US012394170B2

(12) **United States Patent**
**Takahashi**

(10) **Patent No.: US 12,394,170 B2**
(45) **Date of Patent: Aug. 19, 2025**

(54) **CELL IMAGE ANALYSIS METHOD AND CELL IMAGE ANALYZER**

(71) Applicant: **SHIMADZU CORPORATION**, Kyoto (JP)

(72) Inventor: **Wataru Takahashi**, Kyoto (JP)

(73) Assignee: **SHIMADZU CORPORATION**, Kyoto (JP)

( * ) Notice: Subject to any disclaimer, the term of this patent is extended or adjusted under 35 U.S.C. 154(b) by 0 days.

(21) Appl. No.: **17/578,179**

(22) Filed: **Jan. 18, 2022**

(65) **Prior Publication Data**

US 2022/0148282 A1 May 12, 2022

**Related U.S. Application Data**

(63) Continuation of application No. PCT/JP2019/028268, filed on Jul. 18, 2019.

(51) **Int. Cl.**

| | |
|---|---|
| ***G06V 10/22*** | (2022.01) |
| ***C12M 1/34*** | (2006.01) |
| ***C12Q 1/04*** | (2006.01) |
| ***G06V 10/46*** | (2022.01) |
| ***G06V 10/70*** | (2022.01) |
| ***G06V 10/774*** | (2022.01) |
| ***G06V 20/69*** | (2022.01) |

(52) **U.S. Cl.**

CPC ..... ***G06V 10/235*** (2022.01); ***C12M 1/34*** (2013.01); ***C12Q 1/04*** (2013.01); ***G06V 10/46*** (2022.01); ***G06V 10/70*** (2022.01); ***G06V 10/774*** (2022.01); ***G06V 20/69*** (2022.01); ***G06V 20/695*** (2022.01)

(58) **Field of Classification Search**

None

See application file for complete search history.

(56) **References Cited**

U.S. PATENT DOCUMENTS

| | | | | |
|---|---|---|---|---|
| 8,902,306 | B2 | 12/2014 | Mimura et al. | |
| 2015/0087240 | A1* | 3/2015 | Loewke | G06T 7/143 455/67.11 |
| 2016/0370569 | A1* | 12/2016 | Matsumoto | G01N 15/1475 |

(Continued)

FOREIGN PATENT DOCUMENTS

| | | | |
|---|---|---|---|
| JP | 2011-229409 | A | 11/2011 |
| JP | 4968595 | B2 | 4/2012 |

(Continued)

OTHER PUBLICATIONS

Written Opinion by the International Search Authority for PCT application PCT/JP2019/028268 dated Jan. 10, 2019, submitted with a machine translation.

(Continued)

*Primary Examiner* — Ming Y Hon
*Assistant Examiner* — Dominique James
(74) *Attorney, Agent, or Firm* — Muir Patent Law, PLLC

(57) **ABSTRACT**

A cell image analysis method includes converting a first image into a label image by performing a segmentation process to identify a region of a cell that has already started differentiation and a region of an undifferentiated cell in the first image, acquiring a shape feature amount from the label image, and determining whether or not a cell colony includes a colony region that is a candidate for a search target based on the shape feature amount and a determination criterion.

**9 Claims, 15 Drawing Sheets**

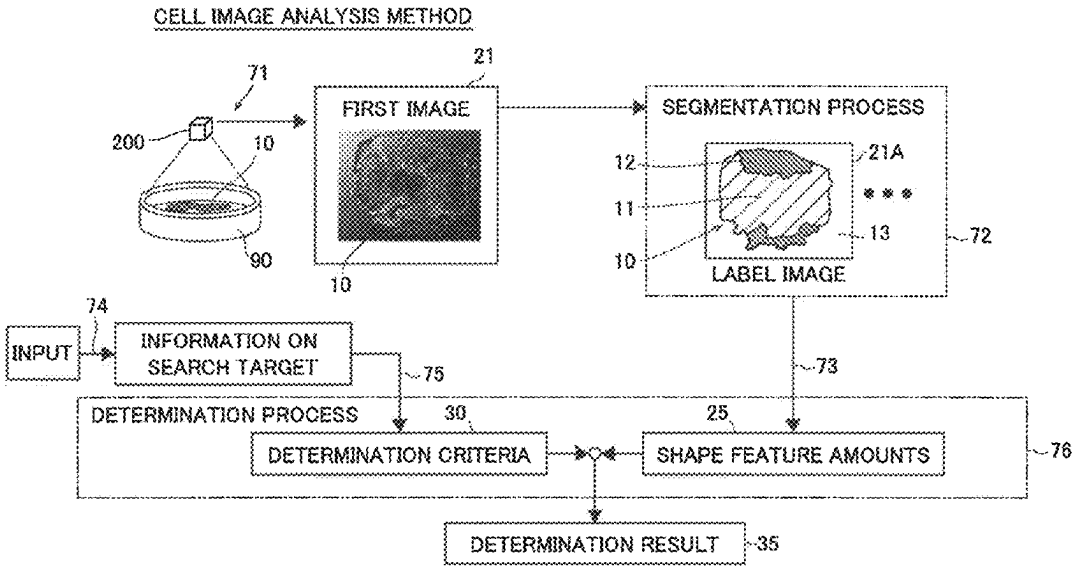

(56) **References Cited**

U.S. PATENT DOCUMENTS

| | | | | |
|---|---|---|---|---|
| 2019/0287244 | A1* | 9/2019 | Wakui | C12M 41/36 |
| 2020/0135328 | A1* | 4/2020 | Yamada | G16H 40/20 |
| 2020/0192059 | A1 | 6/2020 | Wakui | |
| 2020/0342597 | A1* | 10/2020 | Chukka | G06V 20/698 |
| 2021/0117729 | A1* | 4/2021 | Bharti | G01N 15/1429 |
| 2021/0133963 | A1* | 5/2021 | Takahashi | G06T 7/62 |
| 2021/0272288 | A1* | 9/2021 | Takahashi | G06N 3/045 |

FOREIGN PATENT DOCUMENTS

| | | | |
|---|---|---|---|
| JP | 5181385 | B2 | 1/2013 |
| WO | 2017/056600 | A1 | 4/2017 |
| WO | 2018/105432 | A1 | 6/2018 |
| WO | 2019/044424 | A1 | 7/2019 |

OTHER PUBLICATIONS

Takahashi et al., "Development segmentation technique for recognition of undifferentiated aberrant colonies of iPS Cells Using deep learning", 2018, Medical Science Digest, vol. 44, No. 9, p. 483-486.

Cell Culture Analysis Device CS-1, online search on Feb. 14, 2017, URL: https://www.an.shimadzu.co.jp/bio/cell/cs1/index.htm.

Long et al., "Fully Convolutional Networks for Semantic Segmentation", The IEEE Conference on Computer Vision and Pattern Recognition, 2015, pp. 3431-3440 URL:https://people.eecs.berkeley.edu/~jonlong/long_shelhamer_fcn.pdf.

Ronneberger et al., "U-Net: Convolutional Networks for Biomedical Image Segmentation", Computer Science Department and BIOSS Centre for Biological Signalling Studies, University of Freiburg, Germany URL:https://arxiv.org/abs/1505.04597, downloaded May 13, 2019.

Notice of Reasons for Refusal dated Nov. 1, 2022 for corresponding Japanese Patent Application No. JP 2021-532644.

First Office Action dated Dec. 28, 2023 issued in relation to the corresponding Chinese Patent Application No. 201980098569.7 together with a machine English translation thereof.

Second Office Action dated Jul. 9, 2024 for corresponding Chinese Patent Application No. 201980098569.7.

* cited by examiner

FIG. 1

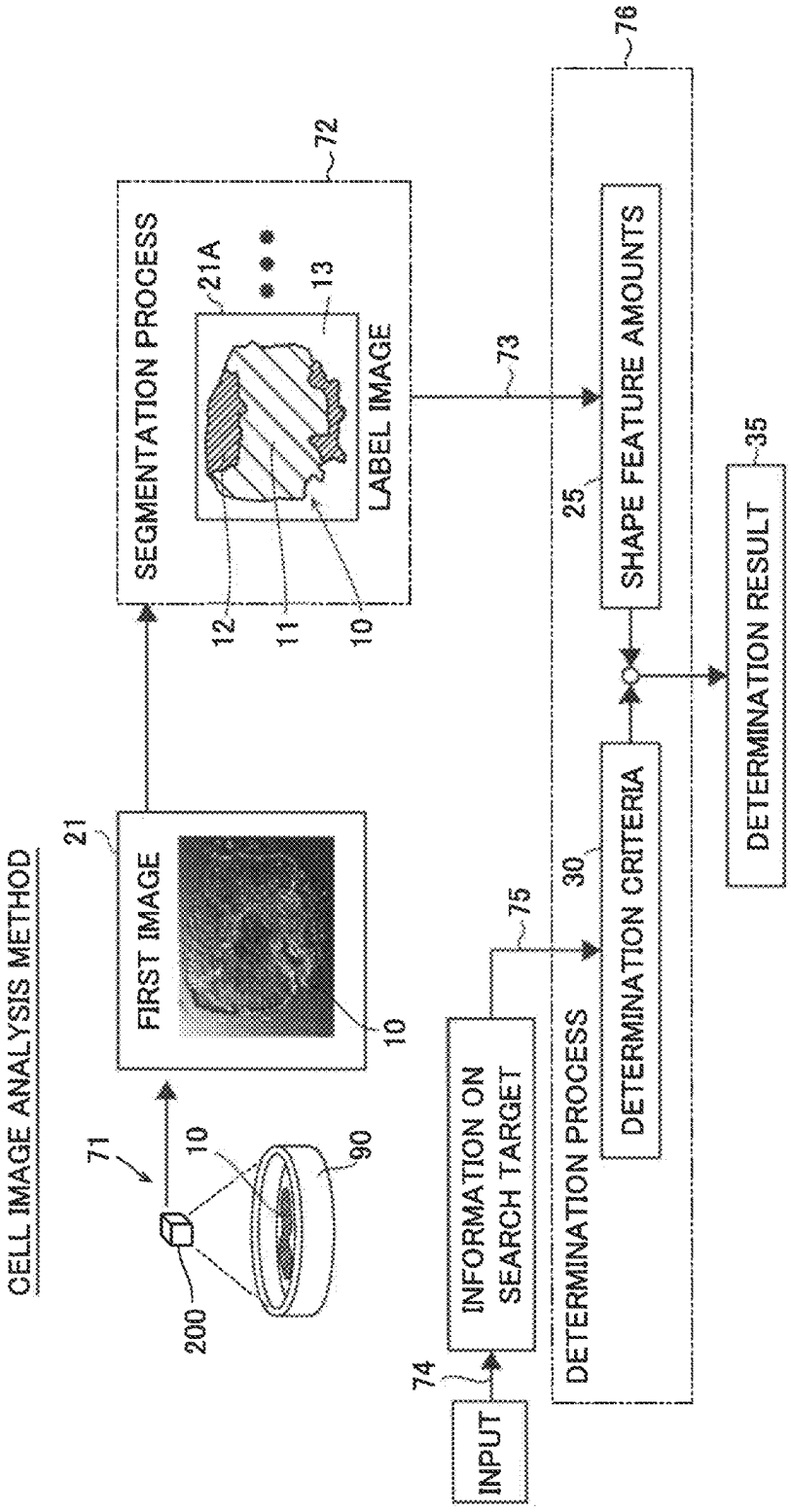
CELL IMAGE ANALYSIS METHOD
71
200
10
90
21
FIRST IMAGE
10
SEGMENTATION PROCESS
72
21A
13
LABEL IMAGE
12
11
10
73
76
25
SHAPE FEATURE AMOUNTS
35
DETERMINATION RESULT
30
DETERMINATION CRITERIA
75
INFORMATION ON SEARCH TARGET
74
INPUT
DETERMINATION PROCESS

FIG.2

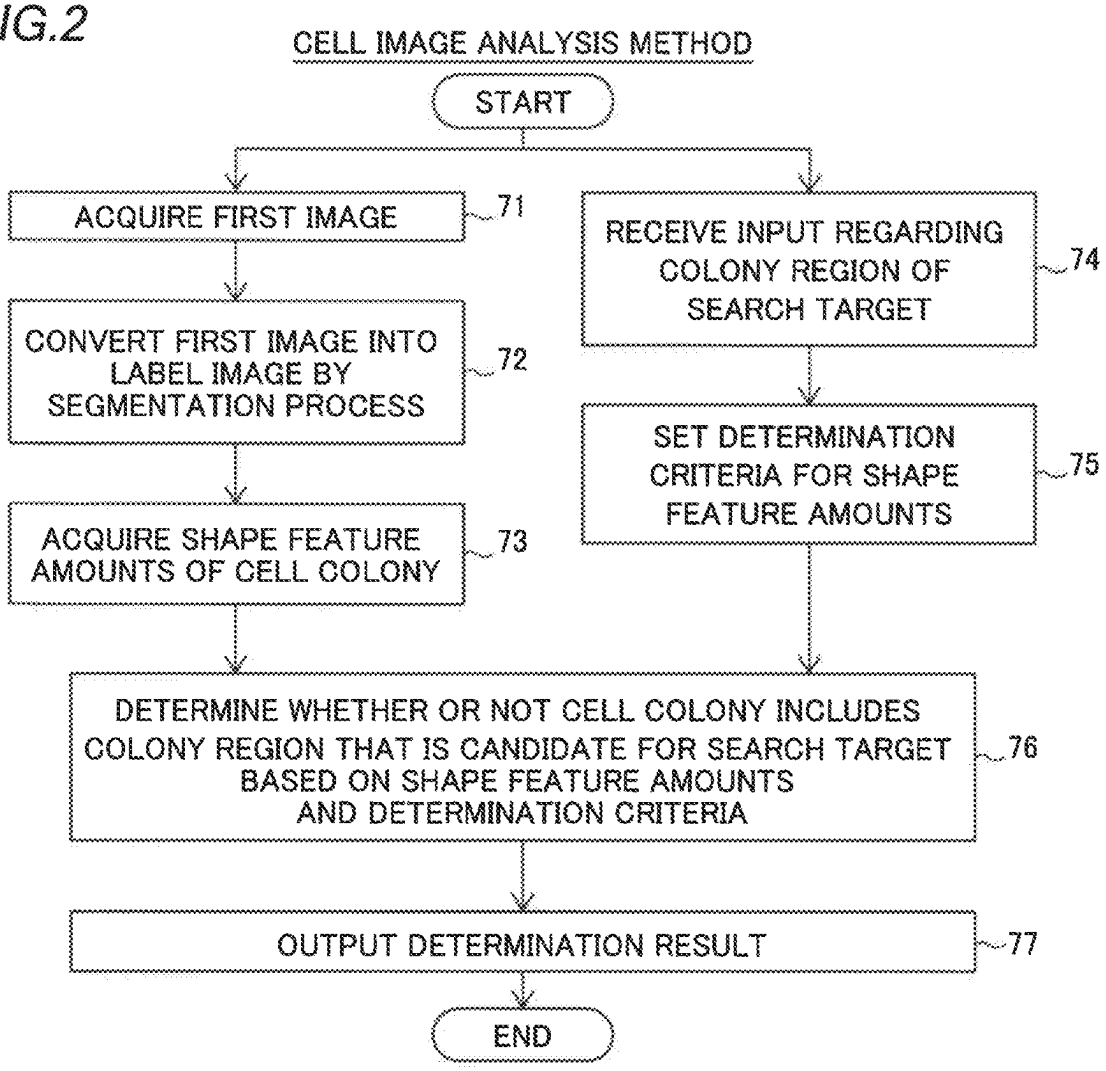
CELL IMAGE ANALYSIS METHOD
START
ACQUIRE FIRST IMAGE
71
CONVERT FIRST IMAGE INTO LABEL IMAGE BY SEGMENTATION PROCESS
72
ACQUIRE SHAPE FEATURE AMOUNTS OF CELL COLONY
73
RECEIVE INPUT REGARDING COLONY REGION OF SEARCH TARGET
74
SET DETERMINATION CRITERIA FOR SHAPE FEATURE AMOUNTS
75
DETERMINE WHETHER OR NOT CELL COLONY INCLUDES COLONY REGION THAT IS CANDIDATE FOR SEARCH TARGET BASED ON SHAPE FEATURE AMOUNTS AND DETERMINATION CRITERIA
76
OUTPUT DETERMINATION RESULT
77
END

FIG.3

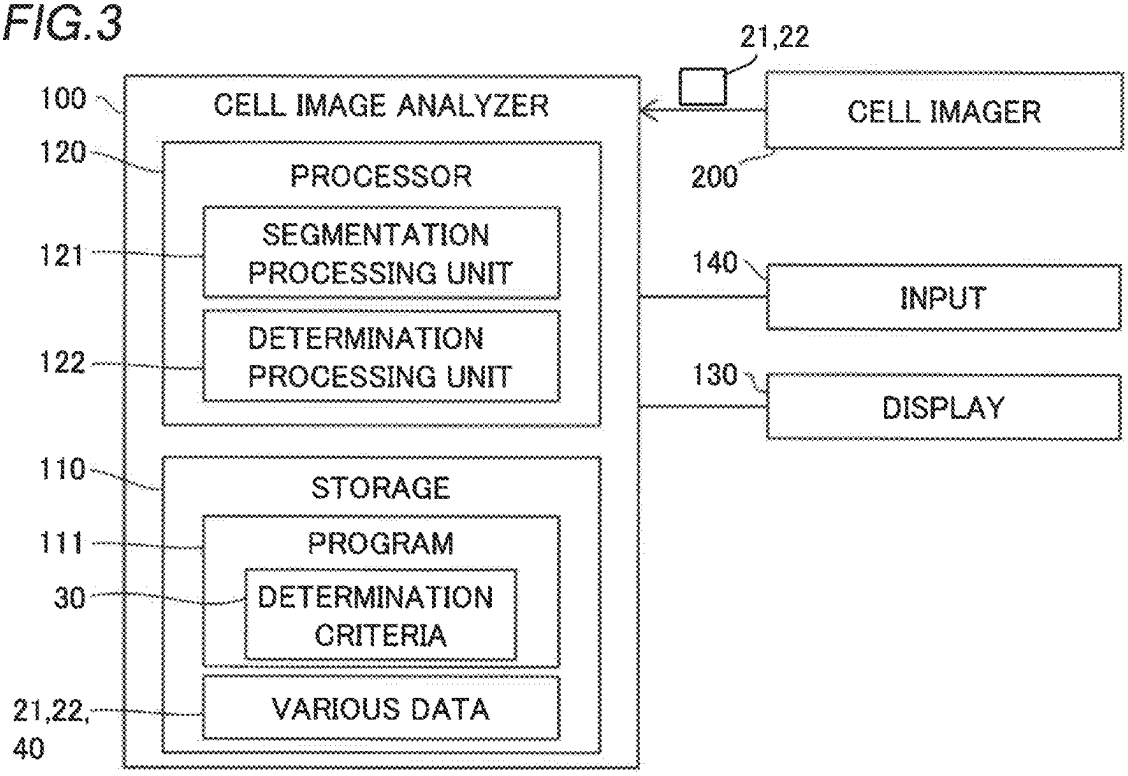
21,22
100
CELL IMAGE ANALYZER
CELL IMAGER
120
PROCESSOR
200
SEGMENTATION PROCESSING UNIT
121
140
INPUT
DETERMINATION PROCESSING UNIT
122
130
DISPLAY
110
STORAGE
111
PROGRAM
30
DETERMINATION CRITERIA
VARIOUS DATA
21,22, 40

FIG.4

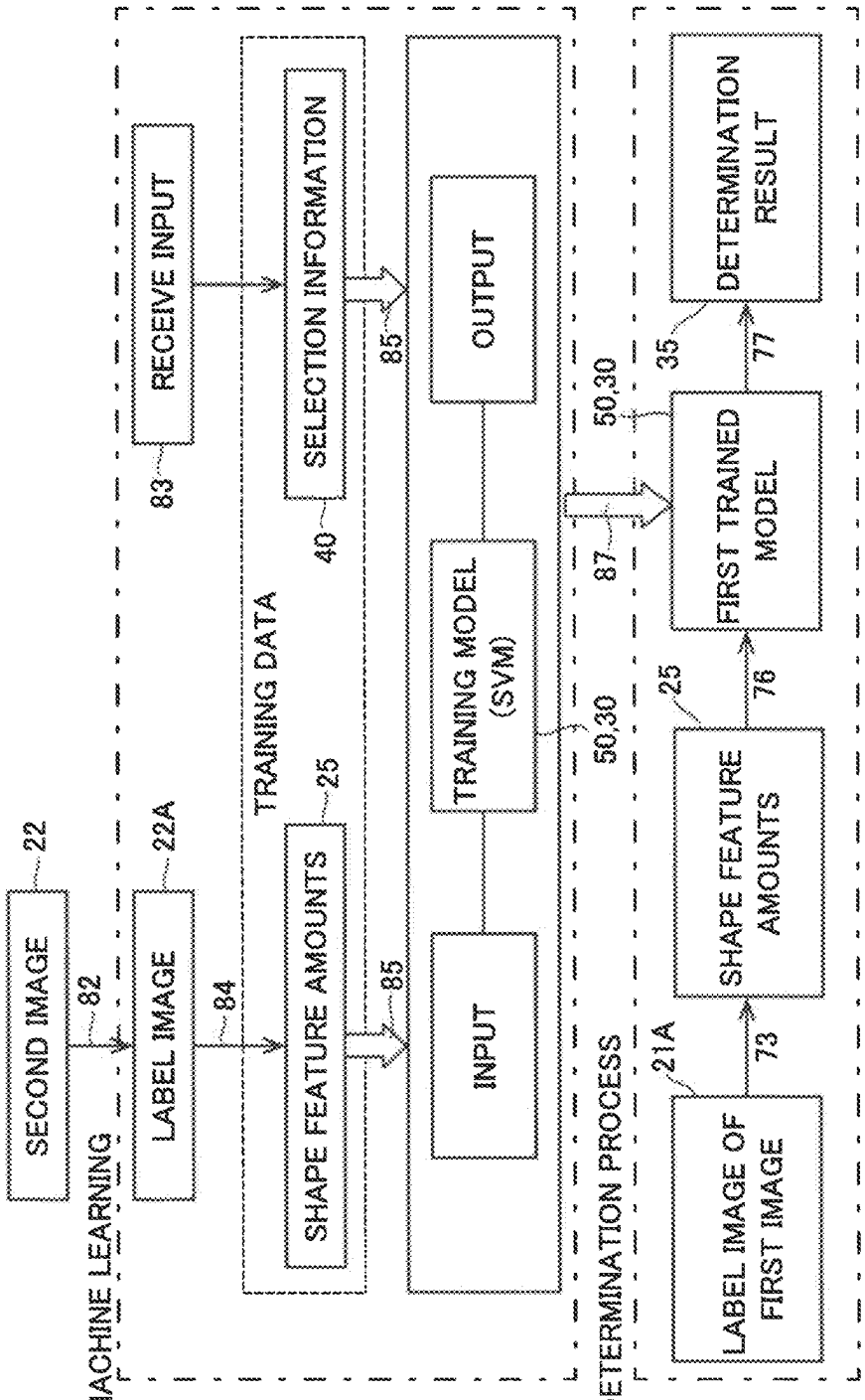
MACHINE LEARNING
SECOND IMAGE
22
82
LABEL IMAGE
22A
84
RECEIVE INPUT
83
TRAINING DATA
SHAPE FEATURE AMOUNTS
25
SELECTION INFORMATION
40
85
85
INPUT
TRAINING MODEL (SVM)
OUTPUT
50,30
87
DETERMINATION PROCESS
21A
LABEL IMAGE OF FIRST IMAGE
73
SHAPE FEATURE AMOUNTS
25
76
FIRST TRAINED MODEL
50,30
35
77
DETERMINATION RESULT

FIG.5

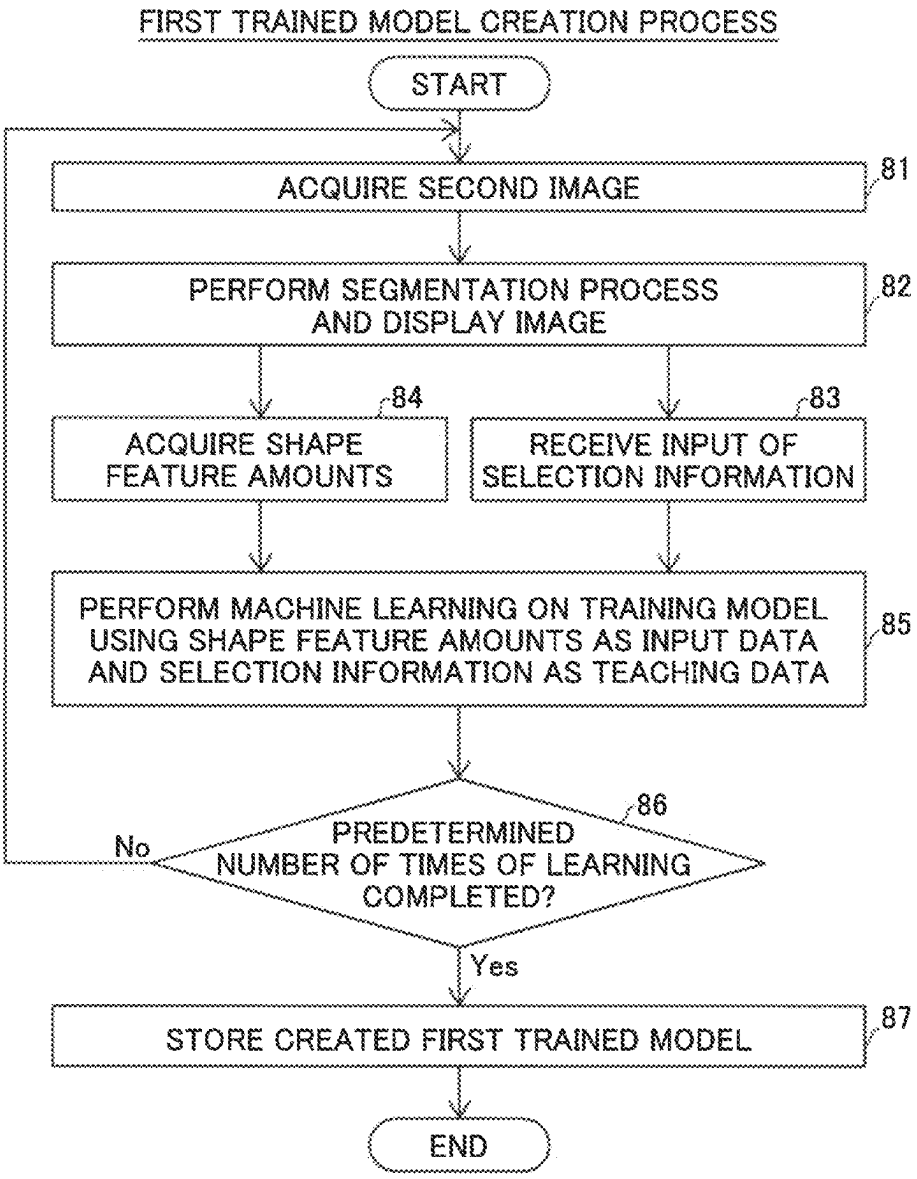
FIRST TRAINED MODEL CREATION PROCESS
START
ACQUIRE SECOND IMAGE
81
PERFORM SEGMENTATION PROCESS AND DISPLAY IMAGE
82
84
ACQUIRE SHAPE FEATURE AMOUNTS
83
RECEIVE INPUT OF SELECTION INFORMATION
PERFORM MACHINE LEARNING ON TRAINING MODEL USING SHAPE FEATURE AMOUNTS AS INPUT DATA AND SELECTION INFORMATION AS TEACHING DATA
85
86
PREDETERMINED NUMBER OF TIMES OF LEARNING COMPLETED?
No
Yes
STORE CREATED FIRST TRAINED MODEL
87
END

FIG.6

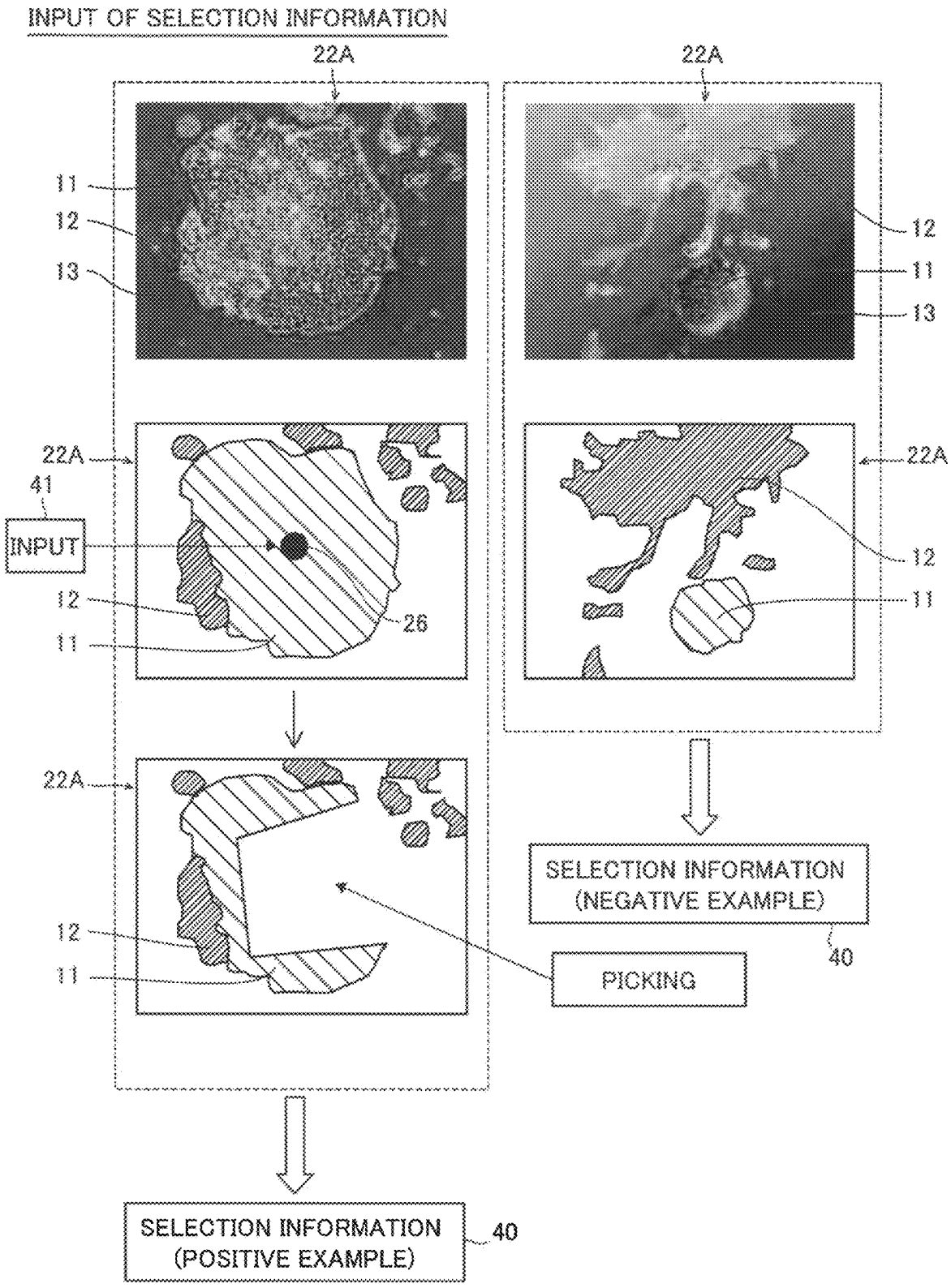
INPUT OF SELECTION INFORMATION
22A
22A
11
12
13
12
11
13
22A
22A
41
INPUT
12
11
26
12
11
22A
12
11
SELECTION INFORMATION
(NEGATIVE EXAMPLE)
40
PICKING
SELECTION INFORMATION
(POSITIVE EXAMPLE)
40

FIG.7

| SHAPE FEATURE AMOUNTS | | |
|---|---|---|
| 25A COLONY FEATURE AMOUNTS | AREA OF COLONY | 25 |
| | CONTOUR LENGTH OF COLONY | 25 |
| | DEGREE OF CIRCULARITY OF COLONY | 25 |
| | ASPECT RATIO OF COLONY | 25 |
| 25B UNDIFFERENTIATED REGION FEATURE AMOUNTS | AREA OF UNDIFFERENTIATED REGION | 25 |
| | CONTOUR LENGTH OF UNDIFFERENTIATED REGION | 25 |
| | DEGREE OF CIRCULARITY OF UNDIFFERENTIATED REGION | 25 |
| | ASPECT RATIO OF UNDIFFERENTIATED REGION | 25 |
| 25C DEVIANT REGION FEATURE AMOUNT | AREA OF DEVIANT REGION | 25 |
| | UNDIFFERENTIATED AREA RATIO | 25 |

FIG.8

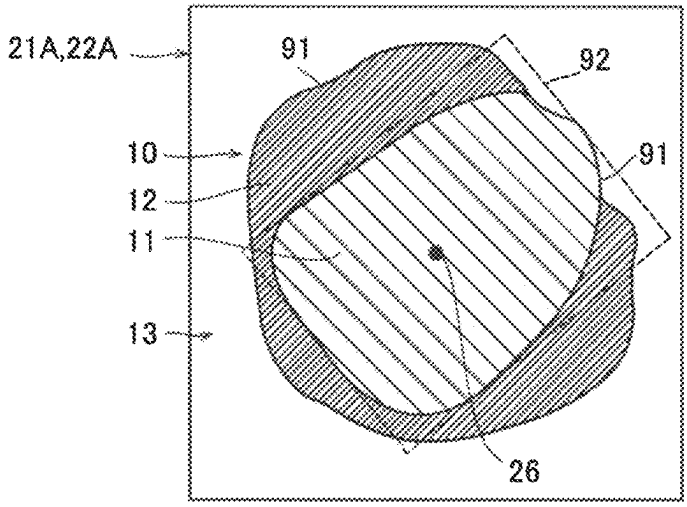

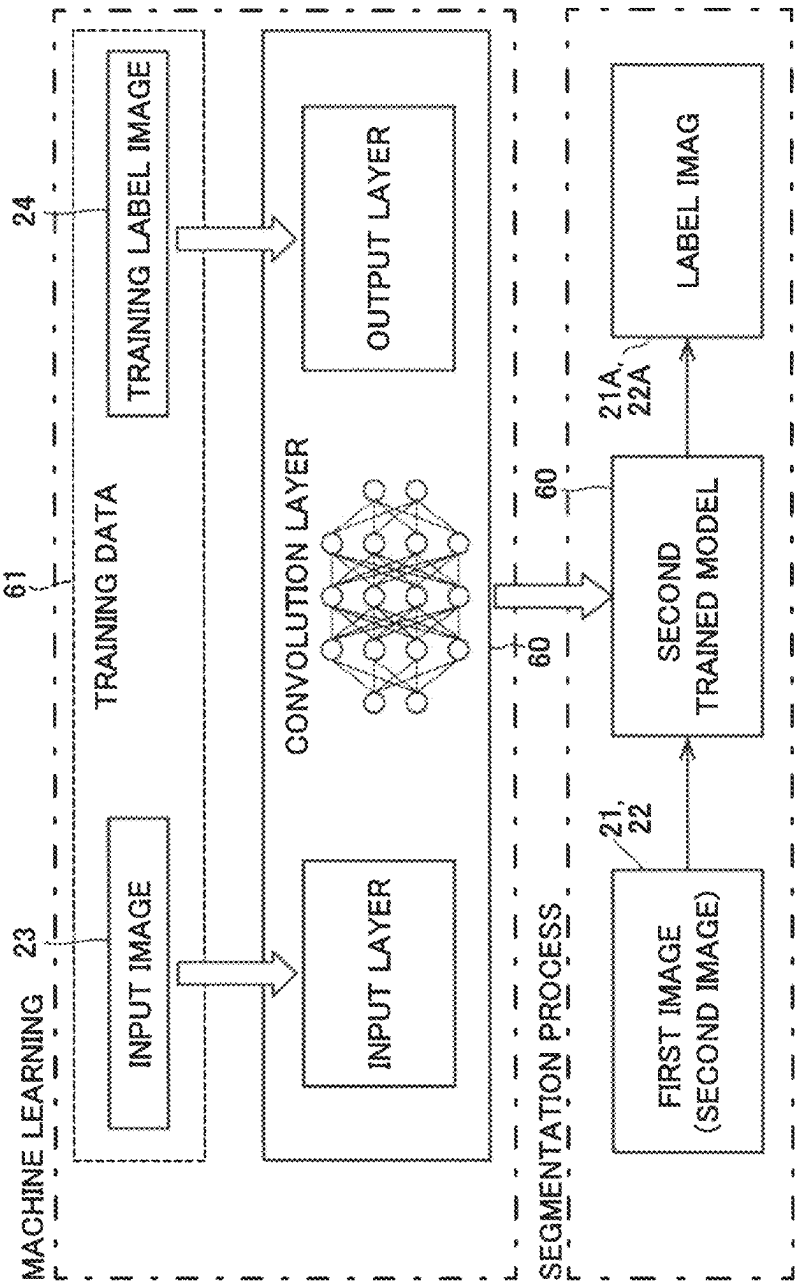
MACHINE LEARNING
23
INPUT IMAGE
61
TRAINING DATA
24
TRAINING LABEL IMAGE
INPUT LAYER
CONVOLUTION LAYER
OUTPUT LAYER
60
60
SEGMENTATION PROCESS
21,
22
FIRST IMAGE
(SECOND IMAGE)
SECOND
TRAINED MODEL
21A,
22A
LABEL IMAG

FIG.9

FIG. 10

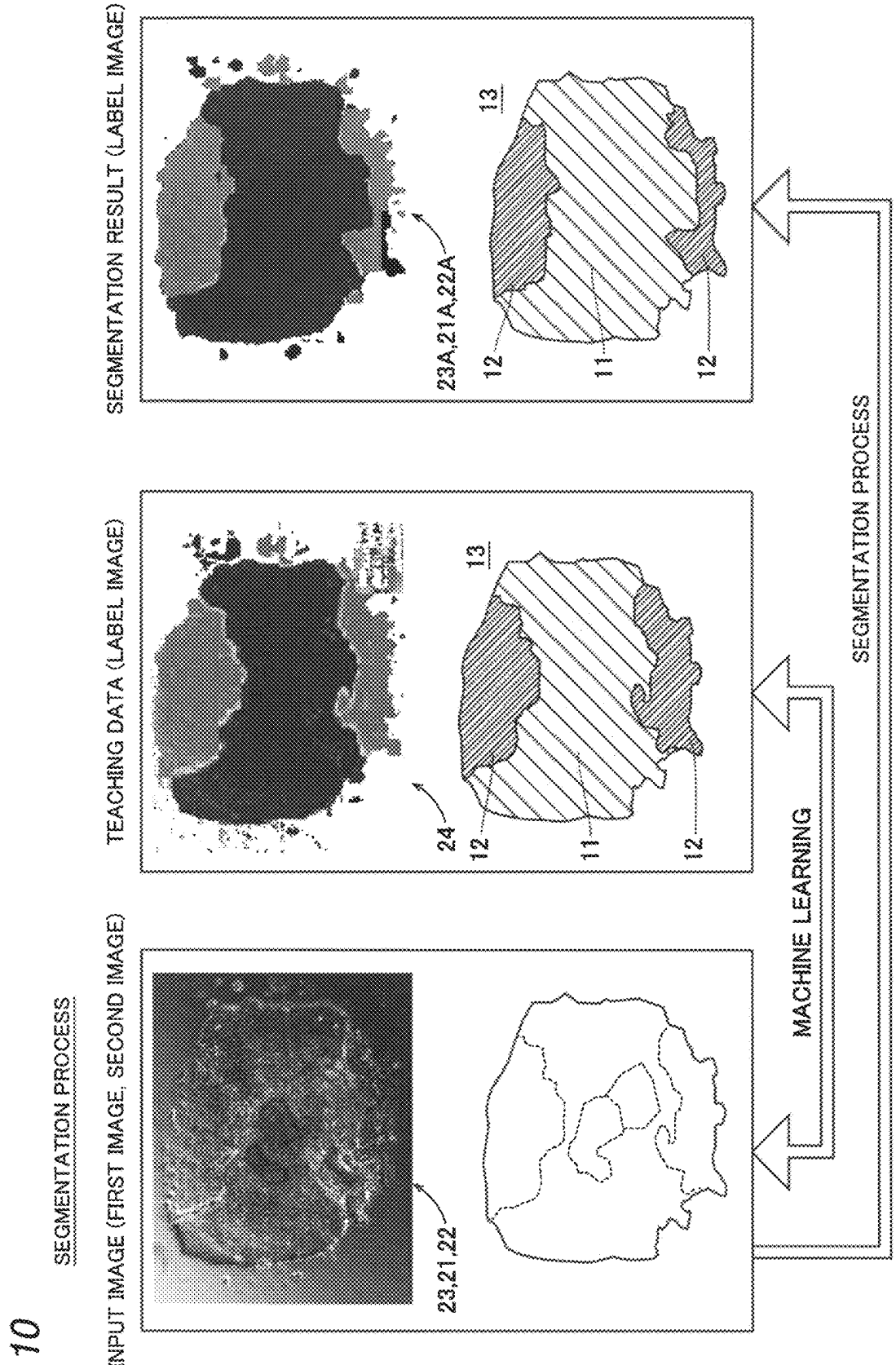
SEGMENTATION PROCESS
INPUT IMAGE (FIRST IMAGE, SECOND IMAGE)
23,21,22
TEACHING DATA (LABEL IMAGE)
24
12
11
12
13
MACHINE LEARNING
SEGMENTATION RESULT (LABEL IMAGE)
23A,21A,22A
12
11
12
13
SEGMENTATION PROCESS

FIG. 11

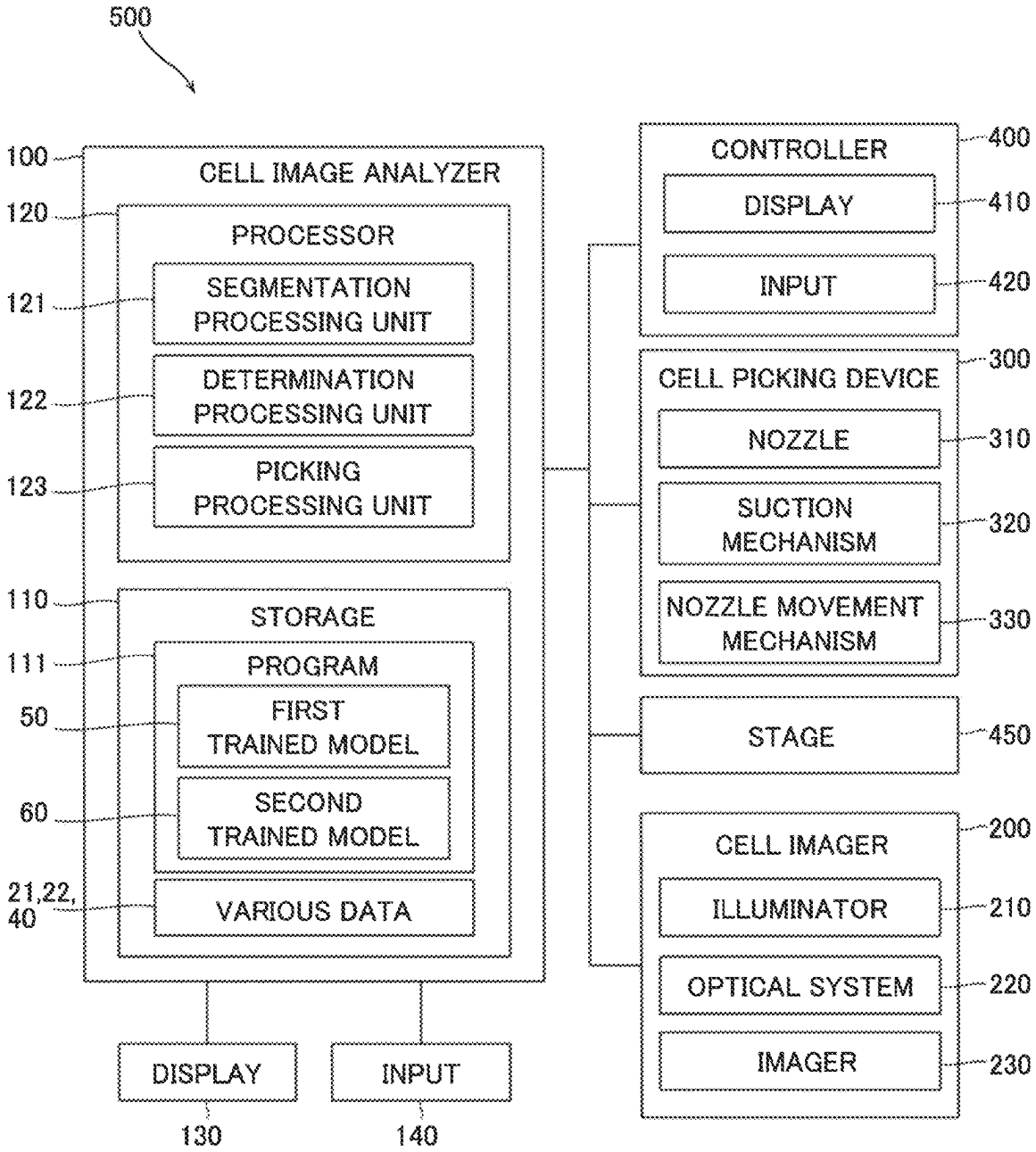
500
100
CELL IMAGE ANALYZER
120
PROCESSOR
121
SEGMENTATION PROCESSING UNIT
122
DETERMINATION PROCESSING UNIT
123
PICKING PROCESSING UNIT
110
STORAGE
111
PROGRAM
50
FIRST TRAINED MODEL
60
SECOND TRAINED MODEL
21,22, 40
VARIOUS DATA
DISPLAY
130
INPUT
140
CONTROLLER
400
DISPLAY
410
INPUT
420
CELL PICKING DEVICE
300
NOZZLE
310
SUCTION MECHANISM
320
NOZZLE MOVEMENT MECHANISM
330
STAGE
450
CELL IMAGER
200
ILLUMINATOR
210
OPTICAL SYSTEM
220
IMAGER
230

FIG. 12

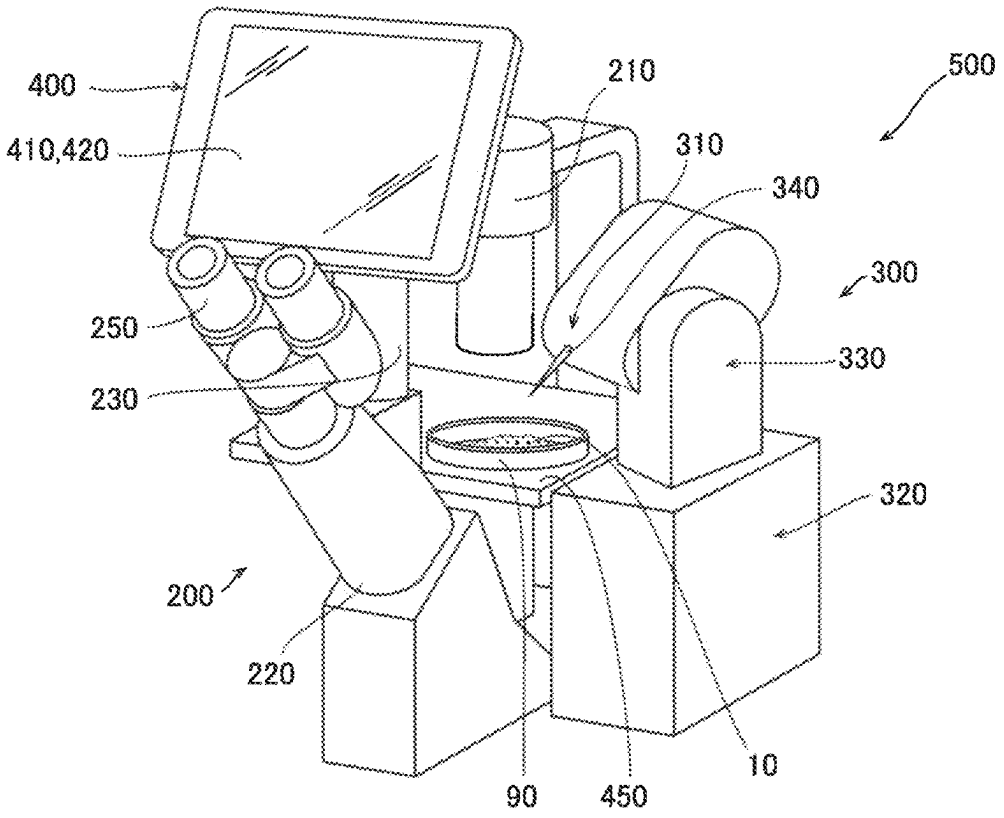

FIG. 13

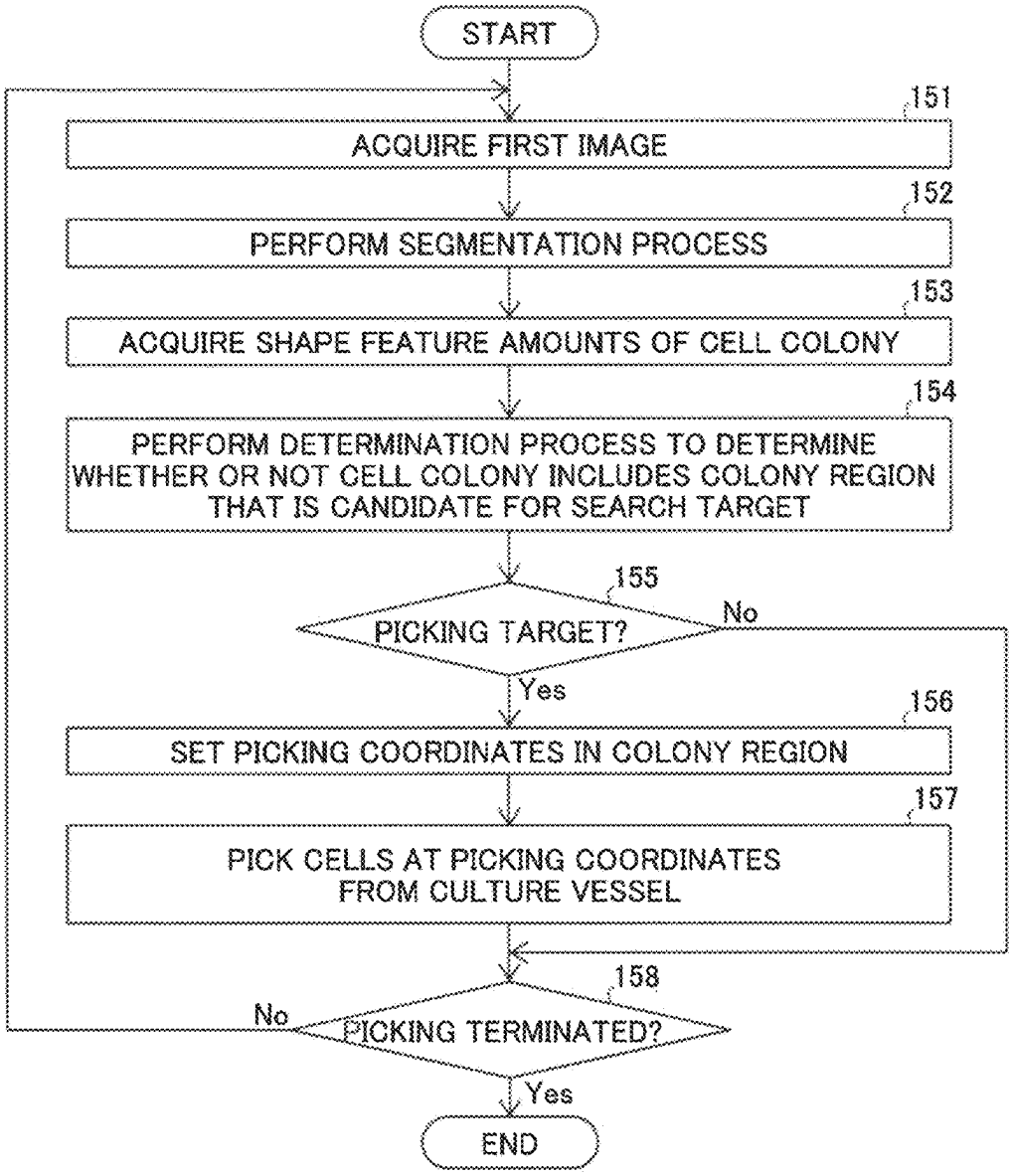


FIG. 14

EXAMPLES OF DETERMINATION CRITERIA FOR PICKING TARGET

| |
|---|
| DETERMINATION RESULT (CERTAINTY) IS LARGER THAN THRESHOLD |
| RANK OF DETERMINATION RESULT (CERTAINTY) IS HIGHER THAN THRESHOLD |
| INPUT OF PICKING TARGET IS RECEIVED FROM USER |

FIG. 15

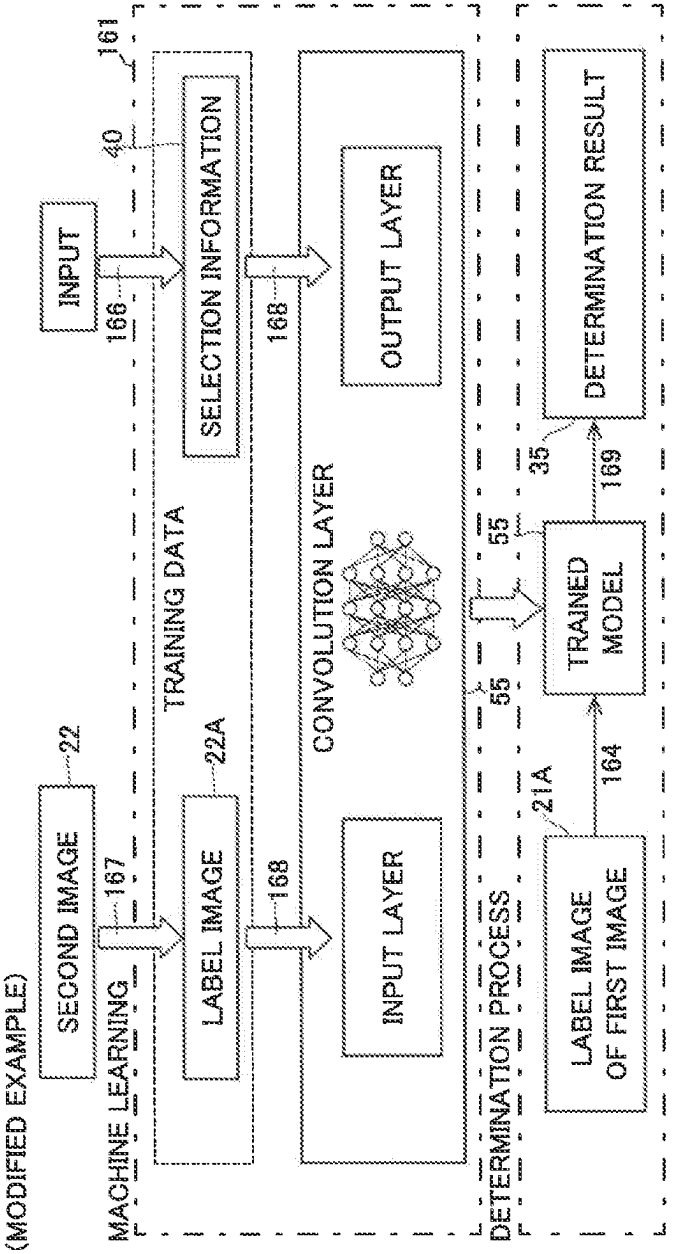
(MODIFIED EXAMPLE)
MACHINE LEARNING
SECOND IMAGE
22
167
INPUT
166
161
40
SELECTION INFORMATION
TRAINING DATA
LABEL IMAGE
22A
168
168
CONVOLUTION LAYER
INPUT LAYER
OUTPUT LAYER
DETERMINATION PROCESS
55
55
LABEL IMAGE OF FIRST IMAGE
21A
164
TRAINED MODEL
169
35
DETERMINATION RESULT

FIG. 16

(MODIFIED EXAMPLE)

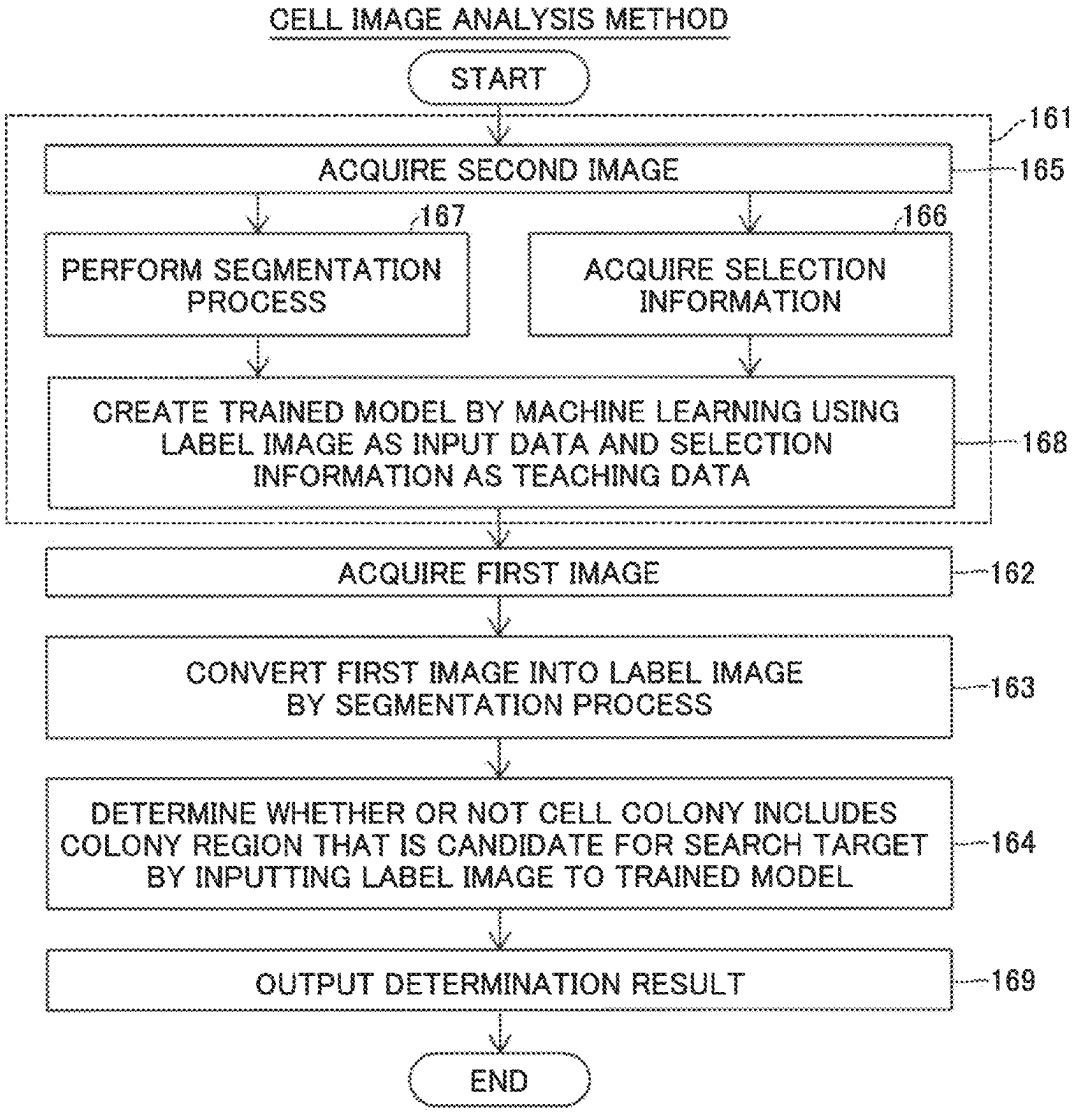

FIG. 17

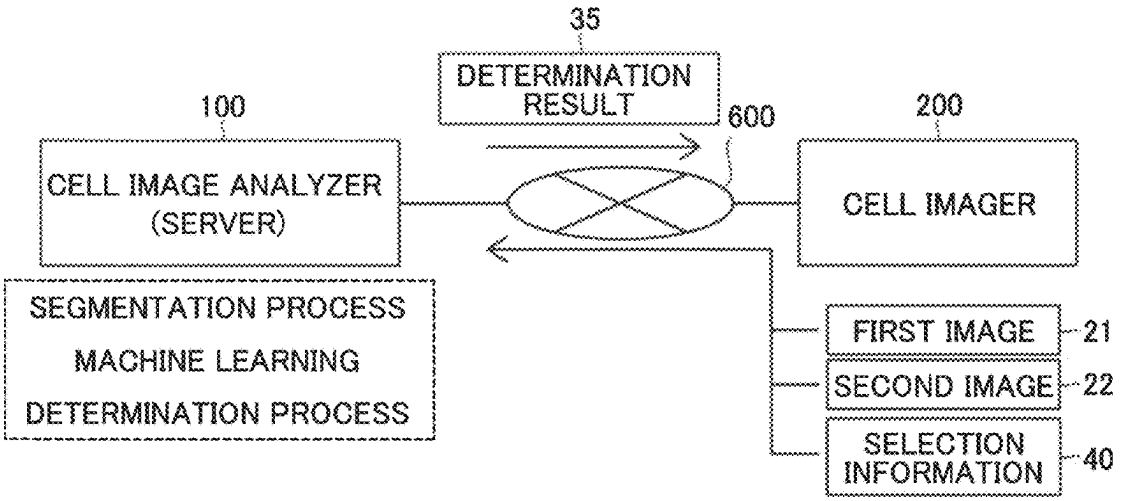
35
DETERMINATION RESULT
100
600
200
CELL IMAGE ANALYZER (SERVER)
CELL IMAGER
SEGMENTATION PROCESS
MACHINE LEARNING
DETERMINATION PROCESS
FIRST IMAGE
21
SECOND IMAGE
22
SELECTION INFORMATION
40

FIG. 18

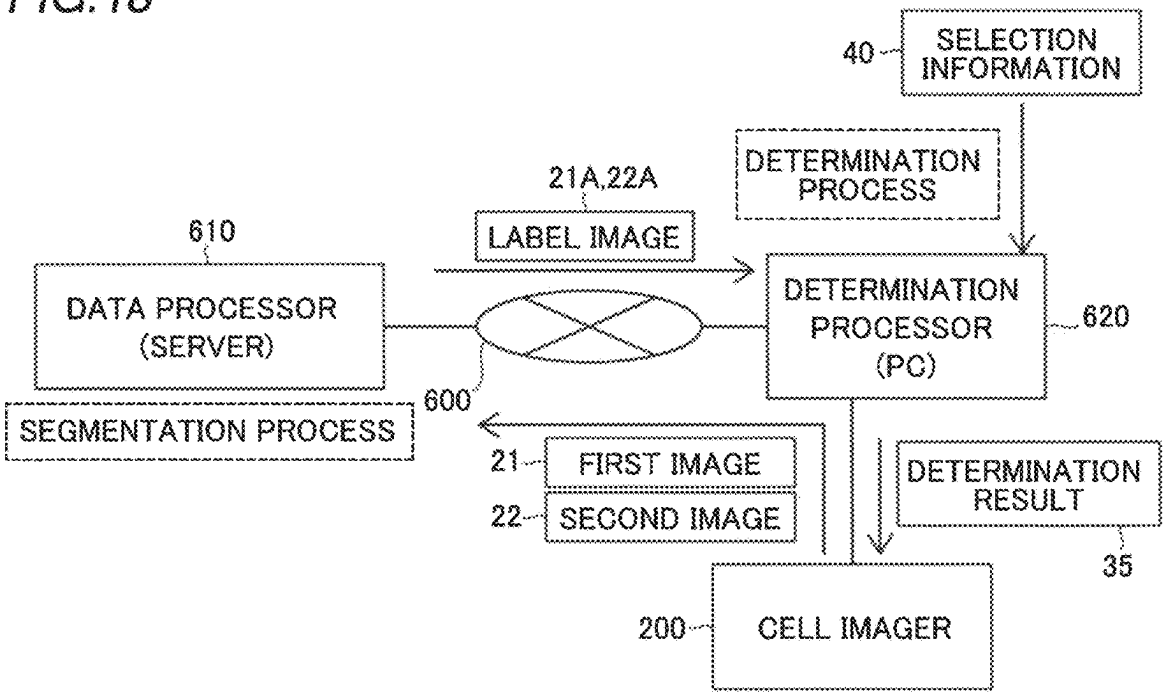
40
SELECTION INFORMATION
DETERMINATION PROCESS
21A,22A
LABEL IMAGE
610
DATA PROCESSOR (SERVER)
DETERMINATION PROCESSOR (PC)
620
600
SEGMENTATION PROCESS
21
FIRST IMAGE
22
SECOND IMAGE
DETERMINATION RESULT
35
200
CELL IMAGER

# CELL IMAGE ANALYSIS METHOD AND CELL IMAGE ANALYZER

## CROSS-REFERENCE TO RELATED APPLICATION

This application is a continuation of PCT application PCT/JP2019/028268, filed on Jul. 18, 2019.

## BACKGROUND OF THE INVENTION

### Field of the Invention

The present invention relates to a cell image analysis method and a cell image analyzer.

### Description of the Background Art

Conventionally, it is known to culture pluripotent cells such as induced pluripotent stem cells (iPS cells).

In cell culture, cells being cultured are extracted from a culture vessel and transferred to another culture vessel such that passaging is performed to obtain a next-generation cell line. This extraction of cells is called picking. There are cells unsuitable for passaging such as cells that have already started differentiation (cells that have lost pluripotency) in the culture vessel, and thus cells suitable for passaging are selected by an operator (user) at the time of passaging.

Specifically, the operator (user) searches for cells suitable for passaging from the culture vessel by checking cell colonies in the culture vessel one by one with a microscope. Then, the operator (user) marks a position at which the cells suitable for passaging are located, and suctions a cell colony at the marked position with a pipetter, for example. Furthermore, at the initial stage of culture, cells that have already started differentiation (cells that have lost pluripotency), dead cells, etc. are extracted and removed from the culture vessel. Similarly to the passaging, such a removal operation is also performed by searching for a removal target using a microscope and picking the found removal target.

Such a cell search operation and a picking operation are delicate and burdensome to the user, and thus a device configured to automate a portion of the operations has been proposed (see Non-Patent Document 1, for example). Non-Patent Document 1 discloses a device configured to automatically perform a cell picking operation with a pipetter by operating a controller after a microscope image of cells in a culture vessel is captured and a user determines a picking target from the image.

Even with the device disclosed in Non-Patent Document 1, it is necessary for the user to perform a cell search operation by himself/herself, and thus it is desired to reduce the workload on the user for the cell search operation.

However, cells to be picked differ depending on the purpose of the cell culture carried out by the user and the type of cells to be cultured, for example. Therefore, it is necessary for the user to independently determine which cell region is suitable for the picking target from among a large number of cell regions observed from the microscope image. Consequently, conventionally, when pluripotent cells are cultured, it has been difficult to reduce the load on the user associated with an operation to search for a picking target.

## SUMMARY OF THE INVENTION

The present invention is intended to solve the above problem. The present invention aims to provide a cell image analysis method and a cell image analyzer capable of effectively reducing the load on a user associated with an operation to search for cells to be picked in cell culture.



In order to attain the aforementioned object, a cell image analysis method according to a first aspect of the present invention includes acquiring a first image of a cell colony including a cell having differentiation potential, converting the first image into a label image by performing a segmentation process to identify a colony region of a cell that has already started differentiation and a colony region of an undifferentiated cell in the cell colony in the first image, acquiring a shape feature amount of the cell colony from the label image, receiving an input regarding a colony region of a search target from a user using a computer, setting a determination criterion for the shape feature amount based on the user's input, and determining whether or not the cell colony includes a colony region that is a candidate for the search target based on the shape feature amount and the determination criterion.

A cell image analyzer according to a second aspect of the present invention includes a storage configured to allow a microscope image of a cell colony including a cell having differentiation potential to be input thereto, a segmentation processing unit configured to convert the microscope image into a label image by performing a segmentation process to identify a colony region of a cell that has already started differentiation and a colony region of an undifferentiated cell in the cell colony in the microscope image, an input configured to receive an input regarding a colony region of a search target, and a determination processing unit configured to determine whether or not the cell colony included in the microscope image includes the colony region that is a candidate for the search target. The determination processing unit is configured to acquire a shape feature amount of the cell colony from the label image and determine a colony region based on the shape feature amount and a determination criterion for the shape feature amount set based on a user's input.

A cell image analysis method according to a third aspect of the present invention includes creating a machine-trained model for determination, acquiring a first image of a cell colony including a cell having differentiation potential, converting the first image into a label image by performing a segmentation process to identify a colony region of a cell that has already started differentiation and a colony region of an undifferentiated cell in the cell colony in the first image, and determining whether or not the cell colony includes the colony region that is a candidate for a search target by inputting the label image of the first image to the trained model. The creating of the trained model includes receiving an input of selection information as to whether or not the cell colony in a second image acquired in advance includes a desired colony region, and creating the trained model by machine learning using a label image obtained by segmenting the second image as input data and the selection information as teaching data.

### Effect of the Invention

According to the first to third aspects of the present invention, as described above, among colony regions including one (ones) of a cell that has started differentiation and another (others) of an undifferentiated cell, a colony region that may be a picking target in accordance with the purpose of culture or the like can be identified from the image by the segmentation process. Furthermore, according to the first and second aspects, the determination result as to whether or

not the cell colony in the image includes the colony region that is the candidate for the search target can be obtained based on the shape feature amount and the determination criterion for the shape feature amount set based on the user's input. According to the third aspect, the determination result as to whether or not the cell colony in the image includes the colony region that is the candidate for the search target can be obtained by the trained model machine-trained using the selection information as to whether or not the cell colony includes the desired colony region. Consequently, according to the first to third aspects of the present invention, the cell colony including the colony region that is likely to be determined by the user as the picking target can be determined and shown to the user, and thus it is no longer necessary for the user to observe and determine a large number of cell regions one by one. Thus, the load on the user associated with the search operation for cells to be picked in cell culture can be effectively reduced.

The foregoing and other objects, features, aspects and advantages of the present invention will become more apparent from the following detailed description of the present invention when taken in conjunction with the accompanying drawings.

## BRIEF DESCRIPTION OF THE DRAWINGS

FIG. **1** is a diagram showing the outline of a cell image analysis method according to an embodiment.

FIG. **2** is a flowchart illustrating the cell image analysis method.

FIG. **3** is a block diagram showing the outline of a cell image analyzer according to the embodiment.

FIG. **4** is a diagram illustrating a first trained model.

FIG. **5** is a flowchart illustrating a creation process for a first trained model.

FIG. **6** is a diagram illustrating a selection information input method.

FIG. **7** is a diagram showing examples of shape feature amounts.

FIG. **8** is a schematic view of a label image for illustrating the shape feature amounts.

FIG. **9** is a diagram illustrating a second trained model.

FIG. **10** is a diagram showing examples of an input image, a training label image, and a segmentation result label image in machine learning.

FIG. **11** is a diagram illustrating an example of a picking system including the cell image analyzer.

FIG. **12** is a perspective view illustrating the picking system.

FIG. **13** is a flowchart illustrating a cell image analysis process and a picking process.

FIG. **14** is a diagram showing examples of determination criteria for a picking target.

FIG. **15** is a diagram illustrating a trained model for determination according to a modified example.

FIG. **16** is a flowchart illustrating a cell image analysis method according to the modified example.

FIG. **17** is a schematic view showing a modified example in which a segmentation process and a determination process are performed on the server side.

FIG. **18** is a schematic view showing a modified example in which a segmentation process is performed on the server side.

## DESCRIPTION OF THE PREFERRED EMBODIMENTS

An embodiment embodying the present invention is hereinafter described on the basis of the drawings.

A cell image analysis method and a cell image analyzer **100** according to this embodiment are now described with reference to FIGS. **1** to **14**.

Cell Image Analysis Method

In the cell image analysis method shown in FIG. **1**, in a cell picking operation in cell culture, a microscope image of a cell colony **10** is acquired, and whether or not the cell colony **10** appearing in the microscope image includes a colony region that is a candidate for a search target is determined.

The cell colony **10** refers to a cell mass (an aggregate of a large number of cells) derived from a single cell. The colony region refers to a region of the cell colony including specific cells.

The cell picking refers to extracting a cell or a cell mass to be picked from a cell culture vessel **90**. The cell picking is performed by suctioning a picking target using an instrument such as a pipetter.

The cell to be picked in this embodiment is a cell having differentiation potential. The cell having differentiation potential is an iPS cell or an ES cell (embryonic stem cell), for example. These cells have pluripotent differentiation (differentiation potential) to differentiate into cells of various tissues and organs. In such cell culture, "undifferentiated cells", which maintain pluripotency, and "undifferentiated deviant cells", which have deviated from the undifferentiated state and have already started to differentiate, are generated. Therefore, a colony region of the undifferentiated cells and a colony region of the undifferentiated deviant cells are formed in the cell colony. The cell colony may include only the colony region of the undifferentiated cells or the colony region of the undifferentiated deviant cells, or may include the colony region of the undifferentiated cells and the colony region of the undifferentiated deviant cells.

In order to grow the undifferentiated cells that maintain pluripotency, an operation called passaging in which undifferentiated cells are picked and transferred to another culture vessel to obtain a next-generation cell line or an operation to pick undifferentiated deviant cells and remove them from the culture vessel **90** is performed.

For example, it is not that cells used for passaging can be any undifferentiated cells. When performing picking, a user searches for a colony region of undifferentiated cells according to the purpose of the user performing a culture operation and selects the colony region of undifferentiated cells as a picking target.

In the cell image analysis method according to this embodiment, a colony region **11** of undifferentiated cells is distinguished from a colony region **12** of undifferentiated deviant cells when cells having such differentiation potential are cultured. Then, in the cell image analysis method, the cell colony **10** including a colony region that is a candidate for a search target for picking is determined according to the purpose of the user performing the culture operation such that an operation to search for the cell colony **10** to be picked is supported. The colony region **12** of undifferentiated deviant cells is an example of a "colony region of cells that have already started differentiation" in the claims.

As shown in FIGS. **1** and **2**, the cell image analysis method according to this embodiment includes at least the following steps **71** to **76**.

(Step **71**) A first image **21** of the cell colony **10** including cells having differentiation potential is acquired.

(Step **72**) In the cell colony **10** in the first image **21**, a segmentation process is performed to identify the colony region **12** of cells (undifferentiated deviant cells) that have

already started differentiation and the colony region **11** of undifferentiated cells, and the first image **21** is converted into a label image **21**A.

(Step **73**) The shape feature amounts **25** of the cell colony **10** are acquired from the label image **21**A.

(Step **74**) A computer is used to receive an input regarding the colony region of a search target from the user.

(Step **75**) Determination criteria **30** for the shape feature amounts **25** are set based on the user's input.

(Step **76**) It is determined whether or not each cell colony **10** includes a colony region that is a candidate for a search target based on the shape feature amounts **25** and the determination criteria **30**.

In step **71**, the first image **21** may be a microscope image of the cell colony **10** including cells having differentiation potential. The microscope image is acquired by an optical microscope such as a transmission observation microscope or a phase-contrast microscope. The first image **21** may be a holographic microscope image. The first image **21** is not particularly limited as long as it is an image obtained by nondestructively imaging the shape of the cell colony **10** at an observable magnification.

The first image **21** is obtained by imaging at least one cell colony **10**. The first image **21** is acquired by imaging the cell colony **10** in the culture vessel **90** with an imager **200**, as shown in FIG. **1**, for example. The culture vessel **90** is a transparent flat dish-shaped culture dish such as a so-called petri dish or a microplate (well plate) in which a plurality of wells are formed.

In step **72** of FIG. **2**, the segmentation process is performed on the acquired first image **21**. In this description, the "segmentation process" refers to a process to divide an image into a plurality of regions and a process to segment an input image into a plurality of label regions by assigning a label indicating a detection target to a region in which the detection target appears. Each of the label regions refers to a region (a portion of an image) including a group of pixels with a common label in an image. The segmentation process is achieved by an image process using a computer.

The label is information representing the meaning indicated by an image portion including the label region. Segmentation is performed by assigning a label to each pixel in an image. The label may be assigned in units of a group of a plurality of pixels (pixel group). The type of label is called a class.

As shown in FIG. **1**, the segmentation process on the first image **21** produces the label image **21**A in which the first image **21** has been divided into a plurality of label regions.

The segmentation process in step **72** divides the first image **21** into at least the label region of the colony region **12** of cells (undifferentiated deviant cells) that have started differentiation and the label region of the colony region **11** of undifferentiated cells. That is, classification into at least two classes is performed. Thus, the generated label image **21**A includes at least two label regions of the colony region **12** of undifferentiated deviant cells and the colony region **11** of undifferentiated cells. The label image **21**A includes three (three classes) label regions of the colony region **12** of undifferentiated deviant cells, the colony region **11** of undifferentiated cells, and a background region **13** other than the colony regions, for example.

In the label image **21**A, each pixel in the same label region is represented by the same pixel value or the same color. Different label regions are represented by different pixel values or different colors. The label image **21**A according to an example of FIG. **1** is a three-valued image in which each pixel in the first image **21** has been segmented by any of three pixel values corresponding to the three classes of labels (the colony region of undifferentiated deviant cells, the colony region of undifferentiated cells, and the background region). Thus, image information irrelevant to the shape of the cell colony, such as the pattern of the colony region or the light-dark gradation appearing in the first image **21**, is removed, and only the shape of each label region can be accurately extracted.

In step **73**, the shape feature amounts **25** of the cell colony **10** are acquired from the label image **21**A. The shape feature amounts **25** refer to information that numerically expresses the shape of the cell colony **10** in the label image **21**A. The shape feature amounts **25** may be amounts (numerical values) indicating the size, contour shape, width, length, etc. of the label region indicating the cell colony **10**. The shape feature amounts **25** of the cell colony **10** may be shape feature amounts related to the entire region of the cell colony **10**, or shape feature amounts related to the colony region **11** of undifferentiated cells or the colony region **12** of undifferentiated deviant cells, which is a portion of the cell colony **10**. The specific contents of the shape feature amounts **25** are described below.

In step **74**, the input regarding the colony region of a search target is received via an input device provided in the computer. Then, in step **75**, the determination criteria **30** for the shape feature amounts **25** are set by the computer based on the input information.

The information regarding the colony region of a search target is information for setting the determination criteria **30** for the shape feature amounts **25**. The information regarding the colony region of a search target may be the determination criteria **30** themselves. The information regarding the colony region of a search target may be information showing the user's tendency as to what kind of colony region the user determines as a search target. More simply, the information regarding the colony region of a search target may be information indicating the user's preference regarding the cell colony **10** as to what kind of colony region the user desires. Therefore, the determination criteria **30** for the shape feature amounts **25** according to the user's own determination criteria are set based on the input regarding the colony region of a search target.

The determination criteria **30** for the shape feature amounts **25** set based on the user's input may be thresholds of the shape feature amounts **25**, for example. When the determination is made using a plurality of shape feature amounts **25**, the determination criteria **30** may include weights for the individual shape feature amounts **25** used in the determination. For example, the user inputs and sets the thresholds or the weights of the shape feature amounts **25** according to the features of the cell colony **10** to be picked. A sample microscope image may be prepared in advance, and the user himself/herself may select and input (teach) whether or not each cell colony **10** appearing in the microscope image includes a colony region that is a candidate for a search target such that the determination criteria **30** are set.

In step **76**, it is determined for each cell colony **10** appearing in the image whether or not each individual cell colony **10** in the first image **21** (label image **21**A) includes the colony region that is a candidate for a search target. The determination process is achieved by an image process using a computer.

The determination process to determine whether or not the cell colony **10** includes the colony region that is a candidate for a search target is performed depending on whether or not the shape feature amounts **25** acquired for the

cell colony **10** to be determined match the determination criteria **30** for the shape feature amounts **25**.

As a result of step **76**, a determination result **35** is generated as to whether or not each cell colony **10** in the first image **21** (label image **21**A) includes the colony region that is a candidate for a search target. The determination result **35** may be binary information of "including the colony region that is a candidate for a search target (positive example)" or "not including the colony region that is a candidate for a search target (negative example)". As described below, the determination result **35** may be information indicating the degree of possibility of "including the colony region that is a candidate for a search target".

In step **77**, the determination result **35** is output. Based on the determination result **35**, it can be determined by the user himself/herself or automatically whether or not each individual cell colony **10** in the first image **21** (label image **21**A) is to be picked. For example, the user selects the cell colony **10** according to the purpose as a picking target from cell colonies **10** determined to be a positive example in consideration of the determination result **35** of the individual cell colony **10**. Furthermore, for example, from the cell colonies **10** determined to be a positive example, any cell colony **10** is selected as a picking target by an automatic process such as a threshold process. Therefore, the user can determine the picking target without performing a search operation such as confirming the morphology of each cell colony **10** in the culture vessel **90** in detail in the picking operation.

Cell Image Analyzer

The outline of the cell image analyzer **100** according to this embodiment is described with reference to FIG. **3**. The cell image analyzer **100** executes the cell image analysis method shown in FIGS. **1** and **2**.

The cell image analyzer **100** shown in FIG. **3** includes a storage **110**, a segmentation processing unit **121**, a determination processing unit **122**, and an input **140**. The cell image analyzer **100** can acquire a microscope image from a cell imager **200** by an input and an output of a signal, data communication, or data transfer via a recording medium.

A microscope image of the cell colony **10** including cells having differentiation potential is input to the storage **110**. The microscope image is the first image **21** shown in FIG. **1**. The cell image analyzer **100** stores image data of the first image **21** acquired from the cell imager **200** in the storage **110**. Thus, step **71** of FIG. **2** is carried out.

The segmentation processing unit **121** performs a segmentation process to identify the colony region **12** of cells that have already started differentiation and the colony region **11** of undifferentiated cells in the cell colony **10** in the microscope image (first image **21**). That is, the segmentation processing unit **121** carries out step **72** of FIG. **2**. The segmentation processing unit **121** converts the first image **21** into the label image **21**A (see FIG. **1**) by the segmentation process on the first image **21**.

The determination processing unit **122** determines whether or not each cell colony **10** included in the microscope image includes the colony region that is a candidate for a search target.

The determination processing unit **122** acquires the shape feature amounts **25** (see FIG. **1**) of the cell colony **10** from the label image **21**A, and determines the colony region based on the shape feature amounts **25** and the determination criteria **30** for the shape feature amounts **25**. That is, the determination processing unit **122** carries out step **73** and step **76** of FIG. **2**. The determination criteria **30** for the shape feature amounts **25** are set in the cell image analyzer **100** based on the user's input using the input **140** in step **74** and step **75** prior to the determination process (step **76**), and are stored in the storage **110**.

The determination processing unit **122** outputs the determination result **35** in step **77** of FIG. **2**. Based on the determination result **35**, it can be determined by the user or automatically whether or not each individual cell colony **10** in the first image **21** (label image **21**A) is to be picked.

In an example shown in FIG. **3**, the cell image analyzer **100** includes a personal computer (PC) including a processor **120** that performs an arithmetic process such as a central processing unit (CPU), a graphics processing unit (GPU), or a field-programmable gate array (FPGA), the storage **110** that stores data, and the input **140**.

In the example of FIG. **3**, the processor **120** functions as the segmentation processing unit **121** and the determination processing unit **122** by executing a program **111** stored in the storage **110**. That is, in the example of FIG. **3**, the segmentation processing unit **121** and the determination processing unit **122** are achieved as functional blocks of the processor **120**. The segmentation processing unit **121** and the determination processing unit **122** may be configured as separate hardware.

The individual hardware refers to the segmentation processing unit **121** and the determination processing unit **122** configured by separate processors. Furthermore, the individual hardware refers to a plurality of computers (PCs) of the cell image analyzer **100**, one of which performs a segmentation process and the other of which performs a determination process, and both of which are separately provided.

The storage **110** may include a volatile and/or non-volatile storage device. For example, the storage **110** includes a hard disk drive or a solid state drive. The program **111** of the cell image analyzer **100** is stored in the storage **110**. The storage **110** stores various data such as the acquired microscope image (first image **21**).

The input **140** receives an operation input from the user. The input **140** includes an input device such as a mouse or a keyboard. Thus, the input **140** receives an input regarding the colony region of a search target. Furthermore, the cell image analyzer **100** is connected to a display **130** that displays an image. The display **130** includes a liquid crystal monitor or an organic/inorganic EL monitor, for example. The input **140** may be a touch panel integrated with the display **130**.

The cell image analyzer **100** can set the determination criteria **30** by receiving the user's operation input via the input **140**. The cell image analyzer **100** can display the microscope image (first image **21**), the label image **21**A, the determination result **35**, etc. on the display **130**. The cell image analyzer **100** receives an input of a selection operation on the label image **21**A displayed on the display **130**, for example. Thus, the cell image analyzer **100** is configured to allow the user to identify the picking target (the cell colony **10** including the colony region that is a candidate for a search target).

Setting of Determination Criteria

An example of a method for setting the determination criteria **30** is now described. The determination criteria **30** can be automatically set from the input information by receiving the operation input from the user.

For example, step **74** of receiving the input regarding the colony region of a search target includes a step of receiving, from the user, an input of selection information **40** as to whether or not the cell colony **10** in a second image **22** acquired in advance includes a desired colony region. Then,

in step **75** of setting the determination criteria **30**, the determination criteria **30** are set based on the received selection information **40**.

The second image **22** is a microscope image acquired in advance as a sample for setting the determination criteria **30**. The second image **22** is an image of the cell colony **10** including cells having differentiation potential, similarly to the first image **21** (see FIG. **1**).

The selection information **40** is information selected by the user as to whether the cell colony **10** in the second image **22** is a positive example (includes a desired colony region) or a negative example (does not include a desired colony region). That is, the selection information **40** is one-to-one associated with one cell colony **10** in the second image **22**, and indicates whether the associated cell colony **10** is a positive example or a negative example. The selection information **40** is binary information indicating either a positive example ("1", for example) or a negative example ("0", for example).

The selection information **40** is acquired by receiving a user's selection of an image displayed on the display **130** via the input **140**, for example. In this embodiment, the step of receiving the input of the selection information **40** includes allowing the user to specify a colony region in the second image **22** or a label image **22**A of the second image **22**, or allowing the user to pick the colony region. Thus, the user actually specifies the colony region or the user actually picks the colony region such that the selection information **40** can be input.

FIG. **6** shows an example of an input of an operation on the label image **22**A of the second image **22**. In FIG. **6**, the label image **22**A and a schematic view for explanation are shown side by side. In the second image **22** or the label image **22**A of the second image **22**, the user performs an operation input **41** to select the cell colony **10** as a positive example via the input **140** (see FIG. **3**). Alternatively, the user actually picks the cell colony **10** as a positive example in a state in which the second image **22** or the label image **22**A of the second image **22** is displayed. As a result of picking, the cell colony **10** is removed from the image such that the selection information **40** indicating that the removed cell colony **10** is a positive example can be acquired. The cell colony **10** to which no input has been provided is given the selection information **40** as a negative example. An operation input indicating that it is a negative example may be provided to the cell colony **10** that the user determines to be a negative example.

The selection information **40** is generated based on the user's operation input for an appropriate number of cell colonies **10**. From a plurality of pieces of generated selection information **40**, it is possible to obtain the user's tendency (i.e., preference information) as to what kind of cell colony **10** is determined as a positive example. Consequently, the determination criteria **30** are set based on the received selection information **40**.

First Trained Model

In this embodiment, the determination criteria **30** may be acquired by machine learning using the selection information **40**. That is, step **75** of setting the determination criteria **30** includes creating a first trained model **50** that has acquired the determination criteria **30** for the shape feature amounts **25** by machine learning using the shape feature amounts **25** acquired from the label image **22**A of the second image **22** as input data and the selection information **40** as teaching data, as shown in FIG. **4**. Furthermore, step **76** (see FIG. **2**) of determining whether or not the cell colony **10** includes the colony region that is a candidate for a search target includes inputting the shape feature amounts **25** acquired from the label image **21**A of the first image **21** to the first trained model **50** to generate the determination result **35**.

The label image **22**A of the second image **22** is acquired by the segmentation process on the second image **22**, similarly to the label image **21**A of the first image **21** shown in FIG. **1**. The label image **22**A of the second image **22** is divided into a plurality of regions, similarly to the label image **21**A of the first image **21**. That is, the label image **22**A (see FIG. **6**) of the second image **22** includes at least the colony region **12** of undifferentiated deviant cells and the colony region **11** of undifferentiated cells.

From the label image **22**A of the second image **22**, the shape feature amounts **25** are calculated for each cell colony **10**. For each cell colony **10** appearing in the second image **22**, the shape feature amounts **25** of the cell colony **10** and the selection information **40** regarding the cell colony **10** are acquired. When the shape feature amounts **25** of the cell colony **10** of interest are given by machine learning using the shape feature amounts **25** as input data and the selection information **40** as teaching data, it is learned to determine whether or not the cell colony **10** is a positive example (includes the colony region that is a candidate for a search target). That is, the first trained model **50** that has acquired the determination criteria **30** for the shape feature amounts **25** is generated by machine learning.

The first trained model **50** (training model for the determination process) is a support vector machine (SVM), for example. Preferably, the first trained model **50** is a non-linear SVM. The first trained model **50** generates the determination result **35** as to whether or not the cell colony **10** corresponds to a positive example, using the shape feature amounts **25** of an unknown cell colony **10** appearing in the label image **21**A of the first image **21** as an input. The first trained model **50** generates, in a range of 0(%) to 100(%), a certainty that is the degree of possibility that the cell colony **10** of interest corresponds to a positive example as the determination result **35**, for example.

FIG. **5** shows a creation process for the first trained model **50**. The first trained model **50** can be created by the cell image analyzer **100** shown in FIG. **3**, for example.

In step **81**, the second image **22** is acquired from the cell imager **200** and input to the storage **110**.

In step **82**, the segmentation processing unit **121** performs the segmentation process on the second image **22**. The segmentation process produces the label image **22**A of the second image **22**.

In step **83**, the input of the selection information **40** to the cell colony **10** in the label image **22**A is received by the input **140**. This step **83** is an example of a "step of receiving the input of the selection information from the user" in the cell image analysis method according to this embodiment. Furthermore, in step **84**, the determination processing unit **122** calculates the shape feature amounts **25** of the cell colony **10** to which the selection information **40** has been input.

In step **85**, the determination processing unit **122** performs machine learning using the shape feature amounts **25** as input data and the selection information **40** as teaching data. Step **85** is an example of a "step of setting the determination criteria" in the cell image analysis method according to this embodiment.

In step **86**, it is determined whether or not a predetermined number of times of learning are completed. When a predetermined number of times of leaning are not completed, the process returns to step **81**, and the determination processing unit **122** learns about the next cell colony **10**. When a

predetermined number of times of learning are completed, machine learning is completed. In step **87**, the created first trained model **50** is stored in the storage **110**.

Thus, the creation process for the first trained model **50** that has acquired the determination criteria **30** for the shape feature amounts **25** is performed. Thus, as shown in FIG. **4**, in the determination process (step **76** of FIG. **2**), the determination processing unit **122** calculates the shape feature amounts **25** from the label image **21**A of the first image **21**, and inputs them to the first trained model **50**. Consequently, the determination processing unit **122** generates the determination result **35** by the first trained model **50**. The machine learning and the determination process using such shape feature amounts **25** require a smaller amount of input data as compared with a case in which the entire image is used as input data, for example, and thus high-speed processing with a small processing load is possible. Therefore, the machine learning of the first trained model **50** in which the user is involved can be completed in a short time, and the process can be quickly performed until the determination result **35** is output during the picking operation.

Shape Feature Amounts

The shape feature amounts **25** are now described.

As shown in FIG. **7**, the shape feature amounts **25** include a shape feature amount related to at least one of i) the entire region of the cell colony **10** included in the label image **21**A, ii) the colony region **11** of undifferentiated cells included in the cell colony **10**, or iii) the colony region **12** of cells (undifferentiated deviant cells) that have started differentiation included in the cell colony **10**. In FIG. **7**, for convenience, the shape feature amounts **25**A of the entire region of the cell colony **10** are referred to as "colony feature amounts", the shape feature amounts **25**B of the colony region **11** of undifferentiated cells are referred to as "undifferentiated region feature amounts", and the shape feature amounts **25**C of the colony region **12** of undifferentiated deviant cells are referred to as "deviant region feature amounts".

In this embodiment, the first image **21** (second image **22**) is divided into three classes of labels: the colony region **11** of undifferentiated cells, the colony region **12** of undifferentiated deviant cells, and the background region **13**. Therefore, as shown in FIG. **8**, the entire region of the cell colony **10** is the sum of the colony region **11** of undifferentiated cells and the colony region **12** of undifferentiated deviant cells. FIG. **8** shows a cell colony **10** including the colony region **11** and the colony region **12**, but there are also a cell colony **10** including only the colony region **11** of undifferentiated cells and a cell colony **10** including only the colony region **12** of undifferentiated deviant cells.

As shown in FIG. **7**, the shape feature amounts **25** specifically include at least one of i) the area of the region, ii) the contour length of the region, iii) the degree of circularity of the region, iv) the aspect ratio of the minimum circumscribed rectangle of the region, or v) the area ratio of the colony region **11** to the entire region of the cell colony **10**. The term "region" here refers to any one of the entire region of the cell colony **10**, the colony region **11**, and the colony region **12**.

The "area of the region" corresponds to the number of pixels included in the region of interest. The "contour length of the region" corresponds to the number of pixels of the contour **91** of the region of interest. The "degree of circularity of the region" is a feature amount in which as the contour **91** of the region of interest is closer to a circle, the value is closer to 1. Assuming that the area of the region of interest is S and the contour length of the region of interest is C, the degree of circularity R of the region is represented by $R=4\pi\times(S/C^2)$.

The "aspect ratio of the minimum circumscribed rectangle of the region" is represented by the (short side/long side) of the minimum circumscribed rectangle **92** of the region of interest. The minimum circumscribed rectangle **92** is a rectangle having the smallest area among rectangles surrounding the region of interest. The "area ratio of the colony region **11** to the entire region of the cell colony **10**" is a ratio occupied by the colony region **11** of undifferentiated cells in the cell colony **10**. The area ratio is represented by (the area of the colony region **11** of undifferentiated cells/the area of the entire cell colony **10**).

FIG. **7** shows examples of the shape feature amounts **25** that may be used when the colony region **11** of undifferentiated cells is picked during passaging. As the shape feature amounts **25**A (colony feature amounts) related to the entire region of the cell colony **10**, the area of the entire region of the cell colony **10**, the contour length of the entire region of the cell colony **10**, the degree of circularity of the entire region of the cell colony **10**, and the aspect ratio of the entire region of the cell colony **10** can be used.

As the shape feature amounts **25**B (undifferentiated region feature amounts) related to the colony region **11** of undifferentiated cells, the area of the colony region **11** of undifferentiated cells, the contour length of the colony region **11** of undifferentiated cells, the degree of circularity of the colony region **11** of undifferentiated cells, and the aspect ratio of the colony region **11** of undifferentiated cells can be used.

As the shape feature amounts **25**C (deviant region feature amounts) related to the colony region **12** of undifferentiated deviant cells, the area of the colony region **12** of undifferentiated deviant cells and the area ratio of the colony region **11** to the entire region of the cell colony **10** can be used. The area ratio indicates that as the value is larger, the colony region **12** of undifferentiated deviant cells is smaller, and becomes a measure of the low proportion of the undifferentiated deviant cells when the colony region **11** of undifferentiated cells is picked.

The shape feature amounts **25** used in the determination process include one or more of the above feature amounts. The features of the cell colony **10** that the user actually uses as criteria to determine whether or not the cell colony **10** is to be picked are not single, and thus it is preferable to use a plurality of shape feature amounts **25** for the determination process. For example, in the determination process, at least one of the shape feature amounts **25**A related to the entire region of the cell colony **10**, at least one of the shape feature amounts **25**B related to the colony region **11** of undifferentiated cells, and at least one of the shape feature amounts **25**C related to the colony region **12** of undifferentiated deviant cells are used. As the number of shape feature amounts **25** increases, it becomes more difficult to set appropriate determination criteria **30**. The first trained model **50** by machine learning shown in FIG. **4** is used such that it is not necessary to directly obtain an appropriate threshold for each shape feature amount **25** even when a plurality of shape feature amounts **25** are used, and the comprehensive determination criteria **30** can be obtained, and thus it is preferable to use the first trained model **50** by machine learning shown in FIG. **4**.

Second Trained Model

In this embodiment, the segmentation process shown in step **72** of FIG. **2** may be performed by a second trained model **60** (see FIG. **9**) in which the segmentation process has

been machine-learned. That is, step **72** of converting the first image **21** into the label image **21**A includes generating the label image **21**A by the second trained model **60** that assigns a segmentation result label to the colony region **11**, using the first image **21** as input data, as shown in FIG. **9**.

The second trained model **60** performs the segmentation process on the input image (the first image **21** or the second image **22**), and outputs the label image (the label image **21**A or the label image **22**A) divided into a plurality of label regions. As a machine learning method, any method such as a fully convolutional network (FCN), a neural network, a support vector machine (SVM), or boosting can be used. For the second trained model **60** in this embodiment, from the viewpoint of the identification performance of the label regions, it is preferable to use a convolutional network frequently used for semantic segmentation, and it is more preferable to use a fully convolutional network. Such a second trained model **60** includes an input layer to which an image is input, a convolution layer, and an output layer.

In order to create the second trained model **60**, machine learning is performed using a training data set that includes a plurality of pieces of training data **61**. FIG. **10** shows an input image **23**, a training label image **24** as teaching data, and a label image **23**A as a result of performing the segmentation process on the input image **23** by the second trained model **60** after machine learning. The training label image **24** and the label image **23**A are labeled in three classes: the colony region **11** of undifferentiated cells, the colony region **12** of undifferentiated deviant cells, and the background region **13**. Each image is actually colored, and the label image is color-coded into three colors. However, it is grayscaled for convenience, and thus each image and a schematic view showing the cell colony **10** are shown side by side for the sake of explanation.

The training data **61** used for machine learning includes the input image **23** and the training label image **24** for the same cell colony **10**. The input image **23** is an original image before the segmentation process is performed, and is an image showing the same cell colony **10** as those in the first image **21** and the second image **22**. The training label image **24** is created as a correct image to be generated as a result of the segmentation process on the input image **23**. That is, the training label image **24** is obtained by dividing the input image **23** into a plurality of label regions.

The training label image **24** is created by the creator of an image for training for performing machine learning. For example, for the cell colony **10**, a cell membrane staining image in which a cell region has been stained with a staining agent and a nuclear staining image in which a nuclear staining region of an undifferentiated cell has been stained with an undifferentiated marker are acquired, and after the cell membrane staining image and the nuclear staining image are binarized by a threshold process, a difference between the two images is acquired such that the training label image **24** is created.

As shown in FIGS. **9** and **10**, when the second trained model **60** is created, a conversion process (segmentation process) from the input image **23** to the training label image **24**, which is a correct answer, is learned by a training model for the segmentation process. As a result of machine learning, the first image **21** or the second image **22** to be processed is input to the created second trained model **60** such that the label image **21**A or the label image **22**A on which the segmentation process has been performed is generated.

The first trained model **50** for the determination process and the second trained model **60** for the segmentation process as described above are stored in the storage **110** as a portion of the program **111** executed by the processor **120** of FIG. **3**, for example. When the processor **120** functions as the determination processing unit **122**, the determination process is performed using the first trained model **50**. When the processor **120** functions as the segmentation processing unit **121**, the segmentation process is performed using the second trained model **60**.

Cell Picking System

As a more specific configuration example, a cell picking system **500** including the cell image analyzer **100** according to this embodiment, the cell imager **200**, and a cell picking device **300** is described with reference to FIG. **11**.

The cell picking system **500** is configured to image the cell colony **10** (see FIG. **1**) in the culture vessel **90** by the cell imager **200**, perform the segmentation process and the determination process on the obtained first image **21**, and perform a picking operation automatically or semi-automatically based on the determination result **35**. The cell picking system **500** includes a controller **400** configured or programmed to control the picking operation. FIG. **12** shows a configuration example of the cell picking system **500** in which the cell imager **200**, the cell picking device **300**, and the controller **400** are combined.

As shown in FIGS. **11** and **12**, the cell imager **200** images the cell colony **10** in the culture vessel **90** and acquires a microscope image (the first image **21** or the second image **22**). The cell imager **200** outputs the microscope image to the controller **400**. The cell imager **200** includes an illuminator **210**, an optical system **220**, and an imager **230**.

The illuminator **210** irradiates the optical system **220** with illumination light via the culture vessel **90** placed on a stage **450**. The illuminator **210** includes a light source such as an LED that generates illumination light in a visible wavelength region. The optical system **220** includes a lens group such as an objective lens and sends incident light transmitted through the culture vessel **90** to the imager **230** to form an image having a desired magnification. The imager **230** includes an image sensor and converts light received through the optical system **220** into an electric signal to generate a microscope image. Examples of the image sensor include a charge-coupled device (CCD) image sensor, a complementary MOS (CMOS) image sensor, etc.

FIG. **12** shows a configuration example in which the imager **230** is attached to an inverted optical microscope (phase-contrast microscope) to form the cell imager **200**. The user can confirm the cell colony **10** with the naked eye instead of the image through an eyepiece **250** of the optical microscope.

The controller **400** is a computer including a processor and a storage (not shown), and the processor functions as a controller by executing a program stored in the storage. The controller **400** is communicably connected to the cell image analyzer **100**, the cell imager **200**, and the cell picking device **300**. In an example of FIG. **12**, the controller **400** is a tablet terminal, and includes a display **410** and a touch panel input **420**. The input **420** can be used by the user to input the selection information **40**.

The controller **400** acquires the captured microscope images (the first image **21** and the second image **22**) from the cell imager **200** and displays them on the display **410**. The controller **400** receives a user's input operation via the input **420** on the displayed image. The controller **400** transmits the acquired microscope images (the first image **21** and the second image **22**) to the cell image analyzer **100**, and transmits the selection information **40** received from the user via the input **420** to the cell image analyzer **100**. The

controller **400** controls the picking operation of the cell picking device **300** by transmitting coordinate information to the cell picking device **300**. The cell image analyzer **100** may function as the controller **400** without providing the controller **400**.

The cell picking device **300** is configured to pick cells in the culture vessel **90** placed on the stage **450**. In the example of FIG. **12**, the cell picking device **300** includes a nozzle **310**, a suction mechanism **320**, and a nozzle movement mechanism **330**.

The nozzle **310** is configured to access the inside of the culture vessel **90** and suction cells. A disposable pipette tip **340** of the nozzle **310** is attachable and detachable, for example. The nozzle **310** suctions cells from the tip end of the attached pipette tip **340**. The suction mechanism **320** is fluidly connected to the nozzle **310** and applies a suction force to the nozzle **310**. The nozzle movement mechanism **330** is configured to move the nozzle **310**. The nozzle movement mechanism **330** is a robot mechanism including a drive source such as a motor, moves the tip end of the nozzle **310** to picking coordinates in the culture vessel **90** at the time of picking, and retracts the tip end of the nozzle **310** to the outside of the culture vessel **90** after suction. The cell picking device **300** is controlled by the controller **400** to start and end the picking operation, and receives an input of the picking coordinates from the controller **400**.

The stage **450** is an electric stage, for example. In this case, the controller **400** can control the stage **450** such that microscope images of a predetermined range in the culture vessel **90** are sequentially acquired. The stage **450** may not be an electric stage. In this case, in the picking operation, the user can grasp and move the culture vessel **90** on the stage **450**, for example, to sequentially acquire a plurality of microscope images at imaging positions in the culture vessel **90**.

In an example of FIG. **11**, the processor **120** of the cell image analyzer **100** includes the segmentation processing unit **121**, the determination processing unit **122**, and a picking processing unit **123** as functional blocks. The segmentation processing unit **121** performs the segmentation process on the microscope images (the first image **21** and the second image **22**) using the second trained model **60** stored in the storage **110**. The determination processing unit **122** acquires the second image **22** and the selection information **40** via the controller **400**, creates the first trained model **50**, and stores it in the storage **110**. The determination processing unit **122** performs the determination process on the cell colony **10** in the first image **21** using the first trained model **50** stored in the storage **110**. The picking processing unit **123** determines whether or not the cell colony **10** corresponds to the picking target, and sets picking coordinates **26** (see FIG. **8**) for the cell colony **10** corresponding to the picking target.

The storage **110** stores the second trained model **60** in advance. The segmentation process does not depend on the user's preference (the tendency of which cell colony **10** is determined as the picking target), and thus the second trained model **60** created by performing machine learning in advance can be stored. Image data including the first image **21** and the second image **22** and the selection information **40**, for example, are input to and stored in the storage **110**.

In the cell image analyzer **100**, the creation process for the first trained model **50** shown in FIG. **5** is performed as a preparatory work before the first image **21** is acquired and the determination process and a picking process are performed. That is, the first trained model **50** is created in advance by the second image **22** as a sample, and is stored in the storage **110**.

First, the user prepares the culture vessel **90** containing a sample cultured cell and places it on the stage **450**. The second image **22** is captured by the cell imager **200** and transmitted to the cell image analyzer **100** via the controller **400** (step **81** of FIG. **5**).

The segmentation processing unit **121** performs the segmentation process by the second trained model **60** to generate the label image **22**A of the second image **22** (step **82** of FIG. **5**). As shown in FIG. **6**, the controller **400** displays the second image **22** or the generated label image **22**A on the display **410**, and receives the input of the selection information **40** from the user via the input **420** (step **83** of FIG. **5**). The image display and input reception can also be performed using the display **130** and the input **140** (see FIG. **11**) of the cell image analyzer **100**.

When inputting the selection information **40**, the user taps the image of the cell colony **10** on a screen when the cell colony **10** including a desired colony region is present in the displayed image, as shown in FIG. **6**, to input the selection information **40** that is a positive example. When the next image is displayed without tapping the image, the selection information **40** that is a negative example is attached to the cell colony **10**. The controller **400** transmits the selection information **40** to the cell imager **200**.

When the selection information **40** is acquired, the determination processing unit **122** calculates the shape feature amounts **25** of the cell colony **10** from the label image **22**A (step **84** of FIG. **5**). The determination processing unit **122** calculates one or a plurality of shape feature amounts **25** set in advance among the various shape feature amounts shown in FIG. **7**.

The determination processing unit **122** performs machine learning using the shape feature amounts **25** of the cell colony **10** and the selection information **40** regarding the cell colony **10** (step **85** of FIG. **5**). The user repeats the above operations to perform machine learning a predetermined number of times required to create the first trained model **50** (step **86** of FIG. **5**). Thus, the creation of the first trained model **50** as the preparatory work is completed. The created first trained model **50** is stored in the storage **110** (step **87** of FIG. **5**).

In the creation process for the first trained model **50**, the picking operation may be actually performed. That is, when the user taps the cell colony **10** in the displayed image, the controller **400** acquires the tapped position as the picking coordinates **26** (see FIG. **6**). The controller **400** transmits the acquired picking coordinates **26** and a picking operation start command to the cell picking device **300**. Thus, the cell picking device **300** picks the colony region **11** at the specified picking coordinates.

According to this configuration, the user can perform the creation process (machine learning) for the first trained model **50**, which is the preparatory work, simply by actually performing the picking operation such as passaging by manual input. For example, when there are a plurality of culture vessels **90** on which the picking operation should be performed, the user causes the cell picking system **500** to perform the picking operation on the first culture vessel **90** by manual input. A large number of cell colonies **10** to be determined are contained in the culture vessel **90**, and thus when the picking operation on the first culture vessel **90** is completed, for example, the creation process for the first trained model **50** by machine learning is also completed. The picking operation on the second and subsequent culture vessels **90** can be automatically or semi-automatically performed using the created first trained model **50**, as described below.

Image Analysis Process and Picking Process

An image analysis process and the picking process by the cell picking system **500** using the first trained model **50** created in advance are now described with reference to FIG. **13**.

Step **151** of FIG. **13** corresponds to step **71** of the cell image analysis method according to this embodiment shown in FIG. **2**. Step **152** of FIG. **13** corresponds to step **72** shown in FIG. **2**. Step **153** of FIG. **13** corresponds to step **73** shown in FIG. **2**. Step **154** of FIG. **13** corresponds to step **76** shown in FIG. **2**. In an example of FIG. **13**, the cell image analysis method includes step **71** to step **76** of FIG. **2**, and acquires the determination result **35** as to whether or not the cell colony **10** includes the colony region that is a candidate for a search target. The cell image analysis method includes step **156** of setting the picking coordinates **26** of the colony region **11** determined to be desired by the user based on the determination result **35** as to whether or not the cell colony **10** includes the colony region that is a candidate for a search target, and step **157** of picking cells at the picking coordinates **26** from the culture vessel **90**.

In step **151**, the cell imager **200** images the cell colony **10** in the culture vessel **90** on the stage **450** and generates the first image **21** showing the cell colony **10** included in the imaging field of view. The segmentation processing unit **121** of the cell image analyzer **100** acquires the first image **21** via the controller **400**.

In step **152**, the segmentation processing unit **121** performs the segmentation process on the acquired first image **21**. That is, the segmentation processing unit **121** generates the label image **21**A of the first image **21** by inputting the first image **21** to the second trained model **60**.

In step **153**, the determination processing unit **122** acquires the shape feature amounts **25** of the cell colony **10** from the generated label image **21**A. That is, the determination processing unit **122** calculates one or a plurality of shape feature amounts **25** set in advance among the examples shown in FIG. **7**.

In step **154**, the determination processing unit **122** determines whether or not each cell colony **10** includes the colony region that is a candidate for a search target. That is, the determination processing unit **122** inputs the shape feature amounts **25** of each cell colony **10** to the first trained model **50** to output the determination result **35** as to whether or not each cell colony **10** is a positive example (includes the colony region that is a candidate for a search target). The determination result **35** is output as a certainty (numerical value) from 0(%) to 100(%).

In step **155**, the picking processing unit **123** of the cell image analyzer **100** determines whether or not the cell colony **10** for which the determination result **35** has been output corresponds to the picking target. When determining that the cell colony **10** for which the determination result **35** has been output does not correspond to the picking target, the picking processing unit **123** advances to step **158**.

When determining that the cell colony **10** for which the determination result **35** has been output corresponds to the picking target, the picking processing unit **123** sets the picking coordinates **26** of the colony region **11** determined to be desired by the user in step **156**.

In an example of passaging, position coordinates in the colony region **11** of undifferentiated cells of the cell colony **10** determined to correspond to the picking target are set to the picking coordinates **26**. For example, as illustrated in FIG. **8**, the picking processing unit **123** calculates the geometric center of gravity in the colony region **11** of undifferentiated cells, and sets a position of the calculated center of gravity at the picking coordinates **26**. Furthermore, the picking processing unit **123** acquires the contour shape of the region actually picked by the cell picking device **300** in advance, and sets the picking coordinates **26** as a position at which the picked region fits within the colony region **11** of undifferentiated cells. The picking processing unit **123** outputs the set picking coordinates **26** to the controller **400**.

In step **157**, the cell picking device **300** picks cells at the picking coordinates **26** from the culture vessel **90** under the control of the controller **400**. The cell picking device **300** extracts the cells (colony region) at the picking coordinates **26** into the pipette tip by moving the tip end of the nozzle **310** at the picking coordinates **26** transmitted from the controller **400** and suctioning the cells. The cell picking device **300** retracts the tip end of the nozzle **310** to the outside of the culture vessel **90**, and then discharges the extracted cells to a cell container at a predetermined position. When the picking is completed, the process advances to step **158**.

In step **158**, the controller **400** determines whether or not the picking operation is terminated. When determining that the picking operation is not terminated, the controller **400** returns the process to step **151** to acquire the next first image **21**. The controller **400** determines that the picking operation is terminated when an operation input is received from the user to terminate the picking operation, when a predetermined number of cell colonies **10** are picked, or when the above process is performed on all cell colonies **10**, for example.

This completes the image analysis process and the picking process using the first trained model **50**.

FIG. **13** shows an example in which the determination process is performed each time the first image **21** is acquired at each imaging position in the culture vessel **90** (hereinafter referred to as a sequential process). In this embodiment, unlike this, a plurality of first images **21** may be captured in advance at imaging positions in the culture vessel **90**, and the determination process may be collectively performed on cell colonies **10** appearing in each of the captured first images **21** (hereinafter referred to as a batch process). In the case of the batch process, after the determination result **35** of each cell colony **10** imaged in advance is obtained, it is determined whether or not each cell colony **10** is to be picked based on each determination result **35**.

FIG. **14** shows examples of criteria for determining whether or not the cell colony **10** corresponds to the picking target in step **155**. When the value (certainty) of the determination result **35** is larger than a preset threshold, for example, as a first determination criterion, the picking processing unit **123** determines that the cell colony **10** corresponds to the picking target. The threshold is input in advance by the user. The user sets a relatively high threshold when he/she wants to carefully select the cell colony **10** to be picked, and sets a relatively low threshold when he/she wants to pick as many cell colonies **10** as possible. The first determination criterion can be applied to both the sequential process and the batch process.

When the ranks of the values (certainties) of the determination results **35** of a plurality of cell colonies **10** are higher than a preset rank threshold, as a second determination criterion, the picking processing unit **123** determines that the cell colony **10** corresponds to the picking target. The second determination criterion can be applied to the batch process. That is, after the determination process is first performed on the plurality of (all) cell colonies **10** appearing in the plurality of first images **21** by the batch process, each cell colony **10** is ranked according to the determination

result **35**, and the top N cell colonies **10** having a high value of the determination result **35** are set as picking targets. The rank threshold N is input in advance by the user.

The picking process can be performed fully automatically by presetting the thresholds for the first determination criterion and the second determination criterion. In addition, when an input operation indicating that the cell colony **10** is to be picked is received, as a third determination criterion, the picking processing unit **123** determines that the cell colony **10** corresponds to the picking target. For example, the value (certainty) of the determination result **35** is displayed on the display **410** together with an image of the cell colony **10**, and the user is caused to input whether or not the displayed cell colony **10** is selected as the picking target via the input **420**. The user can determine whether or not the cell colony **10** is set as the picking target after confirming the cell colony **10** by himself/herself with reference to the numerical value of the determination result **35**.

## Advantages of this Embodiment

In this embodiment, the following advantages are obtained.

As described above, the cell image analysis method according to this embodiment includes step **71** of acquiring the first image **21** of the cell colony **10** including the cells having differentiation potential, step **72** of converting the first image **21** into the label image **21**A by performing the segmentation process to identify the colony region **12** of cells (undifferentiated deviant cells) that have already started differentiation and the colony region **11** of undifferentiated cells in the cell colony **10** in the first image **21**, step **73** of acquiring the shape feature amounts **25** of the cell colony **10** from the label image **21**A, step **74** of receiving the input regarding the colony region of a search target from the user using a computer, step **75** of setting the determination criteria **30** for the shape feature amounts **25** based on the user's input, and step **76** of determining whether or not each cell colony **10** includes the colony region that is a candidate for a search target based on the shape feature amounts **25** and the determination criteria **30**.

As described above, the cell image analyzer **100** according to this embodiment includes the storage **110** configured to allow the microscope image (first image **21**) of the cell colony **10** including the cells having differentiation potential to be input thereto, the segmentation processing unit **121** configured to convert the microscope image (first image **21**) into the label image **21**A by performing the segmentation process to identify the colony region **12** of cells that have already started differentiation and the colony region **11** of undifferentiated cells in the cell colony **10** in the microscope image, the input **140** configured to receive the input regarding the colony region of a search target, and the determination processing unit **122** configured to determine whether or not each cell colony **10** included in the microscope image includes the colony region that is a candidate for a search target, and the determination processing unit **122** is configured to acquire the shape feature amounts **25** of the cell colony **10** from the label image **21**A and determine the colony region based on the shape feature amounts **25** and the determination criteria **30** for the shape feature amounts **25** set based on the user's input.

According to the above configuration, among the colony region **12** of cells that have started differentiation and the colony region **11** of undifferentiated cells, the colony region that may be the picking target according to the purpose of culture, for example, can be identified from the image by the segmentation process. Furthermore, the determination result **35** as to whether or not each cell colony **10** in the image includes the colony region that is a candidate for a search target can be obtained based on the shape feature amounts **25** and the determination criteria **30** for the shape feature amounts **25** set based on the user's input. Consequently, in this embodiment, the cell colony **10** including the colony region that is likely to be determined by the user as the picking target can be determined and shown to the user, and thus it is no longer necessary for the user to observe and determine a large number of cell regions in the microscope image one by one. Thus, the load on the user associated with the search operation for cells to be picked in cell culture can be effectively reduced.

In the example of the above embodiment, with the following configurations, further advantages are obtained.

That is, the cell image analysis method according to the above embodiment includes step **83** of receiving the input of the selection information **40** as to whether or not the cell colony **10** in the second image **22** acquired in advance includes a desired colony region from the user and step **85** of setting the determination criteria **30** based on the received selection information **40**. With this configuration, the user inputs the user's own determination result for the cell colony **10** in the second image **22** as a sample such that the determination criteria **30** as to whether or not the cell colony **10** includes the "colony region that is a candidate for a search target" can be set. In this case, it is not necessary for the user to find optimum values for the thresholds of the shape feature amounts **25** and the weights of the plurality of shape feature amounts **25**, for example, which are the determination criteria **30**, and thus the workload on the user for setting the determination criteria **30** can be reduced.

In the cell image analysis method according to the above embodiment, step **75** of setting the determination criteria **30** includes creating the first trained model **50** that has acquired the determination criteria **30** for the shape feature amounts **25** by machine learning using the shape feature amounts **25** acquired from the label image **22**A of the second image **22** as input data and the selection information **40** as teaching data. Furthermore, step **76** of determining whether or not the cell colony **10** includes the colony region that is a candidate for a search target includes inputting the shape feature amounts **25** acquired from the label image **21**A of the first image **21** to the first trained model **50** to generate the determination result **35**. With this configuration, the user can obtain the first trained model **50** that has acquired the determination criteria **30** for the shape feature amounts **25** by machine learning simply by inputting the selection information **40**. Consequently, the determination result **35** generated by the first trained model **50** can be provided to the user. The colony region appearing in the first image **21** has various morphologies, and the user's preference (the tendency of selection of the picking target) is also various. Therefore, in practice, it is difficult to construct the determination criteria **30** to generate the determination result **35** according to the user's preference by a rule-based method that does not rely on machine learning. On the other hand, when a machine learning method is used, even construction of the determination criteria **30** for a plurality of combined shape feature amounts **25** can be easily performed as compared with the rule-based method. By learning using the selection information **40**, which is the result of the user's own determination, it is possible to easily provide the determination result **35** with high accuracy according to the user's preference.

In the cell image analysis method according to the above embodiment, step **83** of receiving the input of the selection information **40** includes allowing the user to specify the colony region in the second image **22** or the label image **22**A of the second image **22** or allowing the user to pick the colony region. With this configuration, the user can input the selection information **40** as a sample for setting the determination criteria **30** simply by specifying the colony region to determine the picking target for the cell picking device **300**. Therefore, it is not necessary to perform a special input operation to input the selection information **40**, and thus the workload on the user for setting the determination criteria **30** can be reduced.

In the cell image analysis method according to the above embodiment, the shape feature amounts **25** include the shape feature amount related to at least one of i) the entire region of the cell colony **10** included in the label image **21**A, ii) the colony region **11** of undifferentiated cells included in the cell colony **10**, or iii) the colony region **12** of undifferentiated deviant cells that have started differentiation included in the cell colony **10**. As a result of earnest studies, the inventor has found that even when the user himself/herself determines the picking target from the microscope image, the overall shape of the cell colony **10**, the shape of the colony region **11** of undifferentiated cells, and the shape of the colony region **12** of undifferentiated deviant cells greatly influence determination of the user. Therefore, such a shape feature amount **25** is used such that it is possible to easily and accurately determine whether or not the cell colony **10** includes the colony region that is a candidate for a search target.

In the cell image analysis method according to the above embodiment, the shape feature amounts **25** include at least one of i) the area of the region, ii) the contour length of the region, iii) the degree of circularity of the region, iv) the aspect ratio of the minimum circumscribed rectangle of the region, or v) the area ratio of the colony region **11** to the entire region of the cell colony **10**. With this configuration, it is possible to obtain a useful feature amount that characterizes the entire cell colony **10** or the colony region in order to determine whether or not the cell colony **10** includes the colony region that is a candidate for a search target.

In the cell image analysis method according to the above embodiment, step **72** of converting the first image **21** into the label image **21**A includes generating the label image **21**A by the second trained model **60** configured to assign the segmentation result labels to the colony regions (**11** and **12**), using the microscope image (input image **23**) of the cell colony **10** as input data. With this configuration, a highly accurate segmentation process can be performed by the second trained model **60** that has learned the morphologies of the various cell colonies **10**. As described above, the colony region **11** appearing in the microscope image has various morphologies, and it is difficult to achieve a segmentation process that can accurately identify the colony region **11** (an undifferentiated region and a deviant region) having various morphologies by a rule-based method that does not rely on machine learning. On the other hand, when a machine learning method is used, it is possible to cause a training model to learn even morphological features that are hardly defined by a rule, and it is possible to achieve a highly accurate segmentation process.

The cell image analysis method according to the above embodiment further includes step **156** of setting the picking coordinates **26** of the colony region **11** determined to be desired by the user based on the determination result **35** as to whether or not the cell colony **10** includes the colony region that is a candidate for a search target obtained in step **71** to step **76**, and step **157** of picking the cells at the picking coordinates **26** from the culture vessel **90**. With this configuration, it is possible to perform an automatic picking operation on the colony region determined to be the picking target based on the determination result **35** as well as providing the user with the determination result **35** as to whether or not the cell colony **10** includes the colony region that is a candidate for a search target. Consequently, that is, not only the picking target search operation but also the picking operation after the search can be automated or semi-automated, and thus the workload on the user in the entire picking operation related to cell culture can be effectively reduced.

## Modified Example

A modified example of the cell image analysis method is now described with reference to FIGS. **15** and **16**.

While the example in which the shape feature amounts **25** of the cell colony **10** are acquired from the segmented label image **21**A, and the determination process is performed based on the shape feature amounts **25** has been shown in the aforementioned embodiment, in the modified example shown in FIGS. **15** and **16**, a determination process is performed without using shape feature amounts **25** of a cell colony **10**. A cell image analysis method according to the modified example can be executed with the same hardware configuration as that of the above embodiment, and thus description of the hardware is omitted.

The cell image analysis method according to this modified example includes step **161** of creating a machine-trained model **55** for determination, step **162** of acquiring a first image **21** of a cell colony **10** including cells having differentiation potential, step **163** of converting the first image **21** into a label image **21**A by performing a segmentation process to identify a colony region **12** of cells that have already started differentiation and a colony region **11** of undifferentiated cells in the cell colony **10** in the first image **21**, and step **164** of determining whether or not each cell colony **10** includes a colony region that is a candidate for a search target by inputting the label image **21**A of the first image **21** to the trained model **55**.

Step **161** of creating the trained model **55** for determination includes step **166** of receiving an input of selection information **40** as to whether or not the cell colony **10** in a second image **22** acquired in advance includes a desired colony region and step **168** of creating the trained model **55** by machine learning using a label image **22**A obtained by segmenting the second image **22** as input data and the selection information **40** as teaching data.

Thus, the second image **22** is used as a sample to create the trained model **55** for determination. First, in step **165**, the second image **22** is acquired. In step **166**, the input of the selection information **40** is received. In step **167**, the segmentation process is performed on the second image **22**. Step **165** to step **167** are similar to step **81** to step **83** of FIG. **5**.

In the modified example, shape feature amounts **25** are not calculated unlike the example of FIG. **5**. In the modified example, as shown in FIG. **15**, the label image **22**A of the second image **22** is used as input data instead of the shape feature amounts **25**. The selection information **40** is used as teaching data. Therefore, in step **168**, a training model learns to determine (guess) whether or not the cell colony **10** is a positive example (includes the colony region that is a candidate for a search target) when the label image **21**A of the cell colony **10** of interest is given by machine learning

using the label image **21**A as input data and the selection information **40** as teaching data.

As a machine learning method, any method such as a convolutional neural network, a neural network, an SVM, or boosting can be used. From the viewpoint of the identification performance of a label region, it is preferable to use a convolutional neural network for the trained model **55** for determination according to the modified example.

When the training model tries to determine whether or not the cell colony **10** includes the colony region that is a candidate for a search target from a cell image, information contained in the image may be too diverse and a determination result **35** may hardly converge. However, when the label image **22**A by the segmentation process is used as an input image as in this modified example, the input image is segmented by label regions of three classes (at least two classes), and information on variations in brightness in the image due to a cell surface texture (pattern), illumination light, or extraneous light, for example, is removed. That is, it can be said that the label image **22**A is obtained by selectively extracting only information on the shape of the cell colony **10**. Consequently, in machine learning using the label image **22**A as an input image, it is possible to effectively learn to determine whether or not the cell colony **10** is a positive example based on the shape of the cell colony **10** in the image, similarly to the shape feature amounts **25** in the above embodiment.

When the trained model **55** for determination is created by machine learning using the second image **22**, preparations for cell image analysis for the first image **21** are completed.

As shown in FIG. **16**, in the cell image analysis using the trained model **55**, first, the first image **21** is acquired in step **162**, and the label image **21**A of the first image **21** is generated by the segmentation process on the first image **21** in step **163**. Step **162** and step **163** are similar to step **71** and step **72** shown in FIG. **2**.

In step **164**, the determination result **35** as to whether or not each cell colony **10** includes the colony region that is a candidate for a search target is generated by inputting the generated label image **21**A of the first image **21** to the trained model **55** for determination. In step **169**, the generated determination result **35** is output.

### Advantage of Cell Image Analysis Method According to Modified Example

According to this modified example, among the colony region **12** of cells that have started differentiation and the colony region **11** of undifferentiated cells, a colony region that may be a picking target according to the purpose of culture, for example, can be identified from the image by the segmentation process. Furthermore, the determination result **35** as to whether or not each cell colony **10** in the image includes the colony region that is a candidate for a search target can be obtained by the trained model **55** machine-trained using the selection information **40** as to whether or not the cell colony **10** includes the desired colony region. Consequently, according to the modified example, the cell colony **10** including the colony region that is likely to be determined by a user as the picking target can be determined and shown to the user, and thus it is no longer necessary for the user to observe and determine a large number of cell regions in a microscope image one by one. Thus, the load on the user associated with a search operation for cells to be picked in cell culture can be effectively reduced.

### Other Modified Examples

The embodiment disclosed this time must be considered as illustrative in all points and not restrictive. The scope of the present invention is not shown by the above description of the embodiment but by the scope of claims for patent, and all modifications (modified examples) within the meaning and scope equivalent to the scope of claims for patent are further included.

For example, while the example in which the cell colony **10** including the colony region **11** of undifferentiated cells is determined as the picking target for the picking operation for passaging in cell culture has been shown in the aforementioned embodiment, the present invention is not limited to this. As described above, the cell colony **10** including the colony region **12** of undifferentiated deviant cells may be determined as the picking target. That is, the determination process may be performed assuming that the colony region **12** of undifferentiated deviant cells is the colony region that is a candidate for a search target. The determination criteria **30** are different between the colony region **11** of undifferentiated cells and the colony region **12** of undifferentiated deviant cells, and thus the determination criteria **30** are set separately according to the purpose of picking. The selection information **40** input as teaching data in a case of the colony region **12** of undifferentiated deviant cells is different from that in a case of the colony region **11** of undifferentiated cells, and thus the first trained model **50** (trained model **55** for determination) is created separately. The storage **110** shown in FIG. **3** may separately store a first trained model **50** for passaging and a first trained model **50** for removing undifferentiated deviant cells, and switch the trained model used according to the user's purpose.

While the example in which the segmentation process of three classes of undifferentiated cells, undifferentiated deviant cells, and a background is performed has been shown in the aforementioned embodiment, the present invention is not limited to this. In the present invention, a segmentation process may be further performed to perform two-class classification into live cells and dead cells, for example. Alternatively, a segmentation process may be further performed to perform two-class classification into cells attached to a well and detached cells. According to this, for example, the cell colony **10** including the colony region that is a candidate for a search target can be determined from among cell colonies **10** including colony regions of "live cells" and "undifferentiated cells", and the cell colony **10** including the colony region that is a candidate for a search target can be determined from among cell colonies **10** including colony regions of "attached cells" and "undifferentiated cells". As yet another example, a class of "foreign matter" other than cells may be added, and the foreign matter mixed in the culture vessel **90** may be found and removed.

While the example in which the cell image analyzer **100** is communicably connected to the cell imager **200** has been shown in the aforementioned embodiment, the present invention is not limited to this. In the present invention, a portion or all of the process performed by the cell image analyzer **100** may be performed via a network.

For example, in a modified example shown in FIG. **17**, a cell image analyzer **100** at a remote location is configured as a server device connected to a cell imager **200** via a network **600**. A user uses the cell imager **200** to image a first image **21** and a second image **22**, and inputs selection information **40**. The cell imager **200** transmits the first image **21**, the second image **22**, and the selection information **40** to the cell image analyzer **100** via the network **600**. The cell image analyzer **100** performs a segmentation process to generate label images **21**A and **22**A. The cell image analyzer **100** creates a first trained model **50** using the generated label image **22**A and the received selection information **40**. The

cell image analyzer **100** inputs the label image **21**A of the first image **21** to the first trained model **50**, performs a determination process, and transmits a determination result **35** to the cell imager **200**. Thus, the user can acquire the determination result **35** for each cell colony **10** included in the first image **21** and perform a picking operation using the determination result **35**.

While the example in which the cell image analyzer **100** performs the segmentation process, creates the first trained model **50**, and performs the determination process has been shown in the aforementioned embodiment, the present invention is not limited to this. In the present invention, a portion of the process performed by the cell image analyzer **100** may be performed by another device.

For example, in a modified example shown in FIG. **18**, a data processor **610**, which is a server device at a remote location, is communicably connected to a determination processor **620** via a network **600**. A data processor **610** receives a microscope image (a first image **21** or second image **22**) from the determination processor **620**, which is a PC used by a user, and performs a segmentation process. The data processor **610** performs the segmentation process using a second trained model **60**, for example, and transmits a generated label image (**21**A or **22**A) to the determination processor **620**. The determination processor **620** creates a first trained model **50** by machine learning using the label image **22**A of the second image **22** received from the data processor **610** and selection information **40** received from the user. The determination processor **620** calculates shape feature amounts **25** of a cell colony **10** from the label image **21**A of the first image **21** received from the data processor **610**, and performs a determination process using the first trained model **50**. The determination processor **620** acquires a determination result **35** by inputting the shape feature amounts **25** to the first trained model **50**. The user can acquire the determination result **35** for each cell colony **10** included in the first image **21** and perform a picking operation using the determination result **35**.

Thus, the cell image analysis method according to the present invention may be executed in the form of a so-called cloud service, for example, by cooperation of a plurality of computers connected to the network.

While the example in which the area, the contour length, the degree of circularity, and the aspect ratio of the region of interest, the area ratio to the entire region of the cell colony, etc. are used as the shape feature amounts **25** has been shown in the aforementioned embodiment, the present invention is not limited to this. In the present invention, an amount other than the above may be used as the shape feature amount **25**.

While the example in which the determination process is performed using the first trained model **50** has been shown in the aforementioned embodiment, the present invention is not limited to this. As described above, the determination process may be performed using a rule-based method based on the determination criteria **30** such as the thresholds and the weights set according to the user's preference without using the machine learning method.

While the example in which the segmentation process is performed using the second trained model **60** has been shown in the aforementioned embodiment, the present invention is not limited to this. In the present invention, the segmentation process may be performed using a rule-based method using a threshold process or a feature extraction process on an image, for example, without using the machine learning method.

While the example in which the imager **230** of the cell imager **200** is provided in the optical microscope has been shown in FIG. **12**, the present invention is not limited to this. In the present invention, the cell imager **200** may be a dedicated device for capturing microscope images of cells, and may not have a function as an optical microscope. In the example shown in FIG. **12**, the cell imager **200** functions as an optical microscope, and thus the stage **450** is used as an electric stage. However, the cell imager **200** may include an imager **230** movable with respect to a fixed stage **450**.

Aspects

It will be appreciated by those skilled in the art that the exemplary embodiments described above are specific examples of the following aspects.

(Item 1)

A cell image analysis method comprising:

acquiring a first image of a cell colony including a cell having differentiation potential;

converting the first image into a label image by performing a segmentation process to identify a colony region of a cell that has already started differentiation and a colony region of an undifferentiated cell in the cell colony in the first image;

acquiring a shape feature amount of the cell colony from the label image;

receiving an input regarding a colony region of a search target from a user using a computer;

setting a determination criterion for the shape feature amount based on the user's input; and

determining whether or not the cell colony includes a colony region that is a candidate for the search target based on the shape feature amount and the determination criterion.

(Item 2)

The cell image analysis method according to item 1, wherein

the receiving of the input regarding the colony region of the search target includes receiving an input of selection information as to whether or not the cell colony in a second image acquired in advance includes a desired colony region from the user; and

the setting of the determination criterion includes setting the determination criterion based on the received selection information.

(Item 3)

The cell image analysis method according to item 2, wherein

the setting of the determination criterion includes creating a first trained model that has acquired the determination criterion for the shape feature amount by machine learning using the shape feature amount acquired from a label image of the second image as input data and the selection information as teaching data; and

the determining of whether or not the cell colony includes the colony region that is the candidate for the search target includes inputting the shape feature amount acquired from the label image of the first image to the first trained model to generate a determination result.

(Item 4)

The cell image analysis method according to item 2, wherein the receiving of the input of the selection information includes allowing the user to specify the colony region in the second image or a label image of the second image or allowing the user to pick the colony region.

(Item 5)

The cell image analysis method according to item 1, wherein the shape feature amount includes the shape feature amount related to at least one of i) an entire region of the cell colony included in the label image, ii) the colony region of

the undifferentiated cell included in the cell colony, or iii) the colony region of the cell that has started differentiation included in the cell colony.

(Item 6)

The cell image analysis method according to item 5, wherein the shape feature amount includes at least one of i) an area of a region, ii) a contour length of the region, iii) a degree of circularity of the region, iv) an aspect ratio of a minimum circumscribed rectangle of the region, or v) an area ratio of the colony region to the entire region of the cell colony.

(Item 7)

The cell image analysis method according to item 1, wherein the converting of the first image into the label image includes generating the label image by a second trained model configured to assign a segmentation result label to the colony region, using a microscope image of the cell colony as input data.

(Item 8)

A cell picking method utilizing the cell image analysis method according to item 1, comprising:

setting picking coordinates of the colony region determined to be desired by the user based on a determination result as to whether or not the cell colony includes the colony region that is the candidate for the search target; and

picking a cell at the picking coordinates from a culture vessel.

(Item 9)

A cell image analyzer comprising:

a storage configured to allow a microscope image of a cell colony including a cell having differentiation potential to be input thereto;

a segmentation processing unit configured to convert the microscope image into a label image by performing a segmentation process to identify a colony region of a cell that has already started differentiation and a colony region of an undifferentiated cell in the cell colony in the microscope image;

an input configured to receive an input regarding a colony region of a search target; and

a determination processing unit configured to determine whether or not the cell colony included in the microscope image includes the colony region that is a candidate for the search target; wherein

the determination processing unit is configured to acquire a shape feature amount of the cell colony from the label image and determine a colony region based on the shape feature amount and a determination criterion for the shape feature amount set based on a user's input.

(Item 10)

A cell image analysis method comprising:

creating a machine-trained model for determination; acquiring a first image of a cell colony including a cell having differentiation potential;

converting the first image into a label image by performing a segmentation process to identify a colony region of a cell that has already started differentiation and a colony region of an undifferentiated cell in the cell colony in the first image; and

determining whether or not the cell colony includes the colony region that is a candidate for a search target by inputting the label image of the first image to the trained model; wherein

the creating of the trained model includes:

receiving an input of selection information as to whether or not the cell colony in a second image acquired in advance includes a desired colony region; and

creating the trained model by machine learning using a label image obtained by segmenting the second image as input data and the selection information as teaching data.

What is claimed is:

**1**. A cell image analysis method comprising:

acquiring a first image of a cell colony including a cell having differentiation potential;

converting the first image into a label image by performing a segmentation process to identify a colony region of a cell that has already started differentiation and a colony region of an undifferentiated cell in the cell colony in the first image;

acquiring a numerical value of a shape feature which is a numerical value that expresses a shape of the cell colony in the label image from the label image;

receiving an input regarding a colony region of a search target from a user using a computer;

setting a determination criterion for the numerical value of the shape feature based on the user's input; and

determining whether or not the cell colony includes a colony region that is a candidate for the search target based on the numerical value of the shape feature and the determination criterion,

wherein in the receiving of the input regarding the colony region of the search target, an input is received, from the user, of selection information as to whether or not the cell colony in an image group of the cell colony including cells having differentiation potential includes a desired colony region as a target for picking which is an extraction operation of the cell,

wherein the setting of the determination criterion includes setting the determination criterion based on the received selection information,

wherein the setting of the determination criterion includes creating a first trained model that has acquired the determination criterion for the numerical value of the shape feature by machine learning using the numerical value of the shape feature acquired from the label image of the first image as input data and the selection information as teaching data, and

wherein the determining of whether or not the cell colony includes the colony region that is the candidate for the search target includes inputting the numerical value of the shape feature acquired from the label image of the first image to the first trained model to generate a determination result.

**2**. The cell image analysis method according to claim **1**, wherein the receiving of the input of the selection information includes allowing the user to specify the colony region in the first image or the label image of the first image or allowing the user to pick the colony region.

**3**. The cell image analysis method according to claim **1**, wherein the numerical value of the shape feature includes the numerical value of the shape feature related to at least one of i) an entire region of the cell colony included in the label image, ii) the colony region of the undifferentiated cell included in the cell colony, or iii) the colony region of the cell that has started differentiation included in the cell colony.

**4**. The cell image analysis method according to claim **3**, wherein the numerical value of the shape feature includes at least one of i) an area of a region, ii) a contour length of the

region, iii) a degree of circularity of the region, iv) an aspect ratio of a minimum circumscribed rectangle of the region, or v) an area ratio of the colony region to the entire region of the cell colony.

**5**. The cell image analysis method according to claim **1**, wherein the converting of the first image into the label image includes generating the label image by a second trained model configured to assign a segmentation result label to the colony region, using a microscope image of the cell colony as input data.

**6**. A cell picking method utilizing the cell image analysis method according to claim **1**, comprising:

setting picking coordinates of the colony region determined to be desired by the user based on a determination result as to whether or not the cell colony includes the colony region that is the candidate for the search target; and

picking a cell at the picking coordinates from a culture vessel.

**7**. A cell image analyzer comprising:

a storage configured to allow a microscope image of a cell colony including a cell having differentiation potential to be input thereto;

a processor configured to convert the microscope image into a label image by performing a segmentation process to identify a colony region of a cell that has already started differentiation and a colony region of an undifferentiated cell in the cell colony in the microscope image; and

an input configured to receive an input, from a user, regarding a colony region of a search target,

wherein the processor is further configured to determine whether or not the cell colony included in the microscope image includes the colony region that is a candidate for the search target,

wherein the processor is further configured to acquire a numerical value of a shape feature which is a numerical value that express a shape of the cell colony in the label image from the label image and determine a colony region based on the numerical value of the shape feature and a determination criterion for the numerical value of the shape feature set based on a user's input,

wherein the input is configured to receive an input, from the user, of selection information as to whether or not the cell colony in an image group of the cell colony including cells having differentiation potential includes a desired colony region as a target for picking which is an extraction operation of the cell,

wherein the processor is further configured to set the determination criterion based on the received selection information,

wherein the processor is further configured to create a first trained model that has acquired the determination criterion for the numerical value of the shape feature by machine learning using the numerical value of the shape feature acquired from the label image of the microscope image as input data and the selection information as teaching data, and

wherein the processor is further configured to input the numerical value of the shape feature acquired from the label image of the microscope image to the first trained model to generate a determination result, in determining whether or not the cell colony includes the colony region.

**8**. The cell image analysis method according to claim **1**, wherein

in the step of converting the first image into a label image, the first image is converted into the label image including a label region of the identified region among at least two label regions, the colony region of the undifferentiated cell and the colony region of the cell that has started differentiation,

in the step of determining whether or not the cell colony includes the colony region that is the candidate for the search target, for each of the cell colonies in the first image whether or not the colony regions that are candidates for the search target are included, based on the numerical values of the shape feature of the label regions obtained from the label image and the determination criterion input by the user by using the computer.

**9**. The cell image analysis method according to claim **1**, wherein

in the step of converting the first image into a label image, the first image is converted into the label image including a label region of the identified region among at least two label regions, the colony region of the undifferentiated cell and the colony region of the cell that has started differentiation, and

in the step of determining whether or not the cell colony includes the colony region that is the candidate for the search target, for each of the cell colonies in the first image whether or not the colony regions that are candidates for the search target are included, based on the numerical values of the shape feature of the label regions obtained from the label image and the determination criterion input by the user by using the computer.

* * * * *