US012389899B2

(12) **United States Patent**
Kocer et al.

(10) **Patent No.: US 12,389,899 B2**
(45) **Date of Patent: *Aug. 19, 2025**

(54) **LOCALIZED PRODUCT INJECTION SYSTEM AND METHODS FOR SAME**

(71) Applicant: **Raven Industries, Inc.**, Sioux Falls, SD (US)

(72) Inventors: **Jared Ernest Kocer**, Sioux Falls, SD (US); **Nicholas O. Michael**, Sioux Falls, SD (US); **John D. Preheim**, Beresford, SD (US); **Brent A. Driesen**, Alvord, IA (US)

(73) Assignee: **Raven Industries, Inc.**, Sioux Falls, SD (US)

(*) Notice: Subject to any disclaimer, the term of this patent is extended or adjusted under 35 U.S.C. 154(b) by 0 days.

This patent is subject to a terminal disclaimer.

(21) Appl. No.: **17/809,223**

(22) Filed: **Jun. 27, 2022**

(65) **Prior Publication Data**

US 2023/0049963 A1 Feb. 16, 2023

Related U.S. Application Data

(63) Continuation of application No. 16/476,016, filed as application No. PCT/US2018/012590 on Jan. 5, 2018.

(Continued)

(51) **Int. Cl.**
A01M 7/00 (2006.01)
B05B 1/20 (2006.01)

(Continued)

(52) **U.S. Cl.**
CPC ***A01M 7/0092*** (2013.01); ***A01M 7/0071*** (2013.01); ***B05B 1/20*** (2013.01);

(Continued)

(58) **Field of Classification Search**
CPC B05B 12/12; B05B 12/006; B05B 12/008; B05B 15/658; B05B 7/0408; B05B 7/12;

(Continued)

(56) **References Cited**

U.S. PATENT DOCUMENTS

1,582,986 A 5/1926 Frank
3,197,299 A * 7/1965 Stull B64D 1/18 504/319

(Continued)

FOREIGN PATENT DOCUMENTS

AU 725448 10/2000
AU 2004219715 9/2004

(Continued)

OTHER PUBLICATIONS

"U.S. Appl. No. 13/776,285, Amendment and Response under 37 C.F.R. Sec. 1.114 filed Apr. 27, 2015", 13 pgs.

(Continued)

Primary Examiner — Cody J Lieuwen
(74) *Attorney, Agent, or Firm* — Schwegman Lundberg & Woessner, P.A.

(57) **ABSTRACT**

A localized product injection system includes a composite boom tube having a carrier fluid passage within a tube body, and at least one injection product passage within the tube body isolated from the carrier fluid passage. A plurality of port stations are provided at locations along the tube body. Each of the port stations includes a carrier fluid outlet port and at least one injection product outlet port. A localized injection interface is coupled at a port station. The injection interface includes a carrier fluid input coupled with the carrier fluid outlet port, and at least one injection product input coupled with the at least one injection product outlet port. The injection interface includes at least one throttling element in communication with the at least one injection

(Continued)

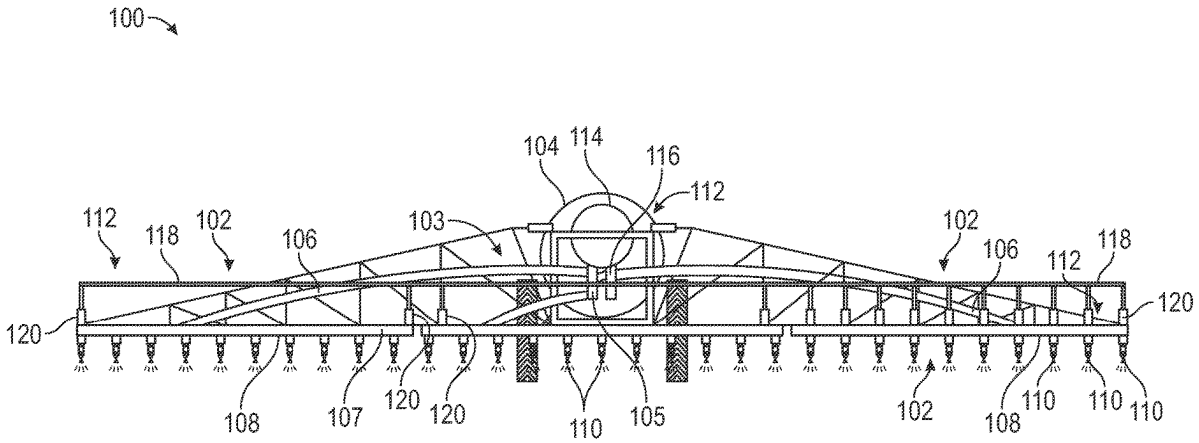

product input, a mixing chamber, and an injection port configured for localized coupling and injection to a product dispenser.

27 Claims, 23 Drawing Sheets

Related U.S. Application Data

(60) Provisional application No. 62/442,897, filed on Jan. 5, 2017.

(51) **Int. Cl.**

B05B 7/04	(2006.01)
B05B 7/12	(2006.01)
B05B 7/26	(2006.01)
B05B 12/12	(2006.01)
B05B 12/14	(2006.01)
B05B 15/658	(2018.01)

(52) **U.S. Cl.**
CPC ***B05B 7/0408*** (2013.01); ***B05B 7/12*** (2013.01); ***B05B 7/26*** (2013.01); ***B05B 12/12*** (2013.01); ***B05B 12/1436*** (2013.01); ***B05B 15/658*** (2018.02)

(58) **Field of Classification Search**
CPC B05B 7/2486; B05B 7/32; B05B 7/28; B05B 7/26; B05B 13/005; A01C 23/007
See application file for complete search history.

(56) **References Cited**

U.S. PATENT DOCUMENTS

3,770,198 A 11/1973 Mihara
3,955,795 A 5/1976 Neely
4,283,010 A 8/1981 Arzi et al.
4,356,528 A 10/1982 Coffee
4,398,605 A 8/1983 Conklin et al.
4,530,463 A 7/1985 Hiniker et al.
4,582,085 A 4/1986 Hafner et al.
4,632,358 A 12/1986 Orth et al.
4,803,626 A 2/1989 Bachman et al.
4,970,973 A 11/1990 Lyle et al.
5,134,961 A 8/1992 Giles et al.
5,285,814 A 2/1994 Pettersson et al.
5,310,113 A 5/1994 Cowgur
5,337,959 A 8/1994 Boyd
5,475,614 A 12/1995 Tofte et al.
5,479,812 A 1/1996 Juntunen et al.
5,496,100 A 3/1996 Schmid
5,503,366 A 4/1996 Zabeck et al.
5,520,333 A 5/1996 Tofte
5,615,836 A 4/1997 Graef
5,635,911 A 6/1997 Landers et al.
5,649,687 A 7/1997 Rosas et al.
5,653,389 A 8/1997 Henderson et al.
5,703,554 A 12/1997 Polgar et al.
5,704,546 A 1/1998 Henderson et al.
5,772,114 A 6/1998 Hunter
5,785,246 A 7/1998 King et al.
5,801,948 A 9/1998 Wood et al.
5,864,781 A 1/1999 White
5,881,919 A 3/1999 Womac et al.
5,883,383 A 3/1999 Dragne
5,884,205 A 3/1999 Elmore et al.
5,884,224 A 3/1999 McNabb et al.
5,897,600 A 4/1999 Elmore et al.
5,911,362 A 6/1999 Wood et al.
5,913,915 A 6/1999 McQuinn
5,919,242 A 7/1999 Greatline et al.
5,924,371 A 7/1999 Flamme et al.
5,931,882 A 8/1999 Fick et al.
5,936,234 A 8/1999 Thomas et al.
5,938,071 A 8/1999 Sauder
5,941,303 A 8/1999 Gowan et al.
5,967,066 A 10/1999 Giles et al.
5,969,340 A 10/1999 Dragne et al.
5,971,294 A 10/1999 Thompson et al.
5,978,723 A 11/1999 Hale et al.
6,009,354 A 12/1999 Flamme et al.
6,012,996 A 1/2000 Lo
6,029,907 A 2/2000 McKenzie
6,070,538 A 6/2000 Flamme et al.
6,070,539 A 6/2000 Flamme et al.
6,079,340 A 6/2000 Flamme et al.
6,086,042 A 7/2000 Scott et al.
6,089,743 A 7/2000 Mcquinn et al.
6,093,926 A 7/2000 Mertins et al.
6,112,999 A 9/2000 Fingleton et al.
6,122,581 A 9/2000 McQuinn
6,138,922 A 10/2000 Hartman et al.
6,145,455 A 11/2000 Gust et al.
6,149,071 A 11/2000 Maccallummhor et al.
6,189,466 B1 2/2001 Sinclair et al.
6,189,807 B1 2/2001 Miller et al.
6,196,473 B1 3/2001 Beeren et al.
6,199,000 B1 3/2001 Keller et al.
6,209,563 B1 4/2001 Seid et al.
6,216,614 B1 4/2001 Wollenhaupt
6,230,091 B1 5/2001 McQuinn et al.
6,236,924 B1 5/2001 Motz et al.
6,240,861 B1 6/2001 Memory
6,250,564 B1 6/2001 Chahley
6,269,757 B1 8/2001 Kiest
6,285,938 B1 9/2001 Lang et al.
6,305,583 B1 10/2001 Ward et al.
6,373,057 B1 4/2002 Penfold
6,486,761 B1 11/2002 Czarnetzki et al.
6,522,948 B1 2/2003 Benneweis
6,533,334 B1 3/2003 Bonn
6,584,920 B1 7/2003 Cresswell
6,598,944 B1 7/2003 Wolff et al.
6,606,542 B2 8/2003 Hauwiller et al.
6,661,514 B1 12/2003 Tevs et al.
6,666,384 B2 12/2003 Prandi
6,678,580 B2 1/2004 Benneweis
6,698,368 B2 3/2004 Cresswell
6,708,080 B2 3/2004 Benneweis
6,720,684 B2 4/2004 Czimmek
6,755,390 B2 6/2004 Masuda et al.
6,776,355 B2 8/2004 Ringer et al.
6,851,377 B2 2/2005 Mayerle et al.
6,853,276 B2 2/2005 Smith
6,877,675 B2 4/2005 Benneweis
6,877,717 B2 4/2005 Collins et al.
6,959,907 B2 11/2005 Hironaka
6,994,406 B1 2/2006 Krawczyk et al.
7,124,964 B2 10/2006 Bui
7,147,241 B2 12/2006 Beaujot et al.
7,152,540 B1 12/2006 Sauder et al.
7,156,322 B1 1/2007 Heitzman et al.
7,162,961 B2 1/2007 Grimm
7,195,027 B2 3/2007 Goossens et al.
7,243,899 B2 7/2007 Acar et al.
7,311,004 B2 12/2007 Giles
7,347,221 B2 3/2008 Berger et al.
7,395,769 B2 7/2008 Jensen
7,441,746 B2 10/2008 Sugiyama
7,472,660 B2 1/2009 Mariman et al.
7,478,603 B2 1/2009 Riewerts et al.
7,490,564 B2 2/2009 Allan et al.
7,502,665 B2 3/2009 Giles et al.
7,626,288 B2 12/2009 Protze
7,654,473 B2 2/2010 Hibberd
7,685,951 B2 3/2010 Beaujot et al.
7,690,440 B2 4/2010 Dean et al.
7,694,638 B1 4/2010 Riewerts et al.
7,706,926 B2 4/2010 Peterson
7,742,842 B2 6/2010 Giles et al.
7,789,321 B2 9/2010 Hitt
7,826,930 B2 11/2010 Giles et al.

(56) **References Cited**

U.S. PATENT DOCUMENTS

7,848,865 B2 12/2010 Di Federico et al.
7,917,249 B2 3/2011 Jacobsen et al.
7,954,731 B2 6/2011 Antonucci et al.
8,078,367 B2 12/2011 Sauder et al.
8,109,448 B2 2/2012 Giles
8,141,504 B2 3/2012 Dean et al.
8,170,825 B2 5/2012 Beaujot et al.
8,186,288 B2 5/2012 Chinkiwsky
8,191,795 B2 6/2012 Grimm et al.
8,191,798 B2 6/2012 Hahn et al.
8,196,534 B2 6/2012 Meyer et al.
8,246,004 B2 8/2012 Kratzer
8,401,704 B2 3/2013 Pollock et al.
8,488,874 B2 7/2013 Zaman et al.
8,523,085 B2 9/2013 Grimm et al.
8,590,859 B2 11/2013 Kurz
8,634,993 B2 1/2014 McClure
8,635,963 B2 1/2014 Friggstad
8,701,707 B2 4/2014 Moosmann et al.
8,733,257 B2 5/2014 Beaujot et al.
8,733,259 B2 5/2014 Beaujot
8,739,830 B2 6/2014 Bradbury et al.
8,825,310 B2 9/2014 Kowalchuk
8,844,838 B2 9/2014 Funseth et al.
8,868,300 B2 10/2014 Kocer et al.
8,915,200 B2 12/2014 Barsi et al.
8,919,676 B2 12/2014 Funseth et al.
9,052,031 B2 6/2015 Leidig
9,061,296 B2 6/2015 Peterson
9,073,070 B2 7/2015 Funseth et al.
9,080,684 B2 7/2015 Stahr
9,113,591 B2 8/2015 Shivak
9,144,190 B2 9/2015 Henry et al.
9,266,124 B2 2/2016 Humpal
9,453,585 B2 9/2016 Sato et al.
9,470,332 B2 10/2016 Miura
9,504,212 B2 11/2016 Michael et al.
9,506,578 B2 11/2016 Lee
9,635,848 B2 5/2017 Needham et al.
9,702,475 B2 7/2017 Scheffel et al.
9,781,916 B2 10/2017 Preheim et al.
9,894,829 B2 2/2018 Shivak
10,058,879 B2 8/2018 Needham
10,173,236 B2 1/2019 Preheim et al.
10,189,031 B2 1/2019 Funseth et al.
10,368,538 B2 8/2019 Preheim et al.
10,518,284 B2 12/2019 Thurow et al.
10,568,257 B2 2/2020 Shivak
10,799,898 B2 10/2020 Posselius et al.
10,821,460 B2 11/2020 Batcheller et al.
11,051,505 B2 7/2021 Humpal et al.
11,071,247 B2 7/2021 Shivak et al.
11,134,668 B2 10/2021 Preheim et al.
11,160,204 B2 11/2021 Michael
11,236,841 B2 2/2022 Krosschell et al.
11,944,030 B2 4/2024 Shivak et al.
12,016,326 B2 6/2024 Kocer et al.
12,029,214 B2 7/2024 Preheim et al.
12,055,234 B2 8/2024 Krosschell et al.
2002/0030119 A1 3/2002 Proharam
2002/0107609 A1 8/2002 Benneweis
2003/0028321 A1 2/2003 Upadhyaya et al.
2003/0070597 A1 4/2003 Cresswell
2003/0234301 A1 12/2003 Swan
2004/0036048 A1 2/2004 Petersen
2004/0104370 A1 6/2004 Suzuki
2004/0128045 A1 7/2004 Benneweis
2005/0000277 A1 1/2005 Giles
2005/0048196 A1 3/2005 Yanagita et al.
2005/0051749 A1 3/2005 Lee
2005/0076818 A1 4/2005 Grimm
2005/0092951 A1 5/2005 Groetzinger
2005/0125083 A1 6/2005 Kiko
2005/0173979 A1 8/2005 Voss
2006/0086295 A1 4/2006 Jensen
2006/0097210 A1 5/2006 Fong et al.
2006/0237562 A1 10/2006 Hedegard
2006/0265106 A1 11/2006 Giles et al.
2006/0273189 A1 12/2006 Grimm et al.
2007/0039880 A1 2/2007 Mayerle
2008/0110476 A1 5/2008 Amestoy et al.
2008/0114497 A1 5/2008 Giles et al.
2008/0114498 A1 5/2008 Giles
2008/0147282 A1 6/2008 Kormann
2008/0163807 A1 7/2008 Dean et al.
2008/0230624 A1 9/2008 Giles et al.
2008/0283633 A1 11/2008 Nozaki et al.
2008/0296398 A1 12/2008 Hickman et al.
2009/0078178 A1 3/2009 Beaujot
2009/0101371 A1 4/2009 Melanson et al.
2009/0112372 A1 4/2009 Peterson
2009/0114210 A1 5/2009 Guice et al.
2009/0134237 A1* 5/2009 Giles B01F 25/31242 239/8
2009/0184182 A1 7/2009 Beeren
2009/0271136 A1 10/2009 Beaujot et al.
2010/0032492 A1 2/2010 Grimm et al.
2010/0096476 A1 4/2010 Callies et al.
2010/0101469 A1 4/2010 Landphair et al.
2010/0132600 A1 6/2010 Dean et al.
2010/0163774 A1 7/2010 Rimboym et al.
2010/0269921 A1 10/2010 Pifer et al.
2011/0054743 A1 3/2011 Kocer et al.
2011/0160920 A1 6/2011 Orr et al.
2011/0179984 A1 7/2011 Beaujot et al.
2011/0204272 A1 8/2011 Kratzer
2011/0210186 A1 9/2011 Kugler et al.
2012/0045013 A1 2/2012 Chen et al.
2012/0080624 A1 4/2012 Stahr et al.
2012/0153051 A1 6/2012 Kah, Jr. et al.
2012/0168530 A1 7/2012 Ellingson et al.
2012/0169495 A1 7/2012 Kowalchuk
2012/0174843 A1 7/2012 Friggstad
2012/0195496 A1 8/2012 Zaman et al.
2012/0211508 A1 8/2012 Barsi et al.
2012/0216732 A1 8/2012 Ballard et al.
2012/0228395 A1 9/2012 Needham
2012/0241533 A1 9/2012 Moeller et al.
2012/0271467 A1 10/2012 Grimm et al.
2013/0032737 A1 2/2013 Neilson et al.
2013/0037633 A1 2/2013 Walter et al.
2013/0092746 A1 4/2013 Scott et al.
2013/0119154 A1 5/2013 Sawyer
2013/0192503 A1 8/2013 Henry et al.
2013/0269578 A1 10/2013 Grimm
2013/0292590 A1 11/2013 Stahr
2013/0306894 A1 11/2013 Weis et al.
2013/0320105 A1 12/2013 Schmidt
2013/0320106 A1 12/2013 Schmidt
2013/0333601 A1 12/2013 Shivak
2014/0014863 A1 1/2014 Najmolhoda et al.
2014/0026995 A1 1/2014 Mayr et al.
2014/0048002 A1 2/2014 Grimm et al.
2014/0084196 A1 3/2014 Heyer et al.
2014/0091243 A1 4/2014 Leidig
2014/0216315 A1 8/2014 Beaujot et al.
2014/0263705 A1 9/2014 Michael et al.
2014/0263708 A1 9/2014 Thompson et al.
2014/0263709 A1 9/2014 Kocer et al.
2014/0277780 A1 9/2014 Jensen et al.
2014/0299673 A1 10/2014 Grimm et al.
2014/0312141 A1 10/2014 Ravishankar
2014/0333398 A1 11/2014 Nila et al.
2014/0361094 A1* 12/2014 Michael A01C 23/042 239/727
2015/0115058 A1 4/2015 Wilger
2015/0257331 A1 9/2015 Shivak
2015/0336116 A1 11/2015 Gerdes
2015/0367352 A1 12/2015 Burchardt
2015/0367357 A1 12/2015 Humpal et al.
2015/0367358 A1 12/2015 Funseth et al.
2015/0375247 A1* 12/2015 Funseth B05B 1/20 239/69
2016/0015020 A1 1/2016 Needham et al.

(56) **References Cited**

U.S. PATENT DOCUMENTS

2016/0017792	A1	1/2016	Fletcher et al.
2016/0044862	A1	2/2016	Kocer et al.
2016/0084382	A1	3/2016	Pisasale
2016/0136671	A1	5/2016	Kocer
2016/0175869	A1	6/2016	Sullivan et al.
2016/0178422	A1	6/2016	Humpal et al.
2016/0227755	A1	8/2016	Preheim et al.
2016/0251008	A1	9/2016	Jeon et al.
2017/0018345	A1	1/2017	Raff et al.
2017/0050206	A1*	2/2017	Bullock F16L 41/12
2017/0079200	A1*	3/2017	Posselius B05B 12/1418
2017/0095834	A1	4/2017	Kinard
2017/0120263	A1	5/2017	Needham
2017/0251656	A1	9/2017	Kolb et al.
2017/0284285	A1	10/2017	Lenk et al.
2017/0314580	A1	11/2017	Steensma et al.
2017/0348718	A1	12/2017	Preheim et al.
2018/0042214	A1	2/2018	Preheim et al.
2018/0111148	A1	4/2018	Batcheller et al.
2018/0288934	A1	10/2018	Shivak
2019/0029170	A1	1/2019	Wilger
2019/0040972	A1	2/2019	Schrader
2019/0047694	A1	2/2019	Zivan et al.
2019/0321844	A1	10/2019	Schrader et al.
2019/0350187	A1	11/2019	Kocer et al.
2019/0373880	A1	12/2019	Kocer et al.
2020/0037519	A1	2/2020	Wonderlich et al.
2020/0101480	A1	4/2020	Schrader et al.
2020/0107538	A1	4/2020	Preheim et al.
2020/0113170	A1	4/2020	Davis et al.
2020/0113171	A1	4/2020	Davis et al.
2020/0214193	A1	7/2020	Shivak
2020/0253111	A1	8/2020	Schlipf et al.
2021/0076977	A1	3/2021	Abeyratne et al.
2021/0102637	A1	4/2021	Krosschell et al.
2021/0144906	A1	5/2021	Shivak et al.
2021/0176977	A1	6/2021	Bremer et al.
2021/0219538	A1	7/2021	Krosschell et al.
2021/0289693	A1	9/2021	Harmon et al.
2021/0400946	A1	12/2021	Burgers et al.
2022/0062934	A1	3/2022	Ferren et al.
2022/0079132	A1	3/2022	Preheim et al.
2022/0088627	A1	3/2022	Chaim et al.
2022/0099213	A1	3/2022	Krosschell et al.
2022/0104427	A1	4/2022	Michael
2023/0141050	A1	5/2023	Sibley et al.
2024/0307911	A1	9/2024	Kocer et al.
2024/0324580	A1	10/2024	Preheim et al.
2024/0418289	A1	12/2024	Krosschell et al.
2024/0424506	A1	12/2024	Kocer

FOREIGN PATENT DOCUMENTS

AU	2005247004		12/2006
AU	2006202376	B2	12/2006
AU	2009203181	A1	2/2010
AU	2012201357	A1	9/2012
AU	2013203361	A1	10/2013
AU	2013204455	A1	3/2014
AU	2013248190		5/2014
AU	2013277513	B2	3/2017
AU	2017285727	B2	7/2020
AU	2020357581	A1	5/2022
AU	2020357581		8/2023
AU	2021209314		8/2023
AU	2023214344		8/2023
CA	2229852	A1	8/1998
CA	2517031	A1	9/2004
CA	2528708	A1	11/2006
CA	2549300	A1	12/2006
CA	2674527	A1	2/2010
CA	2770013	A1	9/2012
CA	2811726	A1	10/2013
CA	2813949	A1	2/2014
CA	2830306		4/2014
CA	2926448	A1	4/2015
CA	2926448	C	9/2020
CN	102435019	A	5/2012
CN	202255911	U	5/2012
CN	102266829	B	12/2012
CN	203264929	U	11/2013
DE	102011053182		3/2013
DE	112017003084	T5	6/2019
EP	0086029	A1	8/1983
EP	0576121	B1	3/1996
EP	969712		1/2000
EP	0961659		10/2002
EP	0963255	B1	10/2002
EP	0847307	B2	1/2003
EP	0837735	B1	2/2004
EP	1426112	B1	6/2011
EP	2249876	B1	8/2012
EP	3530115	A1	8/2019
FR	2964047	A1	3/2012
GB	990346	A	4/1965
GB	2322573	A	9/1998
JP	2759711	B2	5/1998
JP	2000139245	A	5/2000
JP	2005161221	A	6/2005
JP	2010127694	A	6/2010
SU	1285443	A1	1/1987
WO	WO-9712688	A1	4/1997
WO	WO-WO1997012688	A1	4/1997
WO	WO-98037751		9/1998
WO	WO-9842178	A1	10/1998
WO	WO-9916007	A1	4/1999
WO	WO-1999016007	A1	4/1999
WO	WO-2004023865		3/2004
WO	WO-2004081499		9/2004
WO	WO-2005048704	A2	6/2005
WO	WO-2005090979	A1	9/2005
WO	WO-2008059984	A1	5/2008
WO	WO-2008112930	A1	9/2008
WO	WO-2010105221	A1	9/2010
WO	WO-2012022903	A1	2/2012
WO	2013001948		1/2013
WO	WO-2013135430	A1	9/2013
WO	WO-2013191990	A2	12/2013
WO	WO-2013191990	A3	12/2013
WO	WO-2014201008	A1	12/2014
WO	WO-2014210043	A1	12/2014
WO	WO-2015058091	A1	4/2015
WO	WO-2016145081	A2	9/2016
WO	WO-2016145081	A3 *	11/2016 ..... A01C 23/042
WO	WO-2017124175	A1	7/2017
WO	WO-2017192625	A1	11/2017
WO	WO-2017223252	A1	12/2017
WO	WO-2018129323	A1	7/2018
WO	WO-2018129376	A2	7/2018
WO	WO-2018129376	A3	7/2018
WO	WO-2021066962	A1	4/2021
WO	WO-2021263024	A1	12/2021
WO	2022094138		5/2022
WO	2023278009		1/2023
WO	WO-2024192167	A1	9/2024
WO	2024263873		12/2024

OTHER PUBLICATIONS

"U.S. Appl. No. 13/776,285, Non Final Office Action mailed Jul. 30, 2014", 15 pgs.
"U.S. Appl. No. 13/776,285, Notice of Allowance mailed Jan. 27, 2015", 5 pgs.
"U.S. Appl. No. 13/776,285, Notice of Allowance mailed May 4, 2015", 6 pgs.
"U.S. Appl. No. 13/776,285, Response filed Dec. 30, 2014 to Non Final Office Action mailed Jul. 30, 2014", 25 pgs.
"U.S. Appl. No. 13/832,678, Advisory Action mailed Jun. 3, 2016", 3 pgs.
"U.S. Appl. No. 13/832,678, Final Office Action mailed Mar. 17, 2016", 12 pgs.
"U.S. Appl. No. 13/832,678, Non Final Office Action mailed Oct. 1, 2015", 15 pgs.

(56) **References Cited**

OTHER PUBLICATIONS

"U.S. Appl. No. 13/832,678, Notice of Allowance mailed Jul. 20, 2016", 13 pgs.
"U.S. Appl. No. 13/832,678, Response filed May 12, 2016 to Final Office Action mailed Mar. 17, 2016", 10 pgs.
"U.S. Appl. No. 13/832,678, Response filed Jul. 27, 2015 to Restriction Requirement mailed Jun. 9, 2015", 7 pgs.
"U.S. Appl. No. 13/832,678, Response filed Dec. 31, 2015 to Non Final Office Action mailed Oct. 1, 2015", 10 pgs.
"U.S. Appl. No. 13/832,678, Restriction Requirement mailed Jun. 9, 2015", 7 pgs.
"U.S. Appl. No. 14/300,761, Advisory Action mailed Dec. 12, 2017", 3 pgs.
"U.S. Appl. No. 14/300,761, Examiner Interview Summary mailed Nov. 22, 2017", 3 pgs.
"U.S. Appl. No. 14/300,761, Final Office Action mailed Aug. 31, 2017", 11 pgs.
"U.S. Appl. No. 14/300,761, Final Office Action mailed Nov. 27, 2018", 16 pgs.
"U.S. Appl. No. 14/300,761, Final Office Action mailed Dec. 18, 2020", 14 pgs.
"U.S. Appl. No. 14/300,761, Non Final Office Action mailed Feb. 8, 2017", 13 pgs.
"U.S. Appl. No. 14/300,761, Non Final Office Action mailed Apr. 15, 2020", 17 pgs.
"U.S. Appl. No. 14/300,761, Non Final Office Action mailed May 24, 2018", 16 pgs.
"U.S. Appl. No. 14/300,761, Notice of Allowance mailed May 7, 2021", 16 pgs.
"U.S. Appl. No. 14/300,761, Notice of Allowance mailed Sep. 9, 2021", 16 pgs.
"U.S. Appl. No. 14/300,761, Response filed Apr. 19, 2021 to Final Office Action mailed Dec. 18, 2020", 19 pgs.
"U.S. Appl. No. 14/300,761, Response filed Jun. 7, 2017 to Non Final Office Action mailed Feb. 8, 2017", 16 pgs.
"U.S. Appl. No. 14/300,761, Response filed Oct. 15, 2020 to Non Final Office Action mailed Apr. 15, 2020", 17 pgs.
"U.S. Appl. No. 14/300,761, Response filed Oct. 24, 2018 to Non Final Office Action mailed May 24, 2018", 22 pgs.
"U.S. Appl. No. 14/300,761, Response filed Nov. 29, 2019 to Final Office Action mailed Nov. 27, 2018", 21 pgs.
"U.S. Appl. No. 14/300,761, Response filed Dec. 20, 2016 to Restriction Requirement mailed Oct. 20, 2016", 15 pgs.
"U.S. Appl. No. 14/300,761, Resposne filed Nov. 16, 2017 to Final Office Action mailed Aug. 31, 2017", 16 pgs.
"U.S. Appl. No. 14/300,761, Restriction Requirement mailed Oct. 20, 2016", (9 pgs).
"U.S. Appl. No. 14/727,535, Corrected Notice of Allowance mailed Jan. 12, 2018", 2 pgs.
"U.S. Appl. No. 14/727,535, Final Office Action mailed Jun. 21, 2017", 6 pgs.
"U.S. Appl. No. 14/727,535, Non Final Office Action mailed Feb. 16, 2017", 17 pgs.
"U.S. Appl. No. 14/727,535, Notice of Allowance mailed Aug. 24, 2017", 5 pgs.
"U.S. Appl. No. 14/727,535, Preliminary Amendment filed Jun. 2, 2015", 9 pgs.
"U.S. Appl. No. 14/727,535, Response filed Jan. 17, 2017 to Restriction Requirement mailed Nov. 17, 2016", 12 pgs.
"U.S. Appl. No. 14/727,535, Response filed May 6, 2017 to Non Final Office Action mailed Feb. 16, 2017", 18 pgs.
"U.S. Appl. No. 14/727,535, Response filed Aug. 14, 2017 to Final Office Action mailed Jun. 21, 2017", 9 pgs.
"U.S. Appl. No. 14/727,535, Restriction Requirement mailed Nov. 17, 2016", 6 pgs.
"U.S. Appl. No. 14/899,946, Final Office Action mailed Dec. 28, 2018", 41 pgs.
"U.S. Appl. No. 14/899,946, Non Final Office Action mailed Mar. 26, 2018", 37 pgs.
"U.S. Appl. No. 14/899,946, Response filed Aug. 27, 2018 to Non Final Office Action mailed Mar. 26, 2018", 27 pgs.
"U.S. Appl. No. 15/029,935, Final Office Action mailed Jul. 11, 2017", 6 pgs.
"U.S. Appl. No. 15/029,935, Non Final Office Action mailed Mar. 30, 2017", 21 pgs.
"U.S. Appl. No. 15/029,935, Notice of Allowance mailed Aug. 29, 2017", 5 pgs.
"U.S. Appl. No. 15/029,935, Preliminary Amendment filed Apr. 15, 2016", 3 pgs.
"U.S. Appl. No. 15/029,935, Reponse filed Aug. 16, 2017 to Final Office Action mailed Jul. 11, 2017", 11 pgs.
"U.S. Appl. No. 15/029,935, Response filed Jun. 15, 2017 to Non Final Office Action mailed Mar. 30, 2017", 12 pgs.
"U.S. Appl. No. 15/585,034, Non Final Office Action mailed Nov. 2, 2018", 25 pgs.
"U.S. Appl. No. 15/629,696, Corrected Notice of Allowability mailed Aug. 29, 2018", 4 pgs.
"U.S. Appl. No. 15/629,696, Corrected Notice of Allowability mailed Dec. 7, 2018", 2 pgs.
"U.S. Appl. No. 15/629,696, Ex Parte Quayle Action mailed May 3, 2018", 12 pgs.
"U.S. Appl. No. 15/629,696, Response filed Jul. 3, 2018 to Ex Parte Quayle Action mailed May 3, 2018", 13 pgs.
"U.S. Appl. No. 15/629,696, Response to Examiner's Reasons for Allowance filed Nov. 13, 2018", 2 pgs.
"U.S. Appl. No. 15/703,818, Corrected Notice of Allowability mailed Jul. 8, 2019", 2 pgs.
"U.S. Appl. No. 15/703,818, Non Final Office Action mailed Oct. 11, 2018", 6 pgs.
"U.S. Appl. No. 15/703,818, Notice of Allowance mailed Mar. 20, 2019", 5 pgs.
"U.S. Appl. No. 15/703,818, Preliminary Amendment filed Nov. 3, 2017", 6 pgs.
"U.S. Appl. No. 15/703,8181, Response filed Jan. 11, 2019 to Non Final Office Action mailed Oct. 11, 2018", 9 pgs.
"U.S. Appl. No. 15/821,113, Corrected Notice of Allowability mailed Jan. 2, 2020", 2 pgs.
"U.S. Appl. No. 15/821,113, Corrected Notice of Allowability mailed Jan. 28, 2020", 2 pgs.
"U.S. Appl. No. 15/821,113, Ex Parte Quayle Action mailed Aug. 9, 2019", 4 pgs.
"U.S. Appl. No. 15/821,113, Notice of Allowance mailed Sep. 27, 2019", 5 pgs.
"U.S. Appl. No. 15/821,113, Notice of Allowance mailed Oct. 22, 2019", 5 pgs.
"U.S. Appl. No. 15/821,113, Notice of Non-Compliant Amendment mailed Jun. 11, 2019", 4 pgs.
"U.S. Appl. No. 15/821,113, Preliminary Amendment filed Jun. 28, 2018", 7 pgs.
"U.S. Appl. No. 15/821,113, Response filed Apr. 29, 2019 to Restriction Requirement mailed Nov. 30, 2018", 10 pgs.
"U.S. Appl. No. 15/821,113, Response filed Jul. 11, 2019 to Notice of Non-Compliant Amendment mailed Jun. 11, 2019", 12 pgs.
"U.S. Appl. No. 15/821,113, Response filed Sep. 9, 2019 to Ex Parte Quayle Action mailed Aug. 9, 2019", 3 pgs.
"U.S. Appl. No. 15/821,113, Restriction Requirement mailed Nov. 30, 2018", 6 pgs.
"U.S. Appl. No. 16/447,779, Corrected Notice of Allowability mailed May 26, 2021", 2 pgs.
"U.S. Appl. No. 16/447,779, Corrected Notice of Allowability mailed Sep. 9, 2021", 2 pgs.
"U.S. Appl. No. 16/447,779, Non Final Office Action mailed Jan. 12, 2021", 9 pgs.
"U.S. Appl. No. 16/447,779, Notice of Allowance mailed May 20, 2021", 5 pgs.
"U.S. Appl. No. 16/447,779, Preliminary Amendment filed Dec. 30, 2019", 4 pgs.
"U.S. Appl. No. 16/447,779, Response filed Apr. 12, 2021 to Non Final Office Action mailed Jan. 12, 2021", 7 pgs.
"U.S. Appl. No. 16/476,016, Examiner Interview Summary mailed Apr. 15, 2022", 2 pgs.

(56) **References Cited**

OTHER PUBLICATIONS

"U.S. Appl. No. 16/476,016, Final Office Action mailed Jan. 11, 2022", 15 pgs.
"U.S. Appl. No. 16/476,016, Non Final Office Action mailed Jun. 24, 2022", 15 pgs.
"U.S. Appl. No. 16/476,016, Non Final Office Action mailed Aug. 31, 2021", 14 pgs.
"U.S. Appl. No. 16/476,016, Preliminary Amendment filed Jul. 3, 2019", 12 pgs.
"U.S. Appl. No. 16/476,016, Response filed Apr. 11, 2022 to Final Office Action mailed Jan. 11, 2022", 18 pgs.
"U.S. Appl. No. 16/476,016, Response filed Jul. 28, 2021 to Restriction Requirement mailed Apr. 30, 2021", 12 pgs.
"U.S. Appl. No. 16/476,016, Response filed Nov. 29, 2021 to Non Final Office Action mailed Aug. 31, 2021", 19 pgs.
"U.S. Appl. No. 16/476,016, Restriction Requirement mailed Apr. 30, 2021", 8 pgs.
"U.S. Appl. No. 16/731,325, Corrected Notice of Allowability mailed Jun. 15, 2021", 2 pgs.
"U.S. Appl. No. 16/731,325, Ex Parte Quayle Action mailed Oct. 22, 2020", 5 pgs.
"U.S. Appl. No. 16/731,325, Examiner Interview Summary mailed Oct. 23, 2020", 2 pgs.
"U.S. Appl. No. 16/731,325, Notice of Allowance mailed Feb. 18, 2021", 8 pgs.
"U.S. Appl. No. 16/731,325, Notice of Allowance mailed Mar. 23, 2021", 5 pgs.
"U.S. Appl. No. 16/731,325, Notice of Allowance mailed Dec. 7, 2020", 5 pgs.
"U.S. Appl. No. 16/731,325, Preliminary Amendment filed Mar. 24, 2020", 8 pgs.
"U.S. Appl. No. 16/731,325, Response filed Nov. 20, 2020 to Ex Parte Quayle Action mailed Oct. 22, 2020", 10 pgs.
"U.S. Appl. No. 17/001,539, 312 Amendment filed Oct. 5, 2021", 3 pgs.
"U.S. Appl. No. 17/001,539, Notice of Allowance mailed Jun. 3, 2021", 12 pgs.
"U.S. Appl. No. 17/001,539, Notice of Allowance mailed Sep. 15, 2021", 11 pgs.
"U.S. Appl. No. 17/001,539, Supplemental Notice of Allowability mailed Dec. 23, 2021", 4 pgs.
"U.S. Appl. No. 17/161,453, Preliminary Amendment filed Jan. 28, 2021", 8 pgs.
"U.S. Appl. No. 17/410,852, Preliminary Amendment filed Dec. 10, 2021", 8 pgs.
"U.S. Appl. No. 17/465,644, Preliminary Amendment filed Dec. 17, 2021", 11 pgs.
"U.S. Appl. No. 17/504,601, Preliminary Amendment filed Dec. 22, 2021", 7 pgs.
"Application Serial No. PCT/US2014/061150, International Preliminary Report on Patentability mailed Oct. 16, 2015", 10 pgs.
"U.S. Appl. No. 15/629,696, Notice of Allowance mailed Aug. 13, 2018", 5 pgs.
"Australian Application Serial No. 2013277513, First Examiners Report mailed Jul. 26, 2016", 3 pgs.
"Australian Application Serial No. 2013277513, Notice of Acceptance mailed Nov. 8, 2016", 2 pgs.
"Australian Application Serial No. 2013277513, Response filed Oct. 28, 2016 to First Examiners Report mailed Jul. 26, 2016", 20 pgs.
"Australian Application Serial No. 2014278310, First Examiners Report mailed on Jul. 28, 2017", 5 pgs.
"Australian Application Serial No. 2017285727, First Examination Report mailed May 21, 2019", 2 pgs.
"Australian Application Serial No. 2018205225, First Examination Report mailed Apr. 15, 2020", 8 pgs.
"Australian Application Serial No. 2018205225, Response filed Jan. 19, 2021 to First Examination Report mailed Apr. 15, 2020", 14 pgs.
"Australian Application Serial No. 2018205225, Response filed Apr. 13, 2021 to Subsequent Examiners Report mailed Feb. 11, 2021", 24 pgs.
"Australian Application Serial No. 2018205225, Subsequent Examiners Report mailed Feb. 11, 2021", 6 pgs.
"Brazilian Application Serial No. 1120160085175, Office Action mailed Nov. 6, 2018", (w/ English Translation), 6 pgs.
"Canadian Application Serial No. 2,877,195, Office Action mailed Jun. 18, 2019", 3 pgs.
"Canadian Application Serial No. 2,877,195, Office Action mailed Dec. 9, 2020", 3 pgs.
"Canadian Application Serial No. 2,877,195, Response filed Apr. 8, 2021 to Office Action mailed Dec. 9, 2020", 16 pgs.
"Canadian Application Serial No. 2,877,195, Response filed Dec. 18, 2019 to Office Action mailed Jun. 18, 2019", 10 pgs.
"Canadian Application Serial No. 2,877,195, Voluntary Amendment filed Nov. 16, 2020", 13 pgs.
"Canadian Application Serial No. 2,926,448, Examiner's Rule 30(2) Requisition mailed Oct. 3, 2018", 3 pgs.
"Canadian Application Serial No. 2,926,448, Office Action mailed Jan. 5, 2018", 5 pgs.
"Canadian Application Serial No. 2,926,448, Response filed Mar. 19, 2019 to Examiner's Rule 30(2) Requisition mailed Oct. 3, 2018", 7 pgs.
"Canadian Application Serial No. 2,926,448, Response filed Jun. 26, 2018 to Office Action mailed Jan. 5, 2018", 19 pgs.
"Canadian Application Serial No. 3,049,391, Office Action mailed Sep. 4, 2020", 4 pgs.
"Canadian Application Serial No. 3,049,391, Office Action mailed Dec. 1, 2021", 4 pgs.
"Canadian Application Serial No. 3,049,391, Response filed Mar. 3, 2021 to Office Action mailed Sep. 4, 2020", 11 pgs.
"Canadian Application Serial No. 3,049,391, Response filed Mar. 15, 2022 to Office Action mailed Dec. 1, 2021", 8 pgs.
"European Application Serial No. 13807150.1, Communication Pursuant to Article 94(3) EPC mailed Nov. 8, 2017", 5 pgs.
"European Application Serial No. 13807150.1, Extended European Search Report mailed Jan. 8, 2016", 8 pgs.
"European Application Serial No. 13807150.1, Office Action mailed Jan. 26, 2016", 1 pg.
"European Application Serial No. 13807150.1, Office Action mailed Feb. 3, 2015", 3 pgs.
"European Application Serial No. 13807150.1, Response filed Aug. 3, 2015 to Office Action mailed Feb. 3, 2015", 10 pgs.
"European Application Serial No. 13807150.1, Response filed Aug. 5, 2016 to Office Action mailed Jan. 26, 2016", 14 pgs.
"European Application Serial No. 18736496.3, Extended European Search Report mailed Sep. 15, 2020", 9 pgs.
"European Application Serial No. 18736496.3, Response filed Apr. 12, 2021 to Extended European Search Report mailed Sep. 15, 2020", 31 pgs.
"European Application Serial No. 18736496.3, Response to Communication Pursuant to Rules 161(2) and 162 EPC filed Feb. 28, 2020", 14 pgs.
"International Application Serial No. PCT/US2013/045445, International Preliminary Report on Patentability mailed Dec. 31, 2014", 7 pgs.
"International Application Serial No. PCT/US2013/045445, International Search Report mailed Nov. 27, 2013", 3 pgs.
"International Application Serial No. PCT/US2013/045445, Written Opinion mailed Nov. 27, 2013", 9 pgs.
"International Application Serial No. PCT/US2014/041717, International Preliminary Report on Patentability mailed May 6, 2015", 11 pgs.
"International Application Serial No. PCT/US2014/041717, International Search Report mailed Oct. 15, 2014", 2 pgs.
"International Application Serial No. PCT/US2014/041717, Response and Amendment filed Apr. 5, 2015 to Written Opinion mailed Oct. 15, 2014", 15 pgs.
"International Application Serial No. PCT/US2014/041717, Written Opinion mailed Oct. 15, 2014", 7 pgs.
"International Application Serial No. PCT/US2014/043926, International Preliminary Report on Patentability Jan. 7, 2016", 11 pgs.

(56) **References Cited**

OTHER PUBLICATIONS

"International Application Serial No. PCT/US2014/043926, International Search Report mailed Nov. 3, 2014", 2 pgs.
"International Application Serial No. PCT/US2014/043926, Written Opinion mailed Nov. 3, 2014", 9 pgs.
"International Application Serial No. PCT/US2014/061150, International Search Report mailed Feb. 4, 2015", 2 pgs.
"International Application Serial No. PCT/US2014/061150, Written Opinion mailed Feb. 4, 2015", 7 pgs.
"International Application Serial No. PCT/US2017/030694, International Preliminary Report on Patentability mailed May 29, 2018", 23 pgs.
"International Application Serial No. PCT/US2017/030694, International Search Report mailed Aug. 1, 2017", 3 pgs.
"International Application Serial No. PCT/US2017/030694, Response filed Mar. 2, 2018 to Written Opinion mailed Aug. 1, 2017", 4 pgs.
"International Application Serial No. PCT/US2017/030694, Written Opinion mailed Aug. 1, 2017", 8 pgs.
"International Application Serial No. PCT/US2017/038622, International Preliminary Report on Patentability mailed Jan. 3, 2019", 7 pgs.
"International Application Serial No. PCT/US2017/038622, International Search Report mailed Sep. 28, 2017", 2 pgs.
"International Application Serial No. PCT/US2017/038622, Written Opinion mailed Sep. 29, 2017", 5 pgs.
"International Application Serial No. PCT/US2018/012590, International Preliminary Report on Patentability mailed Jul. 18, 2019", 15 pgs.
"International Application Serial No. PCT/US2018/012590, International Search Report mailed Apr. 13, 2018", 4 pgs.
"International Application Serial No. PCT/US2018/012590, Invitation to Pay Additional Fees and Partial Search Report mailed Feb. 21, 2018", 2 pgs.
"International Application Serial No. PCT/US2018/012590, Written Opinion mailed Apr. 13, 2018", 13 pgs.
"International Application Serial No. PCT/US2018/012661, International Search Report mailed Jun. 21, 2018", 4 pgs.
"International Application Serial No. PCT/US2018/012661, Invitation to Pay Additional Fees and Partial Search Report mailed Mar. 15, 2018", 2 pgs.
"International Application Serial No. PCT/US2018/012661, Written Opinion mailed Jun. 21, 2018", 9 pgs.
"International Application Serial No. PCT/US2020/047696, International Search Report mailed Nov. 23, 2020", 2 pgs.
"International Application Serial No. PCT/US2020/047696, Written Opinion mailed Nov. 23, 2020", 4 pgs.
Bevly, David M, et al., "Carrier-Phase Differential GPS for Control of a Tractor Towed Implement", Proceedings of the 13th International Technical Meeting of the Satellite Division of The Institute of Navigation (ION GPS 2000), (2000), 2263-2268.
Dietz, John, "A five-part program for efficient farming", Farming, (Apr. 2000), 1-4.
Elmore, Clyde L., "Soil Solarization A Nonpesticidal Method for Controlling Diseases, Nematodes, and Weeds", University of California Division of Agriculture and Natural Resources Publication 21377, (1997), 1-17.
Van Zuydam, R. P, "A driver's steering aid for an agricultural implement, based on an electronic map and Real Time Kinematic DGPS", Computers and Electronics in Agriculture, 24(3), (Dec. 1999), 153-163.
Van Zuydam, R. P, "Centimeter-Precision Guidance of Agricultural Implements in the Open Field by Means of Real Time Kinematic DGPS", Proceedings of the Fourth International Conference on Precision Agriculture, (1999), 1023-1034.
"Agrifac Pulse-width modulation (PWM) spraying", (c) 2021 Agrifac Machinery B.V. [online]. [archived Jan. 16, 2021]. Retrieved from the Internet: <URL: https://web.archive.org/web/20210116150413/https://www.agrifac.com/optional-spray-technology/strictsprayplus/>, (Jan. 16, 2021), 15 pgs.
"U.S. Appl. No. 13/832,735, Final Office Action mailed Aug. 5, 2016", 29 pgs.
"U.S. Appl. No. 13/832,735, Non Final Office Action mailed Feb. 19, 2016", 26 pgs.
"U.S. Appl. No. 13/832,735, Non Final Office Action mailed Jul. 15, 2015", 22 pgs.
"U.S. Appl. No. 13/832,735, Response filed May 19, 2016 to Non Final Office Action mailed Feb. 19, 2016", 13 pgs.
"U.S. Appl. No. 13/832,735, Response filed Nov. 16, 2015 to Non-Final Office Action mailed Jul. 15, 2015", 16 pgs.
"U.S. Appl. No. 16/476,016, Examiner Interview Summary mailed Oct. 4, 2022", 2 pgs.
"U.S. Appl. No. 16/476,016, Final Office Action mailed Nov. 15, 2022", 20 pgs.
"U.S. Appl. No. 16/476,016, Response filed Oct. 24, 2022 to Non Final Office Action mailed Jun. 24, 2022", 22 pgs.
"U.S. Appl. No. 16/476,069, Examiner Interview Summary mailed Mar. 18, 2022", 2 pgs.
"U.S. Appl. No. 16/476,069, Non Final Office Action mailed Nov. 12, 2021", 13 pgs.
"U.S. Appl. No. 16/476,069, Preliminary Amendment filed Jul. 3, 2019", 13 pgs.
"U.S. Appl. No. 16/476,069, Response filed Apr. 11, 2022 to Non Final Office Action mailed Nov. 12, 2021", 12 pgs.
"U.S. Appl. No. 16/476,069, Response filed Jul. 27, 2021 to Restriction Requirement mailed May 3, 2021", 10 pgs.
"U.S. Appl. No. 16/476,069, Restriction Requirement mailed May 3, 2021", 9 pgs.
"U.S. Appl. No. 17/224,955, Non Final Office Action mailed Mar. 7, 2022", 7 pgs.
"Australian Application Serial No. 2017285727, Response filed Mar. 23, 2020 to First Examination Report mailed May 21, 2019", 10 pgs.
"Brazilian Application Serial No. 1120160085175, Office Action mailed Jan. 18, 2022", (w/ Concise Statement of Relevance), 26 pgs.
"Brazilian Application Serial No. 1120160085175, Office Action mailed Mar. 25, 2020", (w/ English Translation), 6 pgs.
"Brazilian Application Serial No. 1120160085175, Response filed Jul. 27, 2020 to Office Action mailed Mar. 25, 2020", (w/ English Translation of Claims), 102 pgs.
"Brazilian Application Serial No. 1120180747017, Office Action mailed Jul. 22, 2021", (w/ English Translation), 5 pgs.
"Brazilian Application Serial No. 1120180747017, Opinion for non-patenteability (RPI 7.1) mailed Mar. 29, 2022", (w/ English Translation), 18 pgs.
"Brazilian Application Serial No. 1120180747017, Response filed Oct. 20, 2021 to Office Action mailed Jul. 22, 2021", (w/ English Translation of Claims), 14 pgs.
"Brazilian Application Serial No. 1120180747017, Voluntary Amendment filed Jun. 22, 2020", (w/ English Translation), 44 pgs.
"Canadian Application Serial No. 2,877,195, Examiner's Rule 86(2) Report filed Nov. 21, 2022", 3 pgs.
"Canadian Application Serial No. 2,926,448, Examiner's Rule 30(2) Requisition mailed Jul. 23, 2019", 3 pgs.
"Canadian Application Serial No. 2,926,448, Response filed Dec. 11, 2019 to Examiner's Rule 30(2) Requisition mailed Jul. 23, 2019", 4 pgs.
"Canadian Application Serial No. 3,013,670, Examiner's Rule 30(2) Requisition mailed Sep. 11, 2019", 5 pgs.
"Canadian Application Serial No. 3,013,670, Response filed Mar. 11, 2020 to Examiner's Rule 30(2) Requisition mailed Sep. 11, 2019", 68 pgs.
"Canadian Application Serial No. 3,049,391, Office Action mailed Sep. 26, 2022", 4 pgs.
"Canadian Application Serial No. 3,049,421, Office Action mailed Jun. 4, 2021", 3 pgs.
"Canadian Application Serial No. 3,049,421, Office Action mailed Nov. 5, 2020", 3 pgs.
"Canadian Application Serial No. 3,049,421, Office Action mailed Nov. 29, 2021", 4 pgs.
"Canadian Application Serial No. 3,049,421, Response filed Mar. 1, 2021 to Office Action mailed Nov. 5, 2020", 19 pgs.

(56) **References Cited**

OTHER PUBLICATIONS

"Canadian Application Serial No. 3,049,421, Response filed Mar. 25, 2022 to Office Action mailed Nov. 29, 2021", 18 pgs.
"Canadian Application Serial No. 3,049,421, Response filed Oct. 1, 2021 to Office Action mailed Jun. 4, 2021", 33 pgs.
"European Application Serial No. 18735853.6, Communication Pursuant to Article 94(3) EPC mailed Jun. 18, 2021", 4 pgs.
"European Application Serial No. 18735853.6, Extended European Search Report mailed Jun. 16, 2020", 8 pgs.
"European Application Serial No. 18735853.6, Response filed Jan. 11, 2021 to Extended European Search Report mailed Jun. 16, 2020", 16 pgs.
"European Application Serial No. 18735853.6, Response filed Feb. 24, 2020 to Communiciation pursuant to Rules 161(2) and 162 EPC mailed Aug. 13, 2019", 16 pgs.
"European Application Serial No. 18735853.6, Response filed Oct. 28, 2021 to Communication Pursuant to Article 94(3) EPC mailed Jun. 18, 2021", 17 pgs.
"German Application Serial No. 11 2017 003 084.6, Office Action mailed Feb. 5, 2019", (w/ English Translation), 5 pgs.
"German Application Serial No. 11 2017 003 084.6, Response filed May 8, 2019 to Office Action mailed Feb. 5, 2019", (w/ Concise Statement of Relevance), 17 pgs.
"International Application Serial No. PCT/US2018/012661, International Preliminary Report on Patentability mailed Jul. 18, 2019", 11 pgs.
"International Application Serial No. PCT/US2020/047696, International Preliminary Report on Patentability mailed Apr. 14, 2022", 6 pgs.
"International Application Serial No. PCT/US2021/026252, International Search Report mailed Jun. 15, 2021", 2 pgs.
"International Application Serial No. PCT/US2021/026252, Written Opinion mailed Jun. 15, 2021", 4 pgs.
"International Application Serial No. PCT/US2021/038955, International Search Report mailed Sep. 29, 2021", 2 pgs.
"International Application Serial No. PCT/US2021/038955, Written Opinion mailed Sep. 29, 2021", 5 pgs.
"Wilger 2019-20 Manufacturer's Suggested Retail Price List", (Revised Sep. 1, 2019), 20 pgs.
Madsen, Jesper, et al., "Measurement of droplet size and velocity distributions in sprays using Interferometric Particle Imaging (IPI) and Particle Tracking Velocimetry (PTV)", Proceedings 9th International Conference on Liquid Atomization and Spray Systems—ICLASS 2003, (Jan. 2003), 9 pgs.
"U.S. Appl. No. 16/476,016, Examiner Interview Summary mailed Jan. 27, 2023", 2 pgs.
"U.S. Appl. No. 16/476,016, Non Final Office Action mailed Mar. 28, 2023", 22 pgs.
"U.S. Appl. No. 16/476,016, Response filed Feb. 15, 2023 to Final Office Action mailed Nov. 15, 2022", 24 pgs.
"U.S. Appl. No. 17/161,453, Non Final Office Action mailed Mar. 15, 2023", 17 pgs.
"Australian Application Serial No. 2020357581, First Examination Report mailed Feb. 2, 2023", 2 pgs.
"Australian Application Serial No. 2021209314, First Examination Report mailed Jan. 9, 2023", 5 pgs.
"Canadian Application Serial No. 2,877,195, Office Action mailed Jun. 5, 2023", 3 pgs.
"Canadian Application Serial No. 2,877,195, Response filed Mar. 20, 2023 to Examiner's Rule 86(2) Report filed Nov. 21, 2022", 7 pgs.
"Canadian Application Serial No. 3,049,391, Response filed Jan. 20, 2023 to Office Action mailed Sep. 26, 2022", 7 pgs.
"Canadian Application Serial No. 3153465, Examiners Rule 86(2) Report mailed Jan. 13, 2023", 3 pgs.
"Canadian Application Serial No. 3153465, Response filed May 1, 2023 to Examiners Rule 86(2) Report mailed Jan. 13, 2023", 2 pgs.
"Electrostatic Dispersal Solutions", https://web.archive.org/web/20170928035648/https://www.4rysprays.com/, (Captured on Sep. 28, 2017), 6 pgs.
"European Application Serial No. 18736496.3, Communication Pursuant to Article 94(3) EPC mailed Mar. 24, 2023", 10 pgs.
"European Application Serial No. 20872967.3, Response to Communication Pursuant to Rules 161 and 162 EPC filed Nov. 17, 2022", 9 pgs.
"U.S. Appl. No. 17/161,453, Response filed Jun. 15, 2023 to Non Final Office Action mailed Mar. 15, 2023", 15 pgs.
"U.S. Appl. No. 16/476,016, Response filed Jun. 28, 2023 to Non Final Office Action mailed Mar. 28, 2023", 23 pgs.
"U.S. Appl. No. 16/476,016, Examiner Interview Summary mailed Jun. 29, 2023", 2 pgs.
"Canadian Application Serial No. 3,049,391, Examiners Rule 86(2) Report mailed Jul. 6, 2023", 5 pgs.
"Australian Application Serial No. 2021209314, Response filed Jul. 6, 2023 to First Examination Report mailed Jan. 9, 2023", 10 pgs.
"U.S. Appl. No. 16/476,016, Final Office Action mailed Jul. 20, 2023", 21 pgs.
"U.S. Appl. No. 17/410,852, Non Final Office Action mailed Aug. 1, 2023", 9 pgs.
"European Application Serial No. 18736496.3, Response filed Aug. 3, 2023 to Communication Pursuant to Article 94(3) EPC mailed Mar. 24, 2023", 10 pgs.
"U.S. Appl. No. 17/161,453, Final Office Action mailed Sep. 7, 2023", 7 pgs.
"European Application Serial No. 20872967.3, Extended European Search Report mailed Sep. 29, 2023", 9 pgs.
"Canadian Application Serial No. 2,877,195, Response filed Oct. 4, 2023 to Office Action mailed Jun. 5, 2023", 7 pgs.
"U.S. Appl. No. 17/465,644, Restriction Requirement mailed Oct. 13, 2023", 6 pgs.
"U.S. Appl. No. 16/476,016, Response filed Oct. 24, 2023 to Final Office Action mailed Jul. 20, 2023", 21 pgs.
"U.S. Appl. No. 17/410,852, Response filed Nov. 1, 2023 to Non Final Office Action mailed Aug. 1, 2023", 15 pgs.
"U.S. Appl. No. 16/476,016, Advisory Action mailed Nov. 3, 2023", 3 pgs.
"Canadian Application Serial No. 3,049,391, Response filed Nov. 2, 2023 to Examiners Rule 86(2) Report mailed Jul. 6, 2023", 7 pgs.
"U.S. Appl. No. 17/161,453, Response filed Nov. 7, 2023 to Final Office Action mailed Sep. 7, 2023", 8 pgs.
"U.S. Appl. No. 17/410,852, Final Office Action mailed Nov. 14, 2023", 8 pgs.
"U.S. Appl. No. 16/476,016, Pre-Appeal Brief Request filed Nov. 20, 2023", 5 pgs.
"U.S. Appl. No. 17/161,453, Notice of Allowance mailed Nov. 22, 2023", 5 pgs.
"U.S. Appl. No. 17/465,644, Response filed Dec. 13, 2023 to Restriction Requirement mailed Oct. 13, 2023", 11 pgs.
"European Application Serial No. 18736496.3, Communication Pursuant to Article 94(3) EPC mailed Dec. 12, 2023", 13 pgs.
"U.S. Appl. No. 16/476,016, Decision on Pre-Appeal Brief Request mailed Dec. 18, 2023", 2 pgs.
"U.S. Appl. No. 16/476,016, Examiner Interview Summary mailed Jan. 16, 2024", 2 pgs.
"U.S. Appl. No. 16/476,016, Notice of Allowance mailed Feb. 14, 2024", 8 pgs.
"U.S. Appl. No. 17/410,852, Response filed Feb. 14, 2024 to Final Office Action mailed Nov. 14, 2023", 10 pgs.
"U.S. Appl. No. 17/161,453, Corrected Notice of Allowability mailed Feb. 23, 2024", 3 pgs.
"U.S. Appl. No. 16/476,016, Corrected Notice of Allowability mailed Feb. 22, 2024", 3 pgs.
"U.S. Appl. No. 17/410,852, Notice of Allowance mailed Feb. 28, 2024", 5 pgs.
"U.S. Appl. No. 17/161,453, Corrected Notice of Allowability mailed Feb. 29, 2024", 2 pgs.
"U.S. Appl. No. 17/410,852, Corrected Notice of Allowability mailed Mar. 6, 2024", 2 pgs.
"U.S. Appl. No. 17/410,852, Corrected Notice of Allowability mailed Mar. 13, 2024", 2 pgs.
"U.S. Appl. No. 16/476,016, Corrected Notice of Allowability mailed Mar. 13, 2024", 2 pgs.

(56) **References Cited**

OTHER PUBLICATIONS

"U.S. Appl. No. 17/465,644, Notice of Allowance mailed Mar. 21, 2024", 12 pgs.
"U.S. Appl. No. 16/476,016, Corrected Notice of Allowability mailed Apr. 16, 2024", 2 pgs.
"U.S. Appl. No. 16/476,016, Notice of Allowability mailed May 21, 2024", 3 pgs.
"U.S. Appl. No. 18/669,983, Preliminary Amendment filed May 28, 2024", 3 pgs.
"Brazilian Application Serial No. BR112022006486-1, Office Action mailed Jul. 13, 2024", w English translation, 9 pgs.
"European Application Serial No. 18736496.3, Response filed Jun. 10, 2024 to Communication Pursuant to Article 94(3) EPC mailed Dec. 12, 2023", 13 pgs.
"International Application Serial No. PCT US2024 019793, International Search Report mailed Jun. 27, 2024", 5 pgs.
"International Application Serial No. PCT US2024 019793, Written Opinion mailed Jun. 27, 2024", 10 pgs.
"U.S. Appl. No. 17/465,644, Supplemental Notice of Allowability mailed Jun. 27, 2024", 2 pgs.
"U.S. Appl. No. 17/504,601, Restriction Requirement mailed Jul. 8, 2024", 7 pgs.
"U.S. Appl. No. 17/504,601, Response filed Jul. 22, 2024 to Restriction Requirement mailed Jul. 8, 2024", 14 pgs.
"U.S. Appl. No. 17/504,601, Notice of Non-Compliant Amendment mailed Jul. 29, 2024", 2 pgs.
"U.S. Appl. No. 18/750,201, Preliminary Amendment filed Sep. 5, 2024", 12 pgs.
"U.S. Appl. No. 17/410,852, Corrected Notice of Allowability mailed May 31, 2024", 2 pgs.
"U.S. Appl. No. 18/669,983, Preliminary Amendment filed Jun. 4, 2024", 7 pgs.
"U.S. Appl. No. 17/504,601, Non Final Office Action mailed Sep. 16, 2024", 12 pgs.
"U.S. Appl. No. 17/504,601, Response filed Sep. 11, 2024 to Notice of Non-Compliant Amendment mailed Jul. 29, 2024", 14 pgs.
"Australian Application Serial No. 2023214344, First Examination Report mailed Sep. 9, 2024", 2 pgs.
"International Application Serial No. PCT/US2024/034956, International Search Report mailed Oct. 8, 2024", 5 pgs.
"International Application Serial No. PCT/US2024/034956, Written Opinion mailed Oct. 8, 2024", 8 pgs.
"Brazil Application Serial No. BR112022006486-1, Response filed Oct. 25, 2024 to Office Action mailed Jul. 13, 2024", w English Claims, 227 pgs.
"U.S. Appl. No. 18/669,983, Non Final Office Action mailed Jan. 10, 2025", 12 pgs.
"Australian Application Serial No. 2023258379, First Examination Report mailed Jan. 16, 2025", 4 pgs.
"U.S. Appl. No. 17/504,601, Response filed Feb. 13, 2025 to Non Final Office Action mailed Sep. 16, 2024", 17 pgs.
"U.S. Appl. No. 17/504,601, Final Office Action mailed Mar. 7, 2025", 13 pgs.
"English Translation of WO-2013001948-A1", 23 pgs.
"Australian Application Serial No. 2023258379, Response filed Mar. 13, 2025 to First Examination Report mailed Jan. 16, 2025", 3 pgs.

* cited by examiner

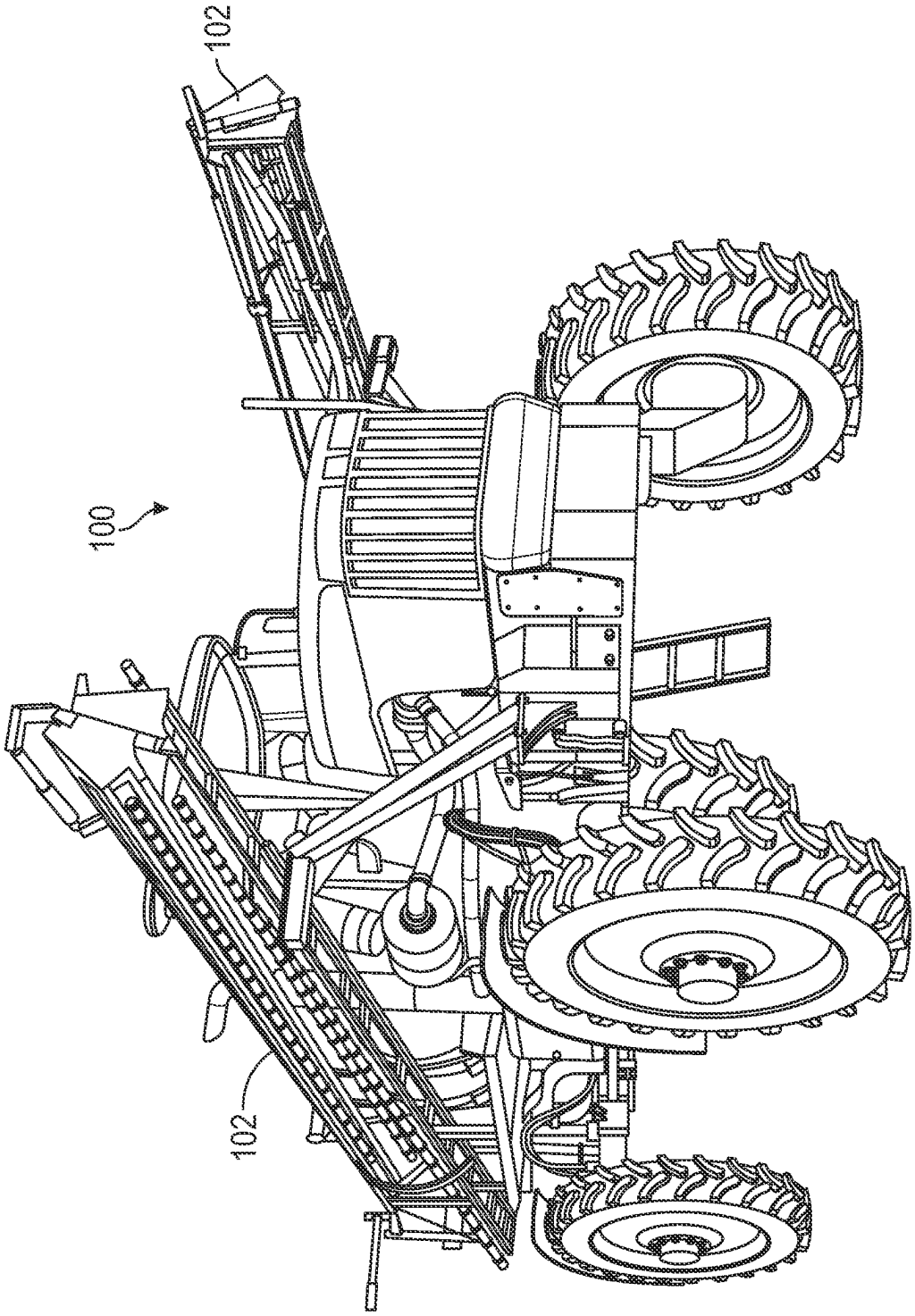

FIG. 1A

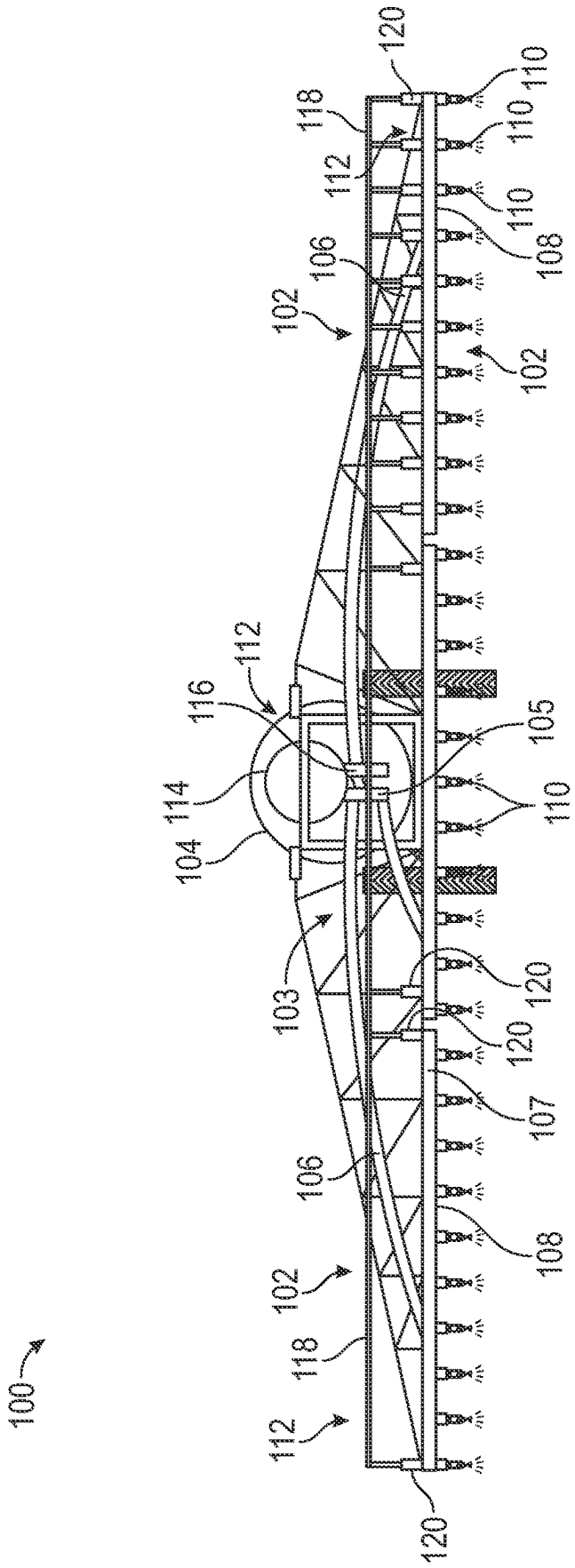
100
112
118
102
120
104
114
116
112
106
103
120
120
107
108
110
105
110
102
118
112
106
110
110
108
120

FIG. 1B

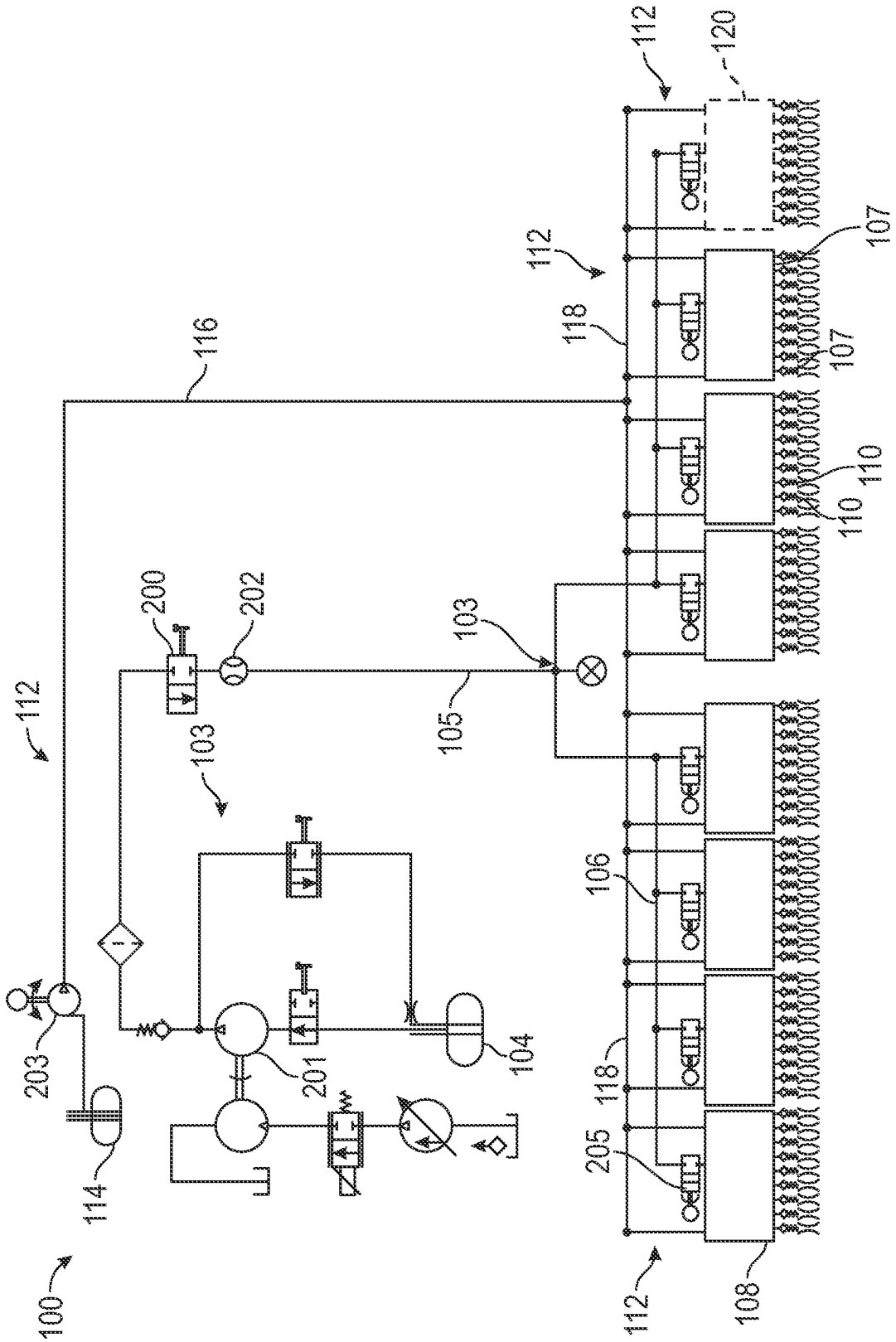
100
112
114
203
116
112
200
202
103
105
103
201
104
118
205
106
112
108
112
120
107
107
110
110

FIG. 2A

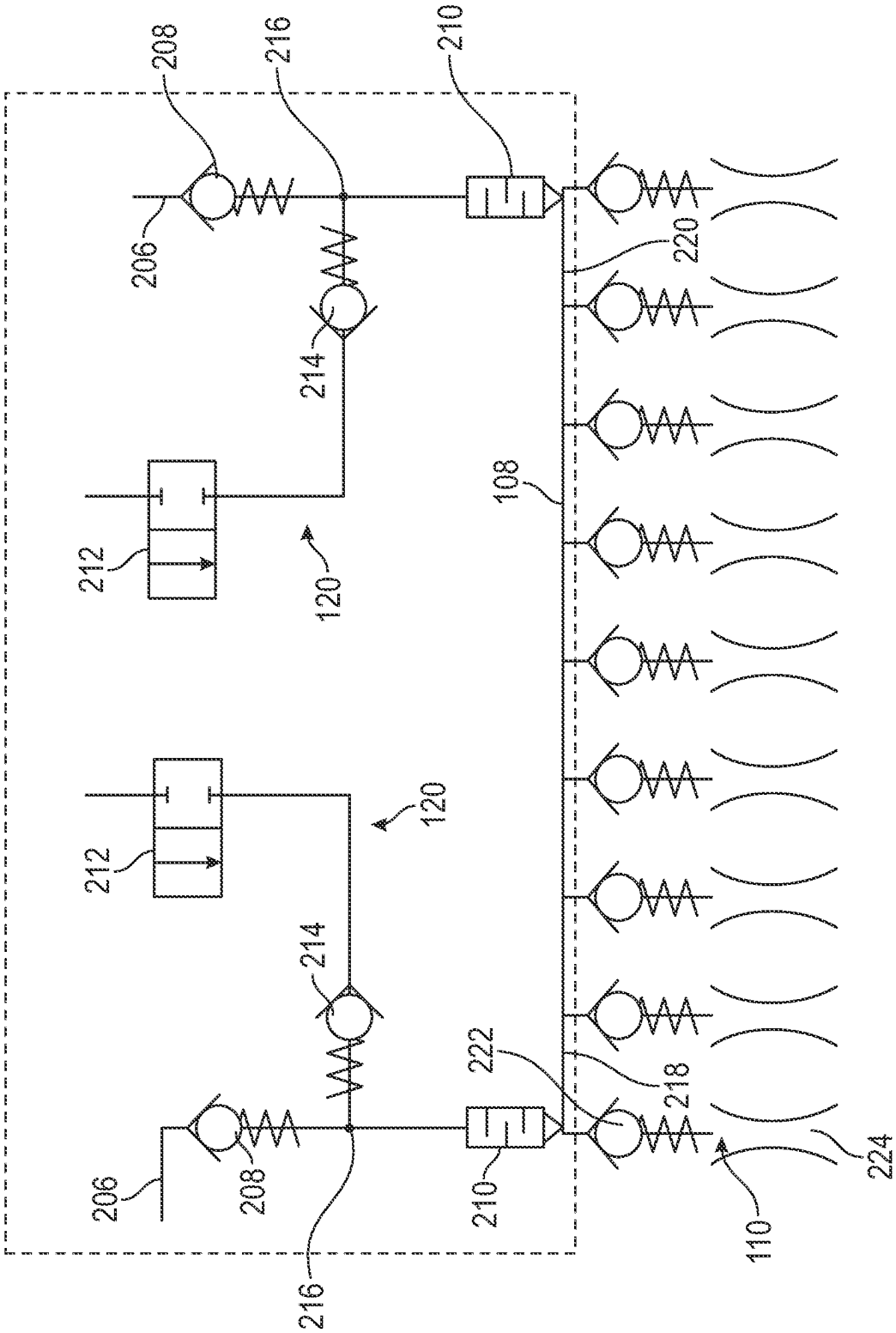

FIG. 2B

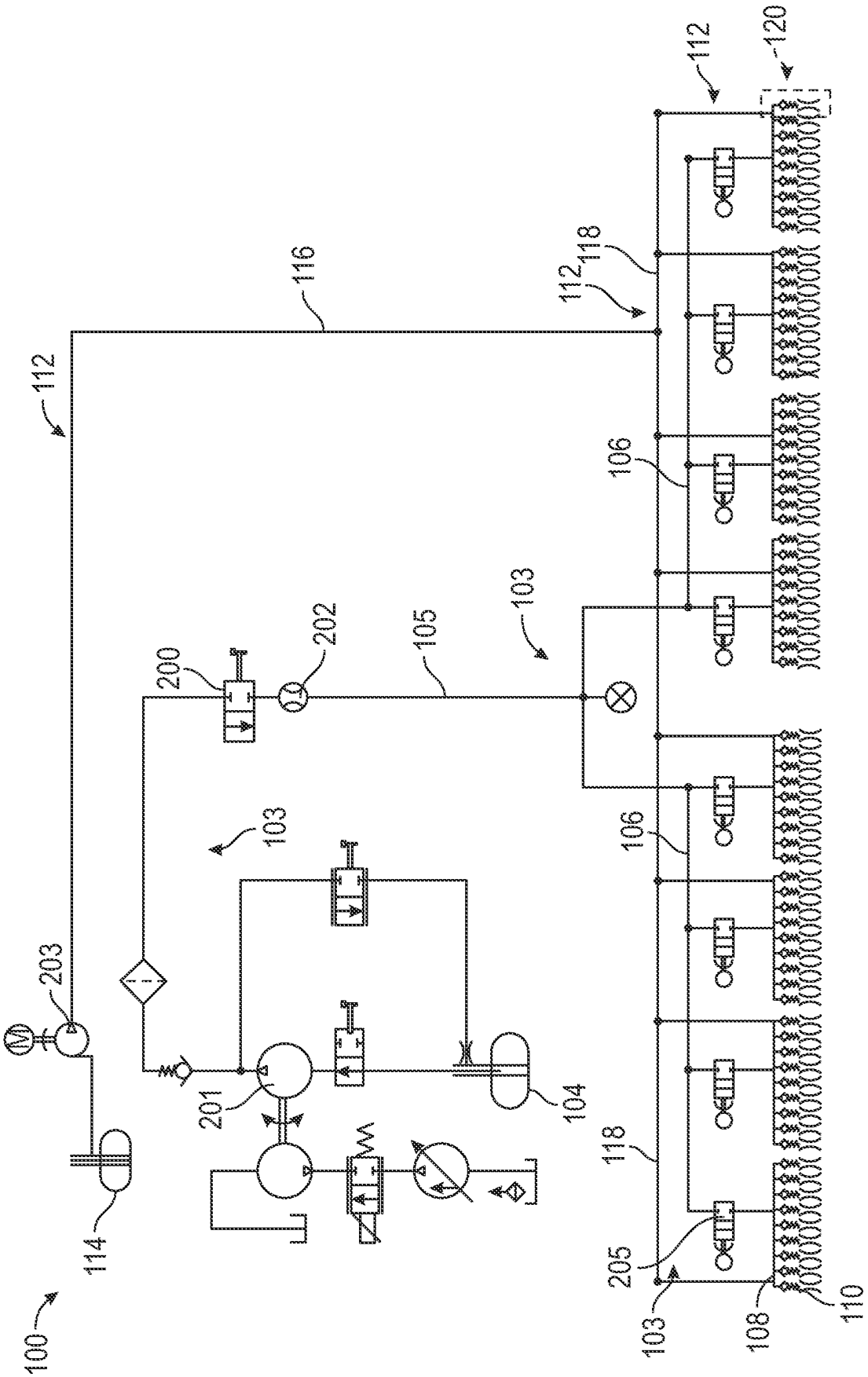
100
112
116
112
118
112
120
203
114
200
202
105
103
201
104
103
106
106
118
205
103
108
110

FIG. 3A

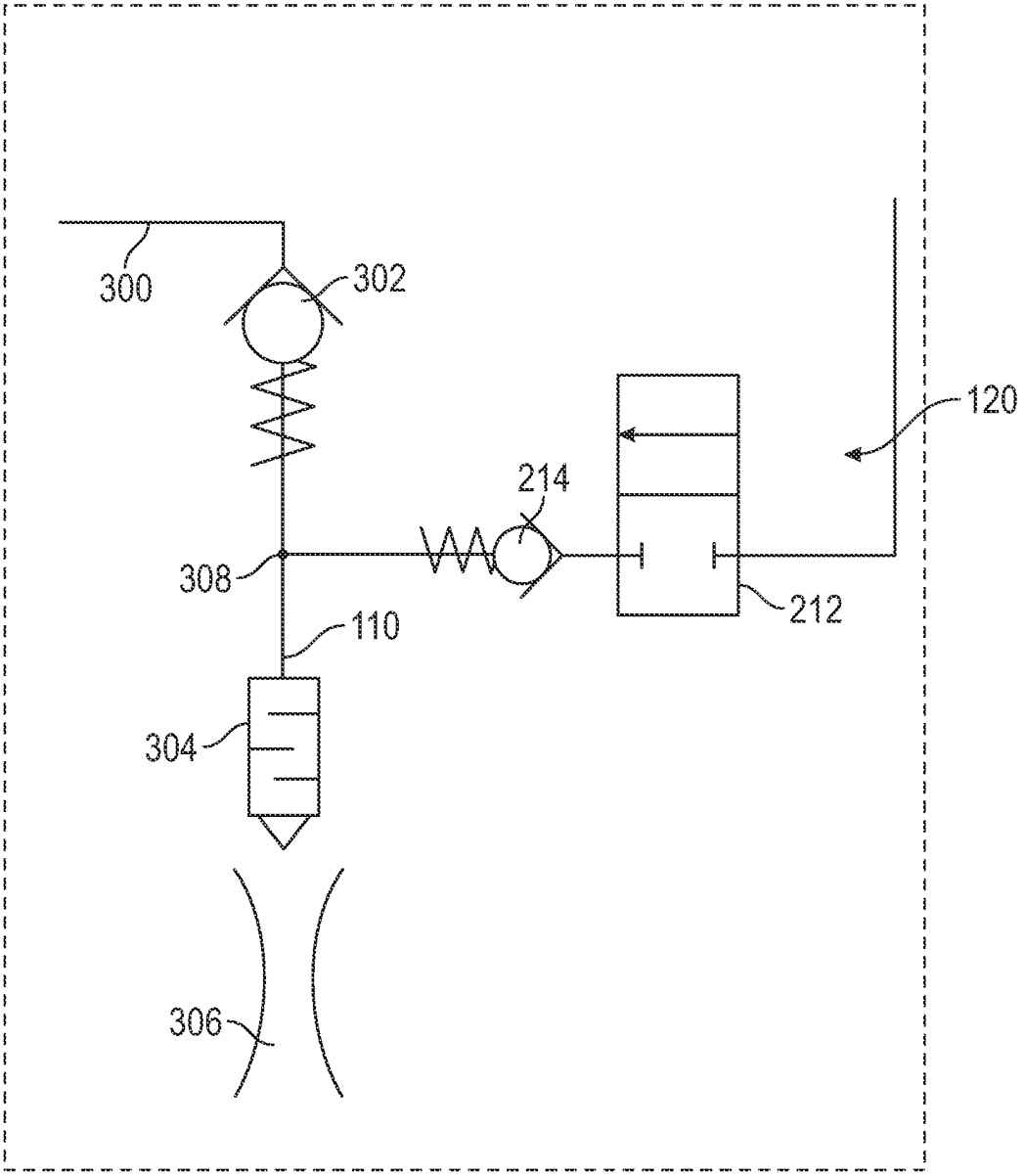

FIG. 3B

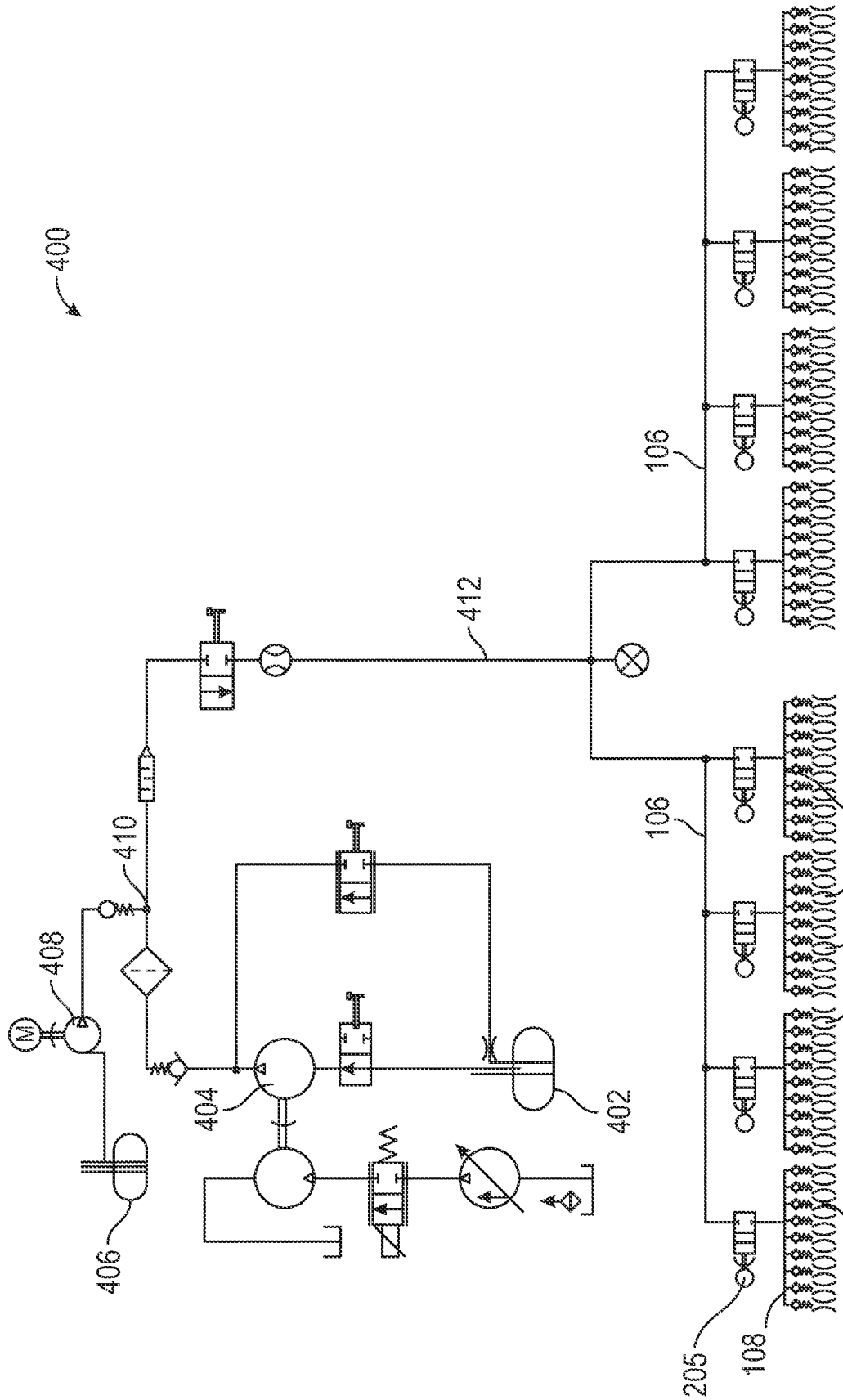

FIG. 4

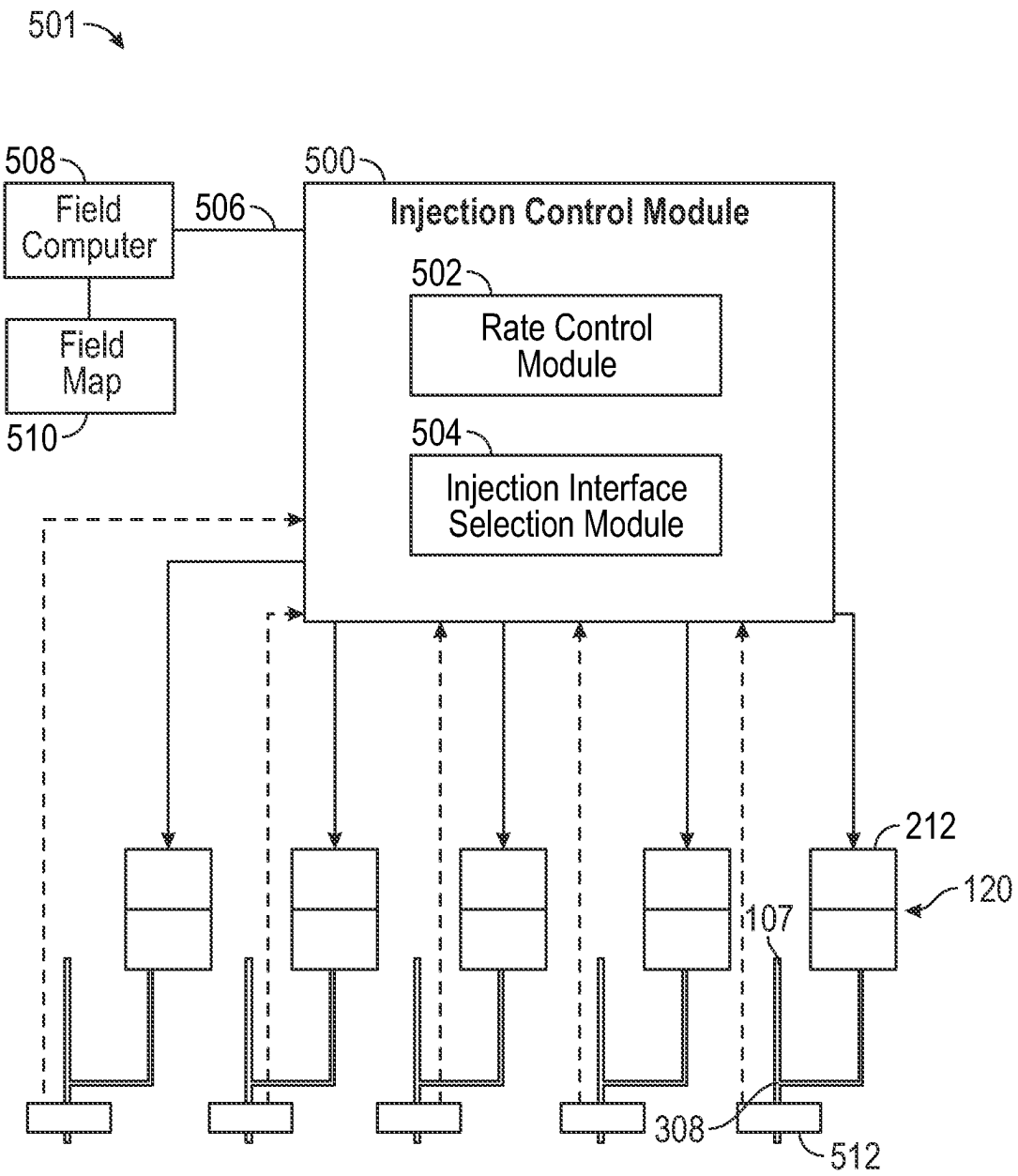
501
508
Field Computer
506
500
Injection Control Module
502
Rate Control Module
Field Map
510
504
Injection Interface Selection Module
212
120
107
308
512

FIG. 5

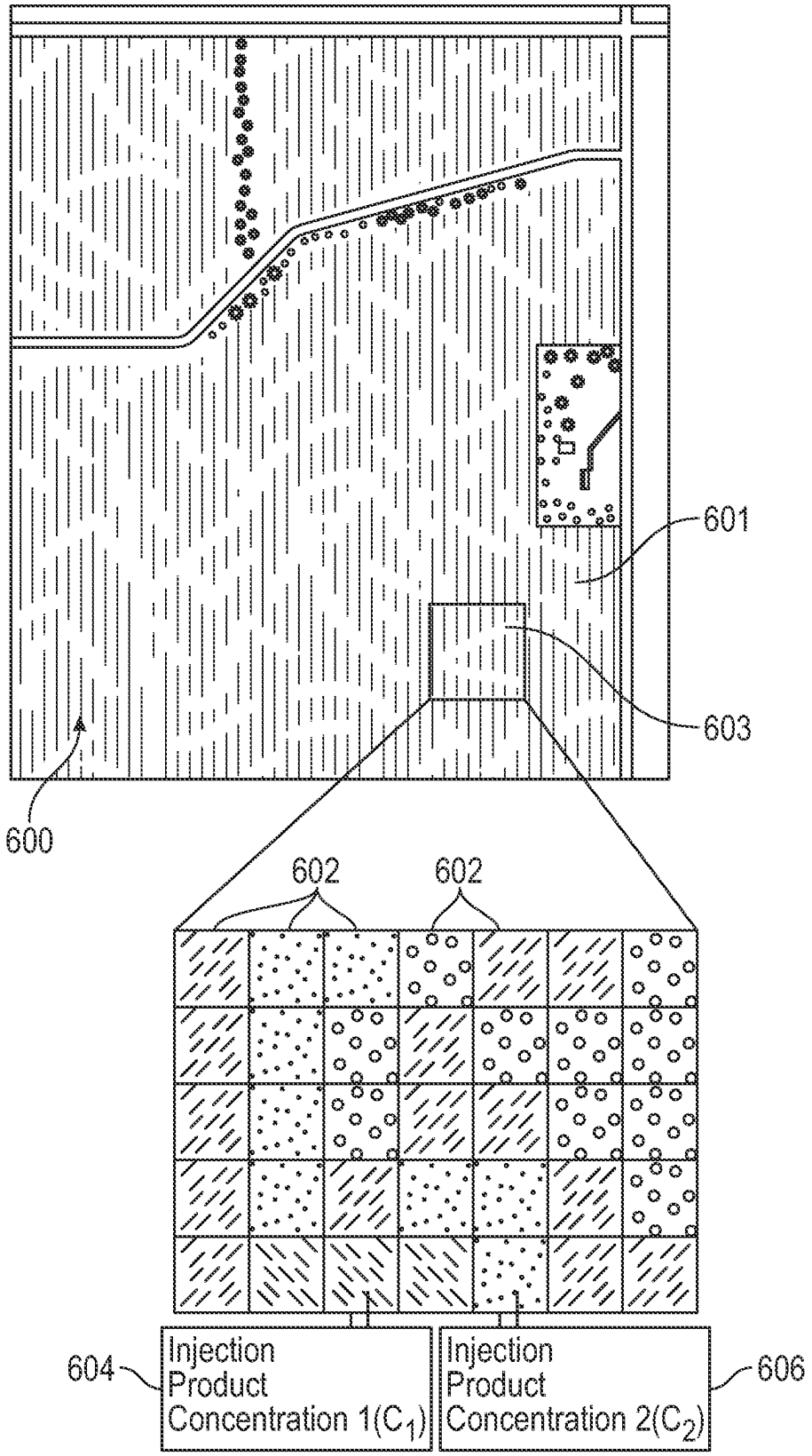
601
603
600
602
602
604
Injection Product Concentration 1(C_1)
Injection Product Concentration 2(C_2)
606

FIG. 6

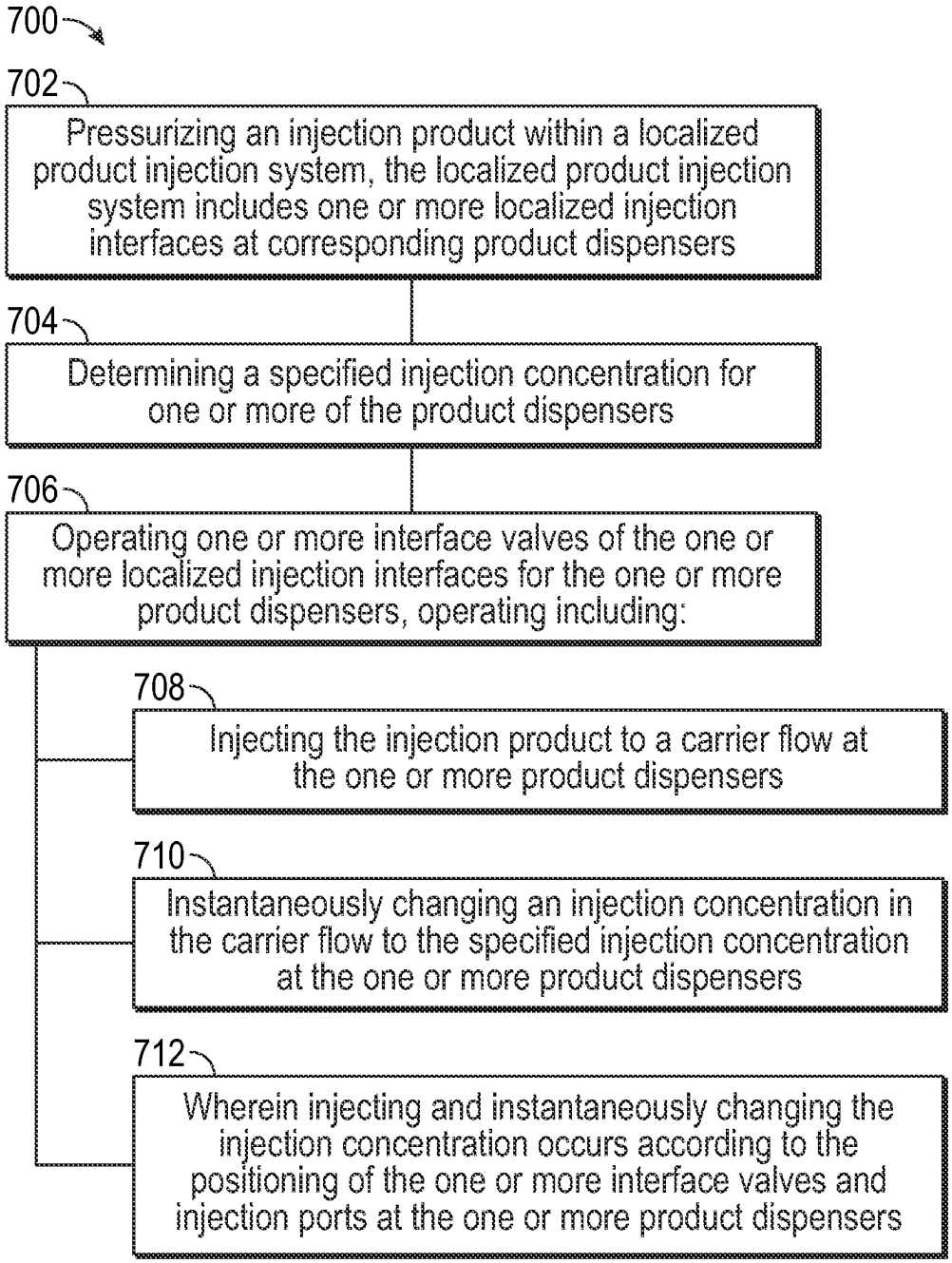
700
702
Pressurizing an injection product within a localized product injection system, the localized product injection system includes one or more localized injection interfaces at corresponding product dispensers
704
Determining a specified injection concentration for one or more of the product dispensers
706
Operating one or more interface valves of the one or more localized injection interfaces for the one or more product dispensers, operating including:
708
Injecting the injection product to a carrier flow at the one or more product dispensers
710
Instantaneously changing an injection concentration in the carrier flow to the specified injection concentration at the one or more product dispensers
712
Wherein injecting and instantaneously changing the injection concentration occurs according to the positioning of the one or more interface valves and injection ports at the one or more product dispensers

FIG. 7

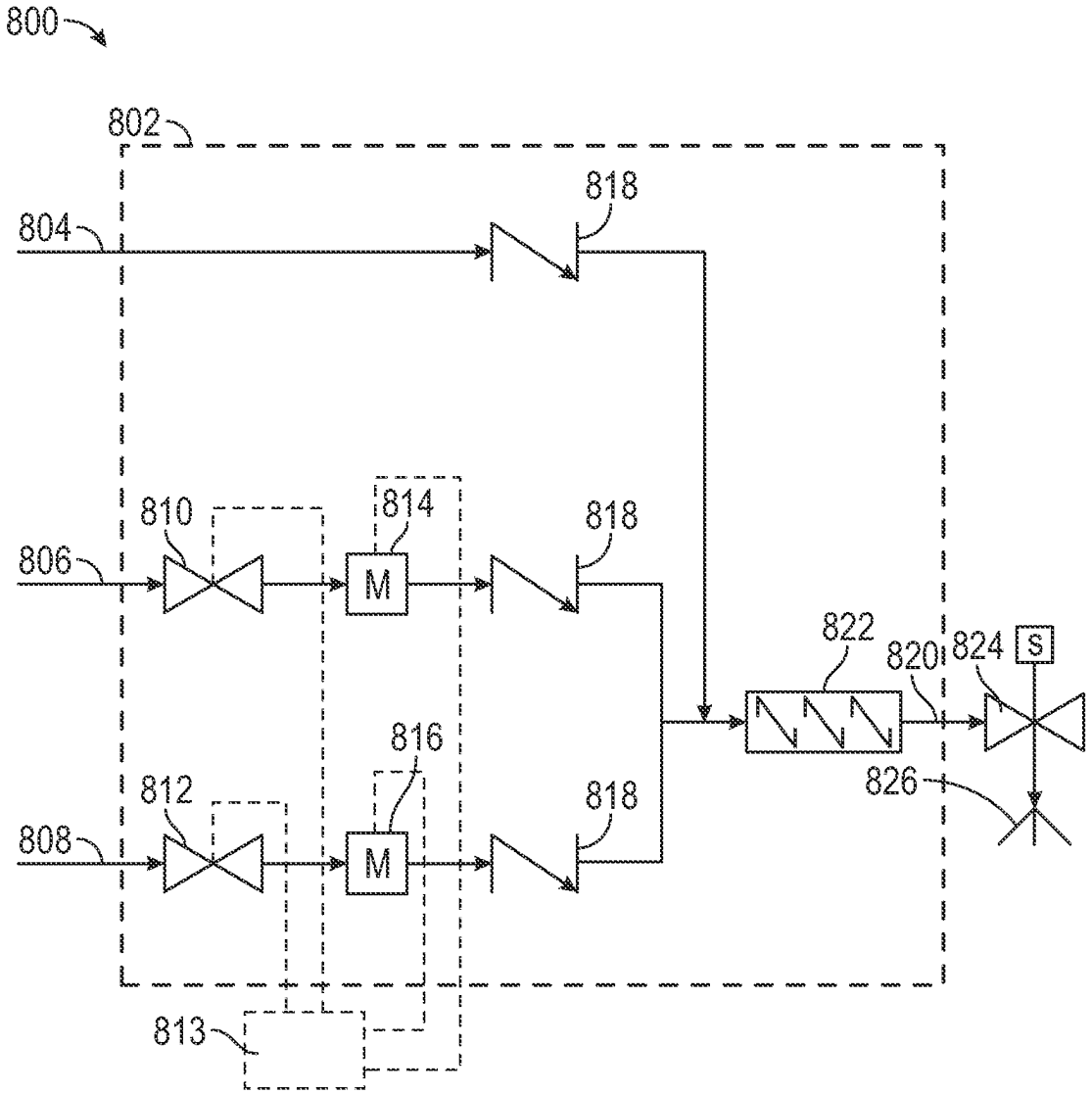
800
802
804
818
806
810
814
M
818
822
820
824
S
816
812
808
M
818
826
813

FIG. 8A

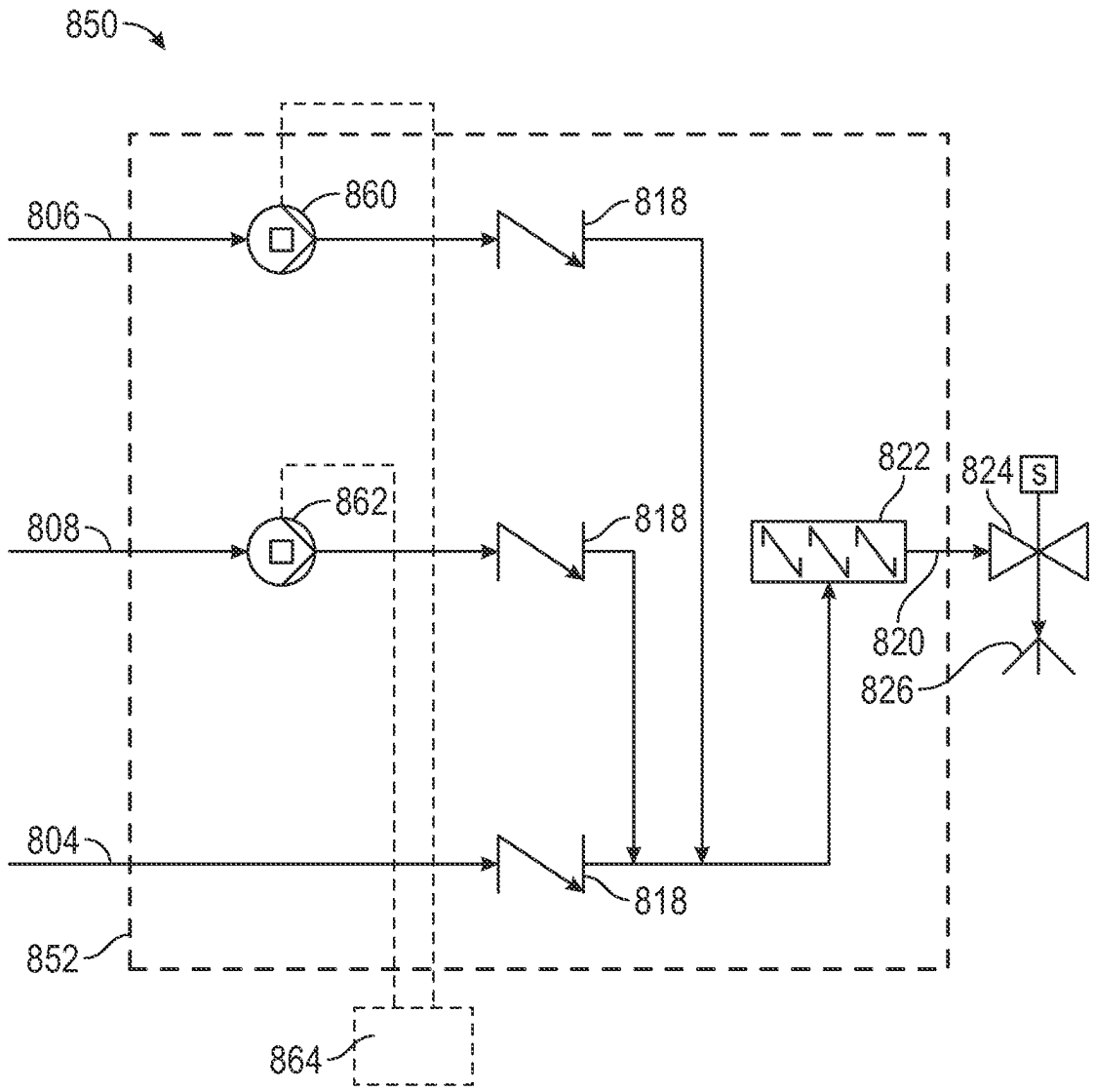

FIG. 8B

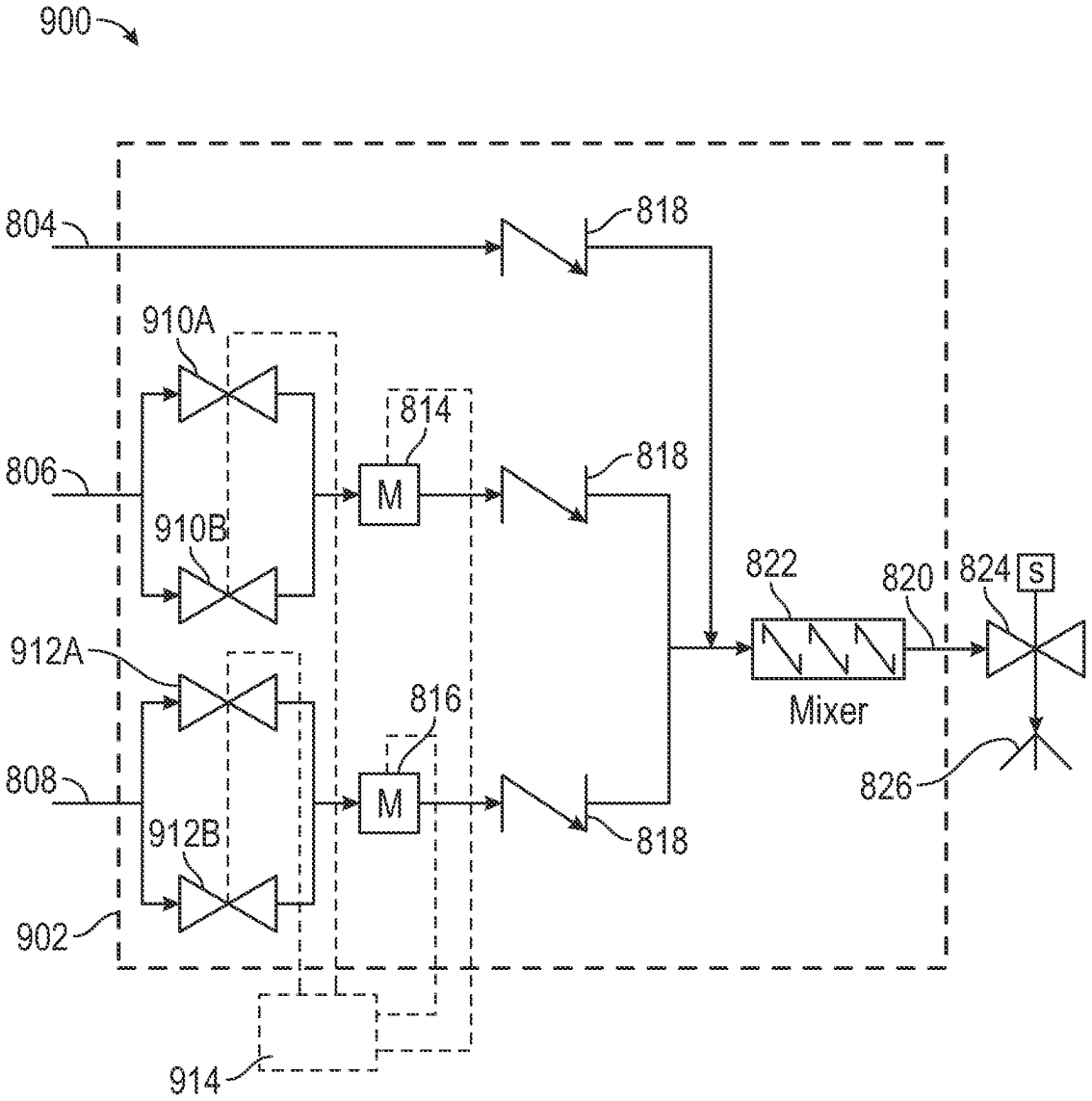
900
804
818
910A
814
806
M
818
910B
822
820
824
S
912A
816
Mixer
808
M
826
912B
818
902
914

FIG. 9A

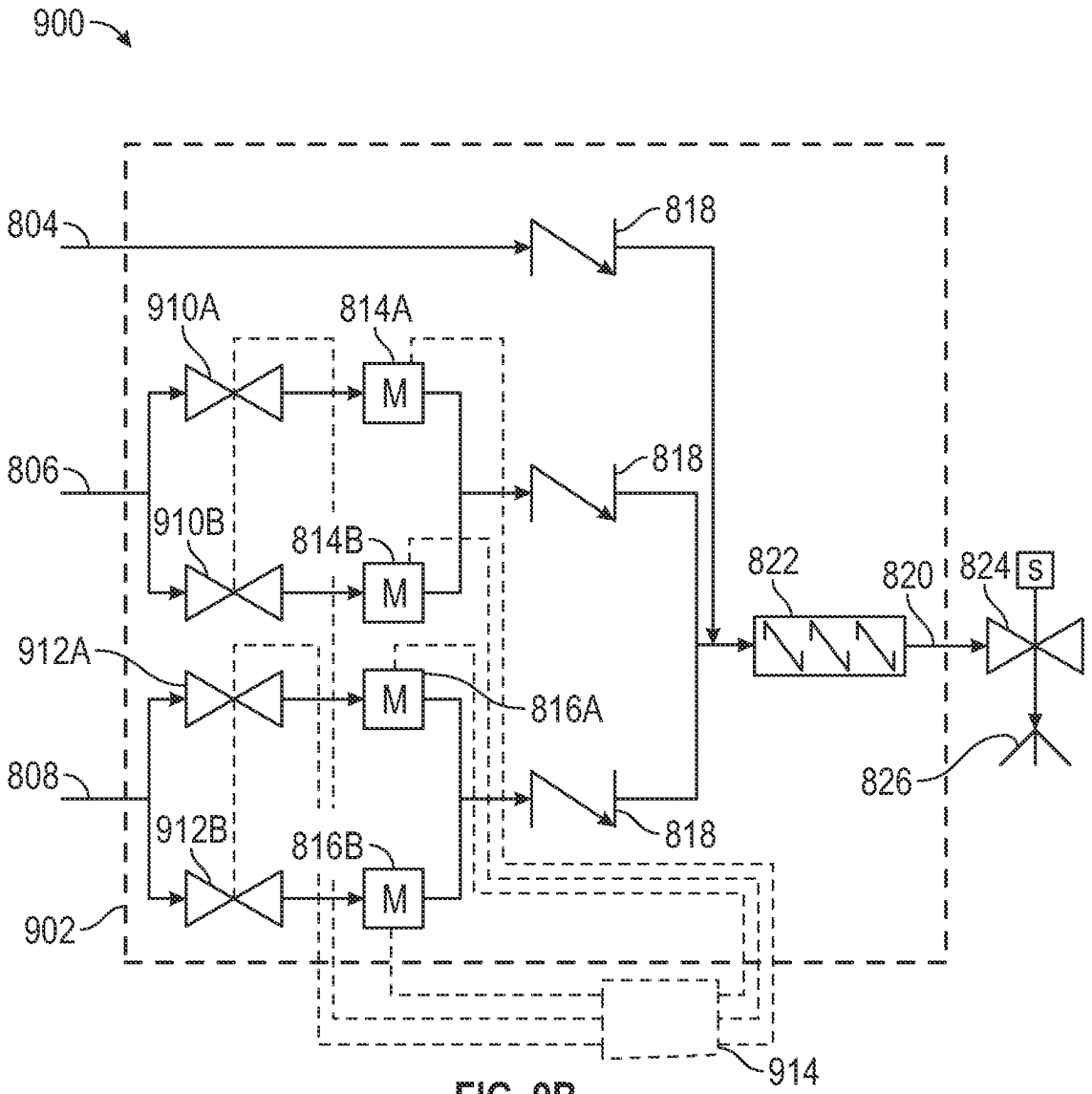
900
804
818
910A
814A
M
806
818
910B
814B
M
822
820
824
S
912A
M
816A
808
826
912B
816B
818
M
902
914

FIG. 9B

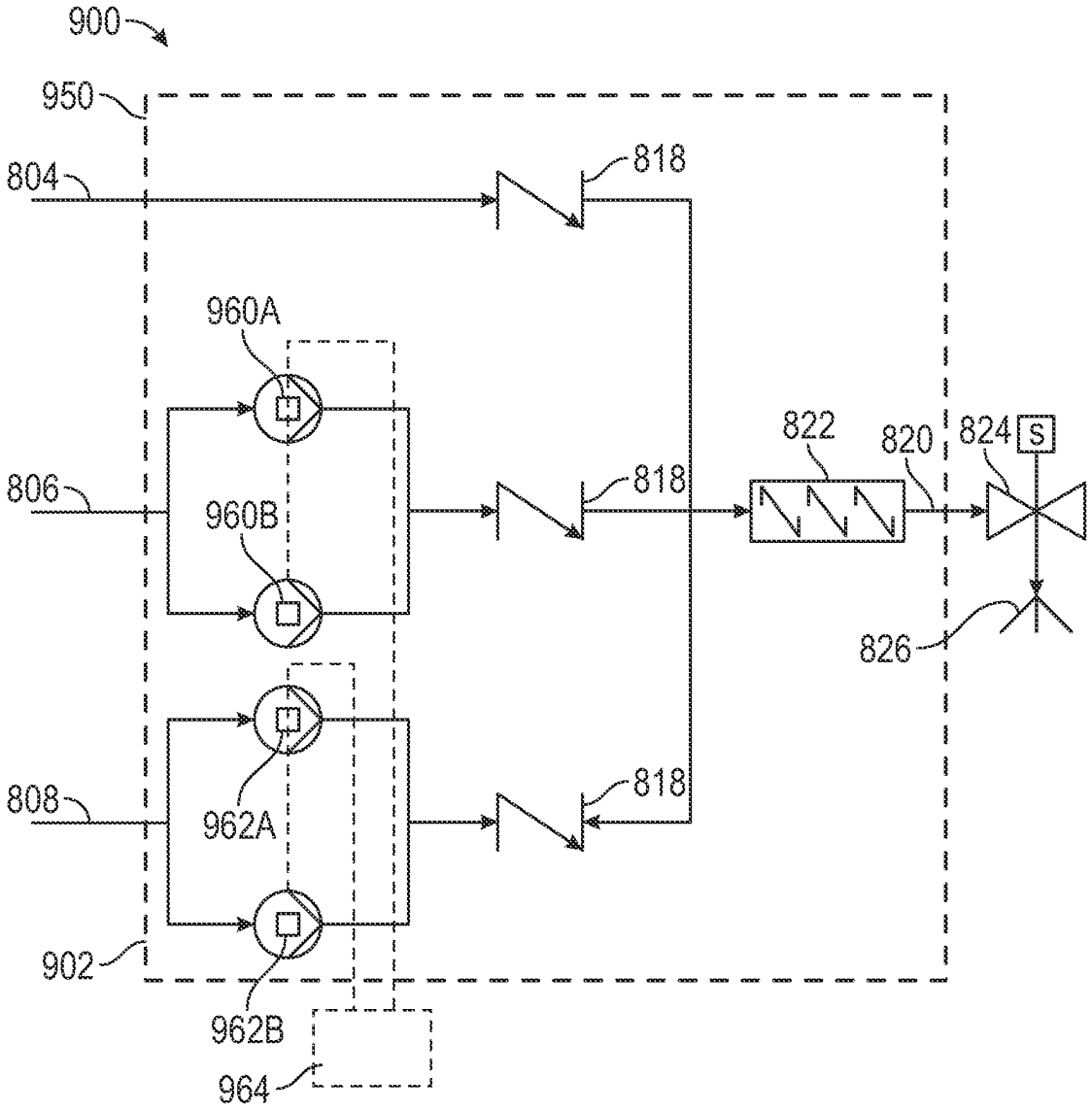
900
950
804
818
960A
806
960B
818
822
820
824
S
826
808
962A
818
902
962B
964

FIG. 9C

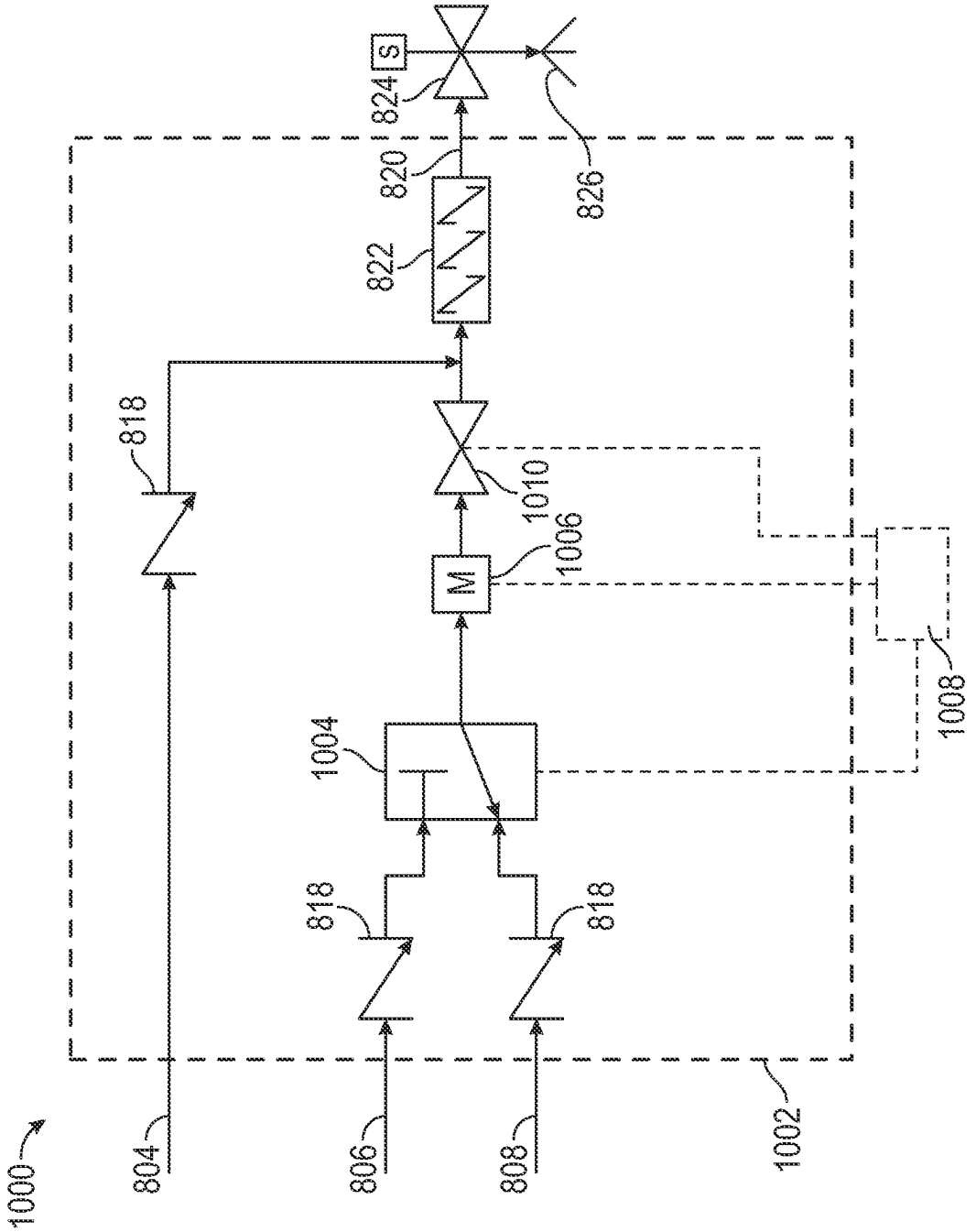
1000
804
806
808
818
818
818
1004
M
1006
1010
822
820
824
S
826
1002
1008

FIG. 10A

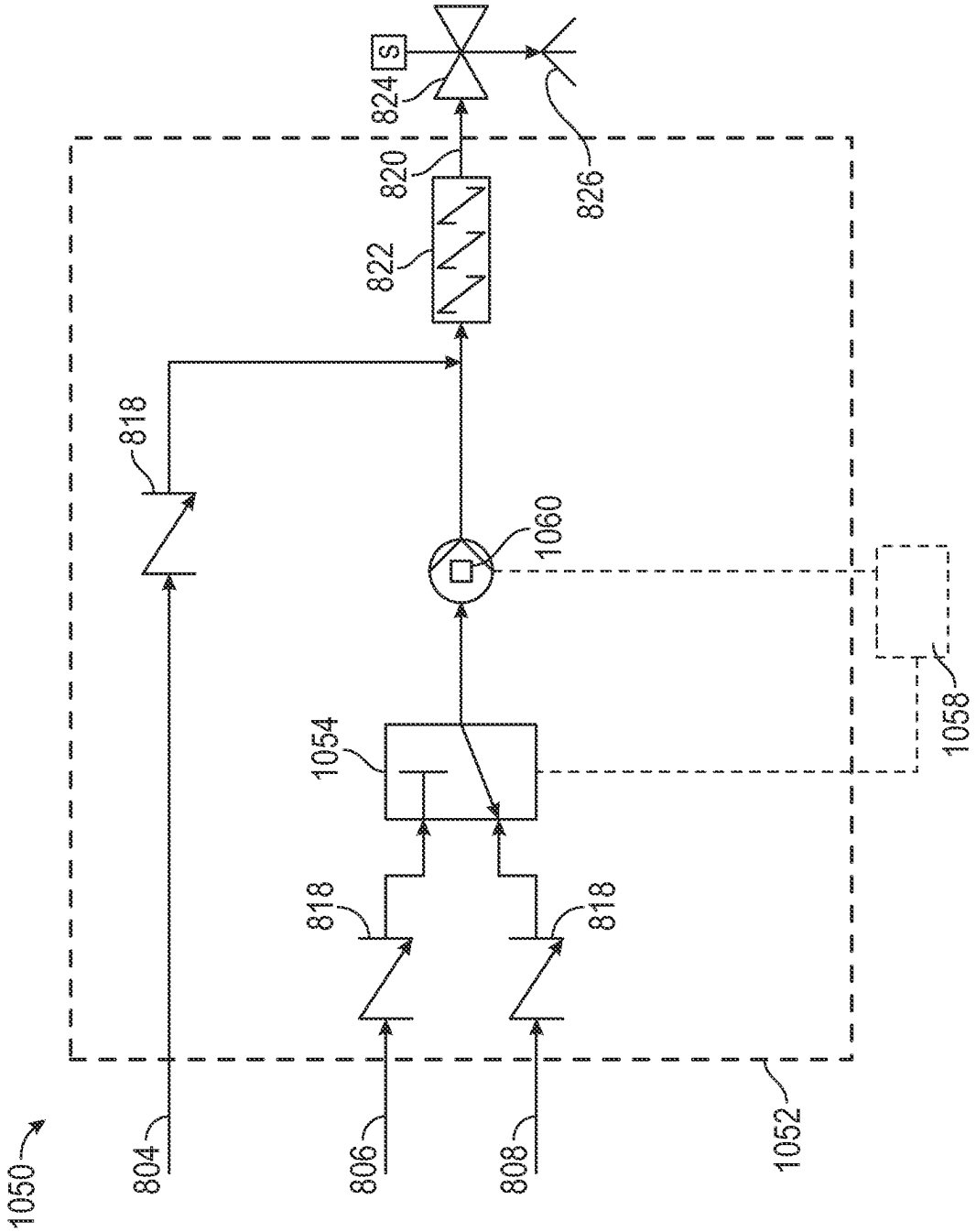
1050
804
806
808
818
818
818
1054
1060
822
820
824
S
826
1052
1058

FIG. 10B

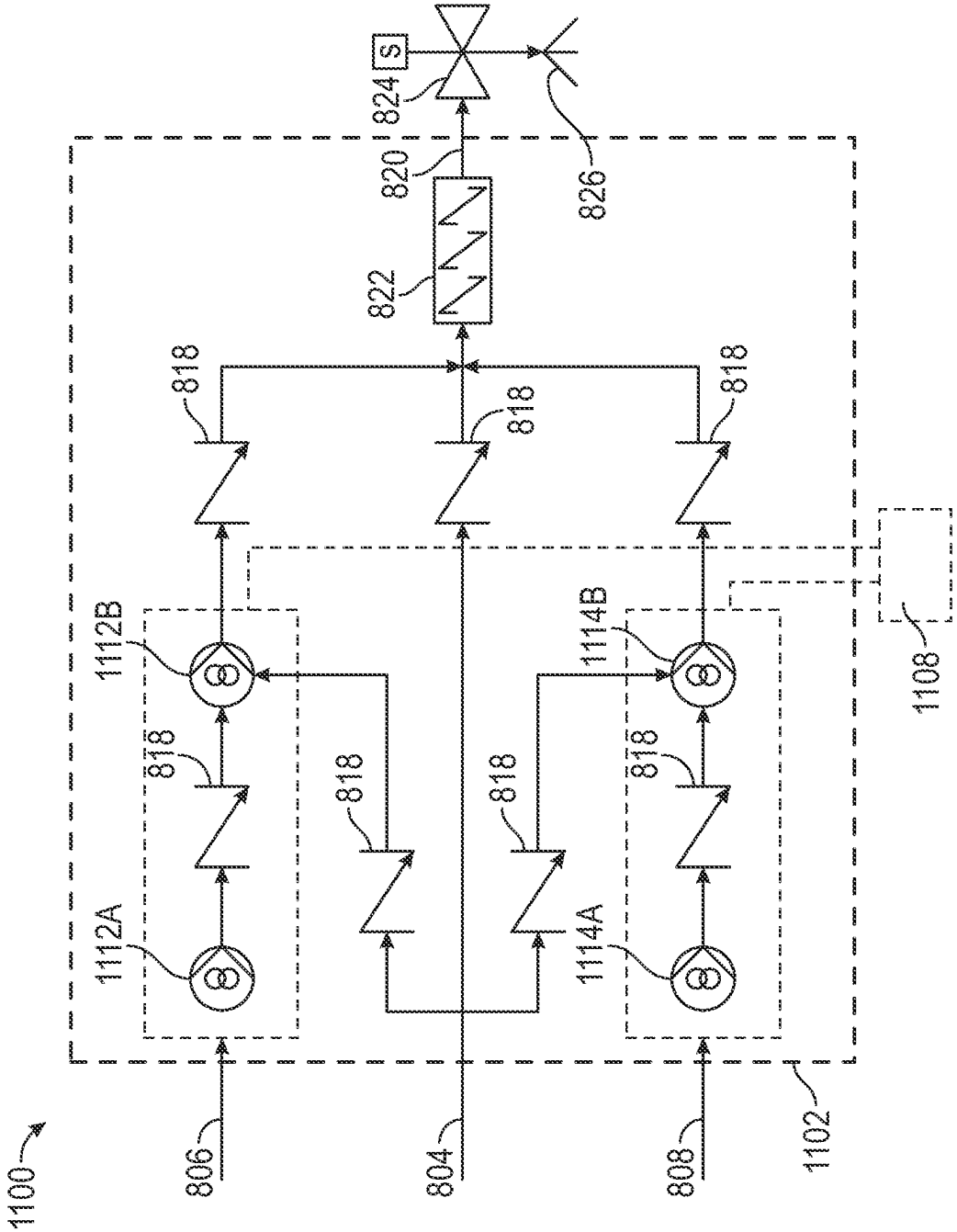
1100
806
804
808
1102
1112A
1112B
1114A
1114B
818
822
820
824
S
826
1108

FIG. 11

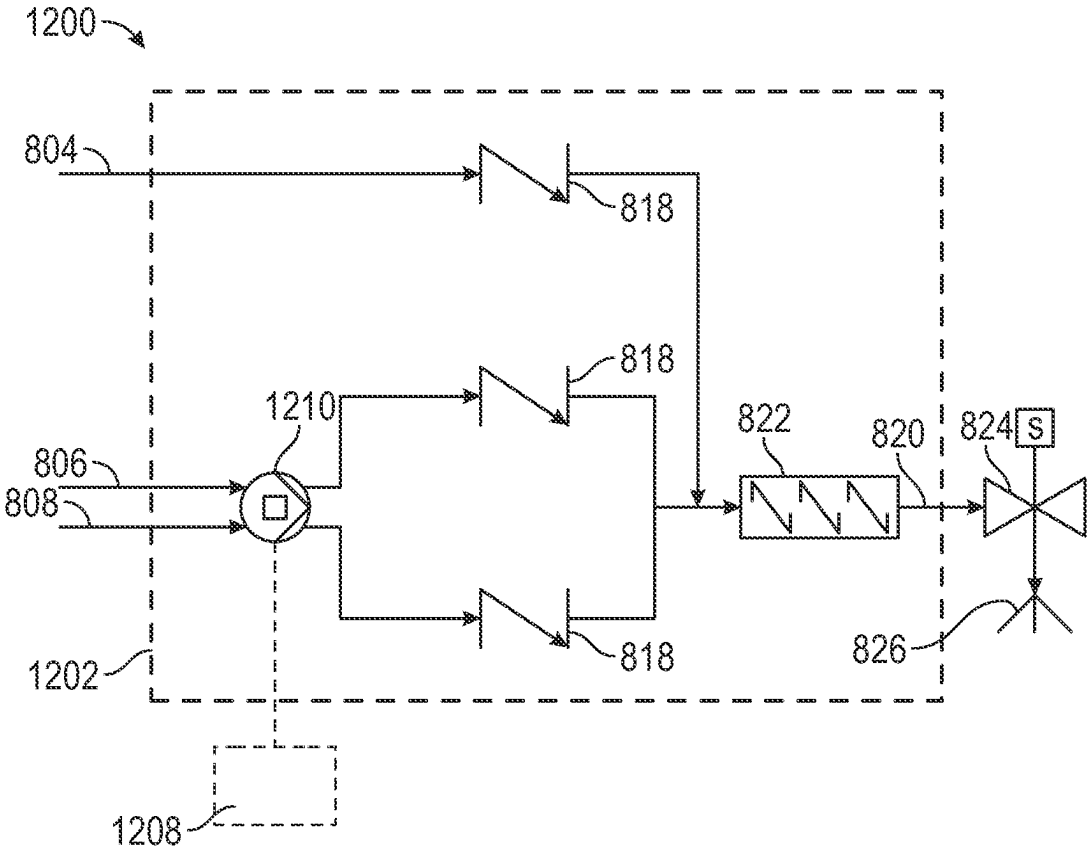

FIG. 12

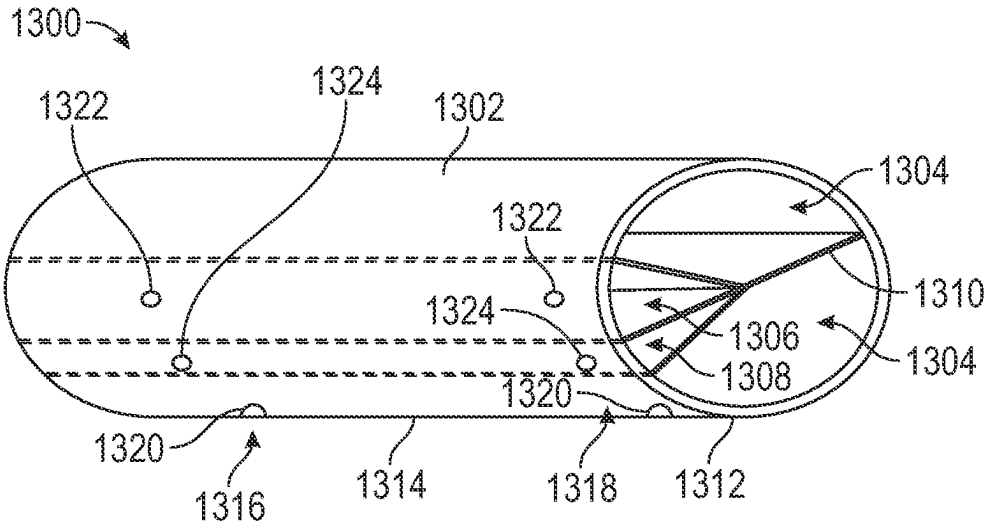

FIG. 13

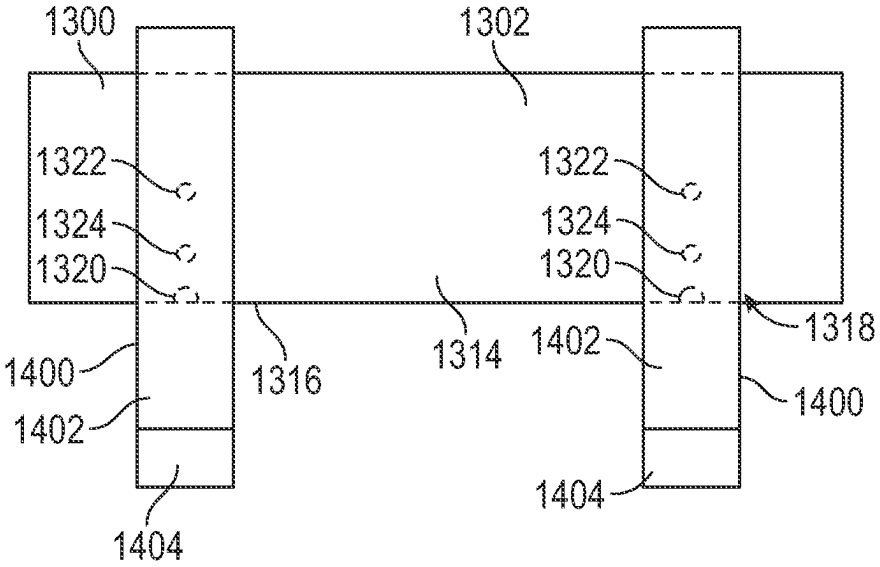

FIG. 14A

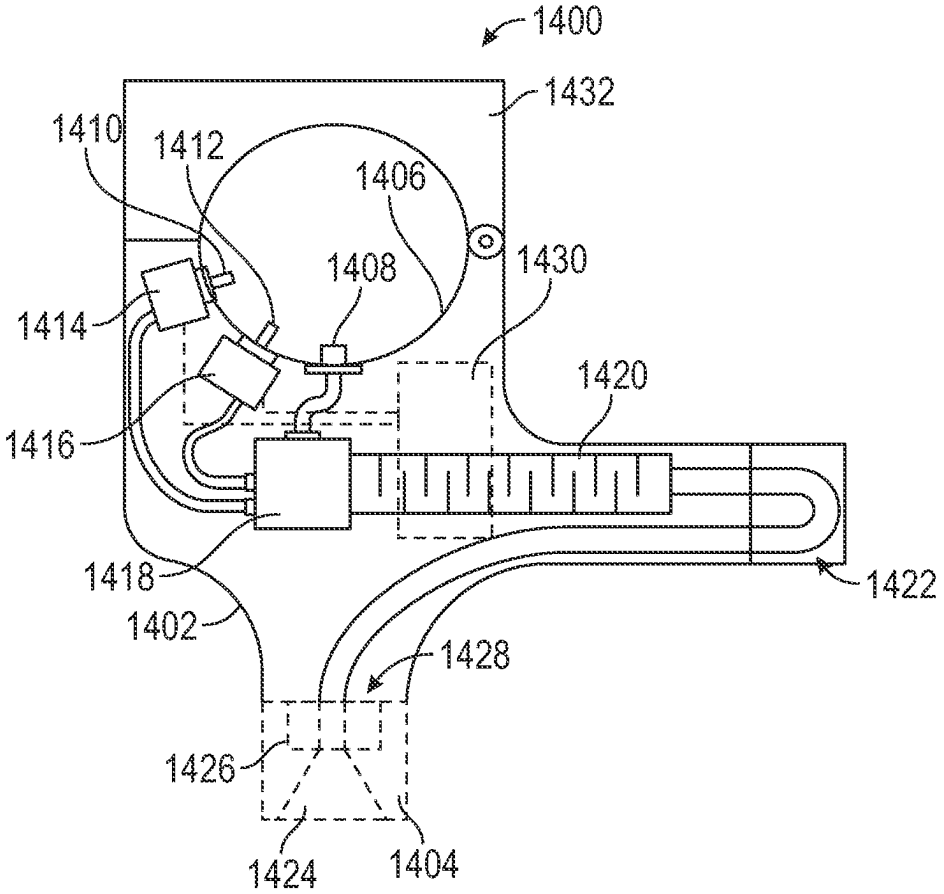

FIG. 14B

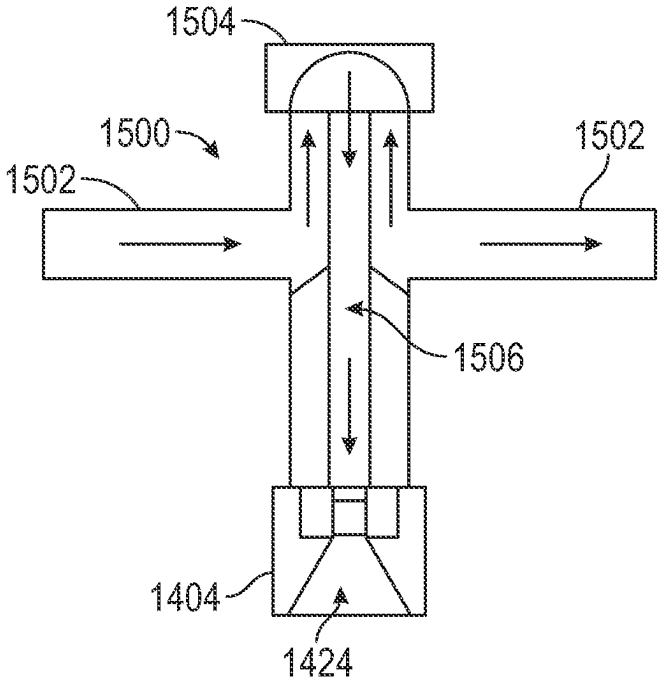

FIG. 15

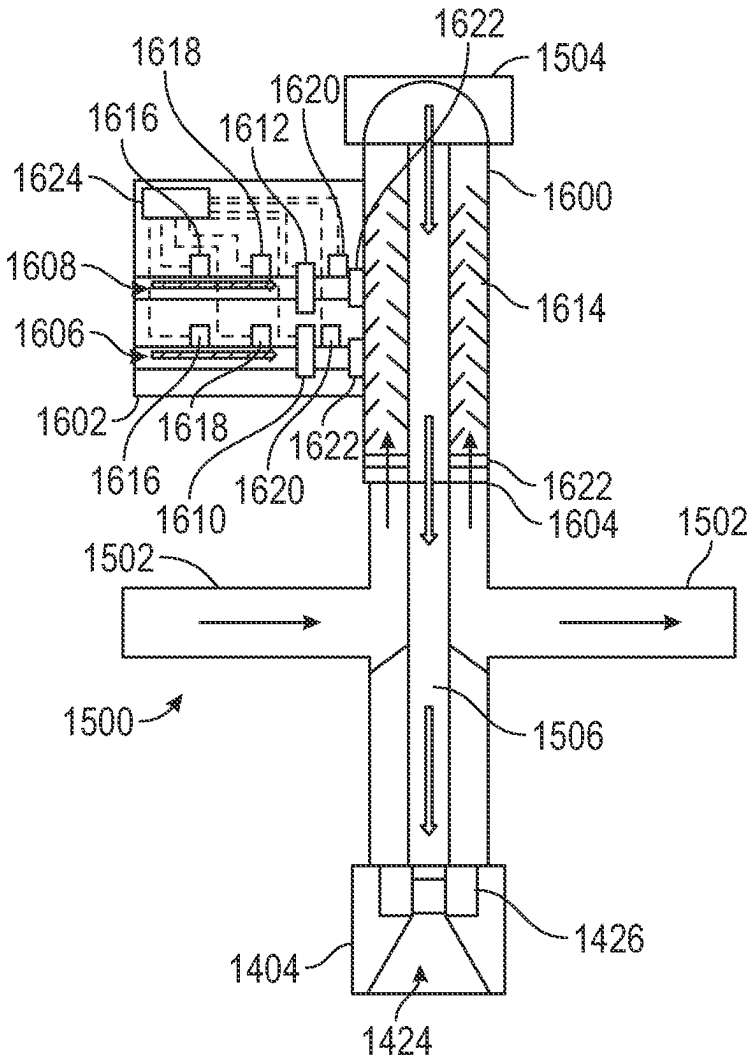
1622
1504
1618
1620
1616
1612
1624
1600
1608
1614
1606
1602
1618
1622
1616
1620
1610
1622
1604
1502
1502
1500
1506
1426
1404
1424

FIG. 16

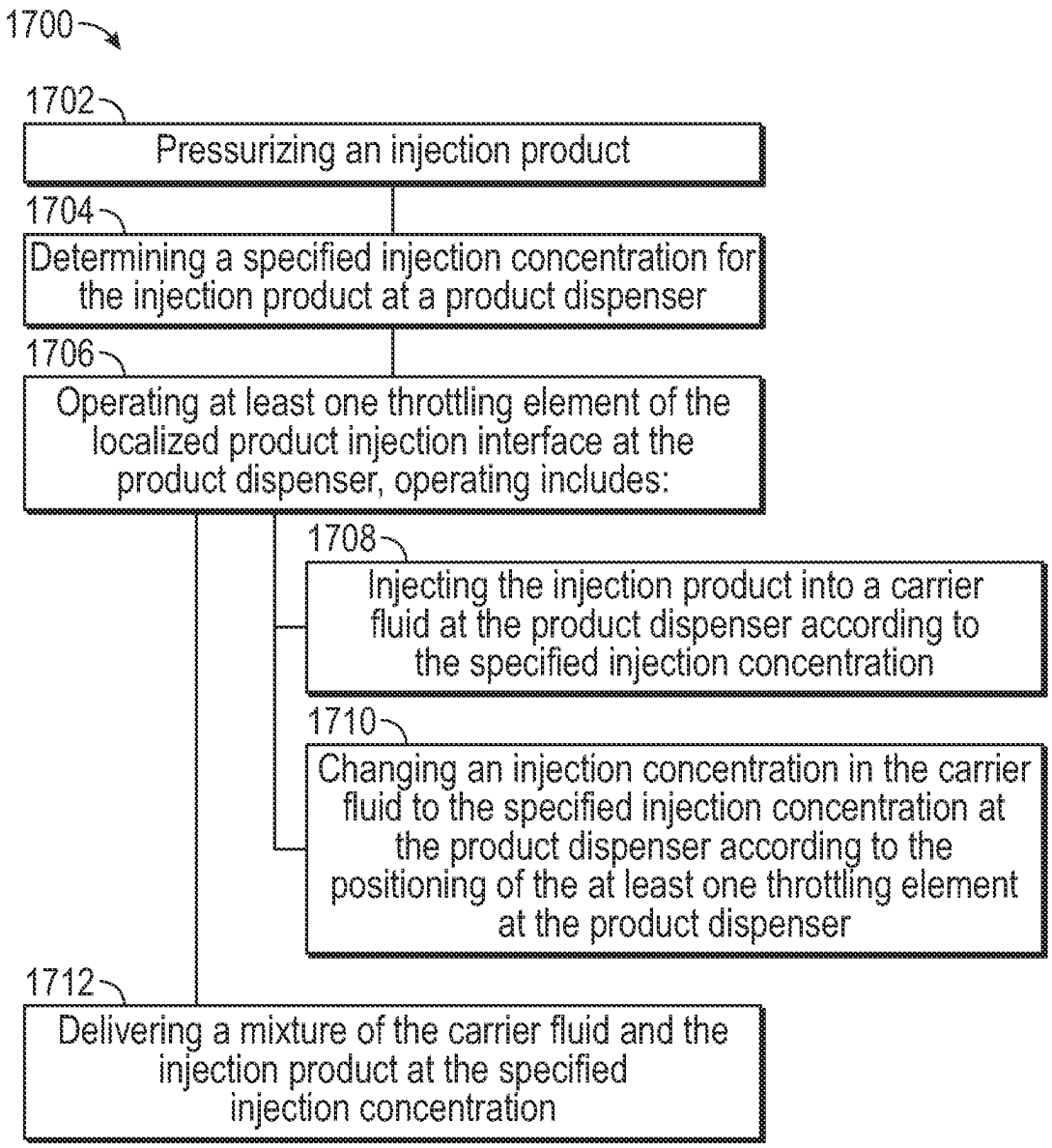
1700
1702
Pressurizing an injection product
1704
Determining a specified injection concentration for the injection product at a product dispenser
1706
Operating at least one throttling element of the localized product injection interface at the product dispenser, operating includes:
1708
Injecting the injection product into a carrier fluid at the product dispenser according to the specified injection concentration
1710
Changing an injection concentration in the carrier fluid to the specified injection concentration at the product dispenser according to the positioning of the at least one throttling element at the product dispenser
1712
Delivering a mixture of the carrier fluid and the injection product at the specified injection concentration

FIG. 17

LOCALIZED PRODUCT INJECTION SYSTEM AND METHODS FOR SAME

CROSS-REFERENCE TO RELATED PATENT DOCUMENTS

This patent application is a continuation of U.S. application Ser. No. 16/476,016, filed Jul. 3, 2019, which is a U.S. national stage application filed under 35 U.S.C. § 371 from International Application Serial No. PCT/US2018/012590, which was filed 5 Jan. 2018, and published as WO2018/129323 on 12 Jul. 2018, and which claims the benefit of priority of Kocer et al., U.S. Provisional Patent Application Ser. No. 62/442,897 entitled "LOCALIZED PRODUCT INJECTION SYSTEM," filed on Jan. 5, 2017, which applications are hereby incorporated by reference herein in their entirety.

This patent application is also related to U.S. application Ser. No. 14/300,761, filed on Jun. 10, 2014, entitled LOCALIZED PRODUCT INJECTION SYSTEM FOR AN AGRICULTURAL SPRAYER; incorporated herein by reference.

This patent application is also related to U.S. application Ser. No. 13/832,735 filed on Mar. 15, 2013, entitled MULTI-SECTION APPLICATOR WITH VARIABLE-RATE SECTIONS; incorporated herein by reference.

This patent application is also related to U.S. application Ser. No. 13/832,678 filed on Mar. 15, 2013, entitled REAL TIME INJECTION FOR AGRICULTURAL SPRAYERS; incorporated herein by reference.

This patent application is also related to U.S. Application Ser. No. 61/803,942 filed on Mar. 21, 2013, entitled GEAR FLOW DIVIDER FOR AGRICULTURAL PRODUCT INJECTION; incorporated herein by reference.

COPYRIGHT NOTICE

A portion of the disclosure of this patent document contains material that is subject to copyright protection. The copyright owner has no objection to the facsimile reproduction by anyone of the patent document or the patent disclosure, as it appears in the Patent and Trademark Office patent files or records, but otherwise reserves all copyright rights whatsoever. The following notice applies to the software and data as described below and in the drawings that form a part of this document: Copyright Raven Industries, Inc.; Sioux Falls, South Dakota, USA. All Rights Reserved.

TECHNICAL FIELD

This document pertains generally, but not by way of limitation, to the application of products (granular, fluid or gaseous) and supplementing of the products.

BACKGROUND

Agricultural sprayers are used to distribute agricultural products, such as fertilizers, insecticides, herbicides and fungicides to crops. Agricultural sprayers include one or more distribution booms that are long enough (e.g., 60 feet to 150 feet) to spray multiple rows of crops in a single pass. Agricultural fields are often irregular in shape and contain one or more of contour changes, tree lines, hillsides, ponds or streams. Irregular field shapes and contour changes provide challenges in even distribution of agricultural products and can lead to waste of agricultural products. Additionally, the configuration of the agricultural sprayer itself may cause unpredictable variation in application of agricultural products.

Agricultural sprayers include a reservoir for a carrier substance. The reservoir is in communication, by way of a header tube or pipe, with a plurality of sections provided along one or more carrier booms (e.g., boom tubes). The header is the main line extending between the reservoir and the carrier booms. Each of the plurality of sections includes multiple sprayer nozzles that distribute the carrier substance received by the section. The carrier substance is used as a vehicle to carry and distribute one or more injection products dispersed into the carrier substance, for instance herbicides, pesticides, fertilizers or the like.

In one example, the injection product is retained in a reservoir separate from the reservoir for the carrier substance. The injection product is pumped from the reservoir and delivered from the reservoir to the header of the carrier substance. In some examples, an inline mixer (e.g., a static mixer) mixes the injected chemical with the carrier substance upstream from or within the header. The header then delivers the mixture to the boom tubes, and the mixture is distributed to the sections and finally the nozzles associated with each of the sections.

OVERVIEW

The present inventors have recognized, among other things, that a problem to be solved can include minimizing lag time and latency between the introduction of an injection product to a carrier flow and application (dispensing) of the carrier flow with the proper concentration of the injection product. In an example, the present subject matter can provide a solution to this problem, such as by providing a localized product injection system in communication with a carrier substance distribution system. The localized product injection system communicates with the carrier substance distribution system locally, for instance at the plurality of product dispensers such as one or more of the sprayer sections or the individual sprayer nozzles of the sprayer sections.

In one example, the localized product injection system includes a plurality of localized injection interfaces that maintain a pressurized source of the injection product immediately adjacent to each of the product dispensers and accordingly ready for instantaneous injection to the flow of the carrier substance immediately prior to dispensing through product dispensers. For instance, each of the plurality of localized injection interfaces includes an interface valve and an injection port. Because the interface valve is positioned at the corresponding product dispenser, upon operation of the interface valve the injection product is instantaneously provided through the injection port to the dispenser (e.g., one or more of a sprayer section or sprayer nozzle). In another example, each of the plurality of localized injection interfaces includes a local pump (e.g., for one or more injection products) that pressurizes the injection product immediately adjacent to each of the product dispensers. Accordingly, lag time for delivery and in-line mixing through a header, the boom tubes associated with each carrier boom, and the sections on each carrier boom are eliminated (including eliminated and minimized). Instead, the localized injection interfaces provide a pressurized source of the injection product at the product dispensers that is ready for instantaneous injection (e.g., at the product dispensers) and mixing with the carrier flow immediately prior to dispensing.

This overview is intended to provide an overview of subject matter of the present patent application. It is not intended to provide an exclusive or exhaustive explanation of the invention. The detailed description is included to provide further information about the present patent application.

DETAILED DESCRIPTION

In the drawings, which are not necessarily drawn to scale, like numerals may describe similar components in different views. Like numerals having different letter suffixes may represent different instances of similar components.

The drawings illustrate generally, by way of example, but not by way of limitation, various embodiments discussed in the present document.

FIG. **1**A is a perspective view of one example of an agricultural sprayer.

FIG. **1**B is a schematic view of one example of an agricultural sprayer including a localized product injection system.

FIG. **2**A is a schematic view of an agricultural sprayer including one example of a localized product injection system.

FIG. **2**B is a detailed schematic view of one example of a localized injection interface in communication with a sprayer section of FIG. **2**A.

FIG. **3**A is a schematic view of an agricultural sprayer including another example of a localized product injection system.

FIG. **3**B is a detailed schematic view of another example of a localized injection interface in communication with a sprayer nozzle of FIG. **3**A.

FIG. **4** is a schematic view of another example of an agricultural sprayer.

FIG. **5** is a schematic view of one example of an injection control module of a localized product injection system.

FIG. **6** is top view of one example of a field map including a plurality of zones indexed with concentration values for the injection product.

FIG. **7** is a block diagram showing one example of a method for using a localized product injection system.

FIGS. **8**A-B are schematic views of additional examples of localized injection interfaces in communication with a product dispenser.

FIGS. **9**A-C are schematic views of other examples of localized injection interfaces in communication with a product dispenser.

FIGS. **10**A-B are schematic views of supplemental examples of localized injection interfaces in communication with a product dispenser.

FIG. **11** is a schematic view of one example of a localized injection interface including a gear pump and mixing assembly.

FIG. **12** is a schematic view of one example of a localized injection interface including a multi-flow pump.

FIG. **13** is a perspective view of one example of a composite boom tube.

FIG. **14**A is a side view of one example of a localized injection interface coupled with the composite boom tube shown in FIG. **13**.

FIG. **14**B is a front view of the localized injection interface.

FIG. **15** is a cross sectional view showing one example of a nozzle assembly.

FIG. **16** is a cross sectional view of an example localized injection interface installed with the nozzle assembly shown in FIG. **15**.

FIG. **17** is a block diagram showing one example of a method for using a localized product injection interface.

DETAILED DESCRIPTION

FIG. **1**A shows one example of a sprayer **100**. As shown, sprayer **100** is a vehicle based sprayer including an agricultural product dispensing system carried by the vehicle. In another example, the sprayer **100** includes, but is not limited to, a trailer housed sprayer configured for coupling with a vehicle, such as a tractor or the like. As shown in FIG. **1**A, the sprayer **100** includes at least two sprayer booms **102**. The sprayer booms **102** shown in FIG. **1**A are in a stowed configuration, for instance during transport of the sprayer **100** into a field. The sprayer is configured to apply one or more agricultural products including, but not limited to, fertilizers, herbicides, pesticides or the like. The sprayer **100** applies the agricultural product in a liquid form, for instance through one or more nozzle assemblies positioned along the sprayer boom **102** according to the spacing of rows of agricultural crops. As will be described herein, the sprayer **100** applies the agricultural product by mixing an injection product with a carrier fluid to achieve a desired concentration of the injection product (a fertilizer, herbicide, pesticide or the like) within the carrier fluid. In another example, the injection product includes a plurality of injection products, for instance injected separately by way of differing injection systems or injected as a common mixture of fluids (e.g., from a mixed injection reservoir) into the product dispensers including one or more of the boom sections and nozzle assemblies of the sprayer booms **102**.

As will be described herein, an agricultural product is provided in a localized manner to each of the product dispensers whether boom sections or nozzles to provide individualized control of application of the agricultural product. Further, the instantaneous injection of the injection product locally to the carrier fluid stream prior to the product dispensers (boom sections, nozzle assemblies or the like) ensures lag time between a desired change in concentration of the injection product and the corresponding application of the adjusted agricultural product is minimized (e.g., negligible lag time or allows for near instant injection and dispensing of the resulting agricultural product). In contrast, other systems mix the injection product upstream from the product dispensers, for instance within the carrier fluid reservoir or at an interchange near a header pump for the carrier fluid. These systems have lag between the interchange and the product dispensers and further preclude the individualized control of the agricultural product (e.g., injection concentration) at the product dispensers. Stated another way, a localized product injection system as described herein provides a pressurized environment for the injection product at the one or more product dispensers (e.g., locally) for instance the boom sections, nozzles, nozzle assemblies or the like. Accordingly, the injection product is provided under pressure to the carrier fluid at the product dispensers immediately prior to application to an agricultural crop.

Referring now to FIG. **1**B, a schematic representation of the sprayer **100** shown in FIG. **1**A is provided. In this example the sprayer booms **102** are in a deployed configuration, for instance extending away from the vehicle **100** shown in FIG. **1**A. As shown, the sprayer **100** includes a carrier system **103** including a carrier reservoir **104** positioned centrally within the vehicle or tender. The carrier

reservoir **104** includes a carrier fluid therein, for instance water or the like. In another example, the carrier reservoir **104** includes a carrier fluid such as water mixed with an initial carrier product (e.g., a mixed carrier formulation). The carrier fluid in such an example includes, but is not limited to, a primary fertilizer, a primary chemical or water base and fertilizer mixture, spray adjuvant, surfactant or the like.

The carrier fluid is distributed from the carrier reservoir by way of a header **105** coupled with one or more boom tubes **106**. The boom tubes **106** extend along the sprayer booms **102** as shown in FIG. **1**B and correspondingly transport the carrier fluid the length of the sprayer booms. As further shown in FIG. **1**B, the boom tubes **106** are in communication with one or more corresponding boom sections **108**. The boom sections **108** are positioned along the sprayer booms **102** and each provide a plurality of nozzle assemblies **110**. As will be described herein, the product dispensers **107** include, but are not limited to, one or more of the boom sections **108**, the nozzle assemblies **110** or a combination of both. Carrier fluid is accordingly distributed from the carrier reservoir **104** through the header **105** into the boom tubes **106**. The carrier fluid is then carried from the boom tubes **106** to one or more boom sections **108** and the associated nozzle assemblies **110** for application of the carrier fluid (mixed with the injection product as described herein) to the agricultural crops.

The localized product injection system **112** is also shown schematically in two different formats in FIG. **1**B. In each of the formats the localized product injection system **112** includes an injection product input, such as an injection product reservoir **114**, separate from the carrier reservoir **104**. The injection product reservoir **114** includes a volume of the injection product therein (concentrated fertilizer, herbicide, pesticide or the like). The injection product reservoir **114** feeds into an injection header **116** which is in communication with one or more injection boom tubes **118** extending along the sprayer booms **102**.

In one example, shown in FIG. **1**B the injection boom tubes **118** are coupled with the product dispensers **107** (the boom sections **108**) by one or more injection interfaces **120**. For instance at the left side of FIG. **1**B the injection interfaces **120** are provided at opposed ends of the boom section **108**. In another example, the injection interfaces **120** are provided at a single or multiple locations along the boom section **108**. The injection product is distributed to the boom section **108** through the injection interfaces **120**. As will be described herein in one example the injection interfaces **120** include at least one throttling element, such as a control valve or pump configured to vary the flow of the injection product into the product dispenser **107** (in this case the boom section **108**) for mixing with the carrier fluid prior to application. Additionally, in the examples described herein a reference to a control valve or pump is considered broadly to also include other throttling elements. For instance, the recitation of a pump or control valve each include the other (e.g., control valve or pump).

The second format of the localized product injection system **112** is also shown in the FIG. **1**B schematic view. In this example the injection interfaces **120** are coupled with the nozzle assemblies **110** of one or more boom sections **108**. For instance, as shown at the right portion of the sprayer **100** the injection interfaces **120** are provided at each of the nozzle assemblies **110**. For instance the injection interfaces **120** provide individualized injection of the injection product to each of the nozzle assemblies **110**. In contrast to injection to the boom sections **108** and corresponding individualized control of the injection product concentration in the boom sections, the injection interfaces **120** at the nozzle assemblies **110** provide individualized control of the concentration of the injection product at each of the nozzle assemblies **110**. Accordingly, the controlled injection of the injection product by the injection interfaces allows for individualized control of the product dispensers, including individualized control of one or more of the boom sections **108** or the nozzle assemblies **110**.

As further shown in FIG. **1**B, the localized product injection system **112** provides a pressurized environment for the injection product at the injection interfaces **120** (whether the injection interfaces are at the boom section **108** or nozzle assemblies **110**). That is to say, the injection product is maintained at a pressure for immediate injection into the carrier fluid of the carrier system **103** at the local injection interfaces **120** immediately prior to application of the resulting agricultural product through the product dispensers **107**. Accordingly, there is no appreciable lag time between the injection of the injection product to the carrier fluid and application of the resulting agricultural product (including the carrier fluid and the injection product) to the agricultural crop. Additionally, the injection product is immediately mixed with the carrier fluid to the specified concentration, for instance with a static mixer, by virtue of the jet of the injection product into the carrier fluid stream from the injection interfaces **120** or the like. Specified concentration of the injection product is achieved at the product dispensers **107** according to an individualized concentration determination (e.g., with an automated controller) for each corresponding injection interface **120**. Accordingly, the sprayer **100** shown in FIG. **1**B including the localized product injection system **112** is able to individually control the content of the agricultural product (for instance the concentration of the injection product within the carrier fluid) at each of the injection interfaces **120** and the corresponding product dispensers **107**. In the example where the injection interface **120** incudes a boom section **108** the sprayer **100** is thereby able to control the concentration of the injection product at each of the boom sections **108**. In another format where the injection interfaces **120** are associated with each of the nozzle assemblies **110** each of the injection interfaces **120** are individually controlled to accordingly provide a desired concentration of the injection product at each of the nozzle assemblies **110**.

The injected product is optionally used as a supplemental chemical with mixed carrier formulations for spot treatment in areas of the field where mixed carrier formulation is not sufficient to achieve the desired results (e.g., control of weeds, pests, or yield). In one prophetic example, an operator applies a primary herbicide (Monsanto brand Roundup®) from the carrier reservoir **104**. The herbicide is mixed with water and a spray adjuvant in the carrier reservoir **104** for general application to the field for corresponding general weed control. The operator (or field map) is aware that the primary herbicide alone will not control certain weeds at certain areas of the field (e.g., because of resistance to the primary herbicide) and accordingly indexes locations for specified injections of the injection product. The operator uses a supplemental herbicide as an injection product in the injection product reservoir **114** (such as DuPont brand Assure®) to control weeds in those areas in addition to the mixed carrier formulation. Accordingly and as described herein, when the specified areas of the field are reached by the sprayer (e.g., the corresponding one or more product dispensers **107**) the injection product including the supplemental herbicide is injected into the corresponding

product dispensers **107** and the areas are sprayed with both primary and secondary herbicides. As the product dispensers move out of the designated areas (e.g., the injection product is no longer specified or specified at a differing concentration) the injection product is injected at a different concentration or shut off from injection to the carrier fluid.

Additionally, the injection product is provided from each of the injection interfaces **120** irrespective of the flow rate of the carrier fluid within the carrier system **103** (e.g., at high or low flow of the carrier fluid). For instance, in a low flow condition only a moderate or small amount of the agricultural product is applied to the agricultural crop corresponding to a low flow of the carrier fluid from carrier system **103**. Because of the low flow rate of the carrier fluid in other systems an upstream added injection product has significant residence time and corresponding lag time in the system prior to application at a desired concentration. Stated another way, the lag time already present between addition of the injection product to the carrier fluid at the upstream and its actual application through a product dispenser is increased because of the minimized flow of the carrier fluid. In the sprayer **100** described herein having injection of the injection product locally at the product dispensers **107** the lag time is effectively eliminated (including substantially reduced). Instead, the localized product injection system **112** provides an immediate or instantaneous injection of the injection product at the injection interfaces **120** to the product dispensers **107** immediately prior to the application of the resulting agricultural product.

FIG. **2**A shows a detailed example of a sprayer **100** including the localized product injection system **112**. In the example shown in FIG. **2**A the localized product injection system **112** is in the boom section format. For instance, the injection interfaces **120** are coupled with one or more boom sections **108** along the sprayer booms **102** and boom tubes **106** shown in FIG. **1**B. The carrier system **103** is shown again in FIG. **2**A and includes the carrier reservoir **104**. As shown in FIG. **2**A the carrier reservoir **104** communicates with the product pump **201** that pressurizes the carrier fluid and delivers it within the header **105** (also shown in FIG. **2**A). In one example the carrier system **103** includes a carrier flow control valve **200** and a flow meter **202**. The flow meter **202** cooperates with the carrier flow control valve **200** (e.g., with an intervening controller) to measure the output flow from the carrier reservoir **104** (produced by the product pump **201**) and to facilitate actuating of the carrier flow control valve **200** to achieve the desired flow rate of carrier fluid to the plurality of boom sections **108** described herein. As further shown in FIG. **2**A the header **105** extends to the boom tubes **106** extending to the left and right of the header **105**. Each of the boom tubes **106** in turn feeds into a plurality of boom sections **108** and the boom sections **108** each have corresponding nozzle assemblies **110**. Optionally, section valves **205** are interposed between each boom section **108** and the corresponding boom tubes **106**. The sections valves **205** facilitate control of the carrier fluid flow to each of the boom sections **108**.

As described herein and shown in the example provided in FIG. **2**A, the product dispensers **107** include the boom sections **108**. That is to say, the injection interfaces **120** are coupled with the boom sections **108** and thereby provide individualized control of the injection product to each of the boom sections **108** relative to the other boom sections.

Referring again to FIG. **2**A, the localized product injection system **112** previously described and shown in FIG. **1**B is shown in further detail. In this example, the injection product reservoir **114** communicates with an injection pump **203**. The injection pump **203** delivers the injection fluid from the reservoir **114** to an injection header **116**. The injection header **116** delivers the injection product to one or more injection boom tubes **118** extending to the left and right and shown in FIG. **2**A. The injection boom tubes **118** distribute the injection product to a plurality of injection interfaces **120**. As previously described, the injection interfaces **120** in the example shown in FIG. **2**A deliver the injection product directly to each of the product dispensers **107** (e.g., the boom sections **108**).

As shown in FIG. **2**A the localized product injection system **112** is isolated from the carrier system **103** until localized introduction of the injection product at the injection interfaces **120**. Accordingly, the localized product injection system **112** is able to maintain a pressurized environment for the injection product to the injection interfaces **120** (e.g., with the injection pump **203**). At the injection interfaces **120** the pressurized injection product is delivered to each of the product dispensers **107** as determined, for instance, by a controller module described herein. Even in low flow situations with a low flow of carrier fluid, metered by the flow meter **202** and the carrier flow control valve **200**, the injection product is provided in a pressurized manner and is thereby ready for instantaneous delivery to one or more of the boom sections **108**. Accordingly, individualized and instantaneous control of the injection product (e.g., the concentration of the injection product) is achieved for each of the product dispensers **107** including the boom sections **108**. The injection product is provided from the injection interfaces **120** locally relative to the boom sections and remote from the upstream carrier reservoir **104**.

Referring now to FIG. **2**B, a detailed view of one of the boom sections **108** shown in FIG. **2**A is provided. The boom section **108** extends from left to right on the page and includes a plurality of nozzle assemblies **110**. In one example, the nozzle assemblies **110** each include a nozzle check valve **222** and a corresponding nozzle **224** (e.g., an atomizer nozzle, stream nozzle or the like). In the example shown in FIG. **2**B nine nozzle assemblies **110** are provided in a spaced configuration along the boom section **108**. Carrier lines **206** (e.g., carrier fluid inputs, carrier fluid fittings or the like) introduce carrier fluid to each of boom section first and second ends **218**, **220**. In one example each of the carrier lines **206** includes a check valve **208** and a mixer **210** such as a static mixer.

The localized product injection system **112** shown in FIG. **2**B includes the injection interfaces **120**. In the example shown in FIG. **2**B, an injection interface **120** is associated with each of the carrier lines **206** (the carrier lines extending from the boom tube **106** of the carrier system **103** to the boom section **108**). Each of the injection interfaces **120** delivers injection product (e.g., from an injection product input, such as an injection product fitting described herein) to the associated carrier line **206** in communication with the boom section first and second ends **218**, **220**.

In one example, the injection interfaces **120** include interface valves **212** in series with check valves **214**. In one example the interface valves **212** include pulse width modulation valves or other control valves configured to provide a metered flow of the pressurized injection product through the injection interfaces **120** to injection ports **216** in communication with each of the carrier lines **206**. In one example the actuation of the interface valves **212**, for instance to a desired flow rate, delivers the designated amount of injection product to each of the corresponding carrier lines **206** at the injection ports **216**. The solution of the carrier fluid and the injection product is delivered

through the mixers **210** and mixed prior to delivery to the boom section **108**. The mixed solution of the carrier fluid and the injection product (the agricultural product) is thereafter delivered from the boom section first and second ends **218**, **220** throughout the boom section **108** and to each of the nozzle assemblies **110**. Accordingly, each of the nozzle assemblies **110** associated with a particular boom section **108** delivers substantially the same agricultural product having the same injection product concentration. The injection interfaces **120** associated with the boom section **108** are operated independently relative to other injection interfaces **120** associated with other boom sections **108** of the sprayer **100**. Accordingly individualized control and instantaneous delivery of the injection product to each of the boom sections **108** (e.g., with little to no lag time) is achieved for each of the boom sections **108**. In another example, the injection ports **216** are downstream of the mixer **210**. For instance, the injections ports **216** are interposed between the injection interfaces (optionally including the carrier line) and the product dispenser (e.g., the boom section **108** or nozzle assembly **110**).

FIG. **3**A shows another example of the sprayer **100**. The example shown in FIG. **3**A is similar in at least some regards to the sprayer **100** previously shown and described in FIGS. **2**A and **2**B. For instance, the sprayer **100** shown in FIGS. **3**A and **3**B includes an isolated localized product injection system **112** that is separate from the corresponding carrier system **103**. As previously described herein, the localized product injection system **112** delivers an injection product from the injection product reservoir **114** to a plurality of boom sections **108**. As shown in FIG. **3**A and further shown in FIG. **3**B, the injection interfaces **120** are each in communication with corresponding nozzle assemblies **110**. Stated another way, the product dispensers **107** in the example shown in FIGS. **3**A and **3**B are the nozzle assemblies **110**. Accordingly individualized control and instantaneous injection of the injection product are provided at each of the nozzle assemblies **110**. Each of the injection interfaces **120**, for instance along the length of the sprayer booms **102**, are independently controlled according to determined concentrations of the injection product within the carrier fluid. The dispensed agricultural product from each of the nozzle assemblies thereby has a varying concentration of the injection product based on the independent control of the concentration provided by the injection interfaces **120**.

Referring now to FIG. **3**B, another example of the injection interface **120** is provided. For instance, as shown in FIG. **3**B the injection interface **120** includes an interface valve **212** and a check valve **214** similar in at least some regards to the interface valve and check valves previously described and shown in FIG. **2**B. In contrast to the previously described example, the injection interface **120** in this example includes an injection port **308** provided at the nozzle assembly **110** and downstream from a carrier line **300** (e.g., carrier fluid input, carrier fluid fitting or the like) communicating with the boom section **108** or boom tube **106**. The nozzle assembly **110** includes a check valve **302** and an in-line mixer **304** (e.g., a static mixer). The nozzle assembly **110** further includes a nozzle **306**, such as an atomizer or stream nozzle in communication with the mixer **304**. As shown in FIG. **3**B, the injection port **308** is coupled with the nozzle assembly **110**, for instance the injection port is interposed between the check valve **302** and the mixer **304**. In another example, the injection port **308** is downstream of the mixer **340**. For instance, the injections port **308** is interposed between the injection interfaces **12** (optionally including the carrier line **300**) and the product dispenser (e.g., the nozzle assembly **110** or the boom section **108**).

In operation, the injection product is delivered through the injection boom tubes **118** to each of the injection interfaces **120**, for instance through an injection product input, such as an injection product fitting described herein. The interface valve **212** meters the amount of injection product delivered to the corresponding nozzle assembly **110**. For instance, the injection product is independently metered for each of the injection interfaces **120** according to control signals from a controller associated with each of the injection interfaces **120**. The controller is configured to control each of the injection interfaces independently or in one or more groups or arrays. The injection product is delivered from the interface valve **212** through the check valve **214** and into the nozzle assembly **110** through the injection port **308**. Prior to delivery through the nozzle **306** the injection product in combination with the carrier fluid is optionally mixed within the mixer **304** and thereafter delivered through the nozzle **306** as the agricultural product having the specified concentration of the injection product.

In a similar manner to the localized product injection system **112** shown in FIGS. **2**A and **2**B the localized product injection system **112** shown in FIGS. **3**A and **3**B is configured to provide an instantaneous addition of an injection product to the carrier fluid stream immediately prior to its dispensing through the nozzle **306** (e.g., local to the product dispenser **107**). Accordingly, instantaneous changes in concentration of the injection product in an agricultural product, for instance for differing parts of a field, are achieved on an as-needed basis as the sprayer **100** moves through the field with little to no lag time.

FIG. **4** shows another example of a sprayer **400**. The sprayer **400** shown in FIG. **4** includes a consolidated system having the injection product reservoir **406** and the injection pump **408** feeding into an injection port **410** of a header **412** of the sprayer **400**. For instance, the carrier fluid is pumped from a carrier reservoir **402** by a carrier pump **404** and supplemented with the injection product at the injection port **410** (e.g., by the injection pump **408**). In one example, a mixer is provided downstream from the injection port **410** for mixing the injection product with the carrier fluid prior to delivery through the header **412** to the boom tubes **406**, the boom sections **108** and the nozzle assemblies **110**.

As shown in FIG. **4**, the injection product is provided to the flow of carrier fluid upstream from the nozzle assemblies **110** and the boom sections **108**. Accordingly, there is significant lag time from the time of introduction of the injection product to the carrier fluid and eventual distribution of the agricultural product including the injection product therein from the nozzle assemblies **110**. Additionally, beyond the lag time each of the nozzle assemblies **110** and the boom sections **108** (the product dispensers **107**) delivers an identical concentration of the injection product within the agricultural product across the sprayer **400**. Accordingly, the sprayer **400** does not provide independent control or instantaneous introduction of the injection product to the product dispensers **107**.

FIG. **5** shows one example of a control system **501** for the sprayer **100**. In the example shown in FIG. **5**, the control system **501** controls a plurality of injection interfaces **120** (five interfaces are shown for exemplary purposes) associated with the nozzle assemblies **110** previously described herein. In a similar manner, the control system **501** is also configured for coupling the injection interfaces **120** associated with either of the nozzle assemblies **110** (as shown in FIG. **3**B) as well as the boom sections **108** (shown in FIG.

2B). Stated another way, the control system **501** is used with injection interfaces **120** associated with any of the product dispensers **107**.

Referring again to FIG. **5**, the control system **501** includes an injection control module **500**. The injection control module **500** is in communication with each of the injection interfaces **120**, for instance by one or more of wired or wireless connections or the like. The injection control module **500** includes, in one example, a rate control module **502** configured to determine and generate signals for one or more of the injection interfaces **120** corresponding to independent injection flow rates. The flow rates correspond to injection product concentrations for a given flow rate of carrier fluid.

In another example, the injection control module **500** includes an injection interface selection module **504**. The injection interface selection module **504** designates one or more of the injection interfaces **120** for adjustment of the injection flow rate of injection product (e.g., on, off, and graduated flow rates of the injection product). The injection interface selection module **504** selects one or more of the injection interfaces **120** for individualized control of the injection interfaces **120** to achieve a desired concentration (e.g., change in concentration) of the injection product in the carrier fluid. The rate control module **502** determines the corresponding rate for each of these selected injection interfaces **120**, for instance in cooperation with the field computer interface **506** and a field computer **508** as described herein.

As further shown in FIG. **5**, the injection interfaces **120** each include an interface valve **212** in communication with the injection control module **500** as previously described herein. The interface valve **212** accordingly allows for a controlled graduated flow of the injection product through the injection port **308** and into the corresponding product dispenser **107**. As shown in FIG. **5**, the injection port **308** is identical to the injection port **308** previously described and shown in FIG. **3**B. In another example, the injection port **216** is used with the injection interface **120**, for instance in a format corresponding to the example shown in FIGS. **2**A and **2**B, for the product dispenser **107** including the boom section **108**.

As further shown in FIG. **5**, an optional concentration sensor **512** is downstream from the injection port **308**. In one example, the concentration sensor **512** includes a relative concentration sensor configured to detect the concentration of the injection product within the agricultural product based on a comparison of at least one characteristic of the agricultural product at a product dispenser **107** relative to the same at least one characteristic at another product dispenser **107**. In another example, the concentration sensor **512** includes a sensor configured to measure one or more characteristics of the injection product (e.g., colors, translucency, or the like corresponding to concentration) relative to a look up table or other database. In still another example, the concentration sensor **512** includes an ultraviolet light sensor that assesses concentration based on color. For instance, a detectable tracer dye is added into the injection reservoir **114** shown in FIGS. **2**A and **3**A. The concentration sensor **512** is configured to measure the concentration of the tracer dye within the agricultural product and is thereby able to associate the measured concentration of the tracer dye with the corresponding concentration of the injection product. In yet another example, the concentration sensor **512** includes, but is not limited to, a pH detector configured to measure the alkalinity or acidity of the injection product within the agricultural product prior to dispensing through one or more of the product dispensers **107** including the boom sections **108** or nozzle assemblies **110**.

As shown in FIG. **5** the concentration sensors **512** are in communication with the injection control module **500**. In one example, the concentration sensors **512** cooperate with the injection control module **500** to provide for feedback control of the interface valves **212** of each of the injection interfaces **120**. Stated another way, as a specified concentration is provided to one or more of the interface valves **212** the corresponding concentration sensors **512** for those injection interfaces **120** measure the concentration in an ongoing manner and accordingly allow for adjustments of the interface valves **212** to accordingly ensure the interface valve **212** is actuated to administer the appropriate concentration of the injection product to the carrier fluid. Accordingly, the agricultural product dispensed from each of the product dispensers **107** (the boom sections **108** or nozzle assemblies **110**) has the concentration of the injection product determined by the injection control module **500** despite variations in the localized product injection system **112**, in the carrier system **103** or the like.

In another example, the injection control module **500** includes a field computer interface **506**. As shown, the field computer interface **506** provides an interface for coupling with a field computer **508** (part of the sprayer **100**, with a leading vehicle such as a tractor, or a standalone device) and the field computer **508** includes a field map **510**. As will be described herein the field map **510** includes a series of prescriptions of agricultural products, seed types, irrigation or the like for various zones. The differing prescriptions for each of the zones are determined through analysis of the field terrain, yields from previous crops, environmental conditions or the like.

The field map **510** provides a plurality of prescriptions for an agricultural product or agricultural products throughout the field (e.g., in one or more of the zones of the field). As the field computer **508** communicates with the injection control module **500** the injection control module uses the field map **510** and its associated zone based prescriptions to independently specify the flow rate of an injection product for each of the injection interfaces **120** for corresponding product dispensers **107**.

Further, with GPS systems, mathematical representations of the product dispensers **107** (e.g., the boom sections **108** or nozzle assemblies **110**) along the sprayer booms **102**, or the like the location of each of the product dispensers **107** of the sprayer **100** is continuously determined on the field map. As one or more product dispensers **107** of the sprayer **100** are within a zone or are poised to enter a zone the injection control module **500** (e.g., with the injection interface selection module **504**) selects the corresponding injection interfaces **120** for adjustment of the injection product concentration based on the field map prescription. As discussed herein, the injection product concentration is changed instantaneously at the product dispensers **107** (e.g., with minimal lag time) relative to the application of the resulting agricultural product according to the prescription. Accordingly, as one or more of the product dispensers **107** are positioned within or are poised to enter into a particular zone having a prescribed concentration of the injection product the rate control module **502** assesses the corresponding injection product concentration and actuates the interface valves **212** of the injection interfaces **120** associated with the one or more corresponding product dispensers **107**. The interface valves **212** are operated (opened, closed or gradu-

ated therebetween) to achieve the flow rate of the injection product that results in the specified concentration for that portion of the field map.

The injection product is thereby introduced in an instantaneous manner at the product dispensers **107** (e.g., locally to the dispensers) immediately prior to dispensing of the agricultural product having the desired concentration to that corresponding portion of the field. The sprayer **100** described herein is able to instantaneously deliver an accurate concentration of the injection product to the carrier system at one or more of the injection interfaces **120** by way of individualized control of each of those injection interfaces **120**. Accordingly, with the field map **510** having various prescriptions and a plurality of product dispensers **107** with individually controlled injection interfaces **120** a multitude of injection product concentrations are provided across the sprayer **102** to accordingly provide the agricultural product with varying concentrations of the injection product to a corresponding variety of different parts of the field.

FIG. **6** shows one example of a field **601** including at least one subdivision such as a field section **603**. The field section **603** is enlarged in the detailed view provided immediately below the field **601**. As shown in the detailed view of the field section **603**, the field section is divided into a plurality of zones **602**. Two exemplary zones **604**, **606** are provided. As shown, each of the zones **604**, **606** has a corresponding stippling, crosshatching or the like denoting a particular concentration of an injection product for an agricultural product (e.g., for a fungicide, herbicide, pesticide, fertilizer or the like). In one example, the zones **602** of the field **601** are indexed to a field map **600**. The field map **600** including the zones **602** provides a consolidated series of prescriptions for application of the agricultural product with varying concentrations of an injection product therein.

As previously described, the field map **600** is accessed by the field computer **508** and the injection control module **500**. Optionally, the injection control module **500** accesses the field map **600** directly. As described herein, as one or more of the product dispensers **107** (e.g., boom sections **108** or nozzle assemblies **110**) is within or is poised to enter one of the zones **602**, for instance zone **604** or zone **606**, the injection control module uses the prescription for the agricultural product for that zone to control the concentration of the injection product for the corresponding product dispensers **107**. Accordingly, prior to entering the zone, while entering the zone, or while within the zone the injection control module **500** (e.g., the injection interface selection module **504**) selects the relevant injection interfaces **120** corresponding to the product dispensers **107**. The rate control module **502** uses the prescriptions provided in the field map **510** (e.g., zones **604**, **606**) to accordingly signal the interface valves **212** with the flow rates of the injection product corresponding to the specified concentration of the injection product. The injection product is then instantaneously delivered to the carrier fluid flow at the product dispensers **107** to ensure timely delivery of the injection product into the carrier system for corresponding delivery of the agricultural product (with the specified concentration of injection product) to the instant zone **602** of the field **601**.

Accordingly, the sprayer **100** described herein including for instance the localized product injection system **112** (described in examples shown in FIGS. **2**A through **3**B), is configured to provide instantaneous individualized control of injection product concentration at each of a plurality of product dispensers **107**. The injection product is immediately and locally distributed to the respective product dispensers **107** immediately prior to the desired application of the agricultural product.

As previously described herein, because the localized product injection system **112** is isolated from the carrier system **103**, excepting the injection ports **216**, **308** (see FIGS. **2**B, **3**B), even in low flow conditions of the carrier fluid through the carrier system **103** the injection product is still delivered at pressure and with the desired independently controlled concentrations to the corresponding product dispensers **107**. Lag time that would otherwise delay the introduction of the injection product with the desired concentration is accordingly mitigated or eliminated even in low flow conditions because of the immediate introduction at the product dispensers **107**.

FIG. **7** shows one example of a method **700** for using a localized product injection system, such as the system **112** described herein. In describing the method **700** reference is made to one or more components, features, functions or the like described herein. Where convenient reference is made to the components, features functions or the like with reference numerals.

Reference numerals provided are exemplary and are not exclusive. For instance, the features, components, functions and the like described in the method **700** include, but are not limited to, the corresponding numbered elements, other corresponding features described herein, both numbered and unnumbered as well as their equivalents.

At **702**, the method **700** includes pressurizing an injection product within a localized product injection system **112**. The localized product injection system **112** includes one or more localized injection interfaces **120** and corresponding product dispensers **107**. In one example and as shown for instance in FIGS. **2**A and **2**B the product dispensers **107** include, but are not limited to, boom sections **108**. In another example, the product dispensers **107** include, but are not limited to, nozzle assemblies, such as the nozzle assemblies **110** shown for instance in FIGS. **3**A and **3**B.

At **704**, a specified injection concentration is determined for one or more of the product dispensers **107**. In one example, determining the specified injection concentration for the one or more product dispensers **107** includes determining an injection concentration for the corresponding injection interfaces **120** associated with those product dispensers **107**. For instance and as described herein, the one or more product dispensers **107** pass through a plurality of zones such as the zones **604**, **606** of a field map **600**. In one example, the field map **60**) and one or more of GPS positioning, mathematical algorithms, combinations of the same, or the like are assessed by an injection control module **500** to determine the locations of the corresponding product dispensers **107** relative to the zones **602**. Concentrations of the injection product are indexed to each of the zones **602**. As the product dispensers **107** enter, are poised to enter, or are within the zones **602** (e.g., exemplary zones **604**, **606**) the corresponding concentrations are associated with the product dispensers and the respective injection interfaces by the injection control module **500**.

At **706**, the method **700** includes operating one or more interface valves **212** of the injection interfaces **120** for the corresponding one or more product dispensers **107**. Operating of the one or more interface valves **120** includes, at **708**, injecting the injection product to a carrier fluid of a carrier system **103** at the one or more product dispensers **107** (e.g., at the boom sections **108** or nozzle assemblies **110**). Operating the one or more interface valves **120** includes, at **710**, instantaneously (e.g., near instantaneously or instanta-

neously) changing the injection concentration in the carrier flow to the specified injection concentration at the one or more product dispensers **107**. At **712**, the injecting and instantaneous change of the injection concentration occurs according to the positioning of the one or more interface valves **212** (of the injection interfaces **120**) and the corresponding injection ports (**216**, **308**) at the one or more product dispensers **107**. Stated another way, by positioning the injection interfaces **120** at the product dispensers **107** the concentration of the injection product in the agricultural product is immediately changed prior to dispensing the resulting agricultural product from the sprayer **102**.

In another example, the injection control module **500** independently controls the one or more injection interfaces as described herein. With the concentrations of the injection product associated with the one or more injection interfaces **120** (e.g., through use of a field map **600** having a plurality of zones **602**), the injection control module **500** actuates the interface valves **212** of the corresponding injection interfaces **120** to independently provide flow of the injection product to the product dispensers **107** as prescribed.

Several options for the method **700** follow. In one example, pressurizing the injection product includes pressurizing the injection product to each of the one or more localized injection interfaces **120** positioned at the one or more product dispensers **107**. Stated another way and as described herein, the localized product injection system **112** is isolated from the carrier system **103** and interfaces with the carrier system at the injection interfaces **120** (local to the product dispensers **107**). By maintaining a pressurized environment at the injection interfaces **120** the injection product is instantaneously injected into the carrier flow at the product dispensers **107**. Accordingly, the pressurized system **112** separate from the carrier system **103** ensures the injection product is instantaneously delivered to the carrier fluid to accordingly provide agricultural product at the one or more product dispensers **107** having the desired concentration of the injection product with little to no lag time between injection and application. As stated herein by providing the injection interfaces **120** at the product dispensers **107** (as opposed to upstream near the carrier reservoir **104**) the agricultural product having the specified injection concentration is immediately applied through the product dispensers **107**, for instance the boom sections **108** and the nozzle assemblies **110**. Stated another way, lag time otherwise present with upstream mixing of the injection product into a flow of the carrier fluid is avoided. Instead, the instantaneous injection and corresponding instantaneous change in concentration of the injection product within the carrier fluid generates an agricultural product having the desired injection concentration immediately prior to its application to the agricultural crop.

In still another example, the method **700** includes measuring the injection concentration in the agricultural product (carrier fluid) at the one or more product dispensers **107**. For instance, in one example the product dispensers **107** include corresponding concentration sensors **512** (see FIG. **5**). A flow rate of the injection product is changed or controlled according to the measured injection concentration and the specified injection concentration. For instance where the injection control module **500** specifies a desired injection product concentration (having a corresponding flow rate) the concentration sensor **512** communicates with the injection control module **500** to provide feedback control to accordingly tune the concentration to achieve the specified injection concentration specified by the rate control module **502**.

In another example, operating the one or more interface valves **212** includes individually operating the one or more interface valves **212** (e.g., independently or as arrays). For instance, as described herein and shown for instance in FIGS. **5**, **2**B and **3**B the injection interfaces **120** are independently operable relative to the other injection interfaces **120** of the sprayer **100**. Accordingly, the localized product injection system **112** provides varying flow rates of the injection product to each of the product dispensers **107** according to individualized specified concentrations. In one example, the individualized specified concentrations are provided by the injection control module **500** configured to assess and determine injection product concentrations from a field map **510** having one or more varying prescriptions for the agricultural product.

FIGS. **8**A and **8**B show examples of injection interfaces **800**, **850**. Referring first to FIG. **8**A, the injection interface **800** includes a plurality of inputs, for instance, a carrier fluid input **804** and one or more injection project inputs such as the injection product inputs **806**, **808**. As described herein, the injection product (or injection products) delivered through the injection product inputs **806**, **808** are mixed with carrier fluid delivered in an isolated or separated passage such as the carrier fluid input **804** to a mixing chamber **822** shown in FIG. **8**A for mixing of the agricultural product (e.g., with one or more of the injection products at a specified concentration relative to the carrier fluid) and delivery of the agricultural product through an injection port **820** to a nozzle, such as the nozzle assembly **824**. The injection port **820** includes, but is not limited to, a fitting configured for coupling with one or more nozzle assemblies **824** including nozzle assemblies having control valves, multiple nozzles, configurable nozzles having controllable nozzle orifices (e.g., including controllable fixed orifices and controllable variable orifices with one or more orifice plates configured to change an orifice profile) or the like.

In one example, the injection interface **800** is a physical component configured for coupling with one or more components of a product injection system, for instance, one or more of the systems previously described herein. For instance, the injection interface **800** includes an interface body **802** providing one or more of the injection product inputs **806**, **808**, the carrier fluid input **804** or the like as fittings. For instance, as described herein, in one example, an injection interface **800** includes a clamping feature configured to position and bias one or more features such as fittings of the injection product inputs **806**, **808** and carrier fluid input **804** into communication with one or more corresponding passages, for instance, of the composite boom tube. The injection interface **800** provides for localized injection and mixing of one or more injection products to a flow of carrier fluid local to a product dispenser, such as the nozzle assembly **824** including a nozzle **826**. Accordingly, instantaneous injection and mixing of the one or more injection products (e.g., with minimal lag time) is provided to facilitate the dispensing of the agricultural product at the specified concentration through the nozzle **826**.

Referring again to FIG. **8**A, the injection interface **800** includes a mixing chamber **822** in communication with each of the carrier fluid input **804** and the one or more injection product inputs **806**, **808**. The mixing chamber **822** includes at least one mixing structure configured to mix each of the carrier fluid **804** and the one or more injection products and accordingly provide an agricultural product having the specified concentration (e.g., including a varied concentration, maintained concentration or the like) distributed in the carrier fluid as described herein. The least one mixing

structure includes, but is not limited to, one or more of vanes, flutes, passages, residence chambers or the like. The mixing chamber **822** blends the injection product (including one or more injection products) with the carrier fluid **804** to provide the agricultural product at the specified concentration. Additionally, the mixing chamber **822** facilitates the instantaneous (including near instantaneous, with minimal lag time or the like) change of concentration of the one or more injection products **806**, **808** in the agricultural product by way of the one or more mixing structures provided locally relative to the product dispenser, such as the nozzle assembly **824**, for instance, shown in FIG. **8**A.

As further shown in FIG. **8**A, one or more throttling elements **810**, **812** are associated with each of the one or more injection product inputs **806**, **808**. The throttling elements **810**, **812** (in this example, one or more control valves) are configured to control the flow rate of the one or more injection products to the carrier fluid and the mixing chamber **822**. For instance, the throttling elements **810**, **812** when used together, for instance, with the injection interface **800**, provide control of each of the injection products, for instance, from the injection product inputs **806**, **808** to the carrier fluid. Accordingly, independent control of the injection products **806**, **808** according to one or more prescriptions or the like is provided by the throttling elements **810**, **812**. In other examples, as described herein, the throttling elements include, but are not limited to, one or more pumps configured to deliver the injection product to the carrier fluid for mixing locally relative to the nozzle assembly **824**.

In the example shown in FIG. **8**A, each of the throttling elements **810**, **812** (control valves in this example) are in communication with the control unit **813** associated with each of the control valves. As further shown in FIG. **8**A, the control unit **813** is in communication with one or more optional sensors including, but not limited to, flow meters **814**, **816** associated with the respective injection product inputs **806**, **808**. In another example, the optional sensors include pressure transducers positioned upstream and downstream relative to the throttling elements **810**, **812** to measure a pressure differential and corresponding determine a flow rate.

In one example, the sensors, such as flow meters **814**, **816**, are in communication with the control unit **813** and the control unit is in communication with each of the throttling elements **810**, **812** as described herein to provide feedback control of the throttling elements **810**, **812**. For instance, where a specified concentration (including maintenance or variation of a concentration) is provided to the control unit **813** (e.g., from a master control unit such as the injection control module **500** in FIG. **5**) the control unit operates the throttling elements **810**, **812** to provide the specified concentration (including concentrations) of each of the one or more injection products from the inputs **806**, **808** to the carrier fluid provided by the carrier fluid input **804**. In one example, the flow meters **814**, **816** measure the flow downstream from the throttling elements **810**, **812** and are used in a feedback control loop by the control unit **813** to control the flow rate through the throttling elements **810**, **812** to thereby provide the specified concentration (corresponding to the flow rates) of the one or more injection products to the carrier fluid.

In another example, operation of the throttling elements **810**, **812**, for instance, control valves are graduated according to known positions or indexing of one or more valve features, for instance, valve operators, displacement of valve operators, duty cycles or the like. Accordingly, operation of the throttling elements **810**, **812** by the control unit **813** optionally uses an open loop system to provide one or more flow rates of the one or more injection products from the injection product inputs **806**, **808** to the carrier fluid according to the known characteristics of the throttling elements **810**, **812**.

In one example, the control unit **813** of the injection interface **800** is included in the physical assembly of the injection interface **800**, for instance, within the interface body **802**. In another example, the control unit **813** is a remote control unit or component of a master control unit associated with and controlling one or more injection interfaces **800**. In the previous example, where the control unit is associated with each individual injection interface **800**, the control unit **813** is, in one example, in communication with a master or overall controlling unit, such as the injection control module **500** shown in FIG. **5**A, that provides one or more specified concentrations to the control unit **813** to facilitate operation of the throttling elements **810**, **812**.

As further shown in FIG. **8**A, in one example, each of the carrier fluid input **804**, the injection product input **806** and the injection product input **808** include one or more check valves **818**. The check valves **818** associated with the injection product inputs **806**, **808** are provided downstream relative to the throttling elements **800**, **812**. The check valves **818** ensure one way delivery of one or more of the injection products and the carrier fluid to the mixing chamber **822**.

As shown, the injection interface **800** provided in FIG. **8**A includes one or more throttling elements **810**, **812** including control valves in the example shown. The control valves, in one example, are used in combination with one or more features such as pumps or the like provided at an upstream location relative to the injection interfaces **800**, for instance, proximate to an injection product reservoir to provide a pressurized flow of the one or more injection products through each of the inputs **806**, **808**. Accordingly, the environment of the injection product, for instance, from the injection product reservoir to the mixing chamber **822** provides a pressurized source of the injection product that is accordingly delivered in a local manner to the mixing chamber **822** for instantaneous mixing of the injection product with the carrier fluid to provide an agricultural product having the one or more injection products at one or more specified concentrations. This facilitates immediate changes in concentrations of the injection products and immediate delivery of corresponding agricultural products having varied injection product concentrations from the nozzle **826** on an as-needed basis with little to no lag time.

In another example, and as previously described herein, the throttling elements **810**, **812** include pumps. In this example, the pressurized environment for the injection product extends, for instance, from at least the pumps to the mixing chamber **822**. Accordingly, in this example, the injection product is also provided in a local pressurized fashion to the mixing chamber **822** to facilitate the instantaneous control of injection product concentration in the carrier fluid and ensure immediate delivery of the resulting agricultural product through the nozzle assembly **824**. In this example, the one or more injection products are delivered from injection product reservoirs in a passive manner including, but not limited to, gravity feeding, remote distribution of injection products by upstream pumps followed by stepping up of pressure with the throttling element pumps, negative pressure pumping (e.g., vacuum pumping) by the throttling elements **810**, **812** or the like.

As shown in FIG. **8**A, one or more throttling elements **810**, **812** and the nozzle assembly **824** optionally include one or more automated valves. For instance, in one example, the

control valves associated with each of the throttling elements **810**, **812** or the nozzle assembly **824** include one or more controllable valves configured for remote control, for instance, by a control unit **813**, master control unit or the like. In one example, the control valves used in one or more of the throttling elements **810**, **812** or the nozzle assembly **824** include, but are not limited to, pulse width modulation valves configured to cycle between on and off configurations at one or more duty cycles and thereby provide corresponding flow rates of one or more of the injection products in the examples of the inputs **806**, **808**, or the mixed agricultural product in the example of the nozzle assembly **824** to the nozzle **826**.

FIG. **8**B shows another example of an injection interface **850** similar in at least some regards to the injection interface **800** shown in FIG. **8**A. In this example, the injection interface **850** includes an interface body **852**, for instance, having one or more component displacement pumps as the throttling elements **860**, **862**. In this example, the throttling elements **860**, **862** include one or more metering pumps configured to provide controlled specified flow rates corresponding to specified concentrations of the one or more injection products to carrier fluid, for instance, through the carrier fluid input **804**. The metering pumps include, but are not limited to, one or more positive displacement piston pumps, diaphragm pumps, peristaltic pumps, gear pumps or the like.

As shown in FIG. **8**B, each of the injection product inputs **806**, **808** extend through the corresponding throttling elements **860**, **862** pumps, in this example, to the carrier fluid input **804**. Each of the injection products and the carrier fluid mix in the mixing chamber **822** for delivery to the nozzle assembly **824** and the nozzle **826**.

In the example shown in FIG. **8**B, a control unit **864** is in communication with each of the throttling elements **860**, **862**, in this example, metering pumps as shown. Optionally, flow meters are provided at the injection interface **850** (e.g., downstream or upstream) relative to the throttling elements **860**, **862** and in communication with the control unit **864**. In this example, the flow meters or other sensors such as pressure transducers are used by the control unit **864** to control each of the throttling elements **860**, **862** with feedback control. In another example, the calibrated operation of the metering pumps of the throttling elements **860**, **862** is used in an open loop control scheme to accordingly deliver a specified flow rate of the one or more injection products to the carrier fluid corresponding to calibrated displacements of the throttling elements **860**, **862**.

In operation, the injection interface **850** operates similarly to the injection interface **800** previously described herein. For instance, specified concentrations of each of the injection projects are provided to the control unit **864** and the throttling elements **860**, **862** (in this example, metering pumps) are operated to provide corresponding flow rates of the one or more injection products through the corresponding check valves **818** to the carrier fluid for mixing at the mixing chamber **822**. As the specified concentrations of each of the injection products **806**, **808** change the control unit **864** correspondingly increases or decreases the flow rate of each of the injection products to the carrier fluid to accordingly change the specified concentration of the injection product within the carrier fluid and deliver an agricultural product having each of the injection products at the (changed) specified concentrations to the nozzle assembly **824**. This facilitates instantaneous mixing and delivery of the agricultural product with specified concentrations of one or more injection products to the nozzle **826** for delivery to a field.

FIGS. **9**A, **9**B and **9**C show additional examples of injection interfaces. Referring first to FIG. **9**A, the injection interface **900** is shown with a carrier fluid input **804** and one or more injection product inputs **806**, **808**. The injection product inputs **806**, **808** are configured, for instance, to provide one or more flows of injection products to the injection interface **900** for mixing, for instance at the mixing chamber **822**, and delivery of the agricultural product having a specified concentration of the one or more injection products to a nozzle assembly **824** including a nozzle **826**. As previously described, the mixed agricultural product is provided with the specified concentration in an instantaneous manner (e.g., with no or minimal lag) to thereby facilitate the instantaneous change in concentration of one or more of the injection products and the agricultural product for application from the nozzle **826** (e.g., according to prescribed changes in concentration, variation in carrier fluid flow rate and corresponding variation in injection product flow rate to maintain a concentration or the like).

Referring again to FIG. **9**A, in this example, the injection interface **900** includes one or more throttling elements such as throttling elements **910**A, **910**B and **912**A, **912**B provided in parallel. With regard to the injection product input **806**, the throttling elements **910**A and **910**B (in this example, control valves) are provided in parallel and accordingly deliver injection product to the mixing chamber **822** together. As further shown in FIG. **9**A, the throttling elements **910**A, **910**B are in communication with a flow meter, such as the flow meter **814** or other sensor, configured to detect a characteristic corresponding to the concentration of the injection product (e.g., flow rate of the injection product relative to the carrier fluid flow rate) prior to delivery to the mixing chamber **822**. In a similar manner, the injection product input **808** includes parallel throttling elements **912**A, **912**B.

In each of the examples provided herein, for the injection product inputs **806**, **808** the throttling elements **910**A, **910**B and **912**A, **912**B, the throttling elements include control valves. In another example, for instance, as shown in FIG. **9**C, the parallel throttling elements include one or more of pumps, control valves, alone or in combination including mixed arrangements of a pump and control valves in parallel or the like. In a similar manner to the previously described throttling elements **910**A, **910**B, the throttling elements **912**A, **912**B are in parallel and deliver a flow of the injection product through one or more sensors, such as a flow meter **816** or other sensor configured to measure a flow rate or the like of the injection product to the mixing chamber **822**. The flow meters **814**, **816** are coupled with a control unit, such as the control unit **914**. The output from the flow meters **814**, **816**, for instance, a measured flow rate (or pressure differential in an option with pressure transducers) through one or more of the respective throttling elements associated with the various injection product inputs **806**, **808** is used by the control unit **914** to further control and refine the flow rates through the throttling elements. As with the previous examples described herein, in one example, the control unit **914** is provided as part of the injection interface **900**, for instance, the control unit **914** is a component within or coupled with the interface body **902**. In another example, the control unit **914** is a remote control unit remote relative to the injection interface **900** and includes, but is not limited to, a master control unit, a module associated with a master

control unit (such as the injection control module **500** in FIG. **5**) configured to operate one or more injection interfaces **900**.

In operation, the injection interface **900** shown in FIG. **9**A is, in one example, operated across a range of flow rates according to the maximum flow rates of one or more of the throttling elements **910**A, **910**B or **912**A, **912**B. For instance, where the injection product input **806** is provided over a range of flow rates, the throttling elements **910**A, **910**B are configured to supply a portion of that range of flow rates. In one example, the throttling element **910**A is configured to provide a flow rate of the injection product from the injection product input **806** at flow rates up to a maximum flow rate for the element **910**A, for instance, ten fluid ounces per minute or less. Where additional flow of the injection product is specified above the maximum flow rate, for instance by the control unit **914**, the supplemental throttling element **910**B is operated to provide additional flow to the mixing chamber **822** and the nozzle assembly **824** coupled at the injection port **820**, providing dual throttling elements **910**A, **910**B and **912**A, **912**B facilitates the use of smaller and potentially less expensive components to accordingly decrease the overall expense of the injection interface **900** while at the same time allowing for a relatively wide range of flow rates of the injection products.

Optionally, the control unit **914** operates both of the throttling elements **910**A, **910**B in a load offsetting manner, for instance providing dual flow through each of the elements **910**A, **910**B to facilitate delivery of the specified flow rate to the mixing chamber **822** while at the same time minimizing one or more other characteristics through the throttling elements **910**A, **910**B including, for instance, pressure drop. In a similar manner, the throttling elements **912**A, **912**B are, in one example, operated by the control unit **914** in a corresponding manner to the throttling elements **910**A, **910**B described previously herein.

Optionally, the flow meters **814**, **816** are, in one example, used in combination with the respective throttling elements to provide feedback control. The control unit **914** uses flow rates, pressure differentials or the like for refining of the actual flow rates of each of the respective injection products to the mixing chamber **822** to achieve a flow rate corresponding to the specified concentration in the resulting agricultural product delivered to the nozzle assembly **824** and its nozzle **826**.

FIG. **9**B shows another example of the injection interface **900** previously shown in FIG. **9**B. Many of the components of the injection interface **900** shown in FIG. **9**B correspond to components shown in FIG. **9**A. For instance, the injection interface **900** includes throttling elements **910**A, **910**B associated with the injection product input **806** and throttling elements **912**A, **912**B associated with the second injection product input **808**. As further shown in FIG. **9**B, the carrier fluid input **804** delivers a flow of carrier fluid to the mixing chamber **822** in a parallel fashion relative to the injection product inputs **806**, **808**. As with previous examples herein, and in the example shown in FIG. **9**B, check valves **818** are interposed between the inputs **804**, **806**, **808** and the mixing chamber **822** to prevent backflow of one or more of the fluids into an opposing parallel line.

In the example shown in FIG. **9**B, the injection interface **900** includes one or more sensors, such as flow meters, provided in parallel with the respective throttling elements **910**A, **910**B or **912**A, **912**B. For instance, the injection product input **806** includes parallel throttling elements **910**A, **910**B and corresponding parallel flow meters **814**A, **814**B. In one example, the flow meters **814**A, **814**B are selected to have a corresponding maximum flow rate proximate to that of the throttling elements **910**A, **910**B. By providing dual flow meters **814**A, **814**B, smaller and potentially less expensive components are used with the throttling elements **910**A, **910**B to accordingly decrease the overall expense of the injection interface **900**. In a similar manner parallel flow meters **816**A, **816**B associated with the throttling elements **912**A, **912**B are provided with the injection product input **808**. The flow meters shown in parallel with the respective throttling elements are, in one example, in communication with the control unit such as the control unit **914**. The control unit **914** is in turn in communication with the throttling elements **910**A, **910**B and **912**A, **912**B to control the flow rate of the one or more injection products to the mixing chamber **822** for local mixing proximate to the nozzle assembly **824** and delivery through the nozzle **826**.

FIG. **9**C shows another example of an injection interface **950**. In at least some regards, the injection interface **950** is similar to the examples of the injection interface **900** previously shown in FIGS. **9**A and **9**B. In this example, the parallel throttling elements **960**A, **960**B and **962**A, **962**B associated with respective injection product inputs **806**, **808** correspond to one or more pumps configured to provide a flow of the injection product to the mixing chamber **822** for localized mixing of the injection products with the carrier fluid (e.g., from the carrier fluid input **804**) and delivery of an agricultural product having one or more specified concentration of the respective injection products to a nozzle assembly **824** having a nozzle **826** proximately coupled with the interface **950**.

As further shown in FIG. **9**C, a control unit **964** is, in one example, in communication with each of the throttling elements **960**A, **960**B and **962**A, **962**B. In a similar manner to the control valves previously described and shown in FIGS. **9**A, **9**B, the pumps as the throttling elements in this example are, in one example, operated in parallel. For instance, one of the pumps, such as the throttling element **960**A shown in FIG. **9**C, is operated up to its maximum flow rate and an additional specified flow of the injection product is diverted through the supplemental throttling element **960**B (in this example another pump) to accordingly provide an overall specified flow rate of the injection product to the mixer **822**. Optionally, the control unit **964** offsets the overall flow between the throttling elements **960**A, **960**B to accordingly ensure each of the throttling elements, here pumps, are operated at less than their maximum flow rates to minimize one or more fluid characteristics of the system such as pressure drop, power requirement for the pumps or the like. By providing dual pumps, smaller and potentially less expensive pumps are used with as the throttling elements **960**A, **960**B (as well as **962**A, **962**B) to accordingly decrease the overall expense of the injection interface **950**.

In a similar manner, the throttling elements **962**A, **962**B of the opposed injection product input **808** are operated in a similar parallel manner. For instance, the control unit **964** operates one of the throttling elements **962**A up to its maximum flow rate and, upon specification of a higher flow rate (e.g. an increased specified concentration of the respective injection product), operates the supplemental throttling element **962**B in combination with the first throttling element **962**A. By using multiple pumps at the injection interface **950**, smaller pumps are, in one example, specified for the injection interface **950** thereby decreasing expense while at the same time providing redundancy and operative capability for the injection interface **950**. For instance, the throttling elements **960**A, **960**B and **962**A. **962**B are, in one example, specified at lower maximum flow rates relative to

larger single pumps and accordingly are specified as less expensive lower flow pumps. At the same time an overall flow rate to the mixing chamber **822** is provided that is comparable to larger more expensive pumps. The plurality of throttling elements **960**A, **960**B (as well as the opposed throttling elements **962**A, **962**B) provide redundancy to facilitate the continued use of the injection interface **950** even where one of the throttling elements **960**A, **960**B mechanically or electrically fails.

FIGS. **10**A and **10**B show additional examples of injection interfaces **1000**, **1050** including a plurality of injection product inputs **806**, **808** using single consolidated throttling elements such as the throttling elements **1010** and **1060** in FIGS. **10**A and **10**B, respectively. Referring first to FIG. **10**A, as shown, the injection interface **1000** includes similar components in at least some regards to the previously described injection interfaces. For instance, the injection interface **1000** includes an interface body **1002** having a carrier fluid input **804** (e.g., carrier fluid fitting in one example) and two or more injection product inputs **806**, **808** (e.g., in another example, input fittings.

As further shown in FIG. **10**A, the injection product inputs **806**, **808** are each in communication with a product selection valve **1004**. The product selection valve **1004** is, in one example, a three-way valve configured to select the injection product input **806** or the injection product input **808**. As further shown in FIG. **10**A, the product selection valve **1004** is coupled with the throttling element **1010** interposed between the selection valve **1004** and the mixing chamber **822**. In a manner similar to the previously described embodiments provided herein, the flow of the injection product through the product selection valve **1004** is controlled by the throttling element **1010**, such as a control valve or pump (the pump shown is shown in FIG. **10**B). The carrier fluid delivered along the carrier fluid input **804** to the mixing chamber **822** mixes with the injection product delivered through the throttling element **1010** to accordingly provide an agricultural product having a specified concentration of the injection product at the injection port **820** for immediate application by the nozzle assembly **824**, for instance, by spraying through the nozzle **826**.

As shown in FIG. **10**A, in one example, a flow meter **1006** is provided in line with the throttling element **1010**. In previous examples, the flow meter **1006** is provided downstream relative to the throttling element **1010**. In the example shown in FIG. **10**A, the flow meter **1006** is provided upstream of the throttling element **1010**. A control unit **1008** is in communication with each of the flow meter **1006** and the throttling element **1010**. In one example, the control unit **1008** uses feedback from the flow meter **1006** (e.g., corresponding to actual flow through the throttling element **1010**) to refine control of the throttling element **1010**, for instance, toward a specified flow rate of one of the injection products to accordingly achieve a specified concentration of the injection product in the carrier fluid at the mixer **822**.

As with previous embodiments described herein, the control unit **1008** is, in one example, included as part of the injection interface **1000**. For instance, the control unit **1008** is retained along or housed within the interface body **1002**. In another example, the control unit **1008** is a module or component of an overall master control unit, such as the injection control module **500** shown in FIG. **5**, in communication with one or more injection interfaces **1000** provided along one or more sprayer booms of a sprayer, such as the agricultural sprayers shown in FIGS. **1**A and **1**B.

Referring now to FIG. **10**B, another example of an injection interface **1050** is provided. The injection interface **1050** includes similar components to the injection interface **1000** shown in FIG. **10**A. For instance, the interface **1050** includes an interface body **1052** including a carrier fluid input **804** and injection product inputs **806**, **808**. A product selection valve **1054** is interposed between the injection product inputs **806**, **808** and a throttling element **1060**, in this example, a pump configured to provide a metered flow rate of at least one of the injection products to the mixing chamber **822** for mixing with the carrier fluid from the carrier fluid input **804**. As further shown in FIG. **10**B (and also shown in FIG. **10**A), each of the injection product inputs **806**, **808** and the carrier fluid input **804** includes check valves **818** configured to prevent backflow of one or more of the injection products into the respective inputs.

In a manner similar to the injection interface **1000** shown in FIG. **10**A, the throttling element **1060** of the injection interface **1050** meters the flow of at least one of the injection products into the carrier fluid for mixing at the mixing chamber **822**. For instance, in this example, the throttling element **1060** includes a pump configured to provide a specified flow rate of the injection product delivered from the product selection valve **1054** to the mixing chamber **822**. The throttling element **1060**, in this example a pump, is, in one example, configured to provide multiple flow rates of the injection product, for instance, by varying displacement (e.g., by varying of piston displacement, operation of a diaphragm, peristaltic operation of a roller pump or metering pump, gear pump or the like) corresponding to specified concentrations of the injection product.

In each of the examples shown in FIGS. **10**A and **10**B, the respective injection interfaces **1000**, **1050** are configured to provide multiple injection products, for instance, through two or more injection product inputs **806**, **808** while providing a unitary throttling element **1010**, **1060** configured to deliver a specified flow rate of the selected injection product to the mixing chamber **822** for mixing with a carrier fluid to provide a specified concentration of the injection product in the carrier fluid (e.g., an agricultural product). The product selection valve **1054** allows for the selection of one of the injection products **806**, **808** and delivery of that selected product to the throttling elements **1010**, **1060**. The control unit **1008**, **1058**, in communication with the respective throttling elements **1010**, **1060**, provides the selected injection product to the mixing chamber **822** at the specified flow rate corresponding to a specified concentration of the injection product relative to the carrier fluid. The product selection valve **1004** (see FIG. **10**A), **1054** (see FIG. **10**B) directs the flow of either of the injection product inputs **806**, **808** to the respective throttling elements **1010**, **106**W to minimize the inclusion of plural throttling elements including additional pumps, control valves, instrumentation for the same and the like in the injection interfaces **1000**, **1050**. Accordingly, the interfaces **1000**, **1050** shown in FIGS. **10**A, B are configured to provide multiple injection products at specified concentrations for mixing with the carrier fluid with the single or unitary throttling elements **1010**, **1060**.

In each of the examples shown in FIG. **10**A, **10**B, the throttling elements **1010**, **1060** including merged inputs such as the injection product inputs **806**, **808**. The product selection valves **1004**, **1054** facilitate metering of one or more injection products while at the same time minimizing extensive instrumentation control and additional features in each of the injection interfaces **1000**, **1050**. For instance, in the example shown in FIG. **10**A, **10**B, the injection interfaces **1000**, **1050** use unitary throttling elements **1010**, **1060** (single control valves or pumps) to meter the blended flow of each of the injection products to the mixing chamber **822**.

Accordingly, each of the injection interfaces **1010**, **1050** is able to mix a plurality of injection products with the carrier fluid and provide specified concentrations of those injection products and the carrier fluid while still using single throttling elements **1010**, **1060**.

FIG. **11** shows another example of an injection interface **1100**. The injection interface **1100** includes at least some similar components to the other injection interfaces previously described herein. For instance, the injection interface **1100** includes an interface body **1102** having a plurality of inputs such as a carrier fluid input **804** and one or more injection product inputs such as the injection product inputs **806**, **808**. Additionally, the injection interface **1100** includes a mixing chamber **822** configured to mix the one or more injection products with the carrier fluid from the carrier fluid input **804** and dispense the locally mixed agricultural product to a nozzle such as the nozzle assembly **824** having a nozzle **826**. The nozzle assembly **824** optionally includes its own control valve to apply the agricultural product with the injection products at specified concentrations at a specified flow rate. The nozzle assembly **824**, in another example, includes a configurable nozzle to control spray patterns.

In the example shown in FIG. **11**, the injection interface **1100** includes throttling elements **1112**A and **1114**A. In this example, the throttling elements **1112**A, **1114**A are used in combination, for instance, with blending elements **1112**B and **1114**B. For instance, the throttling element **1112**A and the blending element **1112**B are components of a dual-head gear pump configured to provide a metered flow of the injection product from the injection product input **806**, mix the metered flow with an initial portion of the carrier fluid, and then distribute the mixed injection product and carrier fluid to the mixing chamber **822** for a second stage of mixing, for instance, with the carrier fluid and optionally another injection product.

As shown in FIG. **11**, the throttling element **1112**A is, in one example, provided as a multiple element gear pump, for instance, having the throttling element 1I 12A providing the metering function for the injection product delivered from the injection product input **806** in communication with (fluid communication and optionally mechanical communication) with the blending element **1112**B. For instance, in one example, the throttling element **1112**A pressurizes the injection product from the injection product input **806** (optionally provided by way of gravity flow, passive or low pressure pumping proximate to an injection product reservoir or the like) and delivers the injection product to the blending element **1112**B. As shown in FIG. **11**, the carrier fluid input **804** splits relative to each of the blending elements **1112**B, **1114**B and provides a flow of the carrier fluid to the blending elements **1112**B, **1114**B for blending (e.g., mixing) with the injection product delivered by way of the throttling elements **1112**A, **1114**A. Accordingly, the blending element **1112**B and the throttling element **1112**A work in combination to deliver a pressurized flow of the injection product at specified flow rate to the blending element **1112**B. The blending element **112**B mixes the specified flow rate of the injection product with a portion of the carrier fluid diverted to the element **1112**B and then delivers the mixture of the two, for instance, through one or more check valves **818** to the mixing chamber **822** for additional mixing with supplemental carrier fluid and optionally another injection product **808**, for instance, from injection product input **808**.

As further shown in FIG. **11**, the injection product input **808** includes its own throttling element **1114**A and blending element **1114**B. In one example, each of the throttling elements **1114**A and blending element **1114**B are in mechanical and fluid communication, for instance, rotation of the gears of the throttling element **114**A (e.g., as a gear pump) is transmitted to the gears of the blending element **1114**B. The injection product delivered from the injection product input **808** is accordingly metered by the throttling element **1114**A, pressurized and thereby delivered to the blending element **1114**B for blending with a flow of the carrier fluid diverted to the blending element **1114**B from the carrier fluid input **804**. The resulting mixture of the injection product as well as the diverted carrier fluid is delivered to the mixing chamber **822** for mixing with the carrier fluid from the input **804** (otherwise not diverted to either of the blending elements **1112**B, **1114**B) and mixed with the blended injection product from the input **806** and carrier fluid. Accordingly, the injection interface **1100** provides two stage mixing of each of the injection products with the carrier fluid by way of the blending elements **1112**B, **1114**B and the mixing chamber **822**.

As shown in FIG. **11**, the injection interface **1100** includes, as with previous examples, a control unit **1108** in communication with each of the throttling and blending elements **1112**A, **1112**B and **1114**A, **1114**B. The control unit **1108** is, in one example, provided with the injection interface **1100** and accordingly provides independent control to each of the throttling and blending elements **1112**A, **1112**B whether independent from each other, synced or the like. In another example, the control unit **1108** is a master control unit, for instance, associated with a plurality of injection interfaces **1100** and configured to accordingly control the flow rates of each of the injection products by way of operation of the respective throttling elements **1112**A, **1114**A and blending with each of the respective blending elements **1112**B, **1114**B (in each of the injection interfaces).

In one example, the throttling elements **1112**A, **1114**A are coupled with each of the blending elements **1112**B, **1114**B. That is to say, the elements are, in one example, mechanically coupled together (with a common shaft, intervening transmission or the like). Accordingly, input power provided to one of the throttling elements **1112**A, **1114**A is also provided or transmitted to the associated blending elements **1112**B, **1114**B. In one example, mechanical power provided to each of these elements is provided by one or more of a hydraulic motor, electric motor, power tank or the like to accordingly rotate the gears of each of the throttling elements **1112**A, **1114**A as well as the associated blending elements **1112**B, **1114**B.

FIG. **12** shows another example of an injection interface **1200**. As with the previous embodiments described herein, the injection interface **1200** includes one or more fluid inputs such as a carrier fluid input **804**, an injection product input **806** and optionally an additional injection product input **808** (as well as additional injection product inputs in other examples). The injection interface **1200** includes an interface body **1202** having one or more fittings for the various inputs. The injection interface **1200** further includes a mixing chamber **822** configured to locally mix a carrier fluid with the one or more of the injection products provided by the inputs **806**, **808** relative to a nozzle assembly **824** and a nozzle **826**.

As previously described herein, the local mixing of the injection products with the carrier fluid allows for variation and control of the concentration of each of the injection products in the carrier fluid and further facilitates instantaneous changing of the concentration of the injection product relative to the carrier fluid for immediate application, for instance, through the nozzle **826** to one or more crops, soil or the like. Instantaneous mixing and corresponding control

of the injection product concentration to a specified concentration and delivery of the resulting mixed agricultural product through the nozzle **826** substantially minimizes (e.g., eliminates, minimizes or the like) lag time between mixing of the agricultural product to the specified concentration of the one or more injection products and dispensing of the agricultural product through the nozzle **826**.

Referring again to FIG. **12**, as shown, the injection interface **1200** includes another example of a throttling element **1210**. In this example, the throttling element **1210** includes a pump configured to displace two or more injection products such as the injection products provided through the injection product inputs **806**, **808**. In one example, the throttling element **1210** includes one or more of a dual piston pump interconnected with a common crank shaft, a double action pump with each side of the piston faces configured to pump one of the injection products from the inputs **806**, **808**, a radial pump or the like. As shown, the injection products pass through the throttling element **1210** and are pressurized for delivery to the mixing chamber **822**, for instance, through one or more check valves **818** interposed between the throttling element **1210** and the mixing chamber **822**. In another example, the throttling element **1210** includes a plurality of component pumps driven from a common mechanical input. For instance, the component pumps are connected with the mechanical input by one or more cams, cam shafts, transmissions or the like to vary flow rates of the injection products between the component pumps. In another example, cams or cam shafts fix the ratio of the injection products to each other, and variation in rotation of the cams or cam shafts are used to proportionally increase and decrease the flow rates of each of the injection products (and their concentration in the carrier fluid) while maintaining a ratio between the injection products.

As further shown, the carrier fluid is provided by the carrier fluid input **804** (through a check valve **818**, in one example) to the mixing chamber **822** for mixing with the injection product delivered by the throttling element **1210** at a specified flow rate, for instance, corresponding to a specified concentration of the injection products in the carrier fluid **804** once mixed. The resulting agricultural product is delivered from the mixing chamber **822** through an injection port **820** coupled in one example with the nozzle assembly **824**. The local coupling and communication of the injection interface **1200** with the nozzle assembly **824** facilitates the immediate delivery of the agricultural product having the specified concentration to the nozzle **826** for dispensing into the field.

As further shown in FIG. **12**, the injection interface **1200** optionally includes a control unit **1208**. In one example, the control unit **1208** is included in the housing such as in the interface body **1202** of the injection interface **1200**. In another example, and as similarly described herein, the control unit **1208** is a master control unit or component of a control unit (e.g., see injection control module **500** in FIG. **5**) positioned away from the injection interface **1200** but coupled with the throttling element **1210** with a wired connection, wireless connection (e.g., optical, radio, RFID) or the like. The control unit **1208**, in one example, operates the throttling element **1210** to control the flow rates of each of the injection products from the inputs **806**, **808**. The control unit **1208** correspondingly controls (e.g., increases, decreases, maintains, regulates or the like) the flow rate of each of the injection products from the inputs **806**, **808** to achieve specified concentrations of each of the products (including a concentration of 0 or no injection product) within the carrier fluid delivered through the carrier fluid input **804** to the mixing chamber **822**.

FIG. **13** shows one example of a composite boom tube **1300**. The composite boom tube **1300** shown in FIG. **13** is, in one example, useable with one or more of the injection interfaces previously described and shown herein. As shown, the composite boom tube **1300** includes a tube body **1302** extending, for instance, into and out of the page. The tube body **1302** includes a tube body perimeter **1314** and one or more passages therein.

As further shown, for instance at the end of the tube body **1302** in FIG. **13**, the composite boom tube **1300** includes one or more carrier fluid passages **1304** and one or more injection product passages **1306**, **1308**. The passages **1304**, **1306**, **1308** are, in one example, of different sizes. For instance, the carrier fluid passage **1304** is shown as a larger passage (based on cross-sectional area) relative to either of the injection product passages **1306**, **1308**. Similarly, the injection product passage **1306** is, in one example, larger relative to the injection product passage **1308**. In at least some examples, varying flow rates are provided through each of the fluid passages **1304**, **1306**, **1308**. For instance, the carrier fluid passage **1304** is sized to convey a relatively large flow rate of carrier fluid such as water, premixed solution or the like to one or more port stations **1316** (described further herein). Similarly, the injection product passages **1306**, **1308** are sized with cross-sectional areas less than the carrier fluid passage **1304**, in one example. Accordingly, the injection product passages **1306**, **1308**, in various examples, provide flow rates (lesser than the carrier fluid flow rate) of concentrated injection products for introduction to the carrier fluid. The injection products and carrier fluid are optionally mixed and distributed from one or more injection interfaces as described herein.

Referring again to FIG. **13**, as shown, the various passages **1304**, **1306**, **1308** are, in examples, divided by partitions **1310** to isolate each of the passages from one another. In other examples, the various passages **1304**, **1306**, **1308** are provided in separate tubes coupled along, strung through or delivered through a conduit or other tube body such as the tube body **1302** in a manner similar to the configuration shown in FIG. **13**. In such an example, each of the passages **1304**, **1306**, **1308** are formed by component tubes received within the tube body **1302** or adhered, fastened together or the like to facilitate the delivery of the various fluids such as the carrier fluid, injection products or the like to one or more port stations, for instance, along booms of the sprayer.

Referring again to the example shown in FIG. **13**, the tube body **1302**, in one example, includes a side wall **1312** forming the tube body perimeter **1314**. As shown, one or more of the passages such as the carrier fluid passage **1304** and the injection product passages **1306**, **1308** optionally share the side wall **1312** and accordingly the side wall **1312** forms at least one surface of each of these passages **1304**, **1306**, **1308**.

The composite boom tube **1300** is, in one example, formed with one or more methods including, but not limited to, extrusion, co-extrusion, pultrusion or the like. In an extrusion example a metal such as aluminum, polymer or the like is extruded through a multi-component dye to accordingly provide each of the passages **1304**, **1306**, **1308** as well as the tube body **1302**. These features are married together during the extrusion process to form a unitary tube body **1302** including the partitions **1310** and the component passages **1304**, **1306**, **1308**.

In another example, each of the passages **1304**, **1306**, **1308** are separately formed, for instance, within adjacent

pultrusion processes and then married, for instance, at a downstream process by one or more of adhesives, heat bonding (e.g., coupling of the component tubes while at a glass transition temperature or the like). In still other examples, each of the passages **1304**, **1306**, **1308** are formed separately and bonded with adhesives at a downstream location. Accordingly, the composite boom tube **1300** is, in one example, constructed with a variety of configurations, for instance, varying carrier fluid passages **1304** and injection product passages **1306**, **1308** (including additional or fewer injection product passages). Optionally, the composite boom tube, and one or more passages are formed with non-circular configurations including, but not limited to, square or rectangular passages that are coupled together as component tubes, coextruded together or the like to form the composite boom tube (e.g., a square or rectangular composite boom tube).

In an additional example, the partition **1310** is a separate component from the tube body **1302**. In this example, the partition **1310** is drawn through the tube body **1302** and coupled along the tube body **1302** to form the passages **1304**, **1306**, **1308**. Optionally, partitions **1310** having different configurations including, but not limited to, single or multiple injection product passages, passages having different sizes or the like are used with the tube body **1302** to provide corresponding composite boom tubes **1300** with different configurations. The partition **1310** optionally includes one or more of adhesives, sealants, compliant fittings or the like along the leading edges of the partition engaged with the tube body **1302** to seal each of the passages **1304**, **1306**, **1308**. After assembly whether by extrusion, pultrusion, co-extrusion or assembly of component passages, installation of a partition or the like the composite boom tube **1300** provides a relatively consistent cross-sectional profile, for instance, as shown in FIG. **13**.

Referring again to FIG. **13**, as shown, the composite boom tube **1300** includes a plurality of port stations **1316**, **1318** provided along the tube body **1302**. Each of the port stations **1316**, **1318** includes one or more outlet ports provided at various locations along the tube body **1302**. In the view shown in FIG. **13** (an enlarged view of an otherwise elongated composite boom tube **1300**), tube port stations **1316**, **1318** are shown. In other examples, the composite boom tube **1300** has a plurality of port stations including, but not limited to, 12, 24, 36 port stations or the like. Each of the port stations **1316**, **1318** of the composite boom tube **1300** are, in one example, located at various locations along the tube **1302** including, but not limited to, set intervals between each of the port stations **1316**, **1318** corresponding to specified locations of spray nozzles along a sprayer boom.

Each of the ports at the port stations **1316**, **1318** are in communication with the various passages **1304**, **1306**, **1308** of the composite boom tube **1300**. In the example shown in FIG. **13**, the composite boom tube **1300** includes at each of the port stations **1316**, **1318** carrier fluid outlet ports **1320**, a first injection product outlet port **1322** and a second injection product outlet port **1324**. In one example, each of the outlet ports includes one or more fittings (e.g., such as rubber fittings, check valves or the like) configured to bias the various ports **1320**, **1322**, **1324** into closed configurations. Accordingly, where one or more of the port stations **1316**, **1318** does not include an injection interface (as described herein) the various ports **1320**, **1322**, **1324** remain closed at those port stations. As will be described herein, the coupling of injection interfaces at the port stations **1316**, **1318** engages one or more fittings with the carrier fluid outlet port **1320** and the injection product outlet ports **1322**, **1324** to accordingly open the ports and provide communication of the carrier fluid and one or more injection products to each of the coupled injection interfaces.

FIG. **14**A shows the composite boom tube **1300** coupled with injection interfaces **1400** at the port stations **1316**, **1318** previously shown in FIG. **13**. As shown, the injection interfaces **1400** are coupled with the composite boom tube **1300**, for instance, with one or more clamping features or other features configured to couple one or more inputs of the injection interfaces **1400** with corresponding ports **1320**, **1322**, **1324** at each of the port stations **1316**, **1318**. For instance, in the example shown in FIG. **14**A and further shown in FIG. **14**B, the interface body **1402** of each of the injection interfaces **1400** includes an input face or other feature configured to extend around at least a portion of the composite boom tube **1300** and thereby couple each of the inputs with the corresponding ports **1320**, **1322**, **1324**. As further shown in FIG. **14**A, the interface body **1402** is optionally coupled with a nozzle assembly **1404** to provide a feature for application of the agricultural product at the various locations of the port stations **1316**, **1318** of the composite boom tube **1300**.

As shown then in FIG. **14**A, each of the injection interfaces **1400** and the composite boom tube **1300**, when used in cooperation, provide localized injection interfaces for mixing of injection products and carrier fluid and application of agricultural product at a plurality of locations corresponding to the port stations provided along the composite boom tube **1300**. As previously described herein, each of the injection interfaces **1400** provides for local control of the concentration of one or more injection products proximate to the nozzle assemblies **1404** to facilitate instantaneous control of the concentration of the one or more injection products within the carrier fluid and corresponding delivery of a mixed agricultural product having the injection products at specified concentrations for immediate dispensing from the nozzle assemblies **1404**.

FIG. **14**B shows one of the localized injection interfaces **1400** previously shown in FIG. **14**A. In this example, the injection interface **1400** is shown in a front view in contrast to the side view previously shown in FIG. **14**A. As shown, the injection interface **1400** includes the interface body **1402**. In this example, the interface body **1402** includes one or more coupling features configured to couple the injection interface **1400** with the composite boom tube **1300** and accordingly provide one or more injection products and carrier fluid to the injection interface **1400** for localized injection of the various injection products to the carrier fluid at specified concentrations followed by dispensing of the resulting agricultural products, for instance, from one or more product dispensers. One example of a coupling feature includes an interface clamp **1432** (e.g., lockable clamp, biasing element, fastener or the like) configured to couple the injection interface **1400** with the composite boom tube **1300**.

In FIG. **14**B, one example of a product dispenser, a nozzle assembly **1404**, is shown in broken lines coupled at an injection port **1428** of the interface **1400**. In other examples, as described herein, the injection port **1428** of the injection interface **1400** is configured for coupling with another product dispenser such as a boom section, multiple nozzle assembly or the like.

Referring again to FIG. **14**B, as shown, the injection interface **1400** includes one or more injection product fittings **1410**, **1412** provided along an input face **1406** of the interface **1400**. Additionally, a carrier fluid fitting **1408** is provided along the input face **1406**. In the example shown

in FIG. **14**B, each of the fittings **1408**, **1410**, **1412** are configured to match the configuration of the ports **1320**, **1322**, **1324** shown in FIGS. **13** and **14**A. Accordingly, with coupling of the injection interface **1400** with the composite boom tube **1300**, each of the carrier fluid fitting **1408** and injection product fittings **1410**, **1412** match with corresponding ports **1320**, **1322**, **1324** to provide communication of the various passages **1304**, **1306**, **1308** (shown in FIG. **13**) to the corresponding components of the injection interface **1400**. Optionally, the interface clamp **1432** (e.g., including a lockable clamp, biasing element, fastener or the like) biases one or more of the carrier fluid fitting **1408** or the injection product fittings **1410**, **1412** into communication with the corresponding matched ports. The interface clamp **1432** initiates communication between the ports and the corresponding composite boom tube passages and retains the injection interface at a specified location on the composite boom tube, such as a port station **1316**, **1318** (as shown in FIGS. **13** and **14**A).

As further shown in FIG. **14**B, each of the inputs of the injection interface **1400**, for instance, the carrier fluid fitting **1408** and the injection product fittings **1410**, **1412** include one or more components interposed between a mixing chamber **1420**. In one example, the injection product fittings **1410**, **1412** include one or more throttling elements **1414**, **1416** configured to provide controlled variable flow rates of the injection product to the mixing chamber **1420** for mixing with the carrier fluid to thereby provide a specified concentration of the various injection products in the resulting agricultural product. In another example, the carrier fluid is also controlled, for instance, by a throttling element interposed between the carrier fluid fitting **1408** and the mixing chamber **1420**.

Additionally, as shown previously in the schematic diagrams provided herein, the injection interface **1400** further includes one or more optional components in addition to the throttling elements **1414**, **1416** including, but not limited to, check valves, flow meters, pressure transducers and the like configured to provide one or more characteristic measurements of the injection products or carrier fluid such as flow rates, pressure drops or the like through the various throttling elements **1414**, **1416**. The characteristic measurements are used, for instance, by a control unit such as the control unit **1430**, to refine control of the injection products, carrier fluid or the like to provide an agricultural product having one or more specified concentrations of the injection products for dispensing at the product dispenser such as the nozzle assembly **1404**.

As further shown in FIG. **14**B, each of the injection product fitting **1410**, **1412** and the carrier fluid fitting **1408** merge the respective fluids at the mixing chamber **1420** for mixing to form a mixed agricultural product for dispensing at the product dispensers. Optionally, a manifold **1418** is provided upstream from the mixing chamber **1420** to receive each of the injection products and carrier fluid prior to delivery to the mixing chamber **1420**. In another example, each of the carrier fluid and the injection products are directly delivered to the mixing chamber **1420** for immediate mixing therein. The agricultural product **1420** as it leaves the mixing chamber **1420** is directed to the injection port **1428** configured for coupling with one or more product dispensers such as the nozzle assembly **1404**, a boom section or the like.

In the example shown in FIG. **14**B, a cap **1422** is interposed between the mixing chamber **1420** and the injection port **1428**. In one example, the cap **1420** is removed and the corresponding free end of the interface body **1402** is configured as another example of an injection port, for instance, configured for coupling with one or more assemblies such as a multi-nozzle assembly to provide one or more various spray patterns according to the configuration of the component nozzles of the multi-nozzle assembly.

Referring again to FIG. **14**B, as shown, the injection interface **1400** includes an optional control unit **1430** included in the injection interface **1400**. In another example, and as previously described herein, the control unit **1430** is remotely positioned relative to the injection interface **1400**, for instance, at a master control node, master control unit or the like such as the injection control module **500** shown in FIG. **5**. Accordingly, the master control unit provides distributed control of each of a number of component injection interfaces **1400** coupled along the composite boom tube **1300**. In other examples, the control unit **1430** as shown is a discrete control unit **1430** provided with the interface body **1402** and in communication with each of the throttling elements **1414**, **1416** as well as one or more sensors such as pressure transducers, flow meters or the like provided with the injection interface **1400**. Optionally, the control unit **1430**, when provided as part of the injection interface **1400**, is itself coupled wirelessly or by wired connection, for instance, through a data port or the like to one or more control units of an agricultural sprayer, tractor, harvester or the like, such as a field computer, master control unit, injection control module or the like. The control unit **1430**, as previously described herein, controls the operation of the one or more throttling elements **1414**, **1416** (e.g., control valves, pumps or the like) to provide one or more of an open loop or feedback loop control of the various throttling elements **1414**, **1416** (as well as an optional throttling element included with the carrier fluid passage) to facilitate the control of the concentration of one or more injection products relative to the carrier fluid for control and immediate mixing of the injection products with the carrier fluid to form an agricultural product. The agricultural product (after mixing) is immediately ready for dispensing through a proximate product dispenser, such as the nozzle assembly **1404**, with little to no lag time. Accordingly, rapid response to specified changes in the concentration, for instance, as the injection interface **1400** transitions to different zones of a field, a prescription changes for the injection product, or the like is accomplished with the injection interface **1400** (and other examples) described herein.

FIG. **15** shows one example of a product dispenser assembly **1500**. In this example, the product dispenser assembly **1500** includes a nozzle assembly **1404** including a nozzle **1424** coupled with one or more passages or lines used with a sprayer, for instance, the sprayer shown in FIGS. **1**A, **1**B. In this example, the product dispenser assembly **1500** includes a carrier line **1502** (e.g., a boom tube or the like) providing a flow of carrier fluid, for instance, from a carrier fluid reservoir along the length of the boom. The carrier line **1502**, in one example, continues to the left and right relative to FIG. **15**. As shown, the carrier line **1502** extends into a cap **1504** and a portion of the carrier fluid is redirected into a nozzle passage such as the nozzle passage **1506**. The remainder of the carrier fluid travels around the nozzle passage **1506** and continues to the right, for instance, toward the end of the boom. That portion of the carrier fluid delivered through the cap **1504** passes through the nozzle passage **1506** to the nozzle assembly **1404** for dispensing from the nozzle **1424**.

In one example, for instance, where the product dispenser assembly **1500** is used with a sprayer not having one or more of the injection interfaces described herein, the carrier line

1502 includes a premixed solution of agricultural product that is provided along the carrier line 1502 and delivered to each of the nozzle assemblies 1404, for instance, along a sprayer boom through respective caps 1504 providing communication between the carrier line 1502 and the nozzle passage 1506.

Referring now to FIG. 16, another example of an injection interface 1600 is shown. In this example, the injection interface 1600 is configured for coupling with an existing product dispenser assembly 1500 including, for instance, a nozzle assembly 1404 and a carrier line 1502. As shown in FIG. 16, the cap 1504 is decoupled from the carrier line 1502 and nozzle passage 1506 and the injection interface 1600 is interposed therebetween. The cap 1504 is replaced, for instance, at an opposed end of the injection interface 1600 relative to an end of the interface 1600 coupled with the remainder of the carrier line 1502 and the nozzle passage 1506.

As further shown in FIG. 16, the product dispenser assembly 1500 (in this example, including the injection interface 1600) includes a nozzle assembly 1404 coupled with an intermediate feature, for instance, the carrier line 1502 and the nozzle passage 1506. In another example, the nozzle assembly 1404 includes a control valve 1426 such as a solenoid operated control valve having an operator that is moved according to a duty cycle to provide one or more flow rates, spray patterns or the like through the nozzle 1424 (e.g., of a mixed agricultural product solution including one or more injection products provided at a specified concentration relative to the carrier fluid).

Referring again to FIG. 16, the injection interface 1600 is interposed between the cap 1504 and the carrier line 1502. As shown in FIG. 16 by way of directional arrows, the carrier line 1502 provides the carrier fluid into the injection interface 1600, for instance, through a carrier fluid input 1604, in one example, having a check valve 1622 such as a diaphragm, lip seal or the like. The carrier fluid passes into the mixing chamber 1614 including one or more mixing structures including vanes, fluting, ridges, passages, a residence chamber or the like configured to mix one or more injection products into the carrier fluid prior to delivery to the remainder of the product dispenser assembly 1500 including the nozzle assembly 1404 and nozzle 1424.

As shown, the injection interface 1600 further includes one or more injection product inputs 1606, 1608. In this example, the interface 1600 includes dual injection product inputs, while in other examples the injection interface 1600 includes fewer or more injection product inputs including, but not limited to, a single injection product input, three, four, five or more injection product inputs. In a manner similar to the previously described and shown schematic versions of the injection interfaces provided herein, the injection product inputs 1606, 1608 provide a flow of one or more injection products to the injection interface 1600 for mixing with the carrier fluid locally relative to the product dispenser assembly 1500 including, for instance, the nozzle assembly 1404.

Additionally, the injection interface 1600 includes one or more throttling elements 1610, 1612 in line with the injection product inputs 1606, 1608, respectively. The throttling elements 1610, 1612 are operated in one example with a control unit 1624 to control the flow rate of the one or more injection products from the inputs 1606, 1608 to the carrier fluid and control the specified concentration of each of the injection products relative to the carrier fluid.

Referring again to FIG. 16, as shown, the control unit 1624 is, in this example, included within an interface body 1602 of the injection interface 1600. As with other previously described embodiments, the control unit 1624 is, in one example, remotely coupled with the injection interface 1600, for instance, wirelessly, by wired connection or the like. For instance, the control unit 1624 is, in one example, a master control unit or a component of a master control unit configured to operate and control a plurality of injection interfaces 1600 distributed along the sprayer boom. In the example shown in FIG. 16, the control unit 1624 is coupled with each of the throttling elements 1610, 1612. In another example, the control unit 1624 is coupled with one or more sensors including one or more of, but not limited to, pressure transducers 1618, 1620 and flow meters 1616. Optionally, the injection interface 1600 includes one or more of these sensors to facilitate feedback loop control of the throttling elements 1610, 1612. While in other examples the injection interface 1600 includes no sensors. For instance, in a configuration where the throttling elements 1610, 1612 include pumps, the injection interface 1600 is optionally without one or more of these instruments, and the throttling elements 1610, 1612 are operated in an open loop manner.

As shown in FIG. 16, the injection interface 1600 does include one or more sensors, such as flow meters 1616 provided for each or one or more of the injection product inputs 1606, 1608. The flow meters 1616 are, in one example, in communication with the control unit 1624 and optionally used to refine operation of the throttling elements 1610, 1612, for instance, in the manner of a feedback loop.

In another example, the injection interface 1600 includes one or more pressure transducers 1618, 1620 optionally provided upstream and downstream relative to the respective throttling elements 1610, 1612 to facilitate the pressure based determination of the flow rate (e.g., by pressure differential) through the throttling elements 1610, 1612. As shown, the pressure transducers 1618, 1620, in this example, are also coupled with the control unit 1624 and are used, in one example, to determine the flow rate through either or both of the throttling elements 1610, 1612 (for instance, where the flow rate through the injection product inputs 1606, 1608 is below the operating threshold for a flow meter such as the flow meter 1616). Optionally, the pressure transducers 1618, 1620 are used in combination with the flow meters 1616, for instance, where the injection product inputs 1606, 1608 are configured to provide a large range of flow rates above and below the operating threshold for the flow meter.

In operation, the injection products are delivered through the respective inputs 1606, 1608 at varying flow rates corresponding to one or more specified concentrations of the injection products relative to the carrier fluid. The throttling elements 1610, 1612 are controlled by, for example, the control unit 1624 to provide these injection products at the specified flow rates to the mixing chamber 1614 for mixing with the corresponding volume of carrier fluid. As the specified concentration of the one or more injection products changes (e.g., as the sprayer moves through a field and the product dispenser assembly 1500 enters into a zone having a differing prescription or the like), the control unit 1624 operates the throttling elements 1610, 1612 to accordingly change the flow rate of the respective injection products and change the specified concentration of the products within the carrier fluid in an instantaneous manner (including near instantaneous and immediately prior to dispensing) prior to application of the agricultural product from the nozzle assembly 1404.

As shown in FIG. 16, the injection product delivered from the throttling elements 1610, 1612 is provided to the mixing

chamber **1614**, for instance, through check valve **1620** configured to prevent backflow of the injection product or carrier fluid into the injection product inputs **1606**, **1608**. The injection products and the carrier fluid are mixed by the one or more mixing structures in the mixing chamber **1614** and delivered along the nozzle passage **1506** to the nozzle assembly **1404** including the nozzle **1424**. Optionally, the nozzle assembly **1404** includes a control valve **1426**, for instance, a solenoid operated control valve configured to operate at one or more duty cycles and thereby provide a controlled flow rate of the agricultural product (including the one or more injection products at specified concentrations) to various zones in the fields according to prescriptions that are implemented by the control unit **1624** through the throttling elements **1610**, **1612**.

FIG. **17** shows one example of the method **1700** for using a localized product injection interface, such as the injection interfaces described and shown previously herein. In describing the method **1700** reference is made to one or more components, elements, features, functions, steps or the like described herein. Where convenient reference is made to the components, elements, features, functions, steps or the like with reference numerals. Reference numerals provided are exemplary and are not exclusive. For instance, the components, elements, features, functions, steps or the like described in the method **1700** include, but are not limited to, the corresponding numbered elements, other corresponding features described herein (both numbered and unnumbered), as well as their equivalents.

At **1702**, the method **1700** includes pressurizing an injection product. As described herein, the injection product is pressurized for injection into a carrier fluid. In one example pressurizing an injection product includes pressurizing the injection product at a remote location, for instance relative to one or more product dispensers. For instance, as shown in FIG. **2**A the injection product is optionally pressurized by a pump such as the injection pump **203** provided adjacent to the injection product reservoir **104**. The injection product is pressurized from the injection pump **203** to one or more of the throttling elements described herein, such as a control valve or pump. In other examples, the injection product is pressurized for injection to the carrier fluid locally relative to the product dispensers. For instance, as shown in FIG. **8**B, in one example the throttling elements **860**, **862**, such as displacement pumps, pressurize the one or more injection products for mixing with the carrier fluid from a carrier fluid input **804**.

At **1704**, the method **1700** includes determining a specified injection concentration for the injection product at the product dispenser. In one example, determining the specified injection concentration includes determining one or more of the location of the injection interface or plurality of injection interfaces relative to one or more zones, regions or the like provided on a field map. In one example the sprayer includes an indexing system such as a GPS module or the like configured to determine the location of the sprayer on an ongoing basis. In other examples each of the product dispensers, injection interfaces or the like includes its own GPS fiducial mathematically related relative to the GPS sensor on the sprayer to determine the locations of the injection interfaces relative to the GPS sensor. In another example the specified injection concentration varies based on the speed of the sprayer the rotation of the sprayer booms (e.g., during a turn), variations based on operator specified concentrations or the like.

At **1706**, the method **1700** includes operating at least one throttling element, for instance one or more of the throttling elements as shown herein, including control valves, displacement pumps or the like of the injection interface at the product dispenser (e.g., a nozzle assembly, boom section or the like). Other examples of product dispensers a boom section **108** (e.g., as shown in FIG. **2**B).

In one example, operating the at least one throttling element includes injecting the injection product to a mixing chamber, such as the mixing chamber **822** shown in FIGS. **8**A, **8**B or the mixer **210**, **304** shown in FIGS. **2**B, **3**B. The injection product is injected to the mixing chamber at the specified injection concentration. For instance, the injection production (including one or more injection products) is provided to the mixing chamber, manifold or the like at a flow rate corresponding to the specified concentration of the injection product relative to the flow rate of the carrier fluid (e.g., with increasing flow rates of the carrier fluid the flow rate of the one or more injection products is increased to offset the increase in the carrier fluid flow rate and maintain the specified injection concentration).

At **1710**, operating the at least one throttling element (e.g., the one or more control valves, one or more pumps or the like) includes changing an injection concentration in the carrier fluid to the specified injection concentration at the product dispenser (such as one or more of the nozzle assembly, boom section or the like) according to the positioning of the at least one throttling element at the product dispenser. In one example changing the injection concentration includes a local change of the injection concentration at the product dispenser to facilitate instantaneous (including near instantaneous, with minimal lag time or the like) control of the injection concentration relative to the carrier fluid for immediate application of the mixed agricultural product from the product dispenser.

At **1712**, the method **1700** includes delivering a mixture of the carrier fluid and the one or more injection products at the specified injection concentration (e.g., an agricultural product) to the product dispenser, such as one or more of the boom section **108** previously described herein or one or more nozzle assemblies **824** including nozzles **826** as previously described herein. The carrier fluid and the injection product are optionally blended and mixed at a mixing chamber, such as the mixing chamber **822** adjacent to the product dispenser. Accordingly, lag time otherwise present with remote mixing and delivery of the agricultural product along one or more booms or the like to the various product dispensers is avoided. Instead, with local mixing of the one or more injection products with the carrier fluid the resulting agricultural product is provided at a specified concentration to the associated product dispensers with minimal lag time (e.g., instantaneously or near instantaneously) to facilitate control (including variation, maintenance or the like) of specified injection product concentrations in the carrier fluid for immediate application to one or more crops, soil or the like in a field.

Several options for the method **1700** follow. In one example, pressurizing the injection product includes pressurizing the injection product to a plurality of localized injection interfaces, for instance one or more control valves positioned at product dispensors of the plurality of product dispensers (e.g., nozzles assemblies **824** and nozzles **826**, boom sections **108** or the like). In one example, pressurizing the injection products to the plurality of localized injection interfaces includes remotely pressurizing the injection product at an injection pump as previously described herein and delivering the pressurized injection fluid in one or more injection product passages (such as the passages **1306**, **1308** shown in FIG. **13**) to the injection interfaces and product

dispensers previously described herein. In other examples pressurizing the injection product to the localized injection interfaces includes pressurizing the injection product at the injection interfaces, for instance with one or more positive displacement pump throttling elements described herein. For instance, referring to FIG. **8**B one example of throttling elements **860**, **862** including positive displacement pumps is shown. In this example the throttling elements **860**, **862** provide a pressurized environment for the one or more injection products and deliver the one or more injection products at flow rates corresponding to specified concentrations to the carrier fluid. In an example such as the one shown in FIG. **8**B, the throttling element **860**, **862** generate the pressurized environment of the injection product in a local manner relative to the injection interface **850** (also shown in FIG. **8**B).

The method **1700** further includes, in another example, dispensing the mixture of the carrier fluid with the injection product at the specified injection concentration from the product dispenser immediately after injection and change of the injection concentration (change of the injection concentration also includes maintenance of a concentration). For instance, dispensing of the mixture of the carrier fluid and the injection product occurs proximate to injection of the injection product to the carrier fluid to facilitate dispensing (e.g., spray) with little to no lag time between the control of the injection product.

In another example, the method **1700** further includes measuring the injection concentration relative to the carrier fluid at a product dispenser for instance proximate to one or more of the boom section **108**, nozzle assembly **824** or the like. The measured injection concentration is compared to the specified injection concentration. Changing the injection concentration as described in the method **1700** to the specified injection concentration includes instantaneously (e.g., with little to no lag time) changing the injection concentration according to the comparison of the measured injection concentration with the specified injection concentration. In one example, as shown in FIGS. **8**A, one or more sensors, such as flow meters **814**, **816**, are included with one or more throttling elements **810**, **812**, respectively. The flow meters measure flow rates of the injection product through the respective throttling elements **810**, **812**. The measured flow rates of the one or more injection products correspond to concentrations of the injection products to the carrier fluid. The measured flow rates are compared with flow rates corresponding to the specified injection concentrations The control unit **813**, in an example, uses the comparison to refine control of the throttling elements and achieve flow rates of each of the one or more injection products that meet the specified injection concentrations for each. Optionally, measuring the injection concentration includes determining the ratio of an injection product flow rate through the at least one throttling element to a carrier fluid flow rate to the injection interface. For instance, in one example a carrier fluid flow rate is determined with one or more upstream flow meters provided for the carrier fluid. In other examples, one or more flow meters or the like are provided downstream, for instance as part of or proximate to one or more injection interfaces such as the injection interface **800** shown in FIG. **8**A.

Although the examples shown in FIGS. **8**A, **9**A and elsewhere include flow meters as example sensors, the sensors associated with the various injection interfaces described herein optionally include one or more pressure transducers for instance pressure transducers provided upstream and downstream relative to the various throttling elements. By measuring the pressure differential therebetween the flow rate is in one example determined for each of the injection products.

In other examples the method **1700** includes mixing the injection product with the carrier fluid in a mixing chamber, such as the mixing chamber **822** shown for instance in FIGS. **8**A, **8**B. The mixing chamber **822** one or more mixing features, such as serpentine passages, vanes, flutes, residence chambers or the like to passively or actively mix the one or more injection products with the carrier fluid to form the agricultural product.

In another example, operating the at least one throttling element on the localized product injection interface includes at least one of operating a control valve for instance the control valve throttling elements **810**, **812** shown in FIG. **8**A or operating the positive displacement pump throttling elements **860**, **862** shown in FIG. **8**A, **8**B as well as any of the other examples previously described herein. Another example pressurizing the injection product includes operating the at least one throttling element for instance with a throttling elements include one or more positive displacement pump throttling element **860** and the positive displacement pump **862** shown in the FIG. **8**B at product dispenser such as one or more of the boon section **108** nozzle assembly **824** or the like.

Various Notes & Examples

Example 1 can include subject matter such as a localized product injection system comprising: a composite boom tube including: a tube body extending from a carrier fluid input and at least one injection product input, a carrier fluid passage within the tube body and extending from the carrier fluid input, at least one injection product passage within the tube body and extending from the at least one injection product input, the at least one injection product passage isolated from the carrier fluid passage, and a plurality of port stations at a plurality of locations along the tube body, each of the plurality of port stations includes: a carrier fluid outlet port in communication with the carrier fluid passage, the carrier fluid outlet port is configured for coupling with a carrier fluid input of a localized injection interface, and at least one injection product outlet port in communication with the at least one injection product passage, the injection product outlet port is configured for coupling with an injection product input of the localized injection interface.

Example 2 can include, or can optionally be combined with the subject matter of Example 1, to optionally include wherein the tube body is an extruded tube body including coextruded partitions for each of the carrier fluid passage and the at least one injection product passage.

Example 3 can include, or can optionally be combined with the subject matter of one or any combination of Examples 1 or 2 to optionally include wherein the at least one injection product passage includes at least a first injection product passage and a second injection product passage, the first and second injection product passages isolated from each other.

Example 4 can include, or can optionally be combined with the subject matter of one or any combination of Examples 1-3 to optionally include wherein the first injection product passage includes a first cross sectional area larger than a second cross sectional area of the second injection product passage.

Example 5 can include, or can optionally be combined with the subject matter of one or any combination of Examples 1-4 to optionally include wherein the carrier fluid

passage and the at least one injection product passage include component tubes within the tube body.

Example 6 can include, or can optionally be combined with the subject matter of Examples 1-5 to optionally include wherein at least two of the carrier fluid passage, the at least one injection product passage and the tube body share an integrated side wall.

Example 7 can include, or can optionally be combined with the subject matter of Examples 1-6 to optionally include wherein each of the carrier fluid passage, the at least one injection product passage and the tube body share an integrated side wall.

Example 8 can include, or can optionally be combined with the subject matter of Examples 1-7 to optionally include wherein the tube body includes a tube body perimeter, and for each of the port stations of the plurality of port stations: the carrier fluid outlet port is provided at a first perimeter location of the tube body perimeter, and the at least one injection product outlet port is provided at a second perimeter location of the tube body perimeter different than the first perimeter location.

Example 9 can include, or can optionally be combined with the subject matter of Examples 1-8 to optionally include wherein the first and second perimeter locations are different circumferential locations around the tube body perimeter.

Example 10 can include, or can optionally be combined with the subject matter of Examples 1-9 to optionally include at least one localized injection interface configured for coupling at a port station of the plurality of port stations, the at least one injection interface includes: a carrier fluid input and at least one injection product input, each of the carrier fluid and the at least one injection product inputs are configured for coupling with one of the carrier fluid outlet port and the at least one injection product outlet port of the composite boom tube at the port station of the plurality of port stations, at least one throttling element in communication with the at least one injection product input, a mixing chamber in communication with each of the carrier fluid input and the at least one injection product input, and an injection port in communication with the mixing chamber, the injection port configured for localized coupling at a product dispenser and localized injection to the product dispenser.

Example 11 can include, or can optionally be combined with the subject matter of Examples 1-10 to optionally include wherein the carrier fluid outlet port and the at least one injection product outlet port of the port station of the plurality of port stations are in a first arrangement, and the at least one location injection interface includes an input face including each of the carrier fluid input and the at least one injection product input in a second arrangement corresponding to the first arrangement.

Example 12 can include, or can optionally be combined with the subject matter of Examples 1-11 to optionally include wherein the at least one localized injection interface includes an interface clamp, the interface clamp configured to: couple the at least one localized injection interface with the port station, and couple the first arrangement of the carrier fluid outlet port and the at least one injection product outlet port of the port station with the second arrangement of the carrier fluid input and the least one injection product input of the at least one localized injection interface.

Example 13 can include, or can optionally be combined with the subject matter of Examples 1-12 to optionally include a localized injection interface comprising: an input face configured for coupling at a port station along a composite boom tube, the input face includes: a carrier fluid fitting configured for coupling with a carrier fluid outlet port at the port station, at least one injection product fitting configured for coupling with at least one injection product outlet port at the port station, and each of the carrier fluid fitting and the at least one injection product fitting are arranged on the input face to interface with the respective carrier fluid outlet port and the at least one injection product outlet port with coupling of the localized injection interface at the port station; at least one throttling element in communication with the at least one injection product fitting; a mixing chamber in communication with each of the carrier fluid and the at least one injection product fittings; and an injection port in communication with the mixing chamber, the injection port configured for localized coupling at a product dispenser and localized injection to the product dispenser.

Example 14 can include, or can optionally be combined with the subject matter of Examples 1-13 to optionally include an electronic control unit coupled with the at least one throttling element, the electronic control unit configured to control the throttling element and a corresponding injection product flow rate through the throttling element.

Example 15 can include, or can optionally be combined with the subject matter of Examples 1-14 to optionally include an interface clamp, the interface clamp configured to: couple the at least one localized injection interface with the port station, and couple the arrangement of the carrier fluid outlet port and the at least one injection product outlet port of the port station with the arrangement of the carrier fluid fitting and the least one injection product fitting of the localized injection interface.

Example 16 can include, or can optionally be combined with the subject matter of Examples 1-15 to optionally include the composite boom tube having the port station included with a plurality of port stations provided along the composite boom tube.

Example 17 can include, or can optionally be combined with the subject matter of Examples 1-16 to optionally include the product dispenser, the product dispenser includes a nozzle assembly coupled with the injection port.

Example 18 can include, or can optionally be combined with the subject matter of Examples 1-17 to optionally include the nozzle assembly is integral to the localized injection interface.

Example 19 can include, or can optionally be combined with the subject matter of Examples 1-18 to optionally include wherein the mixing chamber includes one or more of vanes, flutes or passages configured to mix an injection product with a carrier fluid.

Example 20 can include, or can optionally be combined with the subject matter of Examples 1-19 to optionally include a flow meter in communication with the at least one injection product fitting.

Example 21 can include, or can optionally be combined with the subject matter of Examples 1-20 to optionally include a first pressure transducer positioned upstream relative to the at least one injection product fitting, and a second pressure transducer positioned downstream relative to the at least one injection product fitting, and between the mixing chamber and the at least one injection product fitting.

Example 22 can include, or can optionally be combined with the subject matter of Examples 1-21 to optionally include wherein the throttling element includes one or more of a control valve or pump.

Example 23 can include, or can optionally be combined with the subject matter of Examples 1-22 to optionally

include a localized injection interface comprising: an interface body including a mixing chamber, a carrier fluid input in communication with the mixing chamber, the carrier fluid input configured for coupling with a carrier fluid passage; at least one injection product input in communication with the mixing chamber, the at least one injection product input configured for coupling with an injection product passage; an injection product control system configured to deliver an injection product to a carrier fluid locally relative to a nozzle assembly, the injection product control system includes: a throttling element interposed between the at least one injection product input and the mixing chamber, and a control unit coupled with the throttling element, the control unit and the throttling element are configured to control the flow of the injection product to the mixing chamber; and an injection port in communication with the mixing chamber, the injection port is configured for localized coupling with the nozzle assembly and direct delivery of a mixture of the carrier fluid and the injection product to the nozzle assembly.

Example 24 can include, or can optionally be combined with the subject matter of Examples 1-23 to optionally include a nozzle assembly coupled with the injection port.

Example 25 can include, or can optionally be combined with the subject matter of Examples 1-24 to optionally include wherein the localized injection interface is configured for: downstream coupling with a carrier fluid system and at least one injection product system, and local coupling upstream relative to the nozzle assembly.

Example 26 can include, or can optionally be combined with the subject matter of Examples 1-25 to optionally include wherein in an operation configuration: the carrier fluid input is configured to deliver the carrier fluid to the mixing chamber, the at least one injection product input is configured to deliver a specified flow rate of the injection product to the mixing chamber according to the operation of the control unit and the throttling element, the mixing chamber is configured to mix the injection product with the carrier fluid, and the injection port is configured to locally deliver the mixture of the carrier fluid and the injection product directly to the nozzle assembly.

Example 27 can include, or can optionally be combined with the subject matter of Examples 1-26 to optionally include wherein the mixing chamber includes at least one mixing structure.

Example 28 can include, or can optionally be combined with the subject matter of Examples 1-27 to optionally include wherein the at least one mixing structure includes one or more of vanes, flutes, passages or residence chambers.

Example 29 can include, or can optionally be combined with the subject matter of Examples 1-28 to optionally include wherein the carrier fluid input includes a carrier fluid check valve and the at least one injection product input includes an injection product check valve.

Example 30 can include, or can optionally be combined with the subject matter of Examples 1-29 to optionally include wherein the control unit operates the throttling element according to a specified concentration of the injection product relative to the carrier fluid.

Example 31 can include, or can optionally be combined with the subject matter of Examples 1-30 to optionally include wherein the throttling element includes one or more of a control valve or pump coupled with the control unit.

Example 32 can include, or can optionally be combined with the subject matter of Examples 1-31 to optionally include a method for using a localized product injection interface comprising: pressurizing an injection product; determining a specified injection concentration for the injection product at a product dispenser; and operating at least one throttling element of the localized product injection interface at the product dispenser, operating includes: injecting the injection product to a mixing chamber at the product dispenser according to the specified injection concentration, and changing an injection concentration in the carrier fluid to the specified injection concentration at the product dispenser according to the positioning of the at least one throttling element at the product dispenser; and delivering a mixture of the carrier fluid and the injection product at the specified injection concentration to the product dispenser.

Example 33 can include, or can optionally be combined with the subject matter of Examples 1-32 to optionally include wherein pressurizing the injection product includes pressurizing the injection product to a plurality of localized injection interfaces each respectively positioned at product dispensers of a plurality of product dispensers.

Example 34 can include, or can optionally be combined with the subject matter of Examples 1-33 to optionally include dispensing the mixture of the carrier fluid with the injection product at the specified injection concentration from the product dispenser immediately after injection and change of the injection concentration.

Example 35 can include, or can optionally be combined with the subject matter of Examples 1-34 to optionally include measuring the injection concentration relative to the carrier fluid at the product dispenser; comparing the measured injection concentration relative to the specified injection concentration; and wherein changing an injection concentration in the carrier fluid to the specified injection concentration includes instantaneously changing the injection concentration according to the comparison of the measured injection concentration with the specified injection concentration.

Example 36 can include, or can optionally be combined with the subject matter of Examples 1-35 to optionally include wherein measuring the injection concentration includes determining the ratio of an injection product flow rate through the at least one throttling element to a carrier fluid flow rate to the mixing chamber.

Example 37 can include, or can optionally be combined with the subject matter of Examples 1-36 to optionally include wherein determining the specified injection concentration includes determining the specified injection concentration according to the injection concentration associated with a determined location on the field map; and operating the at least one throttling element includes operating the at least one throttling element according to the determined location and the associated injection concentration.

Example 38 can include, or can optionally be combined with the subject matter of Examples 1-37 to optionally include mixing the injection product with the carrier fluid in a mixing chamber with one or more mixing structures.

Example 39 can include, or can optionally be combined with the subject matter of Examples 1-38 to optionally include wherein operating the at least one throttling element of the localized product injection interface includes at least one of: operating a control valve, or operating a pump.

Example 40 can include, or can optionally be combined with the subject matter of Examples 1-39 to optionally include wherein pressurizing the injection product includes operating the at least one throttling element at the product dispenser, the at least one throttling element includes a pump.

Example 41 can include, or can optionally be combined with the subject matter of Examples 1-40 to optionally

include wherein pressurizing the injection product includes pressurizing the injection product between an injection product reservoir and the at least one throttling element, the at least one throttling element includes one or more of a control valve or a pump.

Each of these non-limiting examples can stand on its own, or can be combined in various permutations or combinations with one or more of the other examples.

The above detailed description includes references to the accompanying drawings, which form a part of the detailed description. The drawings show, by way of illustration, specific embodiments in which the disclosure can be practiced. These embodiments are also referred to herein as "examples." Such examples can include elements in addition to those shown or described. However, the present inventors also contemplate examples in which only those elements shown or described are provided. Moreover, the present inventors also contemplate examples using any combination or permutation of those elements shown or described (or one or more aspects thereof), either with respect to a particular example (or one or more aspects thereof), or with respect to other examples (or one or more aspects thereof) shown or described herein.

In the event of inconsistent usages between this document and any documents so incorporated by reference, the usage in this document controls.

In this document, the terms "a" or "an" are used, as is common in patent documents, to include one or more than one, independent of any other instances or usages of "at least one" or "one or more." In this document, the term "or" is used to refer to a nonexclusive or, such that "A or B" includes "A but not B," "B but not A," and "A and B," unless otherwise indicated. In this document, the terms "including" and "in which" are used as the plain-English equivalents of the respective terms "comprising" and "wherein." Also, in the following claims, the terms "including" and "comprising" are open-ended, that is, a system, device, article, composition, formulation, or process that includes elements in addition to those listed after such a term in a claim are still deemed to fall within the scope of that claim. Moreover, in the following claims, the terms "first," "second," and "third," etc. are used merely as labels, and are not intended to impose numerical requirements on their objects.

Method examples described herein can be machine or computer-implemented at least in part. Some examples can include a computer-readable medium or machine-readable medium encoded with instructions operable to configure an electronic device to perform methods as described in the above examples. An implementation of such methods can include code, such as microcode, assembly language code, a higher-level language code, or the like. Such code can include computer readable instructions for performing various methods. The code may form portions of computer program products. Further, in an example, the code can be tangibly stored on one or more volatile, non-transitory, or non-volatile tangible computer-readable media, such as during execution or at other times. Examples of these tangible computer-readable media can include, but are not limited to, hard disks, removable magnetic disks, removable optical disks (e.g., compact disks and digital video disks), magnetic cassettes, memory cards or sticks, random access memories (RAMs), read only memories (ROMs), and the like.

The above description is intended to be illustrative, and not restrictive. For example, the above-described examples (or one or more aspects thereof) may be used in combination with each other. Other embodiments can be used, such as by one of ordinary skill in the art upon reviewing the above description. The Abstract is provided to comply with 37 C.F.R. § 1.72(b), to allow the reader to quickly ascertain the nature of the technical disclosure. It is submitted with the understanding that it will not be used to interpret or limit the scope or meaning of the claims. Also, in the above Detailed Description, various features may be grouped together to streamline the disclosure. This should not be interpreted as intending that an unclaimed disclosed feature is essential to any claim. Rather, inventive subject matter may lie in less than all features of a particular disclosed embodiment. Thus, the following claims are hereby incorporated into the Detailed Description as examples or embodiments, with each claim standing on its own as a separate embodiment, and it is contemplated that such embodiments can be combined with each other in various combinations or permutations. The scope of the disclosure should be determined with reference to the appended claims, along with the full scope of equivalents to which such claims are entitled.

The claimed invention is:

1. A localized product injection interface comprising:

one or more interface bodies configured for coupling with a boom tube, the boom tube coupled with one or more upstream pumps configured to pressurize a carrier fluid and an injection product, the one or more interface bodies configured to mix the carrier fluid and the injection product to form an agricultural product and provide the agricultural product for spray application, each interface body of the one or more interface bodies houses:

a carrier fluid fitting configured to couple with a carrier fluid passage of the boom tube and receive the carrier fluid pressurized with the one or more upstream pumps;

an injection product fitting configured to couple with an injection product passage of the boom tube and receive the injection product pressurized with the one or more upstream pumps;

an injection control valve, the injection product fitting extending to the injection control valve, the injection control valve is configured to control an injection flow rate of the injection product;

a mixing chamber, the carrier fluid fitting and injection control valve extending to the mixing chamber, the mixing chamber includes a static mixer configured to mix the injection product at the injection flow rate with the carrier fluid from the carrier fluid fitting in each interface body and provide the agricultural product; and

at least one flow measuring sensor proximate to the injection control valve;

wherein the at least one flow measuring sensor measures at least one of flow rate or pressure differential of the injection product;

wherein the injection control valve is configured to meter a quantity of the injection product to the mixing chamber according to the measured at least one of flow rate or pressure differential of the injection product; and

a plurality of nozzle assemblies, each nozzle assembly engaged with at least one of the one or more interface bodies;

wherein each nozzle assembly of the plurality of nozzle assemblies is in direct communication with the mixing chamber housed in at least one of the one or more interface bodies, and each nozzle

assembly is configured to spray the agricultural product pressurized with the one or more upstream pumps;

wherein the agricultural product sprayed from each nozzle assembly includes a concentration of injection product specific to each nozzle assembly.

2. The localized product injection interface of claim **1** comprising a control unit in communication with the injection control valve, and the control unit is configured to control concentration of the injection product in the carrier fluid with control of the injection flow rate by the injection control valve.

3. The localized product injection interface of claim **2**, comprising a carrier control valve in communication with the carrier fluid fitting and the mixing chamber, and the control unit is in communication with the carrier control valve; and

the control unit is configured to control a carrier flow rate of the carrier fluid with the carrier control valve.

4. The localized product injection interface of claim **2**, comprising one or more sensors configured to measure characteristics of one or more of the injection product or the carrier fluid, the one or more sensors in communication with the control unit.

5. The localized product injection interface of claim **4**, wherein the one or more sensors include one or more of flow meters or pressure transducers coupled with one or more of the injection product fitting or the carrier fluid fitting.

6. The localized product injection interface of claim **4**, wherein the one or more sensors include sensors configured to measure or determine a flow rate of one or more of the injection product or the carrier fluid; and wherein the control unit is configured to control concentration of the injection product in the carrier fluid according to the measured or determined flow rate.

7. The localized product injection interface of claim **2**, comprising a concentration sensor proximate to the nozzle assembly, the concentration sensor configured to measure concentration of the injection product in the agricultural product.

8. The localized product injection interface of claim **1**, wherein the interface body is configured for:

downstream coupling with a carrier fluid system and at least one injection product system; and

local coupling upstream relative to the nozzle assembly.

9. The localized product injection interface of claim **1**, wherein the mixing chamber is interposed between the nozzle assembly and each of the carrier fluid fitting and the injection product fitting.

10. The localized product injection interface of claim **1**, wherein the interface body includes an interface clamp configured to:

close around the boom tube;

interfit the carrier fluid fitting with the carrier fluid passage; and

interfit the injection product fitting with the injection product passage.

11. The localized product injection interface of claim **10**, wherein the interface body includes an input face having the carrier fluid fitting and the injection product fitting extending along the input face; and wherein closing of the interface clamp is configured to interfit the carrier fluid fitting and the injection product fitting along the interface clamp with the carrier fluid passage and the injection product passage, respectively.

12. The localized product injection interface of claim **1** comprising the one or more upstream pumps; and the boom tube extending from the one or more upstream pumps to the interface body.

13. The localized product injection interface of claim **1**, including a control unit configured to communicated with the injection control valve to control the injection flow rate based on at least one of the measured flow rate or pressure differential.

14. A localized product injection interface comprising:

one or more interface bodies, each interface body configured for coupling with a boom tube, the boom tube coupled with one or more upstream pumps configured to pressurize a carrier fluid and an injection product, each interface body configured to mix the carrier fluid and the injection product to form an agricultural product and provide the agricultural product for spray application, each interface body houses:

a carrier fluid fitting configured to couple with a carrier fluid passage of the boom tube and receive the carrier fluid pressurized with the one or more upstream pumps;

an injection product fitting configured to couple with an injection product passage of the boom tube and receive the injection product pressurized with the one or more upstream pumps;

an injection control valve, the injection product fitting extending to the injection control valve, the injection control valve is configured to control an injection flow rate of the injection product;

at least one flow measuring sensor proximate to the injection control valve;

wherein the at least one flow measuring sensor is configured to measure at least one of the flow rate or pressure differential of the injection product and is configured to provide an output to a control unit;

a carrier control valve, the carrier fluid fitting extending to the carrier control valve, and the carrier control valve is configured to control a carrier flow rate of the carrier fluid; and

a mixing chamber, the carrier control valve and the injection control valve extending to the mixing chamber, the mixing chamber includes a static mixer configured to mix the injection product at the injection flow rate with the carrier fluid at the carrier flow rate in each interface body and provide the agricultural product;

the control unit in communication with the injection control valve and the carrier control valve of each interface body, the control unit is configured to control each of the injection flow rate, based on the at least one of the flow rate or pressure differential, and the carrier flow rate; and

one or more nozzle assemblies, each nozzle assembly directly coupled with an associated interface body of the one or more interface bodies, each nozzle assembly in direct communication with the mixing chamber, and each nozzle assembly is configured to spray the agricultural product pressurized with the one or more upstream pumps;

wherein the control unit is configured to independently control the injection control valve of each interface body, and is configured to control each nozzle assembly associated with a respective injection control valve is configured to spray an agricultural product with independently controlled concentration relative to a different nozzle assem-

bly of the one or more nozzle assemblies and a respective injection control valves according to an output from the control unit.

15. The localized product injection interface of claim **14** comprising one or more sensors configured to measure characteristics of one or more of the injection product or the carrier fluid, the one or more sensors in communication with the control unit.

16. The localized product injection interface of claim **15**, wherein the one or more sensors include one or more of flow meters or pressure transducers coupled with one or more of the injection product fitting or the carrier fluid fitting.

17. The localized product injection interface of claim **16**, wherein the one or more flow meters or pressure transducers are configured to measure or determine one or more of the injection flow rate of the injection product or the carrier flow rate of the carrier fluid; and

wherein the control unit is configured to control concentration of the injection product in the carrier fluid according to one or more of the injection flow rate or the carrier flow rate.

18. The localized product injection interface of claim **17**, wherein the one or more flow meters or pressure transducers are configured to measure or determine each of the injection flow rate and the carrier flow rate; and

wherein the control unit is configured to control concentration of the injection product in the carrier fluid according to the injection flow rate and the carrier flow rate.

19. The localized product injection interface of claim **14** comprising a concentration sensor proximate to the nozzle assembly, the concentration sensor configured to measure concentration of the injection product in the agricultural product.

20. The localized product injection interface of claim **19**, wherein the control unit is configured to control the injection flow rate of the injection control valve based on the measured concentration of the injection product.

21. The localized product injection interface of claim **14**, wherein the injection product fitting includes at least first and second injection product fittings configured to couple with first and second injection product passages of the injection product passage; and

the injection control valve includes a first injection control valve in communication with the first injection product fitting and a second injection control valve in communication with the second injection product fitting.

22. The localized product injection interface of claim **21**, wherein the control unit is in communication with each of the first and second injection control valves, and the control unit is configured to control each of first and second injection flow rates.

23. The localized product injection interface of claim **22** comprising the injection product, and the injection product includes first and second injection products that are different.

24. The localized product injection interface of claim **14**, wherein the mixing chamber is interposed between the nozzle assembly and each of the carrier fluid fitting and the injection product fitting.

25. The localized product injection interface of claim **14**, wherein the interface body includes an interface clamp configured to:

close around the boom tube;

interfit the carrier fluid fitting with the carrier fluid passage; and

interfit the injection product fitting with the injection product passage.

26. The localized product injection interface of claim **25**, wherein the interface body includes an input face having the carrier fluid fitting and the injection product fitting extending along the input face; and wherein closing of the interface clamp is configured to interfit the carrier fluid fitting and the injection product fitting along the interface clamp with the carrier fluid passage and the injection product passage, respectively.

27. The localized product injection interface of claim **14** comprising the one or more upstream pumps; and the boom tube extending from the one or more upstream pumps to the interface body.

* * * * *