US 20250255603A1

(19) United States

(12) Patent Application Publication

HAMAKER et al.

(10) Pub. No.: US 2025/0255603 A1

(43) Pub. Date: Aug. 14, 2025

(54) **BARBED DEVICES FOR SECURING TISSUE**

(71) Applicant: **Axogen Corporation**, Alachua, FL (US)

(72) Inventors: **Kiri K. HAMAKER**, Tampa, FL (US); **Nikunj Kumar AGRAWAL**, Tampa, FL (US); **Nesreen ALSMADI**, Alachua, FL (US); **Benjamin SPEARMAN**, Alachua, FL (US); **Robert DILUCCIO**, Alachua, FL (US); **Justin DEUERLING**, Alachua, FL (US); **Curt DEISTER**, Alachua, FL (US)

(73) Assignee: **Axogen Corporation**, Alachua, FL (US)

(21) Appl. No.: **19/047,021**

(22) Filed: **Feb. 6, 2025**

Related U.S. Application Data

(60) Provisional application No. 63/737,119, filed on Dec. 20, 2024, provisional application No. 63/721,964, filed on Nov. 18, 2024, provisional application No. 63/683,523, filed on Aug. 15, 2024, provisional application No. 63/551,695, filed on Feb. 9, 2024.

Publication Classification

(51) **Int. Cl.**
A61B 17/06 (2006.01)

(52) **U.S. Cl.**
CPC ***A61B 17/06166*** (2013.01); *A61B 2017/06176* (2013.01)

(57) **ABSTRACT**

A barbed suture may include a suture body and at least one multi-directional barb formed on an outer surface of the suture body. The at least one multi-directional barb includes a first projection and a second projection, the first projection and the second projection extending in two different directions. In another embodiment, a barbed suture may include a suture body and at least two barbs formed on an outer surface of the suture body. Each of the at least two barbs has a first projection pointing in a first direction, and a second projection pointing in a second direction, the first direction being different than the second direction. The invention also relates to methods of forming barbed sutures.

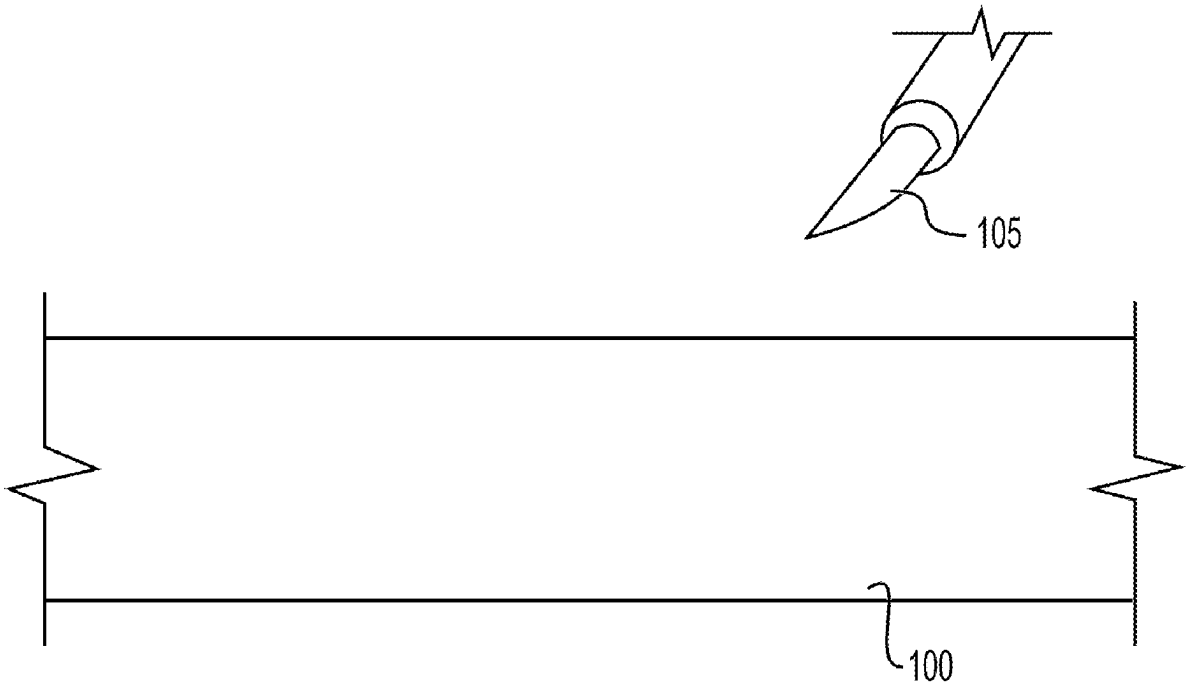

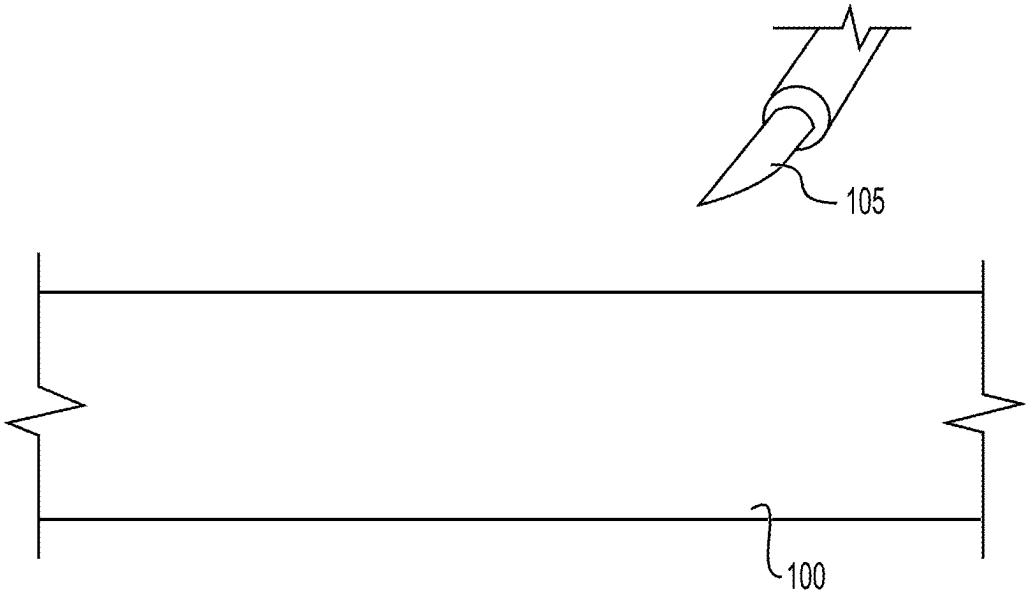

FIG. 1

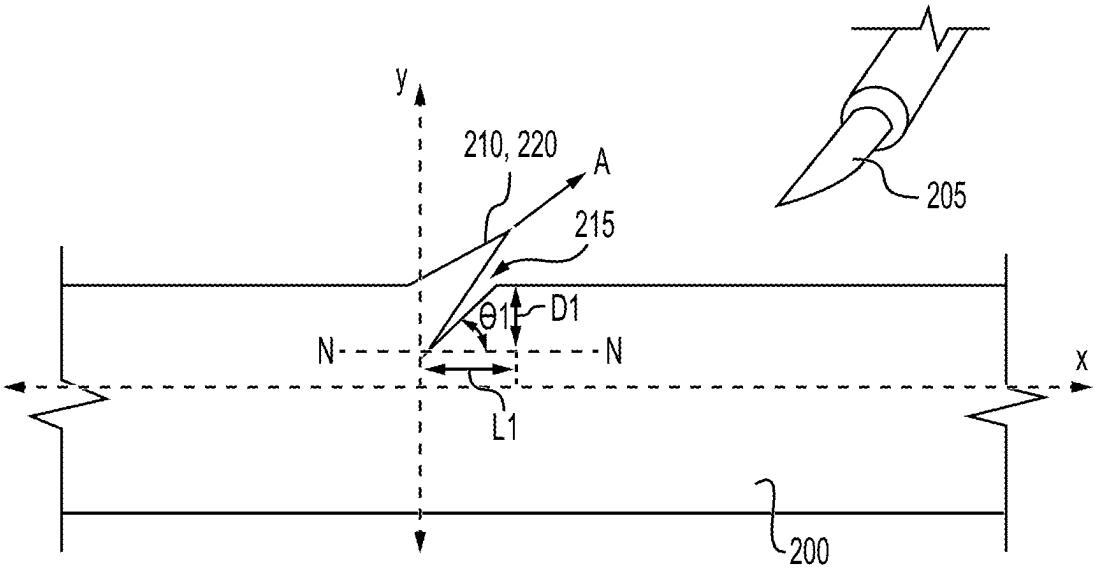

FIG. 2

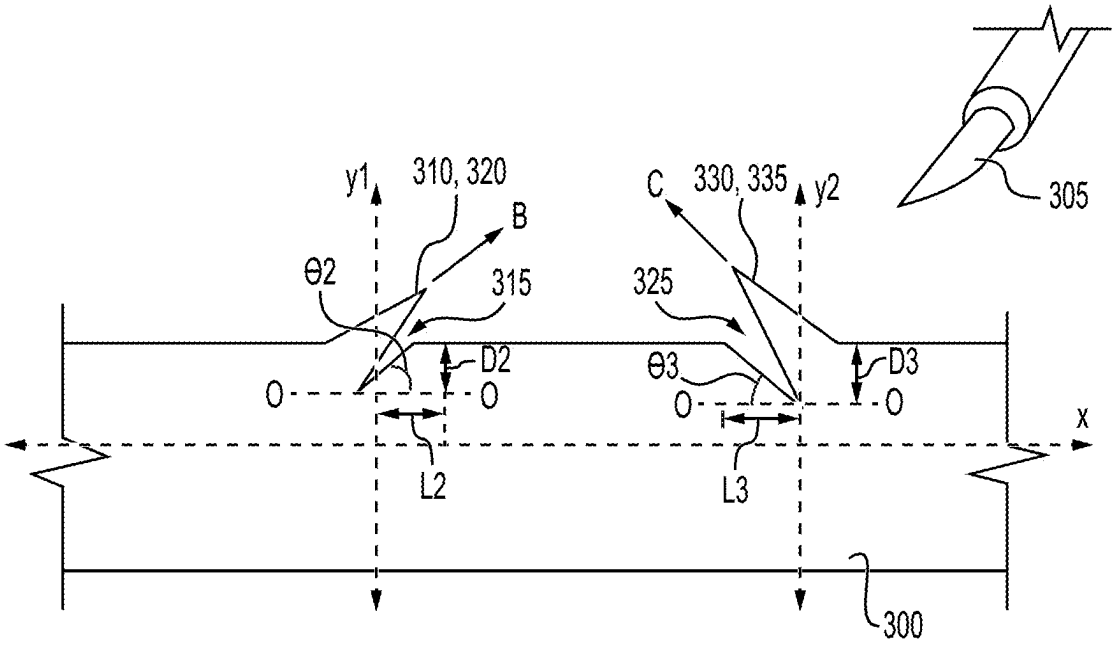
y1
310, 320
B
θ2
315
D2
O
O
L2
C
330, 335
y2
325
θ3
D3
O
O
L3
x
305
300

FIG. 3

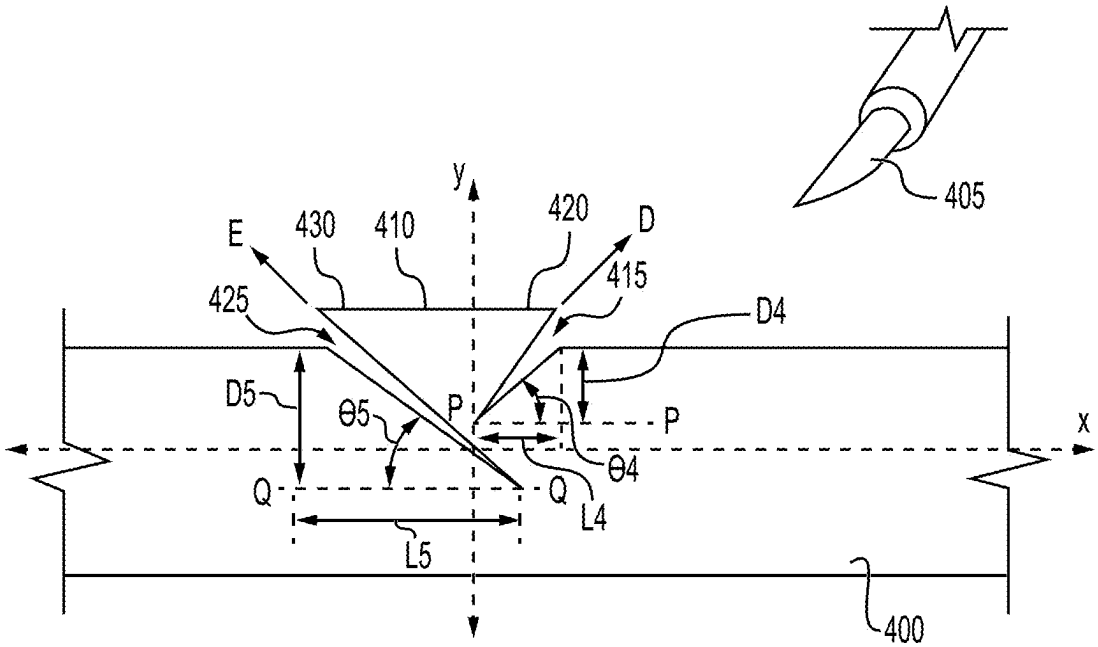
y
E
430
410
420
D
415
425
D4
D5
θ5
P
P
θ4
Q
Q
L4
L5
x
405
400

FIG. 4

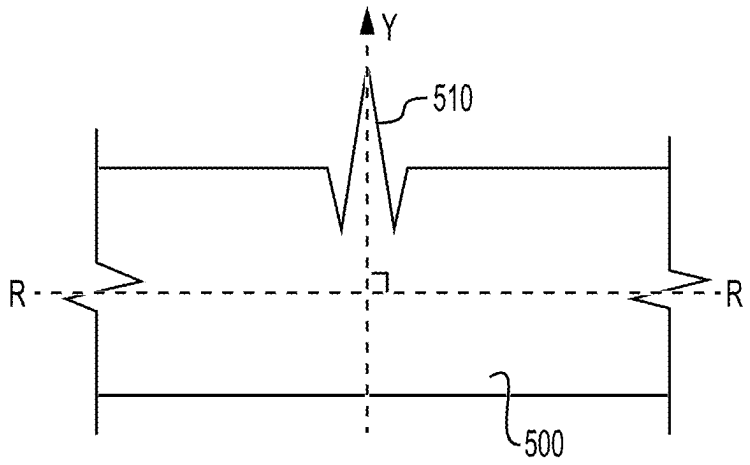

FIG. 5

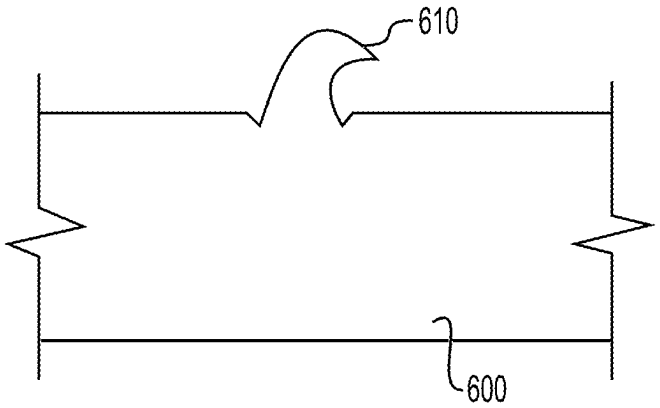

FIG. 6

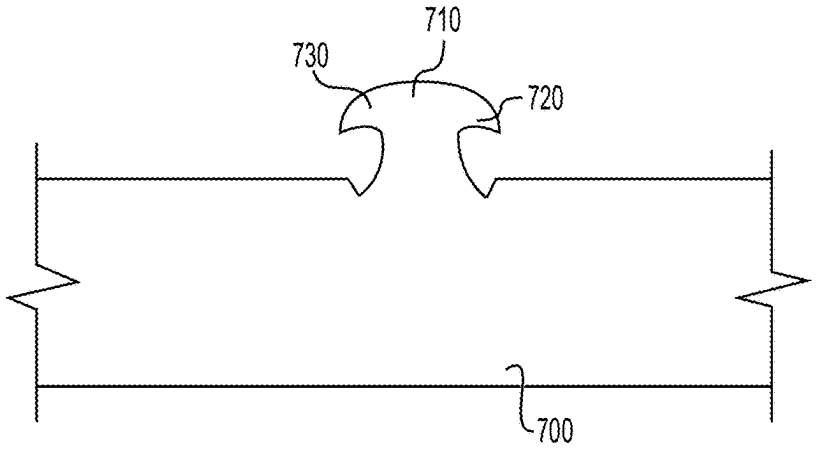

FIG. 7

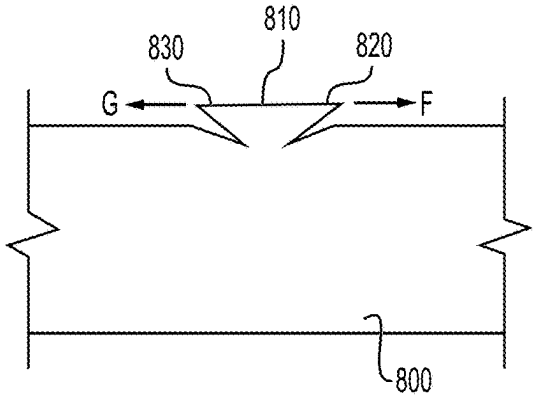

FIG. 8

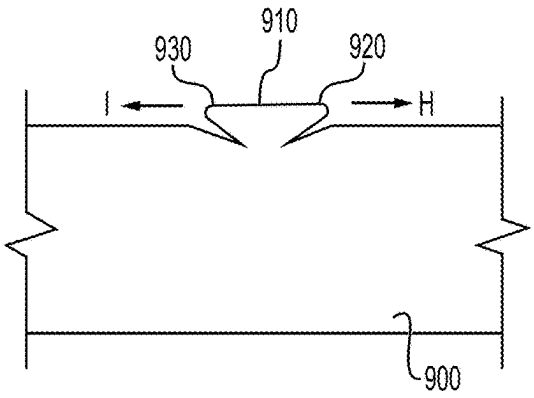

FIG. 9

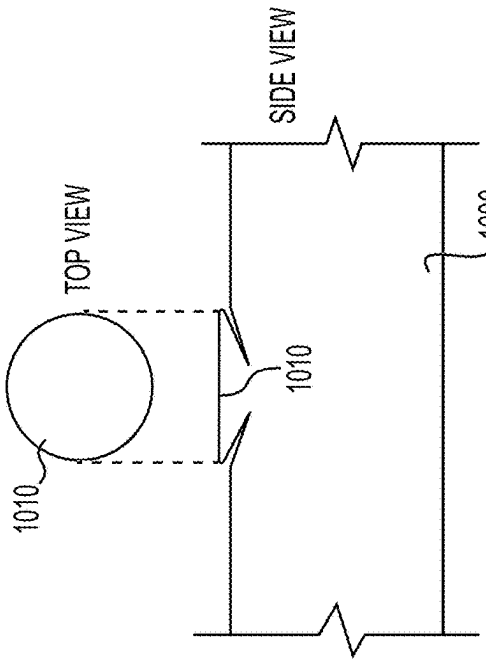

FIG. 10

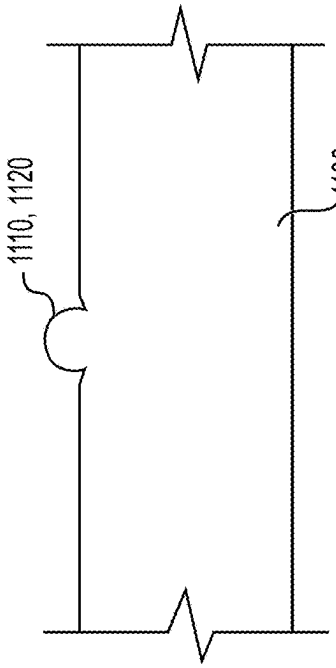

FIG. 11

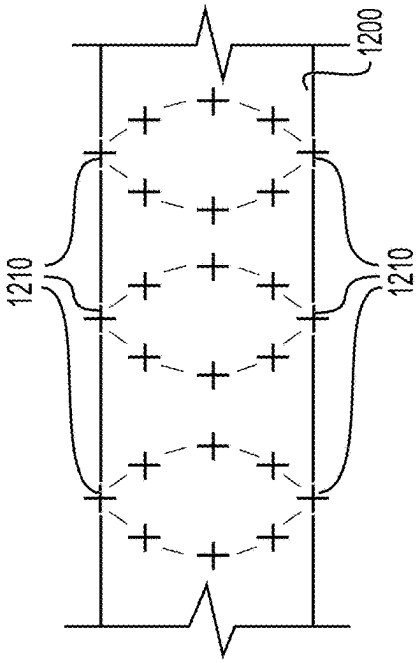

FIG. 12

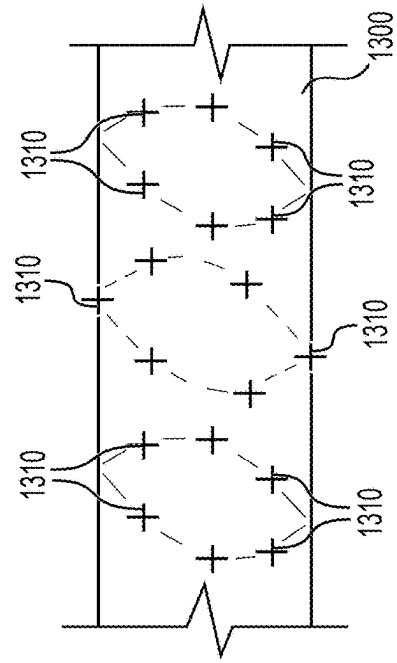

FIG. 13

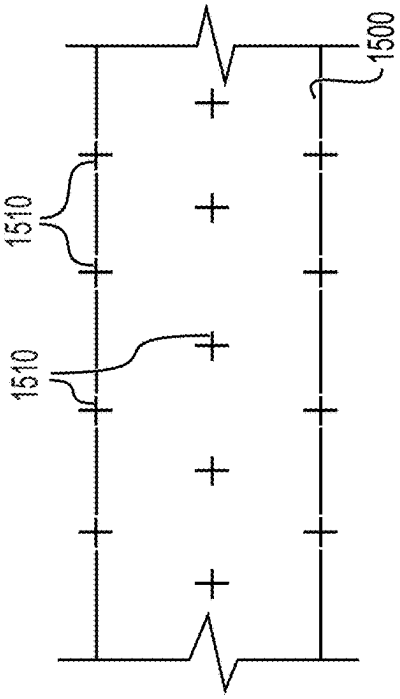

FIG. 15

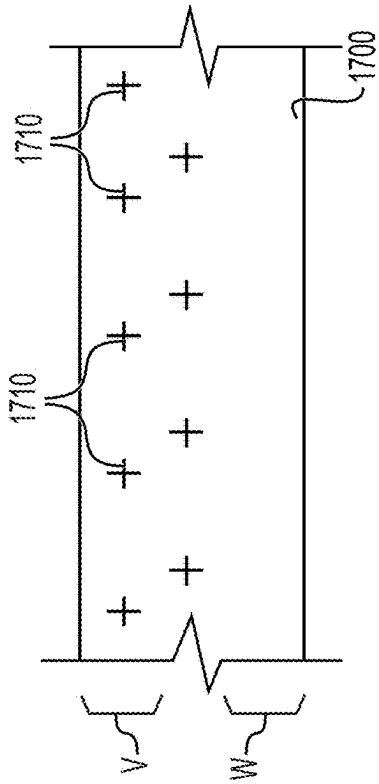

FIG. 17

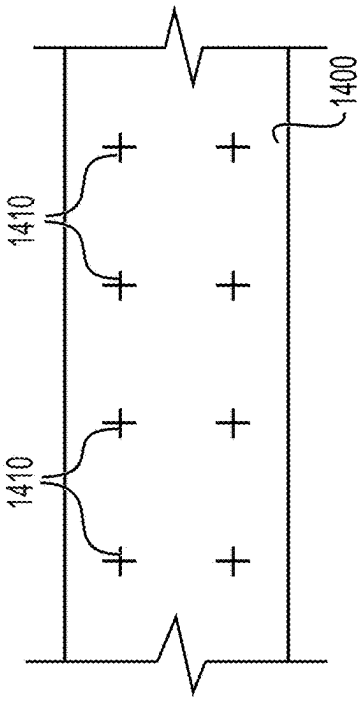

FIG. 14

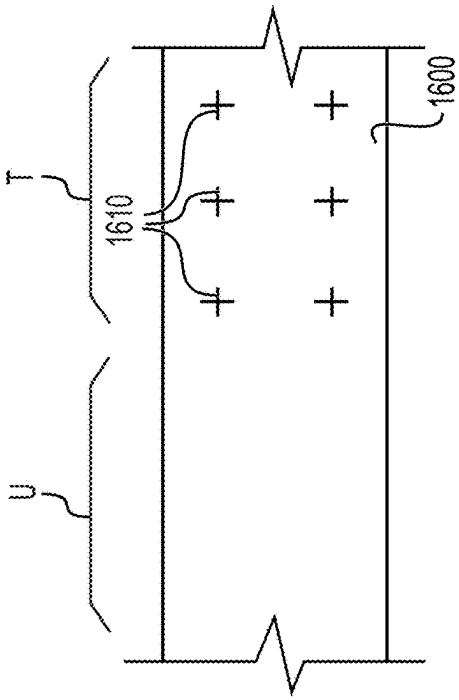

FIG. 16

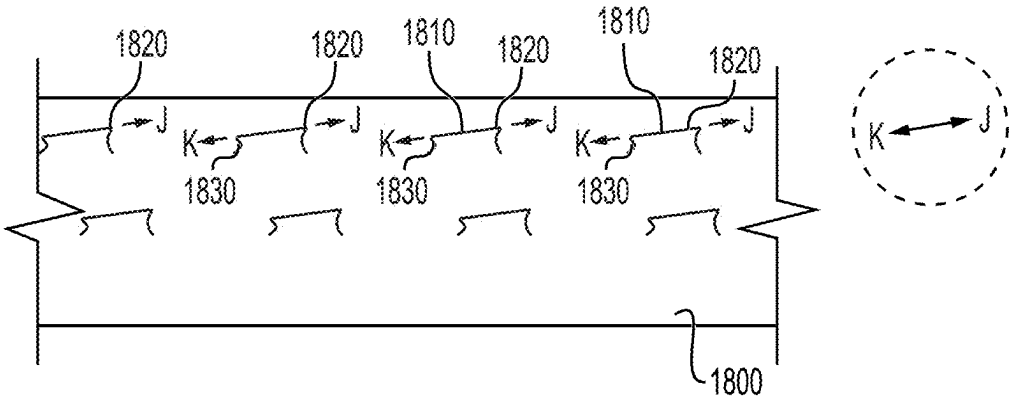
1820
1820
1810
1820
1810
1820
J
K
J
K
J
K
J
1830
1830
1830
K
J
1800

FIG. 18

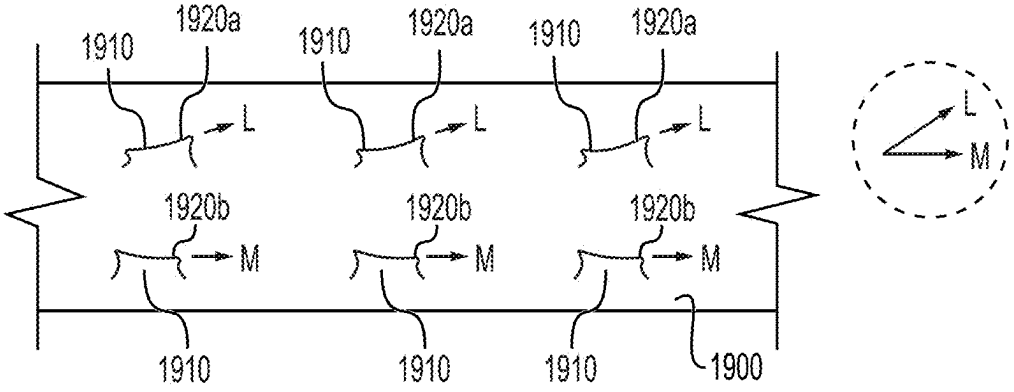
1910
1920a
1910
1920a
1910
1920a
L
L
L
L
M
1920b
1920b
1920b
M
M
M
1910
1910
1910
1900

FIG. 19

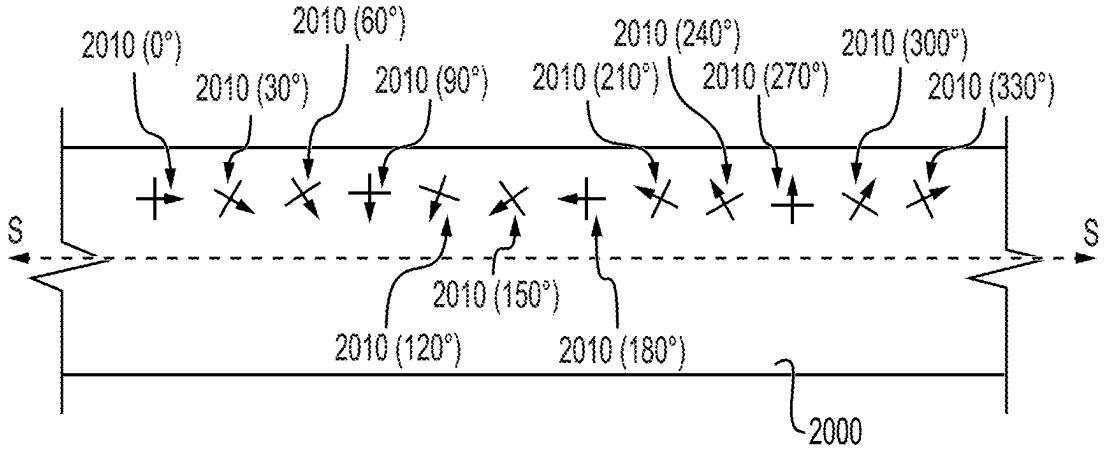
2010 (0°)
2010 (30°)
2010 (60°)
2010 (90°)
2010 (120°)
2010 (150°)
2010 (180°)
2010 (210°)
2010 (240°)
2010 (270°)
2010 (300°)
2010 (330°)
S
S
2000

FIG. 20

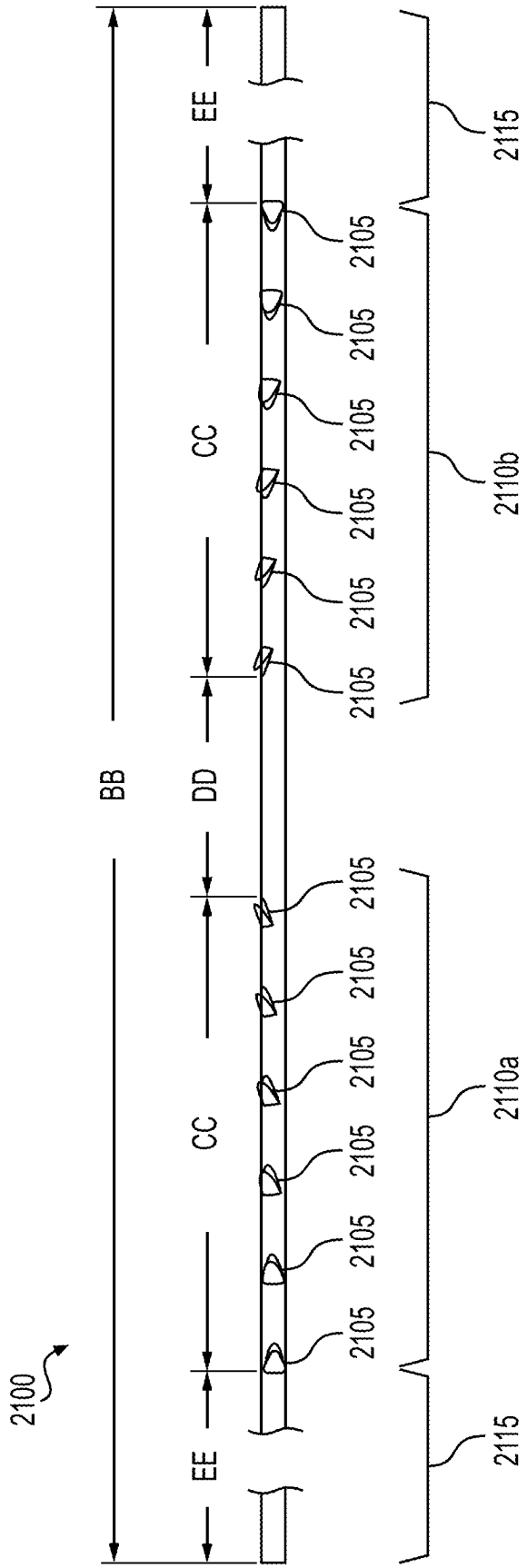
2100
EE
CC
DD
CC
EE
BB
2105
2105
2105
2105
2105
2105
2105
2105
2105
2105
2105
2105
2115
2110b
2110a
2115

FIG. 21

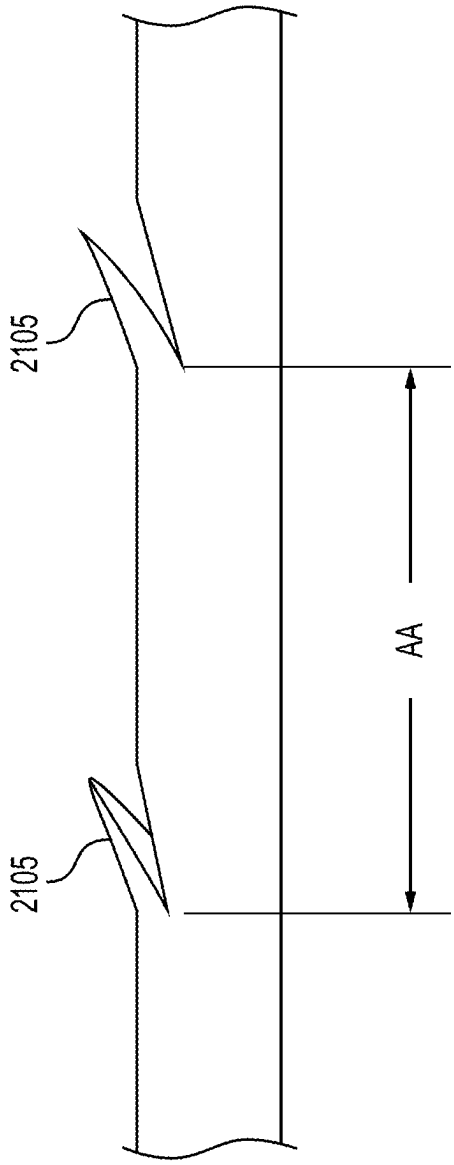

FIG. 22

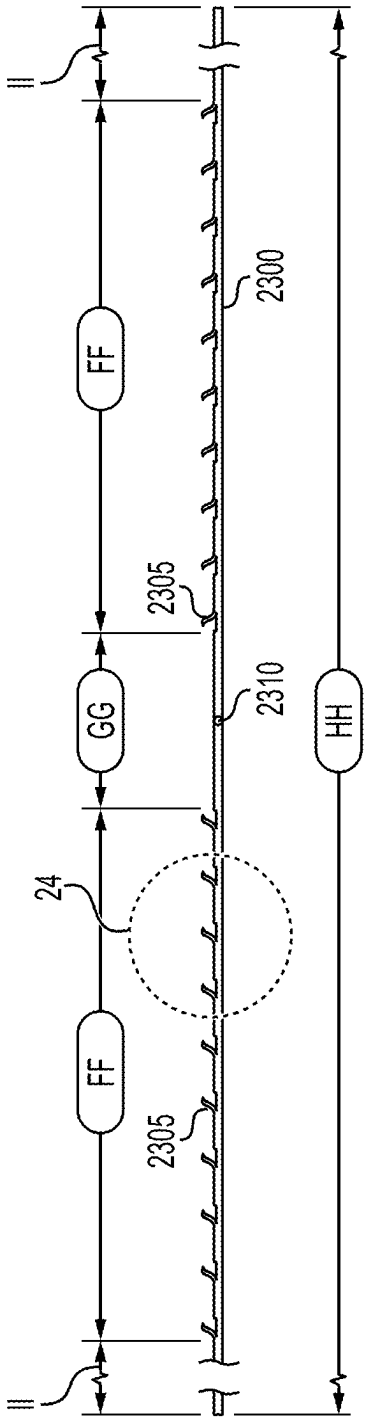
II
FF
2300
2305
GG
2310
HH
24
FF
2305
II

FIG. 23

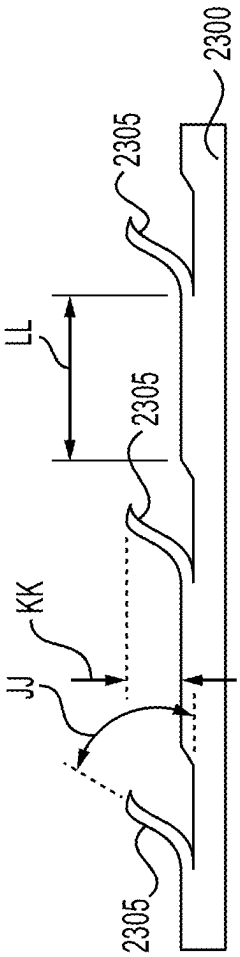
2300
2305
LL
2305
KK
JJ
2305

FIG. 24

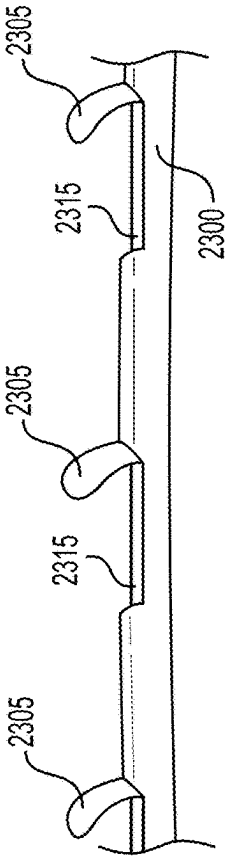

FIG. 25

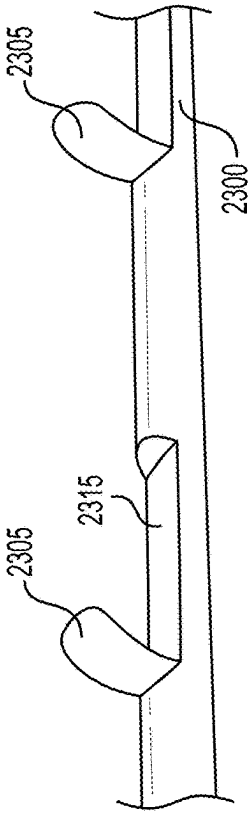

FIG. 26

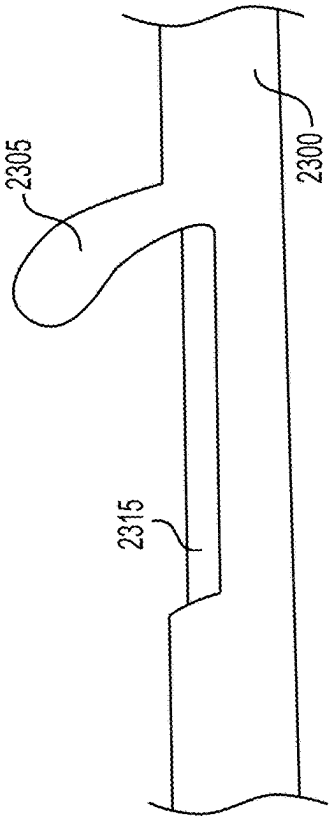

FIG. 27

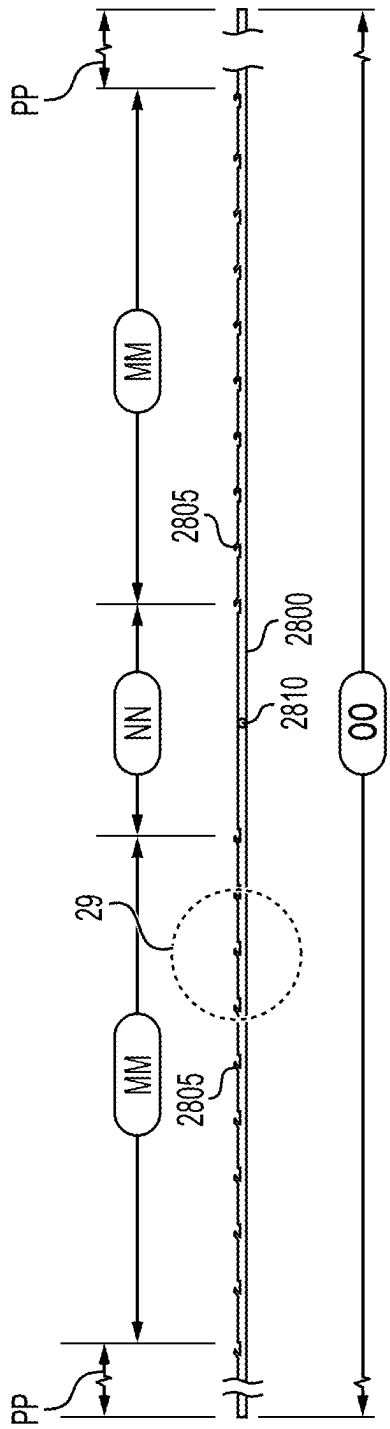

FIG. 28

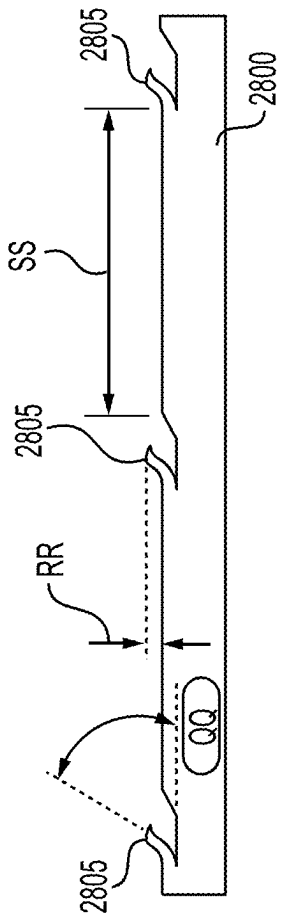

FIG. 29A

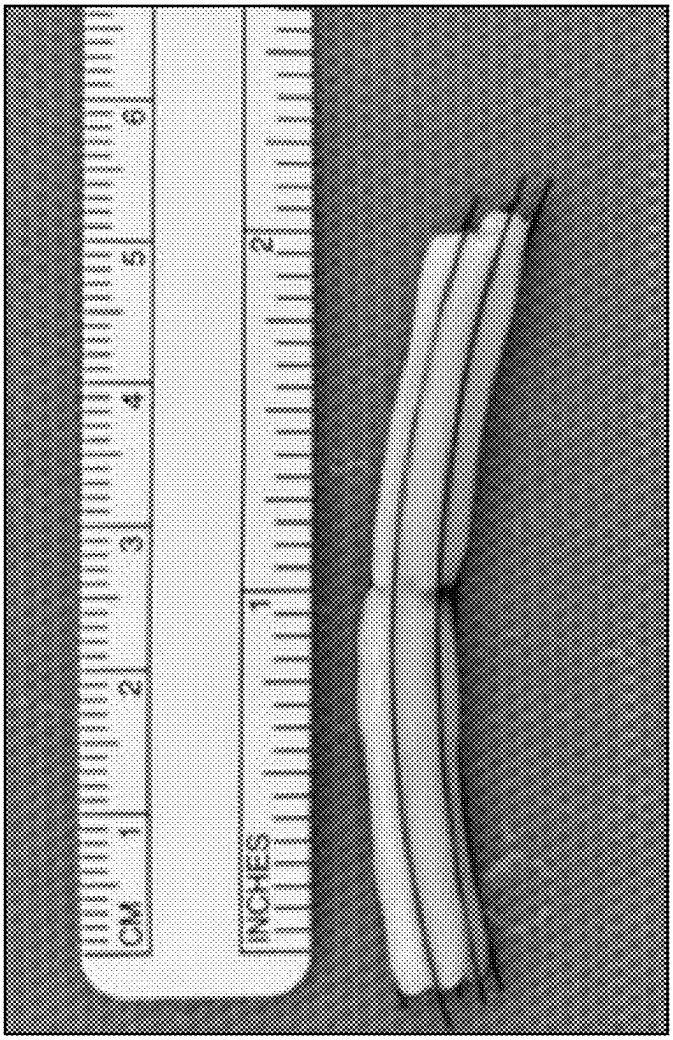

FIG. 29B

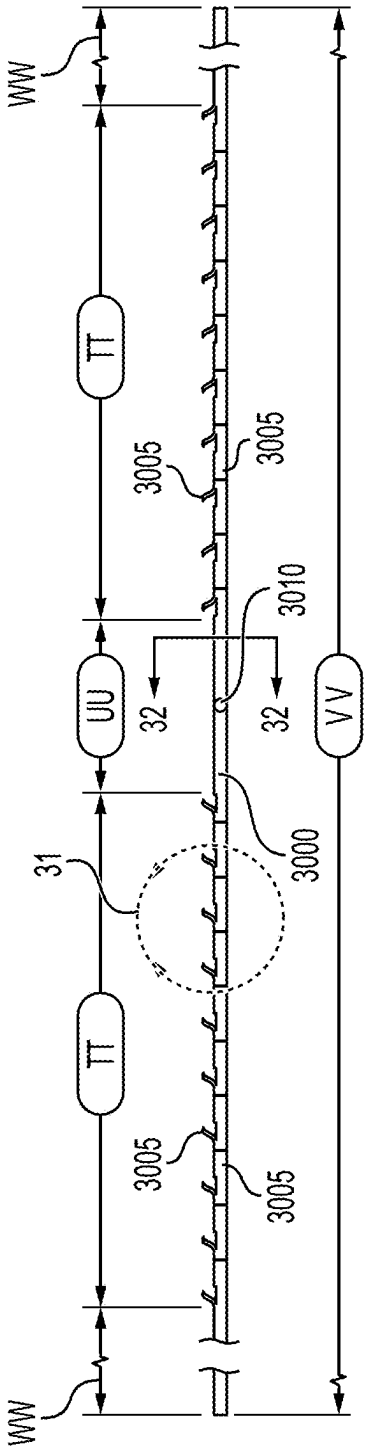

FIG. 30

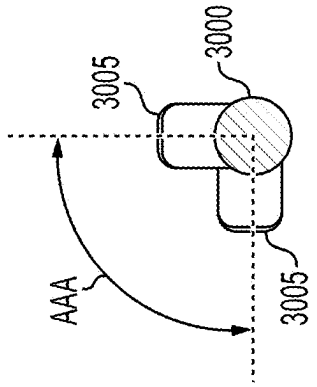

FIG. 32

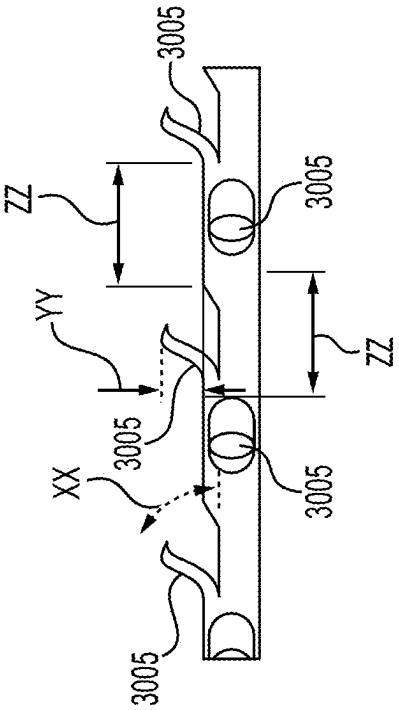

FIG. 31

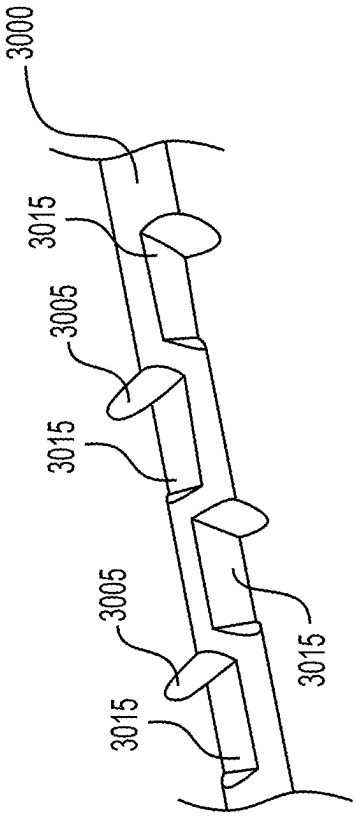

FIG. 33

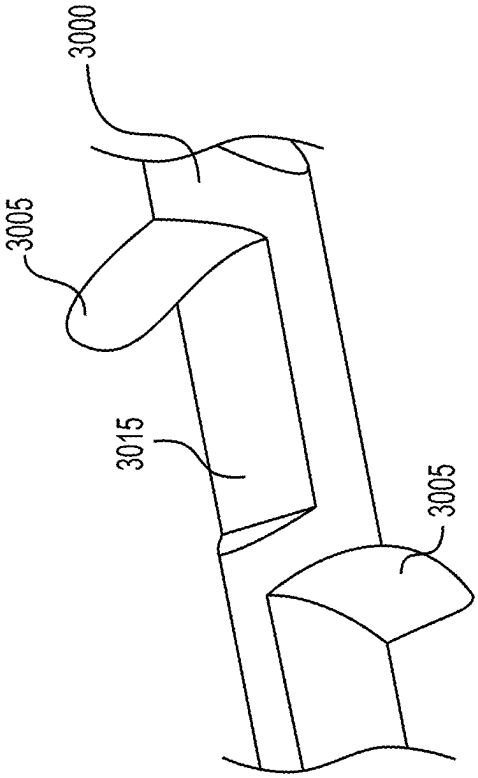

FIG. 34

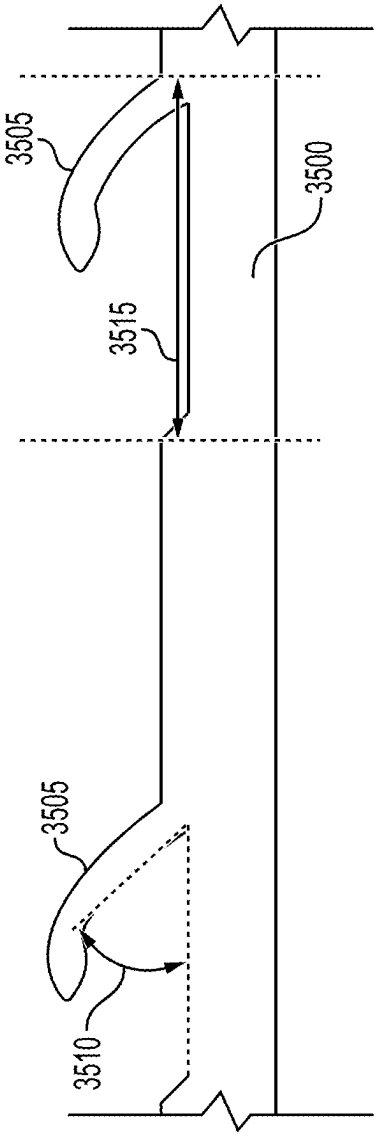

FIG. 35

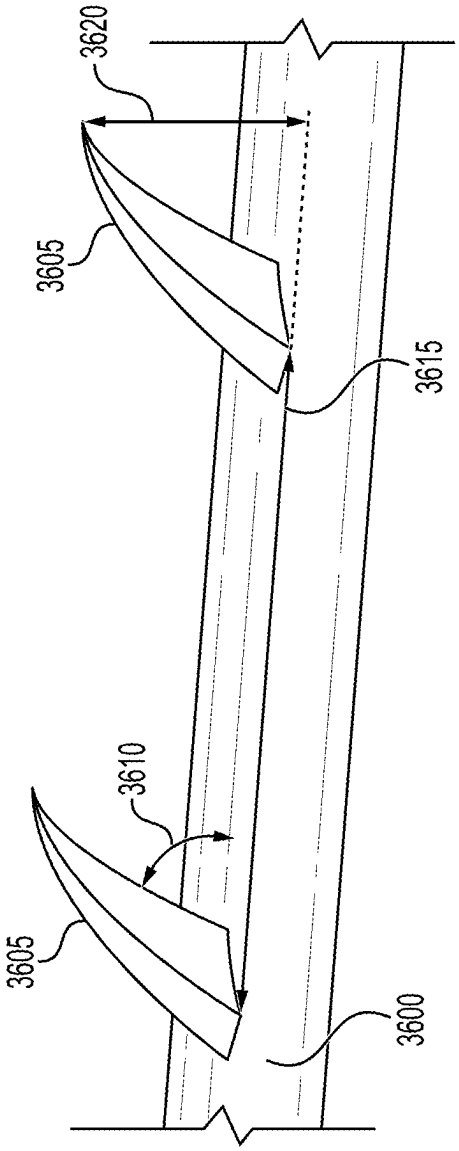

FIG. 36

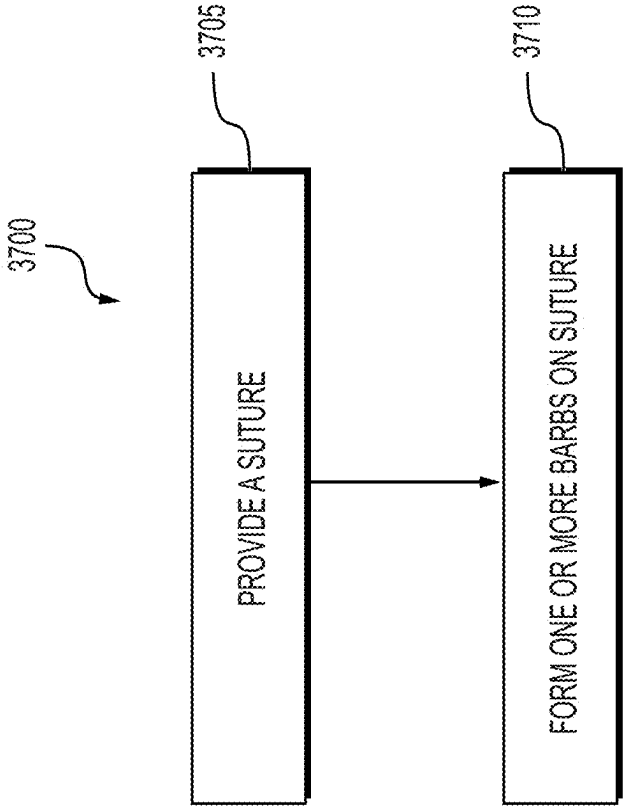
3700
3705
PROVIDE A SUTURE
3710
FORM ONE OR MORE BARBS ON SUTURE

FIG. 37

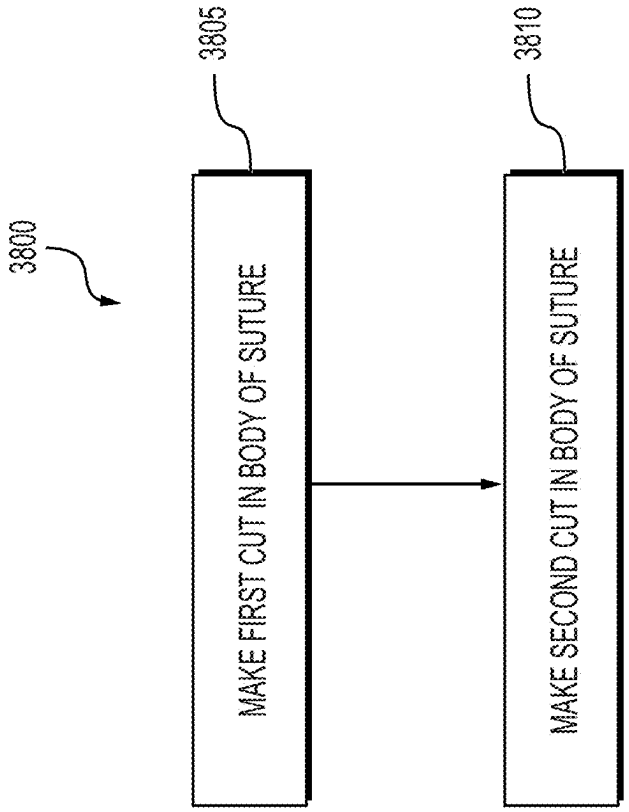
3800
3805
MAKE FIRST CUT IN BODY OF SUTURE
3810
MAKE SECOND CUT IN BODY OF SUTURE

FIG. 38

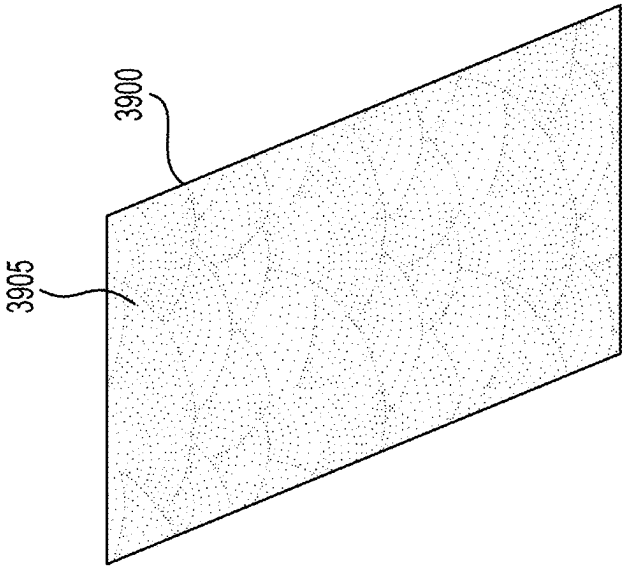

FIG. 39

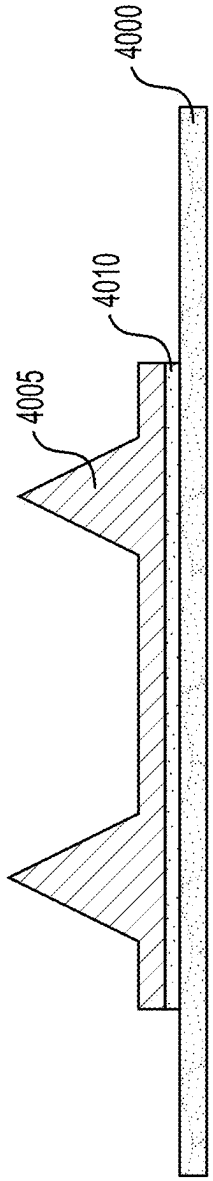

FIG. 40

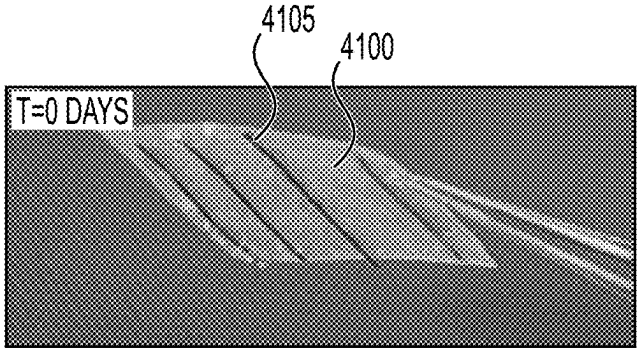

FIG. 41

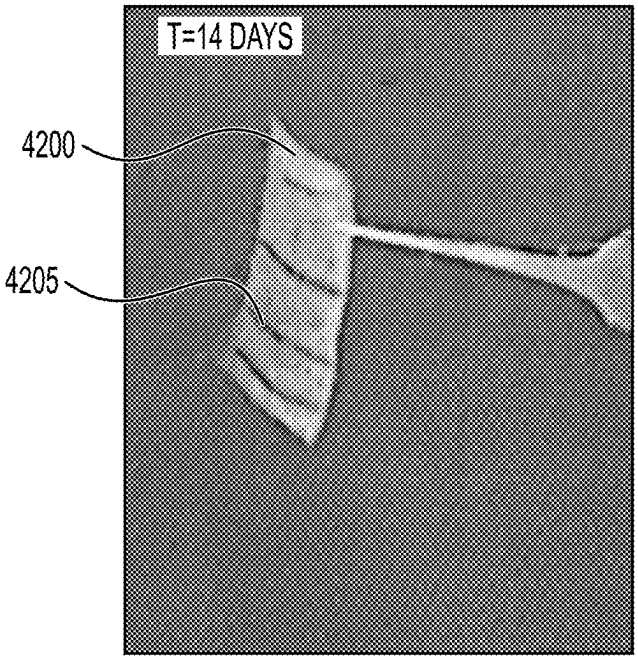

FIG. 42

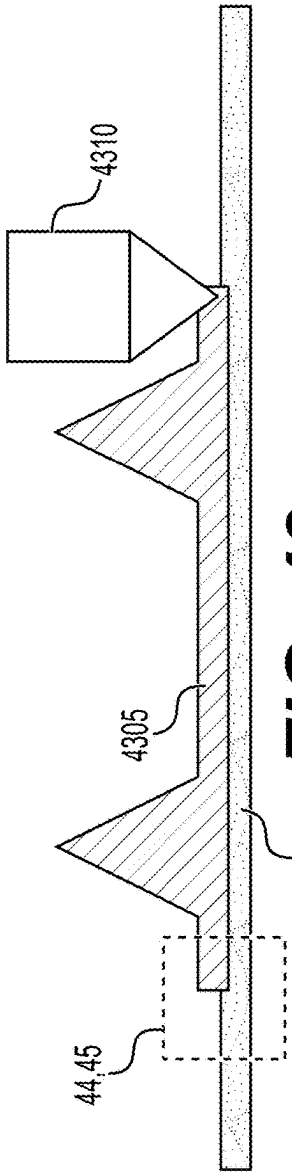

FIG. 43

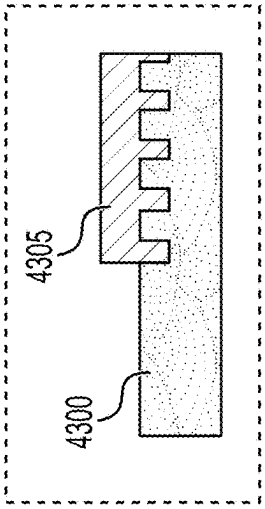

FIG. 44

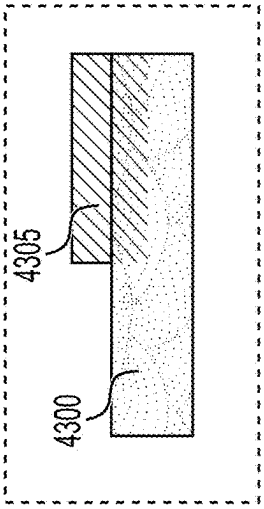

FIG. 45

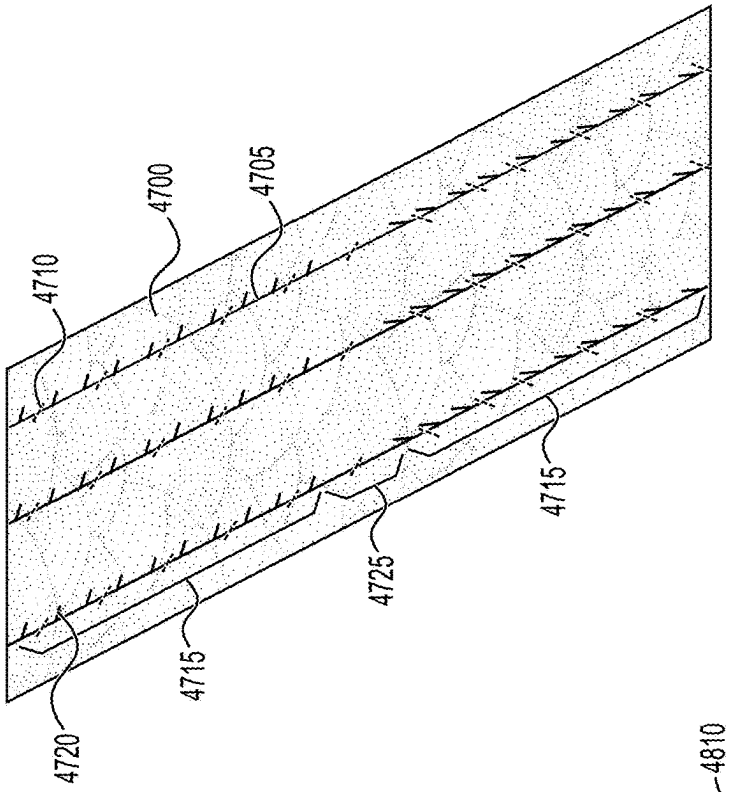

FIG. 47

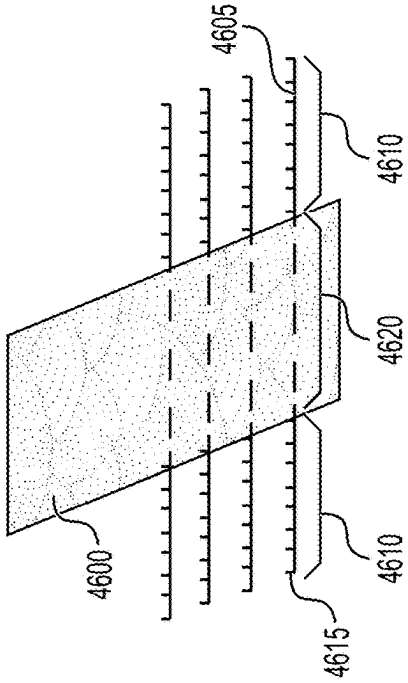

FIG. 46

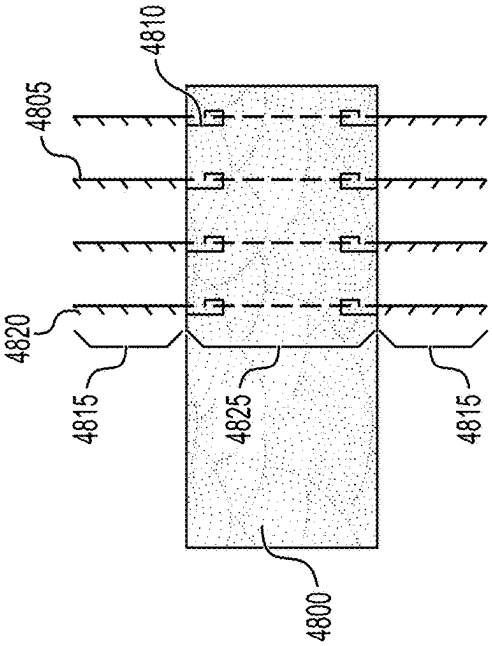

FIG. 48

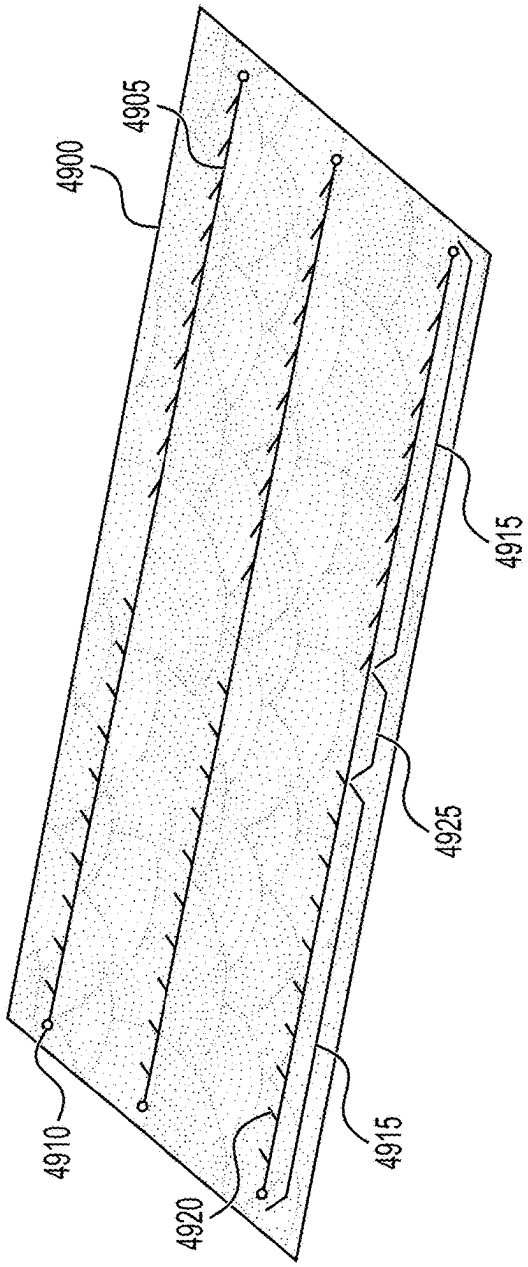

FIG. 49

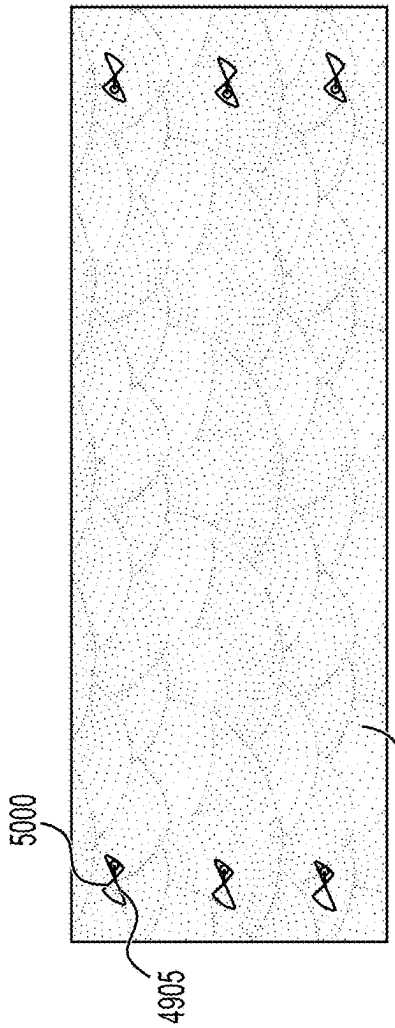

FIG. 50

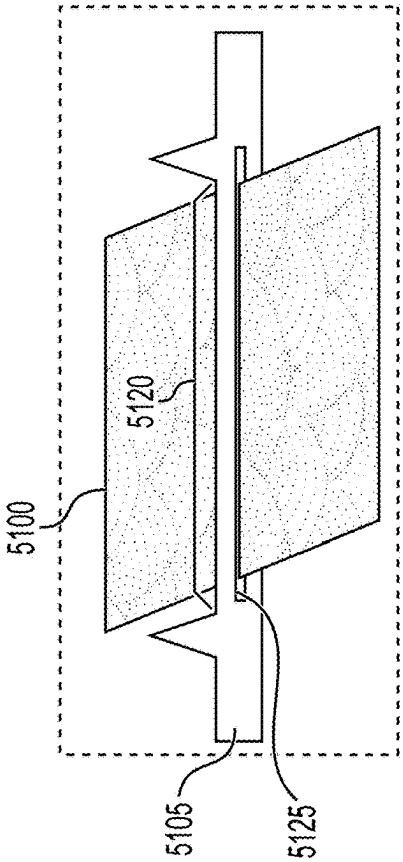

FIG. 52

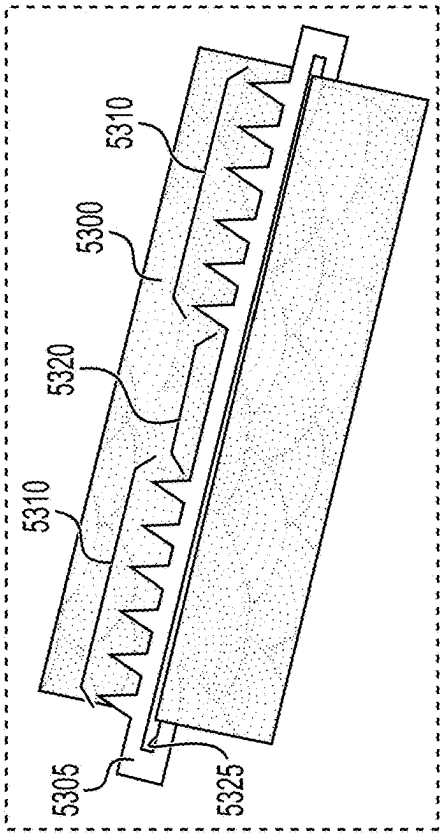

FIG. 54

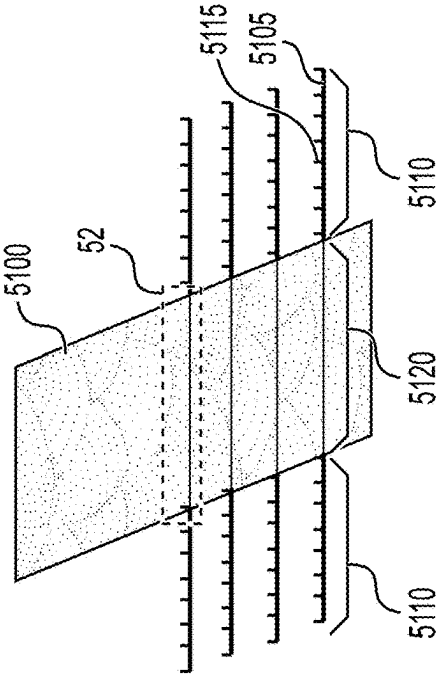

FIG. 51

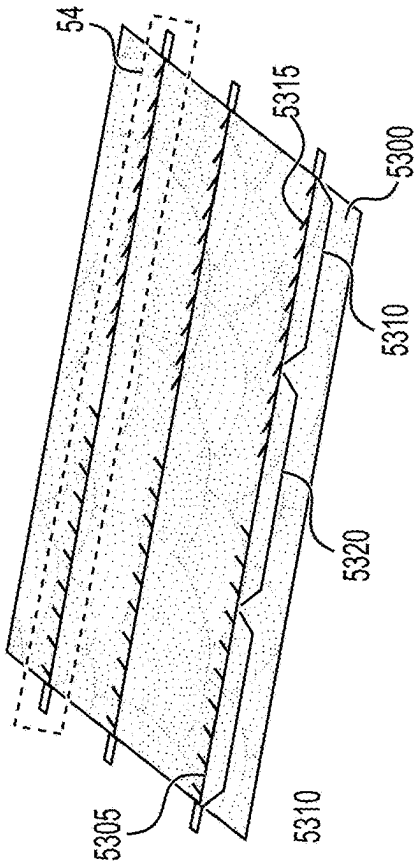

FIG. 53

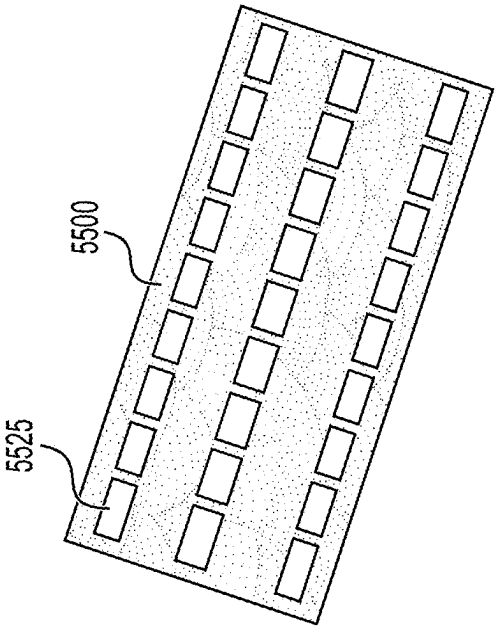

FIG. 56

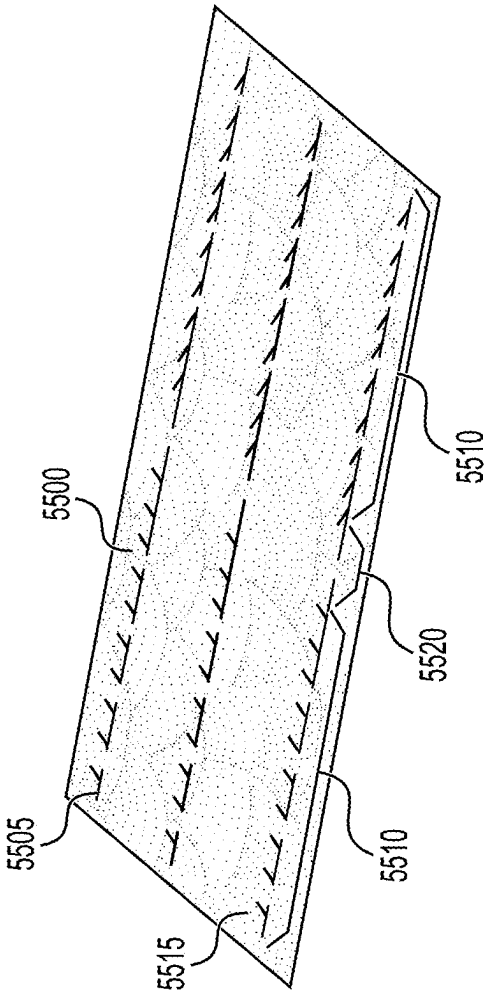

FIG. 55

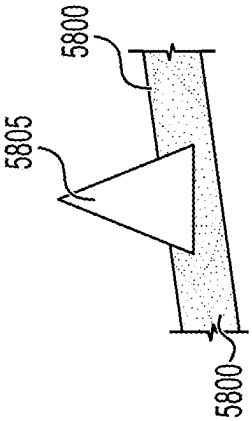

FIG. 58A

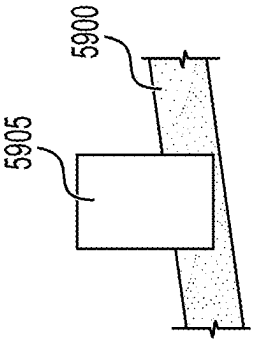

FIG. 59

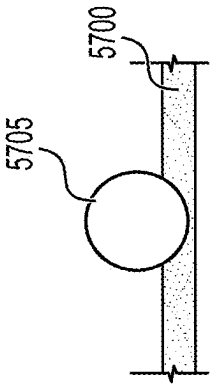

FIG. 57

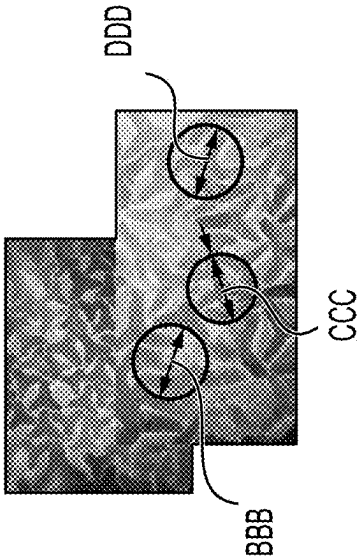

FIG. 58B

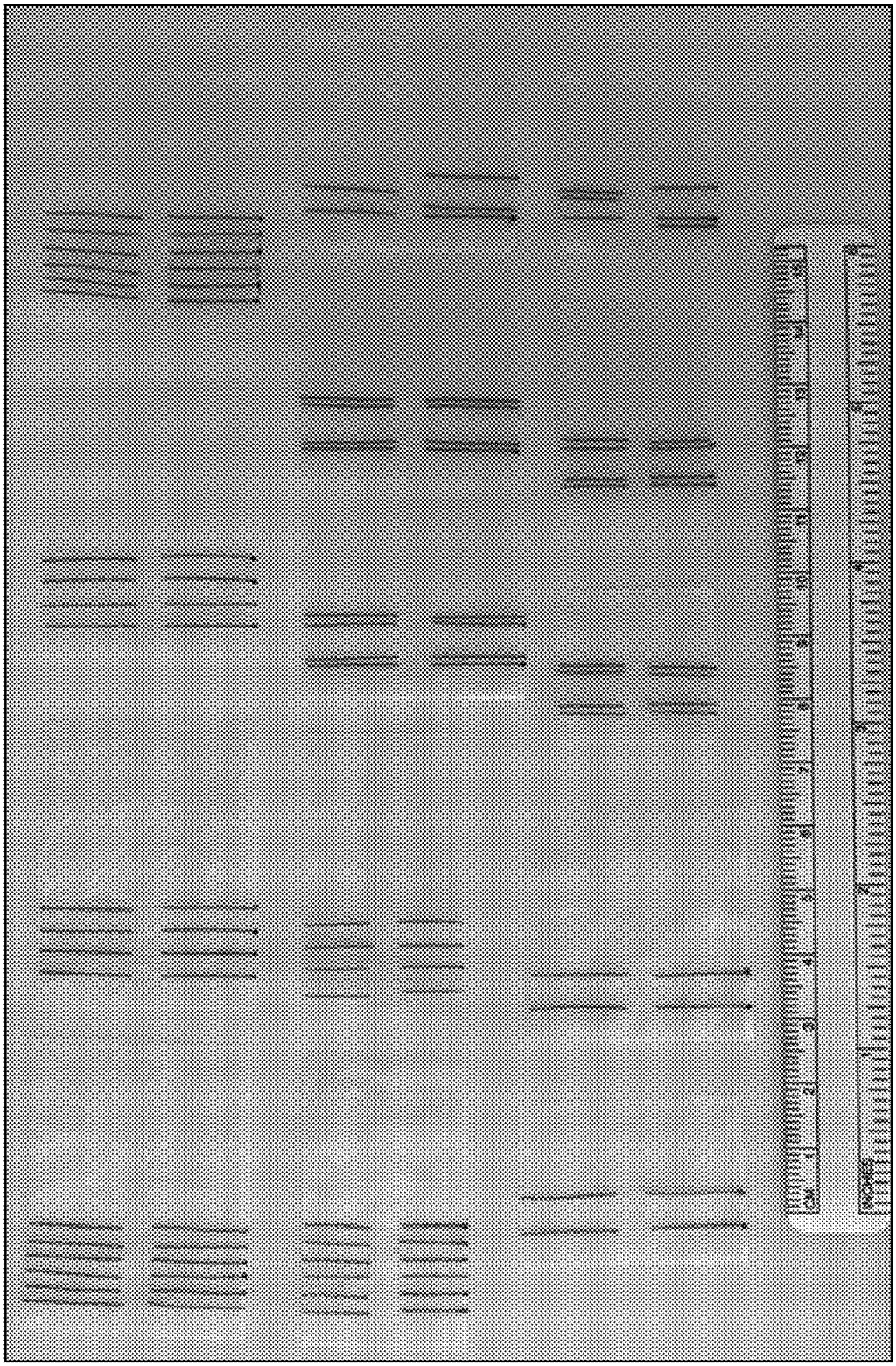

FIG. 60

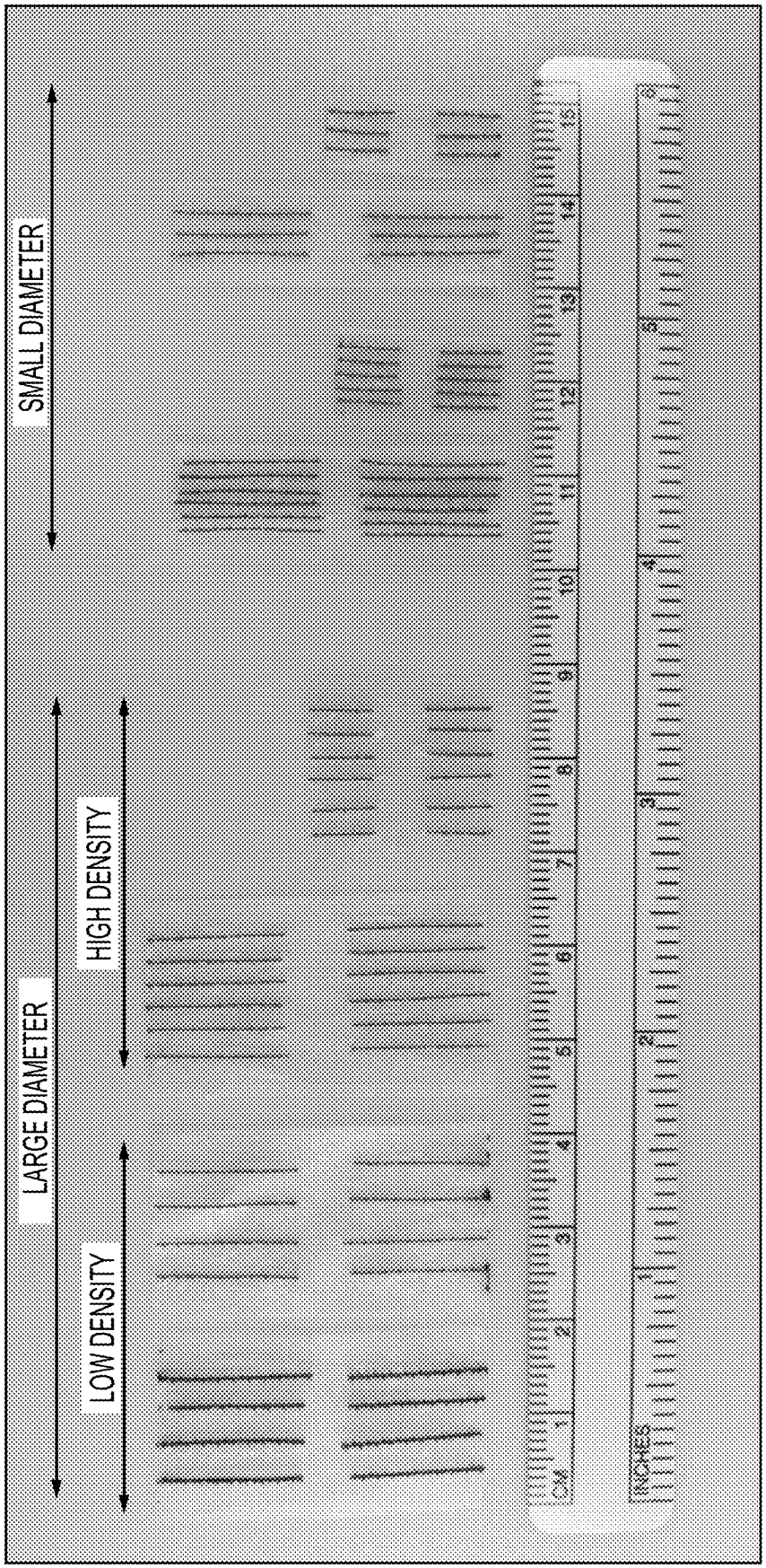
SMALL DIAMETER
LARGE DIAMETER
HIGH DENSITY
LOW DENSITY
CM
INCHES

FIG. 61A

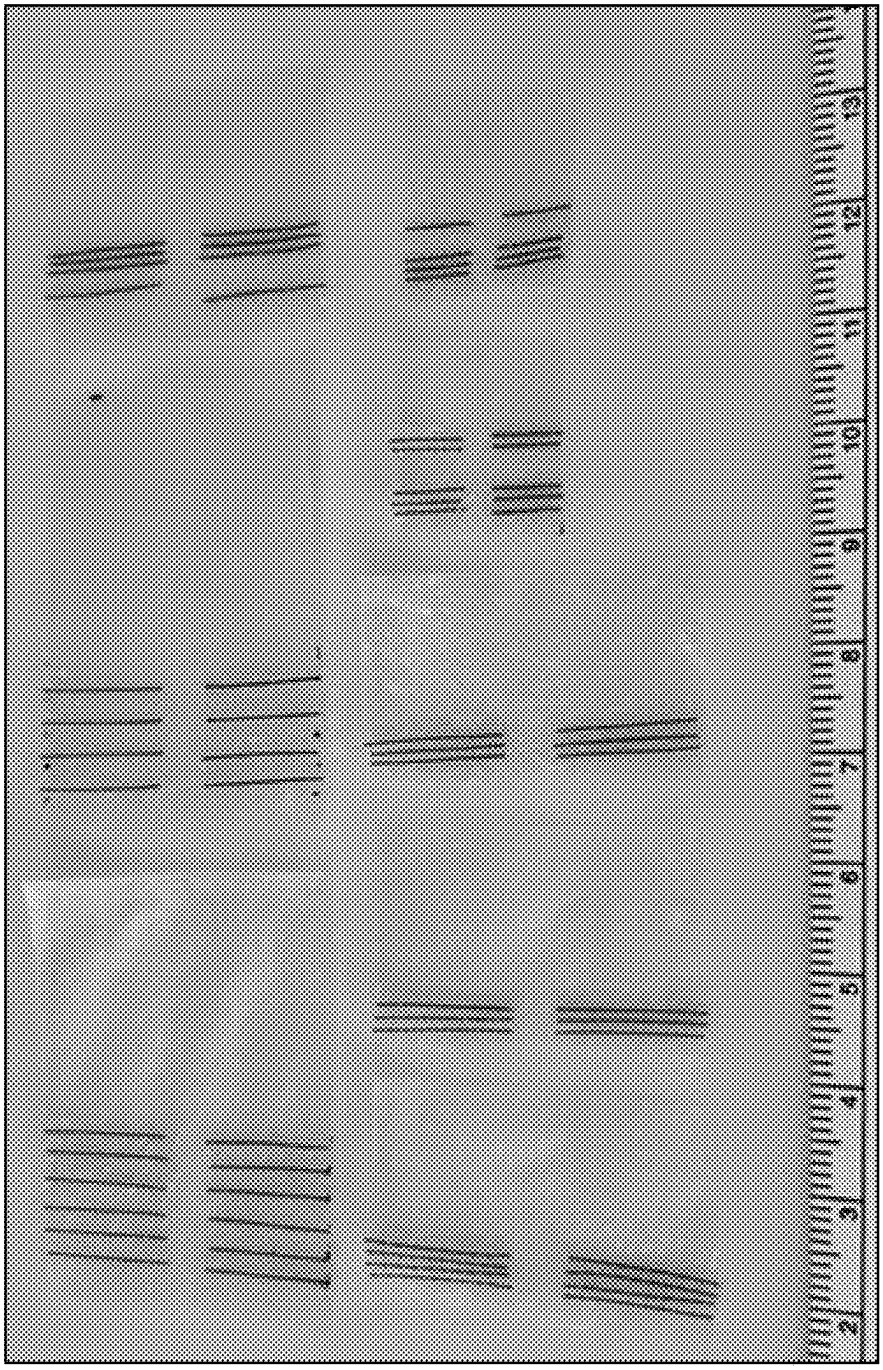

FIG. 61B

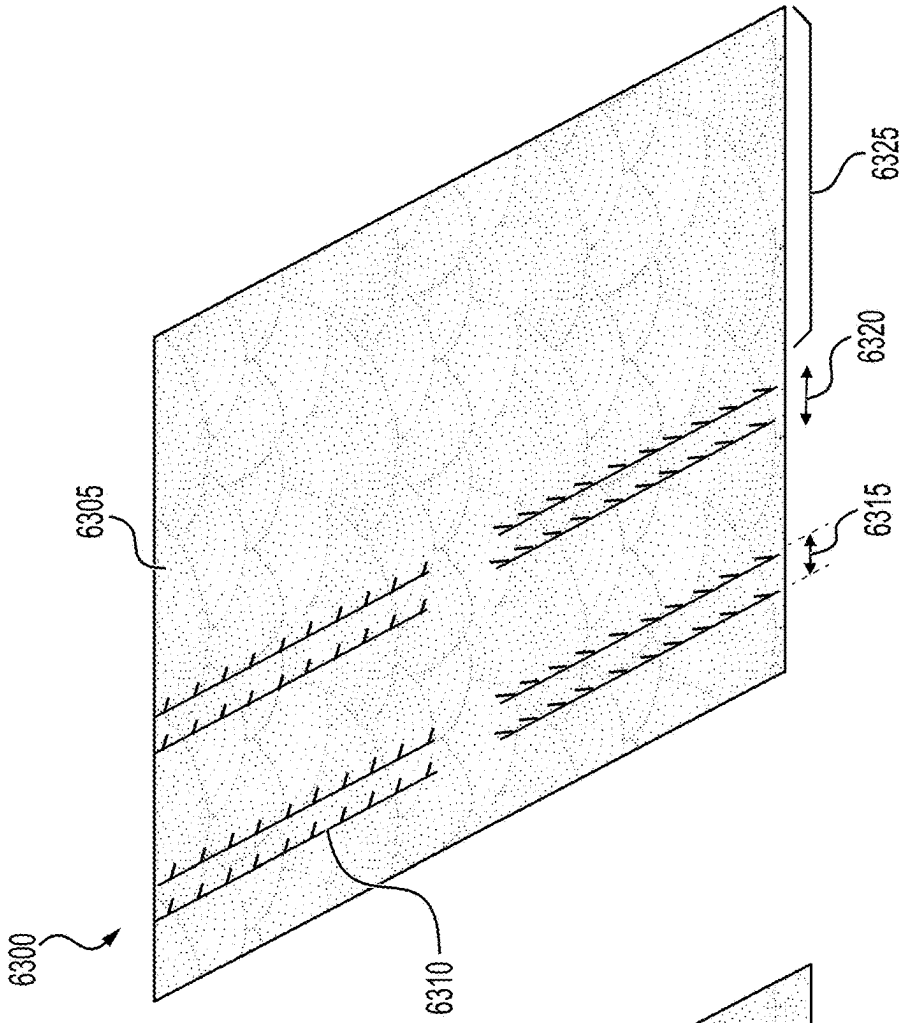

FIG. 63

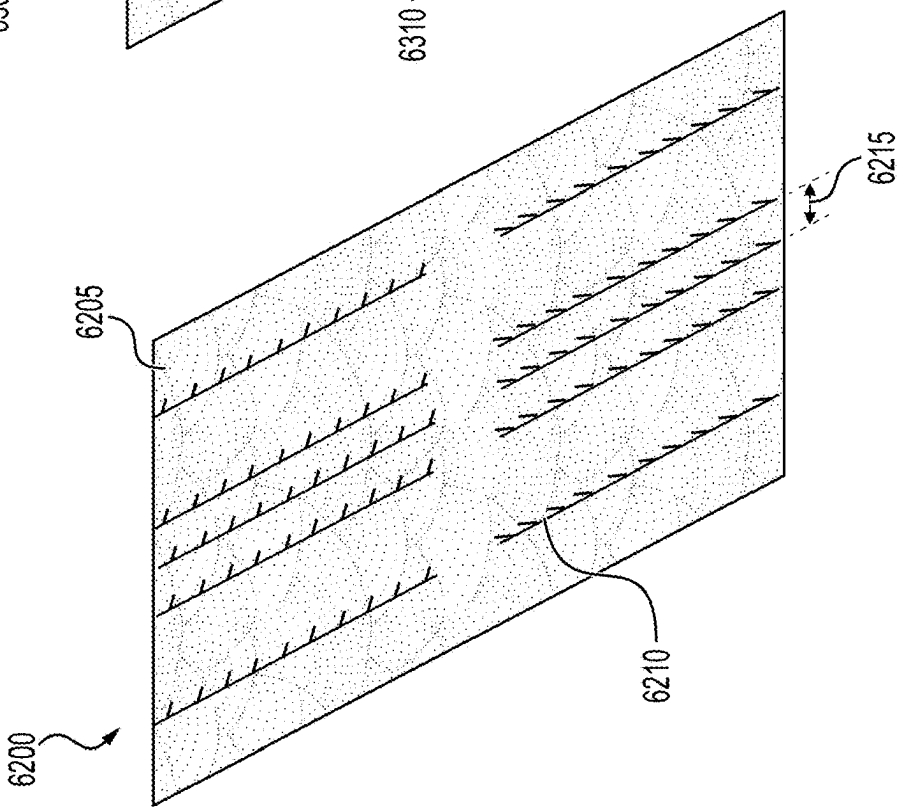

FIG. 62

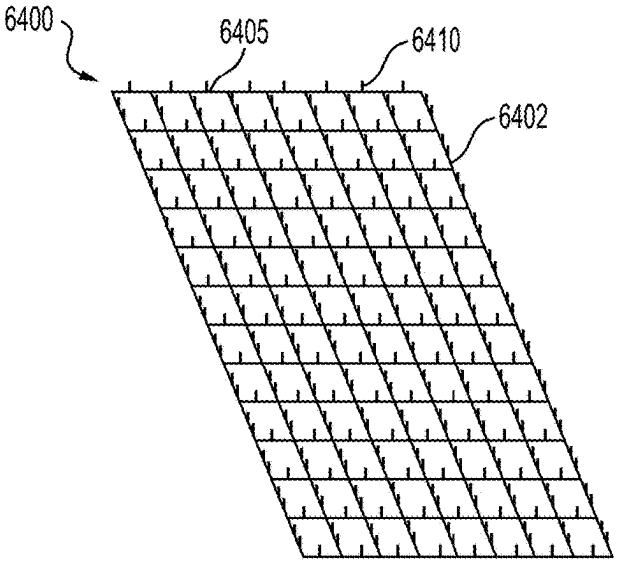

FIG. 64A

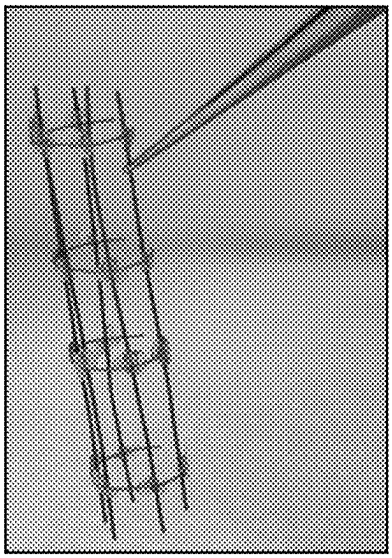

FIG. 64B

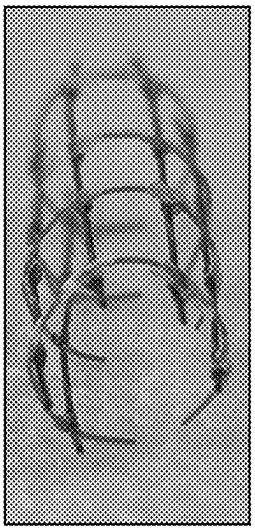

FIG. 64C

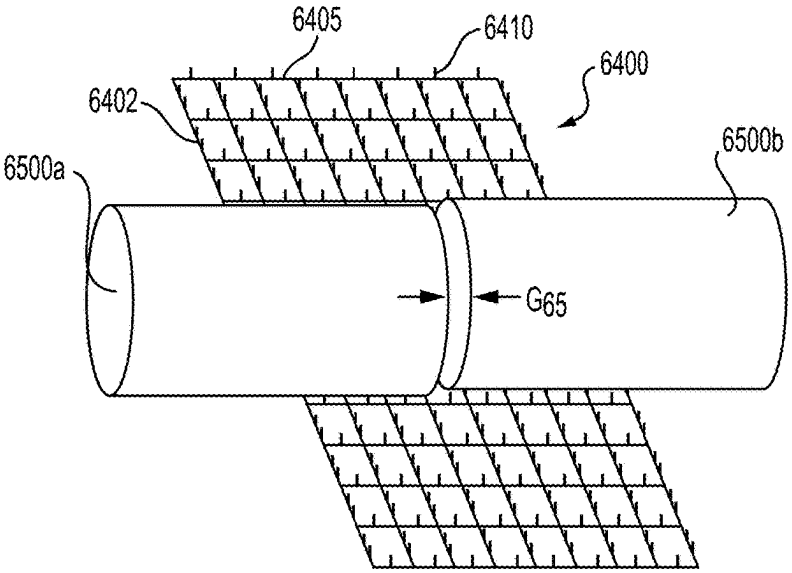

FIG. 65

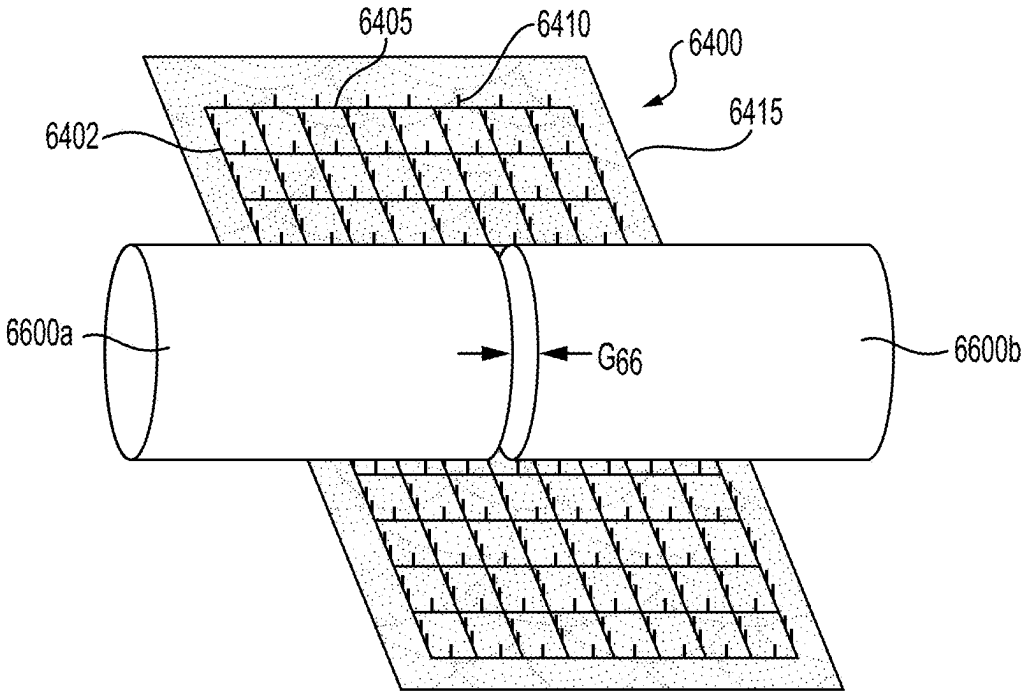
6405
6410
6400
6402
6415
6600a
G66
6600b

FIG. 66

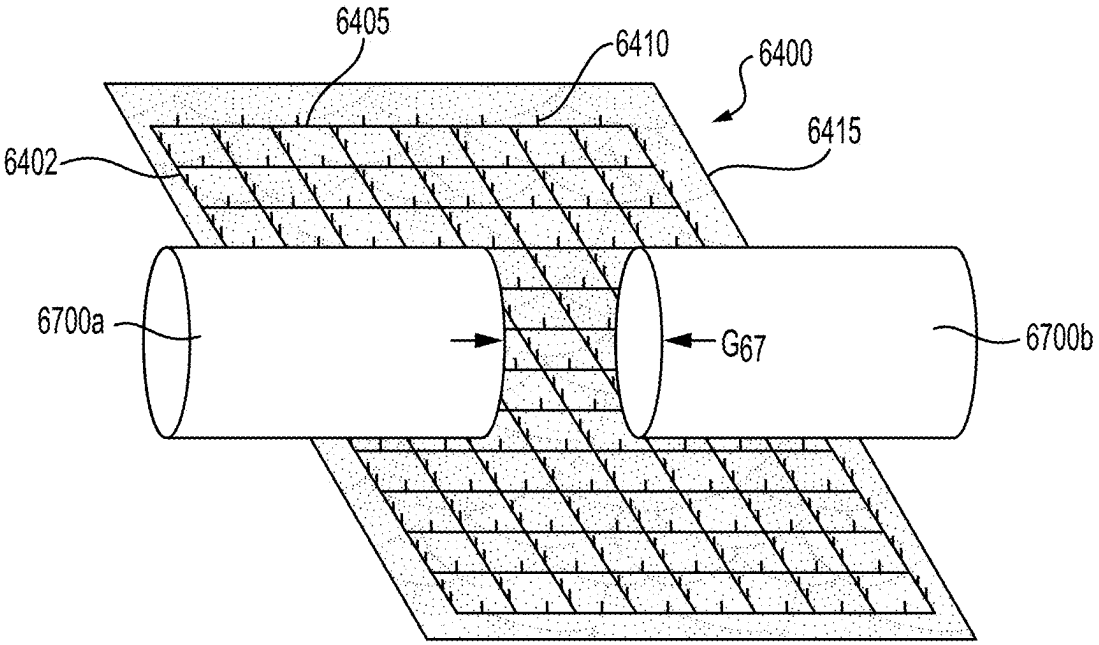
6405
6410
6400
6402
6415
6700a
G67
6700b

FIG. 67

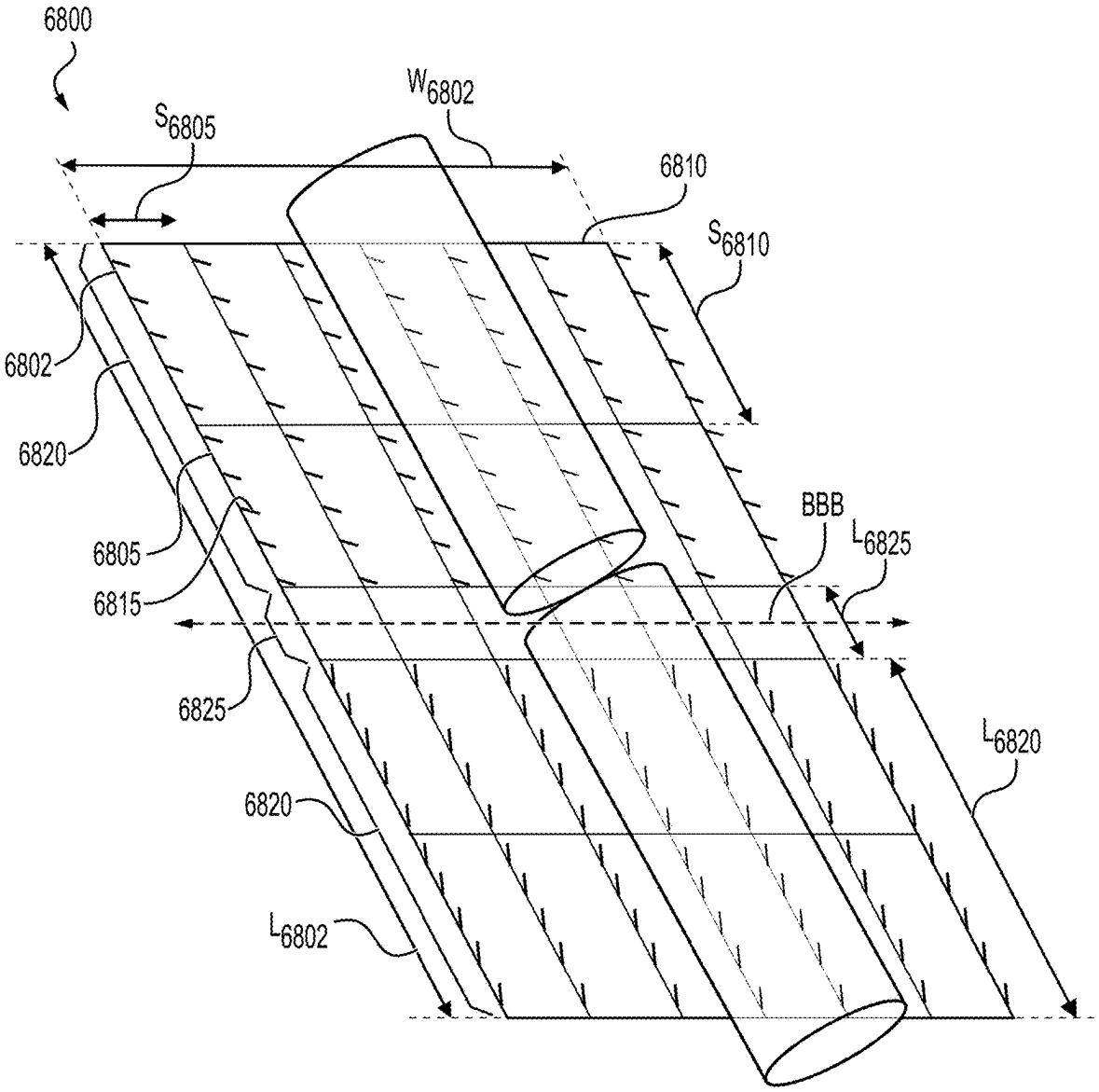
6800
W_{6802}
S_{6805}
6810
S_{6810}
6802
6820
6805
6815
BBB
L_{6825}
6825
L_{6820}
6820
L_{6802}

FIG. 68

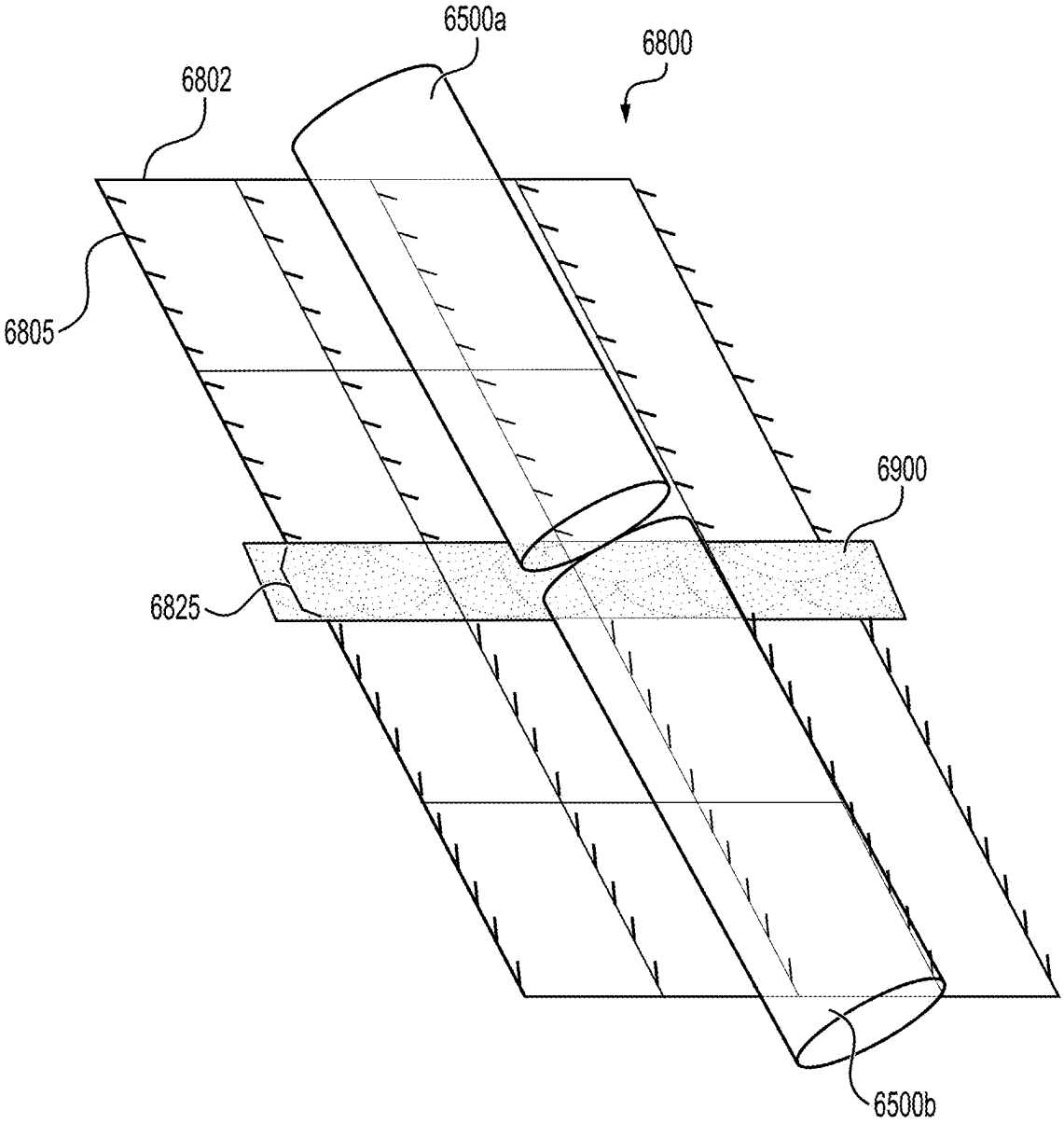

FIG. 69

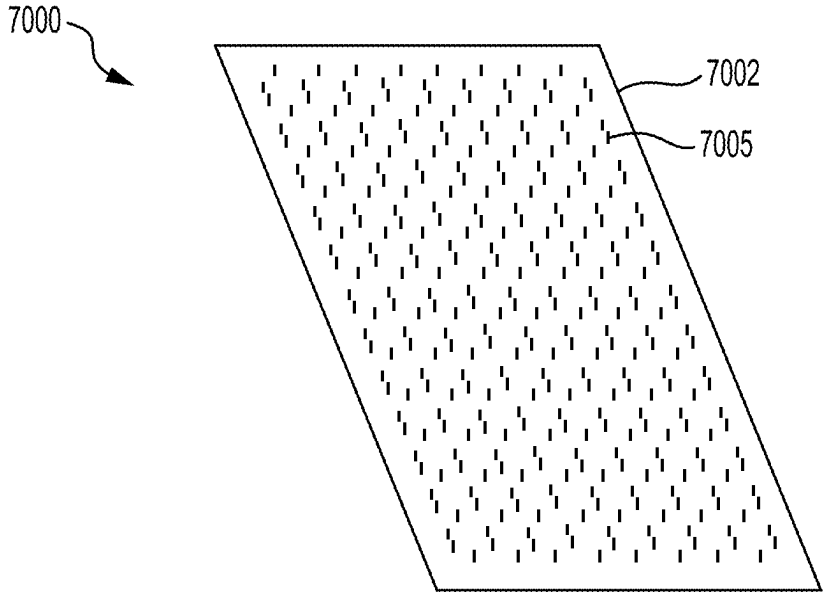

FIG. 70

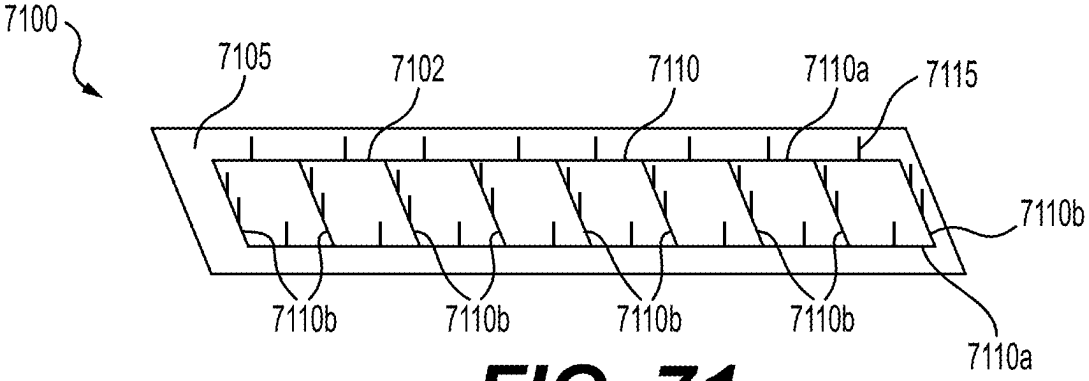

FIG. 71

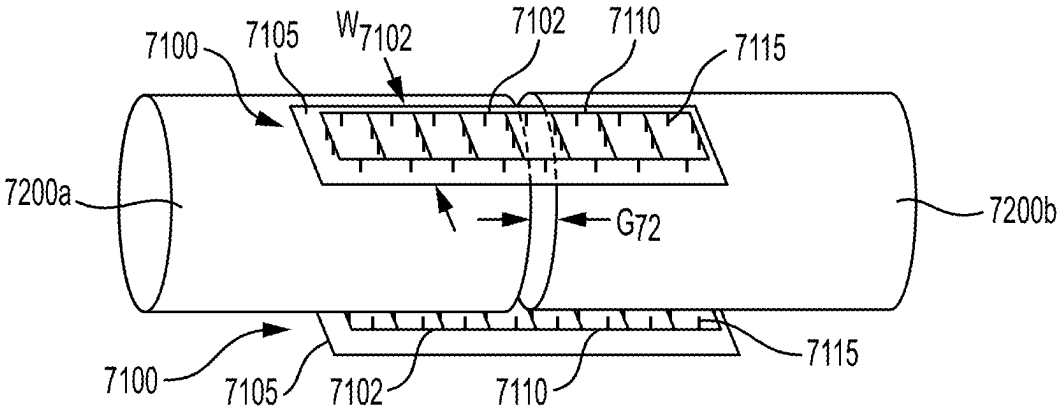

FIG. 72

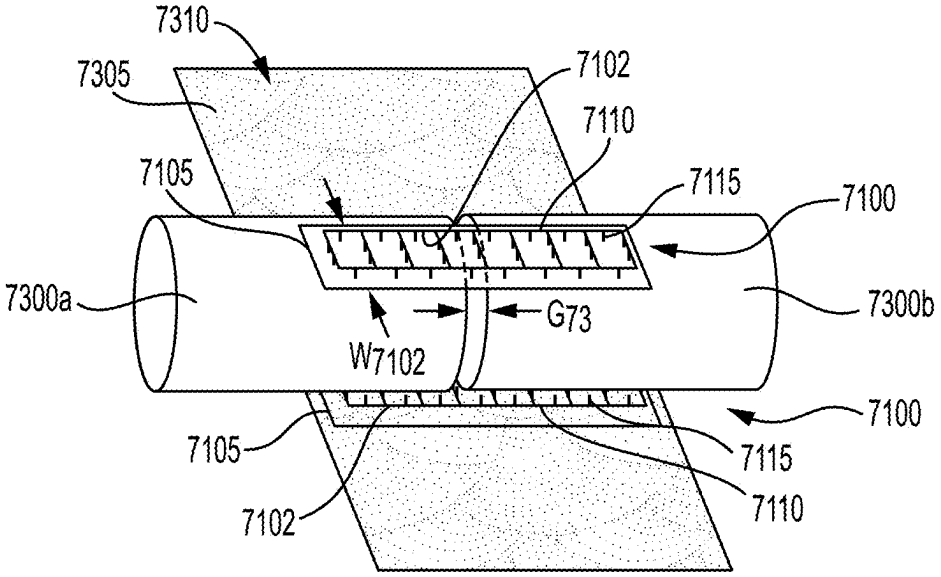

FIG. 73

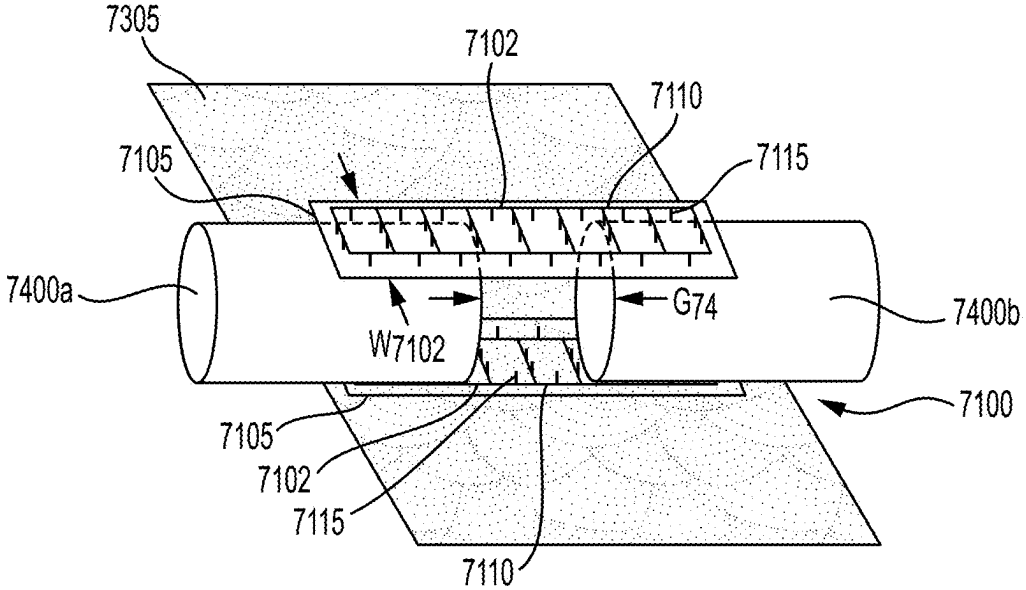

FIG. 74

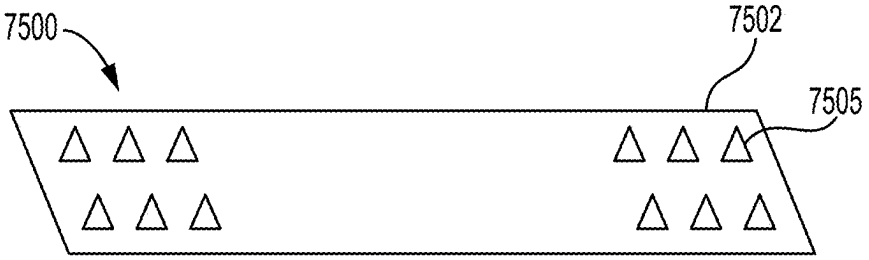

FIG. 75

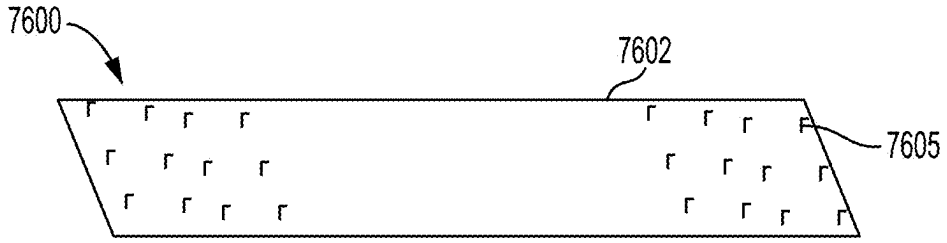

FIG. 76

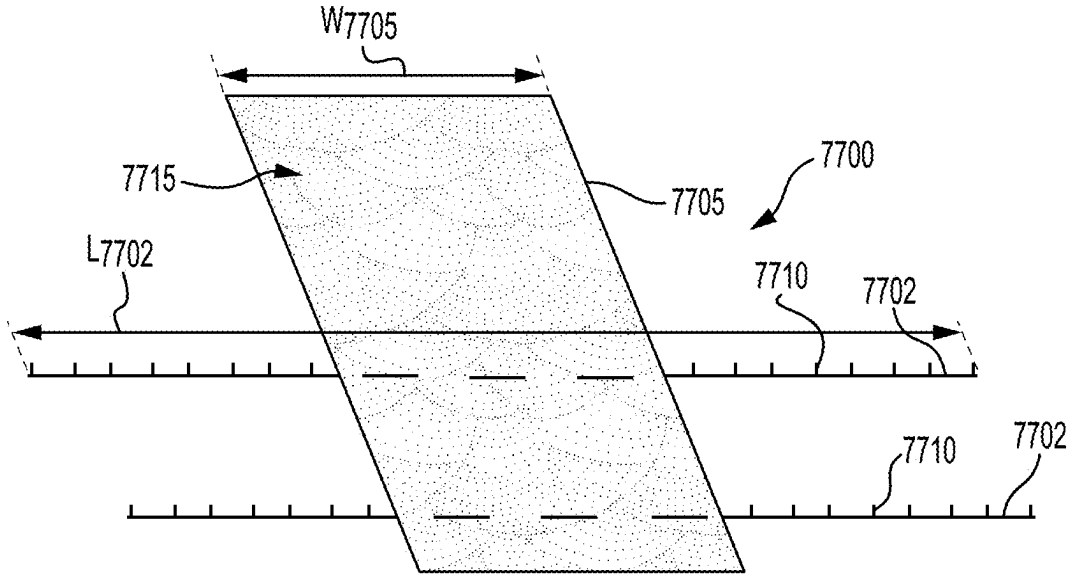

FIG. 77

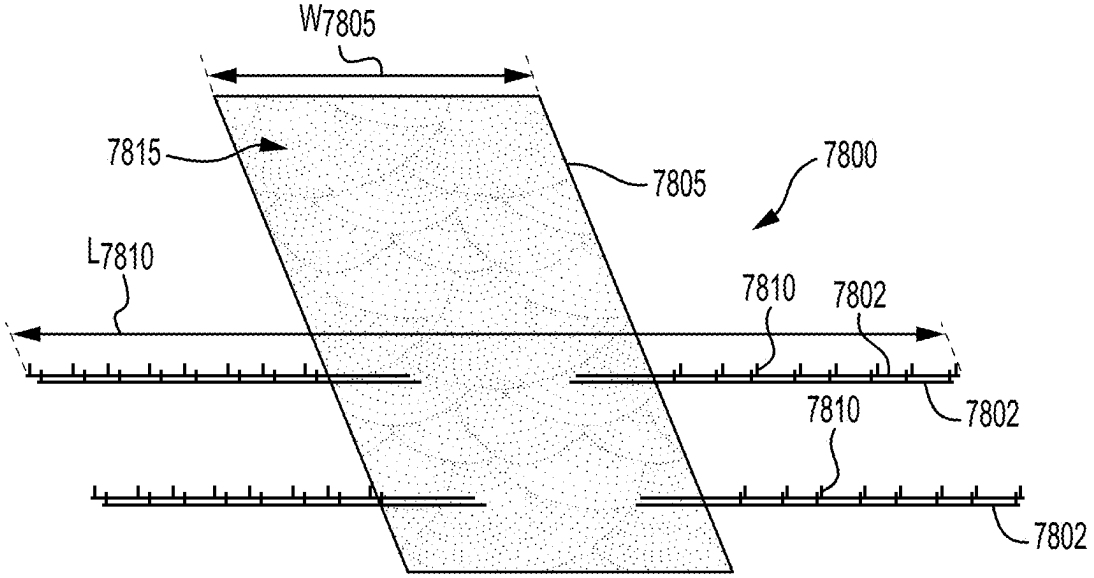

FIG. 78

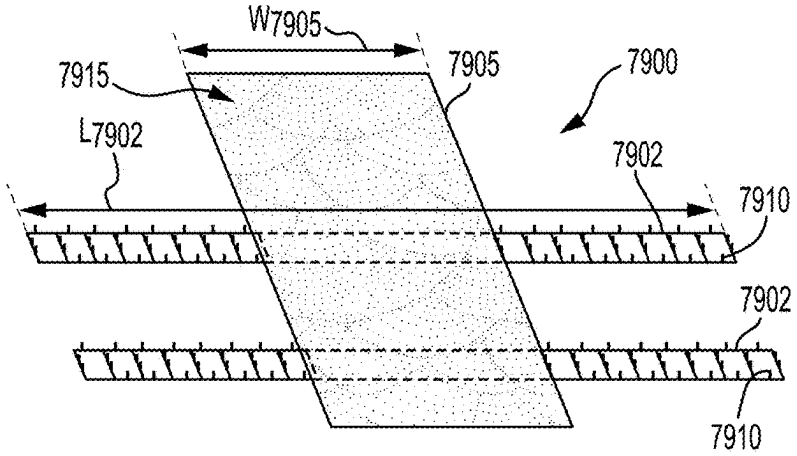

FIG. 79

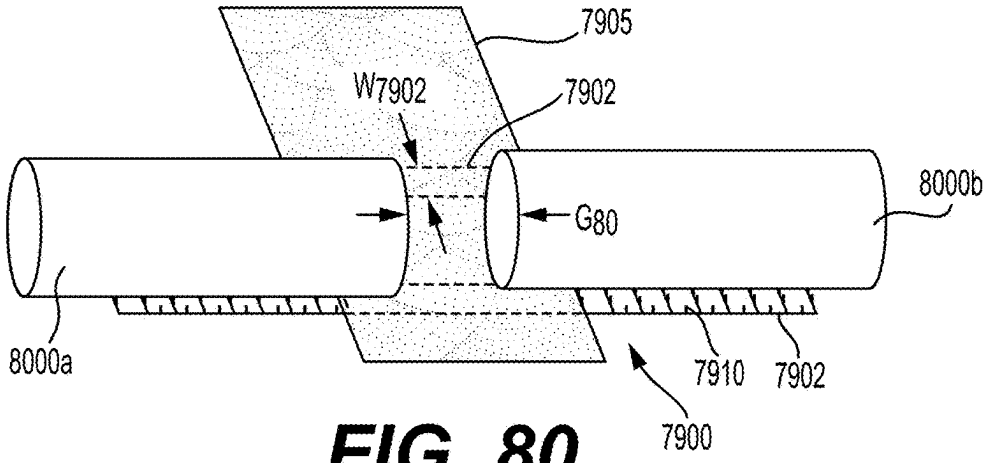

FIG. 80

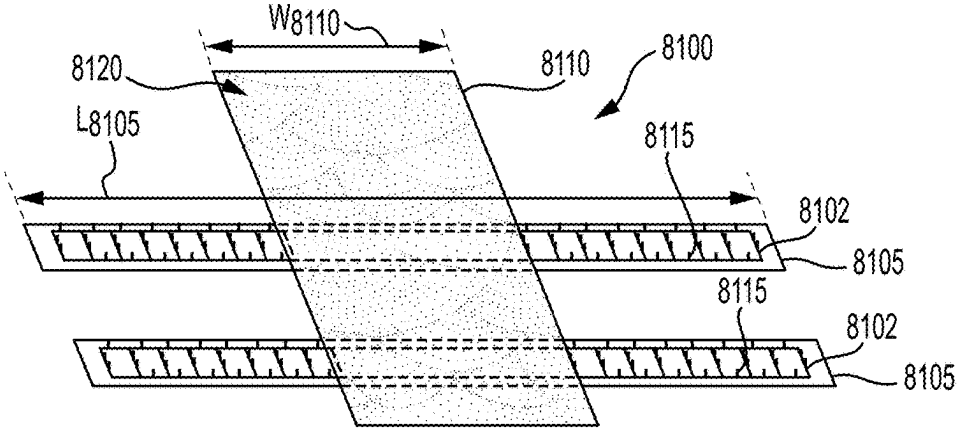

FIG. 81

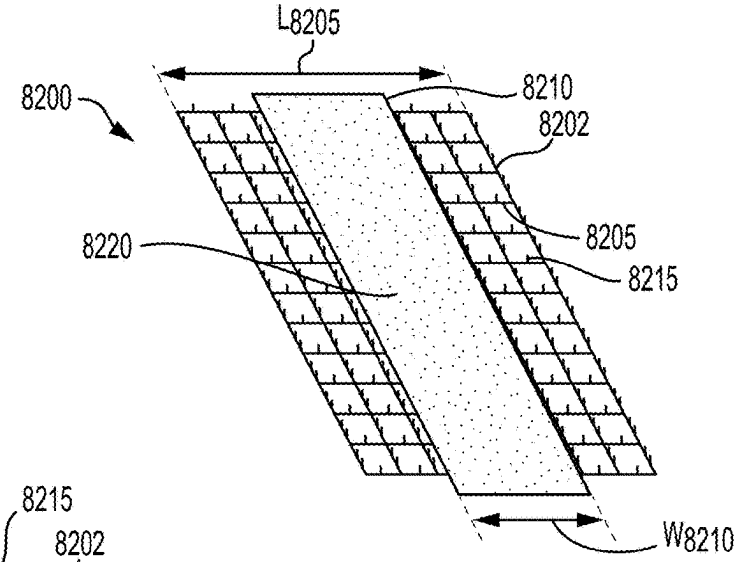

FIG. 82

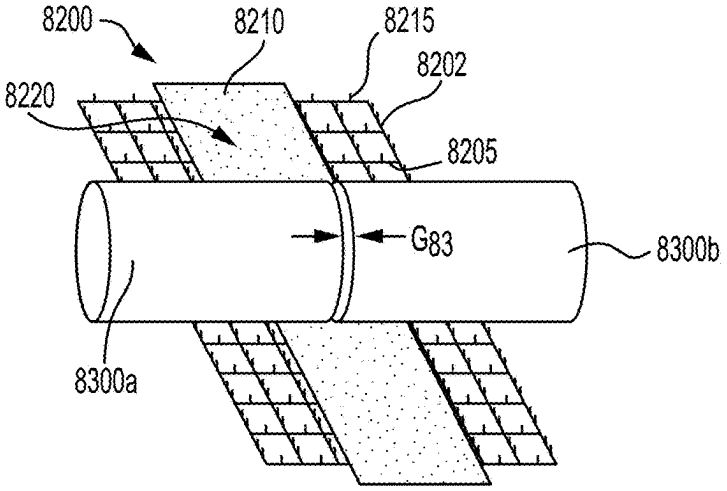

FIG. 83

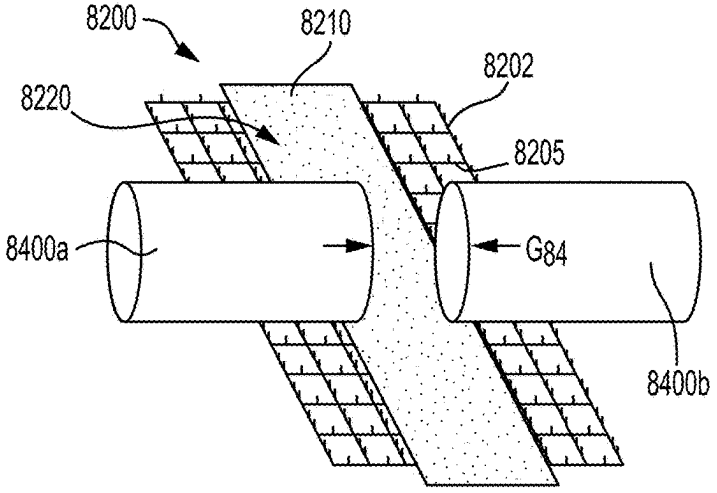

FIG. 84

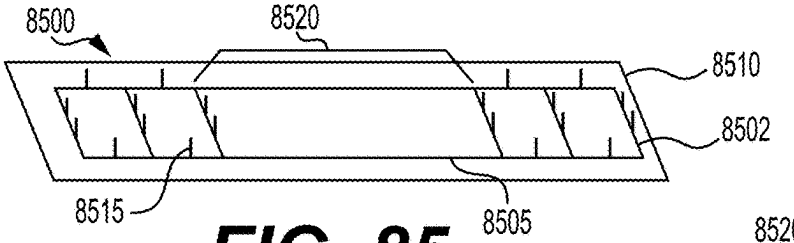

FIG. 85

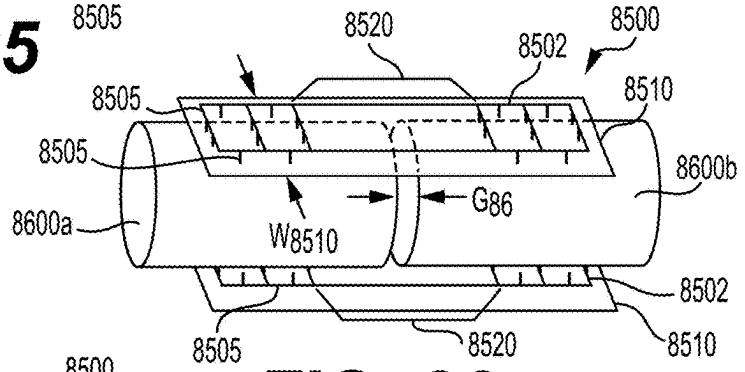

FIG. 86

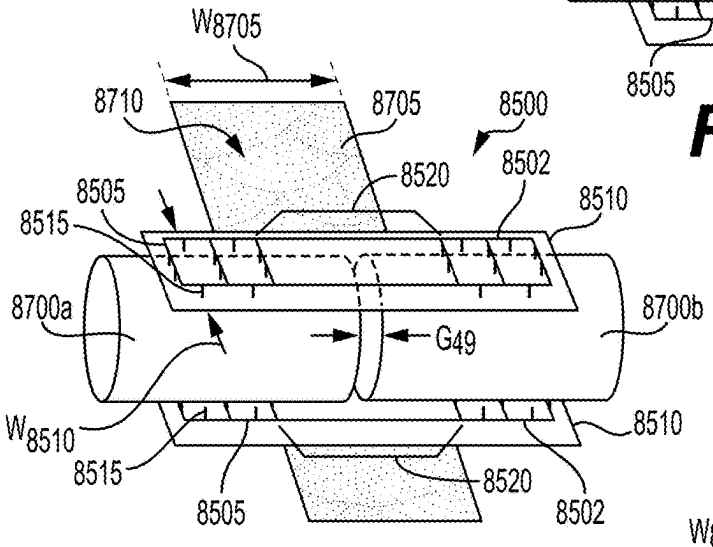

FIG. 87

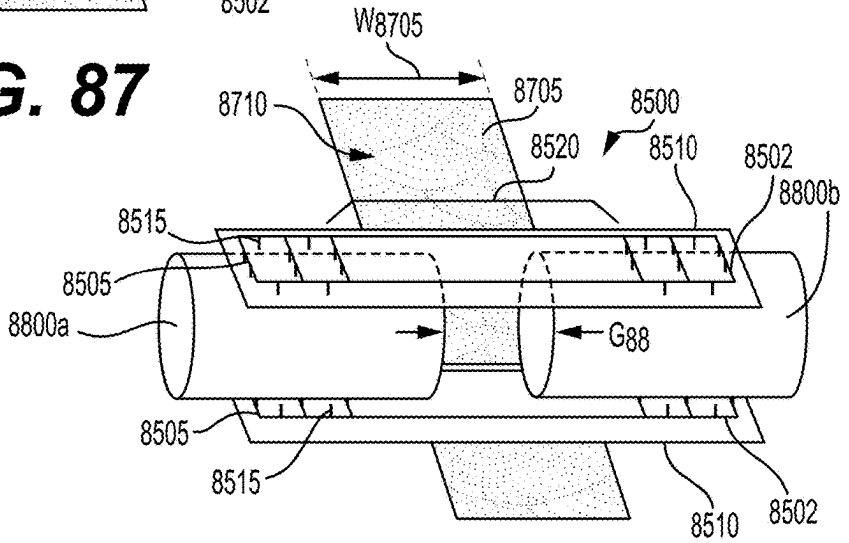

FIG. 88

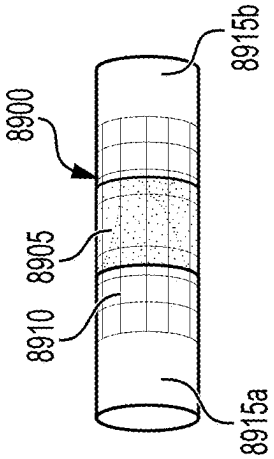

FIG. 91

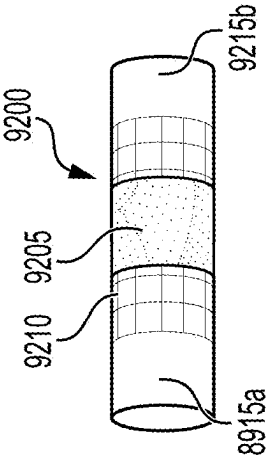

FIG. 94

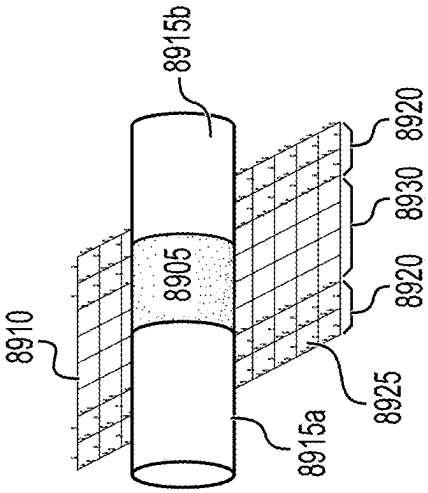

FIG. 90

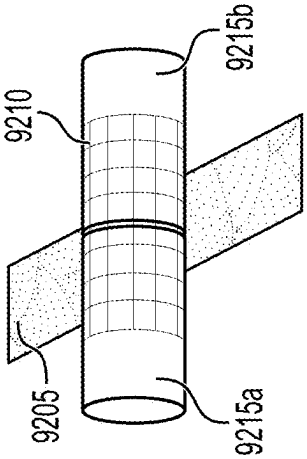

FIG. 93

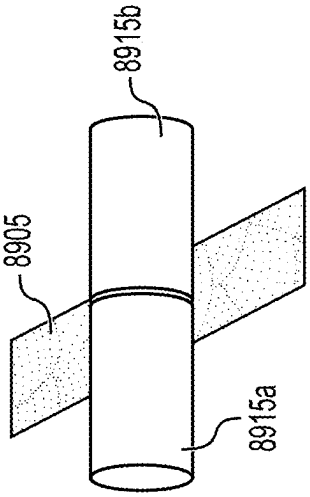

FIG. 89

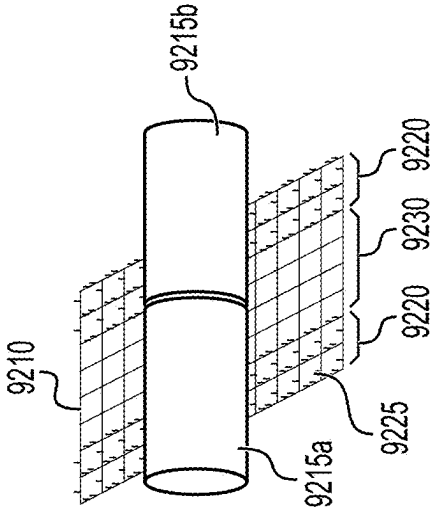

FIG. 92

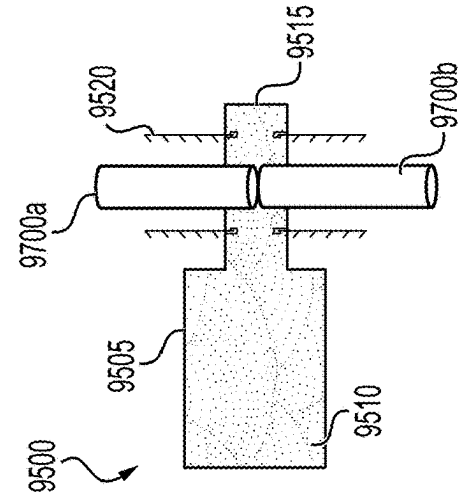

FIG. 95

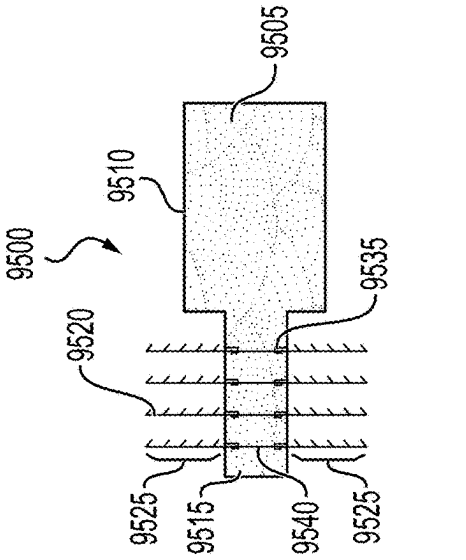

FIG. 96

FIG. 97

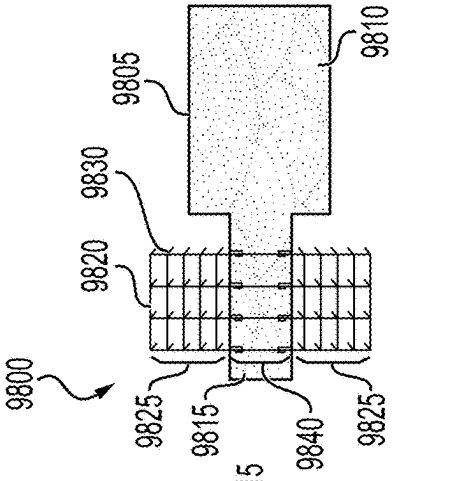

FIG. 98

FIG. 99

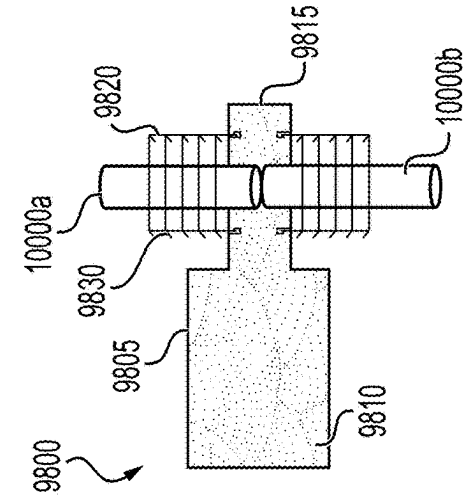

FIG. 100

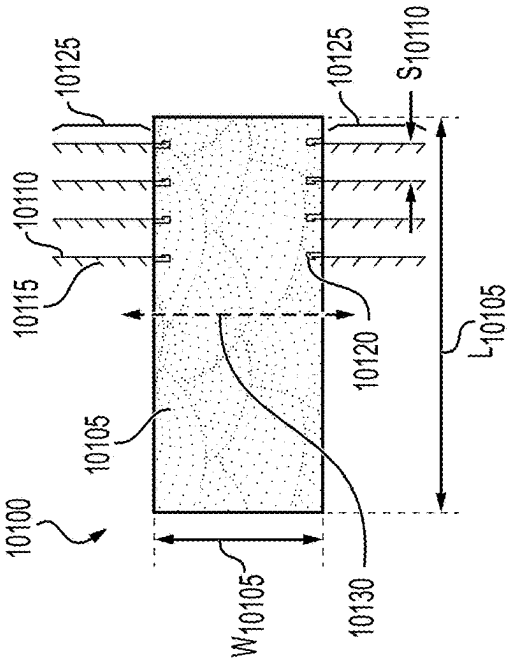

FIG. 101

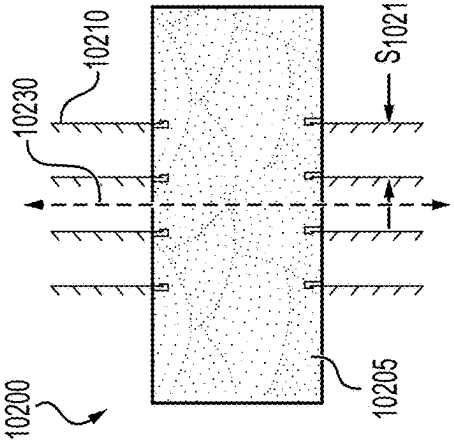

FIG. 102

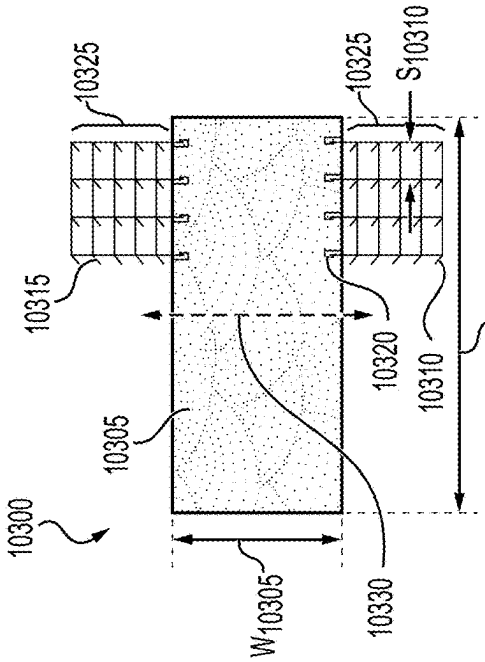

FIG. 103

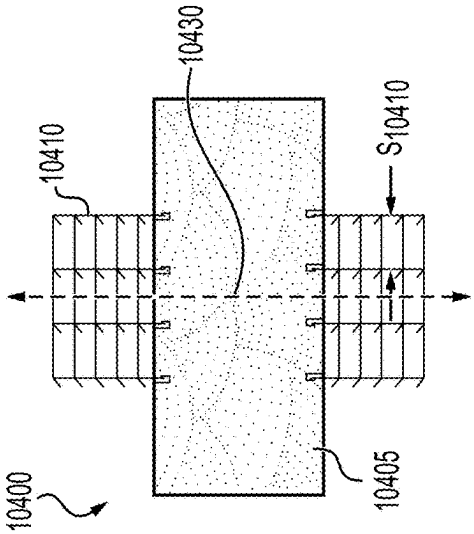

FIG. 104

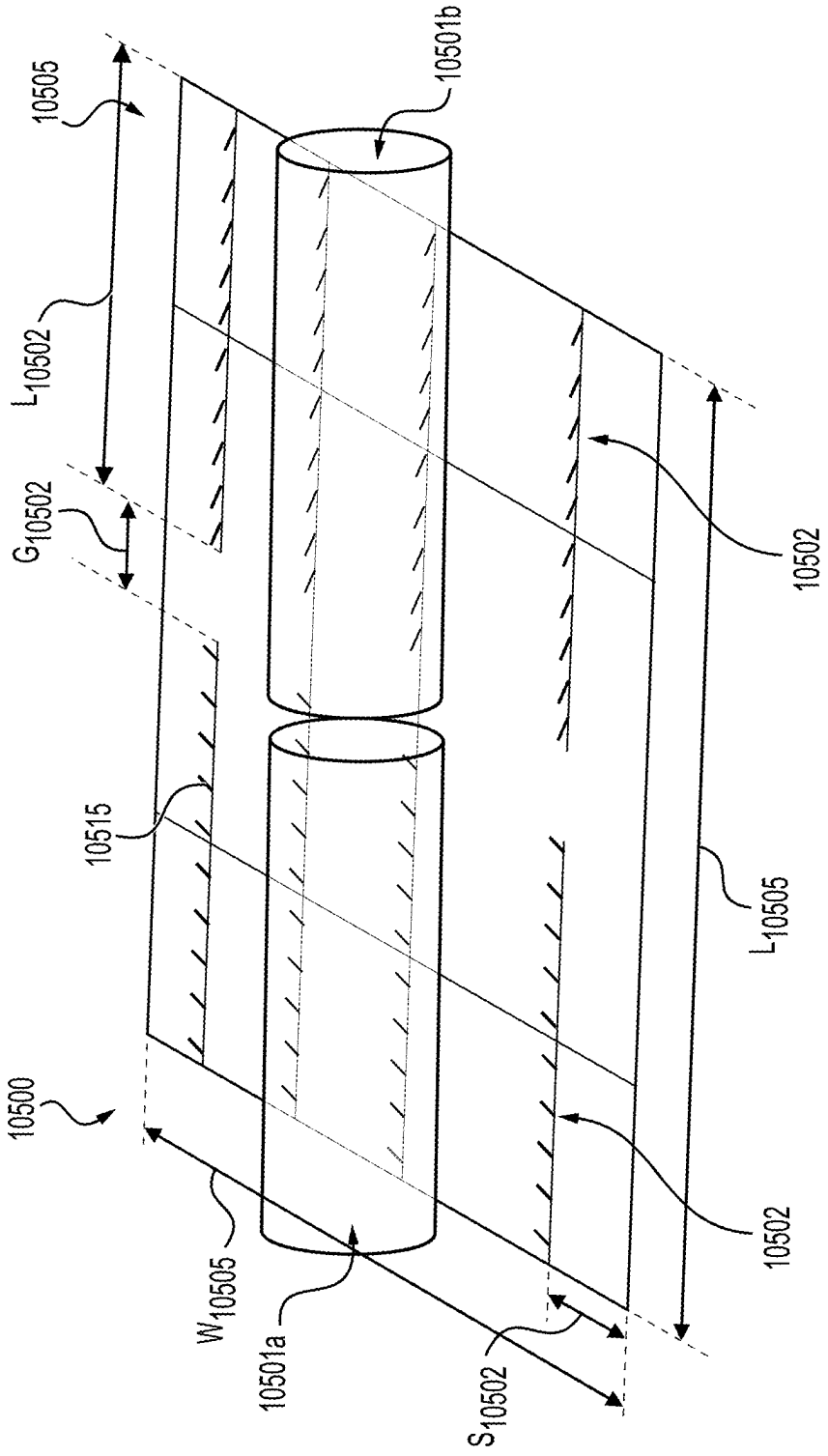
10500
10505
L_{10502}
G_{10502}
10515
W_{10505}
10501a
10501b
S_{10502}
10502
10502
L_{10505}

FIG. 105

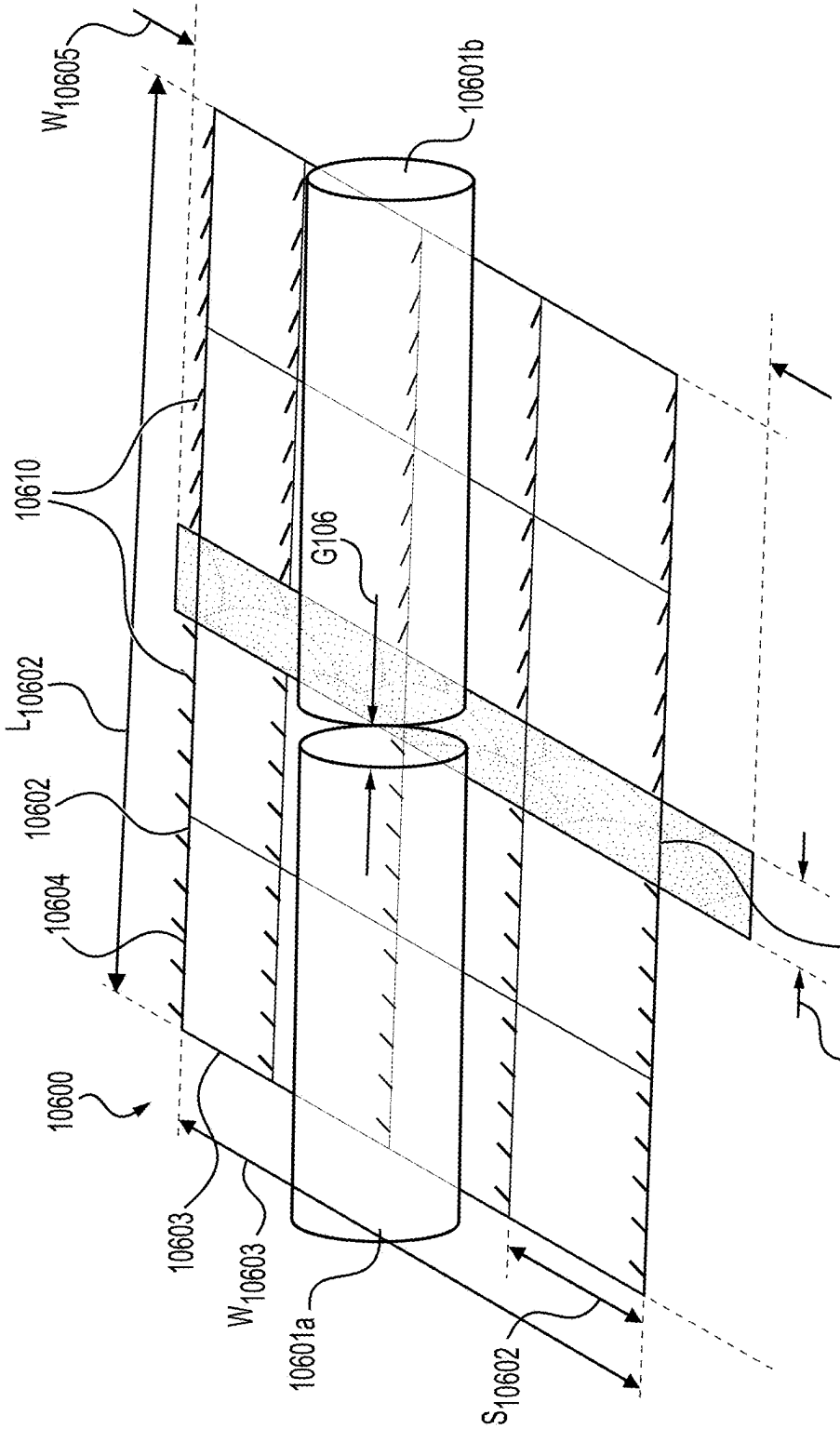
W10605
10601b
10610
G106
L10602
10602
10604
10605
L10605
10600
10603
W10603
10601a
S10602

FIG. 106

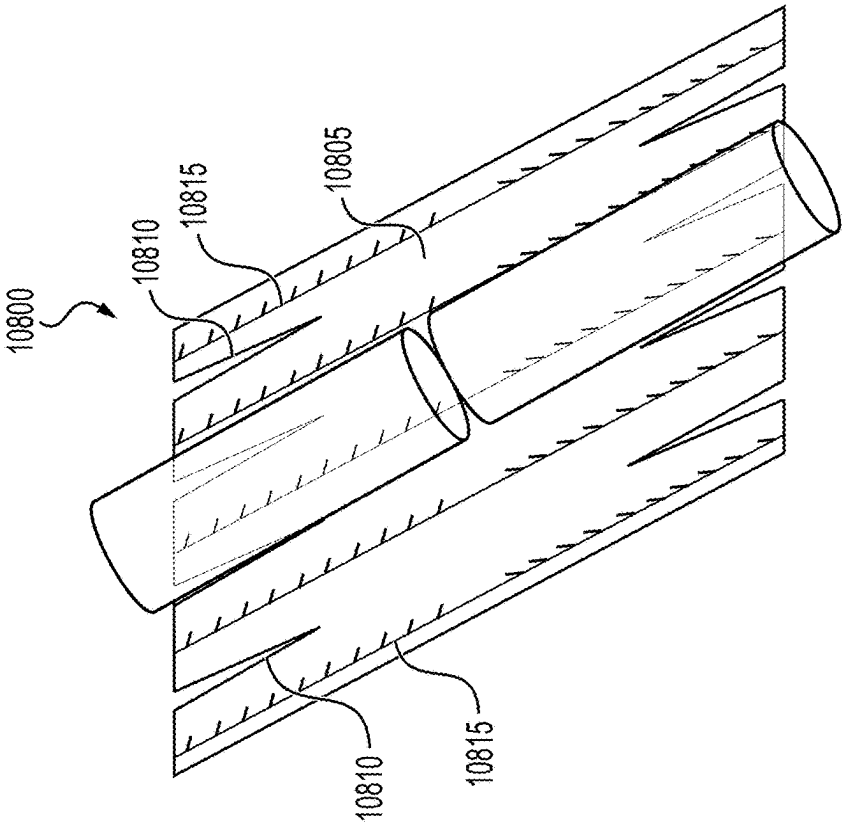

FIG. 108

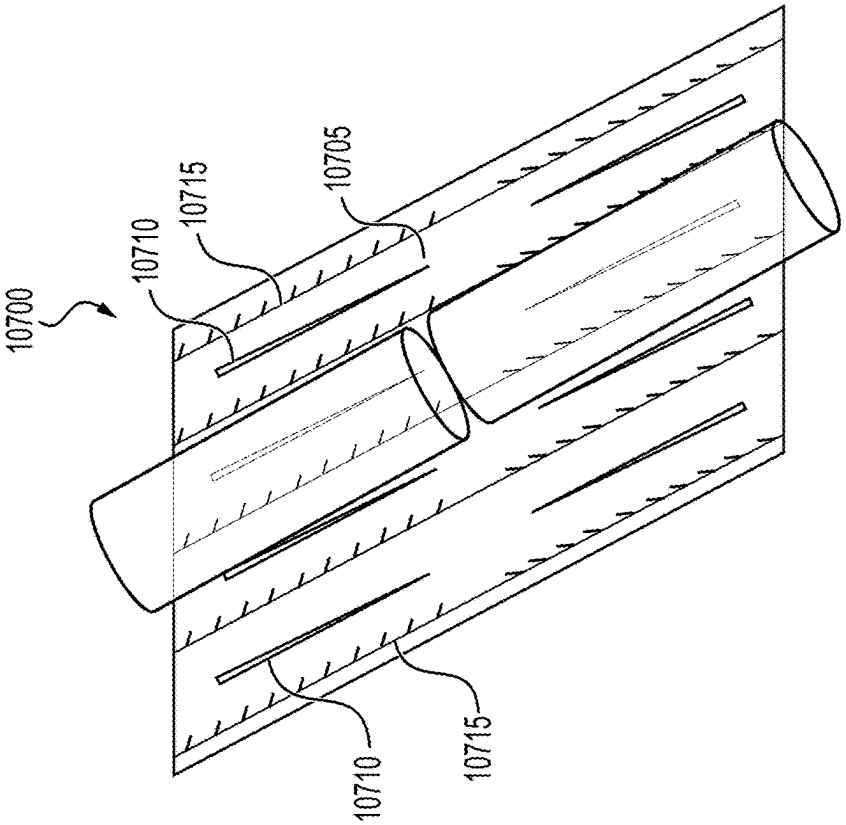

FIG. 107

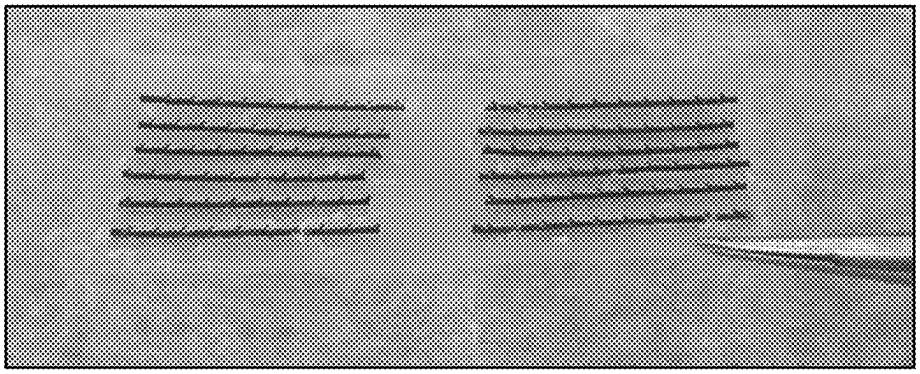

FIG. 109

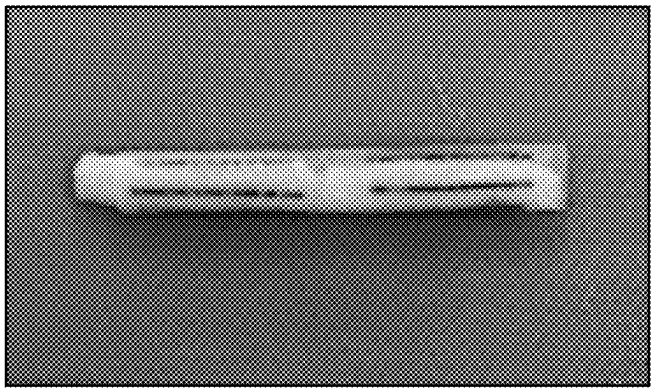

FIG. 110

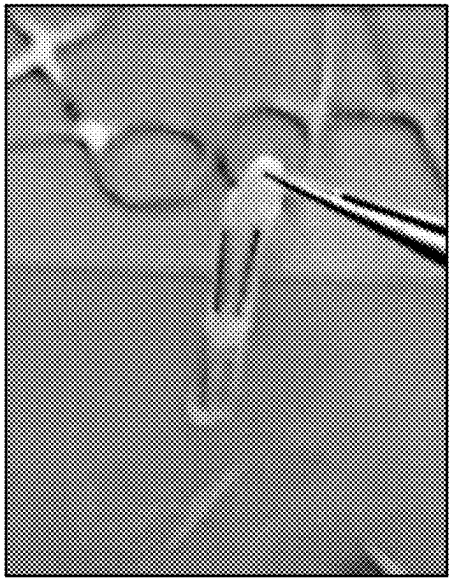

FIG. 111

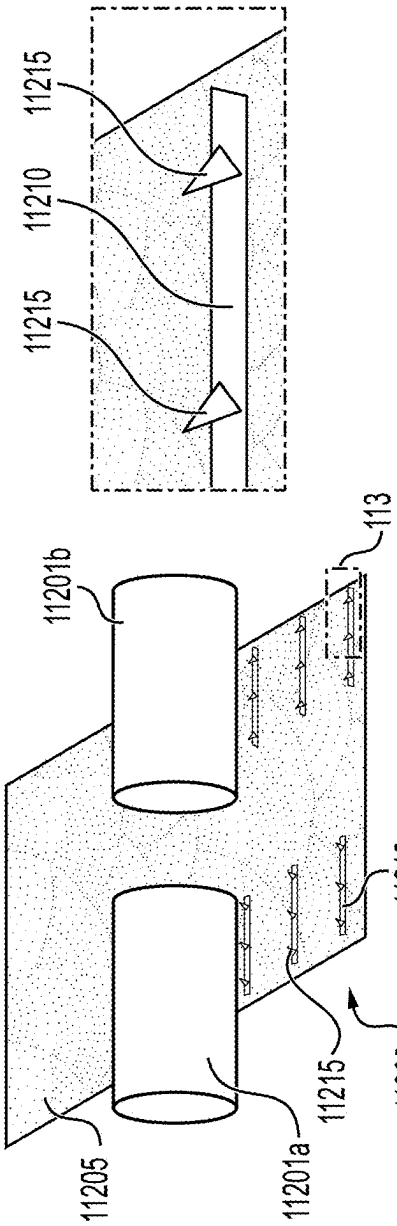

FIG. 112

FIG. 113

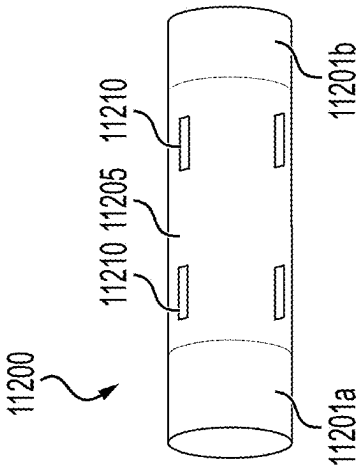

FIG. 114

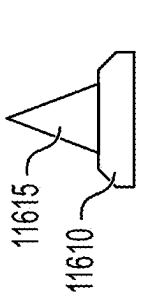

FIG. 115

FIG. 116

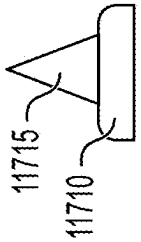

FIG. 117

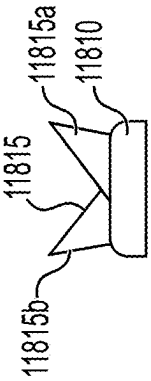

FIG. 118

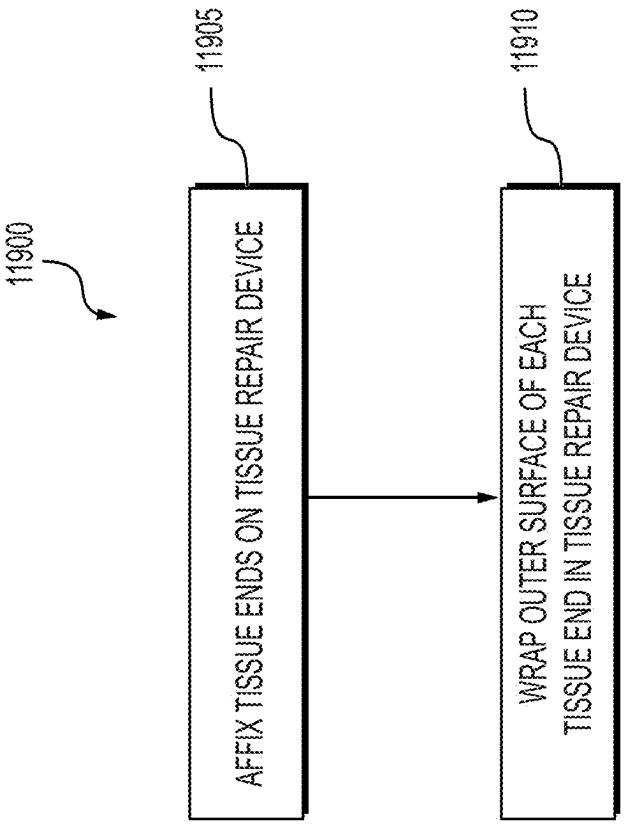

FIG. 119

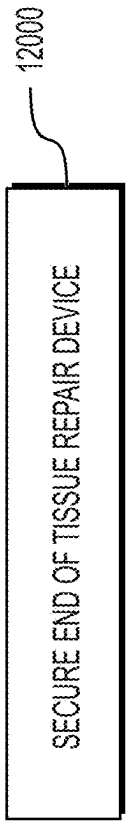

FIG. 120

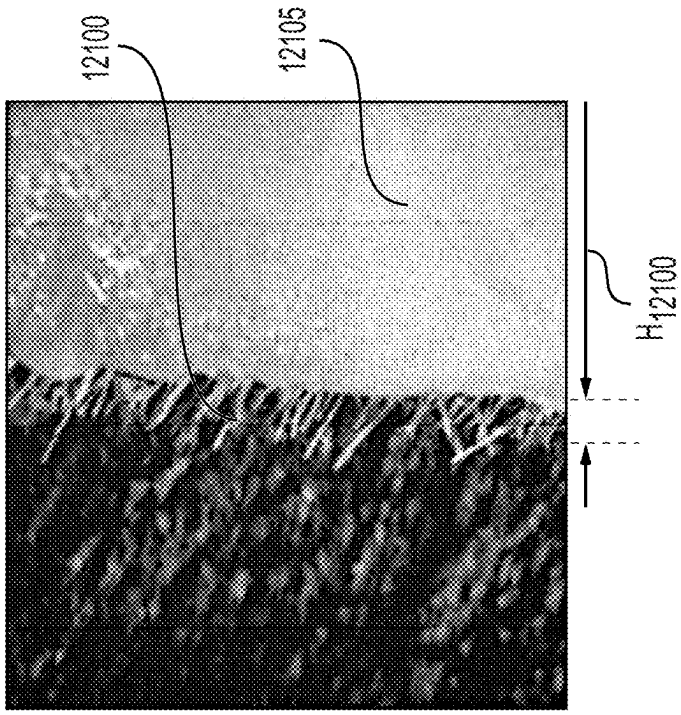

FIG. 121

BARBED DEVICES FOR SECURING TISSUE

CROSS REFERENCE TO RELATED APPLICATIONS

[0001] This patent application claims the benefit of priority to U.S. Provisional Patent Application No. 63/551,695, filed on Feb. 9, 2024; U.S. Provisional Patent Application No. 63/683,523, filed on Aug. 15, 2024; U.S. Provisional Patent Application No. 63/721,964, filed on Nov. 18, 2024; and U.S. Provisional Patent Application No. 63/737,119, filed on Dec. 20, 2024, the entireties of each of which are incorporated herein by reference.

FIELD OF THE INVENTION

[0002] The present disclosure relates generally to the field of barbed devices for the securing and fixing of tissue, and, more specifically, to barbed sutures, barbed constructs, barbed mesh, and barbed strips for the securing and fixing of tissue to other tissue and/or to other devices, and related methods of manufacture and use.

BACKGROUND

[0003] Fixation of tissue, such as nerve tissue, to other tissue or to devices includes placement of sutures. Suture placement may be dependent on technique. With fixation of nerve tissue, ideal placement of a suture would be in the epineurium of the nerve tissue, so that the internal structures of the nerve tissue are generally undisrupted. Such ideal placement of a suture is not always achieved. In addition, perfect placement of a suture may depend on an angle of approach, or the location or orientation of an intended connection between tissue, e.g., nerve ends, or between tissue and a device. These variables may make it difficult for a surgeon to achieve perfect placement of a suture. Further, existing sutures may not be ideal for preventing movement of sutured tissue in more than one direction.

[0004] For example, epineurial suture neurorrhaphy is widely acknowledged as the gold standard for peripheral nerve repair and reconstruction. This technique, however, requires significant expertise in microsurgical methods. Achieving proper micro suture placement and precise approximation of nerve ends are tasks that demand a high level of skill and are both time-intensive and technically challenging. Penetration of the suture needle beyond the outermost epineurial layer could result in the damage to the critical fascicular structures of the nerve.

[0005] Given these inherent complexities, there is growing need for alternative tissue repair strategies, such as for nerves, that do not rely on sutures. Such innovations could significantly enhance the efficiency of nerve or other tissue repair procedures, e.g., by reducing the time required and simplifying the technical demands placed on surgeons.

SUMMARY

[0006] In one aspect of the present disclosure, a barbed suture may include a suture body and at least one multi-directional barb formed on an outer surface of the suture body, the at least one multi-directional barb including a first projection and a second projection, wherein the first projection and the second projection extend in two different directions.

[0007] In another aspect of the present disclosure, a barbed suture may include a suture body, and at least two barbs formed on an outer surface of the suture body, a first barb of the at least two barbs having a first projection pointing in a first direction, and a second barb of the at least two barbs having a first projection pointing in a second direction, wherein the first direction is different from the second direction.

[0008] In still another aspect of the present disclosure, a method of making a barbed suture may include making a first cut into a body of a suture to form a first projection oriented in a first direction, wherein the first cut does not extend fully through the body of the suture, and making a second cut into the body of the suture to form a second projection oriented in a second direction, wherein the second cut does not extend fully through the body or the suture, wherein the first direction is different from the second direction.

[0009] In still another aspect of the present disclosure, a tissue repair device may include at least one mesh comprising a plurality of barbed sutures, including at least a plurality of longitudinal barbed sutures, and optionally a plurality of lateral barbed sutures, each barbed suture including a suture body and at least one barb formed on an outer surface of the suture body.

[0010] In still another aspect of the present disclosure, a tissue repair device may include a base membrane and a plurality of barbs formed on the base membrane, the plurality of barbs being formed by one of laser cutting or embossing.

[0011] In still another aspect of the present disclosure, a tissue repair device may include a base membrane and a plurality of barbs formed on the base membrane, the plurality of barbs being formed of resorbable ceramic and being attached to the base membrane.

[0012] In still another aspect of the present disclosure, a tissue repair device may include a base membrane and at least two barbed sutures, a longitudinal length of the barbed sutures being greater than a width of the base membrane, each barbed suture including portions having barbs and a portion that is free from barbs.

[0013] In still another aspect of the present disclosure, a tissue repair device may include a strip of base membrane and at least two barbed sutures attached to the strip of base membrane.

[0014] In still another aspect of the present disclosure, a method of securing two tissue ends relative to one another may include affixing the two tissue ends to a tissue repair device comprising at least one mesh formed of a plurality of barbed sutures, wherein the plurality of barbed sutures includes a plurality of longitudinal barbed sutures and optionally a plurality of lateral barbed sutures, each barbed suture including a suture body and at least one barb formed on an outer surface of the suture body, and wrapping an outer surface of each of the two tissue ends in the tissue repair device.

[0015] In still another aspect of the present disclosure, a method of securing two tissue ends together may include affixing the two tissue ends to a tissue repair device comprising a base membrane and a plurality of barbs formed on the base membrane, the plurality of barbs formed by one of laser cutting and embossing, and wrapping an outer surface of the two tissue ends in the tissue repair device.

[0016] In still another aspect of the present disclosure, a method of securing two tissue ends together may include affixing the two tissue ends to a tissue repair device com-

prising a base membrane and a plurality of barbs attached to the base membrane, the plurality of barbs being formed of resorbable ceramic, and wrapping an outer surface of each of the two tissue ends in the tissue repair device.

[0017] In still another aspect of the present disclosure, a method of securing two tissue ends together may include affixing the two tissue ends to a tissue repair device comprising a base membrane and at least two barbed sutures, a longitudinal length of the barbed sutures being greater than a width of the base membrane, each barbed suture comprising portions including barbs and a portion that is free from barbs, and wrapping an outer surface of each of the two tissue ends in the tissue repair device.

[0018] Other objects, features and advantages of the present disclosure will become apparent from the following detailed description. It should be understood, however, that the detailed description and the examples, while indicating exemplary embodiments of the present disclosure, are given by way of illustration only, since various changes and modifications within the spirit and scope of the invention will become apparent to those skilled in the art from this detailed description.

[0019] In this disclosure, the singular forms "a," "an," and "the" include plural referents unless the context dictates otherwise. The term "exemplary" is used in the sense of "example" rather than "ideal." The terms "comprises," "comprising," "includes," "including," or other variations thereof, are intended to cover a non-exclusive inclusion such that a composition, method, or process that comprises a list of elements or steps does not necessarily include only those elements or steps, but may include other elements or steps not expressly listed or inherent to such a composition, method, or process. The relative terms, such as "approximately" and "about," are generally used to indicate a possible variation of ±10% of a stated or understood value unless indicated otherwise in the specification. In addition, the term "between" used in describing ranges of values is intended to include the minimum and maximum values described herein. The use of the term "or" in the claims and specification is used to mean "and/or" unless explicitly indicated to refer to alternatives only or the alternatives are mutually exclusive, although the disclosure supports a definition that refers to only alternatives and "and/or." As used herein "another" may mean at least a second or more.

BRIEF DESCRIPTION OF THE DRAWINGS

[0020] The following drawings form part of the present specification and are included to further demonstrate certain aspects of the present disclosure. The disclosure may be better understood by reference to one or more of these drawings in combination with the detailed description of exemplary embodiments presented herein.

[0021] FIG. **1** is a schematic view of a portion of a non-barbed suture and a blade.

[0022] FIG. **2** is a schematic view of a portion of a suture with a barb formed thereon.

[0023] FIG. **3** is a schematic view of a portion of a suture with more than one barb formed thereon.

[0024] FIG. **4** is a schematic view of a portion of a suture with a multi-directional barb formed thereon.

[0025] FIGS. **5** to **11** are schematic views of portions of barbed sutures having barbs of varying shapes, according to various embodiments.

[0026] FIGS. **12** to **20** are schematic views of portions of barbed sutures having barbs of varying arrangements, according to various embodiments.

[0027] FIG. **21** is a schematic view of a barbed suture having a plurality of barbs on a surface thereof.

[0028] FIG. **22** is a detail view of two adjacent barbs of the barbed suture shown in FIG. **22**.

[0029] FIG. **23** is FIG a schematic view of a barbed suture having a number of barbs on a surface thereof.

[0030] FIG. **24** depicts a detail view of three adjacent barbs of the barbed suture shown in FIG. **23**.

[0031] FIGS. **25**, **26**, and **27** are schematic detail views of the barbed suture shown in FIGS. **23** and **24**.

[0032] FIG. **28** is a schematic view of a barbed suture having a number of barbs on a surface thereof, FIG. **29**A depicts a detail view of three adjacent barbs of the barbed suture shown in FIG. **28**, and FIG. **29**B is an image of tissue ends with barbed sutures, as in FIGS. **28** and **29**A, attached thereto.

[0033] FIG. **30** is a schematic view of a dual plane barbed suture having a number of barbs on a surface thereof, FIG. **31** depicts a detail view of three adjacent barbs of the barbed suture shown in FIG. **30**, in one plane and three adjacent parts in another plane, and FIG. **32** depicts a cross-sectional view of the barbed suture shown in FIG. **30**.

[0034] FIGS. **33** and **34** are images of an example barbed suture, described above with respect to FIGS. **30** to **32**.

[0035] FIG. **35** is a schematic drawing of a barbed suture with two adjacent barbs, formed using mechanical cutting.

[0036] FIG. **36** is a schematic drawing of a barbed suture, with two adjacent barbs, formed using injection micro molding.

[0037] FIG. **37** depicts a flowchart of a method of forming a barbed suture, according to one or more embodiments.

[0038] FIG. **38** is a flow chart of a method of forming a barbed suture, according to one or more embodiments.

[0039] FIG. **39** is a schematic depiction of a base membrane, which may be used in forming a tissue repair device according to the embodiments described herein.

[0040] FIG. **40** shows a detail view of a base membrane, a barbed structure **4005**, such as a portion of a barbed suture or a portion of a barbed device, and a layer of a polymer, as a glue or an adhesive, therebetween.

[0041] FIGS. **41** and **42** are images showing the barbed sutures adhered to a base membrane during testing.

[0042] FIG. **43** shows a base membrane with a barbed structure on top of the base membrane, and a spot welding probe.

[0043] FIG. **44** is a detail view of an interface between a thermally bonded barbed structure and a base membrane.

[0044] FIG. **45** is a detail of an alternative interface between a thermally bonded structure and a base membrane.

[0045] FIG. **46** shows one embodiment in which barbed sutures are weaved through a base membrane.

[0046] FIG. **47** shows another embodiment in which barbed sutures are sewn through a base membrane.

[0047] FIG. **48** depicts a base membrane with barbed sutures attached using cuts or hooks in the base membrane.

[0048] FIG. **49** depicts a base membrane with barbed sutures being threaded through holes in the base membrane.

[0049] FIG. **50** shows a back side of the base membrane and barbed sutures **4905** shown in FIG. **49**.

[0050] FIG. **51** depicts barbed sutures attached to a base membrane by inserting the base membrane into a thin slit or cut through the barbed sutures.

[0051] FIG. **52** is a detail view of a slit of the barbed suture shown in FIG. **51**.

[0052] FIG. **53** depicts another embodiment in which barbed sutures are attached to a base membrane by inserting the base membrane into a thin slit or cut through the barbed sutures.

[0053] FIG. **54** is a detail view of a slit of the barbed suture shown in FIG. **53**.

[0054] FIG. **55** depicts barbed sutures attached to layers of base membrane by sandwiching barbed sutures between layers of base membrane.

[0055] FIG. **56** depicts a top layer of base membrane having holes provided in a particular pattern or arrangement, used to sandwich the barbed sutures with additional layers of base membrane while allowing barbs to extend through the top layer of base membrane.

[0056] FIGS. **57**, **58**A, **58**B, and **59** are schematic cross-sectional views of barbed sutures on base membranes.

[0057] FIGS. **60**, **61**A, and **61**B are images of several examples of tissue repair devices having barbed sutures attached to base membranes.

[0058] FIGS. **62** and **63** depict tissue repair devices having base membranes and barbed sutures.

[0059] FIG. **64**A is a schematic view of a barbed mesh, according to one embodiment, and FIGS. **64**B and **64**C are images of a barbed mesh that is pre-formed and rolled.

[0060] FIG. **65** is a schematic view of a configuration of the barbed mesh shown in FIG. **64**, during a tissue repair process, according to one embodiment.

[0061] FIG. **66** is a schematic view of a configuration of the barbed mesh shown in FIGS. **64**A and **65**, with a base membrane, as shown in FIG. **39**, during a tissue repair process, according to another embodiment.

[0062] FIG. **67** is a schematic view of a configuration of the barbed mesh shown in FIGS. **64**A and **65**, with a base membrane, as shown in FIG. **39**, during a tissue repair process, according to still another embodiment.

[0063] FIG. **68** is a schematic view of another barbed mesh, as part of a tissue repair device, with no base membrane.

[0064] FIG. **69** shows the tissue repair device of FIG. **68**, with a strip of base membrane laid atop the barbed mesh, according one embodiment, with tissue ends.

[0065] FIG. **70** is a schematic view of a base membrane with barbs.

[0066] FIG. **71** is a schematic view of a barbed mesh on a strip of base membrane, according to one embodiment.

[0067] FIG. **72** is a schematic view of a configuration of two barbed meshes on strips of base membrane, as shown in FIG. **71**, during a tissue repair process, according to one embodiment.

[0068] FIG. **73** is a schematic view of a configuration of two barbed meshes on strips of base membrane, as shown in FIG. **71**, and a base membrane, during a tissue repair process, according to another embodiment.

[0069] FIG. **74** is a schematic view of a configuration of the barbed meshes on the strips of base membrane, as shown in FIG. **71**, and a base membrane, during a tissue repair process, according to still another embodiment.

[0070] FIG. **75** is a schematic view of an injection molded strip of base membrane with barbs, according to one embodiment.

[0071] FIG. **76** is a schematic view of a strip of base membrane with ceramic barbs, according to another embodiment.

[0072] FIG. **77** is a schematic view of two barbed sutures and a base membrane, according to one embodiment.

[0073] FIG. **78** is a schematic view of two sets of side-by-side barbed sutures, and a base membrane, according to another embodiment.

[0074] FIG. **79** is a schematic view of two strips or meshes with barbed sutures, and a base membrane, according to yet another embodiment.

[0075] FIG. **80** is a schematic view of the two strips with barbed sutures and the base membrane, shown in FIG. **79**, during a tissue repair process, according to one embodiment.

[0076] FIG. **81** is a schematic view of two strips or meshes with barbed sutures adhered to a first base membrane, and a second base membrane, according to still another embodiment.

[0077] FIG. **82** is a schematic view of a mesh of barbed sutures adhered to a base membrane, according to one or more embodiments.

[0078] FIG. **83** is a schematic view of the mesh of barbed sutures adhered to the base membrane, as shown in FIG. **82**, during a tissue repair process, according to one embodiment.

[0079] FIG. **84** is a schematic view of the mesh of barbed sutures adhered to the base membrane, as shown in FIG. **82**, during a tissue repair process, according to another embodiment.

[0080] FIG. **85** is a schematic view of a strip with barbed attachment points, according to one embodiment.

[0081] FIG. **86** is a schematic view of two strips with barbed attachment points, as shown in FIG. **85**, during a tissue repair process, according to one embodiment.

[0082] FIG. **87** is a schematic view of two strips with barbed attachment points, as shown in FIG. **85**, and a base membrane, during a tissue repair process, according to another embodiment.

[0083] FIG. **88** is a schematic view of two strips with barbed attachment points and a base membrane, during a tissue repair process, according to another embodiment.

[0084] FIGS. **89** to **91** are schematic views of a tissue repair device formed of a strip of base membrane and a barbed mesh, according to another embodiment.

[0085] FIGS. **92**, **93**, and **94** show another embodiment of a tissue repair device, formed of a strip of base membrane and a barbed mesh, according to another embodiment.

[0086] FIGS. **95**, **96**, and **97** show another embodiment of a tissue repair device, formed of a base membrane having a large tab and a small tab, and a plurality of barbed sutures.

[0087] FIGS. **98**, **99**, and **100** show another embodiment of a tissue repair device, formed of a base membrane having a large tab and a small tab, and a barbed mesh.

[0088] FIG. **101** shows another embodiment of a tissue repair device, formed of a base membrane and a plurality of barbed sutures.

[0089] FIG. **102** shows another embodiment of a tissue repair device, formed of a base membrane and a plurality of barbed sutures.

[0090] FIG. **103** shows another embodiment of a tissue repair device, formed of a base membrane and a barbed mesh.

[0091] FIG. **104** shows another embodiment of a tissue repair device, formed of a base membrane and a barbed mesh.

[0092] FIG. **105** is a schematic view of a tissue repair device including a plurality of barbed sutures mounted or embedded within a base membrane, according to another embodiment.

[0093] FIG. **106** shows a plurality of barbed sutures with barbs, an integrated strip of base membrane, and two transected tissue ends.

[0094] FIG. **107** is a schematic view of a tissue repair device having a base membrane with internal slits or openings, and longitudinally arranged barbed sutures, and FIG. **108** is a schematic view of a tissue repair device having a base membrane with external slits or openings, and longitudinally arranged barbed sutures.

[0095] FIGS. **109** to **111** are images of a tissue repair device and the tissue repair device in use, as in FIG. **105**.

[0096] FIG. **112** is a schematic view of a tissue repair device according to still another embodiment.

[0097] FIG. **113** is a detail view of the micro-injection molded barbs.

[0098] FIG. **114** depicts the tissue repair device of FIG. **112**, wrapped around tissue ends.

[0099] FIGS. **115** to **118** show side cross-sectional views of strips and barbs.

[0100] FIG. **119** is a flowchart of a method of securing two tissue ends together, according to one or more embodiments.

[0101] FIG. **120** is a flowchart of an additional step of the method shown in FIG. **119**.

[0102] FIG. **121** is an image of glass fibers extending from a resorbable polymer surface.

DETAILED DESCRIPTION

[0103] Barbed sutures may be used for fixation of tissue. Existing barbed sutures may include barbs formed by cutting or slicing portions of a suture, as shown in FIGS. **1** and **2**. An outer circumferential surface of a suture may be cut such that barbs are created on the outer surface. The cut may not extend all of the way through the suture, and the cut may be angled, rather than orthogonal to the surface of the suture. In traditional barbed sutures, the cuts are made so that all of the barbs are oriented, or point, in one direction. Current barbed sutures are designed to assist in wound closure and to allow for the barbed suture to attach to soft tissues and to resist movement in one direction. Existing barbed sutures are intended for wound fixation and do not have ideal physical characteristics for fixation to tissue, e.g., nerve tissue, to itself, to other tissue, or to a device. In addition, existing barbed sutures are intended to fix tissues to resist movement in only one direction: counter to the direction of the barbs (such as the direction A in FIG. **2**). Such barbed sutures may detach from tissue when moved in directions other than the one direction against which the barbs on the sutures are oriented to resist movement.

I. Overview

[0104] Embodiments of the present disclosure may include a barbed suture having a plurality of barbs oriented in different directions. As shown in FIGS. **3** and **4**, and as described in more detail below, exemplary sutures may be formed by cutting barbs at different angles relative to one another. In the example shown in FIG. **3**, a suture may be cut at least once to form at least one barb oriented in a first direction, and then cut at another location to form at least one other barb oriented in a second direction. That is, in one embodiment, a barbed suture has a plurality of barbs with only one projection, with the projections of at least two barbs pointing in two different directions. Such barbed sutures may resist movement in two directions. In other embodiments, different barbs may be oriented in three or more directions. Barbs with projections pointing in different directions may be organized in a repeating pattern, may be grouped regularly, or barbs with projections pointing in different directions may be oriented randomly in different directions along the suture.

[0105] In the example shown in FIG. **4**, a suture may be cut to form a barb having a first projection oriented in a first direction, and then a cut may be made in the vicinity of the first cut, in a different direction from the first cut, to form a second projection of the same barb, the second projection being oriented in a second direction. In these embodiments, the barbed suture formed by multiple cuts, that is, the multi-directional suture and/or the multi-directional barbs, may provide a barbed suture that is capable of rapid attachment to tissue from any angle of approach or connection. Also, the barbed suture may be capable of resisting movement in multiple angles of direction and/or multiple directions when the barbed suture is attached to tissue(s), and, therefore, may also resist or reduce detachment from the tissue(s).

[0106] Embodiments of the present disclosure may include a tissue repair device including a plurality of barbed sutures. In some aspects, one or more barbed sutures may be affixed to or used with a base membrane. In some examples, the tissue repair device may comprise a mesh formed of barbed sutures. In some aspects, the barbed sutures mesh may be affixed to or used with a base membrane. In some aspects, the barbed sutures may comprise portions with and without barbs, depending on how the tissue repair device is designed to be attached to tissue, to multiple tissue ends, or to a device.

[0107] In some aspects, the tissue repair device may be wrapped around or otherwise attached to two tissue ends. In some examples, the tissue ends may physically touch one another, or there may be a gap between the tissue ends when the tissue repair device is in use. The gap between the two tissue ends may, for example, allow for the tissue to retract in vivo in response to changing tension during the rescission procedures.

[0108] Although transected tissue ends are discussed in the disclosure, the tissue repair devices of the embodiments described, e.g., with respect to FIGS. **2** to **114**, may be applied to injured tissues of any type, whether fully transected or not, e.g., for protection or to allow the underlying tissue to heal, or simply to secure tissue for any other suitable reason, unrelated to healing. For example, instead of two tissue ends being brought together, embodiments of the disclosure may wrap around or otherwise cover a portion of tissue that is intact, to promote repair or to otherwise protect the underlying tissue.

[0109] In examples shown in FIGS. **64** to **118**, a tissue repair device may consist of strips of barbed sutures, which may or may not be connected to or used with a base membrane, wherein the base membrane is wrapped around or otherwise applied to the two tissue ends.

[0110] Embodiments of the present disclosure may include barbed devices and methods for fabricating barbed devices. In some instances, the resulting barbed devices may be described as a sutureless tissue coaptation devices, or more specifically, sutureless nerve coaptation devices, although barbed devices of the present disclosure may be used with any suitable tissue, not just nerves. Sutureless, as used herein, refers to not requiring the use of suturing with surgical sutures that are separate from the devices described in the disclosure.

II. Barbed Suture

[0111] FIG. **1** is a schematic view of a portion of a non-barbed suture **100** (also referred to as a suture body) and a blade **105**. The non-barbed suture **100** may be used to form the barbed sutures or barbed devices described herein. The suture **100**, and, therefore, the barbed sutures and barbed devices described herein, may be formed of one or more polymers. The one or more polymers may be a resorbable polymer that biodegrades over time. The one or more polymers may comprise homopolymers, copolymers, and/or polymeric blends including one or more of the following monomers: glycolide, lactide, caprolactone, dioxanone, trimethylene carbonate, monomers of cellulose derivatives, and monomers that polymerize to form polyesters. The polymer may include polydioxanone (PDO), polylactic acid (PLA), polycaprolactone (PCL), polytrimethylene carbonate, polyglycolide (PGL), polyglycolic acid (PGA), poly-3-hydroxybutyrate (PHB), poly(3-hydroxybutyrate-co-3-hydroxyvalerate) (PHBV), poly(4-hydroxybutyrate) (P4HB), poly(propylene carbonate) (PPC), poly(butylene succinate) (PBS), poly(propylene fumarate) (PPF), polydroxyalkanoates, copolymers thereof, or one or more other suitable materials. In some examples, the one or more polymers may comprise polyester, polydioxanone (e.g., poly-p-dioxanone), poliglecaprone (such as poliglecaprone 25 sold under the tradename Monocryl®), polyglytone (such as polyglytone 6211 sold under the tradename Caprosyn®), catgut, collagen, polyglycolide, polylactide (e.g., poly-L-lactide). In some aspects, the suture **100** may be absorbable. In still other examples, the barbed sutures may be formed of biodegradable metal.

[0112] In some examples, the tip of the barbed suture may have a height designed to inhibit damage to the tissue to which it is applied. For example, in the case of use with nerve tissue, the tip of the barbed suture may be designed to be less than a thickness of the nerve epineurium, in order to inhibit the potential for damage to the critical fascicular structures of the nerve tissue. For example, the tip of the barbed suture may be less than about 500 μm, less than about 400 μm, less than about 300 μm, less than about 200 μm, less than about 100 μm, less than about 50 μm, less than about 30 μm, or less than about 1 μm. The tip of the barbed suture may be about 1 μm to about 100 μm, about 1 μm to about 200 μm, about 1 μm to about 300 μm, about 1 μm to about 400 μm, about 1 μm to about 500 μm, about 10 μm to about 400 μm, about 10 μm to about 300 μm, about 10 μm to about 200 μm, about 10 μm to about 100 μm, etc.

[0113] FIG. **2** is a schematic view of a barbed suture **200**, that may be formed of the non-barbed suture **100** shown in FIG. **1**, with a first barb **210** formed in the suture by cutting or scoring a circumferential surface of the suture **200** with a blade **205**, or, in other words, making a first cut **215**, thereby forming the barbed suture **200**. The first cut **215** has a depth D**1** relative to a vertical y-axis, and a length L**1** relative to a horizontal x-axis, and is formed at an angle θ**1** relative to a longitudinal axis N-N of the suture. The first cut **215** forms the barb **210** and, in particular, forms a first projection **220** of the barb, pointing in a direction A. By virtue of the first projection **220** of the barb **210**, the barbed suture **200** may be capable of resisting movement or displacement in the direction A relative to tissue(s) to which it is attached, and, therefore, the barbed suture **200** may be capable of resisting or reducing detachment from the tissue(s) in response to a force pulling the barbed suture **200** along the x-axis in the direction that the barb **210** is pointing.

[0114] FIG. **3** is a detail schematic view of a surface of a barbed suture **300**, similar to the barbed suture **200** shown in FIG. **2**, with a first cut **315** and a second cut **325** made in an outer surface of the suture **300** using a blade **305**. As with the embodiment shown in FIG. **2**, the first cut **315** may have a depth D**2** relative to a y1-axis, and a length L**2** relative to the x-axis, and may be formed at an angle θ**2** relative to a longitudinal axis O-O of the suture **300**. The first cut **315** may form a first barb **310** having a first projection **320** pointing in a direction B. The second cut **325** may be made at another location in the outer surface of the suture **300**, and may have a depth D**3** that is the same as the depth D**2** of the first cut **315**, and a length L**3** that is the same length L**2** of the first cut **315**. Alternatively, the depth D**3** of the second cut **325** may be greater than or less than the depth D**2** of the first cut **315**, and/or the length L**3** of the second cut **325** may be greater than or less than the length L**2** of the first cut **315**. In some aspects, the second cut **325** may be formed at an angle θ**3** that is the same angle θ**2** of the first cut **315**, or the angle θ**3** of the second cut **325** may be greater than or less than the angle θ**2** of the first cut **315**. The second cut **325** may form a second barb **330** having a second projection **335** pointing in a direction C, which differs from the direction B in which the first projection **320** points. In this example, a component (horizontal component parallel to the x-axis in FIG. **3**) of direction C is different, e.g., opposite, to a component (horizontal component parallel to the x-axis in FIG. **3**) of direction B, while other components (vertical components parallel to the y1-axis and the y2-axis in FIG. **3**) of the directions C and B are the same.

[0115] In some aspects, the two cuts **315** and **325** may have the same depth or different depths, and the same lengths or different lengths. In some aspects, the two cuts **315** and **325** may be formed so as to be oriented 180° from each other, or they may be formed so as to be oriented at an angle greater than or less than 180° from each other.

[0116] By virtue of the barbed suture **300** having multiple barbs (e.g., a first barb **310** and a second barb **330**), with projections (projection **320** and projection **335**) pointing in different directions (directions B and C), the barbed suture **300** may resist movement or displacement in both of the directions. And, by virtue of the barbed suture **300** having multiple projections in at least two different directions (directions B and C), the barbed suture **300** may be a multi-directional barbed suture, more specifically, in the embodiment shown in FIG. **3**, a bi-directional barbed suture. Although the multi-directional barbed suture **300** shown in FIG. **3** has two barbs **310** and **330**, the suture **300** may have more than two barbs. Further, the particular directions in which the projections of the more than two barbs point may vary, e.g., the barbs may be uni-directional with the exception of one barb with a projection pointing in a different

direction, or a portion of the barbs may have projections pointing in a first direction, with the remainder of the barbs having projections pointing in a second, different direction. Still further, a multi-directional barbed suture may include three or more barbs with the projections of the three or more barbs pointing in three or more different directions.

[0117] The multi-directional barbed suture **300** of this embodiment may be capable of rapid attachment between the barbed suture and tissue from different angles of approach or connection. The multi-directional barbed suture **300** may be capable of resisting movement in multiple angles of direction and/or multiple directions when the barbed suture **300** is attached to tissue(s), and, therefore, may also resist or inhibit detachment from the tissue(s). Multi-directional barbs may be useful, e.g., when coapting two portions of tissue, such as two ends of a nerve, separately allowing the severed ends to come together or remain at a specified distance from each other, as is described further herein.

[0118] FIG. **4** is a detail schematic view of a surface of a barbed suture **400**, similar to the suture **200** shown in FIG. **2**, with a first cut **415** and a second cut **425** formed in the suture **400** using a blade **405**. As with the embodiment shown in FIG. **2**, the first cut **415** may have a depth D**4** relative to the y-axis, and a length L**4** relative to the x-axis, and may be formed at an angle θ**4** relative to a longitudinal axis P-P of the suture **400**. The first cut **415** may form a barb **410** having a first projection **420** pointing in a direction D.

[0119] The second cut **425** made in the suture **400** may have a depth D**5** that is greater than the depth D**4** of the first cut **415**. In some aspects, the second cut **425** may have a length L**5** that is greater than the length L**4** of the first cut **415**. The second cut **425** may be formed at another angle θ**5** relative to a longitudinal axis Q-Q of the suture **400**. The other angle θ**5** of the second cut **425** may be the same as, greater than, or less than the angle θ**4** of the first cut **415**. The second cut **425** may extend into the suture **400** such that, relative to the vertical y-axis in FIG. **4**, the second cut **425** undermines the first cut **415** at the relatively greater depth D**5**. The second cut **425** may be made relatively close to or in the vicinity of the first cut **415**, and may form part of the barb **410** and, in particular, may form a second projection **430** of the barb **410**, pointing in a direction E.

[0120] Although the first, shallower cut **415** is described as being formed before the second, deeper cut **425** is formed, the barbed suture **400** may also be formed by making the first cut **415** to a relatively greater depth (e.g., D**5**), and the second cut **425** to a relatively lesser depth (e.g., D**4**). In some aspects, the two cuts **415** and **425** could have the same depth or different depths, and the same lengths or different lengths. For example, the depth of the first cut **415** may be the same as the depth of the second cut **425**, with the depth being in a range of about 0.02 mm to about 0.2 mm, about 0.03 mm to about 0.15 mm, or about 0.05 mm to about 0.12 mm. In addition, the angle θ**4** of the first cut **415** and the angle θ**5** of the second cut **425** may be the same, and may be in a range of about 5° to about 45°, about 10° to about 40°, about 10° to about 30°, or about 10° to about 20°. In some aspects, the two cuts **415** and **425** may be formed so as to be oriented 180° from each other, or they may be formed so as to be oriented at an angle greater than or less than 180° from each other. By virtue of the second projection **430** of the barb **410**, the barbed suture **400** may resist movement or displacement in the direction E. And, by virtue of the barb **410** having multiple projections in at least two distinct directions, here, directions D and E, the barb **410** may be a multi-directional barb, and, more specifically, a bi-directional barb. That is, the multi-directional barbed suture **400** of this embodiment may be capable of resisting movement in multiple angles of direction and/or multiple directions when the barbed suture **400** is attached to tissue(s), and, therefore, may also resist or inhibit detachment from the tissue(s).

[0121] Although the barbed sutures **200**, **300**, and **400** described above may be formed by cutting a suture using a blade, other methods of creating barbs in sutures may be used. For example, variable geometry extrusion may be used, which creates a suture having a varying thickness or a varying geometry. The material from which the suture is formed may be cut or extruded in such a way that projections are created in the suture during variable geometry extrusion. In some aspects, for example, barbs may be separately formed either from the same material as the suture or from a different material of the suture, and then they may be fixed onto the suture using welding, annealing, curing, fastening, bonding, laminating, molding, embossing, imprinting, or adhesion. In some aspects, others means of fixing the barbs to the suture may be used. In some aspects, random or irregular patterns of barbs may be created, such as by roughening a surface of the suture.

[0122] And, although the barbed sutures **200**, **300**, and **400** described above may have projections pointing in two directions, such as in the multi-directional barbed suture **300** or the barbed suture **400** having one or more bi-directional barbs **410**, barbs having different geometries may be used.

[0123] For example, as shown in FIG. **5**, a barb **510** on a suture **500** may be a uni-directional barb, which may be oriented approximately perpendicular to a longitudinal axis R-R of the suture **500** (that is, parallel to the y-axis in FIG. **5**) to resist movement along the longitudinal axis. In other aspects, a barb **610** may be formed on a suture **600** in a hook shape, as shown in FIG. **6**, or a barb **710** may be formed on a suture **700**, so as to have multiple hooks, e.g., projections **720** and **730**, as shown in FIG. **7**. In some aspects, in a case in which a barb **810** is a bi-directional barb formed in a suture **800**, the barb **810** may have two projections **820** and **830**, facing or pointing in substantially opposite directions F and G, as shown in FIG. **8**, or a barb **910** formed on a suture **900** may have two rounded projections **920** and **930**, facing or pointing in substantially opposite directions H and I, as shown in FIG. **9**. In the embodiments shown in FIGS. **5** to **9**, as with the embodiments shown in FIGS. **3** and **4**, the two cuts used to form each suture may have the same depth or different depths, and the same lengths or different lengths. In a case in which the barb is a multi-directional barb, the barb may be composed of more than two pointed projections or more than two rounded projections.

[0124] In some aspects, a barb **1010** formed on a suture **1000** may be in the form of a rounded (e.g., oblong or circular) disc, as shown in the multi-plane view of FIG. **10**, or a barb **1110** formed in a suture **1100** may be in the form of a single, round or bulbous projection **1120**, as shown in FIG. **11**. Still further, for example, the barb may be in the form of a geometric shape having three or more sides, e.g., a triangle, a square, a pentagon, a multi-pointed star shape, etc. In some aspects, each barb may have more than two projections. As with the embodiments described above, each of the barbed sutures shown in FIGS. **5** to **11** may be capable of resisting movement in multiple angles of direction and/or

multiple directions when the barbed suture is attached to tissue(s), and, therefore, may also resist or reduce detachment from the tissue(s).

[0125] Although only one barb is shown on each of the suture in FIGS. **4** to **11**, two or more barbs may be formed in the same manner as described above. In some aspects, two or more of the same type of barbs may be included on the suture (e.g., two or more hooked barbs **610** or **710**, or two or more bulbous barbs **1110**). In other aspects, two or more different types of barbs may be included on the suture (e.g., a mixture of hooked barbs **610** or **710** and bulbous barbs **1110**, or a mixture of hooked barbs **610** and **710**, bulbous barbs **1110**, and bi-directional barbs **810**). The barbs may be aligned, for example, in rows, columns, rings, or spirals on the surface of the suture, or in a pattern, such as a grid pattern, or in a random, non-aligned arrangement.

[0126] For example, multiple barbs **1210** may be formed on a suture **1200** in a ring around a circumference of the suture **1200**. The rings may lie in a plane perpendicular to a longitudinal axis of suture **1200**, as shown in FIG. **12**, or they may lie in a plane at an angle to the longitudinal axis of the suture, as shown in FIG. **13** with multiple barbs **1310** on a suture **1300**. In other embodiments, multiple barbs may be oriented in a spiral along a length of a suture, as opposed to forming discrete rings. In some aspects, multiple barbs **1410** may be formed on a suture **1400** in one or more longitudinal lines along a length of the suture **1400**, which may be aligned with one another, as shown in FIG. **14**, or multiple barbs **1510** may be formed on a suture **1500** in a longitudinal line, in an offset position, as shown in FIG. **15**, along the circumference of the suture. In some aspects, for example, barbs **1610** may be formed on a portion T of a length of a suture **1600**, while barbs **1610** may be absent along another portion U of a length of the suture **1600**, as shown in FIG. **16**. As a result, one end of the suture **1600** may include barbs **1610**, while another end may not, or there may be gaps where no barbs **1610** are included along the length of the suture **1600** (as noted below in the discussion of FIG. **21**). In other aspects, barbs **1710** may be formed on a portion V of a circumference of a suture **1700**, while being absent along another portion W of the circumference of the suture **1700**, as shown in FIG. **17**. In this way, one side of the suture **1700** may include barbs **1710**, while another side of the suture **1700** does not. In some aspects, suture **1700** may include a row of barbs **1710** that extend along one side of suture **1700**. Patterns of portions T and U or V and W may alternate or repeat along a length of the respective sutures **1600** and **1700**. Still further, barbs may be formed on a suture in a repeating geometric-shaped pattern along the length of the suture (e.g., a triangle pattern, a square or checker pattern, a pentagon pattern, a hexagon or honeycomb pattern, etc.).

[0127] In FIGS. **12** to **17**, barbs are portrayed as "+" symbols for convenience, but it is anticipated that any suitable type of suture or combinations of suture types—for example, those portrayed and discussed in reference to FIGS. **3** to **11**—may be represented by the "+" symbols used in these figures. Further, although the shape of the suture itself (e.g., suture **100**, **200**) is shown as having a circular cross-section, any suitable cross-sectional shape may be used, e.g., rectangular, triangular, trilobal, pentagonal, hexagonal, etc., as is described further below.

[0128] FIG. **18** shows a barbed suture **1800** with multiple multi-directional barbs **1810**, with the first projections **1820** of the multi-directional barbs each pointing in the same direction, direction J, for example, or a direction parallel thereto. In some aspects, each of the second projection **1830** of the multi-directional barbs **1810** may be pointing in the same direction, direction K, for example, or a direction parallel thereto, with the directions J and K being substantially opposite to each other, as shown in the detail inset. Alternatively, FIG. **19** shows a barbed suture **1900** with multiple multi-directional barbs **1910** arranged in a pattern, e.g., a regular or irregular pattern, in which a first projection **1920***a* of each of a first subset of the barbs **1910** points in one direction L, or a direction parallel thereto, and a first projection **1920***b* of each of a second subset of the barbs **1910** points in another direction M, or a direction parallel thereto. The two directions L and M may be substantially opposite, substantially perpendicular, or, as shown in the detail inset of FIG. **19**, angled relative to each other. Similarly, when the multi-directional barbs are arranged in a pattern, a second projection of the first subset of barb may point in one direction, and a second projection of the second subset of bars may point in another direction. The two directions may be substantially opposite, substantially perpendicular, or angled relative to each other.

[0129] Orientations of barbs along a length of a suture may be arranged in a number of different ways. For example, barbs may be oriented so that they point in a direction that is parallel to a longitudinal axis of the suture, as shown, for example, in FIGS. **8** and **9**. Alternatively, for example, the barbs may be oriented so that they point at an angle, relative to a longitudinal axis of the suture, between about 1° to about 359°. In some aspects, as noted above, the barbs may be oriented in the same orientation as adjacent barbs or in a different orientation relative to adjacent barbs. Further, the barbs may have a repeating orientation or random orientations. Still further, as shown in FIG. **20**, barbs **2010** on a suture **2000** may have a repeating pattern of orientations relative to a longitudinal axis S-S of the suture **2000**. As one particular example of a repeating pattern of orientations, the barbs **2010** in FIG. **20** may be oriented at intervals of about 30° relative to the longitudinal axis S-S of the suture **2000** with each barb **2010** being oriented at an adjusted angle relative to a neighboring barb **2010**, in the following order: 0°, 30°, 60°, 90°, 120°, 150°, 180°, 210°, 240°, 270°, 300°, 330°). This pattern may be replicated with any interval of degrees between 0° and 360°, for example, about 20°, about 40°, about 45°, about 50°, about 60°, or about 90° intervals. In some aspects, the barbs may have a non-repeating pattern or an irregular pattern of orientations relative to the longitudinal axis of the suture (i.e., irregular interval of degrees relative to the longitudinal axis of the suture with each sequential barb).

[0130] FIG. **21** is a schematic view of a barbed suture **2100** having a number of barbs **2105** on a surface thereof, and FIG. **22** depicts two adjacent barbs **2105** of the barbed suture **2100** shown in FIG. **21**, with a spacing AA therebetween. A relatively smaller spacing AA between barbs allows for a relatively greater number of barbs **2105** overall on the barbed suture **2100**, and a relatively larger spacing AA between barbs **2105** allows for a relatively lesser number of barbs **2105** overall on the barbed suture **2100**. In some aspects, the spacing between adjacent barbs **2105** may remain constant along a length BB of the barbed suture **2100**, or the spacing AA between adjacent barbs **2105** may vary along a length BB of the barbed suture **2100**. In FIG.

21, barbs **2105** located within segments **2110***a* and **2110***b* along lengths CC may be spaced at regular intervals, but there may be a gap DD, or a relatively larger spacing, between the segments **2110***a* and **2110***b* of barbs **2105**. Ends of the barbed suture, or leaders **2115**, may be free from barbs **2105**, and may have lengths EE, as shown, or may have barbs **2105**. In the embodiment shown in FIG. **21**, the barbed suture **2100** has a first segment **2110***a* of barbs **2105**, a second segment **2110***b* of barbs **2105**, and a gap DD between the first segment **2110***a* and the second segment **2110***b*.

[0131] The barbs **2105** within each segment **2110***a*, **2110***b* may be unidirectional (for example, as shown in FIGS. **1**, **2**, **3**, **5**, **6**, and **11**) or multi-directional (for example, bi-directional, as shown in FIGS. **4**, **7**, **8**, and **9**) and may point in the same direction as other barbs **2105** (as shown, for example, in FIG. **18**) within the same segment **2110***a*, **2110***b*, or in different directions from some or all of the other barbs **2105** (as shown, for example, in FIGS. **19** and **20**) within the same segment **2110***a*, **2110***b*. Further, the barbs **2105** within each segment **2110***a*, **2110***b* may have the same angle, relative to the longitudinal axis of the barbed suture **2100**, or may have different angles (as discussed and shown, for example, in FIG. **3**). In FIG. **21**, the barbs **2105** in segment **2110***a* each face in a similar direction, which is different than the direction of the barbs **2105** in segment **2110***b*.

[0132] The spacing AA between adjacent barbs **2105** may be about 0.01 mm to about 10 mm, e.g., about 0.01 mm to about 5 mm, about 0.01 mm to about 2 mm, about 1 mm to about 7 mm, about 1 mm to about 5 mm, or about 1 mm to about 3 mm. In some aspects, the spacing AA between adjacent barbs **2105** may be about 1 mm or less, e.g., about 0.5 mm to about 1 mm, about 0.4 mm to about 0.8 mm, about 0.4 mm, about 0.5 mm, about 0.6 mm, about 0.7 mm, about 0.8 mm, or about 0.9 mm. The spacing AA between adjacent barbs **2105** may be determined based at least in part on the specific application in which the barbed suture **2100** is to be used.

[0133] The overall length BB of the barbed suture **2100** may vary, e.g., depending on use or specific application, but may be about 5 mm to about 1 m, e.g., about 50 mm to about 500 mm, about 100 mm to about 500 mm, about 100 mm to about 300 mm, about 200 mm to about 500 mm, about 200 mm to about 300 mm, for example. The length CC of the segments **2110***a*, **2110***b* may be, for example, up to about 50 cm, up to about 30 mm, up to about 10 mm, or up to about 5 mm. In some aspects, the length CC of the segments **2110***a*, **2110***b* may be, for example, about 5 mm to about 20 mm, about 5 to about 40 mm, about 10 to about 60 mm, about 40 mm to about 100 mm, about 50 mm to about 90 mm, about 60 mm to about 80 mm, about 60 mm, about 70 mm, or about 80 mm. The length of CC may depend, at least in part, on the overall length of the barbed suture **2100** and/or the intended use or application of barbed suture **2100**. The gap DD may be based, at least in part, on a gap length between two tissue portions or between a tissue portion and a device being held in place by the barbed suture **2100**. For example, the gap DD may be based, at least in part, on a gap length between two transected nerves (that is, a gap length in nerve transection), or relative desired positioning of two nerve ends, and may be between no or minimal gap to about 80 mm, minimal gap to about 500 mm, minimal gap to about 200 mm, minimal gap to about 100 mm, about 0.5 mm to about 5 mm, about 1 mm to about 4 mm, about 1 mm to about 3 mm, about 0.5 mm, about 1 mm, about 2 mm, about 3 mm, or about 5 mm. The length of gap DD may depend, at least in part, on the overall length of the barbed suture **2100** and/or the intended use or application of barbed suture **2100**. The length EE of the leaders **2115** may be about no or minimal gap up to a length of the barbed suture **2100**. In some aspects, the length EE of the leaders **2115**, if included, may be about 10 mm to about 60 mm, about 20 mm to about 50 mm, about 30 mm to about 40 mm, about 20 mm, about 25 mm, about 30 mm, about 35 mm, about 40 mm, about 45 mm, or about 50 mm, for example. The length EE of leaders **2115**, if included, may depend, at least in part, on the overall length of the barbed suture **2100** and/or the intended use or application of barbed suture **2100**.

[0134] FIG. **23** is a schematic view of a specific example of a barbed suture **2300** having a number of barbs **2305** on a surface thereof, and FIG. **24** depicts a detail view of three adjacent barbs **2305** of the barbed suture **2300** shown in FIG. **23**. In the embodiment shown in FIGS. **23** and **24**, the barbed suture **2300** may be a size 5-0 gauge suture, a size 4-0 gauge suture, a size 3-0 gauge suture, or other suitable thickness, having a diameter in a range of about 0.100 to about 0.339, about 0.100 to about 0.249 mm, or about 0.150 mm to about 0.199 mm. The barbs **2305** may be arranged with a first set of barbs **2305** on a left side of the barbed suture **2300**, shown in FIG. **23**, all facing a central region **2310** of the barbed suture **2300**, and a second set of barbs **2305** on a right side of the barbed suture **2300**, all facing the central region **2310** of the barbed suture **2300**. That is, the barbs **2305** may be provided in a bidirectional arrangement. Each of the first set of barbs **2305** and the second set of barbs **2305** spans a length FF, which may be about 15.0±0.5 mm in this example. A gap GG may extend between the first set of barbs **2305** and the second set of barbs **2305**, and may have a length of about 5.0±0.5 mm in this example. An overall length HH of the barbed suture **2300** may be any suitable length, depending on its intended use. In this example, the overall length HH may be about 75.0±1.0 mm. In some aspects, the barbed suture **2300** may also include end portions free from barbs **2305**, with a length II of the end portions in this example being about 20.0±1.0 mm. With reference to FIG. **24**, in this example, an angle JJ between an axis along which a barb **2305** extends and a longitudinal axis, along which the cut, forming the barb **2305** extends, may be about 60°±5°. A height KK of each barb **2305** may be about 0.30±0.03 mm, and a spacing LL between a barb **2305** and a cut for an adjacent barb **2305**, as shown in FIG. **24**, may be about 0.900±0.1 mm. FIGS. **25**, **26**, and **27** are schematic detail views of the barbed suture **2300** shown in FIGS. **23** and **24**. In particular, FIG. **25** shows three adjacent barbs **2305** along a length of the barbed suture **2300**, as well as cuts **2315** made in a surface of the barbed suture **2300** to thereby form the barbs. FIG. **26** shows two adjacent barbs **2305** along a length of the barbed suture **2300**, as well as cuts **2315** made in the surface of the barbed suture **2300**. And FIG. **27** shows one barb **2305** on the barbed suture **2300**, and a cut **2315** made in the surface of the barbed suture **2300** to thereby form the barb **2305**.

[0135] FIG. **28** is a schematic view of another example of a barbed suture **2800** having a number of barbs **2805** on a surface thereof. FIG. **29**A depicts a detail view of three adjacent barbs **2805** of the barbed suture **2800** shown in FIG. **28**, and FIG. **29**B is an image of tissue ends with barbed sutures, as in FIGS. **28** and **29**A, attached thereto. The barbs **2805** may be arranged with a first set of barbs **2805** on a left

side of the barbed suture **2800**, shown in FIG. **28**, all facing a central region **2810** of the barbed suture **2800**, and a second set of barbs **2805** on a right side of the barbed suture **2800**, all facing the central region **2810** of the barbed suture **2800**. That is, the barbs **2805** may be provided in a bidirectional arrangement. Each of the first set of barbs **2805** and the second set of barbs **2805** spans a length MM, which may be about 22.5±0.5 mm in this example. A gap NN may extend between the first set of barbs **2805** and the second set of barbs **2805**, and may have a length of about 10.0±0.5 mm in this example. An overall length OO of the barbed suture **2800** may be about 95.0±1.0 mm, although any suitable length is acceptable, depending on the intended use of the barbed suture **2800**. The barbed suture **2800** may also, in some aspects, include end portions free from barbs **2805**, with a length PP of the end portions being about 20.0±1.0 mm, if included. With reference to FIG. **29**A, an angle QQ between an axis along which a barb **2805** extends and a longitudinal axis, along which the cut, forming the barb **2805** extends, may be about 60°±5°. A height RR of each barb **2805** may be about 0.10±0.03 mm, and a spacing SS between a barb **2805** and a cut for an adjacent barb **2805**, as shown in FIG. **29**A, may be about 2±0.1 mm. As noted above, FIG. **29**B is an image of tissue ends held in place relative to one another with a plurality of barbed sutures **2800**, as in FIGS. **28** and **29**A, attached thereto. As shown, a plurality of the barbed sutures **2800** extend longitudinally, parallel to an axis of the tissue ends. Barbs **2805** of the barbed sutures **2800** engage with surfaces of the tissue ends, such that the tissue ends are held together. The gap NN extending between the sections of barbs **2805** may be positioned relative to the tissue ends so as to extend over the terminal ends of the tissues being held together. The first set of barbs may engage the first tissue, and the second set of barbs may engage the second tissue, so that the bi-directional nature of the barbed suture holds the two tissue portions in place relative to one another.

[0136] Although transected tissue ends are discussed in reference to FIG. **29**B, the tissue repair devices of this embodiment may be applied to injured tissues of any type, whether fully transected or not, e.g., for protection or to allow the underlying tissue to heal, or simply to secure tissue for any other suitable reason, unrelated to healing. For example, instead of two tissue ends being brought together, embodiments of the disclosure may wrap around or otherwise cover a portion of tissue that is intact, to promote repair or to otherwise protect the underlying tissue.

[0137] As described above, in some aspects, barbed sutures of the present disclosure may have barbs that are positioned in more than one plane, for example, two planes, three planes, four planes, or more. FIG. **30** is a schematic view of an example dual plane barbed suture **3000** having a number of barbs **3005** on a surface thereof, the barbs **3005** extending in two planes. FIG. **31** depicts a detail view of three adjacent barbs **3005** in one plane and three adjacent barbs **3005** in another plane, and FIG. **32** depicts a cross-sectional view of the barbed suture **3000**, with one barb **3005** extending in one plane and another barb **3005** extending in another plane. In the embodiment shown in FIGS. **30** to **32**, the barbed suture **3000** may be a size 3-0 suture, having a diameter in a range of about 0.300 mm to about 0.339 mm. In other aspects, barbed suture **3000** may be a size 5-0 gauge suture, a size 4-0 gauge suture, a size 3-0 gauge suture, or other suitable thickness, having a diameter in a range of about 0.100 to about 0.339, about 0.100 to about 0.249 mm, or about 0.150 mm to about 0.199 mm. The barbs **3005** may be arranged with a first set of barbs **3005** on a left side of the barbed suture **3000**, shown in FIG. **30**, all facing a central region **3010** of the barbed suture **3000**, and a second set of barbs **3005** on a right side of the barbed suture **3000**, all facing the central region **3010** of the barbed suture **3000**. That is, the barbs **3005** may be provided in a bidirectional arrangement. Each of the first set of barbs **3005** and the second set of barbs **3005** spans a length TT. In this example, the length TT may be about 15.0±0.5 mm. A gap UU may extend between the first set of barbs **3005** and the second set of barbs **3005**. In this example, the gap UU may have a length of about 5.0±0.5 mm. An overall length VV of the barbed suture **3000** may be about 75.0±1.0 mm, although the exact length may depend, e.g., on the intended use of the barbed suture **3000**. In some aspects, the barbed suture **3000** may also include end portions free from barbs **3005**, with a length WW of the end portions being about 20.0±1.0 mm, if included. With reference to FIG. **31**, an angle XX between an axis along which a barb **3005** extends and a longitudinal axis, along which the cut, forming the barb **3005** extends, may be about 60°±5°. A height YY of each barb **3005** may be about 0.30±0.03 mm, and a spacing ZZ between a barb **3005** and a cut for an adjacent barb **3005**, as shown in FIG. **31**, may be about 0.900±0.1 mm. FIG. **32** shows a cross-sectional view, taken along line **32-32** in FIG. **30**, of the barbed suture **3000**, with one barb **3005** extending in a first direction (e.g., an upward direction in FIG. **32**), and another barb **3005** extending in a second direction (e.g., a left direction in FIG. **32**). An angle AAA between these two barbs **3005** may be roughly perpendicular to one another, for example, about 90°±5°. FIGS. **33** and **34** are images of another example of a barbed suture **3000**, with barbs oriented in two planes.

[0138] Although the descriptions of exemplary barbed sutures include ranges of dimensions, e.g., barb height, the length of different portions or of the overall barbed suture, diameter, the relative angles between barbs, etc., it should be understood that the specific dimensions included herein as examples are not limiting, and other dimensions may be used. The dimensions of any individual barbed suture may depend, at least in part, on the materials used, the intended use of the barbed suture, etc.

[0139] To optimize the ability of barbs and, therefore, the ability of a barbed suture to engage with and penetrate a tissue or a portion of a tissue, such as an epineurium of a nerve tissue, and therefore, to optimize coaptation strength of tissue being repaired or coapted using the barbed suture, while inhibiting damage to the tissue, certain parameters are considered, including one or more of a number of barbs, barb height, barb spacing (that is, a distance between barbs or a distance between a barb and a cut with which an adjacent barb is formed), plane(s) in which the barbs extend both in terms of direction and number, a shape of a tip of each barb, a sharpness of the tip of each barb, and an angle between a surface of the barb facing the barbed suture and the adjacent surface of the barbed suture (also referred to as a contact angle of the barb). In an embodiment in which barbs are formed by cutting into a surface of a suture, a cutting angle used to form the barbs and a cutting depth (that is, a distance along a length of the surface of the suture which is cut to form the barb) to form each barb may be considered as parameters for optimization as well. In other

embodiments in which laser cutting or injection molding is used to form barbs, such as barbs with custom-shaped tips or microhooks, these parameters are also considered.

[0140] FIG. **35** is a schematic drawing of a barbed suture **3500** with two adjacent barbs **3505**, formed using mechanical cutting with a blade (unshown). In some embodiments, laser cutting or compression molding may be used to form the barbs **3505**. In particular, FIG. **35** depicts a cutting angle **3510** and a cutting depth **3515** for barbs **3505**. As an example, the cutting angle may be about 45°, and the cutting depth may be about 0.75 mm. FIG. **36** is a schematic drawing of a barbed suture **3600**, with two adjacent barbs **3605**, formed using injection micro molding to form microhooks as barbs **3605**. In particular, FIG. **36** depicts an angle of contact **3610**, a shape of the barbs, a distance **3615** between adjacent barbs **3605**, and a height of a barb **3605** from a surface of the suture **3600**.

III. Method of Forming a Barbed Suture

[0141] FIG. **37** depicts a flowchart of a method **3700** of forming a barbed suture according to one or more embodiments. The method **3700** may be used to form a suture having at least one barb, according to any one of the embodiments described above. The method **3700** may include a step **3705** of providing a suture, and a step **3710** of forming one or more barbs on the suture. The step **3710** of forming the one or more barbs may be a step of mechanically cutting the suture to form the one or more barbs. The step **3710** may alternatively be a step of laser cutting the suture to form the one or more barbs. Alternatively, the step **3710** may be a step of injection molding one or more barbs by placing the suture in a mold and injecting a material to form the barbs, or by injection molding barbs and affixing them to a suture. In general, the barbs of the barbed sutures described herein may be formed in any suitable manner, such as cutting with a blade or other instrument, laser cutting, injection molding, etc.

[0142] FIG. **38** depicts a flowchart of a method **3800** of forming a barbed suture according to one or more embodiments. The method **3800** may be used to form a suture having at least one bi-directional barb, according to any one of the embodiments described above. The method **3800** includes step **3805** of making a first cut into a body of a suture to form a first projection. The first projection may be oriented in a first direction. The first cut does not extend fully through the body of the suture. The method **3800** also includes a step **3810** of making a second cut into the body of the suture to form a second projection, oriented in a second direction. The second cut does not extend fully through the body of the suture. The first direction is different from the second direction. In particular, the first direction may be substantially opposite to the second direction. Alternatively, the first direction may be at an angle relative to the second direction. The first cut and the second cut may be at the same or different angles, or at the same or different depths into the body of the suture.

[0143] Although the method **3800** may include the steps **3805** and **3810** described above, the method **3800** may include additional steps. For example, the method **3800** may include a step of twisting the body of the suture prior to making the first cut into the body. The body of the suture may be twisted a predetermined number of turns (a turn representing 360° of rotation) per a length of the suture. In some aspects, the body of the suture may be twisted up to 10 turns per one linear inch, up to about 5 turns per one linear inch, less than about 1 turn per one linear inch, from about 1 to about 10 turns per one linear inch, from about 4 to about 8 turns per one linear inch, from about 1 to about 5 turns per one linear inch, or from 5 to about 10 turns per one linear inch. As an example, in the embodiment shown in FIG. **21**, the body of the suture may be twisted 5.7 turns per one linear inch prior to forming the barbs in the body of the suture. Alternatively, the body of the suture may remain untwisted (i.e., unturned) prior to steps **3805** and **3810**. Further, steps **3815** and **3810** may be performed on one side of the body of the suture, so that barbs are formed on only one side of the body of the suture. In some aspects, the steps **3805** and **3810** may be performed repeatedly to form any number of barbs on the suture, in any one of the arrangements described above or shown in FIGS. **3** to **36**.

[0144] Further, although only two steps and thus two cuts are described in reference to FIG. **38**, additional steps may be included in the method **3800** for making additional cuts. For example, an additional step may be included for making a third cut in the body of the suture to form a third projection of the barb oriented in a third direction.

[0145] Once formed, the barbed suture may be used alone to affix portions of tissue to one another, or to affix two different tissues to one another, or to affix one or more devices to tissue, for example. An example of this is depicted and described in reference to FIG. **29**B. Alternatively, the barbed sutures described herein may be used to form a tissue engaging portion of a larger tissue repair device, such as a mesh, as will be described below in further detail.

IV. Barbed Tissue Repair Devices

[0146] FIGS. **39** to **118** show various embodiments of barbed tissue repair devices and components thereof. Example barbed tissue repair devices may include one or more of barbed sutures, meshes, base membranes, etc., as will be described further herein. In each of these embodiments, the barbed devices may include one or more of the barbed sutures described with respect to FIGS. **1** to **36**, or may include alternative barb formations, as will be described below. In some instances, traditional barbs may be used with the barbed devices described with reference to FIGS. **39** to **118**.

[0147] In addition, in each of these embodiments, components of the barbed devices, e.g., including the barbed sutures, meshes, and base membranes, may be formed of a material, such as a resorbable polymer, or another polymer, e.g., polyester, polydioxanone (e.g., poly-p-dioxanone), poliglecaprone (such as poliglecaprone 25 sold under the tradename Monocryl®), polyglytone (such as polyglytone 6211 sold under the tradename Caprosyn®), catgut, collagen, polyglycolide, polylactide (e.g., poly-L-lactide), polydroxyalkanoates, or one or more other suitable materials, and, in some aspects, one or more of the barbed suture, meshes, or base membranes may be absorbable. In other aspects, the barbed devices may be formed of a biodegradable metal or metal alloys, e.g., biodegradable magnesium, zinc, or iron, or alloys of thereof.

A. Base Membrane

[0148] FIG. **39** is a schematic depiction of a base membrane **3900**, which may be used in combination with barbs, meshes, barbed sutures, or barbed devices formed of barbed

sutures, to form a tissue repair device according to any of the embodiments described herein. The base membrane **3900** may be referred to as a wrap, a film, or a sheet of film. As an example, the base membrane **3900** may have barbs attached to a surface thereof, or the base membrane **3900** may have one or more barbed sutures or a barbed device attached thereto. As another example, the base membrane **3900** may be applied over or wrapped around a barbed device. Alternatively, the base membrane **3900** may be applied over portions of tissue, and then a barbed device may be applied over or wrapped around the underlying base membrane **3900**. In some aspects, ends of the base membrane **3900** may be secured after being applied over or wrapped around barbed sutures or a barbed device, for example, using a suture, and/or an adhesive. In some aspects, use of the base membrane **3900** may provide additional protection for the tissues being repaired, may act as a barrier to prevent the barbed sutures or the barbed device from rubbing on surrounding structures, or may be used to deliver one or more drugs or chemicals to the tissue repair site. If the tissue being repaired is a nerve tissue, then the presence of the base membrane **3900** may inhibit axonal escape as axons regrow from the nerve tissue.

[0149] The base membrane **3900** may be formed of any suitable biocompatible material for use in a tissue repair procedure. The base membrane **3900** may be formed of a natural material, a synthetic material, or a combination thereof. The natural material may be extracellular matrix (ECM) material, such as small intestine submucosa (SIS), for example, or more specifically, porcine SIS, amnion-based tissue (e.g., amniotic/chorionic membrane or amnion), dermis, decellularized fascia, reconstituted denatured collagen, elastin, thrombin, fibronectin, starches, poly(amino acid), gelatin, alginate, pectin, fibrin, oxidized cellulose, chitin, chitosan, tropoelastin, hyaluronic acid, fibrin-based materials, collagen-based materials, hyaluronic acid-based materials, glycoprotein-based materials, cellulose-based materials, silks, and combinations thereof. The natural material may be obtained from a human source or an animal source, and may be autogenic, allogenic, or xenogenic with respect to a subject into which a tissue repair device, including the base membrane **3900**, is implanted or placed. The synthetic material may be one or more of a resorbable polymer, homopolymers, copolymers, and/or polymeric blends including one or more of the following monomers: glycolide, lactide, caprolactone (including ε-caprolactone), dioxanone (including p-dioxanone), trimethylene carbonate, monomers of cellulose derivatives, and monomers that polymerize to form polyesters. The polymers may include polydioxanone (PDS), polycaprolactone (PCL), polytrimethylene carbonate, polyglycolide (PGL), poly-3-hydroxybutyrate (PHB), poly(3-hydroxybutyrate-co-3-hydroxyvalerate) (PHBV), poly(propylene carbonate) (PPC), poly (butylene succinate) (PBS), poly(propylene fumarate) (PPF), polydroxyalkanoates, or one or more other suitable materials.

[0150] The base membrane **3900** may be configured to remodel into host tissue(s) (that is, the tissue(s) on which the tissue repair device having the base membrane **3900** is implanted), and may not leave permanent components, or significant amounts of permanent components, behind. That is, the base membrane **3900** may partially or fully remodel into host tissue(s). The base membrane **3900** may provide circumferential coverage of a tissue repair site, such as a grafting site or a coaptation site, once applied, in an instance in which tubular-shaped tissues are the intended site of application (e.g., nerves, blood vessels, etc.). The base membrane **3900** may protect a covered region of the tissue once applied, and, if used in the case of tissue transection, may protect the coaptation site from an injured tissue bed.

[0151] The base membrane **3900** may be formed of a different material than the material that forms the barbs, barbed sutures, or other components of a barbed device, and thus, the base membrane **3900** may have different mechanical properties from said barbs, barbed sutures, or other components of the barbed device. For example, the base membrane **3900** may be more flexible, whereas the barbs, barbed sutures, or barbed device may be relatively more rigid in order to extend into and engage with the tissue. In some aspects, the base membrane **3900** may be configured to resorb at a different speed (e.g., faster or slower) compared to the barbs, the barbed sutures, or the barbed device, or the base membrane **3900** may be designed to resorb at a similar speed compared to the other components.

[0152] In some embodiments, the base membrane **3900** may also include a protector or a coating **3905** on one or both surfaces thereof. The coating **3905** may include, for example, one or more of hyaluronic acid, alginate, antibiotics, lubricant, growth-enhancing drugs, growth inhibiting drugs, anti-inflammatory drugs, pain-reducing or anesthetic drugs, or other suitable chemical compounds. Surfaces of the base membrane **3900** may be textured, as shown in FIG. **39**, smooth, or a combination thereof. A shape and a size of the base membrane **3900** may depend, at least in part, on a shape and size of a tissue to be repaired using the base membrane **3900**, or a shape and size of the barbed device the base membrane **3900** is a component of or is to be used with. In a case in which a barbed device is used with the base membrane **3900**, the shape and size of the base membrane **3900** may generally correspond to the shape and the size of the barbed device. However, one or both of the size and shape of the base membrane **3900** may differ from that of the barbed device. For example, in one or more embodiments, the base membrane **3900** may be sized to be larger than the barbed device in width and length, so that the base membrane **3900** covers a non-barbed side of barbed device.

B. Attachment of Barbs, Barbed Sutures, Meshes, etc., to a Base Membrane to form a Barbed Device

a. Attachment Using Adhesive or Glues

[0153] One or more barbs, barbed sutures, or meshes may be attached to the base membrane in any suitable manner. For example, the barbs, barbed sutures, or meshes may be attached to the base membrane using a glue or an adhesive. In some aspects, the glue or adhesive may be applied only between the base membrane and the barbs, barbed sutures, or meshes, with minimal to no spilling of the glue or adhesive elsewhere on the base membrane. The glue or adhesive may be applied by one or more of painting, fluid dispensing, spraying, pipetting, jet printing, or three-dimensional (3D) printing. The glue or adhesive may be first applied to the base membrane, and then the barb, barbed sutures, or meshes may be placed onto the glue on the base membrane. Additionally or alternatively, the glue may be applied to a surface of the barbs, barbed sutures, or meshes configured to attach to the base membrane, and then the barbs, barbed sutures, or meshes may be placed onto the base membrane. In some aspects, the barbs, barbed sutures, or meshes may have a notch or an indent on a bottom surface

thereof, and the glue or adhesive may be applied in the notch, and then the barbs, barbed sutures, or meshes may be placed onto the base membrane. The notches may serve to contain the adhesive or glue and to inhibit oozing of the glue or adhesive outside of a footprint of the barbs, barbed sutures, or meshes. In some aspects, individual barbs may be formed and then applied individually, either one by one or a few at a time. In other aspects, barbs may be formed on linear constructs, as shown in FIG. **40**, that could be applied to the base membrane, to affix multiple barbs at one time. These barbed constructs may be shorter or less flexible than barbed sutures, but may serve a similar function and may have arrangements of barbs similar to as described above in reference to barbed sutures.

[0154] According to some embodiments of the present disclosure, adhesive may be a polymer adhesive, and the polymer adhesive may be biocompatible, i.e., it may be safe to use in humans or animals. The polymer adhesive may be biodegradable, i.e., the polymer may completely or partially degrade over time and may not leave significant permanent material behind. The polymer adhesive may be suitable for clinical adaptation.

[0155] Many polymers have a long history of safe use in different clinical products (e.g., sutures), and thus may be appropriate for use in the disclosed embodiments. In some aspects, the polymer adhesive may have a tunable degradation rate, i.e., the polymer composition may be modified to optimize the degradation rate in line with one or more of the tissue type to which the tissue repair device is intended to be applied to, or the intended use of the tissue repair device. In some examples, the polymer adhesive may be used in potential applications for controlled, sustained, and localized delivery of drugs/therapeutics. In such embodiments, the polymer adhesive selected may further be used to act as a drug delivery device.

[0156] In some aspects, glues or adhesives may be used with crosslinking agents, such as one or more of polysaccharides, such as methacrylated gelatin (Gel-MA), methacrylated hyaluronic acid (MA-HA), and glycidyl methcrylated hyaluronic acid (GM-HA, which could also function as adhesives.

[0157] According to some aspects, the polymer adhesive may be polycaprolactone (PCL), poly(ε-caprolactone-co-lactide) (PLCA), polyhydroxyyalkanoates (PHAs), or polylactic-co-glycolic acid (PLGA). PLGA, a synthetic copolymer of polylactic acid (PLA) and polyglycolic acid (PGA), may be suitable for use in clinical applications due to its biodegradability and biocompatibility. This copolymer is soluble in organic solvents such as acetone, dichloromethane (DCM), chloroform, ethyl acetate, dimethyl sulfoxide (DMSO), and tetrahydrofuran.

[0158] Although PLGA is soluble in organic solvents, it biodegrades via hydrolysis of its ester linkages in the presence of water. This biodegradation is a gradual process that may be optimized by adjusting parameters, such as polymer molecular weight and the ratio of lactide to glycolide monomers to achieve the desired degradation rate.

[0159] According to some aspects of the present disclosure, a solution of PLGA may be prepared using organic solvents, such as DCM and acetone. After dissolving the PLGA in the solvent, the solution may be used as an adhesive to attach the barbs, barbed sutures, or mesh to the base membrane, for example, an SIS-membrane, forming a tissue repair device. The tissue repair device may air dry to allow the solvent (e.g., DCM or acetone) to evaporate, resulting in the barbs, barbed sutures, or barbed devices being securely glued to the base membrane. In some aspects, the tissue repair device may be left to dry for one or more hours, e.g., approximately 1 hour, approximately 2 hours, approximately 3 hours, approximately 4 hours, from approximately 30 minutes to approximately 4 hours, from approximately 30 minutes to approximately 3 hours, from approximately 30 minutes to approximately 2 hours, from approximately 1 hour to approximately 2 hours, etc.

[0160] FIG. **40** shows a detail schematic side view of base membrane **4000**, a barbed structure **4005**, such as a portion of a barbed suture or a barbed construct, and a layer of a polymer **4010**, as a glue or an adhesive, therebetween. The layer of polymer **4010** may be referred to as a polymer interface and may attach the barbed structure **4005** to the base membrane **4000**. The base membrane **4000** may be formed of any of the materials described above. The barbed structure **4005** may be a micro-molded barbed construct, as shown in FIG. **40**, or it may be a single barb, a barbed suture, or any other barbed component described herein. The polymer **4010** may be any of the polymers described above for use as an adhesive, and as an example, may be formed of PLGA dissolved in a solvent. In such an example, the polymer **4010** may bond the barbed structure **4005** to the base membrane **4000** once the solvent evaporates.

[0161] Preliminary testing of the method of making a tissue repair device as described above was performed using a solution of PLGA with organic solvents, such as DCM and acetone. After dissolving the PLGA, the solution was used as an adhesive to attach barbed sutures to a base membrane. The tissue repair device was then left to air dry for approximately two hours. The barbed sutures to the SIS base membrane once the solvent evaporated. The adherence of barbed sutures to the SIS base membrane was tested by submerging the barbed sutures and the SIS base membrane in a saline solution and examining the adhesivity by vigorous movement over time. FIGS. **41** and **42** are images showing the barbed sutures adhered to a base membrane during the testing process. At T=0 days, in FIG. **41**, the base membrane **4100** is shown with the side on which the barbed sutures **4105** are adhered facing downward in the direction of gravity. At T=14 days, following 2 weeks of continuous hydration, in FIG. **42**, the base membrane **4200** is shown with the side on which the barbed sutures **4205** are adhered facing to the left of the image. These images demonstrate the slow hydrolysis of PLGA, making it a suitable biocompatible adhesive for in vivo applications, such as tissue repair, such as nerve coaptation.

[0162] Although PLGA was tested in the initial prototypes, other biodegradable polymers that are soluble in organic solvents and are slowly hydrolyzed in water can be used in place of PLGA as the polymer adhesive. A non-exhaustive list of examples includes: Polycaprolactone (PCL), Poly(lactic acid) (PLA), Polyglycolic acid (PGA), Poly(ε-caprolactone-co-lactide) (PCLA), Polyhydroxyalkanoates (PHAs), etc. In addition, different forms of PLGA can be obtained by altering the ratio of lactide to glycolide used during polymerization. These forms are typically identified by the molar ratio of the monomers used (e.g., PLGA 75:25 denotes a copolymer consisting of 75% lactic acid and 25% glycolic acid). The composition of PLGA monomers determines its solubility rate. Polymers with higher lactide

content are usually dissolved in chlorinated solvents, while those with higher glycolide content may be dissolved in fluorinated solvents.

[0163] In addition, commonly used kitchen ingredients can also serve as the polymer adhesives. These natural adhesives are easy to make and are non-toxic in nature. For instance, starch paste, gelatin, honey, molasses, rice paste, sugar syrup, etc., may be used.

b. Attachment Using Thermal Bonding

[0164] As an alternative, thermal bonding may be used to attach barbs, barbed sutures, or meshes to a base membrane. Specific examples of thermal bonding include spot welding, applying ultrasonic heat, or otherwise applying energy to melt and entangle the barbs, barbed sutures, or meshes, or portions thereof, into the base membrane. That is, the barbed components may be attached using heat, such as by melting the barbed components at specific locations on the base membrane, as the barbed components lay atop the base membrane. FIG. **43** shows a base membrane **4300** with a barbed structure **4305** on top of the base membrane **4300**. A spot welding probe **4310** is also shown. FIG. **44** is a detail view of an interface between the thermally bonded barbed structure **4305** and the base membrane **4300**. FIG. **45** is a detail view of an alternative interface between the thermally bonded structure **4305** and the base membrane **4300**.

c. Attachment Using Weaving or Sewing

[0165] As another alternative, barbed components, such as barbed sutures, may be attached to the base membrane by weaving or sewing the barbed sutures into or through the base membrane. FIG. **46** shows one embodiment in which barbed sutures **4605** are woven through a base membrane **4600**. One or more barbed suture **4605** may have barbed portions **4610**, having barbs **4615** thereon, and a non-barbed portion **4620** in a central region of the barbed suture **4605**. The non-barbed portion **4620** may be woven through the base membrane, with the barbed portions **4610** extending out from sides of the base membrane **4600**, as shown. Alternatively, although not shown, barbs **4615** may extend along the entire length of the barbed suture **4605**, and the barbed portion **4620** may be woven through the base membrane **4600**. The weaving of one or more barbed sutures **4605** in this manner may form a permanent attachment between the base membrane **4600** and the barbed sutures **4605**.

[0166] FIG. **47** shows another embodiment in which barbed sutures **4705** are sewn in place on a base membrane **4700**. In one aspect, the barbed sutures **4705** may be sewn by passing through holes **4710** in the base membrane **4700**. The holes **4710** may be evenly spaced along the base membrane **4700**, as shown. In other embodiments, the holes **4710** may be non-evenly spaced along the base membrane **4700**. As with the embodiment shown in FIG. **46**, each barbed suture **4705** may have barbed portions **4715**, having barbs **4720** thereon, and a non-barbed portion **4725** in a center of the barbed suture **4705**, or may have barbs **4720** extending along the entire length. In this embodiment, both the barbed portions **4715** and the non-barbed portions **4725** of the barbed sutures **4705** are on the base membrane **4700**. The sewing of the barbed sutures **4705** in this manner may form a permanent attachment between the base membrane **4700** and the barbed sutures **4705**.

[0167] In other aspects, holes **4710** may be replaced with stitches **4710**, and one or more barbed sutures **4705** may be placed on a surface of the base membrane **4700** and then stitched in place on top of a surface of the base membrane **4700** such that the barbs **4720** extend away from the base membrane.

[0168] In some embodiments, the barbed sutures may be attached to the base membrane by forming cuts or notches, such as J-shaped cuts or S-shaped cuts, and inserting or hooking barbed sutures into the cuts. FIG. **48** depicts a base membrane **4800** with barbed sutures **4805** attached using cuts or hooks **4810** in the base membrane **4800**. The cuts **4810** may be located along one or more edges of the base membrane **4800**, such that the barbed sutures may be inserted or hooked through the cuts **4810** and thereby attached to the base membrane **4800**. In some aspects, each cut **4810** may be formed on an opposite edge to another cut **4810**, as shown. Each barbed suture **4805** may have barbed portions **4815**, having barbs **4820**, and a non-barbed portion **4825** in a central region of the barbed suture. The barbed suture **4805** may be hooked into the base membrane **4800** such that the non-barbed portion **4825** overlaps with the base membrane **4800**, and the barbed portions **4815** extend out from sides of the base membrane **4800**, as shown. In other aspects, barbs **4820** may extend an entire length of barbed suture **4805** and may overlay the base membrane **4800**. The hooking of the barbed sutures **4805** in this manner may form a non-permanent attachment between the base membrane **4800** and the barbed sutures **4805**. That is, with this configuration, the barbed sutures **4805** may be removably attached to the base membrane **4800**.

[0169] In other embodiments, the barbed sutures may be attached to the base membrane by forming small holes or cuts in the base membrane, threading the barbed sutures through the holes, and tying knots in the ends of the barbed sutures once threaded through the holes. FIG. **49** depicts a base membrane **4900** having holes **4910**, with barbed sutures **4905** attached by being threaded through the holes **4910** in the base membrane **4900**. The holes **4910** may be located along one or more edges of the base membrane **4900**, such that the barbed sutures **4905** may be inserted through the holes **4910**. In some aspects, each hole **4910** may be located on opposite edges relative to another hole **4910**, as shown. Each barbed suture **4905** may have barbed portions **4915**, having barbs **4920**, and a non-barbed portion **4925** in a central region of the barbed suture. The barbed suture **4905** may be attached to the base membrane **4900** such that both the barbed portions **4915** and the non-barbed portion **4925** overlap with the base membrane **4900**. In other aspects, barbs **4920** may extend an entire length of barbed suture **4905** and may overlay the base membrane **4900**.

[0170] FIG. **50** shows a back side of the base membrane **4900** and the ends **5000** of barbed sutures **4905** shown in FIG. **49** passed through the holes **4910** and tied in knots. The tying of the ends **5000** of the barbed sutures **4905** in knots may form a permanent attachment between the base membrane **4900** and the barbed sutures **4905**. In some embodiments, a glue or an adhesive, including any of those described above, may be used between the barbed sutures **4905** and the base membrane **4900** to provide additional support and attachment, either instead of, or in addition to, the use of knots to secure the ends **5000** of the barbed sutures **4905**. In some aspects, the ends **5000** may be tied in knots, with or without adhesive, too, and the middle portion of the barbed sutures **4905** may be secured in place with adhesive or stitches.

d. Attachment using Slits Formed in the Barbed Sutures

[0171] As another example, the base membrane may be attached to the barbed sutures by inserting the base membrane into a thin slit or cut that extends through the barbed sutures. FIG. **51** depicts barbed sutures **5105** attached to a base membrane **5100** in this manner. Each barbed suture **5105** may have barbed portions **5110**, having barbs **5115**, and a non-barbed portion **5120** in a central region of the barbed suture **5105**. FIG. **52** is a detail view of a slit **5125** in the non-barbed portion **5120** of the barbed suture **5105** with the base membrane **5100** passing through the slit **5125**. The slit **5125** may have a length and a width that is sufficient for the base membrane **5100** to pass through. With the base membrane **5100** passing through the non-barbed portions **5120** of the barbed sutures **5105**, the base membrane **5100** overlaps with the non-barbed portions **5120**, and the barbed portions **5110** extend out from sides of the base membrane **5100**, as shown in FIG. **51**. In other aspects, barbs **5115** may extend along an entire length of barbed suture **5105**, and a slit **5125** may thus be formed through a barbed region of barbed suture **5105** such that barbs **5115** overlap with the base membrane **5100**. In some aspects, glue or adhesive may be used to maintain the base membrane **5100** within the slit **5125**, while in other aspects, no adhesive or glue may be used.

[0172] FIG. **53** depicts another embodiment in which barbed sutures **5305** are attached to a base membrane **5300** in this manner. Each barbed suture **5305** may have barbed portions **5310**, having barbs **5315**, and a non-barbed portion **5320** in a central region of the barbed suture **5305**. FIG. **54** is a detail view of a slit **5325** passing through both the barbed portions **5310** and the non-barbed portion **5320** of the barbed suture **5305** with the base membrane **5300** passing through the slit **5325**. The slit **5325** may have a length and a width that is sufficient for the base membrane **5300** to pass through. With the base membrane **5300** passing through the barbed portions **5310** and the non-barbed portions **5320** of the barbed sutures **5305**, the base membrane **5300** overlaps with both the barbed portions **5310** and the non-barbed portions **5320**, as shown in FIG. **53**. Alternatively, as described above, barbs **5315** may extend along an entire length of barbed sutures **5305**, or barbs **5315** may not overlap with the base membrane **5300**. In some aspects, glue or adhesive may be used to maintain the base membrane **5300** within the slit **5325**, while in other aspects, no adhesive or glue may be used.

[0173] As still another example, rather than using barbed sutures having a slit formed within the suture body, two barbed sutures, or a barbed suture and a non-barbed suture, may be attached together, leaving a gap between the two sutures. This arrangement may form a slit-like opening through which the base membrane may be passed in a similar manner as the slits described above in reference to FIGS. **51-54**. In one example, the base membrane may be attached to the barbed sutures by attaching two barbed sutures together with glue on their ends and inserting the base membrane through an opening formed between the attached barbed sutures.

e. Attachment Using Sandwiching of Base Membranes

[0174] In another example, the base membrane may be attached to the barbed sutures or other barbed components by sandwiching barbed sutures or other barbed components between multiple layers of base membrane material. FIG. **55** depicts barbed sutures **5505** attached to layers of base membrane **5500** in this manner. Each barbed suture **5505** may have barbed portions **5510**, having barbs **5515**, and a non-barbed portion **5520** in a central region of the barbed suture **5505**. Alternatively, barbs **5515** may extend an entire length of barbed suture **5505**. FIG. **56** depicts a layer of base membrane **5500** having openings **5525** extending through the base membrane **5500**. The openings **5525** may be arranged on the base membrane **5500** in a pattern and may be spaced from one another in an arrangement that compliments the arrangement of the barbed sutures **5505** on the other layer of base membrane **5500**. Once barbed sutures **5505** are placed on a first or base layer of base membrane **5500**, a second or top layer of base membrane **5500** may be placed on top of the barbed sutures, sandwiching the barbed sutures **5505** between the layers of base membrane **5500** while allowing barbs **5515** to extend through the openings **5525** formed in the top layer of base membrane **5500**, as shown in FIGS. **55** and **56**. The layers of base membrane **5500** may be attached or secured together using any one of the glues or adhesives described above, or in any other suitable manner. For example, they may be sewn together, welded, or dehydrated to adhere the layers of base membrane to one another.

f. Attachment Using Etching

[0175] As still a further example, the barbed sutures may be attached to the base membrane using etching, in which the barbed sutures are arranged in a desired orientation in a container, and a material that forms the base membrane (e.g., a resorbable polymer, or any of the other materials listed above as being used to form the base membrane) is cast around the barbed sutures arranged in the container, such that the barbed sutures are completely covered in the material. Then, the material may be selectively etched to expose the barbed sutures, on at least one end, and another end of the material may be sliced to cut a thin film, thereby forming a tissue repair device, with the barbed sutures embedded within the base membrane.

C. Arrangement of Barbed Sutures on Base Membrane

[0176] In embodiments in which barbed sutures or other barbed components are attached to one or more layers of base membrane, factors including the size of the barbed components in terms of length and diameter, the spacing of barbed components relative to each other on the base membrane, the location of the barbed components on the base membrane, a length and a width of the base membrane, and a number of barbed components on the base membrane may be varied depending on the intended use and function of the tissue repair device. One or more of these factors may depend, at least in part, on the type or size of tissue to which the tissue repair device is to be applied, or the procedure for which the tissue repair device is to be used.

[0177] FIG. **57** is a schematic cross-sectional view of a barbed component, in this case, a barbed suture **5705**, on a base membrane **5700**. The barbed suture **5705** has a circular cross-sectional shape, as shown. Although a circular cross-sectional shape may be suitable for use with the tissue repair devices described herein, a circular cross-sectional shape may result in tipping or rolling of the barbed suture **5705** on the base membrane **5700**. In order to engage the tissue to which the tissue repair device is to be applied, ideally the barbs of the barbed suture **5705** face out away from the base membrane **5700**, e.g., approximately perpendicular to the base membrane **5700** or at an angle. However, rolling or

tipping of the barbed suture **5705** may result in barbs on the barbed suture **5705** not facing away from the base membrane **5700**, e.g., facing parallel to the base membrane **5700**, towards the base membrane **5700**, or at a lesser angle than otherwise intended.

[0178] To inhibit rolling or tipping of a barbed component on the base membrane **5700**, the barbed component may be formed having a substantially flat side or surface along which it is attached to the base membrane. A flat surface may also facilitate attachment of the barbed suture **5805** to the base membrane **5800**, by inhibiting movement rolling during the attachment process (such as those described above). For example, a flat surface may make it easier to sew or weave the barbed suture **5805** in place, by providing a flat surface for applying glue, etc. For example, FIG. **58**A is a schematic cross-sectional view of a barbed suture **5805** on a base membrane **5800**. The barbed suture **5805** has a triangular cross-sectional shape, as shown, which provides a flat surface for to prevent tipping or rolling of the barbed suture **5805**. Similar to barbed suture **5805**, other triangular-shaped barbed components, such as triangular shaped barbs or barbed constructs, may be used.

[0179] FIG. **58**B is an image of cross-sections of multi-lobed, e.g., trilobal, barbed sutures. Diameters BBB, CCC, and DDD of circles defined by lobes of the multi-lobed barbed sutures shown in FIG. **58**B may be, for example, about 148.7 μm, about 142.0 μm, or about 150.8 μm. Although the trilobal barbed sutures may not have a flat surface, the lobes may similarly inhibit tipping or rolling of a barbed suture. In some aspects, the multi-lobed, e.g., trilobal, cross-sectional shape may also facilitate attachment of the barbed suture to the base membrane as described above, or may additional provide an indent or ridge into which glue or adhesive may be applied. Other multi-lobed, e.g., trilobal, barbed components, such as trilobal shaped barbs or barbed components, may be used.

[0180] FIG. **59** is a schematic end view of a barbed suture **5905** on a base membrane **5900**. The barbed suture **5905** has a rectangular cross-sectional shape, as shown, which also provides a flat surface for ease of attachment to the base membrane and which serves to inhibit tipping or rolling of the barbed suture **5905**. The barbed sutures shown in FIGS. **58**A, **58**B, and **59** further may provide relatively sharp barbs, e.g., when the barbs are formed using cutting for example, as compared to barbs formed on a circular-shaped barbed suture. A cut formed along a corner of a triangular suture may be more pointed than a cut formed along a portion of a rounded suture. Similarly, other trilobal barbed components, such as triangular shaped barbs or barbed constructs, may be used.

[0181] FIGS. **60**, **61**A, and **61**B are images of different examples of tissue repair devices having barbed sutures attached to base membranes. A measuring ruler is included in these figures for reference to demonstrate spacing that is relatively closer together or spaced apart. The specific measurements shown in respect to these prototypes, however, should not be interpreted as limiting, and any suitable spacing may be used, depending on the intended use of the tissue repair device, manufacturing constraints, etc. In particular, as denoted in regards to the image of FIG. **61**A, tissue repair devices having barbed sutures with larger diameters are depicted on the left side of the figure, and tissue repair devices having smaller diameters are depicted on the right side of the figure. Low density indicates barbed sutures being arranged with a relatively larger spacing therebetween, and high density indicates barbed sutures being arranged with a relatively smaller spacing therebetween. Some of the tissue repair devices shown have barbed sutures with relatively short lengths, which may be useful, for example, in tight anatomical spaces. In some embodiments, the barbed sutures extend longitudinally along a length of the tissue repair device, while in other embodiments, the barbed sutures extend substantially perpendicular to the length of the tissue repair device. Further, barbed sutures may be arranged to provide a space in a central region of a base membrane that is free from barbs or barbed sutures, as shown in the examples in FIGS. **60**, **61**A, and **61**B. This may be achieved by arranging the barbed sutures in two columns, with each column including aligned barbed sutures. Alternatively, this may be achieved by using barbed sutures that include a non-barbed portion in a central region.

[0182] The examples shown in FIGS. **60**, **61**A, and **61**B may have a single layer of base membrane, or more than one layer, such as two layers, three layers, four, or five layers or more.

[0183] As depicted in the figures, barbed components, such as barbed sutures, may be spaced along the entire base membrane, as in FIG. **61**A, or may be clustered in one or more regions of the base membrane, as in FIGS. **60** and **61**B. In some aspects, the positioning of barbed components on the base membrane may effect, e.g., how the tissue repair device is applied to the underlying tissue during use, as is described further below.

[0184] In embodiments in which barbed components, such as barbed sutures, are included along the entire base membrane, the tissue repair device may engage the underlying tissue wherever it is applied to the tissue. For example, if the underlying tissue is tubular, as in the case with a nerve, then the first portion of the tissue repair device may engage the underlying tissue, and subsequent portions of the tissue repair device may also engage the underlying tissue. The last portion of the tissue repair device applied to the tissue may be held in place by the barbed components located there, or may additionally be held in place by a suture, adhesive, a gel, or other securing mechanism, or by capillary action. If the underlying tissue is tubular, as in the case with a nerve, then the first portion of the tissue repair device may engage the underlying tissue, and subsequent portions of the tissue repair device may not engage the underlying tissue.

[0185] In embodiments in which barbed components, such as barbed sutures, are positioned along less than the entire base membrane, e.g., along about ⅔ of the base membrane, along about ¾ of the base membrane, along about half of the base membrane, along less than half of the base membrane, or along about ⅓ of the base membrane, along about ¼ of the base membrane, etc., only the first portion or only the last portion of the base membrane may engage the underlying tissue. The last portion of the tissue repair device applied to the tissue may be held in place by a suture, adhesive, a gel, or other securing mechanism, or by capillary action.

[0186] In some aspects, tissue repair devices may have what will be referred to as one or more 'landing zones,' with landing zones referring to an area of the base membrane on which tissue is to be positioned. FIG. **62** depicts a tissue repair device **6200** having a base membrane **6205** and barbed sutures **6210**, with a landing zone **6215** on which tissue, e.g., two tissue ends, are to be placed. As shown, there may be a relatively higher density of barbed sutures within

the landing zone, with six barbed sutures being located in the landing zone, in sets of three, at a relatively small spacing from each other, and four barbed sutures outside of the landing zone, at a relatively larger spacing from adjacent barbed sutures. FIG. **63** shows another tissue repair device **6300** having a base membrane **6305** and barbed sutures **6310**, with a landing zone **6315** along a left side of the base membrane **6305**. The tissue repair device **6300** may also have additional barbed sutures in an area **6320** adjacent to the landing zone, to provide for engagement of tissue at about 180° from the landing zone, once tissue is wrapped in the tissue repair device **6300**, in the case of use with a tubular tissue. A flap **6325**, or an area of the base membrane **6305** free from barbed sutures, may also be provided for ease of wrapping the tissue and closing the tissue repair device **6300** around the tissue. Excess material may be trimmed from the flap **6325** after wrapping of tissue. Within the landing zones of the embodiments shown in FIGS. **62** and **63**, barbs may be angled to promote engagement with tissue. In one example embodiment, the barbs may be at an angle of about 45° relative to a surface of the base membrane, although angles of about 20° to about 90° may be suitable.

[0187] Clustering barbed components, such as barbed sutures, in a landing zone as is shown in some of the examples in FIG. **61**B and in the embodiments of FIGS. **62** and **63**, may facilitate the attachment of the tissue repair device to the tissue on which it will be positioned. For example, when applying tissue repair devices to small or thin tissues, such as nerves, clustering barbed sutures may make it easier for a user to position the tissue repair device and the tissue relative to one another so that the barbs engage the tissue. One single line of barbed sutures may be harder to position relative to a nerve, or vice versa, but having a higher concentration of barbed sutures in a landing zone may increase the likelihood that at least some of the barbs will engage the tissue.

D. Barbed Mesh

[0188] FIG. **64**A is a schematic view of a tissue repair device **6400**, according to one embodiment, having a barbed mesh **6402**, as a barbed device. The barbed mesh **6402** may be formed of a plurality of barbed sutures **6405**, for example, a plurality of longitudinal and lateral barbed sutures **6405** arranged in a grid pattern. Each barbed suture **6405** may include one or more barbs **6410** extending from a surface of the barbed suture **6405** configured to contact with a tissue. In the embodiment shown in FIG. **64**A, each barbed suture **6405** may include a plurality of barbs **6410**, along a length of the barbed suture **6405**. The barbs **6410** may be evenly spaced along each barbed suture **6405**, or the barbs **6410** may be arranged at varying spacing or randomly.

[0189] Dimensions of the barbed sutures **6405** and the barbed mesh **6402**, may depend, e.g., upon one or both of the type of barb (i.e. the directional arrangement of the barbs, the material of the barbs, the shape of the barbs, the size of the barbs, etc.) used, the intended use (e.g., tissue type or procedure type) of the barbed mesh **6402**, and the targeted anatomical region. Further, the type of barb used may at least in part determine the number of barbs necessary to form adequate attachment of the barbed mesh **6402** to tissue. The targeted anatomical region may at least in part determine the total area of coverage needed and the force of attachment needed for the barbed mesh **6402** to secure to the tissue surface. A spacing between barbed sutures **6405** may be in a range of about 100 microns (which may be, for example, a width of a 10-0 suture) to about 2 cm. A range of a length and/or a width of the barbed mesh **6402** may, in turn, be from about 300 microns to about 10 cm.

[0190] While FIG. **64**A depicts barbs on barbed sutures **6405** extending in both longitudinal and lateral directions, it may be that barbed sutures **6405** are used in only one of the longitudinal or lateral directions, and sutures without barbs may be used in the other direction. In other aspects, not all of the sutures extending in a given direction may have barbs. For example, only sutures extending along a portion (e.g., a half of a tissue repair device **6400**, or along one or more edges of a tissue repair device **6400**) may include barbs, and sutures used in the mesh in other locations may be free of barbs.

[0191] Each barbed suture **6405** may be woven together or overlaid with the other barbed sutures **6405**, or the barbed sutures **6405** may be connected to one another where two or more barbed sutures **6405** intersect, or may be one, uniform mesh instead of woven or overlaid barbed sutures **6405**. In some aspects, the barbed mesh **6402** may be 3D printed, woven from barbed sutures **6405**, or formed in any other suitable manner.

[0192] Although FIG. **64**A shows uni-directional barbs **6410**, in one or more embodiments, the barbs **6410** may be multi-directional. As one specific example, barbs **6410** on one half of the barbed mesh **6402** may point or extend in a first direction, while barbs **6410** on another half of the barbed mesh **6402** may point or extend in a second direction. Further, the barbs **6410** may be multi-directional in that each barb **6410** extends towards or away from a point or a line along the barbed mesh **6402** (e.g., a lateral line, a longitudinal line, or an angled line along the barbed mesh **6402**, including, more specifically, a center line between the two halves of the barbed mesh **6402**). Specifically, in one or more embodiments, barbs **6410** on two "sides" of the barbed mesh **6402**, relative to a central line across the barbed mesh **6402**, may point or extend towards or away from the central line. And, similarly, in one or more embodiments, barbs **6410** may point or extend towards or away from a single point, which may be any point on the barbed mesh **6402**, including a central point (that is, a center of the barbed mesh **6402**).

[0193] Other directional patterns or arrangements of barbs **6410** may also be used, and such arrangements may be configured for attachment of the barbed mesh **6402** to a particular type of surface of a tissue, such as a curved surface, including a convex curved surface, a concave curved surface, a planar or flat surface, a tubular surface, and combinations thereof. In some embodiments, the directional pattern of the barbs **6410** may be random, such that the barbs **6410** of the barbed mesh **6402** randomly entangle the barbed mesh **6402** with any surface topography of a tissue, to thereby hold and fix the tissue.

[0194] In a directional arrangement in which the barbs **6410** point or extend towards a central point, the barbed mesh **6402** may be configured for attachment to a spheroid shaped surface of a tissue. In a directional arrangement in which barbs **6410** point or extend away from a central point, the barbs **6410** may be used to attach the barbed mesh **6402** to a concave curved surface (e.g., an inverse spheroid-shaped tissue surface). In a directional arrangement in which barbs **6410** point or extend towards a line on the barbed

mesh **6402**, such that the barbs **6410** are parallel to each other and converge towards the line, the barbed mesh **6402** may be configured for attachment to cylindrical shaped tissue surfaces, with the line toward which the barbs **6410** face being determined based on the targeted anatomical region or tissue.

[0195] During use, as will be described further below, the tissue repair device **6400** may be wrapped around a tissue or placed on a tissue, or to multiple portions of a tissue, e.g., a transected nerve. The barbs **6410** may hold the barbed mesh **6402** on the tissue and/or may hold tissues in place relative to one another. The holding or fixation of tissue, including nerve tissue or tissue types other than nerve tissue, may be achieved by the uni-directional or multi-directional arrangement of barbs **6410**, as described above. The tissue repair device **6400** may be used by itself, or may be overlaid with a base membrane, as will be described further below.

[0196] In some aspects, the barbed mesh **6402** may be in the form of a sheet, while in other aspects, the barbed mesh **6402** may be pre-formed into a generally cylindrical shape, as shown in the images of FIGS. **64**B and **64**C. That is, the barbed mesh **6402** may be rolled into a cylindrical shape. Then, tissue ends may be inserted into ends of the rolled barbed mesh **6402**, or the barbed mesh **6402** may be unfurled or flexed outward and positioned around the tissue ends, to hold and fix the tissue ends in place relative to one another. Although transected tissue ends are discussed in reference to this embodiment, the tissue repair devices of this embodiment may be applied to injured tissues of any type, whether fully transected or not, e.g., for protection or to allow the underlying tissue to heal, or simply to secure tissue for any other suitable reason, unrelated to healing. For example, instead of two tissue ends being brought together, embodiments of the disclosure may wrap around or otherwise cover a portion of tissue that is intact, to promote repair or to otherwise protect the underlying tissue.

a. Use of Barbed Mesh with or without a Base Membrane

[0197] FIG. **65** is a schematic view of use of the tissue repair device **6400** shown in FIG. **64**A, during a tissue repair process, according to one embodiment. In particular, FIG. **65** shows the barbed mesh **6402**, including barbed sutures **6405** and barbs **6410**, and two transected tissue ends **6500***a* and **6500***b*. The two transected tissue ends **6500***a* and **6500***b* may be placed on the barbed mesh **6402**, so that a portion of the barbed mesh **6402** is positioned on one of the transected tissue ends **6500***a* or **6500***b*, and another portion of the barbed mesh **6402** is positioned on the other one of the transected tissue ends **6500***a* or **6500***b*. The transected tissue ends **6500***a* and **6500***b* may be arranged so that the end regions of the transected tissue ends **6500***a* and **6500***b* are positioned on the barbed mesh **6402**. The transected tissue ends **6500***a* and **6500***b* may be positioned relative to one another so that a gap G_{65} formed between the transected tissue ends **6500***a* and **6500***b* may be approximately 0 mm or may be less than about 5 mm. The transected tissue ends **6500***a* and **6500***b* may be touching or almost touching. In other aspects, gap G_{65} may be greater than approximately 0 mm, for example, up to about 10 mm or up to about 5 mm. For example, the gap may be about 0 mm to about 10 mm, about 0 mm to about 8 mm, about 1 mm to about 10 mm, about 1 mm to about 8 mm, about 2 mm to about 8 mm, about 3 mm to about 7 mm, about 3 mm, about 4 mm, about 5 mm, about 6 mm, about 7 mm, etc. Once the tissue ends are positioned relative to one another, the barbed mesh **6402** may be wrapped around the surface of each of the transected tissue ends **6500***a* and **6500***b*.

[0198] Wrapping the tissue repair device **6400** may include physically moving (e.g., rolling, twisting, or pulling) the barbed mesh **6402** along the surface of the tissue and laying it on the external surface of the transected tissue ends **6500***a* and **6500***b*, rolling the transected tissue ends **6500***a* and **6500***b* on the barbed mesh **6402**, or a combination thereof. In some aspects, ends of the barbed mesh **6402** may be secured after wrapping, for example, using a suture, an adhesive, a gel, or capillary action. In other aspects, the barbs **6410** may be sufficient to hold the tissue ends **6500***a* and **6500***b* in place relative to the barbed mesh **6402**. By this configuration, the barbed mesh **6402** secures the transected tissue ends **6500***a* and **6500***b* together so that a tissue repair process may occur. More specifically, barbs **6410** on the barbed sutures **6405** of the barbed mesh **6402** may protrude into or otherwise engage with the outer surface of each of the transected tissue ends **6500***a* and **6500***b*, and the barbs **6410**, together with the barbed sutures **6405** of the barbed mesh **6402**, may inhibit the transected tissue ends **6500***a* and **6500***b* from moving apart.

[0199] FIG. **66** is a schematic view of a configuration of the tissue repair device **6400**, including a base membrane **6415**, having one or more of the properties of the base membrane **3900**, shown in FIG. **39**, and the barbed mesh **6402**, shown in FIG. **64**A, during a tissue repair process, according to another embodiment. In particular, FIG. **66** shows the tissue repair device **6400**, including the barbed mesh **6402** and the base membrane **6415**, and two transected tissue ends **6600***a* and **6600***b*. The base membrane may be separate from and aligned with the barbed mesh **6402**, or may be attached to the barbed mesh **6402**. The base membrane **6415** and the barbed mesh **6402**, if separate from one another as opposed to attached together, may be packaged together and sold as a pair, or may be packaged and sold individually.

[0200] Similar to the configuration shown in FIG. **65**, in this configuration, two transected tissue ends **6600***a* and **6600***b* may be placed on the barbed mesh **6402**, but in this embodiment, the barbed mesh **6402** is layered with the base membrane **6415**, so that the barbed mesh **6402** is positioned between the base membrane **6415** and the transected tissue ends **6600***a* and **6600***b*. A portion of the barbed mesh **6402** and a portion of the base membrane **6415** are positioned on one of the transected tissue ends **6600***a* or **6600***b*, and another portion of the barbed mesh **6402** and another portion of the base membrane **6415** are positioned on the other one of the transected tissue ends **6600***a* or **6600***b*. The transected tissue ends **6600***a* and **6600***b* may be arranged so that the end regions of the transected tissue ends **6600***a* and **6600***b* are positioned on the barbed mesh **6402** and on the base membrane **6415**. The transected tissue ends **6600***a* and **6600***b* may be positioned relative to one another so that a gap G_{66} that is formed between the transected tissue ends **6600***a* and **6600***b* may be approximately 0 mm or may be less than about 5 mm. Then, the barbed mesh **6402** and the base membrane **6415** may be wrapped to extend around the outer surface of each transected tissue end **6600***a* and **6600***b*. In some aspects, the mesh **6402** may first be wrapped around the transected tissue ends, and then the base membrane **6415** may be wrapped around the tissue ends, overlaying the mesh **6402**. In still other aspects, the wrapping may occur substantially simultaneously. In still other aspects, the mesh

6402 may be affixed to the base membrane **6415**, e.g., in any of the ways described above in regards to affixing barbed sutures to the base membrane, and thus the tissue repair device **6400** may be wrapped around the tissue ends as a whole. Although not shown, in some aspects, a separate base membrane **6415** may first be wrapped around the tissue ends, and then a separate mesh **6402** may be wrapped over the base membrane **6415**, holding the base membrane **6415** and the underlying tissue in place.

[0201] Wrapping the tissue repair device **6400** may include physically moving (e.g., rolling, twisting, or pulling) the barbed mesh **6402** and the base membrane **6415**, individually or together, and laying them on the outer surface of the transected tissue ends **6600***a* and **6600***b*, rolling the transected tissue ends **6600***a* and **6600***b* on the barbed mesh **6402** and the base membrane **6415** with the barbed mesh **6402** being interposed between the transected tissue ends **6600***a* and **6600***b* and the base membrane **6415**, or a combination thereof. In some aspects, ends of the barbed mesh **6402** and/or the base membrane **6415** may be secured after wrapping, for example, using a suture, an adhesive, a gel, or by capillary action. By this configuration, the tissue repair device **6400**, including the barbed mesh **6402** and the base membrane **6415**, may secure the transected tissue ends **6600***a* and **6600***b* together so that a tissue repair process may occur. More specifically, barbs **6410** of the barbed mesh **6402** may protrude into or otherwise engage with the outer surface of each of the transected tissue ends **6600***a* and **6600***b*, and the barbs **6410** of the barbed mesh **6402** and the base membrane **6415**, may inhibit the transected tissue ends **6600***a* and **6600***b* from moving apart.

[0202] As discussed above, use of the base membrane **6415** with the barbed mesh **6402** may provide additional protection for the tissues being repaired, may act as a barrier to prevent the barbed mesh **6402** from rubbing on surrounding structures, or may be used to deliver one or more drugs or chemicals to the tissue repair site. If the tissue being repaired is a nerve tissue, then the presence of the base membrane **6415** may inhibit axonal escape as the axons regrow. The base membrane **6415** may further provide one or more of protection of the neurotrophy formed by the mesh **6402**, preventing ingrowth of fibrotic tissue, and preventing outgrowth of axons, etc. Further, use of the base membrane **6415** may be configured for attachment of tissue ends with a gap therebetween to provide a covering over the gap region.

[0203] Although transected tissue ends are discussed in reference to FIGS. **64-66**, the tissue repair devices of this embodiment may be applied to injured tissues of any type, whether fully transected or not, e.g., for protection or to allow the underlying tissue to heal, or simply to secure tissue for any other suitable reason, unrelated to healing. For example, instead of two tissue ends being brought together, embodiments of the disclosure may wrap around or otherwise cover a portion of tissue that is intact, to promote repair or to otherwise protect the underlying tissue.

E. Base Membrane with Barbed Mesh

[0204] FIG. **67** is a schematic view of a configuration of the tissue repair device **6400**, including the barbed mesh **6402** and the base membrane **6415** during a tissue repair process, according to still another embodiment. In particular, FIG. **67** shows the tissue repair device **6400**, including the barbed mesh **6402** and the base membrane **6415**, and two transected tissue ends **6700***a* and **6700***b*. Similar to the configuration shown in FIG. **66**, in this configuration, two transected tissue ends **6700***a* and **6700***b* may be placed on the barbed mesh **6402** and the base membrane **6415**, but in this configuration, a gap G_{67} therebetween that may be greater than approximately 0 mm. The gap G_{67} between transected tissue ends **6700***a* and **6700***b* may occur, for example, due to a tendency of tissue, such as nerve tissue, to retract, as tissue tends to be under an amount of tension in vivo. As a result, once the tissue is transected and the tension is relieved, the transected tissue ends **6700***a* and **6700***b* may pull away from each other. In addition, an injury to tissue which causes transection of the tissue may similarly create a gap G_{67} between tissue ends **6700***a* and **6700***b*. Still further, a surgeon may trim material off of transected tissue ends **6700***a* and **6700***b* to remove damaged or injured tissue and expose healthy tissue. Forcefully bringing transected tissue ends **6700***a* and **6700***b* together, to close a gap G_{67}, could exert tension on tissues, which, in turn, may detrimentally impact tissue regeneration.

[0205] The gap G_{67} may be greater than approximately 0 mm, for example, up to about 10 mm or up to about 5 mm. For example, the gap may be about 0 mm to about 10 mm, about 0 mm to about 8 mm, about 1 mm to about 10 mm, about 1 mm to about 8 mm, about 2 mm to about 8 mm, about 3 mm to about 7 mm, about 3 mm, about 4 mm, about 5 mm, about 6 mm, about 7 mm, etc. The wrapping and securing of the barbed mesh **6402** and the base membrane **6415** of this configuration may be the same as that shown and described with respect to FIG. **66**.

[0206] FIG. **68** is a schematic view of another barbed mesh **6802**, as part of a tissue repair device **6800**, with no base membrane. As with the embodiment shown in FIG. **64**A, the barbed mesh **6802** is formed of a plurality of barbed sutures **6805**, but in this embodiment, the barbed mesh **6802** also includes non-barbed sutures **6810**. The barbed sutures **6805** are arranged longitudinally in FIG. **68**, and the non-barbed sutures **6810** are arranged laterally. Each of the barbed sutures **6805** may include one or more barbs **6815** extending from a surface of the barbed suture **6805** configured to contact a tissue. In the embodiment shown in FIG. **68**, each barbed suture **6805** has a plurality of barbs **6815** along a length thereof, with barbed portions **6820** including the barbs **6815**, and a non-barbed portion **6825** having no barbs. One of the barbed portions **6820** on one side of a central axis BBB of the barbed mesh **6802**, may have barbs **6815** pointing in a first direction, e.g., pointing towards the central axis BBB, and the other of the barbed portions **6820**, on another side of the central axis BBB, may have barbs **6815** pointing in a second direction, e.g., towards the central axis BBB. That is, the barbed mesh **6802** of this embodiment may have barbs **6815** pointing in one of two directions. In other embodiments, barbed meshes may have barbs pointing in more than two direction. The barbs **6815** may be evenly spaced, within the barbed portions **6820** of the barbed mesh **6802**.

[0207] Dimensions of the barbed mesh **6802**, including dimensions of the barbed portions **6820** and the non-barbed portion **6825**, and spacing of the barbed sutures **6805** and spacing of the non-barbed sutures **6810** from adjacent sutures, may depend upon one or both of the type of barb (e.g., the directional arrangement of the barbs, the material of the barbs, the shape of the barbs, the size of the barbs, etc.) used, the type of tissue and/or procedure with which the tissue repair device is intended to be applied, and the

targeted anatomical region or tissue to be wrapped and repaired using the tissue repair device **6800**. For example, a length L_{6802} of the barbed mesh **6802** may be about 35 mm, a width W_{6802} of the barbed mesh **6802** may be about 15 mm, a length L_{6820} of the barbed portions **6820** may be about 15 mm, a length L_{6825} of the non-barbed portion **6825** may be about 5 mm, a spacing S_{6805} between the barbed sutures **6805** may be about 2.5 mm or about 3 mm, and a spacing S_{6810} between non-barbed sutures **6810** may be about 7.5 mm. These dimensions, however, serve as an example only and are not limiting. Depending on the use case and factors described above, other dimensions may be suitable.

[0208] The barbed sutures **6805** may be formed of polydioxanone (PDO), and may be one of suture types 3-0, 4-0, or 5-0, for example, although any of the materials or sizes described above as suitable for a barbed suture may be used. The non-barbed sutures **6810** may be formed of polydioxanone (PDO), and may be suture type 5-0, for example, although any of the materials or sizes described above as suitable for a barbed suture may be used. In a case in which tissue to be secured using the barbed mesh **6802** is nerve tissue, a size of the barbed sutures **6805** may be based on a size of the nerve tissue. For example, if the nerve tissue has a diameter of about 5 mm and a circumference of about 15.7 mm, the barbed suture **6805** may be a 3-0 sized thread, with a diameter between about 300 μm and 339 μm. As another example, if the nerve tissue has a diameter of about 4 mm, and a circumference of about 12.6 mm, the barbed suture **6805** may be 5-0 sized thread, with a diameter of between about 150 μm and 199 μm.

[0209] Each barbed suture **6805** and non-barbed suture **6810** may be woven together or overlaid with the other sutures, or the sutures may be connected to one another at intersection points. Alternatively, the sutures may be formed as a uniform mesh, instead of being woven. In some aspects, the barbed mesh **6802** may be 3D printed, woven from individual sutures, or formed in any other suitable manner.

[0210] Similar to use of the tissue repair device **6400**, the tissue repair device **6800** may be wrapped around a tissue or placed on a tissue, e.g., a transected nerve. The barbs **6815** may hold the barbed mesh **6802** on the tissue and/or may hold tissues in place relative to one another. The holding or fixation of tissue, including nerve tissue or tissue types other than nerve tissue, may be achieved by the multi-directional arrangement of barbs **6815**, as described above. The tissue repair device **6800** may be used by itself, or may be overlaid with a base membrane, as with the embodiment of FIGS. **66** and **67**. In still other aspects, the barbed mesh **6802** may be attached to a base membrane, as described above.

[0211] FIG. **69** shows the tissue repair device **6800** with a strip of base membrane **6900** laid atop the non-barbed portion **6825** of the barbed sutures **6805** of the barbed mesh **6802**, according one embodiment. In this embodiment, a gap formed between tissue ends **6500***a* and **6500***b* and the extreme ends of the tissue ends **6500***a* and **6500***b* may be positioned on top of the strip of baes membrane **6900**. The strip of base membrane **6900** may have one or more of the properties of the base membrane **3900** described above. Although the strip of base membrane **6900** is shown as being layered between the barbed mesh **6802** and tissue ends **6500***a* and **6500***b*, the strips of base membrane **6900** may alternatively be laid on an opposite side of the non-barbed portion **6825** of the barbed mesh **6802**, sandwiching the non-barbed portion **6825** between the strip of base membrane **6900** and tissue ends **6500***a* and **6500***b*.

[0212] Although transected tissue ends are discussed in reference to FIGS. **67**, **68**, and **69**, the tissue repair devices of these embodiments may be applied to injured tissues of any type, whether fully transected or not, e.g., for protection or to allow the underlying tissue to heal, or simply to secure tissue for any other suitable reason, unrelated to healing. For example, instead of two tissue ends being brought together, embodiments of the disclosure may wrap around or otherwise cover a portion of tissue that is intact, to promote repair or to otherwise protect the underlying tissue.

F. Base Membrane with Barbs

[0213] FIG. **70** is a schematic view of a tissue repair device **7000** with a base membrane **7002** and a plurality of barbs **7005** extending from a surface of the base membrane **7002** that is configured to contact with a tissue. Properties of the base membrane **7002** may be the same as those noted above with respect to base membrane **6415**. The barbs **7005** may be formed of the same material or a different material from which the base membrane **7002** is formed. In some aspects, the barbs **7005** may be formed by laser cutting or embossing the base membrane **7002**, according to one embodiment, or may be ceramic barbs **7005** attached to the base membrane **7002**, according to another embodiment, or a combination thereof. The tissue repair device **7000**, including the base membrane **7002** with barbs **7005**, may be used in a similar or the same manner as the tissue repair device **6400** of the embodiment shown in FIGS. **64** to **67**. The barbs **7005** may be arranged on the base membrane **7002** in a grid configuration or other pattern. Other configurations, including randomly spaced apart barbs **7005**, may alternatively be used. Further, although FIG. **70** depicts the barbs **7005** projecting from the entire base membrane **7002**, barbs **7005** may only project from a portion of base membrane **7002**, e.g., along one or more edges of base membrane **7002**, along a half or less than a half of base membrane **7002**, etc., as described above in relation to the portion of a base membrane that may include barbed structures. In an embodiment in which the barbs **7005** are ceramic barbs, the barbs **7005** may be formed of resorbable ceramic, such as bioglass, for example. If the barbs **7005** and the base membrane **7002** are formed of different materials, e.g., different resorbable materials, the barbs **7005** and the base membrane **7002** may have different mechanical properties. For example, the base membrane **7002** may be more flexible, whereas the barbs **7005** may be relatively more rigid in order to extend into and engage with the tissue to which the tissue repair device **7000** is applied. In some aspects, the base membrane **7002** may be configured to resorb at a different speed (e.g., faster or slower) compared to the barbs **7005**, or they may be configured to resorb at substantially the same time.

G. Barbed Strip and Base Membrane

[0214] FIG. **71** is a schematic view of a tissue repair device **7100** including a barbed strip **7102** formed of barbed sutures **7110**, which may be similar to or the same as those described above, attached to or embedded in a base membrane **7105**, according to one embodiment. Properties of the base membrane **7105** may be the same as those noted above with respect to base membrane **3900**. The barbed strip **7102** may be formed of a plurality of laterally and longitudinally arranged barbed sutures **7110** with barbs **7115** extending from a surface of each barbed suture **7110** configured to

contact with a tissue. In other aspects, the lateral sutures may not include barbs, and only the longitudinally arranged barbed sutures may include barbs. In some aspects, the plurality of barbed sutures **7110** may be arranged in a grid pattern. For example, the barbed strip **7102** may include two or more longitudinal barbed sutures **7110***a* and two or more lateral barbed sutures **7110***b*, the two longitudinal barbed sutures **7110***a* having a relatively greater length than the two or more lateral barbed sutures **7110***b*, thus forming the barbed strip **7102**. Each barbed suture **7110** may include one or more barbs **7115**. Although two longitudinal barbed sutures **7110***a* are described in reference to FIG. **71**, additional longitudinal barbed sutures may be included, and greater or fewer lateral barbed sutures **7110***b* may be included, as well. Each barbed suture **7110** may be a separate barbed suture, e.g., woven together or overlaid with the other barbed sutures **7110**, or the barbed sutures **7110** may be connected to one another where two or more barbed sutures **7110** intersect, or may be one, uniform mesh instead of woven or overlaid barbed sutures. In some aspects, the barbed strip **7102** may be 3D printed, woven from barbed sutures **7110**, or formed in any other suitable manner.

[0215] The barbed sutures **7110** may be attached to the base membrane **7105** in any suitable manner. For example, barbed sutures **7110** may be attached using a glue or an adhesive, as described above. As another example, the barbed sutures **7110** may be attached physically, e.g., by weaving or sewing the barbed sutures **7110** through the base membrane **7105**, or the barbed sutures **7110** may be hooked onto the base membrane **7105** by making J-shaped or S-shaped cuts in the base membrane **7105** or making small holes in the side of the base membrane **7105**, threading the barbed sutures **7110** through the cuts or holes, and tying knots in the ends of the barbed sutures **7110** once threaded through the cuts or holes, as also described above. As another example, base membrane **7105** may be attached to the barbed sutures **7110** by inserting the base membrane **7105** into a thin slit or cut through the barbed sutures **7110** or attaching two barbed sutures **7110** with glue on their ends and inserting the base membrane **7105** through the attached barbed sutures **7110**, as is also described above. As still another example, the barbed sutures **7110** may be attached using heat, such as by melting the barbed sutures **7110** at specific locations as the barbed sutures **7110** lay atop the base membrane **7105**, as described above.

[0216] As still a further example, the barbed sutures **7110** may be attached to the base membrane **7105** using etching, in which barbed sutures **7110** are arranged in a desired orientation, and a material that forms the base membrane **7105** (e.g., a resorbable polymer, or any of the other materials listed above as being used to form base membrane **3900**) is cast around the barbed sutures **7110**, such that the barbed sutures **7110** are completely covered in the material. Then the material may be selectively etched to expose the barbed sutures **7110**, on at least one end, and another end of the material may be sliced to cut a thin film, thereby forming the tissue repair device **7100**, with the barbed sutures **7110** embedded within the base membrane **7105**. The tissue repair device **7100** may include one or more barbed strips **7102**, which may be applied to tissue to attach tissues to one another.

a. Use of Barbed Strip and Base Membrane

[0217] FIG. **72** is a schematic view showing use of two tissue repair devices **7100**, as shown in FIG. **71**, during a tissue repair process, according to one embodiment. In particular, FIG. **72** shows two tissue repair devices **7100** and two transected tissue ends **7200***a* and **7200***b*. The two barbed strips **7102** of the tissue repair devices **7100** may be placed on the transected tissue ends **7200***a* and **7200***b* so that a portion of each barbed strip **7102** is positioned on one of the transected tissue ends **7200***a* and **7200***b*, and another portion of each barbed strip **7102** is positioned on the other one of the transected tissue ends **7200***a* and **7200***b*, so as to 'tape' the transected tissue ends **7200***a* and **7200***b* together. The transected tissue ends **7200***a* and **7200***b* may be arranged so that the end regions of the transected tissue ends **7200***a* and **7200***b* are positioned on the barbed strips **7102**. The transected tissue ends **7200***a* and **7200***b* may be positioned relative to one another so that a gap G_{72} formed between the transected tissue ends **7200***a* and **7200***b* may be approximately 0 mm or may be less than about 5 mm. Although FIG. **72** depicts two barbed strips **7102** placed on opposing sides of the transected tissue ends **7200***a* and **7200***b* to 'tape' the transected tissue ends **7200***a* and **7200***b* together, one or more than two barbed strips **7102** may be used.

[0218] When the barbed strips **7102** are placed on the transected tissue ends **7200***a* and **7200***b* (or vice versa), the width W_{7102} of the barbed strip **7102** may lay on or adhere to a portion of the outer surfaces of the transected tissue ends **7200***a* and **7200***b*, as shown in FIG. **72**. That is, the barbed strips **7102** may extend around only a portion of the surface of the transected tissue ends **7200***a* and **7200***b*, as the width W_{STRIP} of each barbed strip **7102** may be less than a width of the tissue ends **7200***a* and **7200***b*. By this configuration, the barbed strips **7102** may secure the transected tissue ends **7200***a* and **7200***b* relative to one another so that a tissue repair process may occur. More specifically, barbs **7115** of the barbed strips **7102** may protrude into or otherwise engage with the outer surface of each of the transected tissue ends **7200***a* and **7200***b*, and the barbs **7115** of the barbed strips **7102** may inhibit the transected tissue ends **7200***a* and **7200***b* from moving apart.

[0219] FIG. **73** is a schematic view of a use of two tissue repair devices **7100**, as shown in FIG. **71**, and a separate base membrane **7305**, relatively larger than the base membrane **7105** that forms a part of tissue repair device **7100**, during a tissue repair process, according to another embodiment. In particular, FIG. **73** shows two barbed strips **7102**, the separate base membrane **7305**, and two transected tissue ends **7300***a* and **7300***b*. Properties of the separate base membrane **7305** may be the same as those of the base membrane **3900**, described above.

[0220] Similar to the configuration shown in FIG. **72**, in this configuration, barbed strips **7102** may be placed on two transected tissue ends **7300***a* and **7300***b* (or vice versa), but in this embodiment, once the barbed strips **7102** are in place, the separate base membrane **7305** may be wrapped around the barbed strips **7102** and the tissue ends **7300***a* and **7300***b*. A portion of each barbed strip **7102** may be positioned on one of the transected tissue ends **7300***a* and **7300***b*, and another portion of each barbed strip **7102** may be positioned on the other one of the transected tissue ends **7300***a* and **7300***b*. The transected tissue ends **7300***a* and **7300***b* may be arranged so that the end regions of the transected tissue ends **7300***a* and **7300***b* are positioned on the barbed strips **7102**, and the portions of the transected tissue ends **7300***a* and **7300***b* and the barbed strips **7102** are positioned on the separate base membrane **7305**. The transected tissue ends

7300*a* and **7300***b* may be positioned relative to one another so that a gap G_{73} formed between the transected tissue ends **3200***a* and **3200***b* may be approximately 0 mm or may be less than about 5 mm. Although this embodiment depicts two barbed strips **7102** being used in the procedure, one or more than two barbed strips **7102** may be used.

[0221] A width W_{7102} of the barbed strips **7102** may be such that, when the barbed strips **7102** are placed on the transected tissue ends **7300***a* and **7300***b*, the entire width W_{7102} of each barbed strip **7102** lays on or adheres to a portion of the outer surfaces of the transected tissue ends **7300***a* and **7300***b*, as shown in FIG. **73**. That is, the barbed strips **7102** may extend around only a portion of the external surface of the transected tissue ends **7300***a* and **7300***b*, as the width W_{7102} may be less than a width of the tissue ends **7300***a* and **7300***b*. Then, the separate base membrane **7305** may be wrapped around the entire surface of each transected tissue end **7300***a* and **7300***b* and around the barbed strips **7102**.

[0222] Wrapping the transected tissue ends **7300***a* and **7300***b* in the separate base membrane **7305** may include physically moving (e.g., rolling, twisting, or pulling) the separate base membrane **7305** and laying it on the surface of the transected tissue ends **7300***a* and **7300***b*, rolling the transected tissue ends **7300***a* and **7300***b* on the separate base membrane **7305**, or a combination thereof. In some aspects, ends of the separate base membrane **7305** may be secured after wrapping, for example, using a suture, an adhesive, a gel, or capillary action, for example. By this configuration, the tissue repair device **7100**, including the barbed strips **7102** and the separate base membrane **7305**, may secure the transected tissue ends **7300***a* and **7300***b* together so that a tissue repair process may occur. More specifically, barbs **7115** on the barbed strips **7102** may protrude into or otherwise engage with the outer surface of each of the transected tissue ends **7300***a* and **7300***b*, and the barbs **7115** of the barbed strip **7102**, and the separate base membrane **7305**, may inhibit the transected tissue ends **7300***a* and **7300***b* from moving apart. If the transected tissue ends **7300***a* and **7300***b* are nerve ends, then by covering the transected tissue ends **7300***a* and **7300***b* held together by the barbed strips **7102** with the separate base membrane **7305**, it may be possible to prevent axons that may grow from one or both of the transected tissue ends **7300***a* and **7300***b* from escaping, that is, from extending outward and away from the other one of the transected tissue ends **7300***a* and **7300***b*. Although two the tissue repair devices **7100** are depicted in use in FIG. **73**, one or more than two tissue repair devices **7100** may be used.

[0223] FIG. **74** depicts use of two tissue repair devices **7100** and the separate base membrane **7305** during a tissue repair process, according to still another embodiment. In particular, FIG. **74** shows the barbed strips **7102** applied to two transected tissue ends **7400***a* and **7400***b*. As described in reference to FIG. **73**, the separate base membrane **7305** may also be used in this procedure, in which a larger gap is left between the two transected tissue ends **7400***a* and **7400***b*. Similar to the configuration shown in FIG. **73**, in this configuration, barbed strips **7102** may be applied to two transected tissue ends **7400***a* and **7400***b* (or vice versa), but in this configuration, the transected tissue ends **7400***a* and **7400***b* may be arranged relative to one another with a gap G_{74} therebetween, for the reasons discussed above with respect to gap G_{67}. The gap G_{74} may be greater than approximately 0 mm, for example, up to about 10 mm or up to about 5 mm. For example, the gap G_{74} may be about 0 mm to about 10 mm, about 0 mm to about 8 mm, about 1 mm to about 10 mm, about 1 mm to about 8 mm, about 2 mm to about 8 mm, about 3 mm to about 7 mm, about 3 mm, about 4 mm, about 5 mm, about 6 mm, about 7 mm, etc.

[0224] The wrapping and securing of the separate base membrane **7305** of this configuration may be the same as that shown and described with respect to FIG. **73**. If the transected tissue ends **7400***a* and **7400***b* are nerve ends, then use of the separate base membrane **7305** over the transected tissue ends **7400***a* and **7400***b* and the barbed strips **7102** may prevent axons that may grow from one or both of the transected tissue ends **7400***a* and **7400***b* from escaping, that is, from extending outward and away from the other one of the transected tissue ends **7400***a* and **7400***b* and outward from the gap G_{74}. Although FIG. **74** shows two tissue repair devices **7100** being used on the transected tissue ends **7400***a* and **7400***b*, one or more than two barbed strips **7102** may be used.

[0225] Although transected tissue ends are discussed in reference to FIGS. **71-74**, the tissue repair devices of these embodiments may be applied to injured tissues of any type, whether fully transected or not, e.g., for protection or to allow the underlying tissue to heal, or simply to secure tissue for any other suitable reason, unrelated to healing. For example, instead of two tissue ends being brought together, embodiments of the disclosure may wrap around or otherwise cover a portion of tissue that is intact, to promote repair or to otherwise protect the underlying tissue.

H. Strip of Base Membrane with Barbs

[0226] FIG. **75** is a schematic view of a tissue repair device **7500** including a strip of base membrane **7502** with barbs **7505** extending from a surface of the base membrane **7502** configured to contact tissue. One or more properties of the base membrane **7502** may be the same as those noted above with respect to base membrane **3900**. In some aspects, the barbs **7505** may extend from end regions of the base membrane **7502**. In some aspects, a central region of the base membrane **7502** may not include barbs **7505**, while in other aspects, the central region of the base membrane **7502** may also include barbs **7505**. The barbs **7505** may be configured to engage the tissue to which they are applied. The tissue repair device **7500**, including the base membrane **7502** with barbs **7505**, may be used in a similar manner as the tissue repair device **7100**, including the barbed strips **7102**, of the embodiment shown in FIGS. **71** to **74**. When used according to the methods of application shown in FIGS. **72** to **74**, the barbs **7505** at the end regions of the base membrane **7502** may contact and engage two different regions or ends of tissues. In configurations of the base membrane **7502** for which no barbs **7505** are located in a central region of the base membrane **7502**, this barb-less central region may be positioned to generally align with a gap between the tissue (e.g., gaps G_{72}, G_{73}, or G_{74}). As described above with reference to these figures, one or more tissue repair devices **7500** may be used in a similar manner as barbed strips **7102**, including with or without a separate base membrane overlaying the tissue repair devices **7500**.

[0227] The barbs **7505** may be arranged in rows, columns, or in a grid configuration, evenly spaced apart. Other configurations, including randomly spaced apart barbs **7505** or offset bards **7505**, may be used. The barbs **7505** may have a shape similar to that of a barb of one of the embodiments

described herein, or may be different. The tissue repair device **7500** may be formed of a resorbable polymer or metal, for example, and may be a micro-injection molded strip with molded barbs, or may be 3D printed, or formed in any other suitable manner. In some aspects, the barbs **7505** may be laser cut or embossed in the base membrane **7502**, which, in this case, may be formed of the same material. In other aspects, the barbs **7505** may be formed separate from the base membrane **7502** and then attached to the base membrane **7502**, in any of the ways described above. In some aspects, the barbs **7505** may be formed of a different resorbable material than the base membrane **7402**. If the barbs **7505** and the base membrane **7502** are formed of different materials, e.g., different resorbable polymers or metals, the barbs **7505** and the base membrane **7502** may have different mechanical properties. For example, the base membrane **7502** may be more flexible, whereas the barbs **7505** may be relatively more rigid in order to extend into and engage with the tissue. In some aspects, the strip of base membrane **7502** may be configured to resorb at a different speed (e.g., faster or slower) compared to the barbs **7505**, or at substantially the same speed.

I. Base Membrane and Ceramic Barbs

[0228] FIG. **76** is a schematic view of a tissue repair device **7600**, including a base membrane **7602** with ceramic barbs **7605** attached to or embedded within the base membrane **7602**, according to another embodiment. One or more properties of the base membrane **7602** may be the same as those noted above with respect to base membrane **3900**. The ceramic barbs **7605** may extend from a surface of the base membrane **7602** configured to contact tissue and may be configured to engage the tissue to which they are applied. In some aspects, the barbs **7605** may extend from end regions of the base membrane **7602**. In some aspects, a central region of the base membrane **7602** may not include barbs **7605**, while in other aspects, the central region of the base membrane **7602** may also include barbs **7605**. The base membrane **7602** with ceramic barbs **7605** may be used in a similar or the same manner as the barbed strip **7102** of the tissue repair device **7100** of the embodiment shown in FIGS. **71** to **74** and/or the base membrane **7502** of the tissue repair device **7500** of the embodiment shown in FIG. **75**. When used according to the methods of application shown in FIGS. **72** to **74**, the barbs **7505** at the end regions of the strip of base membrane **7602** may contact and engage end regions of two different tissues or two different regions of tissue. In configurations of the base membrane **7602** for which no barbs **7605** are located in a central region of the strip of base membrane **7602**, this barb-less central region may be positioned to generally align with a gap between the tissue ends (e.g., gaps G_{72}, G_{73}, or G_{74}). As described above with reference to these figures, one or more base membranes **7602** may be used in a similar manner as barbed strips **7102** and/or the base membrane **7502**.

[0229] Similar to the embodiment shown in FIG. **75**, the ceramic barbs **7605** of this embodiment may be arranged in rows, columns, or in a grid configuration, evenly spaced apart. Other configurations, including randomly spaced apart barbs **7605** or offset barbs **7605**, may be used. The barbs **7605** may have a shape similar to that of a barb of one of the embodiments described herein, or may be different. In an embodiment in which the barbs **7605** are ceramic barbs, the barbs **7605** may be formed with resorbable ceramic, such as bioglass, for example. The base membrane **7602** may be formed of a resorbable polymer, for example. If barbs **7605** and the base membrane **7602** are formed of different materials, e.g., different resorbable materials, the barbs **7605** and the base membrane **7602** may have different mechanical properties. For example, the strip of base membrane **7602** may be more flexible, whereas the barbs **7605** may be relatively more rigid in order to extend into and engage with the tissue. In some aspects, the base membrane **7602** may be configured to resorb at a different speed (e.g., faster or slower) compared to the barbs **7605**, or at a substantially similar speed. In one aspect, to form the tissue repair device **7600**, barbs **7605** may be placed, e.g., in a container, in a desired configuration or orientation, and a material that forms the base membrane **7602**, such as a resorbable polymer, may be cast around the barbs **7605** placed in the container, such that the material completely covers the barbs **7605**. Then, the material may be selectively etched to expose the barbs **7605** on one end, and another end of the material may be sliced to cut a thin film, thereby forming the tissue repair device **7600**, with the barbs **7605** embedded within the base membrane **7602**. The selective etching of the material may be performed to produce barbs **7605** of a predetermined height.

J. Barbed Sutures and Base Membrane

[0230] FIG. **77** is a schematic view of a tissue repair device **7700** including two barbed sutures **7702** and a base membrane **7705**, according to one embodiment. Properties of the base membrane **7705** may be the same as those noted above with respect to base membrane **3900**. In particular, FIG. **77** shows two barbed sutures **7702** with barbs **7710** extending from a surface of each barbed suture **7702** configured to contact with a tissue, and the barbed sutures **7702** extending longitudinally. FIG. **77** also shows the base membrane **7705**. The barbed sutures **7702** of this embodiment may be referred to as anchors, and may be arranged individually, that is, the barbed sutures **7702** may be arranged spaced apart from one or more additional barbed sutures **7702** on the base membrane **7705**. The barbed sutures **7702** may have a longitudinal length L_{7702} that is greater than a width W_{7705} of the base membrane **7705** such that the barbed sutures **7702** extend out from edges of the base membrane **7705**. Although FIG. **77** shows two barbed sutures **7702**, the tissue repair device **7700** may include one or more than two barbed sutures **7702**. Additionally, the barbed sutures **7702** may be located at one or more end regions of the base membrane **7705**, at a central region and at one or more end regions of the base membrane **7705** (as show in FIG. **77**), only at a central region of the base membrane **7705**, or may be spaced along the base membrane **7705** in both central and end regions. Although FIG. **77** depicts the barbed sutures **7702** extending generally perpendicular to the base membrane **7705**, with the longest edge of the base membrane **7705** perpendicular to the length of the barbed sutures **7702**, other relative orientations of the base membrane **7705** and the barbed sutures **7702** are possible. For example, the barbed sutures **7702** may extend generally parallel with the longest edge of the base membrane **7705**, or the barbed sutures **7702** may extend at an angle of greater than or less than 90 degrees relative to an edge of the base membrane **7705**.

[0231] The barbed sutures **7702** may be attached to the base membrane **7705** in any suitable manner, as described

above. For example, the barbed sutures **7702** may be woven or sewn through or to the base membrane **7705**, as shown in FIG. **77**, or they may pass through defined holes in the base membrane **7705**, as shown in FIG. **78**, or they may be sandwiched between two or more layers of multi-layered base membranes **7705**. The barbed sutures **7702** may include barbs **7710** on some portions, and no barbs **7710** in portions that extend across the base membrane **7705**. The portions of the barbed sutures **7702** with barbs **7710** may extend outward from the base membrane **7705**, as shown. By this arrangement, in some aspects, none of the barbs **7710** may penetrate through the base membrane **7705**.

[0232] During use, the base membrane **7705** with barbed sutures **7702** of the tissue repair device **7700** may be applied in a similar manner as the tissue repair device **7100** described in regards to FIGS. **72** to **74**, except that instead of having separate barbed strips that are applied to the tissue ends and then wrapping the strips and tissue ends with a separate base membrane, the barbed sutures **7702** may essentially act as the barbed strips **7102**, and the base membrane **7705** may act as an integrated base membrane that is wrapped around the tissue. Instead of applying separate components as discussed in FIGS. **73** and **74**, the barbed sutures **7702** may be integrated with the base membrane **7705** in the form of barbed sutures **7702**. Accordingly, end regions of tissues may be secured relative to one another with the barbed ends of barbed sutures **7702**, and the base membrane **7705** may be wrapped around the secured tissue ends. To secure the barbed sutures **7702** to the tissue ends or portions, the barbed sutures **7702** may be engaged with an outer surface of the tissue end regions before and/or as the base membrane **7705** is being wrapped around the tissue ends. In some aspects, the barbed sutures **7702** may be spaced along base membrane **7705** such that barbed sutures **7702** may be positioned on generally opposite sides or ends of tissue when applied, or they may be positioned along different portions of the tissue, as the base membrane **7705** may be wrapped around the tissue.

[0233] Although transected tissue ends are discussed in reference to FIG. **77**, the tissue repair devices of this embodiment may be applied to injured tissues of any type, whether fully transected or not, e.g., for protection or to allow the underlying tissue to heal, or simply to secure tissue for any other suitable reason, unrelated to healing. For example, instead of two tissue ends being brought together, embodiments of the disclosure may wrap around or otherwise cover a portion of tissue that is intact, to promote repair or to otherwise protect the underlying tissue.

K. Sets of Side-by-Side Sutures and Base Membrane

[0234] FIG. **78** is a schematic view of a tissue repair device **7800** including two sets of side-by-side barbed sutures **7802**, and a base membrane **7805**, according to another embodiment. In particular, FIG. **78** shows two sets of barbed sutures **7802** with barbs **7810**, the barbed sutures **7802** extending longitudinally, and the base membrane **7805**. One or more properties of the base membrane **7805** may be the same as those noted above with respect to base membrane **3900**. The barbed sutures **7802** of this embodiment may be arranged together in sets, with each set of barbed sutures **7802** including two or more individual barbed sutures **7802**. Although sets of two barbed sutures **7802** are shown, larger groupings of barbed sutures **7802** are possible, such as sets of three barbed sutures **7802**, sets of four barbed sutures **7802**, etc.

[0235] Each set of barbed sutures **7802** may be connected to one another. For example, the sets of barbed sutures **7802** may be welded together or attached via coupling sutures, ties, bands, or any other suitable fasteners. The sets of barbed sutures **7802** may be arranged spaced apart from one or more additional sets of barbed sutures **7802** on the base membrane **7805**. The sets of barbed sutures **7802** may be spaced along the base membrane **7805** in any of the arrangements or relative orientations as described above with regards to FIG. **77**, base membrane **7705**, and barbed sutures **7702**.

[0236] The sets of barbed sutures **7802** may have a longitudinal length L_{7802} that is greater than a width W_{7805} of the base membrane **7805**. Although FIG. **78** shows two sets of barbed sutures **7802**, a single set of barbed sutures **7802** or more than two sets of barbed sutures **7802** may be used. The sets of barbed sutures **7802** may be attached to the base membrane **7805** in any of the ways described above. For example, the sets of barbed sutures **7802** may pass through defined holes in the base membrane **7805**, as shown in FIG. **78**, or they may be woven or sewn through the base membrane **7805**, as shown in FIG. **77**, or sandwiched between two layers of multi-layered base membranes **7805**. And, similar to the embodiment shown in FIG. **77**, the barbed sutures **7802** may include portions with barbs **7810** and portions with no barbs **7810** in locations extending across the base membrane **7805**. The portions of the barbed sutures **7802** with barbs **7810** may extend outward from the base membrane **7805**, as shown. By this arrangement, in some aspects, none of the barbs **7810** may penetrate through the base membrane **7805**.

L. Barbed Strips and Base Membrane

[0237] FIG. **79** is a schematic view of a tissue repair device **7900** having two barbed strips **7902** integrated with a base membrane **7905**, according to yet another embodiment. In particular, FIG. **79** shows two barbed strips **7902** with barbs **7910** integrated with the base membrane **7905**. One or more properties of the base membrane **7905** may be the same as those noted above with respect to base membrane **3900**. In this embodiment, rather than integrating barbed sutures or sets of barbed sutures (FIGS. **77** and **78**), strips or meshes, as described above with reference to FIGS. **71** to **74**, may be integrated as part of the base membrane **7905**. The barbed strips **7902** may be formed of a plurality of laterally and longitudinally arranged barbed sutures, or a combination of barbed and un-barbed sutures, or in other words, a plurality of barbed sutures, or a combination of barbed and un-barbed sutures, in a thin grid pattern, or a mesh. Each barbed strip **7902** may include one or more barbs **7910** extending from a surface of the barbed strip **7902** configured to contact with a tissue. The barbed strips **7902** may be arranged spaced apart from one or more additional barbed strips **7902** on the integrated base membrane **7905** in any suitable arrangement or orientation, as described above in reference to FIGS. **77** and **78**. The barbed strips **7902** may have a longitudinal length L_{7902} that is greater than a width W_{7905} of the base membrane **7905**. Although FIG. **79** shows the tissue repair device **7900** having two barbed strips **7902**, a single barbed strip **7902** or more than two barbed strips **7902** may be included. The barbed strips **7902** may be sandwiched between two or more layers of multi-layer base

membranes **7905**, or may be sewn, woven, or passed through holes in the base membrane **7905**, as shown in FIG. **79**. And, similar to the embodiments shown in FIGS. **77** and **78**, the barbed strips **7902** may include barbs **7910** on some portions, and no barbs **7910** in portions extending across the base membrane **7905**. The portions of the barbed strips **7902** with barbs **7910** may extend outward from the base membrane **7905**, as shown. By this arrangement, in some aspects, none of the barbs **790** may penetrate through the base membrane **7905**.

a. Use of Tissue Repair Device Having Barbed Strips Integrated with Base Membrane

[0238] FIG. **80** is a schematic view of the tissue repair device **7900**, including the two barbed strips **7902** integrated with the base membrane **7905**, shown in FIG. **79**, in use during a tissue repair process, according to one embodiment. In particular, FIG. **80** shows two barbed strips **7902** with barbs **7910**, the integrated base membrane **7905**, and two transected tissue ends **8000***a* and **8000***b*. The two transected tissue ends **8000***a* and **8000***b* may be placed on the base membrane **7905**, with the barbed strips **7902** generally aligned with the two transected tissue ends **8000***a* and **8000***b*. A portion of the base membrane **7905** and a portion of each of the barbed strips **7902** extending beyond the base membrane **7905** may be positioned on one of the transected tissue ends **8000***a* and **8000***b*, and another portion of the base membrane **7905** and another portion of each of the barbed strips **7902** may be generally aligned with the other one of the transected tissue ends **8000***a* and **8000***b*. The transected tissue ends **8000***a* and **8000***b* may be arranged so that the ends of the transected tissue ends **8000***a* and **8000***b* are positioned on the base membrane **7905**, and the end regions and central portions of the transected tissue ends **8000***a* and **8000***b* are positioned on the barbed strips **7902**. The transected tissue ends **8000***a* and **8000***b* may be positioned relative to one another so that a gap G_{80} is formed therebetween, for the reasons discussed above with respect to gap G_{67}. The gap G_{80} may be approximately 0 mm, or may be greater than approximately 0 mm, such as up to about 5 mm or up to about 10 mm. For example, the gap may be about 0 mm to about 10 mm, about 0 mm to about 8 mm, about 1 mm to about 10 mm, about 1 mm to about 8 mm, about 2 mm to about 8 mm, about 3 mm to about 7 mm, about 3 mm, about 4 mm, about 5 mm, about 6 mm, about 7 mm, etc.

[0239] A width W_{7902} of the barbed strips **7902** may be such that, when the transected tissue ends **8000***a* and **8000***b* are placed on the base membrane **7905**, the width of each of the barbed strips **7902** lays on or adheres to portions of outer surfaces of the transected tissue ends **8000***a* and **8000***b*, as shown in FIG. **80**. That is, the barbed strips **7902** may collectively extend around the outer surface of each of the transected tissue ends **8000***a* and **8000***b*, and each barbed strip **7902** extends generally in line along the transected tissue ends **8000***a* and **8000***b*. The base membrane **7905** may be wrapped around an entire outer surface of each transected tissue end **8000***a* and **8000***b*, surrounding or enclosing the gap G_{80}.

[0240] Wrapping may include physically moving (e.g., rolling, twisting, or pulling) the base membrane **7905** and laying it on the surface of the transected tissue ends **8000***a* and **8000***b*, rolling the transected tissue ends **8000***a* and **8000***b* on the base membrane **7905**, or a combination thereof. In some aspects, ends of the base membrane **7905** may be secured after wrapping, for example, using a suture, an adhesive, a gel, or capillary action. By this configuration, the barbed strips **7902** and the base membrane **7905** secure the transected tissue ends **8000***a* and **8000***b* in place so that a tissue repair process may occur. More specifically, barbs **7910** on the barbed strips **7902** may protrude into or otherwise engage with the outer surface of each of the transected tissue ends **8000***a* and **8000***b*, and the barbs **7910** with the base membrane **7905** may inhibit the transected tissue ends **8000***a* and **8000***b* from moving apart. In scenarios in which the transected tissue ends **8000***a* and **8000***b* are nerve tissue, the base membrane **7905** may also prevent axons that may grow from one or both ends of the tissue ends **8000***a* and **8000***b* from escaping, or extending outward, away from the other of the tissue ends **8000***a* and **8000***b*.

[0241] Although transected tissue ends are discussed in reference to FIGS. **79** and **80**, the tissue repair devices of this embodiment may be applied to injured tissues of any type, whether fully transected or not, e.g., for protection or to allow the underlying tissue to heal, or simply to secure tissue for any other suitable reason, unrelated to healing. For example, instead of two tissue ends being brought together, embodiments of the disclosure may wrap around or otherwise cover a portion of tissue that is intact, to promote repair or to otherwise protect the underlying tissue.

M. Barbed Strips on Strips of a First Base Membrane, and a Second Base Membrane

[0242] FIG. **81** is a schematic view of a tissue repair device **8100** including two barbed strips **8102** each adhered to a strip of a first base membrane **8105**, integrated with a second base membrane **8110**, according to still another embodiment. One or more properties of the first base membrane **8105** and the second base membrane **8110** may be the same as those noted above with respect to base membrane **3900**. The barbed strips **8102** may be similar to tissue repair device **7100** described in reference to FIG. **71**. The embodiment of FIG. **81** may be similar to, and may be used similarly to, the embodiment of FIG. **79**, except that the individual barbed strips **8102** may be adhered or otherwise affixed to strips of base membrane as a backing. In particular, FIG. **81** shows two barbed strips **8102** with barbs **8115**, two strips of base membrane **8105** attached to the back of the barbed strips **8102** (i.e., the side opposite from the surface from which the barbs **8115** protrude), and the second base membrane **8110**. Similar to the embodiment shown in FIG. **79**, the barbed strips **4002** may be formed of a plurality of laterally and longitudinally arranged barbed sutures, or a combination of barbed sutures and non-barbed sutures, or in other words, a plurality of barbed sutures, or a combination of barbed sutures and non-barbed sutures, in a thin grid pattern or mesh, which may be fixed on strips of the first base membrane **8105**. Each barbed strip **8102** may include one or more barbs **8115** extending from a surface of the barbed strip **8102** configured to contact with a tissue. The strips of the first base membrane **8105** and barbed strips **8102** may be arranged spaced apart from one or more additional strips of the first base membrane **8105** and barbed strips **8102** on the second base membrane **8110**, as described above in reference to FIGS. **77** and **78**.

[0243] The strips of the first base membrane **8105** with barbed strips **8102** may have a longitudinal length L_{8105} that is greater than a width W_{8010} of the second base membrane **8110**. Although FIG. **81** shows the tissue repair device **8100** including two strips of the first base membrane **8105** and two

barbed strips **8102**, a single strip of the first base membrane **8105** and a single barbed strip **8102**, or more than two strips of the first base membrane **8105** and more than two barbed strips **8102** may be included. Additionally, the barbed strips **8102** may be located at one or more end regions of the second base membrane **8110**, at a central region and at one or more end regions of the second base membrane **8110** (as show in FIG. **81**), only at a central region of the second base membrane **8110**, or may be spaced in both central and end regions along the second base membrane **8110**. Although FIG. **81** depicts the barbed strips **8102** extending generally perpendicular to the second base membrane **8110**, with the longest edge of the second base membrane **8110** perpendicular to the length of the barbed strips **8102**, other relative orientations of the second base membrane **8110** and the barbed strips **8102** are possible. For example, the barbed strips **8102** may extend generally parallel with the longest edge of the second base membrane **8110**, or the barbed strips **8102** may extend at an angle of greater than or less than 90 degrees relative to an edge of the second base membrane **8110**. The barbed strips **8102** may be sandwiched between two or more layers of multi-layered second base membranes **8110**, as shown in FIG. **81**, or may be sewn or passed through holes in the second base membrane **8110**, or may be attached in any suitable manner, as described above. And, similar to the embodiments shown in FIGS. **77** and **78**, the barbed strips **8102** may include barbs **8115** on some portions, and no barbs **8115** in other portions extending across the second base membrane **8110**. The portions of the barbed strips **8102** with barbs **8115** may extend outward from the second base membrane **8110**, as shown. By this arrangement, in some aspects, none of the barbs **8115** may penetrate through the second base membrane **8110**. During use, the second base membrane **8110** may be applied to tissue in a similar manner as described in regards to FIGS. **77** and **78**.

N. Barbed Mesh and Base Membrane

[0244] FIG. **82** is a schematic view of a tissue repair device **8200** including a barbed mesh **8202** adhered to or embedded within a base membrane **8210**, according to one or more embodiments. One or more properties of the base membrane **8210** may be the same as those noted above with respect to base membrane **3900**. In the embodiment of FIG. **82**, the barbed mesh **8202** may extend from two sides, e.g., opposite sides, of the base membrane **8210**. For example, the base membrane **8210** may extend between portions of the barbed mesh **8202**. The mesh **8202** may extend evenly on both sides of the base membrane **8210** or may extend unevenly from both sides of the base membrane **8210**. In some aspects, the mesh **8202** may extend along the entirety of two sides of the base membrane **8210**, while in other aspects, the mesh **8202** may not extend along the entirety of two sides, or may extend beyond the entirety of two sides of the base membrane **8210**.

[0245] In some aspects, the mesh **8202** may be formed of a plurality of barbed sutures **8205**. Mesh **8202** may include barbed sutures **8205** and barbs **8215**, and the base membrane **8210**. The barbed mesh **8202** may be formed of a plurality of laterally and longitudinally arranged barbed sutures **8205**, or a combination of barbed sutures and non-barbed sutures, in, e.g., a grid pattern. The barbed sutures **8205** may include one or more barbs **8215** extending from a surface of each barbed suture **8205** configured to contact with a tissue. Each barbed suture **8205** may be a separate barbed suture, e.g., woven together or overlaid with the other barbed sutures, or the barbed sutures **8205** may be connected to one another where two or more barbed sutures **8205** intersect, or may be one, uniform mesh instead of woven or overlaid barbed sutures **8205**. The barbed sutures **8205** may have a longitudinal length L_{8205} that is greater than a width W_{8210} of the base membrane **8210**. In embodiments in which the barbed sutures **8205** of the mesh **8202** extend along a surface of the base membrane **8210**, the barbed sutures **8205** may include no barbs in locations extending across the base membrane **8210** (in other words, there may be no barbs in the area in which the base membrane **8210** is placed on the mesh **8202** of barbed sutures **8205**).

[0246] The barbed sutures **8205** may be formed of the materials described herein. The barbed sutures **8205** and the base membrane **8210** may be formed of the same material or they may be formed of different materials, both of which may be, for example, resorbable polymers or metals. For example, if the barbed sutures **8205** and the base membrane **8210** are formed of different resorbable polymers or metals, a barbed mesh **8202** and the base membrane **8210** may have different mechanical properties. For example, the base membrane **8210** may be more flexible, whereas the barbs **8215** may be relatively more rigid in order to extend into and engage with the tissue. In some aspects, the base membrane **8210** may be configured to resorb at a different speed (e.g., faster or slower) compared to the barbs **8215**, or at a substantially similar speed.

[0247] And, in a case in which the mesh **8202** is attached to the base membrane **8210**, the mesh **8202** may be attached to the base membrane **8210** in a suitable manner. For example, tacking or heat welding may be used to adhere the mesh **8202** to the base membrane **8210**, as described above. Further, the mesh **8202** may be attached to the base membrane **8210** using a glue or an adhesive. The glue or adhesive may be composed of one or more of the materials described above.

[0248] As another example, the mesh **8202** may be attached by weaving or sewing the barbed sutures **8205** through the base membrane **8210**, or the barbed sutures **8205** may be hooked onto the base membrane **8210** by making J-shaped or S-shaped cuts in the base membrane **8210** or making small holes in the base membrane **8210**, threading the barbed sutures **8205** through the cuts or holes, and tying knots in the ends of the barbed sutures **8205** once threaded through the cuts or holes. As still another example, the barbed sutures **8205** may be attached using heat, such as by melting the barbed sutures **8205** at specific locations as the barbed sutures **8205** lay atop the base membrane **8210**.

[0249] As still a further example, the barbed sutures **8205** may be attached to the base membrane **8210** using etching, in which barbed sutures **8205** are arranged in a desired orientation in a container, and a material that forms the base membrane **8210** (e.g., a resorbable polymer) is cast around the barbed sutures **8205** in the container, such that the barbed sutures **8205** are completely covered in the material. Then the material may be selectively etched to expose the barbed sutures **8205**, on at least one end, and another end of the material may be sliced to cut a thin film, thereby forming the tissue repair device **8200** with the mesh **8202** embedded in the base membrane **8210**. A shape and a size of the base membrane **8210** may be determined so that portions of the mesh **8202** with no barbs **8215** lay on the base membrane **8210**, as shown in FIG. **82**.

a. Use of Tissue Repair Device Having Barbed Mesh and Base Membrane

[0250] During use, the base membrane **8210** may be applied to tissue in a similar manner as described in regards to FIGS. **77** to **81**. FIG. **83** is a schematic view of the tissue repair device **8200**, including the mesh **8202** adhered to the base membrane **8210**, as shown in FIG. **82**, during a tissue repair process, according to one embodiment. In particular, FIG. **83** shows the barbed mesh **8202**, the base membrane **8210**, and two transected tissue ends **8300***a* and **8300***b*. The two transected tissue ends **8300***a* and **8300***b* may be positioned on the barbed mesh **8202** and the base membrane **8210**, so that a portion of the barbed mesh **8202** and a portion of the base membrane **8210** are positioned on one of the transected tissue ends **8300***a* and **8300***b*, and another portion of the barbed mesh **8202** and another portion of the base membrane **8210** are positioned on the other one of the transected tissue ends **8300***a* and **8300***b*. The transected tissue ends **8300***a* and **8300***b* may be arranged so that the end regions of the transected tissue ends **8300***a* and **8300***b* are positioned on the base membrane **8210**, and portions of the transected tissue ends **8300***a* and **8300***b* set back from the end regions are positioned on the barbed mesh **8202**. The transected tissue ends **8300***a* and **8300***b* may be positioned relative to one another so that a gap G_{83} formed between the transected tissue ends **8300***a* and **8300***b* is approximately 0 mm or is less than about 5 mm. Then, the barbed mesh **8202** and the base membrane **8210** may be wrapped around an outer surface of each of the transected tissue ends **8300***a* and **8300***b*.

[0251] Wrapping the barbed mesh **8202** and the base membrane **8210** may include physically moving (e.g., rolling, twisting, or pulling) the barbed mesh **8202** and the base membrane **8210**, and laying them on the surface of the transected tissue ends **8300***a* and **8300***b*, rolling the transected tissue ends **8300***a* and **8300***b* on the barbed mesh **8202** and the base membrane **8210**, or a combination thereof. In some aspects, ends of the barbed mesh **8202**, the base membrane **8210**, or both, may be secured in place after wrapping, for example, using a suture, an adhesive, a gel, or capillary action. Alternatively, engagement of the barbed mesh **8202** with the tissue may be sufficient to secure the barbed mesh **8202** and the base membrane **8210** in place. By this configuration, the barbed mesh **8202** and the base membrane **8210** may secure the transected tissue ends **8300***a* and **8300***b* together so that a tissue repair process may occur. More specifically, barbs **8215** on the barbed sutures **8205** of the barbed mesh **8202** may protrude into or otherwise engage with the outer surface of each of the transected tissue ends **8300***a* and **8300***b*, and the barbs **8215**, together with the mesh **8202** and the base membrane **8210**, may inhibit the transected tissue ends **8300***a* and **8300***b* from moving apart.

[0252] FIG. **84** is a schematic view of the tissue repair device **8200**, as shown in FIG. **82**, during a tissue repair process, according to another embodiment. In particular, FIG. **84** shows the mesh **8202**, the base membrane **8210**, and two transected tissue ends **8400***a* and **8400***b*. Similar to the configuration shown in FIG. **83**, in this configuration, two transected tissue ends **8400***a* and **8400***b* may be positioned on the mesh **8202** of barbed sutures **8205** and the base membrane **8210**, but in this configuration, the transected tissue ends **8400***a* and **8400***b* may be arranged so that the end regions of the transected tissue ends **8400***a* and **8400***b* are positioned on the base membrane **8210**, and portions of the transected tissue ends **8400***a* and **8400***b* more proximal to the end regions are positioned on the barbed mesh **8202**. The transected tissue ends **8400***a* and **8400***b* may be positioned relative to one another so that a gap G_{84} is formed therebetween, for the reasons discussed above with respect to gap G_{67}. The gap G_{84} may be greater than approximately 0 mm, such as up to about 10 mm or up to about 5 mm. For example, the gap G_{84} may be about 0 mm to about 10 mm, about 0 mm to about 8 mm, about 1 mm to about 10 mm, about 1 mm to about 8 mm, about 2 mm to about 8 mm, about 3 mm to about 7 mm, about 3 mm, about 4 mm, about 5 mm, about 6 mm, about 7 mm, etc. The wrapping and securing of the mesh **8202** and the base membrane **8210** of this configuration may be the same as that shown and described with respect to FIG. **83**.

[0253] Although transected tissue ends are discussed in reference to FIGS. **82-84**, the tissue repair devices of this embodiment may be applied to injured tissues of any type, whether fully transected or not, e.g., for protection or to allow the underlying tissue to heal, or simply to secure tissue for any other suitable reason, unrelated to healing. For example, instead of two tissue ends being brought together, embodiments of the disclosure may wrap around or otherwise cover a portion of tissue that is intact, to promote repair or to otherwise protect the underlying tissue.

O. Mesh within Strip of Base Membrane

[0254] FIG. **85** is a schematic view of a tissue repair device **8500**, including a mesh **8502** adhered to or embedded within a strip of base membrane **8510**, according to one embodiment. One or more properties of the base membrane **8510** may be the same as those noted above with respect to base membrane **3900**. FIG. **85** shows the mesh **8502**, which may include barbs **8515** and a portion **8520** free from barbs. The mesh **8502** may be, for example, 3D printed, or may be formed of a plurality of laterally and longitudinally arranged barbed sutures **8505**, or a combination of barbed sutures and non-barbed sutures, or, in other words, a plurality of barbed sutures **8505**, or a combination of barbed sutures and non-barbed sutures, arranged in a grid pattern. Each of the barbed sutures **8505** may include one or more barbs **8515** extending from a surface of the barbed suture **8505** configured to contact with a tissue, and, as noted above and shown in FIG. **82**, the mesh **8502** may include the portion **8520** that is free from barbs **8515**. The portion **8520** free from barbs **8515** may be in a central region of the mesh **8502**, as shown, however, the portion **8520** free from barbs **8515** may be located at one or both ends of the mesh **8502** in other embodiments.

[0255] The mesh **8502** may be attached to the strip of base membrane **8510** using a glue or an adhesive, or in any of the other ways described above. As another example, the mesh **8502** may be attached by weaving or sewing the barbed sutures **8505** through the strip of base membrane **8510**, or the barbed sutures **8505** may be hooked onto the strip of base membrane **8510** by making J-shaped or S-shaped cuts in the base membrane **8510** or making small holes in the side of the base membrane **8510**, threading the barbed sutures **8505** through the cuts or holes, and tying knots in the ends of the barbed sutures once threaded through the cuts or holes. As still another example, the barbed sutures may be attached using heat, such as by melting the sutures **8505** at specific locations as the barbed sutures **8505** lay atop the strip of base membrane **8510**. As still a further example, the barbed sutures **8505** may be attached to the base membrane **8510**

using etching, in which barbed sutures **8505** are arranged in a desired orientation in a container, and a material that forms the base membrane **8510** (e.g., a resorbable polymer) is cast around the barbed sutures in the container, such that the barbed sutures **8505** are completely covered in the material. Then the material may be selectively etched to expose the barbed sutures **8505**, on at least one end, and another end of the material may be sliced to cut a thin film, thereby forming the tissue repair device **8500** with the mesh **8502** embedded in the strip of base membrane **8510**.

a. Use of Tissue Repair Device Having Mesh within Strip of Base Membrane

[0256] FIG. **86** is a schematic view of the tissue repair device **8500**, during a tissue repair process, according to one embodiment. In particular, FIG. **86** shows two tissue repair devices **8500** and two transected tissue ends **8600***a* and **8600***b*. The two tissue repair devices **8500** may be aligned on the transected tissue ends **8600***a* and **8600***b* so that a portion of each strip of base membrane **8510** and a portion of each mesh **8502** with barbs **8515** are positioned on one of the transected tissue ends **8600***a* and **8600***b*, and another portion of each strip of base membrane **8510** and another portion of each mesh **8502** with barbs **8515** are positioned on the other one of the transected tissue ends **8600***a* and **8600***b*. The transected tissue ends **8600***a* and **8600***b* may be arranged so that the end regions, set back from the extreme ends, of the transected tissue ends **8600***a* and **8600***b* are positioned on the meshes **8502**, and the ends of the transected tissue ends **8600***a* and **8600***b* are positioned on the strips of base membrane **8510**. The transected tissue ends **8600***a* and **8600***b* may be positioned relative to one another so that a gap G_{86} formed between the transected tissue ends **8600***a* and **8600***b* may be approximately 0 mm or may be less than about 5 mm. In the embodiment shown in FIG. **86**, the portion **8520** of the mesh **8502** that is free from barbs **8515** may be located across the gap G_{86} between the transected tissue ends **8600***a* and **8600***b*.

[0257] A width W_{8510} of the strips of base membrane **8510** with the meshes **8502** may be such that, when the transected tissue ends **8600***a* and **8600***b* are placed on the strips of base membrane **8510** and the meshes **8502** (or when the strips of base membrane **8510** with the meshes **8502** are placed on the transected tissue ends **8600***a* and **8600***b*), the entire width W_{8510} of each of the strips of base membrane **8510** lays on or adheres to outer surfaces of the transected tissue ends **8600***a* and **8600***b*, as shown in FIG. **86**. That is, the strips of base membrane **8510** may extend around a portion of the surface of the transected tissue ends **8600***a* and **8600***b* to 'tape' the transected tissue ends **8600***a* and **8600***b* together. By this configuration, the strips of base membrane **8510** and the meshes **8502** may secure the transected tissue ends **8600***a* and **8600***b* together so that a tissue repair process may occur. More specifically, barbs **8515** of the mesh **8502** may protrude into or otherwise engage with the outer surface of each of the transected tissue ends **8600***a* and **8600***b*, and the barbs **8515**, together with the strips of base membrane **8510**, may inhibit the transected tissue ends **8600***a* and **8600***b* from moving apart. Although two tissue repair devices **8500** are depicted in FIGS. **86** to **88**, one or more than two tissue repair devices **8500** may be used during a procedure.

[0258] FIG. **87** is a schematic view of two tissue repair devices **8500**, as shown in FIG. **85**, and a separate base membrane **8705**, during a tissue repair process, according to one embodiment. In particular, FIG. **87** shows strips of base membrane **8510** with barbed meshes **8502**, each including barbs **8515** and a portion **8520** free from barbs **8515**, the separate base membrane **8705**, as well as two transected tissue ends **8700***a* and **8700***b* onto which they are applied. The tissue repair devices **8500** may be applied to the two transected tissue ends **8700***a* and **8700***b* as described in reference to FIG. **86**, but in this embodiment, the separate base membrane **8705** is wrapped on top of at least the central portion of the tissue repair devices **8500**. When positioned in place, the separate base membrane **8705** may cover a gap G_{87} between the transected tissue ends **8700***a* and **8700***b*, and may cover at least a portion of the portion **8520** free from barbs **8515**. The transected tissue ends **8700***a* and **8700***b* may be arranged so that a gap G_{49} between the transected tissue ends **8700***a* and **8700***b* may be approximately 0 mm or may be less than about 5 mm. A shape and a size of the separate base membrane **8705** may be determined so that portions **8520** of the tissue repair device **8500** free from barbs **8515** lay on the separate base membrane **8705**, as shown in FIG. **87**. During use, the separate base membrane **8705** may be applied to tissue in a similar manner as described in regards to FIGS. **73** and **74**.

[0259] FIG. **88** is a schematic view of two tissue repair devices **8500**, as shown in FIG. **85**, and the separate base membrane **8705**, shown in FIG. **87**, during a tissue repair process, according to another embodiment. In particular, FIG. **88** shows the strips of base membrane **8510** with the meshes **8502**, the separate base membrane **8705**, and two transected tissue ends **8800***a* and **8800***b*. The tissue repair devices **8500** may be applied as described in reference to FIG. **86**, and the separate base membrane **8705** may be applied as described in reference to FIG. **87**, but, in the embodiment of FIG. **88**, the transected tissue ends **8800***a* and **8800***b* may be positioned relative to one another so that a gap G_{88} is formed therebetween, for the reasons discussed above with respect to gap G_{67}. The gap G_{88} may be greater than approximately 0 mm, up to about 10 mm, or up to about 5 mm. For example, the gap G_{88} may be about 0 mm to about 10 mm, about 0 mm to about 8 mm, about 1 mm to about 10 mm, about 1 mm to about 8 mm, about 2 mm to about 8 mm, about 3 mm to about 7 mm, about 3 mm, about 4 mm, about 5 mm, about 6 mm, about 7 mm, etc. The wrapping and securing of the separate base membrane **8705** of this configuration may be the same as that shown and described with respect to FIG. **87**. If the transected tissue ends **8800***a* and **8800***b* are nerve ends, then by covering the transected tissue ends **8800***a* and **8800***b* held together by the strips of base membrane **8510** with the meshes **8502** with the separate base membrane **8705**, it may be possible to prevent axons that may grow from one or both of the transected tissue ends **8800***a* and **8800***b* from escaping, that is, from extending outward and away from the other one of the transected tissue ends **8800***a* and **8800***b* and outward from the gap G_{88}.

[0260] Although transected tissue ends are discussed in reference to FIGS. **85-88**, the tissue repair devices of this embodiment may be applied to injured tissues of any type, whether fully transected or not, e.g., for protection or to allow the underlying tissue to heal, or simply to secure tissue for any other suitable reason, unrelated to healing. For example, instead of two tissue ends being brought together, embodiments of the disclosure may wrap around or otherwise cover a portion of tissue that is intact, to promote repair or to otherwise protect the underlying tissue.

P. Strip of Base Membrane with Barbed Mesh

[0261] FIGS. **89** to **91** are schematic views of a tissue repair device **8900** formed of a separate strip of base membrane **8905** and a barbed mesh **8910**, according to another embodiment. The base membrane **8905** may have one or more properties of the base membrane **3900** described above. FIG. **89** shows the strip of base membrane **8905**, with two tissue end **8915***a* and **8915***b* laid thereon. The strip of base membrane **8905** may be initially wrapped around the tissue ends **8915***a* and **8915***b*. FIG. **90** shows tissue ends **8915***a* and **8915***b*, with the strip of base membrane **8905** wrapped around them, placed upon the barbed mesh **8910**. The barbed mesh **8910** may have barbed portions **8920**, with barbs **8925**, and a non-barbed portion **8930** without barbs. The non-barbed portion **8930** may be aligned with the strip of base membrane **8905**, as shown. FIG. **91** shows the strip of base membrane **8905** and the barbed mesh **8910** both wrapped around the tissue ends **8915***a* and **8915***b*. The barbed mesh **8910** may be wrapped around the tissue ends **8915***a* and **8915***b*, as well as the strip of base membrane **8905**, to complete the coaptation of the tissue ends **8915***a* and **8915***b*. The barbed portions **8920** of the barbed mesh **8910** may affix to the tissue ends **8915***a* and **8915***b* only, without physically constraining the wrapped base membrane **8905**.

[0262] FIGS. **92**, **93**, and **94** show another embodiment of a tissue repair device **9200**, formed of a strip of base membrane **9205** and a barbed mesh **9210**, according to another embodiment. The strip of base membrane **9205** may have one or more properties of the base membrane **3900** described above. FIG. **92** shows the barbed mesh **9210**, with two tissue ends **9215***a* and **9215***b* laid thereon. The barbed mesh **9210** may have barbed portions **9220**, with barbs **9225**, and a non-barbed portion **9230** without barbs. The barbed mesh **9210** may be initially wrapped around the tissue ends **9215***a* and **9215***b*, securing the tissue ends **9215***a* and **9215***b* together. FIG. **93** shows tissue ends **9215***a* and **9215***b*, with the barbed mesh **9210** wrapped around them, placed upon the strip of base membrane **9205**. FIG. **94** shows the strip of base membrane **9205** and the barbed mesh **9210** both wrapped around the tissue ends **9215***a* and **9215***b*. The strip of base membrane **9205** may be wrapped around the tissue ends **9215***a* and **9215***b*, as well as the barbed mesh **9210**, to complete the coaptation of the tissue ends **9215***a* and **9215***b*. The barbed portions **9220** of the barbed mesh **9210** may affix to the tissue ends **9215***a* and **9215***b*, achieving coaptation, and the strip of base membrane **9205** is wrapped around the coapted tissue ends **9215***a* and **9215***b*.

[0263] Although transected tissue ends are discussed in reference to FIGS. **89-94**, the tissue repair devices of these embodiments may be applied to injured tissues of any type, whether fully transected or not, e.g., for protection or to allow the underlying tissue to heal, or simply to secure tissue for any other suitable reason, unrelated to healing. For example, instead of two tissue ends being brought together, embodiments of the disclosure may wrap around or otherwise cover a portion of tissue that is intact, to promote repair or to otherwise protect the underlying tissue.

Q. Base Membrane Having Tab with Barbed Sutures

[0264] FIGS. **95** to **97** show another embodiment of a tissue repair device **9500**, formed of a base membrane **9505** having a large tab **9510** and a small tab **9515**, forming a relatively narrow portion of the base membrane **9505**, and a plurality of barbed sutures **9520**. The base membrane **9505** may have one or more properties of the base membrane **3900** described above. The barbed sutures **9520** may be bidirectional barbed sutures, in that they include a plurality of barbs **9530** pointing in one direction, and a plurality of barbs **9530** pointing in another direction.

[0265] FIG. **95** shows the base membrane **9505**, with the large tab **9510** and the small tab **9515**. In one example embodiment, a width W_{9510} of the large tab **9510** may be about 2 cm to about 2.5 cm, and a width W_{9515} of the small tab **9510** may be about 1 cm to about 1.5 cm, although any suitable wider and relatively narrower widths may be used based on the intended use of the tissue repair device **9500**. An overall length L_{9505} of the base membrane **9505** may be based on a size or diameter of tissue to be repaired using the tissue repair device **9500**.

[0266] The barbed sutures **9520** may be attached to the small tab **9515**, as shown in FIG. **95**, by making cuts **9535** in edges of the small tab **9515**, and hooking the barbed sutures **9520** into the cuts **9535**, as described above with respect to FIG. **48**. FIG. **96** shows a back side of the tissue repair device **9500**, and in particular, shows barbed portions **9525** of the barbed sutures **9520**, having barbs **9530**, and non-barbed portions **9540** of the barbed sutures **9520** having no barbs. As in the embodiment described above with respect to FIG. **48**, the barbed sutures **9520** may be hooked onto the small tab **9515** such that the barbed portions **9525** extend outward from the small tab **9515**, and the non-barbed portions **9540** overlap with the small tab **9515**, as shown. That said, the barbed sutures **9520** may be attached to the small tab **9515** in any suitable manner as described above, e.g., adhesive, sewing, weaving, heating, etc.

[0267] FIG. **97** shows two tissue ends **9700***a* and **9700***b* arranged longitudinally, aligning with the barbed sutures **9520** and overlapping a least one barbed suture **9520**, and the small tab **9515** of the base membrane **9505** positioned relative to the tissue ends **9700***a* and **9700***b*. The tissue repair device **9500** may be wrapped around the tissue ends **9700***a* and **9700***b*, such that the small tab **9515**, with the barbed sutures **9520**, wrap around the tissue ends **9700***a* and **9700***b*, with the barbs **9530** of the barbed sutures **9520** engaging with the tissue ends **9700***a* and **9700***b*, achieving coaptation, and the large tab **9510** also wrapping around the tissue ends **9700***a* and **9700***b* to further provide mechanical stability, to minimize the risk for axonal escape if used with nerves, and to protect a larger area of the tissue ends **9700***a* and **9700***b* around the coaptation site.

[0268] The small tab **9515** having the barbed sutures **9520** helps to bring the bidirectional barbs **9530** closer to a site of coaptation between tissue ends **9700***a* and **9700***b*, to help maintain alignment of the tissue ends **9700***a* and **9700***b*. As an example, in a case in which tissue ends **9700***a* and **9700***b* are nerve tissue ends, the small tab **9515** with the bidirectional barbs **9530** helps to maintain fascicular aligning, that is, alignment between fascicles within the nerve tissue ends. The large tab **9510** then wraps around the small tab and provides mechanical stability, minimizes the risk for axonal escape, in a case in which the tissue ends **9700***a* and **9700***b* are nerve tissue ends, and protects a larger area around the coaptation site.

[0269] Although transected tissue ends are discussed in reference to FIGS. **95-97**, the tissue repair devices of this embodiment may be applied to injured tissues of any type, whether fully transected or not, e.g., for protection or to allow the underlying tissue to heal, or simply to secure tissue

for any other suitable reason, unrelated to healing. For example, instead of two tissue ends being brought together, embodiments of the disclosure may wrap around or otherwise cover a portion of tissue that is intact, to promote repair or to otherwise protect the underlying tissue.

R. Base Membrane Having Tab with Barbed Mesh

[0270] FIGS. **98** to **100** show another embodiment of a tissue repair device **9800**, formed of a base membrane **9805** having a large tab **9810** and a small tab **9815**, and a barbed mesh **9820**. The base membrane **9805** may have one or more properties of the base membrane **3900** described above. The barbed mesh **9820** may be formed of a plurality of bi-directional barbed sutures, in that they include a plurality of barbs **9830** pointing in one direction, and a plurality of barbs **9830** pointing in another direction.

[0271] FIG. **98** shows the base membrane **9805**, with the large tab **9810** and the small tab **9815**. In one example embodiment, a width W_{9810} of the large tab **9810** may be about 2 cm to about 2.5 cm, and a width W_{9815} of the small tab **9810** may be about 1 cm to about 1.5 cm, although any suitable wider and relatively narrower widths may be used based on the intended use of the tissue repair device **9800**. An overall length L_{9805} of the base membrane **9805** may be based on a size or diameter of tissue to be repaired using the tissue repair device **9800**.

[0272] The barbed mesh **9820** may be attached to the small tab **9815**, as shown in FIG. **98**, by making cuts **9835** in edges of the small tab **9815**, and hooking the barbed mesh **9820** into the cuts **9835**, as described above with respect to FIG. **48**. FIG. **99** shows a back side of the tissue repair device **9800**, and in particular, shows barbed portions **9825** of the barbed mesh **9820**, having barbs **9830**, and non-barbed portions **9840** of the barbed mesh **9820** having no barbs. As in the embodiment described above with respect to FIG. **48**, the barbed mesh **9820** may be hooked onto the small tab **9815** such that the barbed portions **9825** extend outward from the small tab **9815**, and the non-barbed portions **9840** overlap with the small tab **9815**, as shown. That said, the barbed mesh **9820** may be attached to the small tab **9815** in any suitable manner as described above, e.g., adhesive, sewing, weaving, heating, etc.

[0273] FIG. **100** shows two tissue ends **10000***a* and **10000***b* arranged longitudinally, aligning with longitudinal portions of the barbed mesh **9820**, and overlapping a least a portion of the barbed mesh **9820**, and the small tab **9815** of the base membrane **9805** positioned relative to the tissue ends **10000***a* and **10000***b*. The tissue repair device **9800** may be wrapped around the tissue ends **10000***a* and **10000***b*, such that the small tab **9815**, with the barbed mesh **9820** hooked into the small tab **9815**, wrap around the tissue ends **10000***a* and **10000***b*, with the barbs **9830** of the barbed mesh **9820** engaging with the tissue ends **10000***a* and **10000***b*, achieving coaptation, and the large tab **9810** also wrapping around the tissue ends **10000***a* and **10000***b* to further provide mechanical stability, to minimize the risk for axonal escape, and to protect a larger area of the tissue ends **10000***a* and **10000***b* around the coaptation site, as described above with reference to FIG. **97**.

[0274] As in the embodiment of FIGS. **95** to **97**, the small tab **9815** having the barbed mesh **9820** helps to bring the bidirectional barbs **9830** closer to a site of coaptation between tissue ends **10000***a* and **10000***b*, to help maintain alignment of the tissue ends **10000***a* and **10000***b*. The use of the barbed mesh **9820** further helps to inhibit misalignment of barbed sutures and to ensure the barbs **9830** on the barbed sutures always face and engage with tissue ends **10000***a* and **10000***b*. As an example, in a case in which tissue ends **10000***a* and **10000***b* are nerve tissue ends, the small tab **9815** with the bidirectional barbs **9830** helps to maintain fascicular aligning, that is, alignment between fascicles within the nerve tissue ends. The large tab **9810** provides mechanical stability, minimizes the risk for axonal escape, in a case in which the tissue ends **10000***a* and **10000***b* are nerve tissue ends, and protects a larger area around the coaptation site.

[0275] Although transected tissue ends are discussed in reference to FIGS. **98-100**, the tissue repair devices of this embodiment may be applied to injured tissues of any type, whether fully transected or not, e.g., for protection or to allow the underlying tissue to heal, or simply to secure tissue for any other suitable reason, unrelated to healing. For example, instead of two tissue ends being brought together, embodiments of the disclosure may wrap around or otherwise cover a portion of tissue that is intact, to promote repair or to otherwise protect the underlying tissue.

S. Base Membrane Having Barbed Sutures

[0276] FIG. **101** shows another embodiment of a tissue repair device **10100**, formed of a base membrane **10105** and a plurality of barbed sutures **10110**. The base membrane **10105** may have one or more properties of the base membrane **3900** described above. The barbed sutures **10110** may be bi-directional barbed sutures, in that they include a plurality of barbs **10115** pointing in one direction, and a plurality of barbs **10115** pointing in another direction.

[0277] The base membrane **10105** may have a width W_{10105} of about 2 cm to about 2.5 cm, and a length L_{10105} may be based on a size or diameter of tissue to be repaired using the tissue repair device **10100**, although any suitable lengths and widths may be used. The barbed sutures **10110** may be attached to the base membrane **10105**, as shown in FIG. **101**, by making cuts **10120** in edges of the base membrane **10105**, and hooking the barbed sutures **10110** into the cuts **10120**, as described above with respect to FIG. **48**. Although this attachment mechanism is shown, any suitable attachment methodology described herein may be used. The barbed sutures **10110** may be attached on one side of the base membrane **10105**, that is, they may all be located on one side of a center line **10130** of the base membrane **10105**. The barbed sutures **10110** may also be arranged at a predetermined spacing S_{10110}, which may be determined based on the type of tissue to be repaired using the tissue repair device **10100** or the type of repair procedure. The barbed sutures **10110** may have barbed portions **10125**, having barbs **10115**, and a non-barbed portion (not shown), having no barbs **10115**. As in the embodiment described above with respect to FIG. **48**, the barbed sutures **10110** may be hooked onto the base membrane **10105** such that barbed portions **10125** extend outward from the base membrane **10105**, and the non-barbed portions overlap with the base membrane **10105**.

[0278] By virtue of the base membrane **10105** having a rectangular shape, as shown in FIG. **101**, without a small tab, the tissue repair device **10100** may be relatively easier or simpler to manufacture compared to the embodiment of FIGS. **95-97**, although they may function in a similar manner.

[0279] FIG. **102** shows another embodiment of a tissue repair device **10200**, formed of a base membrane **10205** and

a plurality of barbed sutures **10210**. The tissue repair device **10200** may be the same as the tissue repair device **10100** shown in FIG. **101**, but differs in that the barbed sutures **10210** may be attached centrally on the base membrane **10205**, that is, they may be symmetrically arranged about a center line **10230** of the base membrane **10205**, and the barbed sutures **10210** may be arranged at a relatively larger predetermined spacing S_{10210}, as compared to spacing S_{10110}, although any suitable spacing may be used.

[0280] As with the embodiment of FIG. **101**, by virtue of the base membrane **10205** having a rectangular shape, as shown in FIG. **102**, without a small tab, the tissue repair device **10200** may be relatively easier or simpler to manufacture and may function in a similar manner.

T. Base Membrane Having Barbed Mesh

[0281] FIG. **103** shows another embodiment of a tissue repair device **10300**, formed of a base membrane **10305** and a barbed mesh **10310**. The base membrane **10305** may have one or more properties of the base membrane **3900** described above. The barbed mesh **10310** may be formed of a plurality of bi-directional barbed sutures, each including a plurality of barbs **10315** pointing in one direction, and a plurality of barbs **10315** pointing in another direction.

[0282] The base membrane **10305** may have a width W_{10305} of about 2 cm to about 2.5 cm, and a length L_{10305} may be based on a size or diameter of tissue to be repaired using the tissue repair device **10300**, although any suitable lengths and widths may be used. The barbed mesh **10310** may be attached to the base membrane **10305**, as shown in FIG. **103**, by making cuts **10320** in edges of the base membrane **10305**, and hooking the barbed mesh **10310** into the cuts **10320**, as described above with respect to FIG. **48**. Although this attachment mechanism is shown, any suitable attachment methodology described herein may be used. The barbed mesh **10310** may be attached on one side of the base membrane **10305**, that is, the barbed mesh **10310** be located on one side of a center line **10330** of the base membrane **10305**. The barbed mesh **10310** may also have a predetermined spacing S_{10310} between longitudinal sutures forming the mesh **10310**, which may be determined based on the type of tissue to be repaired using the tissue repair device **10300**, or the type of repair procedure. The barbed mesh **10310** may have barbed portions **10325**, having barbs **10315**, and a non-barbed portion (not shown), having no barbs **10315**. As in the embodiment described above with respect to FIG. **48**, the barbed mesh **10310** may be hooked onto the base membrane **10305** such that barbed portions **10325** extend outward from the base membrane **10305**, and the non-barbed portion overlaps with the base membrane **10305**.

[0283] By virtue of the base membrane **10305** having a rectangular shape, as shown in FIG. **103**, without a small tab, the tissue repair device **10300** may be relatively easier or simpler to manufacture and may function in a similar manner.

[0284] FIG. **104** shows another embodiment of a tissue repair device **10400**, formed of a base membrane **10405** and a barbed mesh **10410**. The tissue repair device **10400** may be the same as the tissue repair device **10300** shown in FIG. **103**, but differs in that the barbed mesh **10410** may be attached centrally on the base membrane **10405**, that is, the barbed mesh **10410** be centered on a center line **10430** of the base membrane **10405**, and a predetermined spacing S_{10410} between longitudinal sutures forming the mesh **10410**, as compared to spacing S_{10310}, although any suitable spacing may be used.

[0285] As with the embodiment of FIG. **103**, by virtue of the base membrane **10405** having a rectangular shape, as shown in FIG. **104**, without a small tab, the tissue repair device **10400** may be relatively easier or simpler to manufacture and may be used in a similar manner.

U. Base Membrane with Longitudinally Arranged Barbed Sutures

[0286] FIG. **105** is a schematic view of a tissue repair device **10500** including a plurality of barbed sutures **10502** mounted on or embedded within a base membrane **10505**, according to another embodiment. One or more properties of the base membrane **10505** may be the same as those noted above with respect to base membrane **3900**. FIG. **105** also shows two tissue ends **10501***a* and **10501***b*, placed on the tissue repair device **10500** during a tissue repair process. In particular, FIG. **105** shows four sets of barbed sutures **10502**, with two sets of the barbed sutures **10502** positioned adjacent to the tissue ends **10501***a* and **10501***b*, and two sets of the barbed sutures **10502** being under the tissue ends **10501***a* and **10501***b*.

[0287] A length L_{10505} of base membrane **10505** may be about 35 mm and a width W_{10505} of the base membrane **10505** may be about 18 mm. The barbed sutures **10502** may be parallel to a long side of the base membrane **10505**, as shown. A length L_{10502} of the barbed sutures **10502** may be about 15 mm, in a case in which set of barbed sutures **10502** are provided. Alternatively, the length L_{10502} of about 15 mm may be a length of a barbed portion of the barbed suture **10502**, and an overall length of the barbed suture **10502** as one continuous longitudinal suture, may be the same as the length L_{10505} of the base membrane **10505**. A spacing S_{10502} between adjacent sutures may be about 3 mm. It should be recognized, however, that the example dimensions provided herein are exemplary only and are not limiting, as the specific dimensions may depend, at least in part, on the tissue to which the tissue repair device is to be affixed or the intended use of the tissue repair device.

[0288] A gap G_{10502} may be provided between barbed sutures **10502**, in a case in which the barbed sutures **10502** are provided as sets, with pairs of barbed sutures being positioned at opposite ends of the base membrane **10505** from each other. Alternatively the barbed sutures **10502** may be long, continuous barbed sutures **10502**, extending along the length of the base membrane **10505**, with central portions of the barbed sutures **10502** being woven through the base membrane **10505**, thereby forming a space between barbed portions of the barbed sutures **10502** on a surface of the base membrane **10505**.

[0289] The barbed sutures **10502** may be, for example, barbed sutures according to one of the embodiments described herein. Alternatively, the barbed sutures **10502** may be 3D printed. Each barbed suture **10502** may include one or more barbs **10515** extending from a surface of the barbed suture **10502** configured to contact with a tissue. As depicted in FIG. **105**, the barbed sutures **10502** may be arranged such that the one or more barbs **10515** of the barbed sutures **10502** are oriented in different directions. The multi-directional arrangement of the one or more barbs **10515** may help the tissue repair device **10500** resist movement or displacement in one or more directions. For example, the multi-directional arrangement of the one or

more barbs **10515** may inhibit tissue ends **10501***a* and **10501***b* from pulling away from each other.

[0290] The barbed sutures **10502** may be mounted to the base membrane **10505** using a glue or an adhesive. The glue or adhesive may include one or more of the materials described above with respect to the embodiment shown in FIGS. **24** to **28**.

[0291] As another example, the barbed sutures **10502** may be attached by weaving or sewing the barbed sutures **10502** through the base membrane **10505**, or the barbed sutures **10502** may be hooked onto the base membrane **10505** by making J-shaped or S-shaped cuts in the base membrane **10505** or making small holes in the side of the base membrane **10505**, threading the barbed sutures **10502** through the cuts or holes, and tying knots in the ends of the sutures **10502** once threaded through the cuts or holes. As still another example, the barbed sutures **10502** may be attached using heat, such as by melting the barbed sutures **10502** at specific locations as the barbed sutures **10502** lay atop the base membrane **10505**.

[0292] As still a further example, the barbed sutures **10502** may be attached to the base membrane **10505** using etching, as described above.

[0293] Although transected tissue ends are discussed in reference to FIG. **105**, the tissue repair devices of this embodiment may be applied to injured tissues of any type, whether fully transected or not, e.g., for protection or to allow the underlying tissue to heal, or simply to secure tissue for any other suitable reason, unrelated to healing. For example, instead of two tissue ends being brought together, embodiments of the disclosure may wrap around or otherwise cover a portion of tissue that is intact, to promote repair or to otherwise protect the underlying tissue.

V. Strip of Base Membrane with Barbed Sutures

[0294] FIG. **106** is a schematic view of a tissue repair device **10600** including barbed sutures **10602**, intersecting with non-barbed sutures **10603**, as a mesh **10604**, integrated with a strip of base membrane **10605**, in use during a tissue repair process, according to still another embodiment. One or more properties of the base membrane **10605** may be the same as those noted above with respect to base membrane **3900**. FIG. **106** shows a plurality of barbed sutures **10602** with barbs **10610**, the non-barbed sutures **10603**, the integrated strip of base membrane **10605**, and two transected tissue ends **10601***a* and **10601***b*. The two transected tissue ends **10601***a* and **10601***b* may be placed on the base membrane **10605**, with the barbed sutures **10602** being generally aligned with the two transected tissue ends **10601***a* and **10601***b*. A portion of the base membrane **10605** and a portion of each of the barbed sutures **10602** which extend beyond the base membrane **10605** may be positioned on one of the transected tissue ends **10601***a* and **10601***b*, and another portion of the base membrane **10605** and another portion of each of the barbed sutures **10602** may be generally aligned with the other one of the transected tissue ends **10601***a* and **10601***b*. The transected tissue ends **10601***a* and **10601***b* may be arranged so that the ends of the transected tissue ends **10601***a* and **10601***b* are positioned on the base membrane **10605**, and the end regions and central portions of the transected tissue ends **10601***a* and **10601***b* are positioned on the barbed sutures **10602**. The transected tissue ends **10601***a* and **10601***b* may be positioned relative to one another so that a gap G_{106} is formed therebetween, for the reasons discussed above with respect to gap G_{67}. The gap G_{106} may be approximately 0 mm, or may be greater than approximately 0 mm, such as up to about 5 mm or up to about 10 mm. For example, the gap G_{106} may be about 0 mm to about 10 mm, about 0 mm to about 8 mm, about 1 mm to about 10 mm, about 1 mm to about 8 mm, about 2 mm to about 8 mm, about 3 mm to about 7 mm, about 3 mm, about 4 mm, about 5 mm, about 6 mm, about 7 mm, etc.

[0295] A length L_{10605} of the strip of base membrane **10605** may be about 5 mm and a width W_{10605} of the base membrane **10605** may be about 18 mm. The barbed sutures **10502** may be perpendicular to a long side of the base membrane **10505**, as shown. A length L_{10602} of the barbed sutures **10602** may be about 35 mm. A spacing S_{10602} between adjacent barbed sutures **10502** may be about 3 mm. The non-barbed sutures **10603** may be parallel to the long side of the base membrane **10505**, as shown. A width W_{10603} of the non-barbed sutures **10603** may be about 15 mm. It is to be understood, however, that these dimensions are only exemplary, and any suitable dimensions, e.g., based on the intended use of the tissue repair device or the type of tissue to which it will be attached, may be used.

[0296] The length L_{10602} of the barbed sutures **10602** and the width W_{10603} of the non-barbed sutures **10603** may be determined such that, when the transected tissue ends **10601***a* and **10601***b* are placed on the base membrane **10605**, the width of each of the barbed sutures **10602** lays on or adheres to portions of outer surfaces of the transected tissue ends **10601***a* and **10601***b*, as shown in FIG. **106**. That is, the barbed sutures **10602** may collectively extend around the outer surface of each of the transected tissue ends **10601***a* and **10601***b*, and each barbed suture **10602** extends generally in line along the transected tissue ends **10601***a* and **10601***b*. The base membrane **10605** may be wrapped around an entire outer surface of each transected tissue end **10601***a* and **10601***b*, surrounding or enclosing the gap G_{106}. The width W_{10602} in this embodiment may be sized so as to cover the gap G_{106}, as well as the ends of the transected tissue ends **10601***a* and **10601***b*, but the majority of the transected tissue ends **10601***a* and **10601***b* may be engaged by the plurality of barbed sutures **10602**.

[0297] Wrapping may include physically moving (e.g., rolling, twisting, or pulling) the base membrane **10605** and laying it on the surface of the transected tissue ends **10601***a* and **10601***b*, rolling the transected tissue ends **10601***a* and **10601***b* on the base membrane **10605**, or a combination thereof. In some aspects, ends of the base membrane **10605** may be secured after wrapping, for example, using a suture, an adhesive, a gel, or capillary action. By this configuration, the barbed sutures **10602** and the base membrane **10605** secure the transected tissue ends **10601***a* and **10601***b* in place so that a tissue repair process may occur. More specifically, barbs **10610** on the barbed sutures **10602** may protrude into or otherwise engage with the outer surface of each of the transected tissue ends **10601***a* and **10601***b*, and the barbs **10610** with the base membrane **10605** may inhibit the transected tissue ends **10601***a* and **10601***b* from moving apart. In scenarios in which the transected tissue ends **10601***a* and **10601***b* are nerve tissue, the barbs **10610** may engage the nerve epineurium. The base membrane **10605** may also prevent axons that may grow from one or both ends of the tissue ends **10601***a* and **10601***b* from escaping, or extending outward, away from the other of the tissue ends **10601***a* and **10601***b*.

[0298] Although transected tissue ends are discussed in reference to FIG. **106**, the tissue repair devices of this embodiment may be applied to injured tissues of any type, whether fully transected or not, e.g., for protection or to allow the underlying tissue to heal, or simply to secure tissue for any other suitable reason, unrelated to healing. For example, instead of two tissue ends being brought together, embodiments of the disclosure may wrap around or otherwise cover a portion of tissue that is intact, to promote repair or to otherwise protect the underlying tissue.

W. Base Membrane with Slits and Longitudinal Barbed Sutures

[0299] FIG. **107** is a schematic view of a tissue repair device **10700** having a base membrane **10705** with slits or openings **10710** positioned away from one or more edges of the tissue repair device **10700**, that is, slits extending within the base membrane **10705**, and longitudinally arranged barbed sutures **10715**. The tissue repair device **10700** may be similar to the tissue repair device **10500** shown in FIG. **105**, but may differ in that the slits **10710** are provided within the base membrane **10705**.

[0300] FIG. **108** is a schematic view of a tissue repair device **10800** having a base membrane **10805** with slits or openings **10810** located along one or more edges of the base membrane **10805**, that is, slits extending towards exterior edges of the base membrane **10805**, and longitudinally arranged barbed sutures **10815**. The tissue repair device **10800** may be the same as the tissue repair device **10500** shown in FIG. **105**, but may differ in that the slits **10810** are provided within the base membrane **10705**.

[0301] The slits or openings **10710** and **10810** may be included in the base membrane to allow for tissue to which the tissue repair device is applied to swell, contract, flex, rotate, or otherwise move after application of the tissue repair device without impinging, constricting, or putting too much pressure on the tissue. For example, swelling, shrinking, or flexion may occur between the barbed attachment sites in the location of the slits. The base membrane on either side of a given slit may more easily be able to move towards or away from each other, or to splay out or bend, even if there is less give or stretchiness to the material from which the base membrane is formed.

[0302] FIGS. **109** to **111** are images of a tissue repair device, as in FIG. **105**, with FIG. **109** depicting a base membrane with longitudinally arranged barbed sutures attached thereto. FIG. **110** depicts sample tissue ends, in this case, nerve ends, wrapped in the base membrane and held in place by the barbed sutures, and FIG. **111** depicts the wrapped tissue ends and base membrane and barbed sutures being held, and demonstrates the ability of the tissue repair device to remain in place and engaged with the tissue ends. Although transected tissue ends are discussed in reference to FIGS. **107** to **111**, the tissue repair devices of this embodiment may be applied to injured tissues of any type, whether fully transected or not, e.g., for protection or to allow the underlying tissue to heal, or simply to secure tissue for any other suitable reason, unrelated to healing. For example, instead of two tissue ends being brought together, embodiments of the disclosure may wrap around or otherwise cover a portion of tissue that is intact, to promote repair or to otherwise protect the underlying tissue.

X. Base Membrane with Barbed Constructs

[0303] FIG. **112** is a schematic view of a tissue repair device **11200** according to still another embodiment. The tissue repair device **11200** has a base membrane **11205** and barbed constructs **11210** of having barbs **11215**. In some aspects, the barbs **11215** may be micro-injection molded. The base membrane **11205** may have one or more of the properties of the base membrane **3900** described above. Each barbed construct **11210** may be formed as a thin substrate, and may be formed of a same material as the barbs **11215**. The barbed constructs **11210** may be arranged on the base membrane **11205** in a grid pattern, as shown, with a long edge of each barbed construct **11210** being parallel to tissue ends **11201***a* and **11201***b* when placed onto the base membrane. Other arrangements, orientations, or configurations of barbed constructs **11210** may be used, such as perpendicular arrangements, or offset or other arrangements of barbed constructs **11210**. In some aspects, the barbed constructs **11210** may be attached along an entire base membrane **11205**, or in other aspects, the barbed constructs **11210** may be attached along less than an entire base membrane **11205**, for example, along one more edges of base membrane **11205**, or along approximately half or less than half of the base membrane **11205**.

[0304] FIG. **113** is a detail view of an example of micro-injection molded barbs **11215**. The thin substrate forming a barbed construct **11210** may be part of a mold used to form the barbs **11215**. A polymer may then be added to the mold to thereby form the barbs **11215**. Any of the polymers listed herein may be used in forming the barbs **11215**, including resorbable polymers.

[0305] FIG. **114** depicts the tissue repair device **11200** wrapped around the tissue ends **11201***a* and **11201***b*. The barbs of the barbed constructs **11210** engage with surfaces of the tissue ends **11201***a* and **11201***b*, achieving coaptation of the tissue ends **11201***a* and **11201***b*, while the base membrane **11205** encloses the coapted tissue ends **11201***a* and **11201***b*. As in other embodiments, the base membrane **11205** may provide mechanical stability, minimize the risk for axonal escape, and protect a larger area of the tissue ends **10201***a* and **10201***b* around the coaptation site.

[0306] FIG. **115** shows a side cross-sectional view of a strip **11510** and a barb **11515** formed thereon, according to one embodiment. The strip **11510** may have a rectangular cross-sectional shape, and the barb **11515** may have a triangular cross-sectional shape. FIG. **116** shows a side cross-sectional view of a strip **11610** and a barb **11615** according to another embodiment. The strip **11610** may have a generally rectangular cross-sectional shape, with upper edges or corners of the strip **11610** having a chamfered edge. The barb **11615** may have a triangular cross-sectional shape. FIG. **117** shows a side cross-sectional view of a strip **11710** and a barb **11715** according to still another embodiment. The strip **11710** may have a generally rectangular cross-sectional shape, with upper edges or corners of the strip **11710** having a rounded edge. The barb **11715** may have a triangular shape. FIG. **118** shows a cross-sectional side view of a strip **11810** and a multi-directional barb **11815** according to yet another embodiment. The strip **11810** may have a generally rectangular cross-sectional shape, with upper edges or corners of the strip **11810** having rounded edges. The multi-directional barb **11815** may have the shape of two triangles partially overlapping each other, as shown, such that the barb **11815** has two points **11815***a* and **11815***b*. Any one of the cross-sectional shapes of the strips and barbs of FIGS. **115** to **118** may be used in the tissue repair device **11200** described above. Further, formation of the barbed constructs

11210 via micro-injection molding may allow for a variety of different potential cross-sectional shapes, only a sample of which are depicted in FIGS. **115** to **118**.

[0307] Although transected tissue ends are discussed in reference to FIGS. **112** to **118**, the tissue repair devices of this embodiment may be applied to injured tissues of any type, whether fully transected or not, e.g., for protection or to allow the underlying tissue to heal, or simply to secure tissue for any other suitable reason, unrelated to healing. For example, instead of two tissue ends being brought together, embodiments of the disclosure may wrap around or otherwise cover a portion of tissue that is intact, to promote repair or to otherwise protect the underlying tissue.

Y. Method of Use of Tissue Repair Device

[0308] FIG. **119** is a flowchart of a method **11900** of securing two tissue ends together using a tissue repair device. The method may include a step **11905** of affixing the two tissue ends on a tissue repair device. Step **11905** may include orienting the tissue repair device so that the surface with barbs is facing the transected tissue ends. Step **11905** may then include affixing one portion of the barbs of the tissue repair device to a portion of a first transected tissue end region and attaching another portion of the barbs of the tissue repair device to a portion of a second transected tissue end region by engaging the barbs with outer surfaces of the transected tissue end regions.

[0309] In some embodiments, the step **11905** may also include aligning first and second transected tissue ends with each other on the tissue repair device and placement of the first and second transected tissue ends at a predetermined spacing from each other, to form a gap (e.g., any one of the gaps described herein) therebetween.

[0310] The method **11900** may also include a subsequent step **11910** of wrapping an outer surface of each of the two tissue ends in the tissue repair device. The step **11910** may include wrapping the tissue repair device, including a base membrane, according to some embodiments, around the outer surfaces of the first and second transected tissue ends, rolling the first and second transected tissue ends on the tissue repair device, or a combination thereof. In some embodiments, a separate base membrane may then also be wrapped around the tissue repair device.

[0311] The method **11900** may include affixing additional barbed sutures, barbed meshes, or barbed strips to the first and second tissue end regions as the tissue repair device is wrapped around the tissue surfaces.

[0312] The method **11900** may optionally also include a step **12000**, shown in FIG. **120**, of securing the ends of the tissue repair device, after the wrapping of the outer surfaces of the two tissue ends. The securing of the ends of the tissue repair device may include using one or more of a suture, an adhesive, a gel, or capillary action. The method **11900** may be part of a tissue repair process. In some embodiments, multiple tissue repair devices may be applied, or a singular tissue repair device may be applied. As described above with respect to several embodiments, a wrap may or may not be used as part of the tissue repair device.

[0313] In embodiments that use a base membrane, for example, a base membrane formed of SIS, a second layer of SIS base membrane may be provided on one end of a first layer of SIS base membrane, so that a portion of the first SIS base membrane may be wrapped around tissue ends one or more times, and then the end of the first base membrane having the second layer of SIS base membrane may be positioned against the underlying wrapped portion of the first layer of SIS base membrane, and the first base membrane and the second base membrane may remain in place via capillary effect.

[0314] In some embodiments, an additional layer of a gel may be applied to at least an end portion of a base membrane, so that a portion of the base membrane may be wrapped around tissue ends one or more times, and then the end of the base membrane having the gel thereon may be positioned against and stuck to the underlying wrapped portion of the base membrane.

[0315] A gap between the two tissue ends placed on the tissue repair device may be approximately 0 mm, or the gap may be greater than approximately 0 mm, for example, up to about 10 mm or up to about 5 mm. The gap may be greater than approximately 0 mm for the reasons set forth above with respect to gap G_{67}. In some aspects, the gap may be about 0 mm to about 10 mm, about 0 mm to about 8 mm, about 1 mm to about 10 mm, about 1 mm to about 8 mm, about 2 mm to about 8 mm, about 3 mm to about 7 mm, about 3 mm, about 4 mm, about 5 mm, about 6 mm, about 7 mm, etc.

[0316] The tissue repair device used in method **11900** may be any of the tissue repair devices shown and described in reference to FIG. **21-36**, or **46-118**, for example. In some aspects, the tissue repair device **6400**, including the barbed mesh **6402** shown in FIGS. **64**A to **67**, or the tissue repair device **7000**, including the base membrane **7002** and barbs **7005** shown in FIGS. **70** to **72**, and may include at least one mesh including a plurality of barbed sutures, including a plurality of longitudinal barbed sutures and a plurality of lateral barbed sutures, each barbed suture including a suture body and at least one barb formed on an outer surface of the suture body, the at least one barb including at least one projection. Alternatively, the tissue repair device used in method **11900** may be, for example, the tissue repair device **7000**, including the base membrane **7002** with barbs **7005**, shown in FIG. **70**, the plurality of barbs being formed by one of laser cutting and embossing. In addition, the tissue repair device may be the tissue repair device **7700**, including the two barbed sutures **7702** and the base membrane **7705**, the tissue repair device **7800**, including the sets of welded, side-by-side barbed sutures **7802** and the base membrane **7805**, shown in FIG. **78**, the tissue repair device **7900**, including the barbed strips **7902** and the base membrane **7905**, shown in FIG. **79**, or the tissue repair device **8100**, including the barbed strips **8102** adhered to the strip of base membrane **8105** and the base membrane **8110**, shown in FIG. **81**. That is, the tissue repair device may include at least a wrap and at least two barbed sutures, a longitudinal length of the barbed sutures being greater than a width of the wrap, each barbed suture including portions including barbs and a portion that is free from barbs. By virtue of this method, two tissue ends may be secured together, to allow for a tissue repair process to occur.

[0317] For each of the configurations of tissue repair devices shown and described with respect to FIGS. **2** to **114**, as an example, the transected tissue ends may be nerve ends, and the tissue repair process may be nerve regeneration. In addition, the method **11900** may be a method of securing two tissue ends together, and the tissue may be nerve tissue, with the transected tissue ends being transected nerve ends. In a case in which the tissue ends are nerve ends, barbs of

the tissue repair devices of the embodiments described with respect to FIGS. **2** to **114** may protrude into or otherwise engage with the epineurium of each of the nerve ends, without extending into the perineurium or fascicles of each nerve end. Further, although transected tissue ends are discussed, the tissue repair devices of the embodiments described with respect to FIGS. **2** to **114** may be applied to injured tissues of any type, whether fully transected or not, e.g., for protection or to allow the underlying tissue to heal, or simply to secure tissue for any other suitable reason, unrelated to healing. For example, instead of two tissue ends being brought together, embodiments of the disclosure may wrap around or otherwise cover a portion of tissue that is intact, to promote repair or to otherwise protect the underlying tissue. The term 'tissue ends' as used herein should not be interpreted as limiting use of the devices, and the devices may be used in a variety of different ways and for procedures other than coaptation. Further, the tissue repair devices of the embodiments described with respect to FIGS. **2** to **114** may be used on tissue ends with a tissue graft being placed between the transected tissue ends.

Z. Microscopic View of Etched Surface

[0318] FIG. **121** is an image of glass fibers **12100** extending from a resorbable polymer surface **12105**, the polymer surface having been etched back to expose the glass fibers **12100**. The glass fibers **12100** may form microneedles of a height H_{12100}, e.g., in a range of about 10 μm to about 500 μm, for example. The etching to expose glass fibers is an example of the forming of barbs or microneedles on a polymer surface, according to one or more embodiments described herein.

AA. Benefits and Uses

[0319] Embodiments of the disclosure may allow for sutureless fixation of tissue, such as fixation of a nerve to other nerve ends or to a nerve adjunctive implant (e.g., protective covering, connector, transected nerve coaptation aid, drug delivery system), for example. In a case in which the barbed suture or the tissue repair device is used on a nerve, aspects of the disclosure may allow for secure attachment of the barbed suture or the tissue repair device to only an outer epineurial connective tissue and fatty tissue of the nerve, while leaving the internal nerve architecture (nerve fascicles, perineurium, endoneurium, and blood vessels) substantially undisturbed. For example, the penetration depth of the barb or projection, of the barbed suture or of the tissue repair device, in the vertical y-axis direction may not exceed about 150 microns. The length of cuts used to form the barbs, of the barbed suture or of the tissue repair device (if applicable), may be, e.g., up to about 250 microns, or longer, so long as the vertical penetration depth along the y-axis does not exceed about 150 microns. In some aspects, the angles of the barbs, of the barbed suture or of the tissue repair device (if applicable), may be up to about 45 degrees relative to the suture along its length or up to about 60 degrees relative to the suture along its length. Example sutures on which multi-directional barbs are included may be, e.g., 3-0 gauge or smaller, for example, 4-0 gauge, 5.0 gauge, 6.0 gauge, 7.0 gauge, or 8.0 gauge.

[0320] Embodiments of the disclosure may also afford benefits over existing methods for tissue fixation, such as placement of sutures or using no sutures, and over other forms of barbed sutures for the purpose of tissue fixation. Embodiments may promote improved fixation that resists against movement of the barbed suture in multiple directions. Embodiments may promote improved fixation that resists against movement of the tissue repair device and distributes the connective force of the tissue repair device across a broader surface(s) of the tissue(s) to which it is affixed. For example, sutures placed directly at a repair site to repair tissue put all of the force of retaining the tissue in place directly at the site of damage. By contrast, tissue repair devices of the current disclosure may distribute the force across a broader portion of the tissue(s) being repaired, which may reduce the amount of stress added to the site of repair.

[0321] Prototypes of the tissue repair devices prepared using methods disclosed herein have demonstrated the effectiveness of adhering sutures on a base membrane formed of SIS, in performing coaptation repair on transected nerve ends in a benchtop setting. The attachment of the sutures to the base membrane provides structural support to sutures and circumferential coverage at the coaptation site of tissue ends to inhibit the risk of axonal escape.

[0322] Although barbed sutures and tissue repair devices of the present disclosure are described for use with nerves, examples of tissue with which barbed sutures and tissue repair devices described herein may be used include nerve tissue, such as peripheral nerve tissue or central nervous system tissue, as well as other types of tissue. Exemplary tissue types suitable for use with barbed sutures and tissue repair devices of the present disclosure include, but are not limited to, epithelial tissue, connective tissue, muscular tissue, tendon tissue, ligament tissue, vascular tissue, intestinal tissue, dermal tissue, and cardiac tissue. The tissue may be mammalian tissue, including human tissue and tissue of other primates, rodent tissue, equine tissue, canine tissue, rabbit tissue, porcine tissue, or ovine tissue. In some aspects, the tissue may be non-mammalian tissue, selected from piscine, amphibian, or insect tissue. The tissue may be allogeneic or xenogeneic to a subject into which the graft is implanted. The tissue may be a synthetic tissue, such as, but not limited to, laboratory-grown or 3D-printed tissue.

[0323] It should be understood that although the present disclosure has been made with reference to preferred embodiments, exemplary embodiments, and optional features, modifications and variations of the concepts herein disclosed may be resorted to by those skilled in the art, and that such modifications and variations are considered to be within the scope of this disclosure as defined by the appended claims. The specific embodiments and examples provided herein are examples of useful embodiments of the present disclosure and are non-limiting and illustrative only. It will be apparent to one skilled in the art that the present disclosure may be carried out using a large number of variations of the devices, device components, methods, and steps set forth in the present description. As will be recognized by one of skill in the art, methods and devices useful for the present methods can include a large number of various optional compositions and processing elements and steps.

We claim:

1. A barbed suture comprising:

a suture body; and

at least one multi-directional barb formed on an outer surface of the suture body, the at least one multi-

directional barb including a first projection and a second projection, wherein the first projection and the second projection extend in two different directions.

2. The barbed suture according to claim **1**, wherein the at least one multi-directional barb is formed by:

making a first cut in the suture body, the first cut having a first depth and a first length and being formed at a first angle relative to a longitudinal axis of the suture body, and forming the first projection; and

making a second cut in the suture body, in a vicinity of the first cut, the second cut having a second depth and a second length and being formed at a second angle relative to the longitudinal axis of the suture body, and forming the second projection.

3. The barbed suture according to claim **2**, wherein the first depth is less than the second depth.

4. The barbed suture according to claim **2**, wherein the first angle is less than the second angle.

5. The barbed suture according to claim **2**, wherein the first cut and the second cut overlap with respect to a radial axis of the suture body.

6. The barbed suture according to claim **1**, wherein the at least one multi-directional barb includes a first barb and a second barb, and wherein at least one of the first barb and the second barb is one of:

hook-shaped;

a multi-directional barb having pointed projections;

a multi-directional barb having rounded projections; or

a geometrically-shaped barb.

7. The barbed suture according to claim **1**, wherein the two different directions are angled relative to each other.

8. The barbed suture according to claim **1**, wherein the two different directions are substantially opposite to each other.

9. The barbed suture according to claim **1**, wherein the at least one multi-directional barb comprises a plurality of multi-directional barbs arranged in one of:

rows;

columns;

rings;

spirals, or

a geometric-shaped pattern on a surface of the suture body.

10. The barbed suture according to claim **1**, wherein the at least one multi-directional barb comprises at least a first barb and a second barb, and wherein first projections of the first and the second multi-directional barbs are oriented in the same direction as each other, and second projections of the first and the second multi-directional barbs are oriented in the same direction as each other.

11. The barbed suture according to claim **1**, wherein the at least one multi-directional barb comprises at least two barbs, and wherein the at least two barbs are arranged in a pattern, with first projections of a first subset of barbs pointing in a first direction and first projections of a second subset of barbs pointing in a second direction, different from the first direction.

12. A barbed suture comprising:

a suture body; and

at least two barbs formed on an outer surface of the suture body, a first barb of the at least two barbs having a first projection pointing in a first direction, and a second barb of the at least two barbs having a first projection pointing in a second direction, wherein the first direction is different than the second direction.

13. The barbed suture according to claim **12**, wherein each of the first barb and the second barb is a uni-directional barb.

14. The barbed suture according to claim **12**, wherein each of the first barb and the second barb is a multi-directional barb.

15. The barbed suture according to claim **12**, wherein at least one of the first barb and the second barb is one of:

hook-shaped;

a multi-directional barb having pointed projections;

a multi-directional barb having rounded projections;

a circular disc;

a single, rounded barb; or

a geometrically-shaped barb.

16. The barbed suture according to claim **12**, wherein the at least two barbs are arranged in one of:

rows;

columns;

rings;

spirals, or

a geometric-shaped pattern on a surface of the suture body.

17. The barbed suture according to claim **12**, wherein the at least two barbs are formed on a portion of a length of the suture body, and no barbs are formed on another portion of the length of the suture body.

18. The barbed suture according to claim **12**, wherein the at least two barbs are formed on a portion of a circumference of the suture body, and no barbs are formed on another portion of the circumference of the suture body.

19. The barbed suture according to claim **12**, wherein the at least two barbs are oriented so that they are angled relative to a longitudinal axis of the suture body.

20. A method of making a barbed suture, the method comprising:

making a first cut into a suture body to form a first projection oriented in a first direction, wherein the first cut does not extend fully through the suture body; and

making a second cut into the suture body to form a second projection oriented in a second direction, wherein the second cut does not extend fully through the suture body,

wherein the first direction is different from the second direction.

21. A tissue repair device comprising:

at least one mesh including:

a plurality of barbed sutures, including a plurality of longitudinal barbed sutures and a plurality of lateral barbed sutures, each barbed suture including:

a suture body; and

at least one barb formed on an outer surface of the suture body.

22. The tissue repair device according to claim **21**, wherein the plurality of longitudinal barbed sutures and the plurality of lateral barbed sutures are arranged in a grid pattern.

23. The tissue repair device of claim **21**, further comprising a base membrane configured to overlay a non-barbed surface of the plurality of barbed sutures during use.

24. The tissue repair device of claim **21**, further comprising sheet of a base membrane attached to a non-barbed surface of the plurality of barbed sutures.

25. The tissue repair device of claim **21**, wherein the plurality of sutures includes two or more lateral sutures and two or more longitudinal sutures, the two or more lateral sutures having a relatively greater length than the two or more longitudinal sutures, thus forming at least one strip of mesh.

26. The tissue repair device of claim **25**, further comprising at least one sheet of base membrane to which the at least one strip of mesh is attached.

27. The tissue repair device of claim **26**, wherein the at least one strip of mesh includes a portion free from barbs, located in a longitudinal center region of the mesh.

28. The tissue repair device of claim **26**, further comprising a base membrane attached to a non-barbed surface of the strip of mesh.

29. The tissue repair device of claim **21**, further comprising a base membrane, wherein a longitudinal length of each lateral barbed suture is greater than a width of the base membrane, wherein the mesh includes a portion that is free from barbs located in a longitudinal center of each lateral barbed suture, and wherein the base membrane extends over the portion of the mesh that is free from barbs.

30. A tissue repair device comprising:

a sheet of base membrane; and

a plurality of barbs formed on the sheet of base membrane, the plurality of barbs being formed by one of laser cutting or embossing.

31. A tissue repair device comprising:

a base membrane; and

a plurality of barbs formed on the base membrane, the plurality of barbs being formed of resorbable ceramic and being attached to the base membrane.

32. A tissue repair device comprising:

a base membrane; and

at least two barbed sutures, a longitudinal length of each of the at least two barbed sutures being greater than a width of the base membrane, each barbed suture including portions having barbs and a portion that is free from barbs.

33. The tissue repair device of claim **32**, wherein the at least two barbed sutures are spaced apart from each other and are woven through the base membrane, such that the portion of each barbed suture that is free from barbs is woven through the base membrane, and the portions of each barbed suture that have barbs extend outward from the base membrane.

34. The tissue repair device of claim **32**, wherein the base membrane includes at least two pre-made holes, and wherein the at least two barbed sutures include at least one set of welded barbed sutures, the at least one set of barbed sutures passing through the at least two pre-made holes in the base membrane.

35. The tissue repair device of claim **32**, wherein the at least two barbed sutures includes at least one strip of barbed sutures, arranged in a thin grid pattern.

36. A tissue repair device comprising:

a strip of base membrane; and

at least two barbed sutures attached to the strip of base membrane.

37. The tissue repair device of claim **36**, wherein each barbed suture includes portions having barbs and a portion that is free from barbs.

38. The tissue repair device of claim **36**, wherein the at least two barbed sutures are arranged to form a mesh.

39. A method of securing two tissue ends relative to one another, the method comprising:

affixing the two tissue ends to a tissue repair device comprising at least one mesh formed of a plurality of barbed sutures, wherein the plurality of barbed sutures includes a plurality of longitudinal barbed sutures and a plurality of lateral barbed sutures, each barbed suture including a suture body and at least one barb formed on an outer surface of the suture body; and

wrapping an outer surface of each of the two tissue ends in the tissue repair device.

40. The method of claim **39**, wherein a gap between the two tissue within the tissue repair device is between 0 mm and about 5 mm.

41. The method of claim **39**, further comprising securing an end of the tissue repair device after the wrapping of the outer surfaces of the two tissue ends.

42. The method of claim **41**, wherein the securing includes using one or more of a suture, a suture, and an adhesive.

43. The method of claim **39**, wherein the method further comprises wrapping a base membrane around the tissue repair device to cover the tissue repair device.

44. The method of claim **43**, wherein the wrapping the base membrane occurs at the same time as wrapping the tissue repair device.

45. The method of claim **43**, wherein the wrapping the base membrane occurs after wrapping the tissue repair device.

46. The method of claim **39**, wherein the tissue repair device further comprises a base membrane to which the at least one mesh is attached.

47. The method of claim **39**, wherein the at least one mesh is at least one strip of mesh, and the plurality of barbed sutures includes two lateral barbed sutures and two or more longitudinal barbed sutures, the two lateral barbed sutures having a relatively greater length than the two longitudinal barbed sutures.

48. The method of claim **47**, further comprising at least one base membrane on which the at least one strip of mesh is attached.

49. The method of claim **48**, wherein the at least one strip of mesh includes a portion free from barbs, located in a longitudinal center region of the mesh.

50. A method of securing two tissue ends together, the method comprising:

affixing the two tissue ends to a tissue repair device comprising a base membrane and a plurality of barbs formed on the base membrane, the plurality of barbs being formed by one of laser cutting and embossing; and

wrapping an outer surface of each of the two tissue ends in the tissue repair device.

51. A method of securing two tissue ends together, the method comprising:

affixing the two tissue ends to a tissue repair device comprising a base membrane and a plurality of barbs attached to the base membrane, the plurality of barbs being formed of resorbable ceramic; and

wrapping an outer surface of each of the two tissue ends in the tissue repair device.

52. A method of securing two tissue ends together, the method comprising:

affixing the two tissue ends to a tissue repair device comprising a base membrane and at least two barbed sutures, a longitudinal length of the barbed sutures being greater than a width of the base membrane, each barbed suture comprising portions including barbs and a portion that is free from barbs; and

wrapping an outer surface of each of the two tissue ends in the tissue repair device.

53. The method of claim **52**, wherein the at least two barbed sutures are spaced apart from each other and are woven through the base membrane, such that the portion of each barbed suture that is free from barbs is woven through the base membrane, and the portions of each barbed suture that include barbs extend outward from the base membrane.

54. The method of claim **52**, wherein the base membrane includes at least two pre-made holes, and wherein the at least two barbed sutures include at least one set of welded barbed sutures, the at least one set of barbed sutures passing through the at least two pre-made holes in the base membrane.

55. The method of claim **52**, wherein the at least two barbed sutures includes at least one strip of barbed sutures, arranged in a grid pattern.

56. The method of claim **55**, further comprising at least one strip of base membrane to which one side of the at least one strip of barbed sutures is attached.

* * * * *