US 20250258605A1

(19) United States
(12) Patent Application Publication
LAZOVSKY et al.
(10) Pub. No.: US 2025/0258605 A1
(43) Pub. Date: Aug. 14, 2025

(54) **MULTI-CHIP ELECTRO-PHOTONIC NETWORKS AND PHOTONIC MEMORY FABRICS FOR INTERCONNECTING MULTIPLE CIRCUIT PACKAGES**

(71) Applicant: **Celestial AI Inc.**, Santa Clara, CA (US)

(72) Inventors: **David LAZOVSKY**, Los Gatos, CA (US); **Philip WINTERBOTTOM**, San Jose, CA (US); **Martinus BOS**, San Jose, CA (US)

(21) Appl. No.: **19/170,026**

(22) Filed: **Apr. 3, 2025**

Related U.S. Application Data

(63) Continuation of application No. 17/903,455, filed on Sep. 6, 2022, now Pat. No. 12,271,595.

(60) Provisional application No. 63/321,453, filed on Mar. 18, 2022.

Publication Classification

(51) **Int. Cl.**

G06F 3/06	(2006.01)
G02B 6/12	(2006.01)
G02B 6/122	(2006.01)
G02B 6/42	(2006.01)
H04Q 11/00	(2006.01)

(52) **U.S. Cl.**

CPC ***G06F 3/0611*** (2013.01); ***G02B 6/12019*** (2013.01); ***G02B 6/1225*** (2013.01); ***G02B 6/4246*** (2013.01); ***G06F 3/0655*** (2013.01); ***G06F 3/0679*** (2013.01); ***H04Q 11/0062*** (2013.01)

(57) **ABSTRACT**

Multi-chip electro-photonic networks for interconnecting multiple circuit packages via photonic channels. Examples of a computing system include a first circuit package, a second circuit package, and one or more inter-chip bidirectional photonic channels interconnecting the first and second circuit packages. The first circuit package can include one or more memory nodes. The second circuit package can include multiple compute nodes and intra-chip bidirectional photonic channels interconnecting the compute nodes.

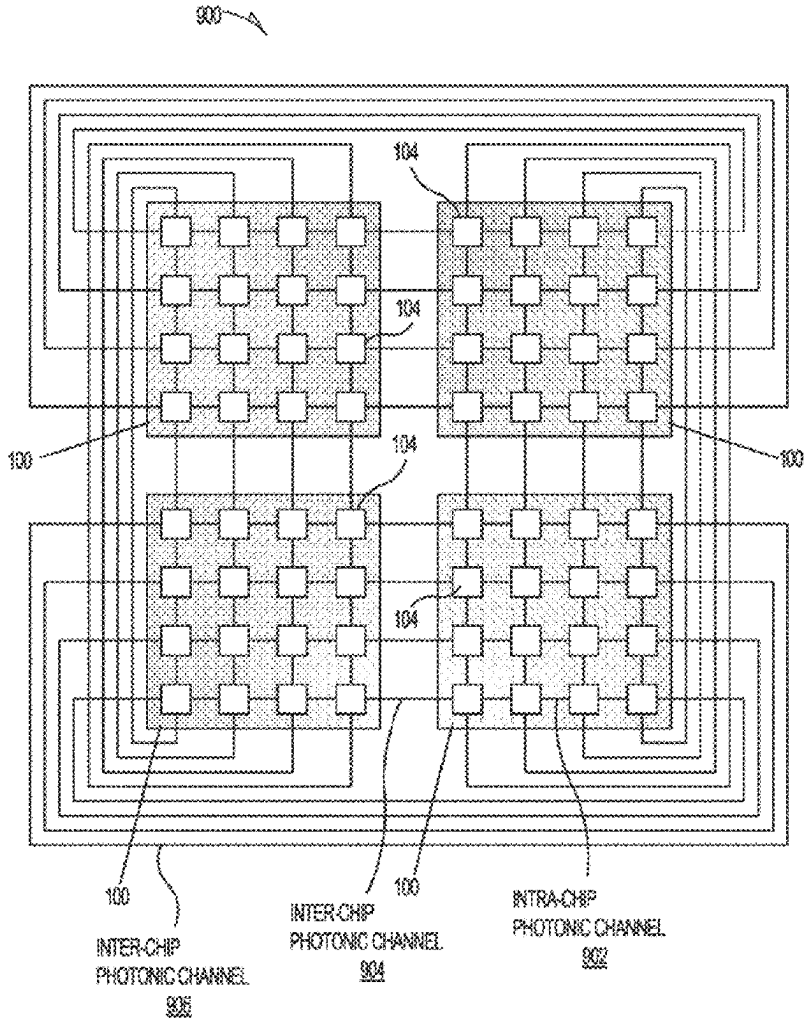

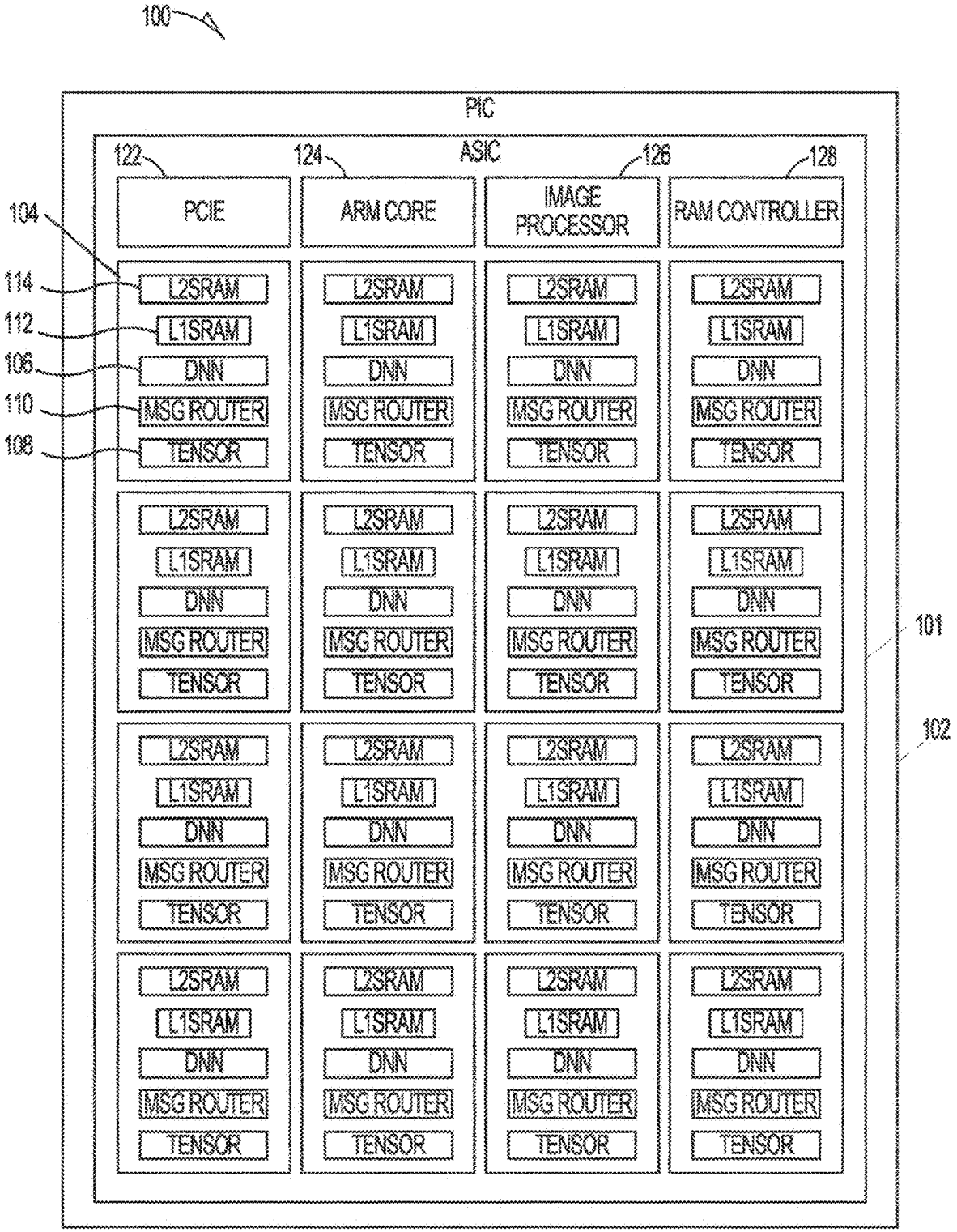
100
PIC
ASIC
122
124
126
128
PCIE
ARM CORE
IMAGE PROCESSOR
RAM CONTROLLER
104
114
112
106
110
108
L2SRAM
L1SRAM
DNN
MSG ROUTER
TENSOR
101
102

FIG. 1A

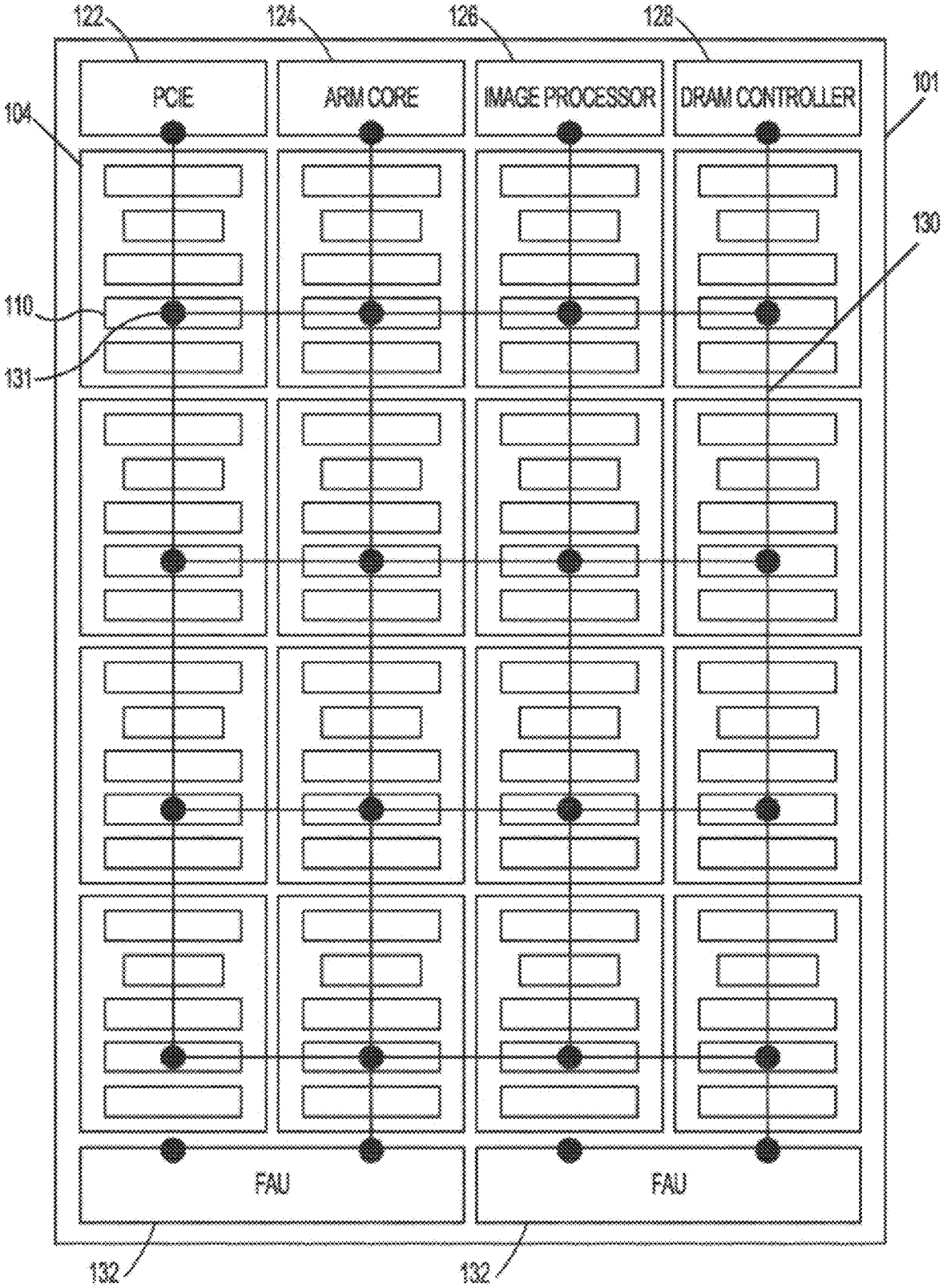
122
124
126
128
PCIE
ARM CORE
IMAGE PROCESSOR
DRAM CONTROLLER
101
104
130
110
131
FAU
FAU
132
132

FIG. 1B

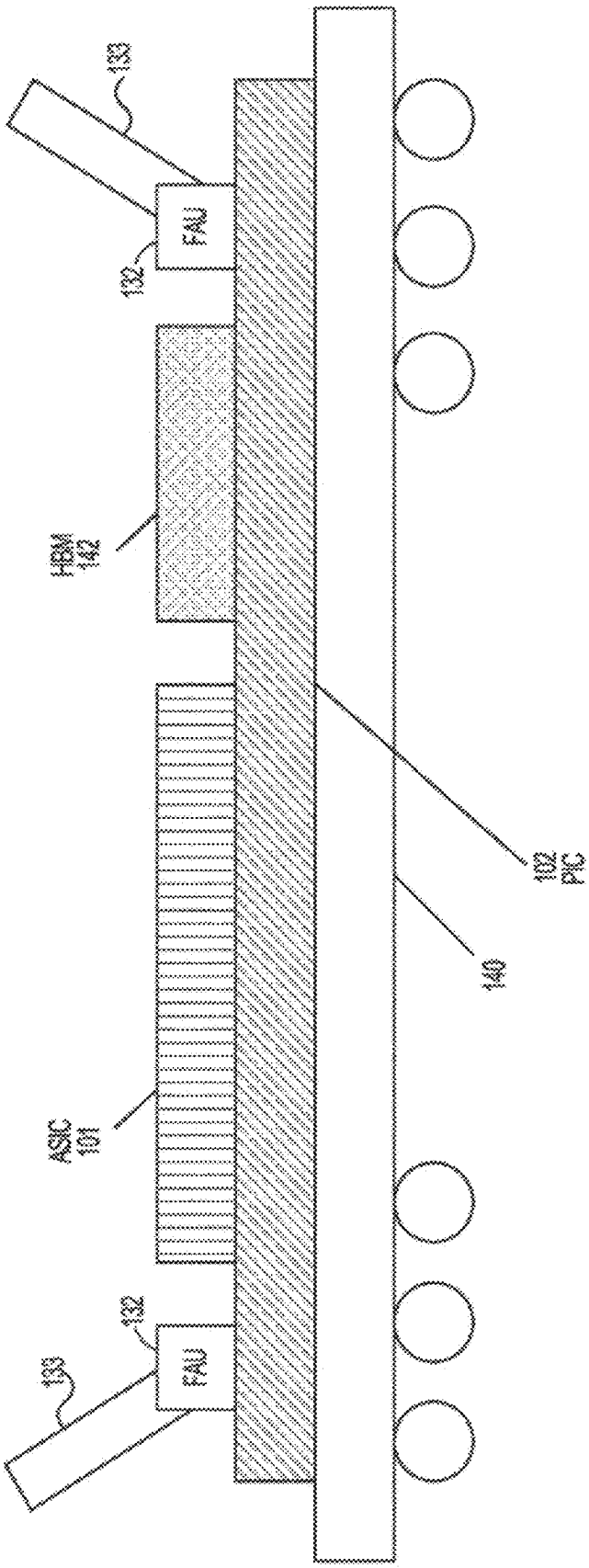

FIG. 1C

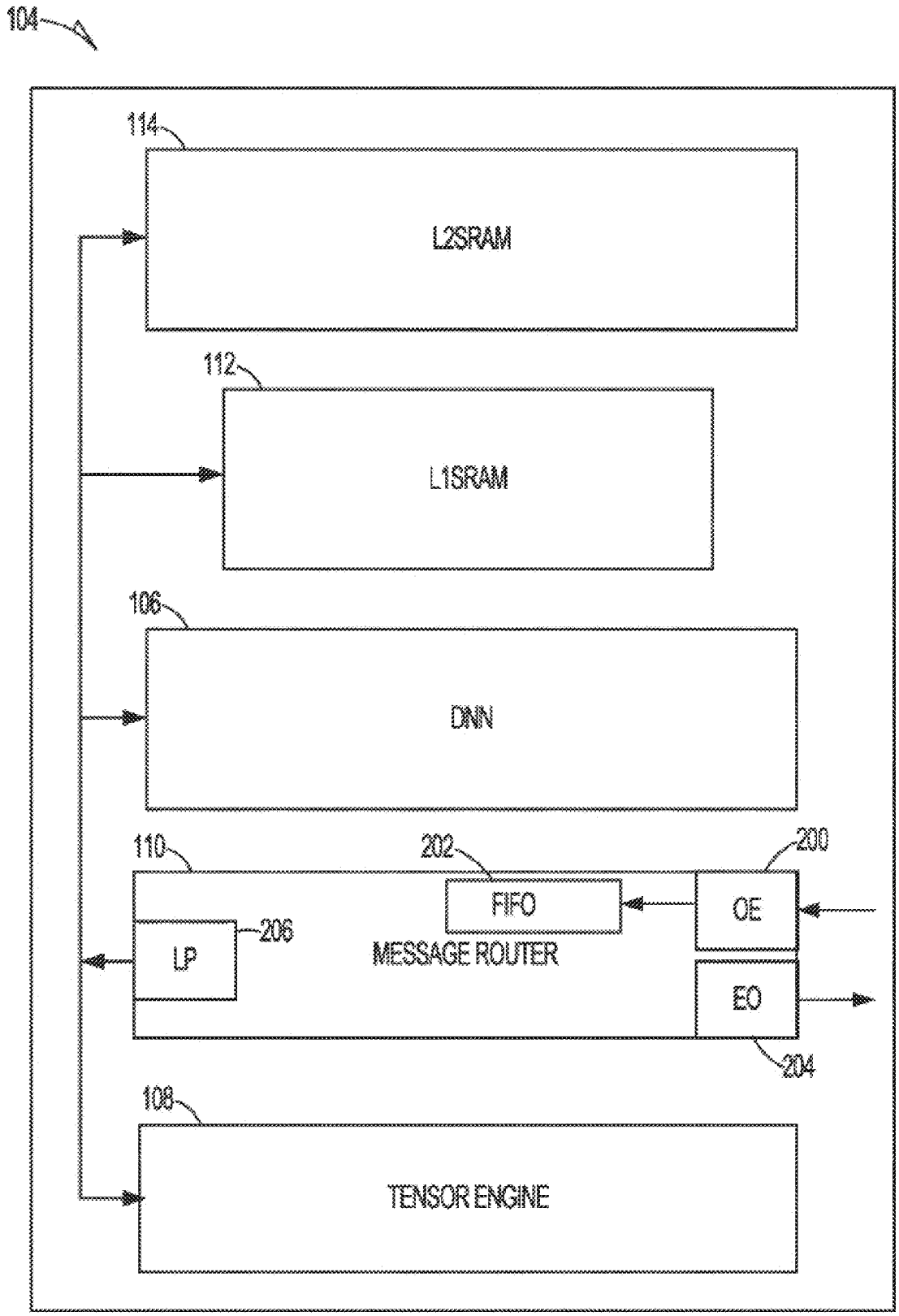
104
114
L2SRAM
112
L1SRAM
106
DNN
110
202
200
FIFO
OE
206
LP
MESSAGE ROUTER
EO
204
108
TENSOR ENGINE

FIG. 2A

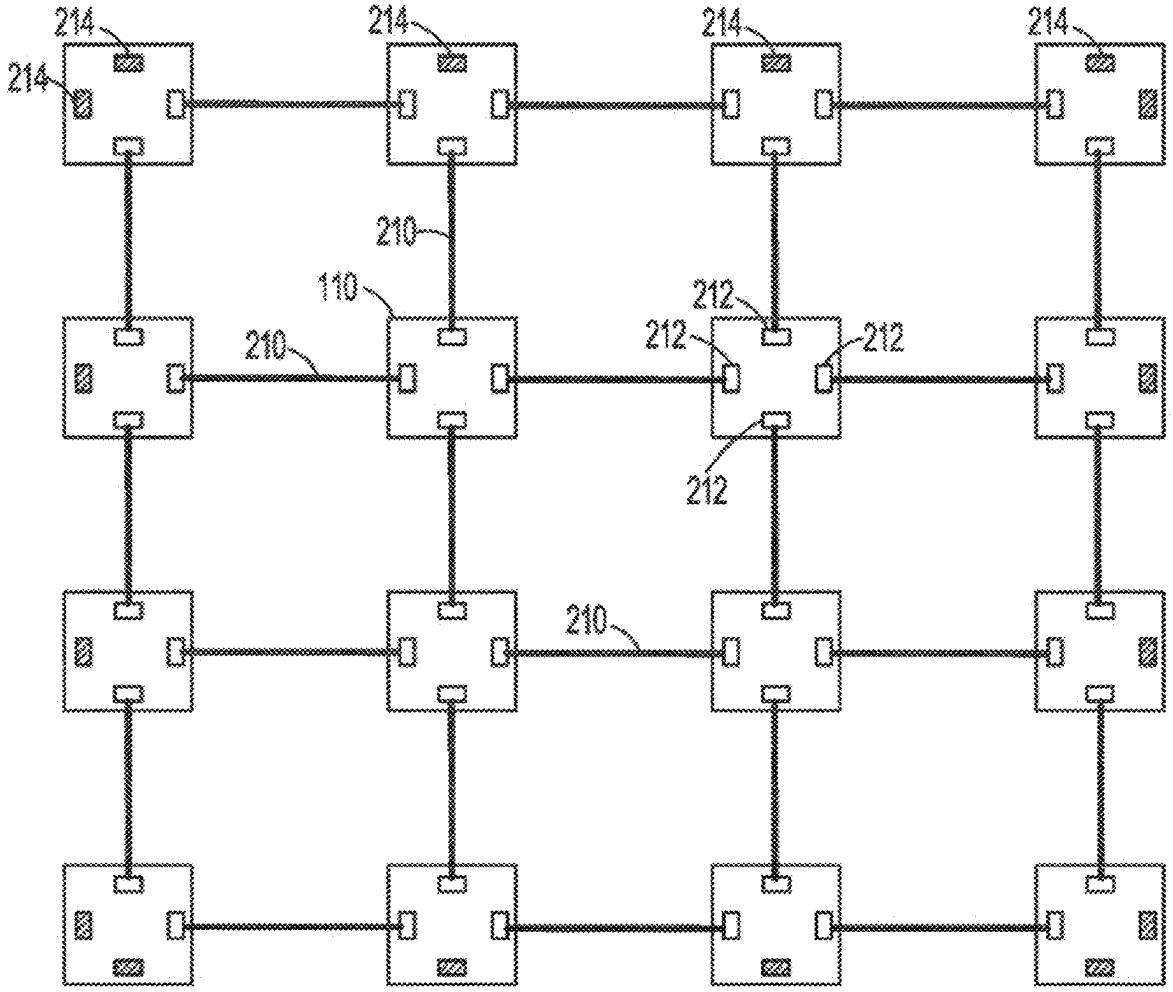

FIG. 2B

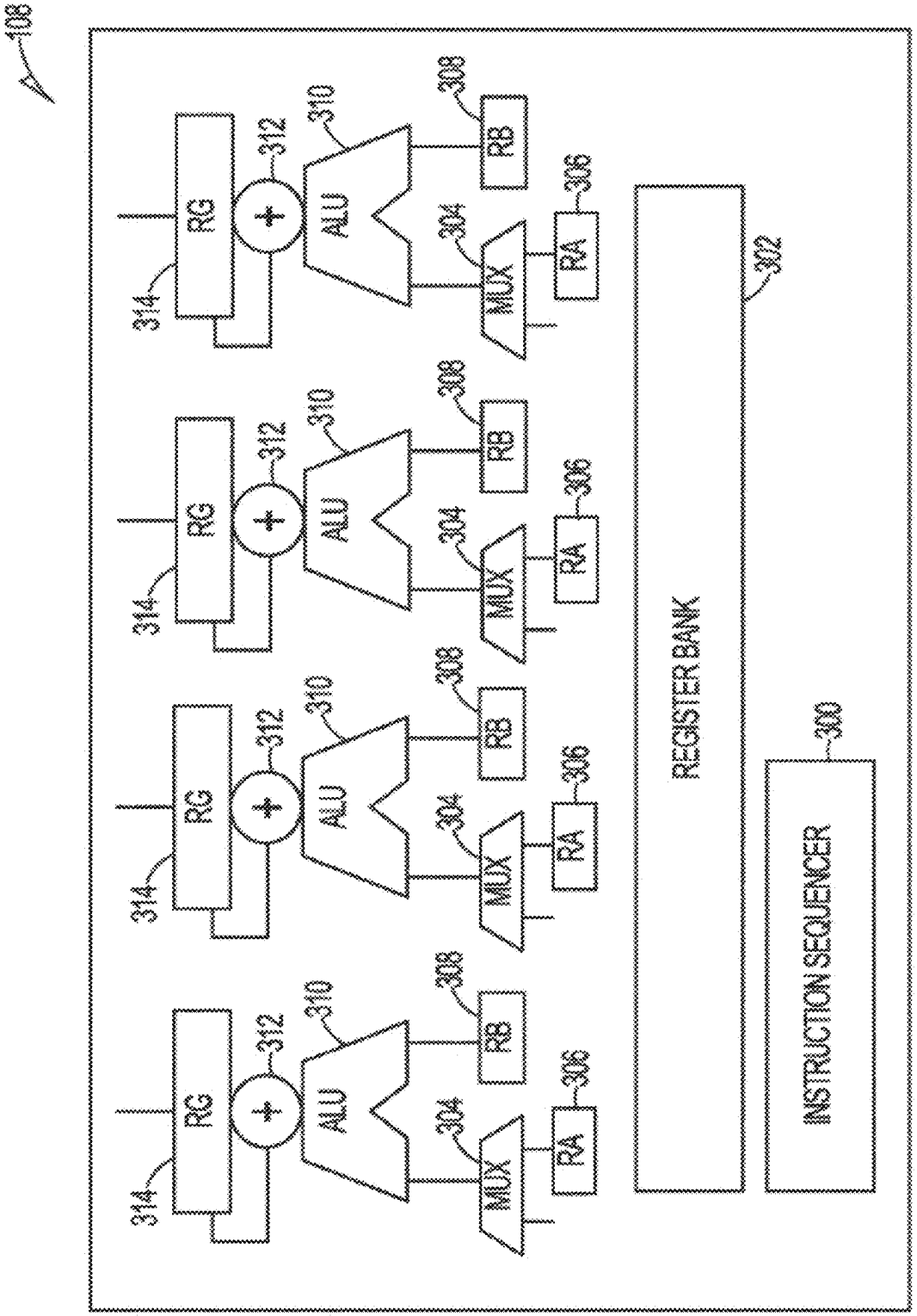
108
RG
314
312
ALU
310
RB
308
MUX
304
RA
306
REGISTER BANK
302
INSTRUCTION SEQUENCER
300

FIG. 3

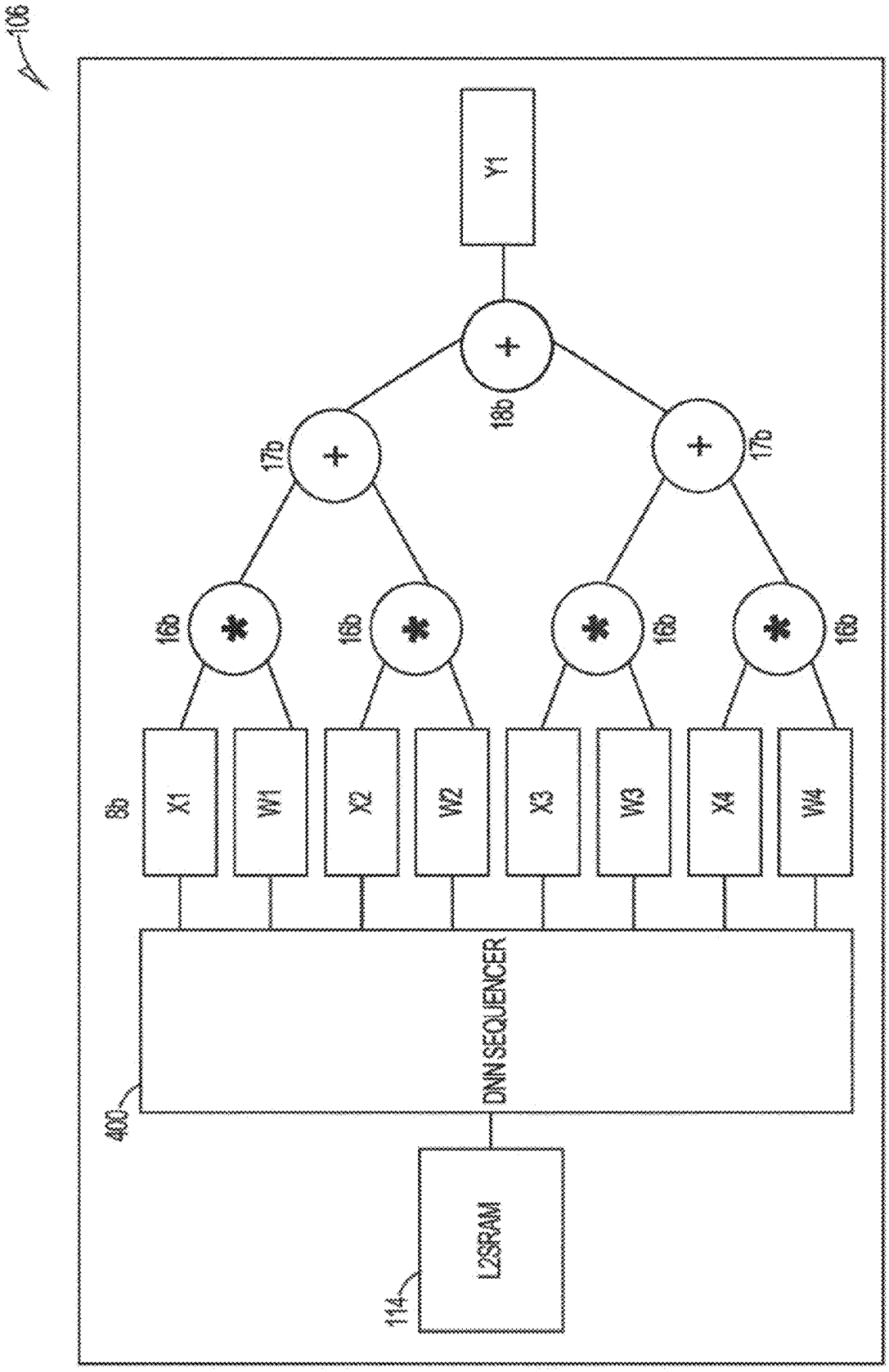
108
8b
X1
W1
X2
W2
X3
W3
X4
W4
16b
16b
16b
16b
17b
17b
18b
Y1
400
DMN SEQUENCER
114
L2SRAM

FIG. 4

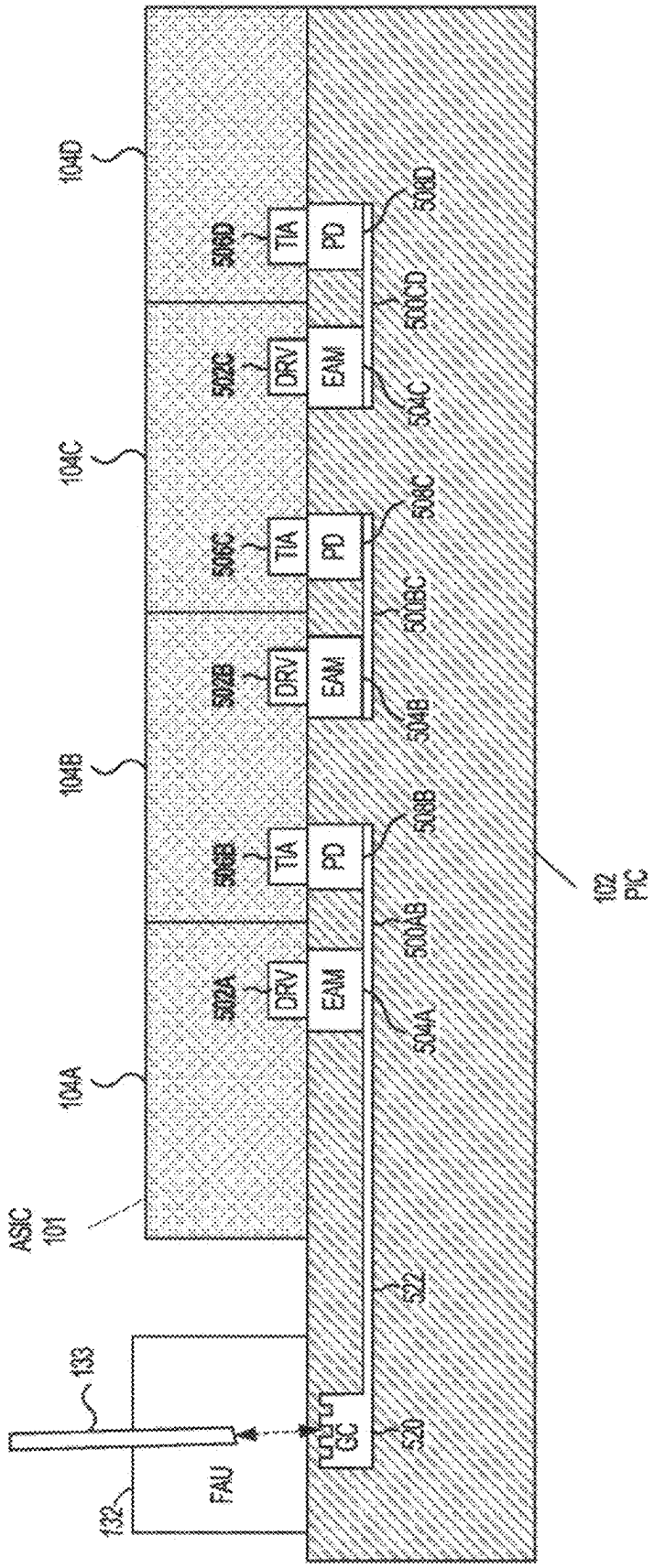
104D
104C
104B
104A
ASIC
101
502D
502C
502B
502A
DRV
EAM
TIA
PD
504A
504B
504C
506B
506C
506D
508B
508C
508D
500AB
500BC
500CD
522
520
GC
FAU
132
133
102
PIC

FIG. 5A

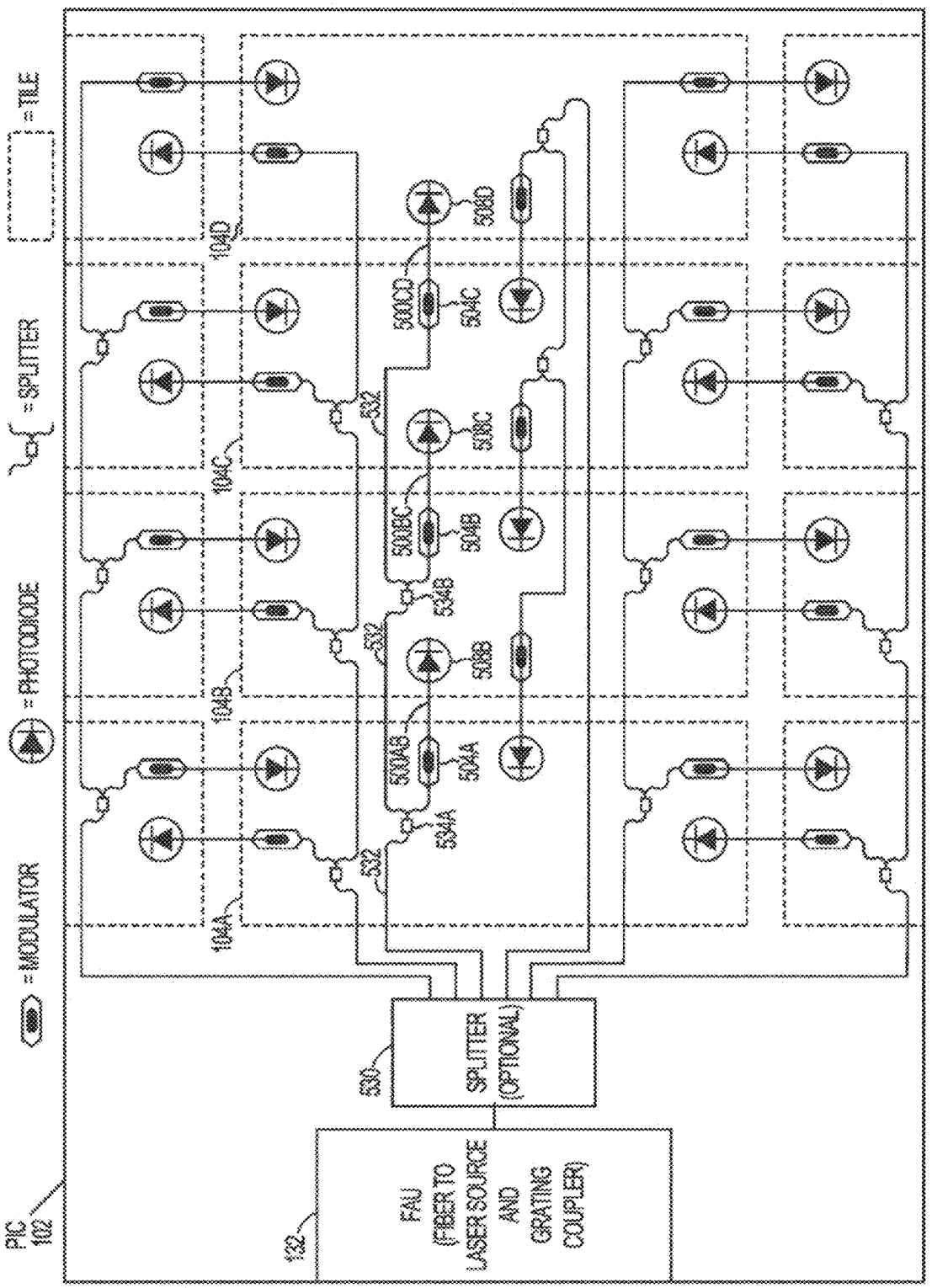
= TILE
= SPLITTER
= PHOTODIODE
= MODULATOR
PIC
102
104A
104B
104C
104D
502
534A
534B
534C
534D
500A
500B
500C
500D
530
SPLITTER
(OPTIONAL)
132
FAU
(FIBER TO
LASER SOURCE
AND
GRATING
COUPLER)

FIG. 5B

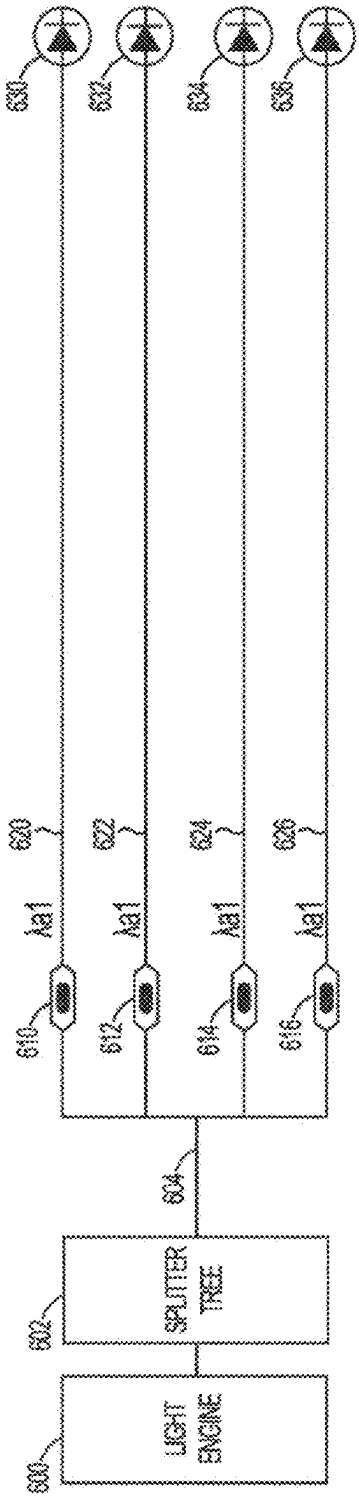

FIG. 6A
(ON-CHIP, NO WDM)

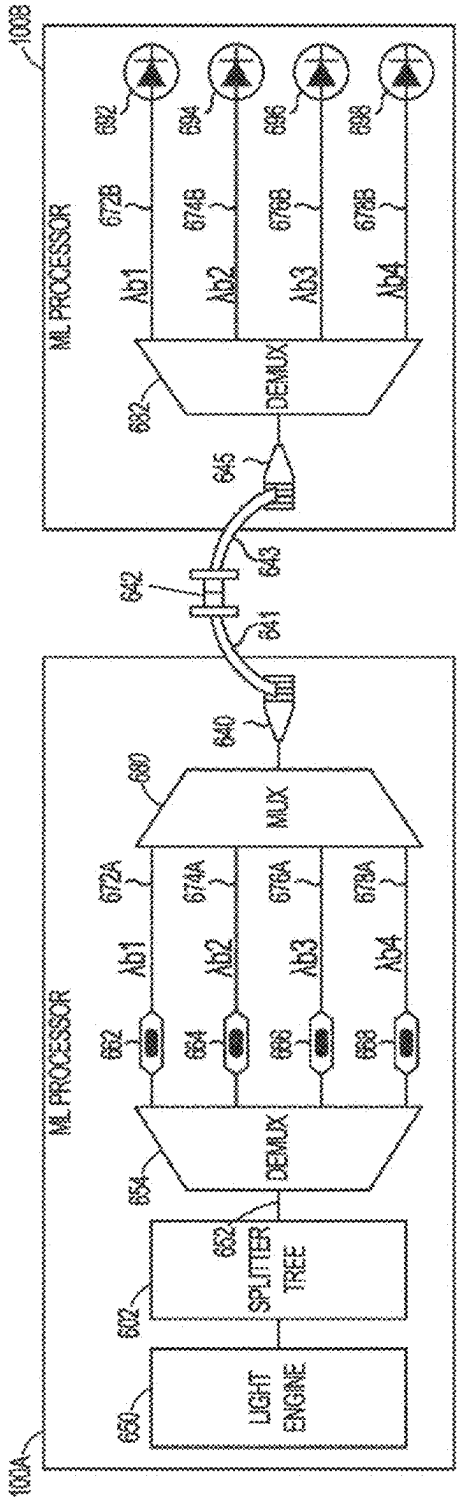

FIG. 6B
(CHIP-TO-CHIP, WDM)

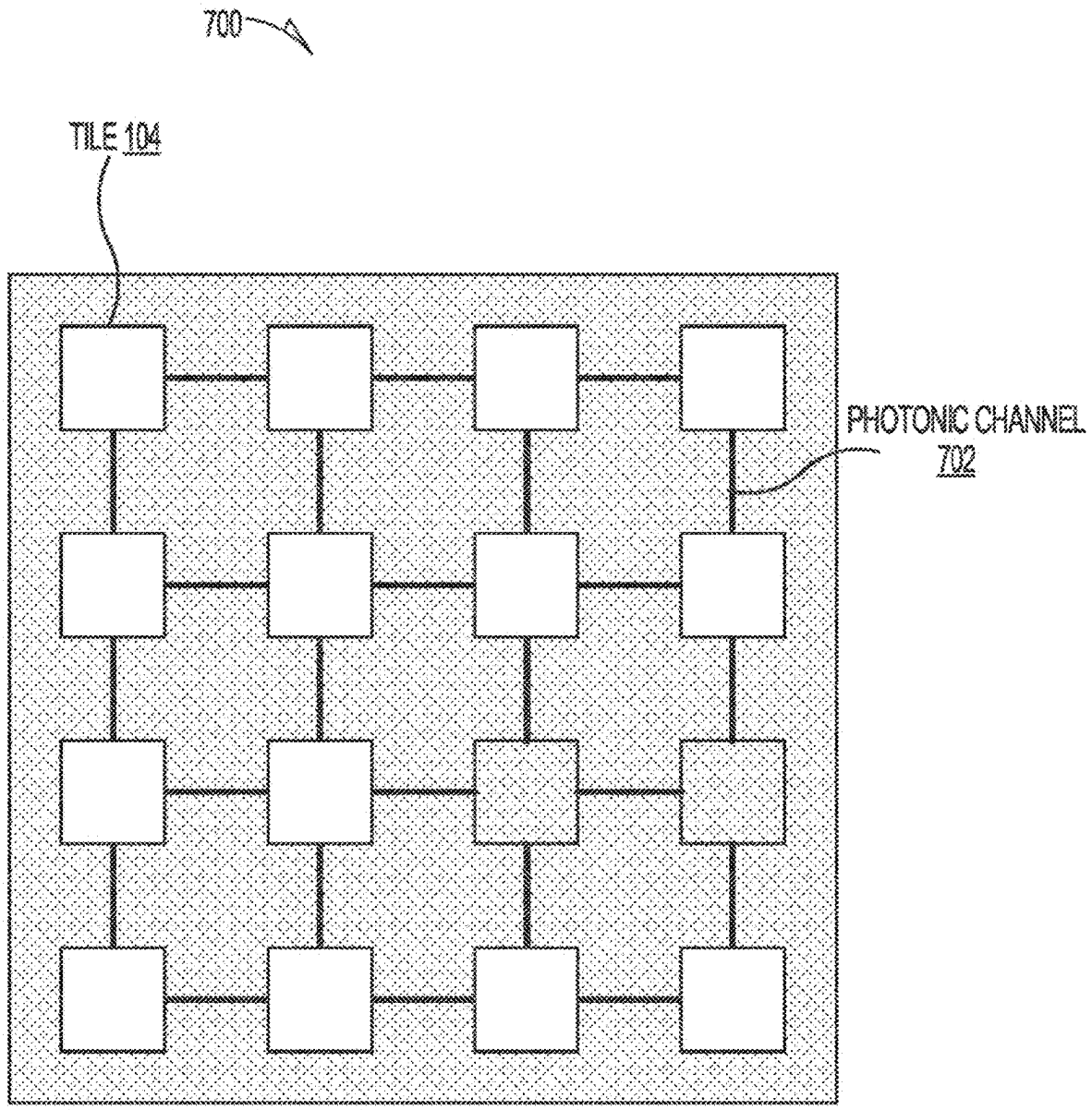

FIG. 7

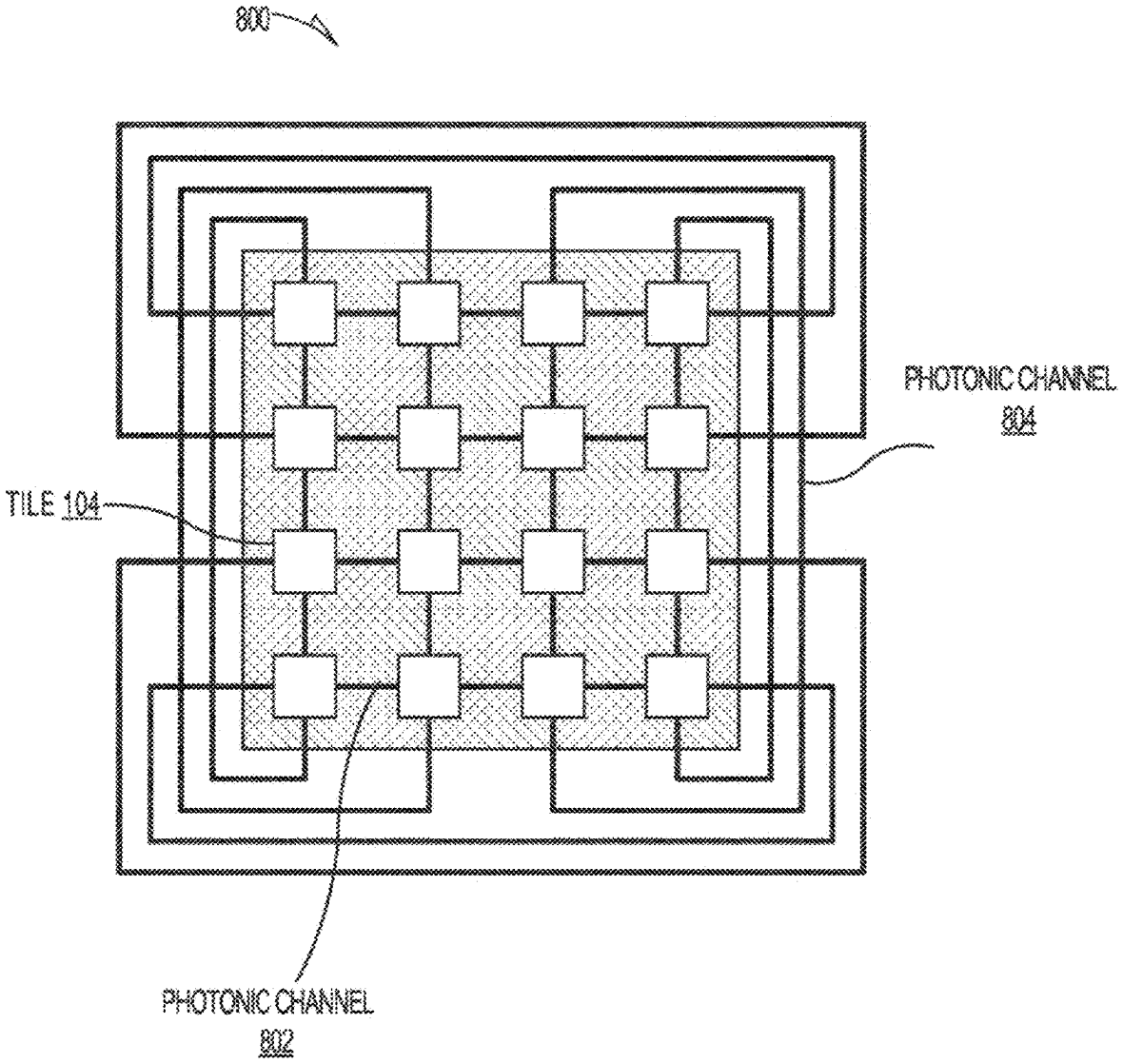

FIG. 8

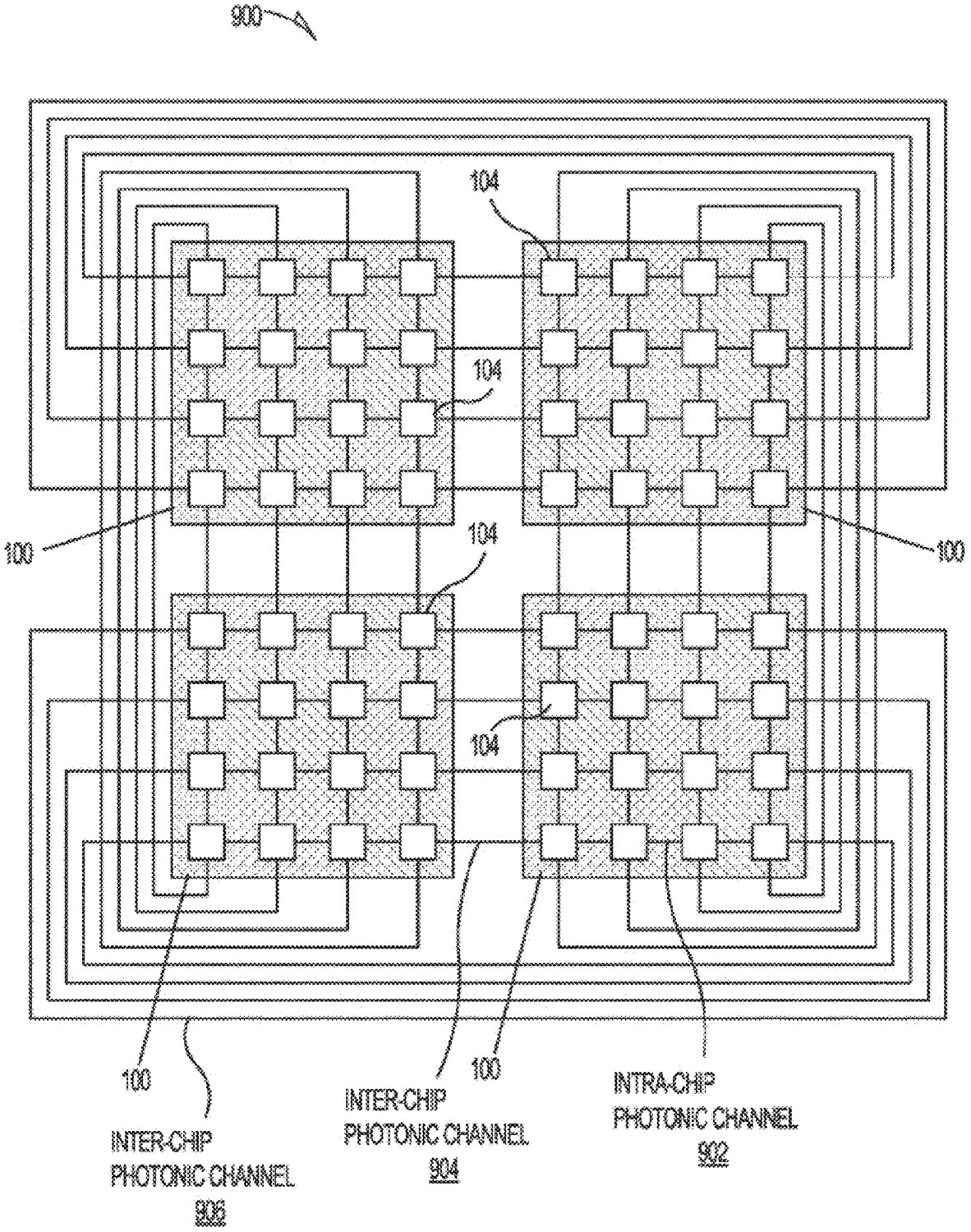
900
104
104
100
104
100
104
100
100
INTER-CHIP
PHOTONIC CHANNEL
906
INTER-CHIP
PHOTONIC CHANNEL
904
INTRA-CHIP
PHOTONIC CHANNEL
902

FIG. 9

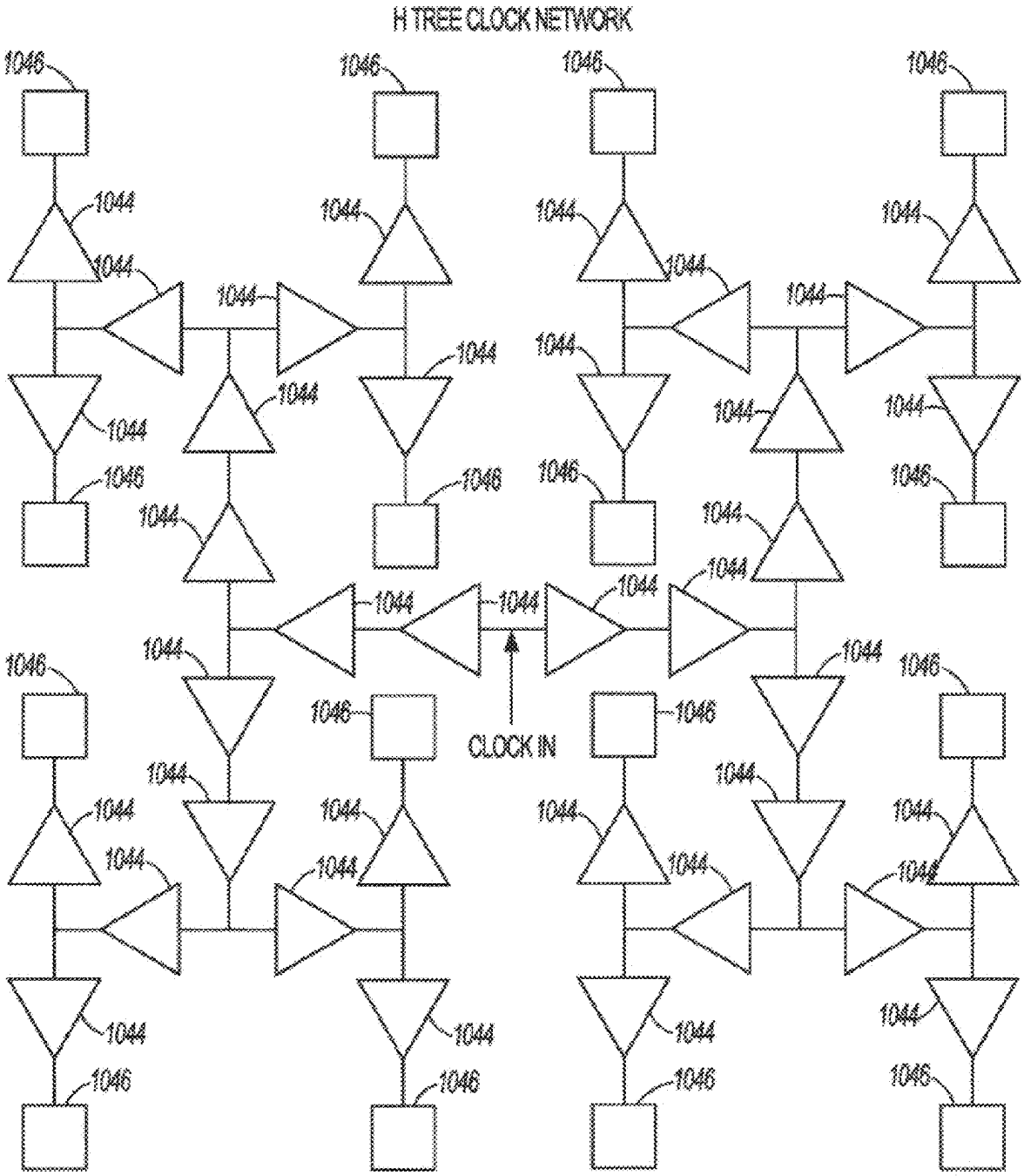

FIG. 10
(PRIOR ART)

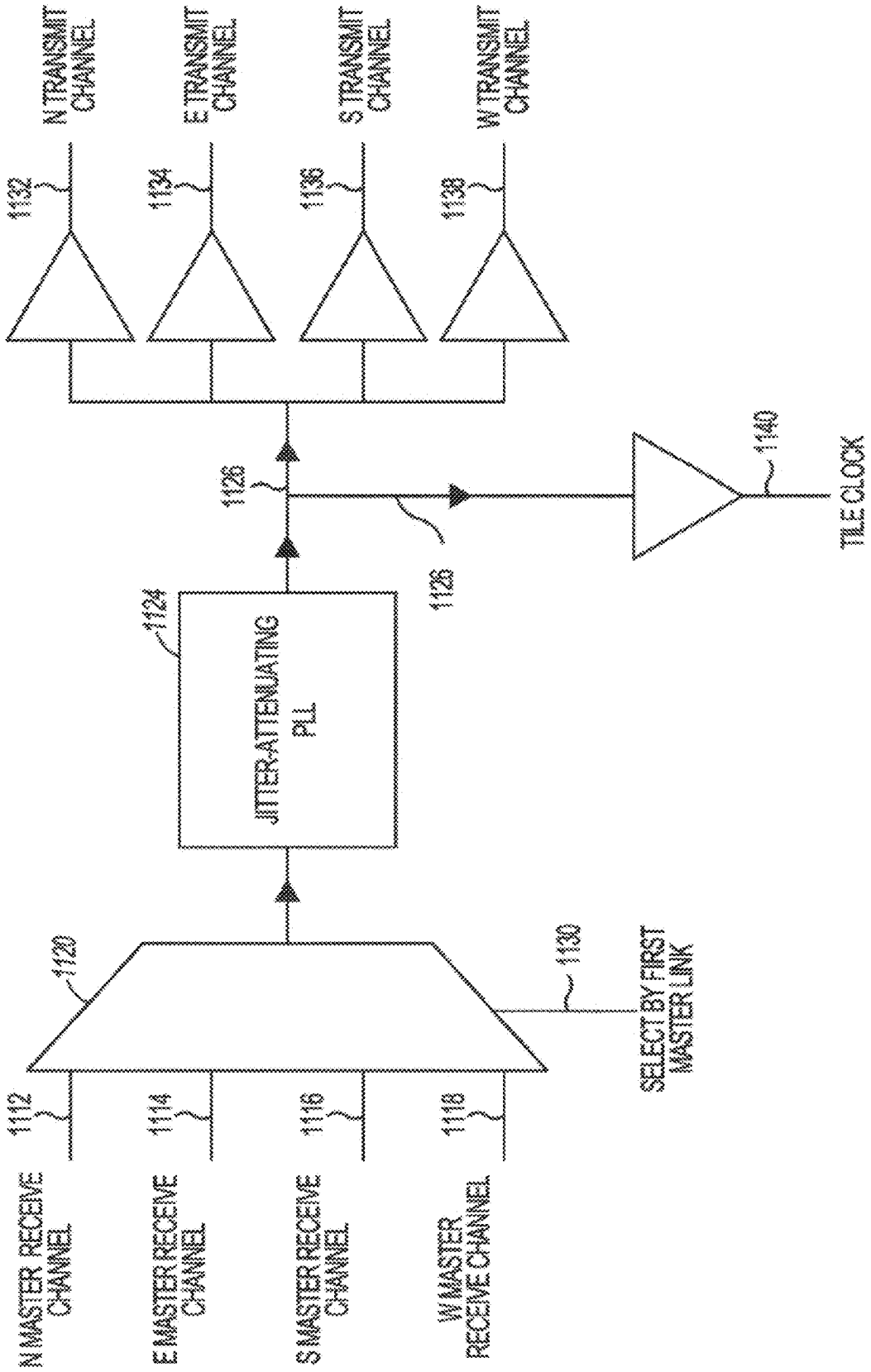
N TRANSMIT CHANNEL
E TRANSMIT CHANNEL
S TRANSMIT CHANNEL
W TRANSMIT CHANNEL
1132
1134
1136
1138
1126
1126
1140
TILE CLOCK
1124
JITTER-ATTENUATING PLL
1120
1130
SELECT BY FIRST MASTER LINK
1112
1114
1116
1118
N MASTER RECEIVE CHANNEL
E MASTER RECEIVE CHANNEL
S MASTER RECEIVE CHANNEL
W MASTER RECEIVE CHANNEL

FIG. 11

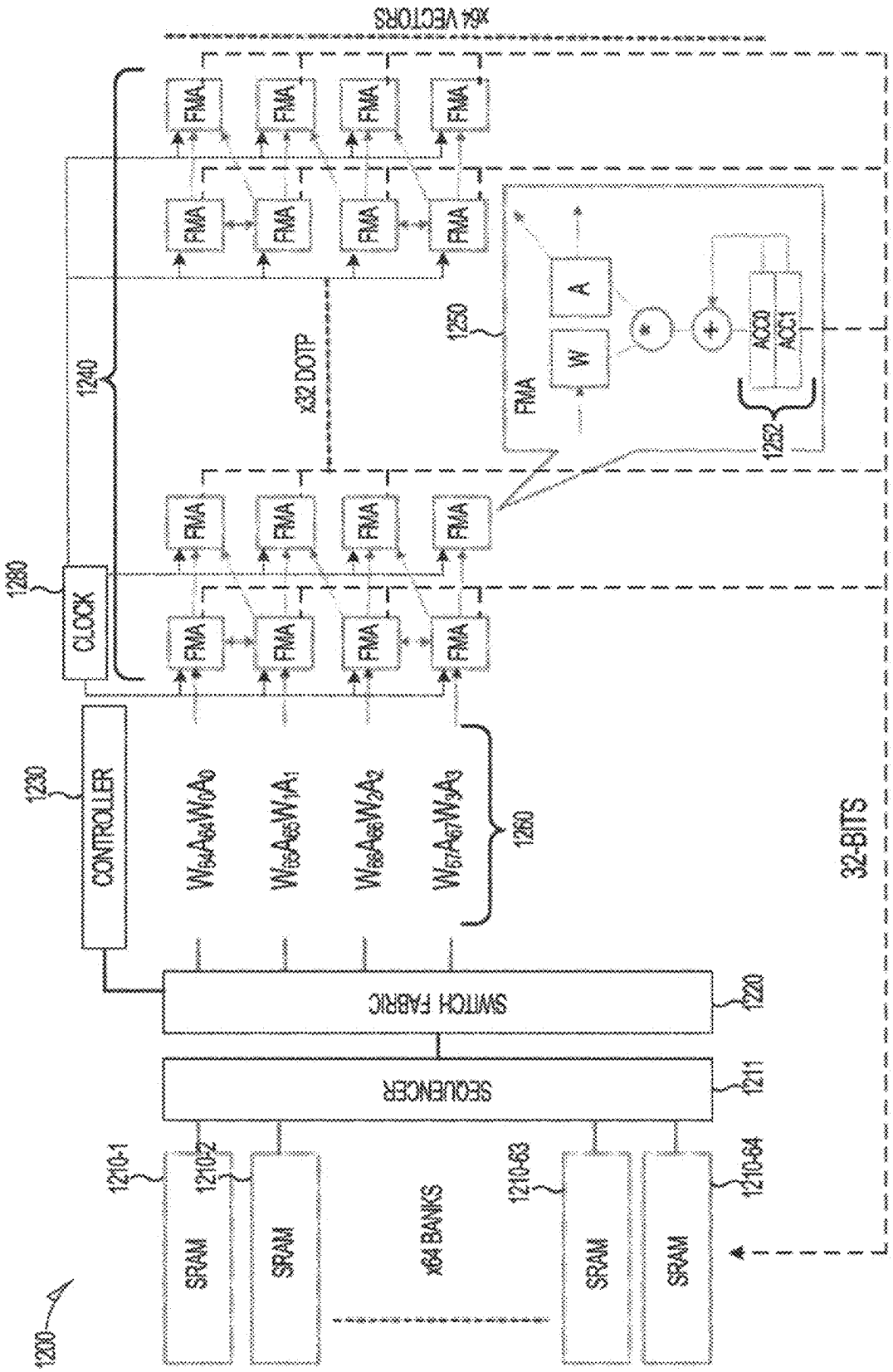
1200
1210-1
1210-2
1210-63
1210-64
SRAM
SRAM
x64 BANKS
SRAM
SRAM
1211
SEQUENCER
1220
SWITCH FABRIC
1230
CONTROLLER
1260
$W_{64}A_{64}W_0A_0$
$W_{65}A_{65}W_1A_1$
$W_{66}A_{66}W_2A_2$
$W_{67}A_{67}W_3A_3$
32-BITS
1280
CLOCK
1240
x32 DOTP
FMA
1250
W
A
ACC0
ACC1
1252
x64 VECTORS

FIG. 12

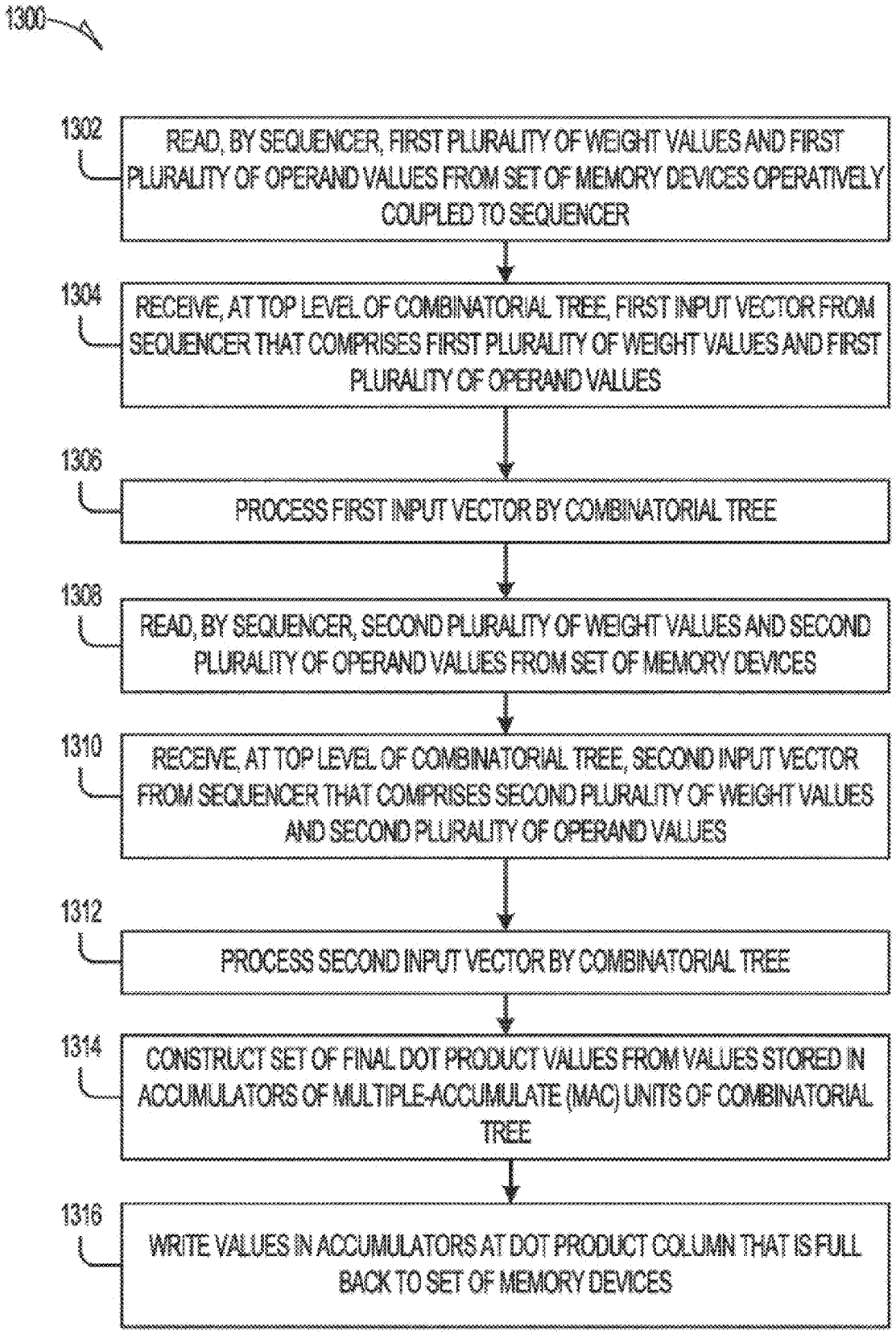
1300
1302
READ, BY SEQUENCER, FIRST PLURALITY OF WEIGHT VALUES AND FIRST PLURALITY OF OPERAND VALUES FROM SET OF MEMORY DEVICES OPERATIVELY COUPLED TO SEQUENCER
1304
RECEIVE, AT TOP LEVEL OF COMBINATORIAL TREE, FIRST INPUT VECTOR FROM SEQUENCER THAT COMPRISES FIRST PLURALITY OF WEIGHT VALUES AND FIRST PLURALITY OF OPERAND VALUES
1306
PROCESS FIRST INPUT VECTOR BY COMBINATORIAL TREE
1308
READ, BY SEQUENCER, SECOND PLURALITY OF WEIGHT VALUES AND SECOND PLURALITY OF OPERAND VALUES FROM SET OF MEMORY DEVICES
1310
RECEIVE, AT TOP LEVEL OF COMBINATORIAL TREE, SECOND INPUT VECTOR FROM SEQUENCER THAT COMPRISES SECOND PLURALITY OF WEIGHT VALUES AND SECOND PLURALITY OF OPERAND VALUES
1312
PROCESS SECOND INPUT VECTOR BY COMBINATORIAL TREE
1314
CONSTRUCT SET OF FINAL DOT PRODUCT VALUES FROM VALUES STORED IN ACCUMULATORS OF MULTIPLE-ACCUMULATE (MAC) UNITS OF COMBINATORIAL TREE
1316
WRITE VALUES IN ACCUMULATORS AT DOT PRODUCT COLUMN THAT IS FULL BACK TO SET OF MEMORY DEVICES

FIG. 13

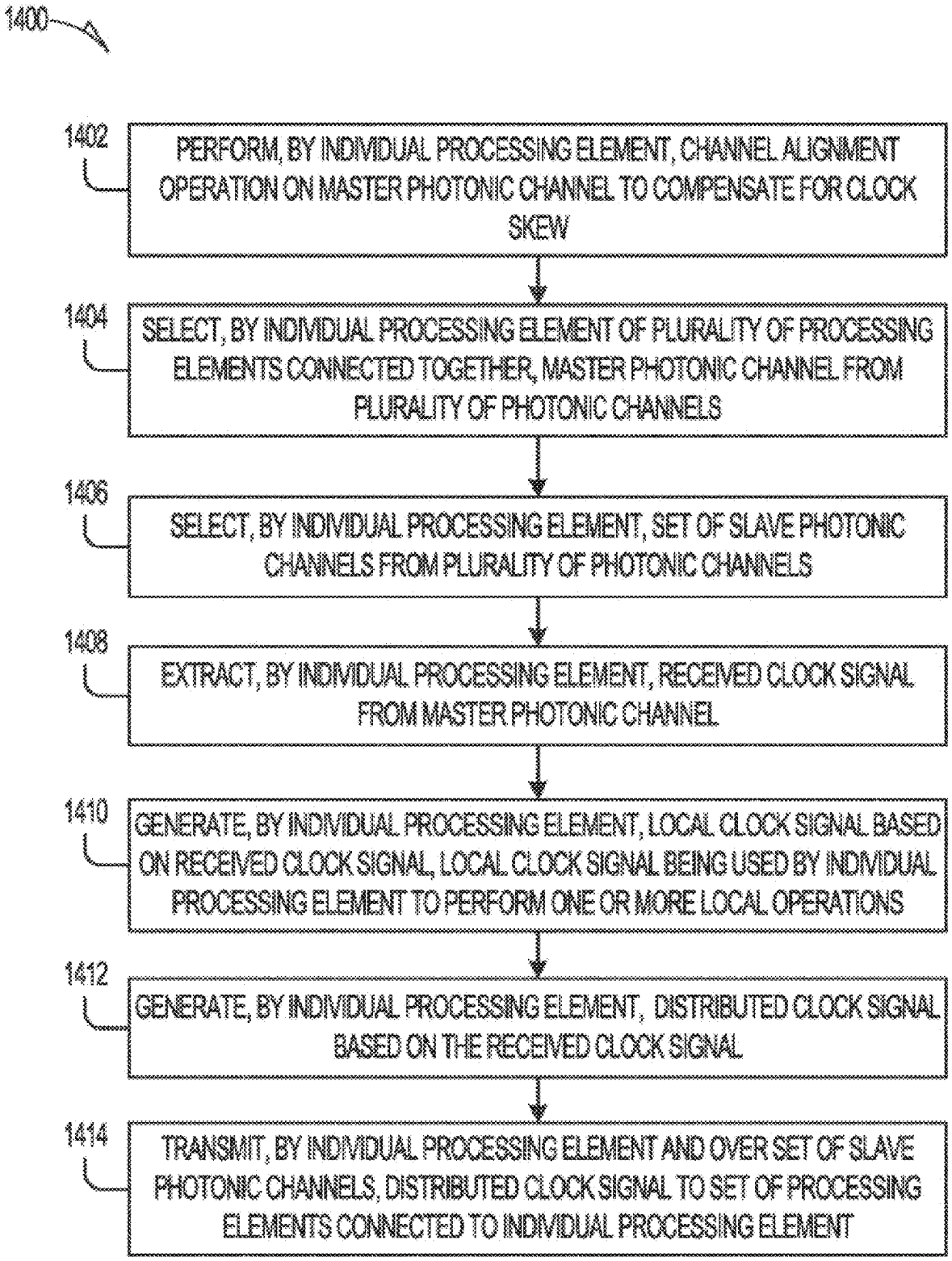
1400
1402
PERFORM, BY INDIVIDUAL PROCESSING ELEMENT, CHANNEL ALIGNMENT OPERATION ON MASTER PHOTONIC CHANNEL TO COMPENSATE FOR CLOCK SKEW
1404
SELECT, BY INDIVIDUAL PROCESSING ELEMENT OF PLURALITY OF PROCESSING ELEMENTS CONNECTED TOGETHER, MASTER PHOTONIC CHANNEL FROM PLURALITY OF PHOTONIC CHANNELS
1406
SELECT, BY INDIVIDUAL PROCESSING ELEMENT, SET OF SLAVE PHOTONIC CHANNELS FROM PLURALITY OF PHOTONIC CHANNELS
1408
EXTRACT, BY INDIVIDUAL PROCESSING ELEMENT, RECEIVED CLOCK SIGNAL FROM MASTER PHOTONIC CHANNEL
1410
GENERATE, BY INDIVIDUAL PROCESSING ELEMENT, LOCAL CLOCK SIGNAL BASED ON RECEIVED CLOCK SIGNAL, LOCAL CLOCK SIGNAL BEING USED BY INDIVIDUAL PROCESSING ELEMENT TO PERFORM ONE OR MORE LOCAL OPERATIONS
1412
GENERATE, BY INDIVIDUAL PROCESSING ELEMENT, DISTRIBUTED CLOCK SIGNAL BASED ON THE RECEIVED CLOCK SIGNAL
1414
TRANSMIT, BY INDIVIDUAL PROCESSING ELEMENT AND OVER SET OF SLAVE PHOTONIC CHANNELS, DISTRIBUTED CLOCK SIGNAL TO SET OF PROCESSING ELEMENTS CONNECTED TO INDIVIDUAL PROCESSING ELEMENT

FIG. 14

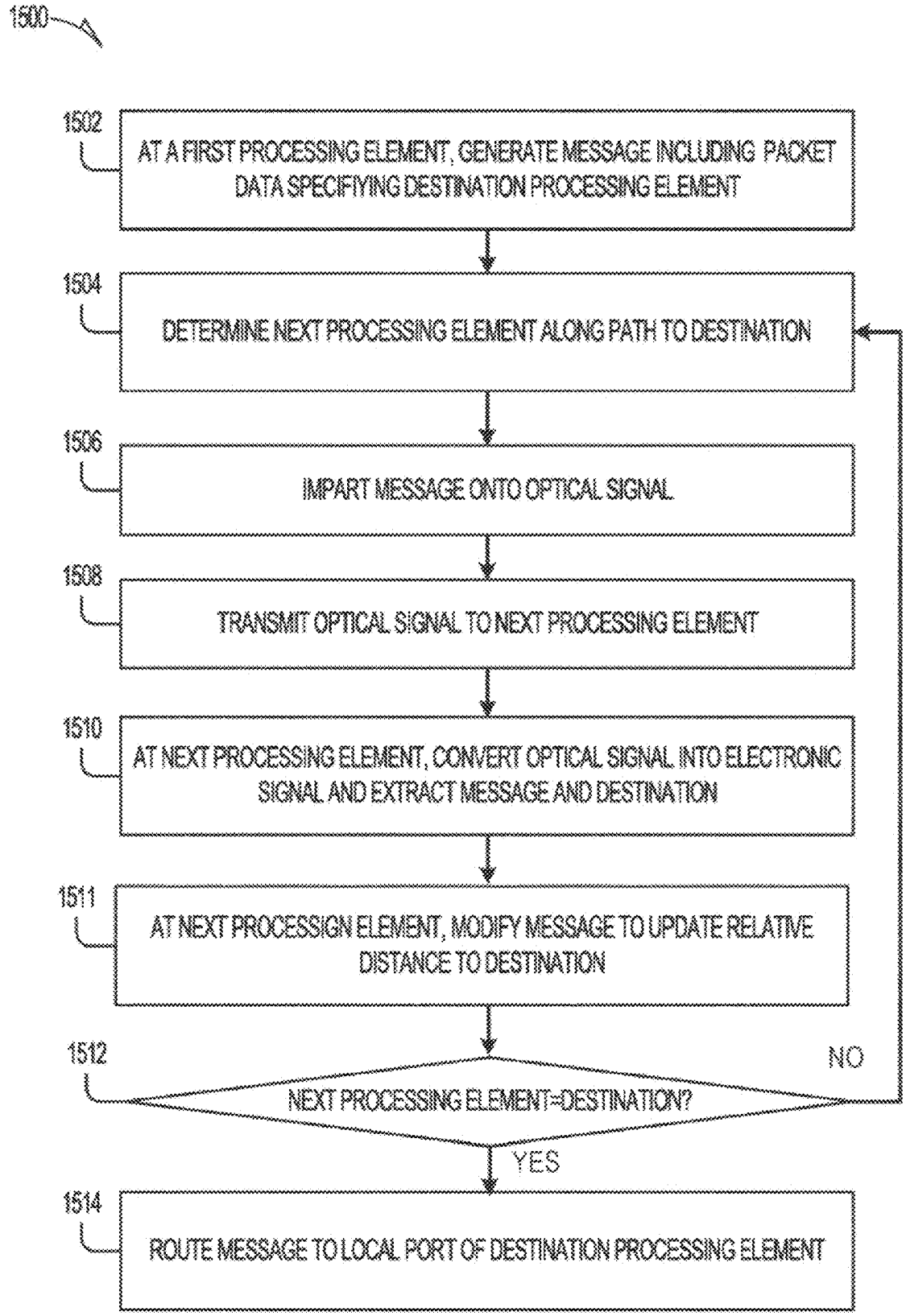
1500
1502
AT A FIRST PROCESSING ELEMENT, GENERATE MESSAGE INCLUDING PACKET DATA SPECIFIYING DESTINATION PROCESSING ELEMENT
1504
DETERMINE NEXT PROCESSING ELEMENT ALONG PATH TO DESTINATION
1506
IMPART MESSAGE ONTO OPTICAL SIGNAL
1508
TRANSMIT OPTICAL SIGNAL TO NEXT PROCESSING ELEMENT
1510
AT NEXT PROCESSING ELEMENT, CONVERT OPTICAL SIGNAL INTO ELECTRONIC SIGNAL AND EXTRACT MESSAGE AND DESTINATION
1511
AT NEXT PROCESSIGN ELEMENT, MODIFY MESSAGE TO UPDATE RELATIVE DISTANCE TO DESTINATION
1512
NEXT PROCESSING ELEMENT=DESTINATION?
NO
YES
1514
ROUTE MESSAGE TO LOCAL PORT OF DESTINATION PROCESSING ELEMENT

FIG. 15

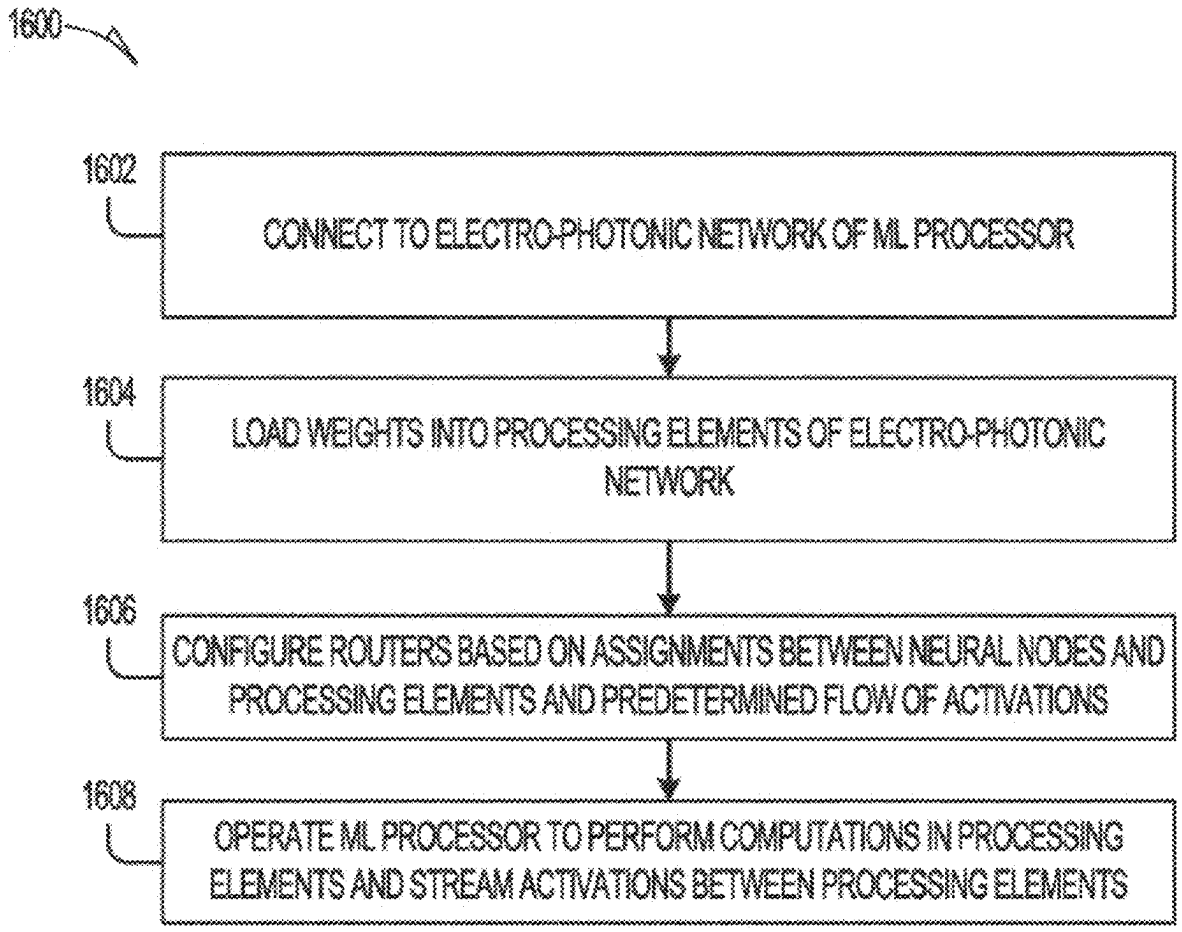
1600
1602
CONNECT TO ELECTRO-PHOTONIC NETWORK OF ML PROCESSOR
1604
LOAD WEIGHTS INTO PROCESSING ELEMENTS OF ELECTRO-PHOTONIC NETWORK
1606
CONFIGURE ROUTERS BASED ON ASSIGNMENTS BETWEEN NEURAL NODES AND PROCESSING ELEMENTS AND PREDETERMINED FLOW OF ACTIVATIONS
1608
OPERATE ML PROCESSOR TO PERFORM COMPUTATIONS IN PROCESSING ELEMENTS AND STREAM ACTIVATIONS BETWEEN PROCESSING ELEMENTS

FIG. 16

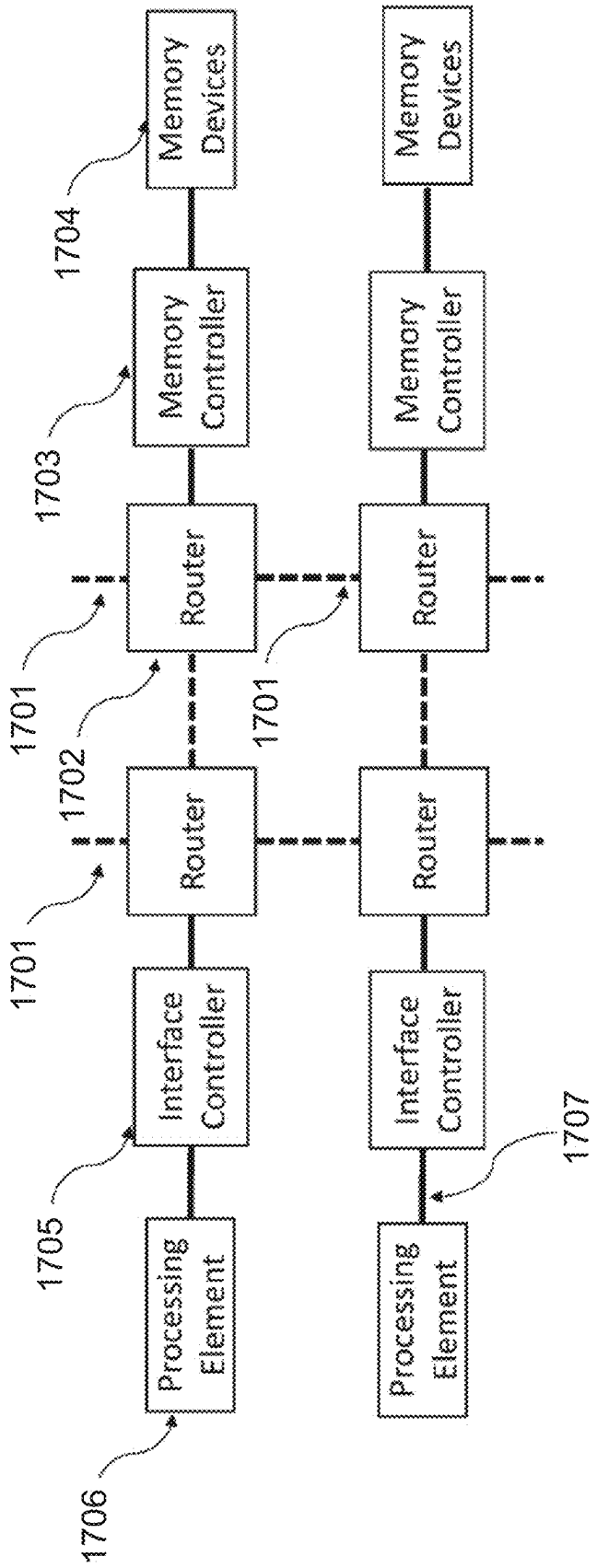
Memory Devices
Memory Controller
Router
Interface Controller
Processing Element
Memory Devices
Memory Controller
Router
Interface Controller
Processing Element
1704
1703
1701
1702
1701
1701
1705
1706
1707

FIG. 17

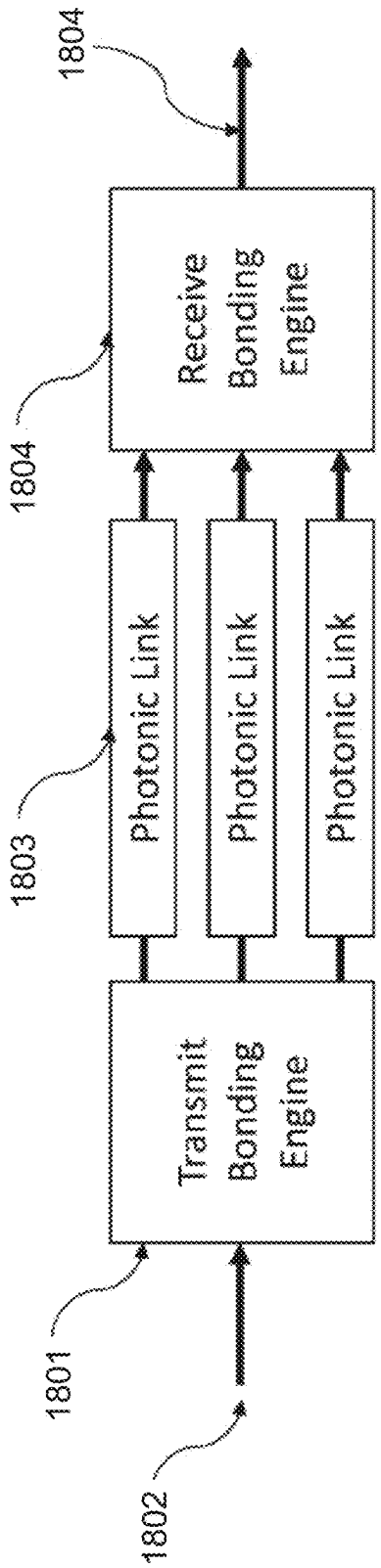
1804
Receive Bonding Engine
1803
Photonic Link
Photonic Link
Photonic Link
1801
Transmit Bonding Engine
1802

FIG. 18

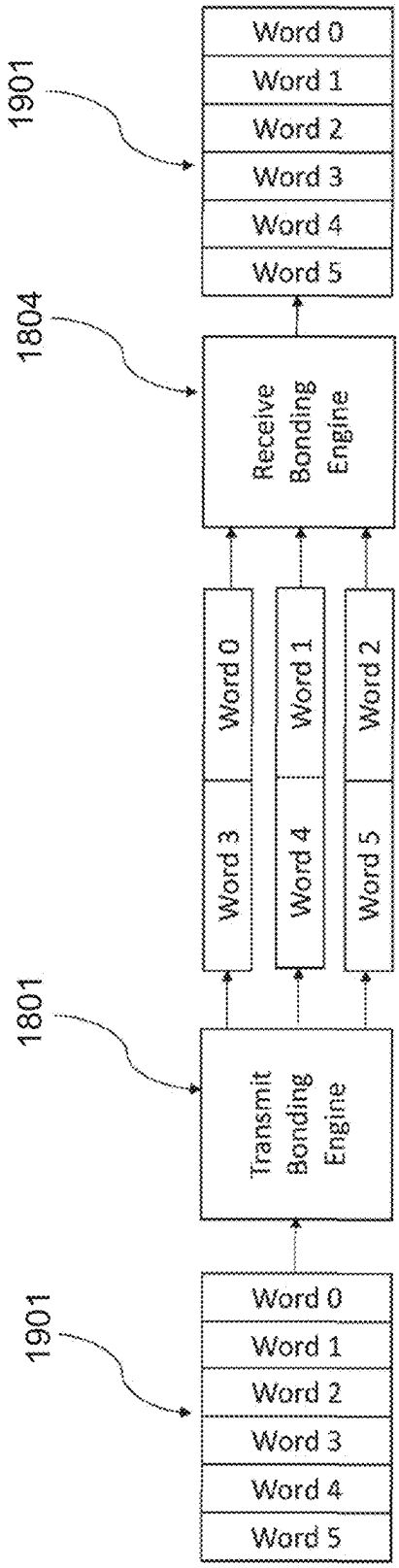
1901
Word 0
Word 1
Word 2
Word 3
Word 4
Word 5
1804
Receive Bonding Engine
Word 0
Word 1
Word 2
Word 3
Word 4
Word 5
1801
Transmit Bonding Engine
1901
Word 0
Word 1
Word 2
Word 3
Word 4
Word 5

FIG. 19

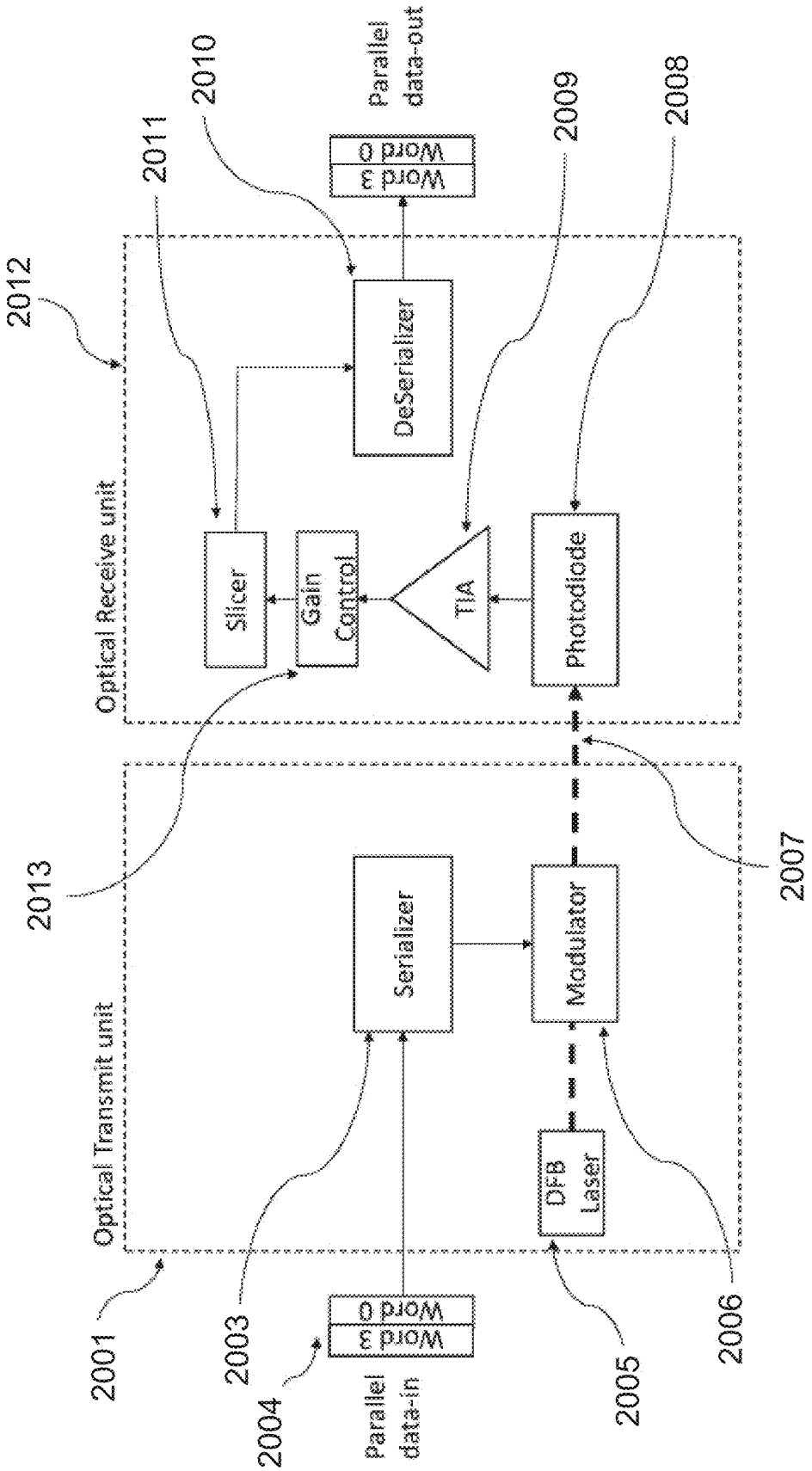
Optical Transmit unit
Optical Receive unit
Serializer
Modulator
DFB Laser
Word 3
Word 0
Parallel data-in
Slicer
Gain Control
TIA
Photodiode
DeSerializer
Word 3
Word 0
Parallel data-out
2001
2003
2004
2005
2006
2007
2008
2009
2010
2011
2012
2013

FIG. 20

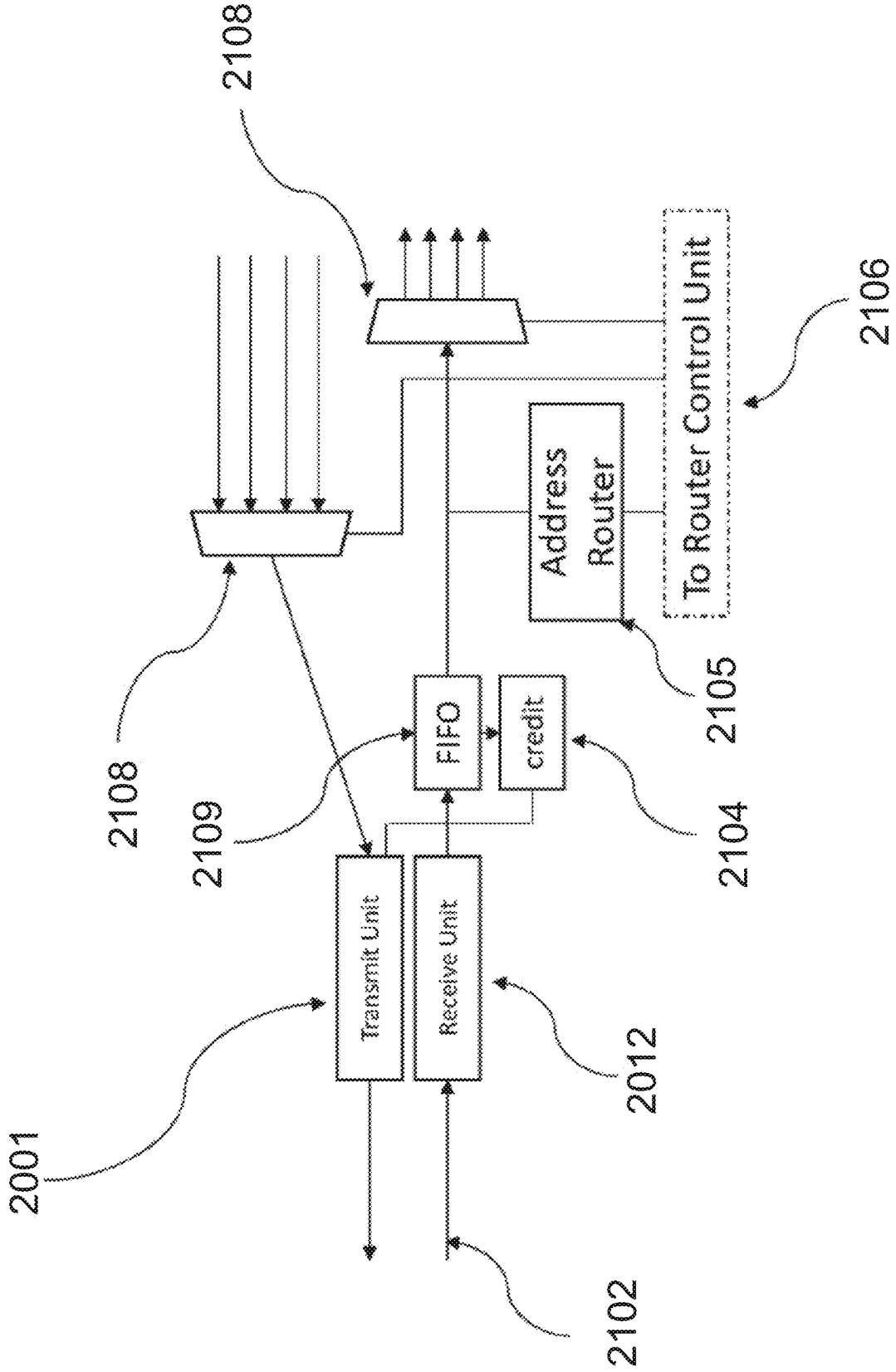
2108
2108
2109
2001
Transmit Unit
Receive Unit
2012
2102
FIFO
credit
2104
Address Router
2105
To Router Control Unit
2106

FIG. 21

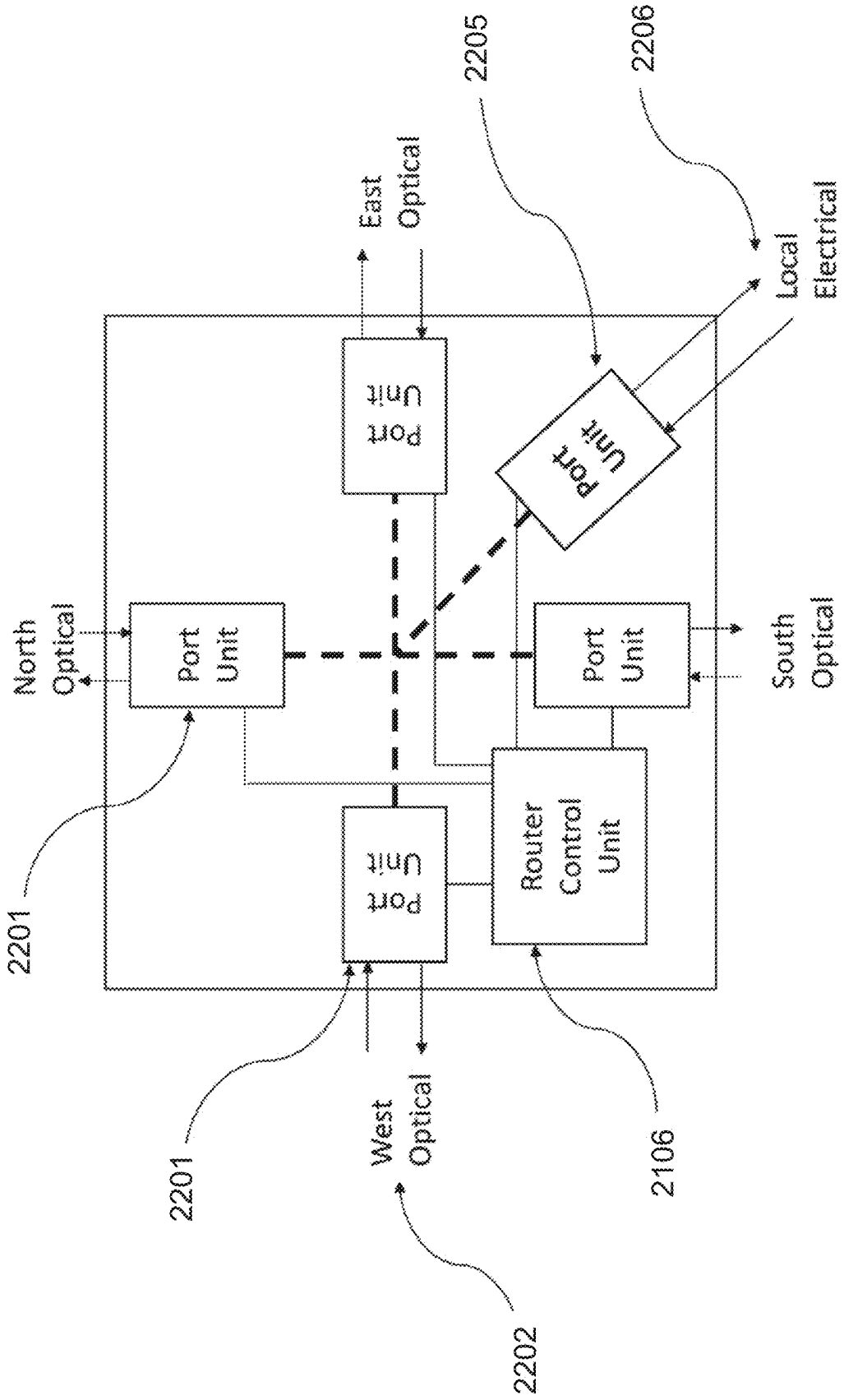
2205
2206
East Optical
Local Electrical
Port Unit
Port Unit
North Optical
Port Unit
Port Unit
South Optical
Router Control Unit
2201
Port Unit
2201
West Optical
2106
2202

FIG. 22

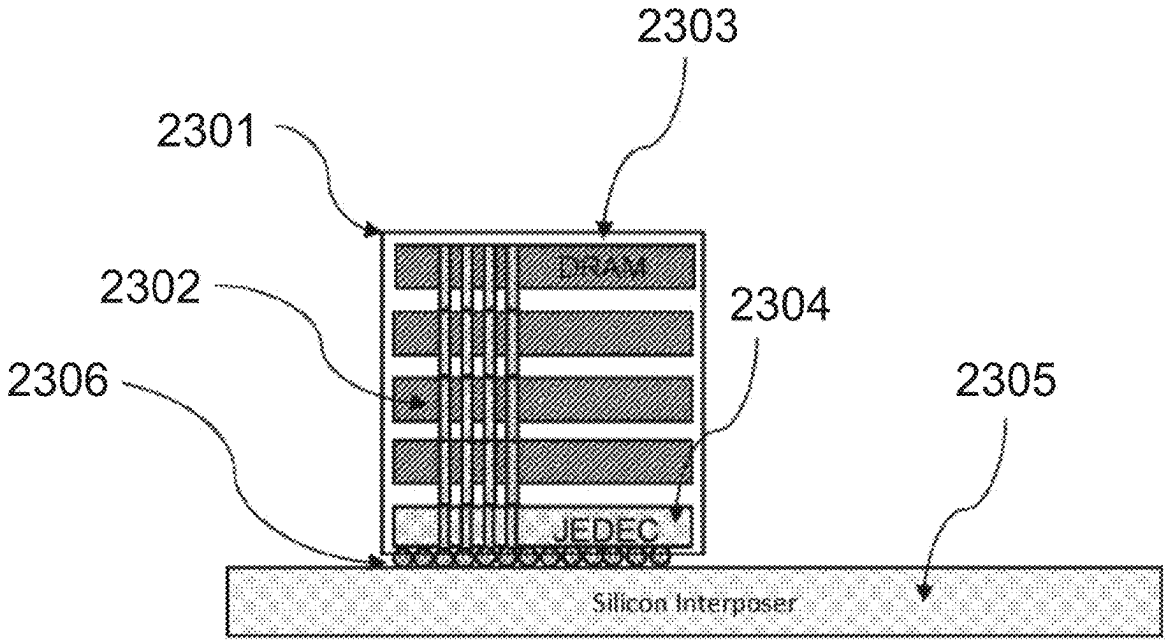

FIG. 23
(PRIOR ART)

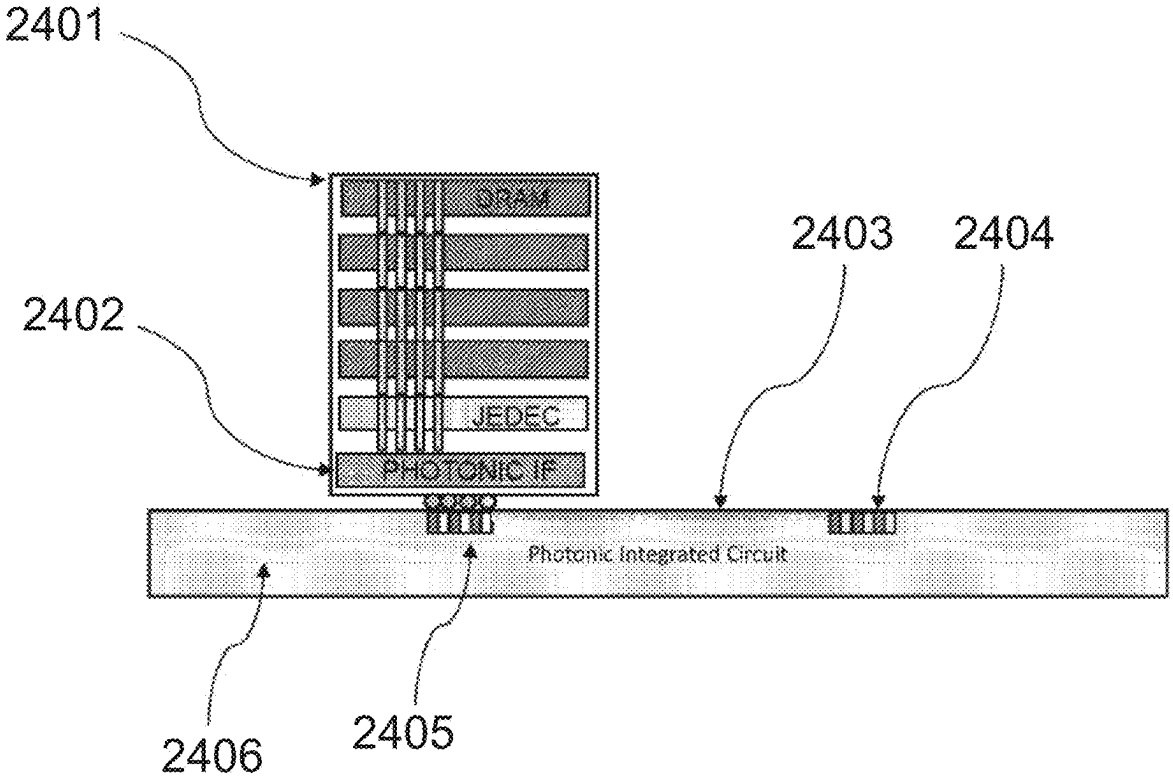

FIG. 24

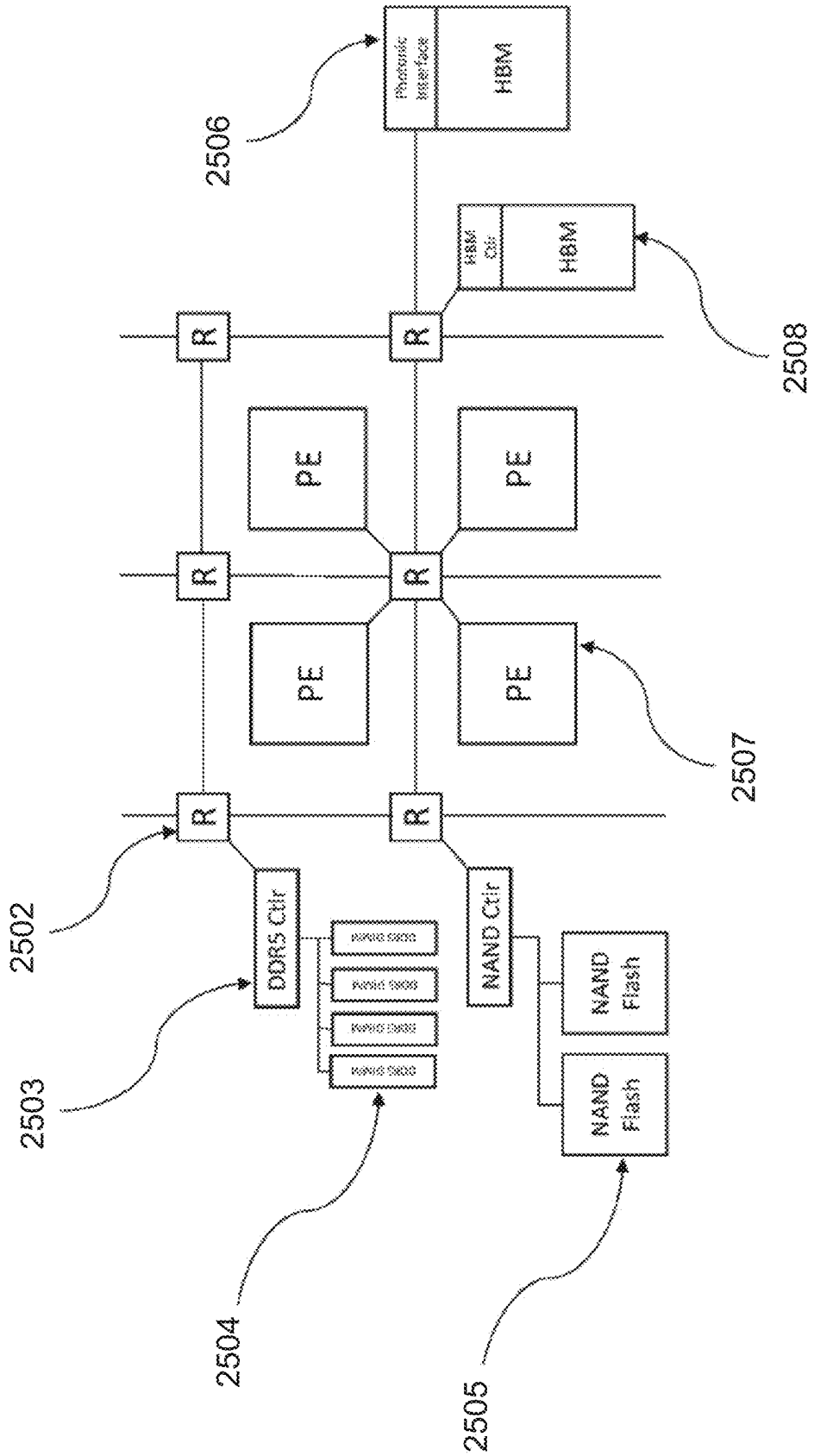
2506
Photonic Interface
HBM
HBM Ctlr
HBM
2508
R
R
R
R
R
R
PE
PE
PE
PE
2507
2502
DDR5 Ctlr
NAND Ctlr
NAND Flash
NAND Flash
2503
2504
2505

FIG. 25

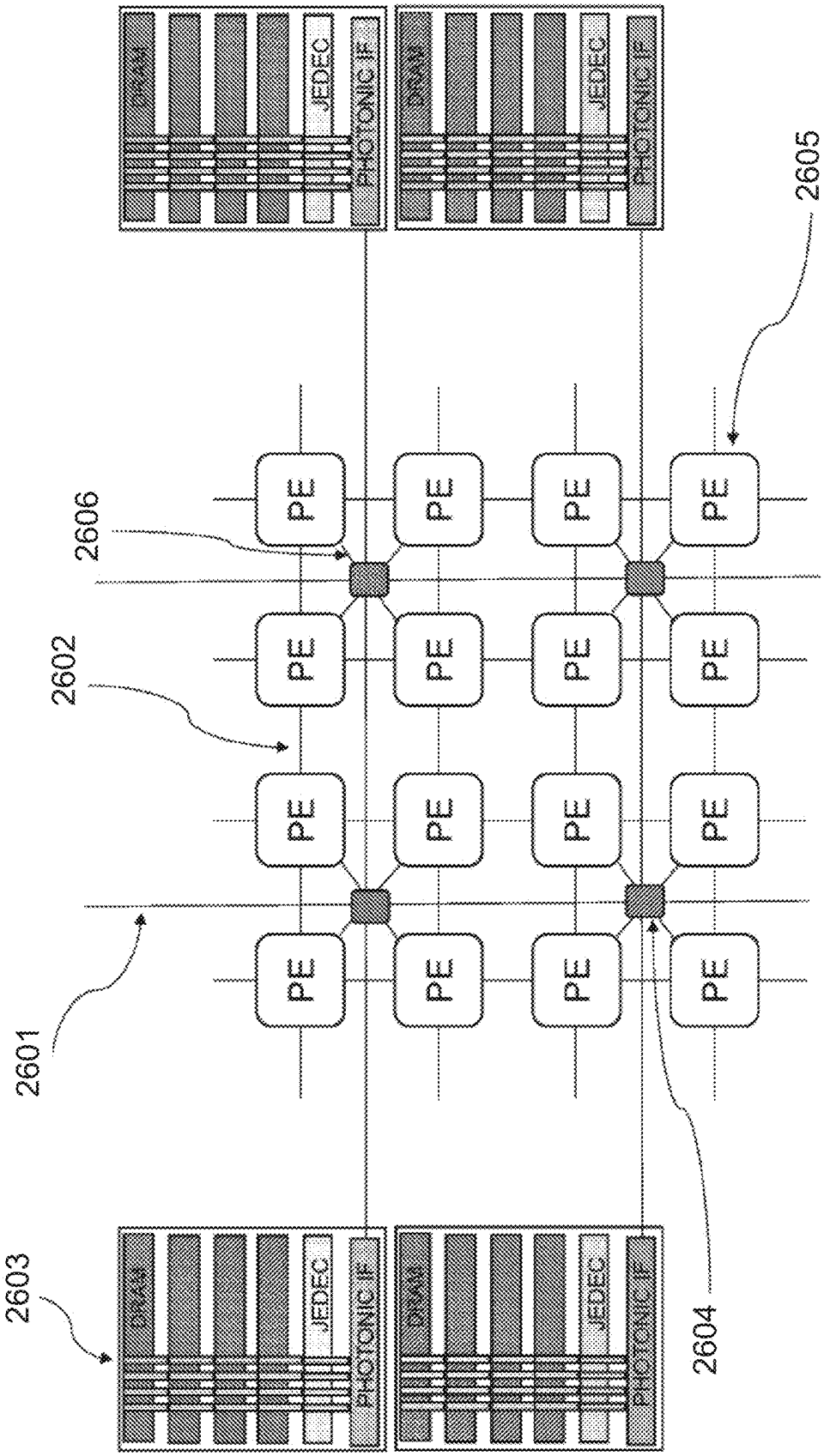
DRAM
JEDEC
PHOTONIC IF
DRAM
JEDEC
PHOTONIC IF
2605
2606
PE
2602
2601
2603
2604

FIG. 26

MULTI-CHIP ELECTRO-PHOTONIC NETWORKS AND PHOTONIC MEMORY FABRICS FOR INTERCONNECTING MULTIPLE CIRCUIT PACKAGES

RELATED APPLICATIONS

[0001] This application is a continuation of U.S. patent application Ser. No. 17/903,455, titled "PHOTONIC MEMORY FABRIC FOR SYSTEM MEMORY INTERCONNECTION", filed on Sep. 6, 2022, which claims priority to U.S. Provisional Patent Application No. 63/321,453, titled "PHOTONIC MEMORY FABRIC SUPPORTING MEMORY INTERCONNECTION", filed on Mar. 18, 2022, and incorporates by reference, in its entirety, U.S. patent application Ser. No. 17/807,694, titled "MULTI-CHIP ELECTRO-PHOTONIC NETWORK", filed on Jun. 17, 2022. This application incorporates by reference, in their entireties, U.S. patent application Ser. Nos. 17/903,455 and 17/807,694, disclosures of which are reproduced in their entireties in this application.

BACKGROUND

[0002] Demands for artificial intelligence (AI) computing, such as machine learning (ML) and deep learning (DL), are increasing faster than they can be met by increases in available processing capacity. This rising demand and the growing complexity of AI models drive the need to connect many chips into a system where the chips can send data between each other with low latency and at high speed. In a presently known approach, connections between chips are made using serializer/deserializer (SerDes) blocks that convert parallel messages into serial bit streams that can be sent over electrical interconnects or optical fibers between chips. In such systems, a distinction is made between on-chip and off-chip communication. Compute elements on the chip communicate packets via metal interconnects, while messages (e.g., packets) destined for another chip move over the chip-level interconnects to the site of the interface to the SerDes, where the data is converted to a bit stream and is transmitted. In the receive direction, bits arrive on an optical fiber or electrical interconnect, are assembled into words, and are then transmitted over metal interconnects inside the chip to the destination processor or memory. Significant energy is expended both in moving the data within the chip to the SerDes and then from the SerDes into other chips in the system. Moreover, the presently known hardware implementations of ML models are relatively power-inefficient in performing the multiply-accumulate (MAC) operations that are extensively used during execution of ML models.

[0003] Current electronic processing systems are increasingly constrained by memory latency and bandwidth. As silicon processing node sizes have decreased, the speed and energy consumption of computation have improved while the interconnection to memory has not kept pace. Where improvements in memory bandwidth and latency have been achieved, it has been at the cost of imposing significant constraints on signal integrity and complexity of packaging. State-of-the-art high bandwidth memory (HBM) dynamic random-access memory (DRAM) requires the memory to be mounted on a silicon interposer to be placed within a few millimeters of the client device that uses the memory, with pins that run over electrical wires at over 3 GHz, imposing signal-integrity as well as thermal constraints that are both complex and expensive to meet. Moreover, the need to place the memory elements close to the chips that use them highly constrains the number and arrangement of HBM stacks around the client device and places significant restrictions on the total amount of memory that can be integrated into such a conventional system.

SUMMARY

[0004] The present disclosure provides computing systems, implemented by multiple circuit packages, that achieve reduced power consumption and/or increased processing speed. The computing systems include a memory fabric that addresses the location, signal integrity, and bandwidth constraints of current memory system architectures.

[0005] In some embodiments, a first circuit package includes one or more memory subsystems (e.g., high bandwidth memory subsystems) and a second circuit package includes an electronic integrated circuit comprising multiple processing elements that are connected by bidirectional photonic channels (e.g., implemented in a photonic integrated circuit in a separate layer or chip of the package) into a hybrid, electronic-photonic (or electro-photonic) network-on-chip (NoC). The first and second circuit packages can be connected to each other by one or more inter-chip bidirectional photonic channels, e.g., implemented with optical fiber. A photonic channel can be used to directly connect a memory subsystem in a point-to-point fashion, providing dedicated bandwidth between the memory subsystem and a processing element.

[0006] For clarity and convenience, a processing element will also be referred to as a "compute node" and a memory subsystem will also be referred to as a "memory node".

BRIEF DESCRIPTION OF THE DRAWINGS

[0007] Various ones of the appended drawings merely illustrate various embodiments of the presently disclosed subject matter and should not be considered as limiting its scope.

[0008] FIG. **1**A is a diagram schematically illustrating components of an example system-in-package (SIP), according to some embodiments.

[0009] FIG. **1**B is a diagram schematically illustrating an example electro-photonic network within the SIP of FIG. **1**A, according to some embodiments.

[0010] FIG. **1**C is a diagram illustrating, in a side view, an example structural implementation of the SIP of FIGS. **1**A and **1**B, according to some embodiments.

[0011] FIG. **2**A is a diagram illustrating an example electronic processing element, including a message router, of the SIP of FIGS. **1**A and **1**B, according to some embodiments.

[0012] FIG. **2**B is a diagram illustrating an example configuration of message routers and photonic channels in an electro-photonic network, according to some embodiments.

[0013] FIG. **3** is a diagram illustrating an example tensor engine as may be used within an electronic processing element as shown in FIG. **2**A, according to some embodiments.

[0014] FIG. **4** is a diagram illustrating an example digital neural network (DNN) as may be used within an electronic processing element as shown in FIG. **2**A, according to some embodiments.

[0015] FIG. **5**A is a diagram illustrating, in a side view, an example implementation of photonic and electronic components of an electro-photonic network, according to some embodiments.

[0016] FIG. **5**B is a diagram illustrating, in top view, a photonic integrated circuit (PIC) of the example electro-photonic network of FIG. **5**A, according to some embodiments.

[0017] FIG. **6**A is a diagram illustrating an example group of photonic links connecting two processing elements within an SIP, according to some embodiments.

[0018] FIG. **6**B is a diagram illustrating an example system of two SIPs that use wavelength-division multiplexing (WDM) for inter-chip optical communications, according to some embodiments.

[0019] FIG. **7** is a diagram illustrating an example electro-photonic network with a quadrilateral mesh topology, according to some embodiments.

[0020] FIG. **8** is a diagram illustrating an example electro-photonic network with a wrapped toroidal mesh topology, according to some embodiments.

[0021] FIG. **9** is a diagram illustrating an example electro-photonic network with an extensible wrapped toroidal mesh topology, according to some embodiments.

[0022] FIG. **10** is a diagram illustrating conventional techniques for clock distribution within a processor.

[0023] FIG. **11** is a diagram illustrating an example of using a photonic fabric to carry a root clock signal, according to some embodiments.

[0024] FIG. **12** is a diagram illustrating an example architecture of a DNN, according to some embodiments.

[0025] FIG. **13** is a flowchart illustrating an example method for operating a DNN, according to some embodiments.

[0026] FIG. **14** is a flowchart illustrating an example method for clock signal distribution using an electro-photonic network, according to some embodiments.

[0027] FIG. **15** is a flowchart illustrating an example method for transferring a message within an electro-photonic network, according to some embodiments.

[0028] FIG. **16** is a flowchart illustrating an example method of implementing an artificial neural network (ANN) on an ML processor, according to some embodiments.

[0029] FIG. **17** is a diagram of a photonic memory fabric for system memory interconnection according to one embodiment.

[0030] FIG. **18** is a diagram of one embodiment of a photonic channel for use in a memory fabric for system memory interconnection.

[0031] FIG. **19** is a diagram of another embodiment of a photonic channel for use in a memory fabric for system memory interconnection.

[0032] FIG. **20** is a diagram of an embodiment of a transmitter and a receiver that can be used in a memory fabric for system memory interconnection.

[0033] FIG. **21** is a diagram of an embodiment of a message router that can be used in a memory fabric for system memory interconnection.

[0034] FIG. **22** is a diagram showing an example of the ports that can be used in a router in a memory fabric for system memory interconnection.

[0035] FIG. **23** is a diagram of a conventional high bandwidth memory (HBM) subsystem.

[0036] FIG. **24** is a diagram of an HBM subsystem according to one embodiment.

[0037] FIG. **25** is a diagram of a photonic memory fabric connected to a variety of memory types according to one embodiment.

[0038] FIG. **26** is a diagram of a photonic memory fabric for system memory interconnection according to one embodiment.

DETAILED DESCRIPTION

[0039] The following description contains specific information pertaining to implementations in the present disclosure. The drawings in the present application and their accompanying detailed description are directed to merely exemplary implementations. Unless noted otherwise, like or corresponding elements among the figures may be indicated by like or corresponding reference numerals. Moreover, the drawings and illustrations in the present application are generally not to scale and are not intended to correspond to actual relative dimensions.

[0040] The present disclosure provides computing systems, implemented by one or more circuit packages (e.g., SIPs), that achieve reduced power consumption and/or increased processing speed. In accordance with various embodiments, power consumed for, in particular, data movement is reduced by maximizing data locality in each circuit package and reducing energy losses when data movement is needed. Power-efficient data movement, in turn, can be accomplished by moving data over small distances in the electronic domain, while leveraging photonic channels for data movement in scenarios where the resistance in the electronic domain and/or the speed at which the data can move in the electronic domain leads to bandwidth limitations that cannot be overcome using existing electronic technology. Thus, in some embodiments, each circuit package includes an electronic integrated circuit (EIC) comprising multiple circuit blocks (hereinafter "processing elements") that are connected by bidirectional photonic channels (e.g., implemented in a PIC in a separate layer or chip of the package) into a hybrid, electronic-photonic (or electro-photonic) network-on-chip (NoC). Multiple such NoCs may be connected, by inter-chip bidirectional photonic channels between respective circuit packages (e.g., implemented by optical fiber), into a larger electro-photonic network, to scale the computing system to arbitrary size without incurring significant power losses. Further disclosed embodiments provide a novel circuit design for the power-efficient performance of MAC operations (herein also referred to as a "dot product engine"), and a novel clocking scheme that results in additional power savings.

[0041] While the described computing systems and its various novel aspects are generally applicable to a wide range of processing tasks, they are particularly suited to implementing ML models, in particular ANNs. As applied to ANNs, a circuit package and system of interconnected circuit packages as described herein are also referred to as an "ML processor" and "ML accelerator," respectively. Neural networks generally include one or more layers of artificial neurons that compute neuron output activations from weighted sums (corresponding to MAC operations) of a set of input activations. For a given neural network, the flow of activations between nodes and layers is fixed. Further, once training of the neural network is complete, the neuron weights in the weighted summation, and any other param-

eters associated with computing the activations, are likewise fixed. Thus, a NoC as described herein lends itself to implementing a neural network by assigning neural nodes to processing elements, pre-loading the fixed weights associated with the nodes into memory of the respective processing elements, and configuring data routing between the processing elements based on the predetermined flow of activations. The weighted summation can be efficiently performed using the disclosed dot product engine, herein also called a "digital neural network (DNN)" due to its applicability to ANNs.

[0042] The foregoing high-level summary of various beneficial aspect and features of the disclosed computing systems and underlying concepts will become clearer from the following description of example embodiments.

[0043] FIG. **1**A is a diagram schematically illustrating components of an example circuit package (SIP) **100**, according to some embodiments. The SIP **100** may serve, e.g., as an ML processor. The SIP **100** includes an EIC **101**, such as, e.g., a digital and mixed-signal application-specific integrated circuit (ASIC), and a PIC **102**. The EIC **101** and PIC **102** are formed in different layers of the SIP (herein the "electronic circuit layer" and "photonic circuit layer," respectively), one stacked above the other, as illustrated further below with reference to FIG. **1**C. The PIC or PICs **102** receive light from one or more laser light sources that may be integrated into the PIC **102** itself, or implemented separately from the PIC either within or externally to the SIP **100** and coupled into to the PIC **102** via suitable optical couplers. The optical couplers and laser sources are omitted from FIG. **1**A, but shown, e.g., in FIGS. **1**B, **1**C, and **5**A through **6**B.

[0044] The EIC **101** includes multiple processing elements **104**, which communicate with each other via bidirectional photonic channels implemented with optical waveguides in the PIC **102**. The processing elements **104** may (although they need not in all embodiments) be electronic circuits identical (or at least substantially similar) in design, and as shown, may form "tiles" of the same size arranged in a rectangular grid. (Hereinafter, the words "processing element" and "tile" are used synonymously.) In the depicted example, the EIC **101** has sixteen such processing elements, or tiles, **106** arranged in a four-by-four array, but the number and arrangement of tiles can generally vary. Neither the shape of the tiles nor the grid in which they are arranged need necessarily be rectangular; for example, oblique quadrilateral, triangular, or hexagonal shapes and grids are, in principle, also possible. Further, although tiling may provide for efficient use of the available on-chip real-estate, the processing elements **104** need not be equally sized and regularly arranged in all embodiments.

[0045] Each processing element **104** in the EIC **101** includes one or more circuit blocks serving as processing engines. For example, in the implementation shown in FIGS. **1**A and **2**, each processing element **104** includes a dot product engine, or DNN, **106** and a tensor engine **108**. The DNN **106** can perform rapid MAC operations at reduced energy per MAC to execute either a convolution function or a dot product function, e.g., as routinely used in neural networks. Details of an example DNN **106** are provided below with reference to FIG. **4**. The tensor engine **108** may be used to perform other, non-MAC operations, e.g., implementing non-linear activation functions as applied to the weighted sums in a neural network. An example tensor engine **108** is described below with reference to FIG. **3**.

[0046] As further shown in FIGS. **1**A and **2**, each processing element **104** includes a message router **110**. The message routers **110** interface with the photonic channels in the PIC **102** to facilitate data flow between the processing elements **104**. Further, the processing element **104** may each have a memory system, e.g., including level-one static random-access memory (L1SRAM) **112** and level-two static random-access memory (L2SRAM) **114**. L1SRAM **112** is optional and, if included, can serve as scratchpad memory for each processing element **104**. L2SRAM **114** may function as the primary memory for each processing element **104**, and may store certain fixed operands used by the DNN **106** and tensor engine **108**, such as the weights of a machine learning model, in close physical proximity to DNN **106** and tensor engine **108**. L2SRAM **114** may also store any intermediate results used in executing the machine learning model or other computation.

[0047] The EIC **101** may further include optional elements, such as a peripheral component interconnect express (PCIE) interface **122**, an advanced RISC machine (ARM) core **124**, an image processor **126**, and/or an external memory controller **128** that may support dynamic random-access memory (DRAM), non-volatile random-access memory (NVRAM), static random-access memory (SRAM), or another type of memory. The PCIE interface **122** generally enables electrical interconnections between the EIC **101** and an external component. For example, weights stored in the L2SRAMs can be received over the PCIE interface **122** from an external component, such as a DRAM. The ARM core **124** can, likewise, interface with a memory device external to the SIP **100** and may process image data or perform other computing tasks. The image processor **126** can process images received from a memory device or another processor, where the images may have originated from a camera. The memory controller **128** may communicate with a high-bandwidth memory (HBM) that may be included in the SIP **100** and, in turn, interface a DRAM external to the SIP **100**. In some examples, the EIC **101** includes multiple memory controllers for different types of memory.

[0048] FIG. **1**B is a diagram schematically illustrating an example electro-photonic network (or NoC) **130** within the SIP **100** of FIG. **1**A, according to some embodiments. Each processing element **104**, and more specifically the message router **110** in each processing element **104**, serves as a node **131** in the network **130**. Connections between these nodes **131** are established via bidirectional photonic channels, each channel interfacing at one end with the message router of one processing element and at the other end with the message router of another processing element. (The physical implementation of the photonic channels and the interfaces between the channels and the message routers are described further below with reference to FIGS. **5**A and **5**B.) Message transfer between any two processing elements **104** that do not share a bidirectional photonic channel directly connecting them can be accomplished by multiple "hops" along a path through one or more intervening nodes **131** within the electro-photonic network **130**; each such hop from one node to the next involves the conversion of the message from the electronic domain into the photonic domain and back into the electronic domain. As such, the network **130** is a hybrid electro-photonic network.

[0049] In FIG. **1**B, each pair of immediately adjacent processing elements (or tiles) **104** in the regular grid is connected by a photonic channel, resulting in a rectangular mesh topology of the electro-photonic network **130**. However, other network topologies, e.g., as result from omitting connections between pairs of adjacent processing elements and/or adding direct connections between non-adjacent processing elements are also possible. Further, even though the processing elements **104** are physically arranged in two dimensions in a single EIC **101**, the photonic channels can be collectively configured to establish topologically three-dimensional electro-photonic networks.

[0050] As further shown in FIG. **1**B, in addition to interconnecting the processing elements **104**, photonic channels in the PIC **102** may also connect the processing elements **104** (e.g., along the periphery of the tiled arrangement) to other elements of the EIC **101**, such as to the PCIE interface **122**, ARM core **124**, image processor **126**, and/or memory controller **128**. Alternatively, some electronic elements of the EIC may be interconnected electrically. For example, the PCIE interface **122** may be electrically connected to one of the processing elements **104** within the electro-photonic NoC, which may serve as the entry point for communication with all other processing elements **104**. According to various embodiments described herein, both electrical and photonic signal routings are employed. Signal routing tasks may be apportioned between electrical (or electronic) paths and photonic paths in a manner and for reasons that will be apparent by the discussion below.

[0051] The PIC **102** may also include one or more optical coupling structures for making off-chip optical connections, e.g., via optical fiber. Fiber connections can be made by several means; example optical coupling structures for fiber connections include fiber attach units (FAUs) located over grating couplers, or edge couplers. FIG. **1**B shows two FAUs **132**; one FAU may be used to supply optical power from an external laser light source to the PIC **102** to drive the photonics in the PIC **102**, while the other FAU may facilitate chip-to-chip interconnection to another electro-photonic networks in another SIP for both transmit and receive communications. While two FAUs **132** are shown in FIG. **1**B, other numbers of FAUs may be used in different examples.

[0052] FIG. **1**C is a diagram illustrating, in a side view, an example structural implementation of the SIP **100** of FIGS. **1**A and **1**B, according to some embodiments. In this example, the EIC (e.g., ASIC) **101** and PIC **102** are formed in separate semiconductor chips (typically silicon chips, although the use of other semiconductor materials is conceivable). PIC **102** is disposed directly on the substrate **140**, shown with solder bumps for subsequent mounting to a printed circuit board (PCB). The EIC **101** and FAUs **132** that connect the PIC **102** to optical fibers **133** are disposed on top of and optically connected to the PIC **102**. Optionally, the SIP **100** may further include, as shown, a memory chip **142** placed on top of the PIC **102** adjacent to the EIC **101**.

[0053] As will be appreciated by those of ordinary skill in the art, the depicted structure of the SIP **100** is merely one of several possible ways to assemble and package the various components. In alternative embodiments, the EIC **101** may, for example, be disposed on the substrate, with the PIC **102** being placed on top of the EIC **101**. In principle, as an alternative to implementing the electronic and photonic circuit layers as separate chips, it also possible to create the EIC **101** and PIC **102** in different layers of a single semiconductor chip. Further, the photonic circuit layer may include multiple PICs in multiple sub-layers, e.g., to reduce waveguide crossings. Moreover, the structure depicted in FIG. **1**C may be modified to included multiple EICs **101** connected to a single PIC **102**, and via photonic channels in the PIC **102** to each other.

[0054] The EIC **101** and PIC **102** can be manufactured using standard wafer fabrication processes, including, e.g., photolithographic patterning, etching, ion implantation, etc. Further, in some embodiments, heterogeneous material platforms and integration processes are used. For example, various active photonic components, such as the laser light sources and/or optical modulators and photodetectors used in the photonic channels, may be implemented using group III-V semiconductor components.

[0055] The laser light source(s) can be implemented either in the SIP **100** or externally. When implemented externally, a connection to the SIP **100** can be made optically, e.g., using a grating coupler in the PIC underneath an FAU **132** as shown in FIG. **1**C, or alternatively using an edge coupler. To implement lasers in the SIP **100**, one option is to use an interposer containing several lasers that can be co-packaged and edge-coupled with the PIC **102**. Alternatively, the lasers can be integrated directly into the PIC **102** using heterogenous or homogenous integration. Homogenous integration allows lasers to be directly implemented in the silicon substrate in which the waveguides of the PIC **102** are formed, and allows for lasers of different materials, such as, e.g., indium phosphide (InP), and architectures such as, e.g., quantum dot lasers. Heterogenous assembly of lasers on the PIC **102** allows for group III-V semiconductors or other materials to be precision-attached onto the PIC **102** and optically coupled to a waveguide implemented on the PIC **102**.

[0056] Several SIPs **100**, each including its own electro-photonic network **130**, may be interconnected to result in a single system providing a larger electro-photonic network. For example, multiple SIPs configured as ML processors may be interconnected to form a larger ML accelerator. The photonic channels within the several SIPs or ML processors, along with optical connections, laser light sources, passive optical components, and external optical fibers on the PCB, which may be utilized in various combinations and configurations along with other photonic elements, form the photonic fabric of the multi-SIP system or multi-ML-processor accelerator.

[0057] FIG. **2**A is a diagram illustrating an example electronic processing element **104**, including a message router **110** of the SIP **100** of FIGS. **1**A and **1**B, according to some embodiments. FIG. **2**A provides more detail on, in particular, the message router **110** and its interface with a bidirectional photonic channel of the PIC **102**. Each bidirectional photonic channel includes unidirectional photonic links in each direction, each unidirectional link being implemented using an optical waveguide in the PIC **102**.

[0058] In one implementation, a message containing the packet data arrives through a photonic channel of the PIC **102** and is received at the optical-to-electrical (OE) interface between the PIC **102** and router **110**. The OE interface may be implemented, for example, by a photodetector (e.g., photodiode) in the PIC **102** to convert the optical signal into an electronic signal, in conjunction with related electronic circuitry **200** in the router **110**, which may include, e.g., a transimpedance amplifier (TIA), optional gain control to

normalize the signal level, and slicer to extract the bit stream. The message can then be buffered in electronic form in a register such as "first in first out" (FIFO) register **202**.

[0059] The electronic message router **110** includes circuitry to examine an address contained in the message header (or, in alternative embodiments, in the message payload), and to determine which port and which destination the message should be routed to. For example, if the destination is another processing element, or tile, within the electro-photonic network, the message can be routed to that destination tile through an electrical-to-optical (EO) interface between the router **110** and the PIC **102**, where the message is converted back into the optical domain for transmission via another photonic channel. The EO interface may be implemented, for example, using an optical modulator within the PIC **102** in conjunction with associated driver circuitry (herein also "modulator driver") **204** in the router; non-limiting examples of applicable modulator technology include electro-absorption modulators (EAMs), Mach-Zehnder modulators, ring modulators, and quantum-confined Stark effect electro-absorption modulators (QCCE EAMs). If the electronic message router **110** determines, on the other hand, that the destination of the message is the tile memory (e.g., L1SRAM **112** or L2SRAM **114**), DNN **106**, or tensor engine **108** in which the router **110** itself resides, the message is routed to local port **206**.

[0060] The EIC-side portions **200**, **204** of the OE and EO interfaces between the message router **110** and the links (in both directions) of a given bidirectional photonic channel, such as the TIA and other circuitry (collectively **200**) associated with the PIC-side photodiode and the driver circuitry associated with the PIC-side optical modulator, are herein collectively referred to as a "photonic-channel interface" of the router **110**. While FIG. **2**A illustrates only one photonic-channel interface, each router **110** generally includes multiple such interfaces to couple to multiple respective photonic channels.

[0061] FIG. **2**B is a diagram illustrating an example configuration of message routers **110** and photonic channels **210** in an electro-photonic network (such as, e.g., network **130** shown in FIG. **1**B), according to some embodiments. In this example, the routers **110** (like the processing elements, or tiles, **104** of which they are part according to FIG. **1**B) are arranged in a two-dimensional, quadrilateral (more specifically, rectangular) array or grid, and the routers **110** of any two tiles that are immediately next to each other in either dimension (e.g., horizontally or vertically in FIG. **2**B) are connected by a bidirectional channel **210**. Accordingly, each router **110** in the interior of the array includes four photonic-channel interfaces **212** to four respective bidirectional photonic channels **210**, one for each of four directions that may be referred to as "north," "east," "south," and "west." Along the periphery of the array, the routers **110** need only have two (at the corners) or three (at the edges between corners) photonic-channel interfaces **212**. However, as shown, the routers **110** along the periphery may, optionally, be equipped with four photonic-channel interfaces as well, e.g., as a result of using the same circuit design for all tiles **104**, which simplifies manufacturing. Moreover, in some embodiments, the photonic-channel interfaces **214** along the periphery of the array may be used to establish inter-chip connections to other SIPs.

[0062] The electronic message routers **110** can be used to route messages to destination addresses using various addressing schemes. Regardless of the addressing scheme, the messages from tile to tile may be transferred primarily or exclusively through the electro-photonic network via photonic channels in the PIC **102** (with optical-to-electrical and electrical-to-optical conversions at each router along the path), as opposed to via electrical interconnections on the EIC **101**. In one implementation, a signed 5-bit packet data (e.g., extracted from the header or, alternatively, the payload of the message) provides the relative location (or distance) in the horizontal direction (east/west) to a destination tile, while another signed 5-bit packet data provides the relative location (or distance) in the vertical direction (south/west) to the destination tile. Of course, packet data of different size (number of bits) may also be used, depending, e.g., on the number of tiles and resulting size of the address space. As the message traversers routers **110** in different tiles, either the horizontal or vertical coordinate is decremented for each hop, depending on along which dimension the message is being transferred. When both 5-bit packet data providing the directions to the destination tile become zero, the message has arrived at the destination tile and is forwarded to the local port **206** of the router in that tile for processing. In some cases, the messages are used to carry read and write memory transactions between tiles.

[0063] While the paths carrying data between the tiles are photonic paths implemented, for example, by optical waveguides on the PIC **102**, path-setup packet data may be provided in electronic form for use by the message routers **110**. Moreover, even for same-tile message routing, path-setup packet data may be used to determine paths that can be either photonic paths or electrical paths. Thus, various embodiments employ a hybrid approach, where both electronics and photonics elements are used in a hybrid electro-optical network-on-chip (EP-NoC) architecture to determine destinations, set up delivery paths, and deliver messages to the destination.

[0064] SIPs with electro-photonic networks as described above lend themselves to the efficient execution of ML models, such as neural networks. A neural network includes a plurality of nodes (herein also referred to as a "neural node" to distinguish them from the nodes of the electro-photonic network) generally organized into layers, including an input layer, one or more hidden layers, and an output layer. In the hidden layers and the output layer, each neural node is a computational unit that has as inputs a set of weights and an input activation from another node (e.g., of a previous layer), and that implements a transfer function that combines the weights and the activations in a predetermined manner according to the ML model, resulting in an output activation.

[0065] Data flows between the nodes of an ML model in a deterministic fashion. Furthermore, the weights associated with the nodes, which are adjustable parameters of the model, are generally determined during model training, and remain fixed during inference calculations, when the trained model operates on inputs to generate outputs. When executing an ML model on an ML processor or ML accelerator as described herein, these characteristics allow minimizing data movement by mapping the ML model onto the electro-photonic network via fixed assignments of neural nodes to processing elements **104**, and pre-loading the associated predetermined weights into memory of the processing elements, or tiles, **104**. In general, when the ML model is distributed over multiple tiles **104** of the ML processor **100**

or ML accelerator, each tile **104** may execute multiple neural nodes, one neural node, or a portion of a neural node that has been parallelized and distributed over several tiles **104**. In some examples, each layer of the ML model is implemented by several tiles **104**, where each tile **104** implements one or more neural nodes.

[0066] In some embodiments, the weights are loaded into memory of the assigned tiles **104** (e.g., L2SRAM **114**) only once during initialization of an inference operation by the ML processor **100** or ML accelerator, and thereafter the weights are not moved from tile to tile. The weights may be loaded from a device (e.g., memory) external to the ML processor **100** via the PCIE **122**. In one implementation, the PCIE **122** accesses the electro-photonic network **130** of the ML processor through a tile **104** closest to the PCIE **122**, and then transfers each weight to its respective destination tile **104** photonically from tile to tile along a (e.g., predetermined) path through the electro-photonic network. In other implementations, during initialization of the ML processor **100**, electronic connections existing on the EIC **101** between the tiles **104**, instead of photonic channels situated on the PIC **102**, are utilized to transfer the weights to each destination tile **104**. Regardless of whether the transfer of weights provided through PCIE interface **122** is done primarily photonically or electronically, the transfer and loading into each L2SRAM **114** is performed only once. As such, significant power is saved in that the weights remain stationary in L2SRAM **114** of each tile **104**.

[0067] Once the ML model has been pre-loaded into the ML processor by storing the weights associated with the neural nodes into L2SRAM **114** of respective tiles **104** assigned to the neural nodes, the ML model can be executed by streaming activations between the neural nodes and performing computations on the streamed activations using the weights stored in L2SRAM **114**. Input activations stream to all tiles **104** allocated to neural nodes in the ML model. The processing engines (e.g., DNN **106** and tensor engine **108**) within these tiles **104** operate on the input activations and the pre-loaded weights to compute output activations of the neural nodes. For example, the DNNs **106** may perform MAC operations, and the tensor engines **108** may implement non-linear activation functions operating on the results of the MAC operation, but other distributions of the computations between one or more processing engines in each tile **104** are also possible. The output activations generated in a tile **104** for a given neural node are then sent to the tile(s) **104** implementing the next node(s) in the ML model (e.g., within the next layer of the neural network) as their input activations. Activations flowing between neural nodes implemented in the same tile **104** are exchanged via the memory of that tile, whereas activations that move between tiles **104** are sent over the photonic fabric. In embodiments where each neural node is implemented by one respective tile **104** of the electro-photonic network, the tile network topology will closely mirror the ML model (or the ML graph topology).

[0068] As activations are streamed from originating tiles into destination tiles through the electro-photonic network, the address of the destination tile for each output activation is generally determined by the electronic message router **110** of the originating tile of that activation, e.g., according to a path set up during initialization of the ML model. The address may be provided as packet data as part of the message that carries the output activation as payload. In one implementation, the address is in the header of the message, and in another implementation the address is encoded into the message itself (as a portion of the payload). The address contained in the message is used by message routers along the path through the electro-photonic network to route the output activation to the destination tile. In some embodiments, as described above, a relative addressing scheme is employed.

[0069] In typical ML models, the number of weights is far greater than the number of activations. For current ML workloads, the ratio of the number of weights to the number of activations is often in the range from approximately 20 to 1 to approximately 60 to 1. Thus, keeping the weights stationary saves a substantial amount of energy, even though the activations are streamed from tile to tile. Furthermore, in some beneficial embodiments, the L2SRAM **114** is physically laid out in close proximity to the DNN **106** and tensor engine **108**, which reduces the interconnect distance through which the weights travel locally within each tile, thus reducing the capacitance associated with the related interconnect length and reducing the energy loss associated with such interconnect capacitance. Additionally, from the above description, it is apparent that activations that stream from originating nodes in one title to destination nodes in another tile, e.g., over relatively long distances, traverse primarily through optical paths provided by the PIC **102**, while activations that stream within the same tile, e.g., over relatively short distances, use electrical paths provided by the EIC **101**. In this manner, reliance on electrical interconnections for long haul-data movement is virtually eliminated, which significantly lowers the energy expended in association with the electrical interconnect capacitance. In other words, by streaming activations from tile to tile photonically, significant power savings can be achieved. In sum, using an ML processor or ML accelerator as described herein, data movements are in part minimized (in the case of weights), and rely in part on power-efficient tile-to-tile data transfer via photonic connections (in the case of activations). In addition to providing the benefit of power saving, using the photonic fabric for data transfer can reduce latency and provide higher bandwidth.

[0070] FIG. **3** is a diagram illustrating an example tensor engine **108** as may be used within an electronic processing element **104** as shown in FIG. **2**A, according to some embodiments. Each tensor engine **108** may be assigned to perform a portion of, for example, inference calculations for a specific machine learning model implemented by the SIP **100**, serving as ML processor. Tensor engines **108** in the different processing elements **104** of the ML processor **100** can perform the machine learning tasks in parallel or in sequence. ML computations of ML processor may be performed in one or more tensor engines **108**, forming a data flow between the tensor engines.

[0071] Various implementations for tensor engine **108** can be used without departing from the scope of the present application. In one example, as shown in FIG. **3**, the tensor engine **108** includes an instruction sequencer **300**, a register bank **302**, multiplexers **304**, Ra registers **306**, Rb registers **308**, arithmetic logic units (ALUs) **310**, adders **312**, and Rg registers **314**. The tensor engine **108** uses instruction sequencer **300** to perform register write, accumulate, and register read operations in a manner known in the art. For example, the tensor engine **108** may write two values to the Ra register **306** and Rb registers **308**, accumulate them with

the aid of the ALU **310**, and save the result in the Rg register **314**. Thereafter, two more values are written into the Ra register **306** and Rb register **308**, are accumulated with the aid of the ALU **310**, read from the ALU **310**, and added to the previous content in the Rg register **314** and written into the Rg register **314**. This routine may repeat again, for example, up to 32 times to generate a 32-bit output from each output register of the tensor engine **108**.

[0072] The tensor engine **108** is a single instruction multiple data (SIMD) processor using an instruction set that may be purpose-designed, in some embodiments, for execution of machine learning algorithms. While data movement between the different tensor engines **108** can be done electronically or photonically, in a preferred implementation, data movement between tensor engines **108** in different processing elements **104** is performed photonically, while data movement within the same tensor engine **108** is performed electronically. The tensor engine includes an interface to the local port **206** of the message router **110**, which allows it to communicate with the PIC **102**.

[0073] FIG. **4** is a diagram illustrating an example DNN **106** as may be used within an electronic processing element **104** as shown in FIG. **2**A, according to some embodiments. Though the example DNN of FIG. **4** is described with respect to DNN **106** of the SIP **100**, for some embodiments, the illustrated DNN can form part of hardware implemented in other environments (e.g., as a component of other types of processors). As used herein, a DNN can also be referred to as a neural compute engine (NCE) or a dot product engine. Depending on the embodiment, a DNN can be implemented by one or more portions of a hardware circuit configured to generate (e.g., compute) one or more dot products (e.g., dot product values) based on at least two vectors. For example, the at least two vectors can be constructed from a set of weight values and operand values (e.g., activation values).

[0074] Referring now to FIG. **4**, an embodiment of a portion of the DNN **106** situated in the EIC **101** of SIP (e.g., ML processor) **100** is shown. The DNN **106** is essentially a combinatorial tree of multipliers and adders that computes in hardware the dot product of a set of weights and operands (for example, activations from a previous node) without latching data during any operation. As such, the DNN **106** has very few registers and expends significantly less power by specializing in doing only certain predetermined routines without performing register transfer operations and without latching data. In the DNN **106**, the pre-loaded weights are fetched from L2SRAM **114**, and a DNN sequencer **400** provides the weights (e.g., weight values) and operands (e.g., operand values) to the top of the combinatorial tree. For example, weights W**1**, W**2**, W**3**, and W**4** are provided to the top of the tree as shown in FIG. **4**. Operands (for example, activations from a previous node) X**1**, X**2**, X**3**, and X**4** are also provided to the top of the tree.

[0075] In some embodiments, each weight W**1**, W**2**, W**3**, and W**4** and each operand X**1**, X**2**, X**3**, and X**4** consists of 8 bits. Weights W**1**, W**2**, W**3**, and W**4** are multiplied with respective operands X**1**, X**2**, X**3**, and X**4**. The result of each operation is a 16-bit product. As shown in FIG. **4**, two 16-bit products are added to form a 17-bit sum. At the next level, two 17-bit products are added to form an 18-bit sum and so on for further levels of addition. The calculated dot product is then added into a 32-bit accumulator so that a sequence of dot products can be accumulated without losing precision. A pipelined implementation of the combinatorial tree can be constructed to re-time the data as it flows through the combinatorial tree. In some embodiments, seven pipeline stages are used. As stated above, the DNN **106** saves significant power during dot product calculations. For comparison, using 7 nm CMOS Fin-FET, a single dot product calculation performed by the tensor engine **108** in FIG. **3** may cost approximately two hundred and fifty femto-Joules (250 fJ) of energy. In contrast, a single dot product calculation performed by the DNN **106** in FIG. **4** may cost approximately only one hundred and thirty femto-Joules (130 fJ) of energy.

[0076] More regarding various embodiments of the DNN is illustrated and described with respect to FIG. **12**.

[0077] FIG. **5**A is a diagram illustrating, in a side view, an example implementation of photonic and electronic components of an electro-photonic network, according to some embodiments. The EIC (e.g., ASIC) **101** is shown as being situated over the PIC **102**. Multiple tiles (processing elements) **104**A, **104**B, **104**C, and **104**D within the EIC **101** are indicated, along with optical links between adjacent pairs of tiles, implemented using waveguides **500**AB, **500**BC, **500**CD in the PIC **102** beneath. Also shown are the EO and OE interface components associated with the tiles and optical links therebetween. As shown, the EO interface components include modulator drivers **502**A, **502**B, **502**C situated, respectively, in EIC tiles **104**A, **104**B, **104**C, along with modulators (e.g., EAMs) **504**A, **504**B, **504**C situated in the PIC **102** directly below the respective modulator drivers **502**A, **502**B, **502**C. The OE interface components include TIAs **506**B, **506**C, **506**D situated, respectively, in EIC tiles **104**B, **104**C, **104**D, and photodetectors (PDs) **508**B, **508**C, **508**D situated in the PIC **102** directly below the respective TIAs **506**B, **506**C, **506**D. The optical waveguides **500**AB, **500**BC, **500**CD each connect an optical modulator **504**A, **504**B, **504**C associated with one tile with a photodetector **508**B, **508**C, **508**D associated with an adjacent tile, thereby providing optical links in PIC **102** for intra-chip communication between the respective pairs of tiles within the ML processor **100**.

[0078] Avoiding lateral displacement between the PIC-side and EIC-side components of the EO and OE interfaces (e.g., by placing the modulator drivers directly above the modulators and the TIAs directly above the photodetectors) minimizes the distance between the components in each interface; in some embodiments, the distances between the modulators and their associated drivers and between the photodetectors and their associated TIAs are minimized such that the speed of signal conversion between the electrical and the optical domains, and vice-versa, is maximized. Typically, the spacings are less than 200 μm, although the spacing can vary depending on the nature of the embodiment, the configuration of the OE and EO interface components, the demands and architecture of the system, the temperature of the system, and the like. In one embodiment, placement of the PIC-side and EIC-side components in close association has beneficial thermal properties toward the PIC-side components. Since the EIC-side is a heat sink which can radiate heat toward the PIC-side components, this in turn can cause increased thermal stability of components on the PIC side due to the added heat. Minimizing the distances between the PIC-side and EIC-side components, in turn, minimizes power consumption for the signal conversion between the optical and electrical domains, which is

important for the overall power-efficiency of data movement over a hybrid electro-photonic network as described herein. Moreover, in some examples, it is beneficial when there is heat generated from components (such as a modulator driver or other functional block) in the EIC which are placed directly above or in close association to the EAM on the PIC. In this scenario, heat radiating from the EIC side can raise the operating temperature of the EAM or otherwise promote thermal stability in an enhanced manner, and/or bring the EAM closer to a peak efficiency or closer to an optimal operating range.

[0079] Also shown in FIG. **5**A are optical coupling structures as may be used to establish fiber-optic connections between the SIP (or ML processors) **100** and other devices. An optical fiber may be coupled to the PIC **102** using edge coupling. Alternatively, as depicted in FIG. **5**A, the optical fiber **133** may be attached to the PIC **102** via an FAU **132**, and light may be coupled between the FAU **132** and the PIC **102** using a grating coupler **520** formed in the PIC **102** directly beneath the FAU **132**. The optical fiber **133** may be connected to an off-chip laser light source, or to the FAU of another SIP (ML processor), that provides optical input to the PIC **102**. The light received via the grating coupler **520** can then be supplied to the modulators **504**A, **504**B, **504**C in the PIC **102** via optical waveguides. In the cross-sectional view of FIG. **5**A, only a waveguide **522** to EAM **504**A is visible, but in the top view of FIG. **5**B, the optical connections between the grating coupler **520** and all EAMs, including EAMs **504**B and **504**C, can be seen.

[0080] FIG. **5**B is a diagram illustrating, in top view, a PIC **102** of the example electro-photonic network of FIG. **5**A, according to some embodiments. The locations of the tiles of the EIC **101** relative to the PIC **102** are indicated by dashed lines. For each pair of adjacent tiles (whether they are adjacent horizontally or vertically), the PIC **102** provides two unidirectional photonic links, each including an optical modulator (defining the input end of the photonic link), a photodetector (defining the output end of the photonic link), and a waveguide directly connecting the modulator to the photodetector. For example, waveguide **500**AB connects modulator **504**A associated with tile **104**A to photodetector **508**B associated with tile **104**B. The two photonic links between any given pair of tiles are oriented in opposite directions, and collectively form a bidirectional photonic channel in accordance herewith. Note that, while only one unidirectional photonic link in each direction is shown in FIG. **1**B, a photonic channel may generally include multiple links in each direction (e.g., together forming bonding group) to increase the bandwidth for data transfer across the channel. Within a tile (or, more specifically, a router within the tile), a photonic-channel interface to a certain bidirectional photonic channel in the PIC includes an optical driver for each outgoing photonic link of that bidirectional channel (with which the router interfaces at the input end of the link) and a TIA (and associated circuitry) for each incoming photonic link of the bidirectional photonic channel (with which the router interfaces at the output end of the link).

[0081] The PIC **102** receives an optical carrier signal from a laser light source. In some embodiments (not shown) the light source is integrated in the PIC. In other embodiments, the light source is implemented externally to the PIC, and provides light to the PIC, e.g., via edge coupling, or via optical fiber connected to an FAU **132** and a grating coupler in the PIC. From the FAU **132** and grating coupler, or any other point of input to the PIC, one or more optical input waveguides guide the carrier signal to the optical modulators of the bidirectional photonic channels, where the carrier signal is modulated to impart respective messages onto the optical signal for transmission via the photonic channels. In some embodiments, as shown, the carrier signal is divided, by an optical splitter **530**, between multiple optical input waveguides, e.g., one waveguide each for the photonic links directed north, east, west, and south for each row of tiles in the EIC. Along each input waveguide, additional splitters may successively branch of light to be input to different modulators. For instance, as depicted, waveguide **532** provides the carrier signal to splitter **534**A in tile **104**A, where the light is split between an optical path to the modulator **504**A of that tile and another optical path guides the light through a continuation of waveguide **532** to splitter **534**B in tile **104**B. From splitter **534**B in tile **104**B, the carrier light is provided along one optical path to modulator **504**B of tile **104**B and along another optical path through a further continuation of waveguide **532** to modulator **504**C in tile **104**C.

[0082] As shown in FIGS. **5**A and **5**B, in one implementation, all or most of tile-to-tile communication, for example the streaming of activations from a first node in a first tile to a second node in a second tile, is performed using the photonic channels in the PIC **102** by employing modulators (e.g., EAMs) and photodetectors in the PIC **102** that are placed directly below their respective modulator drivers and TIAs on the EIC **101**. The modulators and PDs are connected optically, e.g., by waveguides in the PIC **102**. Thus, in one implementation, all or most of tile-to-tile communications are not performed electrically within the EIC **101** but are performed optically using the photonic fabric provided by PIC **102**.

[0083] As noted above, the electro-photonic networks of multiple SIPs as described herein can be connected, via optical couplers on the PICs and an optical transmission medium between the optical couplers of different SIPs, into a larger electro-photonic network. The transmission medium may be an optical fiber, such as a multi-fiber termination push-on (MTP) ribbon fiber connection (up to twenty meters). Other transmission media are also possible, such as integrated optical waveguides (e.g., in a separate PIC configured to provide an optical interconnect structure between the SIPs) or free-space transmission (e.g., employing imaging optics to couple light from an output of one PIC to an input of another PIC). In the case where a grating coupler is used to capture light, the grating coupler can be configured to cause the light to exit the PIC at a pre-defined angle associated with the angle of the fiber so as to minimize the loss of light. In other embodiments, various types of waveguides are possible, including diffraction gratings such as an Echelle grating, and others. Messages between the tiles of all EICs within such a multi-package system may be exchanged via the photonic fabric implemented by the PICs and optical interconnects therebetween, regardless of whether a message is sent on-chip/intra-chip (meaning within a single SIP) or off-chip/inter-chip (meaning a tile in one SIP to a tile in another SIP). According to various embodiments described herein, on-chip and inter-chip optical communications may differ, however, in that on-chip communications are generally performed using single wavelength light, whereas inter-chip communications between different SIPs in the larger system (e.g., different ML processors in the ML accelerator)

are often performed using wavelength division multiplexing (WDM), which serves to reduce the number of fiber connections required between the different chips (e.g., the different ML processors). Note that, in some embodiments, multiple wavelengths are also used for on-chip optical communications, and conversely, single-wavelength communications may, in principle, also be used for off-chip communications.

[0084] FIG. **6**A is a diagram illustrating an example group of photonic links connecting two processing elements within an SIP, according to some embodiments. For intra-chip optical communication, a light engine **600**, which can be an on-chip or off-chip laser light source, outputs carrier light at a single wavelength λa**1**. A splitter tree **602** may divide the light, having wavelength λa**1**, between multiple optical paths **604** (only one being shown) leading to the modulators associated with different tiles and photonic channels. Along each of these paths **604**, the light may be further split between a group of modulators **610**, **612**, **614**, **616** associated with a group of unidirectional photonic links in the same direction that are bonded together to form a bonding group, corresponding to a unidirectional photonic channel from one tile in the SIP to another; two such unidirectional photonic channel between the same pair of tiles of the SIP form an intra-chip bidirectional photonic channel. The modulators **610**, **612**, **614**, **616** (e.g., EAMs) modulate the light having the single wavelength λa**1**, and transmit the modulated light via respective waveguides **620**, **622**, **624**, **626** to photodetectors **630**, **632**, **634**, **636**, which are situated in a different tile of the same chip.

[0085] FIG. **6**B is a diagram illustrating an example system of two SIPs **100**A, **100**B that use WDM for inter-chip optical communications, according to some embodiments. In the depicted example, the PICs of the SIPs **100**A, **100**B are connected through a grating coupler **640** in the first PIC, a first optical fiber **641**, a fiber connector **642**, a second optical fiber **643**, and a grating coupler **645** in the second PIC. In the first SIP **100**A, a light engine **650**, which can be an on-chip or off-chip laser light source, provides light of multiple wavelengths (e.g., between 2 and 16 wavelengths), such as four wavelengths λb**1**, λb**2**, λb**3**, λb**4** as shown, to the PIC. A splitter tree **602** (e.g., similar to that of FIG. **6**A) may divide the light at the multiple wavelengths between multiple optical paths **652** (only one being shown) leading to different tiles of the SIP **100**A and/or to the optical modulators associated with different photonic-channel interfaces within the tiles. For example, the carrier light at the wavelengths λb**1**, λb**2**, λb**3**, λb**4** may be provided to the optical modulators associated with multiple peripheral photonic-channel interfaces, such as the interfaces **214** shown in FIG. **2**B.

[0086] Along each of these paths **652**, a demultiplexer **654** separates the wavelengths λb**1**, λb**2**, λb**3**, λb**4** between different respective modulators (e.g., EAMs) **662**, **664**, **666**, **668**. The modulators **662**, **664**, **666**, **668** modulate the carrier light at the wavelengths λb**1**, λb**2**, λb**3**, λb**4**, and provide the modulated optical signals having respective wavelengths λb**1**, λb**2**, λb**3**, λb**4** on optical waveguides **672**A, **674**A, **674**A, **678**A to a WDM multiplexer **680**. The multiplexed output of the WDM multiplexer **680**, which contains four data streams each encoded on a separate wavelength λb**1**, λb**2**, λb**3**, λb**4**, is provided on a single waveguide to the grating coupler **640**, where the multiplexed modulated optical signal is coupled off-chip to the fiber **641**.

[0087] At the fiber connector **642**, the multiplexed modulated optical signal is coupled from the fiber **641** into a second fiber **643**. The second fiber **643** couples the multiplexed modulated optical signal via the grating coupler **645** into the PIC of the second SIP **100**B. In some other implementations edge, coupled fibers may be used in lieu of or in addition to FAUs and grating couplers. In the SIP **100**B, a demultiplexer **682** then demultiplexes the multiplexed modulated optical signal, outputting four separate modulated signals having wavelength λb**1**, λb**2**, λb**3**, λb**4**. These four signals are provided, via respective optical waveguides **672**B, **674**B, **676**B, **678**B, to photodiodes **692**, **694**, **696**, **698** in SIP **100**B. Collectively, the modulators **662**, **664**, **666**, **668**, waveguides **672**A, **674**A, **676**A, **678**A, multiplexer **680**, and grating coupler **640** in the PIC of SIP **100**A, the fiber-optic connection (**641**, **642**, **643**) between the SIPs **100**A, **100**B, and the grating coupler **645**, demultiplexer **682**, waveguides **672**B, **674**B, **676**B, **678**B, and photodetectors **692**, **694**, **696**, **698** in the PIC of SIP **100**B form a unidirectional photonic channel between tiles of different SIPs; two such unidirectional photonic channel between the same pair of tiles of the SIPs form an inter-chip bidirectional photonic channel.

[0088] Although the implementation discussed above is directed to a photonic channel showing four optical links in one direction and a WDM multiplexer receiving four different wavelengths, in other implementations, two or more optical links and a WDM multiplexer receiving two or more different wavelengths may be used. The demultiplexer would, accordingly, output two or more different wavelengths corresponding to these alternative implementations.

[0089] Using intra-chip and inter-chip photonic channels, e.g., as described above, generally including one or more links per direction, the processing elements (tiles) in the EIC(s) of one or more SIPs can be connected into electro-photonic networks. The resulting network topology generally depends on the selection of pairs of tiles that are directly connected via an associated photonic channel; various example topologies are described below with reference to FIGS. **7**-**9**. Note that, while this disclosure generally refers to bidirectional photonic channels, which, as compared with unidirectional photonic channels, result in network structures providing greater flexibility for implementing ML and other computational models, electro-photonic networks can in principle also be formed with unidirectional photonic channels, and such networks may retain many of the benefits discussed herein (e.g., power savings due to photonic data transfer over longer distances).

[0090] FIG. **7** is a diagram illustrating an example electro-photonic network **700** with a quadrilateral mesh topology, according to some embodiments. This topology is also shown for the SIP **100** depicted in FIG. **1**B. In the depicted example, the network includes sixteen tiles **104** (constituting the network nodes), arranged in a quadrilateral (e.g., as shown, rectangular) grid and interconnected by photonic channels **702** such that the output of each tile can be provided as input to any of its immediately adjacent tiles. In alternative implementations, other network topologies can be supported to provide richer or sparser connectivity, e.g., based on the demands of the particular application. For example, additional photonic channels may be added to skip over network nodes and provide direct paths to non-adjacent nodes, that is, nodes two or more hops away in the rectangular mesh.

[0091] FIG. **8** is a diagram illustrating an example electro-photonic network **800** with a wrapped toroidal mesh topology, according to some embodiments. The network **800**, like the network **700** in FIG. **7**, includes sixteen tiles **104** arranged in a rectangular grid. In this topology, photonic channels **802**, **804** between tiles **104** are configured such that the output of each tile **104** can be provided as input to any of its immediately adjacent tiles (as is also the case in the mesh topology of FIG. **7**) via photonic channels **802**, and that each tile along the periphery of the array can, furthermore, provide its output directly via a photonic channel **804** to a tile on the opposite edge of the grid, that is, the far tile in the same row for tiles arrange along the vertical edges and the far tile in the same column for tiles arranged along the horizontal edges. The resulting wrapped toroid has the beneficial effect of significantly reducing the number of tile-to-tile hops needed to communicate between tiles on opposite sides of the network. For example, without the photonic channels **804**, a message sent from a tile on the left edge to a tile on the right edge of the network would traverse an entire row of tiles in the network.

[0092] In some embodiments, the wrapped toroidal topology is physically implemented by combining optical links at the edges of the chip into a grating coupler that mates with a fiber attach unit, or alternatively into an edge coupler, to provide connection for an array of fibers assembled into a ribbon fiber. The ribbon fiber can be designed to allow arbitrary topologies of optical links to be constructed using patch fibers. The patch fibers allow the connections from one side of the PIC to wrap around and form the wrapped toroid. Alternatively, to using optical fiber, it is also possible to implement the photonic channels **804** that connect tiles on opposite edges as optical waveguides within the PIC. Optionally, to avoid waveguide crossing between the photonic channels **804**, waveguides connecting tiles on opposite ends of the same row may be implemented in a layer separate from waveguides connecting tiles on opposite ends of the same column.

[0093] FIG. **9** is a diagram illustrating an example electro-photonic network **900** with an extensible wrapped toroidal mesh topology, according to some embodiments. In this case, four SIPs **100** (e.g., implementing an ML accelerator with four ML processors), each including in its EIC sixteen tiles **104** in a rectangular grid, are themselves arranged in a two-by-two grid, resulting in an overall arrangement of sixty-four tiles **104** in an eight-by-eight grid. As shown, in this configuration, tiles **104** immediately adjacent to each other either within the same SIP **100** or in two adjacent SIPs **100** are connected by photonic channels (e.g., implemented by waveguides in the PIC for intra-chip photonic channels **902** and by optical fiber for inter-chip photonic channels **904**). Moreover, the tiles **104** along the periphery of the eight-by-eight grid are interconnected (by inter-chip photonic channels **906**) as a wrapped toroid, similar to the topology in FIG. **8**, so that the output of each tile **104** in one SIP **100** that is located at an edge of the eight-by-eight grid can be provided as input to the tile of another SIP **100** on the opposite edge of the grid. Beneficially, the inter-chip photonic channels **904**, **906** seamlessly integrate the tiles **104** of all the SIPs **100** into the larger electro-photonic network **900**. As will be appreciated, the number of SIPs **100** connected into a single larger network may differ from the depicted four and can be straightforwardly increased without incurring substantial energy losses, taking advantage of the energy-efficiency, for long distances, of photonic communications. Further, the extensible wrapped toroidal topology reduces the number of tile-to-tile hops that would otherwise be needed to communicate between tiles on far ends of the grid.

[0094] FIGS. **7-9** illustrate various non-limiting examples of possible network topologies. To provide yet another example, the photonic channels may also be configured to collectively connect tiles within and/or across one or more SIPs into a three-dimensional, cubic grid topology. In such an embodiment, the tiles may still be laid out in a single plane (that is, be geometrically two-dimensional), but feature a three-dimensional network topology by virtue of the connections between network nodes. Note that the wrapped toroidal networks depicted in FIGS. **8** and **9** are also examples of geometrically two-dimensional and topologically three-dimensional configurations.

[0095] It is noted that, in an ML accelerator system according to various embodiments described herein, several techniques may be used to support the power-efficient execution of ML models using the photonic fabric. For ML models, both the pattern and schedule of communication are known at compile time, which provides the opportunity for compiler-directed photonic fabric optimization. For example, photonic channels and optical links in the photonic fabric that are not used may be shut down to save power based on the ML model that is loaded into the ML processor or accelerator. For example, a bidirectional photonic channel consisting of eight links, four in each direction, may provide more bandwidth than a given model demands. Dynamic bonding can be used to selectively activate and deactivate optical links in a channel according to the needs of the ML model based on a schedule developed by the compiler, thus further reducing the power consumption. A prerequisite for the implementation of this algorithm is that the EO and OE interfaces be able to go quiescent and restart in a few bit times, which is accomplished by selecting a master link from each channel at boot time using a negotiation protocol. The master link of a channel is never shut down. The transmit clock on the master link is used as the transmit clock on all the slave links. At the receiver, the master link performs clock data recovery on the incoming bit stream and reconstructs the transmitter clock. The receive clock is then distributed to the other slave links in the channel. Since there will be delays in transmission between master and slave links at both the transmitter and receiver, clock skew must be accounted for in each receive link, which is accomplished by performing a channel alignment phase during the bring up of the channel.

[0096] The configurability of the photonic fabric and its dynamic bonding ability can further be used to provide fault tolerance to correct manufacturing defects caused by low-yielding components. The modulators (e.g., EAMs) and photodiodes may have manufacturing defects, which cause them to be permanently defective. When the ML accelerator is initialized, each channel in the photonic fabric is set up and calibrated to make it ready to carry data. In normal operation, links in a channel are bonded together to form a group that performs as a single logical channel. During the process of channel establishment, nonfunctioning links can be omitted from the bonding group and disabled. The channel establishment process is coordinated by a state machine in the port logic of each channel.

[0097] The channel establishment state machine proceeds in phases. In a first phase, a master link is elected. A transmitter rotates through each link in the channel, transmitting a link establishment framing pattern. When a receive channel successfully receives the link establishment pattern, it converts its establishment link to a "master found" framing pattern. When a channel receives a "master found" framing pattern, the corresponding transmitter will stop rotating through the links, and wait for several "master found" framing patterns to indicate the master selection is stable. If the channel stops receiving "master found," then it will revert to using the link establishment framing pattern. When a master link is established in both directions, bonding can proceed. For each link that is not currently a master, the system transmits a "ready to bond" framing pattern. When the receiver correctly decodes a "ready to bond" framing pattern, it transmits a bonded framing pattern over the master link and adds the receive channel to the bonding group. The process proceeds until all the non-master links have been discarded or added to the bonding group. At the completion of the bonding process, only those links that are fully functional will be included in the bonding group.

[0098] FIG. **10** is a diagram illustrating conventional techniques for clock signal distribution within a processor. The conventional techniques for clock signal distribution within a processor expend a significant amount of energy. Clock trees are typically built hierarchically, starting from a root clock network that distributes a clock signal to regional clock networks. A typical topology is the "H tree network" shown in FIG. **10**, where the clock segments are successively divided on equal-length paths to distribute the clock signal to regions of the processor. Buffers **1044** are used to regenerate the clock signal as it propagates long distances across the processor. The paths through the H tree are matched in length to maintain even clock skew between the arms of the H tree network. Then, within regions, there is a further level of hierarchical clock splitting to connect the clock signal at the regional level to local circuits **1046**. The root clock network often presents routing challenges since the clock paths must be matching in length, and also consumes significant power in the regenerating buffers **1044**.

[0099] FIG. **11** is a diagram illustrating an example of using a photonic fabric to distribute a clock signal, such as a root clock signal, according to some embodiments. For some embodiments, a photonic fabric described herein is used to carry a clock signal within an ML processor (e.g., **100**), such as a clock signal of a root clock network used by the ASIC (or other EIC, e.g., **101**) of the ML processor. Referring now to FIG. **11**, since the master links are always transmitted on channels **1112**, **1114**, **1116**, and **1118**, the receiving tile can use select by first master link **1130** to establish the clock source for the tile (e.g., **104**). The clock signal is extracted from the incoming data stream on channels **1112**, **1114**, **1116**, and **1118** by using clock data recovery (CDR) circuit **1120** and feeding into a jitter-attenuating PLL **1124** that produces a low jitter clock signal **1126** that is then used for the transmitters on all the other channels **1132**, **1134**, **1136** and **1138** in the tile as well as divided down and used as digital clock signal **1140** for the tensor processor, the DNN, and message router.

[0100] Each tile therefore establishes its own clock domain, and electrical connections between tiles use mesochronous clocking. This arrangement has several benefits over a digital global clock network: It saves power by eliminating the root clock network typical in processors; it reduces the complexity of the clock networks that must be routed around a processor and between several processors; and it reduces current spikes in the digital logic due to synchronized global clock transitions. The novel clock signal distribution mechanism of some embodiments extends between ML processors as well as within the tiles of a single ML processor.

[0101] Although the inventive concepts are described herein using various embodiments, other embodiments of these concepts can be devised by a person of ordinary skill in the art without departing from the scope of the present application. For example, in one approach, the DNN itself may be a PNN (photonic neural network), where the neural network layers are implemented using photonics (for example, MAC functions are performed using optical beam splitters and optical waveguides, and where intermediate output signals are optically combined for an optical output). Moreover, parts of the photonic network and/or photonic fabric may be implemented using electrical connections in addition to or instead of optical connection, for example, as back-up connections or for use during testing or during initialization of the ML accelerator.

[0102] In summary, according to various embodiments of the present inventive concepts, the present ML accelerator includes a novel hybrid electronic-photonic (or electro-photonic) NoC and a novel DNN, and an overall unique architecture for executing ML models and a novel clocking scheme. The presently disclosed ML accelerator results in significant reduction of power consumption while increasing processing speed by reducing power consumed for data movement and reducing energy consumption in MAC operations. Reducing power consumed for data movement is accomplished by maximizing data locality (e.g., by reducing data movement) in each ML processor and further by reducing energy losses when data movement is needed. Moreover, the novel clocking scheme in the present ML accelerator results in additional power savings.

[0103] For some embodiments, the clock signal distribution described herein is implemented with respect to a circuit package, such as an SIP. For instance, the circuit package can comprise an ASIC (e.g., **101**), which comprises a plurality of processing elements (e.g., plurality of tiles) that include photonic-channel interfaces. Additionally, the circuit package can comprise a plurality of photonic channels connecting the plurality of processing elements to form at least part of an electro-photonic network (e.g., the network **130**). According to various embodiments, of the plurality of photonic channels, a sub-plurality of photonic channels (e.g., channels **1112**, **1114**, **1116**, **1118**, **1132**, **1134**, **1136**, **1138**) is connected to an individual processing element (e.g., tile **104**) of the plurality of processing elements.

[0104] To facilitate clock signal distribution of an embodiment, an individual processing element can select (e.g., via first master link **1130**), for the individual processing element, a master photonic channel (e.g., one of channels **1112**, **1114**, **1116**, **1118**) from the sub-plurality of photonic channels. For some embodiments, the individual processing element selects the master photonic channel during boot time of the individual processing element (e.g., using a negotiation protocol).

[0105] The individual processing element can select, for the individual processing element, a set of slave photonic

channels (e.g., channels **1132**, **1134**, **1136**, **1138**) from the sub-plurality of photonic channels. For some embodiments, the individual processing element selects the set of slave photonic channels during boot time of the individual processing element (e.g., using a negotiation protocol). Additionally, for some embodiments, the individual processing element performs a channel alignment operation on the master photonic channel, the channel alignment operation being configured to adjust one or more settings of the individual processing element to compensate for clock skew.

[0106] The individual processing element can extract a received clock signal from the selected master photonic channel. For some embodiments, the individual processing element extracts the received clock signal from the master photonic channel by performing clock data recovery (e.g., by CDR circuit **1120**) on an incoming bit stream received over the master photonic channel.

[0107] The individual processing element can generate, based on the received clock signal, a local clock signal (e.g., digital clock signal **1140**) used by the individual processing element (e.g., tile **104**) to perform one or more local operations on the individual processing element. A local operation on the individual processing element can be performed by at least one of a tensor processor (e.g., **108**), a DNN (e.g., **106**), or a message router (e.g., **110**) of the individual processing element (e.g., tile **104**). Accordingly, the individual processing element can comprise a tensor processor (e.g., **108**), and the tensor processor can operate based on the local clock signal. The individual processing element can comprise a message router that includes photonic-channel interfaces, and the message router can operate based on the local clock signal. The individual processing element can comprise a hardware circuit for computing a dot product (e.g., DNN **106**) between at least two vectors, and the hardware circuit can operate based on the local clock signal.

[0108] For some embodiments, the individual processing element (e.g., tile **104**) comprises a jitter-attenuating phase-lock loop (PLL) (e.g., **1124**), where the individual processing element uses the jitter-attenuating PLL to generate a low jitter clock signal based on the received clock signal. The individual processing element can generate the local clock signal based on the received clock signal by generating the local clock signal based on the low jitter clock signal.

[0109] Eventually, the individual processing element can transmit, over the set of slave photonic channels (e.g., channels **1132**, **1134**, **1136**, **1138**), a distributed clock signal to a set of the plurality of processing elements connected to the individual processing element, where the distributed clock signal is generated based on the received clock signal (e.g., output of CDR circuit **20**). For instance, the individual processing element can transmit the distributed clock signal by transmitting one or more outgoing bit streams to the set of processing elements, where the one or more outgoing bit streams are generated based on the distributed clock signal. In this way, one or more processing elements receiving the outgoing bit stream (over the set of slave channels) can then independently extract the distributed clock signal from the outgoing bit stream.

[0110] For some embodiments, the individual processing element is connected to a second processing element (of the plurality of processing elements) configured to operate similarly to the individual processing element. For example, the second processing element can be connected to the individual processing element via an individual photonic channel of the set of slave photonic channels (of the individual processing element). The second processing element can select the individual photonic channel as a second master photonic channel for the second processing element. The second processing element can select, for the second processing element, a second set of slave photonic channels from a second sub-plurality of photonic channels that are connected to the second processing element. The second processing element can extract a second received clock signal from the second master photonic channel (e.g., from the outgoing bit stream received by the second processing element received via the second master photonic channel). The second processing element can generate, based on the second received clock signal, a second local clock signal used by the second processing element to perform one or more local operations on the second processing element. Thereafter, the second processing element can transmit, over the second set of slave photonic channels, a second distributed clock signal to a second set of the plurality of processing elements connected to the second processing element, where the second distributed clock signal is generated based on the second received clock signal.

[0111] FIG. **12** is a diagram illustrating an example architecture **1200** of a DNN, according to some embodiments. As shown, the architecture **1200** comprises a plurality of memory devices that includes sixty-four SRAM memory banks **1210-1** through **1210-64** (hereafter, collectively referred to as SRAM memory banks **1210**), a switch fabric **1220** (e.g., SRAM fabric), a controller **1230**, and an array of dot product units **1240**, where each dot product unit comprises a plurality of fused multiple-accumulate (FMA) units that includes FMA unit **1250**.

[0112] The architecture **1200** can perform compute intensive functions, such as convolutions and matrix multiplies (which are typically used in inner loops of a ML model), with minimum overhead per operation. In contrast to traditional technologies, such as register transfer machines for executing ML graphs, the architecture **1200** can optimally perform specific compute intensive functions with little overhead by removing overhead associated with general programmability. The architecture **1200** can provide close association to the SRAM memory banks **1210** that feed the switch fabric **1220**, which can minimize movement of data to the math units (e.g., the array of dot product units **1240**) while exchanging values between the math units. In this way, the architecture **1200** can provide near-memory compute architecture that also saves power consumption in comparison to conventional technologies.

[0113] According to some embodiments, the architecture **1200** represents a hardware circuit of DNN, where the hardware circuit comprises a combinatorial tree (e.g., as illustrated in FIG. **4**), and a sequencer (e.g., **400**). The combinatorial tree can use multiple-accumulate (MAC) units to generate one or more dot product values based on input values received at a top level of the combinatorial tree, and a sequencer **1211** can be configured to re-arrange the locations in the switch fabric **1220** of the input vectors received from a set of memory devices **1210**. In this way, some embodiments can control the order of the weight values and operand values that are provided as input vectors to the top level (e.g., the left-most column in the 2-dimensional dot product array **1240**). The combinatorial tree can comprise registers configured to maintain clock alignment of values flowing through the combinatorial tree. In FIG. **12**,

clock alignment of values is maintained with respect to clock **1280** connected to the array of dot product units **1240**. As shown, each FMA of the array of dot product units **1240** is connected to the clock **1280**.

[0114] The sequencer **1211** is operatively coupled to the switch fabric **1220** or memory devices that operatively couples the combinatorial tree to the set of memory devices **1210**, such as local SRAM memory devices, which in this example are shown as 64 memory banks that each provide a 32-bit vector. The set of memory devices can comprise the SRAM memory banks **1210** or any other suitable local memory. The combinatorial tree can comprise an array of dot product units, such the array of dot product units **1240**. Inputs of each dot product unit of the array form the top level of the combinatorial tree that receives the input values (e.g., 32-bit vectors).

[0115] The array of dot product units **1240**, which can be configured to receive the input values (e.g., input vectors **1260**), and to generate the one or more dot product values based on the input values as received by the top level of the combinatorial tree, where a single dot product unit can comprise two or more of the MAC units. A single MAC unit of the dot product unit has at least one accumulator. In some embodiments, a plurality of accumulators are configured to accumulate partial dot product values generated by the single MAC unit as values flow through the single MAC unit. The MAC units can comprise at least one FMA unit, such as FMA **1250**.

[0116] For some embodiments, the sequencer **1211** is configured to provide vectors to the switch fabric **1220**, from the set of memory devices **1210**. In some embodiments, weight values and operand values (e.g., activation values) are provided by the switch fabric **1220** as a sequence of input vectors to the top level according to a controller (e.g., controller logic), which control an operation or configuration of the sequencer **1211**, the clock, a tensor engine, or another component associated with the ASIC. For instance, the controller **1230** can implement the sequencer **1211** in hardware, firmware, software, or a combination of all of these, where the sequence of input vectors (e.g., **1260**) provided to the array of dot product units **1240** is determined by the controller **1230**. Depending on the embodiment, the sequencer **1211** can determine the sequence of input vectors provided to the top level based on a set of parameters, where the set of parameters comprises at least one of a stride value, a dilation value, or a kernel size value (e.g., which can be received or processed by the controller **1230**).

[0117] The sequencer **1211** can be configured to generate an individual input vector (of the sequence of input vectors) by reading a plurality of weight values and a plurality of operand values read from the set of memory devices (e.g., the SRAM memory banks **1210**) during a single or multiple clock cycles, where the individual input vector comprises the plurality of the weight values and the plurality of the operand values. According to various embodiments, the plurality of weight values and the plurality of operand values are read by the sequencer for a first time, and no memory bank collisions occur during the read by the sequencer because it permutes the input vectors in the switch fabric **1220** that provide input to the dot product engine **1240**. Additionally, where the set of memory devices comprises memory banks, the sequencer can read from each of the memory banks during the single clock cycle, although other clock-based schemes are also possible. For some embodiments, each successive read of the set of memory devices, by the sequencer, results in reading of new weight values and new operand values from the set of memory devices not read by the sequencer during a previous clock cycle. Specifically, the switch fabric **1220** can read weight values and operand values (e.g., activation values) exactly once with the input data permuted so there are no bank conflicts. By reading individual weight values and operand values only once, there is a reduction in the number of times the individual weight values and operand values is accessed from the set of memory devices.

[0118] The array of dot product units **1240** can comprise data paths that cause at least two weight values to swap between adjacent rows of the array and propagate weight values down columns of the array. Additionally, a single MAC unit of a dot product unit can be operatively coupled to at least two adjacent MAC units of the dot product unit such that an output value generated by the single MAC unit is shared as an input value to each of the at least two adjacent MAC units.

[0119] Eventually, a logic (e.g., controller **1230**) can cause a set of final dot product values to be generated for the weight values and the operand values after all of the sequence of input vectors have been inputted to the top level of the combinatorial tree. For instance, the set of final dot product values generated by the logic can be constructed from values stored in accumulators of the MAC units of the combinatorial tree. Additionally, the logic is configured to store the set of final dot product values to the set of memory devices **1210**. Alternatively, the system can be programmed to execute deterministically and to write the values of the accumulators back to memory automatically after a given number of compute cycles. In this way, the stored the set of final dot product values can be used to construct another input vector for the array of dot product units.

[0120] During operation, one or more weight values and one or more operand values (e.g., activation values) can be stored on the SRAM memory banks **1210**. For some embodiments, the SRAM memory banks **1210** comprises 64 banks of 32-byte wide SRAM memories. The SRAM memory banks **1210** can feed an input of the switch fabric **1220**. The switch fabric **1220** can reorganize data read (from the SRAM memory banks **1210**) using a sequencer **1211**, such that each successive memory read causes a new weight values or operand values to be delivered to the array of dot product units **1240** for performing a computation function (e.g., convolution or matrix multiplication). The switch fabric **1220** can have permuted the data read from the SRAM memory banks **1210** (for example using the controller, the sequencer or a combination of both) according to one or more parameters of an operation in progress (e.g., convolution or matrix multiply) and the step of the computation that is currently executing. Accordingly, a parameter can drive an order in which operand values (e.g., activation values) are applied to weight values. For instance, a parameter for a two-dimensional (2D) convolution operation can comprise a stride, a dilation, or a kernel size. An output of the switch fabric **1220** can drive an input of the array of dot product units **1240** with weight values and operand values as read from the switch fabric **1220**. As values are read from the SRAM memory banks **1210**, a pipeline of the switch fabric **1220** fills up with values and the values start to clock out of the switch fabric **1220** into the array of dot product units **1240**.

[0121] For some embodiments, during each clock cycle, weight values and operand values (e.g., activation values) are read by the switch fabric **1220** as a set of vectors, passes through the switch fabric **1220** to the array of dot product units **1240**, and permuted as the set of vectors pass through the switch fabric **1220**. For convolution operations, the set of vectors read from the SRAM memory banks **1210** can be organized as patches (e.g., 8×8 patches) of channel vectors. For some embodiments, the switch fabric **1220** avoids bank collisions while reading from the SRAM memory banks **1210** by permuting the patches in memory. In this way, the switch fabric **1220** is able to read from all the SRAM memory banks **1210** at every clock cycle.

[0122] For some embodiments, each dot product unit of the array of dot product units **1240** is thirty-two FMA units deep. Additionally, for some embodiments, the array of dot product units **1240** comprises 64 rows by 32 columns of dot product units. During operation, the array of dot product units **1240** can perform 65536 FMA operations in each clock cycle. As shown, for some embodiments, each FMA unit (e.g., FMA unit **1250**) in the array of dot product units **1240** comprises an accumulator **1252**. In this example it is shown as a pair of accumulators (ACC0 and ACC1) configured to accumulate partial product values as weight values and operand values (e.g., activation values) flow through the FMA unit. In other implementations, other accumulator schemes can be used. For example, a FMA unit can receive as input two 8-bit values and generate 32-bit dot product value (stored in the accumulator **1252** of the FMA unit). In various embodiments, output accumulators of an FMA are kept stationary while values are streamed through the FMA unit. By keeping the output accumulators stationary, various embodiments avoid a significant amount of energy consumption because there is no need for arithmetic logic units and memory read and write operations associated with each FMA cycle and each calculation made by an FMA unit. For instance, the energy consumption of the FMA can be 130 femto-Joules (fJ).

[0123] For some embodiments, each level of the array of dot product units **1240** includes a set of connections between adjacent FMA units, and a set of connections between adjacent FMA units between dot product values, which can permit weight values to be shuffled between FMAs. The shuffling of weight values can be controlled (e.g., via the controller **1230**) by either one or more parameters, such as convolution parameters or matrix multiply dimensions. In various embodiments, the array of dot product units **1240** is combinatorial, which enables the array of dot product units **1240** to reduce or avoid energy costs of latching the data in registers at each stage of the compute within the array of dot product units **1240**. For some embodiments, the array of dot product units **1240** comprises a set of pipeline registers (e.g., a small number of pipeline registers) used to keep data flow in the array of dot product units **1240** aligned with a clock signal driving the array of dot product units **1240**. Additionally, for some embodiments, the array of dot product units **1240** comprises a set of data paths that permit swapping of weight values between rows of the array of dot product units **1240**, and that permit propagation of weight values down through columns of the array of dot product units **1240**, which facilitates supply of correct weight values to each operand value (e.g., activation value) as the operand values stream through the array of dot product units **1240**. After all the weight values and operand values have passed through the array of dot product units **1240**, computation of weight values and operand values by the array of dot product units **1240** can be considered complete, and resulting values in the accumulators of each FMA unit in the array of dot product units **1240** make up a set of final dot product values. These final dot product values can be written back to (e.g., stored) the SRAM memory banks **1210** and, subsequently, one or more of those stored values can be used as input to the array of dot product units **1240** during a future subsequent computation by the array of dot product units **1240**.

[0124] FIG. **13** is a flowchart illustrating an example method **1300** for operating a DNN, according to some embodiments. It will be understood that example methods described herein may be performed by a standalone DNN or by a device that includes a DNN (e.g., the DNN **106**), such as the ML processor **100**. Additionally, example methods described herein may be implemented in the form of executable instructions stored on a machine-readable medium or in the form of electronic circuitry (e.g., logic), which can cause a DNN to operate in accordance with the method **1300**. For instance, the operations of the method **1300** of FIG. **13** may be represented by executable instructions that, when executed by a controller of a DNN, cause the DNN to perform in accordance with the method **1300**. Depending on the embodiment, an operation of an example method described herein may be repeated in different ways or involve intervening operations not shown. Though the operations of example methods may be depicted and described in a certain order, the order in which the operations are performed may vary among embodiments, including performing certain operations in parallel.

[0125] Referring now to FIG. **13**, at operation **1302** a sequencer of a DNN reads a first plurality of weight values and a first plurality of operand values from a set of memory devices operatively coupled to the sequencer. At operation **1304**, a first input vector from the sequencer is received at a top level of a combinatorial tree of the DNN, where the first input vector comprises the first plurality of weight values and the first plurality of operand values read at operation **1302**. During operation **1306**, the combinatorial tree processes the first input vector, where the combinatorial tree is configured to use MAC units to generate one or more dot product values based on values received through the top level. The sequencer, at operation **1308**, reads a second plurality of weight values and a second plurality of operand values from the set of memory devices. At operation **1310**, a second input vector from the sequencer is received at the top level of a combinatorial tree, where the second input vector comprises the second plurality of weight values and the second plurality of operand values. During operation **1312**, the combinatorial tree processes the second input vector, where the first input vector and the second input vector are part of a sequence of input vectors to be received by the top level of the combinatorial tree. After a sequence of input vectors has been received by the top level of the combinatorial tree, at operation **1314**, the DNN constructs a set of final dot product values from values stored in accumulators of the MAC units of the combinatorial tree.

[0126] This could comprise multiple steps depending on the size of the accumulator. In some embodiments, the accumulator holds 32 bits. Once sufficient input vectors flow through the dot product array to fill the accumulators, for example at the top level of the combinatorial tree (or elsewhere in the dot product array), then at operation **1316**

the values in the accumulators of MAC units of the combinatorial tree (e.g., accumulators of a column of the array of dot product units that is full) can be written back to the set of memory devices used in operation **1302**. Thereafter, the process can optionally repeat. Thus, the accumulator output can be used by one embodiment as the input to another processing cycle, thereby avoiding the use of an arithmetic logic unit or any memory accesses needed to process or store the intermediate or final results of any calculations made by a row or column of the combinatorial tree.

[0127] FIG. **14** is a flowchart illustrating an example method **1400** for clock signal distribution using an electro-photonic network, according to some embodiments. It will be understood that example methods described herein may be performed by an individual processing element (e.g., tile **104**) of a ML processor (e.g., **100**). Additionally, example methods described herein may be implemented in the form of executable instructions stored on a machine-readable medium or in the form of electronic circuitry (e.g., logic), which can cause individual processing element to operate in accordance with the method **1400**. Depending on the embodiment, an operation of an example method described herein may be repeated in different ways or involve intervening operations not shown. Though the operations of example methods may be depicted and described in a certain order, the order in which the operations are performed may vary among embodiments, including performing certain operations in parallel.

[0128] Referring now to FIG. **14**, an individual processing element of a ML processor, at operation **1402**, performs a channel alignment operation on the master photonic channel, where the channel alignment operation is configured to adjust one or more settings of the individual processing element to compensate for clock skew. At operation **1404**, the individual processing element selects a master photonic channel from a plurality of photonic channels, where the master photonic channel is selected for the individual processing element. For some embodiments, the plurality of processing elements is part of an ASIC of a circuit package, and the plurality of processing elements is connected together by a plurality of photonic channels to form at least part of an electro-photonic network within the circuit package. During operation **1406**, the individual processing element selects a set of slave photonic channels from the plurality of photonic channels, where the set of slave photonic channels is selected for the individual processing element. At operation **1408**, the individual processing element extracts a received clock signal from the master photonic channel. Based on the received clock signal (extracted at operation **1408**), the individual processing element generates a local clock signal used by the individual processing element to perform one or more local operations on the individual processing element. Based on the received clock signal (generated at operation **1410**), at operation **1412**, the individual processing element generates a distributed clock signal. At operation **1414**, the individual processing element transmits, over the set of slave photonic channels, a distributed clock signal to a set of the plurality of processing elements connected to the individual processing element. For various embodiments, operation **1414** comprises transforming the distributed clock signal from an electrical form to an optical form using the photonic-channel interface of the individual processing element. The distributed clock signal is suitable for transmission across the set of slave photonic channels. Additionally, for some embodiments, operation **1414** comprises transforming the distributed clock signal from the optical form to the electrical form at the set of the plurality of processing elements, where the distributed clock signal is suitable for use as associated local clock signals by the set of the plurality of processing elements.

[0129] FIG. **15** is a flowchart illustrating an example method **1500** for transferring a message within an electro-photonic network (e.g., network **130** of SIP **100**), according to some embodiments. At operation **1502**, a message is generated at one of the processing elements **104** of the network (herein also the "first processing element" or "source tile"). The message is a packet of binary information comprising a series of ones and zeros. A portion of the data comprised in the packet can include optionally data from the local memory of a tile, such as a weight or activation. This is typically called the payload of the packet. Another portion of the data comprised in the packet is a header, which can include routing information, such as an address, associated with a destination tile. It is also possible, alternatively, to provide the routing information as part of the payload, e.g., in a first portion separate from a second portion of the payload that carries the data (e.g., weights or activations). Therefore, the routing information in the packet can specify another processing element of the network (herein also the "second processing element" or "destination tile") as the destination of the message. Based on the routing information, a path through the network from the source tile to the destination tile can be determined. Unless the source and destination tiles are directly connected via a bidirectional photonic channel of the network, the path includes one or more intervening processing elements (herein also "third processing elements" or "intervening tiles") on route from the source tile to the destination tile. In some embodiments, the path is determined collectively by routers of the source and intervening tiles (by modifying at least one value in the routing information (e.g., in the header) of the packet at each hop along the route from the source to the destination). For example, in embodiments that specify the address of the destination tile in terms of a relative location, or distance, from the current tile, each message router may route the message to neighboring tile within the network that reduces that distance, e.g., in one of two dimensions, and update the packet data accordingly.

[0130] Accordingly, at operation **1504** (during its first execution), a router of the source tile (in a first iteration) determines the next tile along the path to the destination tile and routes the message within the source tile to a bidirectional photonic channel that connects the source tile to that next tile. At the interface between the source tile and that bidirectional photonic channel, the message is, at operation **1506**, imparted onto an optical signal, e.g., by operating a modulator driver of the source tile to cause an associated modulator of the photonic channel to modulate the optical signal in accordance with the message. At operation **1508**, the modulated optical signal carrying the message is transmitted to the next tile. At operation **1510**, the optical signal is converted back into an electronic signal at an interface between the photonic channel and the next tile, e.g., by measuring the optical signal with a photodetector at the end of the photonic channel. In some embodiments, upon arrival at the EIC of the next tile, the routing information of the packet is modified at operation **1511** to reflect that the packet

has moved one step toward the destination in one of a plurality of dimensions. Thereafter, the message router of the next tile has a packet with routing information whose fields have been modified to indicate the current number of steps remaining in a plurality of different dimensions toward a destination tile.

[0131] At operation **1512**, it is determined whether the tile that received the message at operation **1510** is the destination or an intermediate tile. If the tile is an intermediate tile (e.g., the routing information fields in the header of the packet are non-zero, in one embodiment), the method **1500** loops back to operation **1504**, where the intermediate tile (during the second and any subsequent execution), determines the next tile along the path to the destination. The message is then imparted onto an optical signal (at operation **1506**) for transmission to that next tile (at operation **1508**), and is, after conversion of the optical signal, extracted from the resulting electronic signal (at operation **1510**). The method **1500** iterates through operations **1504-1512** until it arrives at the destination tile. Once the router of the destination tile determines that the message is at its destination, at operation **1514** (for example, if both fields in the packet having routing information are zero), the message (or its payload, such as, e.g., an activation streamed from the source tile) is routed to a local port within the destination tile, e.g., for transmission to a processing engine or memory of the destination tile.

[0132] FIG. **16** is a flowchart illustrating an example method **1600** of implementing an ANN on an ML processor, according to some embodiments. The ANN includes a plurality of neural nodes with associated predetermined weights and a predetermined flow of activations between the nodes. The ML processor (e.g., implemented by SIP **100** of FIGS. **1**A and **1**B) includes an electro-photonic network comprising a plurality of processing elements (e.g., **104**) connected by bidirectional photonic channels, each processing element comprising one or more processing blocks, memory communicatively coupled to the one or more processing blocks, and a message router including two or more photonic-channel interfaces. The method involves, at operation **1602**, receiving input data that includes a representation of the ANN including the weights, to the electro-photonic network of the ML processor in machine readable form. A connection to the ML processor may be established, e.g., via a PCIE, ARM core, general-purpose processor, or other system of the ML processor that is electronically or optically coupled to the electro-photonic network. Operation **1602** may include, for example, providing data via tensor flow to a compiler which transforms it from human-readable form to machine-readable form.

[0133] At operation **1604**, the weights of the ANN are loaded into the processing elements of the electro-photonic network based on an assignment between the neural nodes and the processing elements. The assignment may be determined at compile time (e.g., prior to connecting to the electro-photonic network at operation **1602**). In another embodiment, the weights of the ANN are loaded into the local memories of the processing elements of the electro-photonic network by a scheduler that operates after compilation but before execution of the inference or model. In some embodiments, each neural node is assigned to one of the processing elements, where each processing element may implement one or more neural nodes. In other embodiments, one or more neural nodes are each assigned to multiple processing elements that collectively implement the node. The weights associated with each neural node are loaded into the memory of the one more processing elements assigned to implement that neural node, for example after the code is compiled but before the hardware executes.

[0134] At operation **1606**, the processing elements, and more particularly, e.g., their message routers, are configured based on the assignment of nodes to processing elements in conjunction with the predetermined flow of activations between nodes within the ANN. The configuration may involve, for example, providing path-setup packet data to the routers in electronic form or via photonically transmitted messages. As a result of the configuration, output activations computed at each processing element will be routed to the respective processing element(s) that implement the neural node(s) in the ANN that receive these activations as inputs. The configuration is such that activations between neural nodes implemented by different ones of the processing elements are transferred optically between the processing elements via the bidirectional photonic channel, whereas activations between neural nodes implemented by a shared processing element are transferred electronically within the processing element. At operation **1608**, the ML processor is operated to implement the nodes of the ANN, for example by executing the code and performing the computations on the associated weights and input activations in the processing engines, and streaming activations between the processing elements in accordance with routing decisions made by the configured routers.

[0135] The present application discloses an innovative memory fabric that addresses the location, signal integrity, and bandwidth constraints of current memory system architectures.

[0136] As shown in FIG. **17**, a memory fabric **1700** in accordance with some embodiments includes four main components: a set of one or more photonic channels **1701**, optionally one or more message routers **1702** that enable composition of links into a fabric, one or more memory controllers **1703** to connect standard memory devices **1704**, and one or more interface controllers **1705** to connect to processing elements **1706**. Connections between the routers **1702** are made using photonic links (e.g., optical links), whereas the other connections in FIG. **17** may use alternatively electrical buses **1707** or photonic links. In certain embodiments, e.g., as described below with reference to FIG. **25**, the interface controllers **1705** of the processing elements **1706** connect electrically to the routers **1702**, whereas one or more memory controllers **1703** are augmented by photonic interface controllers that connect optically to the routers **1702** and/or directly to processing elements **1706**. Many topologies are possible that use one or more photonic links and zero or more routers; examples are described further below.

[0137] A photonic channel contains two unidirectional sets of (one or more) links capable of making a bidirectional channel for transferring a message in the form of a variably sized packet.

[0138] As shown in FIGS. **18** and **19**, multiple unidirectional links in one direction may be bonded together to form a single logical channel that can transfer messages. In this embodiment, a message **1802** consisting of a sequence of, e.g., 256-bit words **1901** is presented to the transmit bonding engine **1801**. The transmit bonding engine **1801** may split the words **1901** evenly across the active photonic links **1803**.

In the depicted example, data (e.g., a data item) arrives at the receive bonding engine **1804** on three links. Sequence information added to the words **1901** by the transmit bonding engine **1801** permits the original message **1802** to be assembled in order and sent on the output interface **1805** of the receive bonding engine **1804**. Bonding allows high bandwidth, low latency channels to be constructed from several lower bandwidth links and provides the ability to configure out non-working links.

[0139] As shown in FIG. **20**, each link (e.g., **1803**) in a photonic channel includes an optical transmit unit **2001**, an optical receive unit **2012**, and an optical transmission medium **2007** (e.g., an optical waveguide or fiber) connecting the transmit unit **2001** to the receive unit **2012**. The transmit unit **2001** includes an optical modulator **2006** that imparts a message onto an optical signal by modulating carrier light output by a light source **2005**, and an electrical serializer **2003** that converts an electronic message received in the form of parallel data words **2004** into a signal suitable for driving the optical modulator **2006**. The receive unit **2012** includes a photodiode **2008** to convert the optical signal received via the transmission medium **2007** back to an electrical signal, and associated electronics including a transimpedance amplifier **2009** and gain control to normalize the signal level **2013**, a slicer **2011** to extract the bit-stream, and a deserializer **2010** to convert the received message back into parallel data.

[0140] The optical transmission medium **2007** may include a waveguide on a photonic integrated circuit (PIC), an optical fiber or other optical transmission medium (such as free space optics or glass-etched waveguide), or some combination of the foregoing. Examples of optical modulators **2006** include, but are not limited to, electro-absorption modulators (EAMs) and micro-ring resonators. The light source **2005**, which is conceptually part of the transmit unit **2001**, may be shared between transmit units of multiple photonic links. The light source(s) **2005** feeding the modulators **2006** may be located locally on the PIC or connect to the PIC via optical fiber. When integrated onto the PIC, distributed fiber Bragg (DFB) lasers or quantum dot lasers can be attached during processing or integrated in the native technology where possible. When remote, any packaged continuous wave (CW) laser suitable in power and spectrum for the modulation technology may be used. In one embodiment, the light source is a set of DFB lasers attached to a silicon interposer and connected to the PIC via optical fibers. In one embodiment, the link is modulated at 56 Gb/s in a non-return-to-zero (NRZ) code, but more spectrally efficient modulation schemes, such as PAM-4 or PAM-8 or higher order pulse amplitude modulation, may be used to allow higher bandwidth and lower latency links.

[0141] A photonic channel can be used to directly connect a memory subsystem in a point-to-point fashion, providing dedicated bandwidth between the memory subsystem and a processing element. However, in some embodiments, more complex topologies are created by introducing a routing element that dynamically routes messages between the photonic channels. When a router is used, a portion of the message contains the address of the destination photonic fabric channel.

[0142] As shown in FIG. **21**, a message arriving at the router is processed by an address router **2105** unit that extracts the destination address while the arriving message is stored in a FIFO (first in first out) buffer **2109**. A routing algorithm uses the address bits to select an egress port selected by an output multiplexor **2108** based on the fabric topology and routing policy. Coordination of the port units depicted in FIG. **21** are controlled by a router control unit **2106** that connects to the data input/output multiplexors **2108** and the address router **2105** in each port. The router control unit **2106** resolves port contention when traffic arrives for the same egress port.

[0143] Many topologies and routing algorithms are possible such as hyper-cube or mesh. In various embodiments, the topology is a mesh or wrapped mesh. In such a system, each router has four optical ports and one electronic port. As shown in FIG. **22**, the four optical ports **2201** are connected to the north, south, east, or west routers in the fabric. The port unit multiplexors **2108** are connected electrically within the router to provide full connectivity between the port units. The router control unit **2106** takes request from the various port units and grants access to an egress port in such a fashion that contentions are resolved. Port units may have optical interfaces **2202** or electronic interfaces **2206** based on their destination. The local port **2205** to resources connected to the router will typically be electrical while the connections between routers are usually photonic. In such a system, a convenient addressing scheme encodes the number of steps left in the north/south or east/west direction. A positive number encodes a move north or east, a negative number south or west. As a message traverses a set of routers, if the message moves north, the north/south portion of the address is decremented; likewise, if the message moves south, the north/south portion of the address is incremented. Equivalently, if the message moves east, the east/west portion of the address is decremented, and if the message moves west, it is incremented. The message address is initialized with the number of steps in each direction required to reach the destination. When both the north/south and east/west fields are zero, the message has arrived at the destination and is delivered to the electrical port.

[0144] At the electronic port of each router or at the end of a photonic link in point-to-point architectures, a controller converts messages into a bus protocol that can ultimately be used to access the connected memory. Two examples of such protocols are Peripheral Component Interconnect Express (PCIe) and Advanced Extensible Interface (AXI). In one embodiment, AXI transactions are forwarded over the memory fabric. The messages router uses the top 10 bits of the AXI address to specify the fabric destination and a further 32 bits to specify an offset in the target memory controller. To prevent the ingress FIFOs of the router from overflowing, a flow control scheme should be implemented to control the number of messages in flight in the fabric. This is accomplished by a credit flow control mechanism. A port is initialized with a number of tokens representing memory transactions that are smaller in number than the FIFO at the other end of the link. Every time a new transaction is sent on a link, a credit register **2104** on the egress port is examined. Each memory transaction is a certain number of credits in size. If there are more than memory transaction size credits in the egress port credit register, then transmission can proceed, and the number of tokens is reduced by memory transaction size credits. If there are insufficient credits, the transmission is stalled. When a receiver process removes a message from the ingress FIFO, a credit message with memory transaction size credits is sent back on the link.

Upon receiving the credit, the egress credit register is incremented, and if sufficient credits are now available to transmit any stalled messages, the transmission process can be restarted. Dynamic routing decisions are made when alternate valid routes are available. In such a case, the path with most credits is selected, which provides load balancing within the fabric.

[0145] The photonic links and photonic fabric described above can be employed to provide photonic connection to generally any memory subsystem augmented with a suitable photonic interface controller. As herein understood, a memory subsystem includes a set of one or more memory devices and a memory controller coupled to the set of memory devices to provide access to data stored thereon. The photonic interface controller connects the memory controller to the photonic interface associated with a photonic channel, such as with the optical modulator and photodetector of a bidirectional channel. The memory controller and photonic interface controller may be implemented in separated die that interface with each other, or alternatively in a single die. In some embodiments, the memory subsystem is a memory stack device that includes a stack of DRAM die. Photonic memory connections as described are especially useful to implement complex, scalable HBM **2301** systems. In a conventional HBM subsystem, as shown in FIG. **23**, a stack of DRAM **2303** die is connected using through silicon via (TSV) technology **2302**. At the base of the stack, a DRAM controller presents a JEDEC **2304** interface out of the bottom the stack that connects to the system via a silicon interposer **2305** using bump attach **2306** and a DRAM control interface up into the DRAM stack above to access the memory itself and perform book-keeping tasks such as memory refresh.

[0146] In an example implementation of photonically connected memory in accordance with an embodiment, illustrated in FIG. **24**, an additional controller layer **2402** is added to the base of the HBM stack **2401**. This additional controller layer **2402** serves as a photonic interface controller that connects the (standard) DRAM controller to the optical modulator and photodetector of a bidirectional channel. Thus, addition of this controller layer **2402** converts the standard HBM JEDEC interface into a photonic fabric interface that in turn connects to the modulators and photodiodes **2405** in the photonic integrated circuit **2406**. This arrangement enables the use of standard HBM modules connected over long distances, using waveguides **2403**, optical fibers, or some other optical transmission media that finally terminate in another fabric interface elsewhere in the system **2404**. In an alternative embodiment, the DRAM controller and the photonic interface controller are integrated into a single layer at the base of the HBM stack for further optimization.

[0147] The memory fabric architecture is agnostic to the type of connected memory. As shown in FIG. **25**, different memory controllers allow connecting different types of memory to the photonic memory fabric. In the depicted embodiment, the core of the system is an arrangement of processing elements **2507** that are electrically connected to photonic routers **2502**, which are in turn connected in a mesh. Memory controllers can then be connected to either the electrical ports of the routers (as shown for memory controller **2503**) or, when augmented by or integrated with a photonic interface controller **2506**, via a photonic channel to a photonic port of the router. Non-limiting examples of memory types for which it is desirable to provide connectivity are NAND Flash memory **2505** (including but not limited to solid-state drive (SSD) memory), NOR Flash memory (including conventional CMOS and thin film transistor-based), phase change memory (PCM), storage class memory (SCM) such as Optane, magneto-resistive memory (MRAM), resistive RAM (ReRAM or RRAM), and traditional DRAM (including HBM **2508** and DDR-based DRAM **2504**). An HBM equipped with a photonic interface controller **2506** layer that includes a routing element provides a scalable photonically connected memory that can be stacked like DIMM memories. A selection of memory controllers with different interfaces permits the construction of both heterogenous and homogenous memory systems (e.g., a combination of multiple types of the memories described above).

[0148] An important aspect of the memory fabric is to enable the construction of complex topologies of memories that best serve the application requirements. While this discussion of topologies focuses on HBM, it is equally applicable to other types of memory. In the simplest arrangement, a set of point-to-point channels connect an HBM stack to one or more fabric interfaces located in the same or several chips. The benefit of this arrangement is two-fold. First, the system designer is relieved of the distance constraints of the HBM JEDEC interface, and the HBM memory can be placed arbitrarily far from the client chip if it is within the optical budget of the photonic links (typically several meters). This permits higher density memory systems than can currently be constructed using electrical interfaces. Furthermore, there can be significant energy savings when the photonic fabric interface is located at the center of a large die, where photonic transport of the data is more efficient than an equivalent high bandwidth electrical interconnect in the client chip itself. The second benefit derives from being able to control the power density of the system by spacing the memory and client chips (e.g., implementing processing elements) to optimize cooling efficiency, as the distances are no longer dictated by the electrical interfaces. More complex topologies can be composed by integrating routers in both memory and client-chip components. The use of photonic memory fabrics permits arbitrary grouping of memory and client chips that best serve the bandwidth and connectivity needs of applications. Groups of memory can surround a client chip on a single interposer, and several chips and memory can be integrated onto a single interposer. Special purpose memory and compute subsystems on separate interposers can be networked together using any of the optical transport mediums outlined above, and using a mixture of fabric topologies that may vary from a single or set of point-to-point links aggregated on ribbon fibers to mesh and hyper-cube topologies providing significantly richer and higher bandwidth topologies that utilize various collections of waveguides and optical fibers to connect the components.

[0149] The disclosed memory fabric may be used to augment the processing system described above with reference to FIGS. **1-16**. Memory and compute traffic over a photonic fabric have different characteristics: compute traffic usually involves short hops between adject processing elements, while memory traffic often travels long distances from memory arrays located away from the processor but requires very high bandwidth to support HBM memory. As shown in FIG. **26**, in one beneficial implementation, a

balance can be achieved by overlaying two mesh networks—a memory mesh **2601** and a compute mesh **2602**. The compute mesh **2602** is a densely connected nearest-neighbor mesh connecting all of the processing elements **2605** in the system. The memory mesh **2601** is a lower density mesh with wider channels that feeds groups of compute elements from router nodes **2604** placed equidistant from a cluster of processing elements **2605** and connects **2606** directly to memory subsystems **2603**. The architectural split of memory and compute networks allows each to be optimized for the magnitude of data, traffic patterns, and bandwidth of each fabric application.

[0150] The following numbered examples are illustrative innovative embodiments, and not intended to be restrictive.

[0151] 1. A circuit package comprising: an electronic integrated circuit comprising a plurality of processing elements, each processing element comprising a message router including photonic-channel interfaces; and a plurality of bidirectional photonic channels connecting the processing elements into an electro-photonic network, each bidirectional photonic channel interfacing at a first end with a photonic-channel interface of the message router of a first one of the processing elements and at a second end with a photonic-channel interface of the message router of a second one of the processing elements and being configured to optically transfer a packet between the message routers of the first and second processing elements.

[0152] 2. The circuit package of example 1, wherein each bidirectional photonic channel comprises one or more unidirectional photonic links in both directions.

[0153] 3. The circuit package of example 2, wherein each bidirectional photonic channel comprises multiple unidirectional photonic links in both directions, and wherein the multiple unidirectional photonic links in each direction are bonded together.

[0154] 4. The circuit package of example 2 or example 3, wherein each unidirectional photonic link comprises an optical modulator at an input end, a photodetector at an output end, and an optical waveguide connecting the optical modulator to the photodetector, and wherein each photonic-channel interface comprises a modulator driver for each unidirectional photonic link with which it interfaces at the input end and a transimpedance amplifier for each unidirectional photonic link with which it interfaces at the output end.

[0155] 5. The circuit package of example 4, wherein the optical modulators are electro-absorption modulators (EAMs).

[0156] 6. The circuit package of example 4, wherein the optical modulators comprise at least one of a ring modulator, Mach-Zehnder modulator, quantum-confined Stark effect (QCSE) electro-absorption modulator.

[0157] 7. The circuit package of any of examples 4-6, wherein the electronic integrated circuit is implemented in an electronic circuit layer and the plurality of bidirectional photonic channels are implemented in a photonic circuit layer.

[0158] 8. The circuit package of example 7, wherein the electronic circuit layer is implemented in a first semiconductor chip and the photonic circuit layer is implemented in a second semiconductor chip.

[0159] 9. The circuit package of example 7 or example 8, wherein each modulator driver is placed directly above or below the optical modulator with which it is associated and each transimpedance amplifier is placed directly above or below the photodetector with which it is associated.

[0160] 10. The circuit package of example 8, wherein distances between the optical modulators and their associated modulator drivers and between the photodetectors and their associated transimpedance amplifiers are smaller than 200 μm.

[0161] 11. The circuit package of any of examples 8-10, further comprising, in the photonic circuit layer of the semiconductor chip, optical input waveguides supplying optical carrier signals provided by one or more laser light sources to the optical modulators of the photonic links, the optical carrier signals being modulated by the optical modulators in accordance with drive signals applied by the associated modulator drivers to generate modulated optical signals carrying the packet.

[0162] 12. The circuit package of example 11, further comprising the one or more laser light sources integrated into the circuit package.

[0163] 13. The circuit package of example 12, wherein the one or more laser light sources are integrated with the optical input waveguides in one or more photonic integrated circuits (PICs) in the photonic circuit layer.

[0164] 14. The circuit package of example 12, wherein the one or more laser light sources are implemented in an interposer co-packaged with the semiconductor chips and are edge-coupled with one or more PICs in the photonic circuit layer that include the optical input waveguides.

[0165] 15. The circuit package of example 11, wherein the one or more laser light sources are implemented externally to the circuit package and optically coupled via one or more optical fibers to one or more PICs in the circuit package.

[0166] 16. The circuit package of example 15, wherein the one or more optical fibers are coupled to the one or more PICs via one or more fiber attach units (FAUs) located over grating couplers implemented in the PICs.

[0167] 17. The circuit package of example 15, wherein the one or more optical fibers are edge-coupled to the one or more PICs.

[0168] 18. The circuit package of any of examples 15-17, further comprising, in the photonic circuit layer of the semiconductor chip, one or more optical splitters each splitting an input optical carrier signal received from an associated one of the one or more laser light sources between multiple of the input optical waveguides.

[0169] 19. The circuit package of any of examples 1-18, wherein the electronic integrated circuit is an application-specific integrated circuit (ASIC).

[0170] 20. The circuit package of example 19, wherein the ASIC comprises digital and mixed-signal electronic circuitry.

[0171] 21. The circuit package of example 19, wherein each processing element further comprises a dot product engine implementing a combinatorial tree of multipliers and adders for computing dot products between vectors.

[0172] 22. The circuit package of example 21, wherein each processing element further comprises a tensor engine for obtaining and processing vectors computed as output of the dot product engine.

[0173] 23. The circuit package of example 21 or example 22, wherein each processing element further comprises a memory system.

[0174] 24. The circuit package of any of examples 19-23, further comprising at least one of a peripheral component

interconnect express (PCIE) interface, an advanced RISC machine core, an image processor, or an external memory controller.

[0175] 25. The circuit package of any of examples 19-24, further comprising high bandwidth memory (HBM), the ASIC further comprising a RAM controller communicatively coupling the processing elements to the HBM.

[0176] 26. The circuit package of any of examples 1-25, wherein the message routers of the processing elements are configured to route a packet having routing information in a portion of the packet, wherein a path through the electro-photonic network is determined by using the routing information.

[0177] 27. The circuit package of example 26 wherein the message router of each processing element is configured to determine, based on the routing information in the packet received on one of its photonic-channel interfaces, a destination of the packet, and to route the packet either to a local port if the destination is the local memory or a processing engine within the processing element or to another one of the photonic-channel interfaces if the destination is not the local memory or processing engine within the processing element.

[0178] 28. The circuit package of example 26 or example 27, wherein the processing elements are arranged in a regular grid, and wherein the routing information in the packet specifies relative locations in first and second dimensions along the grid to a processing element that is the destination of the packet.

[0179] 29. The circuit package of example 28, wherein each bidirectional photonic channels connects a pair of immediately adjacent processing elements in the grid in one of the first dimension or the second dimension, and wherein the message router of each processing element is configured to decrement a value in the routing information associated with the relative location in the first dimension when routing the packet to an immediately adjacent processing element along the first dimension and to decrement a value in the routing information associated with the relative location in the second dimension when routing the packet to an immediately adjacent processing element along the second dimension.

[0180] 30. The circuit package of any of examples 26-29, wherein the plurality of bidirectional photonic channels are configured to connect the processing elements into an electro-photonic network having a grid topology defining at least two dimensions, wherein the routing information in the packet specifies coordinates in the at least two dimensions relative to a processing element that is the destination of the packet, and wherein the message router of each processing element, when routing the packet to a topologically immediately adjacent processing element along one of the at least two dimensions, modifies the routing information in the packet by decrementing a value associated with one of the at least two dimensions.

[0181] 31. The circuit package of any of examples 1-30, wherein the electronic integrated circuit is configured as an arrangement of tiles each corresponding to one of the processing elements.

[0182] 32. The circuit package of example 31, wherein the tiles are rectangular tiles arranged in a rectangular grid.

[0183] 33. The circuit package of example 32, wherein the plurality of bidirectional photonic channels is configured to directly connect each pair of immediately adjacent tiles in the rectangular grid to result in a quadrilateral mesh topology of the electro-photonic network.

[0184] 34. The circuit package of example 33, wherein the plurality of bidirectional photonic channels is configured to further directly connect one or more pairs of non-adjacent tiles in the rectangular grid.

[0185] 35. The circuit package of any of examples 33-35, further comprising bidirectional photonic channels configured to directly connect pairs of tiles on opposite edges of the rectangular grid to result in a wrapped toroidal mesh topology of the electro-photonic network.

[0186] 36. The circuit package of any of examples 1-35, wherein the bidirectional photonic channels are configured to connect the processing elements into an electro-photonic network having a cubic grid topology.

[0187] 37. A method comprising: at a first electronic processing element of an electro-photonic network, generating an electronic packet having a header and a payload, the header or a portion of the payload comprising routing information associated with a destination electronic processing element of the electro-photonic network; determining, based on the routing information, a path from the first electronic processing element to the destination electronic processing element via one or more intermediate electronic processing elements of the electro-photonic network, wherein the first, destination, and intermediate processing elements are connected by associated photonic channels; at the first processing element, routing the packet to a port connected via one of the photonic channels to a first intermediate processing element along the path, and transforming the packet from an electronic signal to an optical signal for transmission to the first intermediate processing element; at each of the one or more intermediate processing elements, transforming the optical signal back into an electronic signal, routing the electronic signal to a port connected via one of the photonic channels to a processing element, among the intermediate processing elements and the destination processing elements, that is next along the path, and transforming the electronic signal into an optical signal for transmission to the processing element that is next along the path; and at the destination processing element, transforming the optical signal back into an electronic signal.

[0188] 38. The method of example 37, wherein transforming each electronic signal into an optical signal comprises operating a modulator driver of the respective electronic processing element to cause an associated modulator of the photonic channel to modulate the optical signal in accordance with the packet, and wherein transforming the optical signal back into an electronic signal comprises measuring the optical signal by a photodetector of the photonic channel.

[0189] 39. The method of example 37 or example 38, wherein each of the first, intermediate, and destination electronic processing elements comprises a router, and wherein the path through the electro-photonic network is determined collectively by the routers of the first, intermediate, and destination electronic processing elements.

[0190] 40. The method of example 39, wherein the routing information specifies the destination in terms of relative locations in first and second dimensions to the destination electronic processing element, the method further comprising, responsive to transmission of the packet from any of the first or intermediate electronic processing elements to the next electronic processing element along the path, modifying the routing information in the packet.

[0191] 41. The method of example 39 or example 40, wherein the routers of the first, intermediate, and destination electronic processing elements each comprise a local port and ports associated with multiple photonic channels connecting the respective electronic processing element to multiple other electronic processing elements within the electro-photonic network, wherein the routers of the first and the intermediate electronic processing elements each direct the packet to the port associated with the photonic channel connected to the electronic processing element that is next along the path, and wherein the router of the destination electronic processing element directs the packet to its local port.

[0192] 42. A system comprising: a first circuit package and a second circuit package each comprising an electronic integrated circuit (EIC) comprising a plurality of processing elements and a plurality of message routers capable of transmitting and receiving a message, and a plurality of intra-chip bidirectional photonic channels connecting the message routers into an intra-chip electro-photonic network that can operate on the message; and a plurality of inter-chip bidirectional photonic channels connecting the message routers of the first and the second circuit packages into an inter-chip electro-photonic network that can transmit the message from the EIC in the first circuit package to the EIC in the second circuit package.

[0193] 43. The system of example 42, wherein each circuit package includes an electronic circuit layer in which the EIC is implemented and a photonic circuit layer in which the intra-chip bidirectional photonic channels are implemented.

[0194] 44. The system of example 43, wherein each circuit package includes a first semiconductor chip implementing the electronic circuit layer and a second semiconductor chip implementing the photonic circuit layer.

[0195] 45. The system of any of examples 42-44, wherein the plurality of intra-chip bidirectional photonic channels of each of the circuit packages are implemented using optical waveguides in a photonic integrated circuit (PIC) of the circuit package.

[0196] 46. The system of any of examples 42-45, wherein the intra-chip bidirectional photonic channels each comprise one or more photonic links in each direction, each photonic link comprising, in the PIC, an optical modulator at an input end of the photonic link, a photodetector at an output end of the photonic link, and an optical waveguide connecting the optical modulator to the photodetector.

[0197] 47. The system of example 46, wherein the message routers include photonic-channel interfaces each for interfacing with one of the bidirectional photonic channels, each photonic-channel interface comprising a modulator driver for each photonic link with which it interfaces at the input end of the photonic link and a transimpedance amplifier for each photonic link with which it interfaces at the output end of the photonic link.

[0198] 48. The system of example 46 or example 47, wherein the plurality of inter-chip bidirectional photonic channels are implemented with optical fiber.

[0199] 49. The system of example 48, wherein the first and second circuit packages each include one or more optical coupling structures for coupling the electro-photonic network of the first circuit package via the optical fiber to the electro-photonic network of the second circuit package.

[0200] 50. The system of example 49, wherein the optical couplers include edge couplers in the PICs.

[0201] 51. The system of example 49 or example 50, wherein the optical coupling structures include fiber attach units (FAUs) located over grating couplers in the PICs.

[0202] 52. The system of any of examples 48-51, wherein the inter-chip bidirectional photonic channels are configured to transmit multiplexed optical signals.

[0203] 53. The system of example 52, wherein the inter-chip bidirectional photonic channels each comprise directional photonic channels in each direction, each directional photonic channel between a first PIC of a first circuit package and a second PIC of a second circuit package comprising: in the first PIC, multiple optical modulators to create modulated optical signals at multiple respective wavelengths, a multiplexer to combine the modulated optical signals at the multiple wavelengths into a single multiplexed optical signal, and an optical coupling structure to couple the multiplexed optical signal into the optical fiber; and in the second PIC, an optical coupling structure to couple the multiplexed optical signal from the optical fiber into the second PIC, a demultiplexer to demultiplex the multiplexed optical signal into modulated optical signals at the multiple wavelengths, and multiple respective photodetectors to measure the modulated optical signals at the multiple wavelengths.

[0204] 54. The system of any of examples 42-53, further comprising at least one single-wavelength light source for supplying an optical carrier signal to modulators of the intra-chip bidirectional photonic channels, and at least one multiple-wavelength light source for supplying optical carrier signals at multiple wavelengths to groups of modulators of the inter-chip bidirectional photonic channels.

[0205] 55. The system of example 54, where the at least one single-wavelength light source and the at least one multiple-wavelength light sources comprise light sources integrated into the circuit packages.

[0206] 56. The system of example 54, where the at least one single-wavelength light source and the at least one multiple-wavelength light sources comprise light sources provided externally to the circuit packages and optically couple via one or more optical fibers to one or more PICs in the circuit packages.

[0207] 57. The system of any of examples 42-56, further comprising a plurality of additional circuit packages having an associated EIC with a plurality of associated processing elements, the first, second, and additional circuit packages arranged in a quadrilateral grid.

[0208] 58. The system of example 57, wherein each of the intra-chip and inter-chip bidirectional photonic channel connects a pair of immediately adjacent processing elements in the quadrilateral grid to result in a quadrilateral mesh topology of the inter-chip electro-photonic network.

[0209] 59. The system of example 58, wherein the plurality of inter-chip bidirectional photonic channels are further configured to directly connect pairs of processing elements on opposite edges of the quadrilateral grid to form an electro-photonic network having an extensible wrapped toroidal mesh topology.

[0210] 60. The system of any of examples 42-59, wherein the message routers are configured to route the messages through the inter-chip and the intra-chip electro-photonic network, wherein when the message is sent from a first processing element to a second processing element that is not directly connected with the first processing element via a bidirectional photonic channel, the electronic is routed to

the second processing element along a path through one or more third processing elements, wherein the message is at each of the third processing elements converted from the optical domain to the electronic domain and back into the optical domain at a message router associated with the respective third processing element.

[0211] 61. The system of example 60, wherein the message routers are configured to determine a path through the electro-photonic network for each message based in part on a portion of the message associated with routing information.

[0212] 62. A processing device implementing an artificial neural network (ANN) comprising a plurality of neural nodes having associated sets of weights, the processing device comprising: an electro-photonic network comprising a plurality of electronic processing elements connected by bidirectional photonic channels, each processing element comprising one or more processing engines, memory communicatively coupled to the one or more processing engines, and a message router interfacing with two or more of the bidirectional photonic channels and communicatively coupled to the memory, wherein: each neural node of the ANN is implemented by one or more of the processing elements; the set of weights associated with each neural node is stored in the memory of the one or more processing elements implementing that neural node; the message routers are configured, based on a predetermined flow of activations between the neural nodes, to stream a plurality of activations between the processing elements implementing the respective neural nodes during execution of the ANN; and the one or more processing engines within each processing element are configured to perform, for each neural node implemented by the processing element, computations on the associated set of weights stored in the memory of the processing element and input activations to that node streamed to the processing element to generate an output activation for the node during the execution of the ANN.

[0213] 63. The processing device of example 62, wherein each processing element implements one or more of the neural nodes.

[0214] 64. The processing device of example 62 or example 63, wherein at least one of the neural nodes is implemented by multiple of the processing elements jointly.

[0215] 65. The processing device of any of examples 62-64, wherein activations between neural nodes implemented by the same processing element are exchanged via the memory of the processing element, and wherein activations between neural nodes implemented by different processing elements are exchanged via associated ones of the bidirectional photonic channels.

[0216] 66. The processing device of any of examples 62-65, wherein the one or more processing engines comprise a dot product engine implementing a combinatorial tree of multipliers and adders configured to perform multiply-accumulate (MAC) operations.

[0217] 67. The processing device of example 66, wherein the one or more processing engines further comprise a tensor engine configured to compute non-linear activations.

[0218] 68. The processing device of any of examples 62-67, wherein the plurality of electronic processing elements is implemented on one or more electronic integrated circuits (EICs) each comprising multiple of the electronic processing elements, and wherein the bidirectional photonic channels connecting the electronic processing elements with each EIC are implemented as optical waveguides in an associated photonic integrated circuit (PIC) stacked with the EIC.

[0219] 69. The processing device of example 68, wherein each EIC and its associated PIC are packaged together as a system-in-package (SIP).

[0220] 70. The processing device of example 68 or example 69, wherein the plurality of electronic processing elements are implemented on multiple EICs, and wherein the bidirectional photonic channels connecting electronic processing elements on different ones of the multiple EICs are implemented with optical fiber.

[0221] 71. The processing device of any of examples 68-70, wherein the plurality of electronic processing elements are arranged in a quadrilateral grid, and wherein the bidirectional photonic channels are collectively configured to connect pairs of immediately adjacent processing elements in the grid to result in a quadrilateral mesh topology of the electro-photonic network.

[0222] 72. A method of implementing an artificial neural network (ANN) comprising a plurality of neural nodes with associated predetermined weights, the method comprising: connecting to an electro-photonic network comprising a plurality of processing elements connected by bidirectional photonic channels, each processing element comprising one or more processing engines, memory communicatively coupled to the one or more processing engines, and a message router including two or more photonic-channel interfaces and a communicative coupling to the memory; loading prior to runtime, based on an assignment between the neural nodes and the processing elements, the predetermined weights associated with each neural node into the memory of one or more processing elements assigned to implement the neural node; using the message routers at runtime, based on the assignments and on a predetermined flow of activations between the neural nodes within the ANN, to route the activations between the neural nodes implemented by the processing elements, wherein activations routed between nodes implemented by different source and destination elements among the processing elements are transformed, at the source element and at any intermediate processing element along a path from the source element to the destination element, from an electrical form to an optical form for transmission via the bidirectional photonic channels, and are transformed, at the destination element and any intermediate processing elements along the path, from an optical form to an electrical form.

[0223] 73. The method of example 72, wherein the weights are loaded from memory external to the electro-photonic network into the memory of the processing elements via a PCIE interface.

[0224] 74. The method of example 72 or 73, wherein activations between neural nodes implemented by a shared processing element are transferred electronically within the processing element.

[0225] 75. The method of any of examples 72-74, wherein the assignment between the neural nodes and the processing elements is determined at compile time.

[0226] 76. The method of any of examples 72-75, further comprising operating the electro-photonic network to: stream activations between the processing elements in accordance with routing decisions made by the configured routers; and, for each node, perform computations on the associated weights and input activations streamed to the

node using the one or more processing engines of the one or more processing elements assigned to implement the node.

[0227] 77. The method of any of examples 72-76, further comprising selectively activating photonic links within the bidirectional optical channels based on the flow of activations for reduced power consumption.

[0228] 78. The method of example 77, wherein each bidirectional photonic channel comprises multiple photonic links, and wherein one of the links in each channel is kept active to serve as a master link.

[0229] 79. The method of any of examples 72-78, wherein each bidirectional photonic channel comprises multiple photonic links in each direction, the method further comprising, during initialization of the electro-photonic network, establishing logical channels over at least some of the bidirectional photonic channels, wherein establishing a logical channel over a bidirectional photonic channel comprises bonding photonic links in each direction within that bidirectional photonic channel together to form a bonding group of links.

[0230] 80. The method of example 79, wherein photonic links that are nonfunctioning are omitted from the bonding groups.

[0231] 81. The method of example 79 or example 80, wherein a number of photonic links in the bonding group is determined based on bandwidth requirements associated with implementing the ANN.

[0232] 82. A hardware circuit comprising: a combinatorial tree having a plurality of rows and a plurality of columns, the combinatorial tree using a plurality of hardware units to generate one or more dot product values based on input values received at a first column the combinatorial tree; a first memory device for storing the input values; a sequencer configured to obtain the input values from the first memory device and reorganize the input values in a switch fabric; a clock configured to control a time for when a portion of the reorganized input values is provided to the first column of the combinatorial tree from the switch fabric; and a plurality of hardware units where each hardware unit comprises an accumulator configured to accumulate the one or more dot product values, wherein during one or more subsequent time periods defined by the clock, additional portions of the reorganized input values are provided to accumulators of hardware units associated with the first column, and wherein during one or more additional time periods controlled by the clock, a value associated with each of the accumulators of the hardware units in the first column is written to the first memory device.

[0233] 83. The hardware circuit of example 82, wherein the hardware units comprise at least one fused multiple-accumulate (FMA) unit.

[0234] 84. The hardware circuit of any of examples 82-84, wherein the combinatorial tree comprises an array of dot product units configured to receive the input values, and to generate the one or more dot product values based on the input values as received by the first column, a single dot product unit of the array comprising two or more of the hardware units.

[0235] 85. The hardware circuit of example 84, further comprising a control circuit, the array of dot product units comprising data paths, the control circuit being configured to use the data paths to cause at least two weight values to swap between two neighboring columns of the array or to propagate a weight value from a first row of the array to a second row of the array.

[0236] 86. The hardware circuit of any of examples 82-85, wherein the sequencer includes the switch fabric that operatively couples the combinatorial tree to the first memory device.

[0237] 87. The hardware circuit of any of examples 82-86, wherein the sequencer determines a sequence of input vectors provided to the first column based on a set of parameters, the set of parameters comprising at least one of a stride value, a dilation value, or a kernel size value.

[0238] 88. The hardware circuit of any of examples 82-87, wherein the sequencer is configured to generate an individual input vector of the sequence of input vectors by reading a plurality of weight values and a plurality of operand values read from the first memory device during one or more clock cycles, the individual input vector comprising the plurality of the weight values and the plurality of the operand values.

[0239] 89. The hardware circuit of example 88, wherein the first memory device comprises memory banks, and wherein the plurality of weight values and the plurality of operand values read by the sequencer during the one or more clock cycles are selected for the reading such that: the plurality of weight values and the plurality of operand values are permuted by the sequencer in the switch fabric after receipt from the memory bank, and each of the weight values and the operand valued are read by the sequencer in a single pass.

[0240] 90. The hardware circuit of example 88, wherein the first memory devices comprise memory banks, and wherein the plurality of weight values and the plurality of operand values read by the sequencer during one or more clock cycles are selected for the reading such that: the plurality of weight values and the plurality of operand values are permuted by the sequencer in the switch fabric after receipt from the memory bank, and each of the weight values and the operand values are read by the sequencer in a single pass; and data is read from each of the memory banks, wherein a number of rows of the memory banks is substantially equivalent to a number of rows in the first column of the combinatorial tree.

[0241] 91. The hardware circuit of example 88, wherein each successive read of the first memory device, by the sequencer, results in reading of new weight values and new operand values from the first memory device not read by the sequencer during a previous clock cycle.

[0242] 92. The hardware circuit of any of examples 82-91, wherein a single hardware unit is operatively coupled to at least two adjacent hardware units such that an output value generated by the single hardware unit is shared as an input value to each of the at least two adjacent hardware units.

[0243] 93. The hardware circuit of any of examples 82-92, wherein the accumulator comprises a plurality of accumulators configured to accumulate partial dot product values generated by a single hardware unit as values flow through the single hardware unit.

[0244] 94. The hardware circuit of any of examples 82-93, wherein the combinatorial tree comprises registers associated with the hardware units configured to maintain clock alignment of values flowing through the hardware units.

[0245] 95. The hardware circuit of any of examples 82-94, comprising logic that is configured to generate a set of final

dot product values for the input values after all of a sequence of input vectors have been inputted to the combinatorial tree, the set of final dot product values being constructed from values stored in accumulators of the hardware units of the combinatorial tree.

[0246] 96. The hardware circuit of example 95, wherein the logic is configured to store the set of final dot product values to the first memory device.

[0247] 97. The hardware circuit of any of examples 82-96, wherein the input values comprise at least one weight value and at least one operand value.

[0248] 98. The hardware circuit of any of examples 82-97, wherein the hardware circuit is part of a photonic integrated circuit (PIC).

[0249] 99. A method comprising: reading, by a sequencer, a first plurality of weight values and a first plurality of operand values from a set of memory devices operatively coupled to the sequencer; receiving, at a first column of a combinatorial tree, a plurality of first input vectors from the sequencer, the first plurality of input vectors comprising the first plurality of weight values and the first plurality of operand values; processing the first plurality of input vectors by math units at the first column of the combinatorial tree, the math units being associated with each of the input vectors, each of the math units having at least one accumulator, the combinatorial tree being configured to generate a dot product value in an accumulator of each of the math unit based on values received by the math units at the first column of the combinatorial tree; reading, by the sequencer, a second plurality of weight values and a second plurality of operand values from the set of memory devices; receiving, at the first column of the combinatorial tree, a second plurality of input vectors from the sequencer, the second plurality of input vectors comprising the second plurality of weight values and the second plurality of operand values; processing the second plurality of input vectors by the math units at the first column of the combinatorial tree, the first plurality of input vectors and the second plurality of inputs vector being part of a sequence of input vectors to be received by the math units in the first column of the combinatorial tree; and after all of the sequence of input vectors has been received by the first column of the combinatorial tree and processed by associated math units, providing a set of final dot product values by retrieving a value from each accumulator in each of the math units residing in every row of the first column of the combinatorial tree.

[0250] 100. The method of example 99, wherein the at least one accumulator comprises a plurality of accumulators in each of the math units, the plurality of accumulators being configured to accumulate partial dot product values generated by individual math units as values flow through the individual math units.

[0251] 101. A hardware circuit comprising: an array of dot product units organized as a combinatorial tree that generates dot product values based on weight values and activation values received as input by the array of dot product units, the array of dot product units comprises 64 rows by 32 columns of dot product units, each dot product unit being configured to receive as input two 8-bit values and having an accumulator; and a switch fabric operatively coupling the array to a set of memory devices, the set of memory devices storing a plurality of weight values and a plurality of activation values, the switch fabric being configured to provide **64** input vectors as input to a first column of the array, during a first clock sequence comprising one or more clock cycles, wherein one or more additional clock sequences cause the switch fabric to provide a plurality of additional sets of 64 input vectors to the first column of the array, and wherein when each of the accumulators in the first column of the array has 32 bits, writing each value from each accumulator back into the set of memory devices.

[0252] 102. The hardware circuit of example 101, wherein the dot product units comprise a plurality of FMA units.

[0253] 103. The hardware circuit of example 101 or example 102, wherein the dot product units are configured to receive a 32-byte input.

[0254] 104. The hardware circuit of any of examples 101-103, wherein the set of memory devices comprises 64 banks of 32-byte wide memory devices.

[0255] 105. A circuit package comprising: an application-specific integrated circuit (ASIC) comprising a plurality of processing elements that include photonic-channel interfaces; and a plurality of photonic channels connecting the plurality of processing elements via the photonic-channel interfaces to form at least part of an electro-photonic network, a sub-plurality of the plurality of photonic channels being connected to an individual processing element of the plurality of processing elements, the individual processing element being configured to: select, for the individual processing element, a master photonic channel from the sub-plurality of photonic channels; select, for the individual processing element, a set of slave photonic channels from the sub-plurality of photonic channels; extract a received clock signal from the master photonic channel; generate, based on the received clock signal, a local clock signal used by the individual processing element to perform one or more local operations on the individual processing element; and transmit, over the set of slave photonic channels, a distributed clock signal to a set of the plurality of processing elements connected to the individual processing element, the transmitting the distributed clock signal comprising transforming the distributed clock signal from an electrical form to an optical form using the photonic-channel interface of the individual processing element, the transmitting the distributed clock signal further comprising transforming the distributed clock signal from the optical form to the electrical form at the set of the plurality of processing elements, the distributed clock signal being suitable for transmission across the set of slave photonic channels and for use as associated local clock signals by the set of the plurality of processing elements, the distributed clock signal being generated based on the received clock signal.

[0256] 106. The circuit package of example 105, wherein the individual processing element comprises a jitter-attenuating phase-lock loop (PLL), wherein the individual processing element uses the jitter-attenuating PLL to generate a low jitter clock signal based on the received clock signal, and wherein the generating of the local clock signal based on the received clock signal comprises generating the local clock signal based on the low jitter clock signal.

[0257] 107. The circuit package of example 105 or 106, wherein the individual processing element selects the master photonic channel during boot time of the individual processing element.

[0258] 108. The circuit package of any of examples 105-107, wherein the individual processing element selects the

set of slave photonic channels during boot time of the individual processing element.

[0259] 109. The circuit package of any of examples 105-108, wherein the individual processing element is configured to: perform a channel alignment operation on the master photonic channel, the channel alignment operation being configured to adjust one or more settings of the individual processing element to compensate for clock skew.

[0260] 110. The circuit package of any of examples 105-109, wherein the individual processing element extracts the received clock signal from the master photonic channel by performing clock data recovery on an incoming bit stream received over the master photonic channel.

[0261] 111. The circuit package of any of examples 105-110, wherein the individual processing element transmits the distributed clock signal to the set of processing elements by transmitting one or more outgoing bit streams to the set of processing elements, the one or more outgoing bit streams being generated based on the distributed clock signal.

[0262] 112. The circuit package of any of examples 105-111, wherein the individual processing element comprises a tensor processor and a DNN, wherein each of the tensor processor and the DNN is configured to operate based on the local clock signal, and wherein a packet is capable of being transferred between the DNN and the tensor processor using the local clock signal.

[0263] 113. The circuit package of any of examples 105-112, wherein the individual processing element comprises a message router that includes the photonic-channel interface, the message router being configured to operate based on the local clock signal.

[0264] 114. The circuit package of any of examples 105-113, wherein the individual processing element comprises a hardware circuit for computing one or more dot products between at least two vectors, the hardware circuit being configured to operate based on the local clock signal.

[0265] 115. The circuit package of any of examples 105-114, wherein the individual processing element is a first processing element, the sub-plurality of photonic channels is a first sub-plurality of photonic channels, the master photonic channel is a first master photonic channel, the set of slave photonic channels is a first set of slave photonic channels, the received clock signal is a first received clock signal, the local clock signal is a first local clock signal, and the distributed clock signal is a first distributed clock signal; and wherein a second sub-plurality of the plurality of photonic channels being connected to a second processing element, the second processing element being included in the set of processing elements connected to the first processing element, the second sub-plurality of the plurality of photonic channels including an individual photonic channel of the set of slave photonic channels that connects the first processing element to the second processing element, the second processing element being configured to: select, for the second processing element, a second master photonic channel from the individual photonic channel; select, for the second processing element, a second set of slave photonic channels from the second sub-plurality of photonic channels; extract a second received clock signal from the second master photonic channel; generate, based on the second received clock signal, a second local clock signal used by the second processing element to perform one or more local operations on the second processing element; and transmit, over the second set of slave photonic channels, a second distributed clock signal to a second set of the plurality of processing elements connected to the second processing element, the transmitting the second distributed clock signal comprising transforming the second distributed clock signal from the electrical form to the optical form using the photonic-channel interface of the individual processing element, the transmitting the second distributed clock signal further comprising transforming the second distributed clock signal from the optical form to the electrical form at the second set of the plurality of processing elements, the second distributed clock signal being suitable for transmission across the second set of slave photonic channels and for use as associated local clock signals by the second set of the plurality of processing elements, the second distributed clock signal being generated based on the second received clock signal.

[0266] 116. The circuit package of example 115, wherein the first processing element comprises a first set of components, the second processing element comprises a second set of components, the first set of components comprising at least one of a first tensor processor, a first message router that includes a photonic-channel interface, or a first hardware circuit for computing one or more first dot products between at least two vectors, the second set of components comprising at least one of a second tensor processor, a second message router that includes a photonic-channel interface, or a second hardware circuit for computing one or more second dot products between at least two vectors, the first set of components being configured to operate based on the first local clock signal, and the second set of components being configured to operate based on the second local clock signal.

[0267] 117. A method comprising: selecting, by an individual processing element of a plurality of processing elements, a master photonic channel from a plurality of photonic channels, the master photonic channel being selected for the individual processing element, the plurality of processing elements being part of an application-specific integrated circuit (ASIC) of a circuit package, the plurality of processing elements being connected together by a plurality of photonic channels to form at least part of an electro-photonic network within the circuit package; selecting, by the individual processing element, a set of slave photonic channels from the plurality of photonic channels, the set of slave photonic channels being selected for the individual processing element; extracting, by the individual processing element, a received clock signal from the master photonic channel in a digital format; based on the received clock signal in the digital format, generating, by the individual processing element, a local clock signal used by the individual processing element to perform one or more local operations on the individual processing element using a digital portion of the ASIC; and transmitting, by the individual processing element and over the set of slave photonic channels, a distributed clock signal to a set of the plurality of processing elements connected to the individual processing element, the distributed clock signal being generated based on the received clock signal in the digital format, the transmitting comprising: transforming the distributed clock signal from a digital format to an optical format; routing the distributed clock signal in the optical format across the set of slave photonic channels; receiving the distributed clock signal in the optical format at photonic interfaces of the set of the plurality of processing elements; and transforming the

distributed clock signal to the digital format in the set of the plurality of processing elements using associated photonic channel interfaces.

[0268] 118. The method of example 117, wherein the individual processing element comprises a jitter-attenuating phase-lock loop (PLL), wherein the individual processing element uses the jitter-attenuating PLL to generate a low jitter clock signal based on the received clock signal, and wherein the generating of the local clock signal based on the received clock signal comprises generating the local clock signal based on the low jitter clock signal.

[0269] 119. The method of example 117 or example 118, wherein the selecting of the master photonic channel is performed during boot time of the individual processing element.

[0270] 120. The method of any of examples 117-119, wherein the selecting of the set of slave photonic channels during boot time of the individual processing element.

[0271] 121. The method of any of examples 117-120, comprising: performing, by the individual processing element, a channel alignment operation on the master photonic channel, the channel alignment operation being configured to adjust one or more settings of the individual processing element to compensate for clock skew.

[0272] 122. The method of any of examples 117-121, wherein the extracting of the received clock signal from the master photonic channel comprises performing clock data recovery on an incoming bit stream received over the master photonic channel.

[0273] 123. The method of any of examples 117-122, wherein the transmitting of the distributed clock signal to the set of processing elements comprises transmitting one or more outgoing bit streams to the set of processing elements, the one or more outgoing bit streams being generated based on the distributed clock signal.

[0274] 124. The method of any of examples 117-123, wherein the individual processing element comprises a set of components, the set of components comprising at least one of a tensor processor, a message router that includes photonic-channel interfaces, or a hardware circuit for computing a dot product between at least two vectors, the set of components being configured to operate based on the local clock signal.

[0275] 125. A system comprising: a memory subsystem that comprises: a set of memory devices; and a memory controller operably coupled to the set of memory devices and configured to provide access to data stored on the set of memory devices; and a photonic interface controller connecting the memory controller to a photonic interface associated with a bidirectional photonic channel, the photonic interface comprising an optical modulator and a photodetector, and the photonic interface controller comprising electronic circuitry configured to drive the optical modulator in accordance with messages to be transmitted via the bidirectional photonic channel and to process electronic outputs of the photodetector to retrieve messages received via the bidirectional photonic channel.

[0276] 126. The system of example 125, wherein the memory controller and the photonic interface controller are integrated into a single die.

[0277] 127. The system of example 125, wherein the memory subsystem is a memory stack device, the set of memory devices comprising a stack of dynamic random-access memory (DRAM) die.

[0278] 128. The system of example 127, wherein the memory stack device is a high bandwidth memory (HBM) subsystem.

[0279] 129. The system of example 127, wherein the memory controller and the photonic interface controller are integrated into a single layer that is disposed at a base of the memory stack device.

[0280] 130. The system of example 125, wherein the bidirectional photonic channel implements a point-to-point data connection between the memory subsystem and a processing element.

[0281] 131. The system of example 125, wherein the bidirectional photonic channel is part of a photonic fabric that comprises: multiple bidirectional photonic channels; and one or more message routers connecting the bidirectional photonic channels to each other and connecting the bidirectional photonic channels to one or more processing elements or one or more additional memory subsystems.

[0282] 132. A system comprising: one or more memory subsystems; one or more processing elements; a plurality of message routers, each message router comprising multiple ports each connected to one of a processing element of the one or more processing elements, a memory subsystem of the one or more memory subsystems, or another one of the message routers; and a plurality of bidirectional photonic channels configured to optically transfer messages, wherein connections between the message routers are each implemented by one of the plurality of bidirectional photonic channels.

[0283] 133. The system of example 132, wherein at least one of the one or more memory subsystems is connected by an associated photonic interface controller via one of the plurality of bidirectional photonic channels to one of the plurality of message routers.

[0284] 134. The system of example 132, wherein at least one of the one or more processing elements is connected by an associated electronic interface controller via an electronic bus to one of the plurality of message routers.

[0285] 135. The system of example 132, wherein each bidirectional photonic channel comprises two sets of unidirectional photonic links, each photonic link implemented by: a transmit unit comprising an optical modulator to impart a message onto an optical signal; a receive unit comprising a photodetector to convert the optical signal into an electronic signal carrying the message; and an optical transmission medium connecting the transmit unit to the receive unit.

[0286] 136. The system of example 135, wherein: the transmit unit further comprises an electrical serializer configured to convert parallel data into an electronic drive signal for driving the optical modulator; and the receive unit further comprises a transimpedance amplifier to amplify the electronic signal, gain control to normalize a signal level of the amplified electronic signal, a slicer to extract a bit stream from the normalized electronic signal, and a deserializer to convert a message contained in the bit stream back into parallel data.

[0287] 137. The system of example 135, wherein the optical modulators of the transmit units of the photonic links comprise electro-absorption modulators.

[0288] 138. The system of example 135, wherein each set of unidirectional photonic links comprises multiple unidirectional photonic links bonded together by a transmit bonding engine at inputs of the multiple photonic links and by a receive bonding engine at outputs of the multiple

photonic links, the transmit bonding engine configured to distribute, upon receipt of a message comprising a sequence of words, the words of the message between the inputs of the multiple photonic links and to add sequence information to the words, and the receive bonding engine configured to reassemble the message, upon receipt of the words at the outputs of the multiple photonic links, based on the sequence information.

[0289] 139. The system of example 132 wherein the plurality of message routers and the plurality of bidirectional photonic channels are configured as a quadrilateral mesh network.

[0290] 140. The system of example 139, wherein each of the message routers comprises four optical ports, and wherein one or more optical ports along a periphery of the quadrilateral mesh network are connected via bidirectional photonic channels to the one or more memory subsystems.

[0291] 141. The system of example 140, wherein each of the message routers further comprises four electrical ports connected via electrical buses to four respective processing elements surrounding the message router.

[0292] 142. The system of example 141, wherein the quadrilateral mesh network is a first quadrilateral mesh network, the system further comprising a second plurality of bidirectional photonic channels connecting the processing elements into a second quadrilateral mesh network, a density of the first quadrilateral mesh network being lower than a density of the second quadrilateral mesh network.

[0293] 143. The system of example 132, wherein each of the plurality of message routers comprises an address router unit to extract a destination address from each incoming message and an output multiplexor configured to select an egress port among the multiple ports of the message router based in part on the destination address and a routing policy.

[0294] 144. The system of example 143, wherein each of the plurality of message routers further comprises a router control unit configured to resolve port contention.

[0295] 145. An apparatus coupled to a memory, the apparatus comprising an interface associated with the memory, the interface having a first transmit unit for sending data from the memory and a first receive unit for receiving data sent to the memory, a fabric connected to the first transmit and receive units, the fabric including a plurality of routers, each of the routers having additional transmit and receive units, the routers arranged in a grid formed by connecting the additional transmit units with the additional receive units via optical links, and a first mesh coupled to a first portion of the memory, the first mesh including a first portion of the routers that create a first connection between the first transmit and receive units and a local electrical router associated with a first one of the routers.

[0296] 146. A system comprising: an interface system associated with a memory subsystem, the interface system having a first transmit unit for sending data from the memory subsystem and a first receive unit for receiving data sent to the memory subsystem; a fabric connected to the first transmit and receive units, the fabric including a plurality of routers, each of the routers having additional transmit and receive units, the routers arranged in a grid formed by connecting the additional transmit units with the additional receive units via optical links, and a first mesh system coupled to a first portion of the memory subsystem, the first mesh system including a first portion of the routers that create a first connection between the first transmit and receive units and a local electrical router associated with a first one of the routers.

[0297] 146. A method comprising: generating a request for a data item in a memory; obtaining the data item from the memory with a photonic interface; sending the data item to a fabric using a transmit unit of the photonic interface; and routing the data item through a portion of the fabric coupled to the memory, the portion of the fabric including one or more additional transmit and receive units between the photonic interface and a destination receive unit.

[0298] From the above description it is manifest that various techniques can be used for implementing the concepts described in the present application without departing from the scope of those concepts. Moreover, while the concepts have been described with specific reference to certain implementations, a person of ordinary skill in the art would recognize that changes can be made in form and detail without departing from the scope of those concepts. As such, the described implementations are to be considered in all respects as illustrative and not restrictive. It should also be understood that the present application is not limited to the particular implementations described herein, but many rearrangements, modifications, and substitutions are possible without departing from the scope of the present disclosure.

[0299] Although the subject matter has been described in language specific to structural features and/or methodological acts, it is to be understood that the subject matter defined in the appended claims is not necessarily limited to the specific features or acts described above. Rather, the specific features and acts described above are disclosed as example forms of implementing the claims.

1. A system-in-package comprising:

a first circuit layer comprising a plurality of optical modulators, a plurality of photodetectors, a plurality of optical couplers, and a plurality of waveguides, a first waveguide of the plurality of waveguides optically connecting a first optical modulator of the plurality of optical modulators to a first photodetector of the plurality of photodetectors, and one or more additional waveguides optically connecting a first optical coupler of the plurality of optical couplers to the first optical modulator; and

a second circuit layer comprising a first driver, a first amplifier, a first serializer, and a first deserializer, the first driver being electrically connected to the first optical modulator and the first amplifier being electrically connected to the first photodetector, the first serializer being configured to provide output to the first driver and the first deserializer being configured to receive input from the first amplifier, the input and output passing through electrical connections between the first and second circuit layers,

wherein the first optical modulator, the first driver, the first photodetector, and the first amplifier form a first photonic channel interface configured to receive optical signals from and transmit optical signals to a second photonic channel interface of the SiP connected to the first photonic channel interface via one or more waveguides of the plurality of waveguides.

2. The SiP of claim **1**, the SiP comprises a plurality of processing elements, each processing element being connected to an adjacent processing element by a bidirectional photonic channel.

3. The SiP of claim **2**, comprising multiple electrical integrated circuits supported on a surface of a photonic integrated circuit comprising the first circuit layer, each of the electrical integrated circuits being connected by one or more bidirectional photonic channels.

4. The SiP of claim **3**, wherein at least one of the electrical integrated circuits comprise high bandwidth memory (HBM).

5. The SiP of claim **3**, wherein each bidirectional photonic channel comprises a photonic channel interface at each end.

6. The SiP of claim **1**, wherein the first circuit layer comprises a demultiplexer arranged in an optical path between the first optical coupler and the first optical modulator.

7. The SiP of claim **1**, wherein the first circuit layer comprises a multiplexer arranged in an optical path between a second optical modulator of the plurality of optical modulators and a second optical coupler of the plurality of optical couplers.

8. The SiP of claim **1**, wherein the first circuit layer comprises a demultiplexer arranged in an optical path between a second optical coupler of the plurality of optical couplers and a second photodetector of the plurality of photodetectors.

9. The SiP of claim **1**, wherein a distance between the first driver and the first optical modulator is smaller than 200 mm.

10. The SiP of claim **1**, wherein the first optical modulator is an electro-absorption modulator, a Mach-Zehnder modulator, or a ring modulator.

11. The SiP of claim **1**, wherein the first circuit layer and the second circuit layer are in a single semiconductor chip.

12. The SiP of claim **1**, wherein the first driver, the first amplifier, the serializer, and the deserializer are in a single semiconductor chip.

13. The SiP of claim **1**, wherein the first circuit layer and the second circuit layer are in different semiconductor chips.

14. The SiP of claim **1**, wherein the second circuit layer is part of a photonic integrated circuit.

15. The SiP of claim **1**, wherein the first circuit layer is part of an electronic integrated circuit.

16. The SiP of claim **1**, wherein the electronic integrated circuit comprises the second circuit layer.

17. The SiP of claim **1**, wherein the optical couplers are edge couplers configured to optically couple the plurality of waveguides to one or more optical fibers.

18. The SiP of claim **17**, wherein at least some of the optical fibers are connected to a laser light source external to the SiP.

19. The SiP of claim **17**, wherein at least some of the optical fibers are connected to a second system in package.

20. The SiP of claim **1**, wherein the SiP is a machine learning accelerator or a machine learning processor.

* * * * *