US012391529B2

(12) **United States Patent**
Troy et al.

(10) **Patent No.: US 12,391,529 B2**
(45) **Date of Patent: Aug. 19, 2025**

(54) **MOTION LOCKOUT FOR PLATFORM MOVER SYSTEM**

(71) Applicant: **The Boeing Company**, Chicago, IL (US)

(72) Inventors: **James J. Troy**, Issaquah, WA (US); **Katherine L. Varela**, Seattle, WA (US); **Charles M. Richards**, Kent, WA (US); **Nicholas Gholdoian**, Kirkland, WA (US)

(73) Assignee: **THE BOEING COMPANY**, Arlington, VA (US)

(*) Notice: Subject to any disclaimer, the term of this patent is extended or adjusted under 35 U.S.C. 154(b) by 788 days.

(21) Appl. No.: **17/537,658**

(22) Filed: **Nov. 30, 2021**

(65) **Prior Publication Data**

US 2022/0324688 A1 Oct. 13, 2022

Related U.S. Application Data

(60) Provisional application No. 63/172,865, filed on Apr. 9, 2021.

(51) **Int. Cl.**
B66F 17/00 (2006.01)
B66F 9/075 (2006.01)
B66F 11/04 (2006.01)

(52) **U.S. Cl.**
CPC ***B66F 17/006*** (2013.01); ***B66F 9/07568*** (2013.01); ***B66F 11/04*** (2013.01)

(58) **Field of Classification Search**
CPC B66F 17/006; B66F 9/07568; B66F 11/04
(Continued)

(56) **References Cited**

U.S. PATENT DOCUMENTS

7,194,358 B2 * 3/2007 Callaghan B66F 17/006 340/436
10,005,652 B1 * 6/2018 Cui E04G 1/24
(Continued)

FOREIGN PATENT DOCUMENTS

CN 102701122 B 3/2015
EP 1537036 A1 6/2005
(Continued)

OTHER PUBLICATIONS

EP Search Report mailed Aug. 3, 2022 in re EP Application No. 22167107.6.
(Continued)

Primary Examiner — Logan M Kraft
Assistant Examiner — Anthony Donald Taylor, Jr.
(74) *Attorney, Agent, or Firm* — COATS & BENNETT, PLLC

(57) **ABSTRACT**

The system includes a drive vehicle configured to attach to the platform at a pivot point and to move the platform relative to the target object. One or more distance sensors are positioned to sense the target object, and one or more rotation angle sensors acquire an angular position of the drive vehicle relative to the platform. A processing circuit is configured to calculate one or more distances between the platform and the target object based on inputs from the one or more distance sensors. The processing circuit receives a command to move the drive vehicle in one or more forward, reverse, or rotational directions. The processing circuit allows motion in one or more directions in which the platform will not contact the target object and prevents motion in one or more directions that would cause the platform to contact the target object.

20 Claims, 16 Drawing Sheets

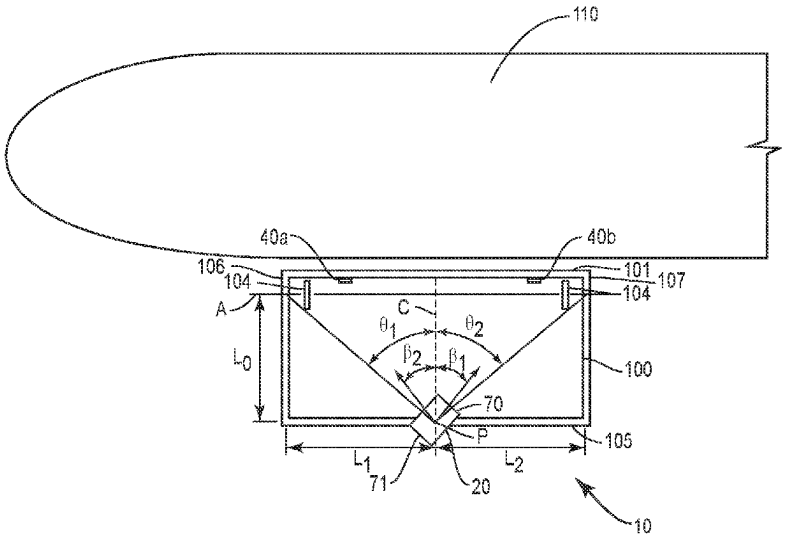

(58) **Field of Classification Search**
USPC 701/116
See application file for complete search history.

(56) **References Cited**

U.S. PATENT DOCUMENTS

10,167,181	B2 *	1/2019	Xu	B66F 9/07568
10,625,427	B2	4/2020	Troy et al.	
11,066,838	B2	7/2021	Richards et al.	
2002/0179559	A1 *	12/2002	Hashiguchi	B66F 11/044 212/281
2005/0224439	A1 *	10/2005	Bean	B66F 11/046 212/280
2011/0014026	A1 *	1/2011	Benzing	E04G 25/06 187/244
2012/0211301	A1 *	8/2012	Clark	B66F 17/006 182/2.2
2018/0361595	A1 *	12/2018	Troy	B25J 9/162
2019/0185304	A1 *	6/2019	Lesquir	G06T 7/75
2019/0210855	A1 *	7/2019	Hao	B66F 11/044
2019/0256226	A1 *	8/2019	Shapoury	G06T 7/73
2019/0311555	A1 *	10/2019	Troy	B25J 9/1697
2020/0018079	A1 *	1/2020	Richards	G05D 1/0225
2020/0055356	A1 *	2/2020	Niewiadomski	B60R 1/003

FOREIGN PATENT DOCUMENTS

JP	2002087797	A	3/2002
JP	2013052948	A	3/2013
KR	20160000931	U	3/2016

OTHER PUBLICATIONS

Wikipedia, "Holonomic (robotics)", online article, retrieved on Jun. 25, 2018, pp. 1-2, retrieved from: https://en.wikipedia.org/wiki/Holonomic_%28robotics%29.

* cited by examiner

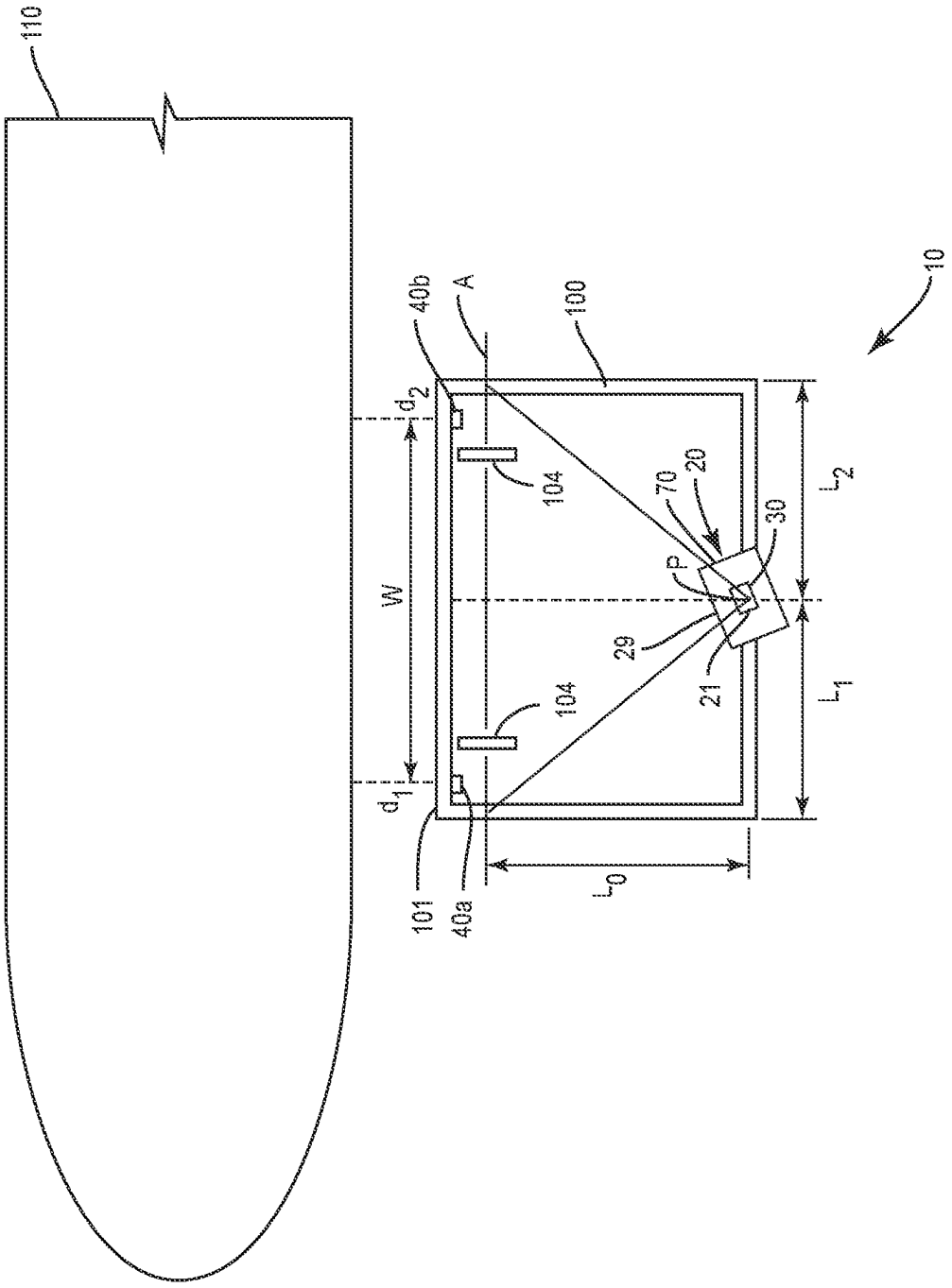

FIG. 1

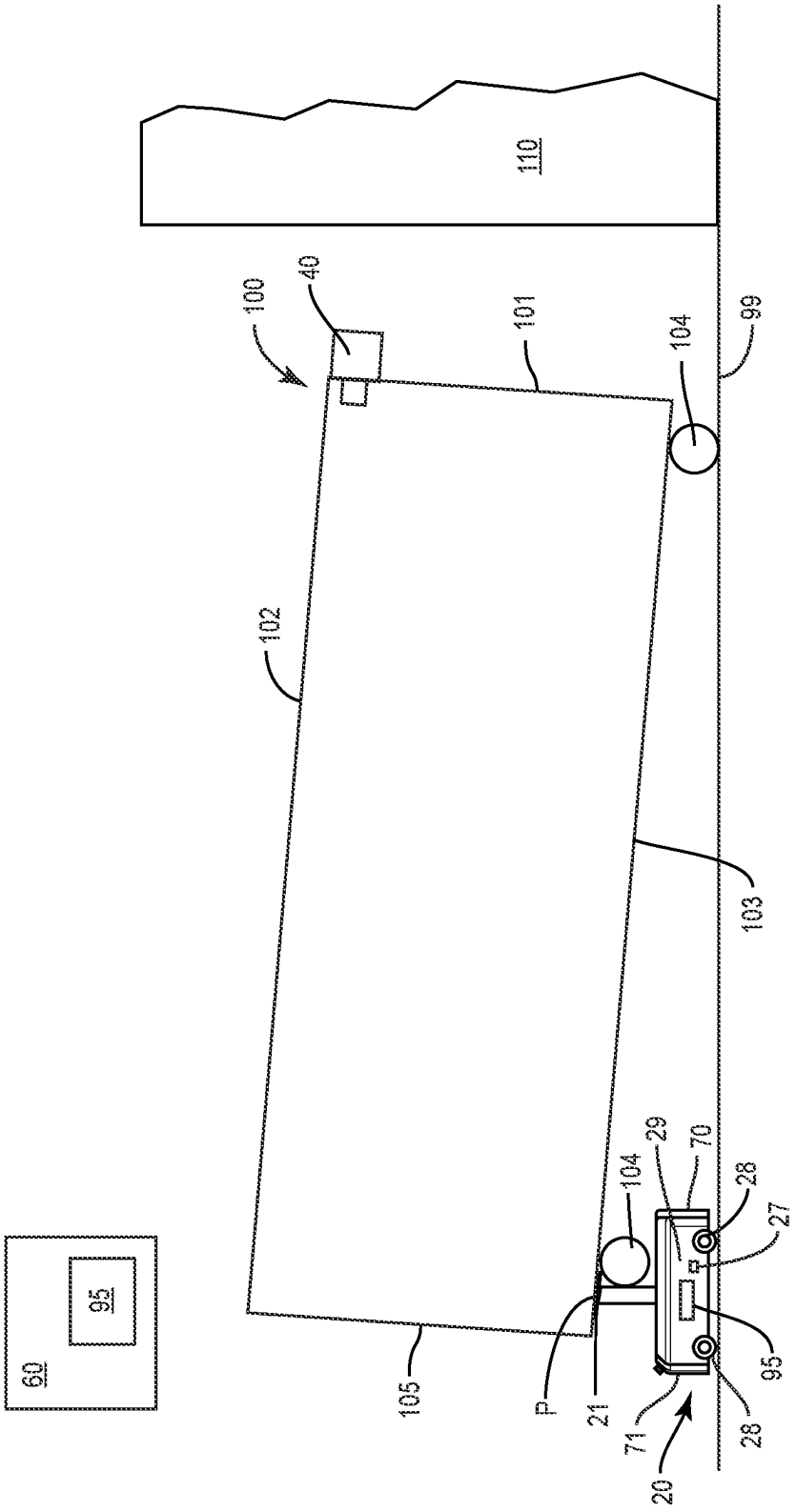
110
100
40
101
104
99
102
103
105
P
21
71
20
28
95
27
28
29
70
104
60
95

FIG. 2

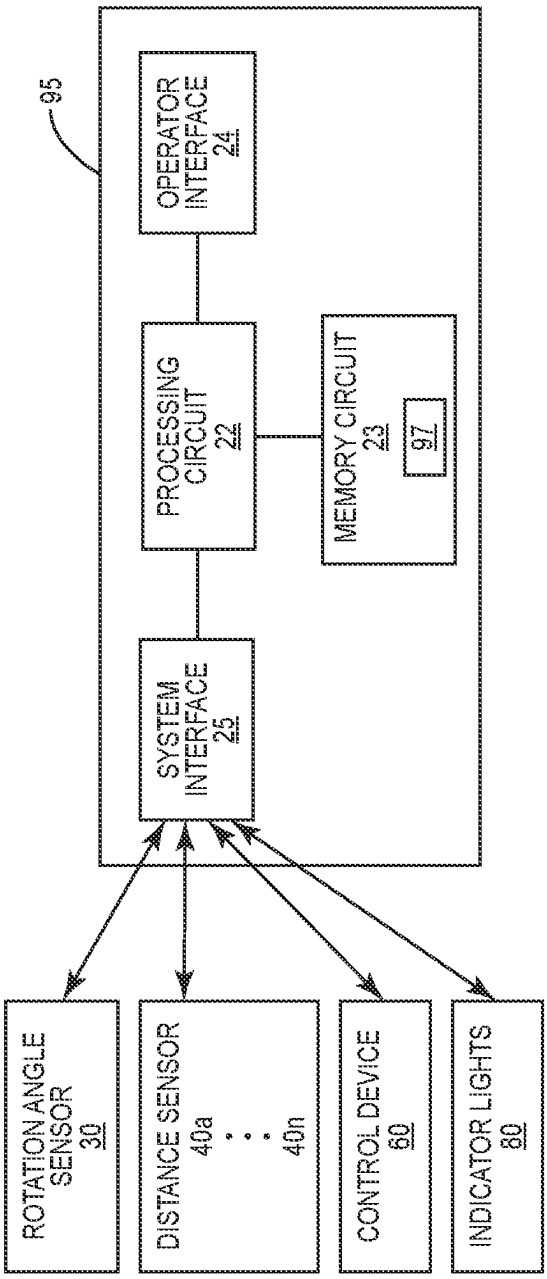
95
OPERATOR INTERFACE 24
PROCESSING CIRCUIT 22
MEMORY CIRCUIT 23
97
SYSTEM INTERFACE 25
ROTATION ANGLE SENSOR 30
DISTANCE SENSOR 40a . . . 40n
CONTROL DEVICE 60
INDICATOR LIGHTS 60

FIG. 3

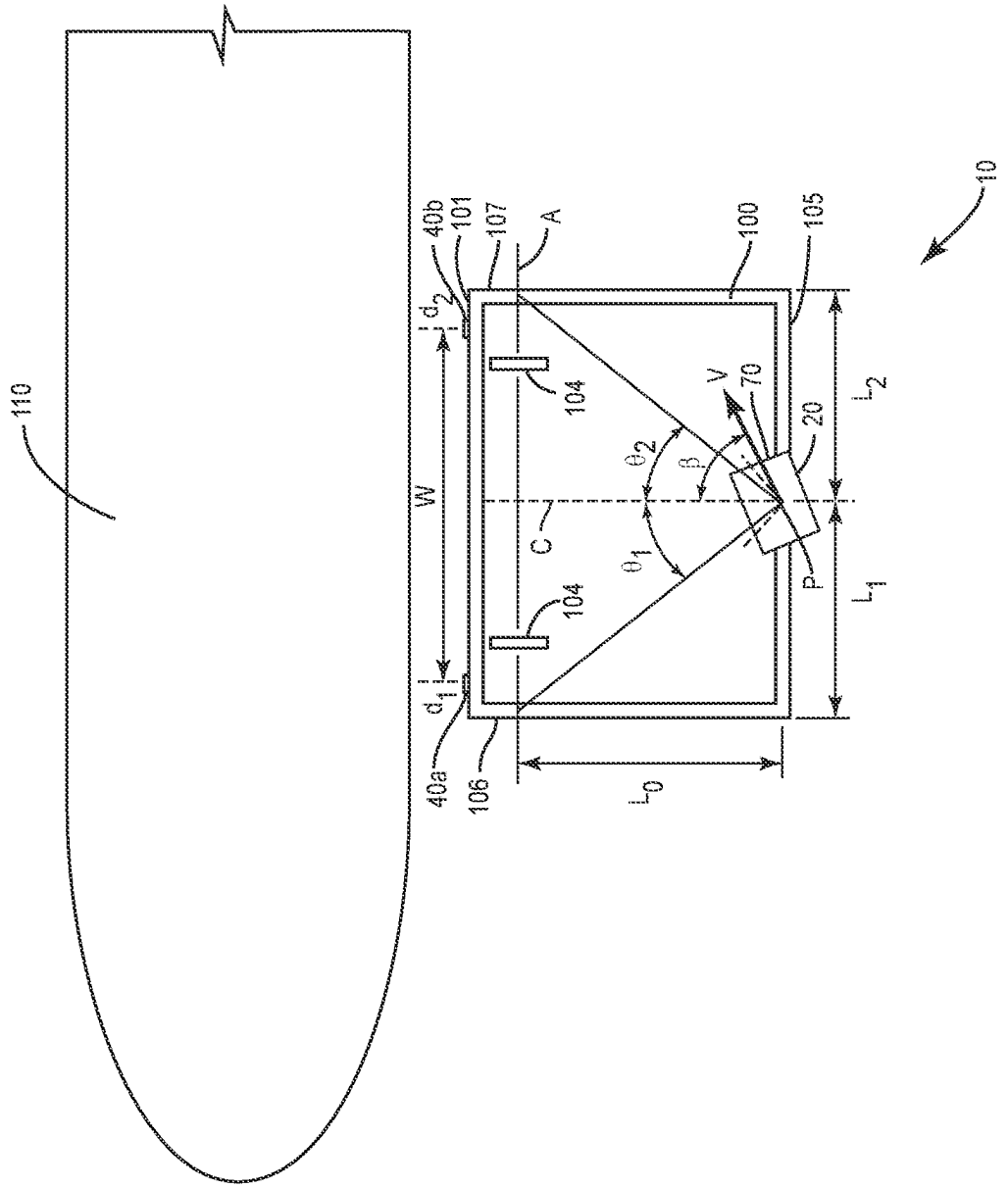
110
10
40b
101
107
A
100
105
d_2
104
V
70
20
L_2
θ_2
β
W
C
θ_1
P
L_1
104
d_1
40a
106
L_0

FIG. 4

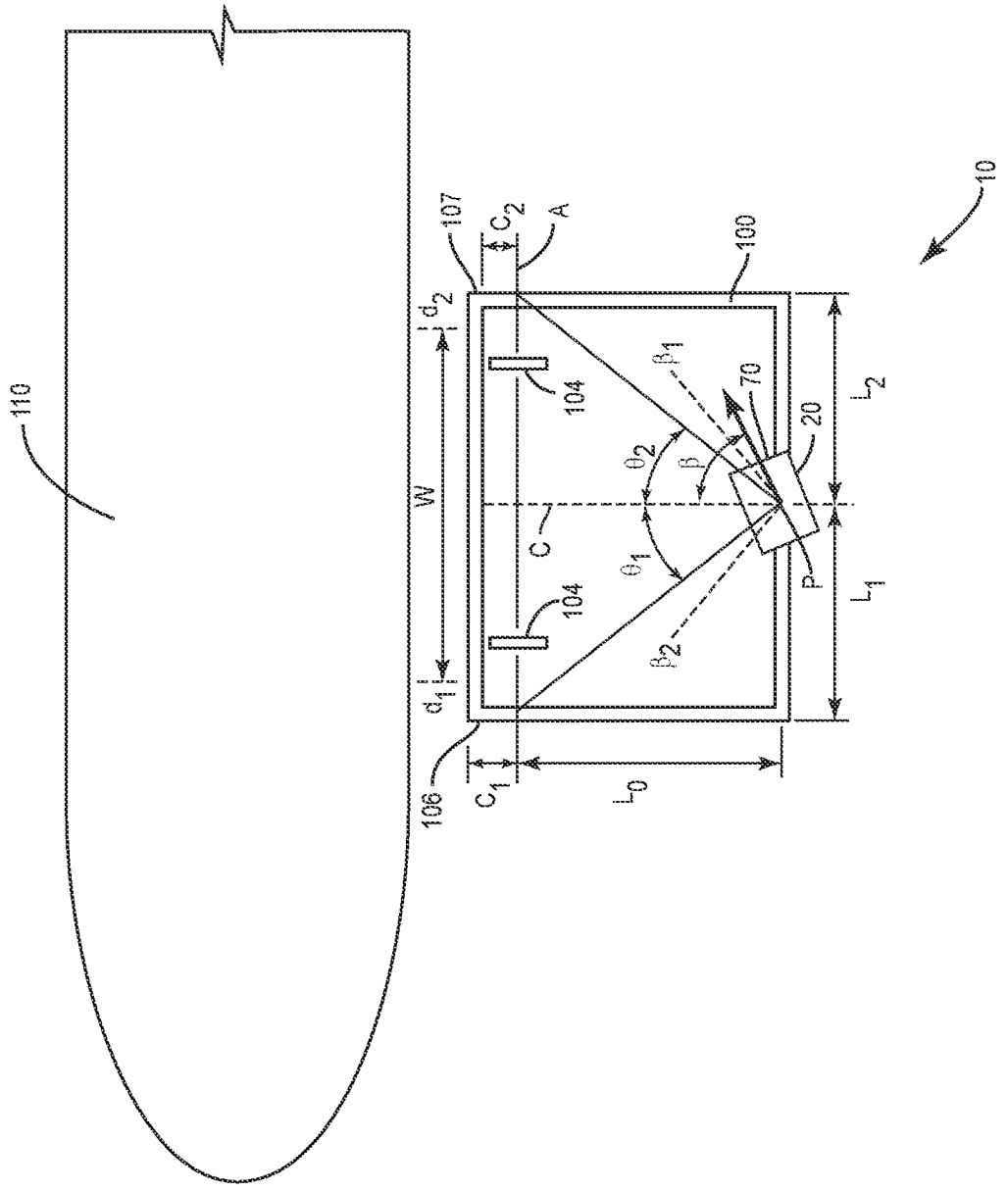
10
100
107
C_2
A
d_2
104
β_1
70
20
L_2
θ_2
β
W
C
θ_1
P
L_1
104
β_2
d_1
106
C_1
L_0
110

FIG. 5

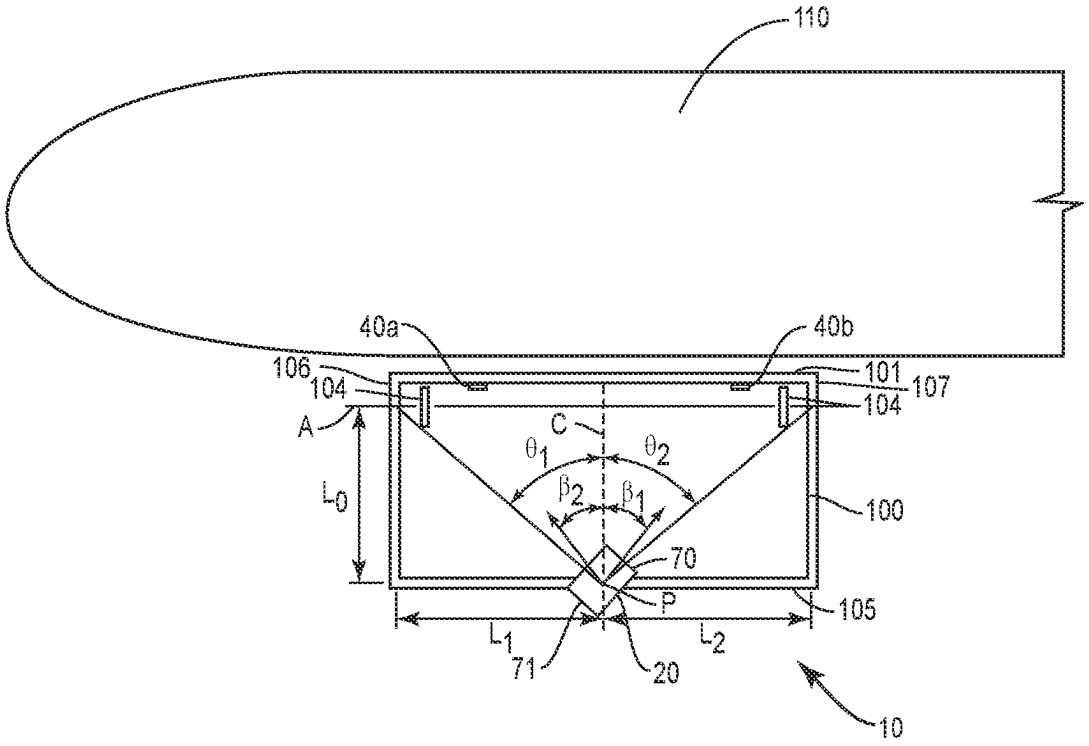
110
40a
40b
106
104
101
107
104
A
C
θ1
θ2
β2
β1
L0
100
70
P
105
L1
L2
71
20
10

FIG. 6

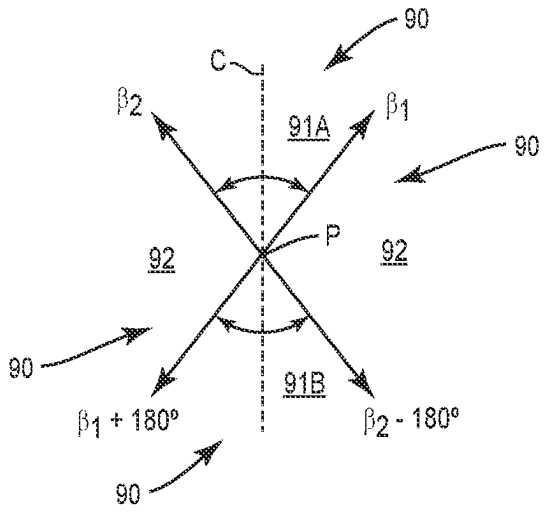
90
C
β2
β1
91A
90
P
92
92
90
91B
β1 + 180°
β2 - 180°
90

FIG. 6A

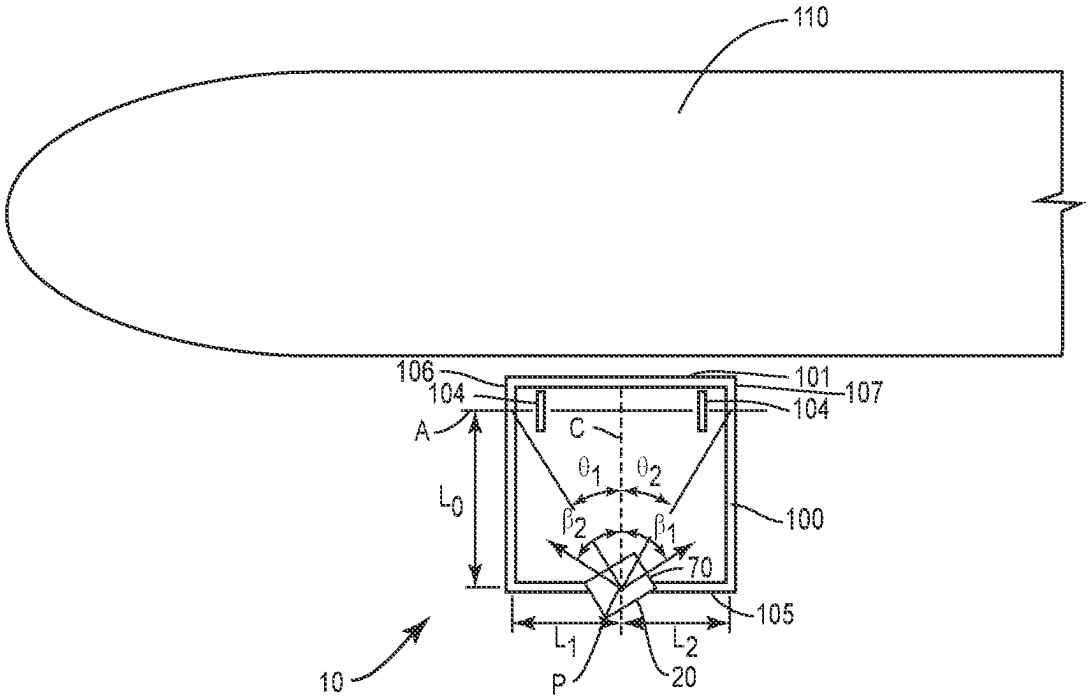
110
106
104
101
107
104
A
C
θ_1
θ_2
L_0
β_2
β_1
100
70
105
L_1
L_2
10
P
20

FIG. 7

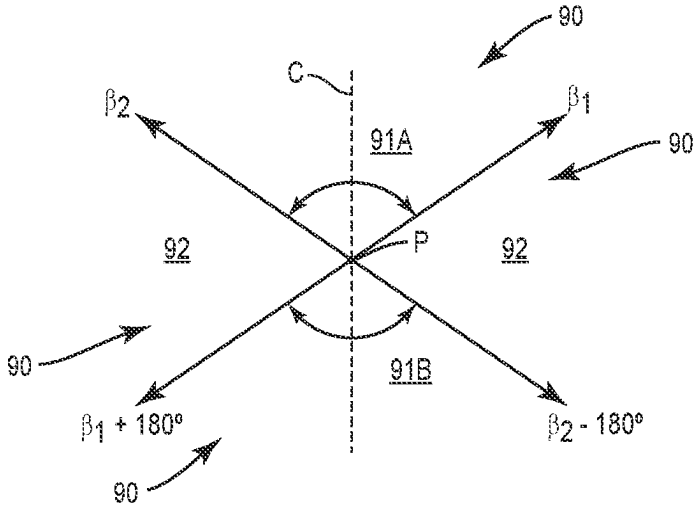
90
C
β_2
β_1
91A
90
92
P
92
90
91B
β_1 + 180°
β_2 - 180°
90

FIG. 7A

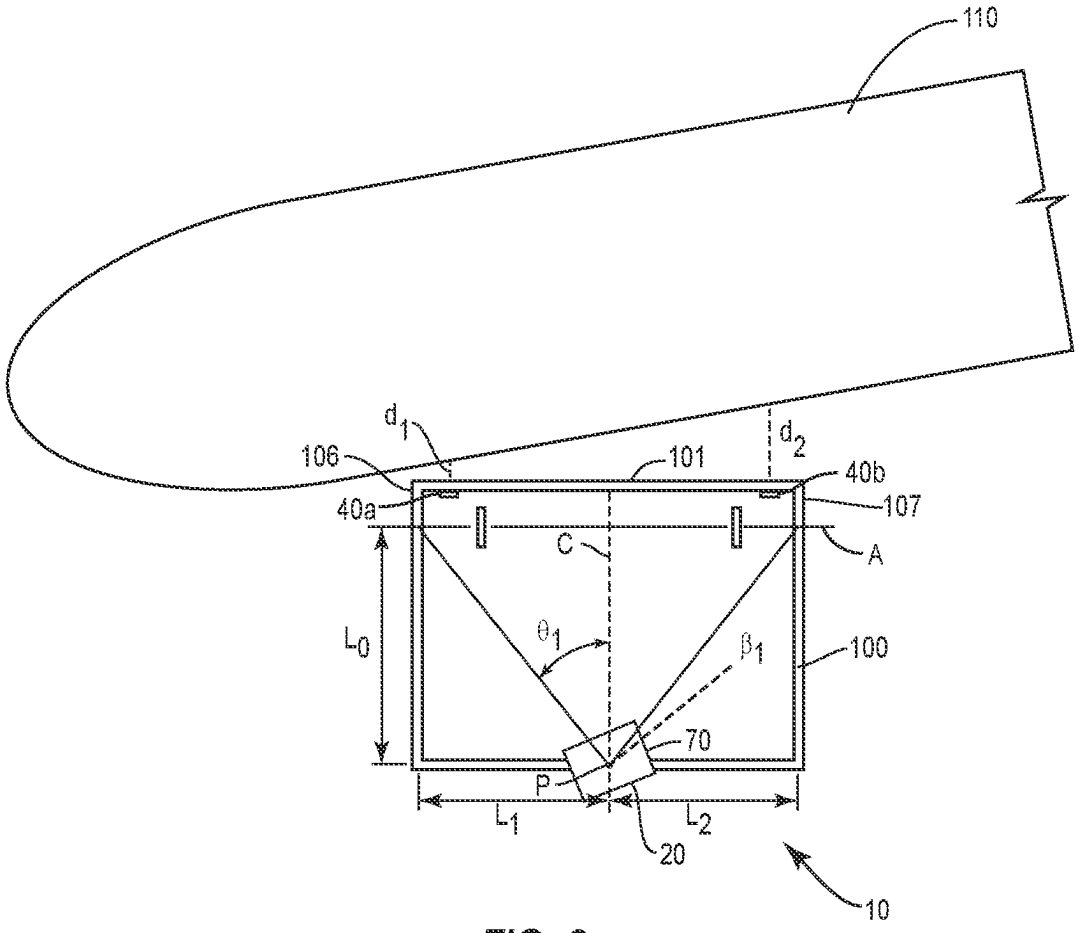
110
d_1
d_2
106
101
40b
40a
107
C
A
L_0
θ_1
β_1
100
70
P
L_1
L_2
20
10

FIG. 8

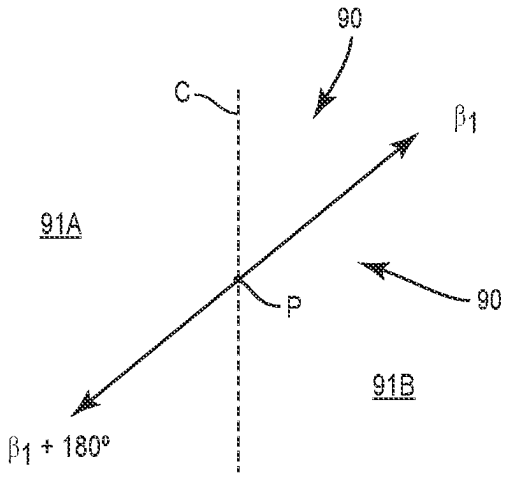
90
C
β_1
91A
P
90
91B
$\beta_1 + 180°$

FIG. 8A

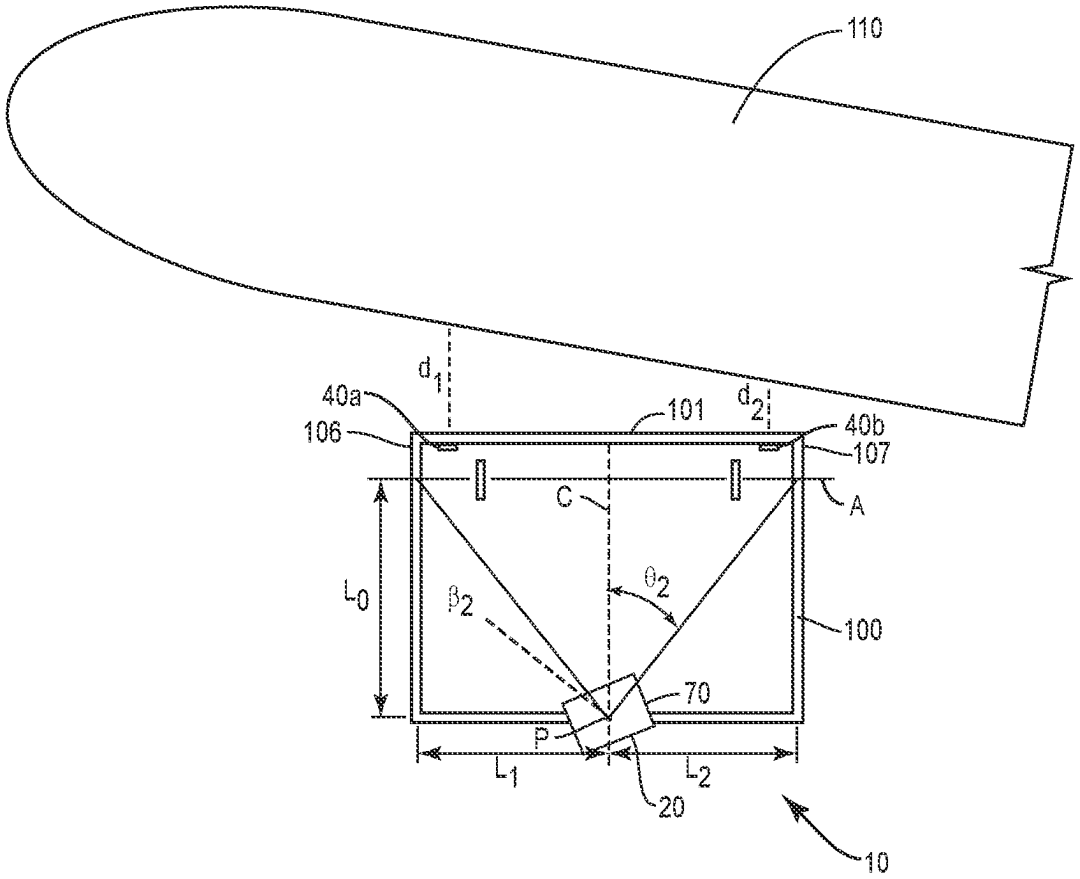
110
d1
40a
106
101
d2
40b
107
C
A
L0
β2
θ2
100
70
P
L1
L2
20
10

FIG. 9

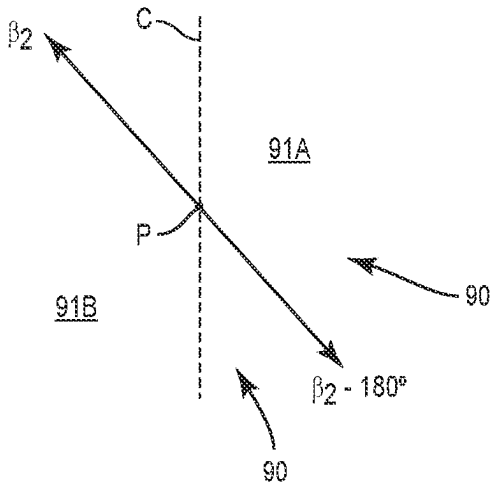
β2
C
91A
P
90
91B
β2 - 180°
90

FIG. 9A

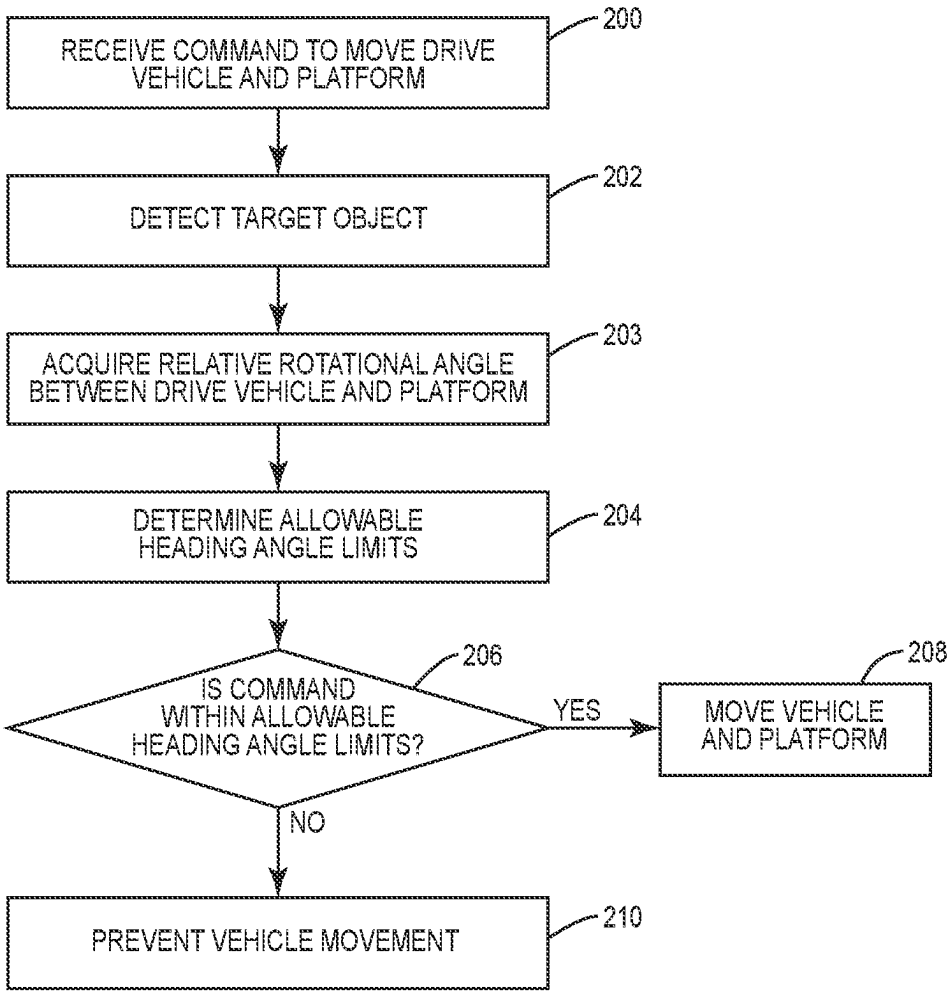
RECEIVE COMMAND TO MOVE DRIVE VEHICLE AND PLATFORM
200
DETECT TARGET OBJECT
202
ACQUIRE RELATIVE ROTATIONAL ANGLE BETWEEN DRIVE VEHICLE AND PLATFORM
203
DETERMINE ALLOWABLE HEADING ANGLE LIMITS
204
IS COMMAND WITHIN ALLOWABLE HEADING ANGLE LIMITS?
206
YES
MOVE VEHICLE AND PLATFORM
208
NO
PREVENT VEHICLE MOVEMENT
210

FIG. 10

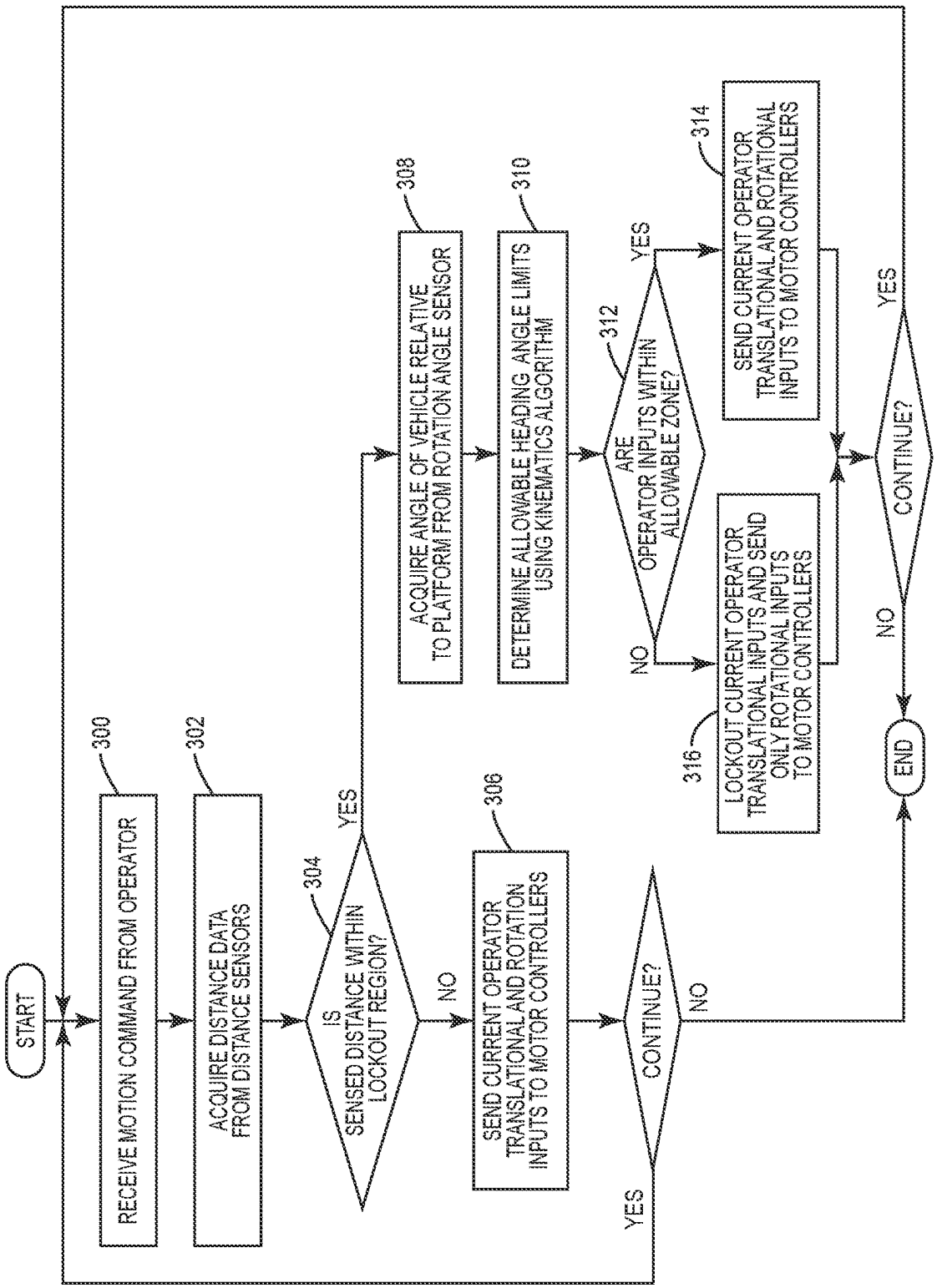
START
300
RECEIVE MOTION COMMAND FROM OPERATOR
302
ACQUIRE DISTANCE DATA FROM DISTANCE SENSORS
304
IS SENSED DISTANCE WITHIN LOCKOUT REGION?
YES
NO
306
SEND CURRENT OPERATOR TRANSLATIONAL AND ROTATION INPUTS TO MOTOR CONTROLLERS
308
ACQUIRE ANGLE OF VEHICLE RELATIVE TO PLATFORM FROM ROTATION ANGLE SENSOR
310
DETERMINE ALLOWABLE HEADING ANGLE LIMITS USING KINEMATICS ALGORITHM
312
ARE OPERATOR INPUTS WITHIN ALLOWABLE ZONE?
YES
NO
314
SEND CURRENT OPERATOR TRANSLATIONAL AND ROTATIONAL INPUTS TO MOTOR CONTROLLERS
316
LOCKOUT CURRENT OPERATOR TRANSLATIONAL INPUTS AND SEND ONLY ROTATIONAL INPUTS TO MOTOR CONTROLLERS
CONTINUE?
YES
NO
CONTINUE?
YES
NO
END

FIG. 11

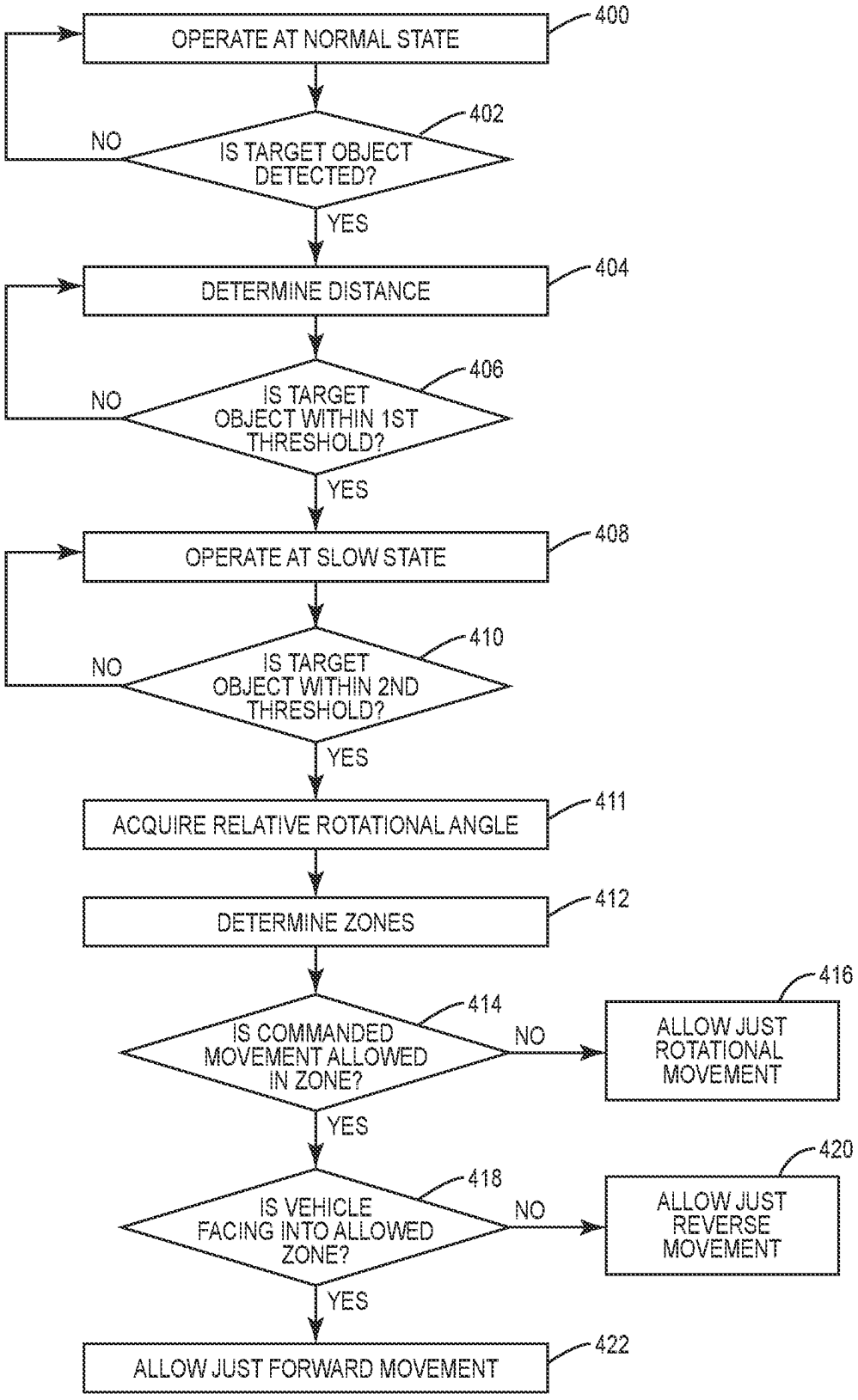
OPERATE AT NORMAL STATE
400
IS TARGET OBJECT DETECTED?
402
NO
YES
DETERMINE DISTANCE
404
IS TARGET OBJECT WITHIN 1ST THRESHOLD?
406
NO
YES
OPERATE AT SLOW STATE
408
IS TARGET OBJECT WITHIN 2ND THRESHOLD?
410
NO
YES
ACQUIRE RELATIVE ROTATIONAL ANGLE
411
DETERMINE ZONES
412
IS COMMANDED MOVEMENT ALLOWED IN ZONE?
414
NO
ALLOW JUST ROTATIONAL MOVEMENT
416
YES
IS VEHICLE FACING INTO ALLOWED ZONE?
418
NO
ALLOW JUST REVERSE MOVEMENT
420
YES
ALLOW JUST FORWARD MOVEMENT
422

FIG. 12

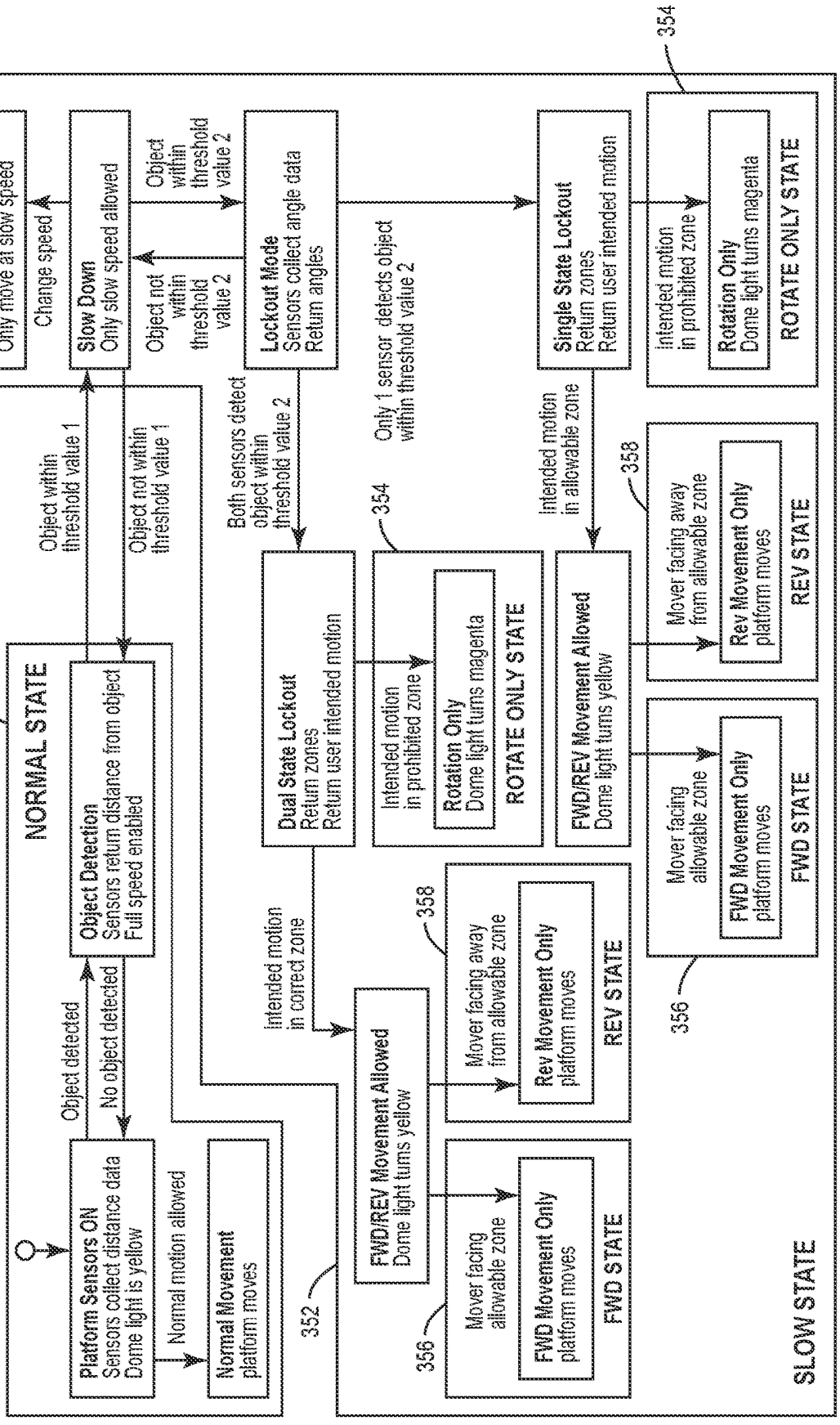
350
NORMAL STATE
Platform Sensors ON
Sensors collect distance data
Dome light is yellow
Object detected
No object detected
Object Detection
Sensors return distance from object
Full speed enabled
Normal motion allowed
Normal Movement
platform moves
Object within threshold value 1
Object not within threshold value 1
Slow Speed Constraint
Only move at slow speed
Change speed
Slow Down
Only slow speed allowed
Object not within threshold value 2
Object within threshold value 2
Lockout Mode
Sensors collect angle data
Return angles
Both sensors detect object within threshold value 2
Only 1 sensor detects object within threshold value 2
Single State Lockout
Return zones
Return user intended motion
intended motion in prohibited zone
Rotation Only
Dome light turns magenta
ROTATE ONLY STATE
354
Intended motion in correct zone
352
FWD/REV Movement Allowed
Dome light turns yellow
Mover facing away from allowable zone
Rev Movement Only
platform moves
REV STATE
358
Mover facing allowable zone
FWD Movement Only
platform moves
FWD STATE
356
Dual State Lockout
Return zones
Return user intended motion
Intended motion in prohibited zone
Rotation Only
Dome light turns magenta
ROTATE ONLY STATE
Intended motion in allowable zone
FWD/REV Movement Allowed
Dome light turns yellow
Mover facing away from allowable zone
Rev Movement Only
platform moves
REV STATE
Mover facing allowable zone
FWD Movement Only
platform moves
FWD STATE
SLOW STATE

FIG. 13

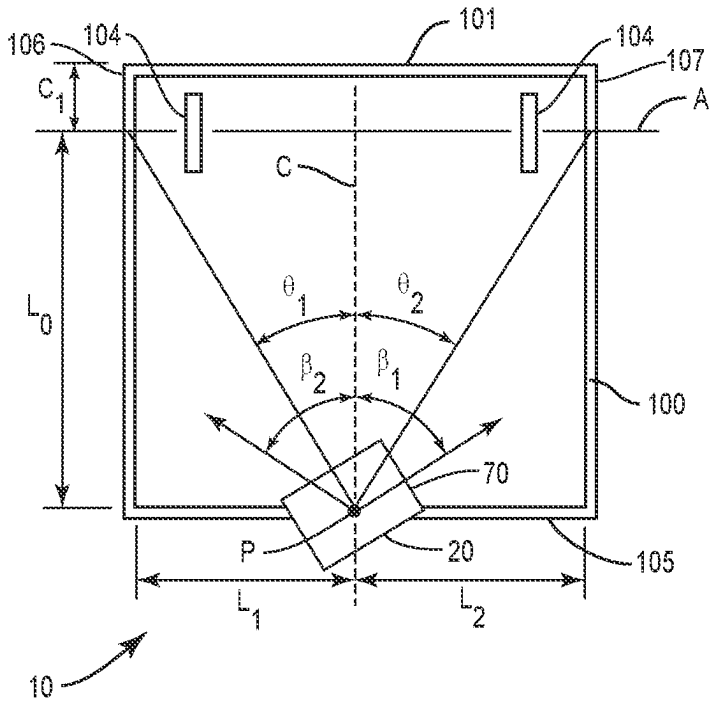
101
106
104
104
107
A
C_1
C
L_0
θ_1
θ_2
β_2
β_1
100
70
P
20
105
L_1
L_2
10

FIG. 14

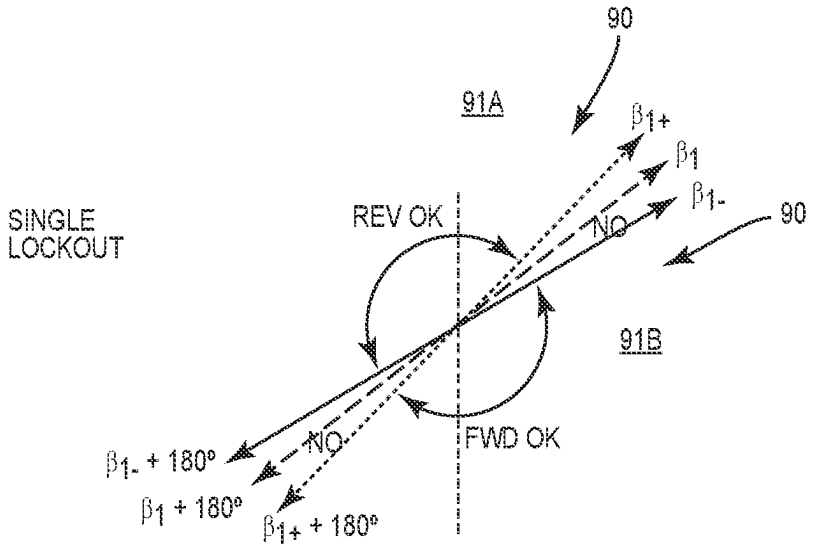
90
91A
β_{1+}
β_1
β_{1-}
90
SINGLE LOCKOUT
REV OK
NO
91B
FWD OK
NO
β_{1-} + 180°
β_1 + 180°
β_{1+} + 180°

FIG. 15

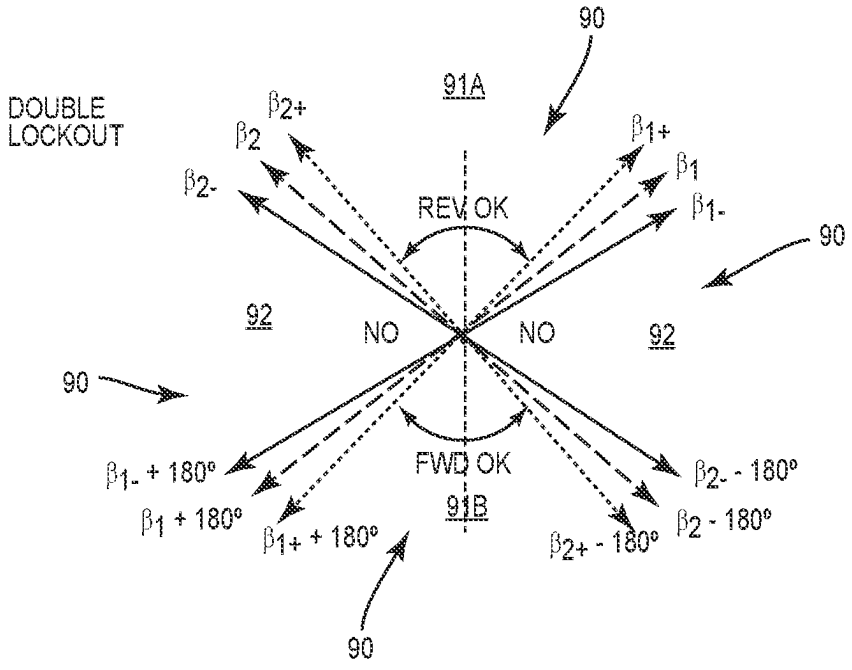
90
91A
DOUBLE LOCKOUT
β_{2+}
β_2
β_{2-}
β_{1+}
β_1
β_{1-}
REV OK
90
92
NO
NO
92
90
FWD OK
β_{1-} + 180°
β_1 + 180°
β_{1+} + 180°
91B
β_{2-} - 180°
β_2 - 180°
β_{2+} - 180°
90

FIG. 16

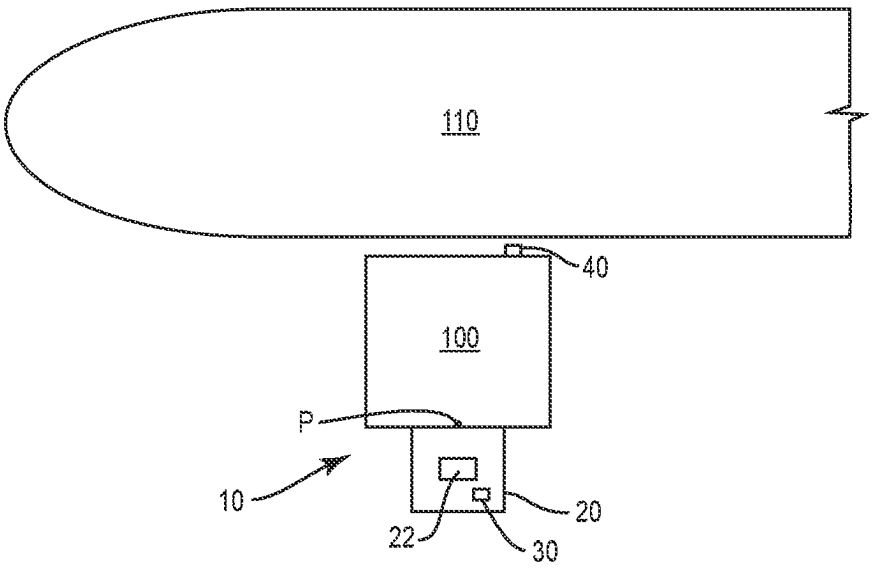

FIG. 17

MOTION LOCKOUT FOR PLATFORM MOVER SYSTEM

RELATED APPLICATIONS

This application claims priority from U.S. Provisional App. No. 63/172,865, filed 9 Apr. 2021, the disclosure of which is incorporated by reference herein in its entirety.

TECHNOLOGICAL FIELD

The present application is directed to a system for moving a platform relative to a target object and, more particularly, to a system that prevents movement of the platform in one or more directions.

BACKGROUND

Many industrial settings use work platforms or other movable structures to position operators and/or equipment relative to a target object, such as a work piece. The platform is often large to support multiple operators and/or equipment and is positioned in close proximity to large target objects. One example is a platform for use with a large commercial aircraft. The platform can have a height in excess of twenty feet to perform various operations on the aircraft.

Some current methods of moving and positioning a platform include workers manually pushing and pulling the platform. Because of the large size and weight of the platform, this movement is often difficult and requires multiple workers. Workers can potentially become injured due to the large forces necessary to move and position the platforms. Another current method includes using equipment, such as forklifts, to move work platforms around a work floor. However, this type of equipment does not include automated collision avoidance capability to protect the target object from potential damage due to accidental contact.

It is often difficult to accurately position the platform relative to the target object. If the platform is not properly positioned relative to the target object such as being too far away or spaced away from the desired position, it may be difficult for the workers and/or equipment to work on the target object. Another issue with moving the platform is the potential for damaging the target object. The platform can accidentally run into the target object during the movement. This is particularly likely when the platform is required to be in very close position relative to the target object which is often required during various manufacturing processes.

Systems have been designed to prevent contact between the platform and the target object. These systems prevent movement of the drive vehicle to prevent the platform from contacting against the platform. However, these systems immobilize motion of the drive vehicle which prevents an operator from moving the drive vehicle and platform in any direction, such as to safely back them away from the target object.

Thus, there is a need for systems and methods of providing for the drive vehicle to move the platform in one or more directions that do not result in the platform contacting against the target object.

Unless explicitly identified as such, no statement herein is admitted to be prior art merely by its inclusion in the Background section.

SUMMARY

One aspect is directed to a system to move a platform relative to a target object. The system comprises a drive vehicle configured to attach to the platform at a pivot point and to move the platform relative to the target object, one or more distance sensors to sense the target object, and one or more rotation angle sensors to measure a relative rotation angle between the drive vehicle and the platform. A processing circuit is configured to: calculate one or more distances between the platform and the target object based on inputs from the one or more distance sensors; based on dimensions of the platform, position of the pivot point on the platform, and inputs from the one or more distance sensors and the rotation angle sensors, calculate heading angle limits and one or more allowable zones in which the drive vehicle can safely move the platform relative to the target object in order to avoid contact between the platform and the target object. The processing circuit is further configured to allow the drive vehicle to move in a first direction with a first relative heading angle that is within one of the allowable zones, and prevent the drive vehicle from moving in a second direction with a second relative heading angle that is outside of one of the allowable zones.

In another aspect, the processing circuit is further configured to move the drive vehicle at or less than an upper limit speed when a leading edge of the platform is located beyond a threshold distance away from the target object and to move the drive vehicle at or less than a slower second upper limit speed when the leading edge is located within the threshold distance from the target object.

In another aspect, indicator lights illuminate in a first color when the drive vehicle is able to move at the first upper limit speed and illuminate in a different second color when the drive vehicle is prevented from moving at the first upper limit speed.

In another aspect, the processing circuit is configured to determine two allowable zones with a first one of the allowable zones providing for just forward movement of the drive vehicle and a second one of the allowable zones providing for just reverse movement of the drive vehicle.

In another aspect, the processing circuit is further configured to calculate a pair of prohibited zones with the drive vehicle prevented from moving in either the forward or reverse directions within the prohibited zones.

In another aspect, the drive vehicle is configured to operate in a rotate only state when the drive vehicle is prohibited from moving in either the forward or reverse directions.

In another aspect, the processing circuit is further configured to determine that the platform is farther than a predetermined distance away from the target object and allowing the drive vehicle to move in any direction.

In another aspect, the processing circuit is further configured to determine a direction in which the drive vehicle is facing with respect to the platform.

In another aspect, the drive vehicle comprises a body, drive members connected to the body and configured to contact against a work floor, one or more motors to drive the drive members, and a mount attached to the body to connect to the platform.

In another aspect, the processing circuit is positioned within the drive vehicle.

One aspect is directed to a system to move a platform relative to a target object. The system comprises a drive vehicle configured to pivotably attach to the platform and to move the platform relative to the target object. A processing circuit is configured to: calculate one or more distances between the platform and the target object; acquire an angular position of the drive vehicle relative to the platform; calculate allowable heading angle limits in which the drive

vehicle can move the platform relative to the target object in directions that avoid contact between the platform and the target object; receive a command to move the drive vehicle; determine that the commanded drive vehicle movement in a first direction is within an allowable zone and move the drive vehicle in the first direction that avoids contact between the platform and the target object; and determine that the commanded drive vehicle movement in a second direction is not within the allowable zone between the allowable heading angle limits and prevent the drive vehicle from moving in the commanded direction.

In another aspect, distance sensors are configured to attach to the platform and sense the target object and with the processing circuit configured to calculate the one or more distances between the platform and the target object based on inputs from the distance sensors.

In another aspect, the allowable zone is a first allowable zone and the processing circuit is further configured to: calculate a second allowable zone that is non-overlapping with the first allowable zone; determine that the drive vehicle can move just in a reverse direction in the first allowable zone; and determine that the drive vehicle can move just in a forward direction in the second allowable zone.

In another aspect, the processing circuit is further configured to move the drive vehicle at or less than a first upper limit speed when the platform is spaced away from the target object beyond a predetermined distance and move the drive vehicle at or less than a slower second upper limit speed when the platform is within the predetermined distance from the target object.

In another aspect, the drive vehicle further comprises a body configured to attach to the platform and drive members to move the body along a work floor.

One aspect is directed to a method of moving a platform relative to a target object with the method comprising: receiving a command to move a drive vehicle connected to the platform in a first direction; calculating one or more distances between the platform and the target object; acquiring a relative angle between the drive vehicle and the platform; determining one or more allowable heading angle limits of the drive vehicle and one or more an allowable zones based on the heading angle limits; using the drive vehicle to move the platform in the first direction when the direction of motion of the drive vehicle is within one of the allowable zones; and maintaining the platform at a current position when the first direction of motion of the drive vehicle is outside of one of the allowable zones.

In another aspect, the method comprises operating the drive vehicle in just a reverse state when the drive vehicle is facing into a first one of the allowable zones and operating the drive vehicle in just a forward state when the drive vehicle is facing into a second one of the allowable zones.

In another aspect, the method comprises determining one or more prohibited zones and operating the drive vehicle in just a rotate only state when the drive vehicle is facing into the one or more prohibited zones.

In another aspect, the method comprises slowing a maximum speed of the drive vehicle when the platform moves within a predetermined distance from the target object.

In another aspect, the method comprises displaying a different color on an indicator light on an operator interface at each time that the drive vehicle transitions to a different operational state.

The features, functions and advantages that have been discussed can be achieved independently in various aspects or may be combined in yet other aspects further details of which can be seen with reference to the following description and drawings.

BRIEF DESCRIPTION OF THE DRAWINGS

FIG. **1** is a top view two-dimensional (2D) drawing diagram of a drive vehicle connected to a platform and positioned in proximity to a target object.

FIG. **2** is a side view 2D drawing diagram of a drive vehicle connected to a platform and with the drive vehicle elevating the platform.

FIG. **3** is a block diagram of a control unit configured to send and/or receive signals from remote components.

FIG. **4** is a top view 2D diagram of critical angle ranges of a platform positioned in proximity to a target object.

FIG. **5** is a top view 2D diagram of allowable heading angles of a platform.

FIG. **6** is a top view 2D diagram of allowable heading angles of a platform.

FIG. **6**A is a diagram of zones of the platform of FIG. **6** including allowable zones and prohibited zones.

FIG. **7** is a top view 2D diagram of allowable heading angles of a platform.

FIG. **7**A is a diagram of zones of the platform of FIG. **7** including allowable zones and prohibited zones.

FIG. **8** is a top view 2D diagram of a single heading angle of a drive vehicle with a single distance sensor detecting the target object within a predetermined threshold.

FIG. **8**A is a diagram of allowable zones of the platform of FIG. **8**.

FIG. **9** is a top view 2D diagram of a single heading angle of a drive vehicle with a single distance sensor detecting the target object within a predetermined threshold.

FIG. **9**A is a diagram of allowable zones of the platform of FIG. **9**.

FIG. **10** is a flowchart diagram of a method of a drive vehicle that moves a platform relative to a target object.

FIG. **11** is a flowchart diagram of a method of a drive vehicle that moves a platform relative to a target object.

FIG. **12** is a flowchart diagram of a method of a drive vehicle that moves a platform relative to a target object.

FIG. **13** is a diagram of operational states of a drive vehicle during operation of moving a platform.

FIG. **14** is a top view 2D diagram of a platform with wheels that are adjustable.

FIG. **15** is a diagram of allowable zones of a platform with an adjustable pivot axis location with a single distance sensor detecting the target object within a predetermined threshold.

FIG. **16** is a diagram of allowable zones of a platform with an adjustable pivot axis location with a pair of distance sensors detecting the target object within a predetermined threshold.

FIG. **17** is a top view 2D diagram of a system to move a platform relative to a target object.

DETAILED DESCRIPTION

FIG. **1** illustrates a top view of drive vehicle **20** configured to move a platform **100** relative to a stationary target object **110**. The drive vehicle **20** is pivotably attached to the platform **100** at a point P. The platform **100** includes wheels **104** that are positioned along axis A. When the drive vehicle **20** applies a force to move the platform **100**, the platform **100** rotates relative to the work floor **99** about a point anywhere along the axis A. Distance sensors **40***a*, **40***b*

measure distances that the platform **100** is located away from the target object **110**. Rotation angle sensor **30** acquires a relative angle between the drive vehicle **20** and the platform **100**. The drive vehicle **20** receives a command to move in one or more forward, reverse, or rotational directions. Based on feedback from the one or more distance sensors **40***a*, **40***b* indicating the one or more distances that the platform **100** is spaced away from the target object **110** and from the rotation angle sensor **30** that acquires the angular position of the drive vehicle **20** relative to the platform **100**, the drive vehicle **20** can move in one or more directions in which the platform **100** will not contact the target object **110** and is prevented from moving in one or more directions that would cause the platform **100** to contact the target object **110**.

The platform **100** can include a variety of different structures and be used for a variety of different purposes. One example as illustrated in the side view shown in FIG. **2** includes the platform **100** with a frame **103** having an elevated work surface **102** configured to support one or more workers who may be performing operations on the target object **110**. The frame **103** can also include steps to provide for egress to and from the elevated work surface **102**. In another example, the platform **100** includes a work surface **102** in closer proximity to the work floor **99**. In one example, the platform **100** includes specialty tooling that is moved between various work locations.

The frame **103** also provides one or more positions for being engaged by the drive vehicle **20**. In one example, the frame **103** includes a hitch that is engaged by a mount **21** on the drive vehicle **20**. In another example, the frame **103** includes members, such as a support beam, that provide for attachment by the drive vehicle **20** at different locations. The platform **100** is configured to be moved by the drive vehicle **20** across a work floor **99** and be positioned relative to the target object **110**. In one example as illustrated in FIG. **2**, the platform **100** includes wheels **104**.

The drive vehicle **20** is configured to attach to the platform **100** at point P. The drive vehicle **20** includes a body **29** that includes a front **70** and rear **71**. The drive vehicle **20** includes drive members **28** to move along the work floor **99**. The drive vehicle **20** can include various types of drive members **28**, including but not limited to wheels and continuous tracks. The drive members **28** equipped with wheels can be configured with standard wheels, tracks, omni wheels, mecanum wheels, and/or swerve drive wheel modules for multi-axis movement. The drive vehicle **20** includes one or more motors **27** to provide power to one or more of the drive members **28**. This power drives the drive vehicle **20** to move the platform **100** across the work floor **99**. In one example, the drive vehicle **20** is a device configured solely for moving platforms **100** across the work floor **99**. In another example, the drive vehicle **20** has other functionality, such as a forklift or tractor, which may be used to attach to and move the platform **100**.

The drive vehicle **20** further includes a mount **21** configured to pivotably attach to the platform **100**. The mount **21** can include various structures, including but not limited to one or more plates configured to receive the platform **100**, a ball and/or hitch, and a gimbal connection between the mount **21** and the body **29**. The pivoting connection forms the pivot point P that provides for the drive vehicle **20** to be positioned at different angular orientations relative to the platform **100**. This provides for the drive vehicle **20** to adjust the angular position of the platform **100** relative to the target object **110**. In one example, the drive vehicle **20** is configured to elevate a section of the platform **100** where it is connected at the mount **21**. In one example as illustrated in FIG. **2**, the drive vehicle **20** includes an extendable element with a telescoping and/or pivoting actuation to move between a retracted position and an extended position.

A control unit **95** controls the movement of the drive vehicle **20**. FIG. **3** is a block diagram that illustrates the control unit **95** that includes one or more processing circuits (shown as processing circuit **22**) that includes one or more microprocessors, Application Specific Integrated Circuits (ASICs), or the like, configured with appropriate software and/or firmware. A computer readable storage medium (shown as memory circuit **23**) stores data and computer readable program code that configures the processing circuit **22** to implement the techniques used to align the platform **100**. Memory circuit **23** is a non-transitory computer readable medium and may include various memory devices such as random access memory, read-only memory, and flash memory.

An operator interface **24** provides for an operator to control the drive vehicle **20**. The operator interface **24** can include one or more operator input devices such as a keypad, touchpad, function keys, scroll wheel, gamepad, joystick, or other type of computer input device. The operator interface **24** can include a display screen, such as a conventional liquid crystal display (LCD) or touch screen display.

A system interface **25** is configured to receive signals and/or send signals with one or more remote components. The system interface **25** can include a transceiver that provides for wireless communications with the components. The system interface **25** can also provide for a hard-wired connection with one or more of the components. In one example, the system interface **25** provides for the drive vehicle **20** to be controlled remotely. In one example, control is through a control device **60** that is handled by an operator. The system interface **25** can also communicate with other remote components, such as a system control unit that oversees multiple different aspects of the manufacturing process.

The rotation angle sensor is **30** mounted to the drive vehicle **20** to acquire the angular position of the drive vehicle **20** relative to the platform **100**. Various types of rotation angle sensors **30** can be used on the drive vehicle **20**, such as but not limited to an absolute encoder or a potentiometer that senses an angle at the pivot point P formed between the mount **21** and/or platform **100** and the body **29**. The angle can include a yaw axis angle which is the rotation about a vertical axis that extends through the pivot point P.

One or more distance sensors **40***a*, **40***b* measure the distance between the platform **100** and the target object **110**. One design includes a pair of distance sensors **40***a*, **40***b* spaced apart along the platform **100** to measure distances at different sections of the platform **100**. Other designs can include three or more distance sensors **40**. Another design includes a single distance sensor **40**. The distance sensors **40** are configured to be positioned along or near a leading edge **101** of the platform **100** that faces the target object **110**. The distance sensors **40** are further configured to be attached to different locations along the leading edge **101** of the platform **100**. This spacing, described by width W, provides for each distance sensor **40** to measure the distance of different sections of the platform **100** away from the target object **110**. Each distance sensor **40** can include an attachment member to attach to the platform **100**. In one example, one or more of the distance sensors **40** are attached to the target object **110** and detect the approaching platform **100**.

A variety of different distance sensors **40** can be used to measure the distance between the platform **100** and the

target object **110**. Distance sensors **40** can include Lidar sensors with an emitter and a receiver. The emitters emit a pulsed laser light with the receiver configured to receive reflected pulses. The distance sensors **40** can also use various other sensing technologies, including but not limited to laser distance sensors, ultrasonic distance sensors, depth cameras, or radar-based distance measurement sensors. The different distance sensors **40** that are attached to the platform **100** can include the same or different sensing technologies.

Indicator lights **80** are positioned at one or more locations to provide a visual indication to the operator of the operational states of the drive vehicle **20**. Positions for the indicator lights **80** include but are not limited to one or more of the drive vehicle **20**, platform **100**, control device **60**, workspace surrounding the target object **110**, and the target object **110**. In one example, the indicator lights **80** illuminate in different colors with each color representing a different operational state of the drive vehicle **20**, such as a first color (e.g., yellow) for a normal state, a second color (e.g., pink) for a rotate only state, a third color (e.g., orange) for a reverse only state, and fourth color (e.g., green) for a forward only state.

In one example, the control unit **95** is mounted to the drive vehicle **20**. The control unit **95** operates based on one or more inputs from the control device **60** and/or operator interface **24**. In another example, the control unit **95** is positioned away from the drive vehicle **20**, such as within the control device **60** as illustrated in FIG. **2**. In one example when the control unit **95** is located remotely from the drive vehicle **20**, the drive vehicle **20** includes basic circuitry to send and receive signals from the control unit **95** and operate the one or more motors **27** to drive and steer the drive vehicle **20**.

FIG. **4** illustrates the drive vehicle **20** connected to the platform **100** at the pivot point P. The platform **100** includes a leading edge **101** that faces towards the target object **110** and an opposing trailing edge **105**. The platform **100** further includes a pair of wheels **104** aligned along an axis A. In one example, at least one of the wheels **104** is locked in a specific angular position relative to a vertical axis to prevent vertical axis rotational motion (castering) of that wheel. This motion constraint enables the entire platform **100** to rotate about a point on axis A when driven by the drive vehicle **20**. A pair of distance sensors **40***a*, **40***b* are attached at the leading edge **101** of the platform **100** and positioned apart by a width W. A length L0 extends between the axis A and the pivot point P. Lengths L1 and L2 are measured between pivot point P and the respective lateral extents **106** and **107** of the platform **100**. The lateral extents **106** and **107** are the furthest physical lateral (e.g., left and right) points of the platform **100** at or in proximity to the leading edge **101** with respect to the pivot location. These extents **106**, **107** are the first points that would contact the target object **110** during rotation of the platform **100**. A reference line C, from which the relative rotation angle between the drive vehicle **20** and platform **100** will be measured, extends through the platform **100** at the pivot point P and through the leading and trailing edges **101**, **105**. In one example, the pivot point P is centered between the lateral extents **106**, **107** and the line C is centered along the platform **100**, in which case L1 is equal in length to L2. In another example, C is not centered along the leading edge **101**, and L1 is not the same length as L2. In another example, the line C is perpendicular to one or both of the leading and trailing edges **101**, **105**.

The control unit **95** receives directional command inputs from an operator to move the drive vehicle **20** and also various inputs from the sensors **30**, **40**. Based on the dimensions of the platform **100**, the directional command inputs, the sensor inputs including distance from the target object **110** and relative angular position of the drive vehicle **20** relative to the platform **100**, the control unit **95** uses algorithms stored in software **97** in the memory circuitry **23** to determine allowable movements that move the drive vehicle **20** such that the platform **100** does not contact against the target object **110**.

FIG. **4** illustrates a drive vehicle **20** that is attached to a platform **100** with the drive vehicle **20** and platform **100** in proximity to a target object **110**. The distance sensors **40***a*, **40***b* measure distances between the platform **100** and the target object **110**. The first distance sensor **40***a* measures a distance d1 between the distance sensor **40***a* and the target object **110**, while the second distance sensor **40***b* measures a distance d2 between distance sensor **40***b* and the target object **110**. The drive vehicle **20** is pivotally connected to the platform **100** at the pivot point P. An angle β is formed between the line C and a direction of travel of the drive vehicle **20**.

A critical angle range is defined with respect to line C and is determined based on the dimensions of the platform **100**. The critical angle range includes a first critical angle θ1 defined as:

$$\theta 1=\tan(L1/L0) \quad \text{(Eq. 1)}$$

The critical angle range also includes a second critical angle θ2 defined as:

$$\theta 2=-\tan(L2/L0) \quad \text{(Eq. 2)}$$

For purposes of the calculations, angles in a counter-clockwise direction from the line C are positive, and angles extending from the line C in a clockwise direction are negative.

As illustrated in FIG. **5**, heading angle limits β1 and β2 are also calculated that define acceptable limits of movement of the drive vehicle **20** that will move the platform **100** without causing contact between the platform **100** and target object **110**. The heading angle limits β1, β2 are defined based on the critical angles θ1, θ2.

$$\beta 1=\theta 1-90° \quad \text{(Eq. 3)}$$

$$\beta 2=\theta 2+90° \quad \text{(Eq. 4)}$$

Motion constraint equations are further calculated to determine whether the drive vehicle **20** can move in the requested direction based on the heading angle limits β1, β2. The motion constraint equations include:

- if (β>β1) and (β<β2), restrict forward (FWD) motion and allow reverse (REV) motion; and
- if (β>β1+180°) and (β<β2−180°), restrict reverse (REV) motion and allow forward (FWD) motion.

FIG. **6** illustrates an example of a drive vehicle **20** that has moved a platform **100** into proximity of a target object **110**. In this position, both distance sensors **40***a*, **40***b* detect the presence of the target object **110**. In this example, the platform **100** includes a relatively large width measured between the lateral extents **106**, **107**. The lengths L1, L2 are large relative to the length L0. In this example, the heading angle limits β1, β2 are relatively narrow (as opposed to FIG. **5** that illustrates an example in which heading angle limits β1, β2 extend outward beyond the critical angles θ1, θ2).

As illustrated in FIG. **6**A, the motion constraint equations define lines that overlap at point P and define four zones **90**. Of the four zones **90**, two are allowable zones **91**A, **91**B that allow for movement, and two are prohibited zones **92** in which forward and reverse motion is not allowed. In one

example using the motion constraint equations, the drive vehicle **20** is able to move in reverse when the front **70** is facing within allowable zone **91**A and is able to move forward when the front **70** is facing within allowable zone **91**B. Forward or reverse motion of the drive vehicle **20** is not allowed when the front **70** is facing within either of prohibited zones **92**. Rotational movement of the drive vehicle **20** would be allowed when the drive vehicle **20** is facing within either of the prohibited zones **92**.

FIG. **7** illustrates an example in which the platform **100** includes a relatively small width measured between the lateral extents **106**, **107** relative to a length L0. In this example, the heading angle limits β1, β2 are wider than the critical angles θ1, θ2. As illustrated in FIG. **7**A, the motion constraints define the zones **90** in which particular motion is allowed for the drive vehicle **20** in allowable zones **91**A, **91**B, and not allowed in prohibited zones **92**. The drive vehicle **20** would be able to move in reverse when the front **70** is facing within allowable zone **91**A and would be able to move forward when the front **70** is facing within allowable zone **91**B. Forward or reverse motion of the drive vehicle **20** would not be allowed when the front **70** is facing within either of prohibited zones **92** (although rotational movement of the drive vehicle **20** would be allowed).

In one example such as illustrated in FIGS. **6** and **6**A, β1 is −40° and β2 is 40°. In another example such as illustrated in FIGS. **7** and **7**A, β1 is −60° and β2 is 60°.

The examples disclosed above include situations in which two of the distance sensors **40***a*, **40***b* each detect the presence of the target object **110**. That is, each of the distance sensors **40***a*, **40***b* are within a predetermined distance of the target object **110**. Situations can also occur in which a single distance sensor **40** detects the presence of the target object **110**.

FIGS. **8** and **8**A illustrate an example in which the leading edge **101** of the platform **100** is not evenly aligned with the target object **110**. In this example, distance sensor **40***a* is in closer proximity to the target object **110** than distance sensor **40***b*. In one example, distance sensor **40***b* does not detect the target object **110** at distance d2. In another example, distance sensor **40***b* detects the target object **110**, but the distance d2 is beyond a predetermined distance threshold in which the processing circuit **22** calculates allowable heading angles. With a single sensor detection with distance sensor **40***a*, a single critical angle θ1 and a single heading angle limit β1 is determined. As illustrated in FIG. **8**A, a graph includes a single line formed by β1 and β1+180°. The single line defines zones **90** that dictate the allowable directional movements of the drive vehicle **20**. The drive vehicle **20** is allowed to move in a reverse direction when the front **70** is facing into allowable zone **91**A (and prevented from moving in a forward direction). The drive vehicle **20** is allowed to move in a forward direction when the front **70** is facing into allowable zone **91**B (and prevented from moving in a reverse direction). In one example, β1 is −50°. The drive vehicle **20** is able to have rotational movement when facing into the different zones **91**A, **91**B.

FIGS. **9** and **9**A include an example in which distance sensor **40***b* detects the target object **110**. Distance sensor **40***a* either does not detect the target object **110** or the distance d1 is beyond a predetermined distance. A single critical angle θ2 and a single heading angle limit β2 is determined. The graph of FIG. **9**A includes a single line formed by β2 and β2−180° that defines the zones **90**. The drive vehicle **20** is allowed to move in a reverse direction when the front **70** is facing into zone **91**A (and prevented from moving in a forward direction). The drive vehicle **20** is allowed to move in a forward direction when the front **70** is facing into zone **91**B (and prevented from moving in a reverse direction). In one example, β2 is 40°. The drive vehicle **20** is able to have rotational movement when facing into the different zones **91**A, **91**B.

The drive vehicle **20** is configured to receive commands to move in various manners relative to the front **70**. These can include moving in a forward direction (i.e., in the direction that the front **70** is facing), a reverse direction (i.e., away from the direction that the front **70** is facing), and rotational directions in which the drive vehicle **20** rotates about the point P relative to the platform **100**. Further, the drive vehicle **20** can operate in different speed ranges, which are defined by constraints on the upper limit speed allowed in each operating state. A normal state operates with a first upper limit speed, and a slow state operates with a second upper limit speed that is slower than the first upper limit speed. In one example, the drive vehicle **20** is also able to operate at a variety of other states with upper limits that include speeds that are slower than the first upper limit speed. The different states can apply to both forward, reverse, and rotational movements. In one example, the drive vehicle **20** operates in two states: a normal state; and a slow state.

During use, an operator enters commands to move the drive vehicle **20** and the attached platform **100**. The commands can be entered through the operator interface **24** on the drive vehicle **20**, through the remote control device **60**, another remote device, or various combinations. The control unit **95** is configured to determine whether the movements of the drive vehicle **20** can occur. If the movement can occur, the control unit **95** determines the speed at which the movement occurs.

FIG. **10** illustrates a method of operating the drive vehicle **20** to move and position the platform **100** relative to the target object **110**. The processing circuit **22** receives commands from the operator to direct the drive vehicle **20** and platform **100** towards the target object **110** (block **200**). These commands can include various directional commands, including but not limited to rotational directions, forward movement, and reverse movement. When the platform **100** is beyond a threshold from the target object **110**, the drive vehicle **20** operates in a first state. During movement of the platform **100**, one or more distance sensors **40** positioned on the platform **100** detects the target object **110** when the platform **100** moves to within the distance threshold (block **202**). The relative rotational angle of the drive vehicle **20** with respect to the platform **100** is acquired by the rotation angle sensor **30** (block **203**). Based on the sensor inputs and the dimensions of the platform **100**, the allowable heading angle limits and allowable zones **91** are determined for the drive vehicle **20** (block **204**).

The commanded directional heading of the drive vehicle **20** is then compared with the allowable heading angle limits (block **206**). If the motion command input by the operator is in an allowed zone **91**, the drive vehicle **20** and platform **100** are moved (block **208**). For example, the movement is allowed when the direction of movement moves the potential platform contact points away from the target object **110**. If the motion command input by the operator is not in an allowed zone **91**, the forward or reverse movement of the drive vehicle **20** is prevented (block **210**). In one example, the input command would move one or more potential platform contact points towards the target object **110** and the forward and reverse movement is therefore prevented. Movement other than forward or reverse may be allowed (e.g., rotational movement instead of forward or reverse

movement) to allow the drive vehicle **20** to change orientation with respect to the platform **100**, in order to allow the drive vehicle **20** to achieve a heading angle that is in an allowed zone **91**.

FIG. **11** illustrates another method of controlling the movement of the drive vehicle **20**. Motion commands are received from the operator to move the drive vehicle **20** and platform **100** (block **300**). The distance between the platform **100** and the target object **110** are determined based on input acquired from the one or more distance sensors **40** (block **302**). The sensed distance between the platform **100** and target object **110** is compared to a predetermined threshold (block **304**). If the distance is not within the threshold, the drive vehicle **20** is moved in the commanded direction (block **306**). In one example, this includes the processing circuit **22** sending inputs to motor controllers in the drive vehicle **20** to drive the drive members **28**.

If the sensed distance between the platform **100** and the target object **110** is within the threshold (block **304**), the relative angle between the drive vehicle **20** and platform **100** is acquired from the rotation angle sensor **30** (block **308**) and two or more allowable heading angle limits are determined (block **310**). The received heading direction from the operator is compared to the allowable zones **91** (block **312**). If the received motion direction is within an allowable zone **91**, the drive vehicle **20** is moved as requested by the operator (block **314**). If the received motion direction is not within an allowable zone **91**, drive vehicle movement in the commanded direction is not allowed (block **316**). In one example, the drive vehicle **20** is prevented from moving from the current location but is able to rotate relative to the platform **100**.

FIG. **12** illustrates a method of operating a drive vehicle **20** and moving a platform **100**. Initially, the drive vehicle **20** operates at a normal state (with no motion constraints) as the drive vehicle **20** is not within proximity to the target object **110** (block **400**). During the normal state, the distance sensors **40** are active to detect the target object **110** and the drive vehicle **20** moves at a first upper limit speed. During the normal state, the indicator lights **80** are illuminated a first color (e.g., yellow) to indicate to the operator that the drive vehicle **20** is operating in this normal state. In one example, the normal state occurs when the drive vehicle **20** is beyond a predetermined distance away from the target object **110**.

The processing circuit **22** monitors the distance sensors **40** to detect the target object **110** (block **402**). As the drive vehicle **20** moves the platform **100**, eventually one or more of the distance sensors **40** detect the target object **110** while the drive vehicle **20** is operating in the normal state. Once detected, the distance to the target object **110** is determined (block **404**). The distance is compared to a first threshold (block **406**). If the distance is above the first threshold, the drive vehicle **20** continues to operate in the normal state at the first upper limit speed. When the distance to the target object **110** is within a first threshold value, the drive vehicle **20** enters into a slow state in which the drive vehicle **20** operates at a slower upper limit speed (block **408**). While the drive vehicle **20** is within the first threshold distance, the drive vehicle **20** is unable to operate at a speed above the slow upper limit speed. Further, the indicator lights **80** change to a different color to indicate to the operator that the drive vehicle **20** is approaching the target object **110**.

While operating at the slower upper limit speed, the distance to the target object **110** is monitored (block **410**). If the drive vehicle **20** is still outside of a second threshold, the drive vehicle **20** continues to operate at the slower upper limit speed. When the drive vehicle **20** moves the platform **100** within the second threshold, the relative rotational angle between the drive vehicle **20** and platform **100** is acquired from the rotation angle sensor **30** (block **411**) and zones **90** are determined by the processing circuit **22** (block **412**). In one example, a single distance sensor **40** detects the target object **110** resulting in the calculation of two zones **90**. In another example, both distance sensors **40** detect the target object **110** resulting in the calculation of four zones **90**. The indicator lights **80** also change to a different color once the platform **100** moves to within the second threshold of the target object **110**.

The processing circuit **22** then determines whether the commanded movement is within an allowable zone **91** (block **414**). If the commanded movement is not within an allowable zone **91**, the movement is not allowed and the movement stops. In one example, the drive vehicle **20** is allowed to just have rotational movement (block **416**). The indicator lights **80** change to a different color (e.g., magenta) to indicate to the operator that the movement is limited to just rotational movement.

When the commanded movement is within an allowable zone **91**, the drive vehicle direction is determined (block **418**). If the drive vehicle **20** is facing away from an allowable zone **91** (i.e., the front **70** is facing towards a prohibited zone **92**), the drive vehicle movement is limited to just reverse movement (block **420**). The indicator lights **80** may change to another color (e.g., orange) to indicate the reverse movement. In one example, the drive vehicle **20** is also able to rotate.

When the drive vehicle **20** is facing an allowable zone **91**, the drive vehicle movement is limited to just forward movement (block **422**). The indicator lights **80** may change to another color (e.g., green) to indicate the allowed forward movement. In one example, the drive vehicle **20** is also able to rotate.

In one example, the processing circuit **22** performs angle and movement calculations once the drive vehicle **20** and platform **100** move within the second threshold distance. The processing circuit **22** receives data from the rotation angle sensor **30** and uses the kinematics algorithm software **97** stored in the memory circuit **23** to determine the relative angle of the drive vehicle **20** to the platform **100**. This can include the drive vehicle heading direction (e.g., drive vehicle directly facing platform **100**, 180° from facing platform **100**, etc.).

The processing circuit **22** uses the kinematics equations of the software **97** to determine the allowable heading angle limits and zones **90** for the drive vehicle **20**, including the one or more allowable zones **91** and one or more prohibited zones **92**. If the motion command input by the operator is in an allowable zone **91** (i.e. moves potential platform contact points away from the target object **110**), the processing circuit **22** allows the movement of the drive vehicle **20** and the resulting platform movement. But if the motion command input by the operator is not in an allowed movement zone **91** (i.e. moves potential platform contact points towards the target object **110**), the processing circuit **22** does not allow the movement and the drive vehicle **20** and the platform **100** position is not changed. The processing circuit **22** may allow rotational movement of the drive vehicle **20** to change the orientation of the drive vehicle **20**.

FIG. **13** is a state machine transition diagram indicating different states that the drive vehicle **20** operates in during movement of the platform **100**. This example includes two distance sensors **40***a*, **40***b* attached to the platform **100** and a single rotation angle sensor **30**.

Initially, the drive vehicle **20** operates in a normal state (block **350**). The indicator lights **80** are a first color (e.g., yellow) indicating to the operator that the drive vehicle **20** is operating in the normal state with normal movement of the drive vehicle **20**. The distance sensors **40***a*, **40***b* collect distance data and while the platform **100** is spaced away from the target object **110** the drive vehicle **20** operates up to full upper limit speed. In one example, the full upper limit speed is the maximum speed of the drive vehicle **20**.

The drive vehicle **20** transitions to a slow state (block **352**) when the target object **110** is detected to be within a first threshold distance. The slow state provides for the drive vehicle **20** to operate at a slower upper limit speed than the normal state. The extent of the decrease in speed can vary with various speed settings available for use. While operating in the slow state, the distance sensors **40***a*, **40***b* continue to collect distance data regarding the distance the platform **100** is spaced away from the target object **110**.

While operating in the slow state, the platform **100** moves to within a second threshold distance of the target object **110**. Upon moving to within the second threshold distance of the target object **110**, the drive vehicle **20** is in a lockout mode with the rotation angle sensor **30** acquiring angle data. The control unit **95** determines heading angle limits and corresponding zones **90**.

During operation when just one distance sensor (e.g., **40***a*) detects that the platform **100** is within the second threshold distance, the drive vehicle **20** operates in a single state lockout mode. The control unit **95** determines the zones **90** and compares these with the commanded motion received from the operator. In the single state lockout mode, when the commanded motion received by the operator is in a prohibited zone **92**, the drive vehicle **20** transitions to a rotate only state (block **354**). The indicator lights **80** also change to a different color (e.g., magenta) to indicate the rotate only state to the operator.

In another example when the drive vehicle **20** is operating in the single state lockout mode, the commanded motion received from the operator is within an allowable zone **91**. The indicator lights **80** change color (e.g., yellow) indicating that the drive vehicle **20** is able to move in forward and reverse directions.

When the drive vehicle **20** is facing into an allowable zone **91**, the drive vehicle **20** transitions to a forward state (block **356**) and is able to operate only in the forward direction. When the drive vehicle **20** is facing away from an allowable zone **91**, the drive vehicle **20** transitions to a reverse state (block **358**) in which only reverse movement is allowed.

In another example when the drive vehicle **20** is in the slow state and within the lockout mode, both sensors **40***a*, **40***b* detect that the platform **100** is within a second threshold value. The drive vehicle **20** then operates in a dual state lockout mode with the control unit **95** determining the zones **90** and comparing against the commanded motion received from the operator. When the control unit **95** determines that the commanded motion is into a prohibited zone **92**, the drive vehicle **20** transitions to the rotate only state (block **354**). The indicator lights **80** change color (e.g., magenta) indicating to the operator that the drive vehicle **20** is in the rotate only state.

In another example, when the drive vehicle **20** is in the dual state lockout mode and the intended motion from the operator is within an allowable zone **91**, the drive vehicle **20** is able to operate in forward and reverse. When the drive vehicle **20** is facing into an allowable zone **91**, the drive vehicle **20** transitions to the forward state (block **356**) that allows for just forward movement. When the drive vehicle **20** is facing away from an allowable zone **91**, the drive vehicle **20** transitions to the reverse state (block **358**) that only provides for reverse movement.

In one example, the platform **100** includes wheels **104** that are aligned along an axis A on which the platform **100** pivots. As illustrated in FIG. **1**, the wheels **104** are fixed to the platform **100** such that the axis A remains fixed relative to the platform **100**. In another example as illustrated in FIG. **14**, the configuration of wheels **104** may be adjusted relative to the platform **100**. In one example, the wheels **104** are on casters to move positions. In another example, the wheels **104** are on slides and are movable along a length of the platform **100**. As illustrated in FIG. **14**, the axis A can be changed a distance C1 relative to the distance Lo. With the adjustable position, the critical angles are calculated as follows:

$$\theta 1=\tan(L1/(L0\pm C1)) \quad \text{(Eq. 5)}$$

The critical angle range also includes a second critical angle θ2 defined as:

$$\theta 2=-\tan(L2/(L0\pm C1)) \quad \text{(Eq. 6)}$$

The heading angle limits β1, β2 are defined based on the critical angles θ1, θ2, as described in Eqs. 3 and 4, and the variations in the resulting heading limits due to the ±C1 variable are referred to as β1+ and β1−, and β2+ and β2−. The adjustability of the wheels **104** also affects the position and size of the zones **90**, which will be described next.

FIG. **15** illustrates an example in which a single distance sensor **40***a* detects the target object **110**. For example, a distance sensor **40***a* detects the target object **110** while distance sensor **40***b* does not detect the target object **110**. With a single sensor detection with distance sensor **40***a*, a single critical angle θ1 and a single heading angle limit β1 is determined, with the related variations β1+ and β1−, due to the addition or subtraction of the C1 variable. As illustrated in FIG. **15**, a graph includes multiple variations in heading angle limits each determined based on the location of the axis A. The heading angle limits define zones **90** that determine the allowable directional movements of the drive vehicle **20**. The drive vehicle **20** is allowed to move in a reverse direction when the front **70** is facing into allowable zone **91**A (and prevented from moving in a forward direction). The drive vehicle **20** is allowed to move in a forward direction when the front **70** is facing into allowable zone **91**B (and prevented from moving in a reverse direction). Rotational movement is allowed when the drive vehicle **20** is facing into either of the zones **91**A, **91**B.

FIG. **16** illustrates an example in which both distance sensors **40***a*, **40***b* detect the target object **110**. Multiple variations in heading angle limits are defined based on the position of the axis A, due to the offset variable C1. With both distance sensors **40***a*, **40***b* detecting the target object **110**, two critical angles θ1, θ2 are computed and two heading angle limits β1, β2 are determined, along with the related variations β1+ and β1−, β2+ and β2−, due to the addition or subtraction of the C1 variable. As illustrated, the motion constraints define the zones **90** in which particular motion is allowed for the drive vehicle **20** in allowable zones **91**A, **91**B, and not allowed in prohibited zones **92**. The drive vehicle **20** would be able to move in reverse when the front **70** is facing within allowable zone **91**A and would be able to move forward when the front **70** is facing within allowable zone **91**B. Motion of the drive vehicle **20** would not be allowed when the front **70** is facing within either of prohibited zones **92**. Rotational movement is allowed when the drive vehicle **20** is facing into any of the zones **91**A, **91**B, **92**.

FIG. **17** illustrates a schematic diagram of a system to move a platform **100** relative to a target object **110**. The system **10** includes a drive vehicle **20** configured to attach to the platform **100** and to move the platform **100** relative to the target object **110**. One or more distance sensors **40** are positioned to sense the target object **110**, and a rotation angle sensor **30** acquires the angular position of the drive vehicle **20** relative to the platform **100**. A processing circuit **22** controls the movement and calculates a distance between the platform **100** and the target object **110** based on inputs from the one or more distance sensors **40** and rotation angle sensors **30**. Based on dimensions of the platform **100** and a position of the pivot point P at which the drive vehicle **20** is attached to the platform **100**, the processing circuit **22** calculates heading angle limits in which the drive vehicle **20** can move the platform **100** relative to the target object **110** that avoids contact between the platform **100** and the target object **110**. The processing circuit **22** allows the drive vehicle **20** to move in a first direction with a first relative heading angle that is within an allowable zone **91** formed between the allowable heading angle limits and prevent the drive vehicle **20** from moving in a second direction with a second relative heading angle that is outside of the allowable zone **91** formed between the allowable heading angle limits.

The mover system **10** is configured to accommodate a variety of different platforms **100** in a variety of contexts. The examples above include a platform **100** configured to support and position workers and/or equipment within proximity to a target object **110**, such as a workpiece on which work is to be performed. Another example of a platform **100** is a trailer that includes wheels that provide for the trailer to be moved by a drive vehicle **20**. In various other examples, the platform **100** is a passive device that is configured to be moved by a drive vehicle **20**.

The present embodiments may be carried out in other ways than those specifically set forth herein without departing from essential characteristics of the systems and methods. The present embodiments are to be considered in all respects as illustrative and not restrictive, and all changes coming within the meaning and equivalency range of the appended claims are intended to be embraced therein.

What is claimed is:

1. A system to move a platform relative to a target object, the system comprising:

a drive vehicle configured to attach to the platform at a pivot point and to move the platform relative to the target object;

one or more distance sensors to sense at least one distance between a leading edge of the platform and the target object;

one or more rotation angle sensors to measure a relative rotation angle at the pivot point between the drive vehicle and the platform; and

a processing circuit configured to determine directional movements of the platform and the drive vehicle relative to a center line that extends through a center of the leading edge and the pivot point, the processing circuit further configured to:

determine the at least one distance between the leading edge of the platform and the target object based on inputs from the one or more distance sensors;

based on dimensions of the platform, a position of the pivot point relative to the platform, the inputs from the one or more distance sensors, and inputs from the one or more rotation angle sensors, determine a plurality of heading angle limits relative to the center line in which the drive vehicle can safely move the platform relative to the target object while avoiding contact between the platform and the target object, the plurality of heading angle limits defining at least a first allowable zone and a second allowable zone opposing the first allowable zone;

allow the drive vehicle to move in a first direction with a first relative heading angle that is within one of the first and second allowable zones and move the platform without contacting the platform against the target object; and

prevent the drive vehicle from moving in a second direction with a second relative heading angle that is outside of the first and second allowable zones.

2. The system of claim **1**, wherein the processing circuit is further configured to move the drive vehicle at or less than a first upper limit speed when the leading edge of the platform is located beyond a threshold distance from the target object and to move the drive vehicle at or less than a slower second upper limit speed when the leading edge of the platform is located within the threshold distance from the target object.

3. The system of claim **2**, further comprising a plurality of indicator lights that illuminate in a first color when the drive vehicle is able to move at the first upper limit speed and illuminate in a different second color when the drive vehicle is unable to move at the first upper limit speed.

4. The system of claim **1**, wherein the first allowable zone is for just forward movement of the drive vehicle, and the second allowable zone for just reverse movement of the drive vehicle.

5. The system of claim **4**, wherein the plurality of heading angle limits further define a pair of prohibited zones, and the processing circuit is further configured to restrict directional movements of the drive vehicle within the prohibited zones.

6. The system of claim **5**, wherein the drive vehicle is configured to operate in a rotate-only state when directional movements of the drive vehicle are within the prohibited zones.

7. The system of claim **1**, wherein the processing circuit is further configured to determine that the platform is farther than a predetermined distance from the target object and allow the drive vehicle to move in any direction based on determining that the platform is farther than the predetermined distance from the target object.

8. The system of claim **1**, wherein the pivot point allows for the drive vehicle to be positioned at different angular orientations relative to the platform.

9. The system of claim **1**, wherein the drive vehicle comprises a body, a plurality of drive members connected to the body and configured to move along a work floor, one or more motors to drive the plurality of drive members, and a mount attached to the body to connect to the platform.

10. The system of claim **1**, wherein the processing circuit is positioned within the drive vehicle.

11. A system to move a platform relative to a target object, the system comprising:

a drive vehicle configured to pivotably attach to the platform at a pivot point and to move the platform relative to the target object; and

a processing circuit configured to:

determine at least one distance between a first edge of the platform and the target object;

acquire an angular position of the drive vehicle relative to the platform;

determine a plurality of heading angle limits in which the drive vehicle can move the platform relative to the target object, the plurality of heading angle limits

defined relative to a center line that extends through the pivot point and the first edge of the platform;

determine a plurality of zones that are spaced around the pivot point with the plurality of zones being bounded by the plurality of heading angle limits, the plurality of heading angle limits defining outer extents of directional movement of the drive vehicle, with a first set of the plurality of zones being allowable zones in which the drive vehicle can move without causing the platform to contact the target object;

receive at least one command to move the drive vehicle;

determine that commanded drive vehicle movement in a first direction is within one of the allowable zones and move the drive vehicle in the first direction while avoiding contact between the platform and the target object; and

determine that commanded drive vehicle movement in a second direction is not within one of the allowable zones and prevent the drive vehicle from moving in the second direction.

12. The system of claim **11**, further comprising one or more distance sensors configured to attach to the platform and sense the target object, wherein the processing circuit is further configured to determine the at least one distance between the first edge of the platform and the target object based on inputs from the one or more distance sensors.

13. The system of claim **11**, wherein the processing circuit is further configured to:

allow just reverse movement of the drive vehicle in one of the allowable zones; and

allow just forward movement of the drive vehicle in the other one of the allowable zones.

14. The system of claim **11**, wherein the processing circuit is further configured to move the drive vehicle at or less than a first upper limit speed when the first edge of the platform is beyond a predetermined distance from the target object and move the drive vehicle at or less than a slower second upper limit speed when the first edge of the platform is within the predetermined distance from the target object.

15. The system of claim **11**, wherein the drive vehicle further comprises a body configured to attach to the platform and a plurality of drive members connected to the body and configured to move along a work floor.

16. A method of moving a platform relative to a target object, the method comprising:

receiving at least one command to move a drive vehicle connected to the platform;

determining at least one distances between the platform and the target object;

acquiring a relative angle between the drive vehicle and the platform;

determining a plurality of heading angle limits of the drive vehicle and a plurality of allowable zones based on the plurality of heading angle limits, the plurality of heading angle limits defined relative to a center line that extends through a point where the drive vehicle is connected to the platform and that is transverse to a pivot axis of the platform;

using the drive vehicle to move the platform in a first direction when commanded drive vehicle movement in the first direction is within one of the allowable zones; and

maintaining the platform at a current position when commanded drive vehicle movement in a second direction is outside of the allowable zones.

17. The method of claim **16**, further comprising operating the drive vehicle in just a reverse state when the drive vehicle is facing into a first one of the allowable zones and operating the drive vehicle in just a forward state when the drive vehicle is facing into a second one of the allowable zones.

18. The method of claim **16**, further comprising determining a plurality of prohibited zones that are positioned adjacent to and in a non-overlapping arrangement with the allowable zones and operating the drive vehicle in a rotate-only state when the drive vehicle is facing into one of the prohibited zones.

19. The method of claim **16**, further comprising reducing a maximum speed of the drive vehicle when the platform moves within a predetermined distance from the target object.

20. The method of claim **16**, further comprising displaying a different color for an indicator light on an operator interface each time that the drive vehicle transitions to a different operational state.

* * * * *