US 20250256515A1

(19) United States

(12) Patent Application Publication

BONNAIN et al.

(10) Pub. No.: US 2025/0256515 A1

(43) Pub. Date: Aug. 14, 2025

(54) **PACKING SYSTEMS AND METHODS, AND BARCODE MASKING APPARATUS FOR THE SAME**

(71) Applicant: **WestRock Packaging Systems, LLC**, Atlanta, GA (US)

(72) Inventors: **Jean-Christophe BONNAIN**, Châteauroux (FR); **Cedric VOSGEOIS**, Villefranche sur Cher (FR); **Barbara LUCHE**, Vouillon (FR)

(21) Appl. No.: **18/702,833**

(22) PCT Filed: **Oct. 20, 2022**

(86) PCT No.: **PCT/US2022/047330**

§ 371 (c)(1),
(2) Date: **Apr. 19, 2024**

Related U.S. Application Data

(60) Provisional application No. 63/257,874, filed on Oct. 20, 2021.

Publication Classification

(51) **Int. Cl.**

B41J 3/407	(2006.01)
B65B 35/46	(2006.01)
B65B 35/58	(2006.01)

(52) **U.S. Cl.**

CPC ***B41J 3/40733*** (2020.08); ***B65B 35/46*** (2013.01); ***B65B 35/58*** (2013.01)

(57) **ABSTRACT**

A masking module includes a masking apparatus situated proximate to a path of a container. The masking apparatus is configured to apply a mask to at least a portion of a barcode of the container as the container travels along the path. The masking module also includes a controller in communication with the masking apparatus. The controller is configured to selectively actuate the masking apparatus when the container passes by the masking apparatus along the path.

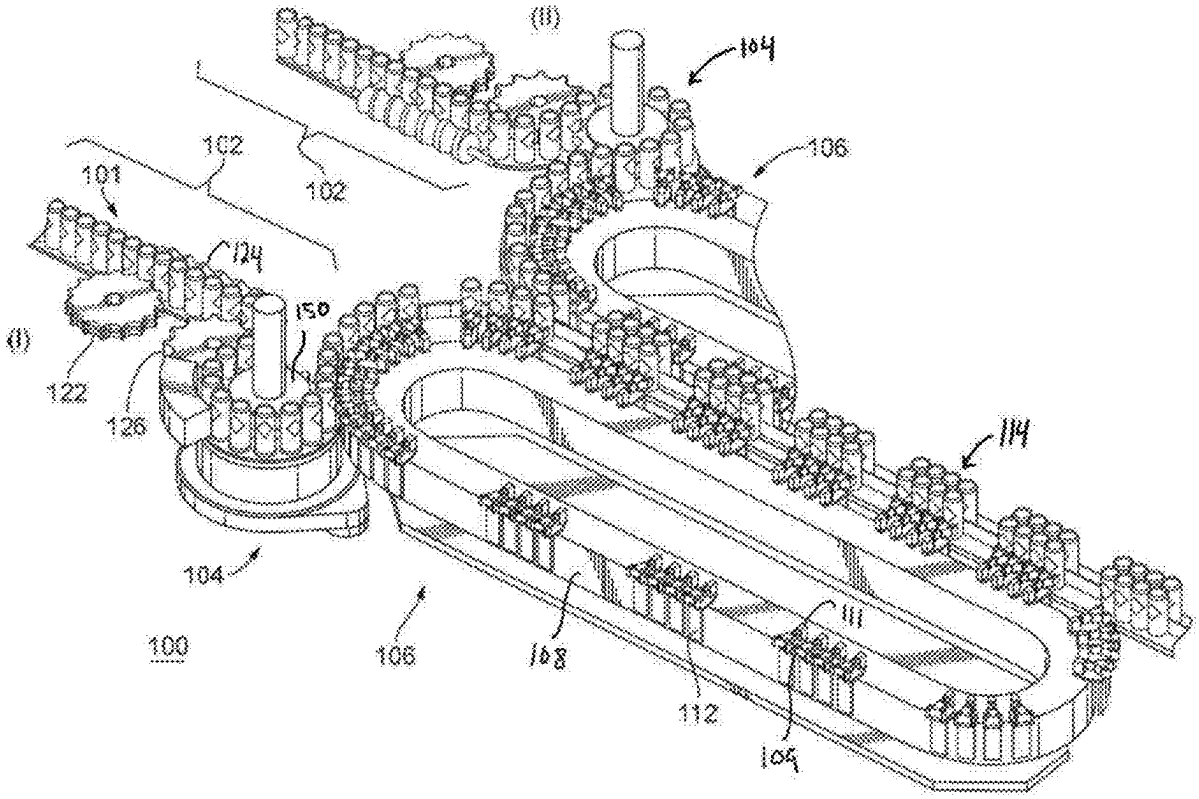

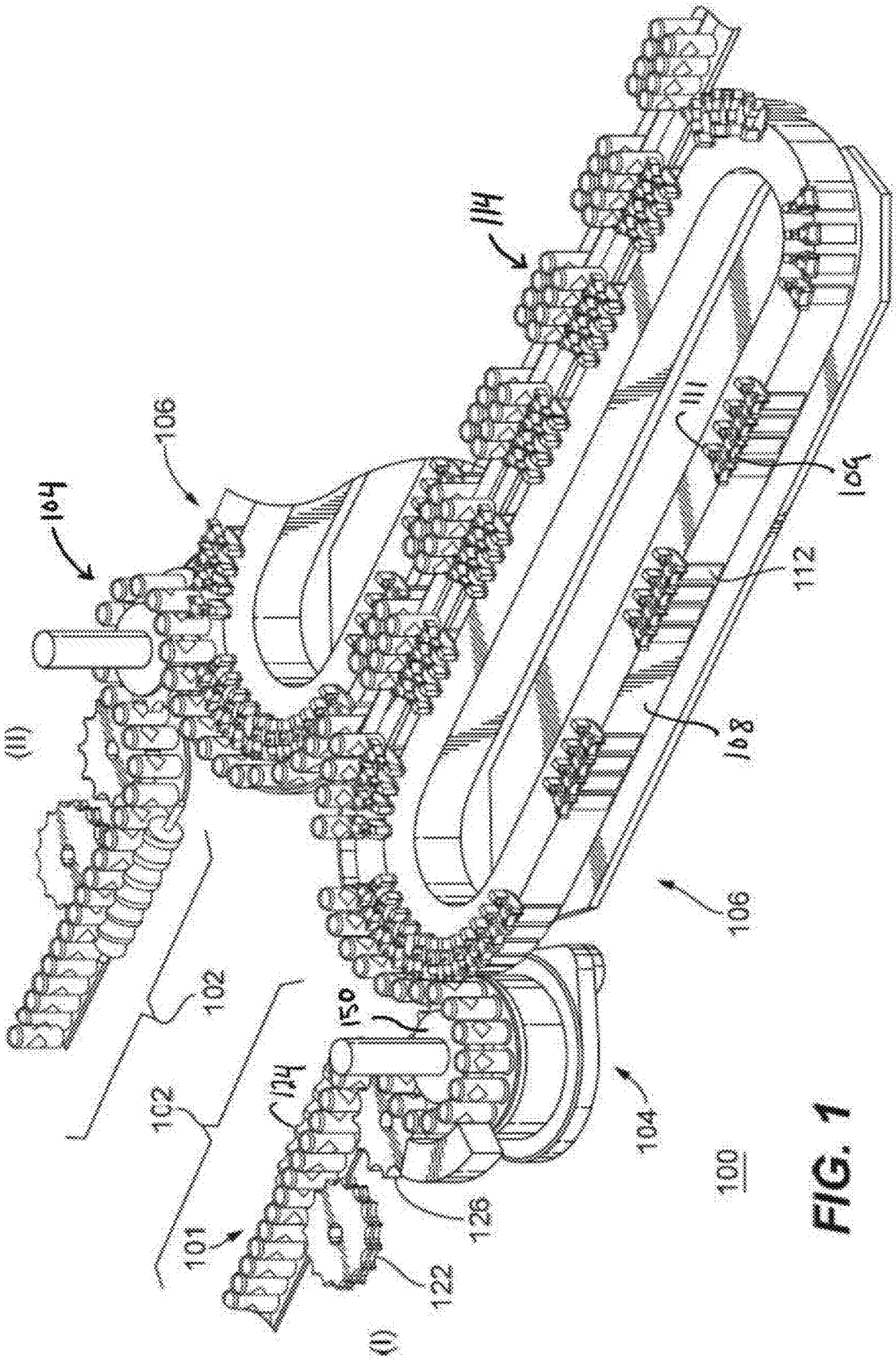
114
106
164
(III)
102
102
124
150
101
122
(II)
126
104
100
106
168
112
111
164

FIG. 1

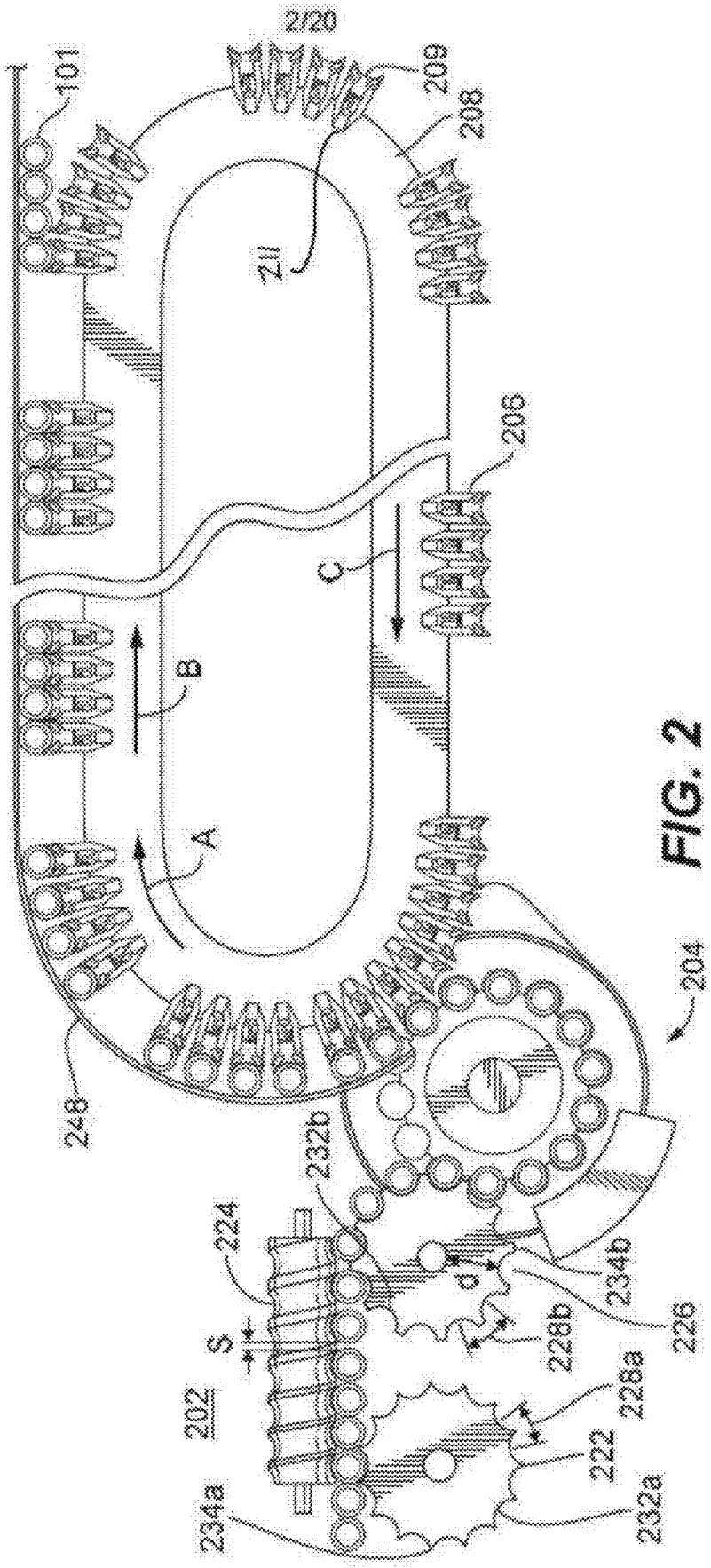
101
220
209
208
211
206
C
B
A
248
204
232b
224
234b
226
228b
228a
222
232a
234a
202
S
d

FIG. 2

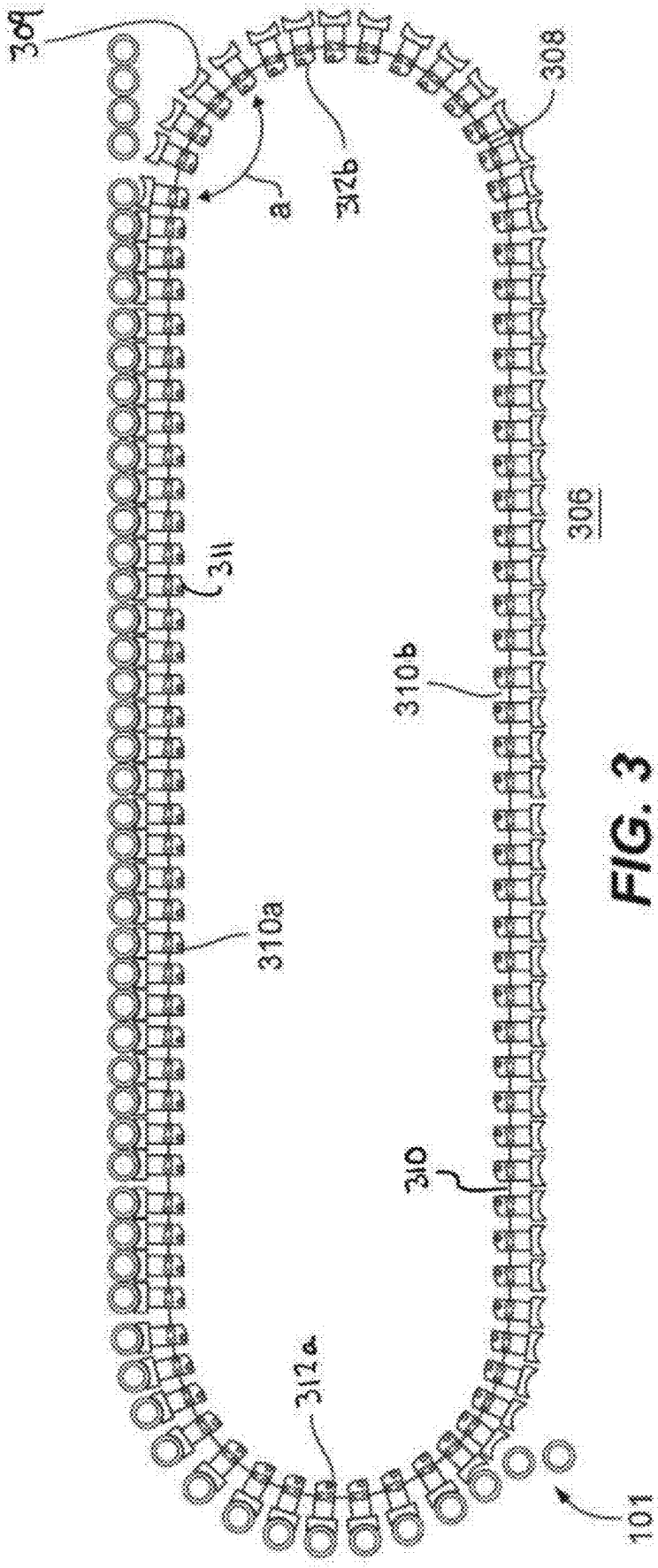

FIG. 3

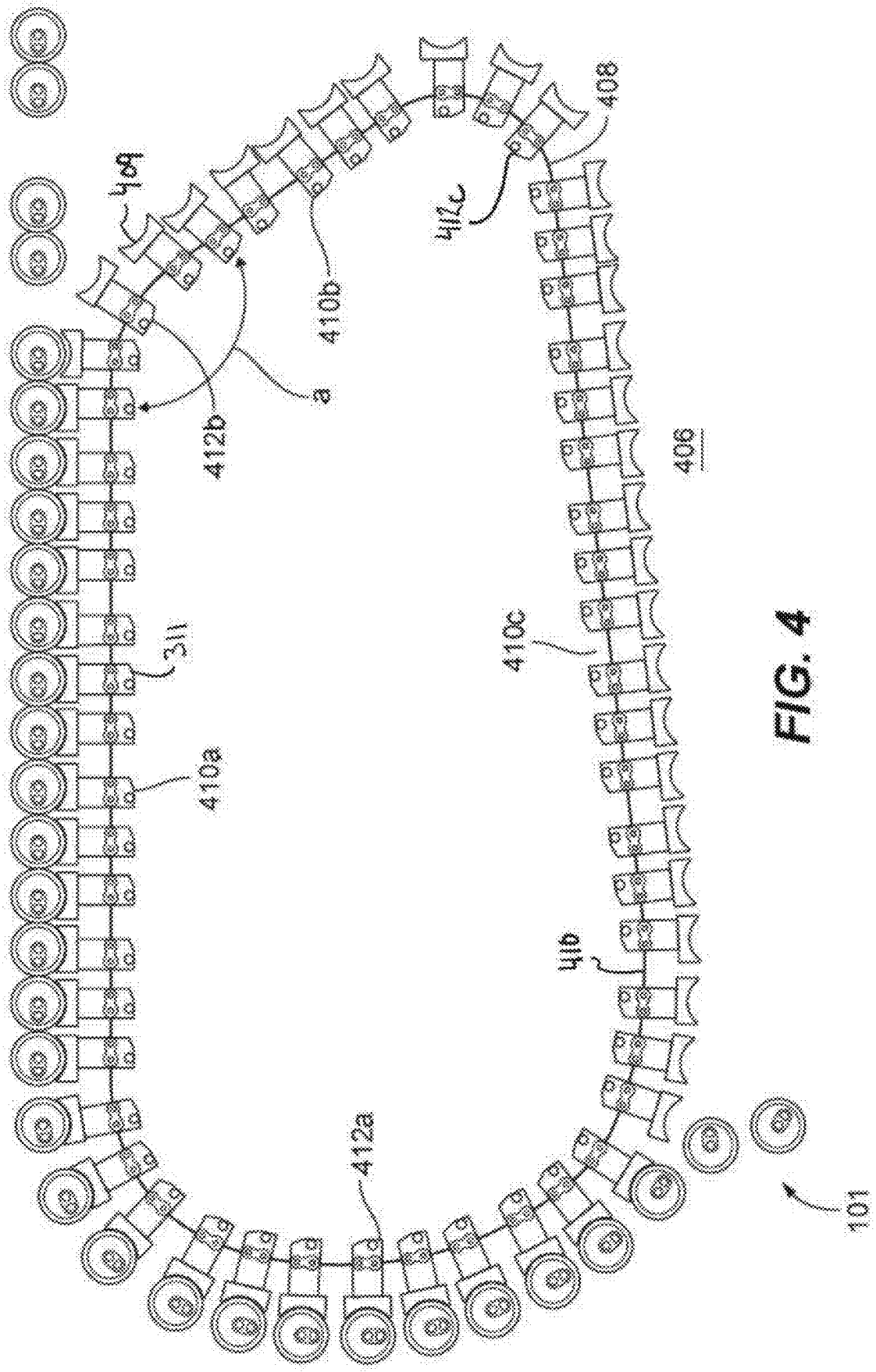

FIG. 4

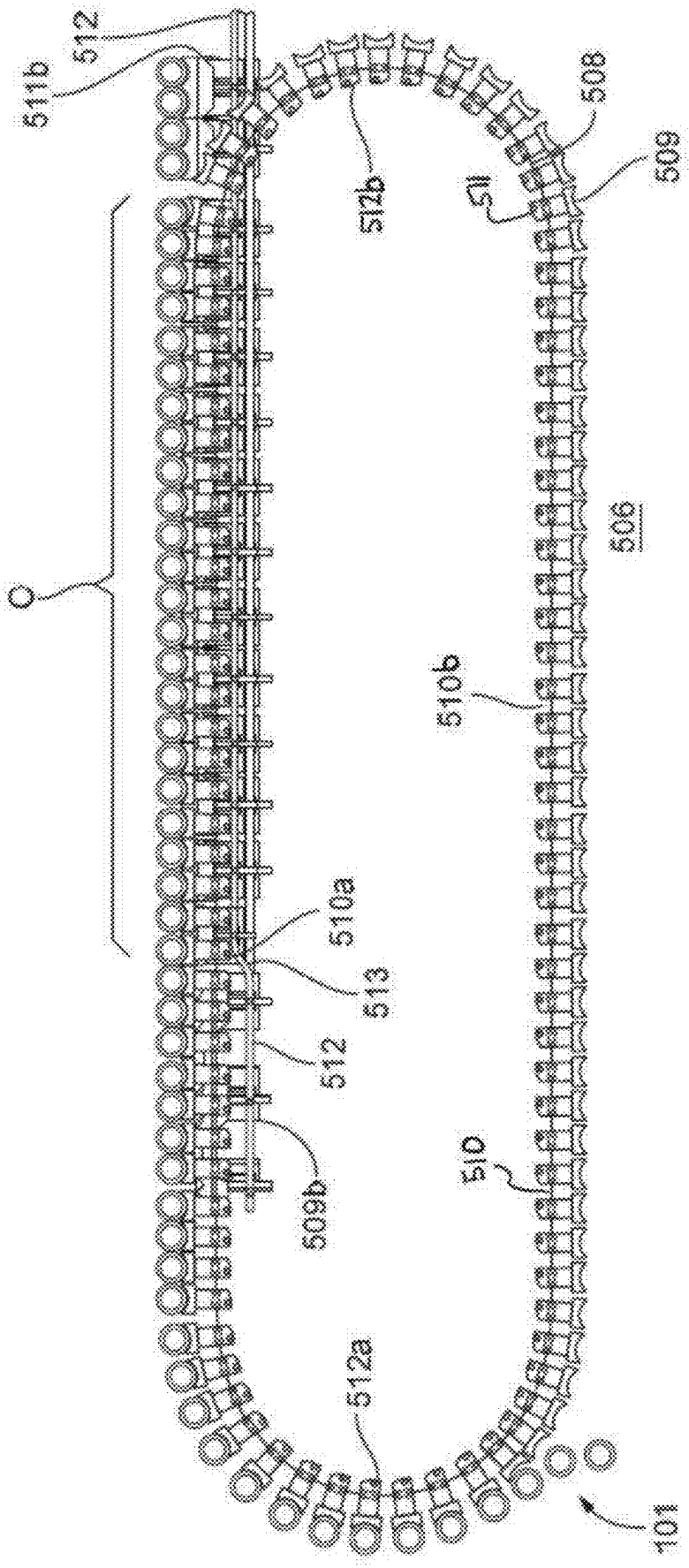
512
511b
512b
508
509
511
506
510b
510a
513
512
509b
510
512a
101
Q

FIG. 5

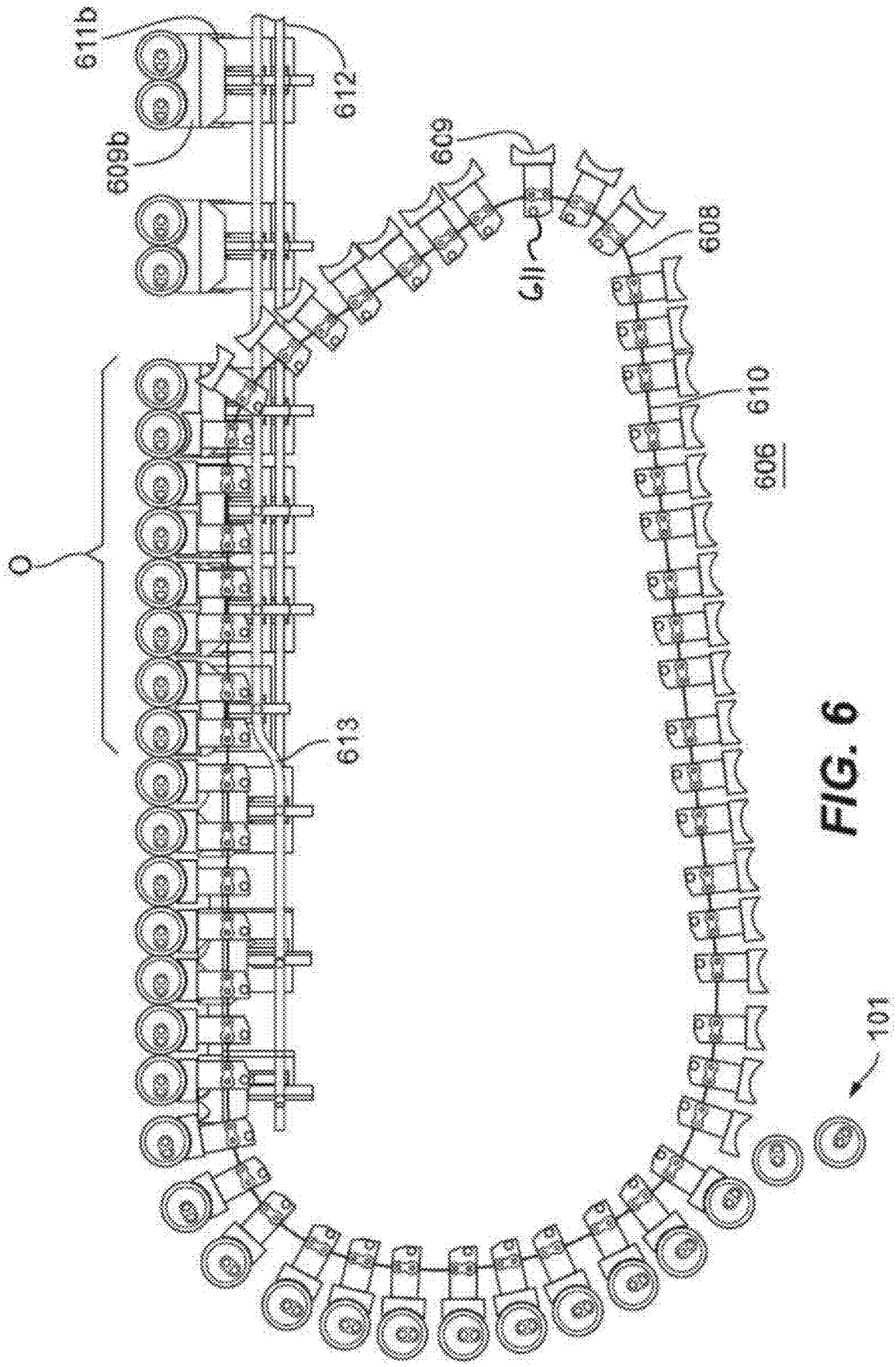

FIG. 6

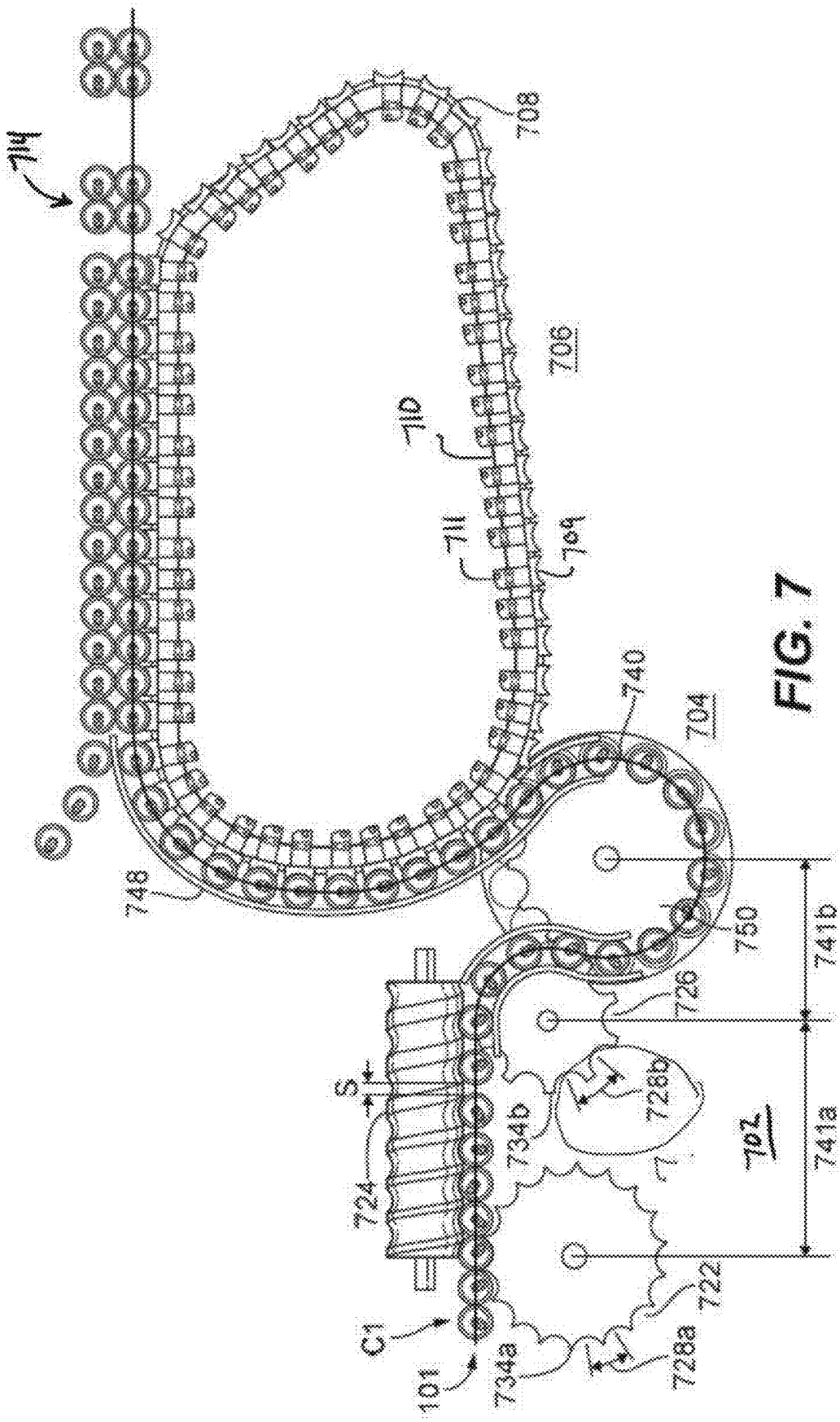
711
708
706
711D
711
709
740
704
748
750
741b
726
S
728b
734b
724
702
741a
722
C1
101
734a
728a

FIG. 7

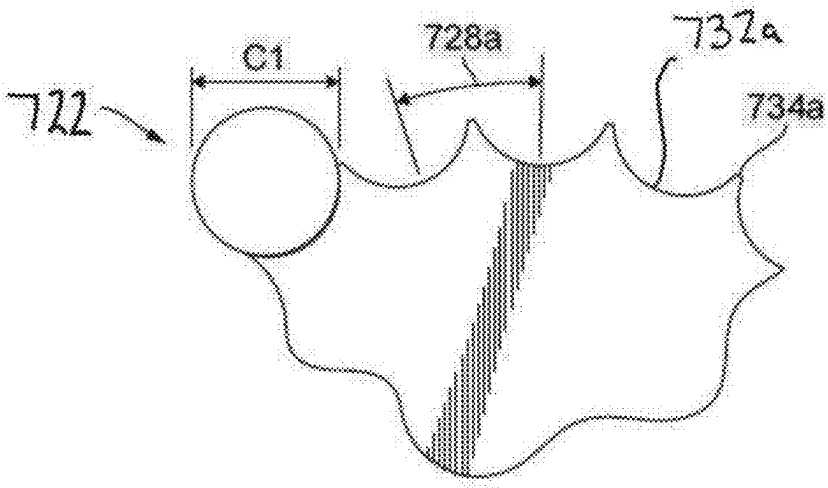

FIG. 7A

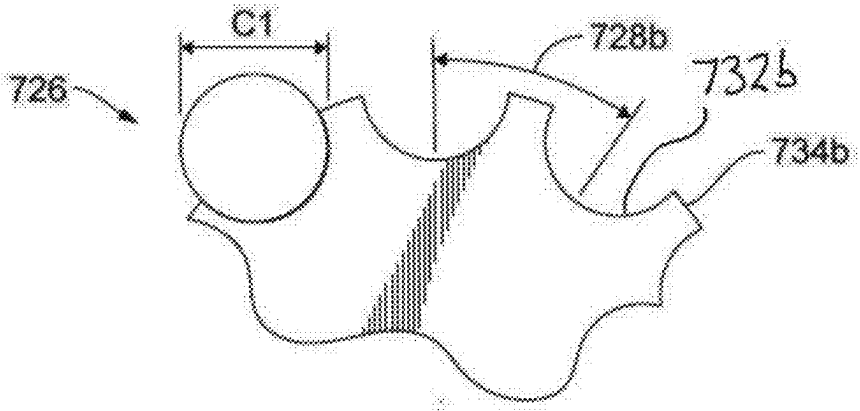

FIG. 7B

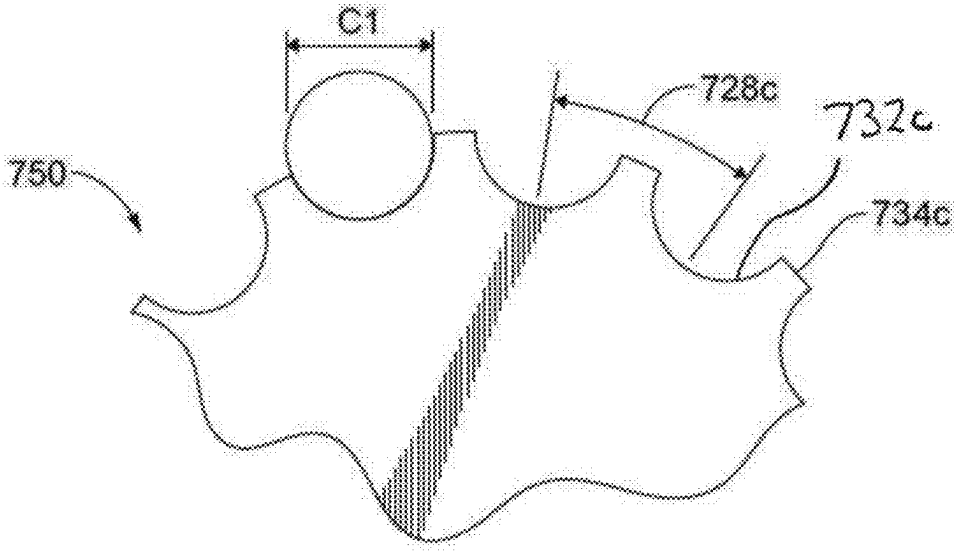

FIG. 7C

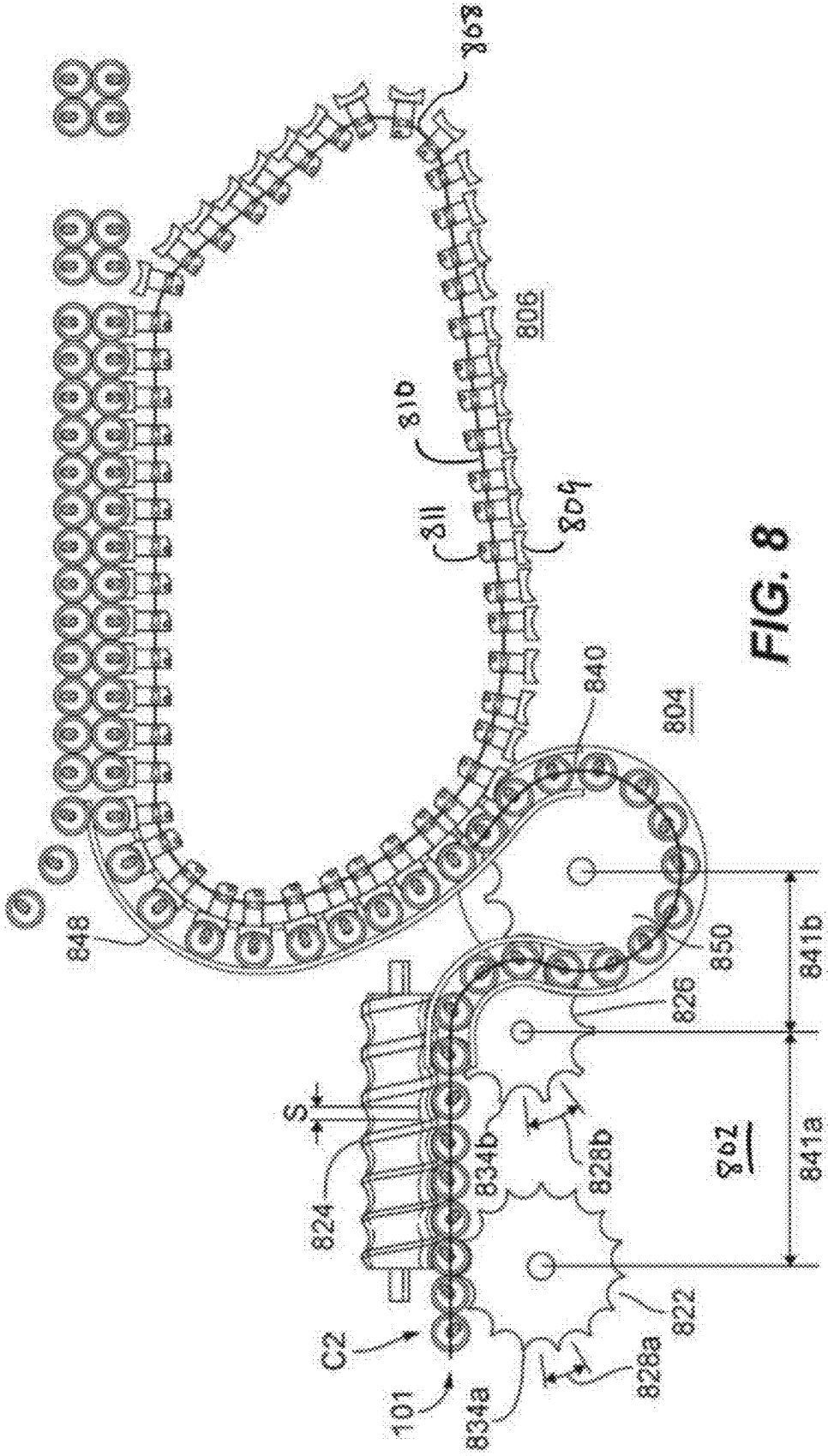
863
806
816
811
808
840
804
848
850
826
841b
841a
862
S
824
834b
828b
822
C2
101
834a
828a

FIG. 8

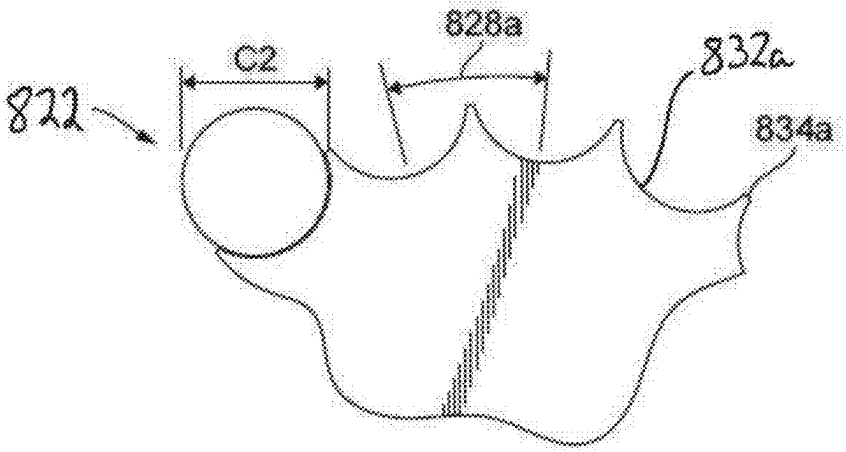

FIG. 8A

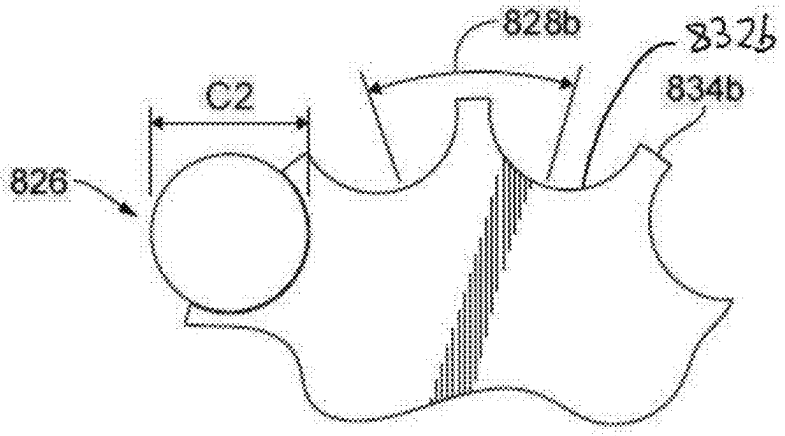

FIG. 8B

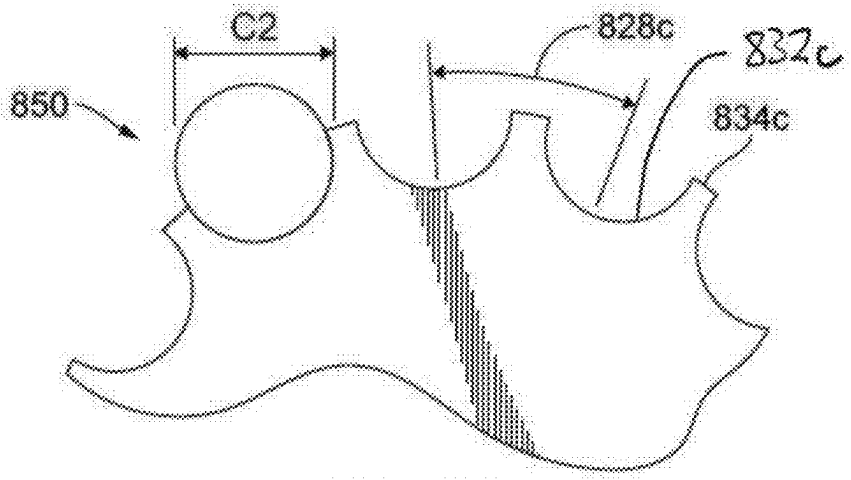

FIG. 8C

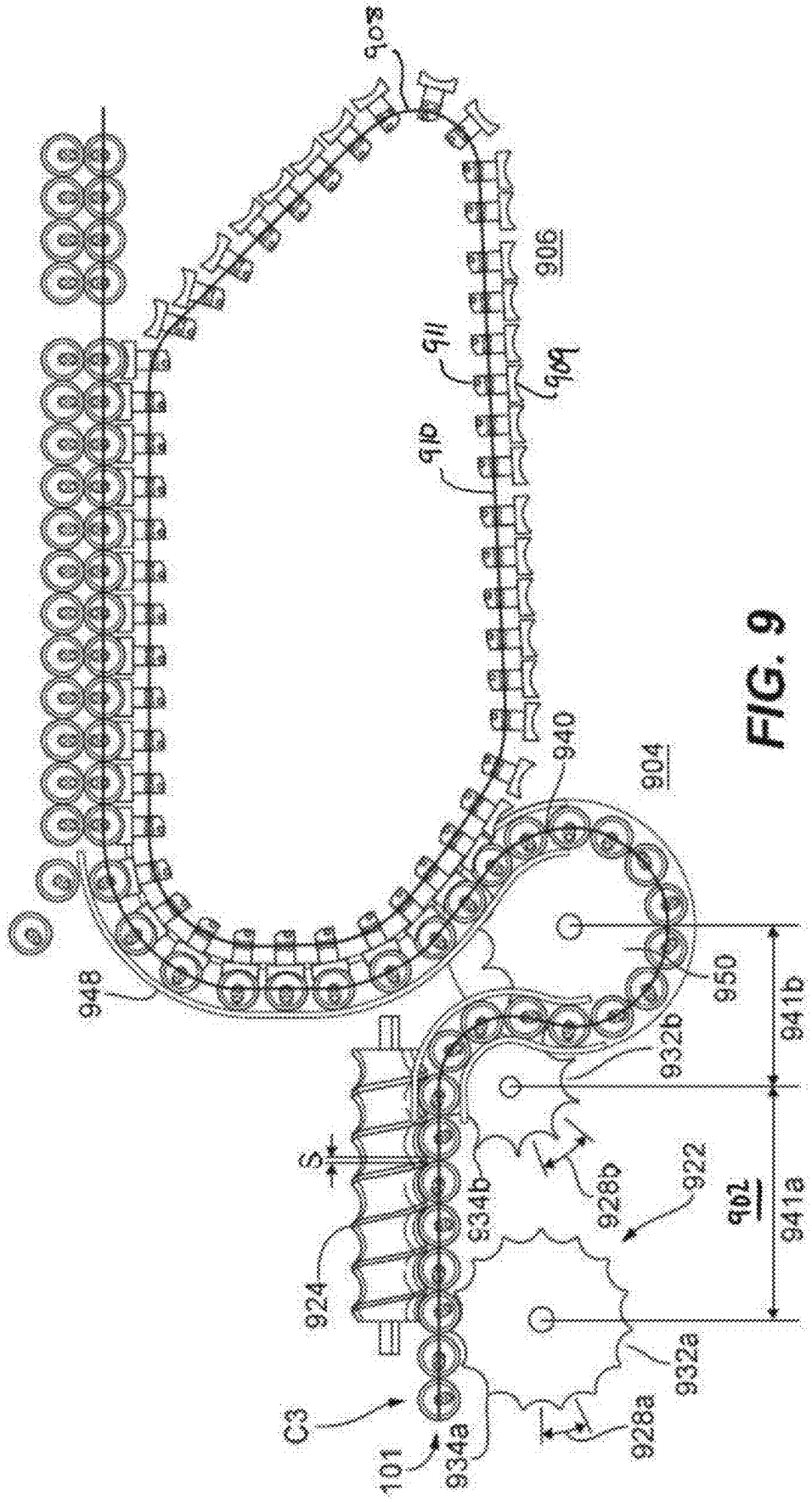
903
906
911
909
916
940
904
948
950
941b
932b
S
928b
922
902
941a
934b
924
C3
101
934a
928a
932a

FIG. 9

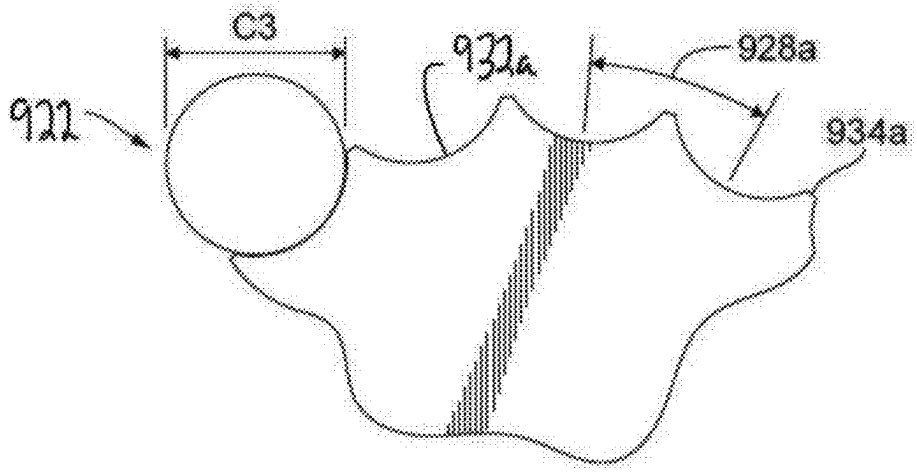

FIG. 9A

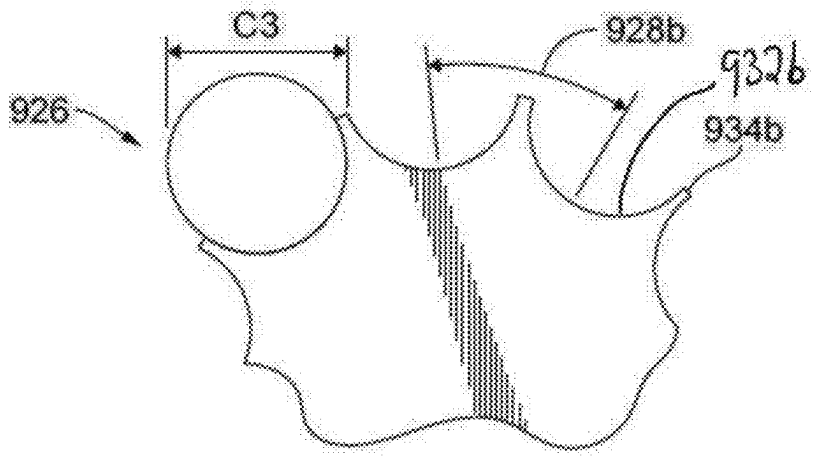

FIG. 9B

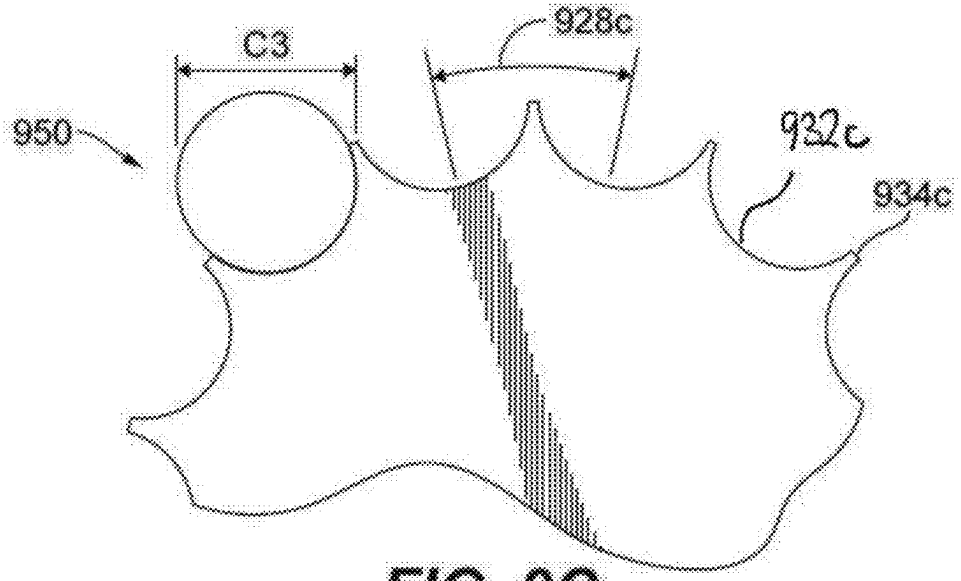

FIG. 9C

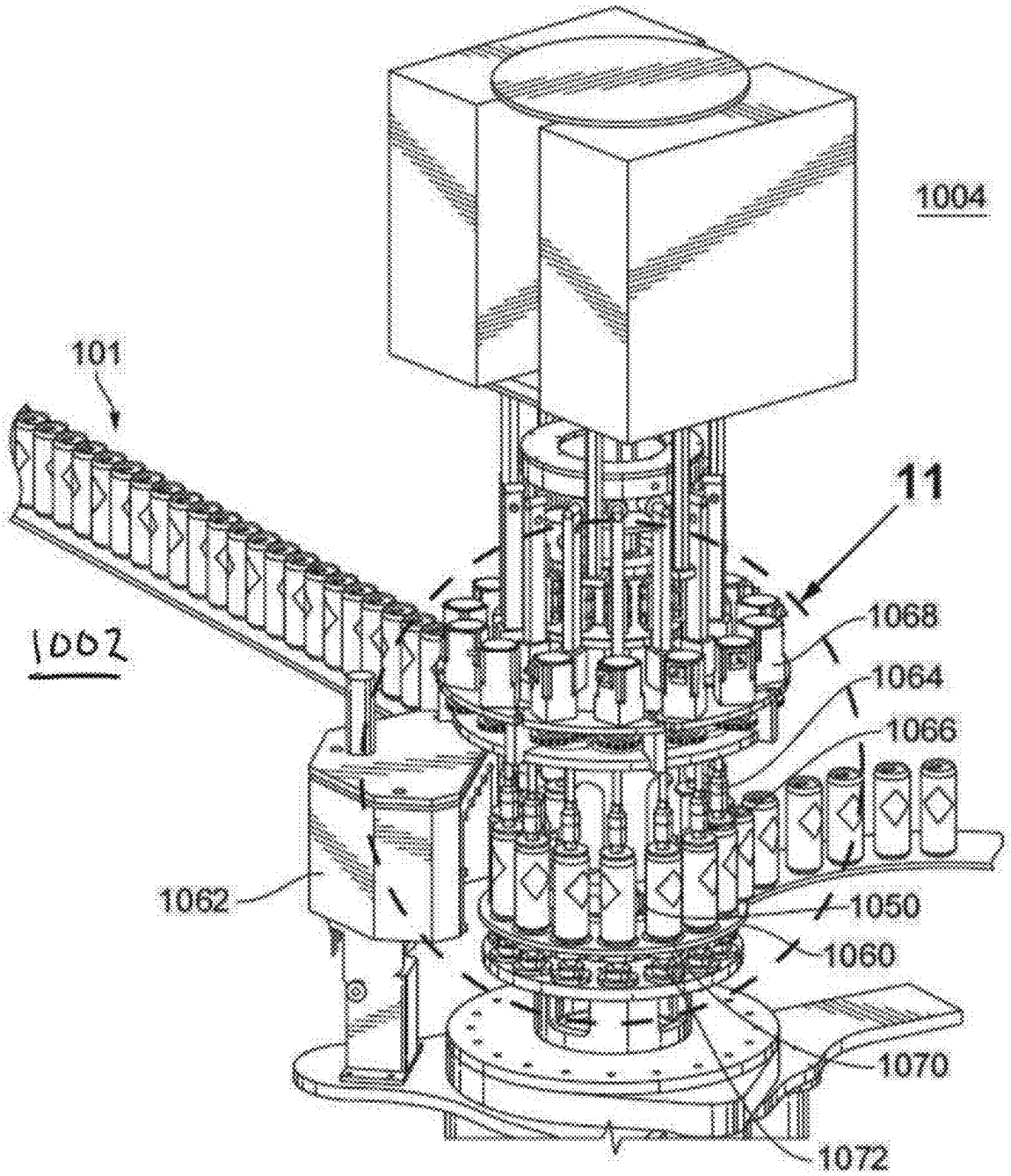

FIG. 10

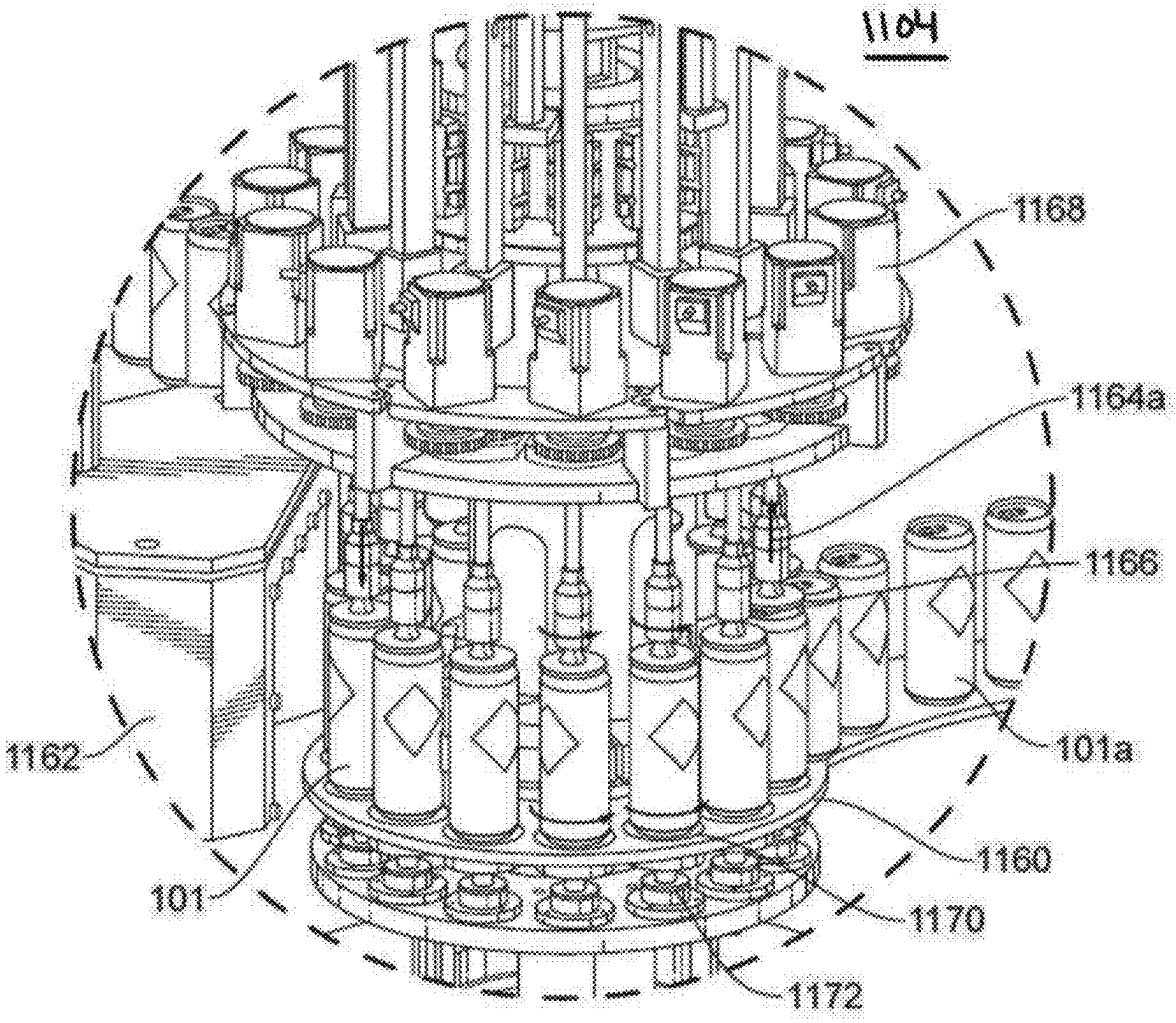

FIG. 11

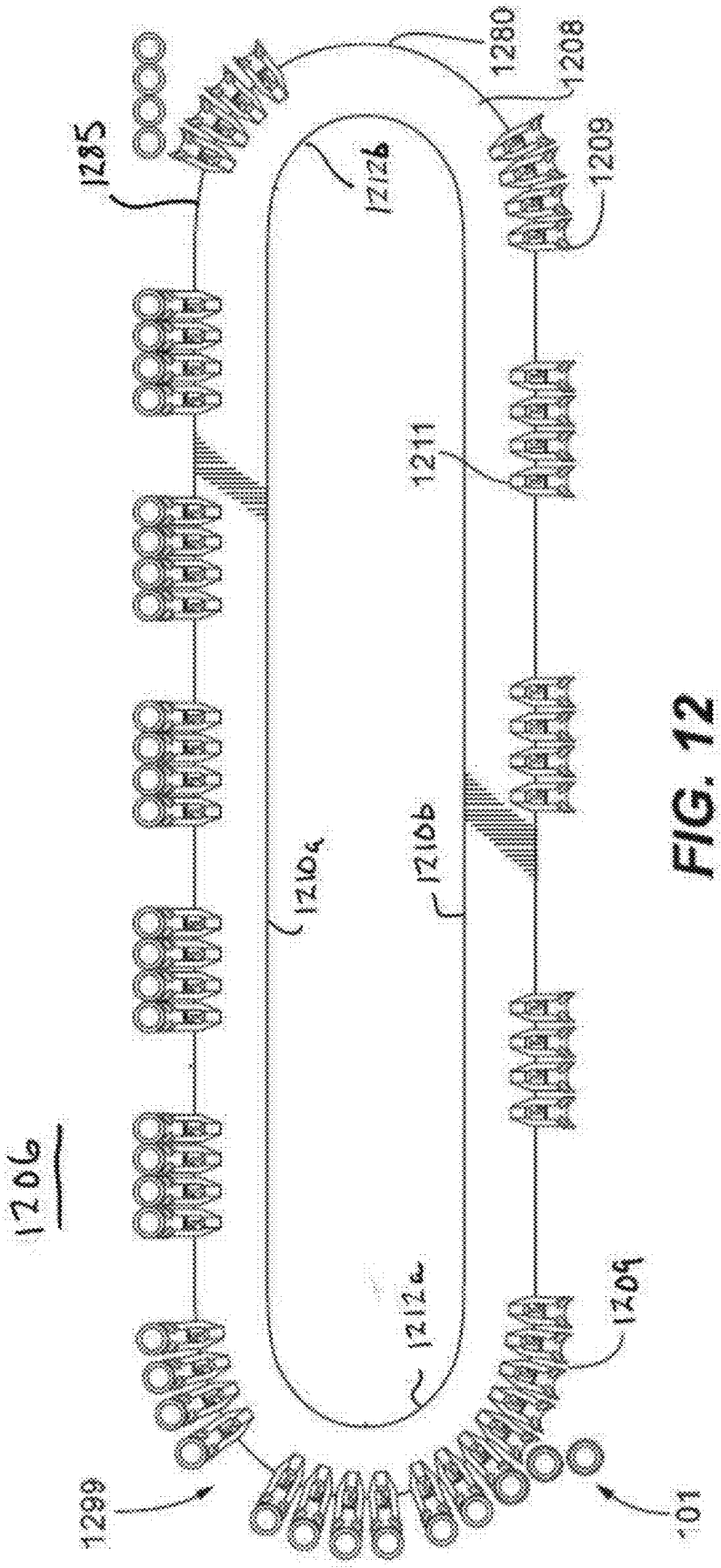
1206
1285
1280
1208
1209
1212b
1211
1210a
1210b
1212a
1209
1299
101

FIG. 12

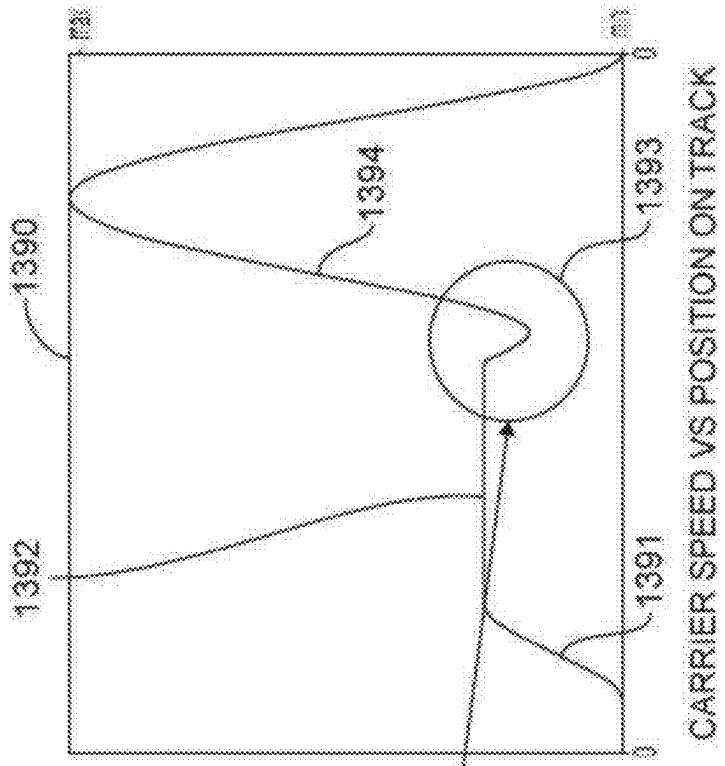
max
0
1390
1392
1394
1393
1391
CARRIER SPEED VS POSITION ON TRACK
B

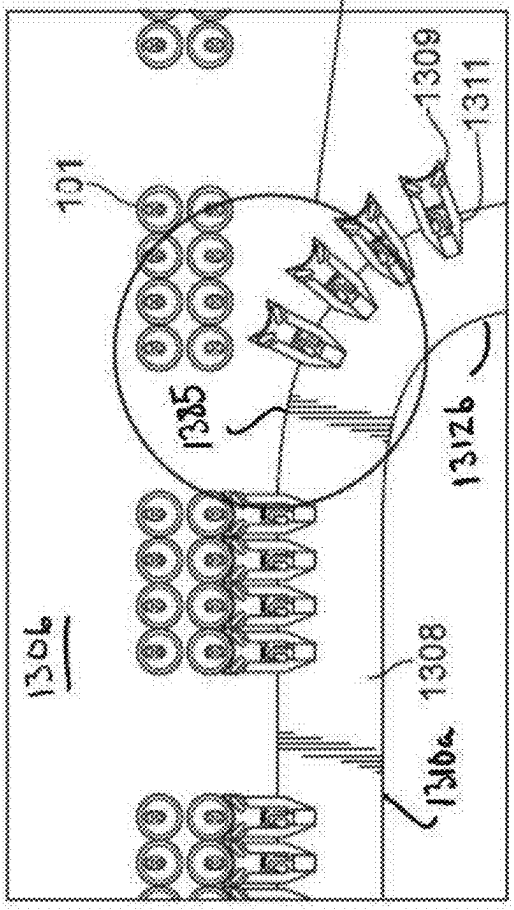
1306
101
1309
1311
1335
1312b
1308
1306a
A

FIG. 13

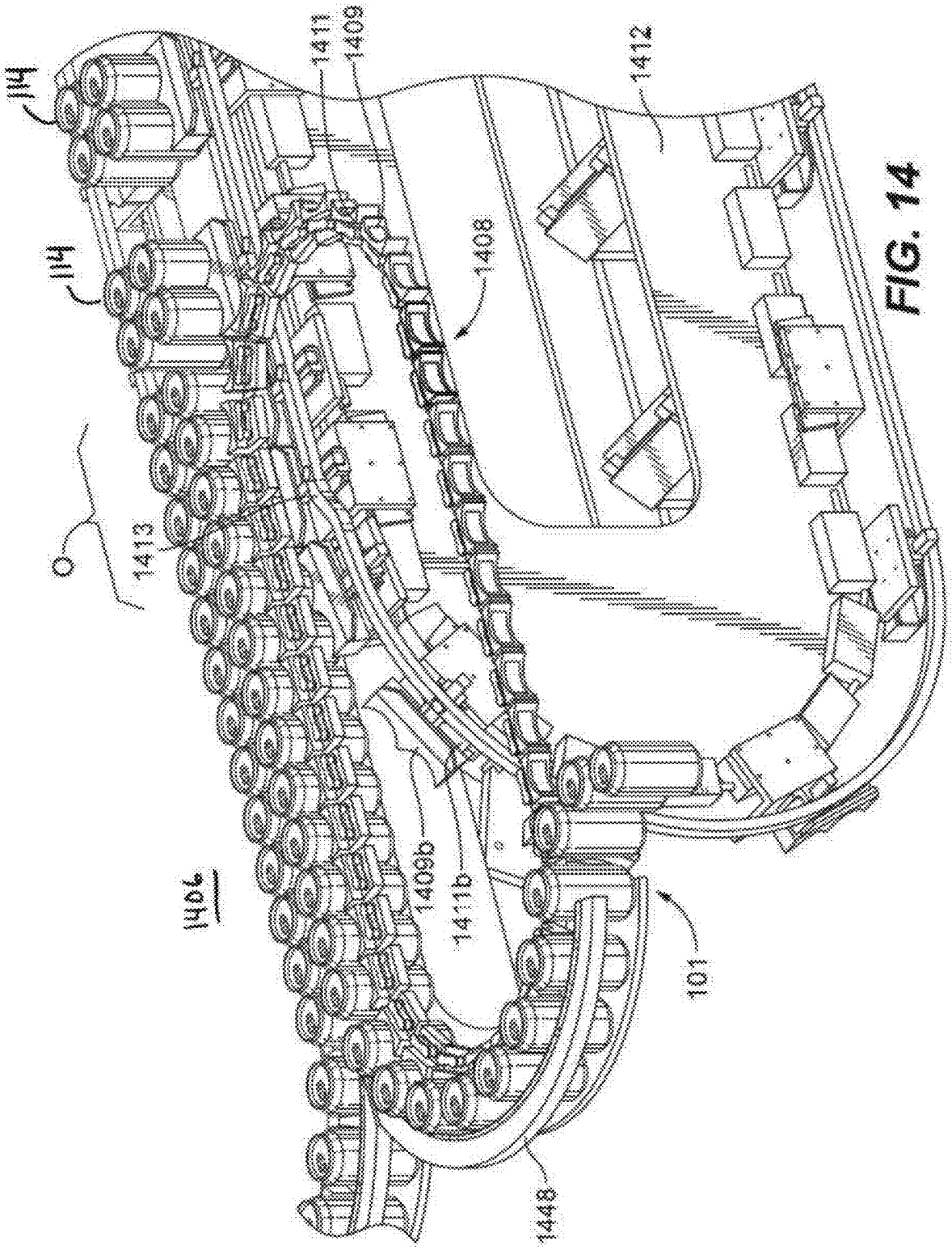

FIG. 14

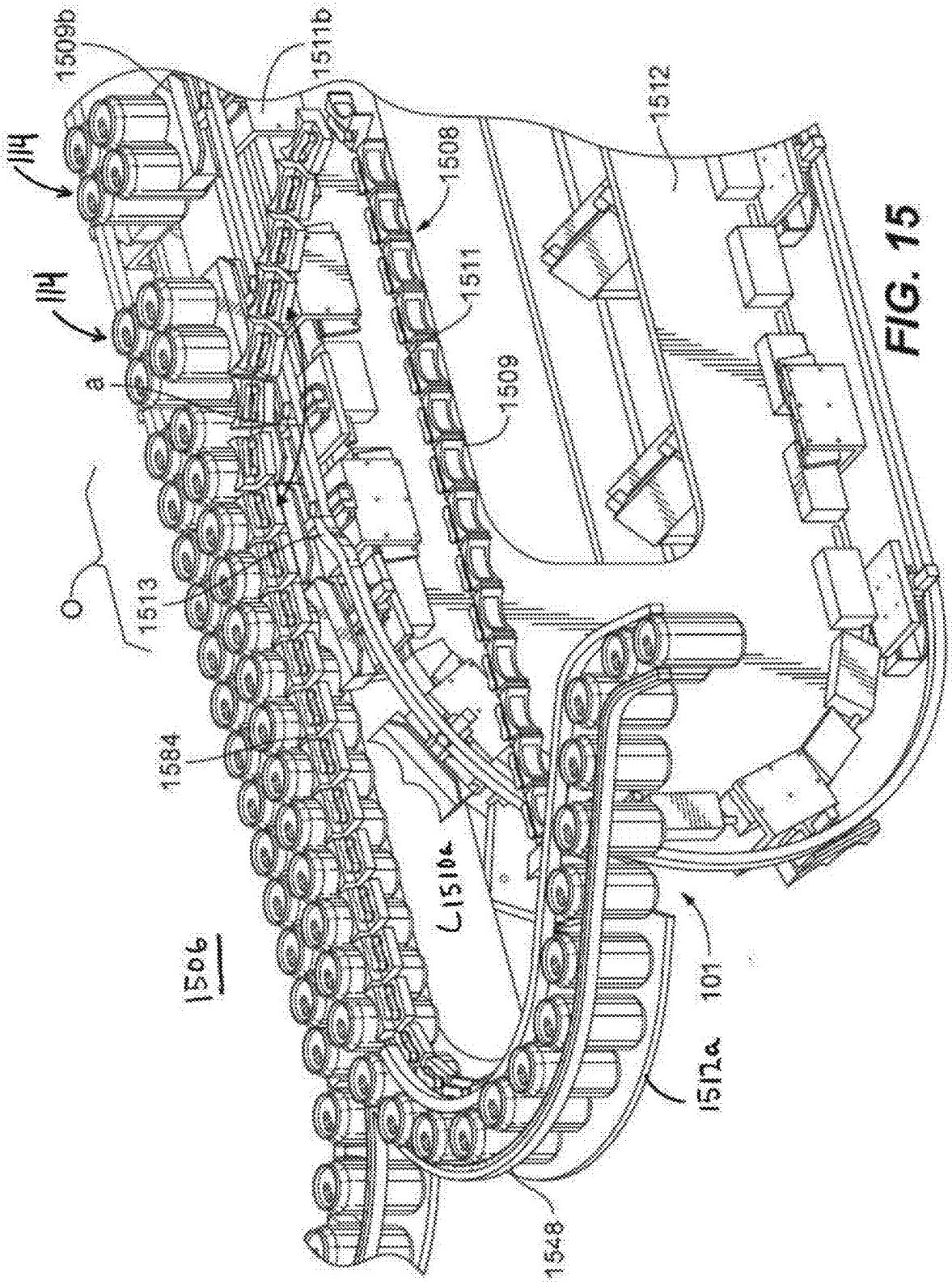
1509b
1511b
1114
1114
a
1508
1511
1509
1512
1513
1584
1506
1510a
101
1512a
1548

FIG. 15

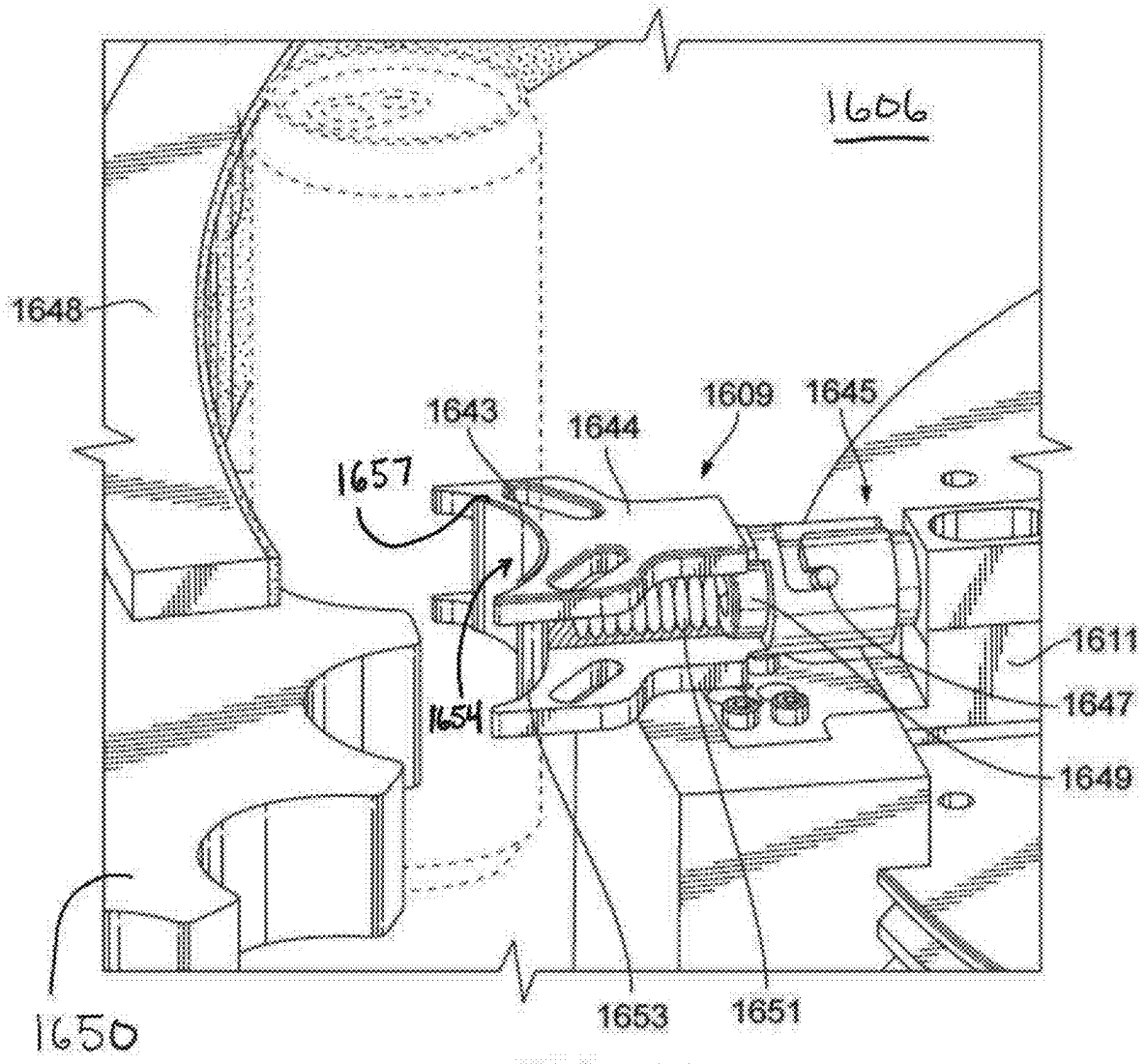
1606
1648
1643
1644
1609
1645
1657
1654
1611
1647
1649
1650
1653
1651

FIG. 16

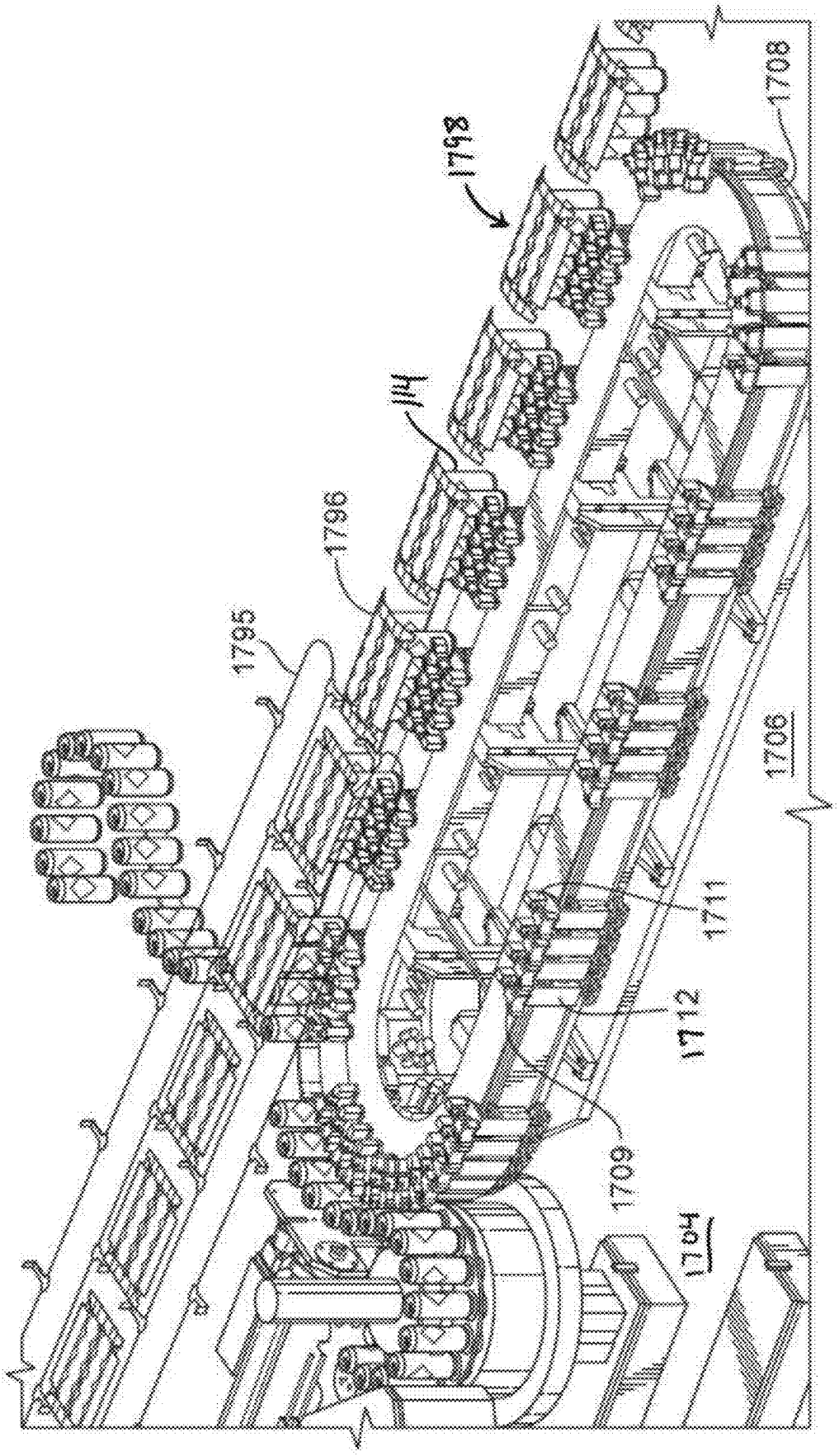

FIG. 17

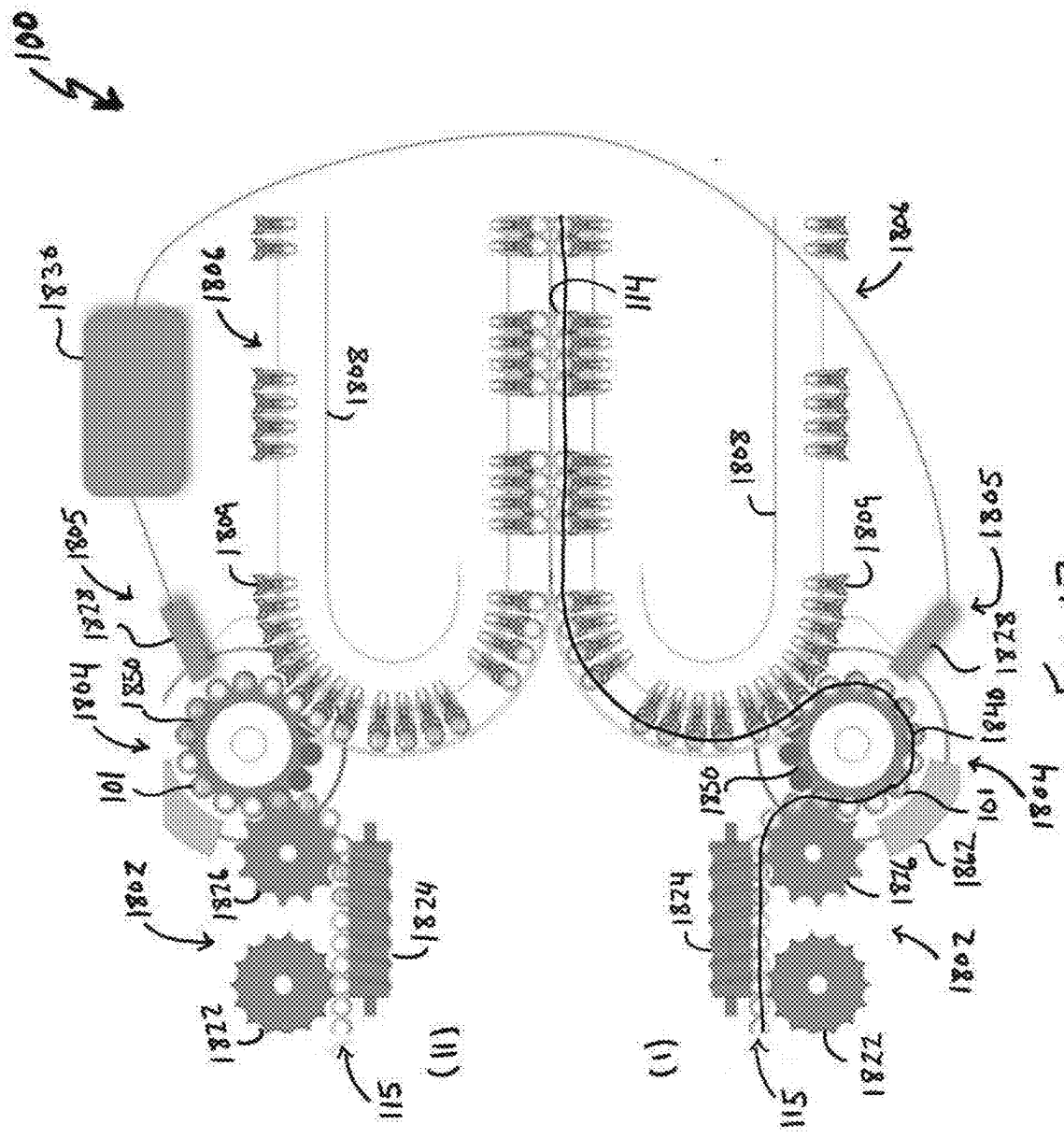
100
1836
1806
1808
111
1808
1808
1808
1808
1805
1828
1828
1808
1808
1808
1808

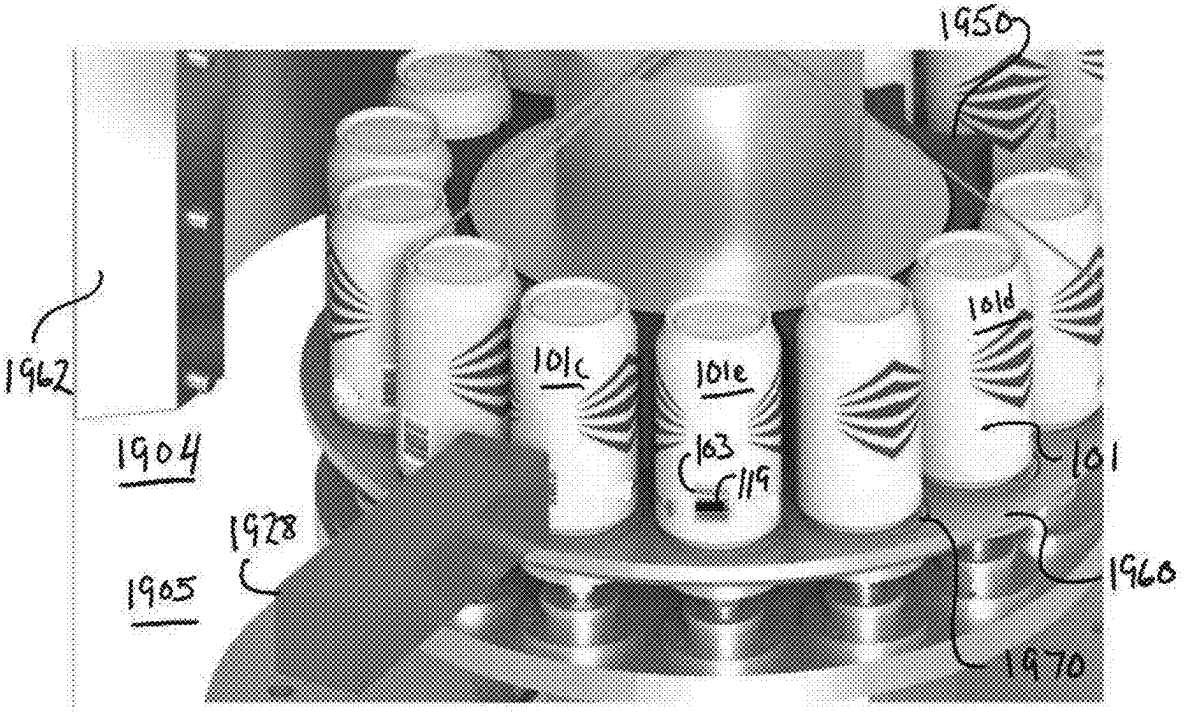

FIG. 19A

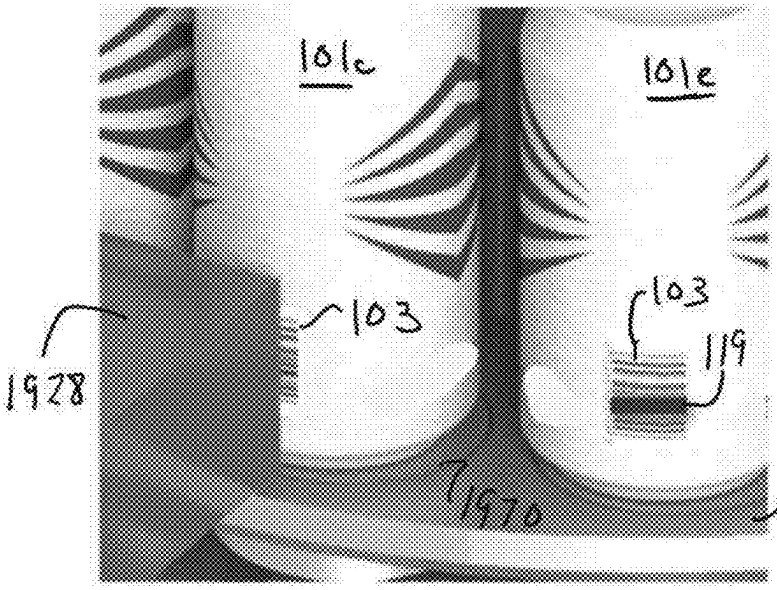

FIG. 19B

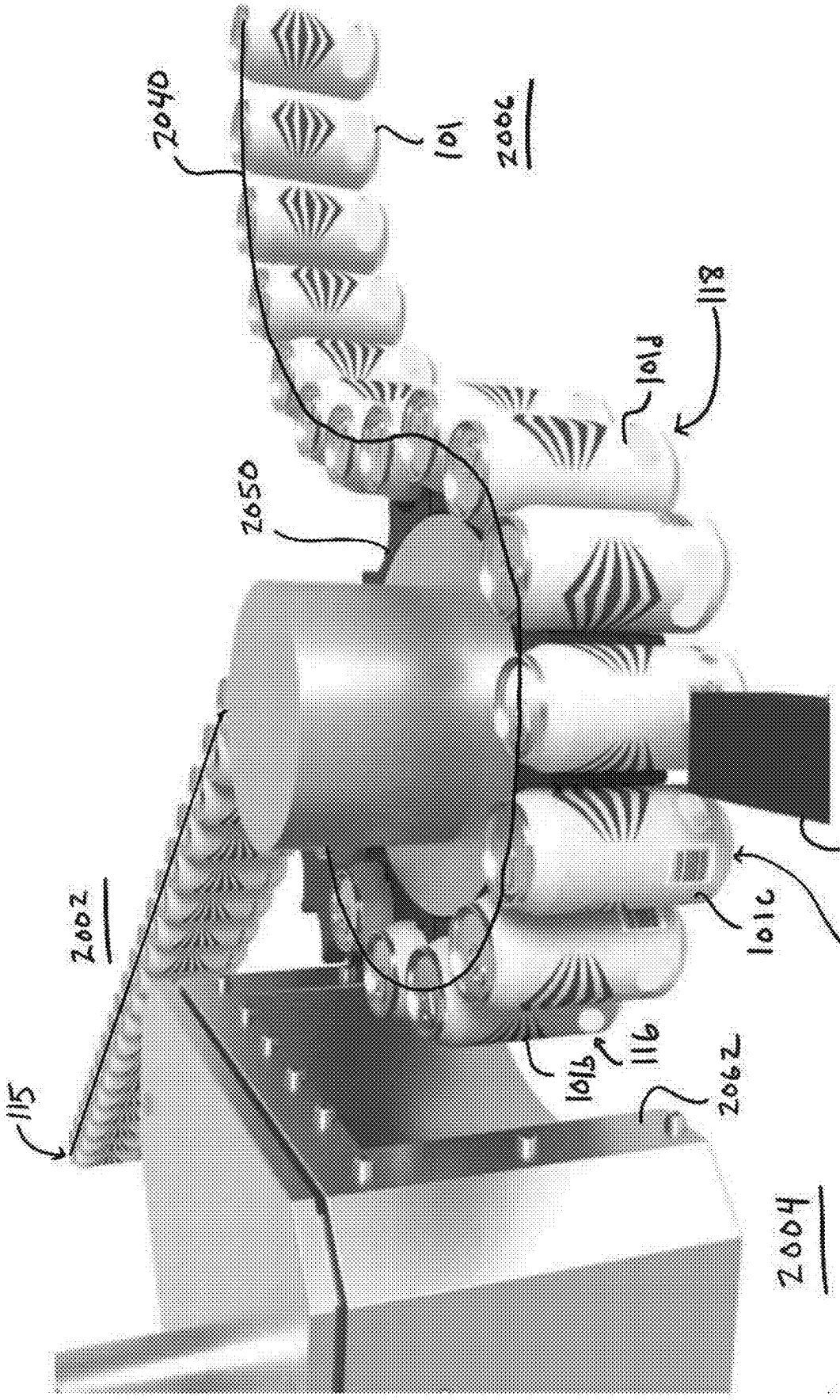
2040
101
2006
118
101d
2050
2005
2028
101c
117
2002
115
101b
116
2062
2004

FIG. 20

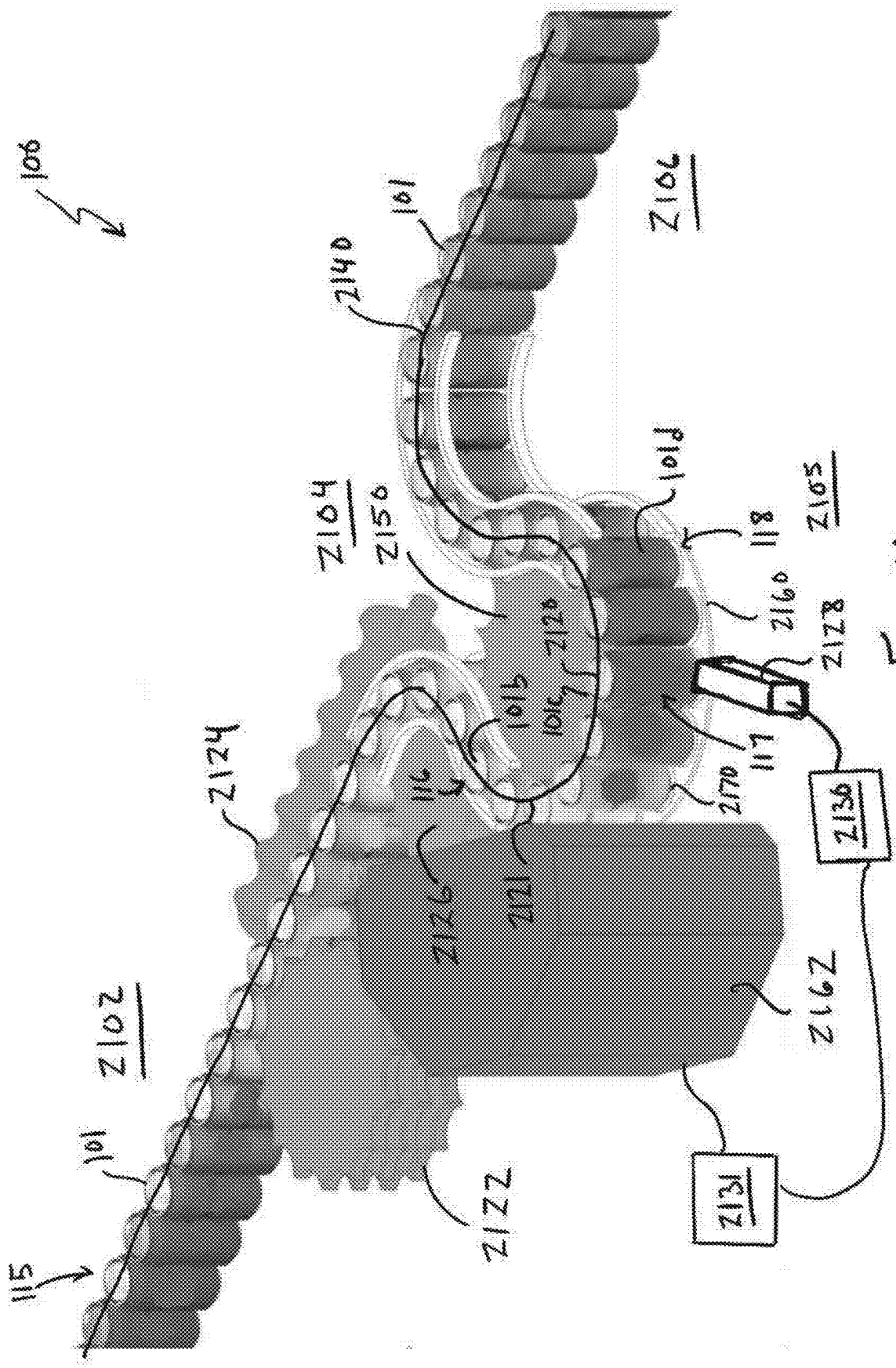
106
101
2140
2104
2150
2106
101d
118
2105
2160
2128
2136
117
2170
101b
101c
2126
116
2124
2111
2162
2102
2131
2122
101
115

FIG. 21

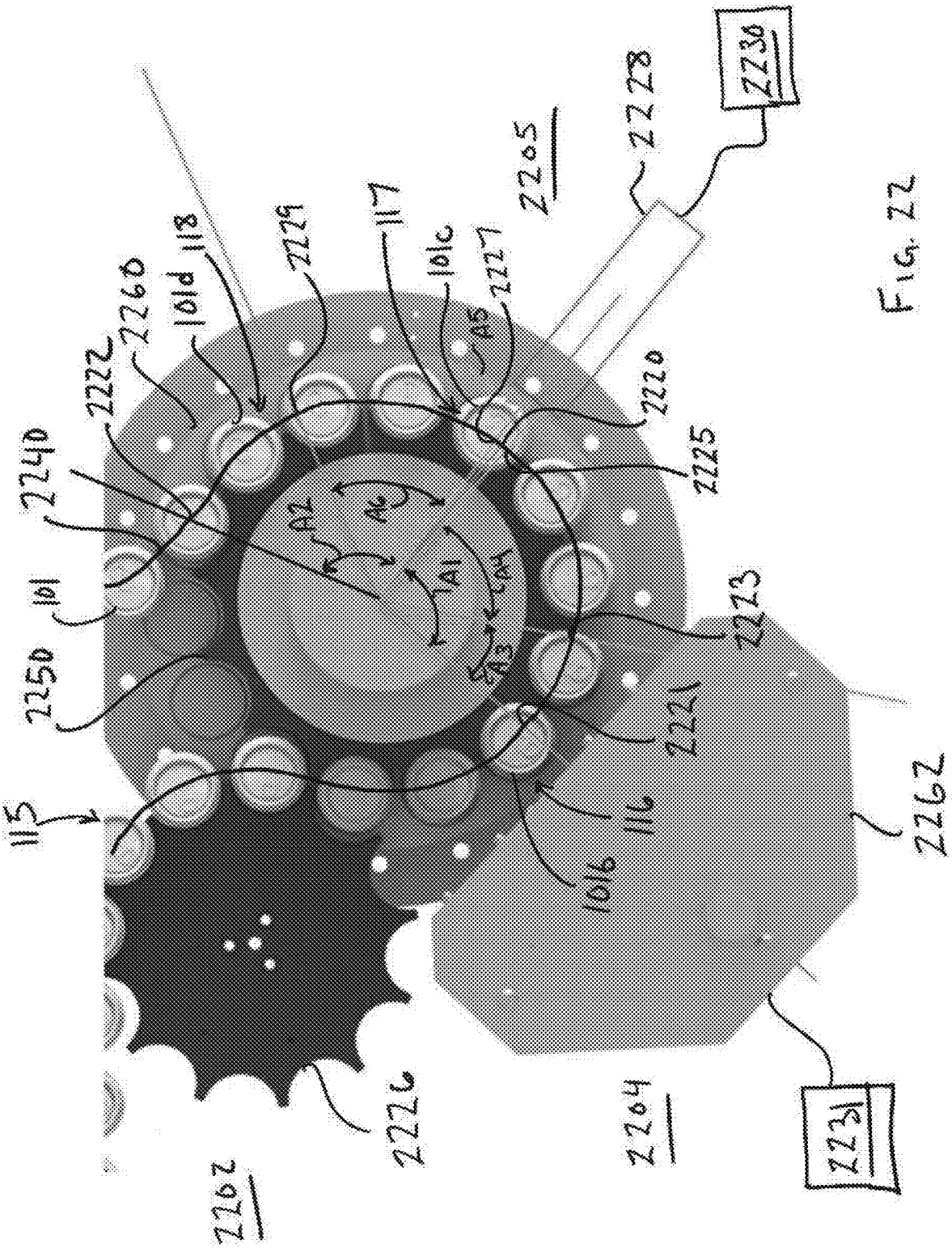
2230
2228
2205
2227
A5
101c
117
2229
118
101d
2260
2222
2240
101
2250
115
2262
2226
2204
2231
2220
2225
2223
2221
116
101b
A1
A2
A3
A4

FIG. 22

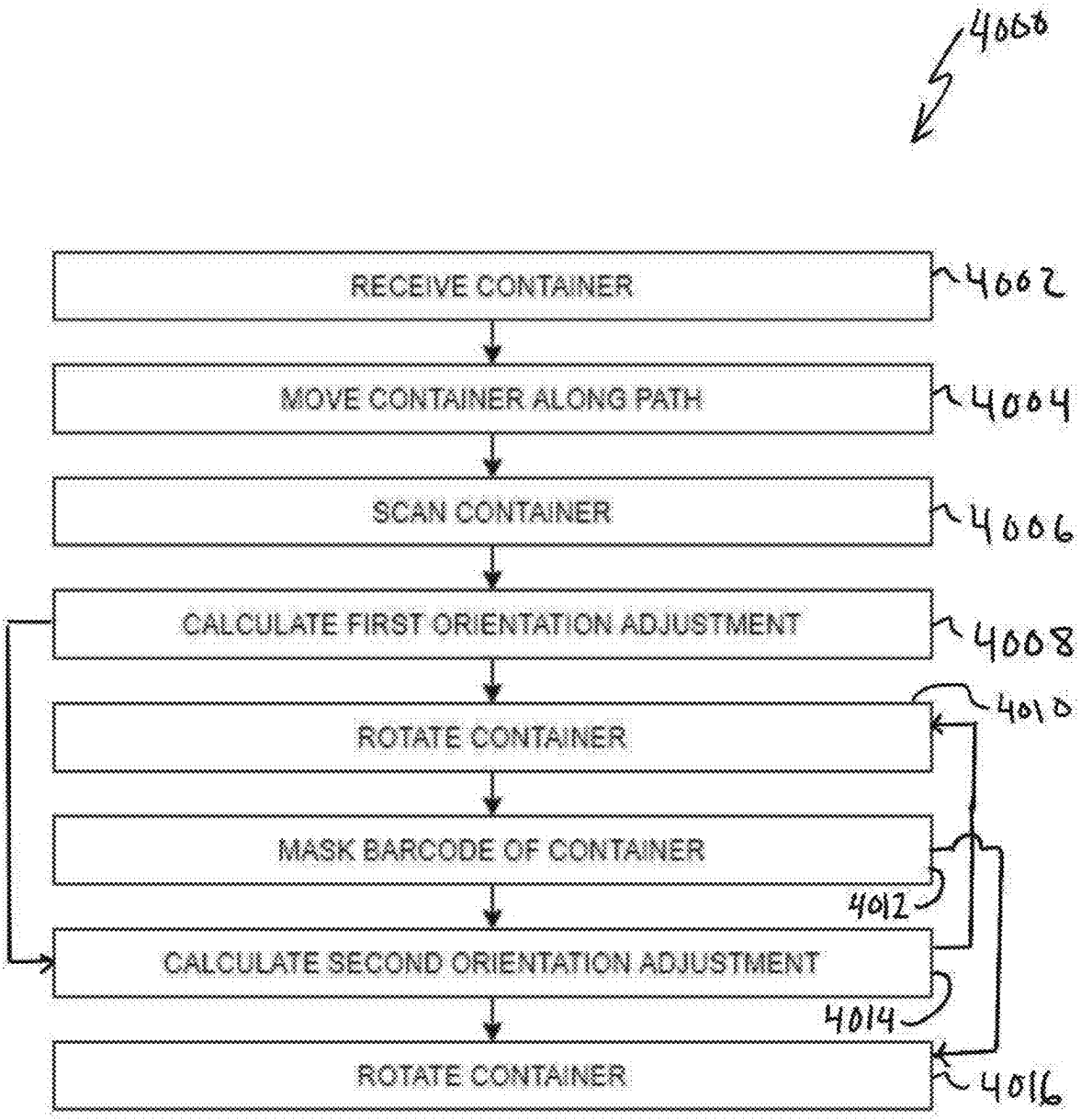
4000
RECEIVE CONTAINER
4002
MOVE CONTAINER ALONG PATH
4004
SCAN CONTAINER
4006
CALCULATE FIRST ORIENTATION ADJUSTMENT
4008
ROTATE CONTAINER
4010
MASK BARCODE OF CONTAINER
4012
CALCULATE SECOND ORIENTATION ADJUSTMENT
4014
ROTATE CONTAINER
4016

FIG. 23

PACKING SYSTEMS AND METHODS, AND BARCODE MASKING APPARATUS FOR THE SAME

CROSS-REFERENCE TO RELATED APPLICATION

[0001] The present application claims the benefit of priority to U.S. Provisional Patent Application Ser. No. 63/257,874 filed on Oct. 20, 2020, the entire contents of which is incorporated herein by reference in its entirety.

FIELD

[0002] The present disclosure relates to packing systems and methods and, more particularly, to systems and methods for orienting and packing containers and barcode masking apparatus for masking at least a portion of a barcode applied to a container.

BACKGROUND

[0003] In the field of packaging, it is often desirable to provide a package including multiple primary product containers, such as multi-packs, for shipping and distribution and for display of promotional information. It is also often desirable to present the packaged containers in a particular orientation. It is also often desirable to mask the barcode of individual containers in the packaged multi-pack of containers. Most often, barcode masking is addressed using a physical element of the container packaging (e.g., a carton or carrier), such as a panel or other portion of the packaging, to block or reveal the relevant barcode. However, this solution typically increases material costs associated with the physical element of the packaging used to bock the barcode and increases processing times, costs and complexities related to forming the packaging and applying the packaging to a group of containers. Accordingly, those skilled in the art continue with research and development efforts in the field of container packaging and barcode masking.

SUMMARY

[0004] Disclosed are a system for packaging containers, a masking module for masking at least a portion of a barcode applied to a container and a method for packaging containers. The following is a non-exhaustive list of examples, which may or may not be claimed, of the subject matter according to the present disclosure.

[0005] In an example, the disclosed masking module includes a masking apparatus situated proximate to a path of a container. The masking apparatus is configured to apply a mask to at least a portion of a barcode of the container as the container travels along the path. The masking module also includes a controller in communication with the masking apparatus. The controller is configured to selectively actuate the masking apparatus when the container passes by the masking apparatus along the path.

[0006] In an example, the disclosed system includes an orienting module configured to receive a container, to guide the container along a portion of a path, and to orient the container in a masking orientation at a masking location along the path. The system also includes a masking module configured to apply a mask to at least a portion of a barcode of the container as the container passes the marking location along the path.

[0007] In an example, the disclosed packaging method includes steps of: (1) receiving a container; (2) moving the container along a path; (3) scanning the container as the container moves along the path; (4) calculating a first orientation adjustment from an initial orientation to a masking orientation for the container; (5) rotating the container to effectuate the first orientation adjustment; and (6) masking at least a portion of a barcode of the container.

[0008] Other examples of the disclosed system, masking module and method will become apparent from the following detailed description, the accompanying drawings, and the appended claims.

BRIEF DESCRIPTION OF THE DRAWINGS

[0009] FIG. **1** is a schematic, perspective view of an example of a portion of a system for packaging containers;

[0010] FIG. **2** is a schematic, top plan view of an example of a portion of the system;

[0011] FIG. **3** is a schematic, top plan view of an example of a portion of the system;

[0012] FIG. **4** is a schematic, top plan view of an example of a portion of the system;

[0013] FIG. **5** is a schematic, top plan view of an example of a portion of the system;

[0014] FIG. **6** is a schematic, top plan view of an example of a portion of the system;

[0015] FIG. **7** is a schematic, top plan view of an example of a portion of the system;

[0016] FIG. **7**A is a schematic illustration of an example of a portion of a metering screw of the system;

[0017] FIG. **7**B is a schematic illustration of an example of a portion of a star-wheel of the system;

[0018] FIG. **7**C is a schematic illustration of an example of a portion of the star-wheel of the system;

[0019] FIG. **8** is a schematic, top plan view of an example of a portion of the system;

[0020] FIG. **8**A is a schematic illustration of an example of a portion of the metering screw of the system;

[0021] FIG. **8**B is a schematic illustration of an example of a portion of the star-wheel of the system;

[0022] FIG. **8**C is a schematic illustration of an example of a portion of the star-wheel of the system;

[0023] FIG. **9** is a schematic, top plan view of an example of a portion of the system;

[0024] FIG. **9**A is a schematic illustration of an example of a portion of the metering screw of the system;

[0025] FIG. **9**B is a schematic illustration of an example of a portion of the star-wheel of the system;

[0026] FIG. **9**C is a schematic illustration of an example of a portion of the star-wheel of the system;

[0027] FIG. **10** is a schematic, perspective view of an example of an orienting module of the system;

[0028] FIG. **11** is a schematic, perspective view of an example of a portion of the orienting module;

[0029] FIG. **12** is a schematic, top plan view of an example of a grouping module of the system;

[0030] FIG. **13**A is a schematic, top plan view of an example of a portion of the grouping module;

[0031] FIG. **13**A is a graphical representation of an example of a velocity profile for lugs and grippers of the grouping module;

[0032] FIG. **14** is a schematic, perspective view of an example of a portion of the system;

[0033] FIG. **15** is a schematic, perspective view of an example of a portion of the system;

[0034] FIG. **16** is a schematic, perspective view of an example of a gripper of the system;

[0035] FIG. **17** is a schematic, perspective view of an example of a portion of the system;

[0036] FIG. **18** is a schematic, top plan view of an example of a portion of the system;

[0037] FIG. **19**A is a schematic, perspective view of an example of a portion of the system;

[0038] FIG. **19**B is a schematic, perspective view of an example of a container with a portion of a barcode masked; and

[0039] FIG. **20** is a schematic, perspective view of an example of a portion of the system;

[0040] FIG. **21** is a schematic, top plan view of an example of a portion of the system;

[0041] FIG. **22** is a schematic, perspective view of an example of a portion of the system;

[0042] FIG. **23** is a flow diagram of an example of a method for packaging containers.

DETAILED DESCRIPTION

[0043] Referring generally to FIGS. **1**-**22**B, by way of examples, the present disclosure is directed to system **100** for packaging containers **101** (herein below referred to collectively as containers and individually as container). More particularly, examples of system **100** enable orienting, grouping, and packing of containers **101** to create packages or packs of containers **101**. More particularly, examples of the system **100** enable masking of at least a portion of a barcode of container **101** during the packaging process. For example, system **100** facilitates metering of a stream of containers **101**, orienting each one of containers **101** is a desired first orientation, masking the barcode of each one of containers **101** in the desired first orientation, and orienting containers in a desired second orientation for grouping and packing containers **101**.

[0044] System **100** and, more particularly, an orienting module and a masking module of the system **100** advantageously avoids various challenges, complexities and undesirable increases in processing time and cost associated traditional barcode masking techniques, such as altering article carriers, while providing barcode masking at a high speed.

[0045] Referring now to FIG. **1**, which illustrates an example of a portion of system **100**. Generally, as illustrated in FIG. **1**, system **100** is configured to receive a stream of containers **101**, to orient each one of containers **101** into a desired direction and/or orientation and to maintain each one of containers **101** in the desired direction and/or orientation while packaging containers **101** into packs **114** (e.g., as shown in FIG. **1**) or packages **1798** (e.g., as shown in FIG. **17**).

[0046] In one or more examples, system **100** includes two sets of modules (e.g., a first module set I and a second module set II). In one or more examples, each set of modules is a mirror of the other. For example, each set of modules includes the same three types of modules. Each of the modules of the set of modules, the details and capabilities of each module and various example configurations of each module are described herein below.

[0047] In one or more examples, each set of modules (e.g., the first module set I and/or the second module set II) includes conveying module **102**, orienting module **104** and grouping module **106**. In one or more examples, conveying module **102** is configured for supplying containers **101**, for example, as a stream of containers **101**. In one or more examples, orienting module **104** is configured for scanning and orienting containers **101**. In one or more examples, grouping module **106** is configured for organizing containers **101** in the desired orientation (e.g., oriented containers **101***a* as shown in FIG. **11**) into groups and/or packs **114**.

[0048] In FIG. **1**, conveying module **102**, orienting module **104** and grouping module **106** of the first module set I are shown and labelled. In FIG. **1**, conveying module **102**, orienting module **104** and a portion of grouping module **106** of the second module set II are shown. Although two sets of modules (e.g., module set I and module set II) are shown in FIG. **1**, each module in the subsequent figures and in the description below may be discussed as part of an individual set (e.g., module set I), not including its mirrored counterpart (e.g., module set II).

[0049] In one or more examples, conveying module **102** includes first star-wheel **122**, metering screw **124** and second star-wheel **126**. Orienting module **104** includes third star-wheel **150**. Grouping module **106** includes track **108**. Grouping module **106** includes lugs **111** (herein below referred to collectively as lugs and individually as lug). Lugs **111** are coupled to and movable along track **108**. Grouping module **106** includes grippers **109** (herein below referred to collectively as grippers and individually as gripper). Grippers **109** are coupled to lugs **111** (e.g., each gripper **109** is coupled to an associated lug **111**). Grouping module **106** includes servo drives **112** (herein below referred to collectively as servo drives and individually as servo drive). Lugs **111** are driven about track **108** by servo drives **112** (e.g., each lug **111** is driven by an associated servo drive **112**).

[0050] System **100** offers multiple benefits over previous conveyor systems in a world that demands faster and more efficient production techniques. Examples of such benefits offered by system **100** includes, but are not limited to, faster and more convenient changeover between differing container sizes and types; faster, more reliable, and more effective methods of packaging containers into groups; and reducing factory floor space required for packaging.

[0051] Referring now to FIG. **2**, which illustrates an example of one of the sets of modules (e.g., module set I shown in FIG. **1**) of system **100**. The example of system **100** shown in FIG. **2** shares many common features with the example of system **100** shown in FIG. **1**. In the example of system **100** shown in FIG. **2**, like numerals have, where possible, been used to denote like parts, albeit with the addition of the prefix "200" to indicate that these features belong to a second example of system **100**.

[0052] In one or more examples, the module set includes conveying module **202**, orienting module **204**, and grouping module **206**. Grouping module **206** includes track **208**. In one or more examples, track **208** is a single oval track.

[0053] In one or more examples, grouping module **206** includes a plurality of grippers **209** (herein below referred to collectively as grippers and individually as gripper). Grippers **209** move containers **101** along track **208**.

[0054] In one or more examples, grouping module **206** includes a plurality of lugs **211** (herein below referred to collectively as lugs and individually as lug). Each gripper **209** is coupled to an associated lug **211**. Lugs **211** move grippers **209** along track **208**.

[0055] In one or more examples, grouping module **206** includes a plurality of servo drives (e.g., servo drives **112** as shown in FIG. **1**). The servo drives of the example of system **100** shown in FIG. **2** are not visible. Each lug **211** is driven about track **208** by an associated servo drive (e.g., servo drive **112** as shown in FIG. **1**).

[0056] Referring to FIGS. **1** and **2**, in one or more examples, servo drive **112** is a linear servo drive. This allows for programming of a specific speed profile for each lug **111**, **211** or group of lugs **111**, **211**, which can move separately from one another to form groups (e.g., packs **114** as shown in FIG. **1**) of containers **101**. Another added benefit of the horizontal oval configuration of track **108**, **208** is, when power to system **100** is lost, lugs **111**, **211** stay in place and are not moved by gravity and do not fall from track **108**, **208**.

[0057] Referring now to FIG. **3**, which illustrates an example of grouping module **306** of system **100**. The example of system **100** shown in FIG. **3** shares many common features with the examples of system **100** shown in FIGS. **1** and **2**. In the example of system **100** shown in FIG. **3**, like numerals have, where possible, been used to denote like parts, albeit with the addition of the prefix "300" to indicate that these features belong to a third example of system **100**.

[0058] In one or more examples, grouping module **306** includes track **308**. Track **308** is a single oval track. Grippers **309** move containers **101** along track **308**. Each gripper **309** is moved about track **308** by chain **310**.

[0059] In one or more examples, track **308** of grouping module **406** is a single track **308** that includes two straight sections (e.g., first straight section **310***a* and second straight section **310***b*) and two curved sections (e.g., first curved section **312***a* and second curved section **312***b*).

[0060] Referring now to FIG. **4**, which illustrates an example of grouping module **406** of system **100**. The example of system **100** shown in FIG. **4** shares many common features with the examples of system **100** shown in FIGS. **1-3**. In the example of system **100** shown in FIG. **4**, like numerals have, where possible, been used to denote like parts, albeit with the addition of the prefix "400" to indicate that these features belong to a fourth example of system **100**.

[0061] In one or more examples, grouping module **406** includes track **408**. Track **408** is a single irregular-shaped track. Grippers **409** move containers **101** along track **408**. Each gripper **409** is moved about track **408** by chain **410**.

[0062] In one or more examples, track **408** of grouping module **406** is a single track that includes three (e.g., at least three) straight sections **410***a*, **410***b*, **410***c* and three (e.g., at least two) curved sections **412***a*, **412***b*, **412***c*.

[0063] Referring now to FIG. **5**, which illustrates an example of grouping module **506** of system **100**. The example of system **100** shown in FIG. **5** shares many common features with the examples of system **100** shown in FIGS. **1-4**. In the example of system **100** shown in FIG. **5**, like numerals have, where possible, been used to denote like parts, albeit with the addition of the prefix "500" to indicate that these features belong to a fifth example of system **100**.

[0064] In one or more examples, grouping module **506** includes track **508**. Track **408** is a single oval track. Grippers **509** move containers **101** along track **508**. Each gripper **509** is moved about track **508** by chain **510**.

[0065] In one or more examples, track **508** of grouping module **506** is a single oval track that includes two straight sections **510***a* and **510***b* and two curved sections **512***a*, **512***b*.

[0066] In one or more examples, grouping module **506** also includes second track **512**. Second track **512** is disposed in a vertical plane that takes the container hand-off from track **508** (also referred to as first track). Second track **512** uses a second set or second plurality of second grippers **509***b* (herein referred to collectively as second grippers and individually as second gripper) and second set or second plurality of second lugs **511***b* (herein referred to collectively as second lugs and individually as second lug) to transport containers **101** after receiving them from track **508**.

[0067] Referring now to FIG. **6**, which illustrates an example of grouping module **606** of system **100**. The example of system **100** shown in FIG. **6** shares many common features with the examples of system **100** shown in FIGS. **1-5**. In the example of system **100** shown in FIG. **6**, like numerals have, where possible, been used to denote like parts, albeit with the addition of the prefix "600" to indicate that these features belong to a sixth example of system **100**.

[0068] In one or more examples, grouping module **606** includes track **608**. Track **608** is a single oval track. Grippers **609** move containers **101** along track **608**. Each gripper **609** is moved about track **608** by chain **610**.

[0069] In one or more examples, track **608** of grouping module **606** is an irregular or oblong track (e.g., as with the example of track **408** shown in FIG. **4**). In one or more examples, second track **612** is disposed in a vertical plane that receives containers **101** from track **608**.

[0070] Each of the examples shown in FIGS. **1-6** include unique benefits, as will be described herein below.

[0071] The following portion of the present disclosure refers to examples of conveying module **102**, **202** (e.g., as shown in FIGS. **1** and **2**). It can be appreciated that any of the examples of grouping module **106**, **206**, **306**, **406**, **506**, **606** can be used with any of the examples of conveying module **102**, **202**.

[0072] Referring now to FIGS. **1** and **2**, in one or more examples, each conveying module **102**, **202** receives a stream of containers **101**. At this point, the stream of containers **101** typically does not have spacing between each container **101**.

[0073] In one or more examples, as the stream of containers **101** reaches conveying module **102**, **202**, the stream meets first star-wheel **122**, **222**. First star-wheel **122**, **222** is configured to help straighten the stream of containers **101** and feed containers **101** of the stream to metering screw **124**, **224**.

[0074] In one or more examples, metering screw **124**, **224** creates a pitch or a predetermined spacing "S" (e.g., as shown by metering screw **224** in FIG. **2**) between each of containers **101**. Metering screw **124**, **224** then feeds the spaced stream of containers **101** to second star-wheel **126**, **226**.

[0075] Referring now to FIG. **2**, in one or more examples, second star-wheel **226** has a different shape than first star-wheel **222**. As an example, second spacing **228***b* between centers of adjacent second divots **232***b* of second star-wheel **226** is larger than first spacing **228***a* between centers of adjacent first divots **232***a* of first star-wheel **222**. As another example, second teeth **234***b* of second star-wheel **226** are wider that first teeth **234***a* of first star-wheel **222**. However, the size of divots **232***a*, **232***b* of each of first and second star-wheels **222**, **226** remains the same, in order to accept and handle containers **101** of the same diameter.

[0076] In one or more examples, divots **232***a*, **232***b* of star-wheels **222**, **226** can be non-circular to convey non-circular containers **101**, such as juice boxes, milk cartons, or motor oil.

[0077] In one or more examples, second star-wheel **226** typically has a smaller diameter and spins faster than first star-wheel **222**. This combination of star-wheels **222**, **226**, taken alone and in combination with others, allows for a more compact footprint of conveying module **202** and of the overall system **100**.

[0078] Referring now to FIGS. **7-9**, which illustrate examples of system **100**. The example of system **100** shown in FIG. **7** shares many common features with the examples of system **100** shown in FIGS. **1-6**. In the example of system **100** shown in FIG. **7**, like numerals have, where possible, been used to denote like parts, albeit with the addition of the prefix "700" to indicate that these features belong to a seventh example of the system **100**. The example of system **100** shown in FIG. **8** shares many common features with the examples of system **100** shown in FIGS. **1-7**. In the example of system **100** shown in FIG. **8**, like numerals have, where possible, been used to denote like parts, albeit with the addition of the prefix "800" to indicate that these features belong to an eighth example of system **100**. The example of system **100** shown in FIG. **9** shares many common features with the examples of system **100** shown in FIGS. **1-8**. In the example of system **100** shown in FIG. **9**, like numerals have, where possible, been used to denote like parts, albeit with the addition of the prefix "900" to indicate that these features belong to a ninth example of system **100**.

[0079] Referring to FIG. **7**, in one or more examples, the stream of containers **101** forms path **740** for the stream of containers **101** from first star-wheel **722** to track **708** of grouping module **706**. Path **740** is defined by a travel path of the center of each container **101**. Path **740** stays substantially the same even if the diameter of containers **101** changes (e.g., after switching out star-wheels to change container size as described above).

[0080] When comparing FIGS. **7**, **8** and **9**, containers **101** of FIG. **7** are smaller than containers **101** of FIGS. **8** and **9**. However, path **740**, **840**, **940** of the centers of containers **101** is substantially the same, starting from first star-wheel **722**, **822**, **922** of conveying module **702**, **802**, **902** through third star-wheel **750**, **850**, **950** of orienting module **704**, **804**, **904**. In one or more examples, path **740**, **840**, **940** is maintained by swapping-out first star-wheel **722**, metering screw **724**, second star-wheel **726** and third star-wheel **750** for a corresponding one of these parts (e.g., first star-wheel **822**, **922**; metering screw **824**, **924**; second star-wheel **826**, **926**; and third star-wheel **850**, **950**).

[0081] In one or more examples, first star-wheel **722**, metering screw **724**, second star-wheel **726** and third star-wheel **750** may be swapped out for corresponding parts, for example, the corresponding parts having the same number of teeth **734***a*, **734***b*, **734***c* and divots **732***a*, **732***b*, **732***c* (e.g., as shown in FIGS. **7**A-**7**C), but deeper and wider divots **732***a*, **732***b*, **732***c*, and thinner teeth **734***a*, **734***b*, **734***c* (e.g., for larger containers **101** having a larger diameter C**1**) or thicker teeth **734***a*, **734***b*, **734***c* and narrower divots **732***a*, **732***b*, **732***c* (e.g., for smaller containers **101** having a smaller diameter C**1**).

[0082] FIGS. **7**A-**7**C illustrate details of examples of each of the star-wheels **722**, **726**, **750**. FIGS. **8**A-**8**C illustrate details of examples of each of star-wheels **822**, **826**, **850**. The examples of star-wheels **822**, **826**, **850** shown in FIGS. **8**A-**8**C share many common features with the examples of star-wheels **722**, **726**, **750** shown in FIGS. **7**A-**7**C. In the examples of star-wheels **822**, **826**, **850** shown in FIGS. **8**A-**8**C, like numerals have, where possible, been used to denote like parts, albeit with the addition of the prefix "800" to indicate that these features belong to another example. The examples of star-wheels **922**, **926**, **950** shown in FIGS. **9**A-**9**C share many common features with the examples of star-wheels **722**, **726**, **750** shown in FIGS. **7**A-**7**C and the examples of star-wheels **822**, **826**, **850** shown in FIGS. **8**A-**8**C. In the examples of star-wheels **922**, **926**, **950** shown in FIGS. **9**A-**9**C, like numerals have, where possible, been used to denote like parts, albeit with the addition of the prefix "900" to indicate that these features belong to another example.

[0083] In one or more examples, first star-wheel **722**, metering screw **724**, second star-wheel **726** and third star-wheel **750** (e.g., shown in FIGS. **7** and **7**A-**7**B) can be interchanged, as needed, with first star-wheel **822**, metering screw **824**, second star-wheel **826** and third star-wheel **850** (e.g., shown in FIGS. **8** and **8**A-**8**C) or with first star-wheel **922**, metering screw **924**, second star-wheel **926** and third star-wheel **950** (e.g., shown in FIGS. **9** and **9**A-**9**C).

[0084] Referring again to FIG. **7**, in one or more examples, an axis on which each of star-wheels **722**, **726**, **750** rotates stays the same after interchanging star-wheels **722**, **726**, **750**. Further, first distances **741***a* between first star-wheel **722** and second star-wheel **726** and second **741***b* between second star wheel **726** and third star-wheel **750** stay the same after interchanging star-wheels **722**, **726**, **750**, for example, with the star-wheels **822**, **826**, **850** (e.g., shown in FIGS. **8** and **8**A-**8**C) or with star-wheels **922**, **926**, **950** (e.g., shown in FIGS. **9** and **9**A-**9**C), which are labeled **841***a* and **841***b* in FIGS. **8** and **941***a* and **941***b* in FIG. **9**.

[0085] In one or more examples, star-wheels **722**, **726**, **750**, **822**, **826**, **850**, **922**, **926**, **950** are left on the same vertical axels and metering screw **724**, **824**, **924** is left on the same horizontal axel. This allows system **100** to be easily changed for an infeed container **101** with a different diameter (e.g., different can diameter C**1** as shown in FIGS. **7-9**).

[0086] As seen in FIGS. **7-9**, path **740**, **840**, **940** of containers **101**, after orienting module **704**, **804**, **904**, is different from FIG. **7** to FIG. **8** to FIG. **9**. In previously used systems, the placement of each module differs from FIG. **7** to FIG. **8** to FIG. **9**, which, in turn, required more movement of modules and lengthier changeover times between different sized and/or shaped containers **101**. System **100** disclosed herein saves time in changeovers (e.g., for different can sizes) and reduces the possibility of errors in those changeovers because less parts must be moved to accommodate differing parts.

[0087] Referring again to FIGS. **7-9**, in one or more examples, as each container **101** passes second star-wheel **726**, **826**, **926**, container **101** is fed to orienting module **704**, **804**, **904**.

[0088] Referring now to FIG. **10**, which illustrates an example of orienting module **1004**. Orienting module **1004** is an example of the any of orienting modules **104**, **204**, **704**, **804**, **904** (e.g., as shown in FIGS. **1**, **2**, **7**, **8** and **9**).

[0089] In one or more examples, orienting module includes base **1060**. Base **1060** supports the incoming containers **101**. Generally, base **1060** is vertically stationary and

is configured to rotate with containers **101** when containers **101** are rotated by third star-wheel **1050**.

[0090] In one or more examples, orienting module **1004** includes camera **1062**. Camera **1062** is located to the side of base **1060**. Camera **1062** is configured for scanning container **101** entering and/or being oriented by orienting module **1004**.

[0091] In one or more examples, orienting module **1004** includes a plurality of turning members **1064** (e.g., herein referred to collectively as turning members and individually as turning member). Each of turning members **1064** is moveably positioned above base **1060**. Turning members **1064** contact and turn containers **101**.

[0092] In one or more examples, orienting module **1004** includes a processor (not shown). The processor is operatively connected to camera **1062**. The processor is adapted (e.g., operable or programmed) to analyze an initial orientation of containers **101** (e.g., before they are properly oriented).

[0093] In one or more examples, it is considered that camera **1062** is required to scan every single container **101**. In one or more examples, it is considered that camera **1062** is only required to scan every second, or third, or fourth container **101**.

[0094] Depending, for example, on downstream packaging steps and/or client specifications, each and every container **101** might be required to face the same direction. After the incoming (e.g., initial) orientation of containers **101** has been analyzed, the processor computes a necessary correction. Each container **101** may need a different correction from another container **101** because the incoming orientation could be different and/or because a final (e.g., desired) orientation may need to be different for each container **101**.

[0095] In one or more examples, multiple containers **101** can be used to create a single large graphic when placed adjacent to each other within the package. Adjacent containers **101** within one package can have a different orientation showing a different graphic or portion of a graphic to a customer. Alternatively, adjacent containers **101** can form one large graphic seen across multiple containers. For instance, the graphic "CANS" can consist of four containers. Each container **101** can be showing either a 'C', an 'A', an 'N' or an 'S'.

[0096] In one or more examples, third star-wheel **1050** of orientation module **1004** (e.g., may also referred to as orientation module star-wheel or orientation star-wheel) is positioned above rotatable base **1060** to help secure containers **101** as they rotate past camera **1062**. As containers **101** move past camera **1062**, third star wheel **1050** helps guide them and provides further stability as containers **101** get oriented.

[0097] In one or more examples, third star-wheel **1050** of orienting module **1004** has the same spacing between centers of adjacent divots as the second star-wheel (not shown in FIG. **10**) of conveying module **1002**, as well as the same tooth thickness. In one or more examples, it may be important to maintain spacing between each container **101** so that camera **1062** is able to properly identify the incoming orientation of each container **101**. Without spacing between each container **101**, adjacent containers **101** may be recognized as a single item by camera **1062** and may not be able to transmit required information to the processor.

[0098] Referring still to FIG. **10**, in one or more examples, each turning member **1064** corresponds to one container **101**. In order to turn each container **101**, turning member **1064** moves down in order to come into contact with container **101**. As turning member **1064** moves down, disk **1066**, located on the bottom of each turning member **1064**, contacts a top of each container **101**, for example, when turning member **1064** actuates from a retracted position to a deployed position. When disk **1066** comes in contact with each container **101**, each turning member **1064** rotates each container **101** a necessary amount to place container **101** in the desired orientation.

[0099] In one or more examples, disk **1066** of turning member **1064** is deformable such that disk **1066** can conform to a contour of at least a portion of an upper end of container **101** when turning member **1064** actuates from a retracted position (e.g., as shown in FIG. **11**) to a deployed position (e.g., as shown in FIG. **10**).

[0100] In one or more examples, a plurality of surfaces **1070** (herein referred to collectively as surfaces and individually as surface) is located within base **1060**. Each of surfaces **1070** corresponds to one of turning members **1064** and to one of containers **101**. Surfaces **1070** are also operatively connected to the processor (not shown) and are programmed to turn the same direction and the same amount as each of turning members **1064**. Thus, containers **101** are turned evenly from the top and from the bottom, further ensuring stability during turning.

[0101] In one or more examples, motor **1072** for each of surfaces **1070** is located below the top surface of base **1060**. The particular orientation, with moving turning members **1064** above containers **101** and a vertically stationary surface **1070** below the containers, allows for a smaller motor and smaller turning turret, since each container **101** does not need to be moved vertically. Once containers **101** are properly oriented, containers **101** are moved to the grouping module (not shown in FIG. **10**).

[0102] In one or more examples, each one of surfaces **1070** is or takes the form of a rotatable disk that includes an upper disk-surface that is flush with an upper base-surface of base **1060**. In one or more examples, motor **1072** is configured to rotate surface **1070**.

[0103] Referring now to FIG. **11**, which illustrates an example of a portion of orientation module **1104**. The example of orientation module **1104** depicts a subsequent view in which it is possible to appreciate the now oriented containers **101***a*, which were previously oriented in different directions, as well as the now retracted turning members **1164***a*, which were previously in contact with the tops of containers **101**. The example of orientation module **1104** shown in FIG. **11** shares many common features with the example of orientation module **1004** shown in FIG. **10**. In the example of orientation module **1104** shown in FIG. **11**, like numerals have, where possible, been used to denote like parts, albeit with the addition of the prefix "1100" to indicate that these features belong to another example of the orientation module.

[0104] Referring now to FIG. **12**, which illustrates an example of grouping module **1206**. The example of grouping module **1206** shown in FIG. **12** shares many common features with the examples of grouping module **106**, **206**, **306**, **406**, **506**, **606**, **706**, **806**, **906** shown in FIGS. **1-7**, **8** and **9**. In the example of grouping module **1206** shown in FIG. **12**, like numerals have, where possible, been used to denote

like parts, albeit with the addition of the prefix "1200" to indicate that these features belong to another example of the grouping module.

[0105] In one or more examples, after containers **101** are oriented within the orienting module (e.g., not shown in FIG. **12**), the stream of containers **101** is passed the orienting module. Grouping module **1206** is responsible for grouping a necessary number of containers **101** together (e.g., to begin forming packs of containers **101** for subsequent packaging), while at the same time ensuring that the orientation of each individual container **101** remains unchanged from the orientation that was received from the orienting module. As described above, a number of possibilities are presented for taking the stream of containers **101** and grouping them while ensuring that the desired orientation is maintained.

[0106] FIG. **12** illustrates an example of grouping module **1206** (e.g., as previously depicted in the example of the grouping module **206** shown in FIG. **2**). Grouping module **1206** includes track **1208**. Track **1208** is single oval track and is oriented in a horizontal plane. Grippers **1209**, which push the containers **101** along track **1208**, are individually attached to lugs **1211**. In one or more examples, each lug **1211** is actuated by the linear servo drive (not shown in FIG. **12**). The linear servo drive (e.g., servo drive **112** shown in FIG. **1**) allows for programming an individual lug **1211** or groups of lugs **1211** speed profiles along track **1208** for lugs **1211** to follow.

[0107] As containers **101** are circulated from the orienting module to grouping module **1206**, lugs **1211** move attached grippers **1209** in place to receive containers **101**. Lugs **1211** are arranged prior to picking up containers **101** in queuing section **1280** and accelerate around first curved portion **1212***a* of track **1208** once a desired group of containers **101** (e.g., in this case it is four containers **101**) have been contacted in order to create gap **1299** between the group and the next group of containers **101**, while maintaining the desired orientation of containers **101** of the group of containers **101**.

[0108] Once the group of containers **101** has reached first straight section **1210***a* of track **1208**, the group of containers **101** travel at a constant speed. At this point, various packaging steps can take place. Each formed group of containers **101** can meet a group from the mirrored set of modules (e.g., module set II shown in FIG. **1**) to make a single pack (e.g., pack **114** as shown in FIG. **1**), such as an eight-pack, a four-pack, and the like.

[0109] Referring now to FIG. **13**A, which illustrates an example of a portion of grouping module **1306**. The example of grouping module **1306** shown in FIG. **13** shares many common features with the examples of grouping module **106**, **206**, **306**, **406**, **506**, **606**, **706**, **806**, **906**, **1206** shown in FIGS. **1-7**, **8**, **9** and **12**. In the example of grouping module **1306** shown in FIG. **13**, like numerals have, where possible, been used to denote like parts, albeit with the addition of the prefix "1300" to indicate that these features belong to another example of the grouping module.

[0110] In one or more examples, as lugs **1311** travel around track **1308**, lugs **1311** follow a programmed speed profile. This allows any plurality of lugs **1311** to be arranged together to form a desired group of lugs **1311** (e.g., two together, three together, etc.). After lugs **1311** and grippers **1309** have reached the end of the first straight section **1310***a* of the track **1308**, lugs **1311** and grippers **1309** peel away from containers **101**, for example, at location **1385** of track **1308**.

[0111] In one or more examples, a method used to peel away grippers **1309** and lugs **1311** is by slowing down grippers **1309** and lugs **1311** to allow containers **101** to keep moving forward at the point where first straight section **1310***a* of the track **1308** turns to second curved portion **1312***b* of the track **1308**. This speed profile allows for gripper **1309** and container **101** to gain separation from each other before gripper **1309** changes directions, thus, preventing grippers **1309** from shifting, turning, or otherwise disturbing containers **101**. After grippers **1309** are free of containers **101**, they accelerate around the rest of second curved portion **1312***b* of track **1308** and the second straight portion (not shown in FIG. **13**) of track **1308** to join lugs **1311** in the queuing section (e.g., queuing section **1280** shown in FIG. **12**).

[0112] Referring now to FIG. **13**B, which illustrates a graphical representation of the velocity profile **1390** for the lug (e.g., lug **1311** shown in FIG. **13**A) and the gripper (e.g., gripper **1309** shown in FIG. **13**A), as described above. The profile **1390** includes acceleration portion **1391**, in which lug **1311** and, thus, gripper **1309** is accelerated immediately after contacting the last container **101** in the intended group of containers **101** (e.g., the second in the package of two and the third in a package of four). Acceleration portion **1391** allows the group of lugs **1311** to produce the gap (e.g., gap **1299** shown in FIG. **12**) from the next group of lugs **1311**. Afterwards the profile **1390** includes constant speed portion **1392**, in which containers **101** are moved along at a constant speed while packaging steps are performed on containers **101**. Afterwards, the profile includes a deceleration portion **1393**, in which lugs **1311** and grippers **1309** are decelerated (e.g., slowed down) as the containers **101** are moved away by another conveyor or lug and carrier combination (e.g., as described above) to drop off containers **101** smoothly without disturbing them. After the containers **101** are dropped off by grippers **1309**, the profile **1390** includes a second acceleration portion **1394**, in which lugs **1311** and grippers **1309** accelerate to the highest velocity to return to the queuing section (e.g., queuing section **1280** shown in FIG. **12**) before picking up another container **101**.

[0113] Referring now to FIG. **14**, which illustrates an example of a portion of system **100**. The example of system **100** shown in FIG. **14** shares many common features with the examples of system **100** shown in FIGS. **1-7**, **8**, **9** and **10-13**. In the example of system **100** shown in FIG. **14**, like numerals have, where possible, been used to denote like parts, albeit with the addition of the prefix "1400" to indicate that these features belong to another example of system **100**.

[0114] In one or more examples, lugs **1411** are each attached and driven by a linear chain (not shown in FIG. **14**). Lugs **1411** and containers **101** travel at a constant velocity around track **1408**. In one or more examples, system **100** conveys the stream of containers **101** to a downstream packaging station or to set of second lugs **1411***b* and second grippers **1409***b* that move along second track **1412** and that would produce the groups of containers **101**.

[0115] Referring now to FIG. **15**, which illustrates an example of a portion of system **100**. The example of system **100** shown in FIG. **15** shares many common features with the examples of system **100** shown in FIGS. **1-7**, **8**, **9** and **10-14**. In the example of system **100** shown in FIG. **15**, like

numerals have, where possible, been used to denote like parts, albeit with the addition of the prefix "1500" to indicate that these features belong to another example of system **100**.

[0116] In one or more examples, track **1508** is horizontal but not strictly oval in shape. In one or more examples, track **1508** is skewed at one point, for example, at location "a". The oblong shape allows for a smoother departure of grippers **1509** from each of containers **101**, since the turning angle of grippers **1509** is not as sharp. This may decrease the chances of gripper **1509** shifting container **101** as it peels away.

[0117] Each of the examples shown in FIGS. **14** and **15** can be paired with the second track (e.g., second track **1412** shown in FIG. **14** and second track **1512** shown in FIG. **15**), which is responsible for receiving containers **101** from the linear chain and grouping them, again while not disturbing and disorienting containers **101**.

[0118] Referring to FIG. **15**, in one or more examples, grouping module **1506** include second track **1512** to move second lugs **1511***b* and second grippers **1509***b* after receiving containers **101** from track **1508**. Second grippers **1509***b* group containers **101** into packs **114** and move packs **114** along also without changing the orientation of each container **101**. While first grippers **1509** and first lugs **1511** move about the horizontal plane, second grippers **1509***b* and second lugs **1511***b* move about a vertical plane. Further, second track **1512** follows an oval but includes a horizontal protuberance **1513**, which forces each second lug **1511***b* and attached second gripper **1509***b* towards the container **101**.

[0119] In one or more examples, second track **1512** can include a linear motor servo drive (not shown) to actuate each of second lugs **1511***b* along second track **1512**. Second lugs **1511***b* and second grippers **1509***b* of second track **1512** are positioned below grippers **1509** and lugs **1511** of track **1508** when both sets contact container **101**. This allows system **100** to handle taller containers **101**.

[0120] In one or more examples, track **1508** (e.g., first track) and second track **1512** partially overlap each other in an area indicated in FIG. **15** by reference the letter "O" and are partially aligned in the same direction, such that grippers **1509** of track **1508** and second grippers **1509***b* of second track **1512** contact container **101** at the same time and for a period of time in area "O" as track **1508** hands containers **101** off to second track **1212**. The overlap of the tracks also allows for a more compact floor space arrangement because two vertical or two horizontal tracks would not be able to overlap without having to move container **101** vertically.

[0121] In one or more examples, during handing off of container **101** from gripper **1509** to second gripper **1509***b*, container **101** is simultaneously driven by other containers **101** of the stream of containers **101**, for example, by second grippers **1509***b* along a straight path of track **1508**. Grippers **1509** are withdrawn as they peel away from contacting container **101** of the stream of containers **101**.

[0122] In one or more examples, gripper **1509** and second gripper **1509***b* drive the respective container **101** at the same velocity when both are in contact with container **101**. This arrangement allows for a smooth transition from containers **101** being pushed along by lugs **1511** and grippers **1509** to later containers **101** being pushed along by second lugs **1511***b* and second grippers **1509***b*.

[0123] In one or more examples, as lugs **1511** follow track **1508** and are connected to corresponding grippers **1509**, curved guide **1548** is placed at a location where grippers **1509** pick up containers **101** from the orienting module (not shown in FIG. **15**) and follows track **1508** to the first straight section **1510***a*. Guide **1548** helps bias containers **101** against a body of each one of grippers **1509**.

[0124] Referring now to FIG. **16**, which illustrates an example of gripper **1609**. Gripper **1609** is an example of any of the examples of gripper **109**, **209**, **309**, **409**, **509**, **609**, **709**, **809**, **909**, **1209**, **1309**, **1409** shown in FIGS. **1-7**, **8**, **9**, **12**, **13**A, **14** and **15**. FIG. **16** depicts an example of gripper **1609** used by an example of grouping module **1606**.

[0125] In one or more examples, gripper **1609** includes gripper body **1644**. Gripper body **1644** partially surrounds and drives a corresponding container **101** along the track (not shown in FIG. **16**). In one or more examples, gripper body **1644** includes receiving end **1643** and locking end **1645**, opposite receiving end **1643**. In one or more examples, gripper body **1644** is coupled to lug **1611** at or by locking end **1645**.

[0126] In one or more examples, coupling **1647** is used to couple gripper body **1644** and lug **1611** together. In one or more examples, coupling **1647** is located on locking end **1645** of gripper body **1644**. Coupling **1647** may be any suitable type or style of mechanical coupling or connector assembly, such as a two-part interconnection assembly. In an example, coupling **1647** is a bayonet style lock. This coupling style allows for an easy changeover of gripper **1609** depending, for example, on the size and/or shape of container **101**.

[0127] In one or more examples, each lug **1611** includes shaft **1649**. Shaft **1649** extends horizontally and is configured to connect to coupling **1647** at locking end **1645** of gripper body **1644**.

[0128] In one or more examples, dampener **1651** is positioned within or is otherwise coupled to or integrated with gripper body **1644**. In one or more examples, dampener **1651** is or takes the form of a spring, a dash pot, a cushion, or the like, which allows for smoothly reacting to container **101** that is out of place and also acts as a shock absorber in order to not damage container **101** when gripper **1609** comes into contact with container **101**.

[0129] In one or more examples, receiving end **1643** of gripper **1609** includes concave gripper surface **1657**. Concave gripper surface **1657** is configured (e.g., suitable sized and shaped) to partially surround container **101**. For example, concave gripper surface **1657** has a radius of curvature that is approximately equal to that of container **101** such that receiving end **1643** suitable accepts and handles container **101** having a matching diameter.

[0130] In one or more examples, insert **1653** is placed in a concave portion of receiving end **1643** (e.g., applied to or on concave gripper surface **1657**) of gripper body **1644**, such that, when insert **1652** comes in contact with container **101**, insert **1653** of receiving end **1643** helps keep container **101** oriented in the proper position and/or orientation.

[0131] In one or more examples, insert **1653** includes a material having a higher coefficient of friction than gripper body **1644**, such as of receiving end **1643**. In one or more examples, insert **1653** also has a higher coefficient of friction than a contact surface of guide **1648**. This combination of friction coefficients allows gripper **1609** to slide container **101** along guide **1648** without container **101** changing an orientation or slipping from gripper **1609**, especially along the curved portion of the track (not shown in FIG. **16**) where lug **1611** and gripper **1609** are accelerating.

[0132] In one or more examples, gripper **1609** utilizes vacuum (e.g., negative pressure) to hold container in contact with receiving end **1643** of gripper **1609**. In an example, gripper **1609** includes vacuum application device **1654** that is configured to selectively apply vacuum to a portion of a surface of container **101** when container **101** is in contact with receiving end **1643** of gripper **1609**. In one or more examples, vacuum application device **1654** may include, but is not limited to, a suction cup (e.g., a flexible bellows suction cup), a vacuum port, or other suitable vacuum mechanism.

[0133] Generally, vacuum application device **1654** is located on receiving end **1643**, such as on, being formed through or extending from concave gripper surface **1657**. In this manner, concave gripper surface **1657** appropriately positions container **101** for contact with vacuum application device **1654** during vacuum coupling of gripper **1609** to container **101**. In one or more examples, as gripper **1609** and container **101** move past guide **1648**, insert **1653** and/or vacuum application device **1654** maintain the orientation of the container **101**.

[0134] In one or more examples, insert **1653** can be an adhesive strip, such as fugitive glue. This type of adhesive allows gripper **1609** to keep container **101** from rotating, but also allows gripper **1609** to peel away at the necessary stage without affecting the orientation of container **101**.

[0135] Referring now to FIG. **17**, which illustrates an example of a portion of system **100**. The example of system **100** shown in FIG. **17** shares many common features with the examples of system **100** shown in FIGS. **1-7**, **8**, **9** and **10-16**. In the example of system **100** shown in FIG. **17**, like numerals have, where possible, been used to denote like parts, albeit with the addition of the prefix "1700" to indicate that these features belong to another example of system **100**.

[0136] In one or more examples, system **100** includes or can be used in conjunction with packaging apparatus **1795**. Packaging apparatus **1795** partially overlaps with track **1708** and is configured to overlay packaging **1796** (e.g., cardboard as shown in FIG. **17** or plastic wrap), while grippers **1709** are still in contact with containers **101**. This arrangement further ensures that containers **101** keep their intended orientation all the way through the packaging process.

[0137] Referring now to FIG. **18**, which illustrates an example of a portion of system **100**. The example of system **100** shown in FIG. **18** shares many common features with the examples of system **100** shown in FIGS. **1-17**. In the example of system **100** shown in FIG. **18**, like numerals have, where possible, been used to denote like parts, albeit with the addition of the prefix "1800" to indicate that these features belong to another example of system **100**.

[0138] The example of system **100** shown in FIG. **18** includes two sets of modules (e.g., first module set I and second module set II as previously depicted in the example shown in FIG. **1**). In one or more examples, each set of modules (e.g., the first module set I and/or the second module set II) includes conveying module **1802**, orienting module **1804** and grouping module **1806**.

[0139] FIG. **18** depicts first star-wheel **1822**, second star-wheel **1826** and metering screw **1824** of conveying module **1802**. Conveying module **1802** is configured to supply stream **115** of containers **101**. Conveying module **1802** is also configured to guide or move each one of containers **101** of stream **115** along a portion of path **1840**. Conveying module **1802** is further configured to transfer containers **101** of stream **115** to orienting module **1804**.

[0140] FIG. **18** depicts third star-wheel **1850** and camera **1862** of orienting module **1804**. Orienting module **1804** is configured to receive stream **115** of containers **101** (e.g., from conveying module **1802**). Orienting module **1804** is also configured to guide or move each one of containers **101** of stream **115** along a portion of path **1840**. Orienting module **1804** is further configured to scan and orient containers **101**. For example, orienting module **1804** is configured to orient each one of containers **101** in at least one desired orientation as containers **101** travel along path **1840**.

[0141] In one or more examples, each set of modules (e.g., the first module set I and/or the second module set II) also includes masking module **1805**. Masking module **1805** is configured to mask or apply a mask (e.g., mask **119** as shown in FIGS. **19A-20**) to at least a portion of a barcode (e.g., barcode **103** as shown in FIGS. **19A-20**) of at least one container **101** of stream **115** as containers **101** travel along a portion of path **1840**.

[0142] In one or more examples, masking module **1805** is situated along a portion of path **1840** between orienting module **1804** and grouping module **1806**.

[0143] In one or more examples, masking module **1805** includes masking apparatus **1828**. Masking apparatus **1828** is situated proximate to path **1840** of stream **115** of containers **101**. Masking apparatus **1828** is configured for masking or for applying the mask (e.g., mask **119** as shown in FIGS. **19A-20**) to at least a portion of the barcode (e.g., barcode **103** as shown in FIGS. **19A-20**) of at least one of containers **101** as containers **101** travel along path **1840**.

[0144] In one or more examples, masking module **1805** includes controller **1830**. Controller **1830** is in communication with masking apparatus **1828**. Controller **1830** is configured to selectively actuate masking apparatus **1828** when at least one of containers passes by masking apparatus **1828** along path **1840**.

[0145] FIG. **18** depicts track **1808** and grippers **1809** of grouping module **1806**. Grouping module **1806** is configured to receive containers **101** from orienting module **1804**. Grouping module **1806** is also configured to guide or move each one of containers **101** of stream **115** along a portion of path **1840**. Grouping module **1806** is further configured to maintain each container **101** in the desired orientation as containers **101** travel along a portion of path **1840**. Grouping module **1806** is also configured to organize containers **101**, while in the desired orientation (e.g., oriented containers), into groups and/or packs **114**, for example, for packaging (e.g., as shown in FIG. **17**).

[0146] Referring now to FIGS. **19A** and **19B**, which illustrates an example of a portion of system **100** and, more particularly, a portion of orienting module **1904** and a portion of masking module **1905**. The example of system **100** shown in FIGS. **19A** and **19B** shares many common features with the examples of system **100** shown in FIGS. **1-18**. In the example of system **100** shown in FIGS. **19A** and **19B**, like numerals have, where possible, been used to denote like parts, albeit with the addition of the prefix "1900" to indicate that these features belong to another example of system **100**.

[0147] FIG. **19A** depicts masking apparatus **1928** of masking module **1905**, which masks at least a portion of barcode **103** (e.g., applies mask **119**) to at least a portion of barcode **103**. FIG. **19A** also depicts camera **1962**, third star-wheel

1950, base **1960**, and surfaces **1970** of orienting module **1904**, which properly orient at least one container **101** to a desired orientation for a masking operation performed by masking apparatus **1928**.

[0148] Barcode **103** is generally applied to a surface of each one of containers **101**. The term "barcode," for example, in reference to barcode **103**, refers to any visual representation of data or information, for example, in a machine-readable form (e.g., scannable by an optical scanner or barcode reader). Barcode **103** can take any suitable form and may include, but is not limited to, one-dimensional (1D) barcodes, two-dimensional (2D) barcodes (e.g., matrix barcodes or quick response (QR) codes, and the like. In one or more examples, barcode **103** is printed on the surface of container **101**. In one or more examples, barcode **103** is or takes the form of a label (e.g., an adhesive label) that is applied to the surface of container **101**.

[0149] For the purpose of the present disclosure, the terms "mask" and "masking," in reference to applying a mask (e.g., mask **119**) to or masking a portion of a barcode refers to, but is not limited to, blocking, obfuscating, altering, or modifying the barcode such that at least a portion of the barcode is rendered unscannable after the masking operation.

[0150] In one or more examples, masking apparatus **1928** includes or takes the form of an inkjet printer. In these examples, masking apparatus **1928** (e.g., inkjet printer) is configured to apply ink over at least a portion of barcode **103**. In these examples, masking apparatus **1928** includes any operational elements, features and/or components typical for inkjet printers of the type used to print on the surface of container **101**, for example, depending on the contour of the surface of container **101**, such as curved surfaces of circular containers (e.g., cans or bottles), planar surfaces of square containers (e.g., boxes or cartons), or other regular or irregular surfaces of the containers. The operational elements, features and/or components of the inkjet printer may further depend on the material type of surface or the material of container **101** on which barcode **103** is situated, for example, metal containers, glass containers, paper or paperboard containers, plastic containers, barcode labels, and the like.

[0151] In one or more examples, masking apparatus **1928** includes or takes the form of a laser printer. In these examples, masking apparatus **1928** (e.g., laser printer) is configured to apply ink over at least a portion of barcode **103**. In these examples, masking apparatus **1928** includes any operational elements, features and/or components typical for laser printers of the type used to print on the surface of container **101**, for example, depending on the contour of the surface of container **101**, such as curved surfaces of circular containers (e.g., cans or bottles), planar surfaces of square containers (e.g., boxes or cartons), or other regular or irregular surfaces of the containers. The operational elements, features and/or components of the laser printer may further depend on the material type of surface or the material of container **101** on which barcode **103** is situated, for example, metal containers, glass containers, paper or paperboard containers, plastic containers, barcode labels, and the like.

[0152] In one or more examples, masking apparatus **1928** includes or takes the form of a laser etcher or a laser engraver. In these examples, masking apparatus **1928** (e.g., laser etcher or laser engraver) is configured to remove at least a portion of barcode **103**. For example, masking apparatus **1928** (e.g., laser etcher or laser engraver) melts, vaporizes, or otherwise removes material from the surface of container **101** on which barcode **103** is applied. In these examples, masking apparatus **1928** includes any operational elements, features and/or components typical for laser etchers or laser engravers of the type used to remove material from the surface of container **101**, for example, depending on the contour of the surface of container **101**, such as curved surfaces of circular containers (e.g., cans or bottles), planar surfaces of square containers (e.g., boxes or cartons), or other regular or irregular surfaces of the containers. The operational elements, features and/or components of the laser etcher or laser engraver may further depend on the material type of surface or the material of container **101** on which barcode **103** is situated, for example, metal containers, glass containers, paper or paperboard containers, plastic containers, barcode labels, and the like.

[0153] In other examples, masking apparatus **1928** may include or take the form of any other suitable device or mechanism that operates to mask (e.g., remove, cover, or otherwise block) a portion of barcode **103**.

[0154] In any of the above examples, the controller (e.g., controller **1830** shown in FIG. **18**) operates to instruct masking apparatus **1928** to apply mask **119** to at least a portion of barcode **103** (e.g., apply ink over or remove at least a portion of barcode **103**) at an appropriate time as container **101** moves along the path (e.g., path **1840** shown in FIG. **18**). In an example, the controller includes a processor, memory, and program instructions stored in the memory and that are executable by the processor to provide instructions to masking apparatus **1928**.

[0155] Generally, masking apparatus **1928** is configured to apply mask **119** having various dimensions, depending, for example, on the extent of barcode **103** to be masked in a particular masking operation. As an example, masking apparatus **1928** applies mask **119** to a portion of barcode **103**. As another example, masking apparatus **1928** applied mask **119** to an entirety of barcode **103**. In one non-limiting example, mask **119** may have dimensions of approximately 2 millimeters by approximately 25 millimeters, which masks a portion of barcode **103**.

[0156] In one or more examples, mask **119** is capable of being removed (e.g., a removable mask). For example, masking apparatus **1928** (e.g., inkjet printer or laser printer) may utilize and apply an ink of the type that can be removed from the surface of container **101** such that barcode **113** is uncovered and, thereby, again scannable.

[0157] Referring now to FIG. **20**, which illustrates an example of a portion of system **100** and, more particularly, a portion of orienting module **2004** and a portion of masking module **2005**. The example of system **100** shown in FIG. **20** shares many common features with the examples of system **100** shown in FIGS. **1-19**B. In the example of system **100** shown in FIG. **20**, like numerals have, where possible, been used to denote like parts, albeit with the addition of the prefix "2000" to indicate that these features belong to another example of system **100**.

[0158] FIG. **20** depicts masking apparatus **2028** of masking module **2005**, which masks at least a portion of barcode **103** (e.g., applies mask **119** to at least a portion of barcode **103**). FIG. **20** also depicts camera **2062** and third star-wheel **2050** of orienting module **2006**, which properly orient at

least one container **101** to a desired orientation for a masking operation performed by masking apparatus **2028**.

[0159] In one or more example, stream **115** of container **101** is moved along a portion of path **2040** and each one of containers **101** is transferred from conveying module **2002** to orienting module **2004** along path **2040**. Each one of containers **101** is oriented in initial orientation **116** (e.g., initially oriented container **101***b*) when received by orienting module **2004**. The rotational orientation of containers **101** may not be controlled as stream **115** of containers **101** are guided along a portion of path **2040** by conveying module **2002**. Accordingly, initial orientation **116** of each one of containers **101** may be unknown and/or may be different when container **101** is handed off to orientating module **2004**.

[0160] In one or more examples, at least one container **101** is selectively oriented in masking orientation **117** (e.g., masking oriented container **101***c*) relative to masking apparatus **2028** before at least the one container **101** passes by masking apparatus **2028** along path **2040**. For example, at least one or each one of containers **101** is selectively rotated from initial orientation **116** (e.g., first rotational orientation) to masking orientation **117** (e.g., second rotational orientation) using orienting module **2004** before container **101** is presented to or passes by masking apparatus **2028** along path **2040**.

[0161] Masking orientation **117** refers to a desired rotational orientation of container **101** such that barcode **103** is suitably situated for the masking operation using masking apparatus **2028**. For example, masking orientation **117** is a rotational orientation of container **101** in which barcode **103** is facing an outward direction relative to third star-wheel **2050**.

[0162] In one or more example, each one of containers **101** is then selectively oriented to packing orientation **118** (e.g., packing oriented container **101***d*) after containers **101** passes by masking apparatus **2028** along path **2040**. For example, at least one or each one of containers **101** is selectively rotated from masking orientation **117** (e.g., second rotational orientation) to packing orientation **118** (e.g., third rotational orientation) after containers **101** pass by masking apparatus **2028** along path **2040** and before containers **101** are transferred to grouping module **2006**.

[0163] Packing orientation **118** refers to a desired rotational orientation of container **101** for packaging (e.g., as shown in FIG. **17**). For example, packing orientation **118** orients container **101** such that a graphic or portion of a graphic is presented in a desired direction. In one or more examples, packing orientation **118** for at least one of containers **101** is different than at least another one of containers **101**.

[0164] Referring now to FIG. **21**, which illustrates an example of a portion of system **100** and, more particularly, a portion of conveying module **2102**, a portion of orienting module **2104** and a portion of masking module **2105**. The example of system **100** shown in FIG. **21** shares many common features with the examples of system **100** shown in FIGS. **1-20**. In the example of system **100** shown in FIG. **21**, like numerals have, where possible, been used to denote like parts, albeit with the addition of the prefix "2100" to indicate that these features belong to another example of system **100**.

[0165] FIG. **21** depicts first star-wheel **2122**, metering screw **2124** and second star-wheel **2126** of conveying module **2102**, which supplies stream **115** of containers **101** to orienting module **2104** in initial orientation **116**. FIG. **21** also depicts masking apparatus **2128** and controller **2130** of masking module **2105**, which masks at least a portion of barcode **103** (not shown in FIG. **21**) of container **101**. FIG. **21** further depicts camera **2162**, third star-wheel **2150**, base **2160** and surfaces **2170** of orienting module **2106**, which properly orients at least one container **101** to masking orientation **117** for the masking operation performed by masking apparatus **2128** and subsequently orients at least one container **101** to packing orientation **118** after the masking operation.

[0166] In one or more examples, conveying module **2102** is configured to transfer stream **115** of containers **101** to orienting module **2104** in initial orientation **116**. Orienting module **2004** is configured to receive stream **115** of containers **101**, to guide each one of containers **101** along a portion of path **2140**, and to orient at least one of containers **101** in masking orientation **117** at masking location **2120** along path **2140**. Generally, masking location **2120** is a position along path **2140** at which the masking operation is performed using masking apparatus **2128**. a Masking module **2105** is configured to apply mask **119** (not shown in FIG. **21**) to at least a portion of barcode **103** (not shown in FIG. **21**) of at least one container **101** as container **101** passes marking location **2120** along path **2140**.

[0167] In one or more examples, orienting module **2104** is configured to selectively rotate at least one or each one of containers **101** from initial orientation **116** to masking orientation **117** before container **101** reaches or passes by masking location **2120** along path **2140**. In one or more examples, orienting module **2104** is further configured to selectively rotate at least one or each one of containers **101** from masking orientation **117** to packing orientation **118** after container **101** passes by masking location **2120** along path **2140** and before container **101** is transferred (e.g., handed off) from orienting module **2104** to grouping module **2106**.

[0168] In one or more examples, grouping module **2106** is configured to receive stream **115** of containers **101** from orienting module **2104** in packing orientation **118**. As described herein above, grouping module **2106** is configured to group containers **101** in packs **114** (e.g., as shown in FIG. **18**) with containers **101** in packing orientation **118**. Additionally, as described herein above, grouping module **2106** is further configured to maintain each one of containers **101** in packing orientation **118** while moving containers **101** along a portion of path **2140**, for example, using the grippers.

[0169] In one or more examples, barcode **103** of select ones of containers **101** may not be masked. In these examples, orienting module **2104** is further configured to selectively rotate at least one or each one of containers **101** from initial orientation **116** directly to packing orientation **118** along path **2140** before container **101** is transferred from orienting module **2104** to grouping module **2106**.

[0170] In one or more examples, masking apparatus **2128** is situated proximate to path **2140** of stream **115** of containers **101**. Masking apparatus **2128** is configured to apply mask **119** to at least a portion of barcode **103** of at least one of containers **101**. Controller **2130** is in communication with masking apparatus **2128**. Controller **2130** is configured (e.g., is adapted or operates) to selectively actuate masking apparatus **2128** when at least one container **101** is at masking location **2120** along path **2140**.

[0171] In one or more examples, camera **2162** is situated to capture an image of at least one of containers **101** as at least container **101** travels along a portion of path **2140** in initial orientation **116**. In one or more examples, processor **2131** is coupled to camera **2162** and is configured to analyze the image and to determine a first angle of rotation from initial orientation **116** to masking orientation **117**. The turning member (e.g., turning member **1064**, **1164** shown in FIGS. **10** and **11**) of orienting module **2104** is configured to rotate container **101** by the first angle of rotation according to a first command from processor **2131**.

[0172] In one or more examples, processor **2131** is further configured to analyze the image and to determine a second angle of rotation from masking orientation **117** to packing orientation **118**. The turning member (e.g., turning member **1064**, **1164** shown in FIGS. **10** and **11**) of orienting module **2104** is further configured to rotate container **101** by the second angle of rotation according to a second command from processor **2131**.

[0173] In one or more examples, camera **2162** is any suitable scanning system or vision system that can collect or generate data that is representative of container **101** and, more particularly, that is representative of the rotational orientation of container **101**.

[0174] In one or more examples, processor **2131** is any computing device or networked system of computing devices that can analyze the data collected or generated by camera **2162**. For example, processor **2131** analyzes the captured image of container **101** in initial orientation **116** (e.g., image of initially oriented container **101***b*) and compares the image to a group or collection of reference images that represent container **101** at a plurality of rotational orientations. Based on a correlation of the captured image with the associated reference image, processor **2131** determines initial orientation **116** of container **101**. Processor **2131** then calculates the first angle of rotation needed to achieve or effectuate rotation from initial orientation **116** to masking orientation **117**.

[0175] In one or more examples, processor **2131** is configured to instruct orienting module **2104** (e.g., either directly or indirectly via a controller dedicated to orienting module **2104**) to rotate container **101** by the first angle of rotation. In one or more examples, processor **2131** is in communication with controller **2130** of masking module **2105** such that controller **2130** instructs masking apparatus **2128** to apply mask **119** to at least a portion of barcode **103** when container **101** is in masking orientation **117** at masking location **2120** along path **2140**.

[0176] In one or more examples, processor **2131** also calculates the second angle of rotation needed to achieve or effectuate rotation from masking orientation **117** to packing orientation **118**. In one or more examples, processor **2131** is configured to instruct orienting module **2104** (e.g., either directly or indirectly via a controller dedicated to orienting module **2104**) to rotate container **101** by the second angle of rotation. For example, processor **2131** analyzes the captured image of container **101** in initial orientation **116** (e.g., image of initially oriented container **101***b*) and compares the image to a group or collection of reference images that represent container **101** at a plurality of rotational orientations. Based on a correlation of the captured image with the associated reference image, processor **2131** determines initial orientation **116** of container **101**. Processor **2131** then calculates an overall angle of rotation needed to achieve or effectuate rotation from initial orientation **116** to packing orientation **118**. Processor **2131** calculates the second angle of rotation based on the difference between the overall angle of rotation and the first angle of rotation.

[0177] In one or more examples, processor **2131** is adapted to analyze the image of container **101**, calculate the first angle of rotation needed to achieve or effectuate rotation from initial orientation **116** to masking orientation **117**, and calculate the second angle of rotation needed to achieve or effectuate rotation from masking orientation **117** to packing orientation **118** in generally the same processing step such that first angle of rotation and the second angle of rotation are determined before any selective rotation of container **101** commences.

[0178] In one or more examples, processor **2131** is adapted to analyze the image of container **101** and calculate the first angle of rotation needed to achieve or effectuate rotation from initial orientation **116** to masking orientation **117** in generally the same processing step. In one or more examples, processor **2131** is adapted to analyze the image of container **101** and calculate the second angle of rotation needed to achieve or effectuate rotation from masking orientation **117** to packing orientation **118** in a subsequent processing step such that first angle of rotation is determined before selective rotation of container **101** from initial orientation **116** to masking orientation **117** and the second angle of rotation is determined before selective rotation of container **101** from masking orientation **117** to packing orientation **118**.

[0179] While image capture, correlation and analysis is provided an example method for determining or calculating the angles of rotation needed to effectuate appropriate rotation of container **101** from initial orientation **116** to masking orientation **117** and then appropriate rotation of container **101** from masking orientation **117** to packing orientation **118**, in other examples, orienting module **2104** may utilize any other suitable scanning and data analysis technique or operation without limiting the scope or intended purpose of the system **100**.

[0180] Referring now to FIG. **22**, which illustrates an example of a portion of system **100** and, more particularly, a portion of conveying module **2202**, a portion of orienting module **2204** and a portion of masking module **2205**. The example of system **100** shown in FIG. **22** shares many common features with the examples of system **100** shown in FIGS. **1-21**. In the example of system **100** shown in FIG. **22**, like numerals have, where possible, been used to denote like parts, albeit with the addition of the prefix "2200" to indicate that these features belong to another example of system **100**.

[0181] FIG. **22** depicts second star-wheel **2226** of conveying module **2202**, which supplies stream **115** of containers **101** to orienting module **2204** in initial orientation **116**. FIG. **22** also depicts masking apparatus **2228** of masking module **2205**, which masks at least a portion of barcode **103** (not shown in FIG. **22**) of container **101**. FIG. **22** further depicts camera **2262**, third star-wheel **2250** and base **2260** of orienting module **2204**, which properly orients at least one container **101** to masking orientation **117** for the masking operation performed by masking apparatus **2228** and subsequently orients at least one container **101** to packing orientation **118** after the masking operation.

[0182] As shown in FIG. **22**, in one or more examples, a circular portion of path **2240** is formed by rotation of container **101** about a central rotational axis of third star-

wheel **2250**. In other words, along the circular portion of path **2240**, container **101** revolved about the rotational axis of third star-wheel **2250**. Accordingly, in one or more examples, container **101** is scanned by camera **2262** at scanning location **2221** along path **2240** (e.g., along the circular portion of path **2240**). Generally, scanning location **2221** is a position along path **2240** at which the scanning operation is performed using camera **2262**. Further, in one or more examples, container **101** is handed off from orienting module **2204** to the grouping module (not shown in FIG. **22**) at a transferring location **2222** along path **2240**. Generally, transferring location **2222** is a position along path **2240** at which container **101** is moved away from third star-wheel **2250**.

[0183] Masking location **2220** along path **2240** is at first angular displacement A**1** from scanning location **2221**. Similarly, transferring location **2222** is at second angular displacement A**2** from masking location **2220**. Generally, first angular displacement A**1** and second angular displacement A**2** are known and is based on the relative locations of camera **2262** and masking apparatus **2228**.

[0184] Orienting module **2204** is configured to complete rotation of container **101** from initial orientation **116** to masking orientation **117** (e.g., effectuate rotation of container **101** by the first angle of rotation) between scanning location **2221** and masking location **2220**. A distance that container **101** moves from scanning location **2221** to masking location **2220** is known and is based on the diameter of third star-wheel **2250**, the diameter of container **101** and first angular displacement A**1**. The time available to effectuate rotation of container **101** from initial orientation **116** to masking orientation **117** is based on the diameter of third star-wheel **2250**, the diameter of container **101**, first angular displacement A**1** and rotational velocity of third star-wheel **2250**. Accordingly, operational speed of camera **2262**, processing speed of processor **2231**, rotational velocity of third star-wheel **2250** and rotational velocity of container **101** (e.g., as rotated by the turning member) are coordinated or synced such that rotation of container **101** from initial orientation **116** to masking orientation **117** is completed between scanning location **2221** and masking location **2220**.

[0185] In an example, camera **2262** is adapted to scan container **101** (e.g., capture image of container **101**) when container **101** passes scanning location **2221**. Processor **2231** is adapted to process and analyze the image (or other data) representing container **101** at initial orientation **116** (e.g., initially oriented container **101***b*) and calculate the first angle of rotation needed to effectuate a first rotation of container **101** from initial orientation **116** to masking orientation **117** within a portion of one rotation of third star-wheel **2250** that is less than first angular displacement A**1** between scanning location **2221** and masking location **2220**.

[0186] In an example, processor **2231** analyzes the image and calculates the first angle of rotation before container **101** reaches first rotating location **2223** along path **2240**, which is at third angular displacement A**3** from scanning location **2221**. Generally, first rotating location **2223** is a position along scan path **2240** at which rotation of container **101** from initial orientation **116** to masking orientation **117** starts.

[0187] The turning member (e.g., turning member **1064**, **1164** shown in FIGS. **10** and **11**) of orienting module **2204** is adapted to rotate container **101** at a rotational velocity sufficient to complete rotation of container **101** by the first angle of rotation before container **101** reaches second rotating location **2225** along scan path **2240**, which is at fourth angular displacement A**4** from first rotating location **2223**. Generally, second rotating location **2225** is a position along scan path **2240** at which rotation of container **101** from initial orientation **116** to masking orientation **117** ends.

[0188] Masking apparatus **2228** is adapted to apply mask **119** (not shown in FIG. **22**) to at least a portion of barcode **103** (not shown in FIG. **22**) at masking location **2220**. Generally, masking location **2220** is between second rotating location **2225** and third rotating location **2227** along scan path **2240**, which is at fifth angular displacement from second rotating location **2225**. Generally, third rotating location **2227** is a position along scan path **2240** at which rotation of container **101** from masking orientation **117** to packing orientation **118** starts. Container **101** is generally rotationally stationary along scan path **2240** between second rotating location **2225**. and third rotating location **2227** for application of mask **119** to barcode **103**.

[0189] Orienting module **2204** is configured to complete rotation of container **101** from masking orientation **117** to packing orientation **118** (e.g., effectuate rotation of container **101** by the second angle of rotation) between masking location **2220** and transferring location **2222**. A distance that container **101** moves from masking location **2220** to transferring location **2222** is known and is based on the diameter of third star-wheel **2250**, the diameter of container **101** and second angular displacement A**2**. The time available to effectuate rotation of container **101** from masking orientation **117** to packing orientation **118** is based on the diameter of third star-wheel **2250**, the diameter of container **101**, second angular displacement A**2** and rotational velocity of third star-wheel **2250**. Accordingly, processing speed of processor **2231**, rotational velocity of third star-wheel **2250** and rotational velocity of container **101** (e.g., as rotated by the turning member) are coordinated or synced such that rotation of container **101** from masking orientation **117** to packing orientation **118** is completed between masking location **2220** and transferring location **2222**.

[0190] In an example, processor **2231** analyzes the image and calculates the second angle of rotation before container **101** reaches third rotating location **2227** along path **2240**. The turning member (e.g., turning member **1064**, **1164** shown in FIGS. **10** and **11**) of orienting module **2204** is adapted to rotate container **101** at a rotational velocity sufficient to complete rotation of container **101** by the second angle of rotation before container **101** reaches fourth rotating location **2229** along scan path **2240**, which is at sixth angular displacement A**6** from third rotating location **2227**. Generally, fourth rotating location **2229** is a position along scan path **2240** at which rotation of container **101** from masking orientation **117** to packing orientation **118** ends. Generally, fourth rotating location **2229** is ahead of or upstream of transferring location **2222**.

[0191] Generally, the first angle of rotation from initial orientation **116** to masking orientation **117** is less than or equal to 180 degrees (e.g., in clockwise or counterclockwise directions). Similarly, the second angle of rotation from masking orientation to packing orientation **118** is less than or equal to 180 degrees (e.g., in clockwise or counterclockwise directions).

[0192] Referring generally to FIGS. **1-22** and particularly to FIG. **23**, by way of examples, the present disclosure directed to method **4000** for packaging containers **101** and,

more particularly, for masking barcode **103** of at least one container **101** of stream **115** of containers **101** during packaging. Additionally, examples of method **4000** enable packing and orienting barcode-masked containers **101***e* (e.g., as shown in FIG. **19**B) for creating packages of containers **101**. More particularly, examples of method **4000** facilitate metering of stream **115** of containers **101**, orienting each one of containers **101** is masking orientation **117**, masking at least a portion of barcode **103** of at least one container **101** and orienting containers **101** in packing orientation **118** for a grouping and packaging operation.

[0193] Referring to FIG. **23**, in one or more examples, method **4000** includes a step of (block **4002**) receiving container **101**. In one or more examples, stream **115** of containers **101** is supplied to the orienting module by the conveying module.

[0194] In one or more examples, method **4000** includes a step of (block **4004**) moving container **101** along the path. In one or more examples, container **101** is moved along a portion of the path by the orienting module.

[0195] In one or more examples, method **4000** includes a step of (block **4006**) scanning container **101** as container moves along the path. In one or more examples, container **101** is scanned in initial orientation **116** at the scanning location along the path by the camera.

[0196] In one or more examples, method **4000** includes a step of (block **4008**) calculating a first orientation adjustment from initial orientation **116** to masking orientation **117** for container **101**. In one or more examples, the first orientation adjustment is calculated based on an analysis of the scan of container **101** (e.g., captured image) and is expressed herein above as the first angle of rotation.

[0197] In one or more examples, method **4000** includes a step of (block **4010**) rotating container **101** to effectuate the first orientation adjustment. In one or more examples, container **101** is rotated by the first angle of rotation from initial orientation **116** to masking orientation **117** using the orientation module.

[0198] In one or more examples, method **4000** includes a step of (block **4012**) masking at least a portion of barcode **103** of container **101**. In one or more examples, mask **119** is applied to at least a portion of barcode **103** with container **101** in masking orientation **117** and at the masking location along the path.

[0199] In one or more examples, the step of (block **4012**) masking at least a portion of barcode **103** includes a step of applying ink over at least the portion of barcode **103** using the masking apparatus.

[0200] In one or more examples, the step of (block **4012**) masking at least a portion of barcode **103** includes a step of removing at least the portion of barcode **103** using the masking apparatus.

[0201] In one or more examples, method **4000** includes a step of (block **4014**) calculating a second orientation adjustment from masking orientation **117** to packing orientation **118** for container **101**. In one or more examples, the second orientation adjustment is calculated based on an analysis of the scan of container **101** (e.g., captured image) and is expressed herein above as the second angle of rotation.

[0202] In one or more examples, the step of (block **4008**) calculating the first orientation adjustment and the step of (block **4014**) calculating the second orientation adjustment are performed together. For example, the first orientation adjustment is calculated or otherwise determined (block **4008**) and the second orientation adjustment is calculated or otherwise determined (block **4014**) before rotation of container **101** to effectuate the first orientation adjustment (block **4010**). As such, in one or more examples, masking orientation **117** and packing orientation **118** are calculated or otherwise determined approximately concurrently.

[0203] In one or more examples, the step of (block **4008**) calculating the first orientation adjustment and the step of (block **4014**) calculating the second orientation adjustment are performed separately or sequentially. For example, the first orientation adjustment is calculated or otherwise determined (block **4008**) before rotation of container **101** to effectuate the first orientation adjustment (block **4010**) and the second orientation adjustment is calculated or otherwise determined (block **4014**) after the first orientation adjustment is calculated (block **4008**) and before rotation of container **101** to effectuate the second orientation adjustment (block **4016**). As such, in one or more examples, masking orientation **117** and packing orientation **118** are calculated or otherwise determined at different times.

[0204] In one or more examples, method **4000** includes a step of (block **4016**) rotating container **101** to effectuate the second orientation adjustment. In one or more examples, container **101** is rotated by the second angle of rotation from masking orientation **1117** to packing orientation **118** using the orientation module.

[0205] The preceding detailed description refers to the accompanying drawings, which illustrate specific examples of the disclosed system, gripper and method described by the present disclosure. It will be understood that the disclosed examples are merely exemplary embodiments of the way in which certain aspects of the of the disclosed system, gripper and method can be implemented and do not represent an exhaustive list of all of the ways the of the disclosed system, gripper and method may be embodied. Other examples having different structures and operations do not depart from the scope of the present disclosure.

[0206] Well-known components, materials or methods are not necessarily described in detail in order to avoid obscuring the present disclosure. Any specific structural and functional details disclosed herein are not meant to be interpreted as limiting, but merely as a basis for the claims and as a representative basis for teaching one skilled in the art to variously employ the invention.

[0207] Like reference numerals may refer to the same feature, element, or component in the different drawings. The figures are not necessarily to scale and some features may be exaggerated or minimized to show details of particular components.

[0208] Throughout the present disclosure, any one of a plurality of items may be referred to individually as the item and a plurality of items may be referred to collectively as the items. Moreover, as used herein, a feature, element, component, or step preceded with the word "a" or "an" should be understood as not excluding a plurality of features, elements, components or steps, unless such exclusion is explicitly recited.

[0209] Illustrative, non-exhaustive examples, which may be, but are not necessarily, claimed, of the subject matter according to the present disclosure are provided above. Reference herein to "example" means that one or more feature, structure, element, component, characteristic, and/or operational step described in connection with the example is included in at least one aspect, embodiment, and/or

implementation of the subject matter according to the present disclosure. Thus, the phrases "an example," "another example," "one or more examples," and similar language throughout the present disclosure may, but do not necessarily, refer to the same example. Further, the subject matter characterizing any one example may, but does not necessarily, include the subject matter characterizing any other example. Moreover, the subject matter characterizing any one example may be, but is not necessarily, combined with the subject matter characterizing any other example.

[0210] It is to be understood that not necessarily all objects or advantages may be achieved in accordance with any particular example described herein. Thus, for example, those skilled in the art will recognize that certain examples may be configured to operate in a manner that achieves or optimizes one advantage or group of advantages as taught herein without necessarily achieving other objects or advantages as may be taught or suggested herein.

[0211] Conditional language such as, among others, "can" or "may," unless specifically stated otherwise, are otherwise understood within the context as used in general to convey that certain examples include, while other examples do not include, certain features, elements and/or steps. Thus, such conditional language is not generally intended to imply that features, elements and/or steps are in any way required for one or more examples or that one or more examples necessarily include logic for deciding, with or without user input or prompting, whether these features, elements and/or steps are included or are to be performed in any particular example.

[0212] Unless otherwise indicated, the terms "first," "second," "third," etc. are used herein merely as labels, and are not intended to impose ordinal, positional, or hierarchical requirements on the items to which these terms refer. Moreover, reference to, e.g., a "second" item does not require or preclude the existence of, e.g., a "first" or lower-numbered item, and/or, e.g., a "third" or higher-numbered item.

[0213] Those skilled in the art will appreciate that not all elements described and illustrated in FIGS. **1-22** need be included in every example and not all elements described herein are necessarily depicted in each illustrative example. FIGS. **1-22**, referred to above, may represent functional elements, features, or components thereof and do not necessarily imply any particular structure. Accordingly, modifications, additions and/or omissions may be made to the illustrated structure. Additionally, those skilled in the art will appreciate that not all elements, features, and/or components described and illustrated in FIGS. **1-22**, referred to above, need be included in every example and not all elements, features, and/or components described herein are necessarily depicted in each illustrative example. Accordingly, some of the elements, features, and/or components described and illustrated in FIGS. **1-22** may be combined in various ways without the need to include other features described and illustrated in FIGS. **1-22**, other drawing figures, and/or the accompanying disclosure, even though such combination or combinations are not explicitly illustrated herein. Similarly, additional features not limited to the examples presented, may be combined with some or all of the features shown and described herein. Unless otherwise explicitly stated, the schematic illustrations of the examples depicted in FIGS. **1-22**, referred to above, are not meant to imply structural limitations with respect to the illustrative example. Rather, although one illustrative structure is indicated, it is to be understood that the structure may be modified when appropriate. Accordingly, modifications, additions and/or omissions may be made to the illustrated structure. Furthermore, elements, features, and/or components that serve a similar, or at least substantially similar, purpose are labeled with like numbers in each of FIGS. **1-22**, and such elements, features, and/or components may not be discussed in detail herein with reference to each of FIGS. **1-22**. Similarly, all elements, features, and/or components may not be labeled in each of FIGS. **1-22**, but reference numerals associated therewith may be utilized herein for consistency.

[0214] Further, references throughout the present specification to features, advantages, or similar language used herein do not imply that all of the features and advantages that may be realized with the examples disclosed herein should be, or are in, any single example. Rather, language referring to the features and advantages is understood to mean that a specific feature, advantage, or characteristic described in connection with an example is included in at least one example. Thus, discussion of features, advantages, and similar language used throughout the present disclosure may, but do not necessarily, refer to the same example.

[0215] The described features, advantages, and characteristics of one example may be combined in any suitable manner in one or more other examples. One skilled in the relevant art will recognize that the examples described herein may be practiced without one or more of the specific features or advantages of a particular example. In other instances, additional features and advantages may be recognized in certain examples that may not be present in all examples. Furthermore, although various examples of the system, the masking module and method have been shown and described, modifications may occur to those skilled in the art upon reading the specification. The present application includes such modifications and is limited only by the scope of the claims.

What is claimed is:

1. A masking module comprising:

a masking apparatus situated proximate to a path of a container and configured to apply a mask to at least a portion of a barcode of the container as the container moves along the path; and

a controller in communication with the masking apparatus and configured to selectively actuate the masking apparatus when the container passes by the masking apparatus along the path.

2. The masking module of claim **1**, wherein the container is selectively oriented in a masking orientation relative to the masking apparatus before the container passes by the masking apparatus along the path.

3. The masking module of claim **2**, wherein:

the container is selectively rotated from an initial orientation to the masking orientation before the container passes by the masking apparatus along the path; and

the container is selectively rotated from the masking orientation to a packing orientation after the container passes by the masking apparatus along the path.

4. The masking module of claim **1**, wherein the masking apparatus comprises an inkjet printer configured to apply ink over at least a portion of the barcode.

5. The masking module of claim **1**, wherein the masking apparatus comprises a laser printer configured to apply ink over at least a portion of the barcode.

6. The masking module of claim **1**, wherein the masking apparatus comprises a laser etcher configured to remove at least a portion of the barcode.

7. A system for packing containers, the system comprising:

an orienting module configured to receive a container, to guide the container along a portion of a path, and to orient the container in a masking orientation at a masking location along the path; and

a masking module configured to apply a mask to at least a portion of a barcode of the container as the container passes the masking location along the path.

8. The system of claim **7**, wherein the masking module comprises:

a masking apparatus situated proximate to the path of the container and configured to apply the mask to at least a portion of the barcode of the container; and

a controller in communication with the masking apparatus and configured to selectively actuate the masking apparatus when the container is at the masking location along the path.

9. The system of claim **8**, wherein the masking apparatus comprises an inkjet printer configured to apply ink over at least a portion of the barcode.

10. The system of claim **9**, wherein the masking apparatus comprises a laser printer configured to apply ink over at least a portion of the barcode.

11. The system of claim **9**, wherein the masking apparatus comprises a laser etcher configured to remove at least a portion of the barcode.

12. The system of claim **8**, wherein the orienting module is configured to selectively rotate the container from an initial orientation to the masking orientation before the container passes by the masking location along the path.

13. The system of claim **12**, wherein the orienting module is further configured to selectively rotate the container from the masking orientation to a packing orientation after the container passes by the masking location along the path.

14. The system of claim **13**, further comprising:

a conveying module configured to transfer the container to the orienting module in the initial orientation; and

a grouping module configured to receive the container from the orienting module in the packing orientation.

15. The system of claim **13**, wherein the orienting module comprises:

a camera situated to capture an image of the container as the container moves along the path in the initial orientation;

a processor coupled to the camera and configured to analyze the image of the container and to determine a first angle of rotation from the initial orientation to the masking orientation; and

a turning member configured to rotate the container by the first angle of rotation according to a first command from the processor.

16. The system of claim **15**, wherein:

the processor is further configured to analyze the image of the container and to determine a second angle of rotation from the masking orientation to the packing orientation; and

the turning member is further configured to rotate the container by the second angle of rotation according to a second command from the processor.

17. A method for packaging containers, the method comprising steps of:

receiving a container;

moving the container along a path;

scanning the container as the container moves along the path;

calculating a first orientation adjustment from an initial orientation to a masking orientation for the container;

rotating the container to effectuate the first orientation adjustment; and

masking at least a portion of a barcode of the container.

18. The method of claim **17**, further comprising:

calculating a second orientation adjustment from the masking orientation to a packing orientation for the container; and

rotating the container to effectuate the second orientation adjustment.

19. The method of claim **18**, wherein the step of masking at least the portion of the barcode of the container comprises applying ink over at least the portion of the barcode.

20. The method of claim **18**, wherein the step of masking at least a portion of the barcode of the container comprises removing at least the portion of the barcode.

* * * * *