US012391452B2

(12) **United States Patent**
Hermanson et al.

(10) **Patent No.: US 12,391,452 B2**
(45) **Date of Patent: Aug. 19, 2025**

(54) **PACKING MATERIAL AND METHOD OF MANUFACTURING THE PACKING MATERIAL**

(71) Applicant: **Terry Hermanson**, Memphis, TN (US)

(72) Inventors: **Terry Hermanson**, Jackson, WY (US); **Huang Meng-Suen**, Hong Kong (CN)

(73) Assignee: **Terry Hermanson**, Memphis, TN (US)

(*) Notice: Subject to any disclaimer, the term of this patent is extended or adjusted under 35 U.S.C. 154(b) by 0 days.

(21) Appl. No.: **18/884,705**

(22) Filed: **Sep. 13, 2024**

(65) **Prior Publication Data**

US 2025/0091787 A1 Mar. 20, 2025

Related U.S. Application Data

(60) Provisional application No. 63/673,406, filed on Jul. 19, 2024, provisional application No. 63/624,460, filed on Jan. 24, 2024, provisional application No. 63/538,629, filed on Sep. 15, 2023.

(51) **Int. Cl.**
B65D 81/05 (2006.01)
B65D 81/127 (2006.01)

(52) **U.S. Cl.**
CPC ***B65D 81/127*** (2013.01); *B65D 2581/053* (2013.01)

(58) **Field of Classification Search**
CPC B65D 81/127; B65D 81/05; B65D 81/052; B65D 2581/053; B65D 81/053; B65D 81/057; B65D 81/055; B65D 2581/051
USPC 206/521, 522, 586
See application file for complete search history.

(56) **References Cited**

U.S. PATENT DOCUMENTS

950,785	A	3/1910	Pene
1,189,140	A	6/1916	Lane
1,710,543	A	4/1929	Leo
1,984,653	A	12/1934	Palmer et al.
2,020,639	A	11/1935	Grayson et al.
2,045,384	A	6/1936	Gerb

(Continued)

FOREIGN PATENT DOCUMENTS

CA	2472739	A1	12/2005
CN	102712400	A	10/2012

(Continued)

OTHER PUBLICATIONS

Comprehensive Guide to cushioning and void fill for shipping packaging, Internet Archive of https://www.ecoenclose.com/Definitive-Guide-to-Void-Fill-and-Cushioning/ (captured Sep. 18, 2019), available at https://web.archive.org/web/20190918180012/https://www.ecoenclose.com/Definitive-Guide-to-Void-Fill-and-Cushioning/.

(Continued)

Primary Examiner — Steven A. Reynolds
(74) *Attorney, Agent, or Firm* — Venable LLP

(57) **ABSTRACT**

Cellulosic packing materials, layers for the cellulosic packing materials, and panels therefor. The panels can be cushioning panels and, more specifically, cellulosic cushioning panels, such as cushioning panels formed from molded pulp or corrugated fiberboard sheets. The panels can be rigid panels and, more specifically, cellulosic rigid panels. The cellulosic cushioning panels can form cushioning layers, and the rigid panels can form rigid layers. Cushioning bocks and packing materials can be formed from the cushioning layers and rigid layers.

30 Claims, 51 Drawing Sheets

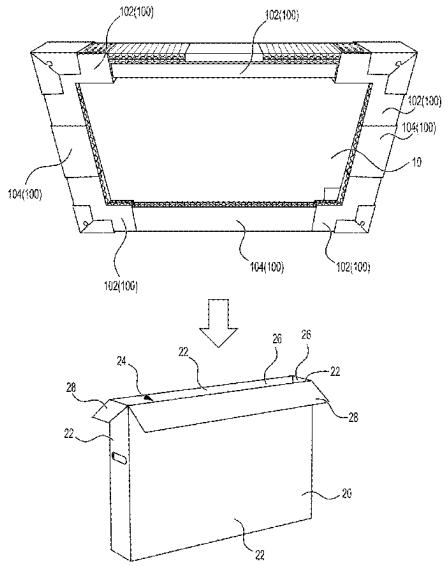

(56) **References Cited**

U.S. PATENT DOCUMENTS

2,115,745 A 5/1938 Page
2,657,158 A 10/1953 Gerard
2,744,624 A 5/1956 Hoogstoel et al.
2,924,154 A 2/1960 Russell et al.
2,978,006 A 4/1961 Clemens
3,040,948 A 6/1962 Wells
3,074,543 A 1/1963 Stanley
3,131,240 A 4/1964 Kirkpatrick
3,231,454 A 1/1966 Williams
3,509,797 A 5/1970 Johnson
3,530,020 A 9/1970 Liebermann
3,542,636 A 11/1970 Wandel
3,546,055 A 12/1970 Spertus
3,574,103 A 4/1971 Latkin
3,616,158 A 10/1971 Rubens et al.
3,650,877 A 3/1972 Johnson
3,655,500 A 4/1972 Johnson
3,669,820 A 6/1972 Fredericks
3,741,411 A 6/1973 Peacock
3,741,859 A 6/1973 Wandel
3,756,904 A 9/1973 Fredericks
3,812,618 A 5/1974 Wood et al.
4,034,135 A 7/1977 Passmore
4,039,708 A 8/1977 Seltz et al.
4,384,442 A 5/1983 Pendleton
4,644,733 A 2/1987 Dolinar
4,680,918 A 7/1987 Lovell
4,806,410 A 2/1989 Armington et al.
4,828,913 A 5/1989 Kiss
4,880,119 A 11/1989 Simon
4,937,131 A 6/1990 Baldacci et al.
4,941,922 A 7/1990 Snyder
4,997,091 A 3/1991 McCrea
5,007,579 A 4/1991 Thomas, Jr.
5,102,036 A 4/1992 Orr et al.
5,151,312 A 9/1992 Boeri
5,230,943 A 7/1993 Pregont
5,251,414 A 10/1993 Duke
5,270,095 A 12/1993 Ito et al.
5,312,665 A 5/1994 Pratt et al.
5,330,165 A 7/1994 van Goubergen
5,340,638 A 8/1994 Sperner
5,468,556 A 11/1995 Fuss et al.
5,540,972 A * 7/1996 Jaegers B32B 38/00 428/116
5,545,297 A 8/1996 Andersen et al.
5,568,867 A 10/1996 Lencoski
5,569,519 A 10/1996 Ervay et al.
5,595,811 A 1/1997 Stout, Jr.
5,623,815 A 4/1997 Hornstein et al.
5,636,744 A 6/1997 Hirose
5,639,543 A 6/1997 Isoda et al.
5,658,624 A 8/1997 Anderson et al.
5,674,344 A 10/1997 Thompson et al.
5,683,772 A 11/1997 Andersen et al.
5,688,578 A 11/1997 Goodrich
5,756,127 A 5/1998 Grisoni et al.
5,799,861 A 9/1998 Bonner et al.
5,826,404 A 10/1998 Fuss et al.
5,871,857 A 2/1999 Alhamad
5,900,119 A 5/1999 Goers et al.
5,910,079 A 6/1999 Watanabe
5,910,089 A 6/1999 Weder
5,944,192 A 8/1999 Weder
5,992,637 A 11/1999 Weder
6,067,779 A 5/2000 Weder
6,128,889 A 10/2000 Fuss
6,190,756 B1 2/2001 Yokoyama et al.
6,254,945 B1 7/2001 Simmons
6,298,637 B1 10/2001 Weder
6,385,949 B2 5/2002 Weder
6,532,721 B1 3/2003 Weder
6,546,701 B2 4/2003 Weder et al.
6,632,165 B1 10/2003 Letourneau et al.
6,752,910 B2 6/2004 Sato et al.
6,797,119 B2 9/2004 Koike
6,871,480 B1 3/2005 Goodrich
6,969,548 B1 11/2005 Goldfine
7,614,201 B2 11/2009 Cabanski et al.
7,651,455 B2 1/2010 Yampolsky et al.
7,803,100 B2 9/2010 Lu et al.
8,052,037 B2 11/2011 Bussey, III et al.
8,146,748 B2 4/2012 Vulpitta
8,201,671 B2 6/2012 Cho
8,360,949 B2 1/2013 Wetsch et al.
8,763,667 B2 7/2014 De Luca
8,900,111 B2 12/2014 Wetsch et al.
8,999,490 B2 4/2015 Kung et al.
9,205,621 B2 12/2015 Cheich
9,266,658 B2 * 2/2016 Kuo B65D 81/1275
9,315,312 B2 4/2016 De Luca et al.
9,427,928 B2 8/2016 Arora et al.
9,457,982 B2 10/2016 Wetsch et al.
9,688,044 B2 6/2017 Deis et al.
10,099,836 B2 10/2018 Cheich
10,357,936 B1 7/2019 Vincent et al.
10,392,177 B2 8/2019 Lantz
10,766,220 B2 9/2020 Deis et al.
10,766,221 B2 9/2020 Deis et al.
10,792,882 B2 10/2020 Wetsch et al.
10,828,859 B2 11/2020 Ciasullo, Jr. et al.
11,123,943 B2 9/2021 Cheich et al.
11,161,668 B1 11/2021 Hermanson et al.
11,167,907 B1 11/2021 Hermanson et al.
11,358,775 B2 6/2022 Hermanson et al.
11,390,443 B2 7/2022 Hermanson et al.
11,390,444 B2 7/2022 Hermanson et al.
2002/0040859 A1 4/2002 Weder
2003/0051819 A1 3/2003 Moustier
2004/0050743 A1 3/2004 Slovencik et al.
2004/0052988 A1 3/2004 Slovencik et al.
2004/0108243 A1 6/2004 Jeannin
2005/0230864 A1 10/2005 Ozasa et al.
2006/0281621 A1 12/2006 Weder
2007/0082181 A1 4/2007 Jung
2007/0095711 A1 * 5/2007 Thompson B65D 5/603 206/522
2008/0153685 A1 6/2008 Cheich et al.
2009/0082187 A1 3/2009 Cheich et al.
2010/0227116 A1 9/2010 Leylekian et al.
2010/0323153 A1 12/2010 Huskey
2011/0053743 A1 3/2011 Wetsch et al.
2011/0061986 A1 3/2011 Orsini et al.
2012/0031957 A1 2/2012 Whitaker
2012/0097067 A1 4/2012 Fascio
2012/0104009 A1 5/2012 Fascio
2012/0165172 A1 6/2012 Wetsch et al.
2012/0237717 A1 * 9/2012 Dunn B32B 29/007 428/116
2013/0171422 A1 7/2013 De Luca
2013/0313277 A1 11/2013 Stewartson et al.
2014/0155241 A1 6/2014 Cheich et al.
2015/0314940 A1 * 11/2015 Matta B65D 75/58 206/522
2016/0060014 A1 3/2016 Timmers et al.
2016/0221233 A1 8/2016 Kiiskinen et al.
2018/0029764 A1 2/2018 Chung et al.
2018/0030659 A1 2/2018 Chung et al.
2018/0086531 A1 * 3/2018 Lefkow B65D 31/10
2018/0126686 A1 5/2018 Nelson et al.
2018/0264768 A1 9/2018 Haug
2018/0319116 A1 11/2018 Haug
2018/0370702 A1 12/2018 Goodrich
2019/0092549 A1 * 3/2019 Buelna B65D 77/26
2019/0241342 A1 8/2019 Kling
2020/0061951 A1 2/2020 Slovencik
2020/0063361 A1 2/2020 Everett et al.
2020/0115087 A1 4/2020 Hagestedt et al.
2020/0139661 A1 5/2020 Greenwell
2020/0180841 A1 6/2020 Alvarez et al.
2020/0290790 A1 * 9/2020 Mowery F25D 3/08
2020/0406592 A1 * 12/2020 Dayrit B32B 7/12
2021/0061535 A1 3/2021 Moore et al.
2021/0179333 A1 * 6/2021 Wetsch B65D 65/40

(56) **References Cited**

U.S. PATENT DOCUMENTS

2021/0237961	A1	8/2021	Lenart et al.
2022/0009693	A1	1/2022	Wu
2022/0072905	A1	3/2022	Brousseau et al.

FOREIGN PATENT DOCUMENTS

CN	104371343	A	2/2015
CN	107984859	A	5/2018
CN	111070843	A	4/2020
DE	3817490		11/1989
DE	40 25 257	C2	9/1992
DE	42 25 143	A1	2/1994
DE	9414805	U1	11/1994
DE	4319792	A1	12/1994
DE	202004010558	U1	9/2004
DE	102007005001	A1	8/2008
DE	102015109972	A1	12/2016
EP	0560608	A1	9/1993
EP	3415443	A	12/2018
EP	3747798	A1	12/2020
EP	3981588	A1	4/2022
GB	689693	A	4/1953
GB	1119244	A	7/1968
GB	2368074		4/2022
JP	27634/1994	U1	4/1994
JP	3003200	U	8/1994
JP	H06-247471	A	9/1994
JP	H08-244853	A	9/1996
JP	2000118571	A	4/2000
JP	2002-225946	A	4/2002
JP	2008-273574	A	11/2008
JP	2009-513383	A	4/2009
JP	2009-286439	A	12/2009
KR	100832094	B1	5/2008
KR	101085309	B1	11/2011
WO	92/04253	A1	3/1992
WO	94/12576		6/1994
WO	97/09248		3/1997
WO	02/102592	A1	12/2002
WO	2017-034910	A1	3/2017
WO	2023/176001	A1	9/2023

OTHER PUBLICATIONS

ExpandOS, https://expandos.com, visited Oct. 29, 2020.

"Paper Packaging Applications", Paper Packaging Systems, https://www.paperpackagingsystems.com/paper-packaging-applications-paper, visited Oct. 29, 2020.

"Crinkle Cut Fill", Bags and Bows Online, https://www.bagsandbowsonline.com/retail-packaging/search?Ntt=crinkle cut fill, visited Oct. 29, 2020.

"Molded Pulp Bubble Wrap," YouTube, with selected screen shots, available at https://youtu.be/36g0IVZ6OU8?si =-4upcDe4TydOEOtL (accessed Dec. 6, 2023).

"Paper Bubble Cushioning", Lumi Products https://www.lumi.com/products/paper-bubble-cushioning (accessed Dec. 16, 2023).

"Corrugated Paper Board"; Easty Limited; https://www.eastyltd.com/Corrugated-Paper-board-CardBoard-p49.html (Accessed: Aug. 27, 2020).

"Hexacomb Packaging"; Packaging Corporation of America; https://www.packagingcorp.com/packaging-solutions/need/protect-products/hexacomb/ (Accessed: Aug. 27, 2020).

"Layered Cardboard Sheet at the best price"; https://www.mwmaterialsworld.com/en/layered-cardboard-sheet.html (Accessed: Aug. 27, 2020).

"Production of Honeycomb Cardboard for sandwich panels"; Bui Giordano; https://www.giordanobui.com/en/main-products/honeycomb-panel/ (Accessed: Aug. 27, 2020).

"Honeycomb by Multi-Wall" brochure from Multi-Wall Packaging (https://www.multiwall.com/honeycomb/); downloaded Aug. 10, 2020.

"Sculpture7"; The Art Teacher (https://artteacherblog.wordpress.com/2016/04/26/cardboard-sculpture/sculpture7/#main) (Accessed: Feb. 8, 2024).

"What is Honeycomb Cell Technology?"; Pallite Group, (https://pallitegroup.com/us/news/what-is-honeycomb-technology/), (Accessed Jun. 13, 2024).

"Custom Paper Bubble Cushioning", Lumi, (https://www.lumi.com/products/paper-bubble-cushioning), (Accessed Dec. 6, 2023).

Search Report and Written Opinion dated Nov. 11, 2024, in International Patent Application No. PCT/US2024/046675.

* cited by examiner

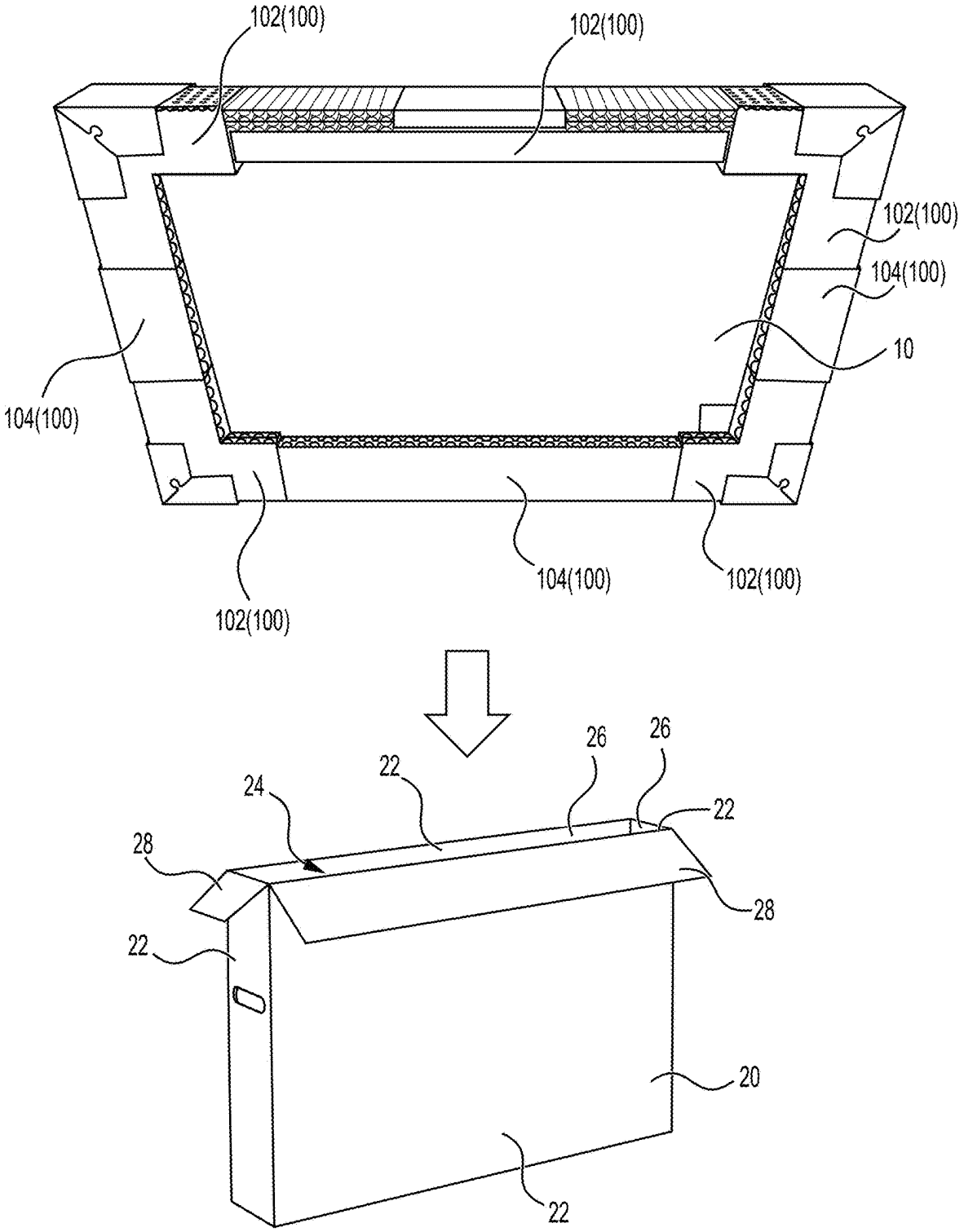
102(100)
102(100)
102(100)
104(100)
10
104(100)
104(100)
102(100)
102(100)
26
26
22
24
22
28
28
22
20
22

FIG. 1

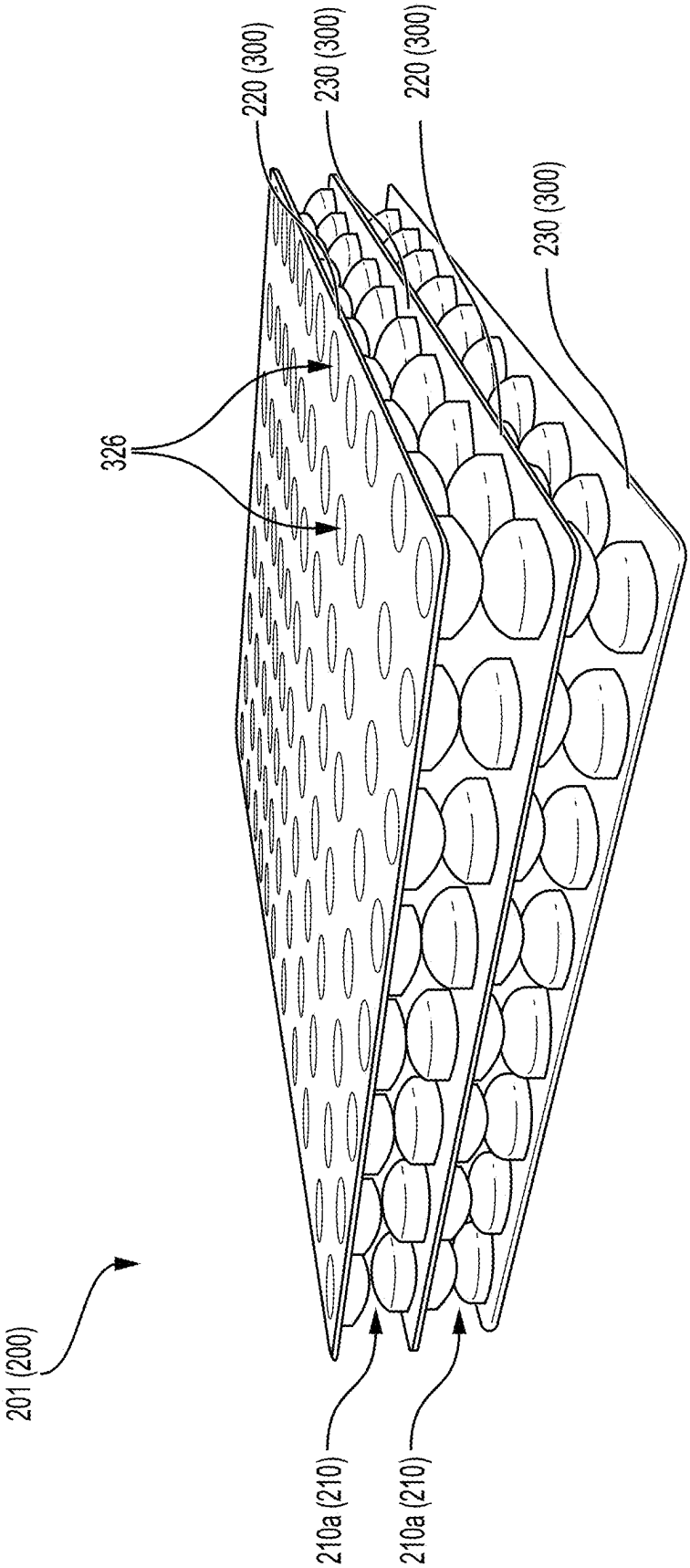

FIG. 2

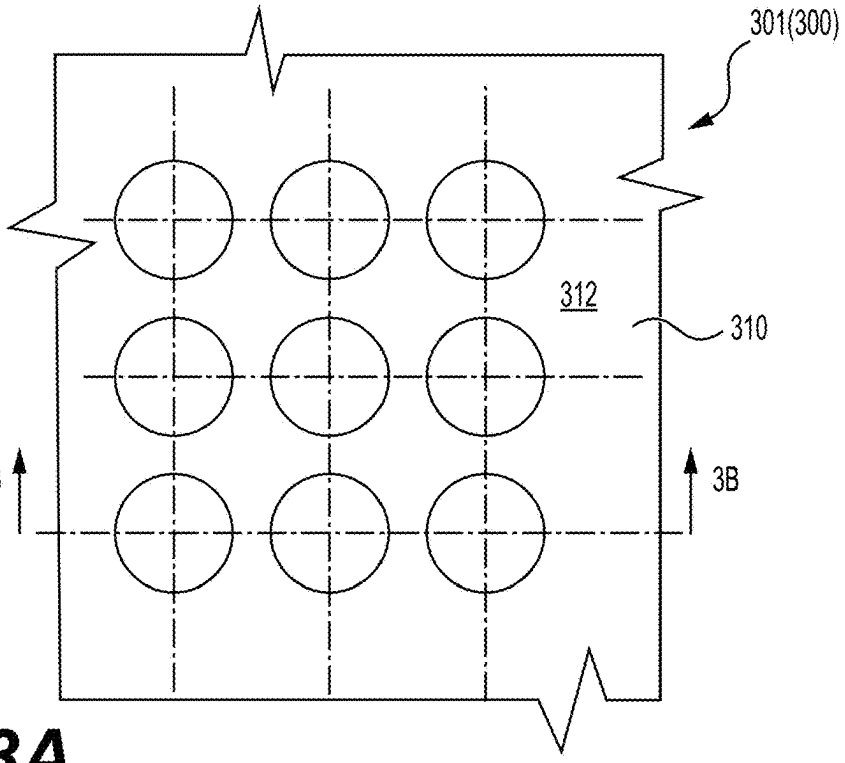

FIG. 3A

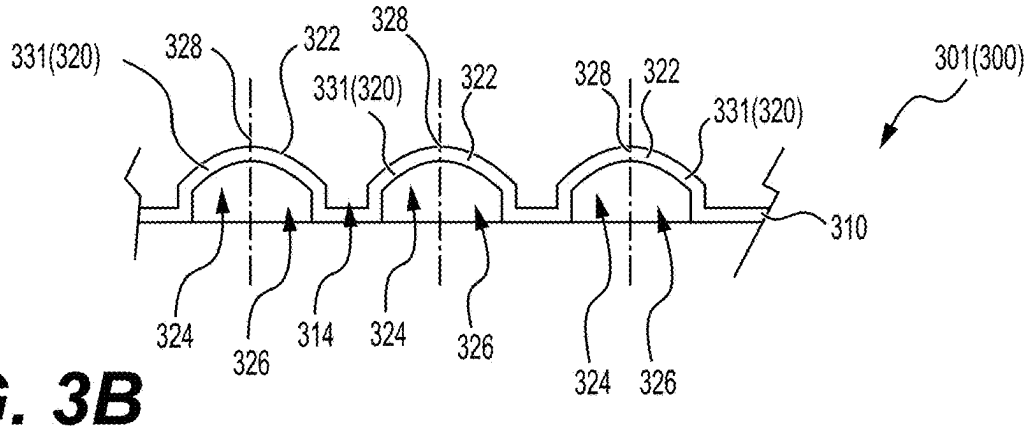

FIG. 3B

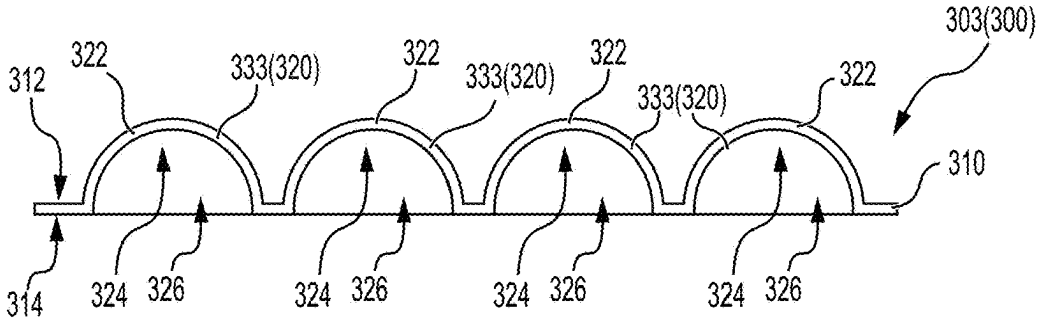

FIG. 3C

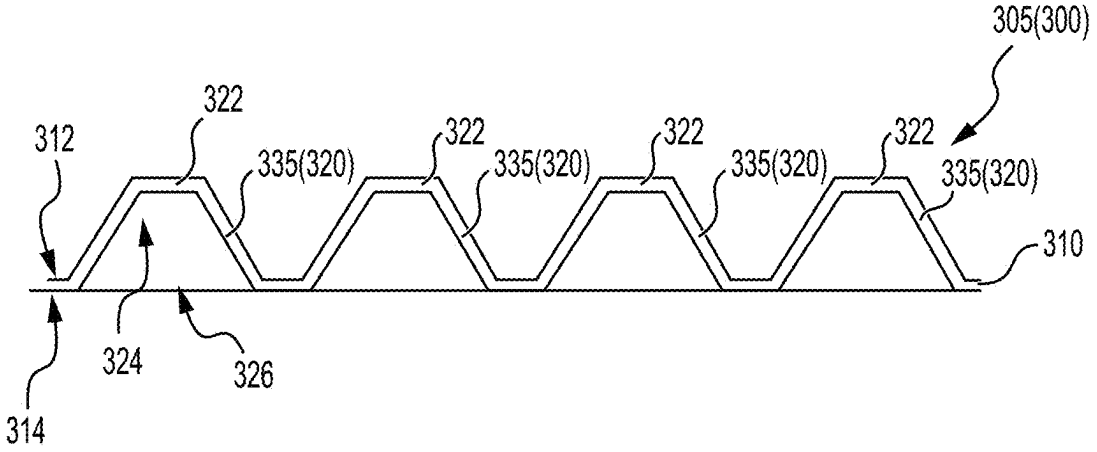

FIG. 3D

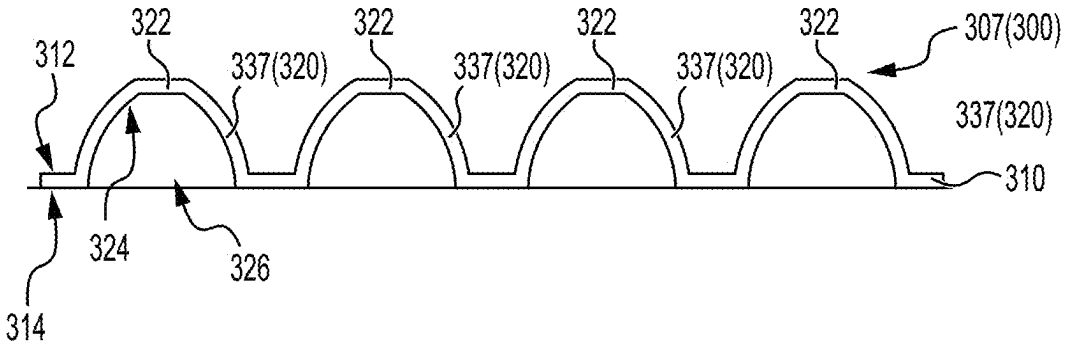

FIG. 3E

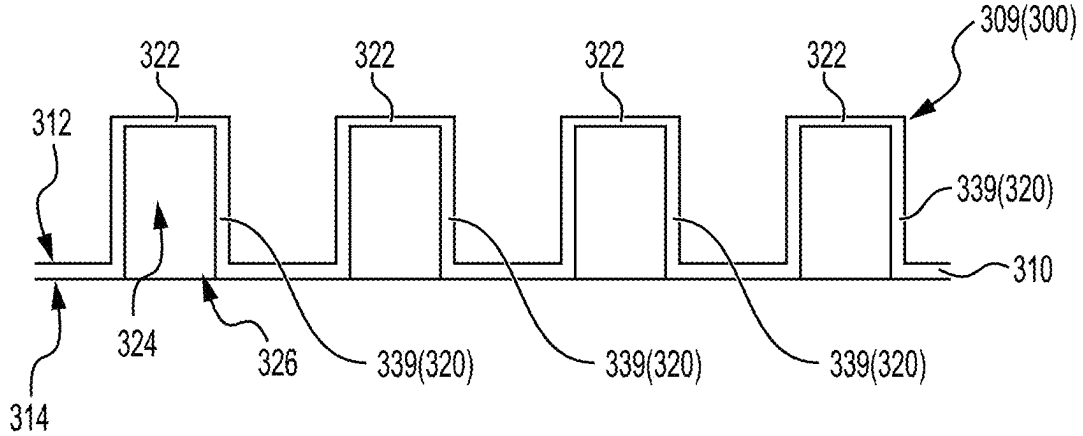

FIG. 3F

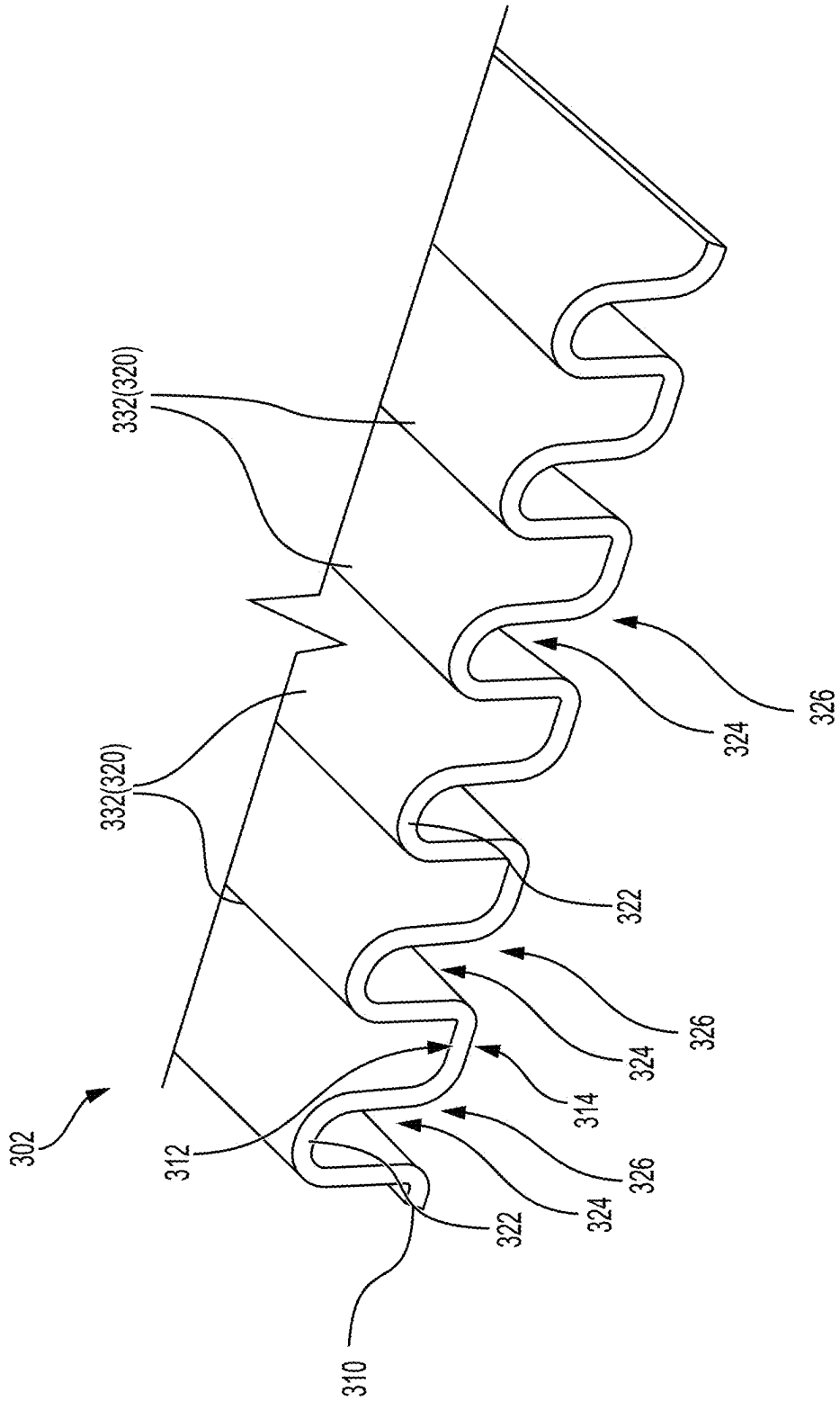

FIG. 3G

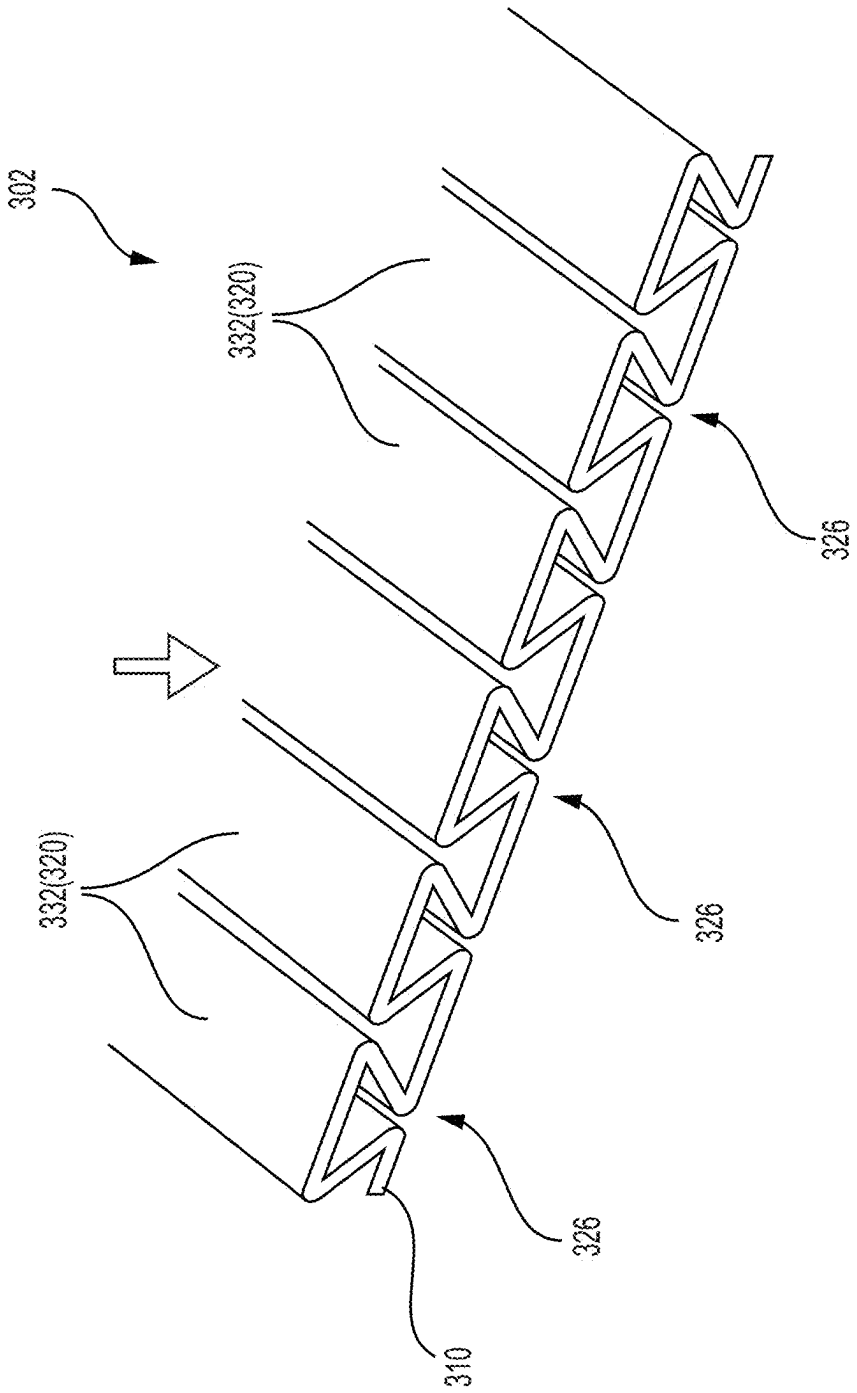

FIG. 3H

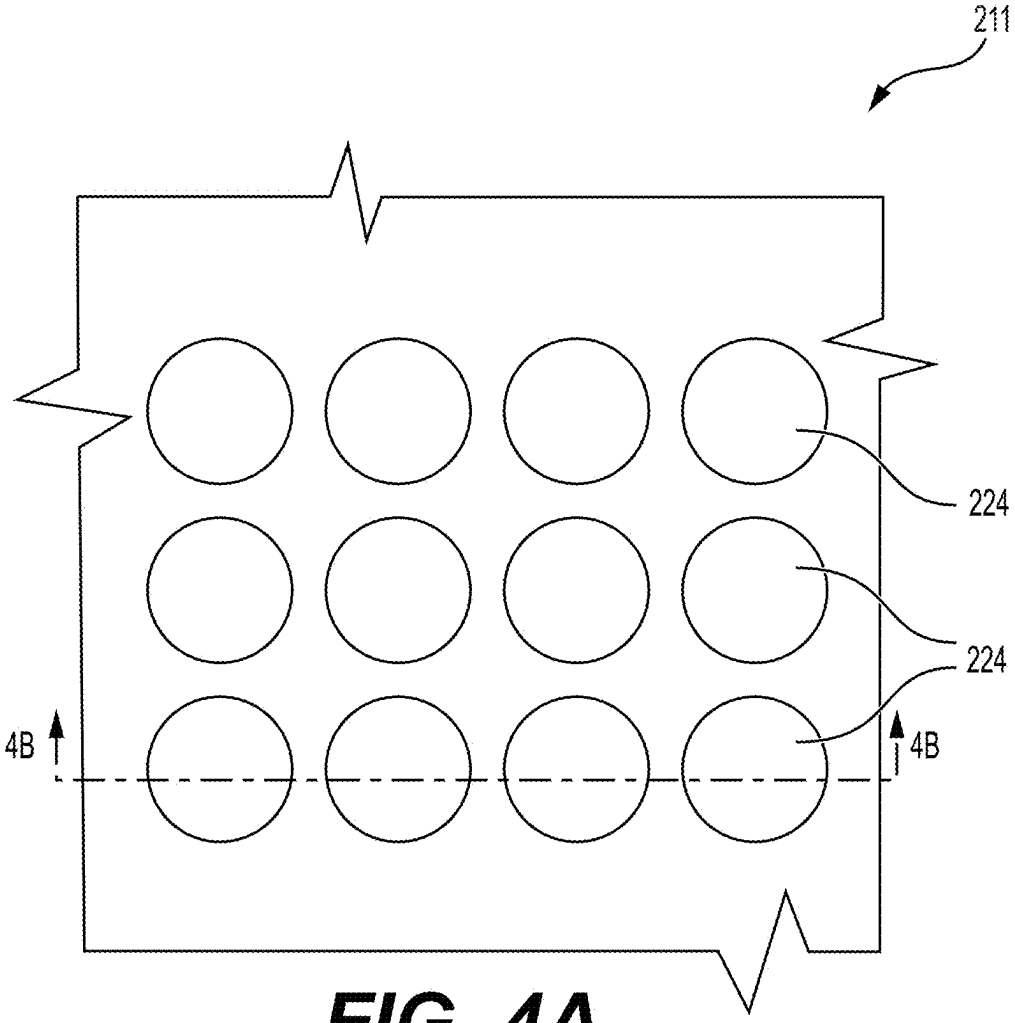

FIG. 4A

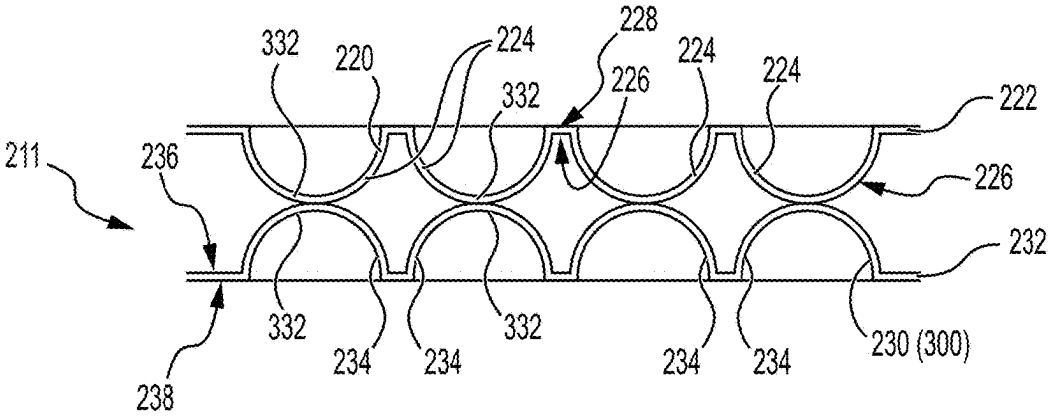
332
220
224
228
224
224
222
332
226
211
236
226
232
332
332
234
234
234
234
230 (300)
238

FIG. 4B

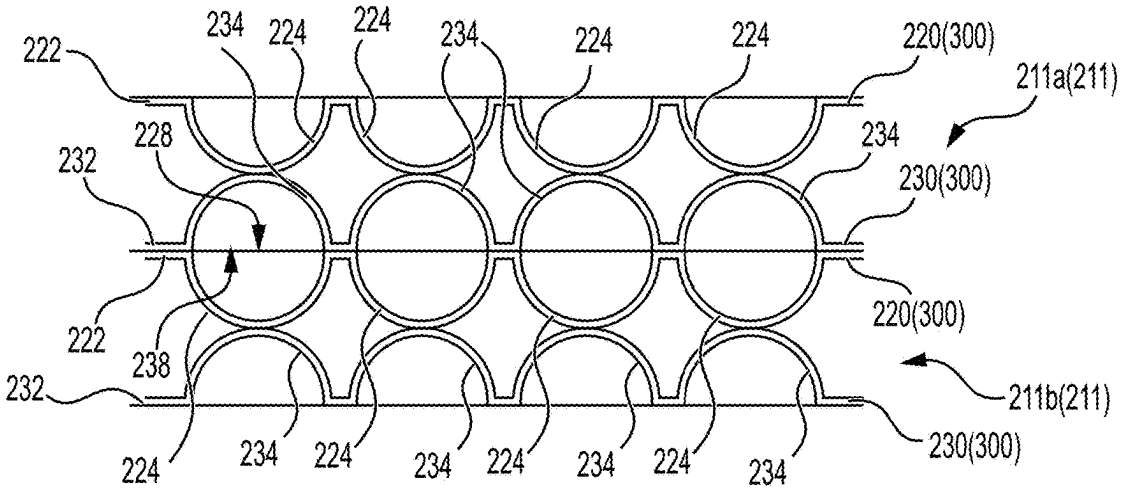
222
234
224
224
234
224
224
220(300)
211a(211)
228
234
232
230(300)
222
220(300)
238
232
211b(211)
224
234
224
234
224
234
224
234
230(300)

FIG. 4C

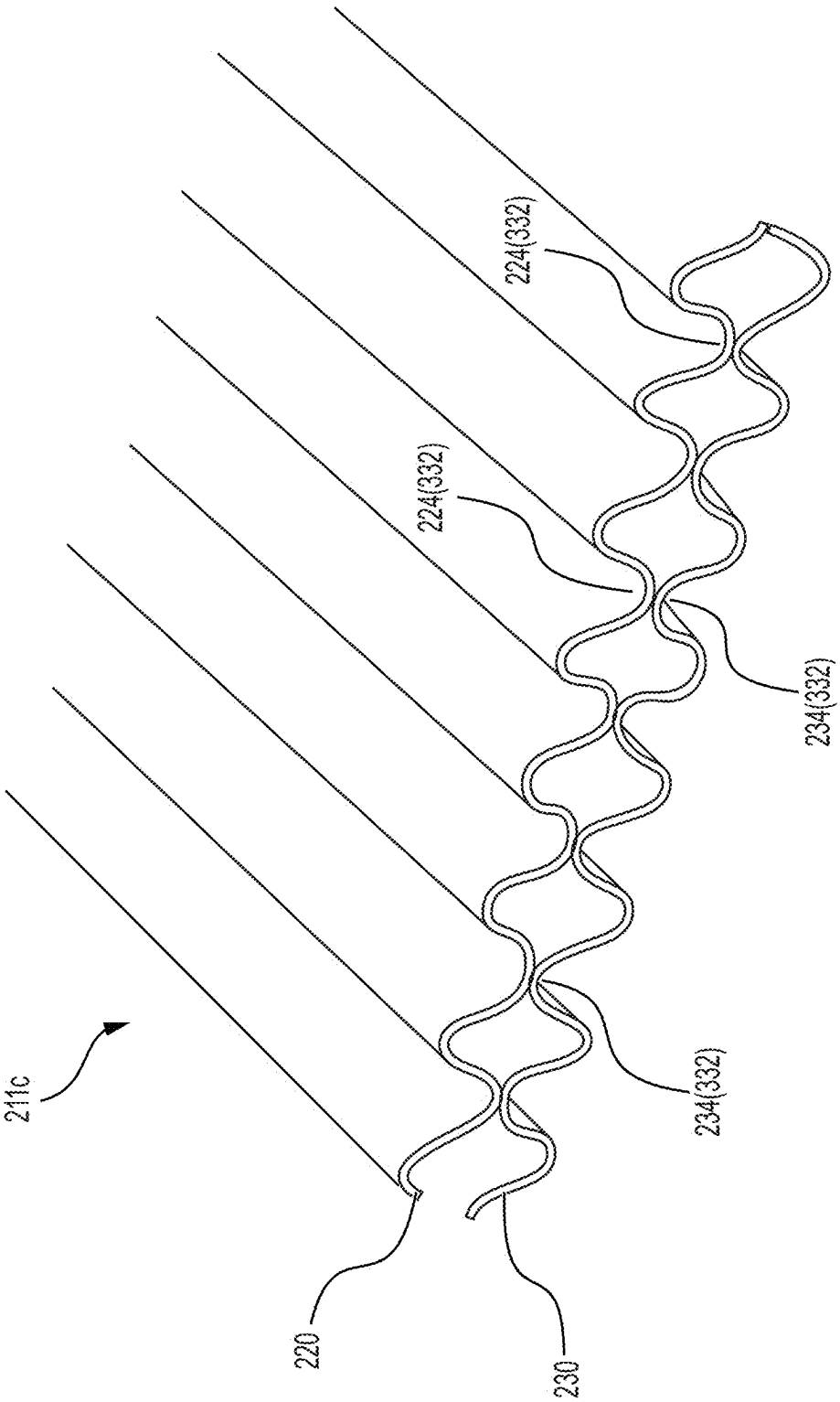

FIG. 4D

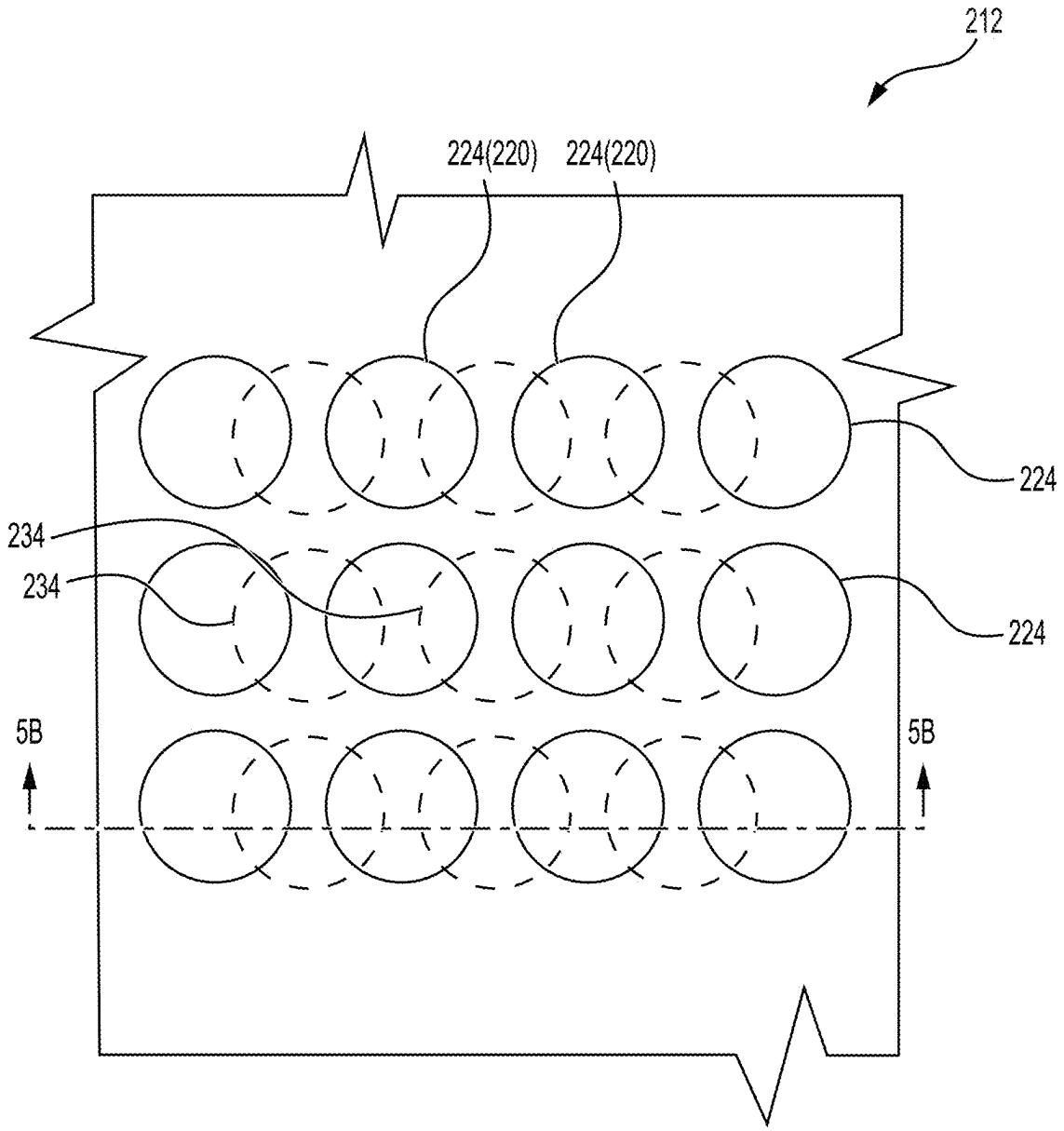

FIG. 5A

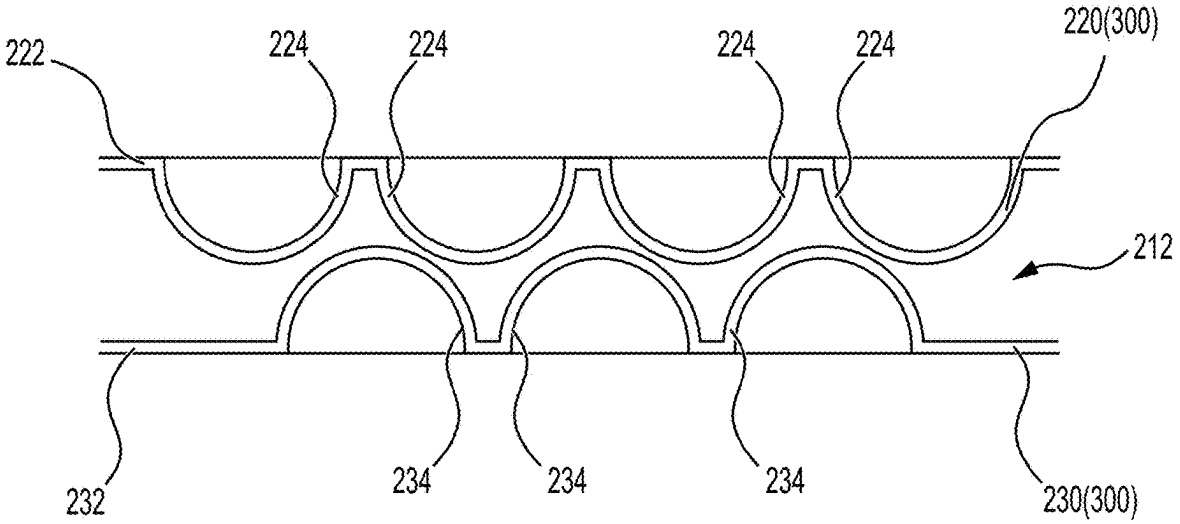
222
224
224
224
224
220(300)
212
232
234
234
234
230(300)

FIG.5B

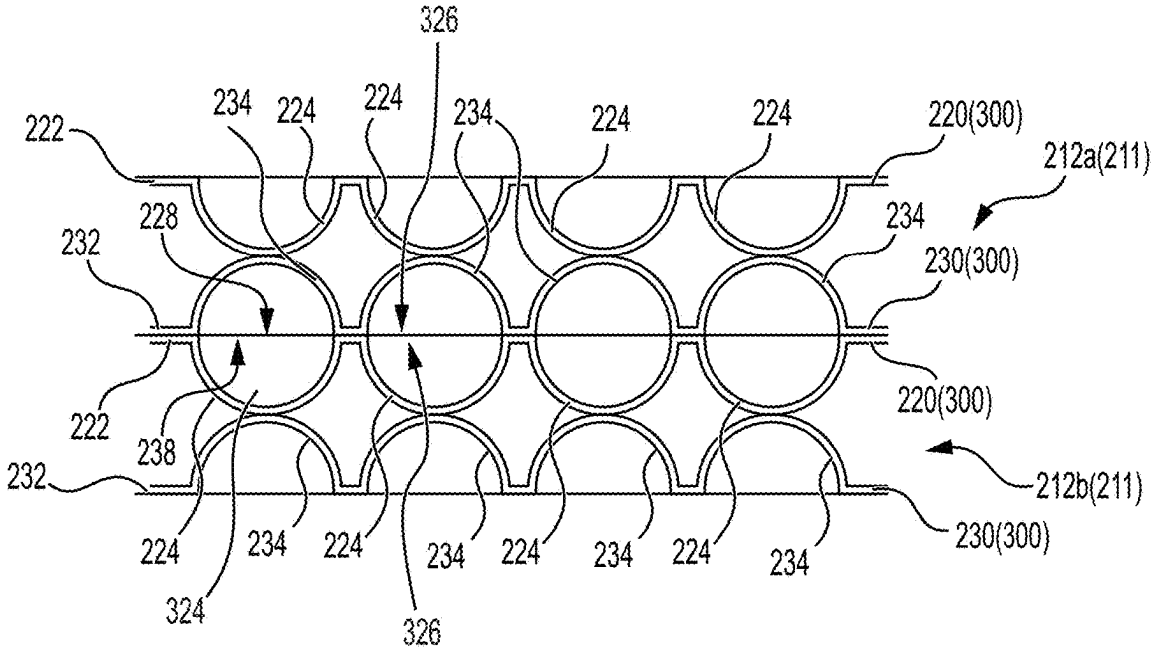
326
222
234
224
224
234
224
224
220(300)
212a(211)
228
232
234
230(300)
222
238
220(300)
232
212b(211)
224
234
224
234
224
234
224
234
230(300)
324
326

FIG. 5C

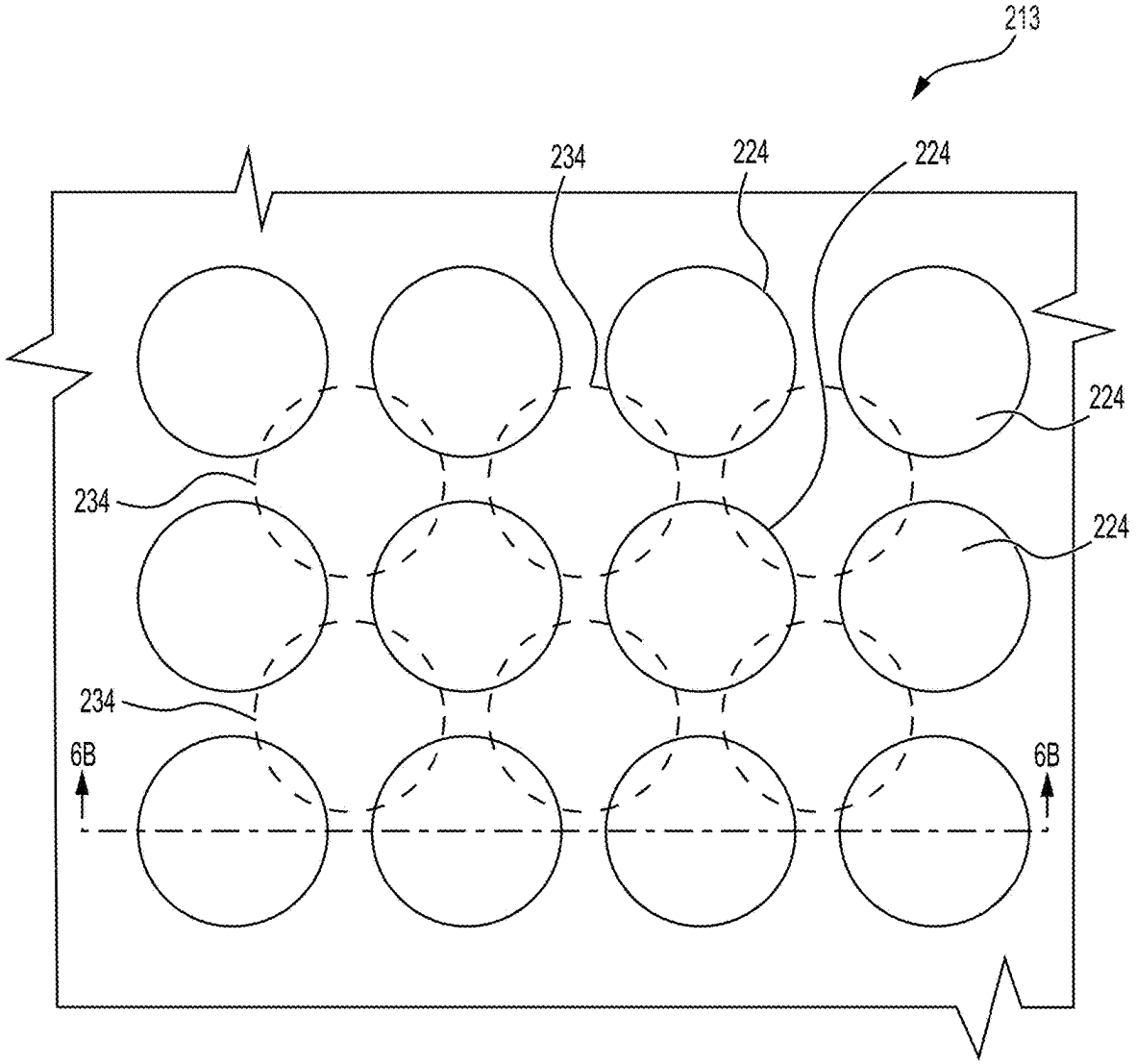

FIG. 6A

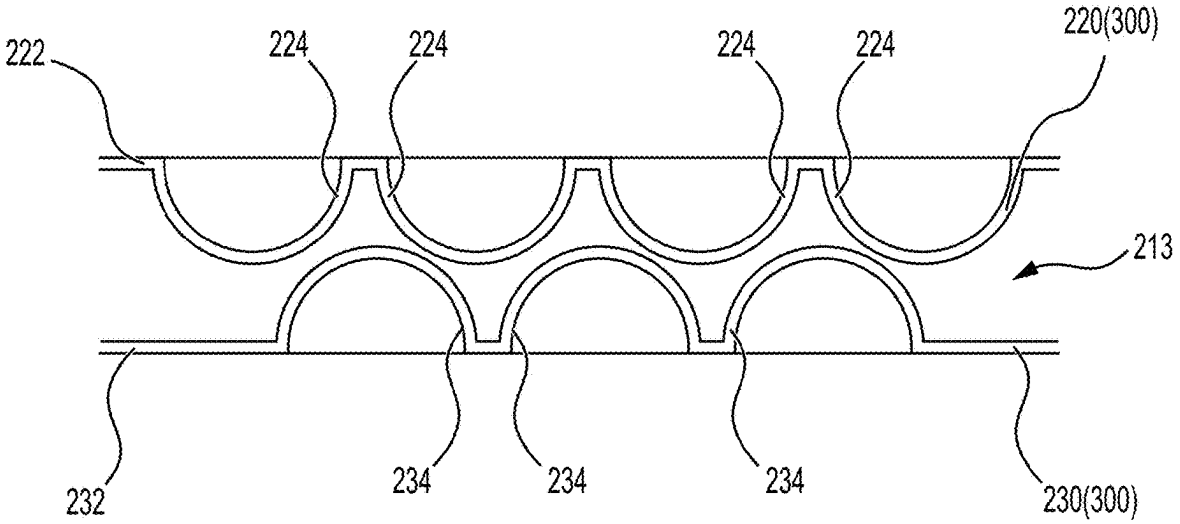
222
224
224
224
224
220(300)
213
232
234
234
234
230(300)

FIG. 6B

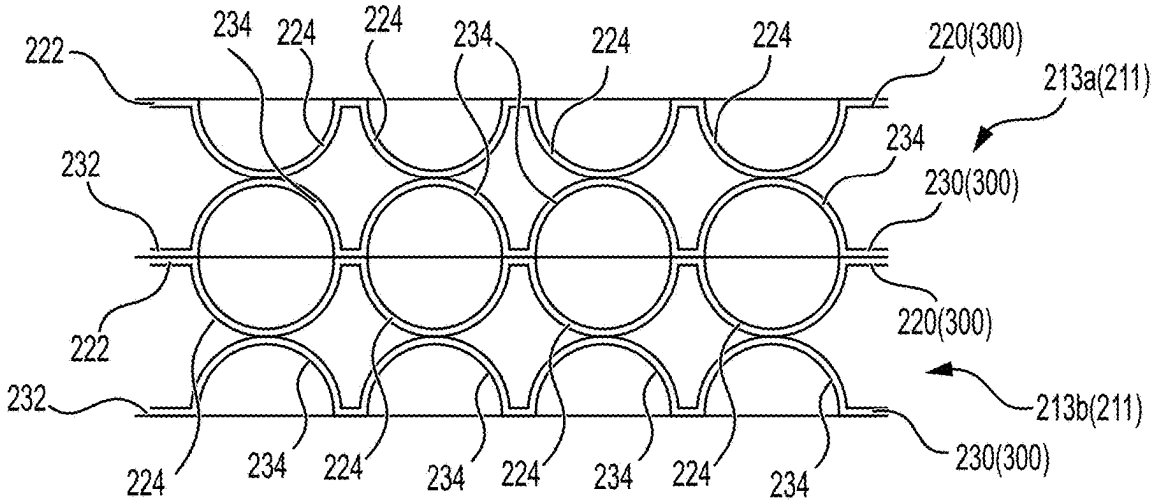
222
234
224
224
234
224
224
220(300)
213a(211)
232
234
230(300)
222
220(300)
232
213b(211)
224
234
224
234
224
234
224
234
230(300)

FIG. 6C

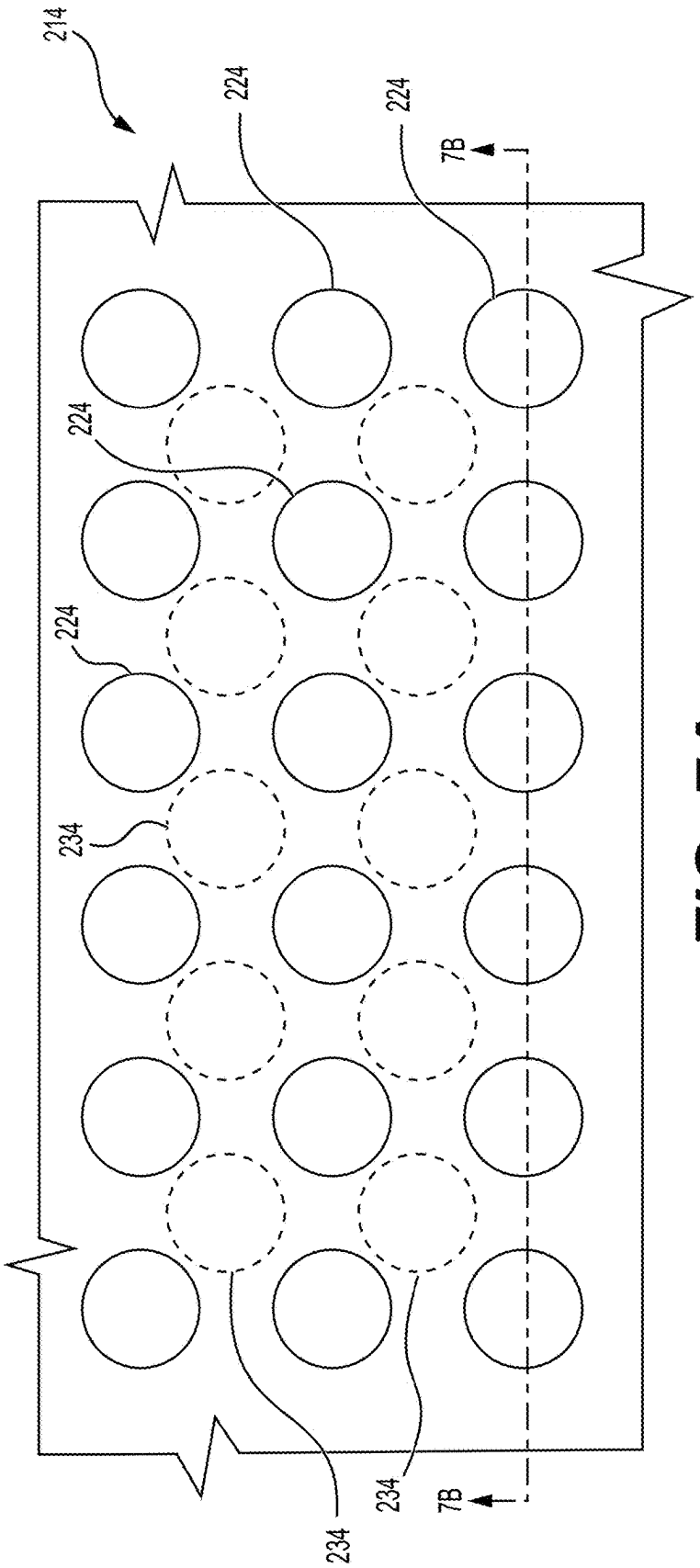

FIG. 7A

FIG. 7B

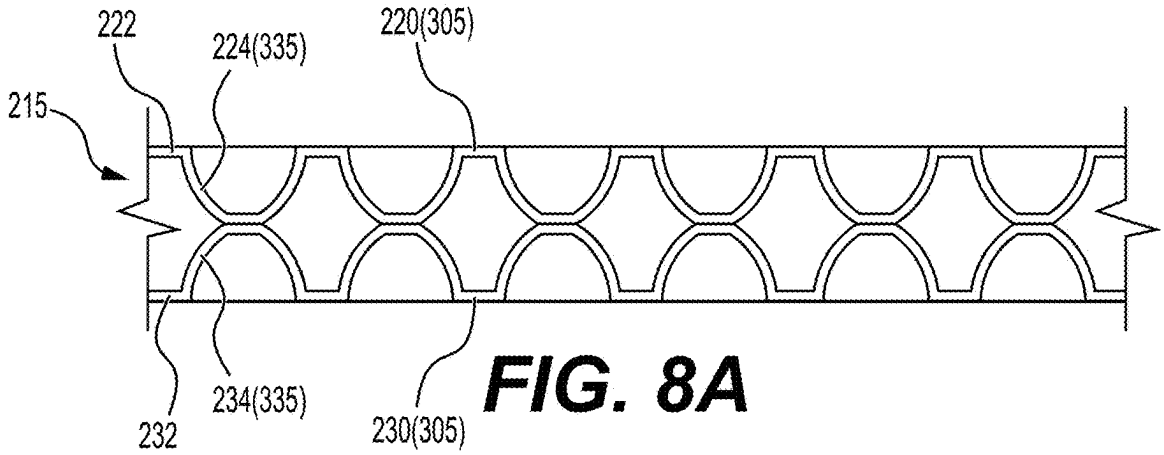

FIG. 8A

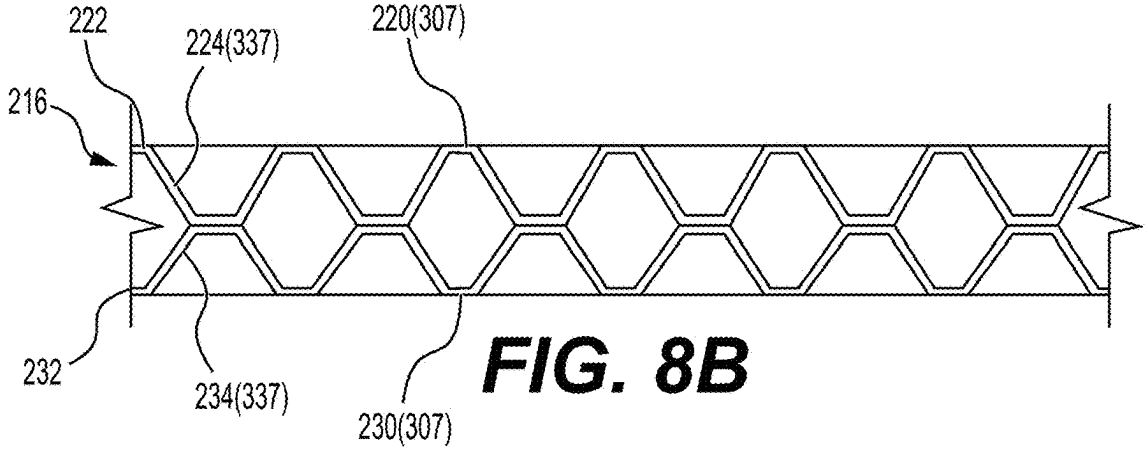

FIG. 8B

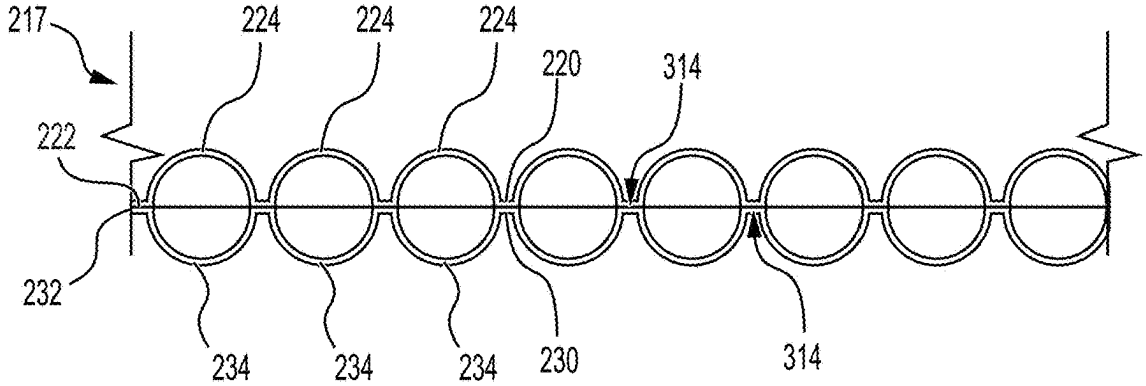

FIG. 8C

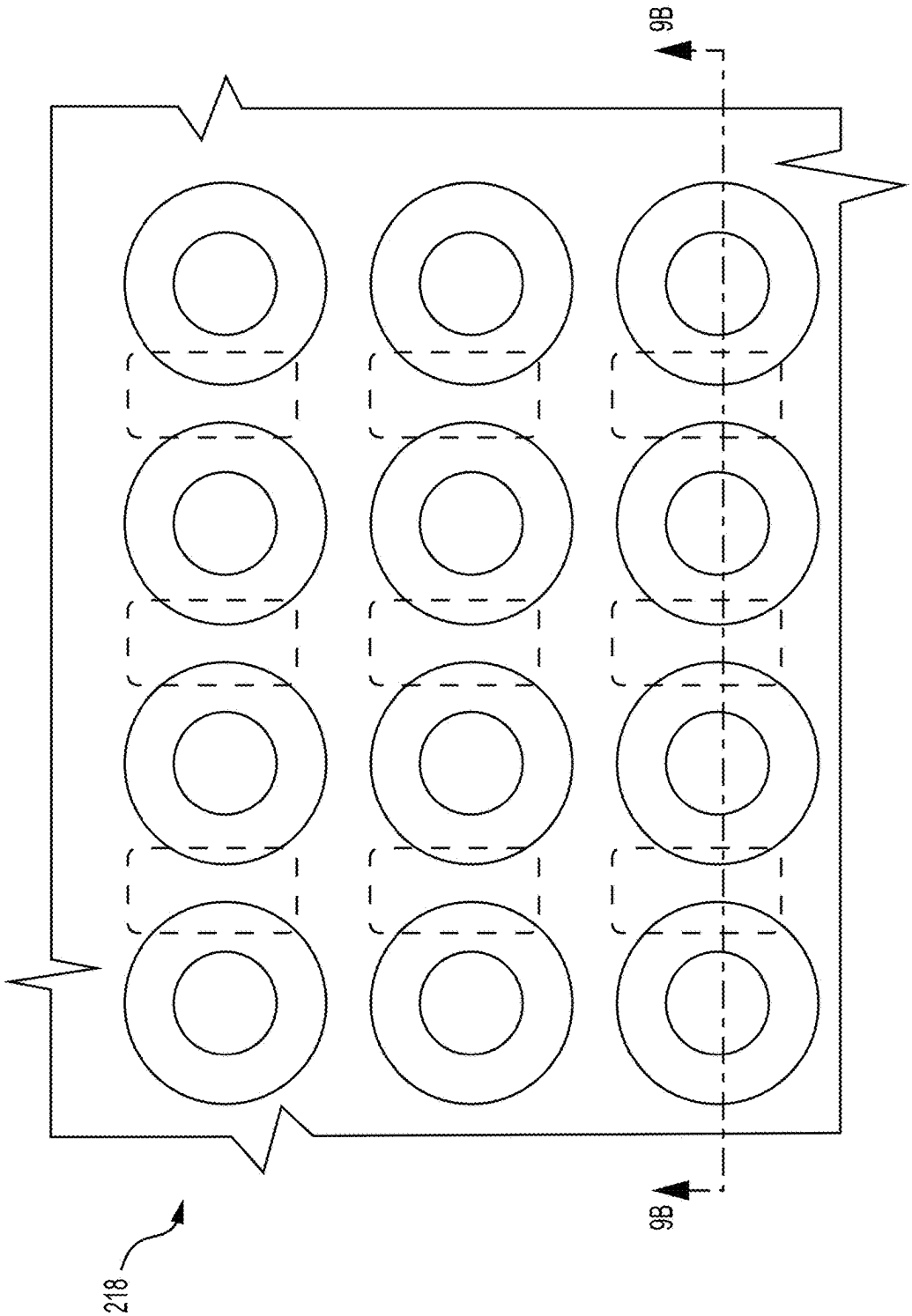

FIG. 9A

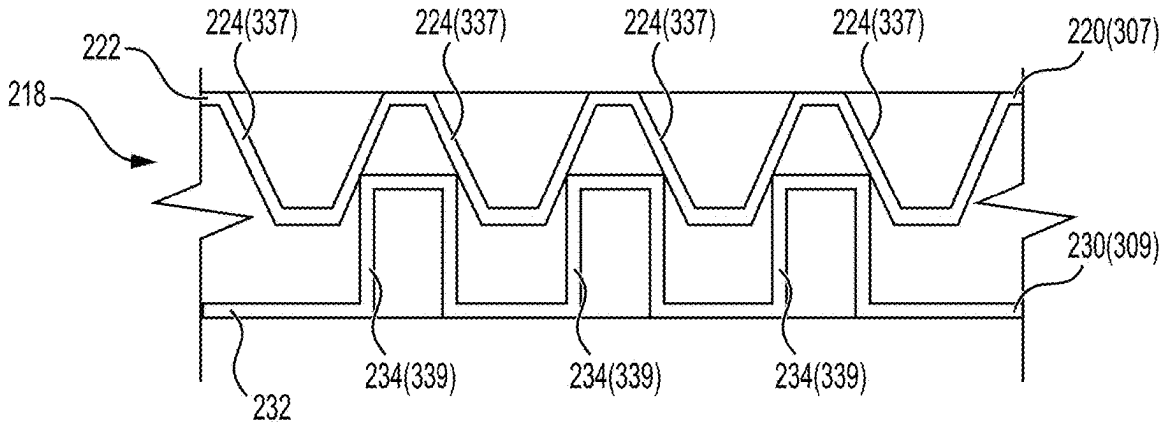
224(337)
224(337)
224(337)
224(337)
222
220(307)
218
230(309)
234(339)
234(339)
234(339)
232

FIG. 9B

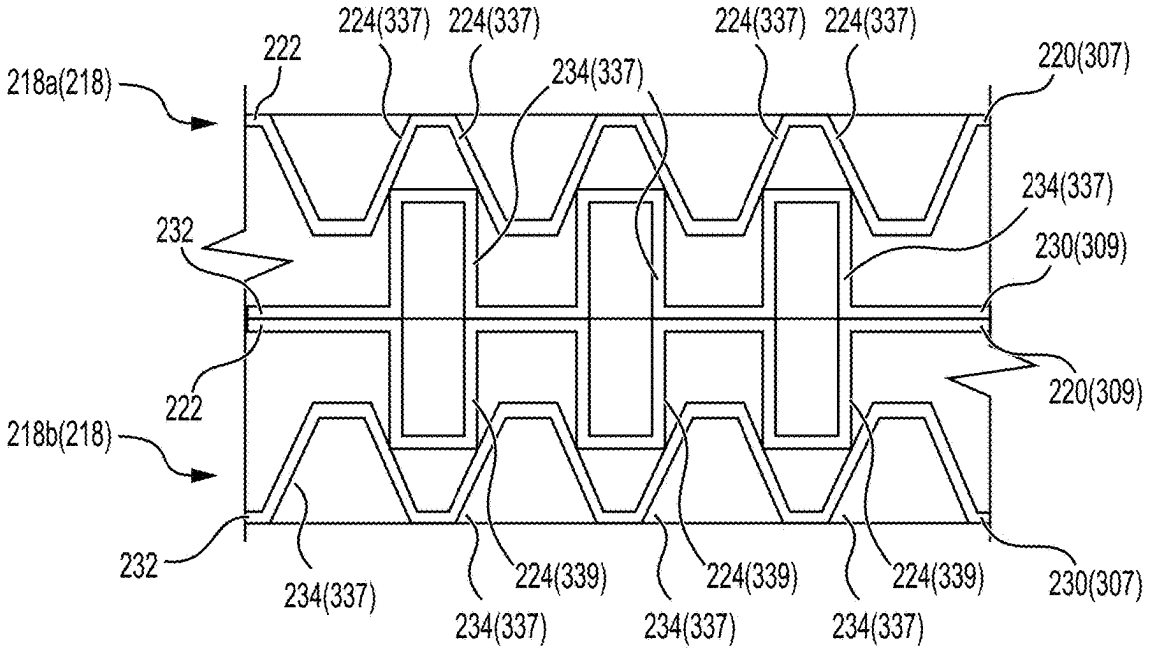
224(337)
224(337)
224(337)
224(337)
222
220(307)
218a(218)
234(337)
234(337)
232
230(309)
222
220(309)
218b(218)
232
234(337)
224(339)
224(339)
224(339)
230(307)
234(337)
234(337)
234(337)

FIG. 9C

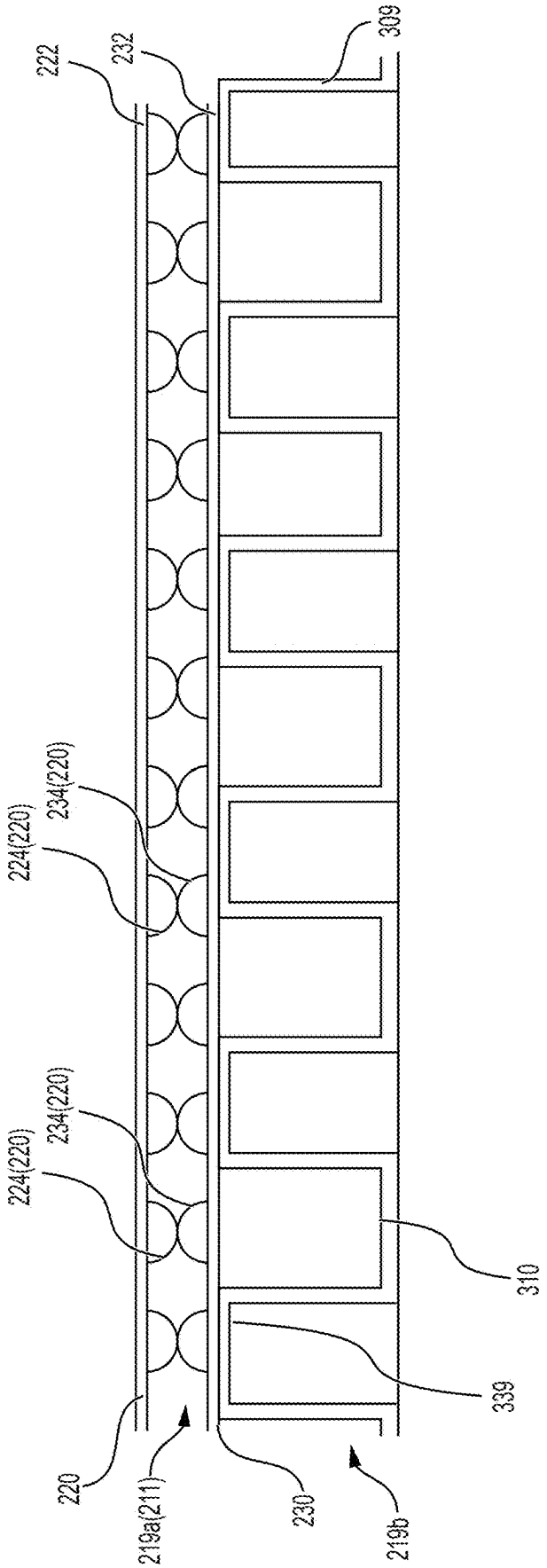
222
232
309
224(220)
234(220)
224(220)
234(220)
310
339
220
219a(211)
230
219b

FIG. 9D

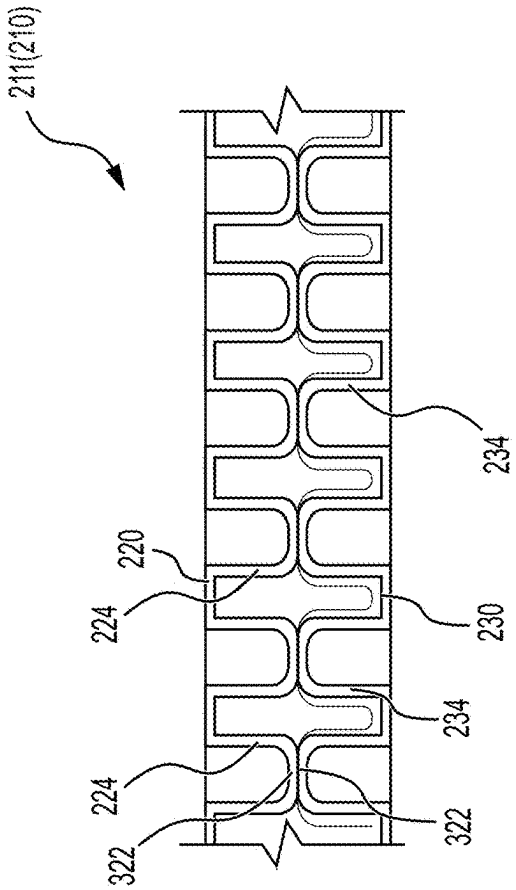

FIG. 10B

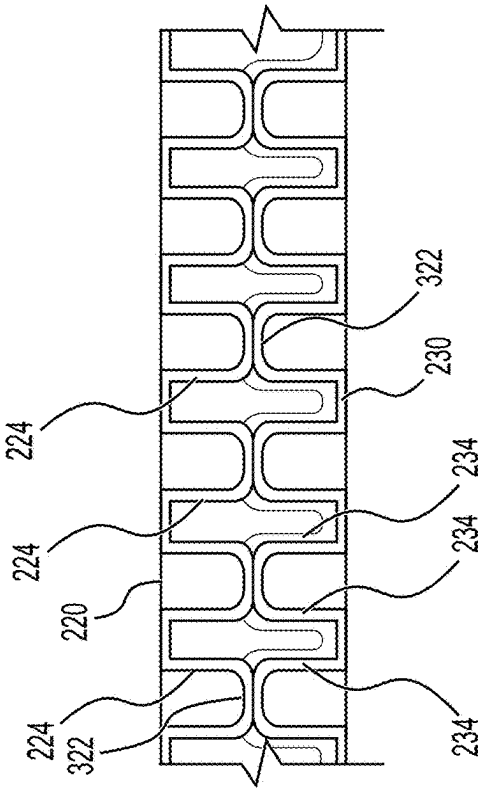

FIG. 10A

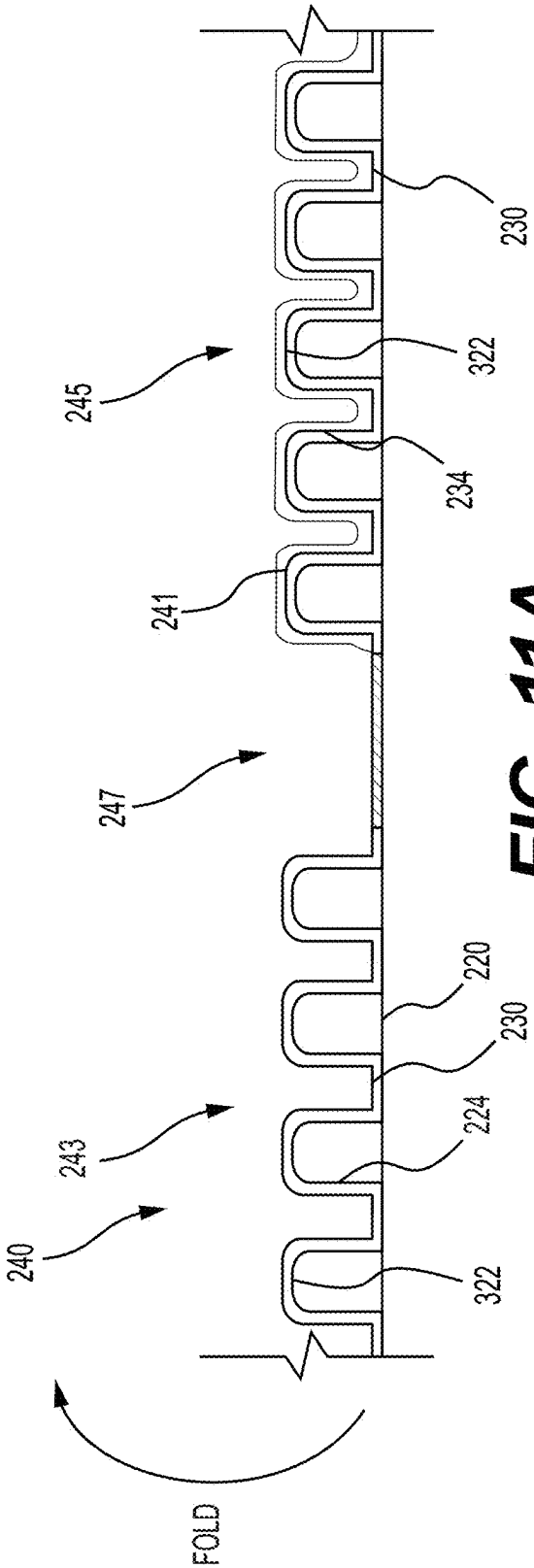

FIG. 11A

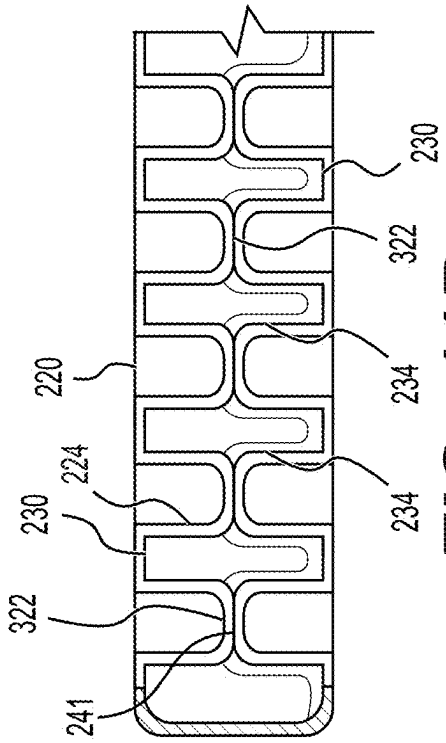

FIG. 11B

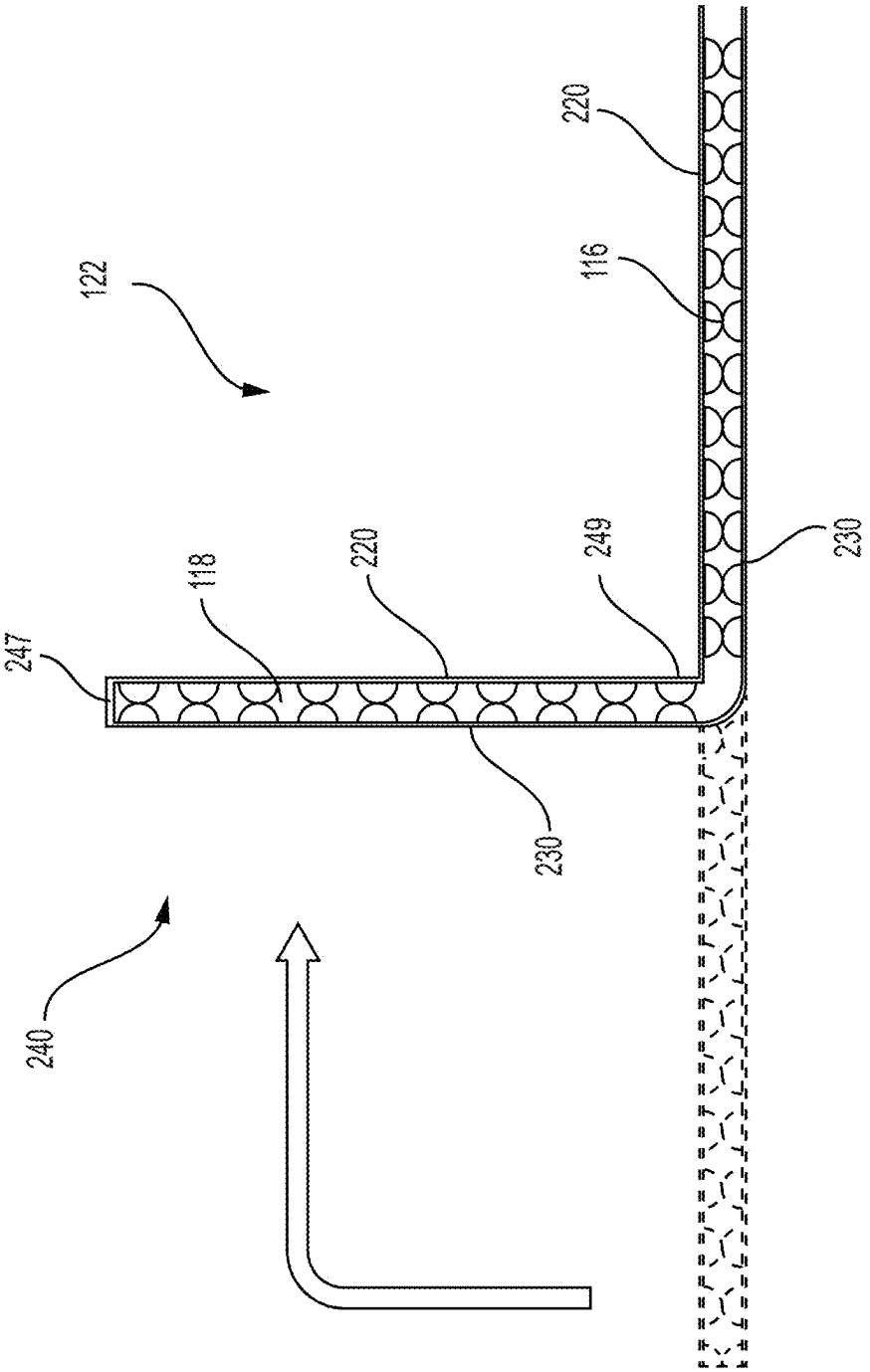

FIG. 11C

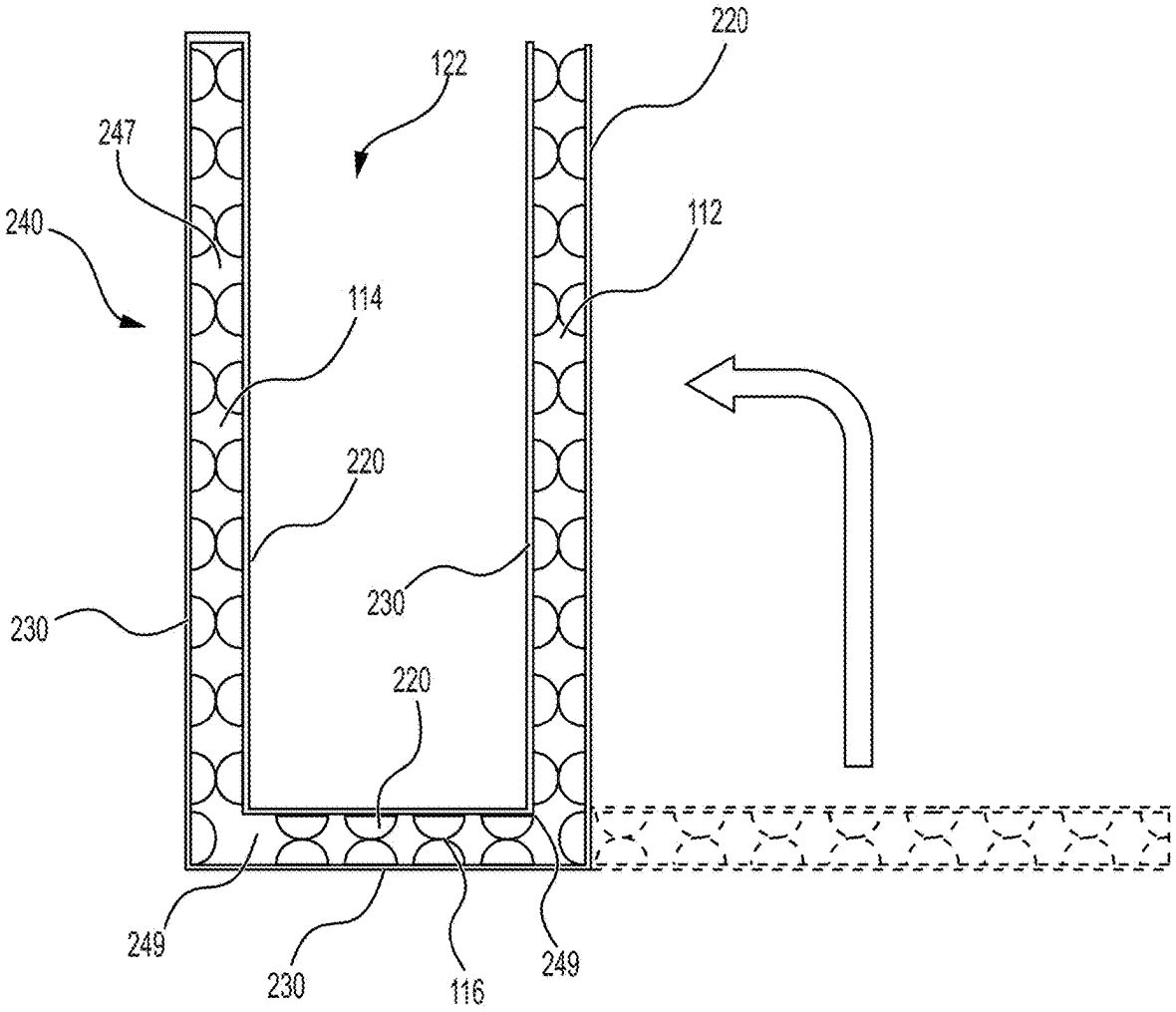

FIG. 11D

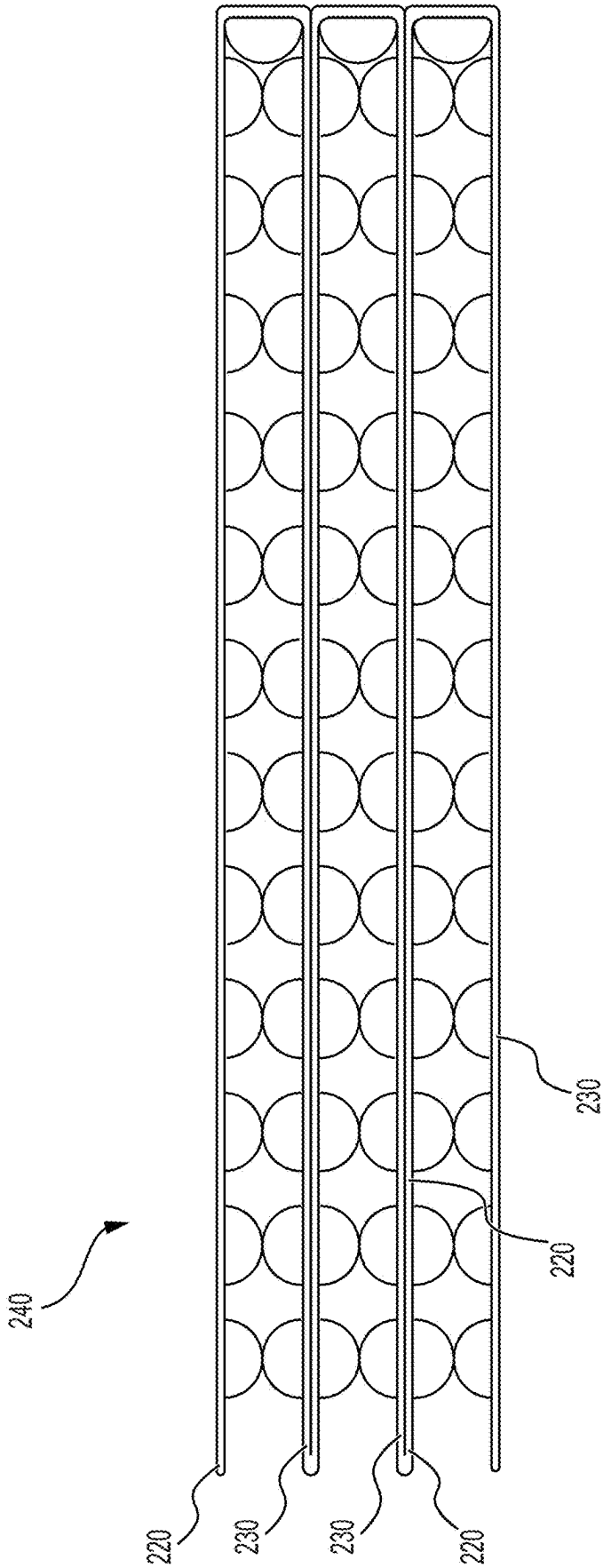

FIG. 11E

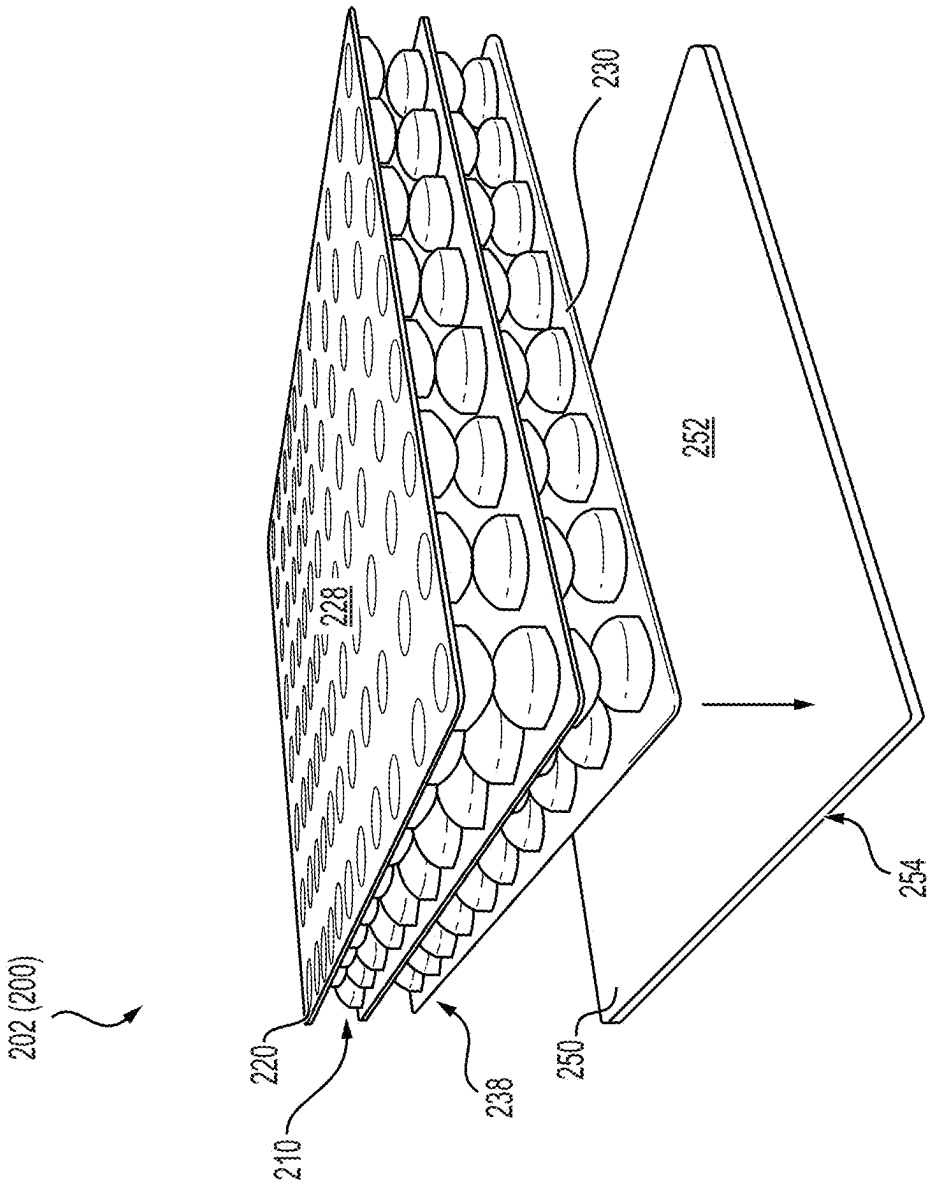

FIG. 12

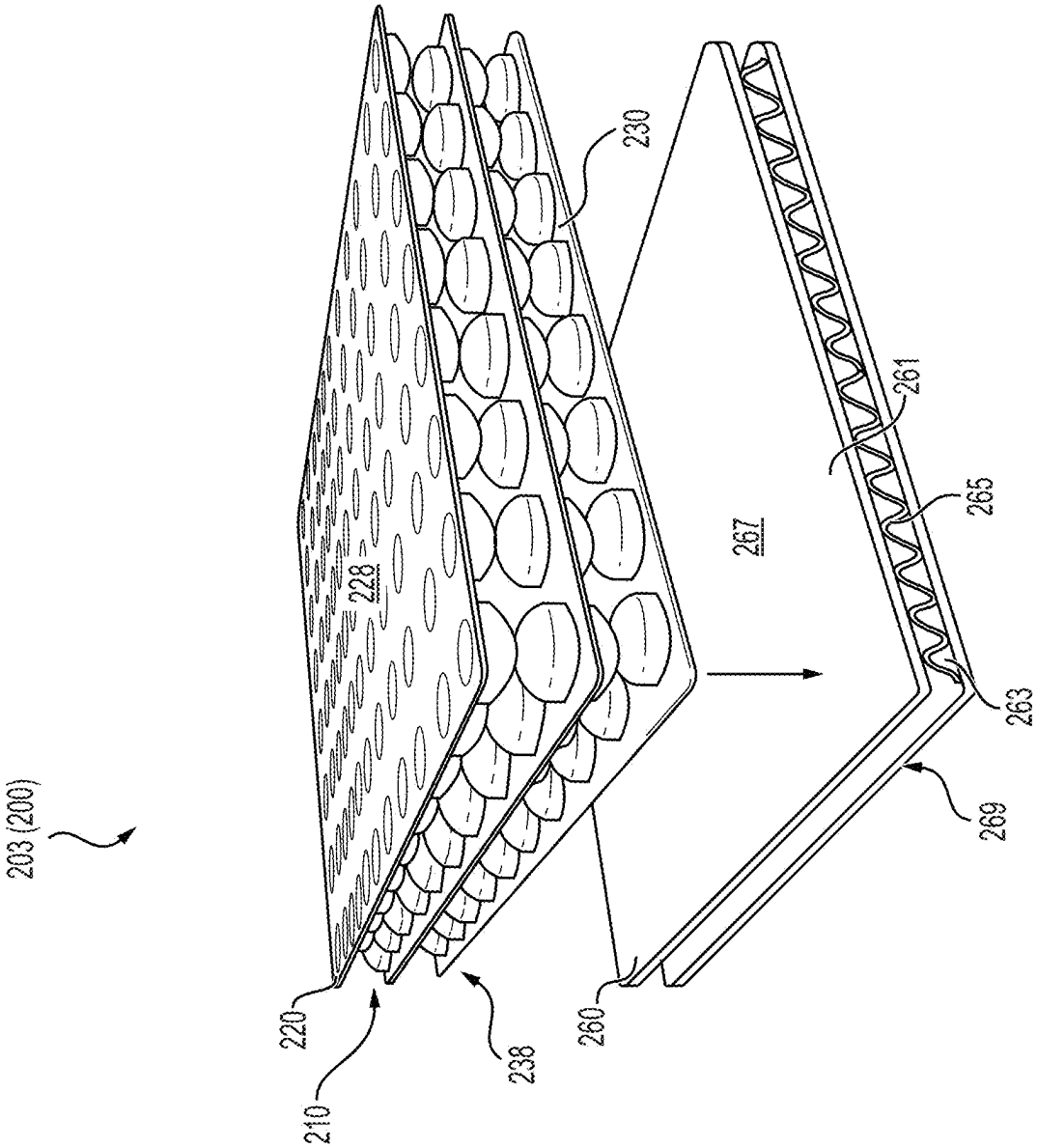

FIG. 13

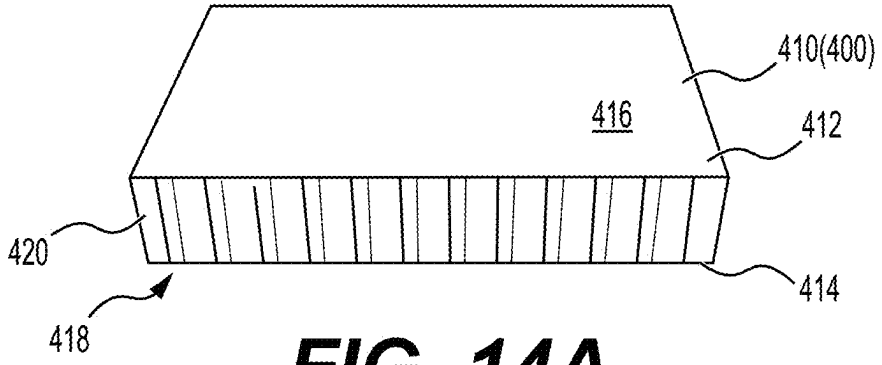

FIG. 14A

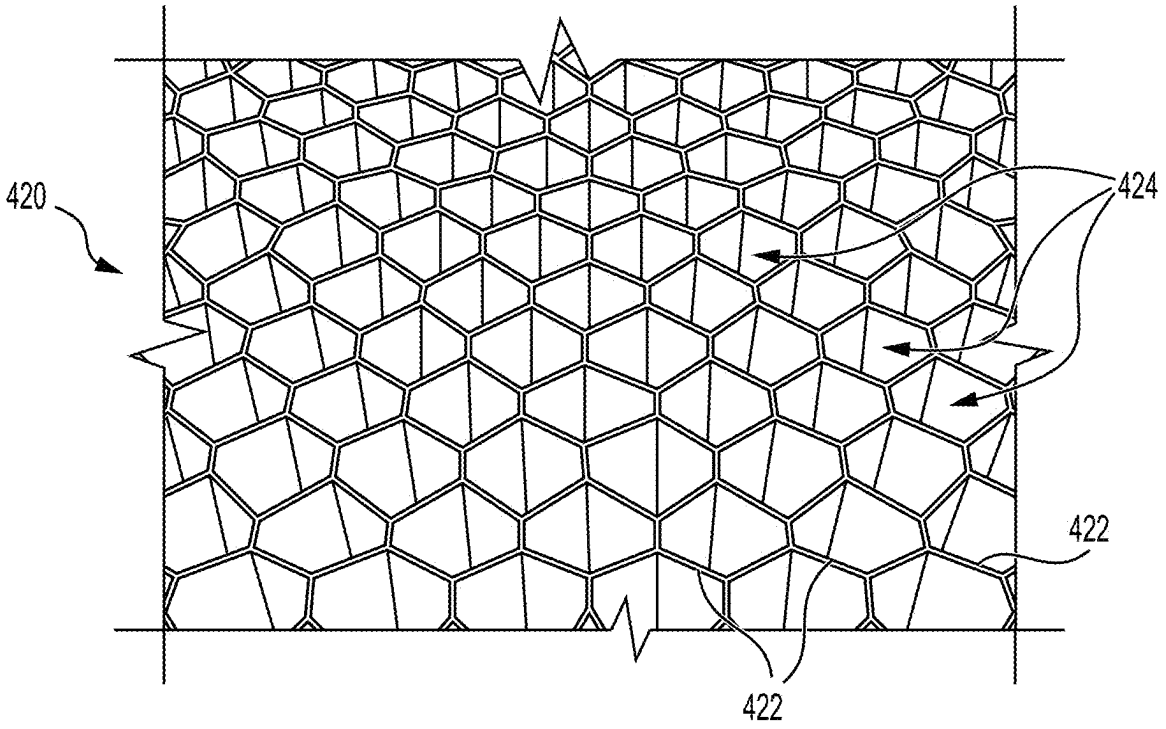

FIG. 14B

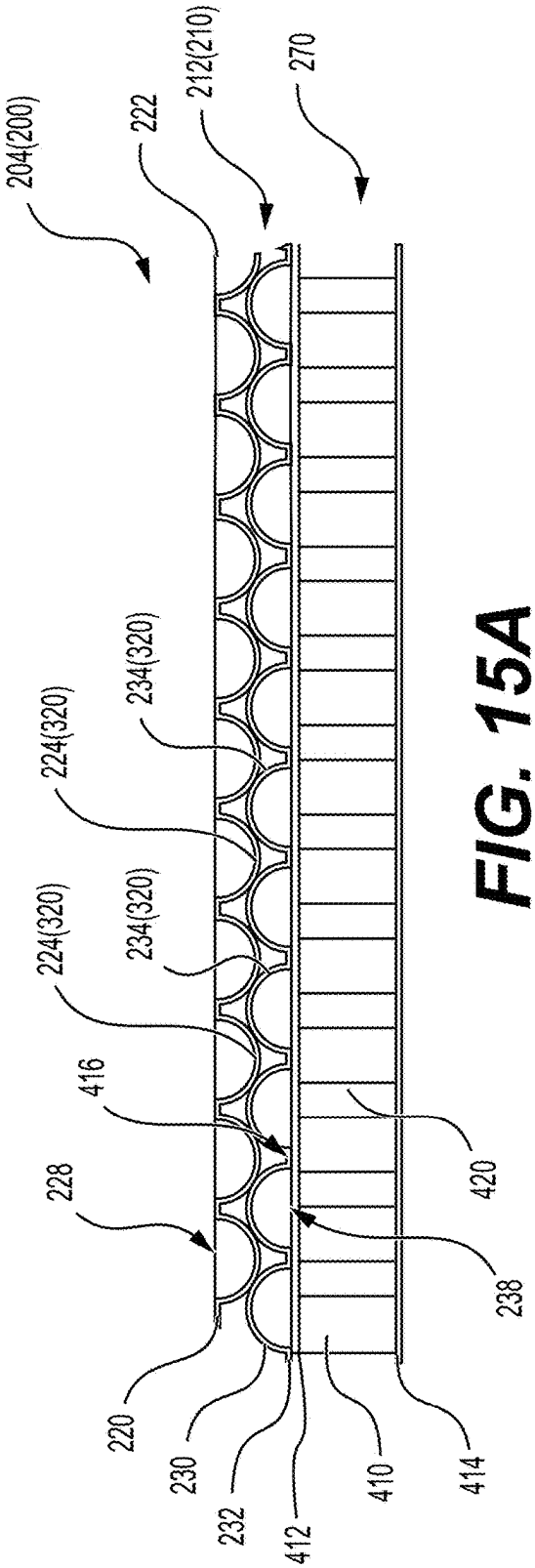

FIG. 15A

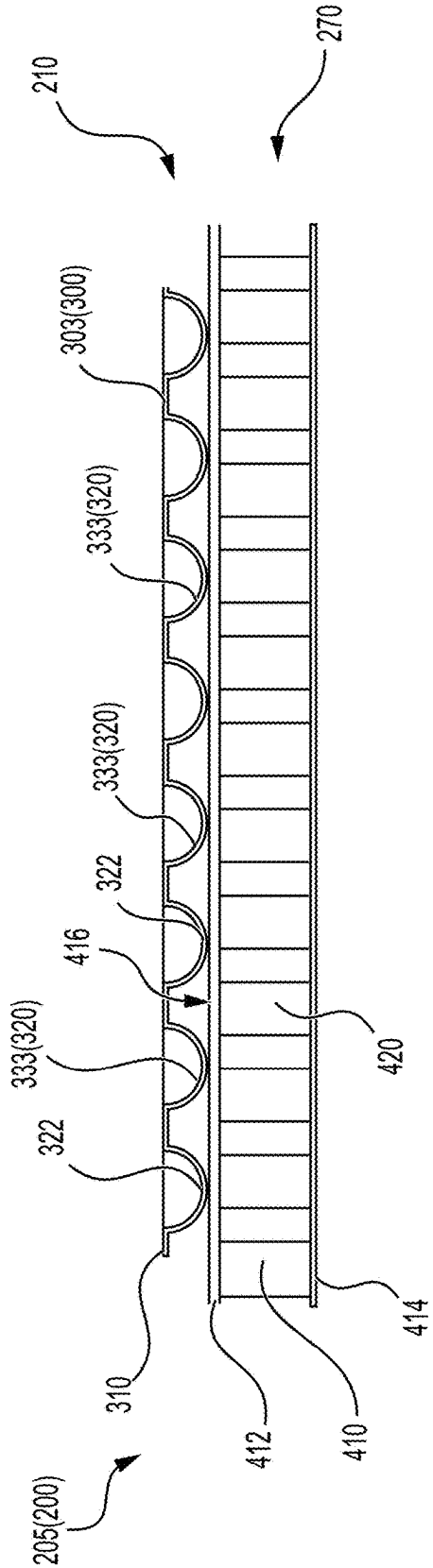

FIG. 15B

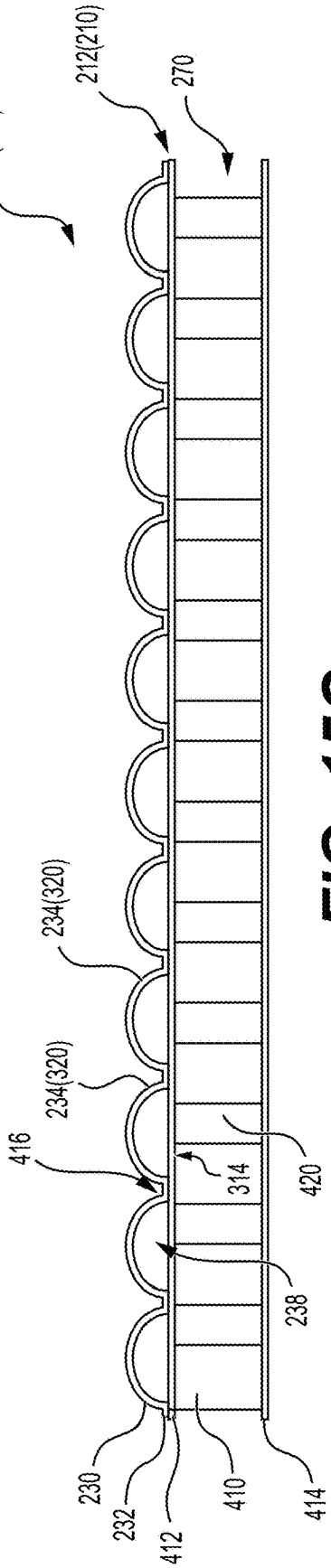

FIG. 15C

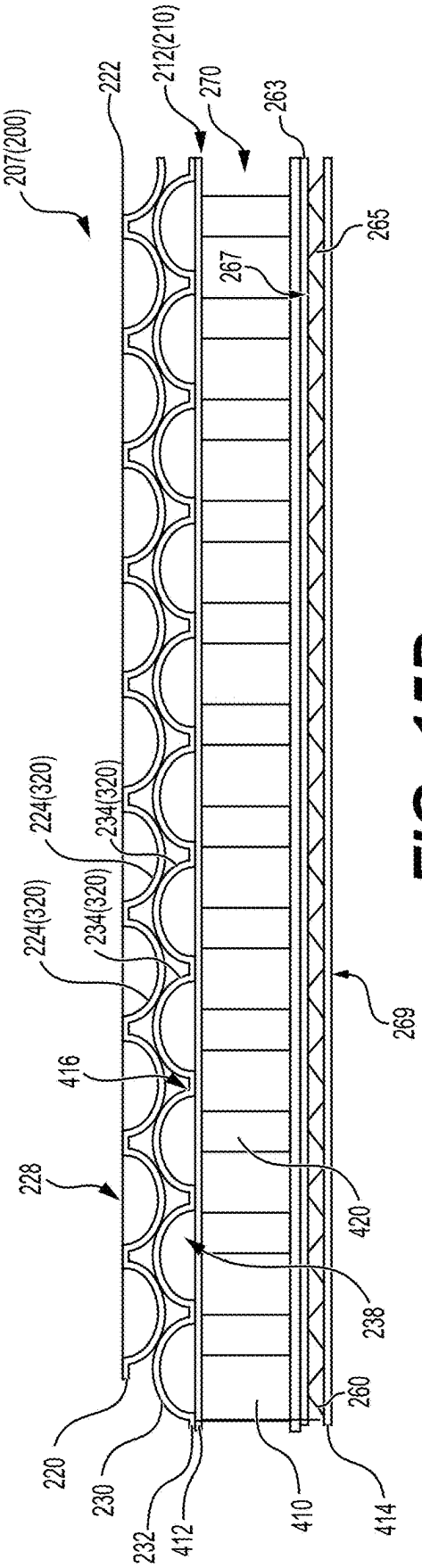

FIG. 15D

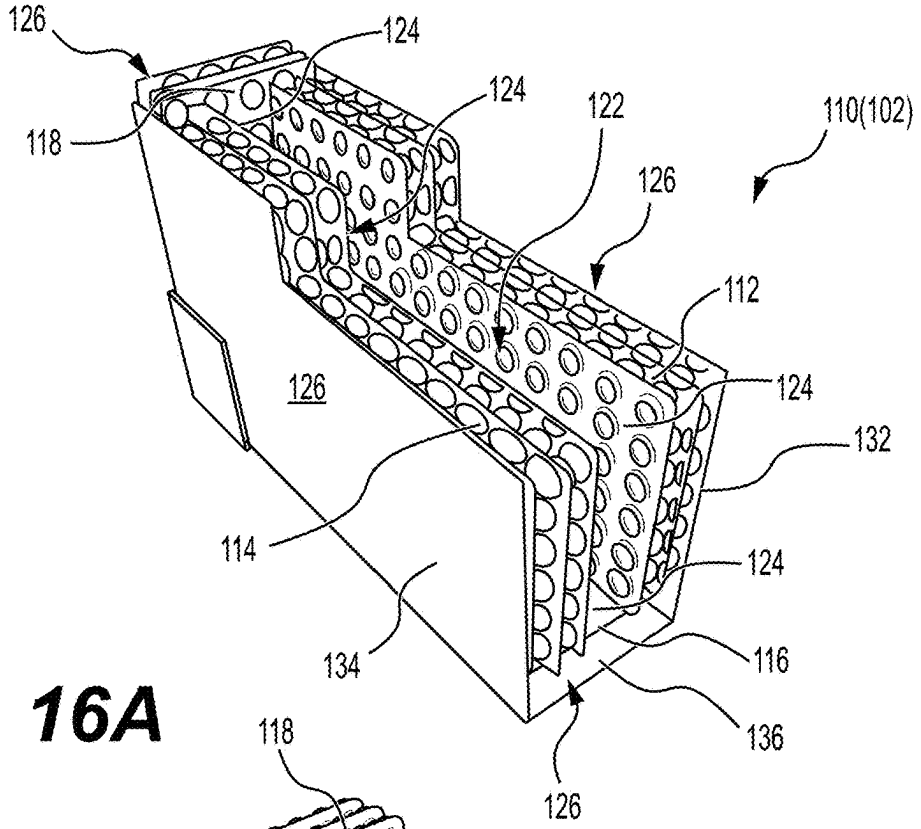

FIG. 16A

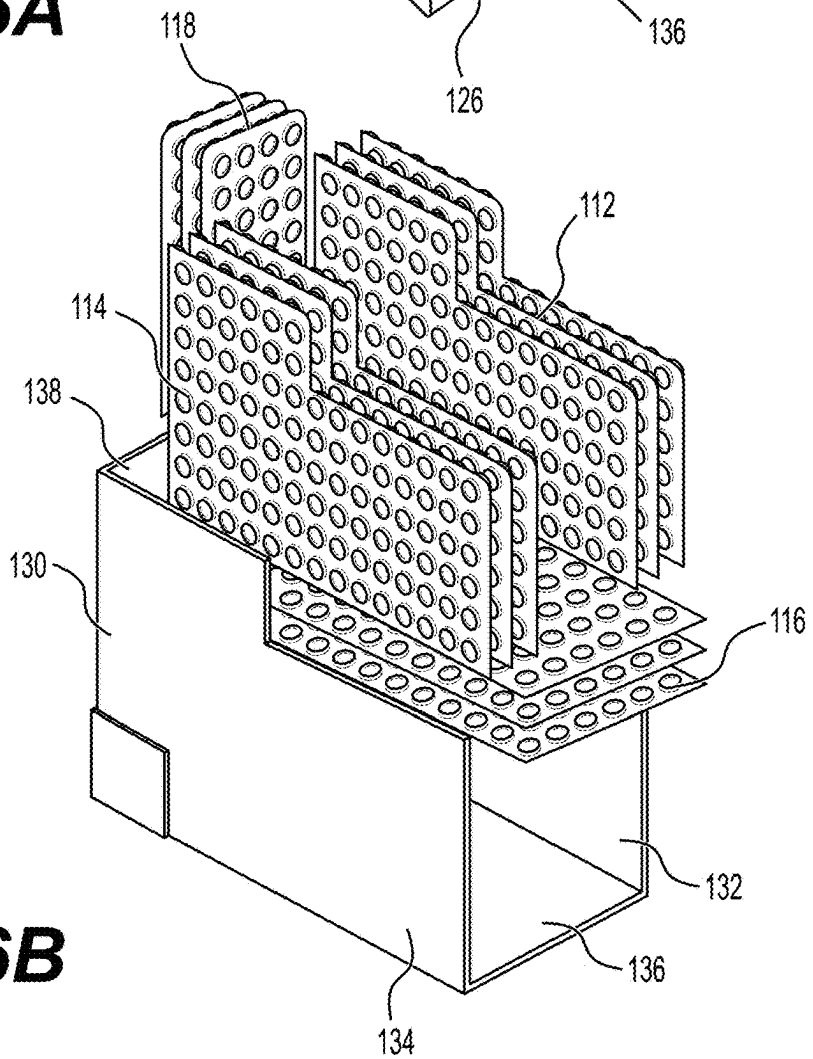

FIG. 16B

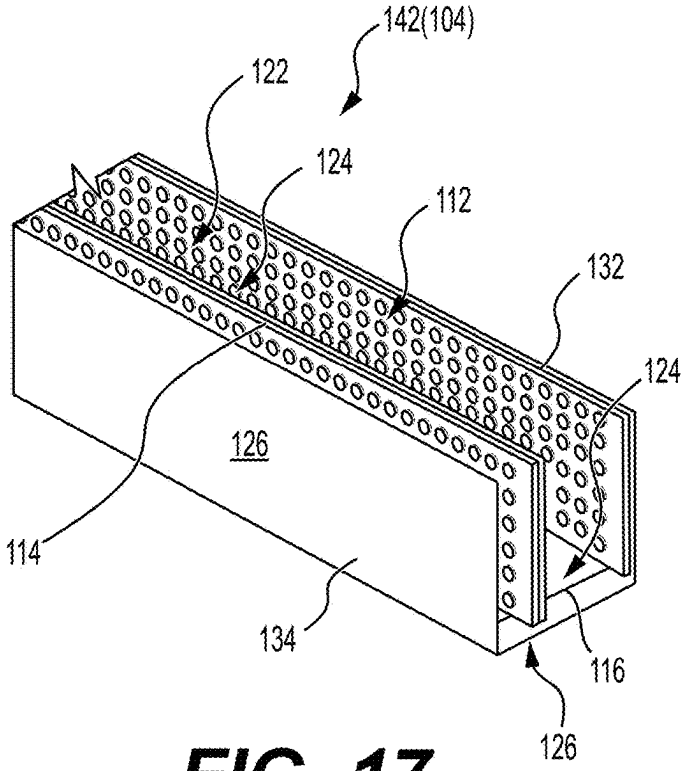
142(104)
122
124
112
132
124
126
114
134
116
126

FIG. 17

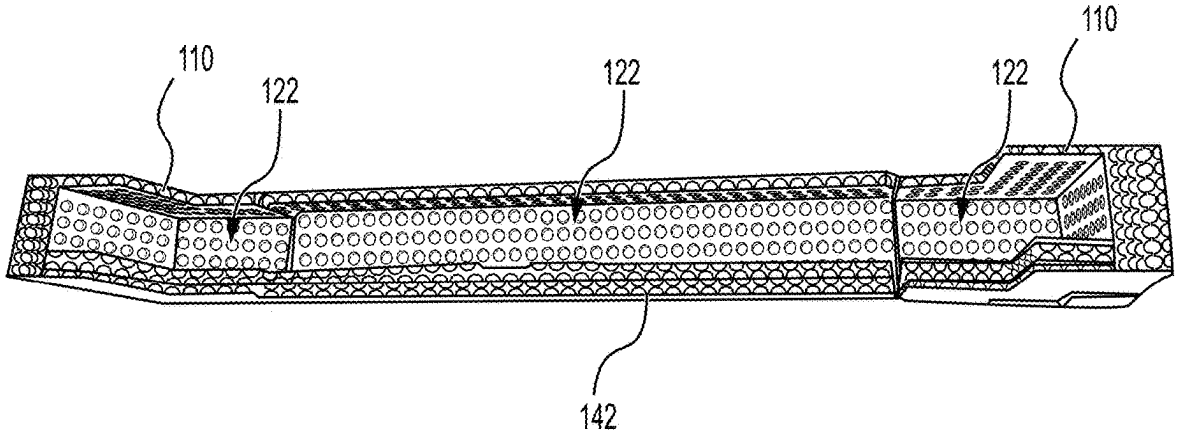
110
122
122
122
110
142

FIG. 18

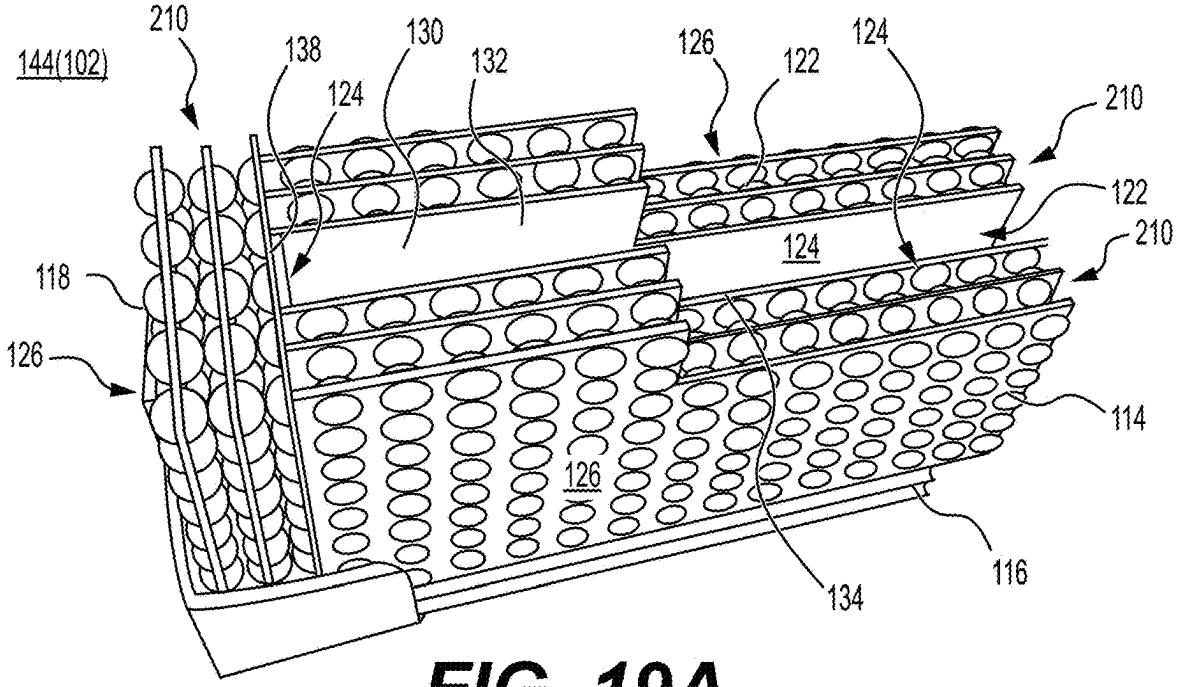

FIG. 19A

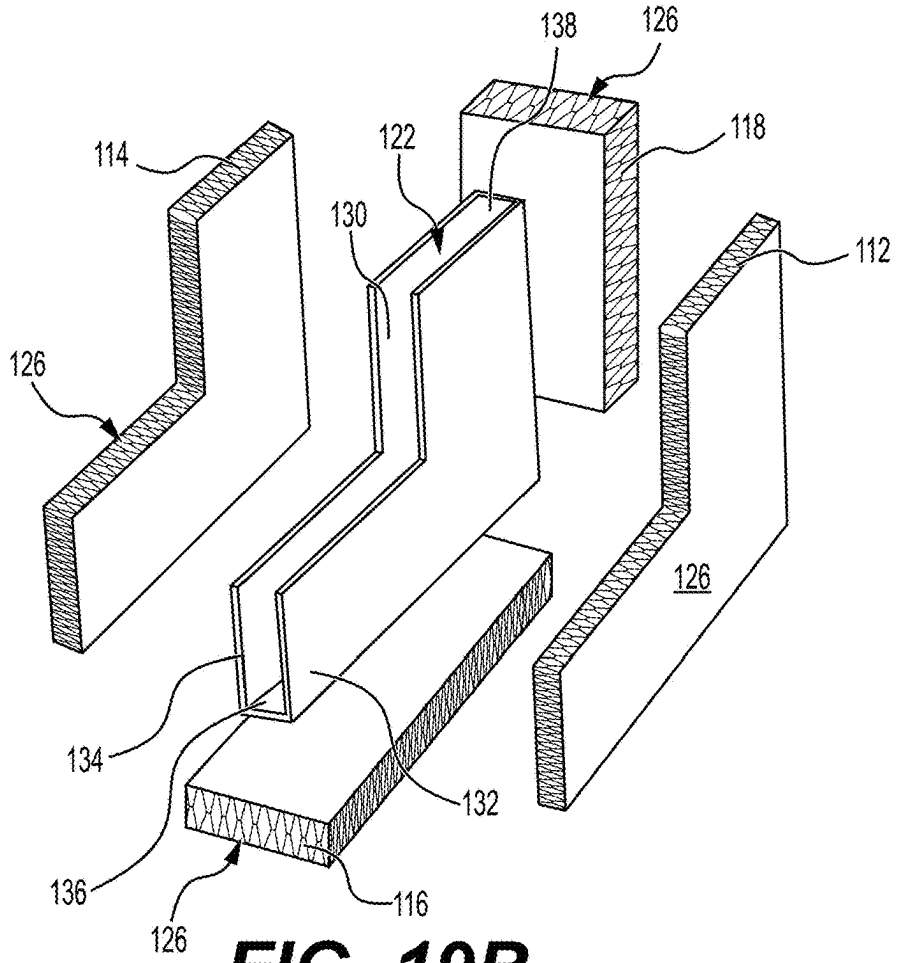

FIG. 19B

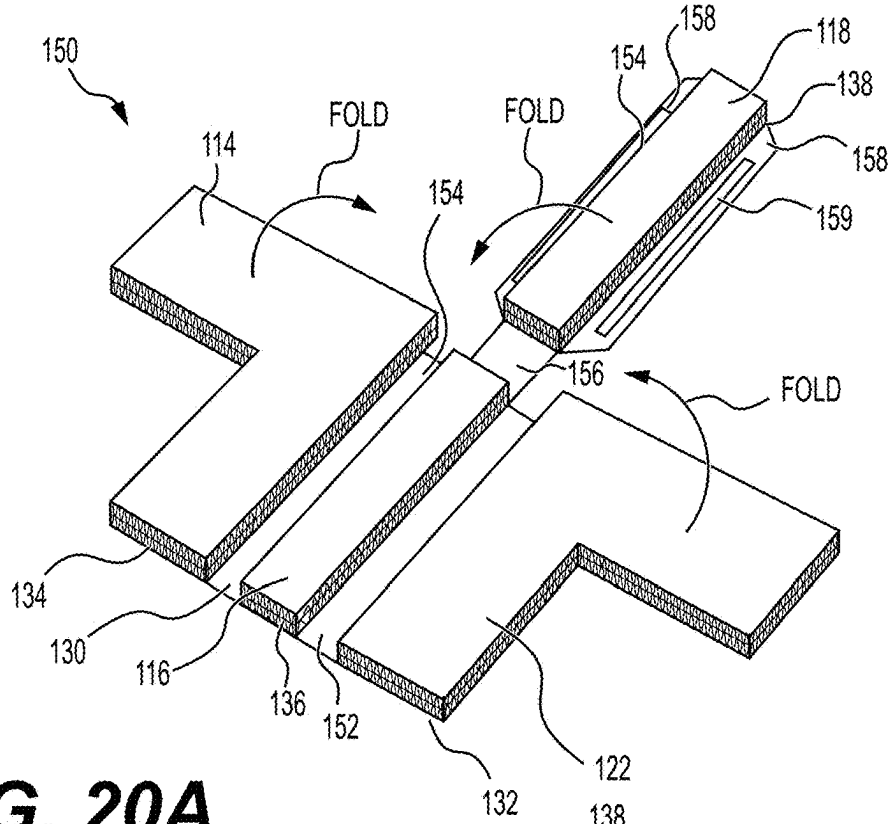

FIG. 20A

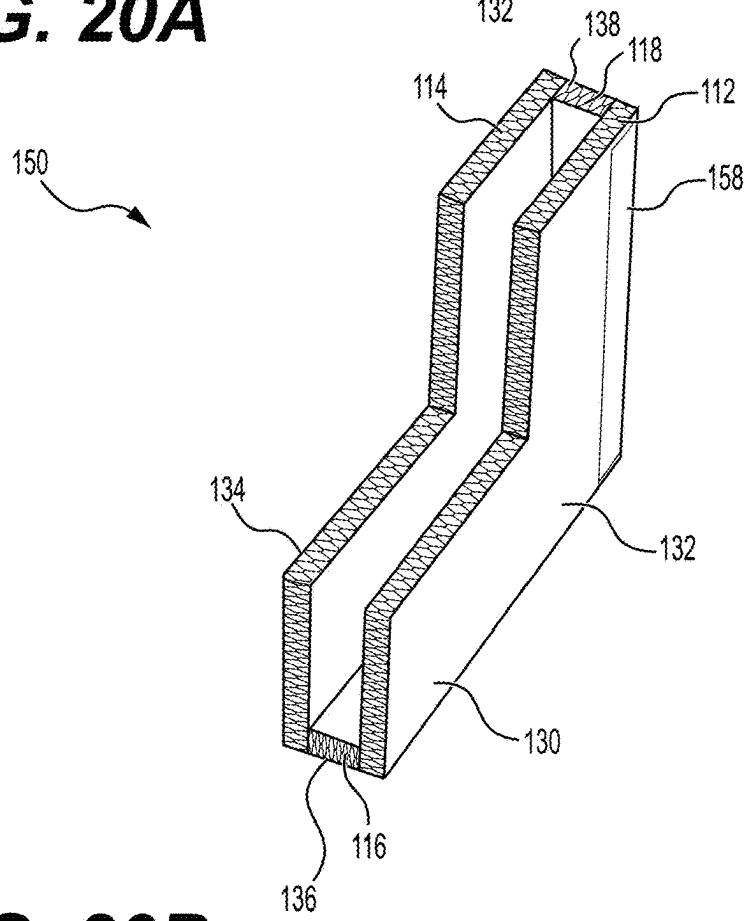

FIG. 20B

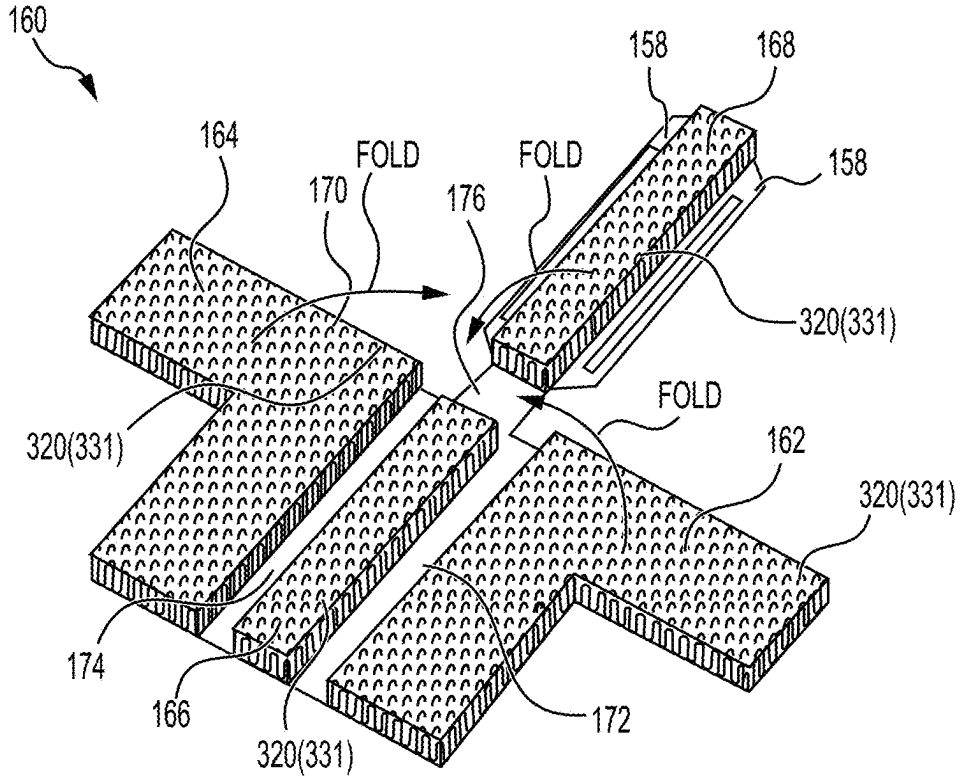

FIG. 21A

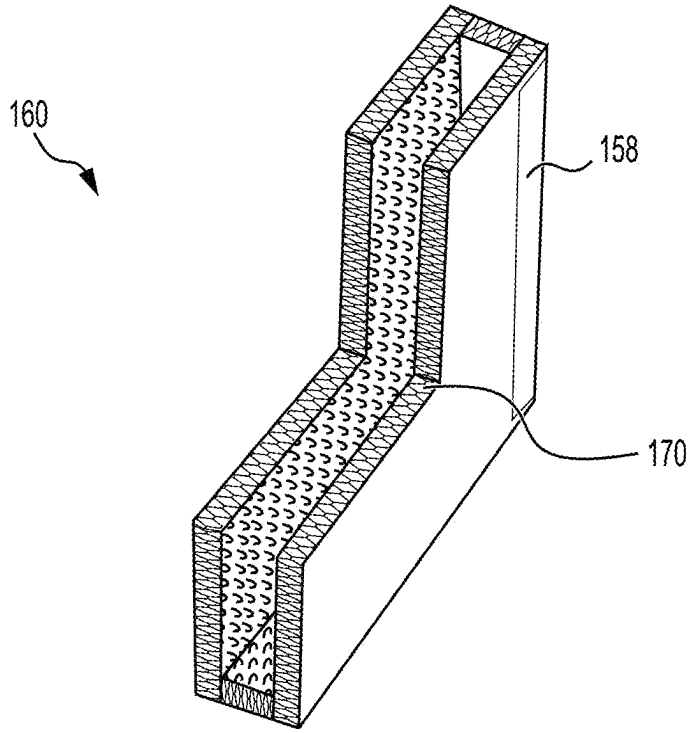

FIG. 21B

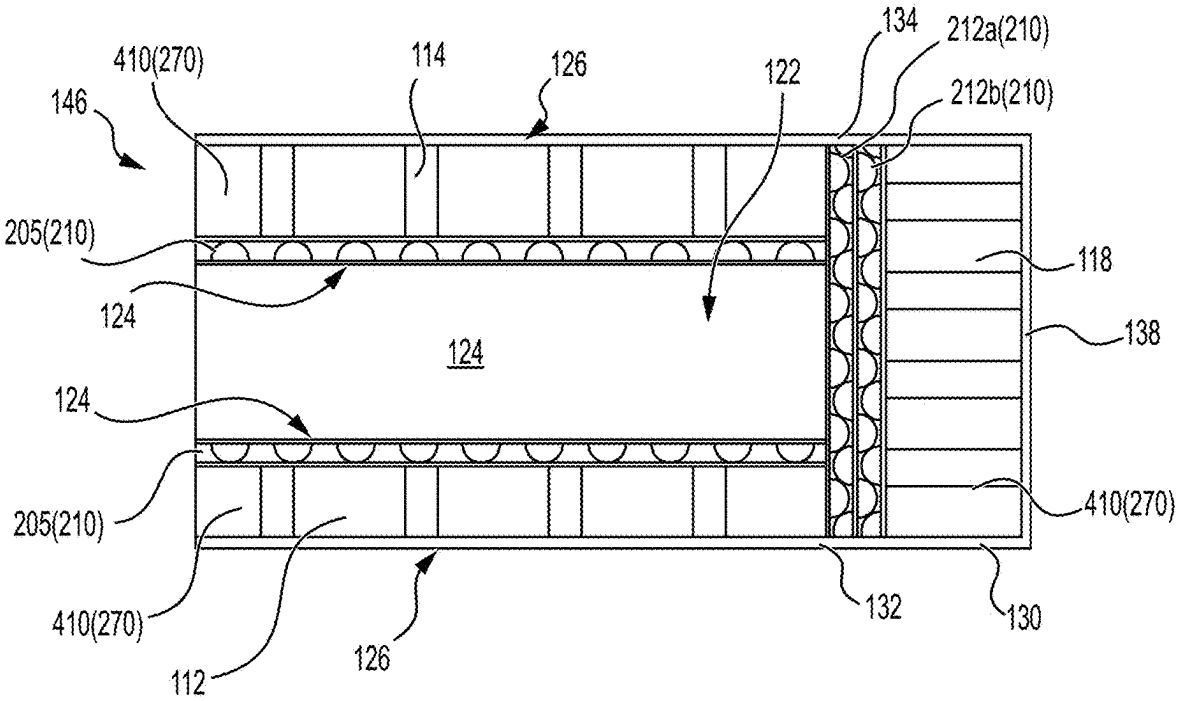
410(270)
114
126
122
134
212a(210)
212b(210)
146
205(210)
118
124
138
124
124
205(210)
410(270)
410(270)
132
130
112
126

FIG. 22A

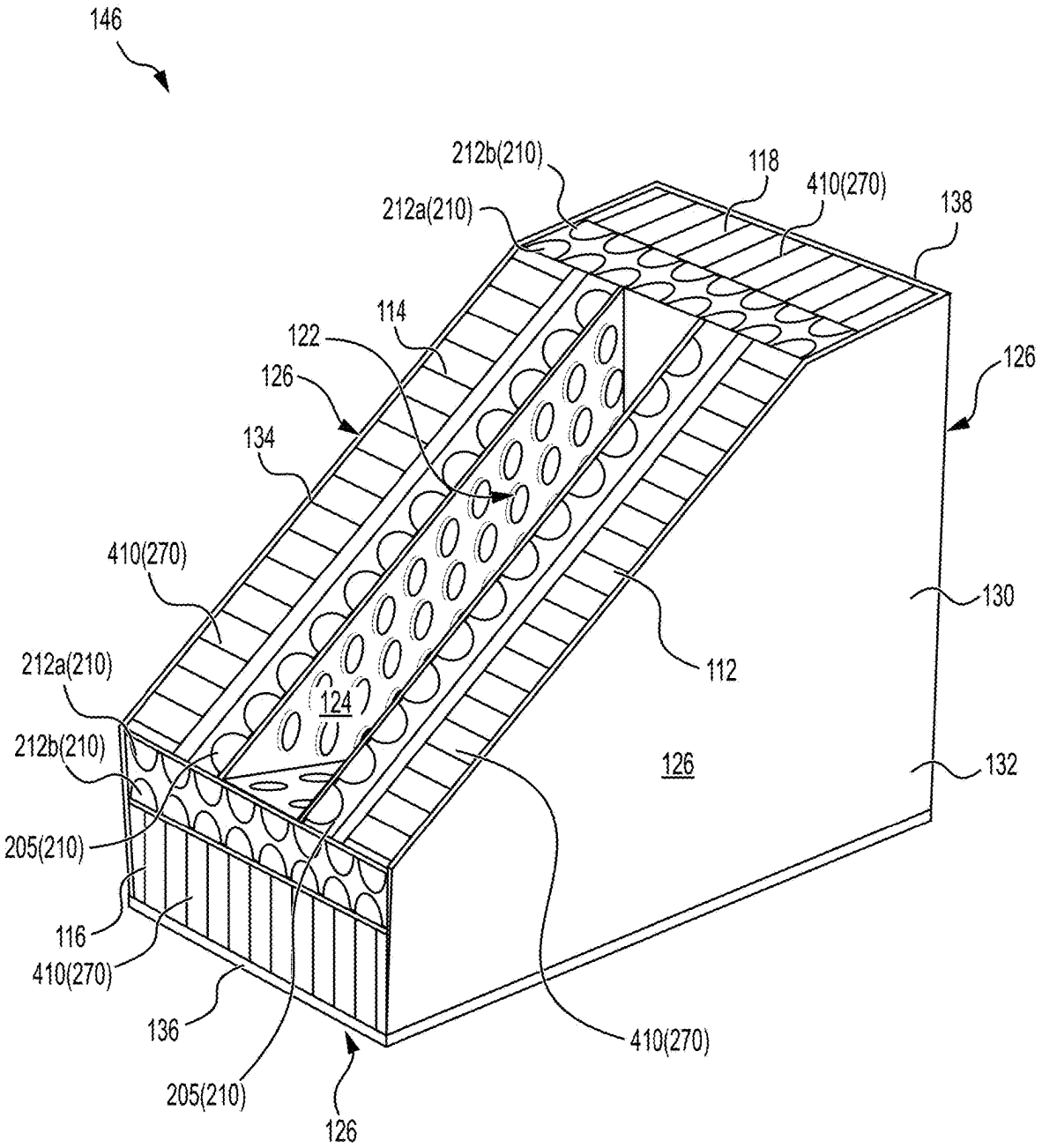
146
212b(210)
118
410(270)
138
212a(210)
114
122
126
126
134
410(270)
130
112
212a(210)
124
212b(210)
126
132
205(210)
116
410(270)
136
410(270)
205(210)
126

FIG. 22B

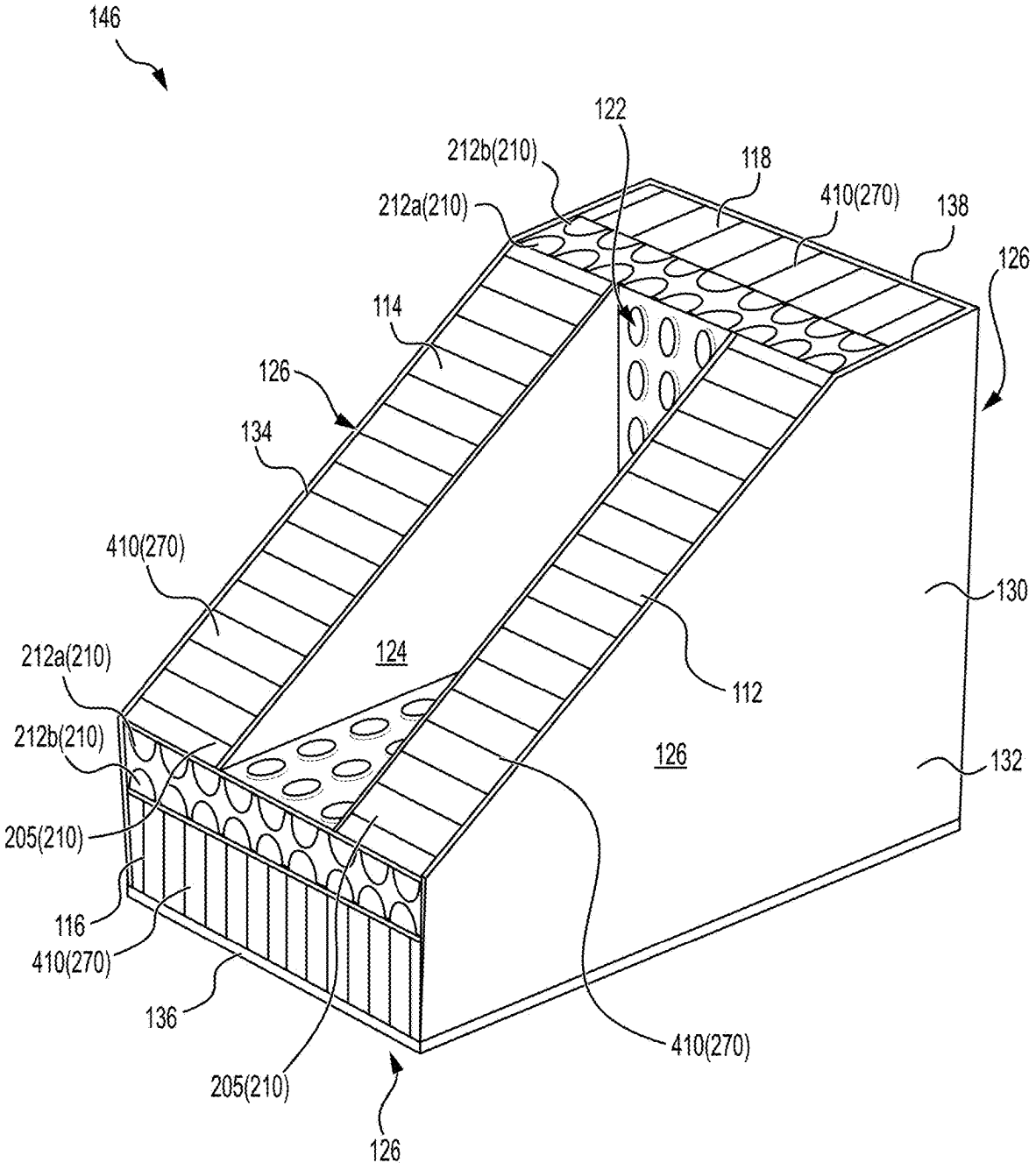
146
122
212b(210)
118
212a(210)
410(270)
138
126
114
126
134
410(270)
130
124
212a(210)
112
212b(210)
126
132
205(210)
116
410(270)
136
410(270)
205(210)
126

FIG. 23

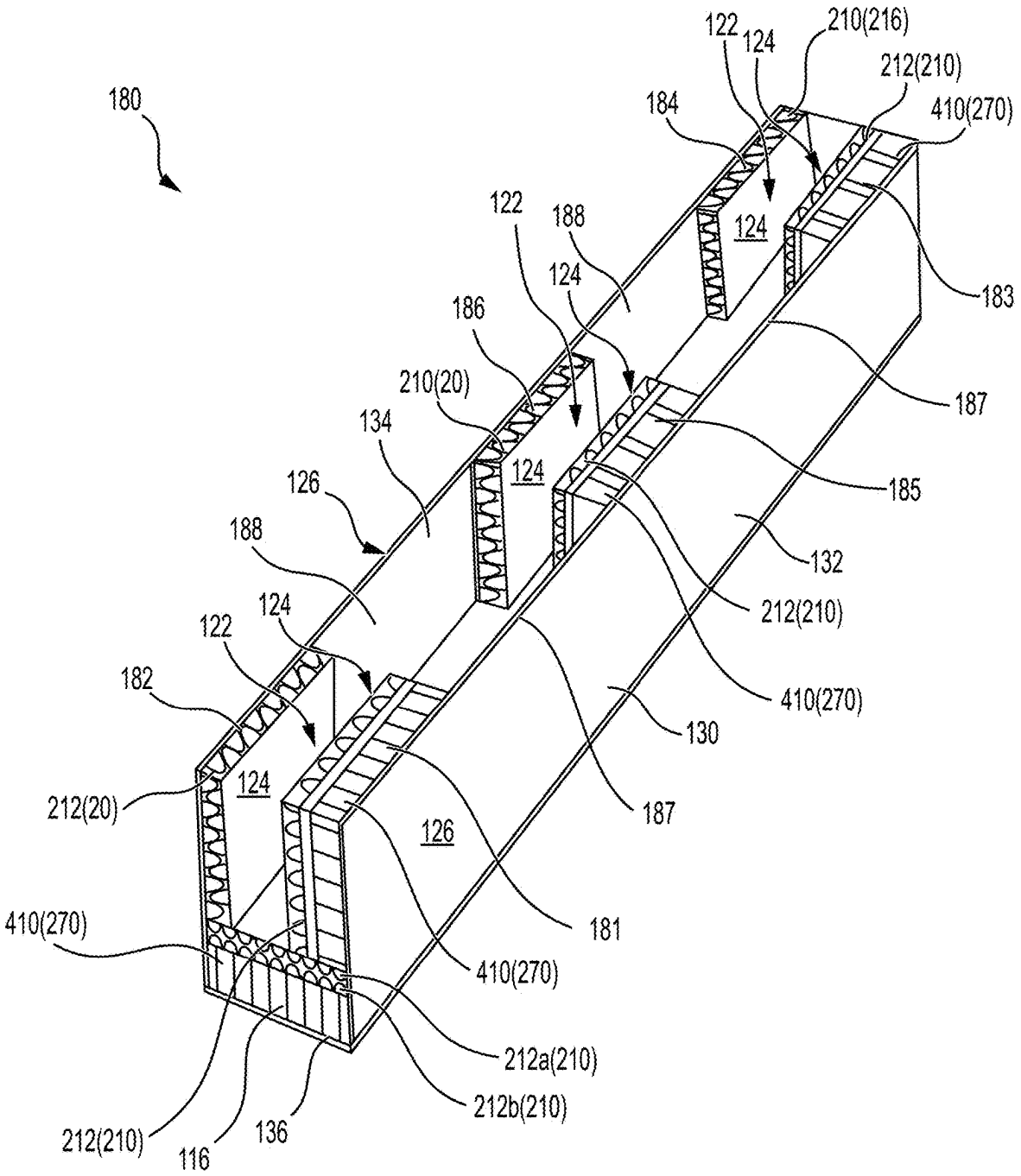
180
122
124
210(216)
212(210)
410(270)
184
124
183
122
188
124
186
187
210(20)
134
124
185
126
132
188
212(210)
124
122
182
410(270)
130
124
212(20)
126
187
181
410(270)
410(270)
212a(210)
212b(210)
212(210)
116
136

FIG. 24A

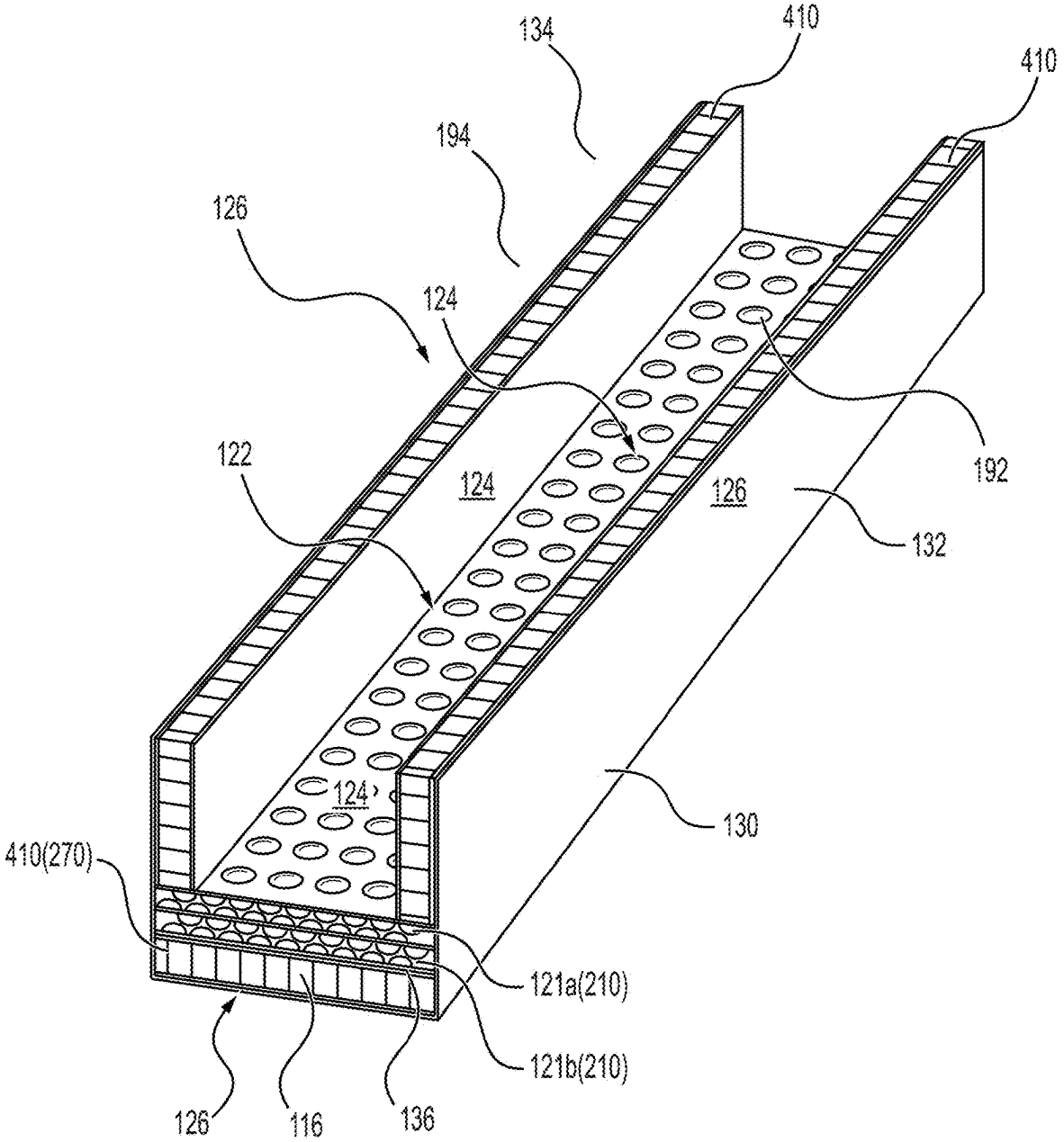
134
410
410
194
126
124
192
122
124
126
132
124
130
410(270)
121a(210)
121b(210)
126
116
136

FIG. 24B

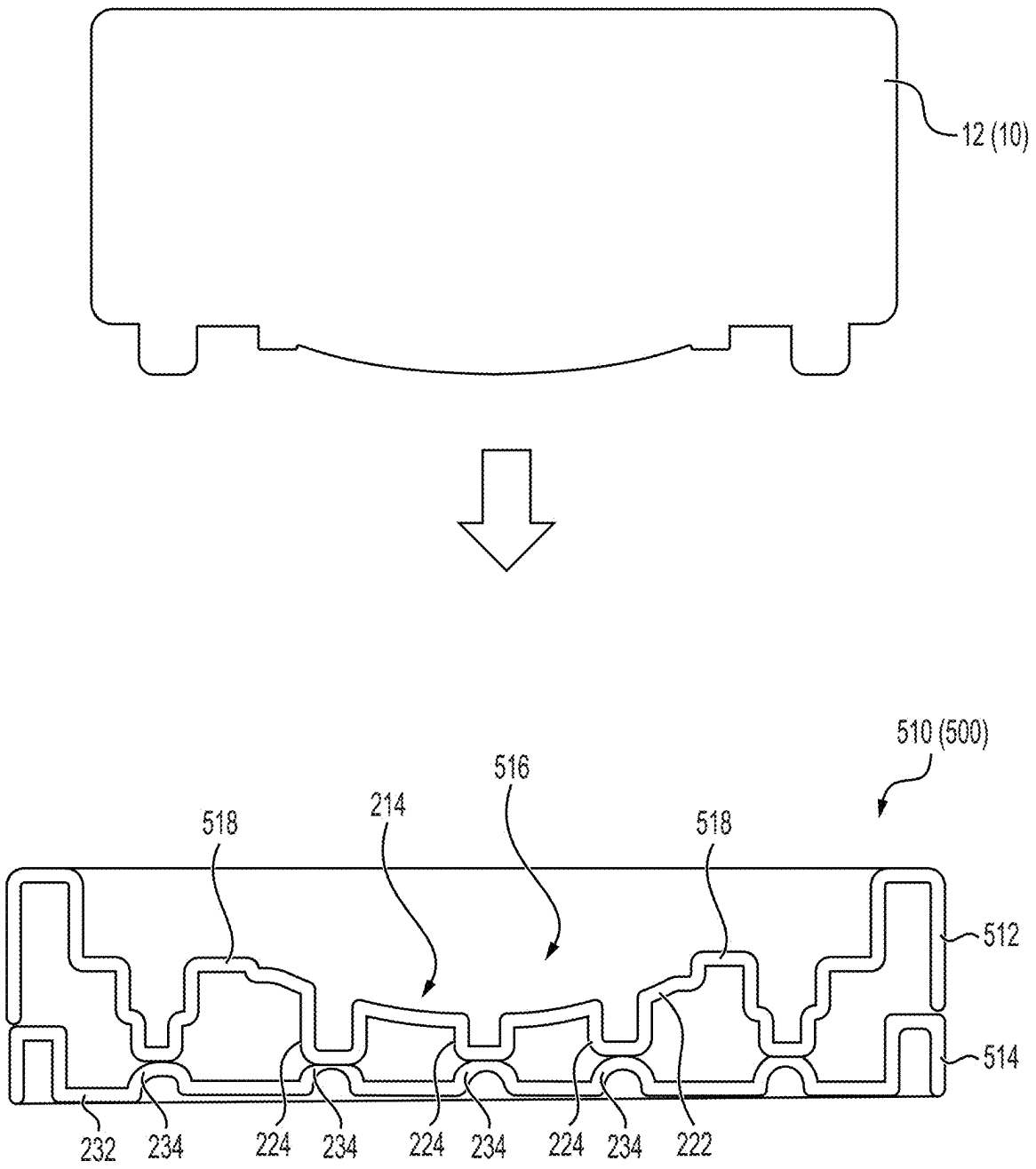
12 (10)
510 (500)
516
214
518
518
512
514
232
234
224
234
224
234
224
234
222

FIG. 25A

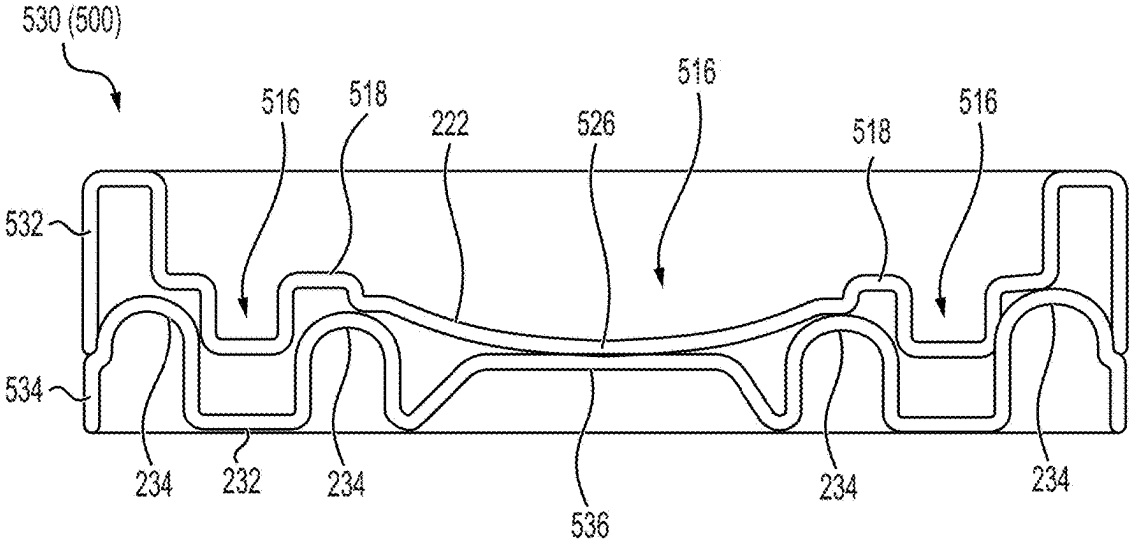

FIG. 25B

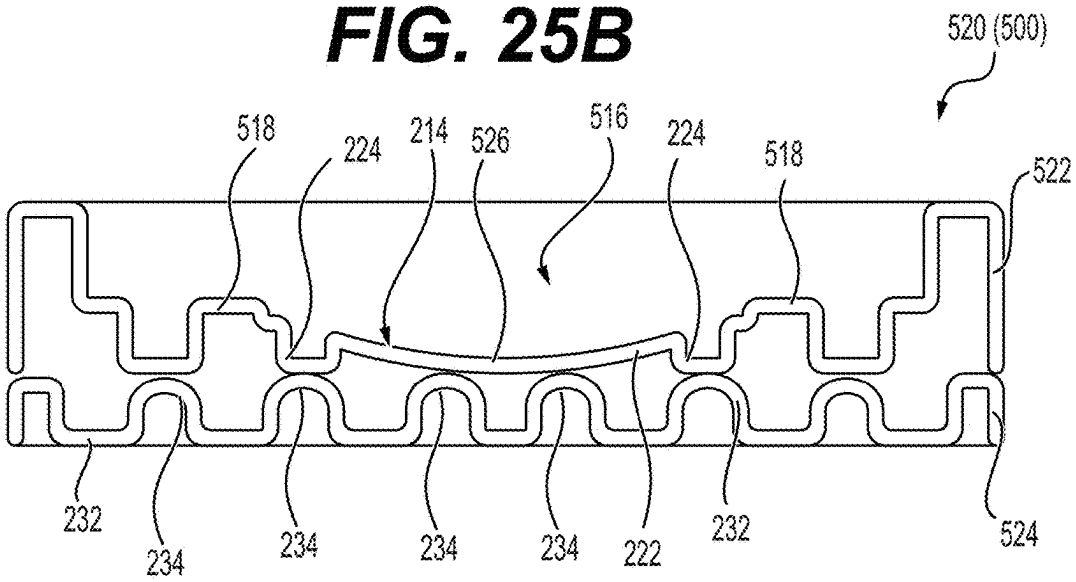

FIG. 25C

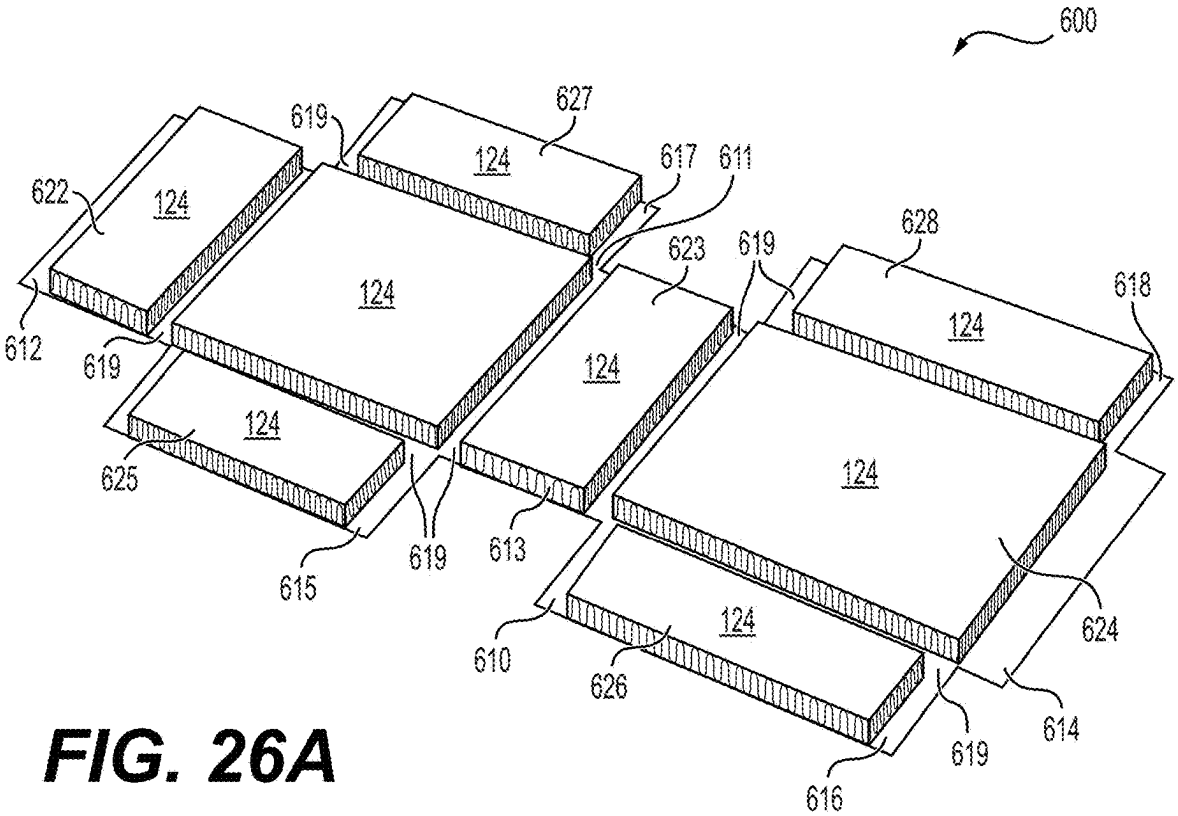

FIG. 26A

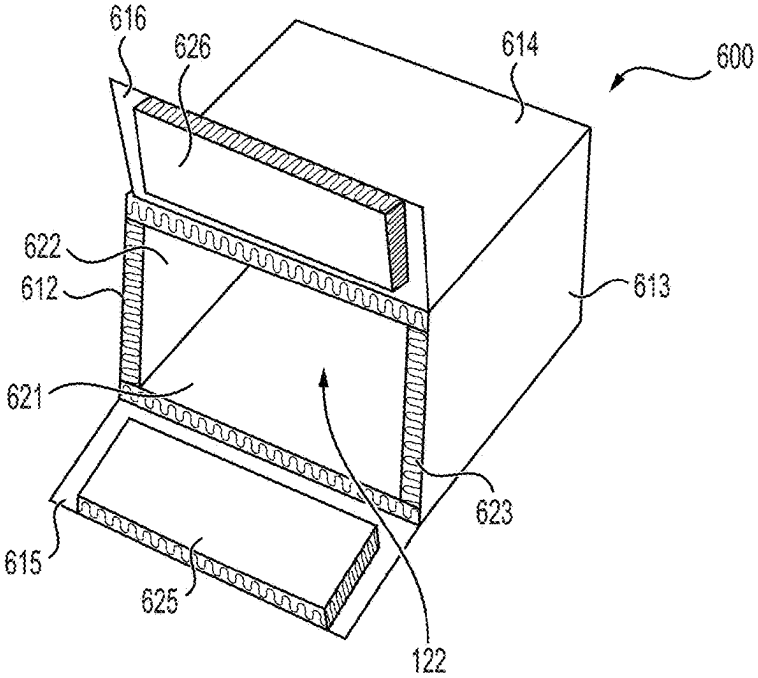

FIG. 26B

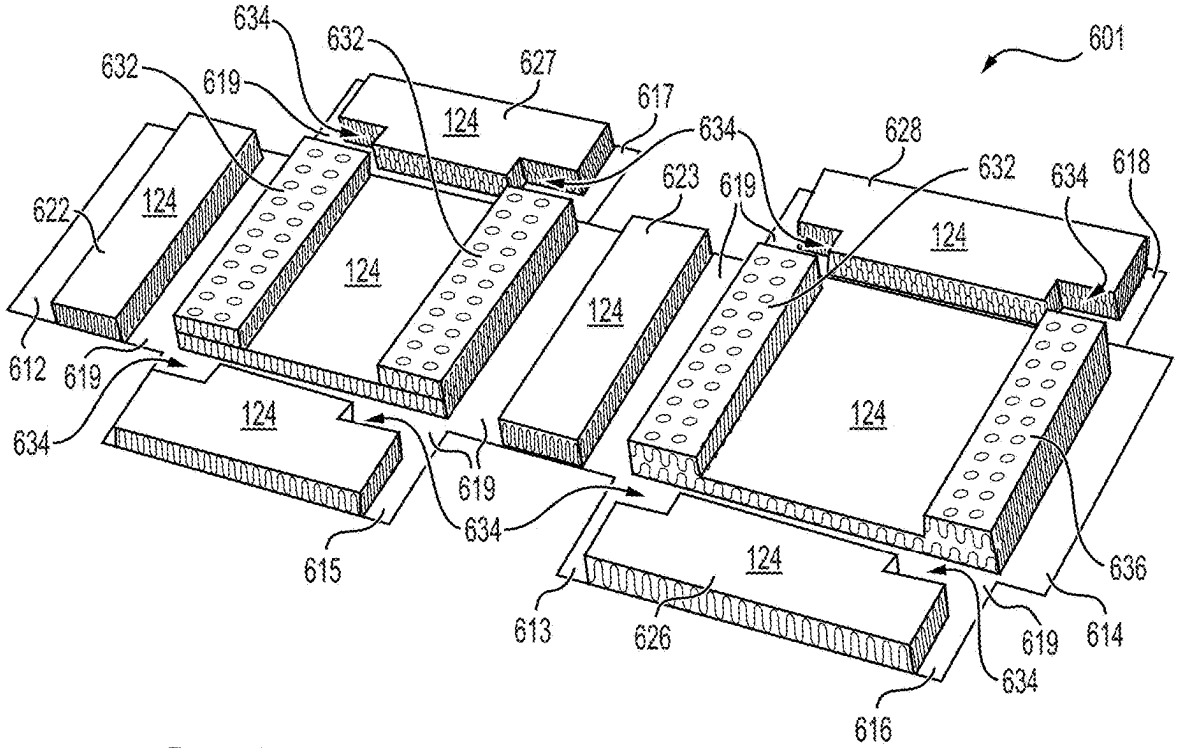

FIG. 27A

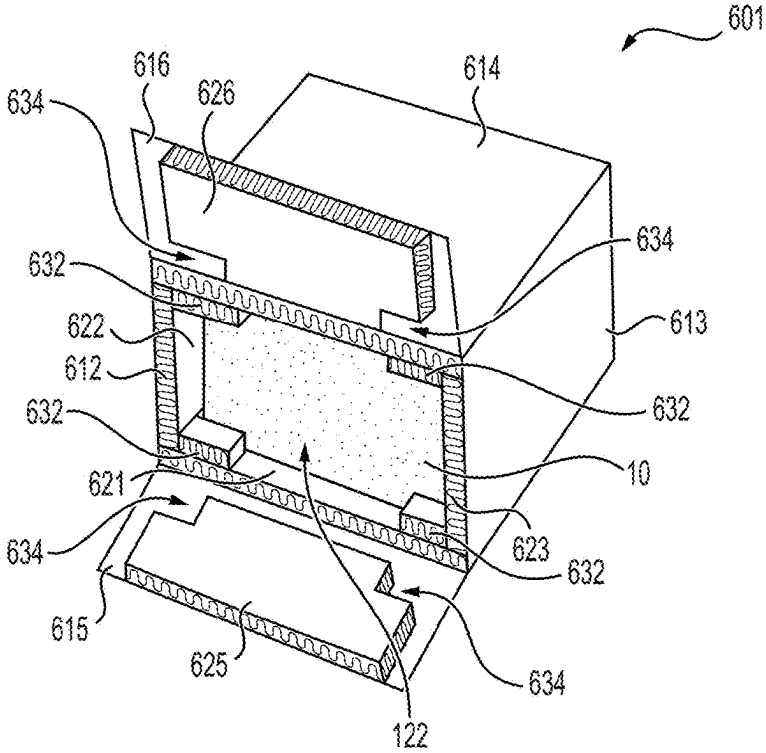

FIG. 27B

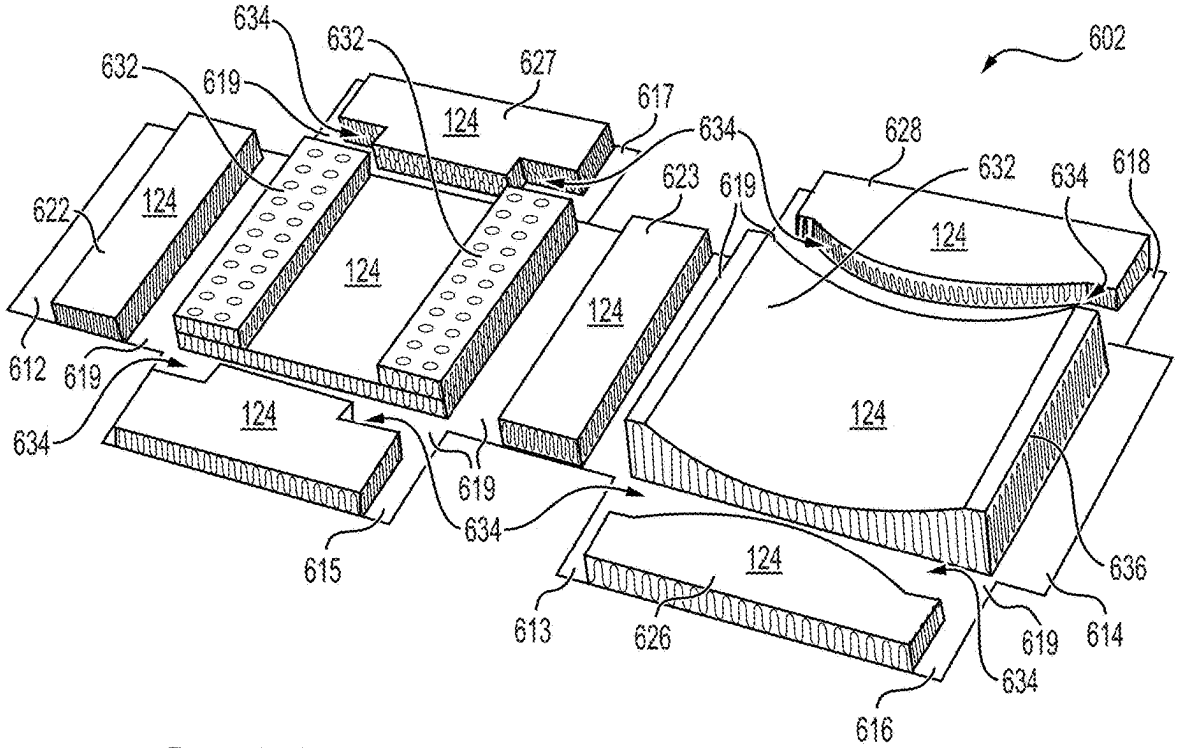

FIG. 28A

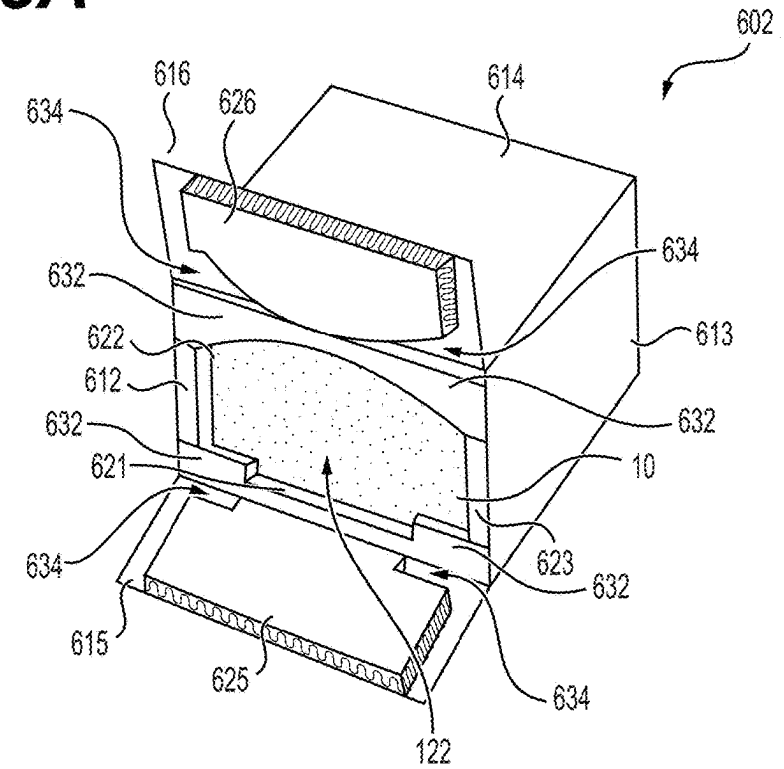

FIG. 28B

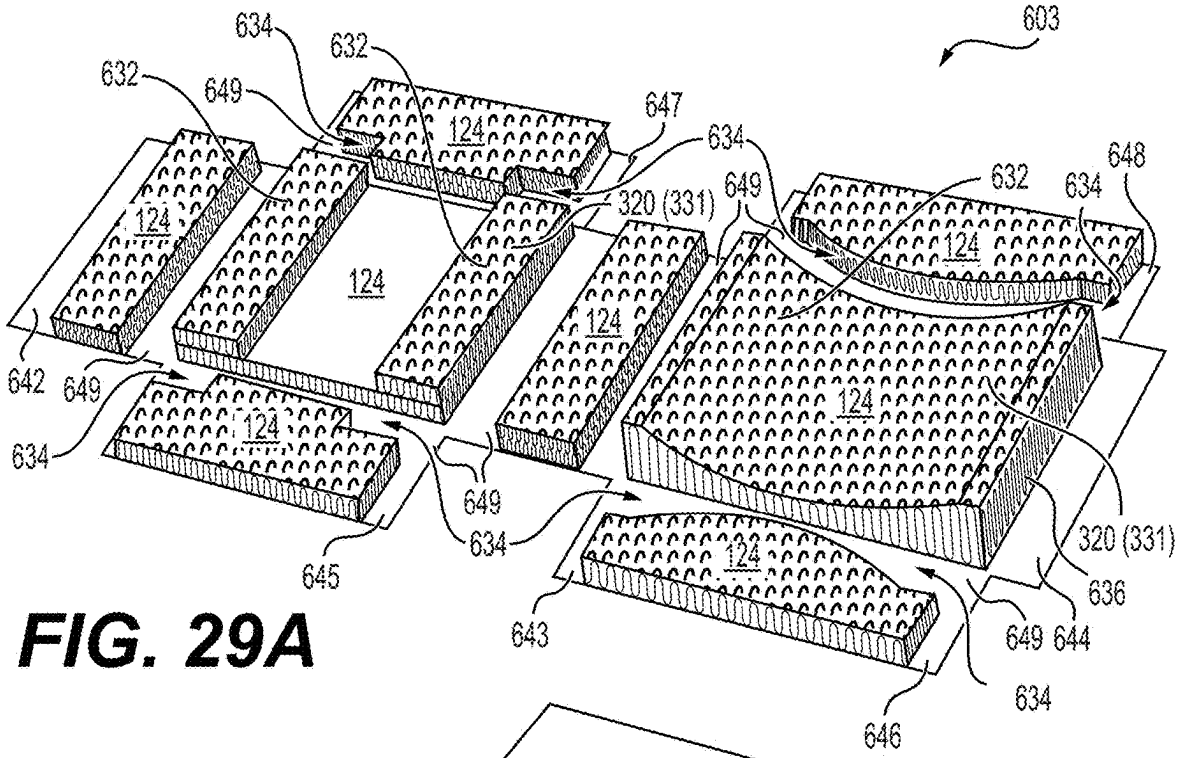

FIG. 29A

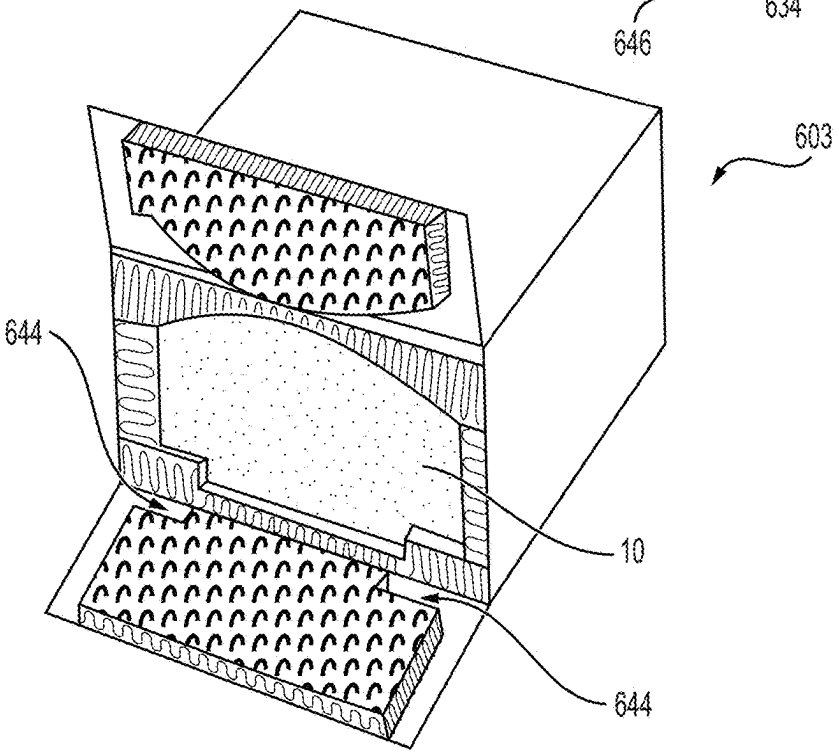

FIG. 29B

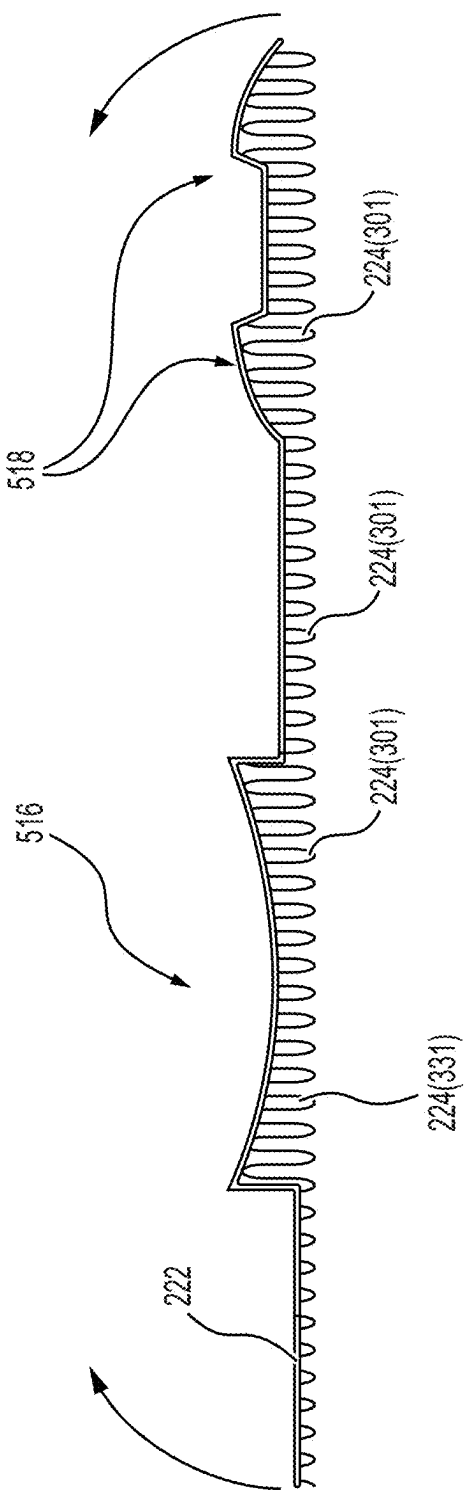

FIG. 30A

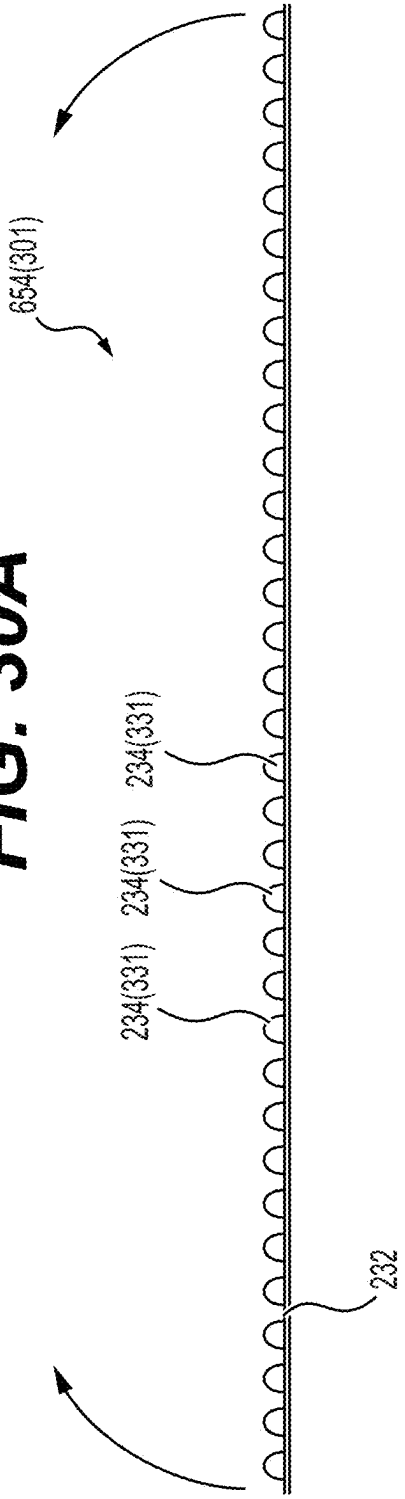

FIG. 30B

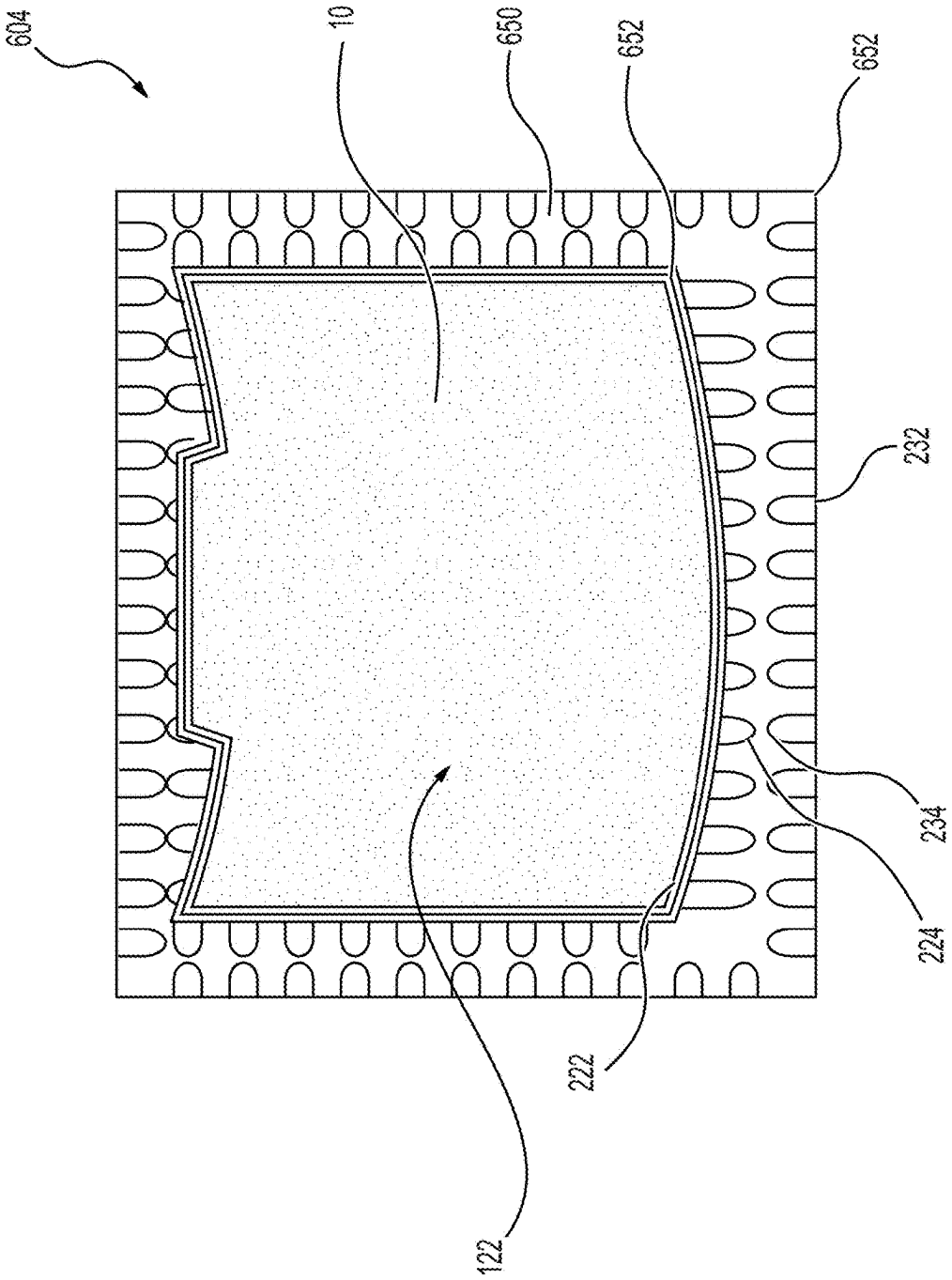

FIG. 30C

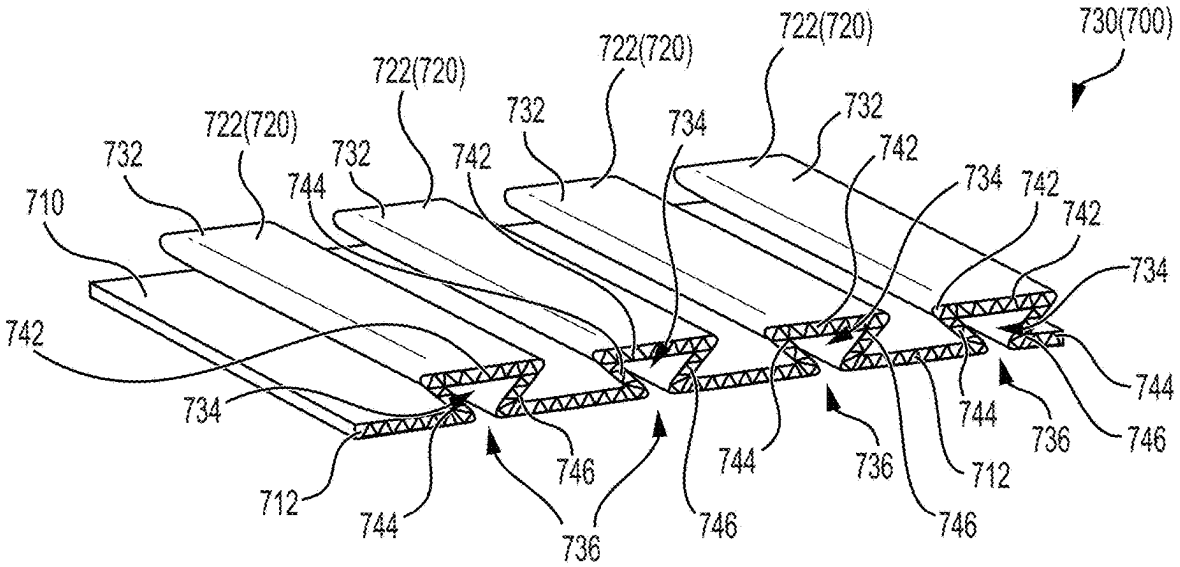
730(700)
722(720)
722(720)
722(720)
722(720)
732
732
732
732
710
742
742
742
742
744
744
744
744
734
734
734
734
712
712
736
736
736
736
746
746
746
746

FIG. 31

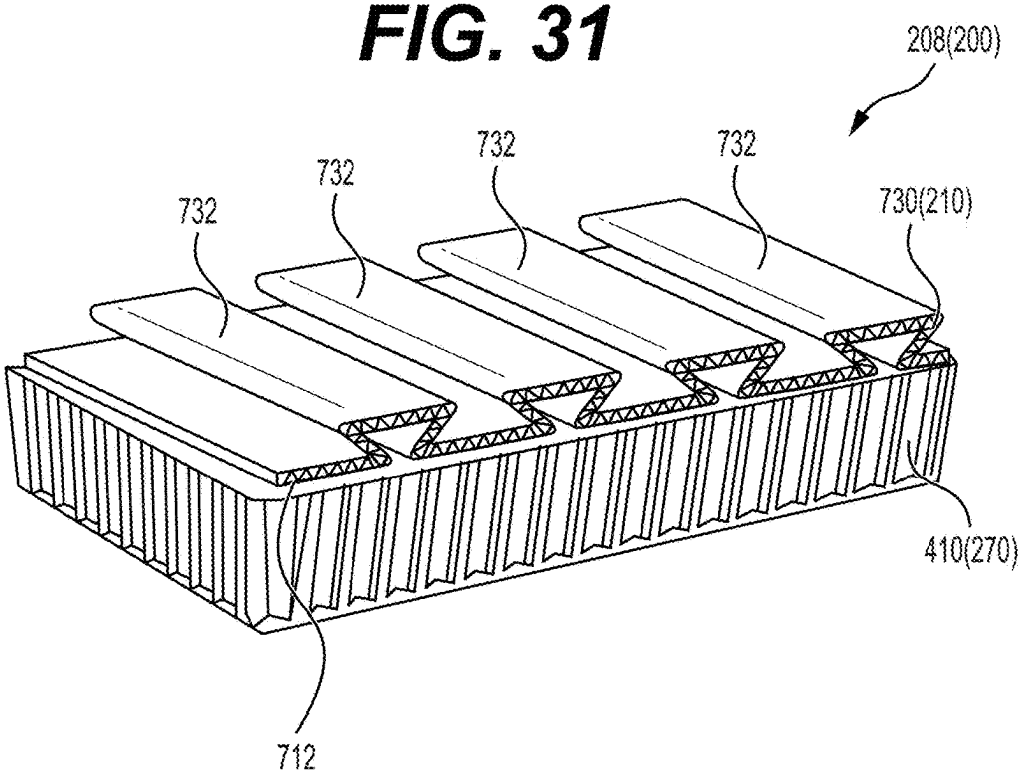
208(200)
732
732
732
732
730(210)
410(270)
712

FIG. 32

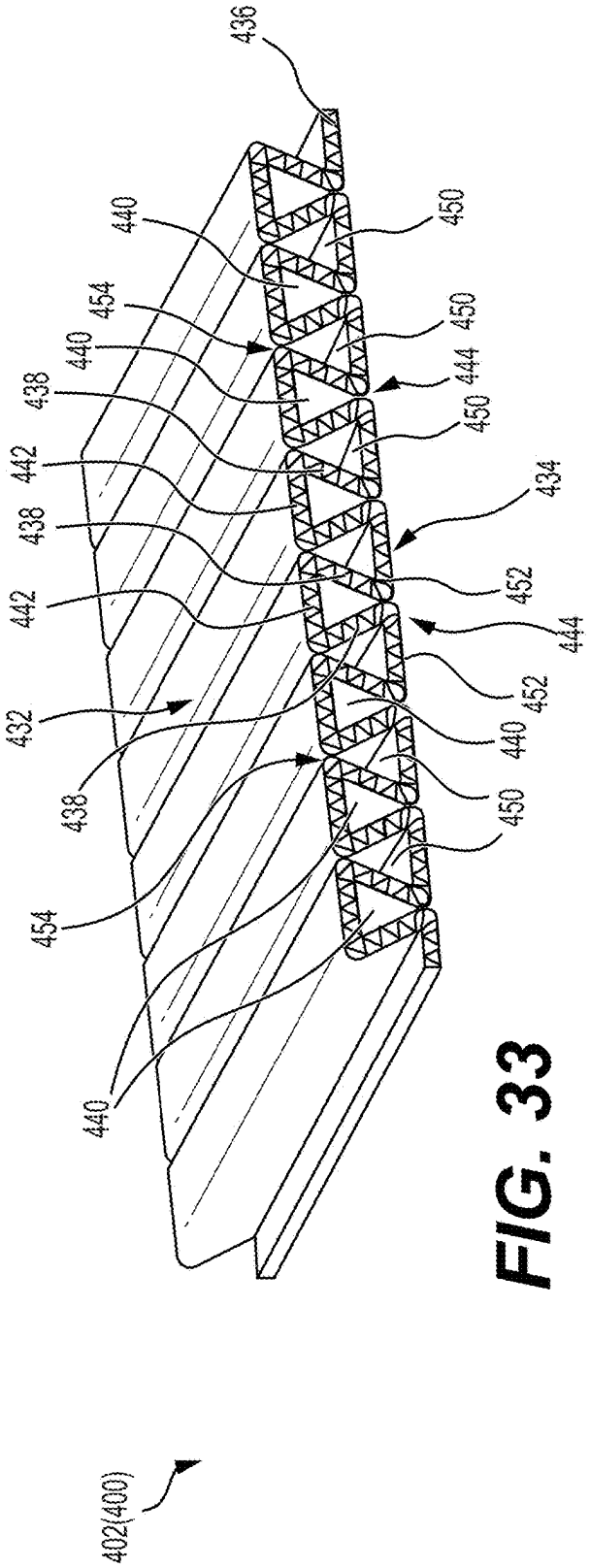
436
440
450
454
440
450
438
444
442
450
438
434
442
452
444
432
452
440
438
450
454
440
402(400)

FIG. 33

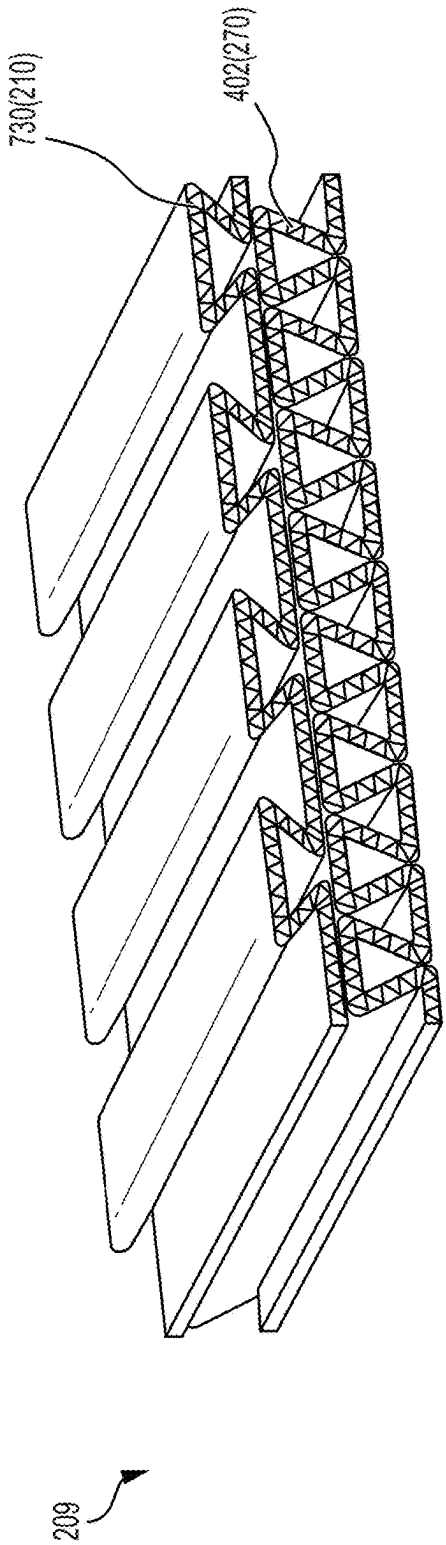
730(210)
402(270)
209

FIG. 34

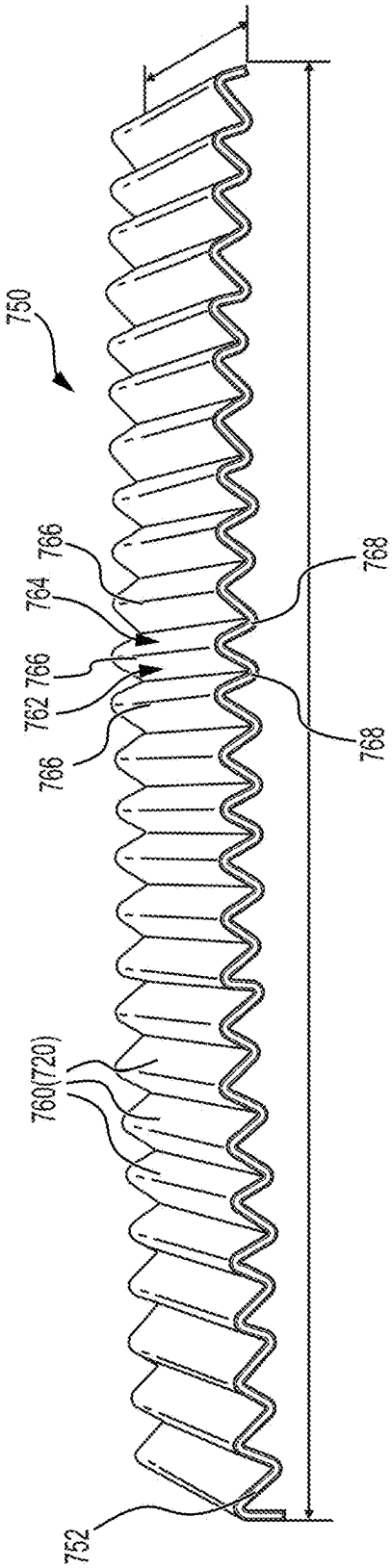

FIG. 35

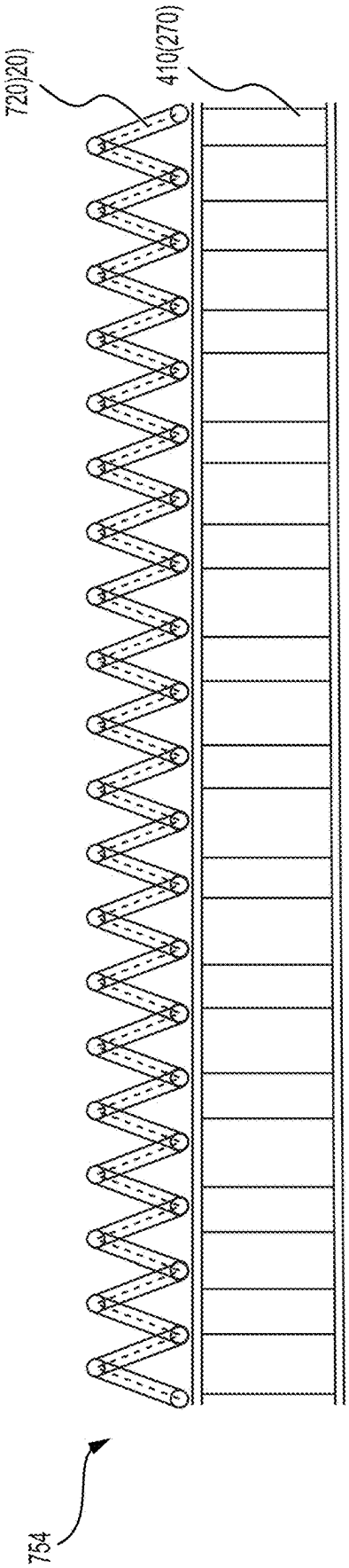

FIG. 36

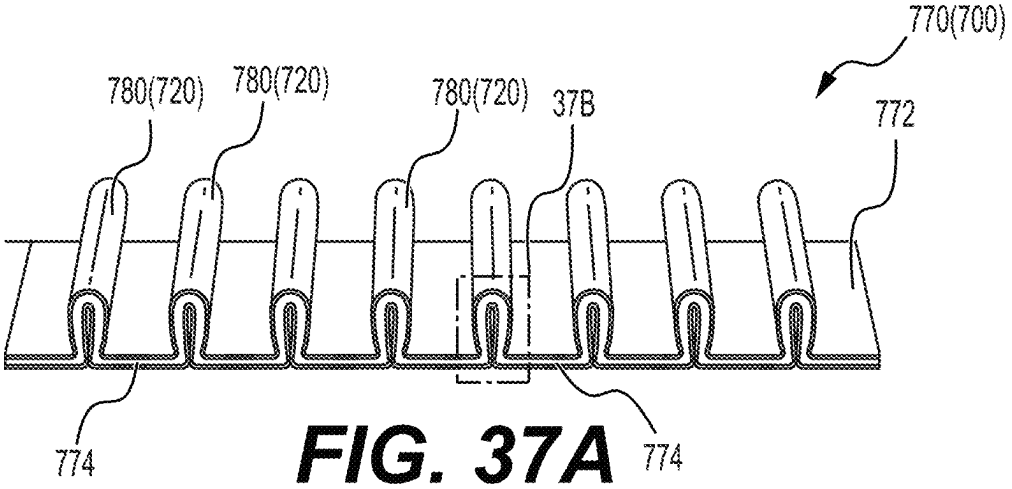

FIG. 37A

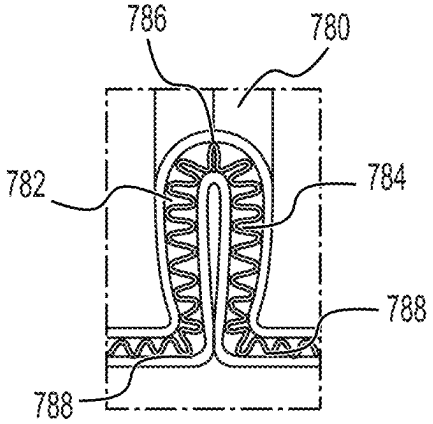

FIG. 37B

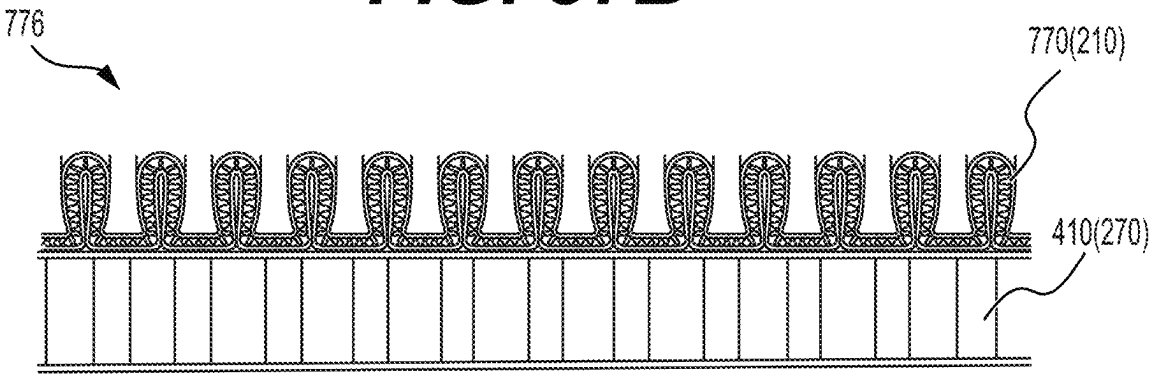

FIG. 38

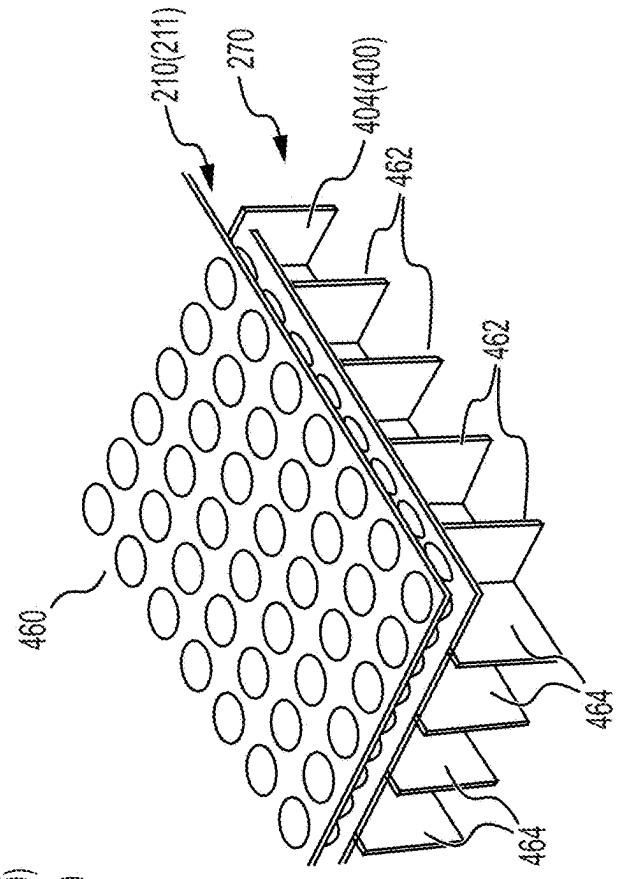

FIG. 39B

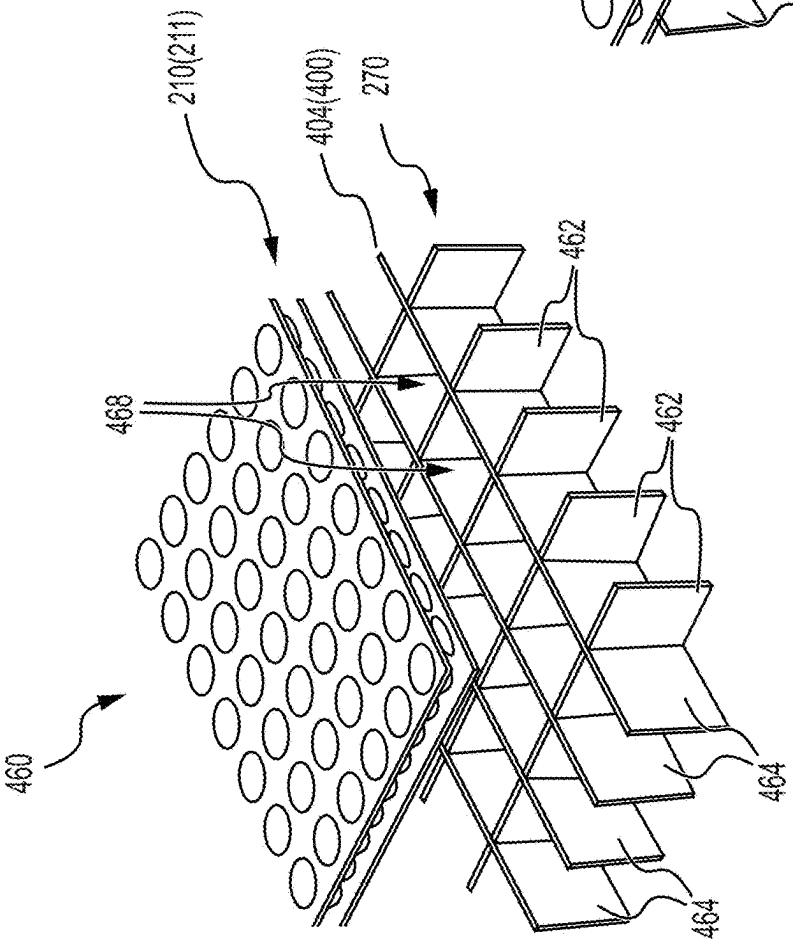

FIG. 39A

PACKING MATERIAL AND METHOD OF MANUFACTURING THE PACKING MATERIAL

CROSS-REFERENCE TO RELATED APPLICATIONS

This application claims the benefit under 35 U.S.C. § 119(e) of U.S. Provisional Patent Application No. 63/673,406, filed Jul. 19, 2024, and titled "PACKING MATERIAL AND METHOD OF MANUFACTURING THE PACKING MATERIAL." This application claims the benefit under 35 U.S.C. § 119(e) of U.S. Provisional Patent Application No. 63/624,460, filed Jan. 24, 2024, and titled "PACKING MATERIAL AND METHOD OF MANUFACTURING THE PACKING MATERIAL." This application claims the benefit under 35 U.S.C. § 119(e) of U.S. Provisional Patent Application No. 63/538,629, filed Sep. 15, 2023, and titled "PACKING MATERIAL AND METHOD OF MANUFACTURING THE PACKING MATERIAL." The foregoing applications are incorporated herein by reference in their entireties.

FIELD OF THE INVENTION

The invention relates to packing material and to methods of manufacturing the same.

BACKGROUND OF THE INVENTION

Various packing materials are used to secure and protect items in shipping containers, including cardboard boxes, to thereby prevent damage to these items if they move within the shipping container during shipment or other impacts during shipping, air, and land transport, such as being dropped or impacted. Such packing materials include bubble wrap, expanded polystyrene foam (EPS foam), and other plastic foam packing, which may be molded into blocks or into other shapes, peanuts, and inflated plastic bags (also known as air pillows). These plastic products may be discarded as waste after they have been used during shipping. Plastic waste takes a significant time to decompose and produces carbon dioxide in the decomposition process. In addition, EPS foam does not readily biodegrade and may take many, many years to effectively break down.

SUMMARY OF THE INVENTION

In one aspect, the invention relates to cushioning panels and, more specifically, cellulosic cushioning panels, such as cushioning panels formed from molded pulp or corrugated fiberboard sheets.

In another aspect, the invention relates to rigid panels and, more specifically, cellulosic rigid panels.

In a further aspect, the invention relates to packing materials including a plurality of layers, such as cushioning layers formed from the cushioning panels, the rigid panels, or both.

In still another aspect, the invention relates to a packing material including one or more cushioning layers. Each cushioning layer includes a first cushioning panel and a second cushioning panel. The first cushioning panel has a first base layer with a plurality of first projections extending therefrom. Each of the first projections has a distal end that is distal from the first base layer. The first cushioning panel is a molded pulp panel. The second cushioning panel has a second base layer with a plurality of second projections extending therefrom. Each of the second projections has a distal end that is distal from the second base layer. The second cushioning panel is a molded pulp panel. The first cushioning panel is positioned with the plurality of first projections projecting toward the second cushioning panel. The second cushioning panel is positioned with the plurality of second projections projecting toward the first cushioning panel, and at least a portion of the second projections of the plurality of second projections being second contacting projections. The distal ends of the second contacting projections contact the first cushioning panel.

In still a further aspect, the invention relates to composite packing material including one or more cushioning layers arranged to have a product side and an outer side and a cellulosic sheet positioned on the outer side of the one or more cushioning layers. Each cushioning layer includes a first cushioning panel and a second cushioning panel. The first cushioning panel has a first base layer with a plurality of first projections extending therefrom. The first cushioning panel is a molded pulp panel. The second cushioning panel has a second base layer with a plurality of second projections extending therefrom. The second cushioning panel is a molded pulp panel. The first cushioning panel and the second cushioning panel are positioned to contact each other with the plurality of first projections projecting toward the second cushioning panel and the plurality of second projections projecting toward the first cushioning panel.

In yet another aspect, the invention relates to composite packing material including a cushioning layer and a rigid panel. The cushioning layer includes a cushioning panel having a base layer with a plurality of projections extending therefrom. Each of the projections has a distal end that is distal from the base layer. The cushioning panel is a molded pulp panel. The rigid panel contacts the cushioning layer. The rigid panel is formed of a cellulosic material. The rigid panel has a rigidity greater than that of the cushioning panel when a load is applied in a thickness direction of the rigid panel or the cushioning panel.

In yet a further aspect, the invention relates to a packing material including one or more cushioning blocks capable of being positioned around an object-to-be-shipped on a product side of each cushioning block. Each cushioning block includes one or more cushioning layers. Each cushioning layer includes a first cushioning panel and a second cushioning panel. The first cushioning panel has a first base layer with a plurality of first projections extending therefrom. Each of the first projections has a distal end that is distal from the first base layer. The first cushioning panel is a molded pulp panel. The second cushioning panel has a second base layer with a plurality of second projections extending therefrom. Each of the second projections has a distal end that is distal from the second base layer. The second cushioning panel is a molded pulp panel. The first cushioning panel is positioned with the plurality of first projections projecting toward the second cushioning panel, and the second cushioning panel is positioned with the plurality of second projections projecting toward the first cushioning panel.

These and other aspects of the invention will become apparent from the following disclosure.

BRIEF DESCRIPTION OF THE DRAWINGS

FIG. **1** shows packing materials formed according to the present disclosure to protect an item-to-be-shipped.

FIG. **2** is a schematic view of a cushioning block that can be used to form the packing materials.

FIG. 3A is a top view of a cushioning panel that may be to form cushioning layers of the packing materials.

FIG. 3B is a cross-sectional view of the cushioning panel taken shown in FIG. 3A along line 3B-3B in FIG. 3A.

FIG. 3C is a cross-sectional view of a cushioning panel taken from a perspective similar to FIG. 3B.

FIG. 3D is a cross-sectional view of a cushioning panel taken from a perspective similar to FIG. 3B.

FIG. 3E is a cross-sectional view of a cushioning panel taken from a perspective similar to FIG. 3B.

FIG. 3F is a cross-sectional view of a cushioning panel taken from a perspective similar to FIG. 3B.

FIG. 3G is a schematic view of another cushioning panel that may be to form cushioning layers of the packing materials.

FIG. 3H is a schematic view illustrating the cushioning panel shown in FIG. 3G in a compressed state.

FIG. 4A is a top view of the cushioning layer formed by positioning a first cushioning panel relative to a second cushioning panel.

FIG. 4B is a cross-sectional view of the cushioning layer shown in FIG. 4A taken along line 4B-4B in FIG. 4A.

FIG. 4C is a cross-sectional view of a plurality of the cushioning layers shown in FIGS. 4A and 4B, taken from a perspective similar to FIG. 4B.

FIG. 4D is a schematic view of a cushioning layer formed by positioning a first cushioning panel relative to a second cushioning panel.

FIG. 5A is a top view of the cushioning layer formed by positioning a first cushioning panel relative to a second cushioning panel.

FIG. 5B is a cross-sectional view of the cushioning layer shown in FIG. 5A taken along line 5B-5B in FIG. 5A.

FIG. 5C is a cross-sectional view of a plurality of the cushioning layers shown in FIGS. 5A and 5B, taken from a perspective similar to FIG. 5B.

FIG. 6A is a top view of the cushioning layer formed by positioning a first cushioning panel relative to a second cushioning panel.

FIG. 6B is a cross-sectional view of the cushioning layer shown in FIG. 6A taken along line 6B-6B in FIG. 6A.

FIG. 6C is a cross-sectional view of a plurality of the cushioning layers shown in FIGS. 6A and 6B, taken from a perspective similar to FIG. 6B.

FIG. 7A is a top view of the cushioning layer formed by positioning a first cushioning panel relative to a second cushioning panel.

FIG. 7B is a cross-sectional view of the cushioning layer shown in FIG. 7A taken along line 7B-7B in FIG. 7A.

FIG. 8A is a cross-sectional view of a cushioning layer, taken from a perspective similar to FIG. 4B.

FIG. 8B is a cross-sectional view of a cushioning layer, taken from a perspective similar to FIG. 4B.

FIG. 8C is a cross-sectional view of a cushioning layer, taken from a perspective similar to FIG. 4B.

FIG. 9A is a top view of the cushioning layer formed by positioning a first cushioning panel relative to a second cushioning panel.

FIG. 9B is a cross-sectional view of the cushioning layer shown in FIG. 9A taken along line 9B-9B in FIG. 9A.

FIG. 9C is a cross-sectional view of a plurality of the cushioning layers shown in FIGS. 9A and 9B, taken from a perspective similar to FIG. 9B.

FIG. 9D is a cross-sectional view of cushioning panels of different types in another arrangement, taken from a perspective similar to FIG. 9B.

FIGS. 10A and 10B illustrate a method of forming a cushioning layer. FIG. 10A is a first step, and FIG. 10B is a second step.

FIGS. 11A to 11E illustrate another method of forming a cushioning. FIG. 11A is a first step, and FIG. 11B is a second step. FIG. 11C shows an optional additional step.

FIG. 11D shows another optional additional step. 11E shows an alternative optional additional step.

FIG. 12 is an exploded view of a cushioning block that can be used to form the packing materials.

FIG. 13 is an exploded view of a cushioning block that can be used to form the packing materials

FIG. 14A is a schematic view of a rigid sheet panel and, more specifically, a honeycomb panel that can be used to form the cushioning blocks.

FIG. 14B is a schematic view showing the core of the honeycomb panel.

FIG. 15A is a cross-sectional view of a cushioning block using with a rigid layer using the honeycomb panel, taken from a perspective similar to FIG. 4B.

FIG. 15B is a cross-sectional view of a cushioning block using with a rigid layer using the honeycomb panel, taken from a perspective similar to FIG. 4B.

FIG. 15C is a cross-sectional view of a cushioning block using with a rigid layer using the honeycomb panel, taken from a perspective similar to FIG. 4B.

FIG. 15D is a cross-sectional view of a cushioning block using with a rigid layer using the honeycomb panel, taken from a perspective similar to FIG. 4B.

FIG. 16A is a schematic view of a corner-shaped packing material.

FIG. 16B is an exploded view of the corner-shaped packing material shown in FIG. 16A.

FIG. 17 is a schematic view of a U-shaped packing material.

FIG. 18 is a schematic view of two corner-shaped packing materials and a U-shaped packing material arranged next to each other.

FIG. 19A is a schematic view of a corner-shaped packing material.

FIG. 19B is an exploded view of the corner-shaped packing material shown in FIG. 19A.

FIG. 20A is a schematic view of a corner-shaped packing material in a flat configuration.

FIG. 20B is a schematic view of the corner-shaped packing material of FIG. 20A in a folded configuration.

FIG. 21A is a schematic view of a corner-shaped packing material in a flat configuration.

FIG. 21B is a schematic view of the corner-shaped packing material of FIG. 21A in a folded configuration.

FIG. 22A is a top view of a corner-shaped packing material.

FIG. 22B is a schematic view of the corner-shaped packing material shown in FIG. 22A.

FIG. 23 is a schematic view of a corner-shaped packing material.

FIG. 24A is a schematic view of a U-shaped packing material.

FIG. 24B is a schematic view of a U-shaped packing material.

FIG. 25A is a cross-sectional view of an irregular cushioning layer, taken from a perspective similar to FIG. 4B.

FIG. 25B is a cross-sectional view of an irregular cushioning layer, taken from a perspective similar to FIG. 4B.

FIG. 25C is a cross-sectional view of an irregular cushioning layer, taken from a perspective similar to FIG. 4B.

FIG. **26**A is a schematic view of a shipping container with cushioning blocks in a flat configuration.

FIG. **26**B is a schematic view of the shipping container of FIG. **26**A in a folded configuration.

FIG. **27**A is a schematic view of a shipping container with cushioning blocks in a flat configuration.

FIG. **27**B is a schematic view of the shipping container of FIG. **27**A in a folded configuration.

FIG. **28**A is a schematic view of a shipping container with cushioning blocks in a flat configuration.

FIG. **28**B is a schematic view of the shipping container of FIG. **28**A in a folded configuration.

FIG. **29**A is a schematic view of a shipping container with cushioning blocks in a flat configuration.

FIG. **29**B is a schematic view of the shipping container of FIG. **29**A in a folded configuration.

FIG. **30**A is a cross-sectional view of a first foldable molded cushioning panel, taken from a perspective similar to FIG. **3**B.

FIG. **30**B is a schematic view of a second foldable molded cushioning panel, taken from a perspective similar to FIG. **3**B.

FIG. **30**C is a schematic end view of a shipping container formed using the first foldable molded cushioning panel of FIG. **30**A and the second foldable molded cushioning panel of FIG. **30**B.

FIG. **31** is a schematic view of cushioning panel.

FIG. **32** is a schematic view of cushioning block using the cushioning panel of FIG. **31**.

FIG. **33** is a schematic view of rigid sheet panel and, more specifically, a shaped corrugated fiberboard rigid sheet panel.

FIG. **34** is a schematic view of cushioning block using the shaped corrugated fiberboard rigid sheet panel of FIG. **33**.

FIG. **35** is a schematic view of cushioning panel.

FIG. **36** is a schematic view of cushioning block using the cushioning panel of FIG. **35**.

FIG. **37**A is a schematic view of cushioning panel.

FIG. **37**B is a detail view of a portion of the cushioning panel of FIG. **37**A, showing detail **37**B in FIG. **37**A.

FIG. **38** is a schematic cross-sectional view of cushioning block using the cushioning panel of FIG. **37**A.

FIG. **39**A is an exploded view of cushioning block having a rigid layer and, more specifically, a lattice-structured rigid sheet panel.

FIG. **39**B is schematic view of the cushioning block shown in FIG. **35**A.

DETAILED DESCRIPTION OF THE PREFERRED EMBODIMENTS

With an increased awareness of the negative effects of plastics and EPS foam on the environment, as discussed above, companies and consumers are increasingly seeking to use environmentally friendly, recyclable, and biodegradable products as a packing material. The packing materials discussed herein provide environmentally friendly, recyclable, and biodegradable products while also providing sufficient protection and cushioning effects at an affordable cost. In particular, embodiments discussed herein may be environmentally friendly, recyclable, and biodegradable replacements for EPS and other plastic foams (e.g., expanded polyethylene, or EPE, foam).

FIG. **1** shows packing materials **100** formed according to the present disclosure used to protect an item-to-be-shipped, such as a flat-panel television, during shipping. The item-to-be-shipped is referred to herein as a product **10**. The packing materials **100** can be arranged around the product **10** in various different arrangements to protect the product during shipping. As will be discussed further below, however, the packing materials **100** can be arranged with certain features thereof closer to the product **10** than others. The packing materials **100** can include a product side and include a product-side surface. The product-side surface can be in contact with the product **10** in some arrangements.

The packing materials **100** are positioned around the product **10**, and the product **10**, with the packing materials **100** positioned therearound, can be placed in a shipping container, such as a shipping box **20**, for example. The shipping box **20** depicted in FIG. **1** is a corrugated cardboard shipping box, but the packing materials **100** discussed herein can be used with other shipping containers. The shipping box **20** includes a plurality of walls **22** defining an internal cavity **24**; more specifically, each wall **22** can include an interior-facing surface **26** delineating the internal cavity **24**. As will be discussed further below, the packing materials **100** can be arranged with certain features thereof closer to the shipping box **20** than others. The packing materials **100** can include a container side and include a container-side surface. The container-side surface can be in contact with the interior-facing surfaces **26** of the shipping container (e.g., the shipping box **20**). The shipping box **20** can also include a plurality of flaps **28** that can be used to open and close the shipping box **20** to allow access to the internal cavity **24** through an opening.

In FIG. **1**, the plurality of packing materials **100** are depicted around the product **10**. The packing materials **100**, or a portion of the packing materials **100**, can be positioned around the product **10** prior to placing the product **10** into the shipping box **20**. Other packing methods can be used, such as placing packing materials **100** into the internal cavity **24** of the shipping box **20** before the product **10**, after the product **10**, together with the product **10**, or a combination thereof.

As will be discussed further below, the packing materials **100** can be comprised of a plurality of cushioning blocks in different arrangements to form the packing materials **100**. The packing materials **100**, depicted in FIG. **1**, include, for example, corner-shaped packing materials **102** and U-shaped packing materials **104**. In some embodiments, such as those depicted for use in protecting the TV (the product **10**) in FIG. **1**, the U-shaped packing materials **104** can be elongated, and the packing materials **100** can also be arranged to form elongated packing materials.

FIG. **2** shows a cushioning block **200** and, more specifically, a cushioning block **201** that can be used to form the packing materials **100** (FIG. **1**) discussed herein. As noted above, the packing materials **100** discussed herein can be formed from one or more cushioning blocks **200**. The cushioning blocks **200** discussed herein can have several different constructions, but reference numeral **200** is used to refer generally to any one of the cushioning blocks **200** discussed herein. The cushioning blocks **200** discussed herein can include a plurality of layers. In some of the cushioning blocks **200**, at least some of the layers may be different from each other in terms of materials, their construction, or both, and these different layers have various different structures, resulting in different strengths, rigidity, and cushioning properties. The cushioning blocks **200**, with these different layers and the packing materials **100**, may be referred to herein as composite cushioning blocks and composite packing materials. The composite cushioning blocks and composite packing materials can be, for example,

a cushioning layer **210**, discussed further below, in combination with at least one other, different layer.

The materials of construction also directly affect such properties. As discussed in more detail below, the cushioning blocks **200** can be formed of cellulosic materials. Some layers, or portions thereof, are formed from molded pulp (also referred to as molded fiber), fiberboard, including corrugated fiberboard sheets (also referred to as corrugated cardboard), and paper sheets in different arrangements. The inventors have found that particular arrangements and constructions of these different layers can be successful in protecting the product **10** during shipping, where other arrangements, including the use of certain layers alone, do not provide the same protective capacity.

The cushioning blocks **200** can include one or more cushioning layers. The cushioning block **201** shown in FIG. **2** includes two cushioning layers **210**, a first cushioning layer **210***a* and a second first cushioning layer **210***b*. Each cushioning layer **210** can be formed from one or more cushioning panels **300**. Various different cushioning panels **300** that can be used to form the cushioning layer **210** are discussed further below, and reference numeral **300** is used herein to refer generally to the various different cushioning panels. More specifically, in FIG. **2**, the cushioning layer **210** is formed from a first cushioning panel **220**, such as a top cushioning panel, and a second cushioning panel **230**, such as a bottom cushioning panel. As will be discussed further below, the cushioning layer **210** can be used in various different arrangements to form the cushioning blocks **200**, but the cushioning layer **210** can be used on its own as the cushioning block **201**.

FIG. **3**A is a top view of a cushioning panel **301** that may be used as the cushioning panel **300** to form the cushioning layers **210** (FIG. **2**) discussed herein. FIG. **3**B is a cross-sectional view of the cushioning panel **301** taken along line **3**B-**3**B in FIG. **3**A. The cushioning panel **301**, shown in FIGS. **3**A and **3**B, can be used to form the cushioning layer **210** shown in FIG. **2**, and more specifically, the cushioning panel **301** can be used to form either one or both of the first cushioning panel **220** or the second cushioning panel **230**.

The cushioning panels **300** discussed herein, such as cushioning panel **301**, are formed from cellulosic materials, like natural cellulosic materials; as such, cellulosic materials are recyclable and biodegradable. The cushioning panel **301** may be formed by using a molded pulp process (also known as a molded fiber process). The pulp or fibers used in this process are preferably cellulosic pulp and fibers and, even more preferably, pulp produced from post-consumer recycled paper, including newsprint, recycled paperboard/fiberboard, recycled cardboard, recycled corrugated cardboard (OCC), and the like. Wastepaper, including paperboard/fiberboard, recycled cardboard, and OCC, may be dissolved in water to defibrillate paper fibers, forming an aqueous slurry of paper (cellulosic) fibers. Other suitable cellulosic (paper) fiber sources may be used and, in some embodiments, recycled paper fibers may be blended with other cellulosic (paper) fibers. Other suitable defibrillating methods and pulping methods (such as Kraft methods) may be used depending upon the source of cellulosic fibers. Accordingly, the cushioning panels **300** formed using this process can also be referred to as molded cushioning panels.

One such molded pulp process is a vacuum-forming process or wet fiber molding process. A forming tool having a surface shaped to correspond to the cushioning panels **300** discussed herein, such as a surface with a plurality of cylindrical projections, may be placed in the aqueous slurry of paper (cellulosic) fibers. The shaped surface may be referred to as a mold or molding surface. A vacuum is drawn, such as through the molding surface, to remove water and to cause the paper fibers to accumulate on the molding surface and take the shape of the molding surface. Once a desired thickness of paper fibers has been accumulated, the molding surface is removed from the aqueous slurry, and the now-molded paper fibers are allowed to dry. The molded paper fibers may be removed from the molding surface to complete drying, such as in a drying oven.

Other suitable fiber molding processes may be used, including, for example, dry fiber molding processes. In such dry fiber molding processes, the paper pulp/fibers are defibrillated, such as by milling, and then molded in a dry form (e.g., without the aqueous slurry). The dry, defibrillated paper fibers may be molded in a press mold under pressure and temperature to form the desired shape, such as the shapes discussed herein. In some processes, the dry, defibrillated paper fibers may be loosely formed into a sheet (referred to as a fiber sheet) by a vacuum, rolled (or otherwise shaped) to a desired thickness, and then fed to the press mold. Prior to being fed into the press mold, the fiber sheet may optionally include a tissue sheet applied to at least one of the top or bottom of the fiber sheet.

The cushioning panel **301** shown in FIGS. **3**A and **3**B is formed with a base layer **310**, having a plurality of projections **320** extending therefrom. The base layer **310** can be a generally planar layer. The base layer **310** can include a projection side with a projection-side surface **312**. Each of the projections **320** can extend from the projection-side surface **312**. The other side of the base layer **310** is referred to herein as a back side, and the base layer **310** can thus include a back-side surface **314**. In FIGS. **3**A and **3**B, the projections **320** all extend from the projection-side surface **312**, and the back-side surface **314** of the cushioning panel **301** is a generally flat surface.

Each of the projections **320** have a distal end **322** that is distal from the base layer **310**. Each projection **320** has a geometric shape. As shown in FIGS. **3**A and **3**B, the projections **320** are cylindrical and, more specifically, circular-cylindrical. As will be discussed further below, the projections **320** can be other geometric shapes such as a cylinder, a rectangular prism, a pyramid, or a cone. The projections **320** of the cushioning panel **301**, shown in FIGS. **3**A and **3**B, all have the same geometric shape, but the cushioning panel **301** can have projections **320** with a plurality of different geometric shapes. That is, one projection of the plurality of projections **320** has a first geometric shape, and another projection of the plurality of projections **320** has a second geometric shape that is different from the first geometric shape.

Each of the projections **320** can be a hollow projection with a cavity **324** formed therein. Each of the projections **320** thus can include one or more sidewalls extending from the base layer **310** and defining the cavity **324**. Each of the projections **320** can be closed on one end. In FIGS. **3**A and **3**B, for example, the distal end **322** is closed and includes an end wall, defining, in part, the cavity **324**. The distal end **322** and, more specifically, the end wall can have various suitable shapes. As depicted in FIG. **3**B, the distal end **322** is rounded. The distal end **322** can have, for example, a spherical dome shape, such as a hemispherical shape. Alternatively, the distal end **322** can be flat, for example, and the projections **320** can have a U-shaped cross-sectional.

The cavity **324** of the projections **320** in the depicted embodiments is an open cavity, having an opening **326** formed in the base layer **310** and, more specifically, in the back-side surface **314** of the base layer **310**. The opening

326 is an opening into the cavity 324. Depending upon how the cushioning panel 301 is arranged, with respect to other features of the cushioning block 200, the cavity 324 can become a closed cavity 324, such as when a plurality of cushioning panels 301 are arranged back-to-back with the back-side surface 314 of one cushioning panel 301 abutting another cushioning panel 301. The openings 326 can also be seen in FIG. 2, for example.

The base layer 310 has a thickness. The thickness of the base layer 310 can be less than the length of the projections 320. The length of each projection 320 can be taken as the distance from the projection-side surface 312 to a tip 328 of the distal end 322. In FIG. 3B, all of the projections 320 have the same length, but, as will be discussed further below, the projections 320 can have a plurality of different lengths.

The plurality of projections 320 can be arranged in a two-dimensional (2D) array, having a plurality of rows and columns. The cushioning panel 301 has a length and a width with a corresponding length direction and a width direction. The plurality of projections 320 can be arrayed in both the length direction and the width direction. In FIG. 3A (see also FIG. 2), the projections 320 in each row are evenly spaced apart from each other, and the projections 320 in each column are also evenly spaced apart from each other. Other arrangements, however, may be used.

As noted above, the projections 320 can have other shapes, such as other geometric shapes. FIGS. 3C to 3F depict cushioning panels with projections 320 of different geometric shapes. Other than the shape of the projections 320, these cushioning panels have the same or similar features as the cushioning panel 301 discussed above with reference to FIGS. 3A and 3B, and that discussion applies here. For clarity, with other cushioning panels discussed herein, the projections shown in FIGS. 3A and 3B are referred to as cylindrical projections 331.

FIG. 3C is a cross-sectional view of a cushioning panel 303 taken from a perspective similar to FIG. 3B. The projections 320 of the cushioning panel 303 shown in FIG. 3C have a dome shape. The dome shape can be, for example, a spherical dome shape, such as a hemispherical shape. For clarity, with other cushioning panels discussed herein, the projections shown in FIG. 3C are referred to as dome-shaped projections 333.

FIG. 3D is a cross-sectional view of a cushioning panel 305 taken from a perspective similar to FIG. 3B. The projections 320 of the cushioning panel 305 shown in FIG. 3D have a pyramidal or cone shape. The base can have various suitable shapes, including a circular base and a corresponding curved side wall or a rectangular base, such as a square base, with corresponding triangular or trapezoidal side walls. For clarity, with other cushioning panels discussed herein, the projections shown in FIG. 3D are referred to as pyramidal projections 335. Instead of coming to a point, the pyramidal projections 335 shown in FIG. 3D have a distal end 322 that is flat.

FIG. 3E is a cross-sectional view of a cushioning panel 307 taken from a perspective similar to FIG. 3B. The projections 320 of the cushioning panel 307 shown in FIG. 3E have arcuate sidewalls. As with the pyramidal projections 335, the base can have various suitable shapes, including a circular base and a square base. For clarity, with other cushioning panels discussed herein, the projections shown in FIG. 3E are referred to as arcuate projections 337. The arcuate projections 337 shown in FIG. 3E have a distal end 322 that is flat.

FIG. 3F is a cross-sectional view of a cushioning panel 309 taken from a perspective similar to FIG. 3B. The projections 320 of the cushioning panel 309 shown in FIG. 3F have a geometric shape that is a rectangular prism. The base can be various rectangular shapes, including square. For clarity, with other cushioning panels discussed herein, the projections shown in FIG. 3F are referred to as rectangular projections 339. The rectangular projections 339 shown in FIG. 3F have a distal end 322 that is flat.

FIG. 3G shows another cushioning panel 302 that may be used as one of the cushioning panels 300 discussed herein. The cushioning panel 302 is similar to the cushioning panels 300 discussed above, but instead of having projections 320 arranged in a plurality of rows or columns, the projections 320 are ridges 332. The ridges 332 are elongated and extend parallel to each other. The ridges 332 can have various shapes, including the domed or arcuate distal end 322 shown in FIG. 3G.

FIG. 3H illustrates the cushioning panel 302 shown in FIG. 3G in a compressed state. When a force is applied in a direction normal to the cushioning panel 302, the ridges 332 can deform such as by spreading out on the distal end 322 and having portions of the base layer 310 move closer together, reducing the size of the opening 326.

As noted above, the cushioning layer 210 (FIG. 2) can be formed by arranging two or more cushioning panels 300. The following discussion will refer to certain cushioning panels 300 discussed above (e.g., the cushioning panels 302 having the dome-shaped projections 333), but the discussion is also applicable to other cushioning panels 300, with projections 320 having other shapes. In general, reference numeral 210 is used to apply to any of the cushioning layers 210, regardless of the specific configurations below. Likewise, the first cushioning panel 220 and the second cushioning panel 230 are used generally to refer to the cushioning panels of the cushioning layer 210, regardless of the specific shape of the projections.

FIGS. 4A and 4B show a cushioning layer 211 formed by positioning a first cushioning panel 220 relative to a second cushioning panel 230. FIG. 4A is a top view of the cushioning layer 211, and FIG. 4B is a cross-sectional view of the cushioning layer 211 taken along line 4B-4B in FIG. 4A. Each of the first cushioning panel 220 and the second cushioning panel 230 are shown as the cushioning panels 303, having the dome-shaped projections 333, but as noted above, the first cushioning panel 220 and the second cushioning panel 230 can be other cushioning panels 300 (FIGS. 3A to 3F), having projections 320 with alternative shapes. The first cushioning panel 220 thus has a first base layer 222 and a plurality of first projections 224 extending therefrom. Similarly, the second cushioning panel 230 has a second base layer 232 and a plurality of second projections 234 extending therefrom. Each first projection 224 of the plurality of first projections 224 has a first geometric shape, and each second projection 234 of the plurality of second projections 234 has a second geometric shape. In FIGS. 4A and 4B, the second geometric shape is the same geometric shape as the first geometric shape and is depicted as the dome-shaped projections 333. The second geometric shape, however, can be a different geometric shape than the first geometric shape.

The first cushioning panel 220 is positioned with the plurality of first projections 224 projecting toward the second cushioning panel 230, and the second cushioning panel 230 is positioned with the plurality of the second projections 234 projecting toward the first cushioning panel 220. The first base layer 222 has an inner side 226 and an outer side 228. The inner side 226 of the first base layer 222 is positioned to oppose the second cushioning panel 230, and

the plurality of first projections **224** extend from the inner side **226** of the first base layer **222**. The second base layer **232** also has an inner side **236** and an outer side **238**. The inner side **236** of the second base layer **232** is positioned to oppose the first cushioning panel **220**, and the plurality of second projections **234** extend from the inner side **236** of the second base layer **232**.

In FIGS. **4**A and **4**B, the first projections **224** and the second projections **234** oppose each other and, more specifically, directly oppose each other. When the first projections **224** and the second projections **234** directly oppose each other, the distal end **322** of the first projections **224** can contact the distal end **322** of the second projections **234**. The projections that contact another surface, such as the other cushioning panel (more specifically projections with the distal end **322** contacting another surface), are referred to herein as contacting projections, and accordingly, at least a portion of the first projections **224** and at least a portion of the second projections **234** are contacting projections. At least a portion of the first projections **224** are first contacting projections with the distal ends **322** of the first contacting projections contacting the second cushioning panel **230**, and at least a portion of the second projections **234** are second contacting projections with the distal ends **322** of the second contacting projections contacting the first cushioning panel **220**. More specifically, in FIGS. **4**A and **4**B, the first contacting projections and the second contacting projections are positioned to directly oppose each other, with the distal end **322** of each first contacting projection contacting a distal end **322** of a corresponding second contacting projection. In this case, both the first projections **224** and the second projections **234** are contacting projections, but in other cases, as will be discussed further below, only one of the first projections **224** or the second projections **234** are contacting projections.

FIG. **4**C is a cross-sectional view of a plurality of the cushioning layers **211** taken from a perspective similar to FIG. **4**B. As noted above, the packing materials **100** (FIG. **1**) can include cushioning blocks **200** (FIG. **2**) with a single cushioning layer **210**, such as the cushioning layer **211** shown in FIG. **5**B. Other packing materials **100** can include cushioning blocks **200** with a plurality of cushioning layers **210**. FIG. **5**C shows, for example, four cushioning panels **300** arranged to form two cushioning layers **210** and, more specifically, a first cushioning layer **211***a* and a second cushioning layer **211***b*. Each of the first cushioning layer **211***a* and the second cushioning layer **211***b*, shown in FIG. **4**C, are the cushioning layers **211** discussed above with reference to FIG. **4**B, and that discussion applies here. Although shown as having the same arrangement, the first cushioning layer **211***a* and the second cushioning layer **211***b* can be arranged differently from each other.

FIG. **4**D is a perspective view of a cushioning layer **211***c* formed by positioning a first cushioning panel **220** relative to a second cushioning panel **230**. In FIG. **4**D, each of the first cushioning panel **220** and a second cushioning panel **230** is the cushioning panel **302** with the ridges **332** arranged to directly oppose each other in a manner similar to the cushioning layers **211** discussed above with reference to FIGS. **4**A and **4**B.

As depicted in FIG. **5**C, the packing materials **100** (FIG. **1**), such as cushioning block **200**, can have two or more cushioning layers, including the first cushioning layer **211***a* and the second cushioning layer **211***b*. The outer side **238** of one of the first base layer **222** or the second base layer **232** of the first cushioning layer **211***a* abuts the outer side **238** of one of the first base layer **222** or the second base layer **232** of the second cushioning layer **211***b*. In FIG. **4**C, the outer side **238** of the second base layer **232** in the first cushioning layer **211***a* abuts the outer side **238** of the first base layer **222** in the second cushioning layer **211***b*.

FIGS. **5**A and **5**B show a cushioning layer **212** formed by positioning a first cushioning panel **220** relative to a second cushioning panel **230**. FIG. **5**A is a top view of the cushioning layer **212**, and FIG. **5**B is a cross-sectional view of the cushioning layer **212** taken along line **6**B-**6**B in FIG. **6**A. FIGS. **5**A and **5**B depict a direct opposition of the first projections **224** and the second projections **234**, but as noted above, other arrangements of the first cushioning panel **220** and the second cushioning panel **230** may be used to form the cushioning layers **210** discussed herein, such as, for example, offset arrangements. FIGS. **5**A and **5**B depict the cushioning layer **212** with one such offset arrangement.

The first projections **224** and the second projections **234** are offset from each other. More specifically, the first projections **224** and the second projections **234** are offset from each other in one of a length direction or a width direction of the cushioning panel **303** but aligned in the other one of a length direction or a width direction of the cushioning panel **303**. In FIG. **5**A, the first projections **224** are shown with solid lines and the second projections **234** are shown with broken lines. As can be seen in FIG. **5**A, the rows of projections of the first cushioning panel **220** and the second cushioning panel **230** are still aligned with each other, but the columns of the first cushioning panel **220** and the second cushioning panel **230** are offset from each other.

More specifically, at least some second projections **234** are each positioned between two adjacent first projections **224**, and at least some first projections **224** are each positioned between two adjacent second projections **234**. In the depicted embodiment, some of the first projections **224** are on the edges of the first cushioning panel **220** and are referred to herein as edge projections. The edge projections are not positioned between two adjacent second projections **234**, but rather next to only one second projection **234**. Each of the first projections **224** and the second projections **234** may include edge projections. More specifically, at least a portion of the first projections **224** can be edge projections, and/or at least a portion of the second projections **234** can be edge projections. Other projections of the first projections **224** and the second projections **234** can be internal projections. More specifically, at least a portion of the first projections **224** can be internal projections, and/or at least a portion of the second projections **234** can be internal projections. Each of the internal projections of the first projections **224** are positioned between two adjacent second projections **234**, and each of the internal projections of the second projections **234** are positioned between two first projections **224**. In FIGS. **5**A and **5**B, the internal projections of the first projections **224** contact two adjacent second projections **234**, and the internal projections of the second projections **234** contact two adjacent first projections **224**.

FIG. **5**C is a cross-sectional view of a plurality of the cushioning layers **212** taken from a perspective similar to FIG. **5**B. Two or more of the cushioning layers **212** shown in FIGS. **5**A and **5**B can be arranged adjacent to each other in a manner similar to the first cushioning layer **211***a* and the second cushioning layer **211***b*, discussed above with reference to FIG. **4**C. More specifically, the plurality of cushioning layers **213** shown in FIG. **5**C includes a first cushioning layer **212***a* and the second cushioning layer **212***b*. In FIG. **6**C, the outer side **238** of the second base layer **232** in the first cushioning layer **212***a* abuts the outer side **238** of the first base layer **222** in the second cushioning layer **212***b*.

While these can be arranged in different ways, the openings **326** of the second projections **234** in the first cushioning layer **212***a* are aligned with the openings **326** of the first projections **224** in the second cushioning layer **212***b* to form a closed cavity between the cavity **324** of the second projections **234** in the first cushioning layer **212***a* and the cavity **324** of the first projections **224** in the second cushioning layer **212***b*.

FIGS. **6**A and **6**B show a cushioning layer **213** formed by positioning a first cushioning panel **220** relative to a second cushioning panel **230**. FIG. **6**A is a top view of the cushioning layer **213** and FIG. **6**B is a cross-sectional view of the cushioning layer **213** taken along line **6**B-**6**B in FIG. **6**A. FIGS. **6**A and **6**B depict the cushioning layer **213** with another offset arrangement.

The first projections **224** and the second projections **234** are offset from each other. More specifically, the first projections **224** and the second projections **234** are offset from each other in both the length direction and the width direction of the cushioning panel **303**. In FIG. **6**A, the first projections **224** are shown in solid lines and the second projections **234** are shown in broken lines. As can be seen in FIG. **6**A, at least a portion of the second projections **234**, such as the internal projections, are located in interstitial locations between the first projections **224**. In FIG. **6**A, this interstitial position is between four adjacent first projections **224**. With this arrangement, at least a portion of the first projections **224**, such as the internal projections, are also located in interstitial locations between the second projections **234**. In FIG. **6**A, this interstitial position is between four adjacent second projections **234**. In FIGS. **6**A and **6**B, the internal projections of the first projections **224** contact four adjacent second projections **234**, and the internal projections of the second projections **234** contact four adjacent first projections **224**.

FIG. **6**C is a cross-sectional view of a plurality of the cushioning layers **213** taken from a perspective similar to FIG. **6**B. Two or more of the cushioning layers **213** shown in FIGS. **6**A and **6**B can be arranged adjacent to each other in a manner similar to the first cushioning layer **212***a* and the second cushioning layer **212***b*, discussed above with reference to FIG. **5**C. The discussion of the features in FIG. **5**C applies to a first cushioning layer **213***a* and a second cushioning layer **213***b* shown in FIG. **7**C, but with the offset arrangement discussed above, with respect to FIGS. **6**A and **6**B.

FIGS. **7**A and **7**B show a cushioning layer **214** formed by positioning a first cushioning panel **220** relative to a second cushioning panel **230**. FIG. **7**A is a top view of the cushioning layer **213** and FIG. **7**B is a cross-sectional view of the cushioning layer **214**, taken along line **7**B-**7**B in FIG. **7**A. FIGS. **7**A and **7**B depict the cushioning layer **213** with another offset arrangement. In FIGS. **6**A and **6**B, the contacting projections of the first projections **224** and the second projections **234** contacted other projections, but other arrangements can be used. In FIGS. **7**A and **7**B, the contacting projections of the first projections **224** and the second projections **234** do not contact each other, but rather, are in contact with other portions of the second cushioning panel **230** and the first cushioning panel **220**, respectively. More specifically, the distal ends **322** of the first projections **224** contact the projection-side surface **312** of the second base layer **232**, and the distal ends **322** of the second projections **234** contact the projection-side surface **312** of the second projections **234**.

The cushioning layers **210** discussed herein can provide a level of cushioning for the product **10**. The cushioning layer **210** has some elastic deformability to provide a first level of cushioning but also provide energy absorption by crumpling or deforming. These different arrangements of the cushioning layers **210** provide different levels of energy absorption that can be adjusted depending upon the need. Additionally, as noted above, the first projections **224** and the second projections **234** can have a variety of shapes, such as different geometric shapes. These different geometric shapes can have different configurations to provide different cushioning or resilience. For example, FIG. **8**A shows a cushioning layer **215** formed by positioning a first cushioning panel **220** relative to a second cushioning panel **230**. FIG. **8**A is a cross-sectional view of the cushioning layer **214** taken from a perspective similar to FIG. **4**B above, but each of the first cushioning panel **220** and the second cushioning panel **230** in the cushioning layer **215** is the cushioning panel **305** having the pyramidal projections **335** shown in FIG. **3**D. Similarly, FIG. **8**B shows a cushioning layer **216** formed by positioning a first cushioning panel **220** relative to a second cushioning panel **230**. FIG. **8**B is a cross-sectional view of the cushioning layer **216** taken from a perspective similar to FIG. **4**B above, but each of the first cushioning panel **220** and the second cushioning panel **230** in the cushioning layer **216** is the cushioning panel **307** having the arcuate projections **337** shown in FIG. **3**E. While FIGS. **8**A and **8**B are depicted with the first projections **224** and the second projections **234** directly opposing each other, other arrangements can be used, including the offset arrangements discussed above.

FIG. **8**C also shows a cushioning layer **217** formed by positioning a first cushioning panel **220** relative to a second cushioning panel **230**. FIG. **8**C is a cross-sectional view of the cushioning layer **216** taken from a perspective similar to FIG. **4**B above. In the cushioning layers **210** discussed above, the first cushioning panel **220** and the second cushioning panel **230** are arranged such that the first projections **224** project toward the second cushioning panel **230** and the second projections **234** project toward the first cushioning panel **220**, but as depicted in FIG. **8**C, the first cushioning panel **220** and the second cushioning panel **230** are arranged such that the first projections **224** project away from the second cushioning panel **230** and the second projections **234** project the first cushioning panel **220**. As with the discussion of a plurality of layers, the discussion of which applies here, the first cushioning panel **220** and the second cushioning panel **230** are positioned with the back-side surface **314** of the first cushioning panel **220** abutting the back-side surface **314** of the second cushioning panel **230**.

FIGS. **9**A and **9**B show a cushioning layer **218** formed by positioning a first cushioning panel **220** relative to a second cushioning panel **230**. FIG. **9**A is a top view of the cushioning layer **213** and FIG. **9**B is a cross-sectional view of the cushioning layer **218** taken along line **9**B-**9**B in FIG. **9**A. As noted above, the second projections **234** can have a geometric shape that is different than the geometric shape of the first projections **224**. In FIGS. **9**A and **9**B, the first cushioning panel **220** is formed using the cushioning panel **305**, shown in FIG. **4**D, with pyramidal projections **335**, and the second cushioning panel **230** is formed using the cushioning panel **309**, shown in FIG. **4**F, with rectangular projections **339**. Although other arrangements may be used, FIGS. **9**A and **9**B depict the cushioning layer **218** with the offset arrangement discussed above with reference to FIGS. **5**A and **5**B. In the previous cushioning layers **210**, both the first projections **224** and the second projections **234** included contacting projections, but depending upon the arrangement and geometric shape, only one of the first projections **224** or

the second projections **234** can include contacting projections. As depicted in FIGS. **9**A and **9**B, for example, the second projections **234** include contacting projections where the distal end **322** of the second projections **234** contact the first cushioning panel **220**, but the distal end **322** of the first projections **224** is not in contact with the second cushioning panel **230**.

FIG. **9**C is a cross-sectional view of a plurality of the cushioning layers **218** taken from a perspective similar to FIG. **9**B. Two or more of the cushioning layers **218** shown in FIGS. **9**A and **9**B can be arranged adjacent to each other in a manner similar to the first cushioning layer **212***a* and the second cushioning layer **212***b*, discussed above with reference to FIG. **5**C. The discussion of the features in FIG. **5**C applies to a first cushioning layer **218***a* and a second cushioning layer **218***b* shown in FIG. **9**C.

FIG. **9**D shows a plurality of cushioning panels of different types in another arrangement. The shapes of the projections, in addition to their arrangement relative to each other, result in different levels of rigidity for each sheet. As will be discussed in more detail below, using a first cushioning layer **219***a* in combination with a second layer **219***b* that has a greater rigidity that the first cushioning layer **219***a* can be advantageous, particularly when the first cushioning layer **219***a* is positioned closer to the product **10** than the more rigid layer, the second layer **219***b* in FIG. **9**D. In FIG. **9**D, the first cushioning layer **219***a* is depicted as using the cushioning layer **211** shown and described above with reference to FIGS. **4**A and **4**B, the second layer **219***b* is depicted as the cushioning panel **309** having rectangular projections **339** shown in FIG. **3**F. Other cushioning panels, however, can be used to form these layers provided the rigidity is as discussed above.

FIGS. **10**A and **10**B illustrate a method of forming a cushioning layer **210**, such as the cushioning layer **211** discussed above. FIG. **10**A is a first step and FIG. **10**B is a second step. After each of the first cushioning panel **220** and the second cushioning panel **230** are formed using the molded pulp methods discussed above, an adhesive **241** can be applied to the first cushioning panel **220**, the second cushioning panel **230**, or both. In FIG. **10**A, the adhesive **241** is shown being applied to the second cushioning panel **230**. More specifically, the adhesive **241** is shown as being applied to the projection side of the second cushioning panel **230**, including the distal end **322** of the second projections **234**. Then the first cushioning panel **220** is positioned relative to the second cushioning panel **230**, which, as depicted, can include positioning the first projections **224** to directly oppose the second projections **234**, with the distal ends **322** of the first projections **224** contacting the distal ends **322** of the second projections **234**. The adhesive **241** then is allowed to dry, binding the distal ends **322** of the first projections **224** to the distal ends **322** of the second projections **234**.

FIGS. **11**A and **11**B illustrate another method of forming a cushioning layer **210**, such as the cushioning layer **211** discussed above. FIG. **11**A illustrates a first step and FIG. **11**B illustrates a second step. In this method, the first cushioning panel **220** and the second cushioning panel **230** are formed as a single cushioning panel **240**, with the first cushioning panel **220** being a first portion **243** of the cushioning panel **240** and the second cushioning panel **230** being a second portion **245** of the cushioning panel **240**. The first portion **243** and the second portion **245** are separated by a connecting portion **247**. The connecting portion **247** can be a portion of the cushioning panel **240** without the projections **320** formed thereon. The connecting portion **247** can be a flat sheet portion of the cushioning panel **240**. After the adhesive **241** is applied in the manner discussed above, the first portion **243** can be rotated relative to the second portion **245** as indicated by the arrow to be positioned, as shown in FIG. **11**B, in the manner discussed above relative to FIG. **10**B.

FIG. **11**C shows an optional additional step. As will be discussed further below, the cushioning layers **210** and cushioning bocks **200** can be positioned relative to each other to form various packing materials. As will be discussed with reference to FIGS. **16**A and **16**B, a third cushioning block **116** and a fourth cushioning block **118** can be arranged transversely to each other, such as to form an L-shape, with a product cavity **122** therebetween. One way of arranging transversely is to further fold the cushioning panel **240** after the step shown in FIG. **11**B. For example, one end of the cushioning panel **240** can be rotated relative to the other end of the cushioning panel **240** to form two cushioning blocks (e.g., third cushioning block **116** and the fourth cushioning block **118**) positioned transversely to each other. The cushioning panel **240** can include a corner portion **249** and, before rotating one of the first base portion **222** and the second base portion **232** can be scored or otherwise cut to facilitate rotation. Additionally, instead of stopping the fold to form the L-shape, the one end of the cushioning panel **240** can be further rotated to form a plurality of cushioning layers (e.g., the first cushioning layer **211***a* and second cushioning layer **211***b* discussed above with reference to FIG. **4**C).

FIG. **11**D shows another optional additional step. The cushioning panel **240** can be further rotated in the manner discussed above with reference to FIG. **11**C to form a U-shape having for example, a first cushioning block **112**, a second cushioning block **114**, and a third cushioning block **116**, discussed in more detail below. One end of the L-shape shown in FIG. **11**C can be further rotated to be arranged transversely to another section of the cushioning panel **240**.

FIG. **11**E shows another optional additional step to form a plurality of layers. In FIG. **11**B the cushioning panel **240** was folded back on itself once to form the cushioning layer and then one end of the cushioning layer was folded the other end of the cushioning layer. Here, in FIG. **11**E, the cushioning panel **240** is folded back on itself multiple times to form a plurality of cushioning layers. The base layer of the cushioning panel **240** can thus have a serpentine structure after being folded.

FIG. **12** shows a cushioning block **202** that can be used as a cushioning block **200** of the packing materials **100** (FIG. **1**) discussed herein. As noted above, the cushioning block **202** can be a composite cushioning block having one or more cushioning layers **210** in combination with at least one other layer that is a different construction, such as having a different material or a different structure. The other layer, shown in this embodiment, is a cellulosic sheet **250**. The cellulosic sheet **250** can be a paper sheet having various basis weights. Thicker and stiffer cellulosic sheets **250** can be used, including, for example, fiberboard sheets. The cellulosic sheet **250** can abut and be attached to the cushioning layer **210**. More specifically, the cellulosic sheet **250** can abut and be directly attached to one of the outer side **228** of the first cushioning panel **220** or the outer side **238** of the second cushioning panel **230**. The cellulosic sheet **250** can include a first surface **252** and a second surface **254**. The first surface **252** can abut and be directly attached to one of the outer side **228** of the first cushioning panel **220** or the outer side **238** of the second cushioning panel **230**. An adhesive may be applied to the first surface **252** of the cellulosic sheet **250**, to one of the outer side **228** of the first cushioning panel

220 or the outer side 238 of the second cushioning panel 230, or both to directly attach the cellulosic sheet 250 to the cushioning layer 210.

A plurality of cellulosic sheets 250 can be used in different arrangements. In some arrangements, a first cellulosic sheet and a second cellulosic sheet can abut and be directly attached to the outer side 228 of the first cushioning panel 220 and the outer side 238 of the second cushioning panel 230, respectively. In some embodiments, the cellulosic sheet 250 is formed on an outer side of the cushioning block 202 and can be referred to as a cover layer.

FIG. 13 shows a cushioning block 203 that can be used as a cushioning block 200 of the packing materials 100 (FIG. 1) discussed herein. The cushioning block 203 shown in FIG. 13 is also a composite cushioning block, but instead of using the cellulosic sheet 250, the cushioning block 203 can be a corrugated fiberboard sheet 260, also referred to as corrugated cardboard. The corrugated fiberboard sheet 260, shown in FIG. 13, is a single-walled corrugated fiberboard sheet, but other corrugated fiberboard sheets 260 can be used, including, for example, double-walled corrugated fiberboard sheets and triple-walled corrugated fiberboard sheets. The corrugated fiberboard sheet 260 includes a top sheet 261, a bottom sheet 263, and a corrugated sheet 265 sandwiched between the top sheet 261 and the bottom sheet 263. When the corrugated fiberboard sheet 260 is a double-walled corrugated fiberboard sheet or a triple-walled corrugated fiberboard sheet, the corrugated fiberboard sheet 260 can include a plurality of corrugated sheets 265 sandwiched between the top sheet 261 and the bottom sheet 263 with intermediate or middle sheets separating the corrugated sheet 265.

Each of the liners (e.g., the top sheet 261, the bottom sheet 263, and the middle or intermediate sheets) and the corrugated sheets 265 can be suitable sheets made from cellulosic fibers that are typically used in the construction of cardboard shipping boxes. The corrugated sheets 265 each include a plurality of flutes. Any suitable standard flute shape typically used in the construction of cardboard shipping boxes may be used. These flutes are referred to herein as interior flutes to distinguish them from other flutes formed in the packing materials discussed below.

The corrugated fiberboard sheet 260 can be positioned and arranged in a manner similar to the cellulosic sheet 250 discussed above. More specifically, the corrugated fiberboard sheet 260 can include a first surface 267, which is an outward-facing surface of the top sheet 261, and a second surface 269, which is an outward-facing surface of the bottom sheet 263. The first surface 267 and the second surface 269 of the corrugated fiberboard sheet 260 can be positioned and arranged similarly to the first surface 252 and the second surface 254 of the cellulosic sheet 250 discussed above. In some embodiments, the corrugated fiberboard sheet 260 is formed on an outer side of the cushioning block 202 and, like the cellulosic sheet 250, can be referred to as a cover layer. The corrugated fiberboard sheet 260 can also be a structural layer of the cushioning block 203.

For some applications, including the TV application discussed above, a combination of both strong and rigid protection with cushioning may be desired. Accordingly, in some embodiments, one or more cushioning panels 300 (FIGS. 3A to 3G), arranged and constructed in the manner discussed above, can be used in conjunction with additional layers of a stronger, more rigid construction. For example, a composite cushioning block can be formed using a cushioning layer 210 (FIG. 2) having one or more cushioning panels 300, with another panel or sheet panel, having a stronger, more rigid construction than the cushioning panels 300 and cushioning layer 210. These sheet panels are referred to herein as rigid sheet panels 400 (FIG. 14A) to distinguish them from the cushioning panels 300, and the rigid sheet panels 400 have a rigidity greater than that of the cushioning panels 300, the cushioning layer 210, or both, when a load is applied in the thickness direction of the rigid sheet panels 400, the cushioning panels 300, or cushioning layer 210. The composite cushioning blocks can include one or more rigid layer 270 (FIGS. 15A to 15D) formed from one or more rigid sheet panels 400. Various different rigid sheet panels 400 that can be used to form the rigid layer 270 are discussed further below, and reference numeral 400 is used herein to refer generally to the various different rigid panels.

FIG. 14A shows a rigid sheet panel 400 that can be used to form the cushioning blocks 200 and the packing materials 100 (FIG. 1). The rigid sheet panel 400 shown in FIG. 14A is a honeycomb panel 410. The honeycomb panel 410 includes a top sheet 412 and a bottom sheet 414. The honeycomb panel 410 can include a first surface 416, which is an outward-facing surface of the top sheet 412, and a second surface 418, which is an outward-facing surface of the bottom sheet 414. Each of the top sheet 412 and the bottom sheet 414 are cellulosic sheets, and the discussion of the cellulosic sheet 250 above applies to these sheets. The honeycomb panel 410 also includes a core 420 sandwiched between the top sheet 412 and bottom sheet 414.

FIG. 14B shows the core 420 of the honeycomb panel 410. The core 420 includes a plurality of bands 422. The bands 422 are cellulosic bands of cellulosic sheet materials, and the discussion of the cellulosic sheet 250 above applies to these cellulosic bands. The core 420 is formed by attaching, such as by using an adhesive, the bands 422 together to form a plurality of cells 424 defined by the bands 422. In FIG. 14B, the cells 424 have a hexagonal shape, but other shapes can be used. The bands 422 can be oriented in a direction transverse to the top sheet 412 and the bottom sheet 414, such as in a direction normal to the top sheet 412 and bottom sheet 414. The cells 424 are also oriented in a direction transverse to the top sheet 412 and the bottom sheet 414, such as in a direction normal to the top sheet 412 and bottom sheet 414. The top sheet 412 and the bottom sheet 414 can have a thickness greater than the bands 422.

FIGS. 15A to 15D show cushioning blocks 200 and, more specifically, composite cushioning blocks formed with one or more cushioning layers 210 in combination with one or more rigid layers 270. FIG. 15A shows a cushioning block 204 having the cushioning layer 212 discussed above and a rigid layer 270 formed using one honeycomb panel 410. The rigid layer 270 and, more specifically, the honeycomb panel 410 is shown in FIG. 15A as contacting the cushioning layer 210. As noted above, the honeycomb panel 410 includes a top sheet 412 with a first surface 416. The top sheet 412 can be positioned to abut the second cushioning panel 230 of the cushioning layer 210. The first surface 416 of the top sheet 412 can abut and be directly attached to one of the outer sides 228 of the first cushioning panel 220 or the outer side 238 of the second cushioning panel 230. An adhesive may be applied to the first surface 416 of the honeycomb panel 410 to one of the outer side 228 of the first cushioning panel 220 or the outer side 238 of the second cushioning panel 230, or both to directly attach the honeycomb panel 410 to the cushioning layer 210. In FIG. 15A, the top sheet 412 abuts the second base layer 232 of the cushioning layer 210.

The projections 320, such as the first projections 224, the second projections 234, or both, can be oriented in the same direction as the cells 424 (FIG. 14B) of the honeycomb

panel **410**. The first projections **224**, the second projections **234**, the cells **424**, or combinations thereof can be oriented in a thickness direction of the cushioning block **204**.

FIG. **15**B shows a cushioning block **205** with the rigid layer **270** formed using one honeycomb panel **410**. The cushioning block **205** is similar to the cushioning block **204** discussed above with reference to FIG. **15**A, but as shown in FIG. **15**B, the cushioning layer **210** is formed with one cushioning panel **300**, such as the cushioning panel **303** discussed above. The cushioning panel **303** can be positioned in different orientations, such as with the projections **320** extending towards the honeycomb panel **410**, such as with the distal ends **322** of the projections **320** contacting the first surface **416** of the top sheet **412**.

FIG. **15**C shows another cushioning block **206** with the rigid layer **270** being the honeycomb panel **410**. The cushioning block **206** shown in FIG. **15**C is similar to the cushioning block **205** discussed above with reference to FIG. **15**B, but here, the projections **320** project away from the honeycomb panel **410**. The base layer **310** can abut the honeycomb panel **410**, such as the top sheet **412**. More specifically, the back-side surface **314** can be positioned to abut and directly contact the first surface **416**.

FIG. **15**D shows another cushioning block **207**. The cushioning block **207** is similar to the cushioning block **204** discussed above with reference to FIG. **15**A. The cushioning block **207** includes a corrugated fiberboard sheet **260** in addition to the cushioning layer **210** and the rigid layer **270**. The corrugated fiberboard sheet **260** can be integrated in various locations within the cushioning block **207**. The corrugated fiberboard sheet **260** can be positioned adjacent to, such as to abut, the cushioning layer **210**, the rigid layer **270**, or both. The corrugated fiberboard sheet **260** can be positioned on an outer surface of the cushioning block **207**, such as on an outer side of the cushioning layer **210** or the rigid layer **270**, but the corrugated fiberboard sheet **260** can be positioned between the cushioning layer **210** and the rigid layer **270**. As shown in FIG. **15**D, for example, the corrugated fiberboard sheet **260** is positioned adjacent to the rigid layer **270** and, more specifically, to abut the honeycomb panel **410** of the rigid layer **270**.

As noted above, the packing materials **100** (FIG. **1**) discussed herein can be formed from one or more cushioning blocks **200**. The cushioning blocks **200** can be arranged in various ways and in various combinations around the product **10** (FIG. **1**). In the following discussion, the packing materials **100** will be described as being formed into unitary structures with the cushioning blocks **200** connected to each other, such as by a corrugated fiberboard sheet **260**. The cushioning blocks **200** can be arranged around the product **10** in the manner discussed below without being connected to each other.

FIGS. **16**A and **16**B show a corner-shaped packing material **110** that can be used as, for example, one of the corner-shaped packing materials **102** discussed above with reference to FIG. **1**. FIG. **16**B is an exploded view of the corner-shaped packing material **110**. The corner-shaped packing material **110** includes one or more cushioning blocks capable of being positioned around the product **10**. More specifically, the corner-shaped packing material **110** includes a plurality of cushioning blocks including a first cushioning block **112**, a second cushioning block **114**, a third cushioning block **116**, and a fourth cushioning block **118**. Each of these cushioning blocks **112**, **114**, **116**, and **118** includes one or more cushioning layers **210** and, more specifically, as depicted in FIGS. **16**A and **16**B, two cushioning layers **210**. The cushioning layers depicted in FIGS. **16**A and **16**B are the cushioning layers **211** shown and described above with reference to FIGS. **4**A to **4**C, but other cushioning layers **210** may be used, and each of these cushioning blocks **112**, **114**, **116**, and **118** includes the first cushioning layer **211***a* and the second cushioning layer **211***b*.

The first cushioning block **112** and the second cushioning block **114** are positioned to oppose each other with a product cavity **122** therebetween. The first cushioning block **112** and the second cushioning block **114** can be oriented parallel to each other, with a thickness direction of each of the first cushioning block **112** and the second cushioning block **114** being oriented in the same direction. The first cushioning block **112** can be a front cushioning block and the second cushioning block **114** can be a back cushioning block. The first cushioning block **112** and the second cushioning block **114** can have different shapes, and, as depicted in FIGS. **16**A and **16**B, the first cushioning block **162** and the second cushioning block **114** each have the same shape, which is an L-shape.

The third cushioning block **116** is positioned along one edge of each of the first cushioning block **112** and the second cushioning block **114** to form a bottom cushioning block. The third cushioning block **116** can be positioned on a long side of the first cushioning block **112** and the second cushioning block **114**. The third cushioning block **116** is positioned transverse and, more specifically, orthogonal to the first cushioning block **112** and the second cushioning block **114**.

The fourth cushioning block **118** is positioned along one edge of each of the first cushioning block **112** and the second cushioning block **114** to form a side cushioning block. The fourth cushioning block **118** can be positioned on a short side of the first cushioning block **112** and the second cushioning block **114**. The fourth cushioning block **118** is positioned transverse and, more specifically, orthogonal to the first cushioning block **112** and the second cushioning block **114**. The third cushioning block **116** and the fourth cushioning block **118** also are positioned transverse and, more specifically, orthogonal to each other.

The third cushioning block **116** and the fourth cushioning block **118** also define boundaries of the product cavity **122**. The product cavity **122** shown in FIG. **16**A is a slot, but other shapes may be formed with the arrangement of the product cavity **122**. In the depicted arrangement, each of the cushioning blocks **112**, **114**, **116**, and **118** define the product cavity **122** in which the product **10** can be placed. The cushioning blocks **112**, **114**, **116**, and **118** include a product side and a product-side surface **124**, which is a surface of each of the cushioning blocks **112**, **114**, **116**, and **118** facing the product cavity **122**.

The cushioning blocks **112**, **114**, **116**, and **118** also include a container side and a container-side surface **126**, which is a surface outward from the corner-shaped packing material **110** and away from the product cavity **122**. Each of the cushioning blocks **112**, **114**, **116**, and **118** include a backing sheet, such as a corrugated fiberboard sheet **260**, positioned on the container side of the cushioning blocks **112**, **114**, **116**, and **118**. More specifically, the corner-shaped packing material **110** includes a first corrugated fiberboard sheet portion **132**, a second corrugated fiberboard sheet portion **134**, a third corrugated fiberboard sheet **1** portion **36**, and a fourth corrugated fiberboard sheet portion **138** corresponding to the first cushioning block **112**, the second cushioning block **114**, the third cushioning block **116**, and the fourth cushioning block **118**, respectively, and arranged in the manner discussed above. Although the corrugated fiberboard sheet portions **132**, **134**, **136**, and **138** can be independently

formed on the cushioning blocks **112**, **114**, **116**, and **118** as individual sheets, the corrugated fiberboard sheet portions **132**, **134**, **136**, and **138** are illustrated in FIGS. **16**A and **16**B as portions of a corrugated fiberboard sheet **130** that are connected to each other and folded in a manner to form an open box shaped structure.

FIG. **17** shows a U-shaped packing material **142** that can be used as, for example, one of the U-shaped packing materials **104** discussed above with reference to FIG. **1**. The U-shaped packing material **142** is formed similarly to the corner-shaped packing material **110** discussed above with reference to FIGS. **16**A and **16**B. The U-shaped packing material **142** includes the first cushioning block **112**, the second cushioning block **114**, and the third cushioning block **116** arranged in a U-shape similar to the arrangement discussed above. The shape of each of the first cushioning block **112** and the second cushioning block **114** are depicted as elongated rectangular blocks to form an elongated product cavity **122**.

FIG. **18** shows two corner-shaped packing materials **110** and a U-shaped packing material **142** arranged next to each other. The product cavities **122** of the corner-shaped packing materials **110** and the U-shaped packing material **142** can be aligned with each other to form a continuous cavity for the product **10** (FIG. **1**). While shown adjacent to each other in FIG. **18** (and also in FIG. **1**), the packing materials **100**, such as the corner-shaped packing materials **110** and the U-shaped packing material **142**, can be spaced apart from each other with gaps therebetween.

FIGS. **19**A and **19**B show another corner-shaped packing material **144** that can be used as, for example, one of the corner-shaped packing materials **102** discussed above with reference to FIG. **1**. FIG. **19**B is an exploded view of the corner-shaped packing material **144**. The corner-shaped packing material **144** shown in FIGS. **19**A and **19**B is similar to the corner-shaped packing material **110** discussed above with reference to FIGS. **16**A and **16**B, and that discussion applies here. In this corner-shaped packing material **144**, the first corrugated fiberboard sheet portion **132**, the second corrugated fiberboard sheet portion **134**, the third corrugated fiberboard sheet portion **136**, and the fourth corrugated fiberboard sheet portion **138** are formed on the product-side surface **124** of each cushioning block **112**, **114**, **116**, and **118**, instead of the container-side surface **126**. In this embodiment, the corrugated fiberboard sheet **130** and, more specifically, the corrugated fiberboard sheet portions **132**, **134**, **136**, and **138** define the cavity instead of a surface of the cushioning layers **210**. In still other embodiments, the corrugated fiberboard sheet portions **132**, **134**, **136**, and **138** can be formed on either side of the cushioning layers **210** (e.g., combining the features of FIGS. **16**A and **16**B with FIGS. **19**A and **19**B).

FIGS. **20**A and **20**B show another corner-shaped packing material **150** that can be used as, for example, one of the corner-shaped packing materials **102** discussed above with reference to FIG. **1**. The corner-shaped packing material **150** shown in FIGS. **20**A and **20**B is similar to the corner-shaped packing material **110** discussed above with reference to FIGS. **16**A and **16**B. As noted above, the first corrugated fiberboard sheet portion **132**, the second corrugated fiberboard sheet portion **134**, the third corrugated fiberboard sheet portion **136**, and the fourth corrugated fiberboard sheet portion **138** can be portions of a corrugated fiberboard sheet **130**. An advantage of using the corrugated fiberboard sheet **130** is that the cushioning blocks **112**, **114**, **116**, and **118** can be attached to a surface, such as an internal surface, of the corrugated fiberboard sheet **130**, and then the corrugated fiberboard sheet **130** can be folded from a flat configuration to a folded configuration to form the corner-shaped packing material **150**. Suitable means of attachment include, for example, an adhesive to attach the cushioning blocks **112**, **114**, **116**, and **118** (or portions thereof such as the cushioning layers) to the surface of the corrugated fiberboard sheet **130**. The corner-shaped packing material **150** shown in FIGS. **20**A and **20**B is configurable in a flat configuration and a folded configuration. The flat configuration is shown in FIG. **20**A, and the folded configuration is shown in FIG. **20**B. In the folded configuration, the corner-shaped packing material **150** is shaped as discussed above with reference to FIGS. **16**A and **16**B.

In the flat configuration shown in FIG. **20**A, the first cushioning block **112** can be spaced apart from the third cushioning block **116** with a gap therebetween. The corrugated fiberboard sheet **130** includes a first connection portion **152** that spans between the first cushioning block **112** and the third cushioning block **116**. A connection portion of the corrugated fiberboard sheet **130**, such as the first connection portion **152**, is a portion of the corrugated fiberboard sheet **130** without a cushioning block attached thereto and allows the first cushioning block **112** to be folded relative to the third cushioning block **116**. The first connection portion **152** connects the first corrugated fiberboard sheet portion **132** with the third corrugated fiberboard sheet portion **136**. In a similar manner, the second cushioning block **114** is spaced apart from the third cushioning block **116**, with a second connection portion **154** connecting the second corrugated fiberboard sheet portion **134** with the third corrugated fiberboard sheet portion **136** to allow the second cushioning block **114** to be folded relative to the third cushioning block **116**. Similarly, the fourth cushioning block **118** is spaced apart from the third cushioning block **116**, with a third connection portion **156** connecting the fourth corrugated fiberboard sheet portion **138** with the third corrugated fiberboard sheet portion **136** to allow the fourth cushioning block **118** to be folded relative to the third cushioning block **116**.

To move from the flat configuration in FIG. **20**A to the folded configuration in FIG. **20**B, the first cushioning block **112**, the second cushioning block **114**, and the fourth cushioning block **118** are folded relative to the third cushioning block **116**, as indicated by the arrows. Although shown as being folded relative to the third cushioning block **116**, the cushioning blocks **112**, **114**, **116**, and **118** can be attached to one another in other configurations to be folded in different orientations, such as the first cushioning block **112**, the second cushioning block **114**, and the third cushioning block **116** being connected to the fourth cushioning block **118** by the corrugated fiberboard sheet **130** to fold relative to the fourth cushioning block **118**. Additionally, although described with reference to the corrugated fiberboard sheet **130**, other backing materials or connecting materials can be used, such as paper sheets. More generally, one cushioning bock (e.g., the first cushioning block **112**) can be connected to another cushioning block (e.g., the third cushioning block **116**) by a connecting material, with a gap formed therebetween to allow the one cushioning block (e.g., the first cushioning block **112**) to be folded from a flat configuration to a folded configuration.

To hold the corner-shaped packing material **150** in the folded configuration, the corrugated layer **130** may include tabs **158** that are, for example, connected to or a part of the corrugated fiberboard sheet **130**, such as a portion of the fourth corrugated fiberboard sheet portion **138**. A peelable adhesive strip **159** can be applied to an inner surface of each

tab **158** and used as an adhesive strip to hold the corner-shaped packing material **150** in the folded configuration. Instead of (or in addition to) a peelable adhesive strip **159**, other means of holding the corner-shaped packing material **150** in the folded configuration can be used. For example, instead of a peelable adhesive strip **159**, an adhesive can be applied to various locations of the corner-shaped packing material **150**, such as to the inner surface of the tabs **158**, for example. Additionally, or alternatively, an adhesive strip (e.g., tape) can be used. When an adhesive strip such as tape is used, the tabs **158** can be omitted.

FIGS. **21**A and **21**B show another corner-shaped packing material **160** that can be used as, for example, one of the corner-shaped packing materials **102** discussed above with reference to FIG. **1**. The corner-shaped packing material **160** is similar to the corner-shaped packing material **150** shown in FIGS. **20**A and **20**B and is configurable in a flat configuration and a folded configuration. The flat configuration is shown in FIG. **21**A and the folded configuration is shown in FIG. **21**B. As noted above, a single molded pulp cushioning panel can be used in the formation of the corner-shaped packing material **160**, and the corner-shaped packing material **160**, shown in FIGS. **21**A and **21**B, is formed from a single, foldable molded cushioning panel **170**, such as the cushioning panel **301** discussed above with reference to FIGS. **3**A and **3**B. Although described with reference to cushioning panel **301** (FIGS. **3**A and **3**B), any of the cushioning panels **300** (e.g., FIGS. **3**A to **3**G) discussed herein may be used.

The foldable molded cushioning panel **170** includes a first projection section **162**, a second projection section **164**, a third projection section **166**, and a fourth projection section **168** arranged in a manner similar to the first cushioning block **112**, the second cushioning block **114**, the third cushioning block **116**, and the fourth cushioning block **118**, respectively, discussed above with respect to FIGS. **20**A and **20**B. Each of these projection sections **162**, **164**, **166**, and **168** are sections containing projections **320**, such as the cylindrical projections **331**.

The foldable molded cushioning panel **170** includes a first connection portion **172** that spans between the first projection section **162** and the third projection section **166**. A connection portion of the foldable molded cushioning panel **170**, such as the first connection portion **172**, can be a portion of the cushioning panel **170** without the projections **320** formed thereon. The connecting portions can be a flat sheet portion of the foldable molded cushioning panel **170**. The first connection portion **172** connects the first projection section **162** with the third projection section **166** and allows the first projection section **162** to be folded, or otherwise rotated, relative to the third projection section **166**. In a similar manner, the second projection section **164** is spaced apart from and connected to the third projection section **166** by a second connection portion **174** to allow the second connection portion **174** to be folded, or otherwise rotated, relative to the third corner-shaped packing material **146**. Similarly, the fourth projection section **168** is spaced apart from and connected to the third projection section **166** by a third connection portion **176** to allow the fourth projection section **168** to be folded, or otherwise rotated, relative to the third projection section **166**.

The foldable molded cushioning panel **170** can be folded from the flat configuration to the folded configuration and held in the folded configuration in a manner similar to the corner-shaped packing material **150** discussed above with reference to FIGS. **20**A and **20**B, and that discussion applies here. Additional layers discussed herein can be attached to each of the projection sections **162**, **164**, **166**, and **168** to form the various cushioning blocks discussed herein.

FIGS. **22**A and **22**B show another corner-shaped packing material **146** that can be used as, for example, one of the corner-shaped packing materials **102** discussed above with reference to FIG. **1**. FIG. **22**A is a top view of the corner-shaped packing material **146**, and FIG. **22**B is a perspective view of the corner-shaped packing material **146**. The corner-shaped packing material **146**, shown in FIGS. **22**A and **22**B, is similar to the corner-shaped packing material **110** discussed above with reference to FIGS. **16**A and **16**B, and that discussion applies here. In the corner-shaped packing material **146**, shown in FIGS. **22**A and **22**B, however, each of the cushioning blocks **112**, **114**, **116**, and **118** are composite cushioning blocks, including a rigid layer **270**. The rigid layer **270** shown in FIGS. **22**A and **22**B includes one or more honeycomb panels **410**, but any of the rigid sheet panels **400** discussed herein can be used.

More specifically, the first cushioning block **112** and the second cushioning block **114** include the cushioning block **205** discussed above with reference to FIG. **15**B. The third cushioning block **116** and the fourth cushioning block **118** include the cushioning block **204** discussed above with reference to FIG. **15**A, but with a plurality of cushioning layers **210**, such as the first cushioning layer **212***a* and the second cushioning layer **212***b* discussed above with reference to FIG. **5**B. As noted above, however, different arrangements and numbers of cushioning layers **210** can be used.

In each of the cushioning blocks **112**, **114**, **116**, and **118**, the cushioning layers **210** can be positioned on the product side. More specifically, the cushioning layers **210** are positioned adjacent to the product cavity **122** and positioned to define the product cavity **122** in the manner discussed above with reference to FIGS. **16**A and **16**B. Also, the rigid layer **270** and, more specifically, the honeycomb panel **410**, is positioned between the cushioning layers **210** and the corrugated fiberboard sheet **130**, which forms the container side of the corner-shaped packing material **146**.

In some embodiments, the third cushioning block **116** and the fourth cushioning block **118** form peripheral edges of the packing materials **100** (FIG. **1**). The inventors have found that additional cushioning, such as additional cushioning layers **210**, can advantageously be placed around the peripheral edges as opposed to the face of the product **10** (FIG. **1**). The third cushioning block **116** and the fourth cushioning block **118** forming the peripheral edges can thus have more cushioning layers **210** than the first cushioning block **112** and the second cushioning block **114**.

FIG. **23** shows another corner-shaped packing material **148** that can be used as, for example, one of the corner-shaped packing materials **102** discussed above with reference to FIG. **1**. As noted above, additional cushioning layers **210** can be placed on the peripheral edges as opposed to the face of the product **10** (FIG. **1**). The corner-shaped packing material **148** shown in FIG. **23** is similar to the corner-shaped packing material **146** shown in FIGS. **22**A and **22**B, but here, the cushioning layers **210** are omitted from the first cushioning block **112** and the second cushioning block **114**, resulting in only a honeycomb panel **410** and the corrugated fiberboard sheet **130**.

FIG. **24**A shows a U-shaped packing material **180** that can be used as, for example, one of the U-shaped packing materials **104** discussed above with reference to FIG. **1**. The U-shaped packing material **180** is formed similarly to the U-shaped packing material **142** discussed above with reference to FIG. **17**. The U-shaped packing material **180** includes a third cushioning block **116** positioned as dis-

cussed above with reference to FIG. **17**. As with the corner-shaped packing material **146** discussed above with reference to FIGS. **22**A and **22**B, the third cushioning block **116** is a composite cushioning block including a rigid layer **270**. The rigid layer **270** of the third cushioning block **116** and the other cushioning blocks shown in FIG. **24** includes one or more honeycomb panel **410**, but any of the rigid sheet panels **400** discussed herein can be used. More specifically, the third cushioning block **116** includes the cushioning block **204** discussed above with reference to FIG. **15**A, but with a plurality of cushioning layers **210**, such as the first cushioning layer **212***a* and the second cushioning layer **212***b* discussed above with reference to FIG. **5**B.

The U-shaped packing material **180** also includes a plurality of cushioning blocks positioned on a first side of the U-shaped packing material **180** similarly to the first cushioning block **112** discussed above with reference to FIG. **17**. More specifically, the U-shaped packing material **180** includes, on the first side, a first-side first-end cushioning block **181**, a first-side second-end cushioning block **183**, and a first-side intermediate cushioning block **185**. Each of the first-side first-end cushioning block **181**, the first-side second-end cushioning block **183**, and the first-side intermediate cushioning block **185** shown in FIG. **25** are composite cushioning blocks formed with one or more cushioning layers **210**, such as the cushioning layer **212** discussed above with reference to FIG. **5**B, and one or more rigid layers **270**, such as the honeycomb panel **410**. The first-side first-end cushioning block **181**, the first-side second-end cushioning block **183**, and the first-side intermediate cushioning block **185** are connected to each other by a corrugated fiberboard sheet **130** and, more specifically, a first corrugated fiberboard sheet portion **132** positioned on the first side of the U-shaped packing material **180**. Each of the first-side first-end cushioning block **181** and the first-side second-end cushioning block **183** is separated from the first-side intermediate cushioning block **185** by a first-side connection portion **187** of the corrugated fiberboard sheet **130**.

Similarly, the U-shaped packing material **180** includes a plurality of cushioning blocks positioned on a second side of the U-shaped packing material **180**, similarly to the second cushioning block **114** discussed above with reference to FIG. **17**. More specifically, the U-shaped packing material **180** includes, on the first side, a second-side first-end cushioning block **182**, a second-side second-end cushioning block **184**, and a second-side intermediate cushioning block **186**. Each of the second-side first-end cushioning block **182**, the second-side second-end cushioning block **184**, and the second-side intermediate cushioning block **186** shown in FIG. **25** are formed with one or more cushioning layers **210**, such as the cushioning layer **212** discussed above with reference to FIG. **5**B. The second-side first-end cushioning block **182**, the second-side second-end cushioning block **184**, and the second-side intermediate cushioning block **186** are connected to each other by a corrugated fiberboard sheet **130** and, more specifically, a second corrugated fiberboard sheet portion **134** positioned on the second side of the U-shaped packing material **180**. Each of the second-side first-end cushioning block **182** and the second-side second-end cushioning block **184** is separated from the second-side intermediate cushioning block **186** by a second-side connection portion **188** of the corrugated fiberboard sheet **130**.

The first-side first-end cushioning block **181** is positioned to oppose the second-side first-end cushioning block **182** with the product cavity **122** therebetween. The first-side second-end cushioning block **183** is positioned to oppose the second-side second-end cushioning block **184** with the product cavity **122** therebetween. The first-side intermediate cushioning block **185** is positioned to oppose the second-side intermediate cushioning block **186** with the product cavity **122** therebetween.

While shown with certain configurations of cushioning blocks, the first-side first-end cushioning block **181**, the second-side first-end cushioning block **182**, the first-side second-end cushioning block **183**, the second-side second-end cushioning block **184**, the first-side intermediate cushioning block **185**, and the second-side intermediate cushioning block **186** can be formed using other cushioning blocks discussed herein. Indeed, the cushioning protection afforded by the first cushioning layer **212***a* and the second cushioning layer **212***b* of the third cushioning block **116** may be sufficient, and in such a case, the sides of the U-shaped packing material **180** can include a rigid layer **270**, like the honeycomb panel **410**, without a cushioning layer. Similarly, although shown as separate cushioning blocks, the first-side first-end cushioning block **181**, the first-side second-end cushioning block **183**, and the first-side intermediate cushioning block **185** can be one continuous elongated cushioning block, and similarly, the second-side first-end cushioning block **182**, the second-side second-end cushioning block **184**, and the second-side intermediate cushioning block **186** can be one continuous elongated cushioning block.

FIG. **24**B shows a U-shaped packing material **190** that can be used as, for example, one of the U-shaped packing materials **104** discussed above with reference to FIG. **1**. The U-shaped packing material **190** is formed similarly to the U-shaped packing material **180** discussed above with reference to FIG. **24**A. Instead of having a plurality of cushioning blocks on the first side and the second side of the U-shaped packing material **190**, the U-shaped packing material **190** has one block on the first side, a first side bock **192**, and one block on the second side, a second side bock **194**. Each of the first side block **192** and the second side block **194** includes a rigid panel **400** and, more specifically, a rigid panel without a cushioning layer. The rigid panel **400** shown in FIG. **24**B is a honeycomb panel **410**, but any of the rigid panels discussed herein may be used. Where packing materials with only rigid panels, such as honeycomb panels have been known to fail, the addition of the cushioning layer on the underside (the third cushioning block **116**) has been found to provide sufficient cushioning for products **10**, such as TVs. Although shown with only a rigid panel **400**, the first side block **192** and the second side block **194** can include any of the cushioning blocks, such as the composite cushioning blocks discussed herein.

FIG. **25**A to **25**C show other cushioning layers, which are referred to herein as irregular cushioning layers **500**, formed from a first cushioning panel **512** and a second cushioning panel **514**. The irregular cushioning layers **500** discussed herein can be used as any one of the cushioning layers discussed above, particularly where the cushioning layers abut or otherwise come into contact with the product **10**. FIG. **25**A shows an irregular cushioning layer **510** that can be used to form a cushioning block. The first cushioning panel **512** and the second cushioning panel **514** are similar to the first cushioning panel **220** (see, e.g., FIG. **2**) and the second cushioning panel **230** (see, e.g., FIG. **2**). When the cushioning panel, such as the first cushioning panel **512**, is a molded cushioning panel, the first cushioning panel **512** can be molded to a variety of shapes. For example, the first cushioning panel **512** and, more specifically, the product side and a product-side surface **124** of a cushioning block formed using the irregular cushioning layer **510** can be shaped to conform to the shape of the product **10**, such as an

irregularly shaped product **12**. Accordingly, the irregular cushioning layer **510** and, more specifically, the first cushioning panel **512** formed therefrom can include product-side recesses **516**, product-side protrusions **518**, or both formed on the product side of a cushioning block formed using the irregular cushioning layer **510**. The product-side recesses **516** and product-side protrusions **518** can thus be formed on the back-side surface **314** of the first cushioning panel **512**.

FIG. **25**B shows another irregular cushioning layer **520** that is similar to the irregular cushioning layer **510** discussed above with reference to FIG. **25**A. The irregular cushioning layer **520** is formed from a first cushioning panel **522** and a second cushioning panel **524**, similar to the first cushioning panel **512** and the second cushioning panel **514**, respectively. In the first cushioning panel **512** and the second cushioning panel **514** discussed above, the projections **320** (e.g., the first projections **224** and the second projections **234**) on the projection side of the first cushioning panel **512** and second cushioning panel **514** can have a repeating or regular pattern arrangement. As depicted in FIG. **25**B, however, the first projections **224** can be a non-repeating pattern, such as omitted over a projection free portion **526** of the first cushioning panel **522**, such as a portion of the first cushioning panel **522** that includes a product-side recesses **516**.

FIG. **25**C shows another irregular cushioning layer **530** that is similar to the irregular cushioning layer **520** discussed above with reference to FIG. **25**B. The irregular cushioning layer **530** is formed from a first cushioning panel **532** and a second cushioning panel **534**, similar to the first cushioning panel **522** and the second cushioning panel **524**, respectively. In FIG. **25**C, the first projections **224** of the first cushioning panel **532** are omitted and the second projections **234** of the second cushioning panel **534** have a non-repeating pattern, such as an enlarged projection **536** abutting the projection free portion **526**.

FIGS. **26**A to **30**C show various configurations of the cushioning blocks discussed herein forming a shipping container. While the packing materials **100** (FIG. **1**) discussed herein may be separate from the shipping box **20** (FIG. **1**) and placed inside the shipping box **20**, other configurations may be used, such as those discussed below, to form a shipping container.

FIGS. **26**A and **26**B show a shipping container **600** formed using the cushioning blocks **200** (see, e.g., FIG. **2**) discussed herein. The shipping container **600** is configurable in a flat configuration and a folded configuration. The flat configuration is shown in FIG. **26**A and the folded configuration is shown in FIG. **26**B. The shipping container **600** includes a corrugated fiberboard sheet **610**, similar to the corrugated fiberboard sheet **130** discussed above. The corrugated fiberboard sheet **610** is sectioned to form a plurality of sections that can be folded from the flat state to the folded state and form a box in the folded state. Various patterns for sectioning the fiberboard sheet **610** can be used. Although the shipping container **600** can have other shapes, the shipping container **600** shown in FIG. **26**B is a rectangular shipping container, and the plurality of sections of the fiberboard sheet **610** include a front section **611**, a left-side section **612**, a right-side section **613**, a back section **614**, a first top flap **615**, a second top flap **616**, a first bottom flap **617**, and a second bottom flap **618**. A cushioning block **200** can be attached to each section of the plurality of sections of the fiberboard sheet **610** in a manner similar to that discussed above with reference to FIGS. **20**A and **20**B. More specifically, the shipping container **600** can include a front cushioning block **621**, a left-side cushioning block **622**, a right-side cushioning block **623**, a back cushioning block **624**, a first top cushioning block **625**, a second top cushioning block **626**, a first bottom cushioning block **627**, and a second bottom cushioning block **628**, attached to an inner surface of the front section **611**, the left-side section **612**, the right-side section **613**, the back section **614**, the first top flap **615**, the second top flap **616**, the first bottom flap **617**, and the second bottom flap **618**, respectively.

Each of the cushioning blocks **621**, **622**, **623**, **624**, **625**, **626**, **627**, and **628**, can be separated from each other with a gap therebetween. The corrugated fiberboard sheet **610** can thus include connection portions **619** between adjacent cushioning blocks **621**, **622**, **623**, **624**, **625**, **626**, **627**, and **628**. The connection portions **619** are similar to the connection positions discussed above, such as first connection portion **152**. The connection portions **619** allow adjacent cushioning blocks **621**, **622**, **623**, **624**, **625**, **626**, **627**, and **628** to be folded relative to each other from the flat configuration shown in FIG. **26**A to the folded configuration shown in FIG. **26**B, to form the shipping container **600** with a product cavity **122** formed therein for a product to be shipped. The shipping container **600** can be held in the folded configuration using the methods for shipping boxes, such as a strip of adhesive (e.g., tape) or adhesive applied to overlapping portions of the shipping container **600**.

FIGS. **27**A and **27**B show a shipping container **601** formed using the cushioning blocks **200** (see, e.g., FIG. **2**) discussed herein. The shipping container **601** is similar to the shipping container **600** discussed above with reference to FIGS. **26**A and **26**B. The shipping container **601** is configurable in a flat configuration and a folded configuration. The flat configuration is shown in FIG. **27**A and the folded configuration is shown in FIG. **27**B. An advantage of using the cushioning blocks **200** discussed herein is that the cushioning blocks **200** can be configurated to conform more directly to the product **10** and, in particular, a product **10** that does not have a rectangular shape. The cushioning blocks **621**, **622**, **623**, **624**, **625**, **626**, **627**, and **628** can have positions with additional layers added thereto to better conform to the shape of the product **10** and form a product cavity **122** that has a non-rectangular cross-sectional. As shown in FIGS. **27**A and **27**B, for example, the front cushioning block **621** and the back cushioning block **624** each include portions with additional layers **632**, such as additional cushioning layers, formed thereon. To accommodate additional layers **632**, other cushioning blocks **621**, **622**, **623**, **624**, **625**, **626**, **627**, and **628**, such as the first top cushioning block **625**, the second top cushioning block **626**, the first bottom cushioning block **627**, and the second bottom cushioning block **628**, can include cutouts **634** to accommodate additional layers **632**.

FIGS. **28**A and **28**B show a shipping container **602** formed using the cushioning blocks **200** (see, e.g., FIG. **2**) discussed herein. The shipping container **602** is similar to the shipping container **601** discussed above with reference to FIGS. **27**A and **27**B. The shipping container **602** is configurable in a flat configuration and a folded configuration. The flat configuration is shown in FIG. **28**A, and the folded configuration is shown in FIG. **28**B. As noted above, irregular cushioning layers **500** can be advantageously used to form irregular cushioning blocks **636**. As shown in FIGS. **28**A and **28**B, one or more of the cushioning blocks can be an irregular cushioning block **636**, such as the back cushioning block **624**, for example. Other cushioning blocks, such as the second top cushioning block **626** and the second

bottom cushioning block **628**, can be shaped to accommodate the irregular cushioning blocks **636** when in the folded configuration.

FIGS. **29**A and **29**B show another shipping container **603**. The shipping container **603** is similar to the shipping container **602** shown in FIGS. **28**A and **28**B and is configurable in a flat configuration and a folded configuration. The flat configuration is shown in FIG. **29**A, and the folded configuration is shown in FIG. **29**B. Instead of using the corrugated fiberboard sheet **610**, the shipping container **603** is formed from a single, foldable molded cushioning panel **640**, similar to the cushioning panel **301** discussed above with reference to FIGS. **3**A and **3**B, and the corner-shaped packing material **160** discussed above with reference to FIGS. **21**A and **21**B. Although described with reference to cushioning panel **301** (FIGS. **3**A and **3**B), any of the cushioning panels **300** (e.g., FIGS. **3**A to **3**G) discussed herein may be used.

The foldable molded cushioning panel **640** includes a front projection section **641**, a left-side projection section **642**, a right-side projection section **643**, a back projection section **644**, a first top flap projection section **645**, a second top flap projection section **646**, a first bottom flap projection section **647**, and a second bottom flap projection section **648** arranged in a manner similar to the front section **611**, the left-side section **612**, the right-side section **613**, the back section **614**, the first top flap **615**, the second top flap **616**, the first bottom flap **617**, and the second bottom flap **618**, discussed above. Each of these projection sections **641**, **642**, **643**, **644**, **645**, **646**, **647**, and **648** are sections containing projections **320**, such as the cylindrical projections **331**.

The foldable molded cushioning panel **640** also includes connection portions **649** similar to the first connection portion **172** discussed above with reference to FIGS. **21**A and **21**B. The connection portions **649** are positioned between adjacent projection sections **641**, **642**, **643**, **644**, **645**, **646**, **647**, and **648** to allow the projection sections **641**, **642**, **643**, **644**, **645**, **646**, **647**, and **648** to be folded relative to each other in the manner discussed above, as with the foldable molded cushioning panel **170** in FIGS. **21**A and **21**B, additional layers discussed herein can be attached to each of the projection sections **641**, **642**, **643**, **644**, **645**, **646**, **647**, and **648** to form the various cushioning blocks discussed herein.

FIGS. **30**A and **30**C show another shipping container **604** (FIG. **30**C). The shipping container **604** shown in FIGS. **30**A and **30**C is similar to the shipping container **603** discussed above with reference to FIGS. **29**A and **29**B. Instead of being formed from one foldable molded cushioning panel, the shipping container **603** shown in FIGS. **30**A to **30**C is formed from a plurality of foldable molded cushioning panels. FIG. **30**A shows a first foldable molded cushioning panel **652**, and FIG. **30**B shows a second foldable molded cushioning panel **654**. Each of the first foldable molded cushioning panel **652** and the second foldable molded cushioning panel **654** can be any of the cushioning panels **300** (e.g., FIGS. **3**A to **3**G) discussed herein, such as the cushioning panel **301** with cylindrical projections **331**, for example. The first foldable molded cushioning panel **652** can be positioned relative to the second foldable molded cushioning panel **654** to form a cushioning layer **650** (FIG. **30**C), similarly to the first cushioning panel **220** (FIG. **2**) and the second cushioning panel **230** (FIG. **2**) in the manner discussed above. The first foldable molded cushioning panel **652** is an inner cushioning panel that can be positioned adjacent to the product **10** (FIG. **30**C) and can be an irregular cushioning sheet, similar to the first cushioning panel **512** (FIG. **16**A) discussed above. The first foldable molded cushioning panel **652** is shown in a flat configuration in FIG. **30**A, and the second foldable molded cushioning panel **654** is shown in a flat configuration in FIG. **30**B.

FIG. **30**C shows the first foldable molded cushioning panel **652** and the second foldable molded cushioning panel **654** in a folded configuration to form the shipping container **604**. The first foldable molded cushioning panel **652** can be folded to form the product cavity **122**. The cushioning layer **650**, including each of the first foldable molded cushioning panel **652** and the second foldable molded cushioning panel **654**, can be folded to surround the product **10**. The first foldable molded cushioning panel **652** and the second foldable molded cushioning panel **654** can each be folded independently to form the cushioning layer **650**. For example, the first foldable molded cushioning panel **652** can be folded and then the second foldable molded cushioning panel **654** can be folded around the first foldable molded cushioning panel **652** to form the cushioning layer **650** and the shipping container **604**. Alternatively, the first foldable molded cushioning panel **652** and second foldable molded cushioning panel **654** can be placed together in the flat configuration and then folded together. The first foldable molded cushioning panel **652**, whether alone or connected to the second foldable molded cushioning panel **654**, can also be folded around the product **10**.

FIG. **31** shows an alternative cushioning panel **700**. The cushioning layers **210** (FIG. **2**) used in the cushioning blocks **200** (FIG. **2**) discussed above are formed using the molded paper pulp panel as the cushioning panel, but other cushioning panels may be used to form the cushioning blocks. This cushioning panel **700** is formed from a sheet that includes projections **720** that are allowed to deform when a load is exerted thereon. More specifically in FIG. **31**, the cushioning panel **700** includes a plurality of flutes **722** formed in the sheet that also includes a base layer **712**. The base layer **712** is similar to the base layers **310** (FIG. **3**B) discussed above. The flutes **722** form the projections **720** of the cushioning panel **700**. These flutes **722** are spaced apart from each other, and this spaced apart configuration allows the flutes **722** to deform relative to the base layer **712**, providing cushioning. The cushioning panel **700** can be formed from various cellulosic sheets discussed above. The corrugated fiberboard sheet **710** can be folded, or otherwise formed, into the flutes **722**. The flutes **722** are elongated and extend parallel to each other. The flutes **722** can have various shapes, as will be discussed further below.

The cushioning panel **700** shown in FIG. **31** includes flutes **722** that are triangularly shaped, which are referred to herein as triangular flutes **732**. For clarity, with other cushioning panels discussed herein, these cushioning panels are referred to as triangularly fluted cushioning panels **730**. The triangular flutes **732** include a plurality of cell walls that define a triangularly shaped cell, which is referred to as a triangular cell **734**. The plurality of cell walls includes a distal wall **742**, forming the base of the triangle, and is similar to the distal ends **322** (see, FIG. **3**B) discussed above. The first transverse wall **744** is distal from the base layer **712**. The plurality of cell walls also includes a first transverse wall **744** and a second transverse wall **746**. The first transverse wall **744** and the second transverse wall **746** can be a portion of the corrugated fiberboard sheet **710** that extends transversely from the base layer **712** or a surface thereof. The corrugated fiberboard sheet **710** can be a continuous sheet, and each of the first transverse wall **744** and the second transverse wall **746** connects one of the base layer **712** with the distal wall **742**, forming a side of one of

the triangular cells **734**. The ends of the first transverse wall **744** and the second transverse wall **746** are closer to each other on the base layer **712** side than the ends on the distal wall **742**, forming an apex **736** of the triangular cell **734**. The first transverse wall **744** and the second transverse wall **746** can abut each other at the second transverse wall **746**, but, as shown in FIG. **31**, for example, the ends of each of the first transverse wall **744** and the second transverse wall **746** can be spaced apart from each other to form a gap in the base layer **712**. The sizing and spacing of the flutes **722**, such as the triangular flutes **732**, including the gap at the apex **736** can be varied to provide different cushioning properties.

FIG. **32** shows the triangularly fluted cushioning panel **730** used as a cushioning layer **210** of a cushioning block **208**. The triangularly fluted cushioning panel **730** can be used in a manner similar to any one of the cushioning panels discussed above. As shown in FIG. **32**, for example, the triangularly fluted cushioning panel **730** is used to form a composite cushioning block with a rigid layer **270** formed of a honeycomb panel **410**.

FIG. **33** shows rigid sheet panel **400** and, more specifically, a shaped corrugated fiberboard rigid sheet panel **402**. The shaped corrugated fiberboard rigid sheet panel **402**, shown in FIG. **33**, includes a first surface and a second surface. For ease of reference herein, the first surface will be referred to as a top surface **432** and the second surface will be referred to as a bottom surface **434**, but depending upon use, the surfaces may have different orientations, such as outer surfaces and inner surfaces. The shaped corrugated fiberboard rigid sheet panel **402** can be formed from a corrugated fiberboard sheet **436** that is folded or otherwise shaped to form a plurality of triangularly shaped cells and, more specifically, a plurality of first triangular cells **440** and a plurality of second triangular cells **450**. The first triangular cells **440** and second triangular cells **450** are arranged in an alternating pattern with each of the first triangular cells **440** adjacent to and, more specifically, between two of the second triangular cells **450** and, similarly, with the exception of an end cell, each of the second triangular cells **450** is adjacent to and, more specifically, between two of the first triangular cells **440**. The end cells, however, are adjacent to only one cell. If one of the first triangular cells **440** is on the end (an end cell), the end cell of the first triangular cells **440** is adjacent to one of the second triangular cells **450** and, similarly, if one of the second triangular cells **450** is on the end (an end cell), the end cell of the second triangular cells **450** is adjacent to one of the first triangular cells **440**. Each of the plurality of triangular cells (i.e., the first triangular cells **440** and the second triangular cells **450**) have a longitudinal axis, which, in the depicted embodiment, extends in a direction parallel to the top surface **432**, the bottom surface **434**, or both.

Each of the first triangular cells **440** includes a base portion, which is referred to herein as a first base portion **442**. The first base portion **442** is a portion of the corrugated fiberboard sheet **436**, and collectively, the plurality of first base portions **442** forms a top wall. The top surface **432** is an outer surface of the top wall. Similarly, each of the second triangular cells **450** includes a base portion, which is referred to herein as a second base portion **452**. The second base portion **452** is a portion of the corrugated fiberboard sheet **436**, and collectively, the plurality of second base portions **452** forms a bottom wall. The bottom surface **434** is an outer surface of the bottom wall. The first triangular cells **440** and the second triangular cells **450** are thus arranged in an interlocking pattern.

The shaped corrugated fiberboard rigid sheet panel **402** also includes a plurality of transverse walls **438**. A transverse wall **438** can be a portion of the corrugated fiberboard sheet **436** that extends transversely to the top surface **432** and the bottom surface **434**. The shaped corrugated fiberboard rigid sheet panel **402** can be formed from a continuous sheet (i.e., the corrugated fiberboard sheet **436**), and each transverse wall **438** connects one of the first base portions **442** with one of the second base portions **452**, forming a side of one of the triangularly shaped cells. The transverse wall **438** separates one first triangular cell **440** from an adjacent second triangular cell **450**. Two transverse walls **438** are brought together opposite a base portion to form the apex of the triangular cell. More specifically, two transverse walls **438** may be brought together opposite the first base portion **442** to form a first apex **444** of one of the first triangular cells **440**, and two transverse walls **438** may be brought together opposite the second base portion **452** to form a second apex **454** of one of the second triangular cells **450**. The transverse walls **438** attach to the ends of the first base portion **442** and the second base portion **452**. In the depicted embodiment, each end of the first base portion **442** abuts an end of an adjacent first base portion **442** at the second apex **454**, and each end of the second base portion **452** abuts an end of an adjacent second base portion **452** at the first apex **444**. In some embodiments, an adhesive may be at each of the first apexes **444** and each of the second apexes **454**.

The transverse walls **438** of the depicted embodiment have the same length and thus the first triangular cells **440** and the second triangular cells **450** may be isosceles triangles or equilateral triangles. In some embodiments, the first base portion **442** and/or the second base portion **452** is the same length as each of the transverse walls **438**, but in other embodiments, the first base portion **442** and/or the second base portion **452** has a length that is greater or less than each of the transverse walls **438**. The first triangular cells **440** and the second triangular cells **450** are each acute isosceles triangles in FIG. **1**, but other shapes may be used, such as obtuse triangles. The numbers, size, and density of the cells may be varied according to the overall crush, burst, and flexibility desired. The angles of the vertices and length of the first base portion **442**, the second base portion **452**, and the transverse walls **438** of the triangular cells may be varied to adjust the properties of the shaped corrugated fiberboard rigid sheet panel **402**.

FIG. **34** shows the shaped corrugated fiberboard rigid sheet panel **402** used as the rigid layer **270** of a cushioning block **209**. The shaped corrugated fiberboard rigid sheet panel **402** can be used in a manner similar to any one of the rigid sheet panels discussed above. As shown in FIG. **34**, for example, the shaped corrugated fiberboard rigid sheet panel **402** is used to form a composite cushioning block with the triangularly fluted cushioning panel **730**.

FIG. **35** shows another alternative cushioning panel **700**. As noted above, the flutes **722** can have various shapes, and the cushioning panel **700** shown in FIG. **35** has projections **720** that are V-shaped or waved shaped. For clarity with other cushioning panels discussed herein, this cushioning panel is referred to as a V-shaped cushioning panel **750**. The V-shaped cushioning panel **750** can be formed from a cellulosic sheet discussed herein, such as a corrugated fiberboard sheet **752**. The V-shaped cushioning panel **750** includes a plurality of macro flutes **760** that are arranged parallel to each other. These macro flutes **760** will be referred to as macro flutes **760** to distinguish these flutes from the interior flutes of the corrugated fiberboard sheet

752 forming the V-shaped cushioning panel 750. The macro flutes 760 of the V-shaped cushioning panel 750 are parallel to the interior flutes.

The macro flutes 760 can have a generally triangular shape (or V-shape) with a first planar surface 762 connected to a second planar surface 764 at a peak 766. Adjacent macro flutes 760 are connected to each other at a valley 768, providing a structure of a plurality of alternating ridges (the peaks 766) and grooves (the valleys 768). The macro flutes 760 are shown as having the same height and spacing, but they are not so limited and may have different heights and spacings.

FIG. 36 shows the V-shaped cushioning panel 750 used as a cushioning layer 210 of a cushioning block 754. The V-shaped cushioning panel 750 can be used in a manner similar to any one of the cushioning panels discussed above. As shown in FIG. 36, for example, the V-shaped cushioning panel 750 is used to form a composite cushioning block with a rigid layer 270 formed of a honeycomb panel 410.

FIGS. 37A and 37B show another alternative cushioning panel 700. For clarity with other cushioning panels discussed herein, this cushioning panel is referred to as a finned cushioning panel 770. FIG. 11A is a perspective view of the finned cushioning panel 770, and FIG. 37B is a detail view, showing detail 37B in FIG. 37A of the finned cushioning panel 770. The projections 720 of the finned cushioning panel 770 are fins 780 that are arranged parallel to each other. The finned cushioning panel 770 can be formed from a cellulosic sheet discussed herein, such as a corrugated fiberboard sheet 772. The fins 780 of the finned cushioning panel 770 can be parallel to the interior flutes of the corrugated fiberboard sheet 772 used to form the finned cushioning panel 770. The fins 780 can be separated from each other by a base section 774 of the finned cushioning panel 770. The base section 774 is generally planar. The base section 774 can be similar to the base layers discussed above. Each of the fins 780 is connected to a base section 774, and the fins 780 project from the base section 774.

As shown in FIG. 37B, the fins 780 of this embodiment have a U-shape or a horseshoe shape, and each fin 780 includes a first projecting portion 782 connected to a second projecting portion 784 at a peak 786. The peak 786 is similar to the distal ends of the projections discussed above. The end of each of the first projecting portion 782 and the second projecting portion 784 that is connected to the base section 774 is a base end portion 788. The base end portion 788 is the end of the first projecting portion 782 or the second projecting portion 784 opposite the peak 786. The first projecting portion 782 and the second projecting portion 784 can be continuously connected to each other at the peak 786 and can be a continuation of the same corrugated material at the peak 786 without being cut or separated.

Other portions of the first projecting portion 782 and the second projecting portion 784 (beyond the peak 786) may also be connected to each other. For example, an adhesive may be applied between an interior surface of the first projecting portion 782, an interior surface of the second projecting portion 784, or both. Although the adhesive may be applied to the full length of the interior surface of the first projecting portion 782 and/or the interior surface of the second projecting portion 784, the adhesive can be applied between the base end portion 788 of the interior surface of the first projecting portion 782 and/or the base end portion 788 the interior surface of the second projecting portion 784. In this way, the first projecting portion 782 and the second projecting portion 784 are also connected to each other at the base end portion 788. Connecting the first projecting portion 782 and the second projecting portion 784 at the base end portion 788 helps prevent the fin 780 from spreading out when a force is applied to the peak 786, for example, and thus provides rigidity to the fin 780 and a protective (cushioning) effect of the finned cushioning panel 770 overall. Among other things, the spacing between the fin 780 (e.g., the length of the base section 774) can be varied to adjust the cushioning properties of the finned cushioning panel 770.

FIG. 38 shows the finned cushioning panel 770 used as a cushioning layer 210 of a cushioning block 776. The finned cushioning panel 770 can be used in a manner similar to any one of the cushioning panels discussed above. As shown in FIG. 36, for example, the finned cushioning panel 770 is used to form a composite cushioning block with a rigid layer 270 formed of a honeycomb panel 410.

FIGS. 39A and 39B show a cushioning block 460 having a cushioning layer 210, such as the cushioning layer 211 discussed above, and a rigid layer 270. FIG. 39A is an exploded view of the cushioning block 460, and FIG. 39B is a perspective view of the cushioning block 460. Although shown with the cushioning layer 211 discussed above with reference to FIGS. 4A and 4B, any of the cushioning layers discussed herein can be used. The rigid layer 270 includes one or more rigid sheet panels 400. The rigid sheet panel 400 shown in FIGS. 39A and 39B is referred to herein as a lattice-structured rigid sheet panel 404. The lattice-structured rigid sheet panel 404 can be used in any of the cushioning blocks discussed herein.

The lattice-structured rigid sheet panel 404 includes a plurality of strips including first strips 462 and second strips 464 positioned transversely to each other to form a lattice structure 466 with a plurality of cells 468. The first strips 462 and the second strips 464 have a width that is oriented in the thickness direction of the cushioning block 460. The first strips 462 and the second strips 464 can be positioned such that the cells 468 are oriented in the thickness direction of the cushioning block 460. The first strips 462 and the second strips 464 can be positioned orthogonal to the outer side 238 of the second cushioning panel 230. The cells 468 are shown as rectangular cells with the first strips 462 being positioned orthogonally relative to the second strips 464, but other angles can be used.

The lattice structure 466 can be formed in different ways. The lattice structure 466 can be formed as a molded pulp structure with the first strips 462 and the second strips 464 being integrally formed with each other. Alternatively, the first strips 462 and the second strips 464 can be formed as separate strips and then interlocked with each other. For example, the first strips 462, the second strips 464, or both, can have slits formed therein to interlock with the other strip. The first strips 462 and the second strips 464 can be corrugated fiberboard strips that are interlocked with each other. When the first strips 462 and the second strips 464 are corrugated fiberboard strips, the flutes of the corrugated fiberboard can be oriented in the thickness direction of the cushioning block 460.

As noted above, adhesive can be used in various contexts. Any suitable adhesive may be used, but throughout the embodiments discussed herein, the adhesive is preferably a biodegradable adhesive.

Throughout the embodiments discussed herein, various features are described as being similar to one another. Accordingly, the discussion of one feature also applies to the features that are similar to that feature. In some cases, the same reference numerals are used to describe the same or similar features throughout. Additionally, various layers are described separately above, but as noted, these layers can be

combined in various combinations, including those not explicitly illustrated, to form packing materials and, more specifically, various different cushioning blocks.

Although this invention has been described with respect to certain specific exemplary embodiments, many additional modifications and variations will be apparent to those skilled in the art in light of this disclosure. It is, therefore, to be understood that this invention may be practiced otherwise than as specifically described. Thus, the exemplary embodiments of the invention should be considered in all respects to be illustrative and not restrictive, and the scope of the invention to be determined by any claims supportable by this application and the equivalents thereof, rather than by the foregoing description.

What is claimed is:

1. A packing material comprising:

one or more cushioning layers, each cushioning layer including:

a first molded pulp cushioning panel comprising a plurality of cellulosic fibers molded into a panel having a first base layer and a plurality of first projections extending therefrom, each of the first projections having a distal end that is distal from the first base layer; and

a second molded pulp cushioning panel comprising a plurality of cellulosic fibers molded into a panel having a second base layer and a plurality of second projections extending therefrom, each of the second projections having a distal end that is distal from the second base layer,

wherein the first molded pulp cushioning panel is positioned with the plurality of first projections projecting toward the second molded pulp cushioning panel, and

wherein the second molded pulp cushioning panel is positioned with the plurality of second projections projecting toward the first molded pulp cushioning panel, and at least a portion of the second projections of the plurality of second projections being second contacting projections, the distal ends of the second contacting projections contacting the first molded pulp cushioning panel.

2. The packing material of claim **1**, wherein the first molded pulp cushioning panel and the second molded pulp cushioning panel are a first portion and a second portion of a foldable molded pulp panel having a connection portion connecting the first portion and the second portion.

3. The packing material of claim **1**, wherein at least a portion of the second contacting projections are internal second contacting projections, and each internal second contacting projection is positioned between two or more adjacent first projections of the plurality of first projections.

4. The packing material of claim **1**, wherein at least a portion of the first projections of the plurality of first projections are first contacting projections, the distal ends of the first contacting projections contacting the second molded pulp cushioning panel.

5. The packing material of claim **4**, wherein at least a portion of the second contacting projections are internal second contacting projections, and each internal second contacting projection is positioned between two or more adjacent first projections of the plurality of first projections.

6. The packing material of claim **4**, wherein the first contacting projections contact the second molded pulp cushioning panel by the distal end of each first contacting projection contacting at least one of the plurality of second projections, and

wherein the second contacting projections contact the first molded pulp cushioning panel by the distal end of each second contacting projection contacting at least one of the plurality of first projections.

7. The packing material of claim **6**, wherein the first contacting projections and the second contacting projections are positioned to directly oppose each other with the distal end of each first contacting projection contacting a distal end of a corresponding second contacting projection.

8. The packing material of claim **1**, comprising two or more cushioning layers including a first cushioning layer and a second cushioning layer,

wherein, for each cushioning layer, the first base layer has an inner side and an outer side, the inner side of the first base layer being positioned to oppose the second molded pulp cushioning panel and the plurality of first projections extending from the inner side of the first base layer, and the second base layer has an inner side and an outer side, the inner side of the second base layer being positioned to oppose the first molded pulp cushioning panel and the plurality of second projections extending from the inner side of the second base layer, and

wherein the outer side of one of the first base layer or the second base layer of the first cushioning layer abuts the outer side of one of the first base layer or the second base layer of the second cushioning layer.

9. The packing material of claim **1**, wherein the first projections, the second projections, or both are elongated ridges extending parallel to each other.

10. The packing material of claim **1**, wherein each first projection of the plurality of first projections has a first geometric shape, and

wherein each second projection of the plurality of second projections has a second geometric shape, the second geometric shape being a different geometric shape than the first geometric shape.

11. The packing material of claim **1**, wherein each first projection of the plurality of first projections has a first geometric shape, and

wherein each second projection of the plurality of second projections has a second geometric shape, the second geometric shape being the same geometric shape as the first geometric shape.

12. The packing material of claim **1**, wherein, for each cushioning layer, the second base layer has an inner side and an outer side, the inner side of the second base layer being positioned to oppose the first molded pulp cushioning panel and the plurality of second projections extending from the inner side of the second base layer, each second projection of the plurality of second projections having a tip and a length from the inner side to the tip, the plurality of second projections having a plurality of different lengths.

13. A composite packing material comprising:

one or more cushioning layers arranged to have a product side and an outer side, each cushioning layer including:

a first molded pulp cushioning comprising a plurality of cellulosic fibers molded into a panel having a first base layer and a plurality of first projections extending therefrom; and

a second molded pulp cushioning panel comprising a plurality of cellulosic fibers molded into a panel having a second base layer and a plurality of second projections extending therefrom,

wherein the first molded pulp cushioning panel and the second molded pulp cushioning panel are positioned to contact each other with the plurality of first projections

projecting toward the second molded pulp cushioning panel and the plurality of second projections projecting toward the first molded pulp cushioning panel; and

a cellulosic sheet positioned on the outer side of the one or more cushioning layers.

14. The composite packing material of claim **13**, wherein the cellulosic sheet is a corrugated fiberboard sheet.

15. The composite packing material of claim **14**, further comprising a rigid panel positioned between one of the cushioning layers and the cellulosic sheet, the rigid panel being formed of a cellulosic material, wherein the rigid panel has a rigidity greater than that of each cushioning layer when a load is applied in a thickness direction of the rigid panel or the cushioning layer.

16. The composite packing material of claim **13**, wherein the cellulosic sheet is a honeycomb panel including a plurality of cells extending in a thickness direction of the packing material, and the plurality of first projections and the plurality of second projections extend in the thickness direction of the packing material.

17. A composite packing material comprising:

a cushioning layer including a molded pulp cushioning panel comprising a plurality of cellulosic fibers molded into a panel having a base layer and a plurality of projections extending therefrom, each of the projections having a distal end that is distal from the base layer, layer; and

a rigid panel contacting the cushioning layer, the rigid panel being formed of a cellulosic material,

wherein the rigid panel has a rigidity greater than that of the molded pulp cushioning panel when a load is applied in a thickness direction of the rigid panel or the molded pulp cushioning panel.

18. The composite packing material of claim **17**, wherein the rigid panel is a honeycomb panel including a plurality of cells extending in a thickness direction of the packing material.

19. The composite packing material of claim **17**, wherein the rigid panel is a lattice-structured panel having cells oriented in the thickness direction of the rigid panel.

20. The composite packing material of claim **17**, wherein the plurality of projections extends from the base layer in a direction away from the rigid panel.

21. The composite packing material of claim **17**, wherein the plurality of projections extends from the base layer in a direction toward from the rigid panel, the rigid panel including a first surface the distal ends of the plurality of projections contacting the first surface.

22. A packing material comprising:

one or more cushioning blocks capable of being positioned around an object-to-be-shipped on a product side of each cushioning block, each cushioning block comprising:

one or more cushioning layers, each cushioning layer including:

a first molded pulp cushioning panel comprising a plurality of cellulosic fibers molded into a panel having a first base layer and a plurality of first projections extending therefrom, each of the first projections having a distal end that is distal from the first base layer; and

a second molded pulp cushioning panel comprising a plurality of cellulosic fibers molded into a panel having a second base layer and a plurality of second projections extending therefrom, each of the second projections having a distal end that is distal from the second base layer,

wherein the first molded pulp cushioning panel is positioned with the plurality of first projections projecting toward the second molded pulp cushioning panel, and the second molded pulp cushioning panel is positioned with the plurality of second projections projecting toward the first molded pulp cushioning panel.

23. The packing material of claim **22**, wherein each cushioning block further comprises a rigid panel contacting one of the cushioning layers.

24. The packing material of claim **23**, wherein the rigid panel is a honeycomb panel having a plurality of cells extending in a direction to extend toward the product side of the cushioning block, the honeycomb panel being formed of a cellulosic material.

25. The packing material of claim **23**, wherein the one or more cushioning layers are positioned closer to the product side of each cushioning block than the rigid panel.

26. The packing material of claim **22**, wherein each cushioning block further comprises a cellulosic outer sheet, the cellulosic outer sheet being a corrugated fiberboard sheet.

27. The packing material of claim **26**, wherein each cushioning block further comprises a rigid panel contacting one of the cushioning layers, the corrugated fiberboard sheet contacting one of the cushioning layers or the rigid panel.

28. The packing material of claim **22**, wherein the one or more cushioning blocks includes a first cushioning block and a second cushioning block arranged transversely each other to form an L-shape and a product cavity therebetween.

29. The packing material of claim **22**, further comprising a corrugated fiberboard sheet including a first portion, a second portion, and a connecting portion connecting the first portion with the second portion,

wherein the one or more cushioning blocks includes a first cushioning block and a second cushioning block, the first cushioning block including the first portion of the corrugated fiberboard sheet and the second cushioning block including the second portion of the corrugated fiberboard sheet.

30. The packing material of claim **22**, further comprising:

a corrugated fiberboard sheet including a plurality of backing portions connected to each other by a plurality of connecting portions, each connecting portion connecting one backing portion with another backing portion; and

a plurality of the cushioning blocks, each cushioning block further comprising a backing portion of the plurality of backing portions,

wherein the plurality of backing portions connected to each other in a manner to be foldable into a shipping box.

* * * * *