US 20250256816A1

(19) United States
(12) Patent Application Publication
LAPPIN et al.

(10) Pub. No.: US 2025/0256816 A1
(43) Pub. Date: Aug. 14, 2025

(54) **ROLL STABILIZATION AND RELATED APPARATUSES**

(71) Applicant: **Dometic Marine Canada Inc.**, Richmond (CA)

(72) Inventors: **Derry William LAPPIN**, Vancouver (CA); **Mark Isaac Dyck**, Delta (CA); **Trevor Daniel Boleac**, Langley (CA); **Noam Dean Davidson**, Vancouver (CA); **Kevin Sean Stopp**, Richmond (CA); **Mackenzie Douglas Hart**, Vancouver (CA); **Ray Tat Lung Wong**, Richmond (CA)

(21) Appl. No.: **19/052,196**

(22) Filed: **Feb. 12, 2025**

Related U.S. Application Data

(63) Continuation-in-part of application No. 18/680,517, filed on May 31, 2024, which is a continuation-in-part of application No. 18/713,331, filed on May 24, 2024, filed as application No. PCT/CA2022/051725 on Nov. 23, 2022.

(60) Provisional application No. 63/283,181, filed on Nov. 24, 2021.

Publication Classification

(51) **Int. Cl.**

B63B 39/04	(2006.01)
F16C 35/04	(2006.01)
F16F 15/00	(2006.01)
F16F 15/30	(2006.01)
F16F 15/31	(2006.01)
F16F 15/315	(2006.01)
H02K 7/02	(2006.01)

(52) **U.S. Cl.**

CPC ***B63B 39/04*** (2013.01); ***F16C 35/04*** (2013.01); ***F16F 15/002*** (2013.01); ***F16F 15/302*** (2013.01); ***F16F 15/31*** (2013.01); ***F16F 15/3156*** (2013.01); ***H02K 7/02*** (2013.01); *F16C 2361/55* (2013.01); *F16F 2222/08* (2013.01); *F16F 2230/0005* (2013.01); *F16F 2230/08* (2013.01); *F16F 2230/10* (2013.01); *F16F 2230/18* (2013.01); *F16F 2230/22* (2013.01); *F16F 2230/30* (2013.01); *F16F 2232/02* (2013.01); *F16F 2236/08* (2013.01)

(57) **ABSTRACT**

This disclosure relates generally to roll stabilization and related apparatuses.

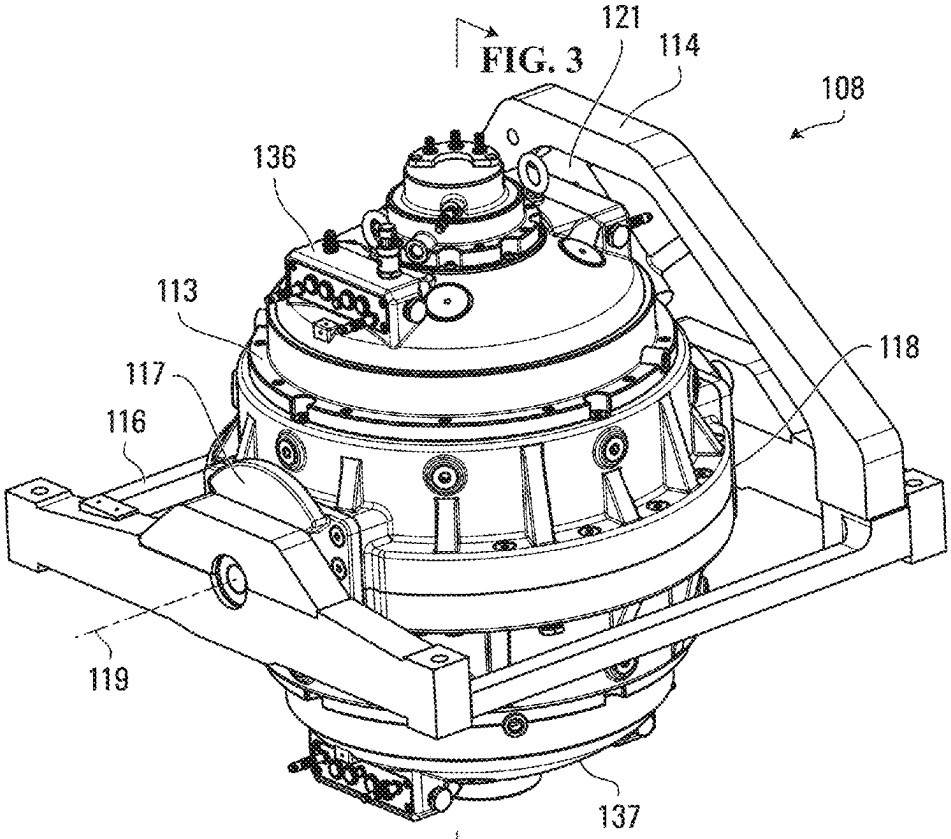

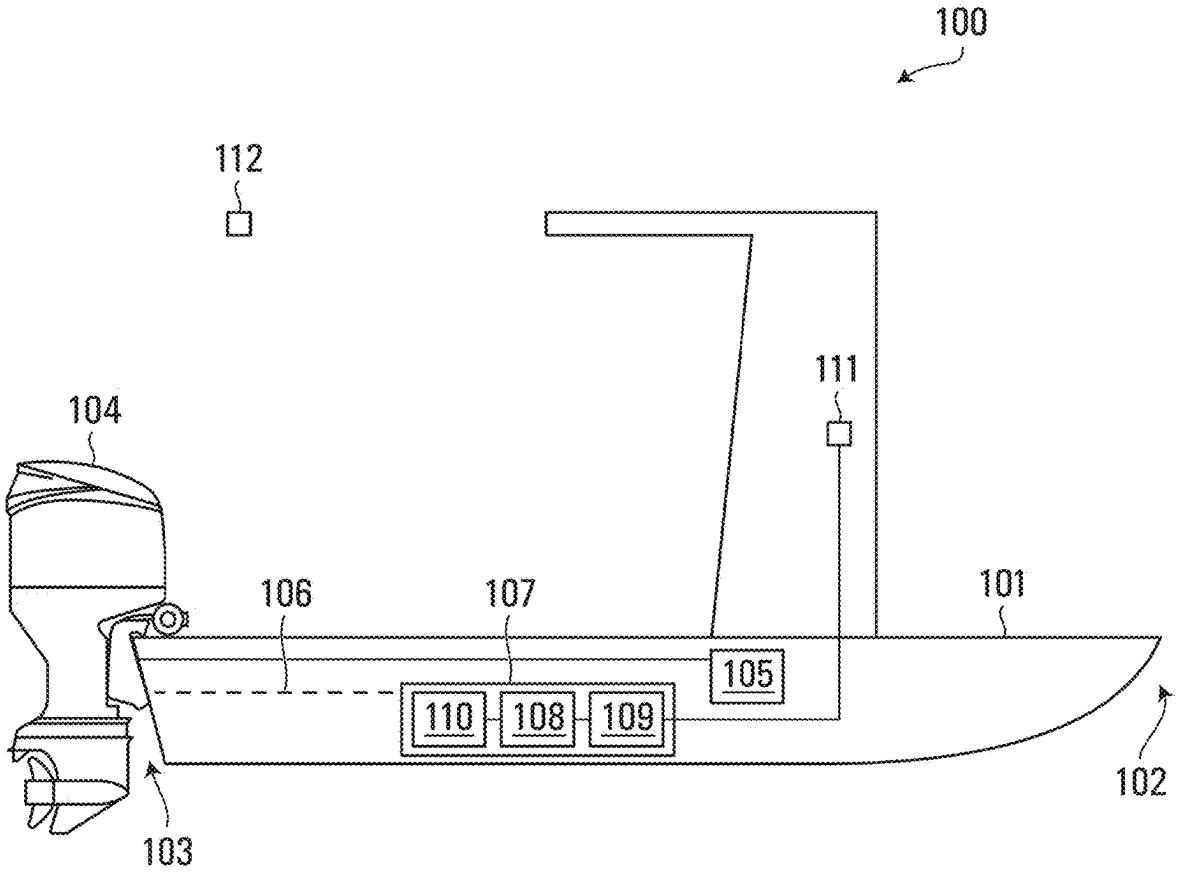

FIG. 1

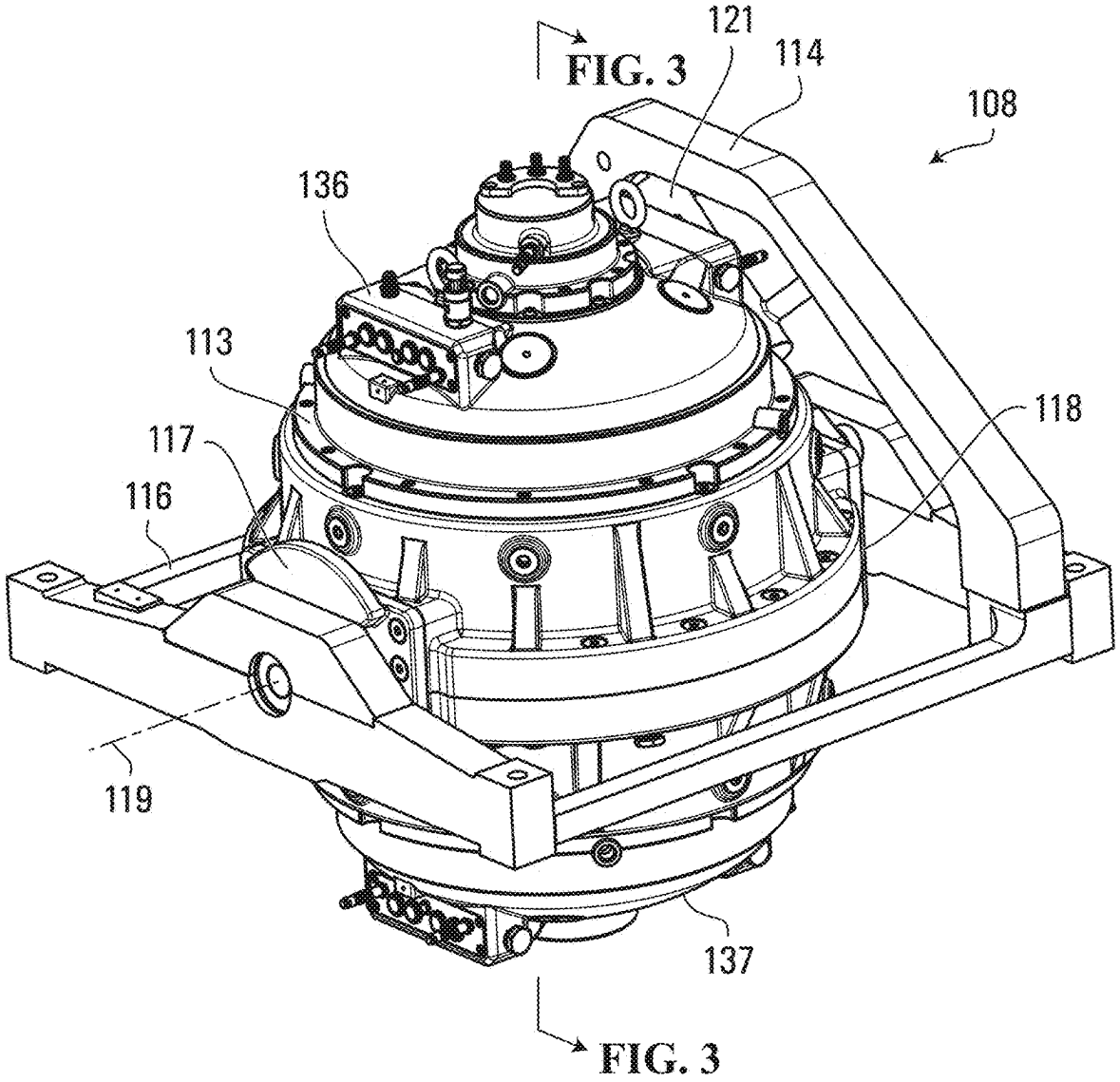

FIG. 2

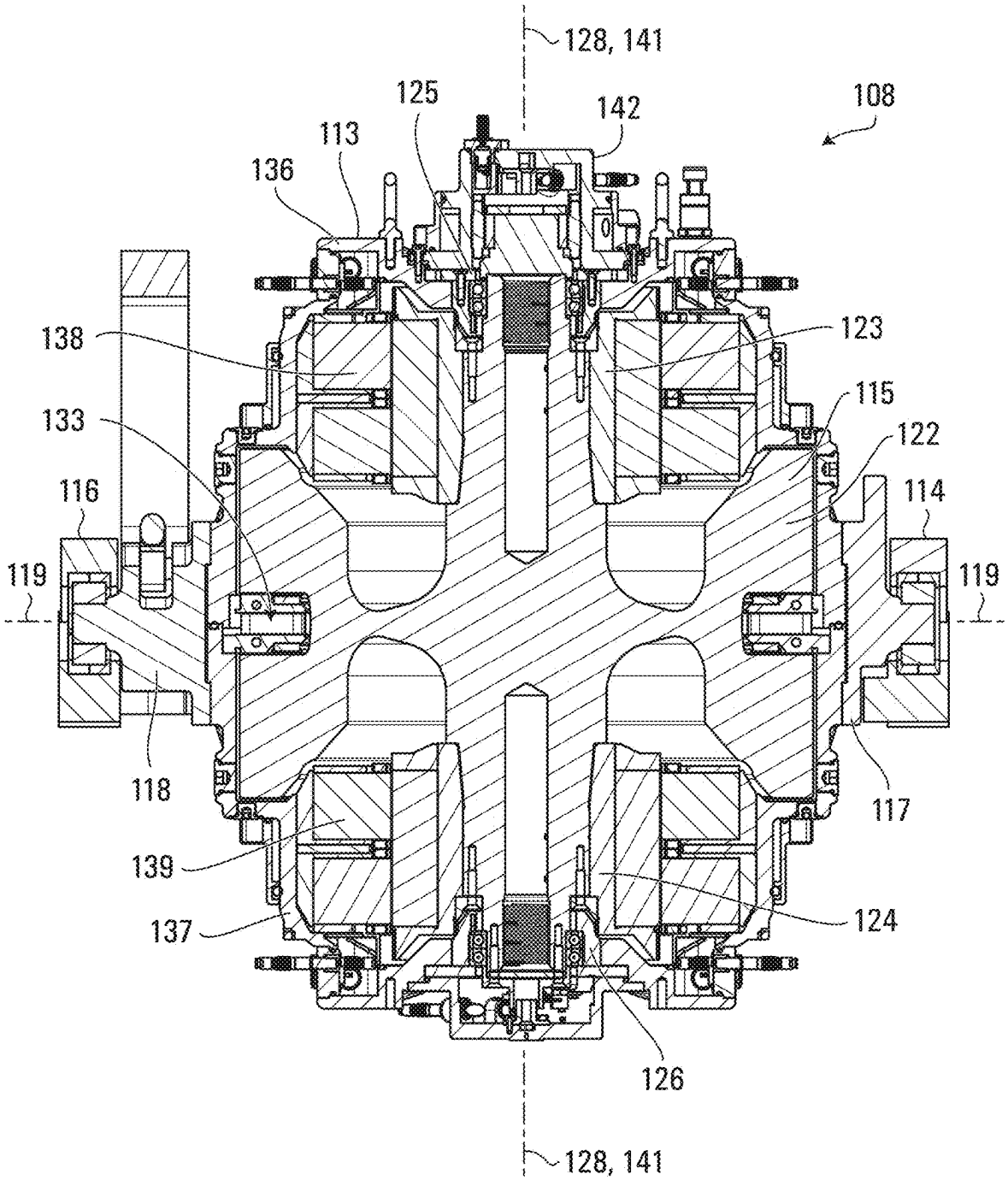
128, 141
125
142
108
113
136
138
123
115
133
122
116
114
119
119
118
117
139
124
137
126
128, 141

FIG. 3

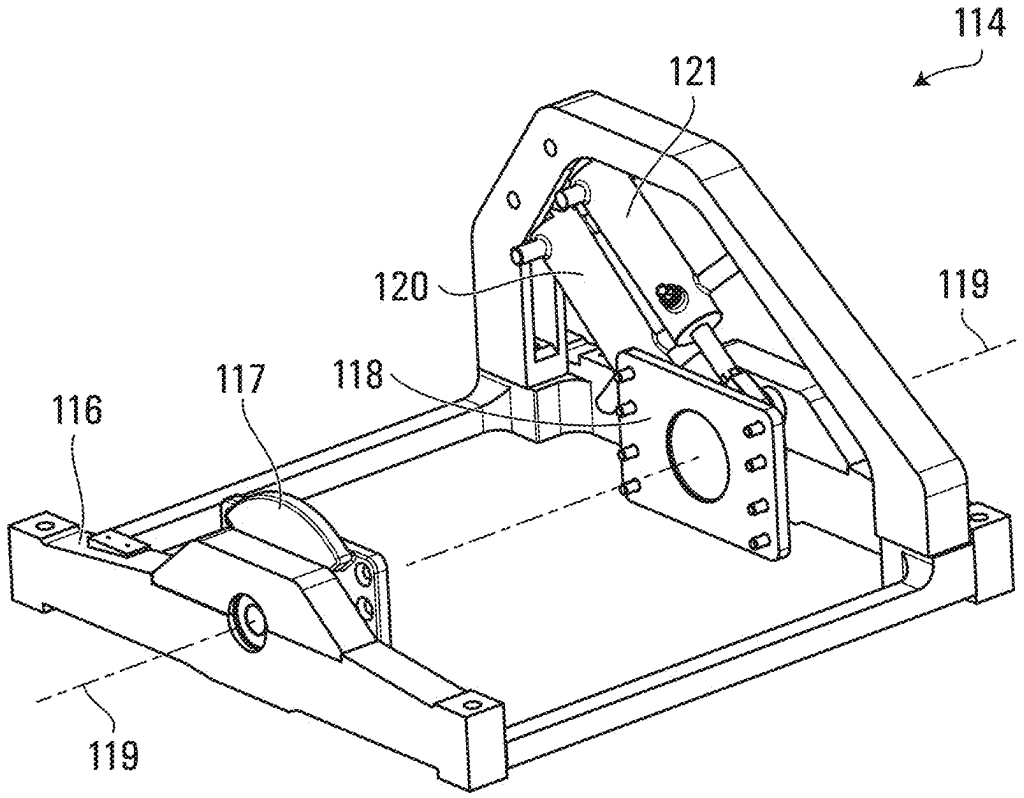

FIG. 4

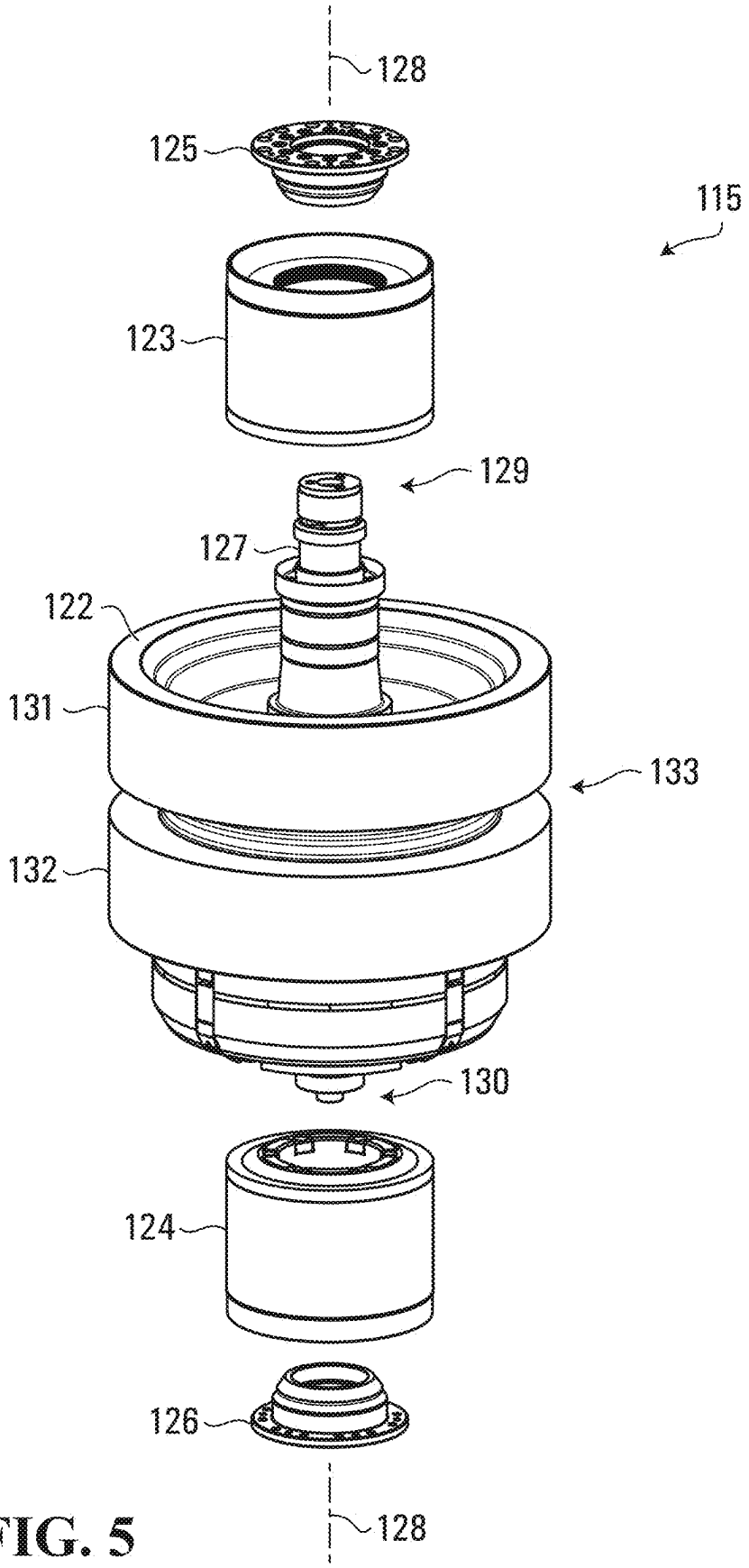

FIG. 5

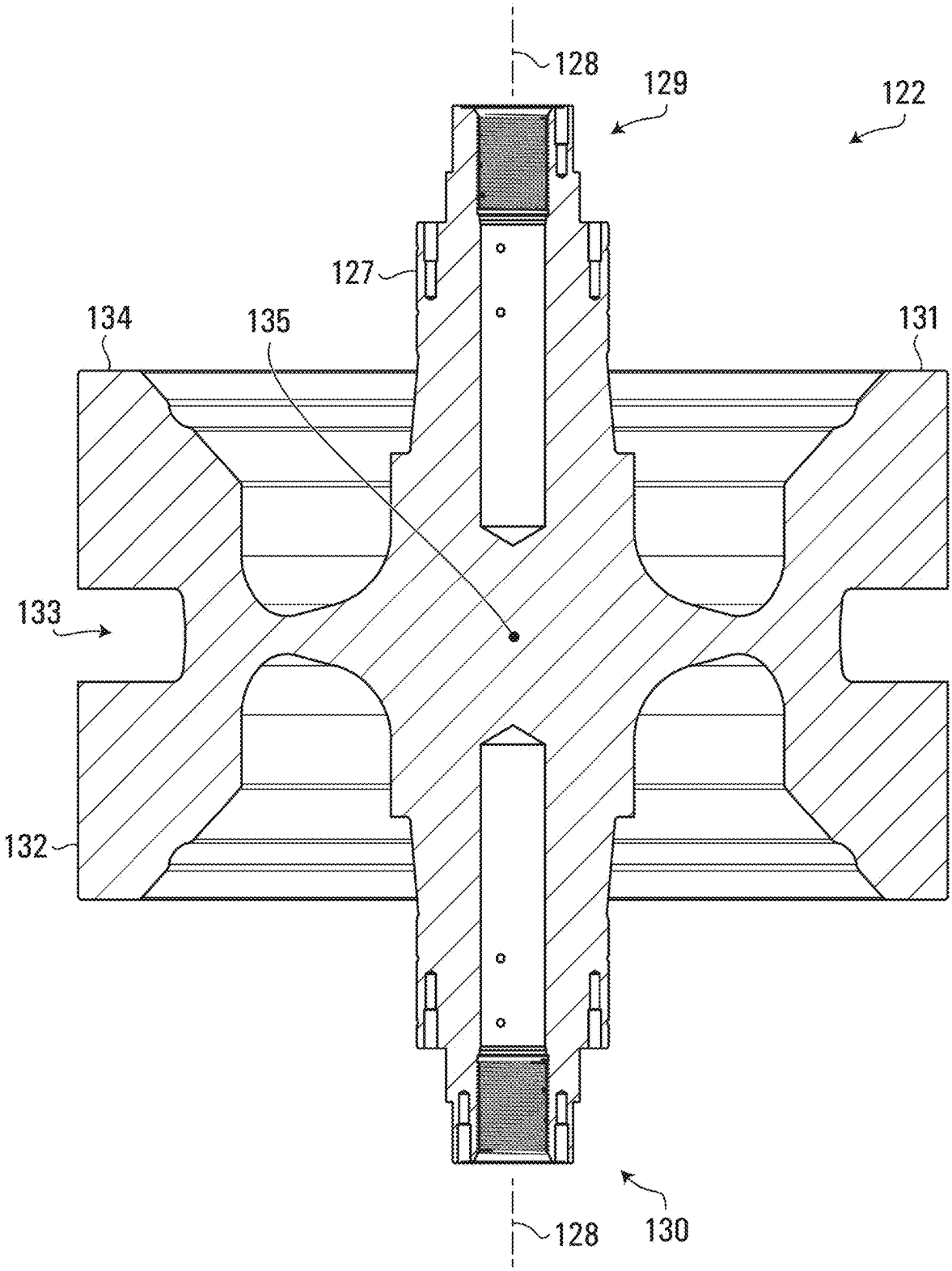

FIG. 6

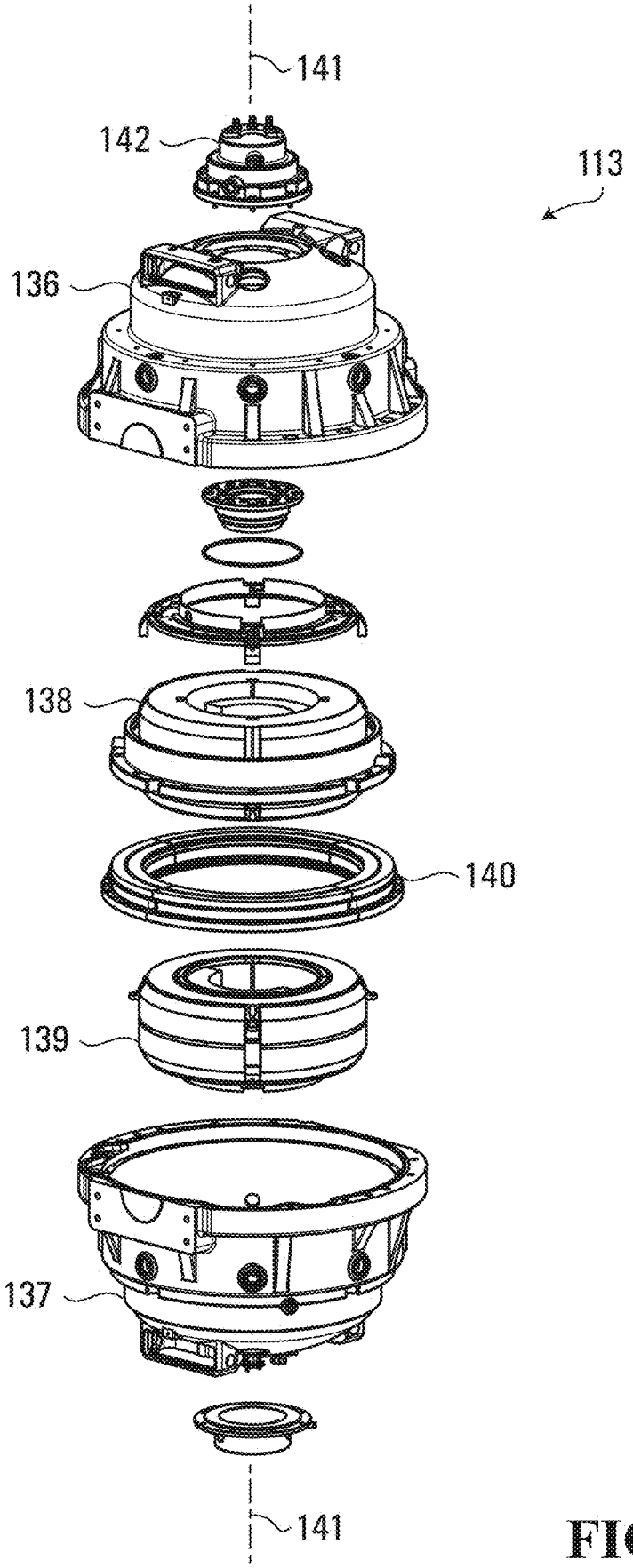

FIG. 7

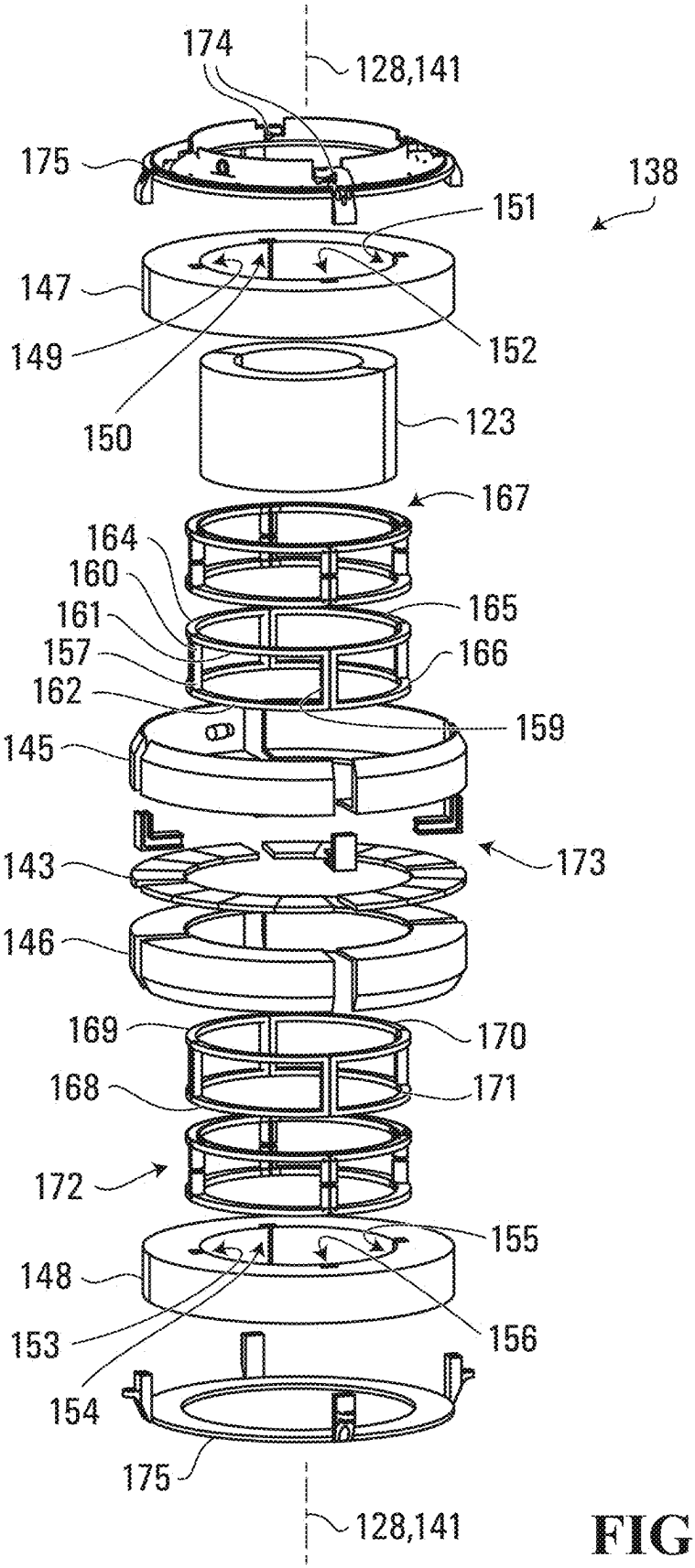
174
128,141
175
138
151
147
149
152
150
123
167
164
160
165
161
157
166
162
159
145
173
143
146
169
170
168
171
172
155
148
153
156
154
175
128,141

FIG. 8

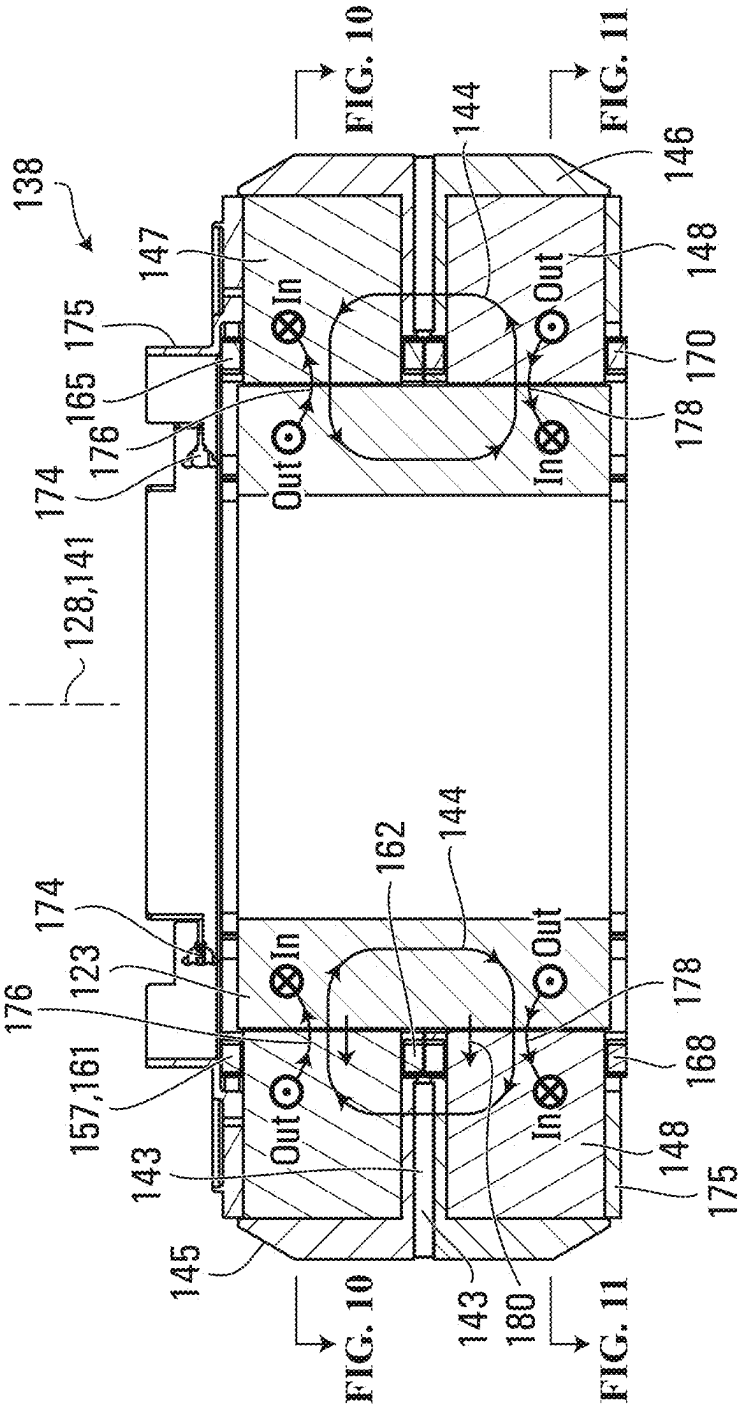
138
147
175
165
176
174
128,141
174
123
176
157,161
143
145
FIG. 10
FIG. 10
In
Out
Out
In
144
162
144
In
Out
Out
In
143
180
FIG. 11
FIG. 11
146
148
170
178
178
168
148
175

FIG. 9

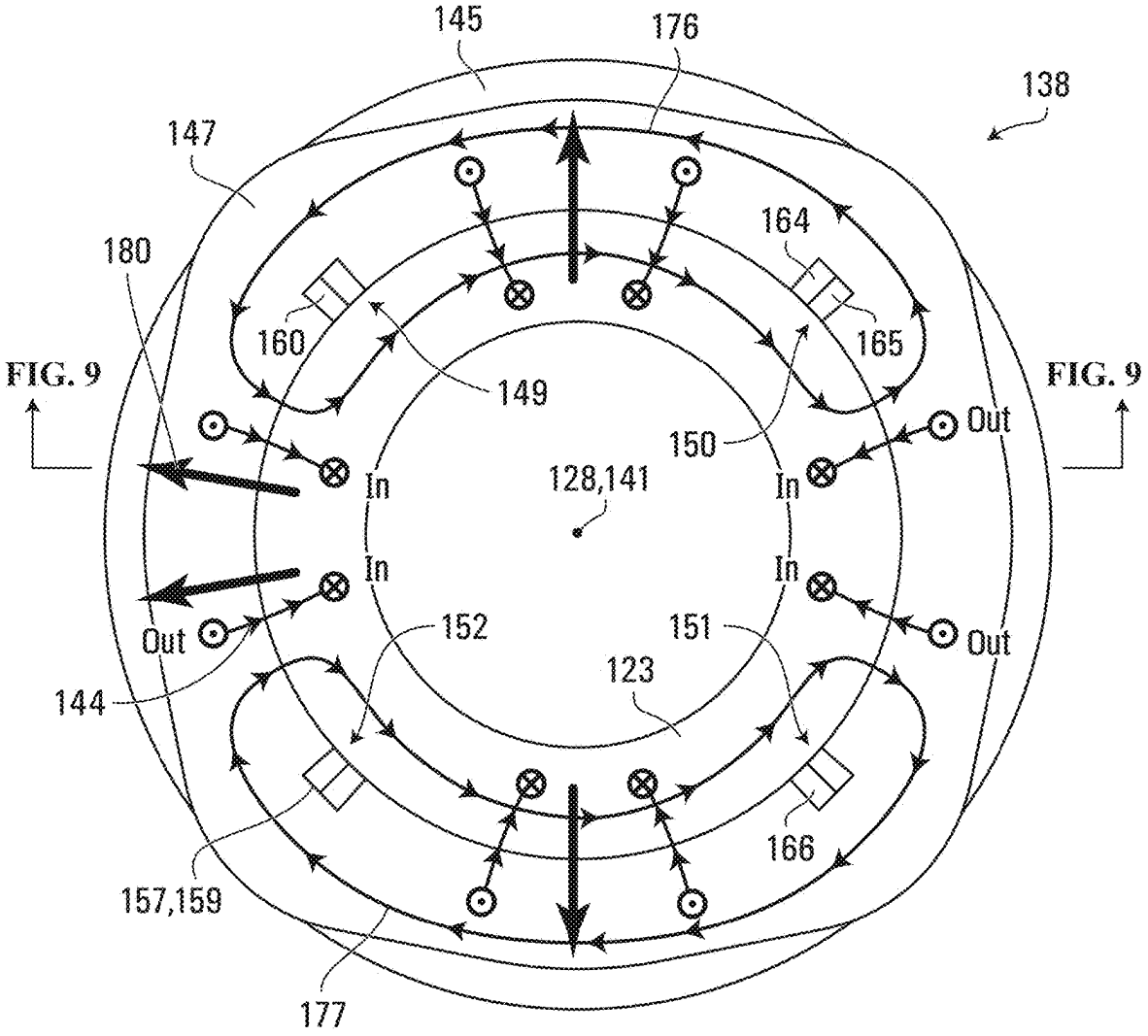
145
176
138
147
180
164
160
165
149
150
FIG. 9
FIG. 9
Out
In
128,141
In
In
In
Out
Out
152
151
144
123
166
157,159
177

FIG. 10

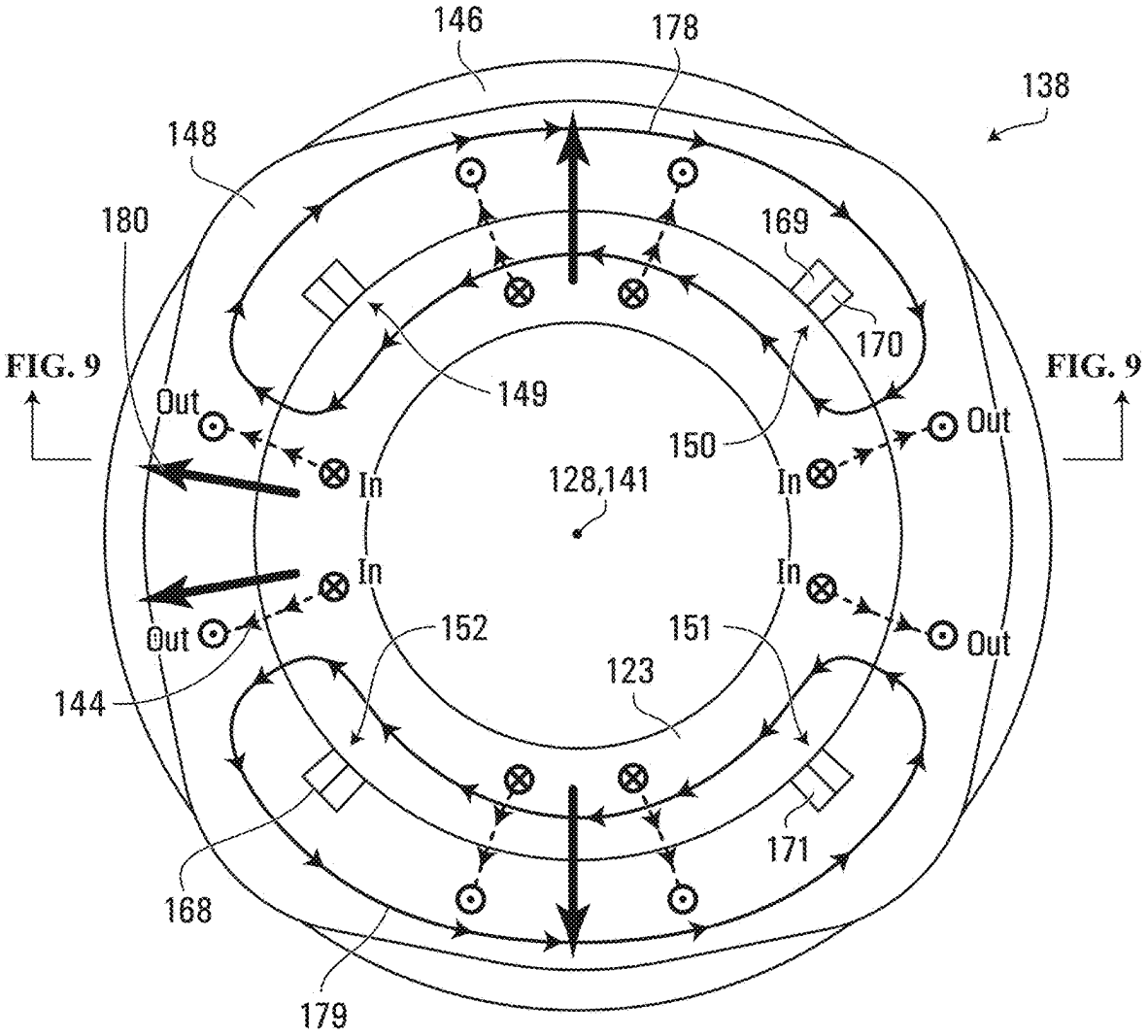
146
178
138
148
180
169
170
FIG. 9
FIG. 9
149
Out
150
Out
In
128,141
In
In
In
Out
152
151
Out
144
123
171
168
179

FIG. 11

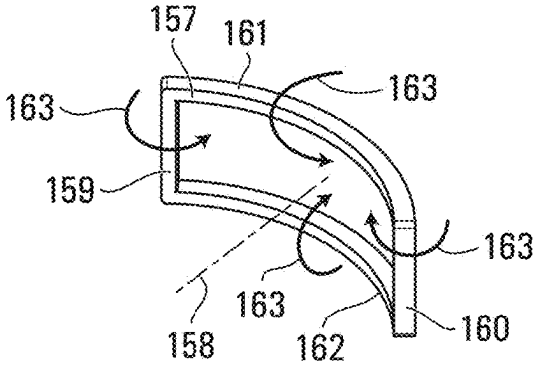
157
161
163
163
159
163
163
158
162
160

FIG. 12

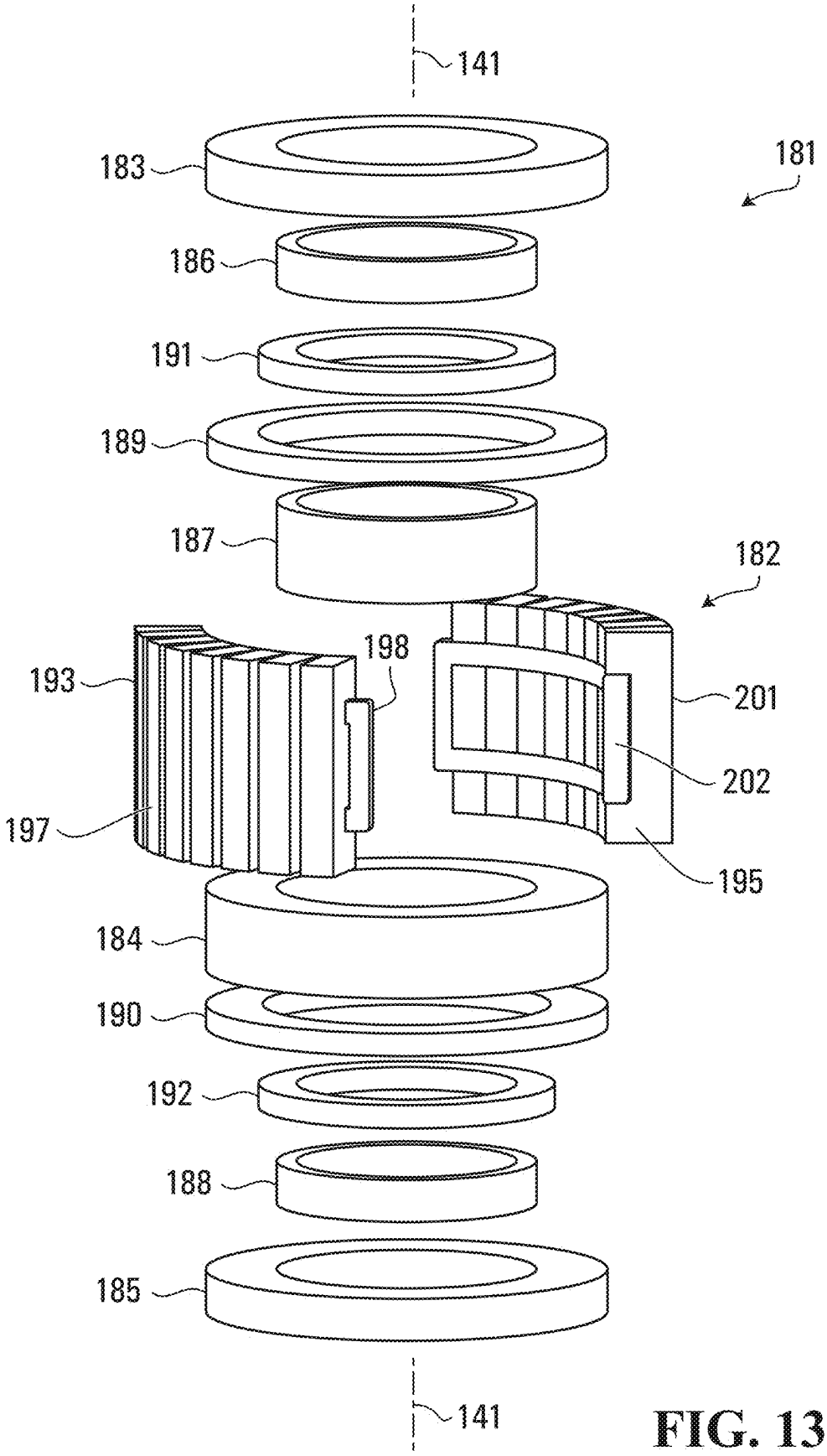
141
183
181
186
191
189
187
182
198
193
201
202
197
195
184
190
192
188
185
141

FIG. 13

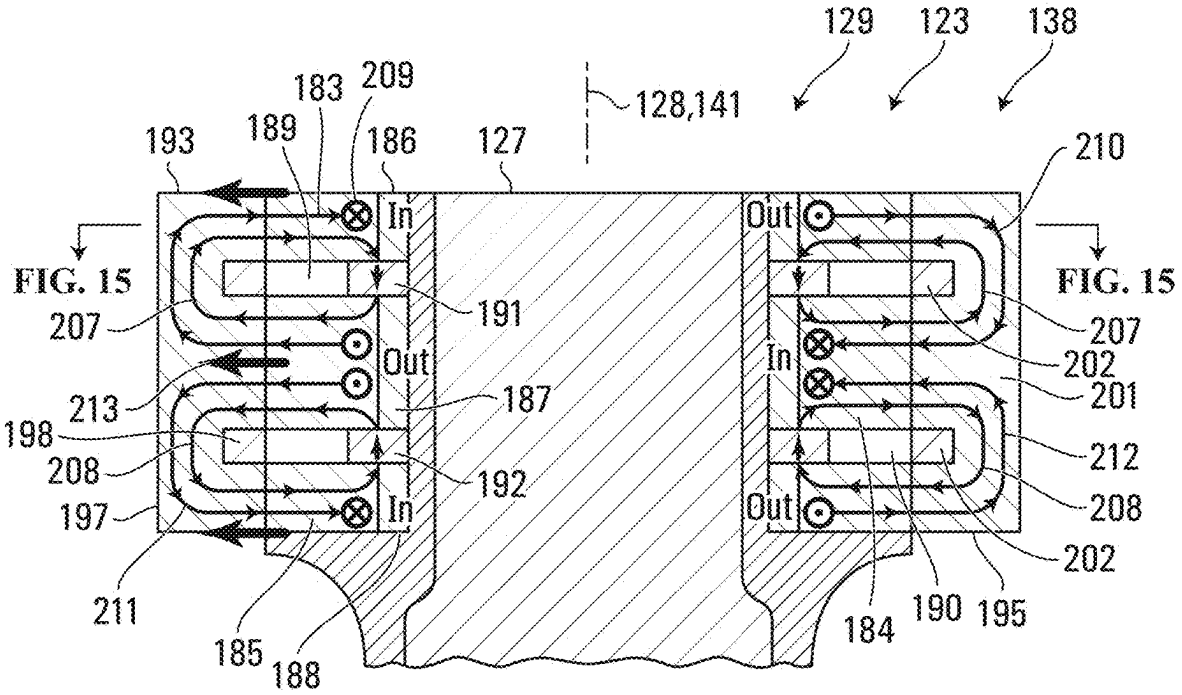
129
123
138
128,141
183
209
189
186
193
127
210
In
Out
FIG. 15
FIG. 15
207
191
207
202
Out
In
213
187
201
198
212
208
192
208
197
In
Out
202
211
185
188
184
190
195

FIG. 14

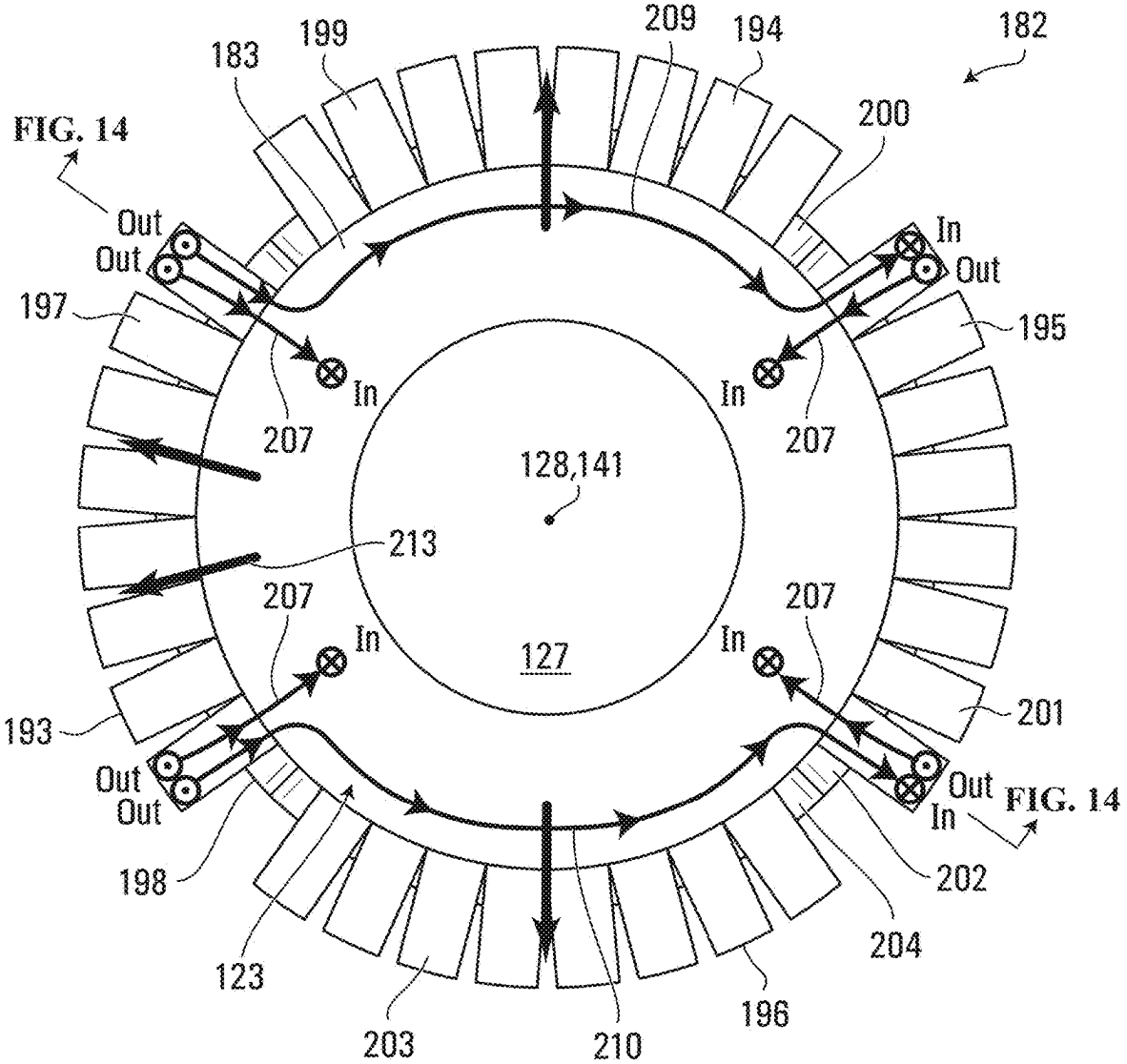
182
183
199
209
194
200
FIG. 14
Out
Out
In
Out
197
195
In
In
207
207
128,141
213
207
207
In
In
127
193
201
Out
Out
Out
In
FIG. 14
198
202
204
123
196
203
210

FIG. 15

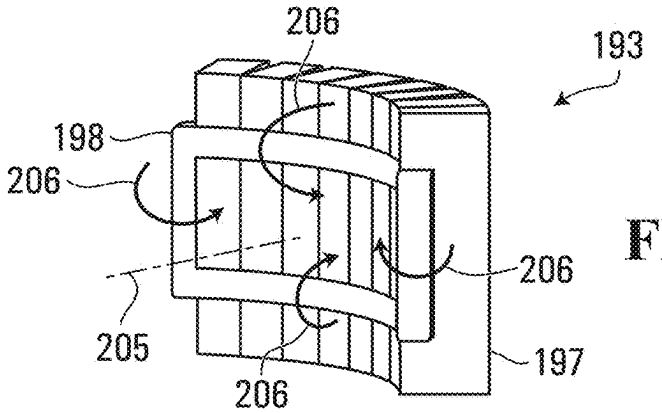
206
193
198
206
206
205
197
206

FIG. 16

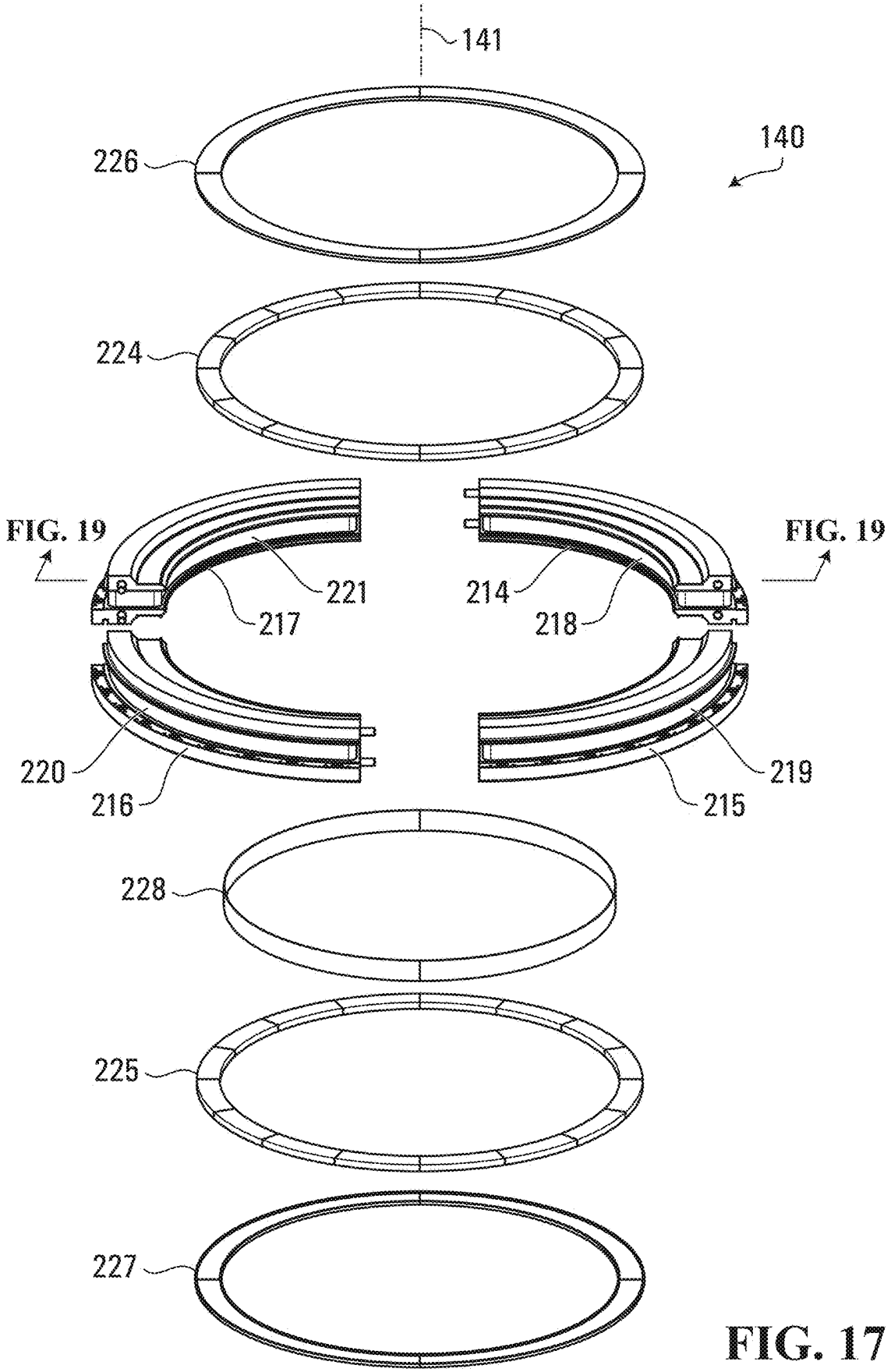
141
140
226
224
FIG. 19
FIG. 19
221
217
214
218
220
216
219
215
228
225
227

FIG. 17

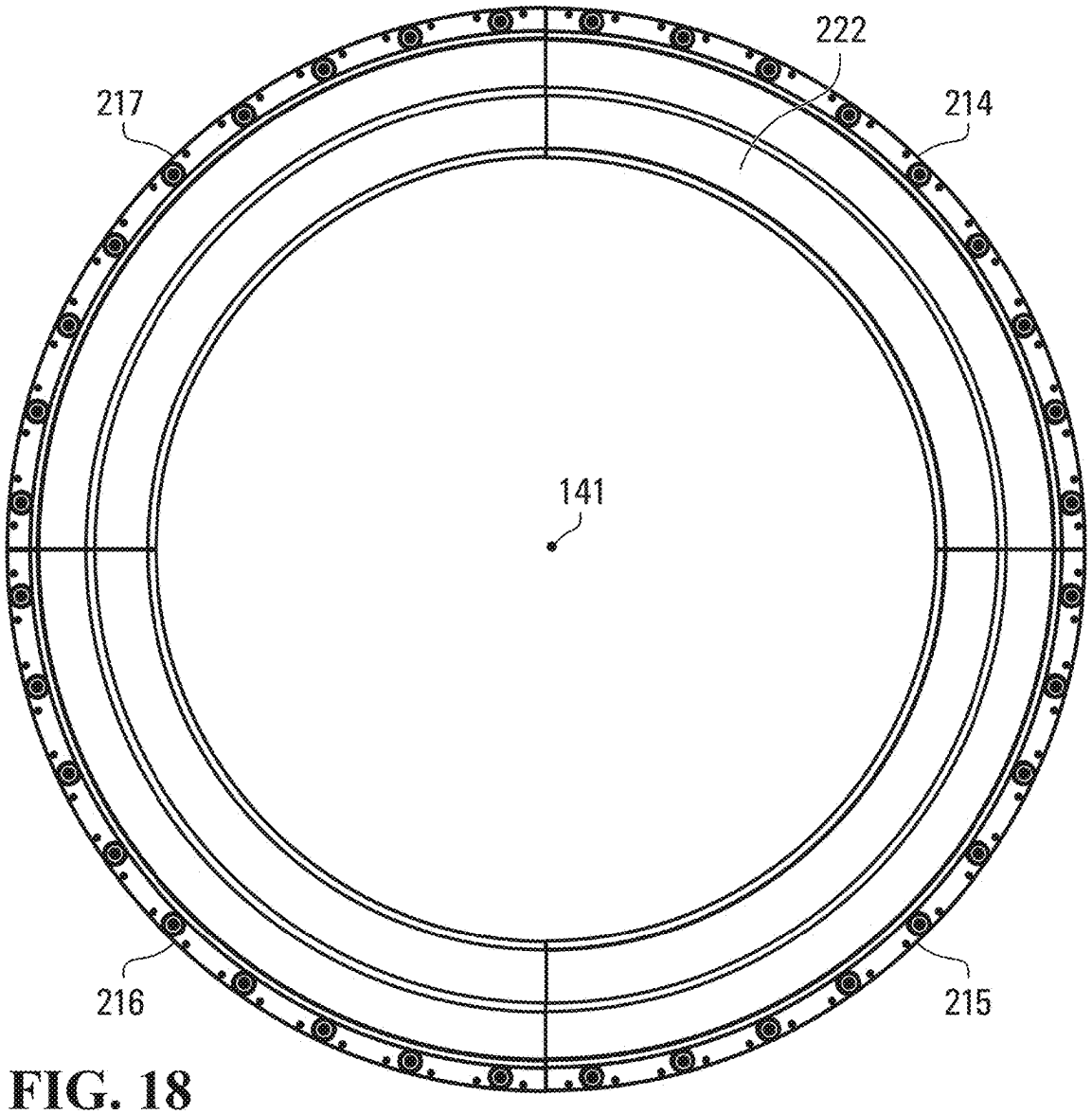
222
217
214
141
216
215

FIG. 18

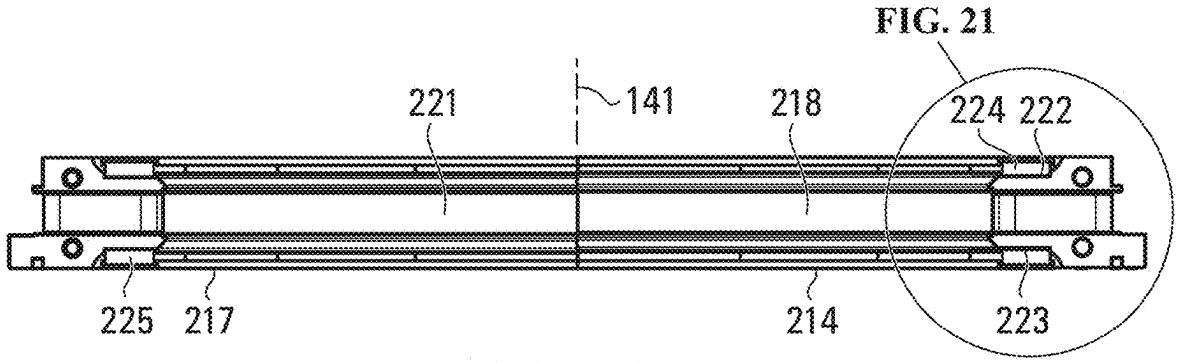
FIG. 21
221
141
218
224
222
225
217
214
223

FIG. 19

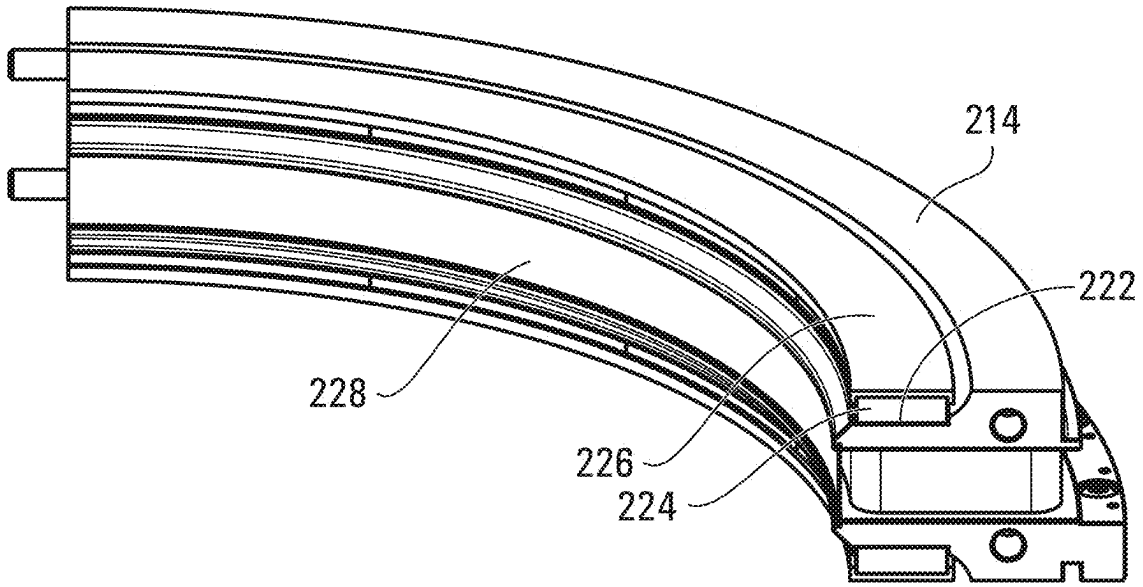

FIG. 20

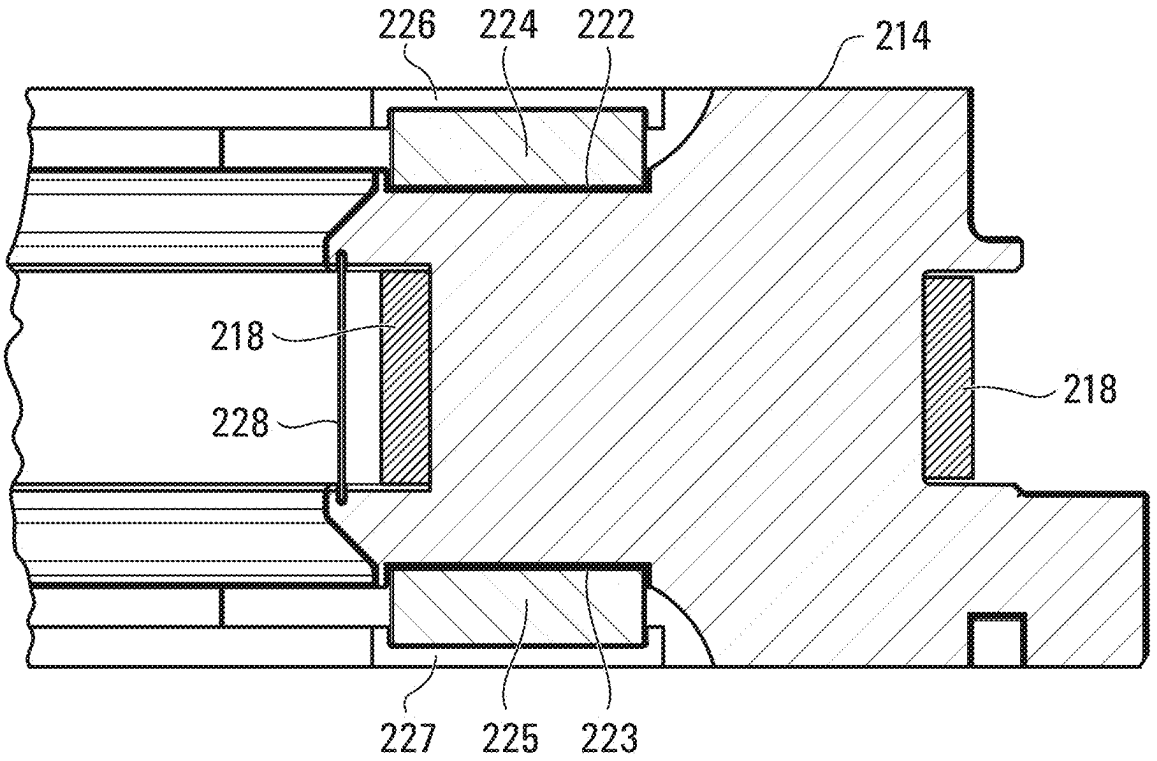

FIG. 21

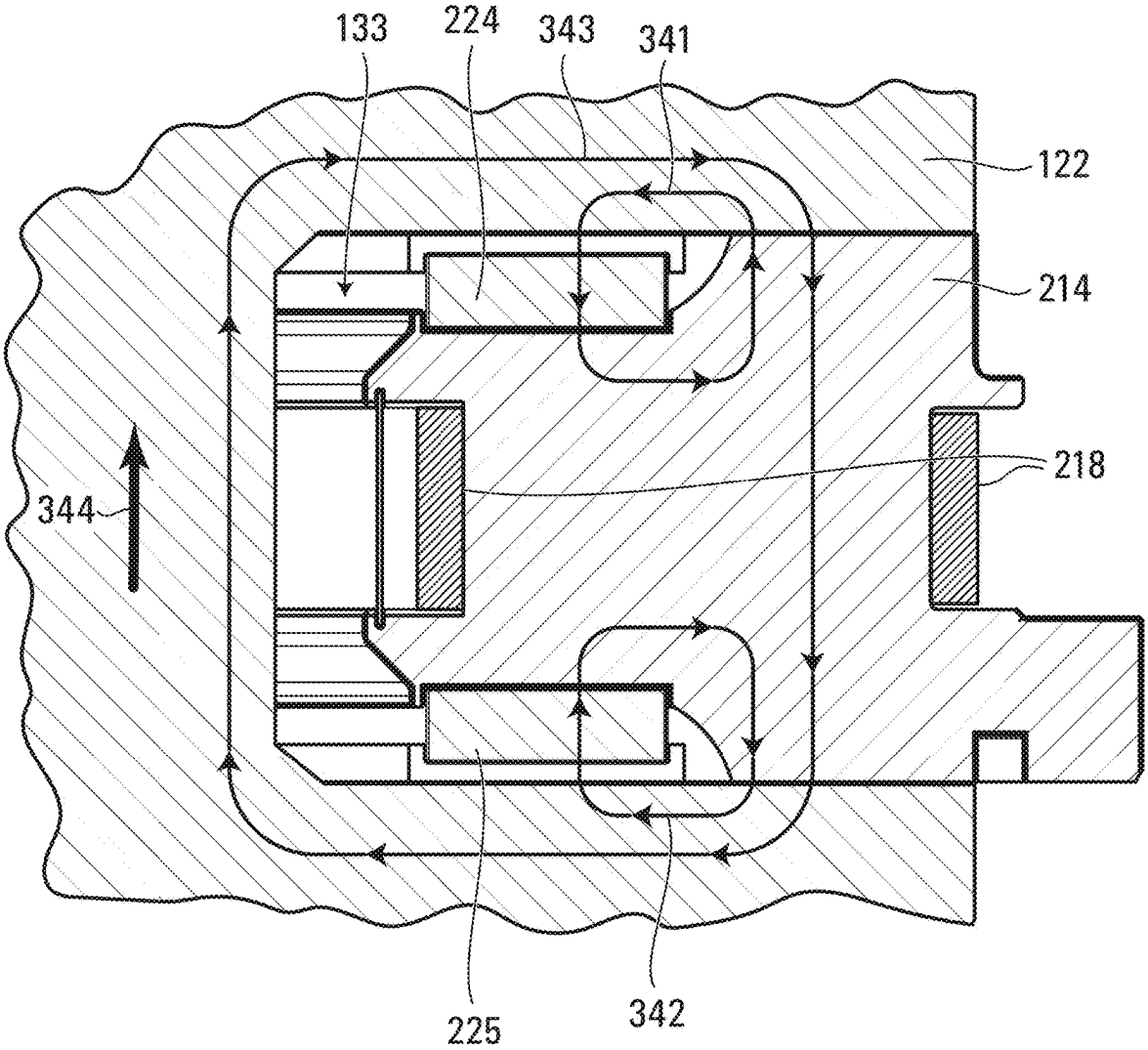

FIG. 22

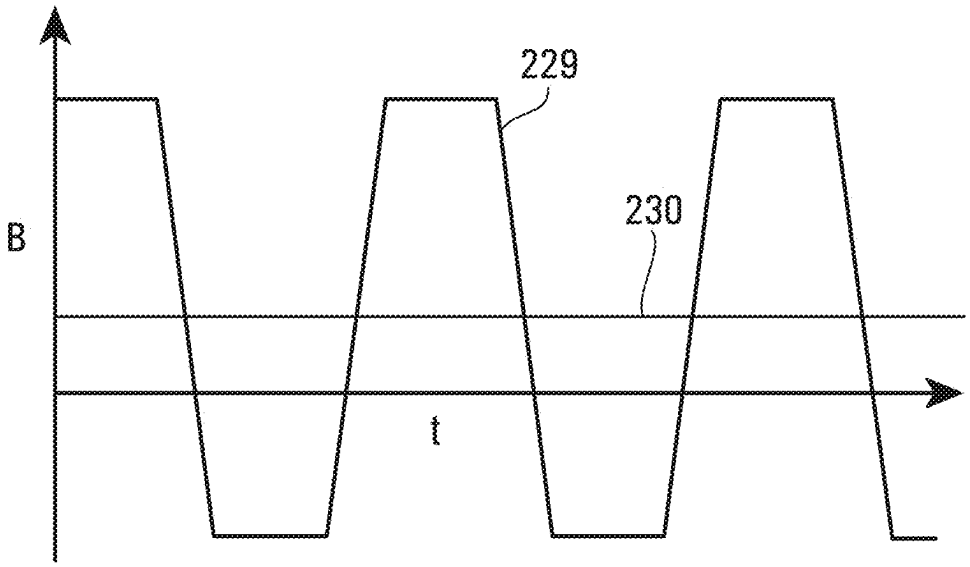

FIG. 23

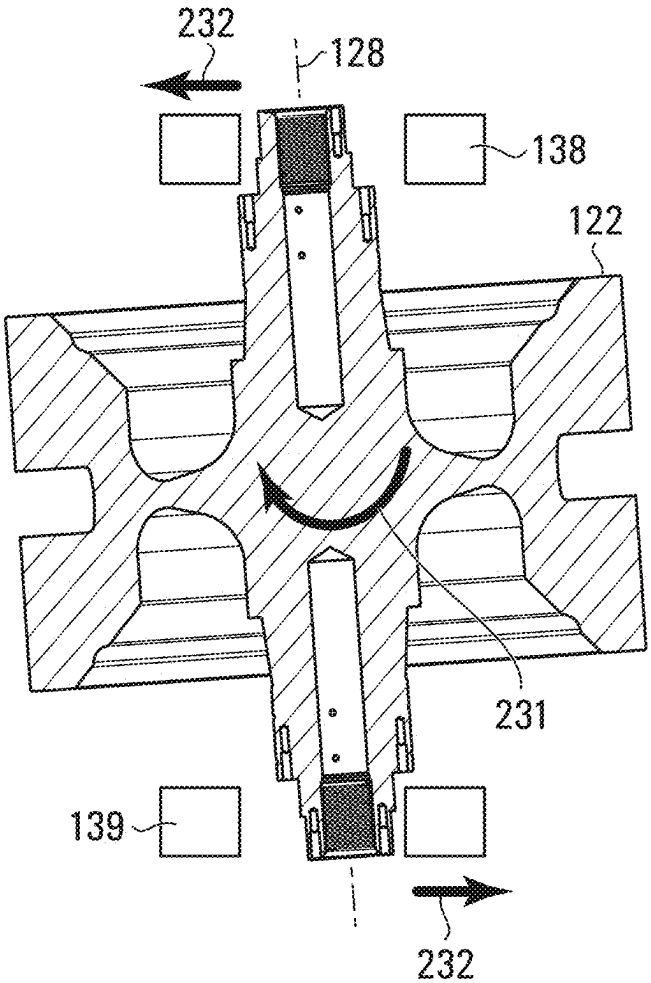

FIG. 24

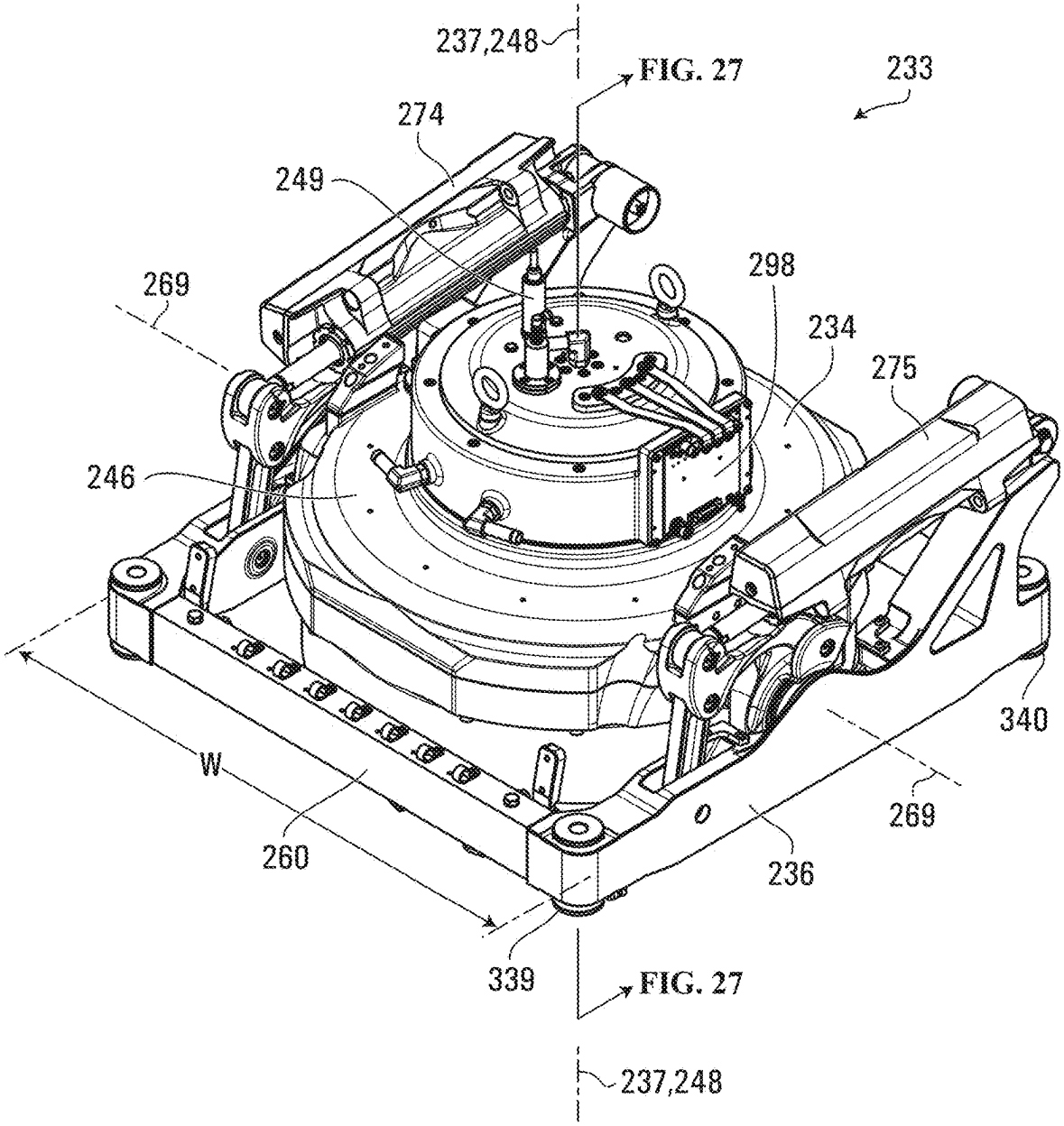
237,248
FIG. 27
233
274
249
298
269
234
275
246
340
W
269
260
236
339
FIG. 27
237,248

FIG. 25

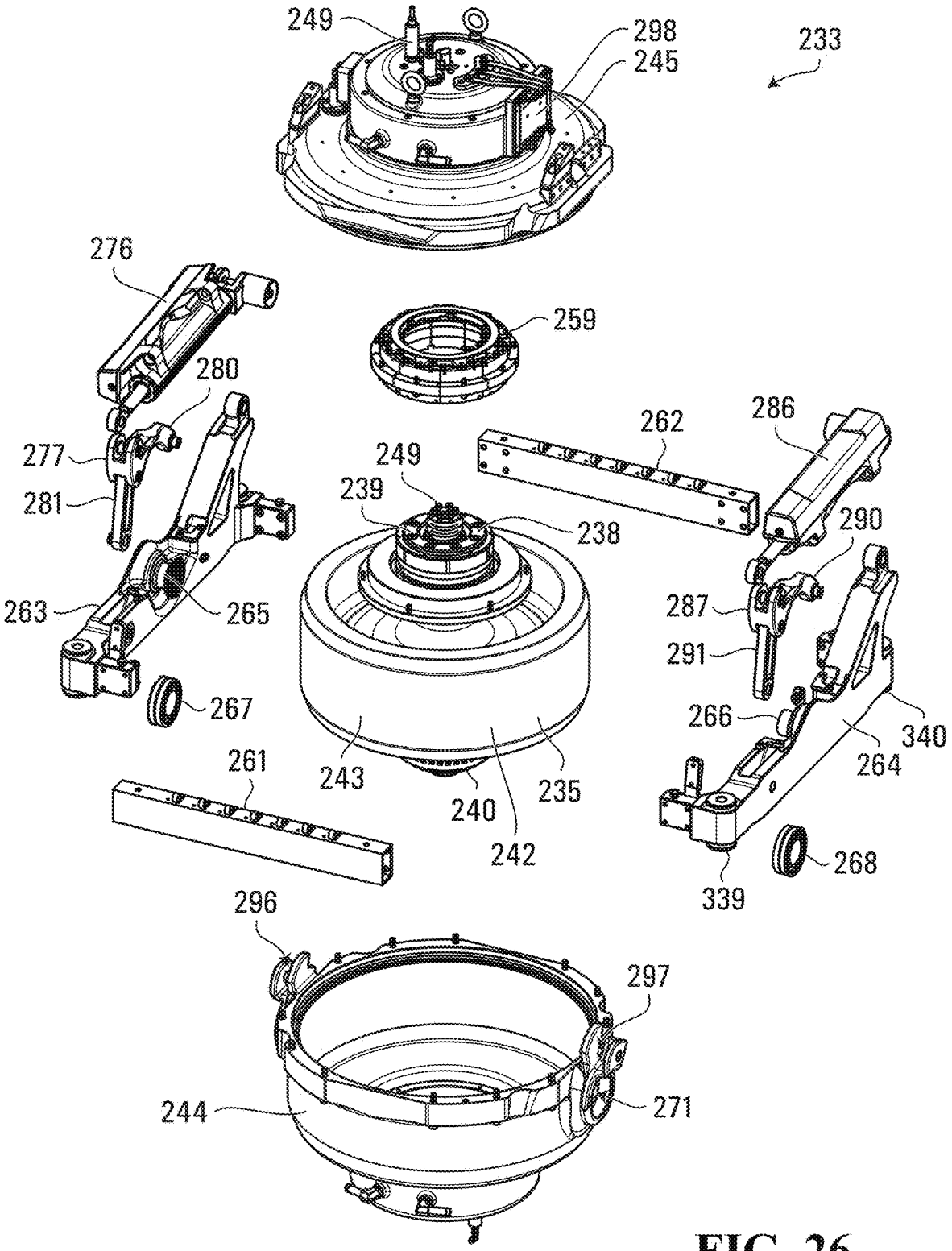
249
298
245
233
276
259
280
262
286
277
249
239
238
281
290
263
265
287
291
267
266
340
261
243
235
264
240
242
268
339
296
297
244
271

FIG. 26

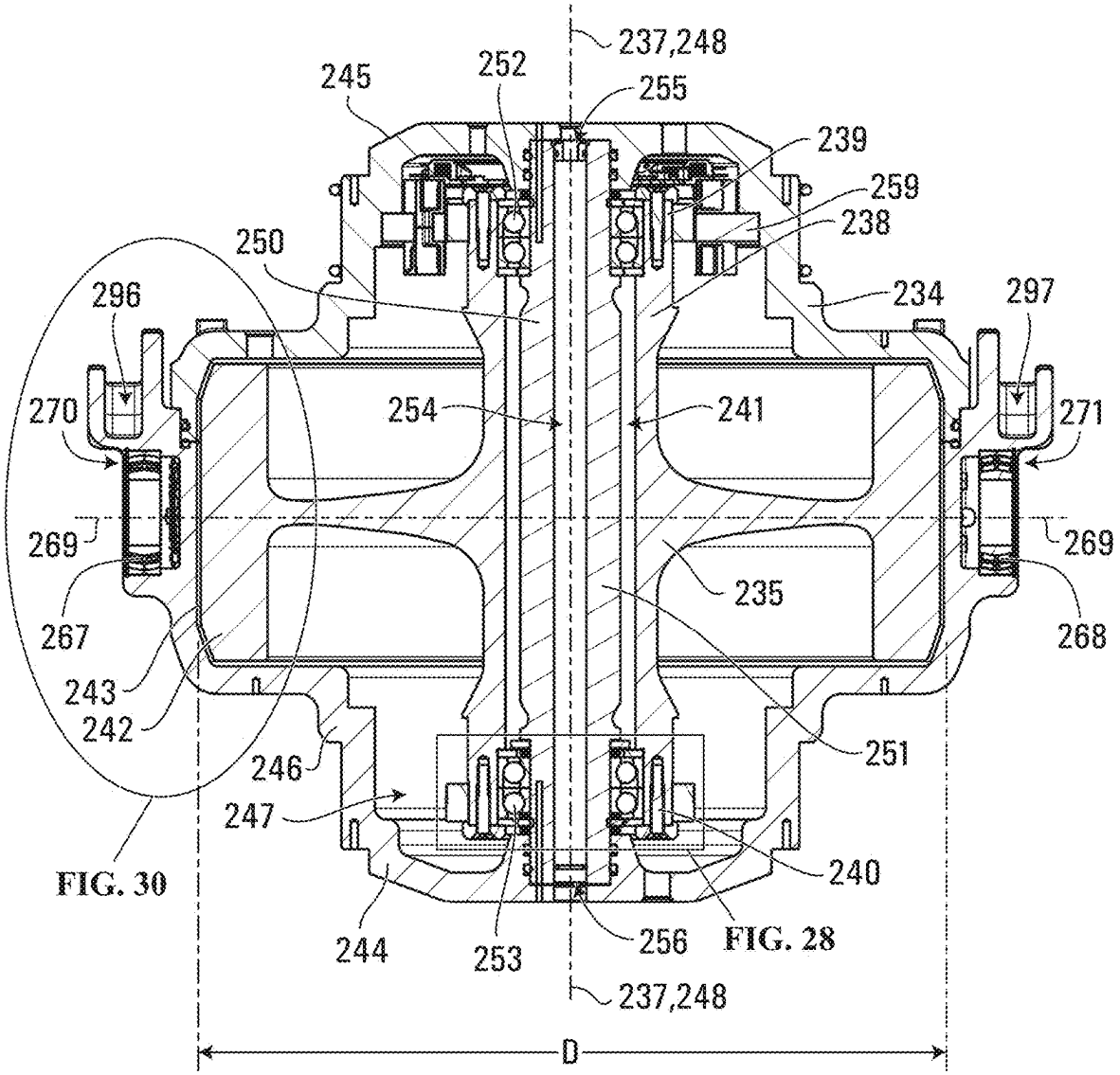
237,248
245
252
255
239
259
238
250
234
297
296
270
254
241
271
269
269
235
267
268
243
242
251
246
247
240
FIG. 30
244
253
256
FIG. 28
237,248
D

FIG. 27

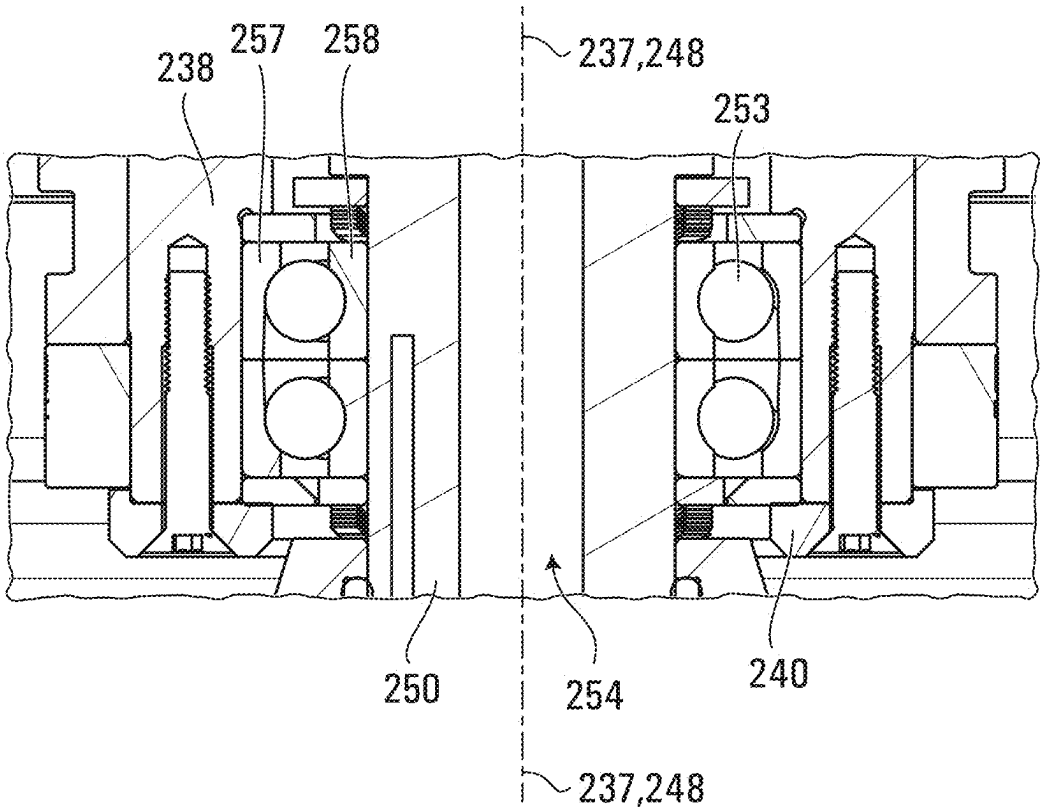

FIG. 28

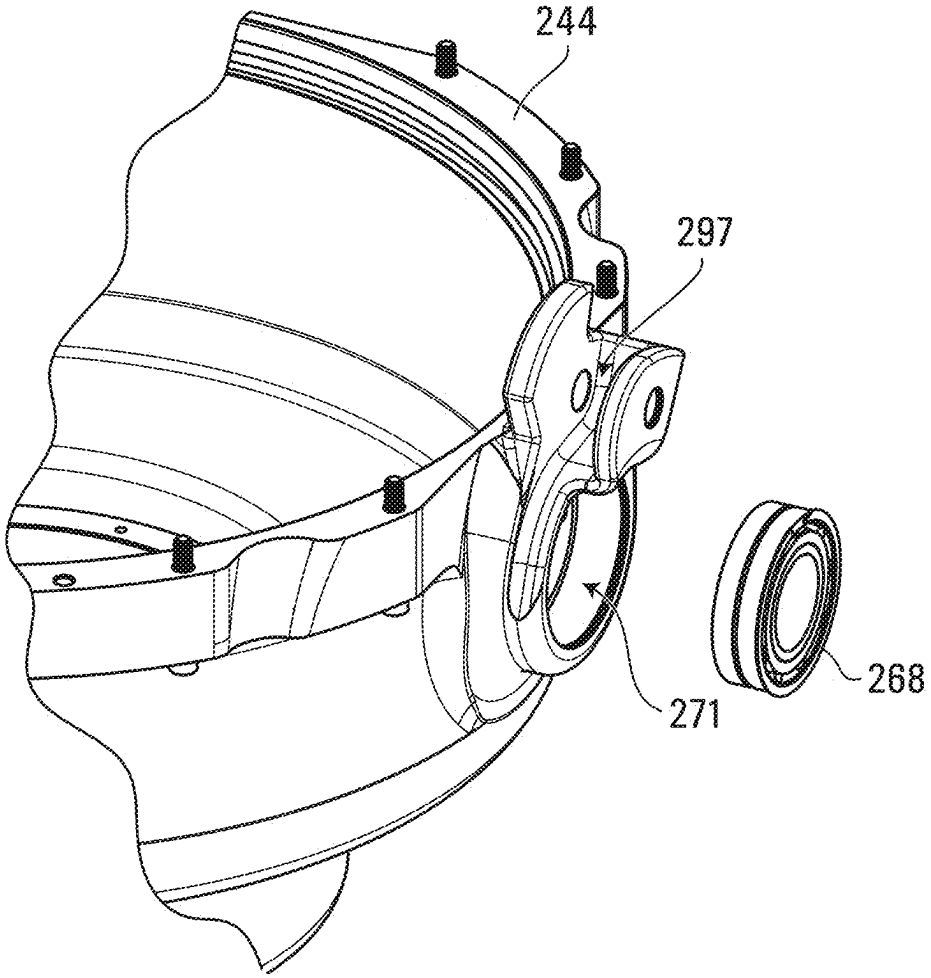

FIG. 29

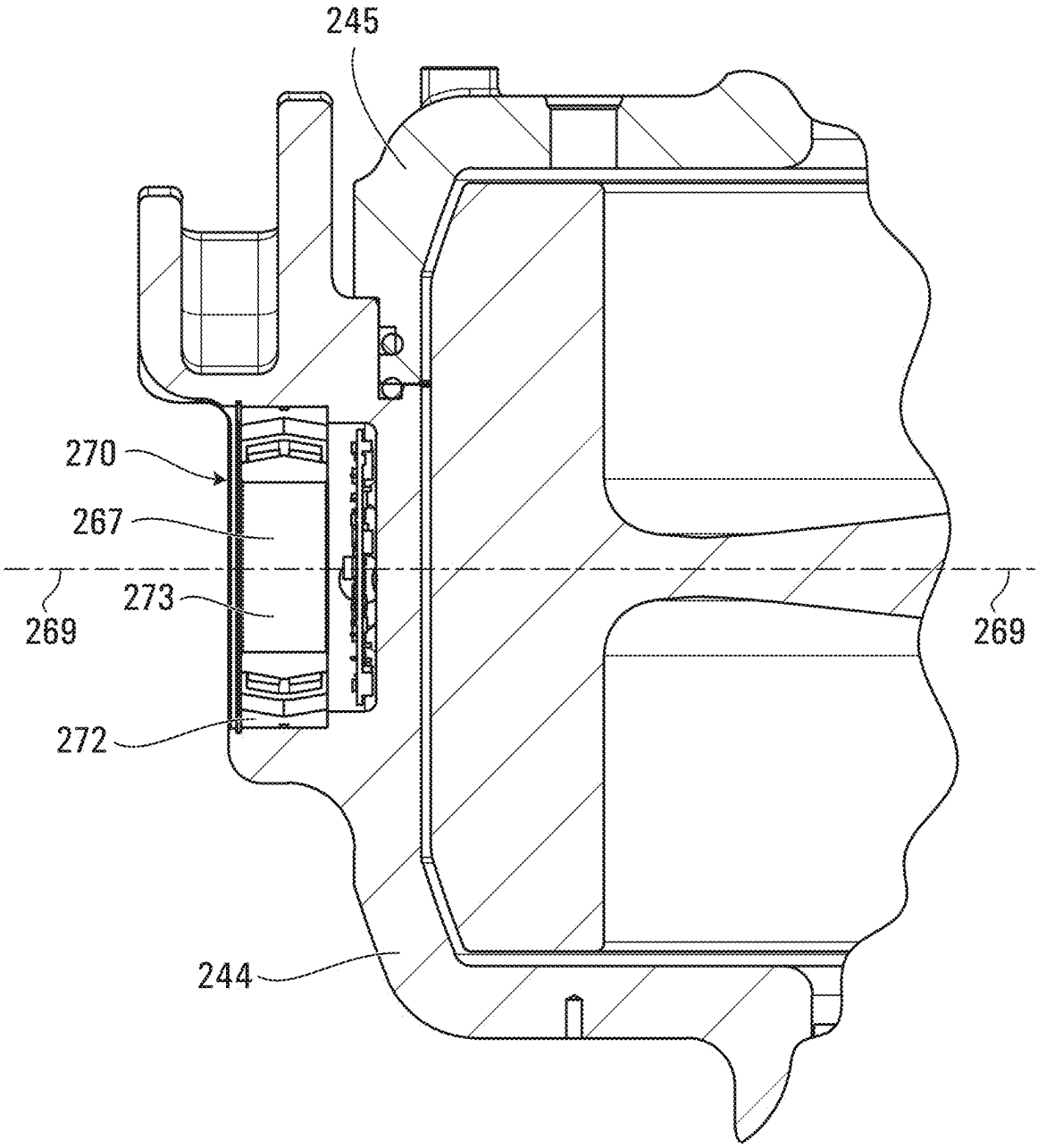

FIG. 30

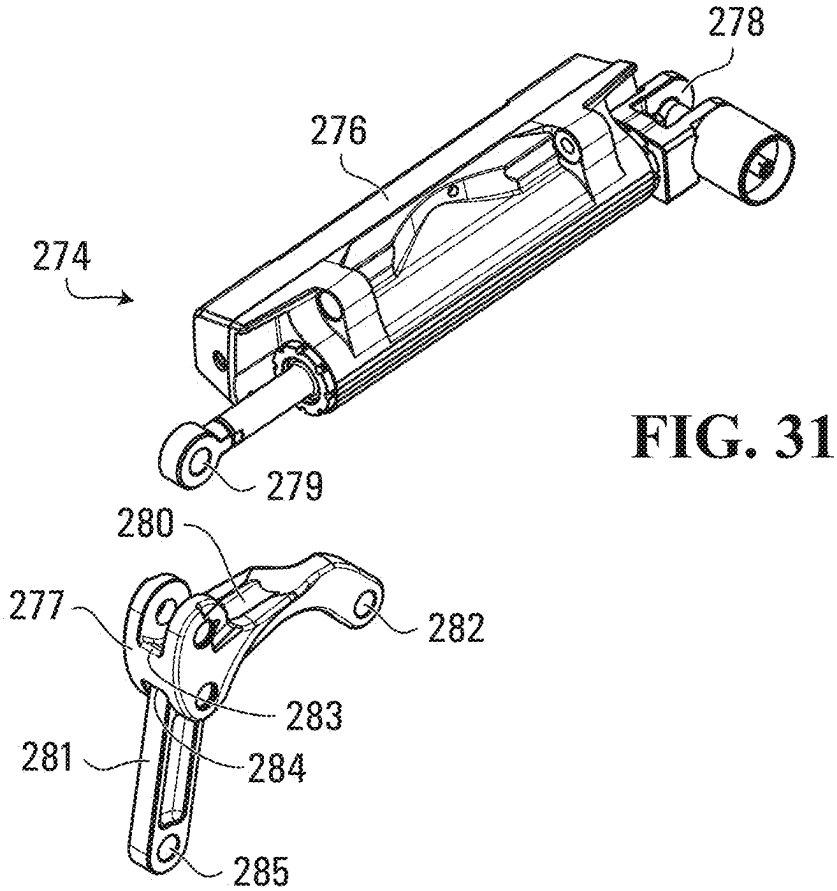
278
276
274
279
280
277
282
283
281
284
285

FIG. 31

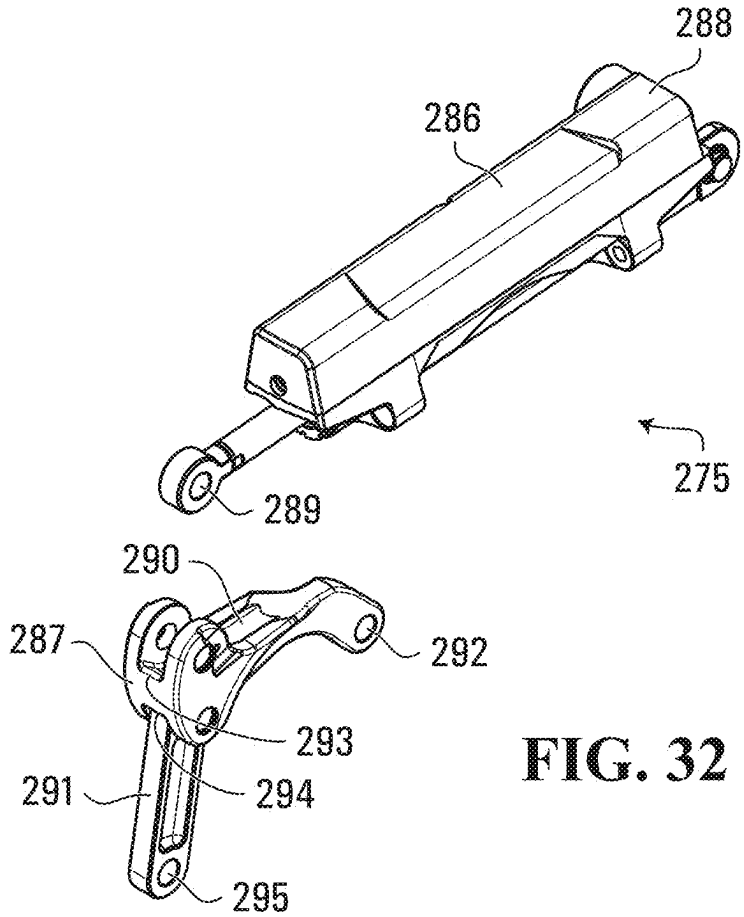
288
286
275
289
290
287
292
293
291
294
295

FIG. 32

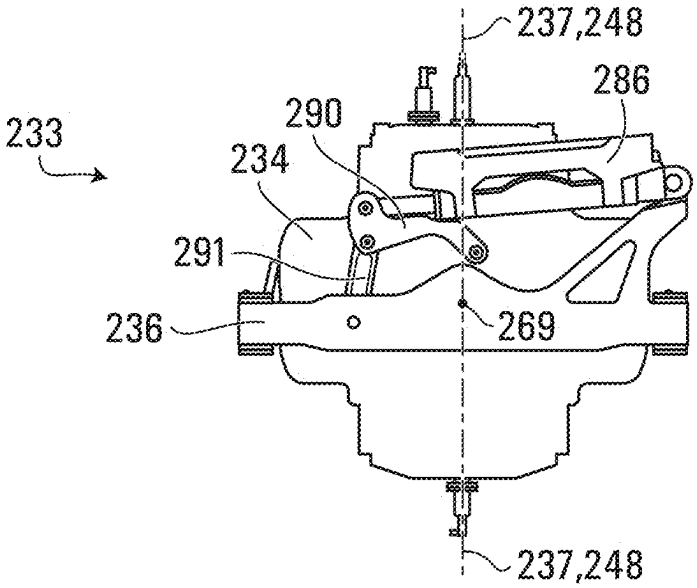

FIG. 33

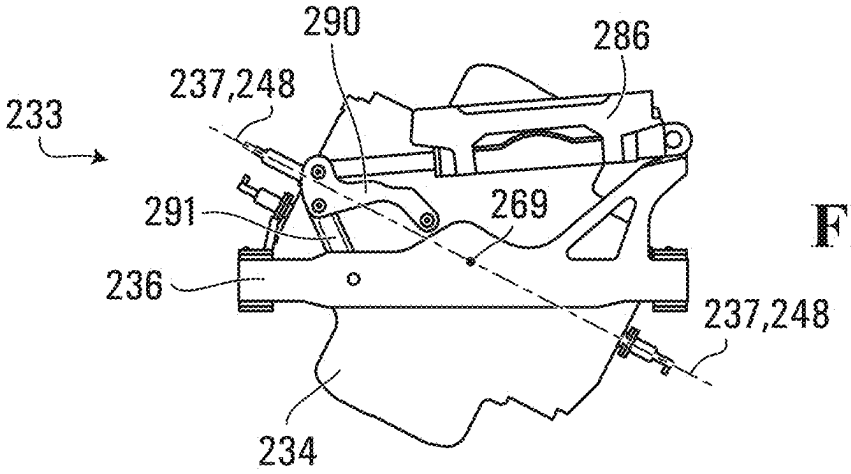

FIG. 34

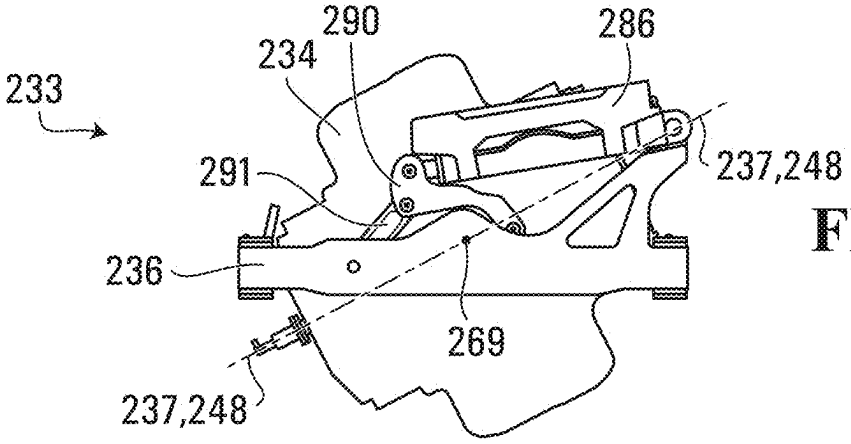

FIG. 35

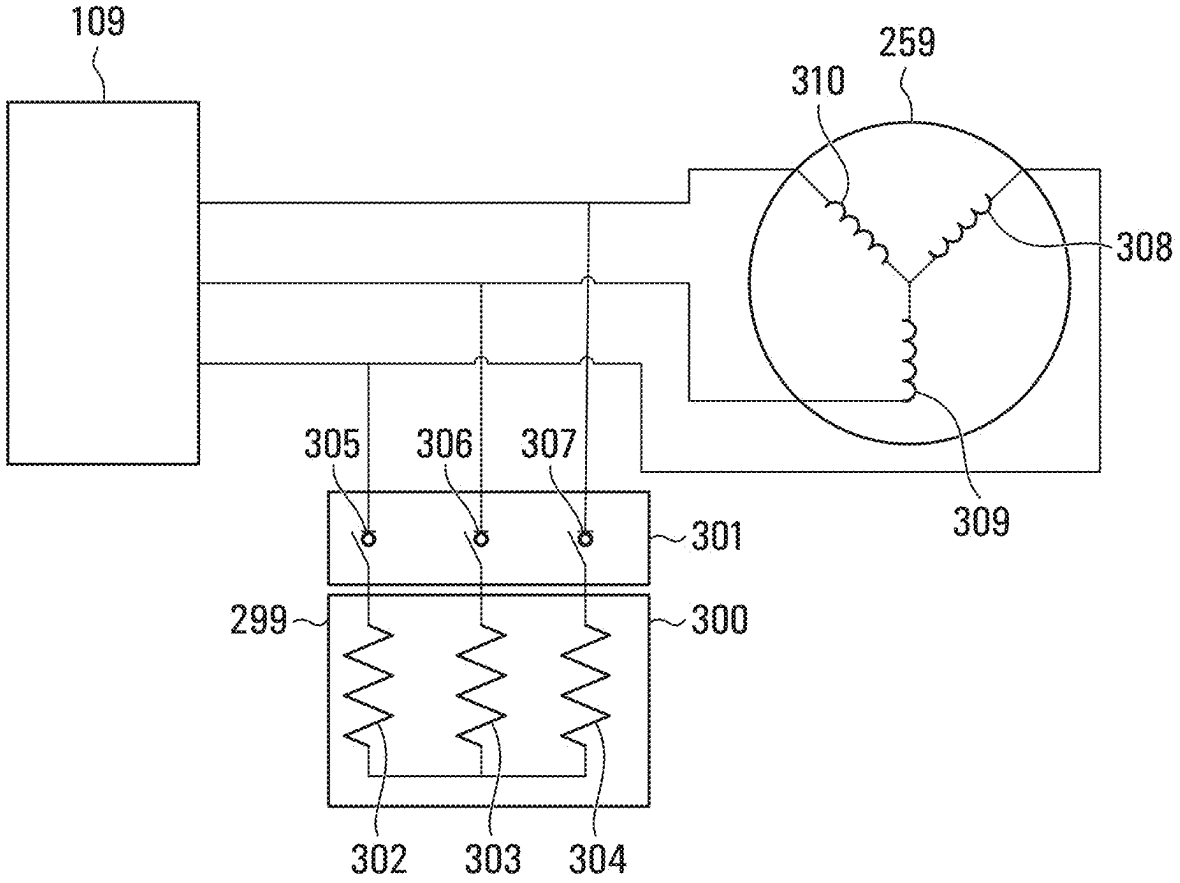

FIG. 36

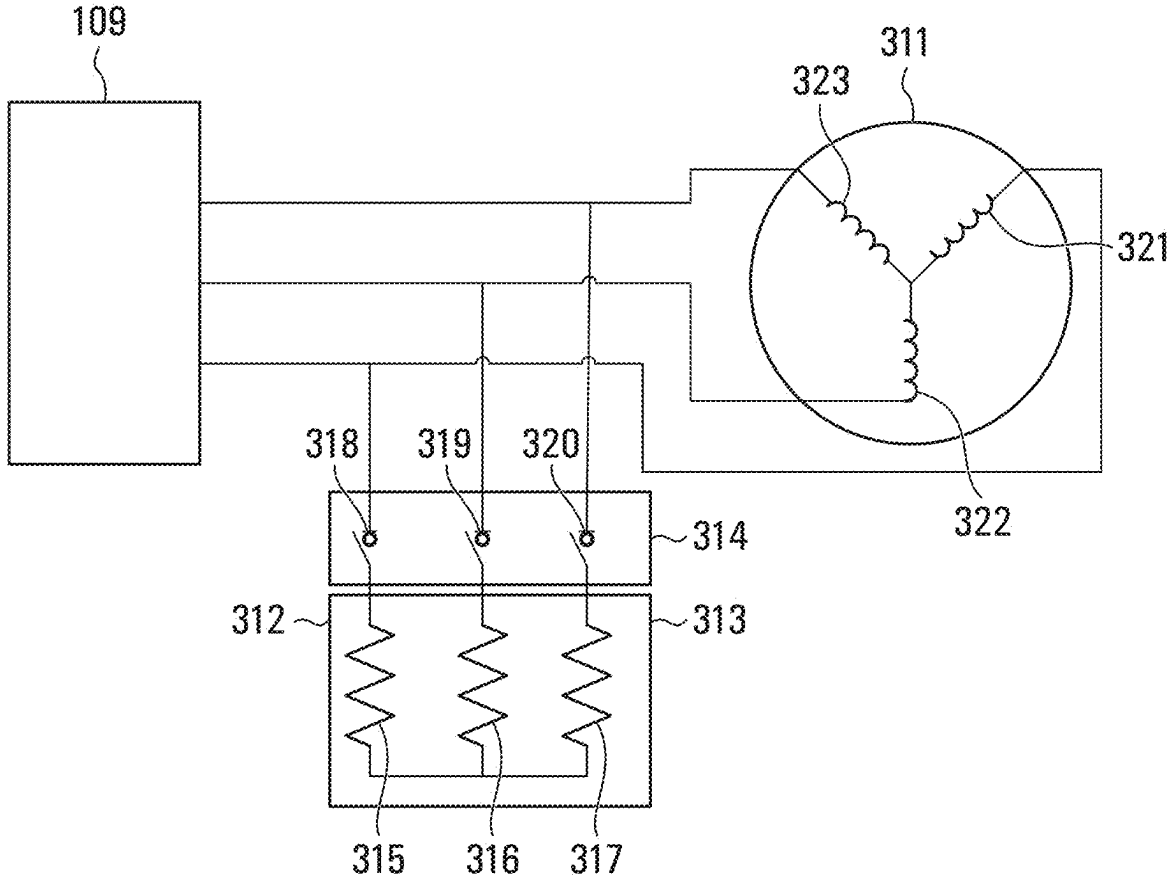

FIG. 37

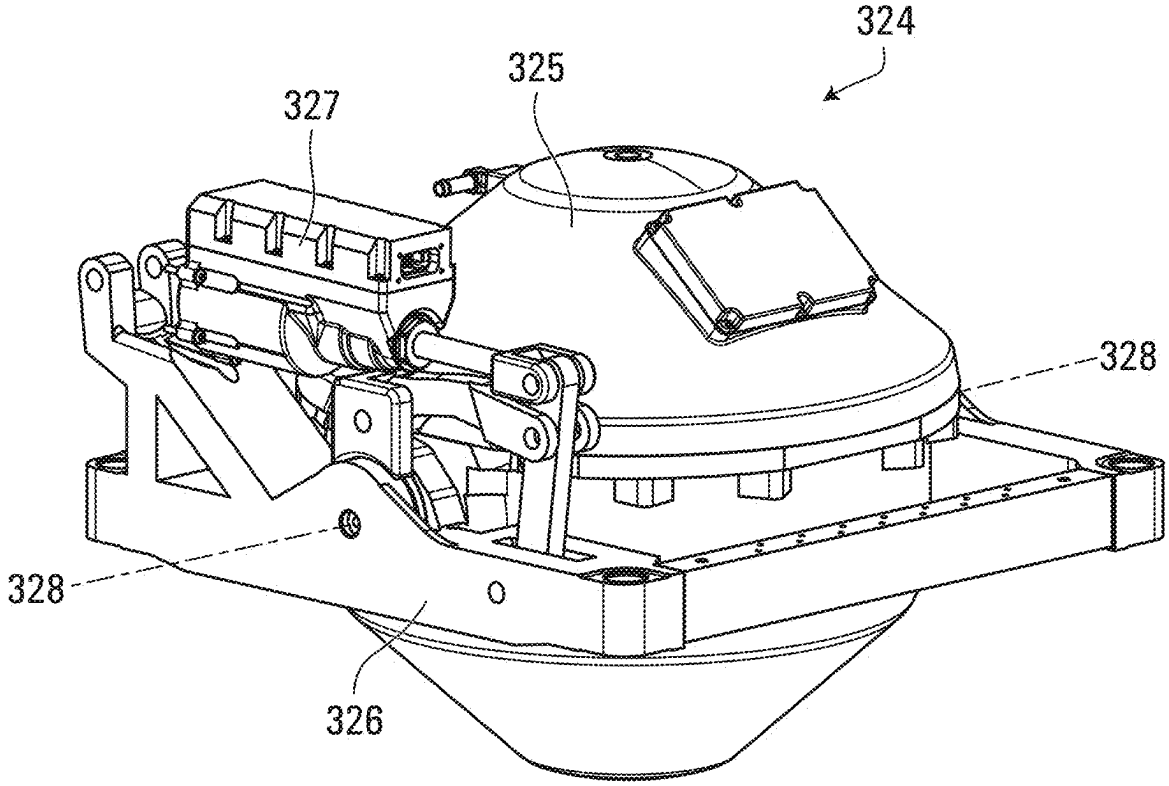

FIG. 38

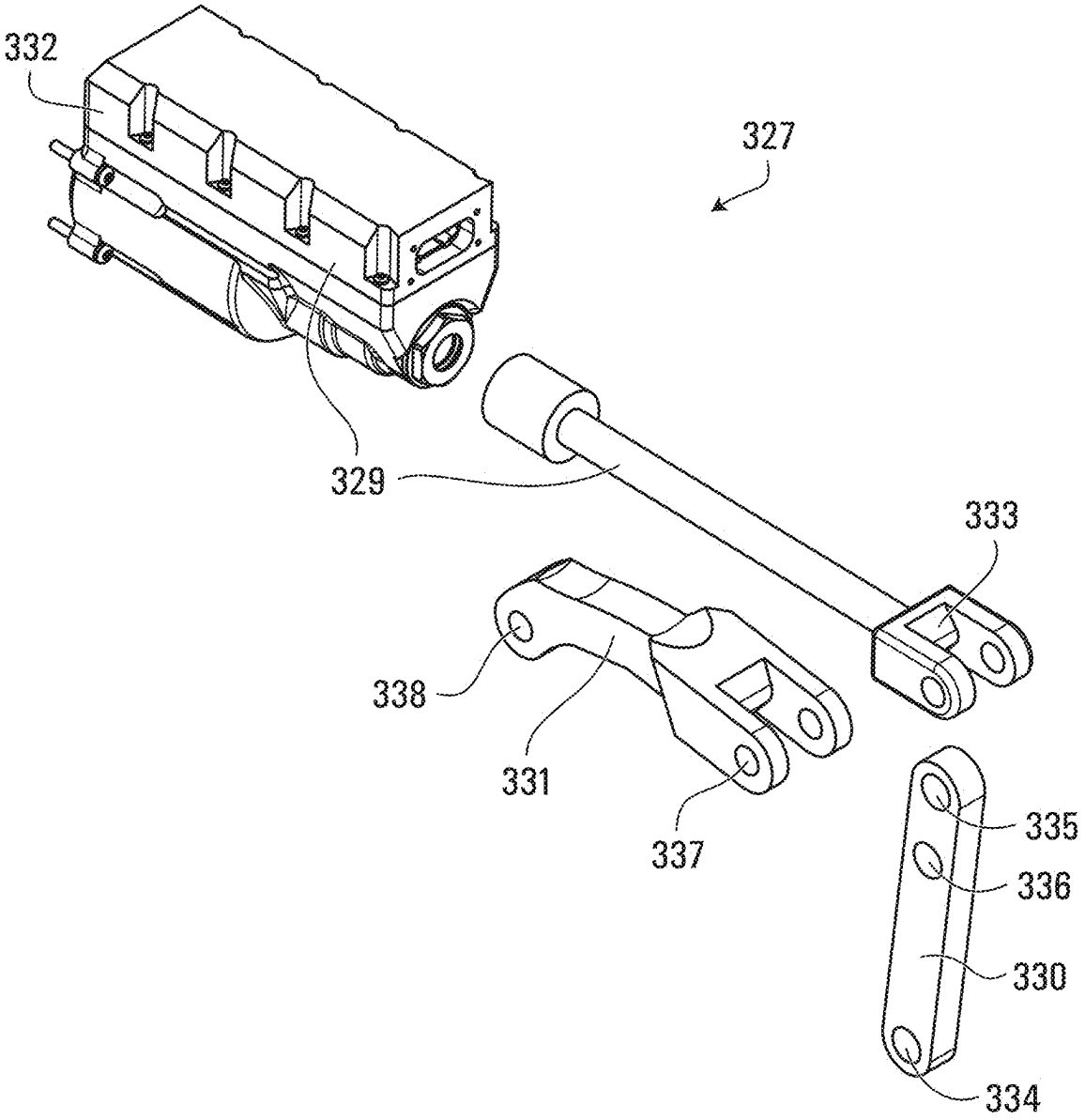

FIG. 39

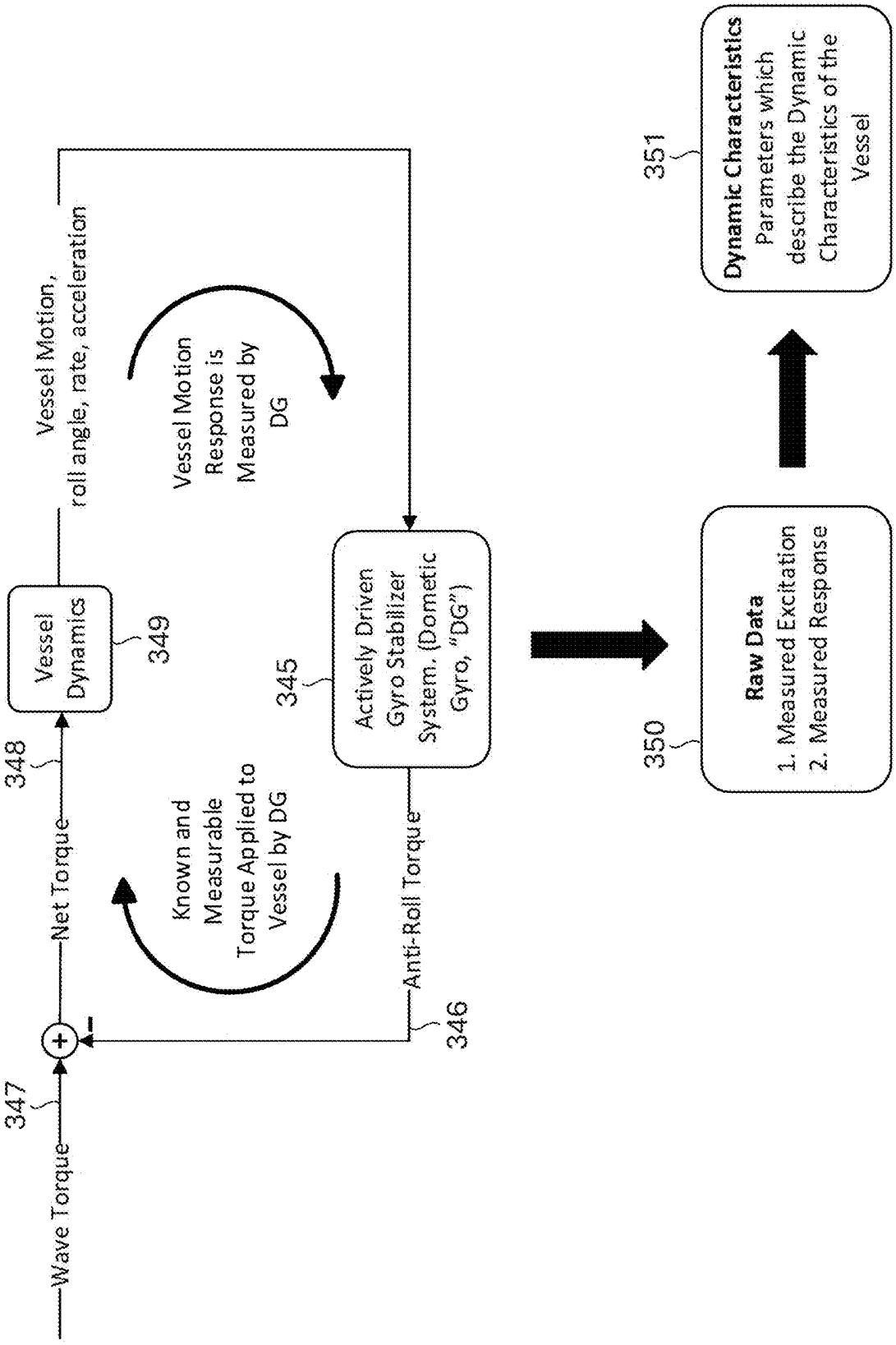
Wave Torque
347
+
-
Net Torque
348
Vessel Dynamics
349
Vessel Motion, roll angle, rate, acceleration
Vessel Motion Response is Measured by DG
Known and Measurable Torque Applied to Vessel by DG
Anti-Roll Torque
346
Actively Driven Gyro Stabilizer System. (Dometic Gyro, "DG")
345
Raw Data
1. Measured Excitation
2. Measured Response
350
Dynamic Characteristics
Parameters which describe the Dynamic Characteristics of the Vessel
351

FIG. 40

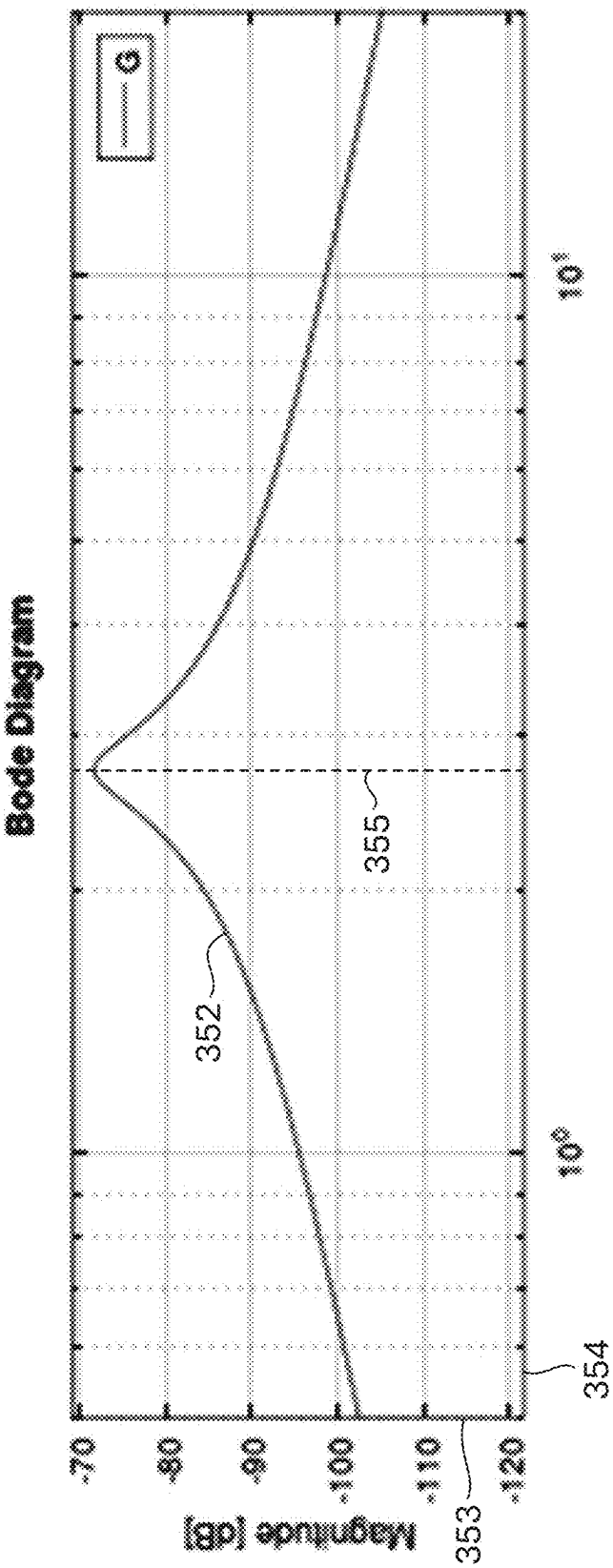
Bode Diagram
G
Magnitude (dB)
-70
-80
-90
-100
-110
-120
10^0
10^1
352
353
354
355

FIG. 41

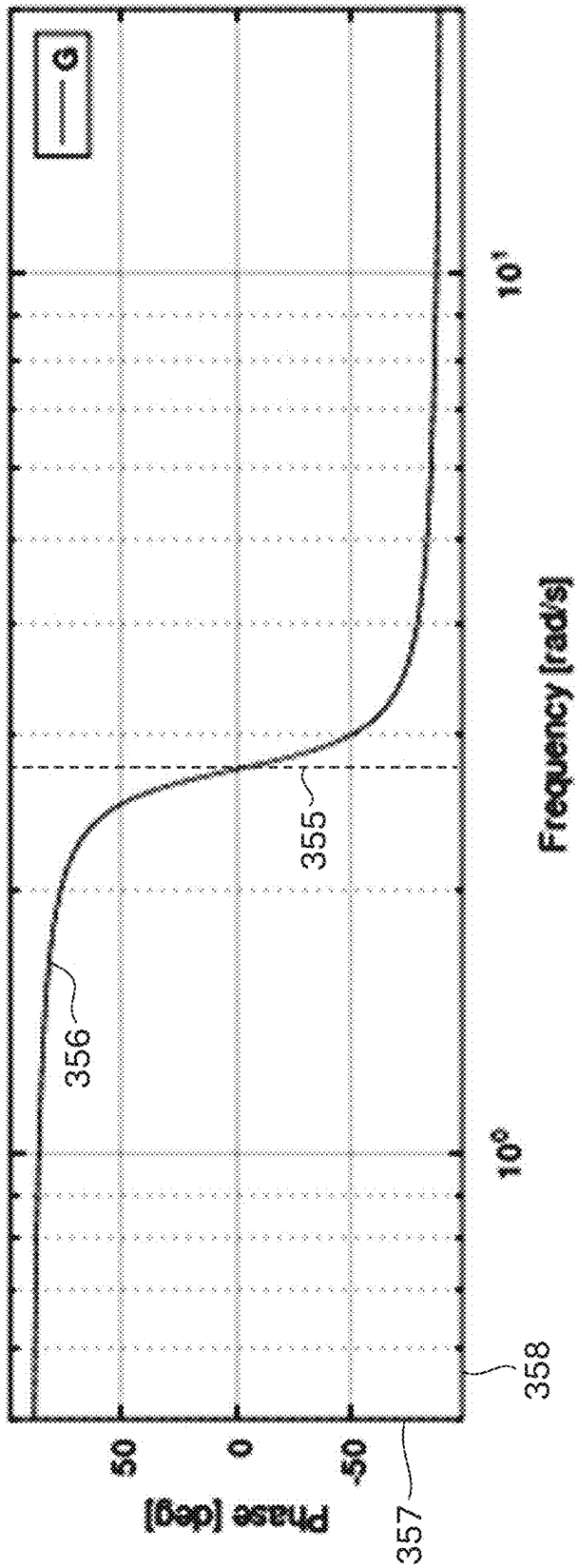

FIG. 42

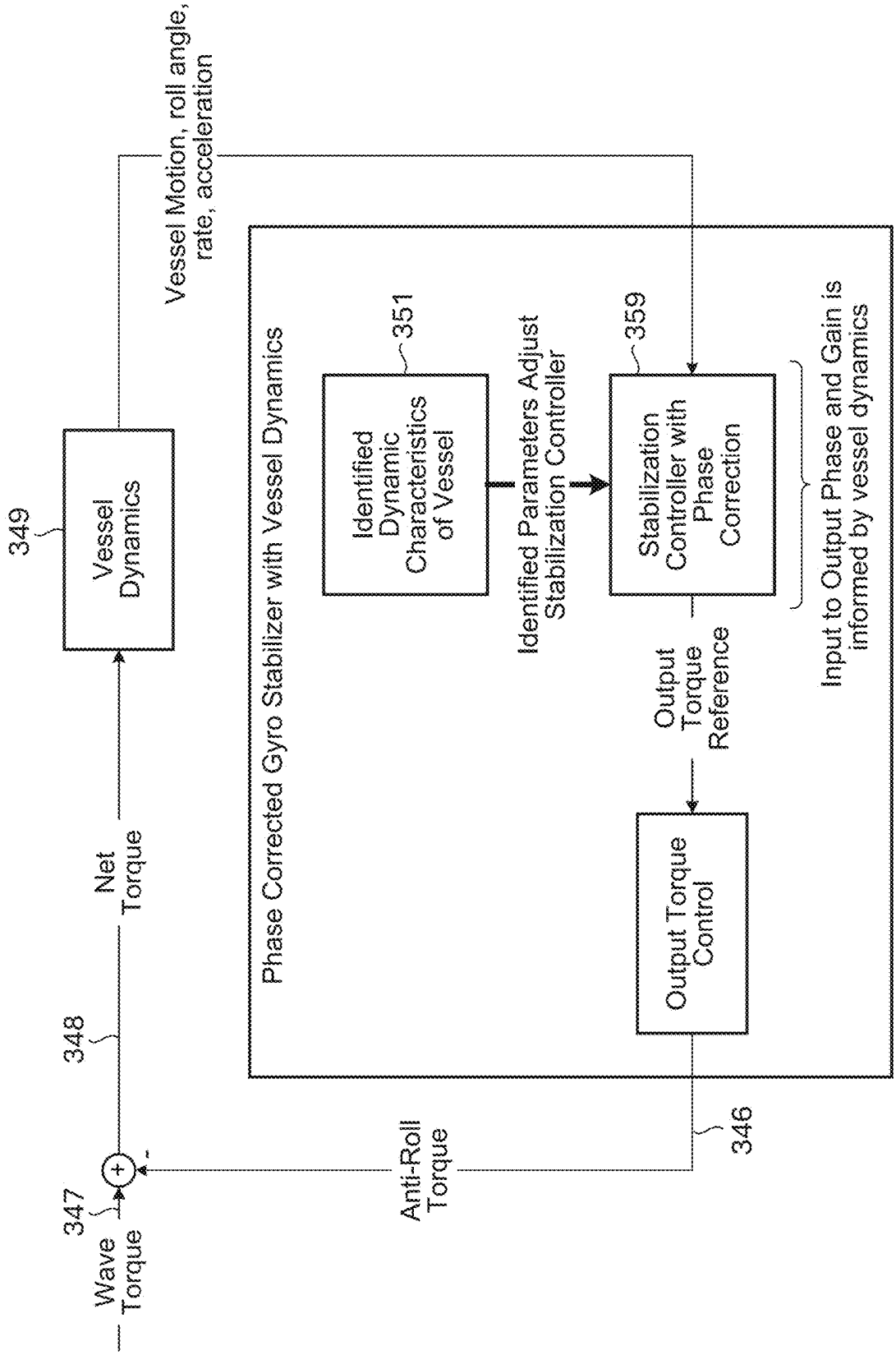
Vessel Motion, roll angle, rate, acceleration
349
Vessel Dynamics
Phase Corrected Gyro Stabilizer with Vessel Dynamics
351
Identified Dynamic Characteristics of Vessel
Identified Parameters Adjust Stabilization Controller
359
Stabilization Controller with Phase Correction
Input to Output Phase and Gain is informed by vessel dynamics
Output Torque Reference
Output Torque Control
Net Torque
348
346
Anti-Roll Torque
347
Wave Torque
+
-

FIG. 43

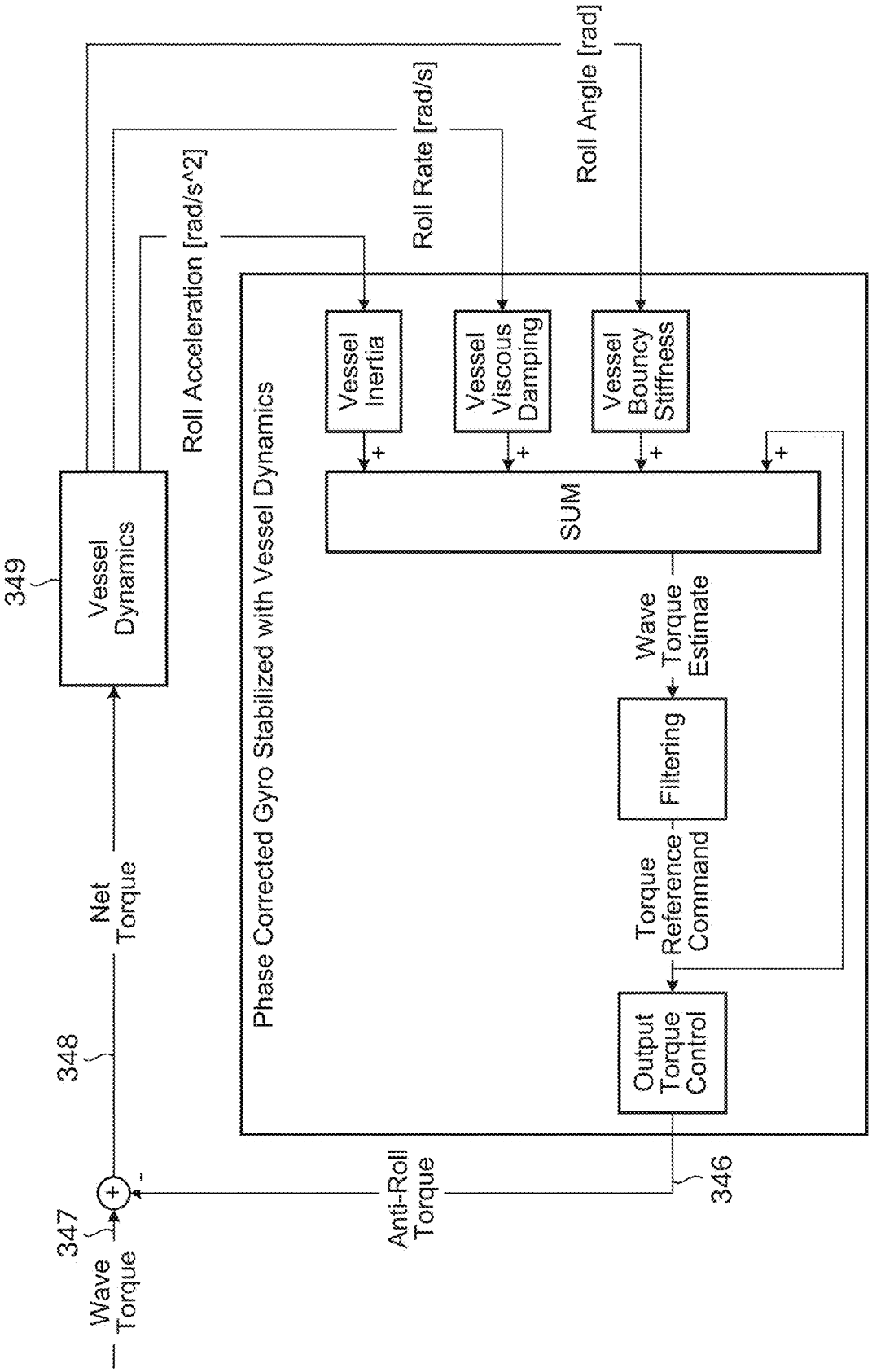
Roll Angle [rad]
Roll Rate [rad/s]
Roll Acceleration [rad/s^2]
349
Vessel Dynamics
Phase Corrected Gyro Stabilized with Vessel Dynamics
Vessel Inertia
Vessel Viscous Damping
Vessel Bouncy Stiffness
+
+
+
+
SUM
Wave Torque Estimate
Filtering
Torque Reference Command
Output Torque Control
Net Torque
348
347
Wave Torque
-
Anti-Roll Torque
346

FIG. 44

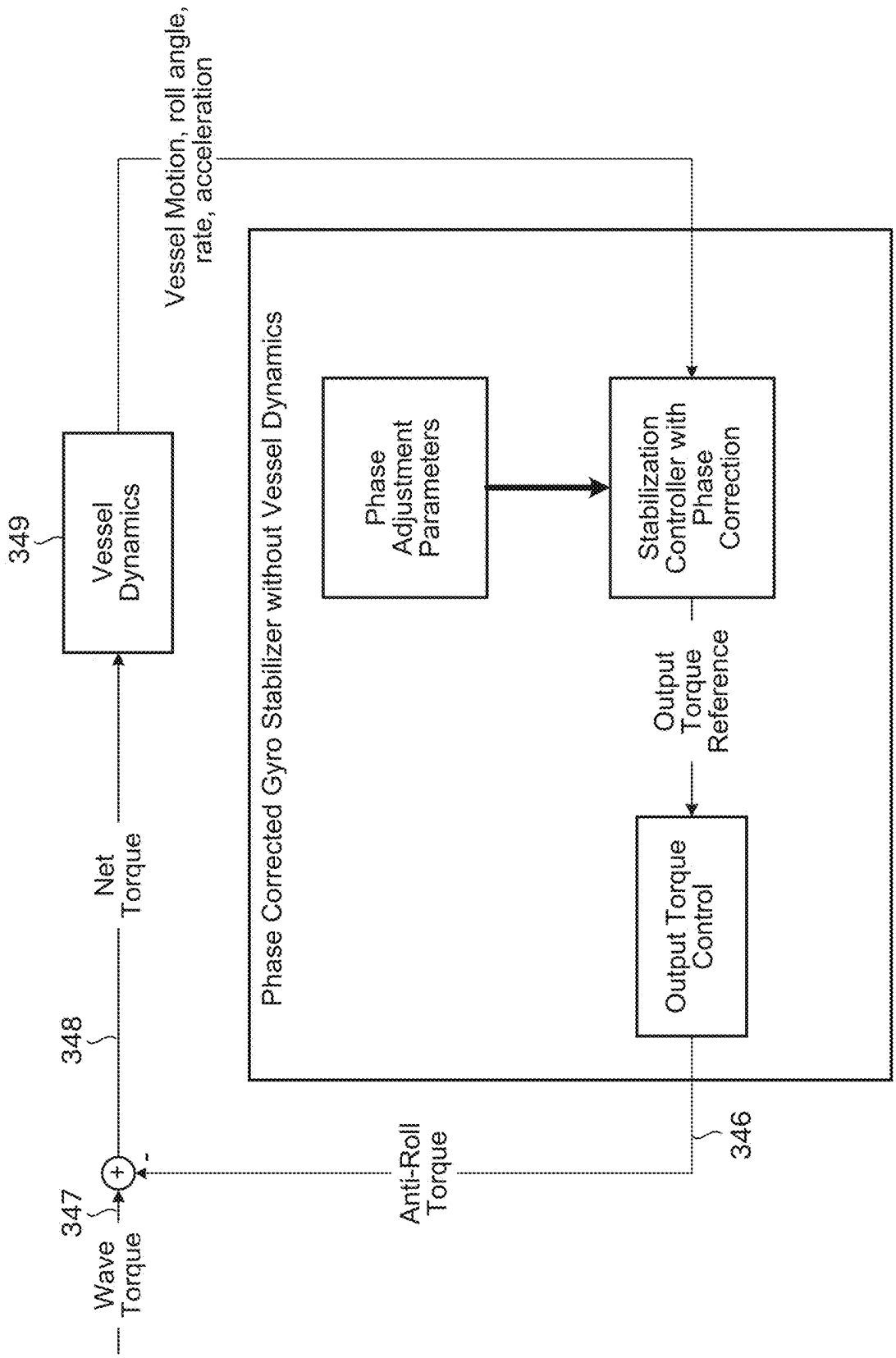
Vessel Motion, roll angle, rate, acceleration
349
Vessel Dynamics
Phase Corrected Gyro Stabilizer without Vessel Dynamics
Phase Adjustment Parameters
Stabilization Controller with Phase Correction
Output Torque Reference
Output Torque Control
Net Torque
348
346
Anti-Roll Torque
347
Wave Torque
+
-

FIG. 45

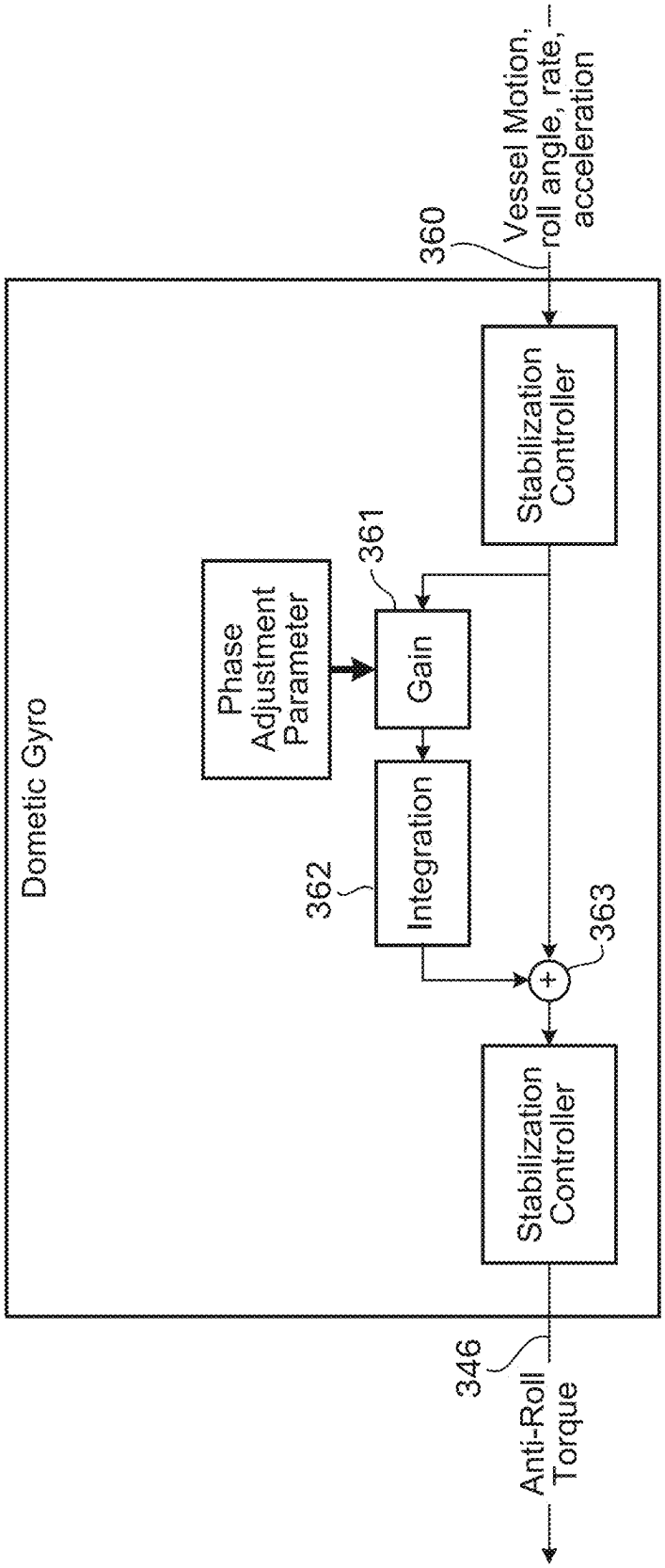
Dometic Gyro
Vessel Motion, roll angle, rate, acceleration
360
Stabilization Controller
Phase Adjustment Parameter
361
Gain
Integration
362
363
+
Stabilization Controller
346
Anti-Roll Torque

FIG. 46

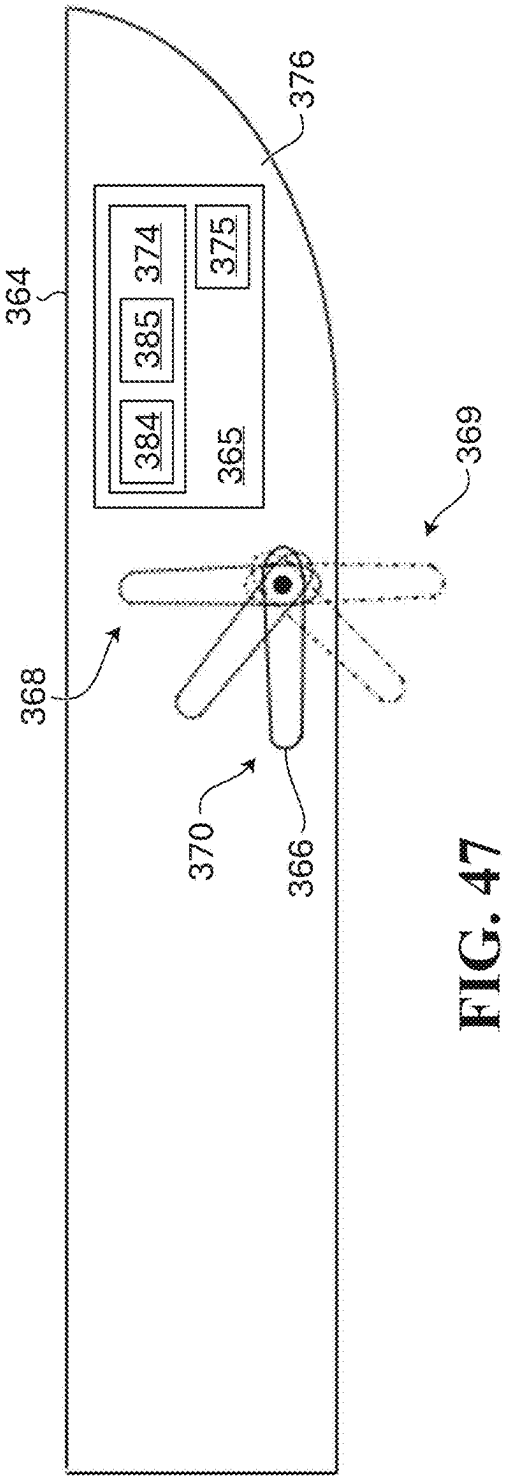
364
376
384
385
374
375
365
368
369
370
366

FIG. 47

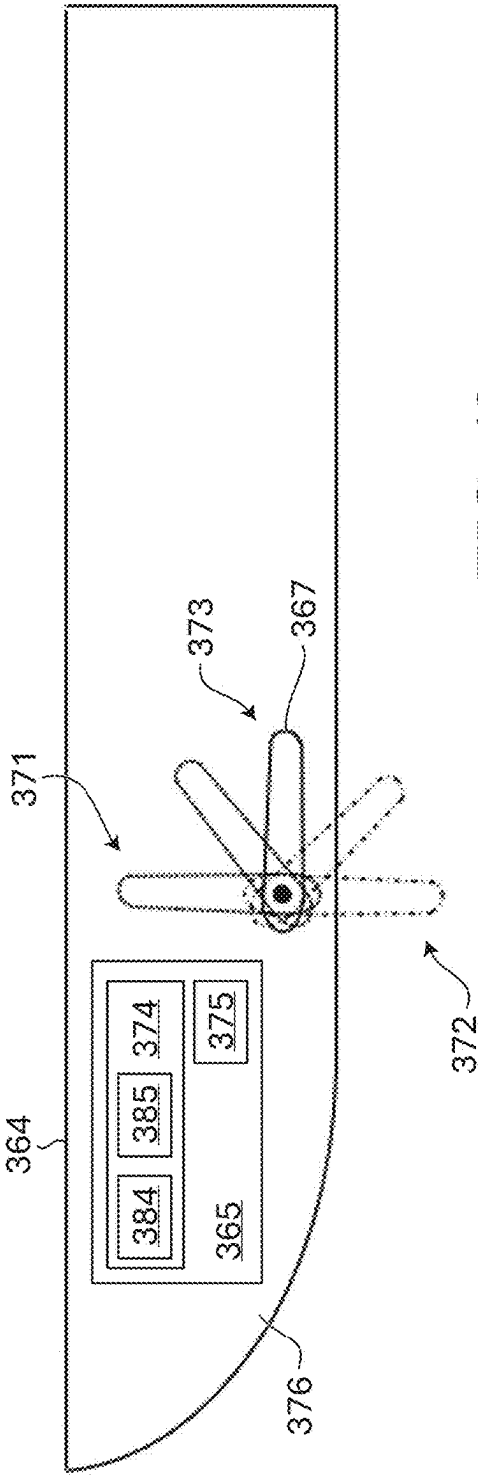
371
373
367
364
384
385
374
375
365
372
376

FIG. 48

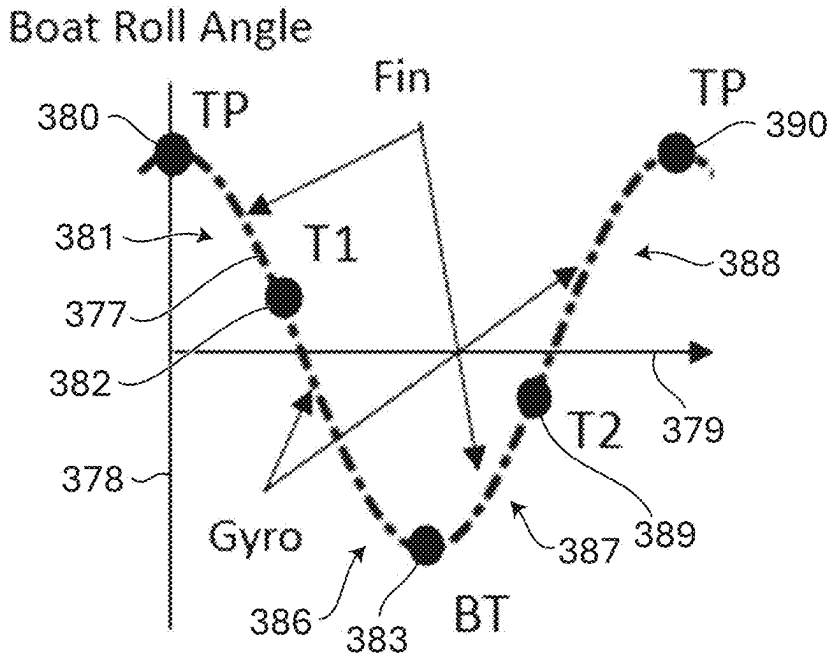
Boat Roll Angle
Fin
TP
TP
380
390
381
T1
388
377
382
T2
379
378
Gyro
387
389
386
383
BT

FIG. 49

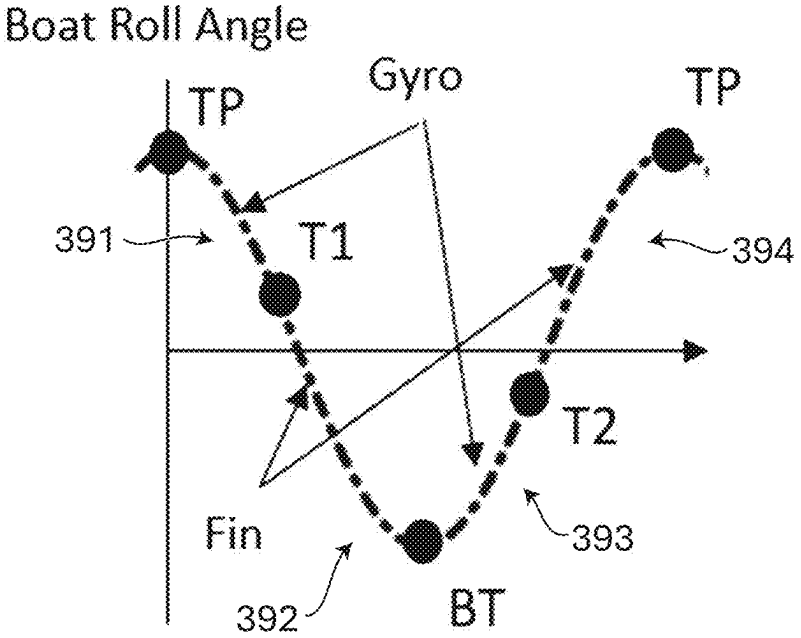
Boat Roll Angle
Gyro
TP
TP
391
T1
394
T2
Fin
393
392
BT

FIG. 50

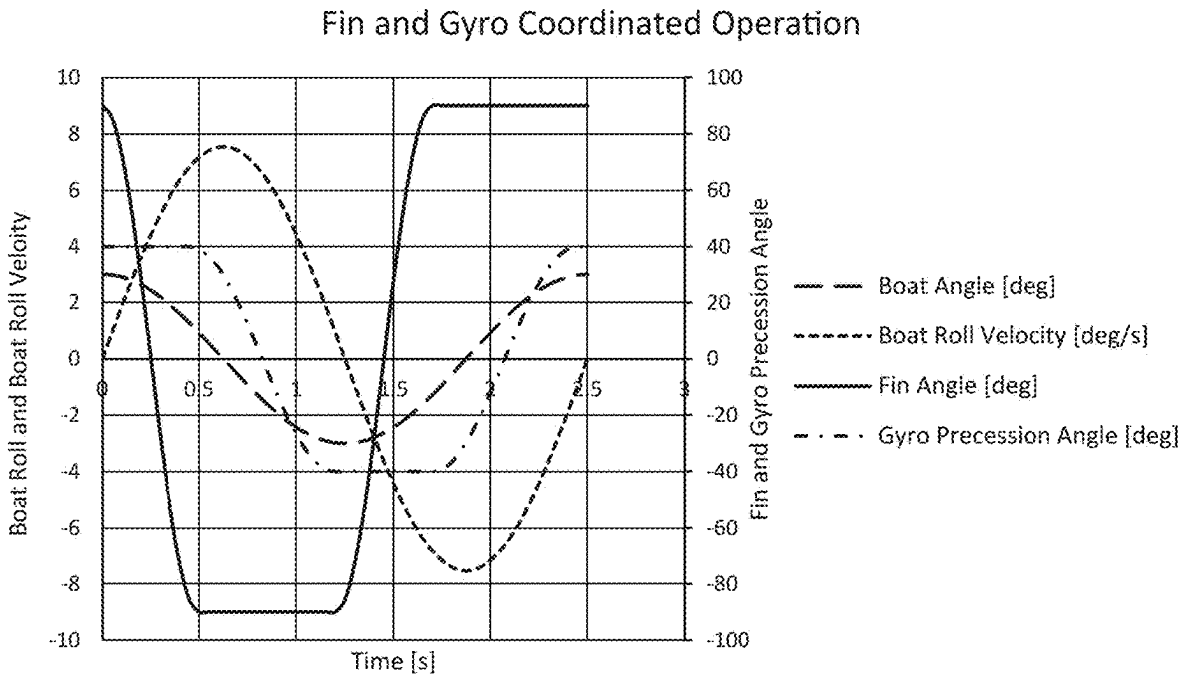
Fin and Gyro Coordinated Operation
Boat Roll and Boat Roll Velocity
Fin and Gyro Precession Angle
Time [s]
Boat Angle [deg]
Boat Roll Velocity [deg/s]
Fin Angle [deg]
Gyro Precession Angle [deg]

FIG. 51

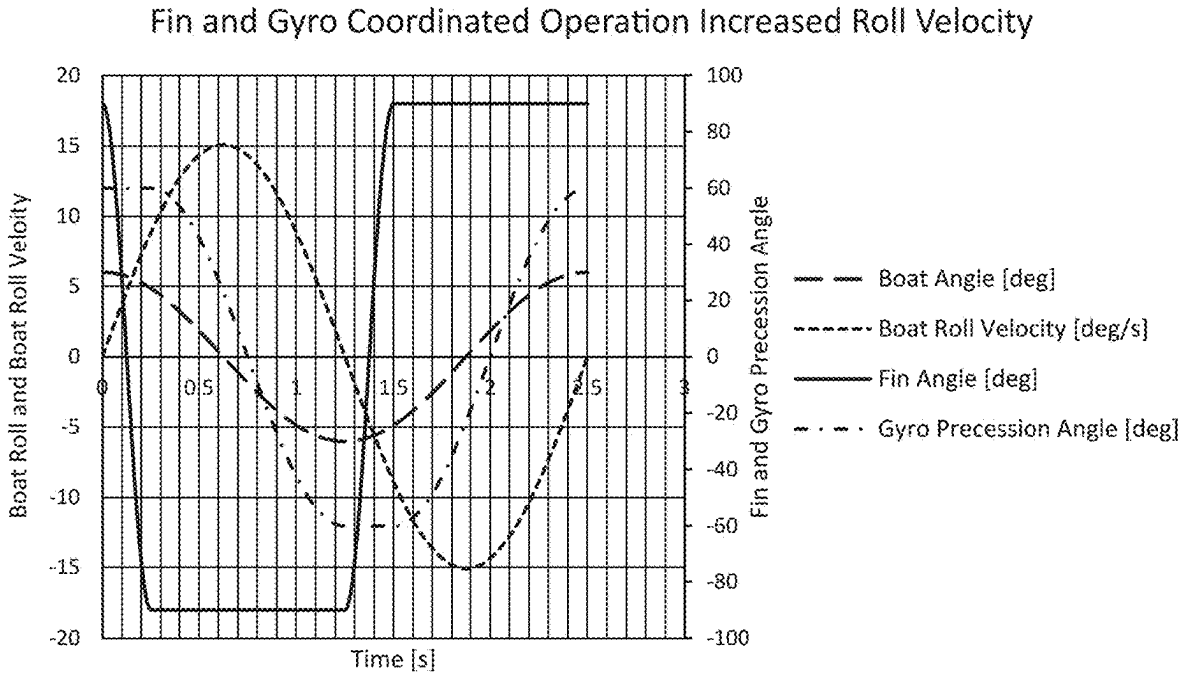
Fin and Gyro Coordinated Operation Increased Roll Velocity
Boat Roll and Boat Roll Velocity
Fin and Gyro Precession Angle
Time [s]
Boat Angle [deg]
Boat Roll Velocity [deg/s]
Fin Angle [deg]
Gyro Precession Angle [deg]

FIG. 52

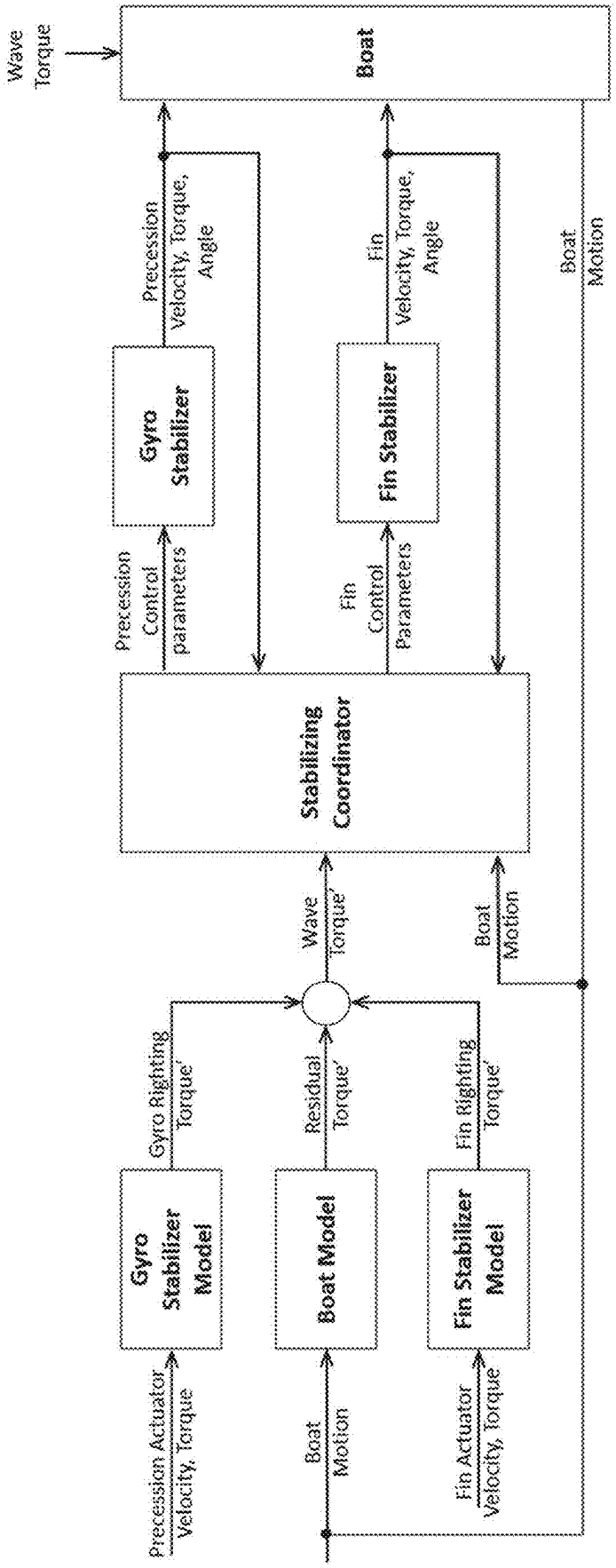
Wave Torque
Boat
Precession Velocity, Torque, Angle
Fin Velocity, Torque, Angle
Boat Motion
Gyro Stabilizer
Fin Stabilizer
Precession Control parameters
Fin Control Parameters
Stabilizing Coordinator
Wave Torque'
Boat Motion
Gyro Righting Torque'
Residual Torque'
Fin Righting Torque'
Gyro Stabilizer Model
Boat Model
Fin Stabilizer Model
Precession Actuator Velocity, Torque
Boat Motion
Fin Actuator Velocity, Torque

FIG. 53

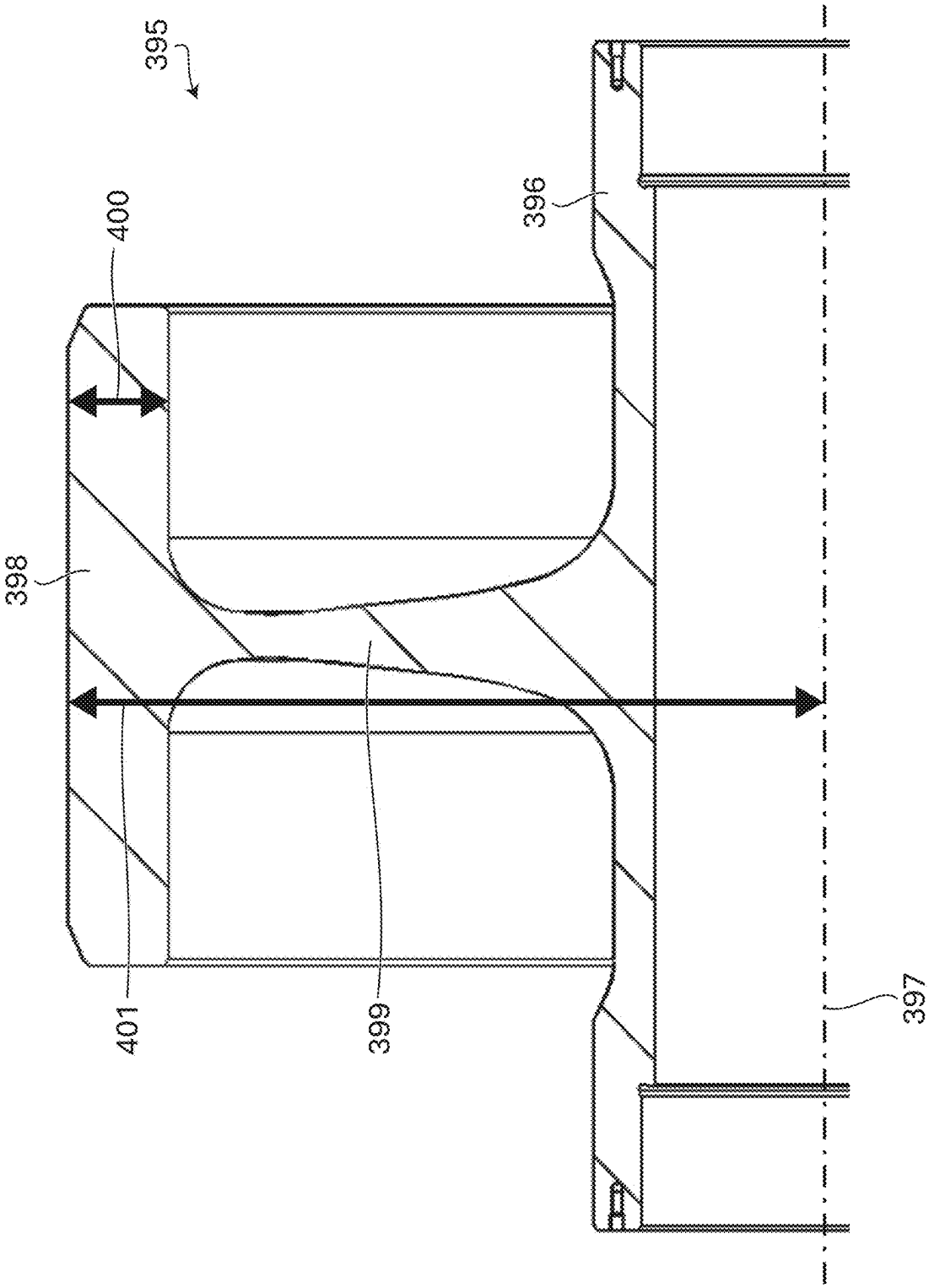

FIG. 54

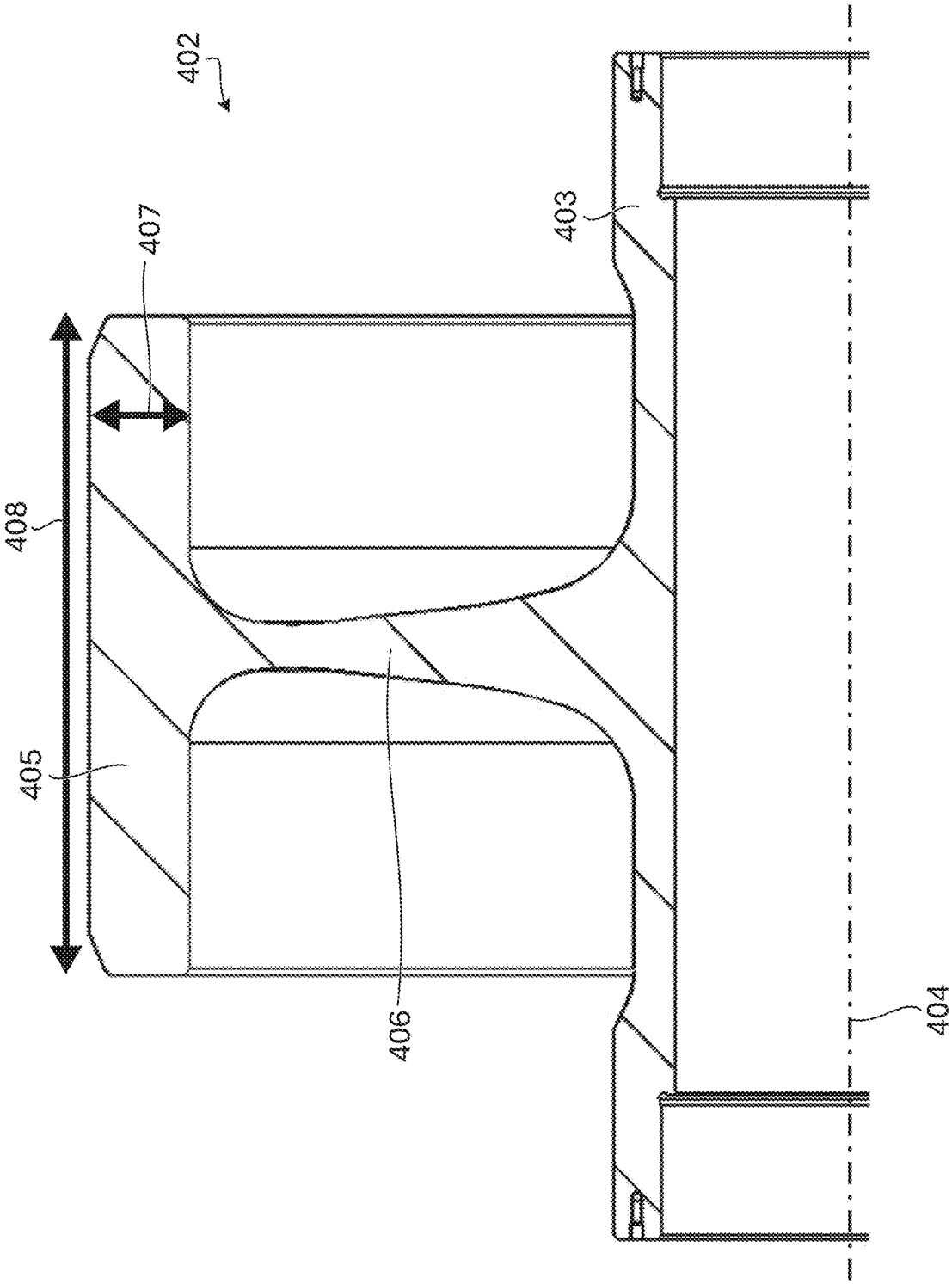

FIG. 55

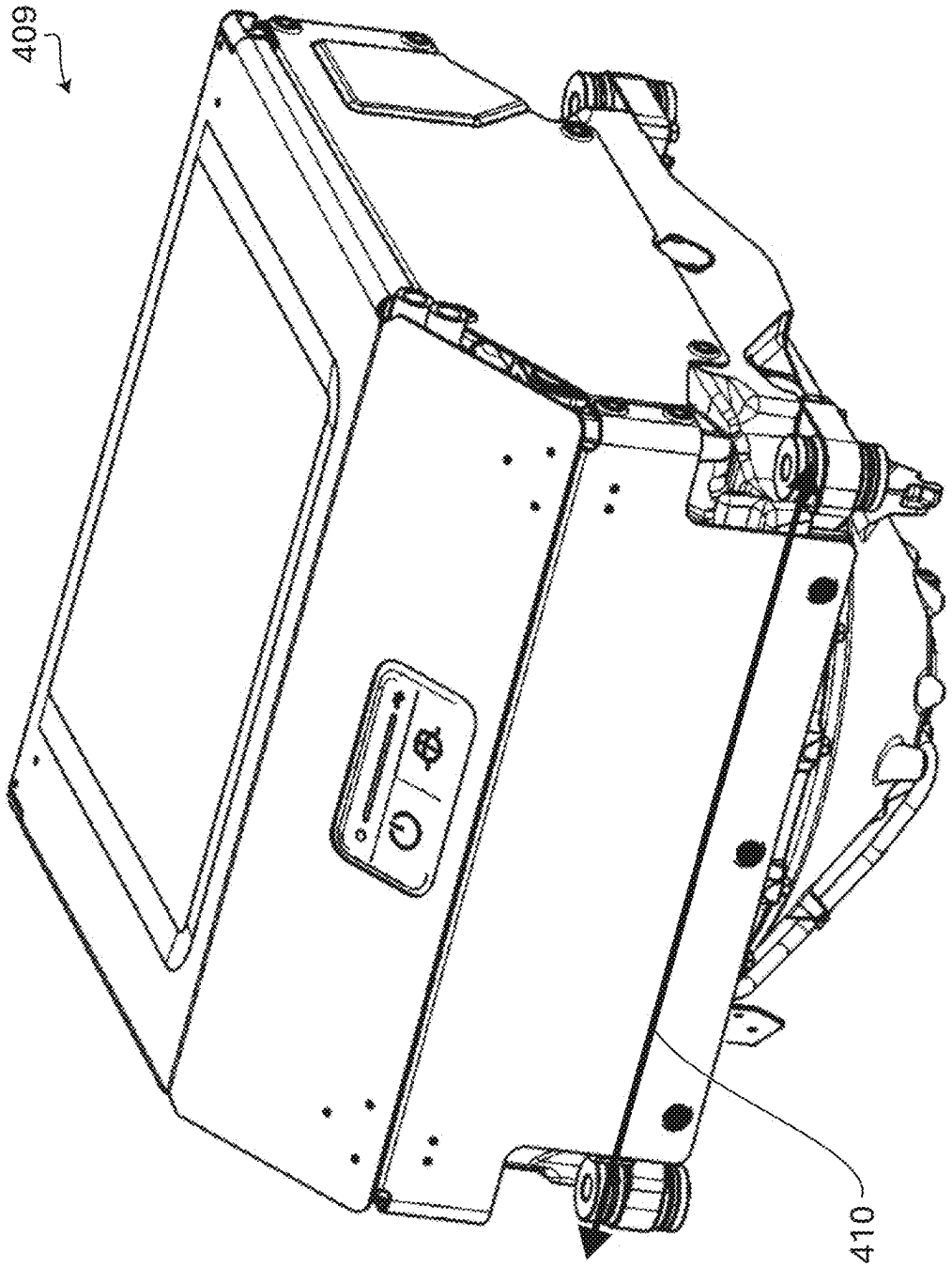

FIG. 56

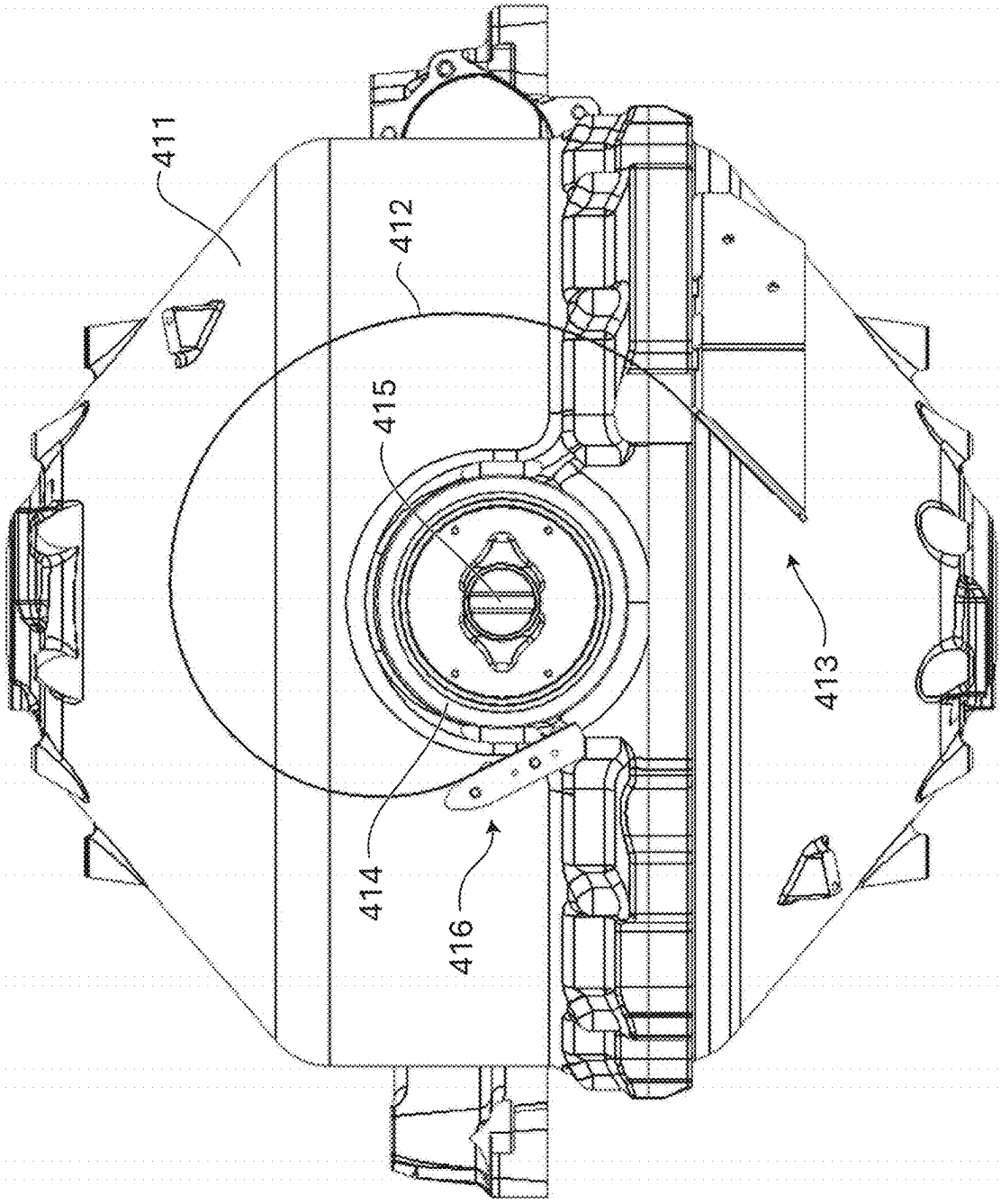

FIG. 57

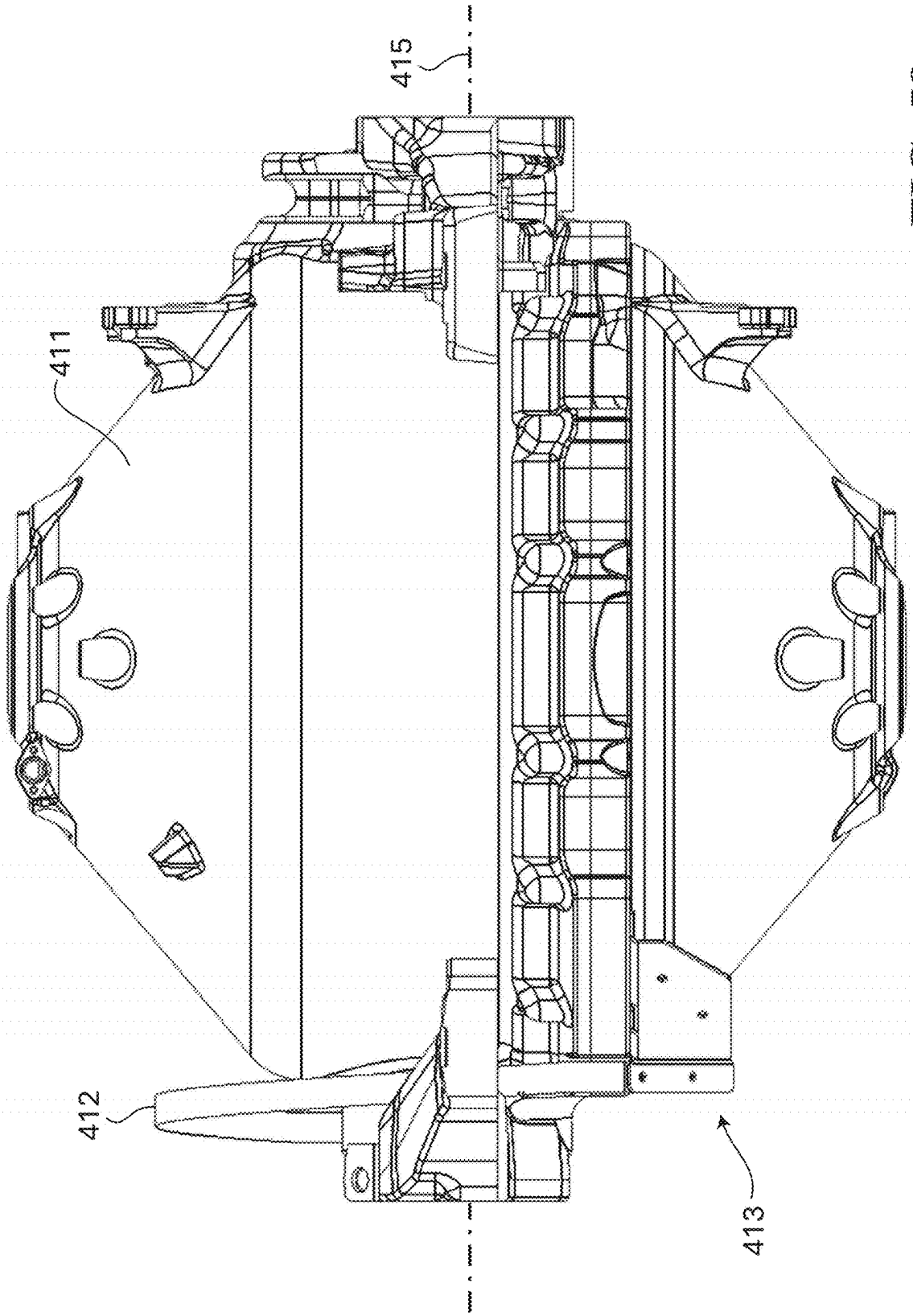

FIG. 58

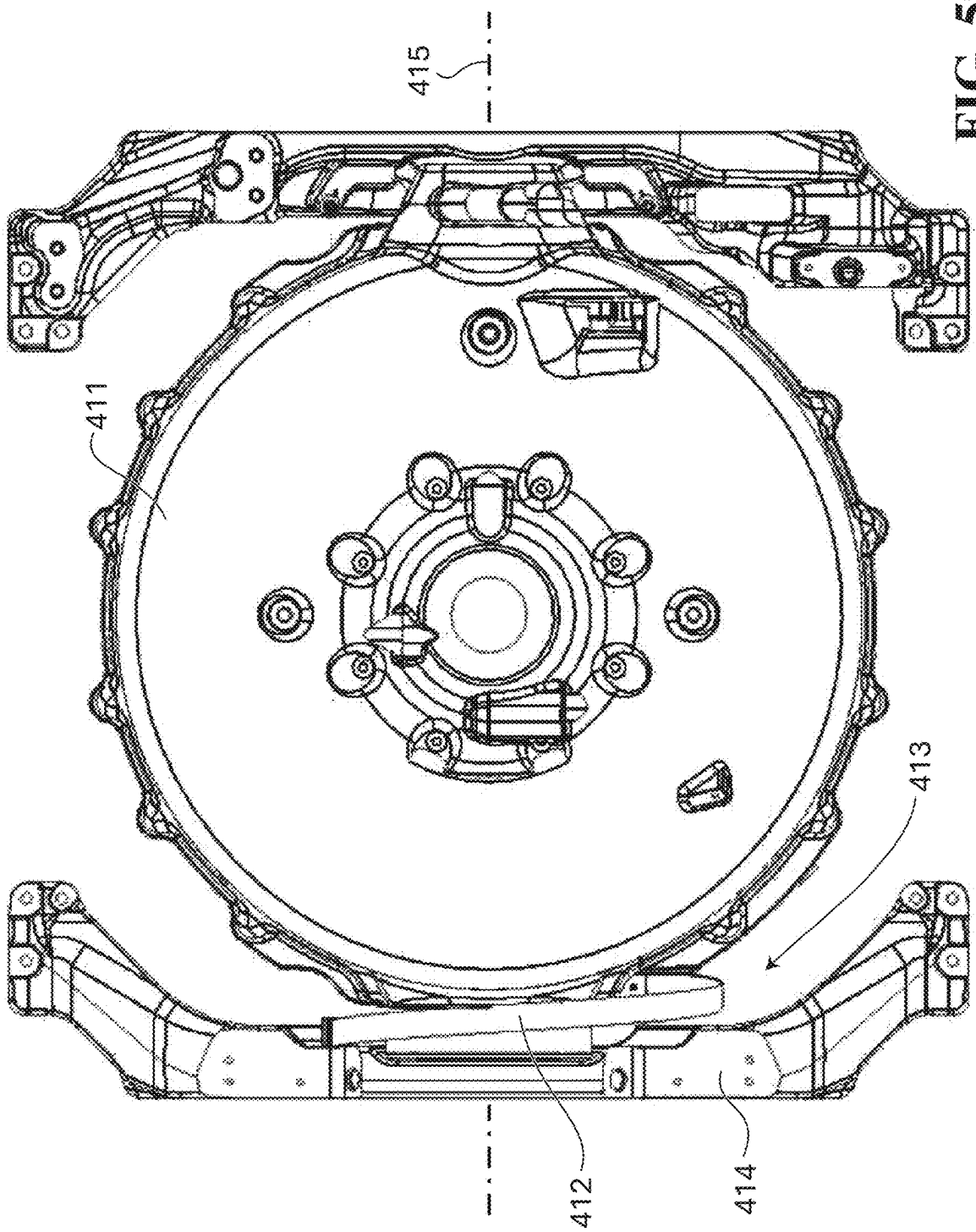

FIG. 59

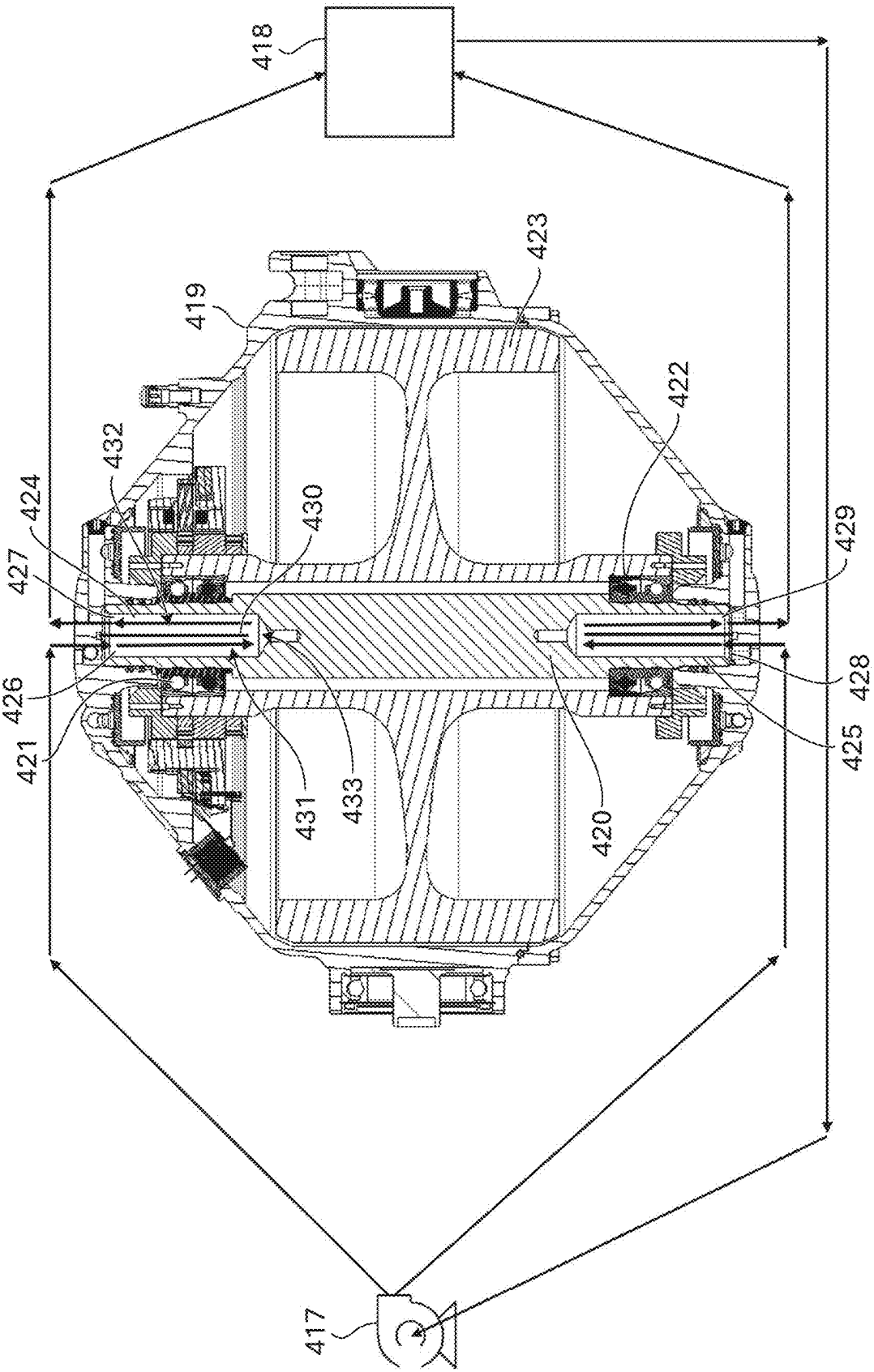
418
423
419
422
432
424
430
429
427
426
428
421
425
431
433
420
417

FIG. 60

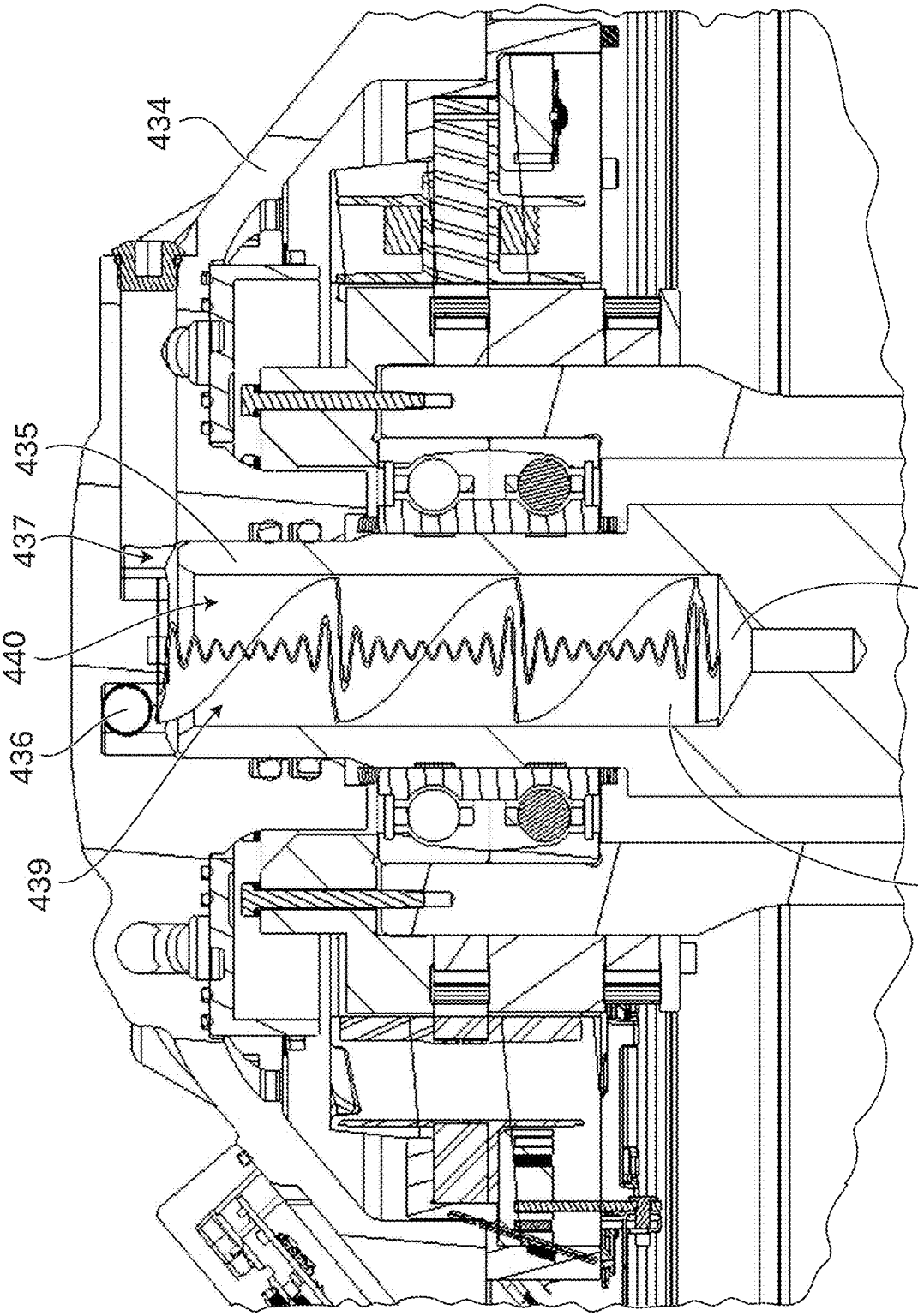

FIG. 61

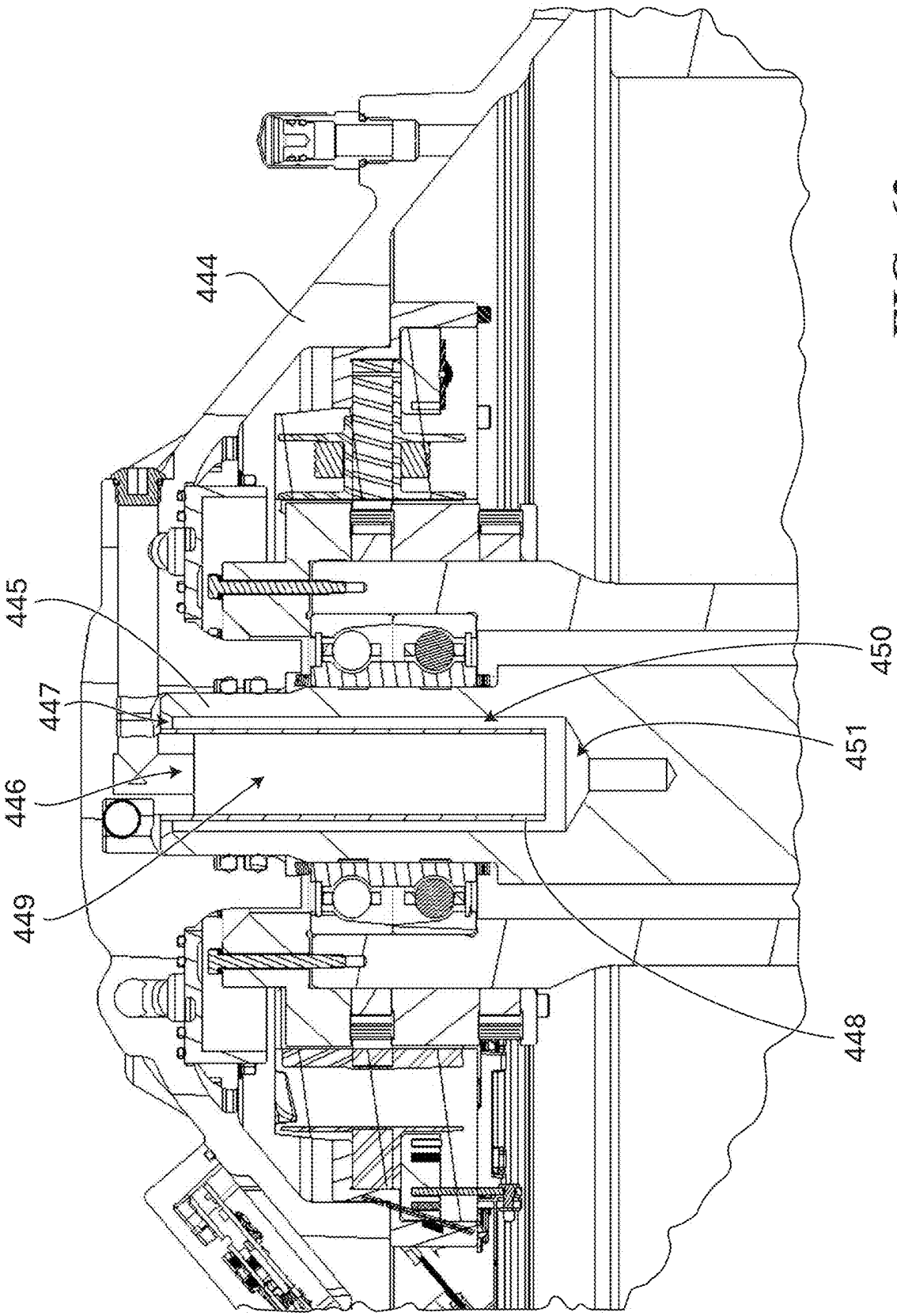

FIG. 62

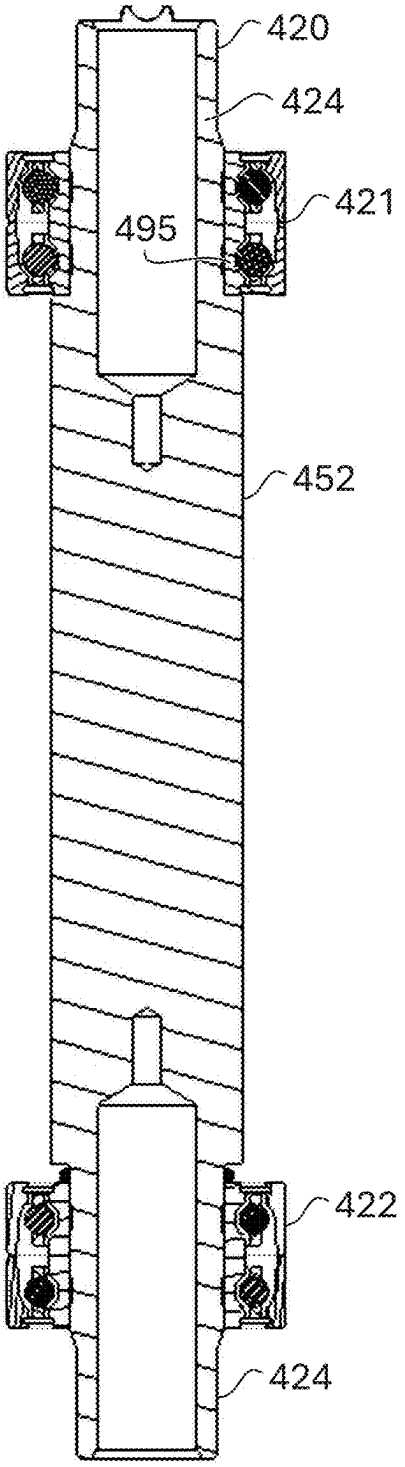
420
424
421
495
452
422
424

FIG. 63

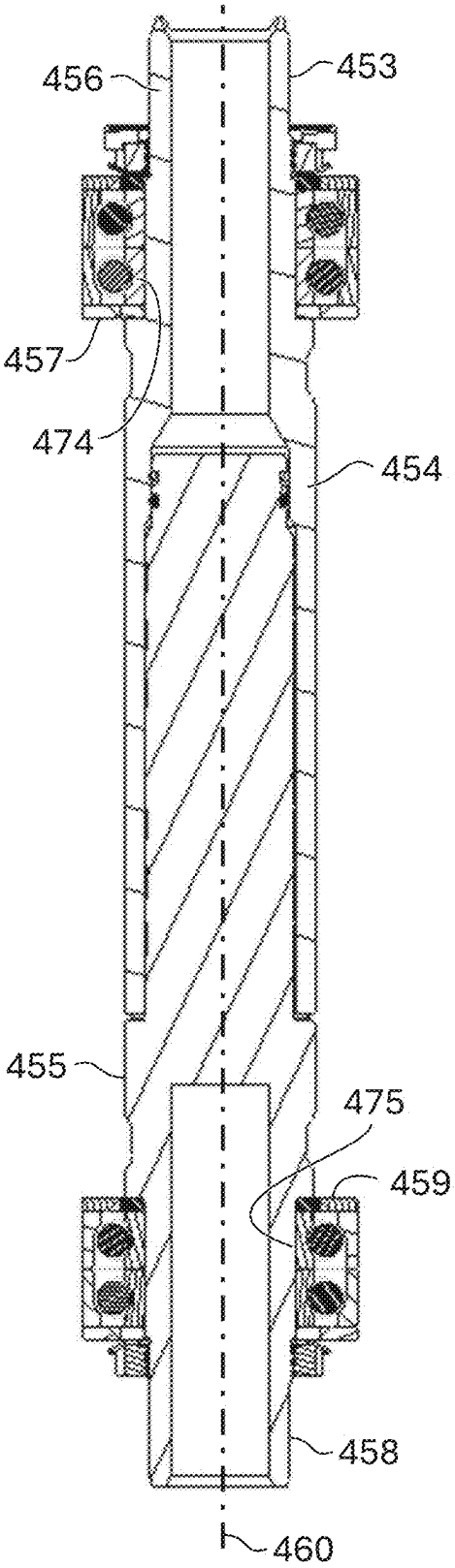
456
453
457
474
454
455
475
459
458
460

FIG. 64

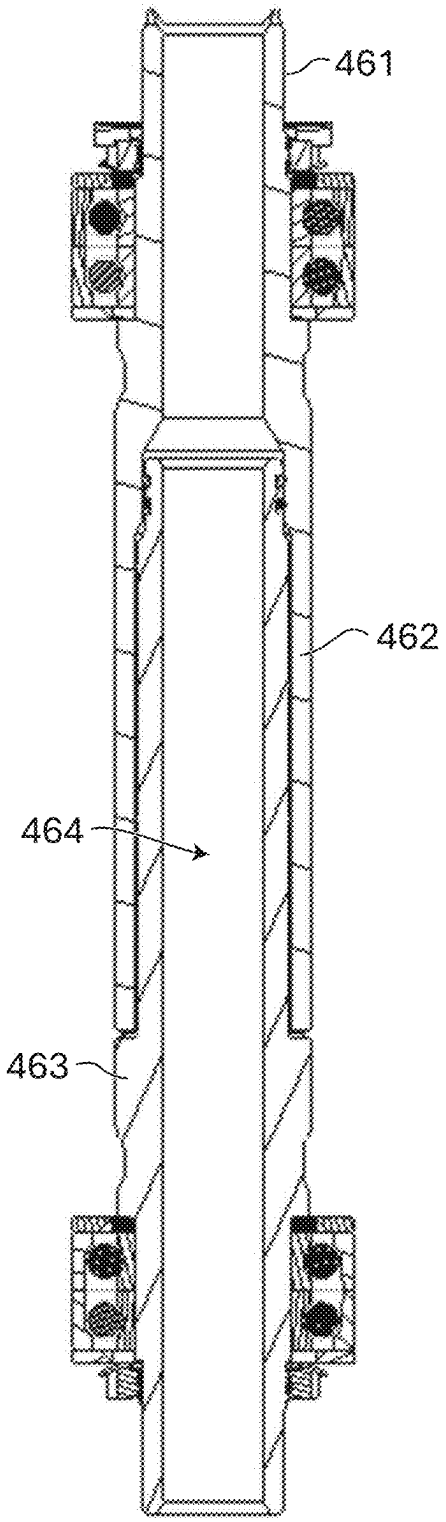

FIG. 65

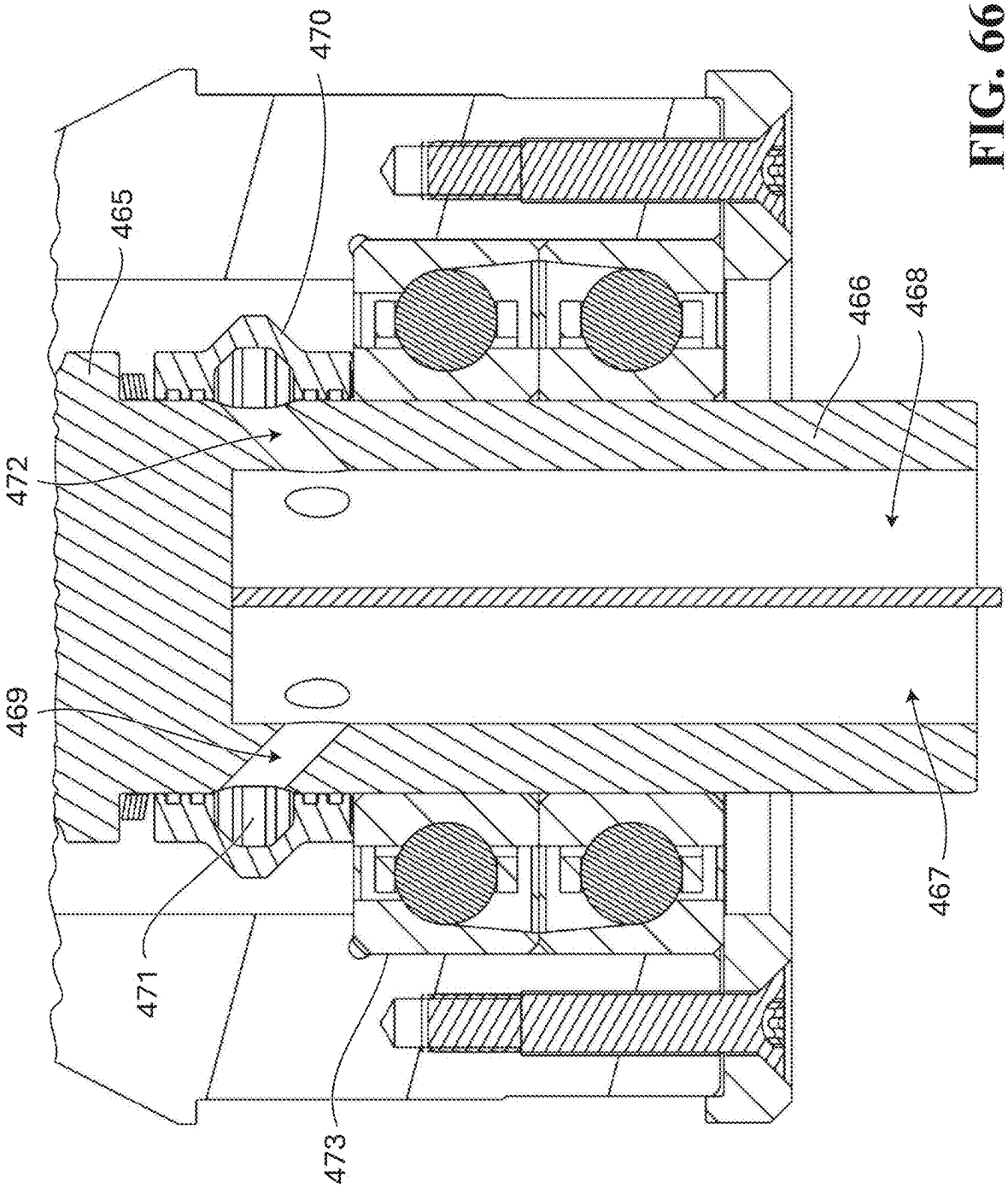

FIG. 66

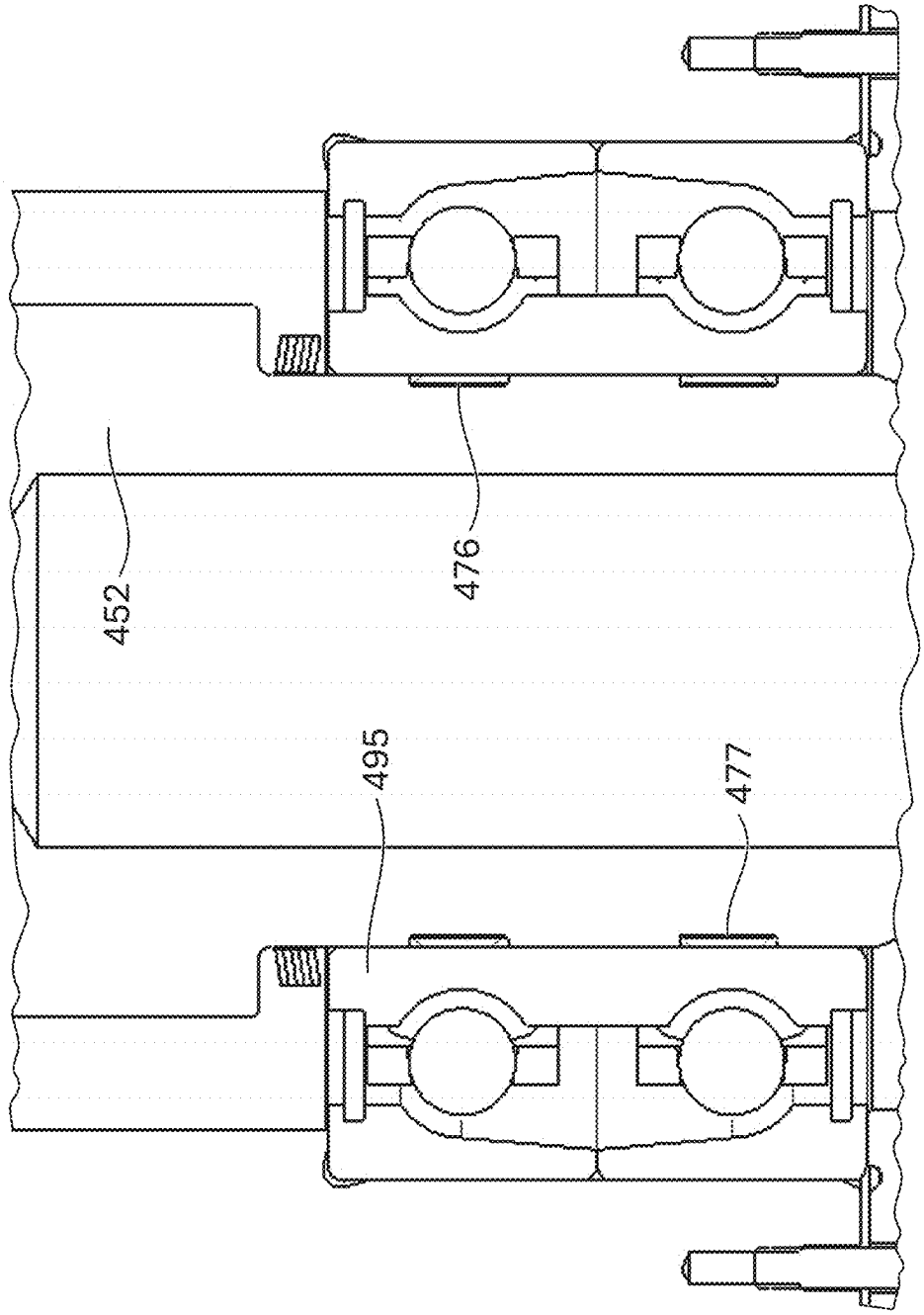

FIG. 67

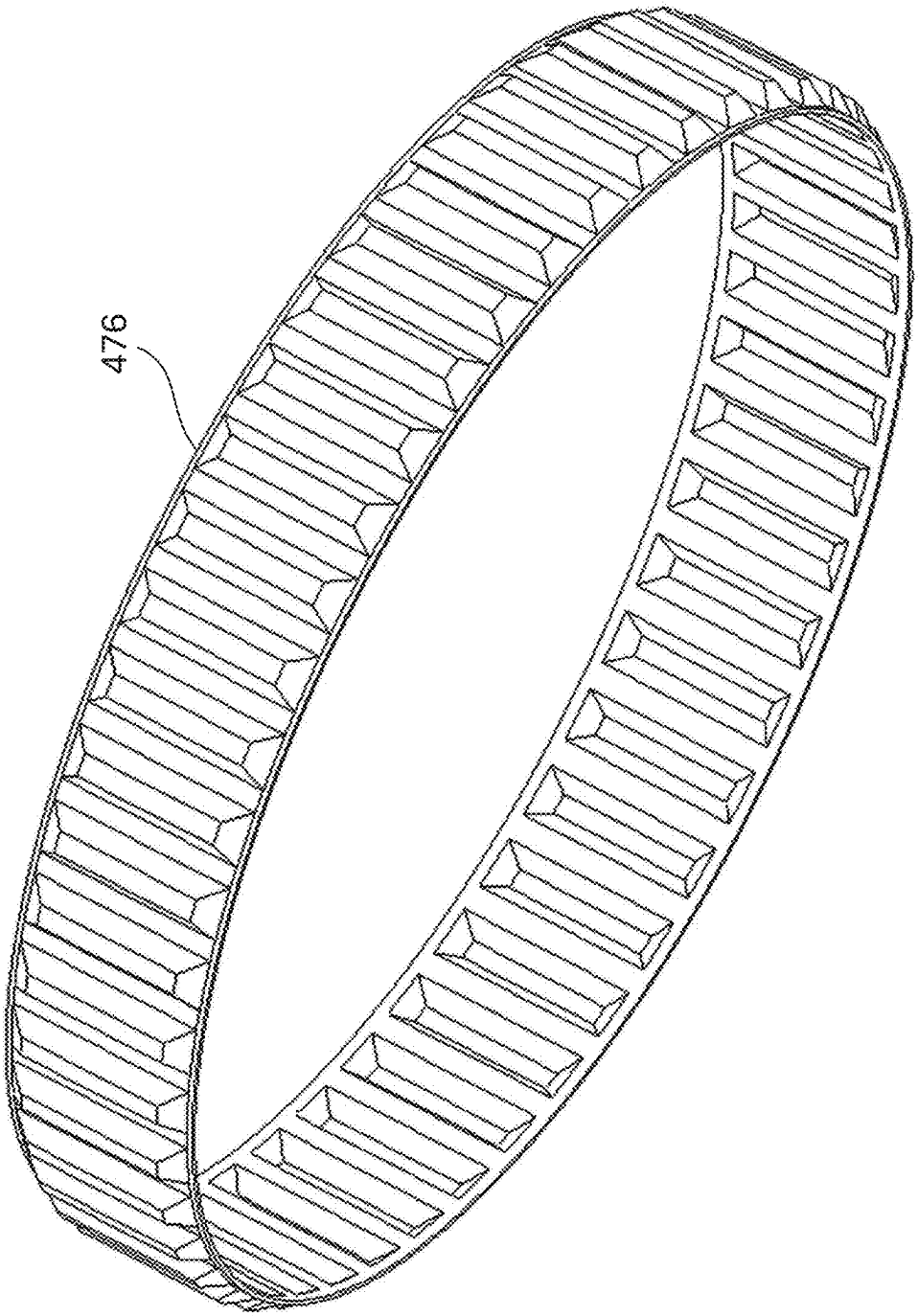

FIG. 68

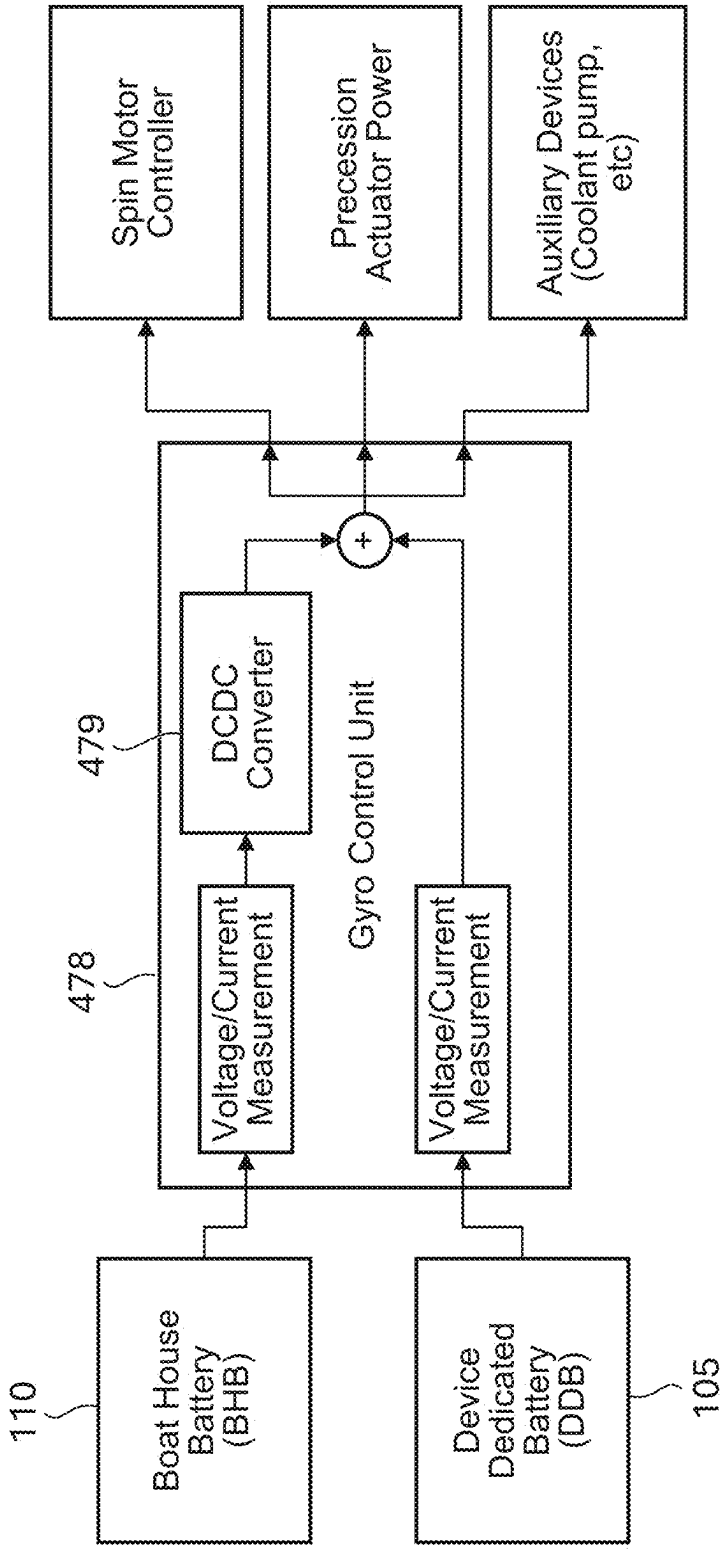
Spin Motor Controller
Precession Actuator Power
Auxiliary Devices (Coolant pump, etc)
479
DCDC Converter
Gyro Control Unit
478
Voltage/Current Measurement
Voltage/Current Measurement
110
Boat House Battery (BHB)
Device Dedicated Battery (DDB)
105

FIG. 69

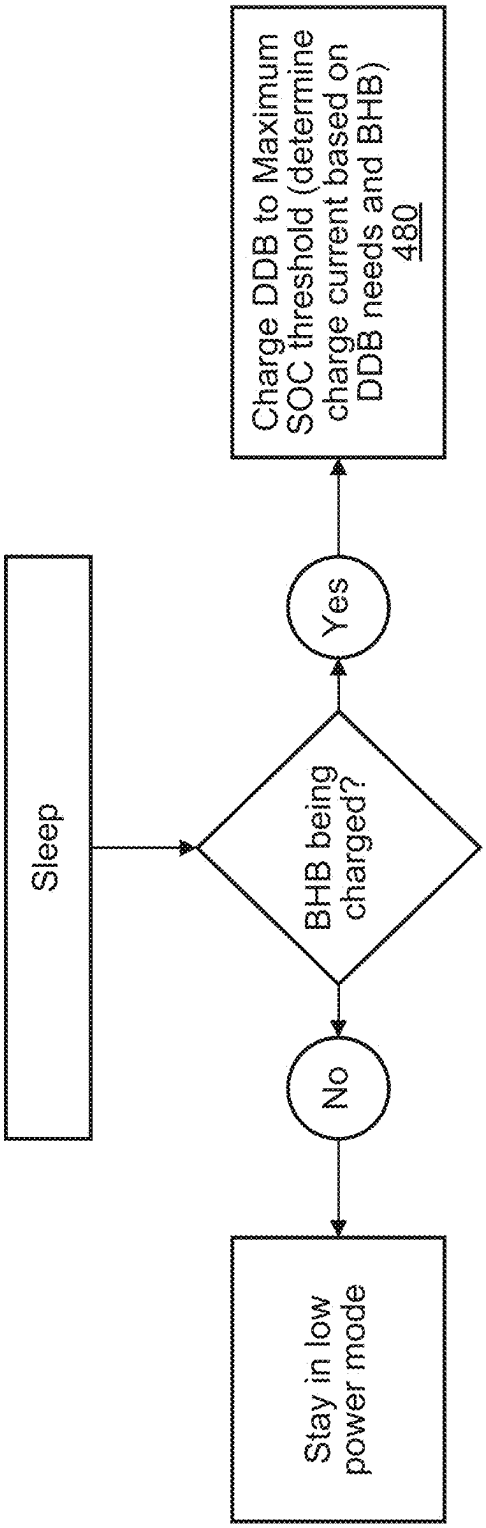
Sleep
BHB being charged?
No
Yes
Stay in low power mode
Charge DDB to Maximum SOC threshold (determine charge current based on DDB needs and BHB)
480

FIG. 70

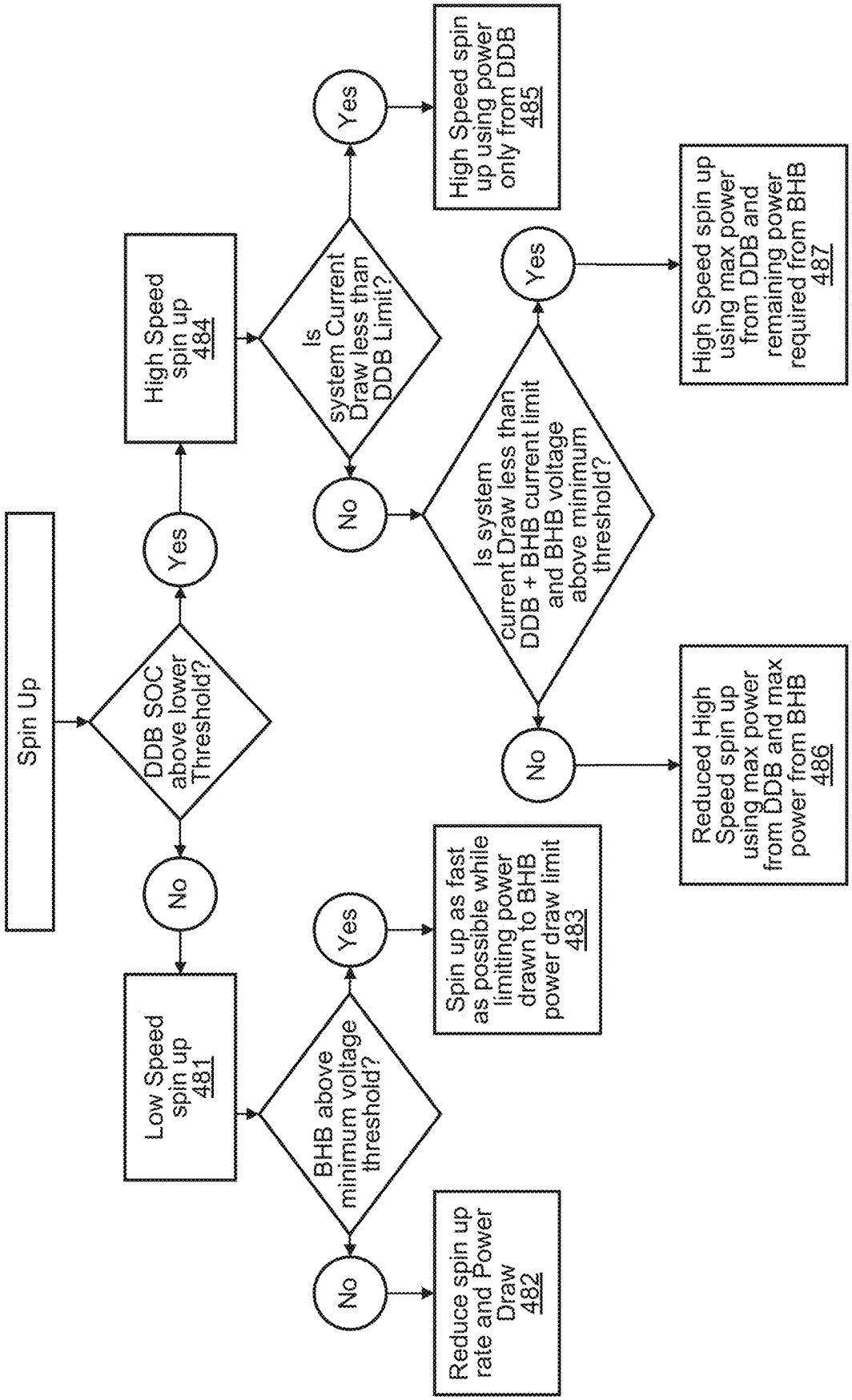
Spin Up
DDB SOC above lower Threshold?
Yes
No
High Speed spin up 484
Low Speed spin up 481
Is system Current Draw less than DDB Limit?
Yes
No
High Speed spin up using power only from DDB 485
BHB above minimum voltage threshold?
Yes
No
Spin up as fast as possible while limiting power drawn to BHB power draw limit 483
Reduce spin up rate and Power Draw 482
Is system current Draw less than DDB + BHB current limit and BHB voltage above minimum threshold?
Yes
No
High Speed spin up using max power from DDB and remaining power required from BHB 487
Reduced High Speed spin up using max power from DDB and max power from BHB 486

FIG. 71

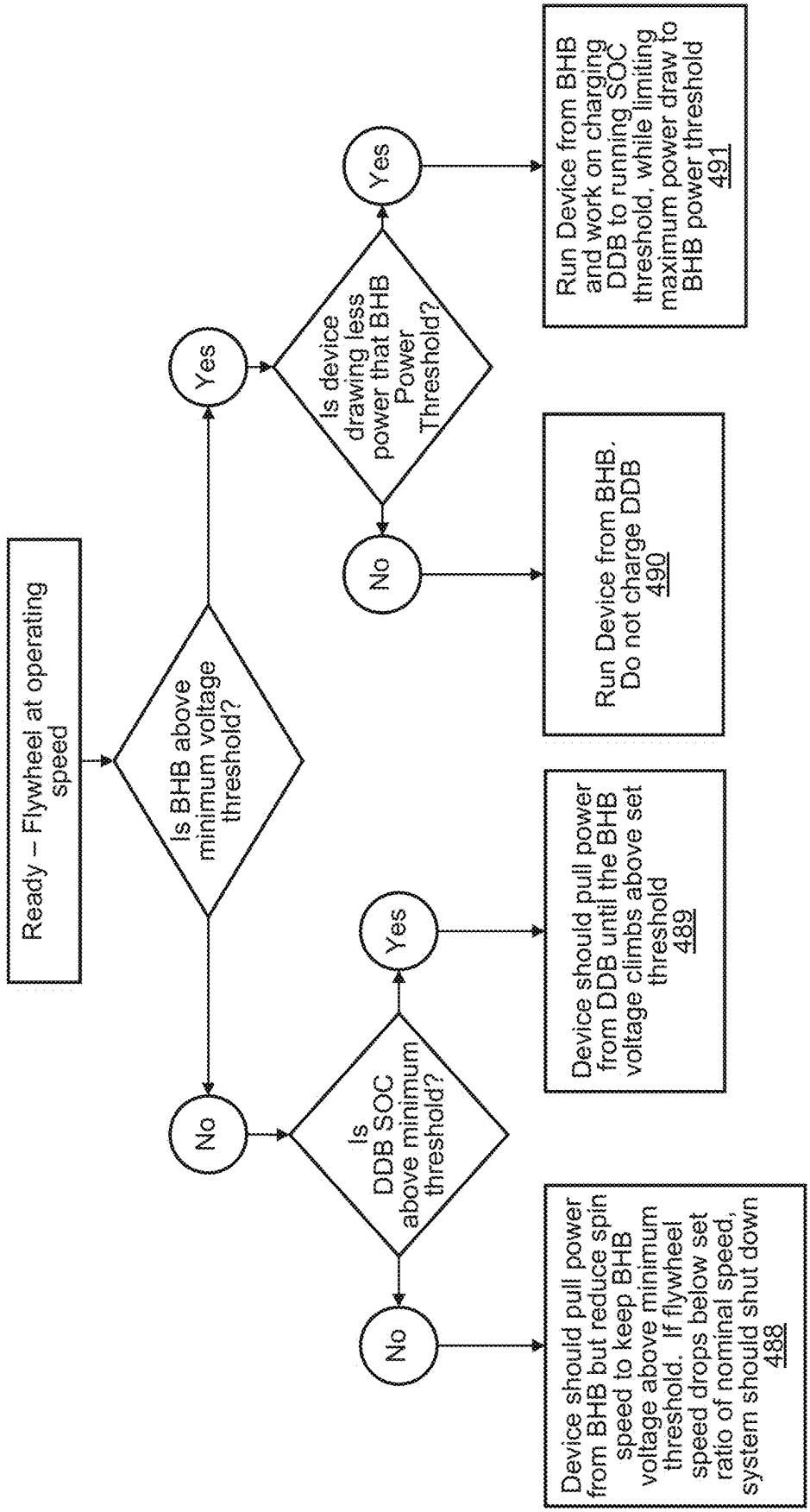
Ready – Flywheel at operating speed
Is BHB above minimum voltage threshold?
Yes
No
Is device drawing less power that BHB Power Threshold?
Yes
No
Run Device from BHB and work on charging DDB to running SOC threshold, while limiting maximum power draw to BHB power threshold 491
Run Device from BHB. Do not charge DDB 490
Is DDB SOC above minimum threshold?
Yes
No
Device should pull power from DDB until the BHB voltage climbs above set threshold 489
Device should pull power from BHB but reduce spin speed to keep BHB voltage above minimum threshold. If flywheel speed drops below set ratio of nominal speed, system should shut down 488

FIG. 72

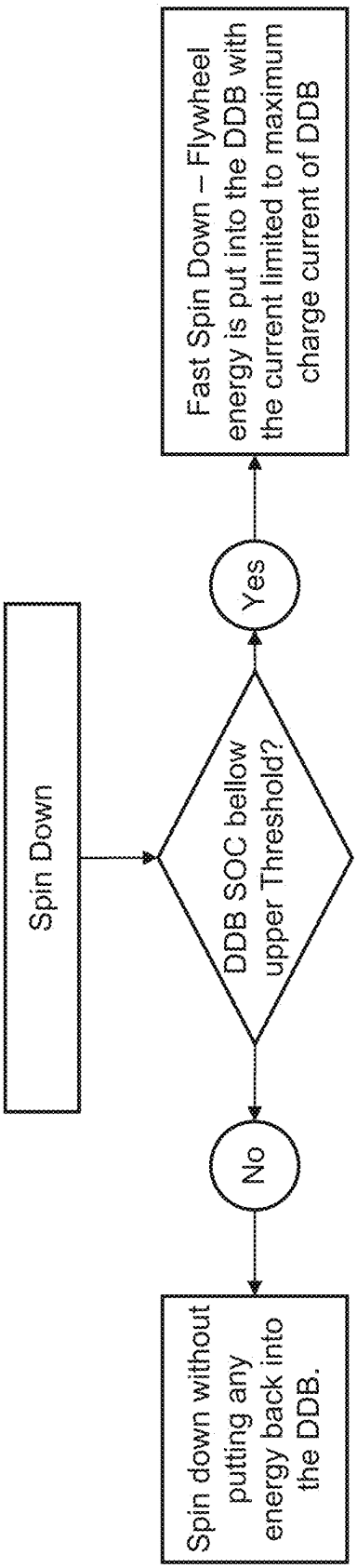
Spin Down
DDB SOC bellow upper Threshold?
Yes
No
Fast Spin Down – Flywheel energy is put into the DDB with the current limited to maximum charge current of DDB
Spin down without putting any energy back into the DDB.

FIG. 73

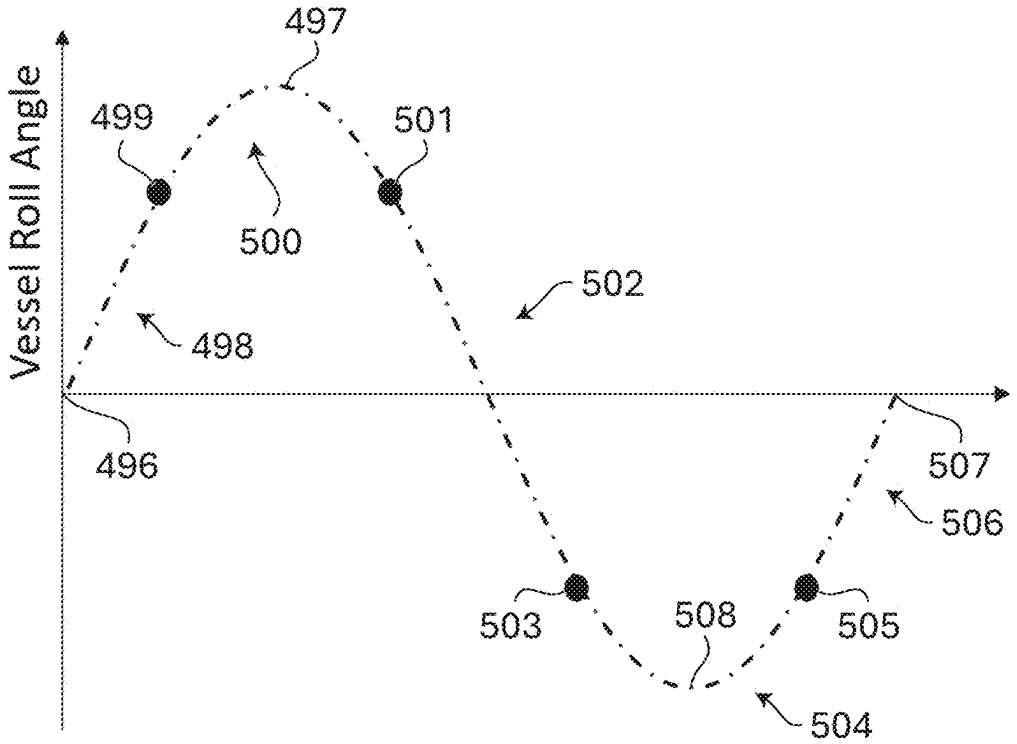
Vessel Roll Angle
497
499
501
500
502
498
496
507
506
503
508
505
504

FIG. 74

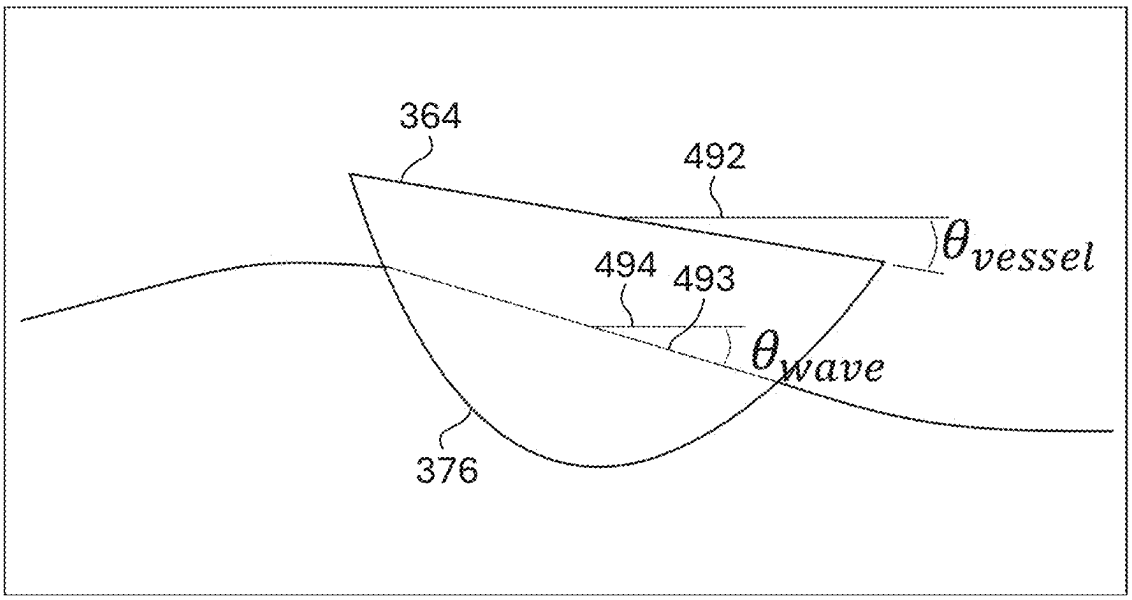
364
492
θ_{vessel}
494
493
θ_{wave}
376

FIG. 75

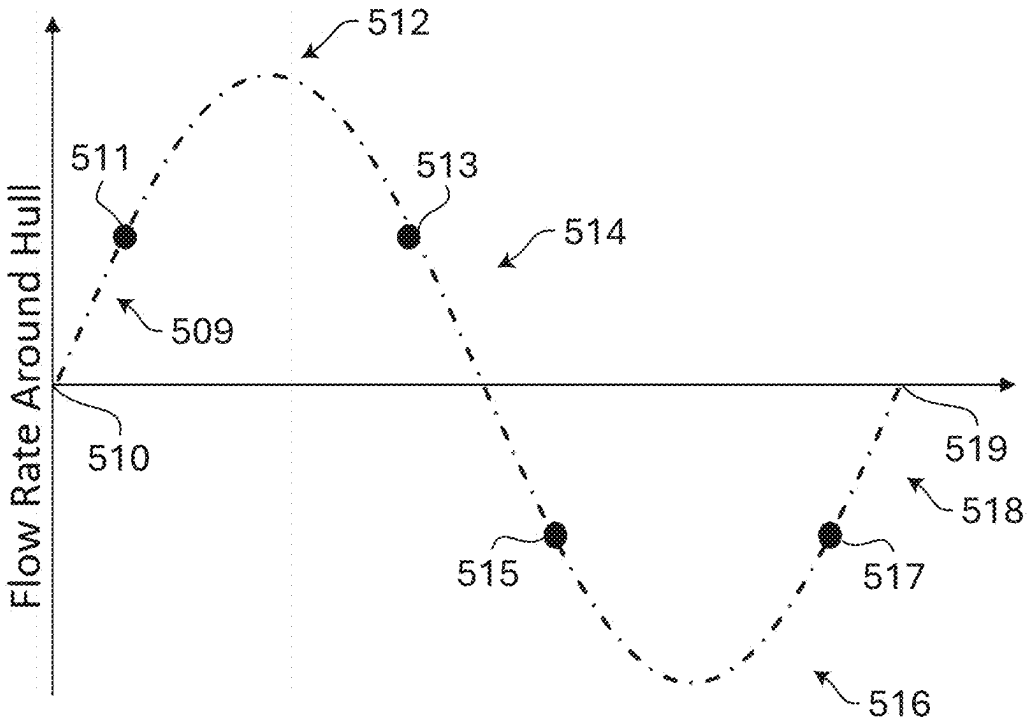
512
511
513
514
509
Flow Rate Around Hull
510
519
518
515
517
516

FIG. 76

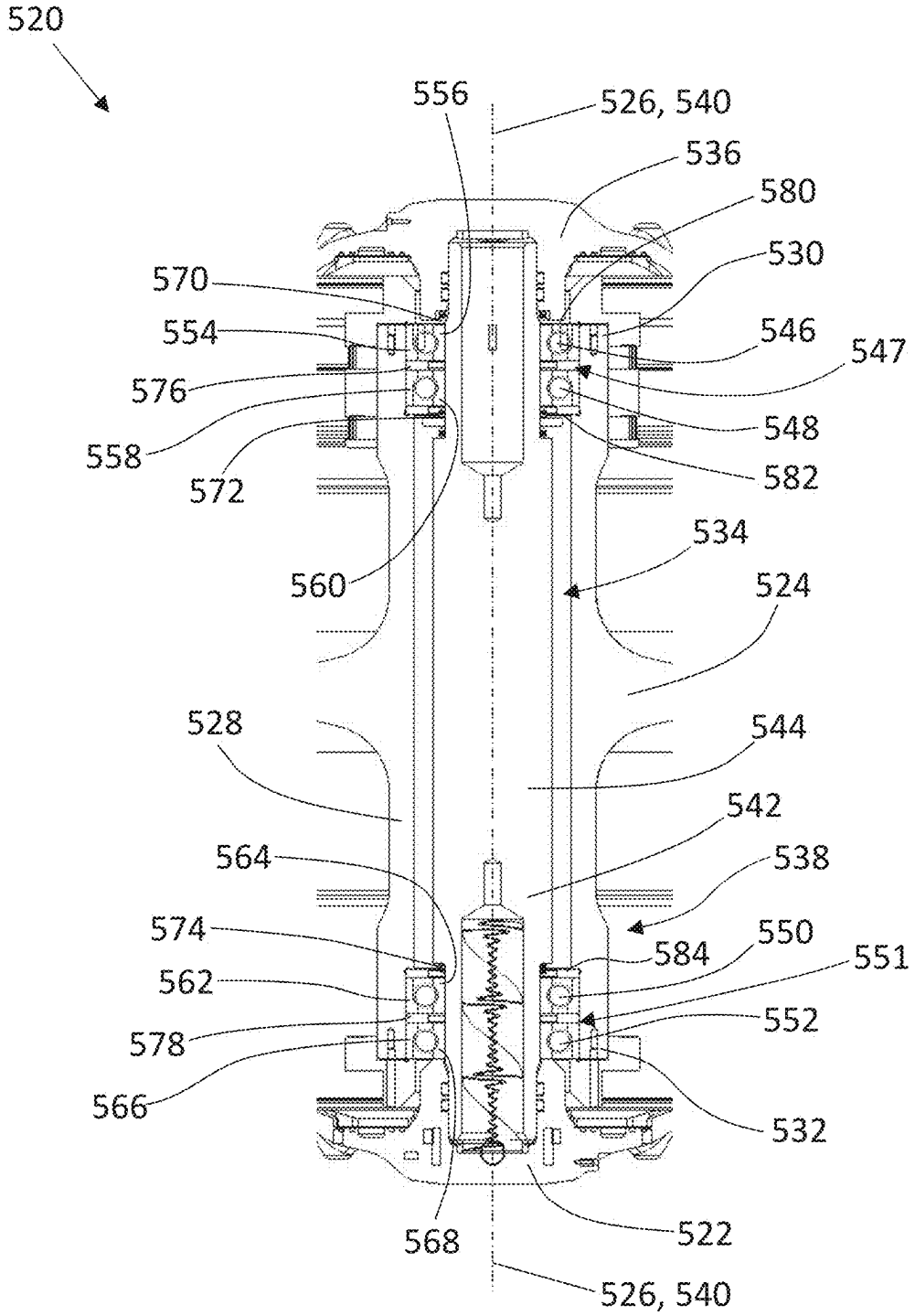
520
556
526, 540
536
580
530
570
554
546
547
576
548
558
582
572
534
560
524
528
544
542
564
538
574
550
584
551
562
552
578
566
532
568
522
526, 540

FIG. 77

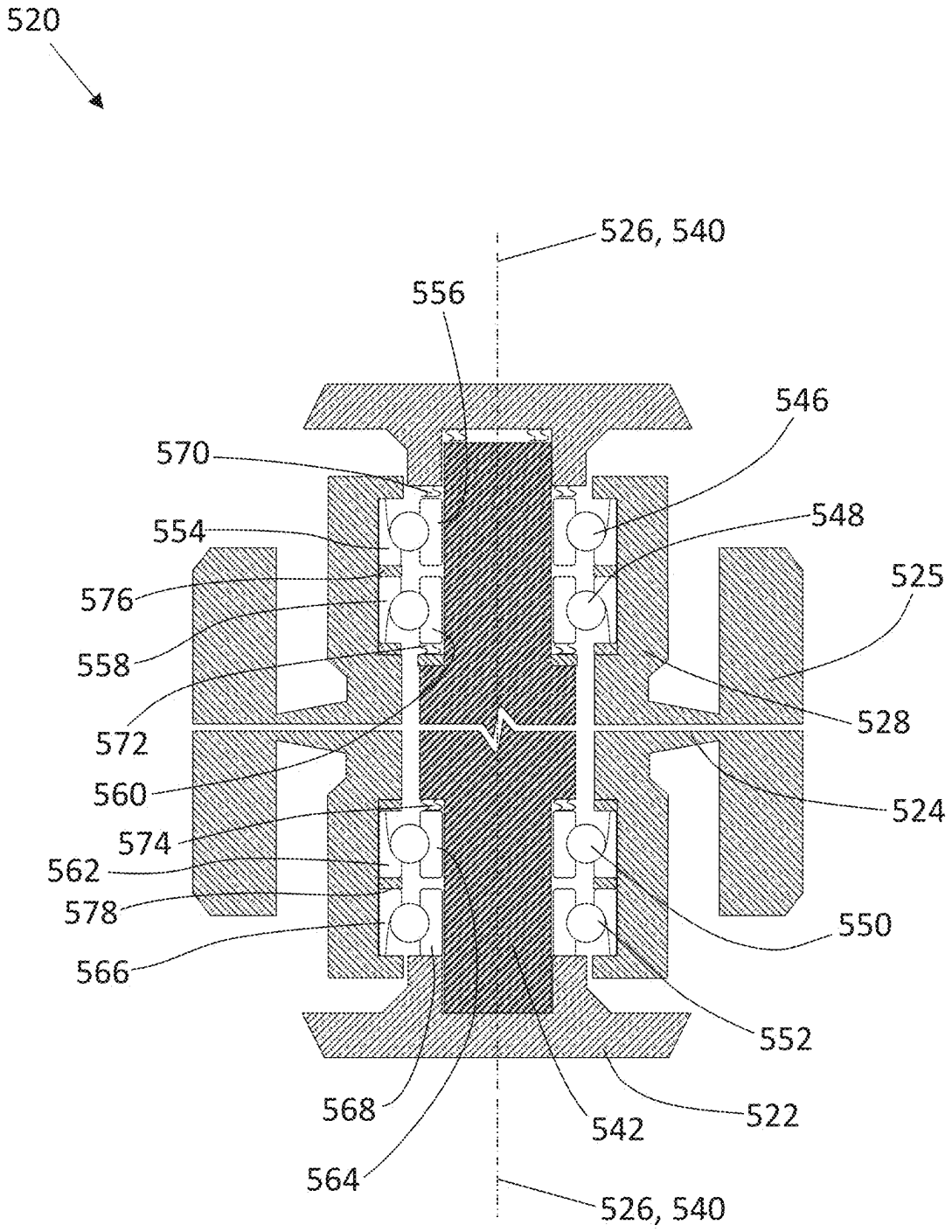
520
526, 540
556
546
570
548
554
525
576
558
528
572
560
524
574
562
578
550
566
552
568
542
522
564
526, 540

FIG. 78

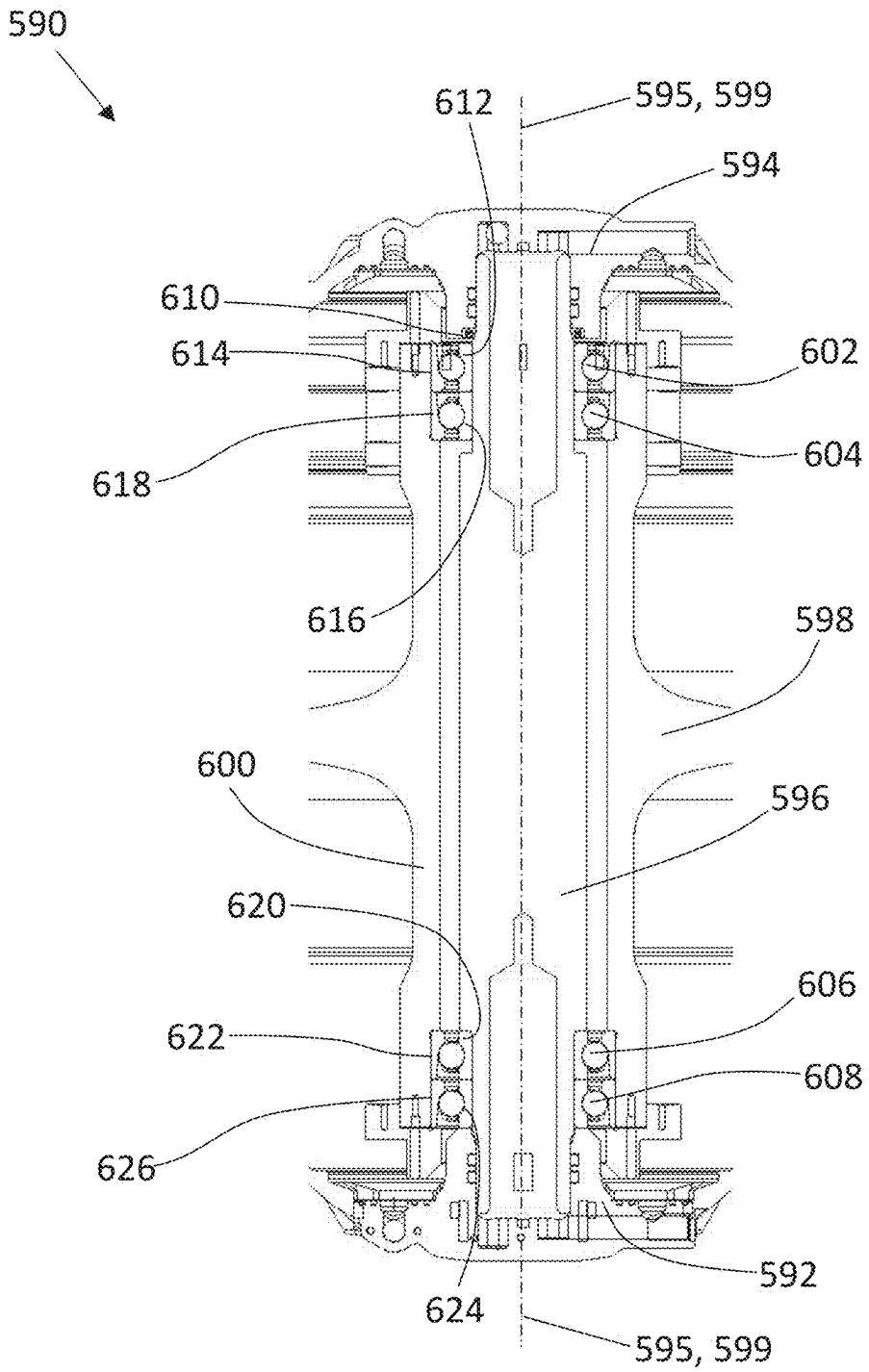
590
612
595, 599
594
610
614
602
618
604
616
598
600
596
620
606
622
608
626
592
624
595, 599

FIG. 79

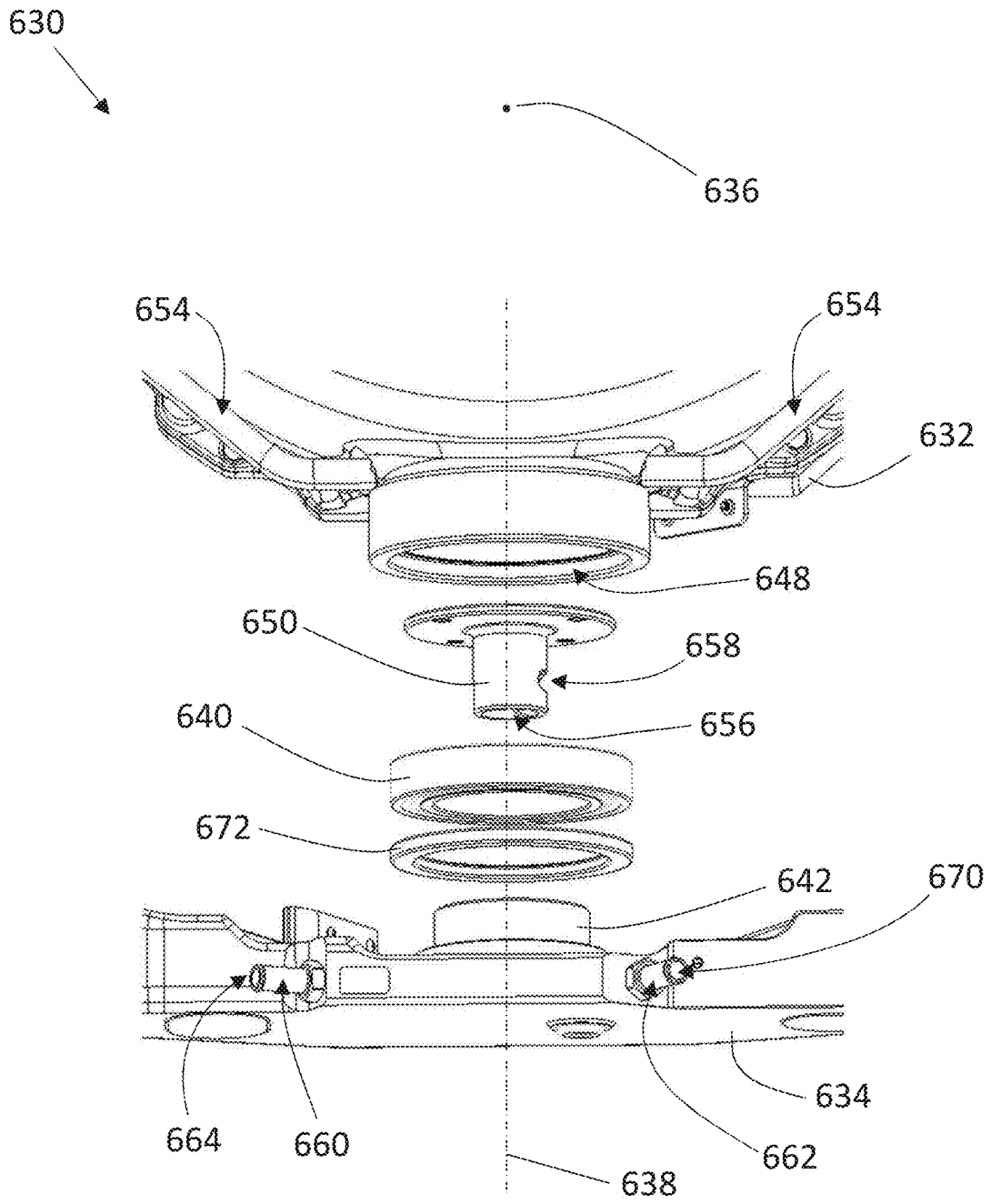
630
636
654
654
632
648
650
658
640
656
672
642
670
634
664
660
662
638

FIG. 80

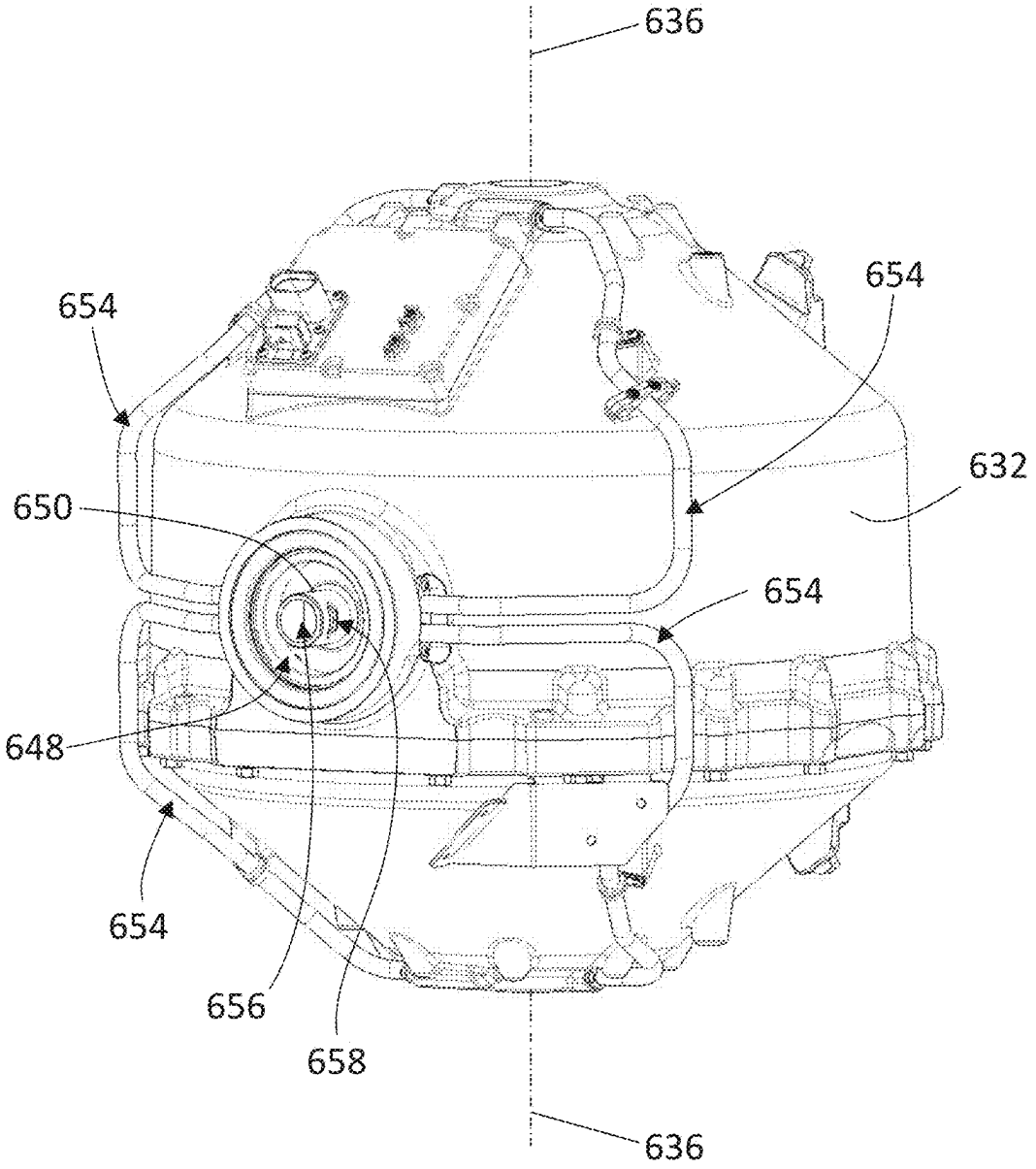

FIG. 81

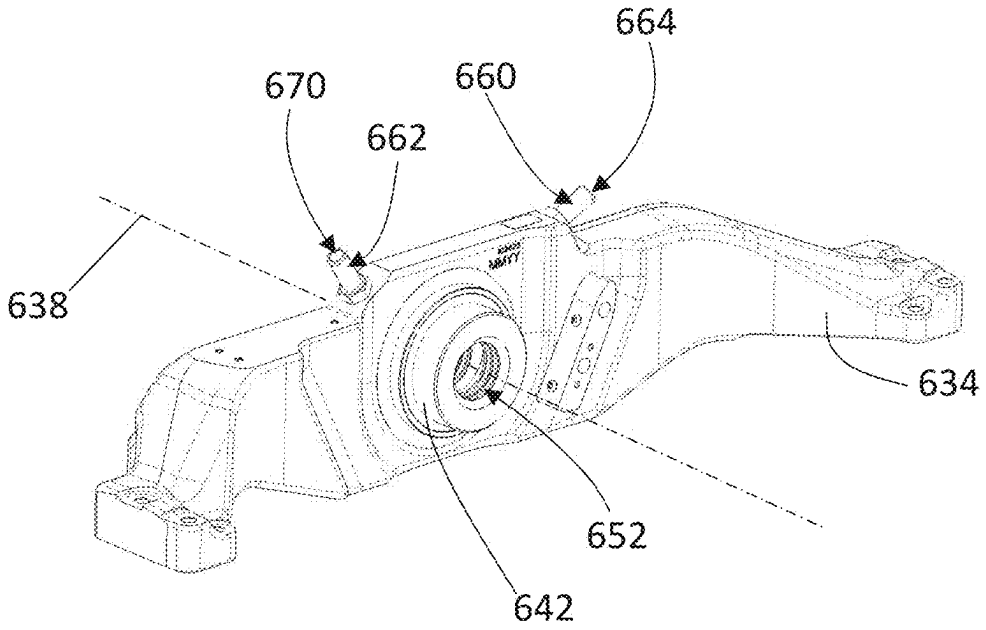

FIG. 82

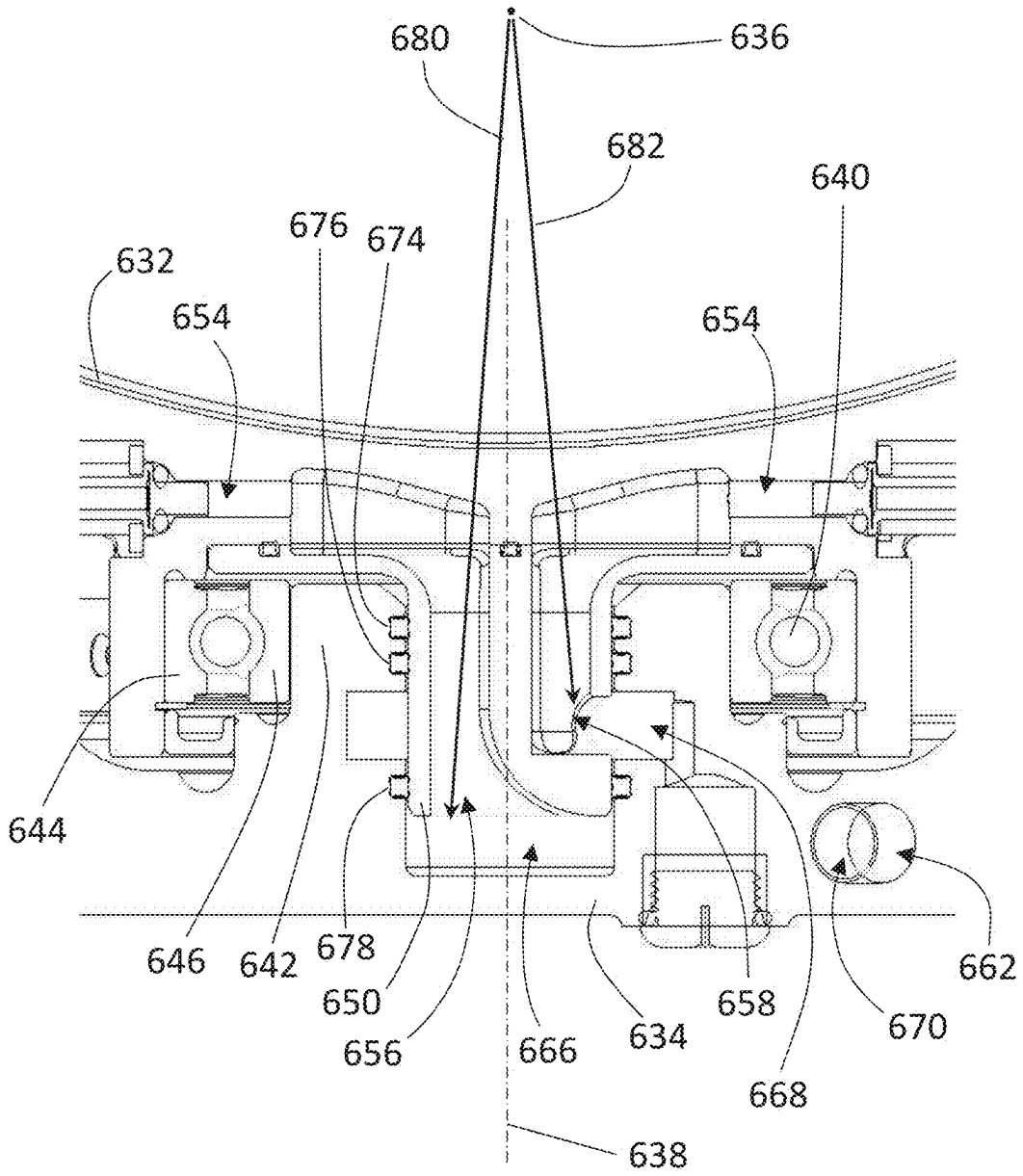
680
636
682
640
676
674
632
654
654
644
646
642
678
650
656
666
634
658
668
670
662
638

FIG. 83

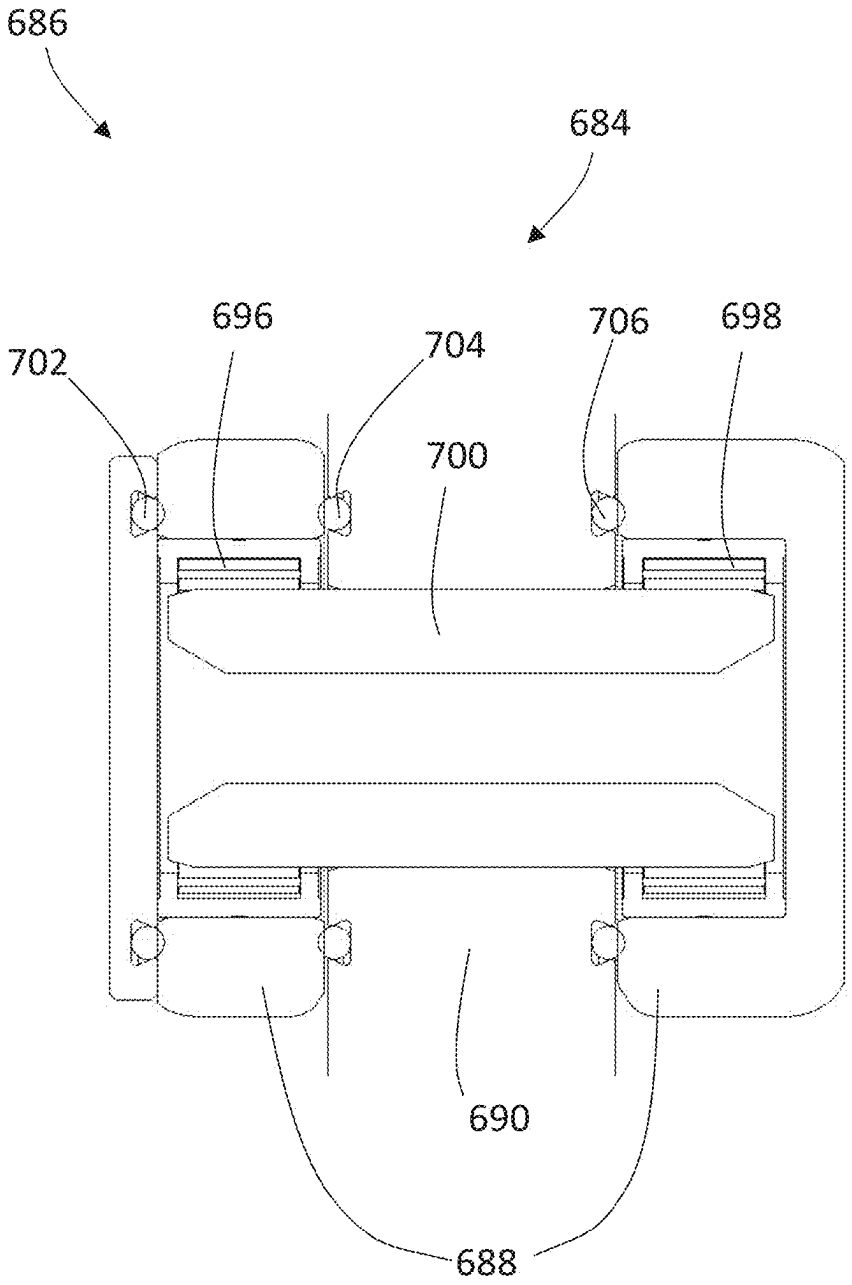

FIG. 84

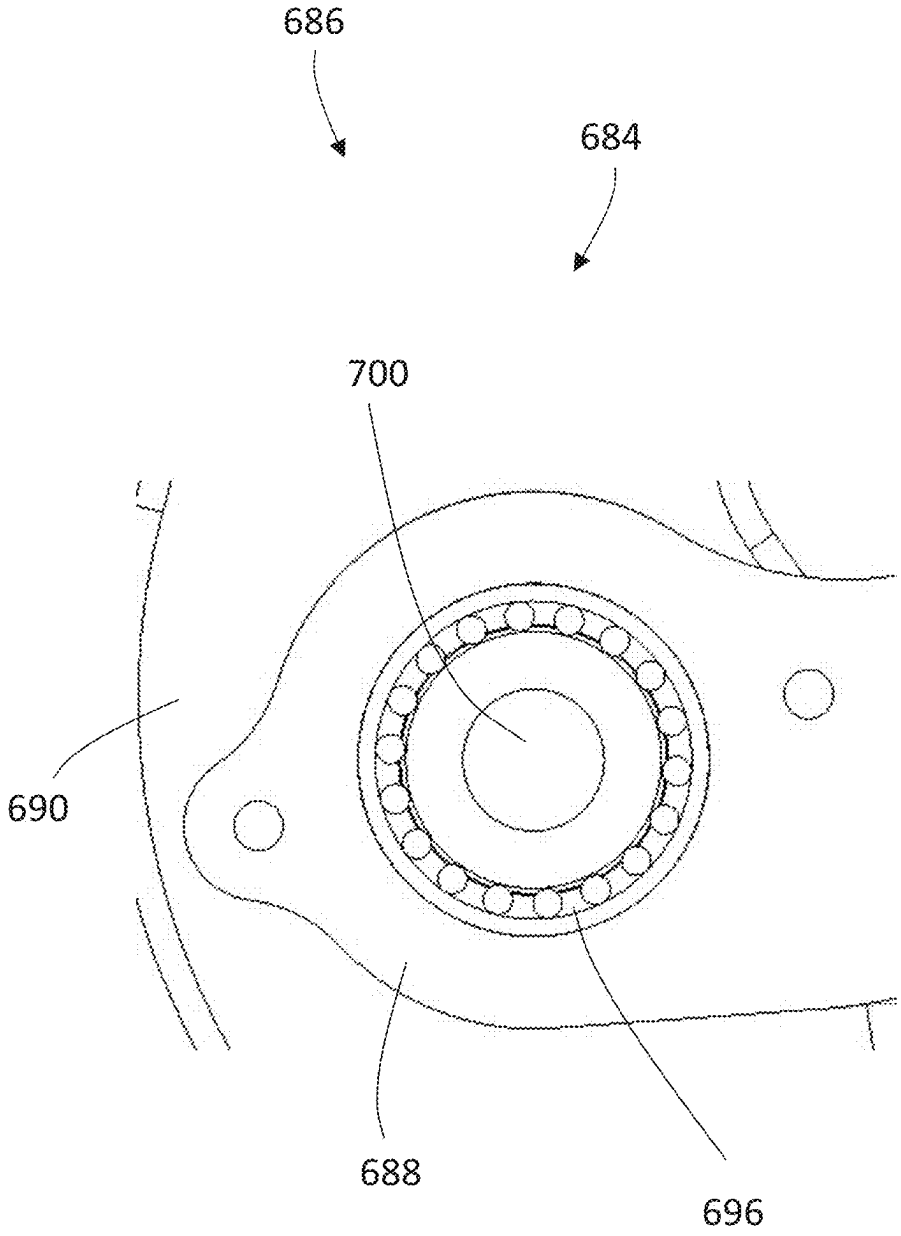

FIG. 85

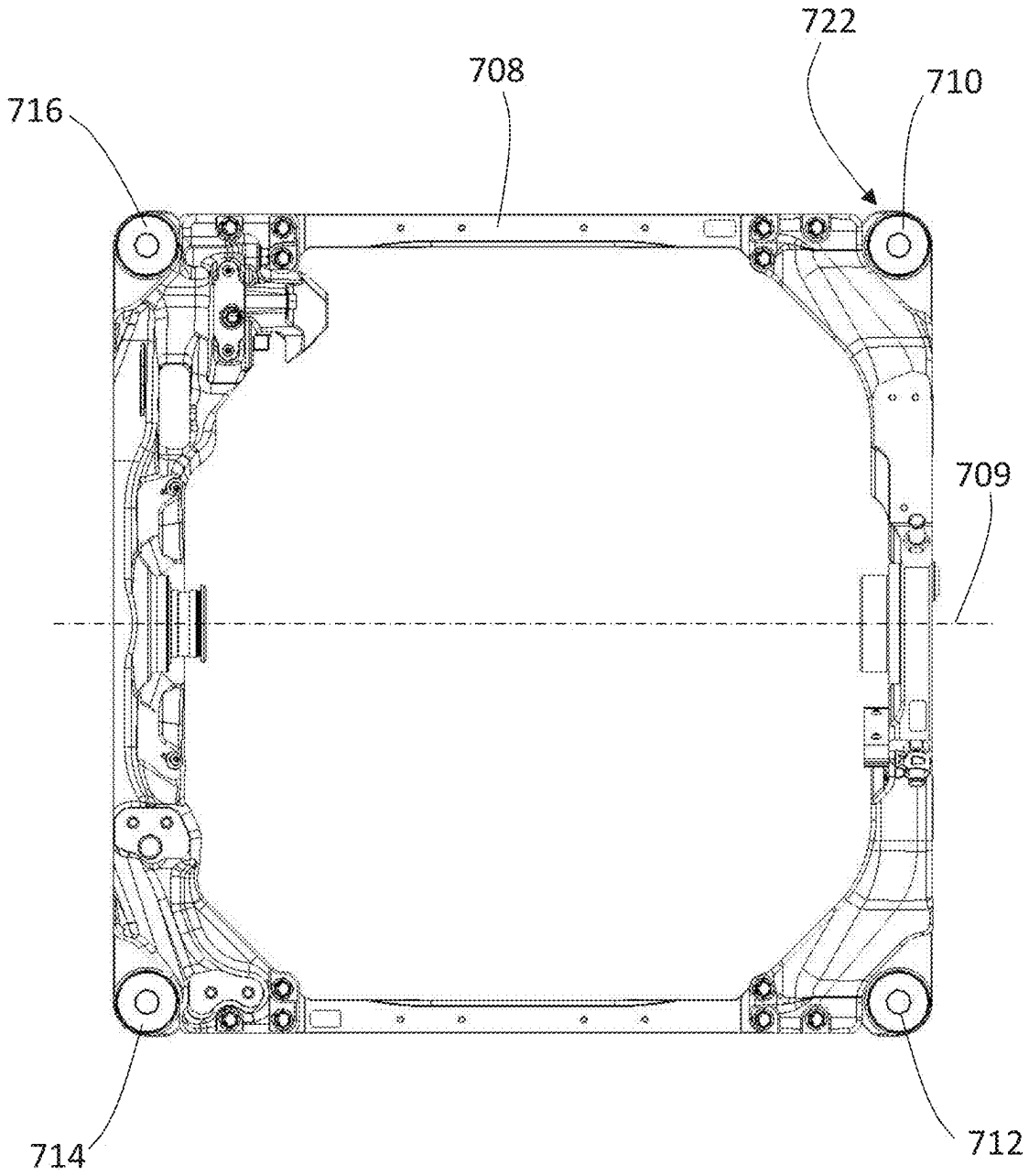

FIG. 86

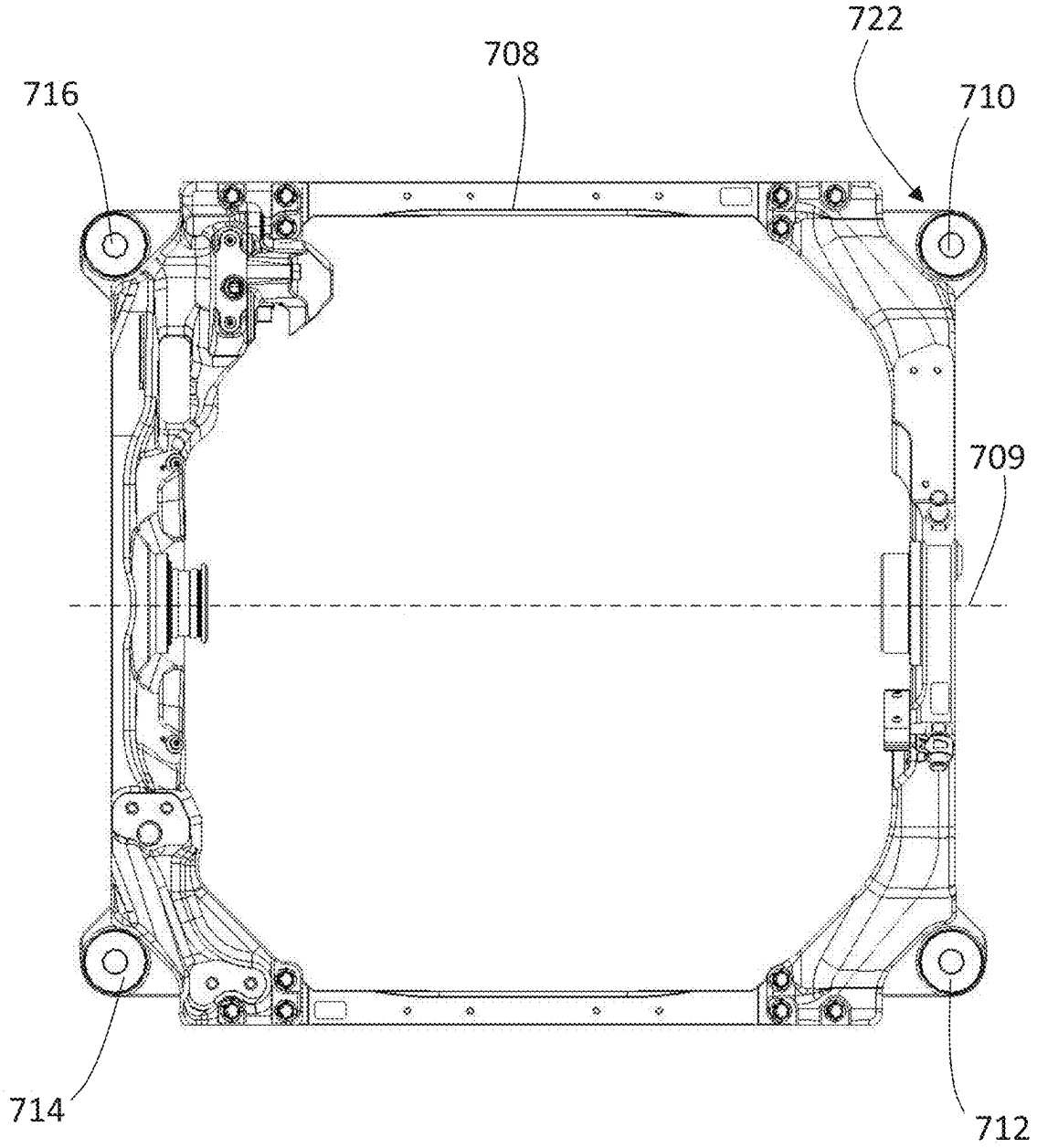

FIG. 87

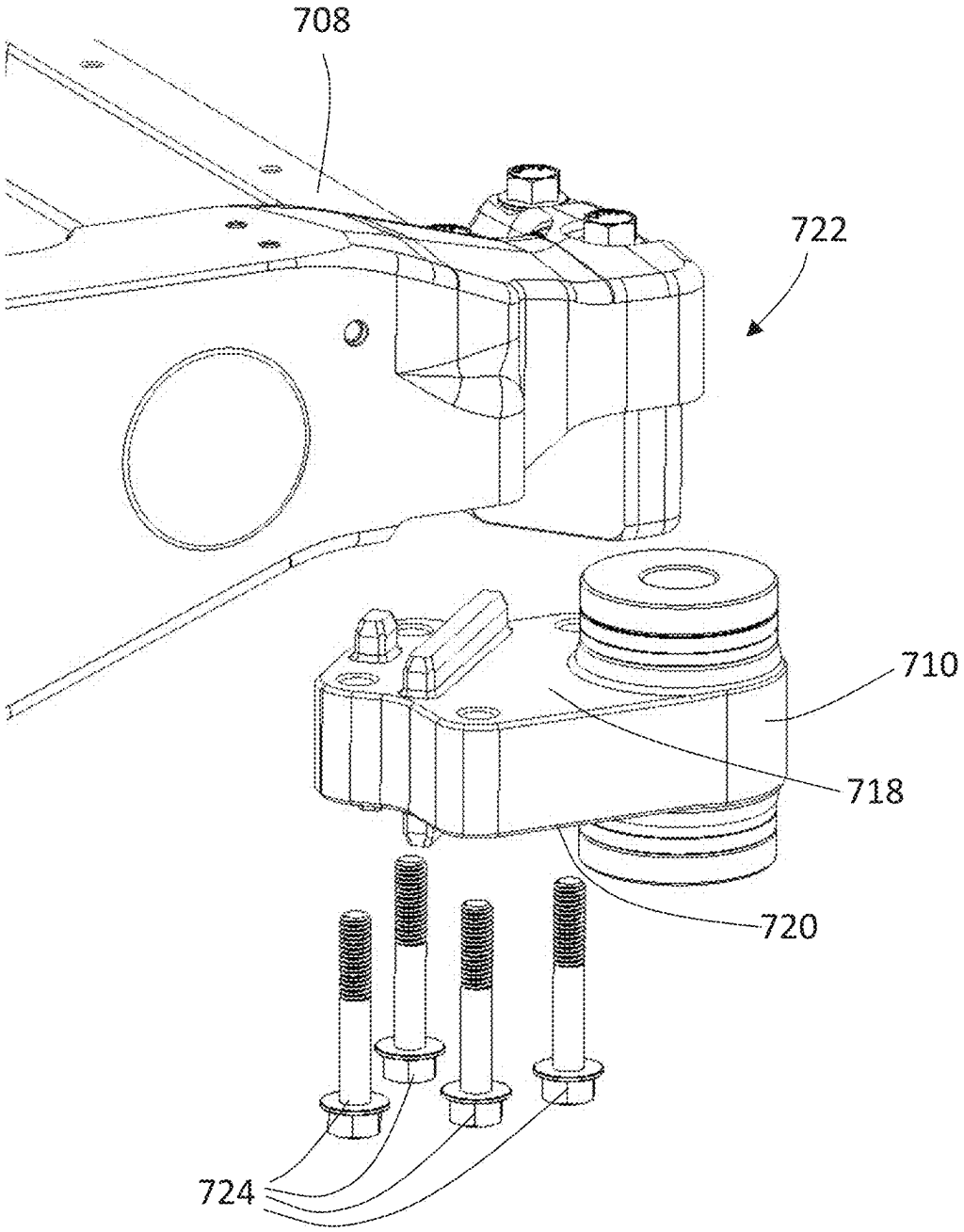

FIG. 88

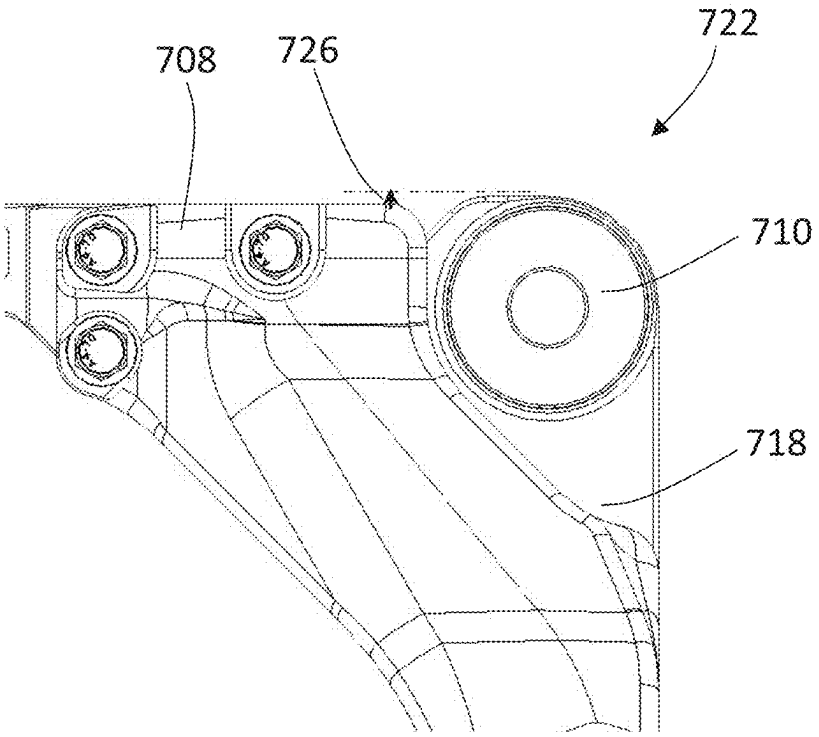

FIG. 89

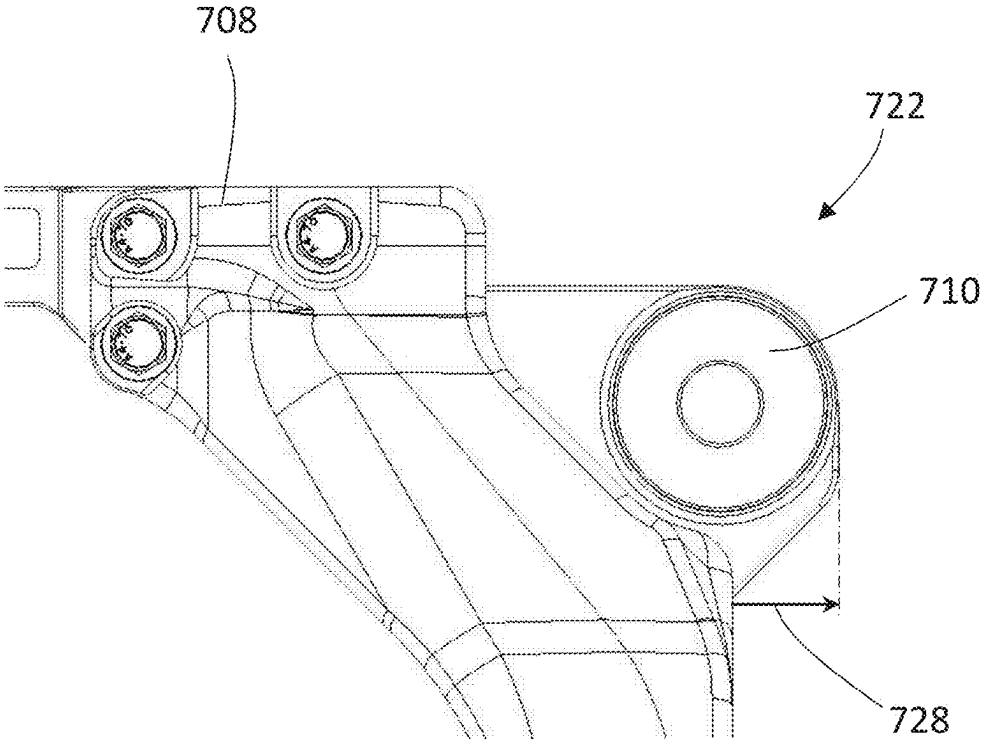

FIG. 90

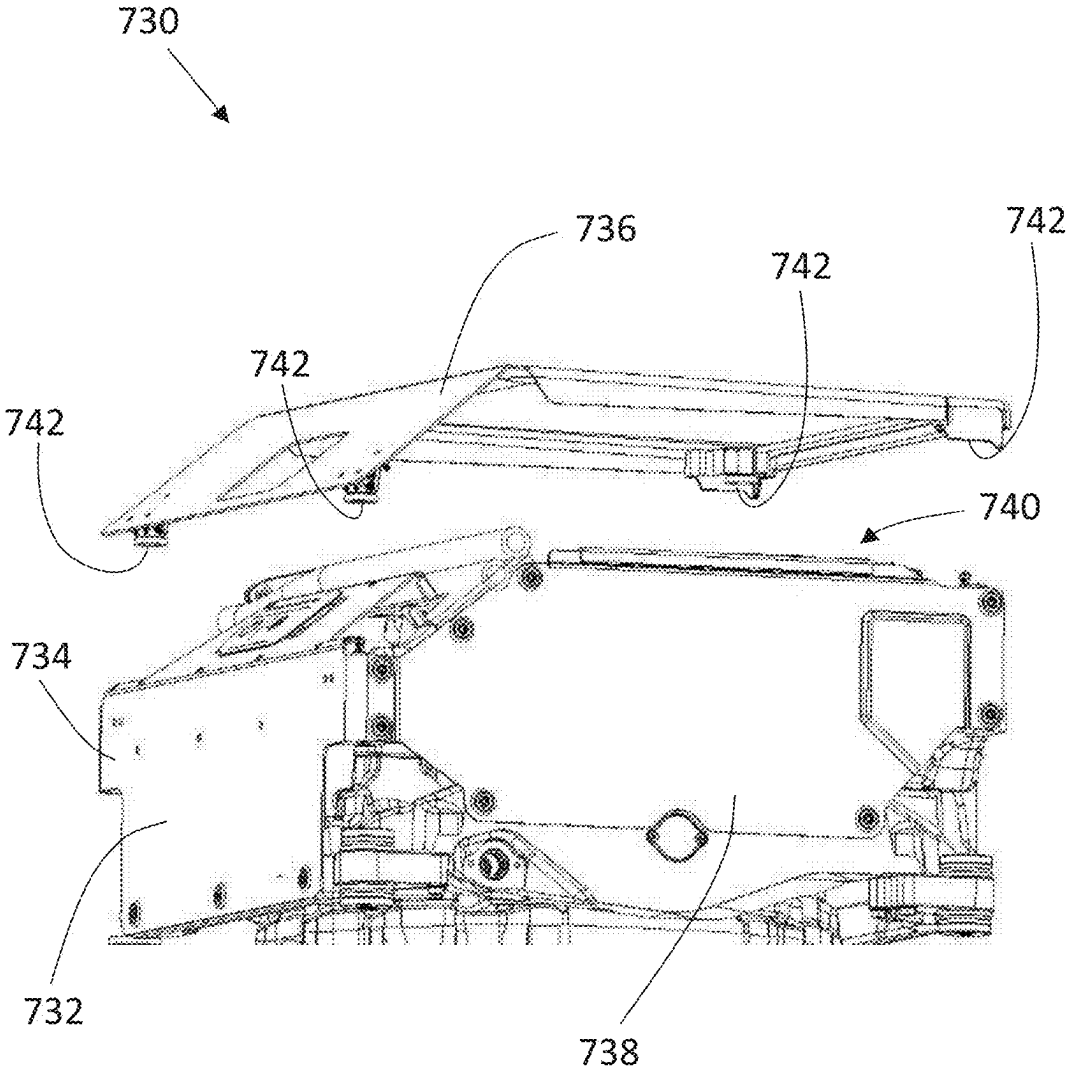

FIG. 91

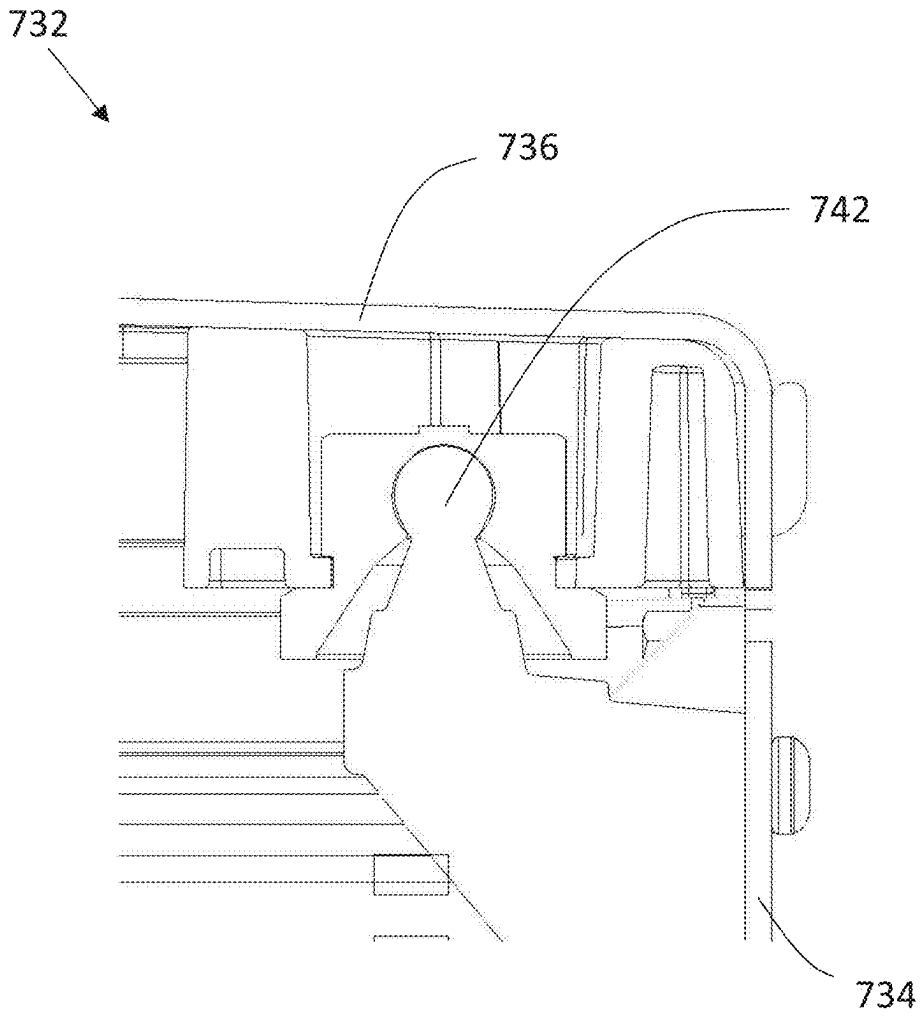

FIG. 92

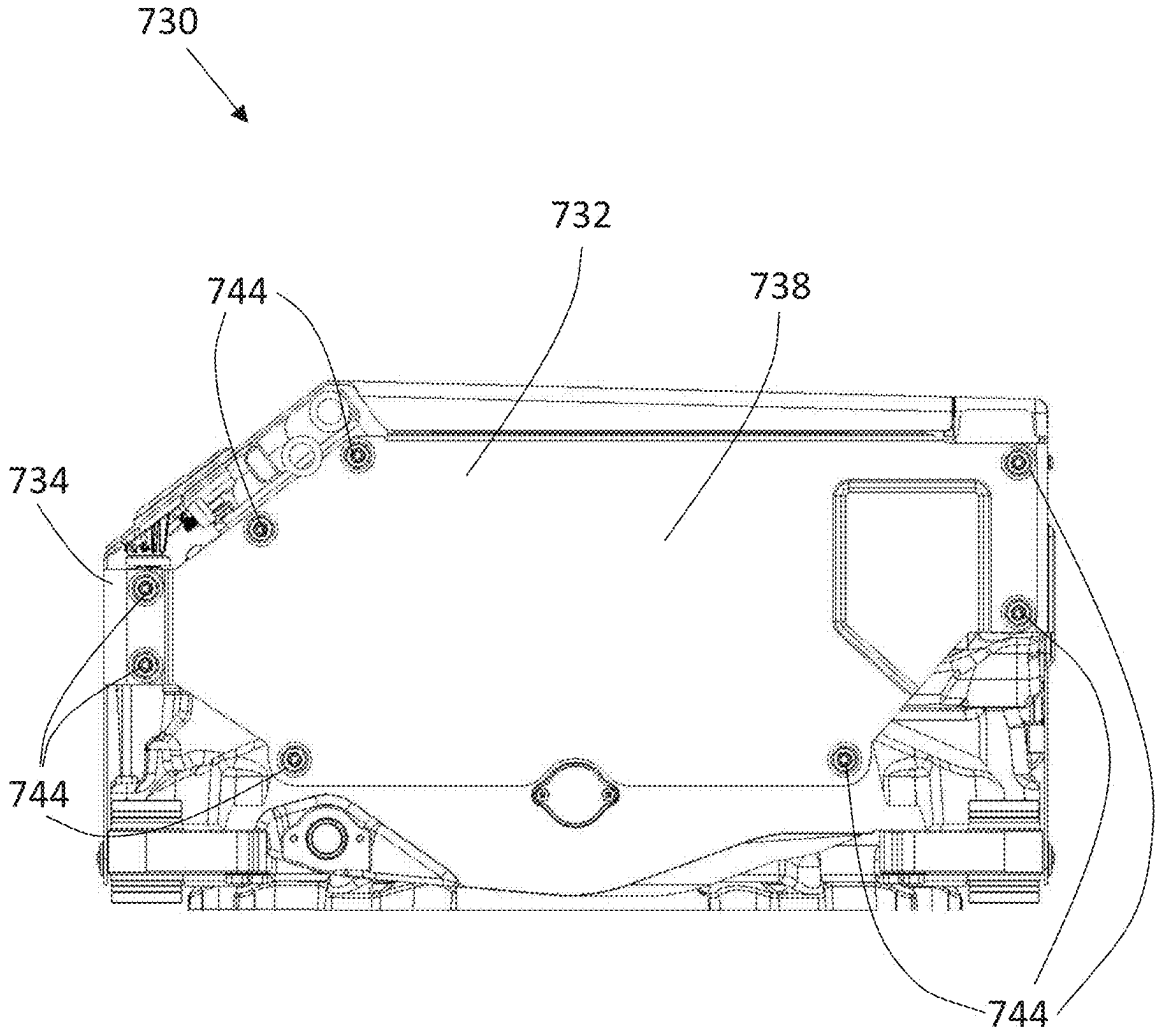

FIG. 93

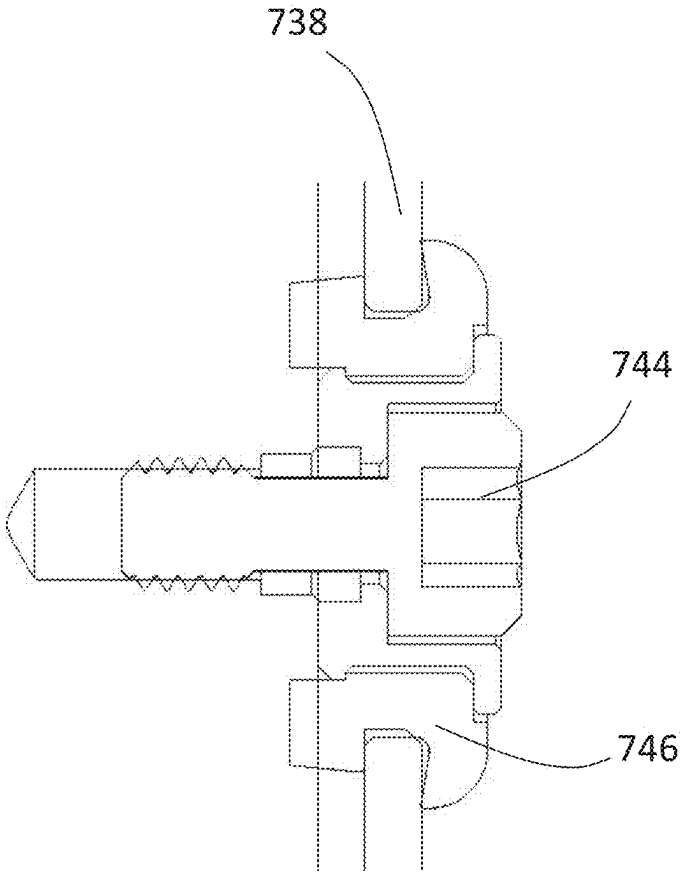

FIG. 94

ROLL STABILIZATION AND RELATED APPARATUSES

CROSS-REFERENCE TO RELATED APPLICATION

[0001] This application is a continuation-in-part of U.S. patent application Ser. No. 18/680,517 filed May 31, 2024, which is a continuation-in-part of U.S. patent application Ser. No. 18/713,331 filed May 24, 2024, which is the United States national stage of PCT international patent application no. PCT/CA2022/051725 filed Nov. 23, 2022, which claims the benefit of, and priority to, U.S. provisional patent application No. 63/283,181 filed Nov. 24, 2021. The entire contents of U.S. provisional patent application No. 63/283,181, of PCT international patent application no. PCT/CA2022/051725, and of U.S. patent application Ser. No. 18/680,517 are incorporated by reference herein.

FIELD

[0002] This disclosure relates generally to roll stabilization and related apparatuses.

RELATED ART

[0003] A marine vessel may include a roll-stabilization apparatus. However, some known roll-stabilization apparatuses have some disadvantages.

SUMMARY

[0004] According to at least one embodiment, a roll-stabilizer apparatus comprises: a flywheel-support body comprising a rotation-support body; a flywheel body surrounding at least a portion of the rotation-support body, wherein the rotation-support body supports the flywheel body for rotation relative to the flywheel-support body around at least one axis of rotation comprising a spin axis of rotation of the flywheel body and a central-rotation axis of the flywheel-support body; and a mounting body supporting the flywheel-support body and permitting rotation of the flywheel-support body relative to the mounting body around a precession axis non-parallel to the at least one axis of rotation.

[0005] According to at least one embodiment, a roll-stabilizer apparatus comprises: a flywheel body having a spin axis of rotation; a flywheel-support body having a central-rotation axis and comprising at least one magnetic bearing operable to support the flywheel body, the flywheel-support body permitting rotation of the flywheel body relative to the flywheel-support body around the spin axis of rotation at least when the spin axis of rotation is colinear with the central-rotation axis of the flywheel-support body; and a mounting body supporting the flywheel-support body and permitting rotation of the flywheel-support body relative to the mounting body around a precession axis non-parallel to the central-rotation axis of the flywheel-support body.

[0006] According to at least one embodiment, a roll-stabilizer apparatus comprises: a flywheel body; a flywheel-support body supporting the flywheel body and permitting rotation of the flywheel body relative to the flywheel-support body around at least one axis of rotation comprising a spin axis of rotation of the flywheel body and a central-rotation axis of the flywheel-support body; a mounting body supporting the flywheel-support body and permitting rotation of the flywheel-support body relative to the mounting body around a precession axis non-parallel to the at least one axis of rotation; and at least one precession-control device operable to control rotation of the flywheel-support body relative to the mounting body. The at least one precession-control device comprises: at least one actuator rotatably attached to the mounting body; and a first force-transfer body and a second force-transfer body, the first force-transfer body rotatably attached to each of the flywheel-support body, the at least one actuator, and the second force-transfer body, and the second force-transfer body further rotatably attached to the mounting body. The first force-transfer body is operable to transfer force at least between the at least one actuator and the flywheel-support body.

[0007] According to at least one embodiment, a roll-stabilizer apparatus comprises: a flywheel body; a flywheel-support body supporting the flywheel body and permitting rotation of the flywheel body relative to the flywheel-support body around at least one axis of rotation comprising a spin axis of rotation of the flywheel body and a central-rotation axis of the flywheel-support body; a mounting body supporting the flywheel-support body and permitting rotation of the flywheel-support body relative to the mounting body around a precession axis non-parallel to the at least one axis of rotation; and at least one precession-control device operable to control rotation of the flywheel-support body relative to the mounting body. The at least one precession-control device comprises: at least one actuator rotatably attached to the mounting body; and a first force-transfer body and a second force-transfer body, the first force-transfer body rotatably attached each of the mounting body, the at least one actuator, and the second force-transfer body, and the second force-transfer body further rotatably attached to the flywheel-support body. The first force-transfer body and the second force-transfer body are operable to transfer force at least between the at least one actuator and the flywheel-support body.

[0008] According to at least one embodiment, a roll-stabilizer apparatus comprises: a flywheel body; a flywheel-support body supporting the flywheel body and permitting rotation of the flywheel body relative to the flywheel-support body around at least one axis of rotation comprising a spin axis of rotation of the flywheel body and a central-rotation axis of the flywheel-support body; a mounting body supporting the flywheel-support body and permitting rotation of the flywheel-support body relative to the mounting body around a precession axis non-parallel to the at least one axis of rotation; at least one precession bearing operable to support the flywheel-support body for rotation relative to the mounting body around the precession axis; and at least one precession-control device operable to control rotation of the flywheel-support body relative to the mounting body and operable to apply a force at least partly overlapping a dimension of the at least one precession bearing along the precession axis.

[0009] According to at least one embodiment, a roll-stabilizer apparatus comprises: a flywheel body; a flywheel-support body supporting the flywheel body and permitting rotation of the flywheel body relative to the flywheel-support body around at least one axis of rotation comprising a spin axis of rotation of the flywheel body and a central-rotation axis of the flywheel-support body; a mounting body supporting the flywheel-support body and permitting rotation of the flywheel-support body relative to the mounting body around a precession axis non-parallel to the at least one axis

of rotation; and at least one precession bearing operable to support the flywheel-support body for rotation relative to the mounting body around the precession axis, the at least one precession bearing comprising an outer precession body surrounding an inner precession body, the outer precession body rotatable relative to the inner precession body and relative to the mounting body.

[0010] According to at least one embodiment, a flywheel apparatus comprises a flywheel body rotatable around a spin axis of rotation and comprises a peripheral surface spaced apart from the spin axis of rotation, wherein the flywheel body defines a groove recessed in the peripheral surface.

[0011] According to at least one embodiment, a flywheel apparatus comprises a flywheel body rotatable around a central-rotation axis of the flywheel body, the flywheel body comprising: a central portion; a wheel portion spaced apart from the central portion radially relative to the central-rotation axis of the flywheel body; and at least one radial portion coupling the wheel portion to the central portion; wherein the wheel portion has a maximum radial thickness relative to the central-rotation axis of the flywheel body, the wheel portion extends to a maximum radius from the central-rotation axis of the flywheel body, and a ratio of the maximum radial thickness to the maximum radius is less than 0.27.

[0012] According to at least one embodiment, a flywheel apparatus comprises a flywheel body rotatable around a central-rotation axis of the flywheel body, the flywheel body comprising: a central portion; a wheel portion spaced apart from the central portion radially relative to the central-rotation axis of the flywheel body; and at least one radial portion coupling the wheel portion to the central portion; wherein the wheel portion has a maximum radial thickness relative to the central-rotation axis of the flywheel body and a maximum height along the central-rotation axis of the flywheel body, and a ratio of the maximum radial thickness to the maximum height is less than 0.23.

[0013] According to at least one embodiment, an axial-magnetic-bearing apparatus comprises: an annular bearing body; and a plurality of electromagnets, each one of the plurality of electromagnets comprising a respective different electrical conductor, each one of the plurality of electromagnets positioned on the annular bearing body in a respective different annular sector of a plurality of annular sectors of the annular bearing body, the plurality of annular sectors surrounding a central-rotation axis of the annular bearing body. The electrical conductor of each one of the plurality of electromagnets extends transversely to the central-rotation axis of the annular bearing body such that each one of the plurality of electromagnets becomes magnetized in a direction along the central-rotation axis of the annular bearing body in response to, at least, an electrical current through the electrical conductor.

[0014] According to at least one embodiment, a roll-stabilizer controller apparatus is programmed to, at least, cause at least one precession-control device to apply a torque to a flywheel-support body relative to a mounting body, the flywheel-support body supporting a flywheel body and permitting rotation of the flywheel body relative to the flywheel-support body around at least one axis of rotation comprising a spin axis of rotation of the flywheel body and a central-rotation axis of the flywheel-support body.

[0015] According to at least one embodiment, a roll-stabilizer apparatus comprises: a flywheel body; a flywheel-support body supporting the flywheel body and permitting rotation of the flywheel body relative to the flywheel-support body around at least one axis of rotation comprising a spin axis of rotation of the flywheel body and a central-rotation axis of the flywheel-support body; a mounting body supporting the flywheel-support body and permitting rotation of the flywheel-support body relative to the mounting body around a precession axis non-parallel to the at least one axis of rotation; at least one precession-control device operable to control rotation of the flywheel-support body relative to the mounting body; and a roll-stabilizer controller programmed to, at least, cause the at least one precession-control device to apply the torque to the flywheel-support body relative to the mounting body.

[0016] According to at least one embodiment, a marine vessel comprises: at least one hull; and the apparatus, wherein the mounting body is attached to the at least one hull.

[0017] According to at least one embodiment, there is described a roll-stabilizer apparatus comprising: a flywheel body; a flywheel-support body supporting the flywheel body and permitting rotation of the flywheel body relative to the flywheel-support body around at least one axis of rotation comprising a spin axis of rotation of the flywheel body and a central-rotation axis of the flywheel-support body; a mounting body supporting the flywheel-support body and permitting rotation of the flywheel-support body relative to the mounting body around a precession axis non-parallel to the at least one axis of rotation; and one or more mounting feet removably attached to the mounting body, the one or more mounting feet operable to mount the mounting body to a vessel.

[0018] According to at least one embodiment, there is described a roll-stabilizer apparatus comprising: a flywheel body; a flywheel-support body supporting the flywheel body and permitting rotation of the flywheel body relative to the flywheel-support body around at least one axis of rotation comprising a spin axis of rotation of the flywheel body and a central-rotation axis of the flywheel-support body; a mounting body supporting the flywheel-support body and permitting rotation of the flywheel-support body relative to the mounting body around a precession axis non-parallel to the at least one axis of rotation; and an outer housing attached to the mounting body, the outer housing surrounding at least a portion of the flywheel-support body and permitting rotation of the flywheel-support body relative to the mounting body around the precession axis.

[0019] According to at least one embodiment, there is described a roll-stabilizer apparatus comprising: a flywheel body; a flywheel-support body supporting the flywheel body and permitting rotation of the flywheel body relative to the flywheel-support body around at least one axis of rotation comprising a spin axis of rotation of the flywheel body and a central-rotation axis of the flywheel-support body; a mounting body supporting the flywheel-support body and permitting rotation of the flywheel-support body relative to the mounting body around a precession axis non-parallel to the at least one axis of rotation; at least one precession-control device operable to control rotation of the flywheel-support body relative to the mounting body, the at least one precession-control device comprising at least one bearing.

[0020] According to at least one embodiment, there is described a roll-stabilizer apparatus comprising: a flywheel body; a flywheel-support body supporting the flywheel body

and permitting rotation of the flywheel body relative to the flywheel-support body around at least one axis of rotation comprising a spin axis of rotation of the flywheel body and a central-rotation axis of the flywheel-support body, the flywheel-support body defining at least one flywheel-support-body fluid channel comprising a first flywheel-support-body opening and a second flywheel-support-body opening, the at least one flywheel-support-body fluid channel operable to convey a fluid through at least some of the flywheel-support body between the first flywheel-support-body opening and the second flywheel-support-body opening; and a mounting body supporting the flywheel-support body and permitting rotation of the flywheel-support body relative to the mounting body around a precession axis non-parallel to the at least one axis of rotation, the mounting body defining at least a first mounting-body fluid channel and a second mounting-body fluid channel, the first mounting-body fluid channel comprising a first mounting-body opening and a second mounting-body opening and operable to convey the fluid through at least some of the mounting body between the first mounting-body opening and the second mounting-body opening, the second mounting-body fluid channel comprising a third mounting-body opening and a fourth mounting-body opening and operable to convey the fluid through at least some of the mounting body between the third mounting-body opening and the fourth mounting-body opening; wherein the second mounting-body opening is in fluid communication with the first flywheel-support-body opening, and wherein the second flywheel-support-body opening is in fluid communication with the third mounting-body opening.

[0021] According to at least one embodiment, there is described a flywheel apparatus comprising: a flywheel body; a flywheel-support body supporting the flywheel body and permitting rotation of the flywheel body relative to the flywheel-support body around at least one axis of rotation comprising a spin axis of rotation of the flywheel body and a central-rotation axis of the flywheel-support body; at least one plurality of bearings operable to support the flywheel body for rotation relative to the flywheel-support body around the at least one axis of rotation; and at least one resilient body configured to resiliently urge together, along the central-rotation axis of the flywheel-support body, the individual bearings of the at least one plurality of bearings.

[0022] Other aspects and features will become apparent to those ordinarily skilled in the art upon review of the following description of illustrative embodiments in conjunction with the accompanying figures.

BRIEF DESCRIPTION OF THE DRAWINGS

[0023] FIG. **1** is a schematic illustration of a marine vessel according to one embodiment.

[0024] FIG. **2** is a perspective view of a roll-stabilizer apparatus of a roll-stabilizer assembly of the marine vessel of FIG. **1**.

[0025] FIG. **3** is a cross-sectional view of the roll-stabilizer apparatus of FIG. **2**, taken along the line labeled FIG. **3** in FIG. **2**.

[0026] FIG. **4** is a perspective view of a mounting body of the roll-stabilizer apparatus of FIG. **2**.

[0027] FIG. **5** is an exploded perspective view of a flywheel assembly of the roll-stabilizer apparatus of FIG. **2**.

[0028] FIG. **6** is a cross-sectional view of a flywheel body of the flywheel assembly of FIG. **5**.

[0029] FIG. **7** is an exploded perspective view of a flywheel-support body of the roll-stabilizer apparatus of FIG. **2**.

[0030] FIG. **8** is an exploded perspective view of a radial active magnetic bearing including a rotor of the flywheel assembly of FIG. **5** and a stator of the flywheel-support body of FIG. **7**.

[0031] FIG. **9** is a cross-sectional view of the radial active magnetic bearing of FIG. **8**, taken along the line labeled FIG. **9** in FIG. **10** and in FIG. **11**.

[0032] FIG. **10** is another cross-sectional view of the radial active magnetic bearing of FIG. **8**, taken along the line labeled FIG. **10** in FIG. **9**.

[0033] FIG. **11** is another cross-sectional view of the radial active magnetic bearing of FIG. **8**, taken along the line labeled FIG. **11** in FIG. **9**.

[0034] FIG. **12** is a perspective view of an electric coil of the radial active magnetic bearing of FIG. **8**.

[0035] FIG. **13** is an exploded perspective view of a radial active magnetic bearing according to another embodiment.

[0036] FIG. **14** is a cross-sectional view of the radial active magnetic bearing of FIG. **13**, taken along the line labeled FIG. **14** in FIG. **15**.

[0037] FIG. **15** is another cross-sectional view of the radial active magnetic bearing of FIG. **13**, taken along the line labeled FIG. **15** in FIG. **14**.

[0038] FIG. **16** is a perspective view of an annular-sector stator body of the radial active magnetic bearing of FIG. **13**.

[0039] FIG. **17** is an exploded perspective view of an axial active magnetic bearing of the flywheel-support body of FIG. **7**.

[0040] FIG. **18** is a plan view of an assembled annular-sector body of the axial active magnetic bearing of FIG. **17**, including the annular-sector body of FIG. **19**.

[0041] FIG. **19** is a cross-sectional view of the axial active magnetic bearing of FIG. **17**, taken along the line labeled FIG. **19** in FIG. **17**.

[0042] FIG. **20** is a perspective view of an annular-sector body of the axial active magnetic bearing of FIG. **17**.

[0043] FIG. **21** is an enlarged fragmentary view of FIG. **19**.

[0044] FIG. **22** is the fragmentary view of FIG. **21**, with the axial active magnetic bearing of FIG. **17** positioned in a groove of the flywheel body of FIG. **6**.

[0045] FIG. **23** illustrates an example of changes over time in magnetic field experienced by a point on the flywheel body of FIG. **6**.

[0046] FIG. **24** illustrates use of negative stiffness according to one embodiment.

[0047] FIG. **25** is a perspective view of a roll-stabilizer apparatus according to another embodiment.

[0048] FIG. **26** is an exploded perspective view of the roll-stabilizer apparatus of FIG. **25**.

[0049] FIG. **27** is a cross-sectional view of a flywheel body and a flywheel-support body of the roll-stabilizer apparatus of FIG. **25**, taken along the line labelled FIG. **27** in FIG. **25**.

[0050] FIG. **28** is an enlarged fragmentary view of a bearing of the flywheel-support body of FIG. **27**.

[0051] FIG. **29** is a fragmentary perspective view of a housing body of the flywheel-support body of FIG. **27** and a precession bearing of the roll-stabilizer apparatus of FIG. **25**.

[0052] FIG. **30** is an enlarged fragmentary view of a portion of the flywheel-support body of FIG. **27** and another precession bearing of the roll-stabilizer apparatus of FIG. **25**.

[0053] FIG. **31** is an exploded perspective view of a precession-control device of the roll-stabilizer apparatus of FIG. **25**.

[0054] FIG. **32** is an exploded perspective view of another precession-control device of the roll-stabilizer apparatus of FIG. **25**.

[0055] FIG. **33** is a side view of the roll-stabilizer apparatus of FIG. **25** with the precession-control device of FIG. **32** in an intermediate position.

[0056] FIG. **34** is a side view of the roll-stabilizer apparatus of FIG. **25** with the precession-control device of FIG. **32** in an extended position.

[0057] FIG. **35** is a side view of the roll-stabilizer apparatus of FIG. **25** with the precession-control device of FIG. **32** in a contracted position.

[0058] FIG. **36** is a circuit diagram of a braking circuit for an electric motor/generator of the roll-stabilizer apparatus of FIG. **25**.

[0059] FIG. **37** is a circuit diagram of a damping circuit for an actuator motor of the roll-stabilizer apparatus of FIG. **25**.

[0060] FIG. **38** is a perspective view of a roll-stabilizer apparatus according to another embodiment.

[0061] FIG. **39** is an exploded perspective view of a precession-control device of the roll-stabilizer apparatus of FIG. **38**.

[0062] FIG. **40** schematically illustrates an example of identifying dynamic vessel characteristics according to one embodiment.

[0063] FIG. **41** illustrates roll dynamic mobility of a marine vessel as a function of experienced torque frequency in one embodiment.

[0064] In FIG. **42** illustrates a phase difference between motion of a marine vessel and net torque applied to a marine vessel in one embodiment.

[0065] FIG. **43** illustrates schematically adjustment of phase of motion of a marine vessel according to at least one or more properties of the marine vessel in one embodiment.

[0066] FIG. **44** illustrates schematically estimation of wave torque according to one embodiment.

[0067] FIG. **45** illustrates schematically phase-corrected control according to one embodiment.

[0068] FIG. **46** illustrates implementation of phase-shift control to align anti-roll torque with wave torque in one embodiment.

[0069] FIGS. **47** and **48** illustrate a marine vessel including stabilizing fins according to one embodiment.

[0070] FIGS. **49** and **50** illustrate stabilization of roll of a marine vessel according to some embodiments.

[0071] FIGS. **51** and **52** illustrate examples of operation according to the example of FIG. **49**.

[0072] FIG. **53** illustrates schematically a possible embodiment of roll stabilization using stabilizing fins.

[0073] FIGS. **54** and **55** are partial cross-sectional views of flywheel bodies according to some embodiments.

[0074] FIG. **56** is a perspective view of a roll-stabilizer assembly according to one embodiment.

[0075] FIG. **57** is a side view of a flywheel-support body and a portion of a mounting body according to one embodiment.

[0076] FIG. **58** is a front view of the flywheel-support body of FIG. **57**.

[0077] FIG. **59** is a top view of the flywheel-support body and the mounting body of FIG. **57**.

[0078] FIG. **60** illustrates a cooling system for a roll-stabilizer apparatus according to one embodiment.

[0079] FIGS. **61** and **62** are partial cross-sectional views of roll-stabilizer apparatuses according to other embodiments.

[0080] FIGS. **63** to **65** are cross-sectional views of rotation-support bodies according to different embodiments.

[0081] FIG. **66** is a partial cross-sectional view of a rotation-support body according to another embodiment.

[0082] FIG. **67** is a partial cross-sectional view of the rotation-support body of FIG. **63**.

[0083] FIG. **68** is a perspective view of a compressible body of the rotation-support body of FIG. **67**.

[0084] FIGS. **69** to **73** schematically illustrate power management according to some embodiments.

[0085] FIG. **74** illustrates stabilization of roll of a marine vessel according to one embodiment.

[0086] FIG. **75** illustrates marine vessel and wave angles according to one embodiment.

[0087] FIG. **76** illustrates stabilization of roll of a marine vessel according to one embodiment.

[0088] FIG. **77** is a cross-sectional view of a flywheel apparatus according to one embodiment.

[0089] FIG. **78** schematically illustrates the flywheel apparatus of FIG. **77**.

[0090] FIG. **79** is a cross-sectional view of a flywheel apparatus according to another embodiment.

[0091] FIG. **80** is an exploded top view of a roll stabilizer apparatus according to one embodiment.

[0092] FIG. **81** is a perspective view of a flywheel-support body of the roll stabilizer apparatus of FIG. **80**.

[0093] FIG. **82** is a perspective view of a mounting body of the roll stabilizer apparatus of FIG. **80**.

[0094] FIG. **83** is cross-sectional top view of a portion of the roll stabilizer apparatus of FIG. **80**.

[0095] FIG. **84** is a cross-sectional view of a precession linkage of a roll stabilizer apparatus according to one embodiment.

[0096] FIG. **85** is a side view of the precession linkage of FIG. **84**.

[0097] FIG. **86** is a top view of a mounting body of a roll stabilizer apparatus according to one embodiment.

[0098] FIG. **87** is a top view of the mounting body of FIG. **86** with mounting feet in an alternative orientation.

[0099] FIG. **88** is a perspective view of a mounting foot of FIG. **86**.

[0100] FIG. **89** is a top view of a mounting foot as installed to the mounting body of FIG. **86**.

[0101] FIG. **90** is a top view of a mounting foot as installed to the mounting body of FIG. **87**.

[0102] FIG. **91** is a perspective view of a roll-stabilizer apparatus according to one embodiment.

[0103] FIG. **92** is a cross-sectional view of tool-free mounting of the roll-stabilizer apparatus of FIG. **91**.

[0104] FIG. **93** is a side view of the roll-stabilizer apparatus of FIG. **91**.

[0105] FIG. **94** is a cross-sectional view of a retained fastener of the roll-stabilizer apparatus of FIG. **91**.

DETAILED DESCRIPTION

[0106] Referring to FIG. **1**, a marine vessel according to one embodiment is shown generally at **100**. The marine vessel **100** includes a hull **101** having a bow shown generally at **102**. The hull **101** also has a stern shown generally at **103** and opposite the bow **102**. At the stern **103**, the marine vessel **100** includes a marine engine **104** operable to apply a thrust to the hull **101**. The marine engine **104** in the embodiment shown is an outboard motor, but alternative embodiments may vary and may, for example, include one or more motors that may not necessarily be outboard motors. The marine vessel **100** also includes a main energy-storage device **105** that may be electrically connected to a starter motor of the marine engine **104** to power the starter motor, or that may be electrically connected to one or more other electrical devices of the marine vessel **100**. The marine engine **104** may include an alternator to charge the main energy-storage device **105**, or one or more other sources of electric current may charge the main energy-storage device **105**. However, in alternative embodiments, the marine engine **104** may include an electric motor operable to apply a thrust to the hull **101**, and the main energy-storage device **105** may be electrically connected to the electric motor to power the electric motor.

[0107] Herein, "electrically connected" may refer to any direct or indirect connection that permits a transfer of electrical energy, such as a direct electrical connection or an electrical connection involving inductive power transfer or other wired or wireless energy transfer, for example.

[0108] Also herein, "energy-storage device" may refer to one or more electrochemical cells, one or more batteries, one or more fuel cells, or one or more other devices operable to store electrical energy or other energy as described herein, or a combination of two or more thereof.

[0109] The marine vessel **100** has a longitudinal axis **106** extending between the bow **102** and the stern **103** of the hull **101**. In general, "roll" herein may refer to movement that includes rotation of the hull **101** around the longitudinal axis **106**.

[0110] The marine vessel **100** is an example only, and alternative embodiments may differ. For example, alternative embodiments are not limited to marine vessels and may not necessarily include marine vessels, and "roll" may refer to other types of movement of marine vessels or of other types of bodies. Some alternative embodiments may include more than one hull.

Roll-Stabilizer Assembly

[0111] The marine vessel **100** also includes a roll-stabilizer assembly **107** including a roll-stabilizer apparatus **108**, a roll-stabilizer controller **109**, and a roll-stabilizer energy-storage device **110** distinct from the main energy-storage device **105**. An alternator of the marine engine **104**, one or more other sources of electric current, or both may charge the roll-stabilizer energy-storage device **110**. The roll-stabilizer energy-storage device **110** may additionally or alternatively be charged as described below.

[0112] In some embodiments, some or all of the roll-stabilizer apparatus **108**, the roll-stabilizer controller **109**, and the roll-stabilizer energy-storage device **110** may be integrated into a single unit that may be attached directly or indirectly to the hull **101**. Such an integrated unit may, in some embodiments, simplify installation, for example because such an integrated unit may require fewer electrical connections with other components of the marine vessel **100**, or such an integrated unit may require less assembly. Further, such an integrated unit may, in some embodiments, allow transmission of electrical energy between the roll-stabilizer apparatus **108** and the roll-stabilizer energy-storage device **110** with shorter electrical conductors, and thus less wasted energy, when compared to other roll-stabilizer assemblies that involve external sources of electrical energy for a roll-stabilizer apparatus and longer electrical conductors. Further, such an integrated unit including the roll-stabilizer apparatus **108** and the roll-stabilizer energy-storage device **110** may, in some embodiments, reduce or avoid electrical energy required from external sources of electrical energy, and may continue to function despite a failure of an external source of electrical energy.

[0113] The marine vessel **100** also includes an inertial measurement unit **111** in communication with the roll-stabilizer controller **109** and operable to provide, to the roll-stabilizer controller **109**, one or more signals indicating measurements, relative to an inertial frame of reference or another frame of reference, of linear acceleration, of rotational acceleration, of orientation, or a combination of two or more thereof of the hull **101** or of one or more other locations on the marine vessel **100** that may move with the hull **101**. For example, the inertial measurement unit **111** may include one or more gyroscopes, one or more accelerometers, one or more other devices operable to measure linear acceleration, rotational acceleration, orientation, or a combination of two or more thereof of the hull **101** relative to an inertial frame of reference or another frame of reference. The inertial measurement unit **111** may be positioned at any location on the marine vessel **100**. For example, in some embodiments, the inertial measurement unit **111** may be positioned on one or both of housing bodies **136** and **137** described below, or on one or both of housing bodies **244** and **245** described below. Further, in some embodiments, the inertial measurement unit **111** may include more than one device at one or more locations. However, alternative embodiments may omit the inertial measurement unit **111** or include one or more alternatives to the inertial measurement unit **111**.

[0114] The roll-stabilizer controller **109** may include one or more processor circuits that may include one or more central processing unit (CPUs) or microprocessors, one or more machine learning chips, discrete logic circuits, or one or more application-specific integrated circuit (ASICs), or combinations of two or more thereof, for example, and that may include one or more of the same or different computer-readable storage media, which in various embodiments may include one or more of a read-only memory (ROM), a random access memory (RAM), a hard disc drive (HDD), a solid-state drive (SSD), and other computer-readable and/or computer-writable storage media. For example, one or more such computer-readable storage media may store program codes that, when executed, cause one or more processor circuits of the roll-stabilizer controller **109** to implement functions as described herein, for example, in which case the roll-stabilizer controller **109** may be programmed, configured, or operable to implement such functions. Of course the roll-stabilizer controller **109** may be configured or otherwise operable to implement other functions and to implement functions in other ways. For example, the roll-stabilizer controller **109** may be a single device or may include more

than one device. In general, any apparatus, controller, or other device may include one or more processor circuits that may be programmed, configured, or operable as described above.

[0115] The roll-stabilizer controller **109** may include a wireless transmitter, a wireless receiver, a wireless transceiver, or two or more thereof to allow the roll-stabilizer controller **109** to receive one or more wireless signals directly or indirectly from, or transmit one or more wireless signals directly or indirectly to, a remote device **112**. The remote device **112** may be a smartphone, a tablet computer, a smart watch, or smart glasses, for example. In the embodiment shown, the remote device **112** is detached from the marine vessel **100** and usable from outside of the marine vessel **100** and is therefore remote from the marine vessel **100**. However, alternative embodiments may differ. For example, alternative embodiments may include one or more wired or other connections between the remote device **112** and the roll-stabilizer controller **109**, and alternative embodiments may include devices on or integrated into the marine vessel **100** instead of the remote device **112**.

[0116] Referring to FIG. **2** and to FIG. **3**, the roll-stabilizer apparatus **108** includes a flywheel-support body **113**, a mounting body **114**, and a flywheel assembly **115** in the flywheel-support body **113**.

Mounting Body

[0117] Referring to FIG. **4**, the mounting body **114** includes a base **116** attachable to one or more other structures in the roll-stabilizer assembly **107**, which may be attached to the hull **101** directly or indirectly to attach the mounting body **114**, and thus the roll-stabilizer apparatus **108**, to the hull **101**. However, in alternative embodiments, the roll-stabilizer apparatus **108** may be attached directly or indirectly to the hull **101** in other ways, or the roll-stabilizer apparatus **108** may not be attached to any hull or to any marine vessel. Therefore, in some embodiments, measurements of linear acceleration, of rotational acceleration, of orientation, or a combination of two or more thereof of the hull **101**, relative to an inertial frame of reference or another frame of reference, by the inertial measurement unit **111** may indicate such acceleration, orientation, or both of the mounting body **114** relative to such a frame of reference. Therefore, references herein to movement, acceleration, or orientation of the mounting body **114**, relative to an inertial frame of reference or another frame of reference, may refer to movement, acceleration, or orientation, relative to such a frame of reference, of the inertial measurement unit **111** or of any other location that may be attached directly or indirectly to the mounting body **114** or that may otherwise move with mounting body **114**.

[0118] The mounting body **114** also includes mounting brackets **117** and **118**, each supported by a respective precession bearing and rotatable relative to the base **116** around a precession axis of rotation (or simply a precession axis) **119**. The mounting brackets **117** and **118** are spaced apart from each other to define a space between the mounting brackets **117** and **118** to receive the flywheel-support body **113**, and the mounting brackets **117** and **118** are each attachable to the flywheel-support body **113** such that when the flywheel-support body **113** is attached to the mounting brackets **117** and **118**, the flywheel-support body **113** is attached to the mounting body **114** while the mounting body **114** permits the flywheel-support body **113** to rotate around the precession axis of rotation **119** relative to the base **116**.

[0119] In some embodiments, movement of the flywheel-support body **113** relative to the mounting body **114** may be constrained to rotation of the flywheel-support body **113** relative to the mounting body **114** around the precession axis of rotation **119**. However, alternative embodiments may differ. For example, in alternative embodiments, the flywheel-support body **113** may be mounted for both translation and rotation relative to the mounting body **114**, for example using a linkage such as a four-bar linkage.

[0120] The mounting body **114** also includes precession-control devices **120** and **121**. In general, a precession-control device may include an actuator, which may be a linear actuator or a torsional actuator, and which may be an electromechanical actuator, a screw actuator, a hydraulic actuator, or a pneumatic actuator. Further, a precession-control device may include a shock absorber, a damper, an electric generator, or another device that can apply a resistive torque to the flywheel-support body **113** relative to the mounting body **114** to dampen the rotation of the flywheel-support body **113** relative to the mounting body **114**.

[0121] The precession-control device **120** is a linear actuator rotatably attached to the base **116** and rotatably attached to the mounting bracket **118** at a distance away from the precession axis of rotation **119** such that linear extension or contraction of the precession-control device **120** may cause rotation of the mounting bracket **118** (and thus of the flywheel-support body **113**) around the precession axis of rotation **119** relative to the base **116**, and such that rotation of the flywheel-support body **113** (and thus of the mounting bracket **118**) around the precession axis of rotation **119** relative to the base **116** may cause linear extension or contraction of the precession-control device **120**.

[0122] Also, the precession-control device **121** is a linear actuator rotatably attached to the base **116** and rotatably attached to the mounting bracket **118** at a distance away from the precession axis of rotation **119** such that linear extension or contraction of the precession-control device **121** may cause rotation of the mounting bracket **118** (and thus of the flywheel-support body **113**) around the precession axis of rotation **119** relative to the base **116**, and such that rotation of the flywheel-support body **113** (and thus of the mounting bracket **118**) around the precession axis of rotation **119** relative to the base **116** may cause linear extension or contraction of the precession-control device **121**.

[0123] In some embodiments, each of the precession-control devices **120** and **121** may be a roller-screw actuator as described in United States patent application publication no. US 2020/0102053 A1, for example, and may be self-locking. For example, the actuators may be backdrivable and may include brakes to resist or prevent rotation of the flywheel-support body **113** relative to the mounting body **114**. Such actuators may be simpler than other actuators, such as hydraulic actuators that may require handling hydraulic fluid and producing pressurized hydraulic fluid.

[0124] Each of the precession-control devices **120** and **121** is in communication with the roll-stabilizer controller **109** (shown in FIG. **1**) to receive one or more control signals from the roll-stabilizer controller **109**. Further, each of the precession-control devices **120** and **121** is an electromechanical actuator operable to extend and contract to apply a torque to, and to rotate, the mounting bracket **118** (and thus

the flywheel-support body **113**) around the precession axis of rotation **119** relative to the base **116** in response to, at least, one or more control signals from the roll-stabilizer controller **109**. Such a torque applied by the precession-control devices **120** and **121** may differ from a resistive torque because, for example, a torque applied by the precession-control devices **120** and **121** may cause rotation of the mounting bracket **118** around the precession axis of rotation **119** relative to the base **116** in a same direction as the applied torque, and the applied torque may be independent of rotation of the mounting bracket **118** around the precession axis of rotation **119** relative to the base **116**.

[0125] Further, each of the precession-control devices **120** and **121** is operable to generate electrical energy from rotation of the flywheel-support body **113** (and thus of the mounting bracket **118**) around the precession axis of rotation **119** relative to the base **116** and thereby dampen precession of the flywheel-support body **113** around the precession axis of rotation **119** relative to the base **116**. The precession-control devices **120** and **121** are electrically connected to the roll-stabilizer energy-storage device **110** such that electrical energy generated by the precession-control devices **120** and **121** may be stored by the roll-stabilizer energy-storage device **110**.

[0126] In some embodiments, minimizing backlash or lost motion between the flywheel-support body **113** and the precession-control devices **120** and **121**, or between the mounting body **114** and the precession-control devices **120** and **121**, may be important for control stability.

[0127] However, alternative embodiments may differ. For example, alternative embodiments may include more or fewer precession-control devices that may differ from the precession-control devices **120** and **121**. For example, a precession-control device according to an alternative embodiment may include a different electromechanical actuator, a different electric generator, or both, and some embodiments may omit such precession-control devices. Further, alternative embodiments may differ and may include hydraulic actuators, torsional actuators, or both, for example. Also, precession-control devices of alternative embodiments need not be actuators, but could apply only resistive forces or torques that simply resist or dampen movement of the flywheel-support body **113** relative to the mounting body **114**.

Flywheel Assembly

[0128] Referring to FIG. **5** and to FIG. **6**, the flywheel assembly **115** includes a flywheel body **122**, rotors **123** and **124**, and touchdown bearings in touchdown-bearing assemblies **125** and **126**. The flywheel body **122** has a shaft **127** extending along a spin axis of rotation **128** between opposite ends shown generally at **129** and **130** of the shaft **127**. The rotor **123** may be attached to the shaft **127** at the end **129**, and the rotor **124** attached to the shaft **127** at the end **130**. The spin axis of rotation **128** may be through a center of mass of the flywheel assembly **115** and through centers of the opposite ends **129** and **130**, although the flywheel assembly **115** does not necessarily have to spin around spin axis of rotation **128**. In some embodiments, the flywheel assembly **115** may spin in other ways.

[0129] A wheel portion **131** surrounds the shaft **127** and the spin axis of rotation **128**, and much of the wheel portion **131** is spaced apart from the spin axis of rotation **128** to increase a moment of inertia of the flywheel body **122**. An outer (or outermost) peripheral surface **132** of the wheel portion **131** also surrounds the shaft **127** and the spin axis of rotation **128**, and is generally cylindrical around the spin axis of rotation **128**. However, the wheel portion **131** of the flywheel body **122** defines a groove (or taper cut) shown generally at **133** and recessed in the outer peripheral surface **132**. Alternative embodiments may differ. For example, a wheel portion of an alternative embodiment may include a groove in a peripheral surface that is not necessarily an outer or outermost peripheral surface of the wheel portion, and that may be an inner surface of a flywheel body, for example. Such a surface may be cylindrical, or may be generally cylindrical (for example, not exactly cylindrical but similar to cylindrical).

[0130] Because the wheel portion **131** of the flywheel body **122** defines the groove **133**, a point of peak stress of the flywheel body **122** during rotation of flywheel body **122** around the spin axis of rotation **128** may be at a location **134**, as opposed to a location **135** that may be a point of peak stress of the flywheel body **122** if the flywheel body **122** omitted the groove **133**. The location **134** is closer to a surface of the wheel portion **131** than the location **135**, so the point of peak stress at the location **134** may be preferable to the point of peak stress at the location **135**, for example because the location **134** is closer to a surface of the wheel portion **131** that may be heat-treated.

[0131] The flywheel assembly **115** is an example only, and alternative embodiments may differ.

Flywheel Body

[0132] Referring to FIG. **54**, a flywheel body according to one embodiment is shown generally at **395** and includes a central portion **396** rotatable around a central-rotation axis **397** of the flywheel body **395**. The flywheel body **395** may be rotationally symmetric around the central-rotation axis **397** or otherwise configured to rotate around the central-rotation axis **397** in a roll-stabilizer apparatus such as those described herein or in gyroscope or another flywheel application. The flywheel body **395** also includes a wheel portion **398** spaced apart from the central portion **396** radially relative to the central-rotation axis **397**. The flywheel body **395** also includes at least one radial portion **399** coupling the wheel portion **398** to the central portion **396**.

[0133] The wheel portion **398** has a maximum radial thickness **400** relative to the central-rotation axis **397**, and the wheel portion **398** extends to a maximum radius **401** from the central-rotation axis **397**. In some embodiments, a ratio of the maximum radial thickness **400** to the maximum radius **401** is less than 0.27, less than 0.27, less than 0.26, less than 0.25, less than 0.24, less than 0.23, less than 0.22, less than 0.21, less than 0.20, less than 0.19, less than 0.18, less than 0.17, less than 0.16, or less than 0.15.

[0134] Referring to FIG. **55**, a flywheel body according to one embodiment is shown generally at **402** and includes a central portion **403** rotatable around a central-rotation axis **404** of the flywheel body **402**. The flywheel body **402** may be rotationally symmetric around the central-rotation axis **404** or otherwise configured to rotate around the central-rotation axis **404** in a roll-stabilizer apparatus such as those described herein or in gyroscope or another flywheel application. The flywheel body **402** also includes a wheel portion **405** spaced apart from the central portion **403** radially relative to the central-rotation axis **404**. The flywheel body

402 also includes at least one radial portion **406** coupling the wheel portion **405** to the central portion **403**.

[0135] The wheel portion **405** has a maximum radial thickness **407** relative to the central-rotation axis **404**, and the wheel portion **405** has maximum height **408** along the central-rotation axis **404**. In some embodiments, a ratio of the maximum radial thickness **407** to the maximum height **408** is less than 0.23, less than 0.22, less than 0.21, less than 0.20, less than 0.19, less than 0.18, less than 0.17, or less than 0.16.

[0136] Embodiments such as those described above may balance a high proportion of moment of inertia to mass of a flywheel body or a maximum rotational speed of the flywheel body with possible challenges such as potentially damaging vibration modes or manufacturing challenges.

Flywheel-Support Body

[0137] Referring to FIG. **7**, the flywheel-support body **113** includes housing bodies **136** and **137** that, when assembled as shown in FIG. **2** and in FIG. **3**, form a housing that houses the flywheel assembly **115**. The housing bodies **136** and **137** may be hemispheric bodies in some embodiments, and the housing formed by the housing bodies **136** and **137** may include very low air pressure, a slippery gas, helium, some other gas or mixture of gases, or a vacuum in some embodiments. More specifically, the housing formed by the housing bodies **136** and **137** may form a seal to contain an internal environment different than an ambient external environment. For example, the seal may be an air-tight seal, and the internal environment may have a different pressure than ambient pressure, or may contain gases or mixtures of gases different than ambient air. Thus, for example, in some embodiments the housing formed by the housing bodies **136** and **137** may enclose the flywheel assembly **115** in an environment that has a pressure lower than ambient pressure, such as a vacuum, or that includes a slippery gas, helium, or some other gas or mixture of gases. The flywheel-support body **113** also includes, within the housing formed by the housing bodies **136** and **137**, stators **138** and **139** and an axial active magnetic bearing **140**. In general, the flywheel-support body **113** has a central-rotation axis **141**. The central-rotation axis **141** is perpendicular to the precession axis of rotation **119**. In alternative embodiments, the central-rotation axis **141** may be non-parallel to, and not necessarily perpendicular to, the precession axis of rotation **119**. The central-rotation axis **141** is not necessarily at an exact center of the flywheel-support body **113** or of any other structure.

[0138] The flywheel-support body **113** is operable to support the flywheel assembly **115** such that the flywheel assembly **115** is rotatable within the flywheel-support body **113** at least when the spin axis of rotation **128** is colinear with the central-rotation axis **141**. However, the spin axis of rotation **128** does not necessarily have to be colinear with the central-rotation axis **141**, and a target axis for the spin axis of rotation **128** may be colinear with the central-rotation axis **141**, or close to but not necessarily colinear with the central-rotation axis **141**.

[0139] The flywheel-support body **113** also includes an electric motor/generator **142** electrically connected (either directly or indirectly, such as indirectly through the roll-stabilizer controller **109**) to the roll-stabilizer energy-storage device **110** (shown in FIG. **1**) such that the electric motor/generator **142** may use electric energy stored by the roll-stabilizer energy-storage device **110** to apply a torque to the flywheel assembly **115** (and thus to the flywheel body **122**) around the spin axis of rotation **128** relative to the flywheel-support body **113**. In some embodiments, the electric motor/generator **142** may have multiple different windings to facilitate generating different torque profiles, which may provide higher rates of acceleration or deceleration. As used herein, the term "electric motor/generator" excludes any electrical or other connections, such as wires, studs, or plugs.

[0140] Further, the electric motor/generator **142** may convert rotational kinetic energy, from rotation of the flywheel assembly **115** (and thus from the flywheel body **122**) around the spin axis of rotation **128** relative to the flywheel-support body **113**, to electrical energy, and the electric motor/generator **142** is electrically connected to the roll-stabilizer energy-storage device **110** such that the roll-stabilizer energy-storage device **110** may receive and store such electrical energy converted from such rotational kinetic energy.

[0141] In some embodiments, the electric motor/generator **142** may be located entirely within the housing formed by the housing bodies **136** and **137**. As such, when the housing formed by the housing bodies **136** and **137** encloses the flywheel assembly **115** in an internal environment different than an ambient external environment, the electric motor/generator **142** may also be contained in this internal environment. In such embodiments, electrical connections (not shown) to the electric motor/generator **142** could pass through one or both of the housing bodies **136** and **137**.

[0142] The electric motor/generator **142** is an example only, and alternative embodiments may differ. For example, an alternative embodiment may include only an electric motor, or may include an electric motor and an electric generator separate from the electric motor. Further, an alternative embodiment may include more than one electric motor, more than one electric generator, or more than one electric motor/generator that may differ from the electric motor/generator **142**. Also, alternative embodiments could generate torque in other ways. For example, alternative embodiments may include a hydraulic pump and motor, or could use air power. Further, as described below for example, one or more magnetic bearings may apply a torque to the flywheel assembly **115**. Also, in some embodiments, a motor may have an output shaft that is spaced apart from the central-rotation axis **141**.

[0143] More generally, the flywheel-support body **113** is an example only, and alternative embodiments may differ.

[0144] The flywheel-support body **113** may also include one or more proximity sensors, one or more position sensors, or both that are operable to provide, to the roll-stabilizer controller **109** (shown in FIG. **1**), one or more signals indicating measurements of proximity or position of the flywheel assembly **115** relative to the flywheel-support body **113**. For example, such one or more sensors may include one or more optical sensors, one or more magnetic sensors (such as one or more eddy-current sensors, for example), one or more capacitive sensors, one or more inductive sensors (for example, one or more sensors of inductance of one or more magnetic bearings as described herein), one or more other proximity sensors, one or more other position sensors, or a combination of two or more thereof.

Power Management

[0145] In some embodiments, power transfer from and to the main energy-storage device **105** (also referred to as a Boat House Battery (BHB)) and the roll-stabilizer energy-storage device **110** (also referred to as a Device Dedicated Battery (DDB)) may be coordinated.

[0146] For example, FIG. **69** illustrates how power from the main energy-storage device **105** and the roll-stabilizer energy-storage device **110** may be used by a roll-stabilizer apparatus such as the roll-stabilizer apparatus **108**. A battery controller **478** includes a DCDC converter **479**, which may step up voltage from the main energy-storage device **105** and the roll-stabilizer energy-storage device **110** to a higher voltage for us by the roll-stabilizer apparatus.

[0147] FIG. **70** illustrates schematically a standby mode according to one embodiment. During such a standby mode, energy is not transferred to or from rotational kinetic energy of a flywheel body. As shown at **480** in FIG. **70**, in the standby mode, if the main energy-storage device **105** is being charged, the battery controller **478** may cause the roll-stabilizer energy-storage device **110** to be charged up to a standby-maximum charge threshold. For example, the standby-maximum charge threshold at **480** may be 80% of a maximum charge level of the roll-stabilizer energy-storage device **110**, 100% of a maximum charge level of the roll-stabilizer energy-storage device **110**, or some other charge threshold as may be recommended or chosen to extend a usable lifetime of the roll-stabilizer energy-storage device **110** or for some other reason.

[0148] FIG. **71** illustrates schematically a startup mode according to one embodiment. During such a startup mode, energy is transferred to rotational kinetic energy of a flywheel body from the main energy-storage device **105**, from the roll-stabilizer energy-storage device **110**, or from both until the flywheel body reaches a threshold minimum angular speed or angular momentum for roll stabilization. During such a spin-up mode, if a level of charge of the roll-stabilizer energy-storage device **110** is not (as shown at **481**) at least a roll-stabilizer-energy-storage-device minimum threshold, then energy may be transferred to rotational kinetic energy of the flywheel body from at least (or only) the main energy-storage device **105**. As shown at **482**, if a voltage of the main energy-storage device **105** is not at least a minimum-voltage threshold, then a rate of energy transfer to rotational kinetic energy of the flywheel body from the main energy-storage device **105** may be reduced. As shown at **483**, if the voltage of the main energy-storage device **105** is at least the minimum-voltage threshold, then a rate of energy transfer to rotational kinetic energy of the flywheel body from the main energy-storage device **105** may be increased up to a maximum power transfer from the main energy-storage device **105**.

[0149] As shown at **484**, if the level of charge of the roll-stabilizer energy-storage device **110** is at least the roll-stabilizer-energy-storage-device minimum threshold, then energy from the roll-stabilizer energy-storage device **110** may be transferred to rotational kinetic energy of the flywheel body. As shown at **485**, if an electric current demand for roll stabilization is less than available electric current from the roll-stabilizer energy-storage device **110** or a voltage of the main energy-storage device **105** is at least a minimum-voltage threshold, then energy may be transferred to rotational kinetic energy of the flywheel body from at least (or only) the roll-stabilizer energy-storage device **110**. Herein, "electric current demand for roll stabilization" may refer to electric current for increasing rotational kinetic energy of a flywheel body, for maintaining a target angular speed or angular momentum for roll stabilization, for active actuation or precession control, and for other purposes related to roll stabilization.

[0150] However, if the electric current demand for roll stabilization is at least the available electric current from the main energy-storage device **105** and from the roll-stabilizer energy-storage device **110**, of if the voltage of the main energy-storage device **105** is not at least the minimum-voltage threshold, then as shown at **486**, a rate of energy transfer to rotational kinetic energy of the flywheel body from the main energy-storage device **105** may be reduced until the electric current demand for roll stabilization is no more than the available electric current from the main energy-storage device **105** and from the roll-stabilizer energy-storage device **110**. Also, if the electric current demand for roll stabilization is no more than the available electric current from the main energy-storage device **105** and from the roll-stabilizer energy-storage device **110**, and if the voltage of the main energy-storage device **105** is at least the minimum-voltage threshold, then as shown at **487**, then energy may be transferred to rotational kinetic energy of the flywheel body using the maximum available power from the roll-stabilizer energy-storage device **110** and using power from the main energy-storage device **105** as required.

[0151] FIG. **72** illustrates schematically an operation mode according to one embodiment. During such an operation mode, energy may be transferred to the flywheel body to maintain a target angular speed or angular momentum for roll stabilization. As shown at **488**, if the voltage of the main energy-storage device **105** is not at least a minimum-voltage threshold, and if a level of charge of the roll-stabilizer energy-storage device **110** is not at least a roll-stabilizer-energy-storage-device minimum threshold, then angular speed or angular momentum of the flywheel body may be reduced. However, as shown at **489**, if the voltage of the main energy-storage device **105** is not at least the minimum-voltage threshold but the level of charge of the roll-stabilizer energy-storage device **110** is at least the roll-stabilizer-energy-storage-device minimum threshold, then energy may be transferred to rotational kinetic energy of the flywheel body using power from at least (or only) the roll-stabilizer energy-storage device **110**.

[0152] As shown at **490**, if the voltage of the main energy-storage device **105** is at least the minimum-voltage threshold, and if non-charging power transfer (for example, power transfer for roll stabilization functions excluding charging the roll-stabilizer energy-storage device **110**) is at least a maximum power transfer from the main energy-storage device **105**, then the roll-stabilizer energy-storage device **110** is not charged.

[0153] However, as shown at **491**, if the voltage of the main energy-storage device **105** is at least the minimum-voltage threshold, and if non-charging power transfer (for example, power transfer for roll stabilization functions excluding charging the roll-stabilizer energy-storage device **110**) is less than the maximum power transfer from the main energy-storage device **105**, then the roll-stabilizer energy-storage device **110** may be charged up to a roll-stabilizer-energy-storage-device operation-maximum threshold that may be less than the standby-maximum charge threshold. The roll-stabilizer-energy-storage-device operation-maxi-

mum threshold may be determined based on an estimate of rotational kinetic energy of the flywheel body and on an estimate of efficiency of conversion of the rotational kinetic energy of the flywheel body to electrical energy to be stored by the roll-stabilizer energy-storage device **110**, such that the roll-stabilizer energy-storage device **110**, when charged to the roll-stabilizer-energy-storage-device operation-maximum threshold, may be recharged with the rotational kinetic energy of the flywheel body, at the efficiency of conversion of the rotational kinetic energy of the flywheel body to electrical energy to be stored by the roll-stabilizer energy-storage device **110**, to the standby-maximum charge threshold or without exceeding the standby-maximum charge threshold.

[0154] FIG. **73** illustrates schematically a spin-down mode in which an angular speed or angular momentum of the flywheel body is decreasing. During operation, the roll-stabilizer energy-storage device **110** may be charged from decreasing angular speed or angular momentum of the flywheel body to no more than the roll-stabilizer-energy-storage-device operation-maximum threshold, and during shutdown, the roll-stabilizer energy-storage device **110** may be charged from decreasing angular speed or angular momentum of the flywheel body to no more than the standby-maximum charge threshold.

Homopolar Radial Magnetic Bearing

[0155] Referring to FIG. **8**, to FIG. **9**, to FIG. **10**, and to FIG. **11**, the rotor **123** (also shown in FIG. **5**) is a cylindrically shaped assembly of steel laminations stacked in a direction along the central-rotation axis **141**. The rotor **124** (also shown in FIG. **5**) may be similar to the rotor **123**. However, the rotor **123** is an example only, and alternative embodiments may differ. For example, alternative embodiments may include more or fewer components, or one or more alternatives to the components described above. For example, an alternative embodiment may include materials that differ from the materials described above.

[0156] The stator **138** (also shown in FIG. **7**) includes a row of permanent magnets **143** in a generally annular shape around the central-rotation axis **141**. However, alternative embodiments may include one or more electromagnets or other magnets additionally or alternatively to the permanent magnets **143**. The permanent magnets **143** are magnetized in a direction along the central-rotation axis **141** and create a bias magnetic field as shown by magnetic-field arrows **144**. The magnetization direction of the permanent magnets **143** as shown in FIG. **9**, in FIG. **10**, and in FIG. **11** is an example only, and the magnetization direction may be opposite or otherwise different in other embodiments.

[0157] Steel pieces **145** and **146** are on opposite sides, along the central-rotation axis **141**, of the permanent magnets **143**. The steel pieces **145** and **146** may function as back-iron flux distributors.

[0158] Also on opposite sides, along the central-rotation axis **141**, of the permanent magnets **143** are cylindrically shaped axially stacked lamination-steel bodies **147** and **148**. The lamination-steel bodies **147** and **148** could additionally or alternatively be made of soft-magnetic-composite (SMC), similar low-loss magnetic steels, sintered magnetic materials, laminations, or other materials, and alternative embodiments may have topologies that differ from the topology shown. The lamination-steel body **147** is between the steel piece **145** and the rotor **123**, and the lamination-steel body **148** is between the steel piece **146** and the rotor **123**. The lamination-steel body **147** is generally annular, and an inner surface of the lamination-steel body **147** defines axially extending grooves shown generally at **149**, **150**, **151**, and **152**. The lamination-steel body **148** is also generally annular, and an inner surface of the lamination-steel body **148** defines axially extending grooves shown generally at **153**, **154**, **155**, and **156**.

[0159] The rotor **123** and the lamination-steel bodies **147** and **148** may be sized and positioned such that a gap (which may be an air gap in some embodiments) is between the rotor **123** and the lamination-steel bodies **147** and **148**. Such a gap may facilitate generation of magnetic forces as described herein, for example.

[0160] Referring to FIG. **8**, to FIG. **10**, to FIG. **11**, and to FIG. **12**, the stator **138** also includes an electric coil **157** including an electric conductor (such as copper) coiled around an axis **158** extending through and across the electric coil **157**. The coil has axial portions **159** and **160** and peripheral portions **161** and **162** between the axial portions **159** and **160**. When an electric current passes through the electric coil **157** in a clockwise direction from the perspective of the central-rotation axis **141** (or clockwise in the orientation of FIG. **12**), the electric coil **157** produces a magnetic field as shown by magnetic-field arrows **163**, and when an electric current passes through the electric coil **157** in a counter-clockwise direction from the perspective of the central-rotation axis **141** (or counter-clockwise in the orientation of FIG. **12**), the electric coil **157** produces a magnetic field opposite the magnetic-field arrows **163** in FIG. **12**. The axial portion **159** is received in the groove **152**, and the axial portion **160** is received in the groove **149**. The peripheral portions **161** and **162** are therefore on opposite sides, along the central-rotation axis **141**, of the lamination-steel body **147**.

[0161] The stator **138** also includes an electric coil **164** that may be similar to the electric coil **157**, although axial portions of the electric coil **164** are received in the grooves **149** and **150**.

[0162] The stator **138** also includes an electric coil **165** that may be similar to the electric coil **157**, although axial portions of the electric coil **165** are received in the grooves **150** and **151**.

[0163] The stator **138** also includes an electric coil **166** that may be similar to the electric coil **157**, although axial portions of the electric coil **166** are received in the grooves **151** and **152**.

[0164] The stator **138** also includes electric insulators shown generally at **167**, each for surrounding and electrically insulating a respective one of the electric coils **157**, **164**, **165**, and **166**.

[0165] The stator **138** also includes an electric coil **168** that may be similar to the electric coil **157**, although axial portions of the electric coil **168** are received in the grooves **153** and **156**, and peripheral portions of the electric coil **168** are on opposite sides, along the central-rotation axis **141**, of the lamination-steel body **148**.

[0166] The stator **138** also includes an electric coil **169** that may be similar to the electric coil **168**, although axial portions of the electric coil **169** are received in the grooves **153** and **154**.

[0167] The stator **138** also includes an electric coil **170** that may be similar to the electric coil **168**, although axial portions of the electric coil **170** are received in the grooves **154** and **155**.

[0168] The stator **138** also includes an electric coil **171** that may be similar to the electric coil **168**, although axial portions of the electric coil **171** are received in the grooves **155** and **156**.

[0169] The stator **138** also includes electric insulators shown generally at **172**, each for surrounding and electrically insulating a respective one of the electric coils **168**, **169**, **170**, and **171**.

[0170] The stator **138** also includes wire guides shown generally at **173** for guiding wires or other electric conductors electrically connected to one, more than one, or all of the electric coils **157**, **164**, **165**, **166**, **168**, **169**, **170**, and **171**. The electric coils **157**, **164**, **165**, **166**, **168**, **169**, **170**, and **171** are electrically connected to the roll-stabilizer energy-storage device **110** (either directly or indirectly, such as indirectly through the roll-stabilizer controller **109**) and may receive electric current from the roll-stabilizer energy-storage device **110** (shown in FIG. **1**), and the roll-stabilizer controller **109** (also shown in FIG. **1**) may control electric current through each of the electric coils **157**, **164**, **165**, **166**, **168**, **169**, **170**, and **171** independently such that electric current through one of the electric coils **157**, **164**, **165**, **166**, **168**, **169**, **170**, and **171** may be independent from electric current through one, more than one, or all of the others of the electric coils **157**, **164**, **165**, **166**, **168**, **169**, **170**, and **171**.

[0171] When the stator **138** is assembled as shown in FIG. **9**, in FIG. **10**, and in FIG. **11**, peripheral portions of the electric coils **157**, **164**, **165**, **166**, **168**, **169**, **170**, and **171** that are axially between the lamination-steel bodies **147** and **148** are also radially between the rotor **123** and the permanent magnets **143**.

[0172] The stator **138** also includes a radial sensor mount **174** that may be used to mount one or more sensors, and a clamp **175** may be used for retention.

[0173] Referring to FIG. **9**, to FIG. **10**, and to FIG. **11**, the bias magnetic field as shown by the magnetic-field arrows **144** is generally toroidal (or generally rectangular in a cross-section along the central-rotation axis **141**) and passes through the permanent magnets **143**, through the lamination-steel body **147**, through the rotor **123** and around the peripheral portions of the electric coils **157**, **164**, **165**, **166**, **168**, **169**, **170**, and **171** that are axially between the lamination-steel bodies **147** and **148**, through the lamination-steel body **148**, and back through the permanent magnets **143**.

[0174] In general, the bias magnetic field as shown by the magnetic-field arrows **144** creates magnetic forces that are generally radial relative to the spin axis of rotation **128** and that attract the rotor **123** towards the stator **138** radially relative to the spin axis of rotation **128**. Such attractive magnetic forces from the bias magnetic fields as shown by the magnetic-field arrows **144** may be uniform or similar around the spin axis of rotation **128**, so the rotor **123** and the stator **138** therefore may function as a radial magnetic bearing (that may be known as a homopolar magnetic bearing) that may align the spin axis of rotation **128** to the central-rotation axis **141**.

[0175] Referring to FIG. **9**, to FIG. **10**, and to FIG. **11**, when an electric current passes through the electric coil **157** in a counter-clockwise direction from the perspective of the central-rotation axis **141** (or counter-clockwise in the orientation of FIG. **12**), when an electric current passes through the electric coil **165** in a clockwise direction from the perspective of the central-rotation axis **141**, when an electric current passes through the electric coil **168** in a clockwise direction from the perspective of the central-rotation axis **141**, and when an electric current passes through the electric coil **170** in a counter-clockwise direction from the perspective of the central-rotation axis **141**,

[0176] 1. a control magnetic field as shown by magnetic-field arrows **176** passes around the axial portion **160** of the electric coil **157**, through the rotor **123**, around an axial portion of the electric coil **165**, through the lamination-steel body **147**, and back around the axial portion **160** of the electric coil **157**,

[0177] 2. a control magnetic field as shown by magnetic-field arrows **177** passes around the axial portion **159** of the electric coil **157**, through the rotor **123**, around an axial portion of the electric coil **165**, through the lamination-steel body **147**, and back around the axial portion **159** of the electric coil **157**,

[0178] 3. a control magnetic field as shown by magnetic-field arrows **178** passes around an axial portion of the electric coil **168**, through the lamination-steel body **148**, around an axial portion of the electric coil **170**, through the rotor **123**, and back around the axial portion of the electric coil **168**, and

[0179] 4. a control magnetic field as shown by magnetic-field arrows **179** passes around an axial portion of the electric coil **168**, through the lamination-steel body **148**, around an axial portion of the electric coil **170**, through the rotor **123**, and back around the axial portion of the electric coil **168**.

[0180] As shown in FIG. **9**, in FIG. **10**, and in FIG. **11**, on a side of the stator **138** having the electric coils **157** and **168**, the control magnetic fields as shown by the magnetic-field arrows **176**, **177**, **178**, and **179** are in the same direction as the bias magnetic fields as shown by the magnetic-field arrows **144**, so the control magnetic fields as shown by the magnetic-field arrows **176**, **177**, **178**, and **179** complement or enhance the bias magnetic fields as shown by the magnetic-field arrows **144** and strengthen the magnetic attraction of the rotor **123** towards the side of stator **138** having the electric coils **157** and **168**.

[0181] As also shown in FIG. **9**, in FIG. **10**, and in FIG. **11**, on a side of the stator **138** having the electric coils **165** and **170** (opposite the side of the stator **138** having the electric coils **157** and **168**), the control magnetic fields as shown by the magnetic-field arrows **176**, **177**, **178**, and **179** are in an opposite direction from the bias magnetic fields as shown by the magnetic-field arrows **144**, so the control magnetic fields as shown by the magnetic-field arrows **176**, **177**, **178**, and **179** counter or diminish the bias magnetic fields as shown by the magnetic-field arrows **144** and weaken the magnetic attraction of the rotor **123** towards the side of stator **138** having the electric coils **157** and **168**.

[0182] As a result, when an electric current passes through the electric coil **157** in a counter-clockwise direction from the perspective of the central-rotation axis **141** (or counter-clockwise in the orientation of FIG. **12**), when an electric current passes through the electric coil **165** in a clockwise direction from the perspective of the central-rotation axis **141**, when an electric current passes through the electric coil **168** in a clockwise direction from the perspective of the

central-rotation axis **141**, and when an electric current passes through the electric coil **170** in a counter-clockwise direction from the perspective of the central-rotation axis **141**, the electric coils **157**, **165**, **168**, and **170** cause a net magnetic force **180** radially towards the side of the stator **138** having the electric coils **157** and **168**, so the rotor **123** and the stator **138** therefore may function as an active radial magnetic bearing having radial forces controllable at least in part by controlling electric currents through the electric coils **157**, **165**, **168**, and **170**.

[0183] If directions of the electric currents through the electric coils **157**, **165**, **168**, and **170** are reversed from the directions described in the example above, then the electric currents would cause a net magnetic force opposite the net magnetic force **180** and radially towards the side of the stator **138** having the electric coils **165** and **170**. Further, the example described above involves electric currents through the electric coils **157**, **165**, **168**, and **170**, but similar radial forces towards or away from a side of the stator **138** having the electric coils **164** and **169** or a side of the stator **138** having the electric coils **166** and **171** may be controlled at least in part by controlling electric currents through the electric coils **164**, **166**, **169**, and **171**.

[0184] In general, diametrically opposed electric coils may cooperate to control radial magnetic forces. Therefore, in some embodiments, the electric coils **157**, **165**, **168**, and **170** may be electrically connected to each other, the electric coils **164**, **166**, **169**, and **171** may be electrically connected to each other, and the roll-stabilizer controller **109** (also shown in FIG. **1**) may control electric current through the electric coils **157**, **165**, **168**, and **170** independently from electric current through the electric coils **164**, **166**, **169**, and **171**.

[0185] The stator **139** (also shown in FIG. **7**) may be similar to the stator **138**. However, the stator **138** is an example only, and alternative embodiments may differ. For example, alternative embodiments may include more or fewer components, or one or more alternatives to the components described above. For example, an alternative embodiment may include materials that differ from the materials described above. Alternative embodiments may also include passive magnetic bearings in place of or in addition to the rotor **123** and the stator **138**.

E-Core Radial Magnetic Bearing

[0186] Referring to FIG. **13**, to FIG. **14**, and to FIG. **15**, an alternative embodiment includes a rotor **181** and a stator **182**. In the embodiment of FIG. **13**, FIG. **14**, and FIG. **15**, the flywheel assembly **115** may include the rotor **181** as an alternative to the rotor **123**, to the rotor **124**, or to both, so FIG. **13**, FIG. **14**, and FIG. **15** illustrate the spin axis of rotation **128** as in the embodiment of FIG. **8**, FIG. **9**, FIG. **10**, and FIG. **11**. Likewise, in the embodiment of FIG. **13**, FIG. **14**, and FIG. **15**, the flywheel-support body **113** may include the stator **182** as an alternative to the stator **138**, to the stator **139**, or to both, so FIG. **13**, FIG. **14**, and FIG. **15** illustrate the central-rotation axis **141** as in the embodiment of FIG. **8**, FIG. **9**, FIG. **10**, and FIG. **11**.

[0187] The rotor **181** includes lamination rings **183**, **184**, and **185**. The rotor **181** also includes a solid-steel ring **186** inside the lamination ring **183**, a solid-steel ring **187** inside the lamination ring **184**, and a solid-steel ring **188** inside the lamination ring **185**. The rotor **181** also includes a non-magnetic ring (such as a stainless-steel ring) **189** between the lamination rings **183** and **184**, and a non-magnetic ring (such as a stainless-steel ring) **190** between the lamination rings **184** and **185**. The rotor **181** also includes an annular permanent magnet **191** inside the non-magnetic ring **189**, between the lamination rings **183** and **184**, and between the solid-steel rings **186** and **187**. The rotor **181** also includes an annular permanent magnet **192** inside the non-magnetic ring **190**, between the lamination rings **184** and **185**, and between the solid-steel rings **187** and **188**. The annular permanent magnets **191** and **192** are magnetized in opposite directions along the central-rotation axis **141**. The magnetization directions of the permanent magnets **191** and **192** as shown in FIG. **14** and in FIG. **15** are an example only, and the magnetization directions may be opposite or otherwise different in other embodiments. Further, alternative embodiments may include one or more electromagnets or other magnets additionally or alternatively to one or both of the permanent magnets **191** and **192**.

[0188] More generally, the rotor **181** is an example only, and alternative embodiments may differ. For example, alternative embodiments may include more or fewer components, or one or more alternatives to the components described above. For example, an alternative embodiment may include materials that differ from the materials described above.

[0189] Still referring to FIG. **13**, to FIG. **14**, and to FIG. **15**, the stator **182** includes four annular-sector stator bodies **193**, **194**, **195**, and **196**. The annular-sector stator bodies **194** and **196** are omitted from FIG. **13** for simplicity of illustration. The annular-sector stator body **193** includes SMC bodies **197** and an electric coil **198**. The annular-sector stator body **194** includes SMC bodies **199** and an electric coil **200**. The annular-sector stator body **195** includes SMC bodies **201** and an electric coil **202**. The annular-sector stator body **196** includes SMC bodies **203** and an electric coil **204**. The SMC bodies may be made from other materials, such as similar low-loss magnetic steels, sintered magnetic materials, or laminations, and alternative embodiments may have topologies that differ from the topology shown.

[0190] The lamination rings **183**, **184**, and **185** and the annular-sector stator bodies **193**, **194**, **195**, and **196** may be sized and positioned such that a gap (which may be an air gap in some embodiments) is between the lamination rings **183**, **184**, and **185** and the annular-sector stator bodies **193**, **194**, **195**, and **196**. Such a gap may facilitate generation of magnetic forces as described herein, for example.

[0191] The electric coils **198**, **200**, **202**, and **204** are electrically connected to the roll-stabilizer energy-storage device **110** (either directly or indirectly, such as indirectly through the roll-stabilizer controller **109**) and may receive electric current from the roll-stabilizer energy-storage device **110** (shown in FIG. **1**), and the roll-stabilizer controller **109** (also shown in FIG. **1**) may control electric current through each of the electric coils **198**, **200**, **202**, and **204** independently such that electric current through one of the electric coils **198**, **200**, **202**, and **204** may be independent from electric current through one, more than one, or all of the others of the electric coils **198**, **200**, **202**, and **204**.

[0192] Referring to FIG. **16**, the annular-sector stator body **193** is illustrated, and the annular-sector stator bodies **194**, **195**, and **196** may be similar to the annular-sector stator body **193**. The electric coil **198** includes an electric conductor coiled around an axis **205** extending through and across the electric coil **198** the such that when an electric current

passes through the electric coil **198** in a clockwise direction from the perspective of the central-rotation axis **141** (or clockwise in the orientation of FIG. **16**), the electric coil **198** produces a magnetic field as shown by magnetic-field arrows **206** in FIG. **16**, and when an electric current passes through the electric coil **198** in a counter-clockwise direction from the perspective of the central-rotation axis **141** (or counter-clockwise in the orientation of FIG. **16**), the electric coil **198** produces a magnetic field opposite the magnetic-field arrows **206** in FIG. **16**.

[0193] Referring back to FIG. **14** and to FIG. **15**, the permanent magnet **191** creates a bias magnetic field as shown by magnetic-field arrows **207**. The bias magnetic field as shown by the magnetic-field arrows **207** is generally toroidal (or generally rectangular in a cross-section along the central-rotation axis **141**) and passes through the permanent magnet **191**, around the non-magnetic ring **189**, through the lamination ring **184**, around the electric coils **198**, **200**, **202**, and **204**, through the SMC bodies **197**, **199**, **201**, and **203**, through the lamination ring **183**, and back through the permanent magnet **191**. The solid-steel rings **186** and **187** may, in some embodiments, facilitate flow of magnetic flux, through the permanent magnet **191**, from the bias magnetic field as shown by the magnetic-field arrows **207**. The non-magnetic ring **189** may, in some embodiments, create a magnetic-flux barrier to shape the bias magnetic field as shown by the magnetic-field arrows **207**.

[0194] Further, the permanent magnet **192** creates a bias magnetic field as shown by magnetic-field arrows **208**. The bias magnetic field as shown by the magnetic-field arrows **208** is generally toroidal (or generally rectangular in a cross-section along the central-rotation axis **141**, and opposite in direction to the bias magnetic field as shown by the magnetic-field arrows **207**) and passes through the permanent magnet **192**, around the non-magnetic ring **190**, through the lamination ring **184**, around the electric coils **198**, **200**, **202**, and **204**, through the SMC bodies **197**, **199**, **201**, and **203**, through the lamination ring **185**, and back through the permanent magnet **192**. The solid-steel rings **187** and **188** may, in some embodiments, facilitate flow of magnetic flux, through the permanent magnet **192**, from the bias magnetic field as shown by the magnetic-field arrows **208**. The non-magnetic ring **190** may, in some embodiments, create a magnetic-flux barrier to shape the bias magnetic field as shown by the magnetic-field arrows **208**.

[0195] In general, the bias magnetic fields as shown by the magnetic-field arrows **207** and **208** create magnetic forces that are generally radial relative to the spin axis of rotation **128** and that attract the rotor **181** towards the stator **182** radially relative to the spin axis of rotation **128**. Such attractive magnetic forces from the bias magnetic fields as shown by the magnetic-field arrows **207** and **208** may be uniform or similar around the spin axis of rotation **128**, so the rotor **181** and the stator **182** therefore may function as a radial magnetic bearing (that may be known as a homopolar magnetic bearing) that may align the spin axis of rotation **128** to the central-rotation axis **141**.

[0196] Referring to FIG. **14**, to FIG. **15**, and to FIG. **16**, when an electric current passes through the electric coil **198** in a clockwise direction from the perspective of the central-rotation axis **141** (or clockwise in the orientation of FIG. **16**), and when an electric current passes through the electric coil **202** in a counter-clockwise direction from the perspective of the central-rotation axis **141**,

[0197] 1. control magnetic fields as shown by magnetic-field arrows **209** and **210** pass around the electric coil **198**, through the SMC bodies **197**, through the lamination ring **183**, through the SMC bodies **201**, around the electric coil **202**, through the lamination ring **184**, and back around the electric coil **198**, and

[0198] 2. control magnetic fields as shown by magnetic-field arrows **211** and **212** pass around the electric coil **198**, through the SMC bodies **197**, through the lamination ring **185**, through the SMC bodies **201**, around the electric coil **202**, through the lamination ring **184**, and back around the electric coil **198**.

[0199] As shown in FIG. **14**, in the annular-sector stator body **193**, the control magnetic fields as shown by the magnetic-field arrows **209** and **211** are in the same direction as the bias magnetic fields as shown by the magnetic-field arrows **207** and **208**, so the control magnetic fields as shown by the magnetic-field arrows **209** and **211** complement or enhance the bias magnetic fields as shown by the magnetic-field arrows **207** and **208** in the annular-sector stator body **193** and strengthen the magnetic attraction of the rotor **181** towards the annular-sector stator body **193** of the stator **182**.

[0200] As also shown in FIG. **14**, in the annular-sector stator body **195**, the control magnetic fields as shown by the magnetic-field arrows **209** and **211** are in an opposite direction from the bias magnetic fields as shown by the magnetic-field arrows **207** and **208**, so the control magnetic fields as shown by the magnetic-field arrows **209** and **211** counter or diminish the bias magnetic fields as shown by the magnetic-field arrows **207** and **208** in the annular-sector stator body **195** and weaken the magnetic attraction of the rotor **181** towards the annular-sector stator body **195** of the stator **182**.

[0201] As a result, when an electric current passes through the electric coil **198** in a clockwise direction from the perspective of the central-rotation axis **141** (or clockwise in the orientation of FIG. **16**), and when an electric current passes through the electric coil **202** in a counter-clockwise direction from the perspective of the central-rotation axis **141**, the electric coils **198** and **202** cause a net magnetic force **213** radially towards the annular-sector stator body **193**, so the rotor **181** and the stator **182** therefore may function as an active radial magnetic bearing (that may be known as an e-core active radial magnetic bearing) having radial forces controllable at least in part by controlling electric currents through the electric coils **198** and **202**.

[0202] If directions of the electric currents through the electric coils **198** and **202** are reversed from the directions described in the example above, then the electric currents would cause a net magnetic force opposite the net magnetic force **213** and radially towards the annular-sector stator body **195**. Further, the example described above involves electric currents through the electric coils **198** and **202**, but similar radial forces towards or away from the annular-sector stator bodies **194** and **196** may be controlled at least in part by controlling electric currents through the electric coils **200** and **204**.

[0203] In general, diametrically opposed electric coils may cooperate to control radial magnetic forces. Therefore, in some embodiments, the electric coils **198** and **202** may be electrically connected to each other, the electric coils **200** and **204** may be electrically connected to each other, and the roll-stabilizer controller **109** (also shown in FIG. **1**) may

control electric current through the electric coils **198** and **202** independently from electric current through the electric coils **200** and **204**.

[0204] In some embodiments, an e-core active radial magnetic bearing as described above may involve shorter paths for magnetic flux than other homopolar active magnetic bearings, so an e-core active radial magnetic bearing as described above may involve less material and be smaller than other homopolar active magnetic bearings.

[0205] The stator **182** is an example only, and alternative embodiments may differ. For example, an alternative embodiment may include more or fewer annular-sector stator bodies. Further, alternative embodiments may include more or fewer components, or one or more alternatives to the components described above. For example, an alternative embodiment may include materials that differ from the materials described above. As one example, alternative embodiments may include sets of laminations aligned in a radial direction instead of the SMC bodies. Also, an alternative embodiment may include more or fewer magnets than the embodiment described above.

Axial Magnetic Bearing

[0206] Referring to FIG. **17**, the axial active magnetic bearing **140** includes four annular-sector bodies **214**, **215**, **216**, and **217**, which may be made from steel. When assembled as shown in FIGS. **18** and **19**, the annular-sector bodies **214**, **215**, **216**, and **217** collectively form an annular bearing body having a plurality of annular sectors surrounding the central-rotation axis **141**. The sectors may be overlapping in some embodiments.

[0207] The annular-sector body **214** includes an electric coil **218**. The electric coil **218** includes an electric conductor coiled around an axis parallel to the central-rotation axis **141** (or, more generally, extending transversely to the central-rotation axis **141**) such that when an electric current passes through the electric coil, the electric coil magnetizes the annular-sector body **214** in a direction along such an axis parallel to the central-rotation axis **141**. The annular-sector body **214** and the electric coil **218** thus function as an electromagnet positioned on the annular bearing body in one of the annular sectors of the annular bearing body.

[0208] The annular-sector body **215** includes an electric coil **219**. The electric coil **219** includes an electric conductor coiled around an axis parallel to the central-rotation axis **141** (or, more generally, extending transversely to the central-rotation axis **141**) such that when an electric current passes through the electric coil, the electric coil magnetizes the annular-sector body **215** in a direction along such an axis parallel to the central-rotation axis **141**. The annular-sector body **215** and the electric coil **219** thus function as an electromagnet positioned on the annular bearing body in one of the annular sectors of the annular bearing body.

[0209] The annular-sector body **216** includes an electric coil **220**. The electric coil **220** includes an electric conductor coiled around an axis parallel to the central-rotation axis **141** (or, more generally, extending transversely to the central-rotation axis **141**) such that when an electric current passes through the electric coil, the electric coil magnetizes the annular-sector body **216** in a direction along such an axis parallel to the central-rotation axis **141**. The annular-sector body **216** and the electric coil **220** thus function as an electromagnet positioned on the annular bearing body in one of the annular sectors of the annular bearing body.

[0210] The annular-sector body **217** includes an electric coil **221**. The electric coil **221** includes an electric conductor coiled around an axis parallel to the central-rotation axis **141** (or, more generally, extending transversely to the central-rotation axis **141**) such that when an electric current passes through the electric coil, the electric coil magnetizes the annular-sector body **217** in a direction along such an axis parallel to the central-rotation axis **141**. The annular-sector body **217** and the electric coil **221** thus function as an electromagnet positioned on the annular bearing body in one of the annular sectors of the annular bearing body.

[0211] The electric coils **218**, **219**, **220**, and **221** are electrically connected to the roll-stabilizer energy-storage device **110** (either directly or indirectly, such as indirectly through the roll-stabilizer controller **109**) and may receive electric current from the roll-stabilizer energy-storage device **110** (shown in FIG. **1**), and the roll-stabilizer controller **109** (also shown in FIG. **1**) may control electric current through each of the electric coils **218**, **219**, **220**, and **221** independently such that electric current through one of the electric coils **218**, **219**, **220**, and **221** may be independent from electric current through one, more than one, or all of the others of the electric coils **218**, **219**, **220**, and **221**.

[0212] Referring to FIG. **20**, to FIG. **21**, and to FIG. **22**, the annular-sector body **214** is illustrated, and the annular-sector bodies **215**, **216**, and **217** are similar to the annular-sector body **214**. The annular-sector body **214** has an annular-sector surface **222** on one side, along an axis parallel to the central-rotation axis **141**, of the electric coil **218**, and an annular-sector surface **223** on an opposite side, along the axis parallel to the central-rotation axis **141**, of the electric coil **218** from the annular-sector surface **222**. An annular permanent magnet **224** may be positioned against annular-sector surfaces (such as the annular-sector surface **222**) on one side of the electric coil **218** along an axis parallel to the central-rotation axis **141**, and an annular permanent magnet **225** may be positioned against annular-sector surfaces (such as the annular-sector surface **223**) on an opposite side of the electric coil **218** from the annular-sector surface **222** along the axis parallel to the central-rotation axis **141**.

[0213] The annular permanent magnets **224** and **225** are magnetized in opposite directions along the central-rotation axis **141** (shown in FIG. **17**) such that the annular permanent magnet **224** creates a bias magnetic field through the flywheel body **122** and through the annular-sector body **214** as shown by magnetic-field arrows **341** in FIG. **22**, and the annular permanent magnet **225** creates a bias magnetic field through the flywheel body **122** and through the annular-sector body **214** as shown by magnetic-field arrows **342** in FIG. **22**. Also, when an electric current passes through the electric coil **218**, a control magnetic field as shown by magnetic-field arrows **343** in FIG. **22** passes through the flywheel body **122** and through the annular-sector body **214**. As shown in FIG. **22**, the control magnetic field as shown by the magnetic-field arrows **343** is in an opposite direction from the bias magnetic field as shown by the magnetic-field arrows **341** and in the same direction as the bias magnetic field as shown by the magnetic-field arrows **342**, so the bias magnetic fields shown by magnetic-field arrows **342** and **343** and the control magnetic field as shown by the magnetic-field arrows **343** create a magnetic force **344** that is generally axial relative to the spin axis of rotation **128** and that attracts the rotor **123** upwards. However, alternative embodiments may include one or more electromagnets or other magnets

additionally or alternatively to one or both of the permanent magnets **224** and **225**. Further, the magnetization directions of the permanent magnets **224** and **225**, and the control magnetic field as shown by the magnetic-field arrows **343**, as shown in FIG. **22** are examples only, and the magnetization directions and magnetic fields may be opposite or otherwise different in other embodiments.

[0214] Referring to FIG. **17** and to FIG. **21**, the axial active magnetic bearing **140** also includes a solid-steel ring **226** (which may be formed from four pieces as shown) on the annular permanent magnet **224** such that the annular permanent magnet **224** is between the annular-sector body **214** and the solid-steel ring **226**. The axial active magnetic bearing **140** also includes a solid-steel ring **227** on the annular permanent magnet **225** such that the annular permanent magnet **225** is between the annular-sector body **214** and the solid-steel ring **227**. The annular permanent magnets **224** and **225** may be segmented, which may create some discontinuities in magnetic flux density, so the solid-steel rings **226** and **227** may, in some embodiments, more uniformly distribute magnetic flux density between the annular-sector bodies **214**, **215**, **216**, and **217** and the flywheel body **122**. The axial active magnetic bearing **140** also includes a wire shield **228** between the electric coils **218**, **219**, **220**, and **221** and the central-rotation axis **141** such that the wire shield **228** may retain and protect the electric coils **218**, **219**, **220**, and **221**.

[0215] Referring now to FIG. **22**, when the roll-stabilizer apparatus **108** is assembled as shown in FIG. **3**, at least a portion of the axial active magnetic bearing **140** may be positioned in the groove **133** so that magnetic fields produced by the axial active magnetic bearing **140** may exert axial forces on the flywheel body **122** to maintain the flywheel assembly **115** away from the touchdown bearings in the touchdown-bearing assemblies **125** and **126**. In some embodiments, positioning the axial active magnetic bearing **140** in the groove **133** may permit a more-compact roll-stabilizer apparatus **108** when compared to other roll-stabilizer apparatuses having similar capacities for roll stabilization.

[0216] The groove **133**, the solid-steel ring **226**, and the annular-sector bodies **214**, **215**, **216**, and **217** may be sized and positioned such that a gap (which may be an air gap in some embodiments) is between: the flywheel body **122** and the solid-steel ring **226**; and the annular-sector bodies **214**, **215**, **216**, and **217**. Such a gap may facilitate generation of magnetic forces as described herein, for example.

[0217] The axial active magnetic bearing **140** is an example only, and alternative embodiments may differ. For example, the electromagnets of the axial active magnetic bearing **140** are in four annular sectors, but alternative embodiments may include more or fewer annular sectors. The number of sectors may be an even number in some embodiments. Further, in alternative embodiments, the annular sectors may not be equal to each other in size but rather may differ in size from each other. More generally, alternative embodiments may include more or fewer components, or one or more alternatives to the components described above. For example, an alternative embodiment may include materials that differ from the materials described above. Also, an alternative embodiment may include more or fewer magnets than the embodiment described above. Some alternative embodiments may include more than one axial magnet bearing, and may include stacks of axial magnetic bearings to increase axial force and/or torque output.

Torque from Axial Magnetic Bearing

[0218] In some embodiments, the axial active magnetic bearing **140** may apply a torque to the flywheel assembly **115**, for example to complement a radial magnetic bearing including the rotor **123** and the stator **138**, a radial magnetic bearing including the rotor **124** and the stator **139**, or both, or more generally to function similarly to one or more radial bearings.

[0219] For example, one or more electric coils on a first side of the axial active magnetic bearing **140** may produce one or more magnetic fields that differ from one or more magnetic fields produced by one or more electric coils on a second side of the axial active magnetic bearing **140** opposite the first side of the axial active magnetic bearing **140**. For example, one side of the axial active magnetic bearing **140** may include the electric coils **218** and **219**, and an opposite side of the axial active magnetic bearing **140** may include the electric coils **220** and **221**. As another example, one side of the axial active magnetic bearing **140** may include the electric coils **219** and **220**, and an opposite side of the axial active magnetic bearing **140** may include the electric coils **218** and **221**.

[0220] The one or more magnetic fields produced by the one or more electric coils on one side of the axial active magnetic bearing **140** may differ from the one or more magnetic fields produced by the one or more electric coils on an opposite side of the axial active magnetic bearing **140** in direction, in strength, or in both. Such different magnetic fields may cause the axial active magnetic bearing **140** to exert, in addition to any net axial force on the flywheel body **122**, torque on the flywheel body **122** (and thus on the flywheel assembly **115**) around an axis between the two sides of the axial active magnetic bearing **140** as described above, for example.

[0221] In some embodiments, because the axial active magnetic bearing **140** may apply a torque to the flywheel assembly **115**, other radial bearings may be smaller, and the roll-stabilizer apparatus **108** may better control positions of the flywheel assembly **115** in the flywheel-support body **113**. For example, the roll-stabilizer apparatus **108** may experience significant external forces, and the axial active magnetic bearing **140** functioning as a radial bearing may, in some embodiments, allow the roll-stabilizer apparatus **108** to accommodate such external forces.

Wire Guide

[0222] FIGS. **57**, **58**, and **59** illustrate a flywheel-support body **411** according to one embodiment. The flywheel-support body **411** may be similar to a flywheel-support body as described herein, for example. A wire guide **412** includes one or more wires extending between a mounting body **414** (that may be similar to a mounting body as described herein, for example) and the flywheel-support body **411**. FIG. **57** shows a portion of the mounting body **414**, which is shown more fully in FIG. **59**. Stringers under the mounting body **414** may attach the mounting body **414** to a hull or other structure of a marine vessel. The flywheel-support body **411** is rotatable relative to the mounting body **414** around a precession axis of rotation **415**.

[0223] The one or more wires of the wire guide **412** may convey electrical power to one or more electric motors

inside the flywheel-support body **411**, receive electrical power from one or more electric generators inside the flywheel-support body **411**, receive signals from one or more sensors inside the flywheel-support body **411**, transmit control signals to one or more motor drivers or sensors inside or on the flywheel-support body **411**, or two or more thereof, for example.

[0224] The wire guide **412** is attached or attachable to the flywheel-support body **411** at a location shown generally at **413** and is attached or attachable to the mounting body **414** at a location shown generally at **416**. The location **413** is spaced apart from the location **416** along the precession axis of rotation **415**. The wire guide **412** curves around the precession axis of rotation **415** between the location **416** and the location **413**. The location **413** is, or is positioned to be, between the flywheel-support body and the mounting body **414**. The location **416** is above at least a portion of the mounting body **414**. The location **416** overlaps at least partially along the precession axis of rotation **415** with a bearing supporting the flywheel-support body for rotation around the precession axis of rotation **415** relative to the mounting body **414**.

Operation

[0225] Referring back to FIG. **1**, to FIG. **2**, and to FIG. **3**, the roll-stabilizer assembly **107** may be attached to the hull **101** directly or indirectly such that the precession axis of rotation **119** is not parallel to the longitudinal axis **106**. In some embodiments, the precession axis of rotation **119** may extend horizontally and perpendicular to the longitudinal axis **106**, namely transversely relative to the hull **101**. However, alternative embodiments may differ. For example, in some embodiments, the precession axis of rotation **119** may extend vertically or in another direction that is not parallel (and that may be perpendicular) to the longitudinal axis **106** of the marine vessel **100**.

[0226] In operation, the electric motor/generator **142** may apply a torque to the flywheel assembly **115** (and thus to the flywheel body **122**) around the spin axis of rotation **128** relative to the flywheel-support body **113**, which may cause the flywheel assembly **115** to spin around the spin axis of rotation **128** relative to the flywheel-support body **113**, thus causing the flywheel assembly **115** to have angular momentum along the spin axis of rotation **128**.

[0227] In general, when waves or other external forces apply torque to the marine vessel **100**, the hull **101** (and thus the mounting body **114**) may rotate or roll around a roll axis (which may be close to the longitudinal axis **106**). Such rotation of the mounting body **114** around the roll axis causes the flywheel-support body **113** (and thus the flywheel body **122**) to rotate around the roll axis, and conservation of angular momentum of the flywheel body **122** causes the flywheel body **122** (and thus the flywheel-support body **113**) to precess relative to the mounting body **114** around the precession axis of rotation **119** in response to such rotation of the flywheel body **122** around the roll axis. Such precession of the flywheel body **122** relative to an intertial reference frame, and around the precession axis of rotation **119**, causes a torque to be exerted by the flywheel body **122** (and thus by the flywheel-support body **113** and the mounting body **114**) on the hull **101** in a direction opposite the rotation of the hull **101** (and thus the mounting body **114**) around the roll axis. The angular momentum of the flywheel body **122** may thus resist the rotation of the hull **101** (and thus the mounting body **114**) around the roll axis, and the roll-stabilizer apparatus **108** may stabilize the marine vessel **100** by resisting roll around the roll axis. However, other torques and movements may arise, for example in response to yaw or pitch motion of the hull **101**.

[0228] When the flywheel assembly **115** is being prepared to spin, or is spinning, around the spin axis of rotation **128** relative to the flywheel-support body **113**, the roll-stabilizer controller **109** may, in response to, at least, one or more signals indicating measurements of proximity or position of the flywheel assembly **115** in the flywheel-support body **113** from one or more proximity sensors, one or more position sensors, or both as described above, control electric currents through one or more of the electric coils **157**, **164**, **165**, **166**, **168**, **169**, **170**, **171**, **198**, **200**, **202**, **204**, **218**, **219**, **220**, and **221**, as described herein for example, to maintain the spin axis of rotation **128** along the central-rotation axis **141** (or along any other axis that may be desired as described below, for example) and to maintain the flywheel assembly **115** away from the touchdown bearings in the touchdown-bearing assemblies **125** and **126**.

[0229] As indicated above, the rotor **123** and the stator **138** may function as a magnetic bearing. As also indicated above, the rotor **124** may be similar to the rotor **123**, and the stator **139** may be similar to the stator **138**. Therefore, the rotor **124** and the stator **139** may also function as a magnetic bearing. As also indicated above, the rotor **181** may be an alternative to the rotor **123**, and the stator **182** may be an alternative to the stator **138**, so the rotor **181** and the stator **182** may also function as a magnetic bearing. The axial active magnetic bearing **140** is also a magnetic bearing.

[0230] In some embodiments, such magnetic bearings may allow the flywheel assembly **115** to spin around the spin axis of rotation **128** relative to the flywheel-support body **113** with less friction when compared to other types of bearings. Such reduced friction may, in some embodiments, allow the flywheel assembly **115** to spin around the spin axis of rotation **128** relative to the flywheel-support body **113** with less power to the electric motor/generator **142** and with less cooling than a roll-stabilizer apparatus having other types of bearings. Further, in some embodiments, magnetic bearings such as those described herein may last longer than other bearings (such as mechanical bearings) and reduce or avoid cumbersome replacement of worn bearings. Also, in some embodiments, magnetic bearings such as those described herein may vibrate less and generate less noise than such other bearings, and may tolerate higher operating temperatures than such other bearings. Overall, the roll-stabilizer apparatus **108** may, in some embodiments, have a longer usable life or require less maintenance than a roll-stabilizer apparatus having other types of bearings.

[0231] Also, magnetic bearings such as those described herein may, in some embodiments, permit the flywheel assembly **115** to spin around the spin axis of rotation **128** relative to the flywheel-support body **113** faster than a roll-stabilizer apparatus having other types of bearings. Such faster spin of the flywheel assembly **115** around the spin axis of rotation **128** relative to the flywheel-support body **113** may, in some embodiments, permit, when compared to a roll-stabilizer apparatus having other types of bearings, greater angular momentum (and therefore greater capacity for roll stabilization) for the same mass of the flywheel assembly **115**, or similar angular momentum (and therefore similar capacity for roll stabilization) for a reduced mass of

the flywheel assembly **115**. Therefore, the roll-stabilizer apparatus **108** may have a reduced mass compared to a roll-stabilizer apparatus having other types of bearings but similar capacity for roll stabilization.

[0232] When the roll-stabilizer apparatus **108** is not in operation, and in case such magnetic bearings are insufficient or fail for some reason, the touchdown bearings in the touchdown-bearing assemblies **125** and **126** may constrain movement of the flywheel assembly **115** relative to the flywheel-support body **113** to reduce or avoid any possible damage to the flywheel assembly **115** or to the flywheel-support body **113** from excessive movement of the flywheel assembly **115** relative to the flywheel-support body **113**.

Startup

[0233] In general, "startup" may refer to a process that involves controlling electric currents through electric coils to maintain the spin axis of rotation **128** along (namely colinear with, or close to but not necessarily colinear with) the central-rotation axis **141** and to maintain the flywheel assembly **115** away from the touchdown bearings in the touchdown-bearing assemblies **125** and **126**, and that involves causing the flywheel assembly **115** (and thus the flywheel body **122**) to spin around the spin axis of rotation **128** relative to the flywheel-support body **113** until the flywheel assembly **115** reach a threshold minimum angular speed or angular momentum for roll stabilization.

[0234] In some embodiments, the remote device **112** may be used to initiate such startup by transmitting one or more wired, wireless, or other signals directly or indirectly to the roll-stabilizer controller **109** to indicate initiation of startup. For example, an application may be installed on the remote device **112** that causes remote device **112** to transmit one or more signals directly or indirectly to the roll-stabilizer controller **109**. Startup may take some time because the flywheel assembly **115** may take some time to reach the threshold minimum angular speed or angular momentum for roll stabilization. Therefore, remote initiation may allow for remote initiation of startup, which may reduce or avoid time spent waiting for the flywheel assembly **115** to reach the threshold minimum angular speed or angular momentum for roll stabilization. Further, remote initiation may allow for a slower startup and thus reduced electrical power during startup.

Remote Diagnostics

[0235] The remote device **112** may also receive one or more wired, wireless, or other signals directly or indirectly from the roll-stabilizer controller **109** to indicate diagnostic information regarding the roll-stabilizer assembly **107**. Such diagnostic information may include, for example, operation status, a time when the flywheel assembly **115** (and thus the flywheel body **122**) is predicted to reach a threshold minimum angular speed or angular momentum for roll stabilization, a battery charge or other condition of the roll-stabilizer energy-storage device **110**, one or more indications of any faults, or a combination of two or more thereof. For example, an application may be installed on the remote device **112** that causes remote device **112** to indicate such diagnostic information in response to one or more wired, wireless, or other signals received by the remote device **112** directly or indirectly from the roll-stabilizer controller **109**.

[0236] In some embodiments, such remote diagnostics may permit more-efficient maintenance or reductions in required maintenance, easier diagnosis by a manufacturer or maintenance provider, and possible remote maintenance to reduce or avoid time required for in-person maintenance.

Energy Management

[0237] As indicated above, the electric motor/generator **142** is electrically connected to the roll-stabilizer energy-storage device **110**, which is distinct from the main energy-storage device **105** in the embodiment shown (although alternative embodiments may differ). As also indicated above, the electric coils **157**, **164**, **165**, **166**, **168**, **169**, **170**, **171**, **198**, **200**, **202**, **204**, **218**, **219**, **220**, and **221** are also electrically connected to the roll-stabilizer energy-storage device **110** (either directly or indirectly, such as indirectly through the roll-stabilizer controller **109**) and may receive electric current from the roll-stabilizer energy-storage device **110**. The electric energy used by the electric motor/generator **142** and by the electric coils **157**, **164**, **165**, **166**, **168**, **169**, **170**, **171**, **198**, **200**, **202**, **204**, **218**, **219**, **220**, and **221** is used for roll stabilization. The electric motor/generator **142** may also provide electric energy to the roll-stabilizer controller **109** or to the inertial measurement unit **111** or otherwise provide electric energy for roll stabilization.

[0238] Therefore, energy stored by the roll-stabilizer energy-storage device **110** may be for roll stabilization. In some embodiments, energy stored by the roll-stabilizer energy-storage device **110** is only for one or more such roll-stabilization functions and unavailable for functions other than roll-stabilization, such as for a starter motor of the marine engine **104**, for the marine engine **104** if the marine engine **104** includes an electric motor, or for other functions such as for navigation or lights, for example.

[0239] In some embodiments, the roll-stabilizer energy-storage device **110**, distinct from the main energy-storage device **105**, may reduce power draws on the main energy-storage device **105** when the electric motor/generator **142** is apply a torque to the flywheel assembly **115** (and thus to the flywheel body **122**) around the spin axis of rotation **128** relative to the flywheel-support body **113**.

[0240] Further, in some embodiments, the roll-stabilizer energy-storage device **110**, distinct from the main energy-storage device **105**, may provide greater electrical power than the main energy-storage device **105**. In some embodiments, such greater electrical power may permit greater torque and therefore greater acceleration of flywheel assembly **115** (and thus to the flywheel body **122**) around the spin axis of rotation **128** relative to the flywheel-support body **113**, which may prepare the roll-stabilizer apparatus **108** for roll stabilization faster than other roll-stabilizer apparatuses that omit the roll-stabilizer energy-storage device **110**.

[0241] Further, in some embodiments, the roll-stabilizer energy-storage device **110**, distinct from the main energy-storage device **105**, may facilitate recovery of rotational kinetic energy, from rotation of the flywheel assembly **115** (and thus from the flywheel body **122**) around the spin axis of rotation **128** relative to the flywheel-support body **113**, by converting such rotational kinetic energy to electrical energy and storing such electrical energy in the roll-stabilizer energy-storage device **110**. Such recovery of rotational kinetic energy may be more difficult or impossible in other roll-stabilizer apparatuses that omit the roll-stabilizer energy-storage device **110**. Further, such recovery of rota-

tional kinetic energy may, in some embodiments, generate less heat than other roll-stabilizer apparatuses that omit the roll-stabilizer energy-storage device **110**, so the roll-stabilizer apparatus **108** may require less cooling than a roll-stabilizer apparatus that does not recover of rotational kinetic energy.

Eddy-Current Brake

[0242] As indicated above, the electric motor/generator **142** may convert rotational kinetic energy, from rotation of the flywheel assembly **115** (and thus from the flywheel body **122**) around the spin axis of rotation **128** relative to the flywheel-support body **113**, to electrical energy, and the electric motor/generator **142** may therefore function as a brake.

[0243] However, in some situations, further braking forces may be desired. In such cases, the roll-stabilizer controller **109** may cause at least some of the electric coils **218**, **219**, **220**, and **221** (shown in FIG. **17**) to produce different magnetic fields, for example by causing respective electric currents through at least some of the electric coils **218**, **219**, **220**, and **221** to differ.

[0244] For example, the roll-stabilizer controller **109** may cause the electric coils **218** and **220** to produce magnetic fields in a first direction along an axis parallel to the central-rotation axis **141** while causing the electric coils **219** and **221** to produce magnetic fields in a second direction opposite the first direction along the axis parallel to the central-rotation axis **141**. As another example, the roll-stabilizer controller **109** may cause the electric coils **218** and **220** to produce magnetic fields having a first strength while causing the electric coils **219** and **221** to produce magnetic fields having a second strength different from the first strength. In some embodiments, magnetic fields produced by some or all of the electric coils **218**, **219**, **220**, and **221** may, in a direction around the central-rotation axis **141**, alternate between two different types of magnetic fields. For example, magnetic fields produced by some or all of the electric coils **218**, **219**, **220**, and **221** may, in a direction around the central-rotation axis **141**, alternate between different directions, different strengths, or both.

[0245] When the flywheel body **122** is rotating around the spin axis of rotation **128** relative to the flywheel-support body **113**, and when the roll-stabilizer controller **109** causes at least some of the electric coils **218**, **219**, **220**, and **221** to produce different magnetic fields, a point on the flywheel body **122** may experience changes in magnetic field over time. In FIG. **23**, a line **229** illustrates an example of changes over time (indicated by t in FIG. **23**) in magnetic field (indicated by B in FIG. **23**) experienced by a point on the flywheel body **122** when the flywheel body **122** is rotating around the spin axis of rotation **128** relative to the flywheel-support body **113** and when the roll-stabilizer controller **109** causes at least some of the electric coils **218**, **219**, **220**, and **221** to produce different magnetic fields, and a line **230** illustrates an average magnetic field over a period of time when the flywheel body **122** is rotating around the spin axis of rotation **128** relative to the flywheel-support body **113** and when the roll-stabilizer controller **109** causes at least some of the electric coils **218**, **219**, **220**, and **221** to produce different magnetic fields.

[0246] Such changes over time in magnetic field, as illustrated by the line **229** for example, may induce eddy currents in the flywheel body **122**, which may result in a torque on the flywheel body **122** (and thus on the flywheel assembly **115**) in a direction opposite a direction of rotation of the flywheel body **122** is rotating around the spin axis of rotation **128** relative to the flywheel-support body **113**. Therefore, by causing at least some of the electric coils **218**, **219**, **220**, and **221** to produce different magnetic fields, the roll-stabilizer controller **109** may cause the axial active magnetic bearing **140** to function as an eddy-current brake.

[0247] Such an eddy-current brake may, in some embodiments, allow for fast braking when desired. Also, such an eddy-current brake may, in some embodiments, reduce or avoid wear on physical brakes, or allow physical brakes to be reduced in size, simplified, or avoided altogether. Also, in some embodiments, heat generated from such an eddy-current brake may be absorbed by the flywheel body **122**, which may be able to accommodate such heat better than other components of the roll-stabilizer apparatus **108**.

Movement Estimation and Prediction

[0248] As indicated above, measurements of linear acceleration, of rotational acceleration, of orientation, or a combination of two or more thereof, relative to an inertial frame of reference or another frame of reference, of the hull **101** by the inertial measurement unit **111** may indicate such acceleration, orientation, or both of the mounting body **114** relative to such a frame of reference. In some embodiments, the roll-stabilizer controller **109** may estimate, predict, or both movement of the hull **101**, of the mounting body **114**, of one or more other locations on the marine vessel **100**, or of a combination of two or more thereof, relative to an inertial frame of reference or another frame of reference, for example in response to, at least, one or more signals indicating measurements (by the inertial measurement unit **111** shown in FIG. **1**, for example) of linear acceleration, of rotational acceleration, of orientation, or of two or more thereof of the hull **101** relative to such a frame of reference. In some embodiments, such movement estimation, movement prediction, or both may involve an open-loop system of the roll-stabilizer controller **109**, at least one predictive model of the roll-stabilizer controller **109**, a time history of measurements, or two or more thereof, for example. For example, such prediction or estimation may involve analysis or consideration of measurements of acceleration, velocity, or both by the inertial measurement unit **111**.

[0249] For example, in response to, at least, one or more signals indicating measurements by the inertial measurement unit **111**, the roll-stabilizer controller **109** may detect periodic movement (for example, from waves causing roll of the hull **101**) of the hull **101**, of the mounting body **114**, of one or more other locations on the marine vessel **100**, or of a combination of two or more thereof, relative to an inertial frame of reference or another frame of reference, and predicted movement may be movement of the hull **101**, of the mounting body **114**, of one or more other locations on the marine vessel **100**, or of a combination of two or more thereof, relative to such a frame of reference and according to such detected periodic movement. Such movement may include roll of the hull **101** around the longitudinal axis **106** or other movement such as linear or other rotational movement, and such movement may not necessarily be periodic.

[0250] In general, movement of the hull **101**, of the mounting body **114**, of one or more other locations on the marine vessel **100**, relative to an inertial frame of reference or another frame of reference, may cause precession of the

flywheel assembly **115** relative to the flywheel-support body **113** and relative to the mounting body **114**. Therefore, when the roll-stabilizer controller **109** predicts movement of the hull **101**, of the mounting body **114**, of one or more other locations on the marine vessel **100**, or of a combination of two or more thereof, relative to an inertial frame of reference or another frame of reference, the roll-stabilizer controller **109** may also predict resulting precession of the flywheel assembly **115** relative to the flywheel-support body **113** and relative to the mounting body **114** in a predicted direction of precession.

[0251] Alternative embodiments may differ and may, for example, estimate or predict movement of the hull **101**, of the mounting body **114**, of one or more other locations on the marine vessel **100**, or of a combination of two or more thereof in other ways. For example, in some embodiments, movement of the hull **101**, of the mounting body **114**, of one or more other locations on the marine vessel **100**, or of a combination of two or more thereof may be estimated or predicted using one or more measurements, relative to an inertial frame of reference or another frame of reference, of linear acceleration, of rotational acceleration, of orientation, or a combination of two or more thereof of the flywheel-support body **113**.

Flywheel Force, Torque, or Movement in Response to Predicted Movement

[0252] As indicated above, the roll-stabilizer controller **109** may, in response to, at least, one or more signals indicating measurements of proximity or position of the flywheel assembly **115** in the flywheel-support body **113** from one or more proximity sensors, one or more position sensors, or both as described above, control electric currents through one or more of the electric coils **157**, **164**, **165**, **166**, **168**, **169**, **170**, **171**, **198**, **200**, **202**, **204**, **218**, **219**, **220**, and **221**, as described herein for example, to maintain the spin axis of rotation **128** along a target axis, which may be colinear with the central-rotation axis **141** or close to but not necessarily colinear with the central-rotation axis **141**, and to maintain the flywheel assembly **115** away from the touchdown bearings in the touchdown-bearing assemblies **125** and **126**. However, in some embodiments, the roll-stabilizer controller **109** may control electric currents through one or more of the electric coils **157**, **164**, **165**, **166**, **168**, **169**, **170**, **171**, **198**, **200**, **202**, **204**, **218**, **219**, **220**, and **221** in response to other measurements, detections, or predictions, such as acceleration, velocity, or both of the flywheel-support body **113** relative to inertial ground as measured by an inertial measurement unit similar to the inertial measurement unit **111**, for example.

[0253] In general, movement of the hull **101**, of the mounting body **114**, of one or more other locations on the marine vessel **100**, or of a combination of two or more thereof, relative to an inertial frame of reference or another frame of reference, may cause the flywheel-support body **113** to move relative to the flywheel assembly **115** in a direction of such movement. Therefore, in some embodiments, in response to, at least, predicting predicted movement of the hull **101**, of the mounting body **114**, of one or more other locations on the marine vessel **100**, or of a combination of two or more thereof in a predicted direction relative to an inertial frame of reference or another frame of reference, the roll-stabilizer controller **109** may control electric currents through one or more of the electric coils **157**, **164**, **165**, **166**, **168**, **169**, **170**, **171**, **198**, **200**, **202**, **204**, **218**, **219**, **220**, and **221** to cause at least one magnetic bearing to exert one or more forces, one or more torques, or both on, or to move, the flywheel assembly **115** (and thus the flywheel body **122**) generally in the predicted direction of movement (for example, in the predicted direction of movement or in a direction close to the predicted direction of movement) relative to the flywheel-support body **113**, for example to maintain the spin axis of rotation **128** along (namely colinear with, or close to but not necessarily colinear with) the central-rotation axis **141** and to maintain the flywheel assembly **115** away from the touchdown bearings in the touchdown-bearing assemblies **125** and **126**. In some embodiments, the roll-stabilizer controller **109** may do so independently of any measurement of position of the flywheel assembly **115** or of the flywheel body **122** relative to the flywheel-support body **113**.

[0254] Also, in general, rotation of the flywheel assembly **115** (and thus of the flywheel body **122**), relative to an inertial frame of reference or another frame of reference, may cause the flywheel assembly **115** (and thus of the flywheel body **122**) to move in a direction of precession relative to the flywheel-support body **113** and relative to the mounting body **114**. Therefore, in some embodiments, in response to, at least, predicting predicted precession of the flywheel assembly **115** (and thus of the flywheel body **122**) relative to the flywheel-support body **113** and relative to the mounting body **114** in a predicted direction of precession, the roll-stabilizer controller **109** may control electric currents through one or more of the electric coils **157**, **164**, **165**, **166**, **168**, **169**, **170**, **171**, **198**, **200**, **202**, **204**, **218**, **219**, **220**, and **221** to cause at least one magnetic bearing to exert one or more forces, one or more torques, or both on, or to move, the flywheel assembly **115** (and thus the flywheel body **122**) generally opposite the predicted direction of precession (for example, opposite the predicted direction of precession or in a direction close to opposite the predicted direction of precession) relative to the flywheel-support body **113** to maintain the spin axis of rotation **128** along (namely colinear with, or close to but not necessarily colinear with) the central-rotation axis **141** and to maintain the flywheel assembly **115** away from the touchdown bearings in the touchdown-bearing assemblies **125** and **126**. In some embodiments, the roll-stabilizer controller **109** may do so independently of any measurement of position of the flywheel assembly **115** or of the flywheel body **122** relative to the flywheel-support body **113**.

[0255] In some embodiments, such flywheel movement in response to predicted movement, predicted precession, or both may reduce undesired physical contact between the flywheel assembly **115** and the flywheel-support body **113**.

Negative Stiffness

[0256] Referring back to FIG. **3**, to FIG. **10**, to FIG. **11**, and to FIG. **12**, if the rotor **123** moves in a radial direction relative to the stator **138** such that the spin axis of rotation **128** is not along the central-rotation axis **141** within the rotor **123** and the stator **138**, then magnetic forces created by the bias magnetic fields as shown by the magnetic-field arrows **144** are stronger on a side of the rotor **123** that is closer to the stator **138** and are weaker on a side of the rotor **123** that is farther from the stator **138**, so magnetic forces will tend to attract the rotor **123** to the stator **138** towards the side of the rotor **123** that is closer to the stator **138**.

[0257] The rotor **123** and the stator **138** are part of an example shown in FIG. **3**, in FIG. **10**, in FIG. **11**, and in FIG. **12**, but likewise if the rotor **124** moves in a radial direction relative to the stator **139** such that the spin axis of rotation **128** is not along the central-rotation axis **141** within the rotor **124** and the stator **139**, magnetic forces will tend to attract the rotor **124** to the stator **139** towards the side of the rotor **124** that is closer to the stator **139**. Likewise, if the rotor **181** moves in a radial direction relative to the stator **182** such that the spin axis of rotation **128** is not along the central-rotation axis **141** within the rotor **181** and the stator **182**, magnetic forces will tend to attract the rotor **181** to the stator **182** towards the side of the rotor **181** that is closer to the stator **182**.

[0258] Such tendencies may be referred to as "negative stiffness", which may cause undesired contact between a rotor and a stator, or undesired misalignment of a rotor relative to a stator. However, in some embodiments, negative stiffness may facilitate alignment of the rotor **123** and the stator **138**, alignment of the rotor **124** and the stator **139**, alignment of the rotor **181** and the stator **182**, or two or more thereof.

[0259] As indicated above, in some embodiments, in response to, at least, predicting the predicted movement of the mounting body **114**, the roll-stabilizer controller **109** may control electric currents through one or more of the electric coils **157**, **164**, **165**, **166**, **168**, **169**, **170**, **171**, **198**, **200**, **202**, **204**, **218**, **219**, **220**, and **221** to cause the at least one magnetic bearing to move the flywheel assembly **115** (and thus the flywheel body **122**) in the predicted direction of movement, in the predicted direction of precession, or both relative to the flywheel-support body **113** to maintain the spin axis of rotation **128** along the central-rotation axis **141** and to maintain the flywheel assembly **115** away from the touchdown bearings in the touchdown-bearing assemblies **125** and **126**. In some embodiments, the roll-stabilizer controller **109** may do so in response to predicted magnetic forces that result from such movement.

[0260] For example, referring to FIG. **24**, the roll-stabilizer controller **109** may predict movement of the flywheel assembly **115** or of the flywheel body **122** relative to the flywheel-support body **113** in a predicted direction **231** different from a direction around the spin axis of rotation **128**. In the example of FIG. **24**, in response predicting predicted movement of the flywheel body **122** relative to the flywheel-support body **113** in the predicted direction **231**, the roll-stabilizer controller **109** may cause at least one radial magnetic bearing (such as a radial magnetic bearing including the rotor **123** and the stator **138**, a radial magnetic bearing including the rotor **124** and the stator **139**, or both) to rotate the flywheel assembly **115** (and thus the flywheel body **122**) relative to the flywheel-support body **113** in a direction as shown by arrows **232** and opposite the predicted direction **231** such that the flywheel body **122** is farther from the at least one radial magnetic bearing in the predicted direction than in a direction opposite the predicted direction **231**.

[0261] Rotation of the flywheel assembly **115** (and thus the flywheel body **122**) relative to the flywheel-support body **113** in the direction as shown by the arrows **232** may cause negative stiffness because magnetic forces in the radial magnetic bearings may tend to cause the flywheel assembly **115** (and thus the flywheel body **122**) to rotate further relative to the flywheel-support body **113** in the direction as shown by the arrows **232**. However, such negative stiffness may resist the predicted movement of the flywheel body **122** relative to the flywheel-support body **113** in the predicted direction **231** such that the radial magnetic bearings require less electric current, may be smaller, or may be simpler than would be required to resist the predicted movement of the flywheel body **122** relative to the flywheel-support body **113** in the predicted direction **231** without such negative stiffness.

[0262] In some embodiments, such negative stiffness may result from moving the flywheel assembly **115** (and thus the flywheel body **122**) relative to the flywheel-support body **113**

- **[0263]** 1. generally in a predicted direction of motion of the flywheel-support body **113**, and
- **[0264]** 2. generally in a direction opposite a predicted direction of precession of the flywheel assembly **115** (and thus the flywheel body **122**) relative to the flywheel-support body **113**.

[0265] In some embodiments, negative stiffness as described above may facilitate alignment of the flywheel body **122** because the magnetic forces caused by the resulting negative stiffness may tend to resist the predicted movement of the flywheel assembly **115** (and thus of the flywheel body **122**) relative to the flywheel-support body **113** and require less electric current through one or more of the electric coils **157**, **164**, **165**, **166**, **168**, **169**, **170**, **171**, **198**, **200**, **202**, **204**, **218**, **219**, **220**, and **221** to control positions of the flywheel assembly **115** relative to the flywheel-support body **113**. Such a reduction in electric current may, in some embodiments, conserve energy and also reduce generation of heat in the roll-stabilizer apparatus **108**. Further, such use of negative stiffness may, in some embodiments, permit smaller or simpler magnetic bearings than would be required in a roll-stabilizer apparatus that does not use of negative stiffness as described above, for example.

[0266] In the example of FIG. **24**, the predicted direction **231** is a rotational direction and the arrows **232** also indicate a rotational direction. However, alternative embodiments may differ, and for example the predicted direction may be linear or a combination of rotational and linear.

Active Actuation

[0267] Referring back to FIG. **4**, as indicated above, each of the precession-control devices **120** and **121** is operable to apply a torque to, and to rotate, the mounting bracket **118** (and thus the flywheel-support body **113**) around the precession axis of rotation **119** relative to the base **116** in response to, at least, one or more control signals from the roll-stabilizer controller **109**.

[0268] In some embodiments, the roll-stabilizer controller **109** may cause such rotation of the mounting bracket **118** around the precession axis of rotation **119** relative to the base **116** to counteract detected or predicted roll of the marine vessel **100** around the longitudinal axis **106**, or for other reasons.

[0269] For example, the roll-stabilizer controller **109** may cause such rotation of the mounting bracket **118** around the precession axis of rotation **119** relative to the base **116** to facilitate identification of a roll factor of the marine vessel **100**, and the roll-stabilizer controller **109** may use such a roll factor of the marine vessel **100** to determine how to control rotation of the mounting bracket **118** around the precession

axis of rotation **119** relative to the base **116** to counteract detected or predicted roll of the marine vessel **100** around the longitudinal axis **106**.

[0270] As another example, the roll-stabilizer controller **109** may cause such rotation of the mounting bracket **118** around the precession axis of rotation **119** relative to the base **116** to cause desired roll of the marine vessel **100** around the longitudinal axis **106**.

[0271] FIG. **40** schematically illustrates an example of identifying dynamic vessel characteristics according to one embodiment. Such dynamic vessel characteristics may facilitate active actuation in some embodiments.

[0272] As shown at **345** in FIG. **40**, a roll-stabilizer apparatus (as described herein, for example) may apply an anti-roll torque **346** to a marine vessel. A wave torque **347** applied to the marine vessel, less the anti-roll torque **346**, results in a net torque **348** on the marine vessel. The marine vessel has certain properties (or vessel dynamics) shown at **349**, such as moment of inertia of the marine vessel, one or more roll-damping properties of the marine vessel, distribution of weight of the marine vessel, center of gravity (KG), center of buoyancy (KB), transverse metacenter (KMT), metacentric height (GM), volume of displacement (V), righting moment (RM), righting arm (GZ), radius of gyration (k), added radius of gyration (a), orientation of a roll axis relative to the vessel, restoring torque on the marine vessel from buoyancy of the marine vessel, one or more other properties or vessel dynamics, or any two or more thereof. Those properties **349** determine a response (such as motion of the marine vessel, a roll angle around a roll axis, an angular speed around the roll axis, an angular acceleration around the roll axis, natural period of rolling, one or more other responses, or two or more thereof) in response to the net torque **348**. As shown at **350**, one or more such responses may be measured (by the inertial measurement unit **111**, for example) and one or more controllers (such as the roll-stabilizer controller **109**, for example) may infer (as shown at **351**) one or more properties (or vessel dynamics) of the marine vessel, such as moment of inertia of the marine vessel, one or more roll-damping properties of the marine vessel, distribution of weight of the marine vessel, orientation of a roll axis relative to the vessel, restoring torque on the marine vessel from buoyancy of the marine vessel, one or more other properties or vessel dynamics, or any two or more thereof.

[0273] In some embodiments, the anti-roll torque **346** may be applied to the marine vessel by a roll-stabilizer apparatus as shown at **345** to facilitate identification of one or more properties (or vessel dynamics) of the marine vessel as shown at **351**. However, one or more properties (or vessel dynamics) of a marine vessel may be identified in other ways.

[0274] In FIG. **41**, a line **352** illustrates roll dynamic mobility (on a vertical axis **353**) of a marine vessel as a function of experienced torque frequency (on a horizontal axis **354**) in one embodiment. Roll dynamic compliance may be a ratio of roll angle to torque and may be an inverse of roll dynamic stiffness, whereas roll dynamic mobility may be a ratio of roll rate to torque. As shown in FIG. **41**, the marine vessel in the embodiment shown has a natural frequency **355** at which roll dynamic stiffness is minimal or roll dynamic mobility is at a maximum. Of course, alternative embodiments may differ.

[0275] As indicated above, when waves or other external forces apply torque to the marine vessel **100**, the hull **101** (and thus the mounting body **114**) may rotate or roll around a roll axis (which may be close to the longitudinal axis **106**), and conservation of angular momentum of the flywheel body **122** causes the flywheel-support body **113** (and thus the flywheel body **122**) to precess relative to the mounting body **114** around the precession axis of rotation **119** in response to rotation of the flywheel-support body **113** around the roll axis, which causes a torque to be exerted by the flywheel body **122** (and thus by the flywheel-support body **113** and the mounting body **114**) on the hull **101** in a direction opposite the rotation of the hull **101** (and thus the mounting body **114**) around the roll axis.

[0276] Absent active actuation such as active actuation as described herein for example, precession of the flywheel-support body **113** (and thus of the flywheel body **122**) relative to the mounting body **114** around the precession axis of rotation **119** and resulting anti-roll torque **346** may be out of phase with wave torque **347** or other torque applied to a marine vessel. Such a phase difference between anti-roll torque **346** and wave torque **347** or other torque applied to the marine vessel may cause an undesired net torque **348** on the marine vessel, resulting in undesired movement of the marine vessel caused by the undesired net torque **348**. The net torque **348** may be defined as the anti-roll torque **346** subtracted from the wave torque **347**.

[0277] In FIG. **42**, a line **356** illustrates a phase difference between motion of the marine vessel (such as a mounting body of the marine vessel, or structure that moves with the mounting body) around the roll axis and net torque **348** (on a vertical axis **357**) as a function of roll frequency (on a horizontal axis **358**) in one embodiment. As shown in FIG. **42**, the phase difference may be zero at the natural frequency **355** and may be non-zero at other frequencies. Of course, alternative embodiments may differ.

[0278] In some embodiments, active actuation may involve applying a torque to the flywheel-support body **113** (and thus of the flywheel body **122**) relative to an intertial reference frame around the precession axis of rotation **119** such that resulting motion of the flywheel-support body **113** (and thus of the flywheel body **122**) relative to the intertial reference frame around the precession axis of rotation **119** has an absolute precession rate at a phase, shifted relative to a measured or predicted motion of the hull **101** (and thus the mounting body **114** or structure that moves with the mounting body) around a roll axis, by a phase shift responsive to at least such measured or predicted motion.

[0279] FIG. **43** illustrates schematically an embodiment showing at **359** adjustment of phase of motion of a marine vessel according to at least one or more properties (or vessel dynamics) **351** of the marine vessel in one embodiment.

[0280] FIG. **44** illustrates schematically estimation of wave torque according to one embodiment.

[0281] FIG. **45** illustrates schematically phase-corrected control according to one embodiment.

[0282] FIG. **46** illustrates implementation of phase-shift control to align anti-roll torque with wave torque in one embodiment. In some embodiments, one or more input signals **360** may indicate angular speed ω_h of the hull **101** (and thus the mounting body **114** or structure that moves with the mounting body) around a roll axis over time t and may be expressed as $\omega_h = A \sin(\omega_w t)$ where ω_w is an angular frequency of motion of the hull **101** (and thus the mounting

body **114** or structure that moves with the mounting body) and A is an amplitude of the angular speed ω_h.

[0283] As shown at **361**, a gain k may be applied to the input signal to produce Ak $\sin(\omega_w t)$, and at **362** an anti-derivative of Ak $\sin(\omega_w t)$ may be calculated as

$$\int Ak\sin(\omega_w t)dt = -\frac{Ak}{\omega_w}\cos(\omega_w t) + C$$

for some constant C, which can be disregarded. At **363**, the input A $\sin(\omega_w t)$ may be added to the antiderivative

$$-\frac{Ak}{\omega_w}\cos(\omega_w t)$$

to produce an output

$$A\sin(\omega_w t) - \frac{Ak}{\omega_w}\cos(\omega_w t),$$

which may be scaled by B as

$$AB\sin(\omega_w t) - \frac{ABk}{\omega_w}\cos(\omega_w t)$$

to compensate for addition of the antiderivative.

[0284] Because sin(a+b)=sin(a) cos(b)+cos(a) sin(b), applying the gain k at **361** causes the scaled output

$$AB\sin(\omega_w t) - \frac{ABk}{\omega_w}\cos(\omega_w t)$$

to have a phase shift ϕ relative to the input A $\sin(\omega_w t)$ such that the scaled output

$$AB\sin(\omega_w t) - \frac{ABk}{\omega_w}\cos(\omega_w t) = A\sin(\omega_w t + \phi)$$

$$\text{where } \cos(\phi) = B \text{ and } \sin(\phi) = -\frac{ABk}{\omega_w}.$$

[0285] In other words, for a desired phase shift ϕ, by choosing B=cos(ϕ) and die gain

$$k = -\frac{\omega_w \sin(\phi)}{AB},$$

the input A $\sin(\omega_w t)$ is shifted by the phase shift ϕ to the output A $\sin(\omega_w t+\phi)$ by applying the gain, adding the anti-derivative, and scaling as described above. Of course, alternative embodiments may differ and may, for example, shift phase in other ways.

[0286] The phase shift ϕ may be chosen according to the line **356**. For example, if a frequency (such as a dominant frequency or other frequency) of motion of the marine vessel (such as a mounting body of the marine vessel, or structure that moves with the mounting body) around the roll axis is identified, the line **356** may identify, for that dominant frequency, a phase difference between motion of the marine vessel (such as a mounting body of the marine vessel, or structure that moves with the mounting body) around the roll axis and the wave torque **347**. That identified phase difference may be used to determine the phase shift phase shift ϕ so that, by shifting the input A $\sin(\omega_w t)$ by the phase shift ϕ to the output A $\sin(\omega_w t+)$ as described above for example, the output A $\sin(\omega_w t+)$ may be used to generate the anti-roll torque **346** such that the anti-roll torque **346** is in phase with the wave torque **347**. As a result, the net torque **348** may be reduced, which may in some embodiments reduce undesired net torque **348** and undesired movement of the marine vessel caused by the undesired net torque **348**. However, in at least some embodiments, a frequency (such as a dominant frequency or other frequency) need not be explicitly identified. In other words, in at least some embodiments, the phase shift ϕ may be identified by procedures that do not explicitly identify any frequency but that may rather, for example, respond to at least a frequency.

Active Actuation with Stabilizing Fins

[0287] FIGS. **47** and **48** illustrate a marine vessel **364** according to one embodiment. The marine vessel **364** includes a hull **376**. The marine vessel **364** also includes roll-stabilizer assembly **365** that may be similar to the roll-stabilizer assembly **107**, for example. However, the marine vessel **364** includes a starboard-side stabilizing fin **366** on a starboard side of the marine vessel **364** and a port-side stabilizing fin **367** on a port side of the marine vessel **364**. The starboard-side stabilizing fin **366** has a range of motion relative to the hull **376** from an uppermost vertical position shown generally at **368** to a lowermost vertical position shown generally at **369**, with intermediate positions between the vertical positions **368** and **369** including a horizontal position shown generally at **370**. Likewise, the port-side stabilizing fin **367** has a range of motion relative to the hull **376** from an uppermost vertical position shown generally at **371** to a lowermost vertical position shown generally at **372**, with intermediate positions between the vertical positions **371** and **372** including a horizontal position shown generally at **373**. Of course, alternative embodiments may differ and may, for example, have different types of stabilizing fins, a different number of stabilizing fins, or different ranges of motion, for example.

[0288] The roll-stabilizer assembly **365** includes a roll-stabilizer apparatus **374** that may be similar to the roll-stabilizer apparatus **108** and that includes a flywheel-support body **384** that may be similar to the flywheel-support body **113** and a mounting body **385** that may be similar to the mounting body **114**. The roll-stabilizer assembly **365** also includes a roll-stabilizer controller **375** that may be similar to the roll-stabilizer controller **109**, but the roll-stabilizer controller **375** may be programmed to control movement of the stabilizing fins **366** and **367** relative to the hull **376**, to control one or more precession-control devices (such as the precession-control devices **120** and **121** or other precession-control devices such as those described herein, for example), or both.

[0289] FIG. **49** illustrates stabilization of roll of a marine vessel as a function of time according to one embodiment. In FIG. **49**, a line **377** illustrates roll angle of a marine vessel around a roll axis (on a vertical axis **378**) as a function of time (on a horizontal axis **379**) in one embodiment. In that

embodiment, at a point **380** (top point TP), the marine vessel is rolled around the roll axis to a greatest extent to one side and is beginning to roll to the other side. The top point and the bottom point illustrate examples of positive and negative roll motion position extremes from tilting to starboard and to port respectively. Depending on the reference frame, a zero-roll position may refer to the vessel at its upright position or at a mid-point between the roll motion extremes.

[0290] At the point **380**, the stabilizing fins **366** and **367** may be at or near respective ends of their range of motion relative to the hull **376** such that moving the stabilizing fins **366** and **367** relative to the hull **376** towards an opposite end of the range of motion would resist roll of the marine vessel around the roll axis to a side opposite the side of the point **380**. For example, at the point **380**, the marine vessel may be rolled around the roll axis to a greatest extent to a starboard side, in which case the starboard-side stabilizing fin **366** may be at its lowermost vertical position **369** relative to the hull **376** and the port-side stabilizing fin **367** may be at its uppermost vertical position **371** relative to the hull **376**.

[0291] During some or all of a portion shown generally at **381** between the point **380** and a point **382** in time after the point **380** but before a point **383** (bottom point BT) when the marine vessel is rolled around the roll axis to a greatest extent to a side opposite the side of the point **380**, the roll-stabilizer controller **375** may cause one or both of the stabilizing fins **366** and **367** to move relative to the hull **376** in a direction resisting roll of the marine vessel around the roll axis in the direction of roll between the points **380** and **382** while precession of the flywheel-support body **384** relative to the mounting body **385** in a direction that would resist such roll.

[0292] During some or all of the portion **381**, the roll-stabilizer controller **375** may cause the flywheel-support body **384** to be held at or near an end of a range of precession of the flywheel-support body **384** relative to the mounting body **385** such that precession of the flywheel-support body **384** relative to the mounting body **385** towards an opposite end of the range of precession would resist roll of the marine vessel around the roll axis in the direction of roll between the points **380** and **382**.

[0293] Such a range of precession is not necessarily a physically maximum range of precession between hard stops but may be a range equal to or less than such a physically maximum range. For example, in some embodiments, roll stabilization may be accomplished partly but not entirely by the stabilizing fins **366** and **367**. In such embodiments, roll stabilization by the roll-stabilizer apparatus **374** may be most efficient when the stabilizing fin **366** is at either its uppermost vertical position **368** or its lowermost vertical position **369** relative to the hull **376**, and when the port-side stabilizing fin **367** is at either its uppermost vertical position **371** or its lowermost vertical position **372** relative to the hull **376**. Therefore, when roll stabilization may be accomplished partly but not entirely by the stabilizing fins **366** and **367**, roll stabilization may be most efficient by using the maximum ranges of motion of the stabilizing fins **366** and **367**, a physically maximum range of precession of the roll-stabilizer apparatus **374** may be unnecessary. Therefore, a range of precession of the roll-stabilizer apparatus **374** may be less than a physically maximum range of precession between hard stops, and an end of a range of precession is not necessarily at a physical hard stop but may instead be an end of a range less than a physically maximum range of precession.

[0294] At the point **382** at the end of the portion **381**, one or both of the stabilizing fins **366** and **367** may reach or be near ends of their respective ranges of motion relative to the hull **376** opposite the ends of the ranges of motion at the point **380**. For example, if at the point **380** the marine vessel was rolled around the roll axis to the greatest extent to the starboard side, then at point **382** the starboard-side stabilizing fin **366** may be at its uppermost vertical position **368** relative to the hull **376** and the port-side stabilizing fin **367** may be at its lowermost vertical position **372** relative to the hull **376**.

[0295] At the point **382** at the end of the portion **381**, the marine vessel has rolled around the roll axis a portion of an amount from the point **380** to the side opposite the side of the point **380**, but one or both of the stabilizing fins **366** and **367** may be at or near ends of their respective ranges of motion relative to the hull **376** opposite the ends of the ranges of motion at the point **380**.

[0296] Therefore, during some or all of a portion shown generally at **386** between the point **382** and the point **383**, the roll-stabilizer controller **375** may cause precession of the flywheel-support body **384** relative to the mounting body **385** in a direction that resist roll of the marine vessel around the roll axis in the direction of roll between the points **380** and **382** and between the points **382** and **383**. At the point **383** at the end of the portion **386**, the flywheel-support body **384** may be at or near an end of its range of precession relative to the mounting body **385** opposite the end of the range of precession of points **380** and **382** and of the range **381**. During some or all of the portion **386**, the roll-stabilizer controller **375** may cause one or both of the stabilizing fins **366** and **367** to be held in their positions relative to the hull **376** of point **382**.

[0297] During portions shown generally at **387** and **388**, the marine vessel roll may around the roll axis in a direction opposite the direction of roll of the portions **381** and **386**. During some or all of the portion **387**, the roll-stabilizer controller **375** may cause one or both of the stabilizing fins **366** and **367** to move relative to the hull **376** in directions opposite the directions of the portion **381** while causing the flywheel-support body **384** to be held at or near its position relative to the mounting body **385** of the point **383**. During some or all of the portion **388**, which ends at a point **390**, the roll-stabilizer controller **375** may cause precession of the flywheel-support body **384** relative to the mounting body **385** in a direction opposite the direction of the portion **386** while causing one or both of the stabilizing fins **366** and **367** to be held at or near their positions relative to the hull **376** at a point **389** at the end of the portion **387**.

[0298] As shown in FIG. **49**, the portions **381**, **386**, **387**, and **388** are not necessary equal in time or in associated amount of roll of the marine vessel around the roll axis.

[0299] The example of FIG. **49** may be summarized as follows.

Roll Angle	Point or Portion	Position(s) of Stabilizing Fin(s)	Point or Portion	Precession Position
Greatest extent to first side (for example, starboard)	380	At or near first end (for example, 369 and 371) of range of motion	380	At or near first end of range of precession
Moving from first side to second side (for example, port) opposite first side	381	Moving towards second end (for example, 368 and 372) of range of motion opposite first end of range of motion	381	
	382	At or near second end of range of motion	382	
	386		386	Moving towards second end of range of precession opposite first end of range of precession
Greatest extent to second side	383		383	At or near second end of range of precession
Moving from second side to first side	387	Moving towards first end of range of motion	387	
	389	At or near first end of range of motion	389	
	388		388	Moving towards first end of range of precession
Greatest extent to first side	390		390	At or near first end of range of precession

[0300] FIGS. **51** and **52** illustrate examples of operation according to the example of FIG. **49**.

[0301] FIG. **50** illustrates an example including portions shown generally at **391**, **392**, **393**, and **394** that are reversed with respect to order of use of the stabilizing fins and roll-stabilizer apparatus **374**. In the example of FIG. **50**, the portion **391** is similar to the portion **386**, the portion **392** is similar to the portion **381** but after the portion **391**, the portion **393** is similar to the portion **388**, and the portion **394** is similar to the portion **387** but after the portion **393**. Still other embodiments may differ.

[0302] FIG. **74** illustrates an example including

[0303] 1. a portion shown generally at **498** between a point **496** and a point **499** after the point **496**,

[0304] 2. a portion shown generally at **500** between the point **499** and a point **501** after the point **499**,

[0305] 3. a portion shown generally at **502** between the point **501** and a point **503** after the point **501**,

[0306] 4. a portion shown generally at **504** between the point **503** and a point **505** after the point **503**, and

[0307] 5. a portion shown generally at **506** between the point **505** and a point **507** after the point **505**.

[0308] The portion **500** includes a point **497** at which the roll direction changes. Therefore, the portion **500** includes roll in a first direction (the direction of the portion **498** and **506**) and then roll in a second direction (the direction of the portion **502**) opposite the first direction. Also, the portion **504** includes a point **508** at which the roll direction changes again. Therefore, the portion **504** includes roll in the second direction (the direction of the portion **502**) and then roll in the first direction (the direction of the portion **498** and **506**), and in general such portions may include roll only in one direction or roll in two directions.

[0309] In the example of FIG. **74**, roll stabilization of the marine vessel **364** may involve using the roll-stabilizer apparatus **374** during some or all of the portions **498**, **502**, and **506** and using the stabilizing fins **366** and **367** during some or all of the portions **500** and **504**. Therefore, the example of FIG. **74** may be summarized as follows.

Roll Angle or Angular Speed	Point or Portion	Position(s) of Stabilizing Fin(s)	Point or Portion	Precession Position
Moving towards first side (for example, starboard)	499	At or near first end (for example, 369 and 371) of range of motion	499	At or near first end of range of precession
Moving towards and reaching (at 497) first side and then (after 497) moving towards second side (for example, port) opposite first side	500	Moving towards second end (for example, 368 and 372) of range of motion opposite first end of range of motion	500	
	501	At or near second end of range of motion	501	
	502		502	Moving towards second end of range of precession opposite first end of range of precession
Moving towards second side	503		503	At or near second end of range of precession

-continued

Roll Angle or Angular Speed	Point or Portion	Position(s) of Stabilizing Fin(s)	Point or Portion	Precession Position
Moving towards and reaching (at 508)	504	Moving towards first end of range of motion	504	
second side and then	505	At or near first end	505	
(after 508) moving towards first side	506	of range of motion	506	Moving towards first end of range of precession
Moving towards first side	507		507	At or near first end of range of precession

[0310] In some embodiments, roll stabilization using the stabilizing fins **366** and **367** and the roll-stabilizer apparatus **374** may be responsive to a rate of change of an angle between a marine vessel and waves. For example, FIG. **75** illustrates an angle θ_{vessel} of roll of the marine vessel **364** relative to a horizontal line **492**. FIG. **75** illustrates an angle θ_{wave} of a wave **493** relative to a horizontal line **494**.

[0311] In some embodiments. θ_{vessel} may be estimated as

$$\theta_{vessel} = \theta_{wave} * \frac{C_{vessel}s + K_{vessel}}{I_{vessel}s^2 + C_{vessel}s + K_{vessel}} + \frac{(\tau_{fin} + \tau_{gyro})}{I_{vessel}s^2 + C_{vessel}s + K_{vessel}}$$

where C_{vessel} is a damping coefficient of the marine vessel **364** due to viscous forces on the hull from water for example, K_{vessel} is a spring constant (from a restoring buoyancy, for example) of the marine vessel **364**, I_{vessel} is rotational inertia of the marine vessel **364**, τ_{fin} is torque applied by one or both of the stabilizing fins **366** and **367** on the marine vessel **364**, τ_{gyro} is torque applied by the roll-stabilizer apparatus **374** on the marine vessel **364**, and s is a Laplace variable.

[0312] Also, in some embodiments, θ_{wave} may be estimated as

$$\theta_{wave} = \theta_{vessel} * \frac{\left(I_{vessel}s^2 + c_{vessel}s + K_{vessel}\right)}{C_{vessel}s + K_{vessel}} - \frac{(\tau_{fin} + \tau_{gyro})}{C_{vessel}s + K_{vessel}}.$$

[0313] In some embodiments, $\theta_{relative}=\theta_{wave}-\theta_{vessel}$ may represent a roll angle of the marine vessel **364** relative to the wave **493**, and $\hat{\theta}_{relative}$ may be an estimate of $\theta_{relative}$. In such embodiments, the derivative of $\hat{\theta}_{relative}$ in time t, namely $\delta\hat{\theta}_{relative}/\delta t$ or $\dot{\hat{\theta}}_{relative}$, may be an estimate of a rate of water flow laterally across the hull **376** of the marine vessel **364**.

[0314] In some embodiments, roll stabilization of the marine vessel **364** using the stabilizing fins **366** and **367** may relatively more efficient when the marine vessel **364** is rolling in a direction opposite a change in $\theta_{relative}$, namely when $\delta\hat{\theta}_{relative}/\delta t$ or $\dot{\theta}_{vessel}$ (the derivative of θ_{vessel} in time t) and $\dot{\theta}_{relative}$ are opposite in sign, and roll stabilization of the marine vessel **364** using the stabilizing fins **366** and **367** may relatively less efficient when the marine vessel **364** is rolling in the same direction as a change in $\theta_{relative}$, namely $\dot{\theta}_{vessel}$ and $\dot{\theta}_{relative}$ are have the same sign.

[0315] In general some embodiments may involve prioritizing the stabilizing fins **366** and **367** when the stabilizing fins **366** and **367** are relatively more efficient (for example when $\dot{\theta}_{vessel}$ and $\dot{\theta}_{relative}$ are opposite in sign) and prioritizing the roll-stabilizer apparatus **374** when the stabilizing fins **366** and **367** are relatively less efficient (for example when $\dot{\theta}_{vessel}$ and $\dot{\theta}_{relative}$ have the same sign). Further, the stabilizing fins **366** and **367** may dampen roll relatively little when in uppermost (**368** and **371**) or lowermost (**369** and **372**) vertical positions and may dampen roll relatively more when in intermediate positions such as the horizontal positions **370** and **373**.

[0316] Therefore, some embodiments may involve decreasing damping (for example by positioning the stabilizing fins **366** and **367** in uppermost (**368** and **371**) or lowermost (**369** and **372**) vertical positions) when waves are contributing to roll (for example when $\dot{\theta}_{vessel}$ and $\dot{\theta}_{relative}$ have the same sign) and increasing damping (for example by positioning the stabilizing fins **366** and **367** in intermediate positions such as the horizontal positions **370** and **373**) when waves are counteracting to roll (for example when $\dot{\theta}_{vessel}$ and $\dot{\theta}_{relative}$ are opposite in sign).

[0317] FIG. **76** illustrates an embodiment that may be responsive to an estimate of a rate of water flow laterally across the hull **376** of the marine vessel **364**. Such an estimate of flow rate may be according to $\dot{\hat{\theta}}_{relative}$ as described above, or some other estimate.

[0318] During a portion shown generally at **509** between points **510** and **511**, flow rate is in a first direction and relatively small but increasing. During the portion **509**, because the flow rate is relatively small, the stabilizing fins **366** and **367** may be relatively more efficient than in a relatively high flow rate. Therefore, roll stabilization of the marine vessel **364** may involve using stabilizing fins **366** and **367** during some or all of the portion **509**.

[0319] However, during some or all of a portion shown generally at **512** between the point **511** and a point **513** after the point **511**, the flow rate is relatively high. During the portion **511**, because the flow rate is relatively high, the stabilizing fins **366** and **367** may be relatively less efficient than in a relatively low flow rate. Therefore, roll stabilization of the marine vessel **364** may involve using the roll-stabilizer apparatus **374** during some or all of the portion **512**.

[0320] During the portion **512**, the flow rate changes direction, and during a portion shown generally at **514** between the point **513** and a point **515** after the point **513**, the flow rate is relatively low and in a direction opposite the direction of the portion **510**. During the portion **514**, because the flow rate is relatively small, the stabilizing fins **366** and **367** may be relatively more efficient than in a relatively high flow rate, so roll stabilization of the marine vessel **364** may involve using stabilizing fins **366** and **367** during some or all of the portion **514**.

[0321] During some or all of a portion shown generally at **516** between the point **515** and a point **517** after the point **515**, the flow rate is relatively high, so roll stabilization of

the marine vessel **364** may involve using the roll-stabilizer apparatus **374** during some or all of the portion **516**.

[0322] During a portion shown generally at **518** between the point **517** and a point **519** after the point **517**, the flow rate is relatively low and in a direction opposite the direction of the portion **514**. During the portion **518**, because the flow rate is relatively small, roll stabilization of the marine vessel **364** may involve using stabilizing fins **366** and **367** during some or all of the portion **518**.

[0323] The example of FIG. **76** may be summarized as follows.

Flow Rate	Point or Portion	Position(s) of Stabilizing Fin(s)	Point or Portion	Precession Position
In first direction, magnitude low but increasing	509	Moving towards first end (for example, 369 and 371) of range of motion	509	At or near first end of range of precession
In first direction, high in magnitude	511 512	At or near first end of range of motion	511 512	Moving towards second end of range of precession opposite first end of range of precession
In first direction, magnitude decreasing	513		513	At or near second end of range of precession
Low in magnitude, changing from first direction to second direction opposite first direction	514	Moving towards second end (for example, 368 and 372) of range of motion opposite first end of range of motion	514	
In second direction, magnitude increasing	515	At or near second end of range of motion	515	
In second direction, high in magnitude	516		516	Moving towards first end of range of precession
In second direction, magnitude decreasing	517		517	At or near first end of range of precession
In second direction, magnitude low and decreasing	518	Moving towards first end of range of motion	518	

Internally Supported Flywheel Body

[0324] Referring now to FIGS. **25**, **26**, and **27**, a roll-stabilizer apparatus according to another embodiment is shown generally at **233** and includes a flywheel-support body **234**, a flywheel body **235** inside the flywheel-support body **234**, and a mounting body **236**. The roll-stabilizer apparatus **233** may be used, for example, in place of the roll-stabilizer apparatus **108** in the roll-stabilizer assembly **107** of the marine vessel **100**, and may be controlled by the roll-stabilizer controller **109** as described above with respect to the roll-stabilizer apparatus **108**.

[0325] Referring to FIGS. **26** and **27**, the flywheel body **235** is generally symmetrical about a spin axis of rotation **237**, and includes a shaft **238** extending along the spin axis of rotation **237** between a first end, shown generally at **239**, and a second end, shown generally at **240**, of the shaft **238**. The spin axis of rotation **237** may be through a center of mass of the flywheel body **235** and through centers of the first and second ends **239** and **240**, although the flywheel body does not necessarily have to spin around the spin axis of rotation **237**. The shaft **238** defines an axial through hole, shown generally at **241**, extending along the spin axis of rotation **237** from the first end **239** to the second end **240**. However, alternative embodiments may differ. For example, a shaft of an alternative embodiment may define an axial hole that extends along only part of a distance between a first end and a second end of the shaft, such as from the first end to a midpoint of the shaft. In other alternative embodiments, the shaft may include more than one axial hole, such as a first axial hole extending inward from the first end and a second axial hole extending inward from the second end.

[0326] The flywheel body **235** also includes a wheel portion **242** surrounding the shaft **238** and the spin axis of rotation **237**. Much of the wheel portion **242** is spaced apart from the spin axis of rotation **237** to increase a moment of inertia of the flywheel body **235**. An outer (or outermost) peripheral surface **243** of the wheel portion **242** also surrounds the shaft **238** and the spin axis of rotation **237**, and is generally cylindrical around the spin axis of rotation **237**. However, alternative embodiments may differ. For example, a wheel portion of an alternative embodiment may include a groove such as the groove **133** of the wheel portion **131** of the flywheel body **122**, or may include a groove in a peripheral surface that is not necessarily an outer or outermost peripheral surface of the wheel portion, and that may be an inner surface of a flywheel body, for example.

[0327] Referring to FIGS. **25**, **26**, and **27**, the flywheel-support body **234** includes housing bodies **244** and **245** that, when assembled as shown in FIG. **25** and in FIG. **27**, form a housing **246** that defines an internal cavity, shown generally at **247**. In some embodiments, the flywheel-support body **234** may include a central-rotation axis **248**, which may extend through a center of the housing body **244** and a center of the housing body **245** when the housing bodies **244** and **245** are assembled to form the housing **246**, and which may be colinear with the spin axis of rotation **237** of the flywheel body **235**. As with the central-rotation axis **141** of the flywheel-support body **113** of the roll-stabilizer apparatus **108**, the central-rotation axis **248** of the flywheel-support body **234** is not necessarily at an exact center of the housing body **244**, the housing body **245**, the flywheel-support body **234**, or of any other structure. Of course, the embodiment shown is an example only, and alternative embodiments may

vary. For example, alternative embodiments may include a different number of housing bodies forming the housing **246**.

[0328] The housing **246** surrounds and houses the flywheel body **235** within the internal cavity **247**. That is, the flywheel body **235** is located entirely within the internal cavity **247**. The housing **246** may form a seal around the internal cavity **247** to enable the internal cavity **247** to contain an internal environment different than an ambient external environment. For example, the seal may be an air-tight seal, and the internal environment may have a different pressure than ambient pressure, or may contain gases or mixtures of gases different than ambient air. Thus, for example, the housing **246** may enclose the flywheel body **235** in an environment that has a pressure lower than ambient pressure, such as a vacuum, or that includes a slippery gas, helium, or some other gas or mixture of gases. In the embodiment shown, the flywheel-support body **234** includes valves, such as valve **249**, which are in fluid communication with the internal cavity **247**. The valve **249** is operable to control movement of gases into or out of the internal cavity **247**. For example, the valve **249** may be operable to evacuate the internal cavity **247** to generate an environment having a pressure lower than ambient pressure.

[0329] The flywheel-support body **234** also includes a rotation-support body **250** extending from the center of the housing body **244** to the center of the housing body **245** within the internal cavity **247** when the housing bodies **244** and **245** are assembled to form the housing **246**. The rotation-support body **250** is generally centered along the spin axis of rotation **237** of the flywheel body **235** (and/or the central-rotation axis **248** of the flywheel-support body **234**) and extends through the axial through hole **241** of the flywheel body **235**, such that an enclosed portion **251** of the rotation-support body **250** is positioned through the axial through hole **241**. That is, the flywheel body **235** surrounds the enclosed portion **251** of the rotation-support body **250**. In the embodiment shown, the flywheel-support body **234** also includes bearings **252** and **253** disposed along the enclosed portion **251** of the rotation-support body **250** within the axial through hole **241** of the flywheel body **235**. The bearings **252** and **253** interface with the flywheel body **235** and are operable to support rotation of the flywheel body **235** relative to the rotation-support body **250**, as well as axial loads between the flywheel body **235** and the rotation-support body **250**. More specifically, the bearings **252** and **253** are operable to support the flywheel body **235** on the rotation-support body **250** such that the flywheel body **235** is rotatable within and relative to the flywheel-support body **234** around the spin axis of rotation **237**, and such that the flywheel body **235** is maintained aligned with the flywheel-support body **234**. In the embodiment shown, the bearings **252** and **253** and the rotation-support body **250** generally maintain the flywheel body **235** positioned relative to the flywheel-support body **234** such that the spin axis of rotation **237** of the flywheel body **235** is colinear with the central-rotation axis **248** of the flywheel-support body **234**. This configuration can facilitate assembly, as it allows many rotating elements of the roll-stabilizer apparatus **233** (e.g., the flywheel body **235**, the bearings **252** and **253**, and the rotation-support body **250**) to be assembled outside of the housing **246**, thus eliminating a requirement for precision alignment of the housing bodies **244** and **245**. Of course, the embodiment shown is an example only, and alternative embodiments may vary. For example, alternative embodiments may include a rotation-support body extending through only a part of the axial through hole **241**, or may include more than one rotation-support body.

[0330] In the embodiment shown, the rotation-support body **250** defines an internal fluid conduit shown generally at **254**. The internal fluid conduit **254** extends through an entirety of the rotation-support body **250** along the spin axis of rotation **237** and includes a first opening **255** where the rotation-support body **250** interfaces with the housing body **244** and a second opening **256** where the rotation-support body **250** interfaces with the housing body **245**. The internal fluid conduit **254** is operable to convey a fluid through the rotation-support body **250** between the first opening **255** and the second opening **256**. In some embodiments, the roll-stabilizer apparatus **233** may also include a fluid reservoir (not shown) fluidly connected to the internal fluid conduit **254**, and a fluid pump (not shown) fluidly connected to both internal fluid conduit **254** and the fluid reservoir and operable to pump the fluid from the fluid reservoir to the internal fluid conduit **254**. In some embodiments, the fluid conveyed through the internal fluid conduit **254** may be a coolant, and the internal fluid conduit **254**, fluid reservoir, and fluid pump may function as a cooling system operable to cool the bearings **252** and **253**. Such a cooling system may be used in conjunction with a heat exchanger and a separate cooling circuit.

[0331] Referring now to FIGS. **27** and **28**, the bearings **252** and **253** in the embodiment shown are mechanical bearings. More specifically, the bearings **252** and **253** are ball bearings. Considering as an example the bearing **253** as shown in greater detail in FIG. **28**, the bearing **253** includes an outer race **257** and an inner race **258**. The outer race **257** is fixed to the shaft **238** of the flywheel body **235**, while the inner race **258** interfaces with the rotation-support body **250**. In some embodiments, the inner race **258** may be fixed to the rotation-support body **250**. However, in other embodiments, the inner race **258** may be a "floating" inner race, movable axially along the rotation-support body **250** (i.e., along the central-rotation axis **248** of the flywheel-support body **234**). A "floating" inner race may be required to accommodate thermal expansion in some embodiments. The outer race **257** is operable to rotate relative to the inner race **258** and relative to the rotation-support body **250** and thus the flywheel-support body **234**. As such, each of the bearings **252** and **253** includes an outer body (i.e., the outer race **257** of the bearing **253**) that is rotatable relative to the flywheel-support body **234**, and rotation of these outer bodies enables the flywheel body **235** to rotate relative to the flywheel-support body **234**. In some embodiments, a majority of the heat generated in the bearings **252** and **253**, such as about ⅔, for example, of the heat generated in the bearings **252** and **253**, may be generated in inner races of the bearings **252** and **253**, such as the inner race **258** of the bearing **253**. Because these inner races are fixed to (i.e., in contact with) the rotation-support body **250**, in embodiments where the internal fluid conduit **254**, fluid reservoir, and fluid pump function as a cooling system operable to cool the bearings **252** and **253** as described above, cooling of the bearings **252** and **253** may be improved due to direct cooling of the inner races through conduction. Such improved cooling may increase an operating life of the bearings **252** and **253**. Of course, the embodiment shown is an example only, and alternative may differ. For example, alternative embodiments may include a different number of bearings, or other types of mechanical

bearings, such as cylindrical roller bearings or tapered roller bearings. Other alternative embodiments may include bearings other than mechanical bearings. For example, some alternative embodiments may include magnetic bearings, such as the axial active magnetic bearing **140** or the radial magnetic bearings of the roll-stabilizer apparatus **108** described above.

Bearing Preloading

[0332] Referring now to FIGS. **77** and **78**, a flywheel apparatus according to another embodiment is shown generally at **520** and includes a flywheel-support body **522** and a flywheel body **524** inside the flywheel-support body **522**. The flywheel apparatus **520** may be used with a mounting body, such as the mounting body **236**, in a roll-stabilizer apparatus, such as the roll-stabilizer apparatus **233**.

[0333] The flywheel body **524** may generally be similar to the flywheel body **235**. That is, the flywheel body **524** may be generally symmetrical about a spin axis of rotation **526**, and includes a shaft **528** extending along the spin axis of rotation **526** between a first end, shown generally at **530**, and a second end, shown generally at **532**, of the shaft **528**. The spin axis of rotation **526** may be through a center of mass of the flywheel body **235** and through centers of the first and second ends **530** and **532**, although the flywheel body does not necessarily have to spin around the spin axis of rotation **526**. The shaft **528** defines an axial through hole, shown generally at **534**, extending along the spin axis of rotation **526** from the first end **530** to the second end **532**. The flywheel body **524** also includes a wheel portion **525** surrounding the shaft **528** and the spin axis of rotation **526**, with much of the wheel portion spaced apart from the spin axis of rotation **526** to increase a moment of inertia of the flywheel body **524**.

[0334] Similarly, the flywheel-support body **522** may generally be similar to the flywheel-support body **234**. That is, the flywheel-support body **522** includes a housing **536** that defines an internal cavity, shown generally at **538**. The housing **536** surrounds and houses the flywheel body **524** within the internal cavity **538**. That is, the flywheel body **524** is located entirely within the internal cavity **538**. In some embodiments, the flywheel-support body **522** may include a central-rotation axis **540**, which may extend through a center of the housing **536**, and which may be colinear with the spin axis of rotation **526** of the flywheel body **524**.

[0335] The flywheel-support body **522** also includes a rotation-support body **542** extending within the internal cavity **538** of the housing **536**. The rotation-support body **542** is generally centered along the spin axis of rotation **526** of the flywheel body **524** (and/or the central-rotation axis **540** of the flywheel-support body **522**) and extends through the axial through hole **534** of the flywheel body **524**, such that an enclosed portion **544** of the rotation-support body **542** is positioned through the axial through hole **534**. That is, the flywheel body **524** surrounds the enclosed portion **544** of the rotation-support body **542**.

[0336] In the embodiment shown in FIG. **77**, the flywheel-support body **522** also includes bearings **546**, **548**, **550**, and **552** disposed along the enclosed portion **544** of the rotation-support body **542** within the axial through hole **534** of the flywheel body **524**. More specifically, the bearings **546**, **548**, **550**, and **552** are arranged in two groups: in a first bearing group **547**, the bearings **546** and **548** are positioned in the axial through hole **534** axially adjacent to one another along the central-rotation axis **540** of the flywheel-support body **522** near the first end **530** of the shaft **528**, and in a second bearing group **551** the bearings **550** and **552** are positioned in the axial through hole **534** axially adjacent to one another along the central-rotation axis **540** of the flywheel-support body **522** near the second end **532** of the shaft **528**. In the embodiment shown, each of the bearing groups **547** and **551** includes a pair of bearings (i.e., the bearings **546** and **548** and the bearings **550** and **552**, respectively), but in alternative embodiments such bearing groups may include more than two bearings. Further, in some alternative embodiments one or more of such bearing groups may include only a single bearing.

[0337] The bearings **546**, **548**, **550**, and **552** interface with the flywheel body **524** and are operable to support rotation of the flywheel body **524** relative to the rotation-support body **542**, as well as axial loads between the flywheel body **524** and the flywheel-support body **522** (e.g., in some embodiments, between the flywheel body **524** and the rotation-support body **524** of the flywheel-support body **522**). More specifically, the bearings **546**, **548**, **550**, and **552** are operable to support the flywheel body **524** on the rotation-support body **542** such that the flywheel body **524** is rotatable within and relative to the flywheel-support body **522** around the spin axis of rotation **526**, and such that the flywheel body **524** is maintained aligned with the flywheel-support body **522**. In the embodiment shown, the bearings **546**, **548**, **550**, and **552** and the rotation-support body **542** generally maintain the flywheel body **524** positioned relative to the flywheel-support body **522** such that the spin axis of rotation **526** of the flywheel body **524** is colinear with the central-rotation axis **540** of the flywheel-support body **522**.

[0338] The bearings **546**, **548**, **550**, and **552** in the embodiment shown are mechanical bearings. More specifically, the bearings **546**, **548**, **550**, and **552** are ball bearings. Even more specifically, the bearings **546**, **548**, **550**, and **552** are angular contact bearings. Each of the bearings **546**, **548**, **550**, and **552** includes a respective outer race and a respective inner race. More specifically, the bearing **546** includes an outer race **554** and an inner race **556**; the bearing **548** includes an outer race **558** and an inner race **560**; the bearing **550** includes an outer race **562** and an inner race **564**; and the bearing **552** includes an outer race **566** and an inner race **568**.

[0339] In the embodiment shown, the outer races **554**, **558**, **562**, and **566** are fixed to the shaft **528** of the flywheel body **524**, while the inner races **556**, **560**, **564**, and **568** interface with the rotation-support body **542**. Also in the embodiment shown, the inner races **556**, **560**, **564**, and **568** are "floating" inner races, movable axially along the rotation-support body **542** (i.e., along the central-rotation axis **540** of the flywheel-support body **522**). As explained above, a "floating" inner race may be required to accommodate thermal expansion in some embodiments. The outer races **554**, **558**, **562**, and **566** are generally operable to rotate relative to their respective inner races **556**, **560**, **564**, and **568** and relative to the rotation-support body **542** and thus the flywheel-support body **522**. That is, the outer race **554** is operable to rotate relative to the inner race **556** and relative to the flywheel-support body **522**, the outer race **558** is operable to rotate relative to the inner race **560** and relative to the flywheel-support body **522**, the outer race **562** is operable to rotate relative to the inner race **564** and relative to the flywheel-support body **522**, and the outer race **566** is

operable to rotate relative to the inner race **568** and relative to the flywheel-support body **522**. As such, each of the bearings **546**, **548**, **550**, and **552** includes an outer body (i.e., the outer races **554**, **558**, **562**, and **566** of the bearings **546**, **548**, **550**, and **552**, respectively) that is rotatable relative to the flywheel-support body **522**, and rotation of these outer bodies enables the flywheel body **524** to rotate relative to the flywheel-support body **522**. However, alternative embodiments may include mechanical bearings which include inner races fixed to the flywheel body and outer races interfacing with the flywheel-support body. In such alternative embodiments, the inner races may generally be operable to rotate relative to their respective outer races and relative to the flywheel-support body.

[0340] The flywheel-support body **522** also includes resilient bodies **570**, **572**, and **574**, and spacers **576** and **578**. In general, the resilient bodies **570**, **572**, and **574** are axially adjacent the bearing groups **547** and **551** along the central-rotation axis **540** of the flywheel-support body **522**. More specifically, the resilient body **570** is axially adjacent the bearing **546** along the central-rotation axis **540** of the flywheel-support body **522**, the resilient body **572** is axially adjacent the bearing **548** along the central-rotation axis **540** of the flywheel-support body **522**, and the resilient body **574** is axially adjacent the bearing **550** along the central-rotation axis **540** of the flywheel-support body **522**. That is, the resilient body **570** is axially adjacent to the bearing group **547** at a first axial end **580** of the bearing group **547** along the central-rotation axis **540** of the flywheel-support body **522**, the resilient body **572** is axially adjacent to the bearing group **547** at a second axial end **582** of the bearing group **547** along the central-rotation axis **540** of the flywheel-support body **522**, and the resilient body **574** is axially adjacent to the bearing group **547** at a first axial end **584** of the bearing group **551** along the central-rotation axis **540** of the flywheel-support body **522**. The resilient bodies **570**, **572**, and **574** may be, for example, springs. More specifically, resilient bodies **570**, **572**, and **574** may be, for example, wave springs.

[0341] In general, the resilient bodies **570**, **572**, and **574** are configured to resiliently urge together, along the central-rotation axis **540** of the flywheel-support body **522**, individual bearings of the bearing groups **547** and **551**. More specifically, the resilient body **570** is configured to resiliently urge the inner race **556** of the bearing **546** towards the bearing **548** along the central-rotation axis **540** of the flywheel-support body **522**, the resilient body **572** is configured to resiliently urge the inner race **560** of the bearing **548** towards the bearing **546** along the central-rotation axis **540** of the flywheel-support body **522**, and the resilient body **574** is configured to resiliently urge the inner race **564** of the bearing **550** towards the bearing **552** along the central-rotation axis **540** of the flywheel-support body **522**. The inner race **568** of the bearing **552** may be urged towards the bearing **550** along the central-rotation axis **540** of the flywheel-support body **522** by support from the housing **536** of the flywheel-support body **522** as gravity pulls the flywheel body **524**—and, as a result, the bearing group **551**—downward and/or as the resilient body **570** urges the flywheel assembly downward.

[0342] In general, the spacers **576** and **578** are positioned between outer races of adjacent bearings of the bearing group **547** and the bearing group **551**, respectively, to maintain axial separation, along the central-rotation axis **540** of the flywheel-support body **522**, between those outer races. More specifically, the spacer **576** is between the outer race **554** of the bearing **546** and the outer race **560** of the bearing **548** and maintains axial separation, along the central-rotation axis **540** of the flywheel-support body **522**, between the outer race **554** and the outer race **560**. Similarly, the spacer **578** is between the outer race **564** of the bearing **550** and the outer race **568** of the bearing **552** and maintains axial separation, along the central-rotation axis **540** of the flywheel-support body **522**, between the outer race **564** and the outer race **568**. In some alternative embodiments, instead of the spacers, the outer race of one or more of the bearings may be larger in an axial dimension along the along the central-rotation axis **540** of the flywheel-support body **522** than the inner race, such that outer races of adjacent bearings are in contact while the inner races remain separate.

[0343] By resiliently urging the inner races **556** and **558** of the bearings **546** and **548** together while the respective outer races **554** and **560** are separated by the spacer **576**, as described herein, the resilient bodies **570** and **572** may preload the bearings **546** and **548**. Similarly, by resiliently urging the inner races **558** and **566** of the bearings **550** and **552** together while the respective outer races **564** and **568** are separated by the spacer **578**, the resilient body **574** may preload the bearings **550** and **552**. As used herein, the term "preloading" may refer to bearing balls of the bearings **546**, **548**, **550**, and **552** being under compressive loading (e.g., axial and radial compressive loading in the embodiment shown). Preloading may maintain positions of the bearing balls between the inner and outer races of the bearings **546**, **548**, **550**, and **552**, which may avoid damage from the bearing balls moving out of position during operation—that is, preloading may remove any internal clearance (i.e., space for bearing balls to move radially between the races) of the bearings **546**, **548**, **550**, and **552**.

[0344] Of course, the embodiment shown is an example only, and alternative embodiments may differ. For example, in some alternative embodiments where bearings include inner races fixed to the flywheel body and outer races interfacing with the flywheel-support body, the resilient bodies may be configured to resiliently urge together the outer races of individual bearings to preload the bearings, rather than the inner races as described above. In such alternative embodiments, axial separation of the inner races of adjacent bearings—rather than the outer races as described above—may be maintained by spacers, or, instead of the spacers, by the inner race of one or more of the bearings being larger in an axial dimension along the along the central-rotation axis **540** of the flywheel-support body **522** than the outer race, such that inner races of adjacent bearings are in contact while the outer races remain separate.

[0345] Referring now to FIG. **79**, a flywheel apparatus according to another embodiment is shown generally at **590**. The flywheel apparatus **590** is generally similar to the flywheel apparatus **520** and includes a flywheel-support body **592** similar to the flywheel-support body **522**, including a housing **594** similar to the housing **536**, a central-rotation axis **595** similar to the central-rotation axis **540**, and a rotation-support body **596**, similar to the rotation-support body **542**, extending within the housing **594** and centered along the central-rotation axis **595**; a flywheel body **598** similar to the flywheel body **524**, including a spin axis of rotation **599** similar to the spin axis of rotation **526** and a shaft **600** similar to the shaft **528**; bearings **602**, **604**, **606**,

and **608** generally similar to the bearings **546**, **548**, **550**, and **552**; and a resilient body **610** similar to the resilient bodies **570**, **572**, and **574**.

[0346] Like the bearings **546**, **548**, **550**, and **552**, each of the bearings **602**, **604**, **606**, and **608** includes a respective inner race and a respective outer race operable to rotate relative to the inner race and relative to the flywheel-support body **592**. More specifically, the bearing **602** includes an inner race **612** and an outer race **614** operable to rotate relative to the inner race **612** and relative to the flywheel-support body **592**; the bearing **604** includes an inner race **616** and an outer race **618** operable to rotate relative to the inner race **616** and relative to the flywheel-support body **592**; the bearing **606** includes an inner race **620** and an outer race **622** operable to rotate relative to the inner race **620** and relative to the flywheel-support body **592**; and the bearing **608** includes an inner race **624** and an outer race **626** operable to rotate relative to the inner race **624** and relative to the flywheel-support body **592**.

[0347] However, unlike the bearings **546**, **548**, **550**, and **552**, the bearings **602**, **604**, **606**, and **608** are arranged without any axial separation along the central-rotation axis **595** of the flywheel-support body **592**. That is, the inner race **612** of the bearing **602** is in contact with the inner race **616** of the bearing **604**, the outer race **614** of the bearing **602** is in contact with the outer race **618** of the bearing **604**, the inner race **620** of the bearing **606** is in contact with the inner race **624** of the bearing **608**, and the outer race **622** of the bearing **606** is in contact with the outer race **626** of the bearing **608**. Moreover, the bearings **602**, **604**, **606**, and **608** are arranged in tandem such that a bearing ball contact angle (i.e., contact between a respective inner race and a bearing ball, and between the bearing ball and a respective outer race) is the same for each of the bearings **602** and **604**, and is the same for each of the bearings **606** and **608**. As such, the resilient body **610** alone is configured to preload all four of the bearings **602**, **604**, **606**, and **608**. That is, the resilient body **610** applies a resilient force, in a direction along the central-rotation axis **595** of the flywheel-support body **592**, to the inner race **612** of the bearing **602** to resiliently urge the inner race **612** of the bearing **602** toward the bearing **604** along the central-rotation axis **595** of the flywheel-support body **592**. This force is transferred to the inner race **616** of the bearing **604** through contact between the inner races **612** and **616**, and to the outer race **614** of the bearing **602** and the outer race **618** of the bearing **604** through bearings balls of the bearings **602** and **604** (thus preloading the bearings **602** and **604**). The force is then transferred through the shaft **600** of the flywheel body **598** to the outer race **622** of the bearing **606** and, through contact between the outer race **622** and the outer race **626** of the bearing **608**, to the outer race **626** of the bearing **608**. Finally, the force is transferred through bearings balls of the bearings **606** and **608** to the inner races **620** and **624** of the bearings **606** and **608**, respectively, which are supported by the housing **594** of the flywheel-support body **592**.

Cooling System

[0348] FIG. **60** illustrates a cooling system for a roll-stabilizer apparatus according to one embodiment. In FIG. **60**, a coolant source (such as a coolant pump) **417** is operable to pump cooling fluid to a coolant destination **418**, which may include a coolant reservoir, a heat exchanger or both. Also in FIG. **60**, a roll-stabilizer apparatus **419** includes a rotation-support body **420** that may function similarly to the rotation-support body **250**. For example, the roll-stabilizer apparatus **419** includes bearings **421** and **422** that may function similarly to the bearings **252** and **253**. The bearing **421** includes an inner race **495**. The roll-stabilizer apparatus **419** also includes a flywheel body **423** that may be similar to a flywheel body as described herein for example.

[0349] However, the rotation-support body **420** defines a first internal fluid conduit **424** on a first side of the flywheel body **423** and a second internal fluid conduit **425** on a second side of the flywheel body **423** opposite the first side. The first internal fluid conduit **424** extends only on the first side of the flywheel body **423**, and the second internal fluid conduit **425** extends only on the second side of the flywheel body **423**, although alternative embodiments may differ. The first internal fluid conduit **424** has first and second openings shown generally at **426** and **427** on the first side of the flywheel body **423**, and the second internal fluid conduit **425** has third and fourth openings shown generally at **428** and **429** on the second side of the flywheel body **423**.

[0350] The first internal fluid conduit **424** includes a separator body **430** separating first and second portions shown generally at **431** and **432** of the first internal fluid conduit **424**. The first portion **431** is in fluid communication with the first opening **426**. The second portion **432** is in fluid communication with the second opening **427**. A transition portion shown generally at **433** is in fluid communication with the first and second portions **431** and **432**. As a result, cooling fluid from the coolant source **417** may be directed into the first opening **426**, from the first opening **426** through the first portion **431** to the transition portion **433**, from the transition portion **433** through the second portion **432**, and from the second portion **432** out the second opening **427**. The second internal fluid conduit **425** also includes a first portion in fluid communication with the third opening **428**, a second portion in fluid communication with the fourth opening **429**, and a transition portion in fluid communication with the first and second portions so that cooling fluid from the coolant source **417** may be directed into the third opening **428**, through the second internal fluid conduit **425**, and out the fourth opening **429** as described above with respect to the first internal fluid conduit **424**.

[0351] The first internal fluid conduit **424** is surrounded by and positioned near the bearing **421**, and the second internal fluid conduit **425** is surrounded by and positioned near the bearing **422**. Therefore, cooling fluid passing through the first and second internal fluid conduits **424** and **425** may cool the bearings **421** and **422** respectively. Because the first internal fluid conduit **424** extends only on the first side of the flywheel body **423** and the second internal fluid conduit **425** extends only on the second side of the flywheel body **423**, cooling may be focused on the bearings **421** and **422**, although alternative embodiments may differ.

[0352] In the embodiment of FIG. **60**, cooling fluid from the coolant source **417** is directed through the first and second internal fluid conduits **424** and **425** in parallel because a portion of cooling fluid from the coolant source **417** is directed through the first internal fluid conduit **424** to the coolant destination **418**, and a different portion of cooling fluid from the coolant source **417** is directed through the second internal fluid conduit **425** to the coolant destination **418**. However, in an alternative embodiment, cooling fluid from the coolant source **417** may be directed through the first and second internal fluid conduits **424** and **425** in

series because at least some cooling fluid from the coolant source **417** may be directed through the first internal fluid conduit **424** and then through the second internal fluid conduit **425** to the coolant destination **418**, or through the second internal fluid conduit **425** and then through the first internal fluid conduit **424** to the coolant destination **418**.

[0353] FIG. **61** illustrates a roll-stabilizer apparatus **434** according to another embodiment. The roll-stabilizer apparatus **434** may be similar to the roll-stabilizer apparatus **419** and includes a first internal fluid conduit **435** that may be similar to the first internal fluid conduit **424**. The first internal fluid conduit **435** has first and second openings shown generally at **436** and **437** and includes a separator body **438** separating first and second portions shown generally at **439** and **440** of the first internal fluid conduit **435**. The first portion **439** is in fluid communication with the first opening **436**. The second portion **440** is in fluid communication with the second opening **437**. A transition portion shown generally at **441** is in fluid communication with the first and second portions **439** and **440**. As a result, cooling fluid from the coolant source **417** may be directed into the first opening **436**, from the first opening **436** through the first portion **439** to the transition portion **441**, from the transition portion **441** through the second portion **440**, and from the second portion **440** out the second opening **437**. However, unlike the separator body **430**, the separator body **438** is twisted and may include a turbulator, for example.

[0354] FIG. **62** illustrates a roll-stabilizer apparatus **444** according to another embodiment.

[0355] The roll-stabilizer apparatus **444** may be similar to the roll-stabilizer apparatus **419** and includes a first internal fluid conduit **445** that may be similar to the first internal fluid conduit **424**. The first internal fluid conduit **445** has first and second openings shown generally at **446** and **447** and includes a separator body **448** separating first and second portions shown generally at **449** and **450** of the first internal fluid conduit **445**. The first portion **449** is in fluid communication with the first opening **446**. The second portion **450** is in fluid communication with the second opening **447**. A transition portion shown generally at **451** is in fluid communication with the first and second portions **449** and **450**. As a result, cooling fluid from the coolant source **417** may be directed into the first opening **446**, from the first opening **446** through the first portion **449** to the transition portion **451**, from the transition portion **451** through the second portion **450**, and from the second portion **450** out the second opening **447**. However, unlike the separator body **430**, the separator body **448** is tubular such that the first and second portions **449** and **450** may be concentric, for example.

[0356] In general, the second internal fluid conduit **425**, or other second internal fluid conduits as described herein for example, may include separator bodies such as the separator body **438** or **448**.

[0357] FIG. **63** illustrates the rotation-support body **420** including a unitary body **452** including the first and second internal fluid conduits **424** and **425**.

[0358] FIG. **64** illustrates a rotation-support body **453** according to another embodiment. The rotation-support body **453** may function similarly to the rotation-support body **420** but includes first and second rotation-support-body portions **454** and **455**. The first rotation-support-body portion **454** includes a first internal fluid conduit **456** that may be similar to the first internal fluid conduit **424**, **435**, or **445**, for example. The first rotation-support-body portion **454** is attached or fixed to a bearing **457** that may function similarly to the bearing **252** or **421**, for example. The second rotation-support-body portion **455** includes a second internal fluid conduit **458** that may be similar to the second internal fluid conduit **425**, for example. The second rotation-support-body portion **455** is attached or fixed to a bearing **459** that may function similarly to the bearing **253** or **422**, for example.

[0359] The first and second rotation-support-body portions **454** and **455** are slidable relative to each other along a central-rotation axis **460** of the rotation-support body **453**, which may also be a central-rotation axis of a flywheel-support body (such as the flywheel-support body **234**) including the rotation-support body **453**. In the embodiment shown, portions of the first and second rotation-support-body portions **454** and **455** are telescopically slidable, but alternative embodiments may differ. Such sliding of the first and second rotation-support-body portions **454** and **455** are slidable relative to each other may accommodate differential thermal expansion and contraction without requiring the bearing **457** or **459** to slide relative to a unitary body such as the unitary body **452**.

[0360] Because sliding of the first and second rotation-support-body portions **454** and **455** relative to each other may accommodate differential thermal expansion and contraction without requiring the bearing **457** or **459** to slide relative to a unitary body such as the unitary body **452**, an inner race **474** of the bearing **457** may be fixed to the first rotation-support-body portion **454** and an inner race **475** of the bearing **459** may be fixed to the second rotation-support-body portion **455**, for example by interference press-fitting. Because the inner race **474** may be fixed to the first rotation-support-body portion **454** and the inner race **475** may be fixed to the second rotation-support-body portion **455**, one or more compressible bodies may be positioned between the inner race **474** and the first rotation-support-body portion **454** and between the inner race **475** and the second rotation-support-body portion **455**. For example, FIG. **67** illustrates two compressible bodies **476** and **477** between the inner race **495** and the unitary body **452**. Such a compressible body may include a tolerance ring as shown in FIG. **68**.

[0361] FIG. **65** illustrates a rotation-support body **461** according to another embodiment. The rotation-support body **453** includes first and second rotation-support-body portions **462** and **463** may function similarly to the rotation-support body **453**, although the rotation-support body **461** defines an internal fluid conduit shown generally at **464** that, like the internal fluid conduit **254**, extends to opposite sides of the rotation-support body **461** and to opposite sides of a flywheel body supported by the rotation-support body **461**.

[0362] FIG. **66** illustrates a rotation-support body **465** according to another embodiment. The rotation-support body **465** may be similar to other rotation-support bodies as described herein and includes an internal fluid conduit **466** including first and second portions shown generally at **467** and **468**. The first portion **467** may receive a cooling fluid as described above with reference to the first portion of the second internal fluid conduit **425**. However, instead of passing cooling fluid from the first portion **467** to a transition portion such as the transition portion **433**, **441**, or **451**, cooling fluid from the first portion **467** passes through a through-opening shown generally at **469** in the rotation-support body **465** to a heat-transfer body **470** that may surround a portion of the rotation-support body **465**. The

heat-transfer body **470** defines a fluid channel shown generally at **471** in fluid communication with the through-opening **469**. The fluid channel **471** extends within the heat-transfer body **470** partly around the rotation-support body **465** and is in fluid communication with a through-opening shown generally at **472** in the rotation-support body **465** and in fluid communication with the second portion **468**.

[0363] Therefore, cooling fluid received at an opening (such as the third opening **428**) may enter the first portion **467** from such an opening and pass through the first portion **467**, from the first portion **467** through the through-opening **469** to the fluid channel **471**, through the fluid channel **471** to the through-opening **472**, through the through-opening **472** to the second portion **468**, through the second portion **468** to an opening (such as the fourth opening **429**), and out such an opening. As a result, such cooling fluid may cool at least the heat-transfer body **470**.

[0364] The heat-transfer body **470** is positioned thermally coupled to a bearing **473** that may be similar to the bearing **253** or **422** so that cooling the heat-transfer body **470** may cool the bearing **473**. The heat-transfer body **470** may be thermally coupled to the bearing **473** by direct contact or indirect contact through one or more heat-conducting bodies, a heat-conducting pad, a heat-conducting paste, or two or more thereof. At least some thermal contact between the heat-transfer body **470** and bearing **473** is independent of the rotation-support body **465**. At least some thermal contact between the heat-transfer body **470** and bearing **473** is radially outward from the rotation-support body **465**. At least a portion of the heat-transfer body **470** overlaps radially with at least a portion of bearing **473**. At least a portion of the fluid channel is radially outward from the rotation-support body **465**. At least a portion of the fluid channel overlaps radially with at least a portion of bearing **473**.

Rotary Coolant Coupling

[0365] FIGS. **80** to **83** show a coolant coupling for a roll-stabilizer apparatus **630** according to one embodiment. The roll-stabilizer apparatus **630** includes a flywheel body (not shown) similar to the flywheel body **235** and to the flywheel body **423**, a flywheel-support body **632** generally similar to the flywheel-support body **234** and to the flywheel-support body of the roll-stabilizer apparatus **419**, and a mounting body **634** generally similar to the mounting body **236**. In general, the flywheel-support body **632** supports the flywheel body and permits rotation of the flywheel body relative to the flywheel-support body **632** around at least one axis of rotation, such as a spin axis of rotation of the flywheel body and/or a central-rotation axis **636** of the flywheel-support body **632**. The mounting body **634** generally supports the flywheel-support body **632** and permits rotation of the flywheel-support body **632** relative to the mounting body **634** around a precession axis **638** non-parallel to the at least one axis of rotation. The roll-stabilizer apparatus **630** also includes a precession bearing **640** which may function similarly to the precession bearings **267** and **268**. That is, the precession bearing **640** is mounted on a precession bearing mount **642** of the mounting body **634**, interfaces with the flywheel-support body **632**, and is operable to support rotation of the flywheel-support body **632** relative to the mounting body **634** around the precession axis **638**. The roll-stabilizer apparatus **630** may also include a cooling system such as the cooling system of the embodiments of FIGS. **60** to **66**.

[0366] The precession bearing **640** includes an outer precession race **644** and an inner precession race **646**. The outer precession race **644** surrounds the inner precession race **646** and is fixed to the flywheel-support body **632** within a precession bearing socket **648**, while the inner precession race **646** interfaces with the precession bearing mount **642** of the mounting body **634**. In some embodiments, the inner precession race **646** may be fixed to the precession bearing mount **642**. However, in other embodiments, the inner precession race **646** may be a "floating" inner precession race, movable axially along the precession bearing mount **642** (i.e., along the precession axis **638**). A "floating" inner race may be required to accommodate thermal expansion. The outer precession race **644** is operable to rotate relative to the inner precession race **646** and thus relative to the precession bearing mount **642** and, ultimately, the mounting body **634**. As such, the precession bearing **640** includes an outer precession body (i.e., the outer precession race **644**) that surrounds and is rotatable relative to the mounting body **634**, and rotation of this outer precession body enables the flywheel-support body **632** to rotate relative to the mounting body **634**.

[0367] In the embodiment shown, the flywheel-support body **632** includes a protruding portion **650** which protrudes from the precession bearing socket **648** and which is sized to fit into an opening **652** on the precession bearing mount **642** of the mounting body **634** within the inner precession race **646** of the precession bearing **640** when the flywheel-support body **632** is supported by the precession bearing **640** and the mounting body **634** for rotation relative to the mounting body **634** around the precession axis **638**. That is, when the flywheel-support body **632** is supported for rotation by the precession bearing **640** and the mounting body **634**, at least a portion of the protruding portion **650** of the flywheel-support body **632** is surrounded by the inner precession race **646** of the precession bearing **640** and by the precession bearing mount **642** of the mounting body **634**. In the embodiment shown, the protruding portion **650** of the flywheel-support body **632** is removable from the flywheel-support body **632**. However, in alternative embodiments, the protruding portion **650** may integrated with a housing of the flywheel-support body **632**.

[0368] The flywheel-support body **632** of the embodiment shown in FIGS. **80** to **83** defines a flywheel-support-body fluid channel **654** which includes a first flywheel-support-body opening **656** and a second flywheel-support-body opening **658**. More specifically, the protruding portion **650** of the flywheel-support body **632** defines the first flywheel-support-body opening **656** and the second flywheel-support-body opening **658**. The flywheel-support-body fluid channel **654** is operable to convey a fluid through at least some of the flywheel-support body **632** between the first flywheel-support-body opening **656** and the second flywheel-support-body opening **658**. For example, the flywheel-support-body fluid channel **654** may be operable to convey a coolant or cooling fluid through portions of the flywheel-support body **632**, for example, in order to cool one or more operating bearings within the flywheel-support body **632**, as described above with reference to the embodiments of FIGS. **60** to **66**. For example, cooling fluid may enter the flywheel-support-body fluid channel **654** through the first flywheel-support-body opening **656** at a cold temperature, pass through the flywheel-support-body fluid channel **654**, and, in doing so, provide cooling to, for example, one or more operating

bearings, motors, and/or controllers within the flywheel-support body **632**, and then exit the flywheel-support-body fluid channel **654** through the second flywheel-support-body opening **658** at a warm temperature.

[0369] The mounting body **634** defines a first mounting-body fluid channel **660** and a second mounting-body fluid channel **662**. The first mounting-body fluid channel **660** includes a first mounting-body opening **664** and a second mounting-body opening **666**, and is operable to convey a fluid through at least some of the mounting body **634** between the first mounting-body opening **664** and the second mounting-body opening **666**. The second mounting-body fluid channel **662** includes a third mounting-body opening **668** and a fourth mounting-body opening **670**, and is operable to convey a fluid through at least some of the mounting body **634** between the third mounting-body opening **668** and the fourth mounting-body opening **670**. As described above, the first mounting-body fluid channel **660** and the second mounting-body fluid channel **662** may be operable to convey a coolant or cooling fluid through portions of the mounting body **634**. For example, the first mounting-body fluid channel **660** may provide fresh (cold) cooling fluid to the flywheel-support-body fluid channel **654** and the second mounting-body fluid channel **662** may remove spent (warm) cooling fluid from the flywheel-support-body fluid channel **654**. In some embodiments, the first mounting-body fluid channel **660** may be in fluid communication, through the first mounting-body opening **664**, with a coolant source (not shown) such as a coolant pump to receive the fresh cooling fluid. In some embodiments, the second mounting-body fluid channel **662** may be in fluid communication, through the fourth mounting-body opening **670**, with a coolant reservoir to dispose of the spent cooling fluid.

[0370] In general, when the flywheel-support body **632** is supported, by the precession bearing **640** and the mounting body **634**, for rotation around the precession axis **638** relative to the mounting body **634**, such that the outer precession race **644** of the precession bearing **640** is fixed to the flywheel-support body **632** and the inner precession race **646** interfaces with the precession bearing mount **642** of the mounting body **634**, and such that at least a portion of the protruding portion **650** of the flywheel-support body **632** is surrounded by the inner precession race **646** and by the precession bearing mount **642**, the second mounting-body opening **666** is in fluid communication with the first flywheel-support-body opening **656** and the second flywheel-support-body opening **658** is in fluid communication with the third mounting-body opening **668**. Thus, for example, fluid may flow through roll-stabilizer apparatus **630** by passing through the first mounting-body opening **664**, the first mounting-body fluid channel **660**, the second mounting-body opening **666**, the first flywheel-support-body opening **656**, flywheel-support-body fluid channel **654**, the second flywheel-support-body opening **658**, the third mounting-body opening **668**, the second mounting-body fluid channel **662**, and the fourth mounting-body opening **670**, while the flywheel-support body **632** is rotating around the precession axis **638** relative to the mounting body **634** (i.e., while the roll-stabilizer apparatus **630** is operating).

[0371] In the embodiment shown, the roll-stabilizer apparatus **630** also includes a bearing seal **672** and internal seal **674**, **676**, and **678**. The bearing seal **672** and the internal seals **674**, **676**, and **678** may prevent fluid leakage between the flywheel-support body **632**, the mounting body **634**, and the precession bearing **640**.

[0372] Also in the embodiment shown, the first flywheel-support-body opening **656** is a first radial distance **680** from the central-rotation axis **636** of the flywheel-support body **632**, and the second flywheel-support-body opening **658** is a second radial distance **682** from the central-rotation axis **636** of the flywheel-support body **632**, and the first radial distance **680** is different from the second radial distance **682**. More specifically, the first radial distance **680** is greater than the second radial distance **682** (i.e., the first flywheel-support-body opening **656** is further away from the central-rotation axis **636** than the second flywheel-support-body opening **658**). Accordingly, the second mounting-body opening **666** is also further from the central-rotation axis **636** than the third mounting-body opening **668**. Electric Motor/Generator

[0373] Referring back to FIGS. **26** and **27**, the flywheel-support body **234** also includes electric motor/generator and **259** electrically connected (either directly or indirectly, such as indirectly through the roll-stabilizer controller **109**) to the roll-stabilizer energy-storage device **110** (shown in FIG. **1**) such that the electric motor/generator **259** may use electric energy stored by the roll-stabilizer energy-storage device **110** to apply a torque to the flywheel body **235** around the spin axis of rotation **237** relative to the flywheel-support body **234**. In some embodiments, the electric motor/generator **259** may have multiple different windings to facilitate generating different torque profiles, which may provide higher rates of acceleration or deceleration. As used herein, the term "electric motor/generator" excludes any electrical or other connections, such as wires, studs, or plugs.

[0374] Further, the electric motor/generator **259** may convert rotational kinetic energy, from rotation of the flywheel body **235** around the spin axis of rotation **237** relative to the flywheel-support body **234**, to electrical energy, and the electric motor/generator **259** is electrically connected to the roll-stabilizer energy-storage device **110** such that the roll-stabilizer energy-storage device **110** may receive and store such electrical energy converted from such rotational kinetic energy. Of course, the embodiment shown is an example only, and alternative embodiments may vary. For example, in some alternative embodiments, the electric motor/generator **259** may be electrically connected to a dedicated roll-stabilizer energy-storage device (not shown) that is external to the roll-stabilizer assembly **107** and distinct from both the main energy-storage device **105** and the roll-stabilizer energy-storage device **110**.

[0375] In the embodiment shown, the electric motor/generator **259** is located entirely within the internal cavity **247** of the flywheel-support body **234**. As such, when the internal cavity **247** contains the flywheel body **235** in an internal environment different than an ambient external environment, the electric motor/generator **259** will also be contained in this internal environment. In such embodiments, electrical connections (not shown) to the electric motor/generator **259** could pass through the housing **246** into the internal cavity **247**.

[0376] The electric motor/generator **259** is an examples only, and alternative embodiments may differ. For example, an alternative embodiment may include only electric motors, or may include an electric motor and an electric generator

separate from the electric motor. Further, an alternative embodiment may include numbers of electric motors, electric generators, or electric motor/generators that may differ from the electric motor/generator **259**. Also, alternative embodiments could generate torque in other ways. For example, alternative embodiments may include a hydraulic pump and motor, or could use air power.

Mounting Body

[0377] Referring now to FIGS. **25** to **27** and **29** to **31**, the mounting body **236** includes a base **260** attachable to one or more other structures in the roll-stabilizer assembly **107**, which may be attached to the hull **101** directly or indirectly to attach mounting body **236**, and thus the roll-stabilizer apparatus **233**, to the hull **101**. However, in alternative embodiments, the roll-stabilizer apparatus **233** may be attached directly or indirectly to the hull **101** in other ways, or the roll-stabilizer apparatus **233** may not be attached to any hull or to any marine vessel. Therefore, in some embodiments, measurements of linear acceleration, of rotational acceleration, of orientation, or a combination of two or more thereof of the hull **101**, relative to an inertial frame of reference or another frame of reference, by the inertial measurement unit **111** may indicate such acceleration, orientation, or both of the mounting body **236** relative to such a frame of reference. In other embodiments, the roll-stabilizer apparatus **233** may itself have an onboard inertial measurement unit (not shown), for example attached to the flywheel-support body **234**. Therefore, references herein to movement, acceleration, or orientation of the mounting body **236**, relative to an inertial frame of reference or another frame of reference, may refer to movement, acceleration, or orientation, relative to such a frame of reference, of the inertial measurement unit **111** or of any other location that may be attached directly or indirectly to the mounting body **236** or that may otherwise move with mounting body **236**.

[0378] The base **260** includes base structures **261**, **262**, **263**, and **264**, which, when assembled together, form the base **260**. The base structure **263** includes a precession bearing mount **265**, and the base structure **264** includes a precession bearing mount **266**. The mounting body **236** further includes precession bearings **267** and **268** mounted on the precession bearing mounts **265** and **266**, respectively. The precession bearings **267** and **268** interface with the flywheel-support body **234** and are operable to support rotation of the flywheel-support body **234** relative to the base **260** of the mounting body **236** around a precession axis **269**.

[0379] The base structures **261**, **262**, **263**, and **264** are spaced apart from each other to define a space between the base structures **261**, **262**, **263**, and **264** to receive the flywheel-support body **234**. The space between the base structures **261**, **262**, **263**, and **264** is sized and shaped to permit rotation of the flywheel-support body **234** relative to the mounting body **236** around the precession axis **269**. In the embodiment shown, the precession axis **269** is generally perpendicular to the spin axis of rotation **237** of the flywheel body **235**. However, in alternative embodiments, the precession axis **269** may be non-parallel to, and not necessarily perpendicular to, the spin axis of rotation **237**.

[0380] In some embodiments, movement of the flywheel-support body **234** relative to the mounting body **236** may be constrained to rotation of the flywheel-support body **234** relative to the mounting body **236** around the precession axis **269**. However, alternative embodiments may differ. For example, in alternative embodiments, the flywheel-support body **234** may be mounted for both translation and rotation relative to the mounting body **236**, for example using a linkage such as a four-bar linkage.

Precession Bearings

[0381] Referring now to FIGS. **26**, **27**, **29**, and **30**, in the embodiment shown, the precession bearings **267** and **268** support the flywheel-support body **234** by being positioned in and interfacing with precession bearing sockets, shown generally at **270** and **271**, which are integrated directly into the housing body **244** of the flywheel-support body **234**. FIG. **29** provides a more detailed view of the precession bearing socket **271** for precession bearing **268**. The precession bearings **267** and **268** in the embodiment shown are mechanical bearings. Considering as an example the precession bearing **267** as shown in greater detail in FIG. **30**, the precession bearing **267** includes an outer precession race **272** and an inner precession race **273**. The outer precession race **272** is fixed to the housing body **244** within the precession bearing socket **270**, while the inner precession race **273** interfaces with the precession bearing mount **265** of the base structure **263** of the mounting body **236**. In some embodiments, the inner precession race **273** may be fixed to the precession bearing mount **265**. However, in other embodiments, the inner precession race **273** may be a "floating" inner precession race, movable axially along the precession bearing mount **265** (i.e., along the precession axis **269**). A "floating" inner race may be required to accommodate thermal expansion. The outer precession race **272** is operable to rotate relative to the inner precession race **273** and thus relative to the precession bearing mount **265** and, ultimately, the mounting body **236**. As such, each of the precession bearings **267** and **268** includes an outer precession body (i.e., the outer precession race **272** of the precession bearing **267**) that is rotatable relative to the mounting body **236**, and rotation of these outer precession bodies enables the flywheel-support body **234** to rotate relative to the mounting body **236**. Of course, the embodiment shown is an example only, and alternative may differ. For example, alternative embodiments may include a different number of precession bearings. Other alternative embodiments may include bearings other than mechanical bearings.

Precession-Control Devices

[0382] Referring now to FIGS. **25** to **27** and **31** to **35**, the mounting body **236** also includes precession-control devices **274** and **275** operable to control rotation of the flywheel-support body **234** relative to the mounting body **236** around the precession axis **269**. In general, a precession-control device may include an actuator, which may be a linear actuator or a torsional actuator, and which may be an electromechanical actuator, a screw actuator, a hydraulic actuator, or a pneumatic actuator. Further, a precession-control device may include a shock absorber, a damper, an electric generator, or another device that can apply a resistive torque to the flywheel-support body **234** relative to the mounting body **236** to dampen the rotation of the flywheel-support body **234** relative to the mounting body **236**.

[0383] The precession-control device **274** includes a linear actuator **276** (such as a screw actuator, for example) and a precession linkage **277**. The linear actuator **276** includes a

mounting body end **278** and a force-transfer body end **279**. The precession linkage **277** includes a first force-transfer body **280** and a second-force transfer body **281**. The first force-transfer body **280** includes a flywheel-support body end **282** and an actuator end **283**. The second-force transfer body **281** includes a force-transfer linkage end **284** and a constraining end **285**. The mounting body end **278** of the linear actuator **276** is rotatably attached to the base structure **263** of the base **260**. The flywheel-support body end **282** of the first force-transfer body **280** is rotatably attached to the flywheel-support body **234**. The actuator end **283** of the first force-transfer body **280** is rotatably attached to the force-transfer body end **279** of the linear actuator **276** and also to the force-transfer linkage end **284** of the second force-transfer body **281**. The constraining end **285** of the second force-transfer body **281** is rotatably attached to the base structure **263** of the base **260**. Through the rotatable connections described above, the first force-transfer body **280** is connected to both the linear actuator **276** and the flywheel-support body **234**, and is therefore operable to transfer force between the linear actuator **276** and the flywheel-support body **234**. Further, the rotatable connection between the first force-transfer body **280** and the flywheel-support body **234** is positioned at a distance away from the precession axis **269**, such that linear extension or contraction of the linear actuator **276** may, by transferring force through the first force-transfer body **280**, apply a torque to and cause and/or resist rotation of the flywheel-support body **234** around the precession axis **269** relative to the base **260** of the mounting body **236**, and, correspondingly, such that rotation of the flywheel-support body **234** around the precession axis **269** relative to the base **260** may cause linear extension or contraction of the linear actuator **276**. The rotatable connection between the mounting body end **278** of the linear actuator **276** and the base structure **263**, together with the second-force transfer body **281** and its rotatable connections to the first force-transfer body **280** and the base structure **263**, constrain a range of motion of the flywheel-support body **234**, the linear actuator **276**, and the first force-transfer body **280** such that the force transferred through the first force-transfer body **280** may be close to linearly related to the torque applied to the flywheel-support body **234**.

[0384] Similarly, the precession-control device **275** includes a linear actuator **286** and a precession linkage **287**. The linear actuator **286** includes a mounting body end **288** and a force-transfer body end **289**. The precession linkage **287** includes a first force-transfer body **290** and a second force-transfer body **291**. The first force-transfer body **290** includes a flywheel-support body end **292** and an actuator end **293**. The second force-transfer body **291** includes a force-transfer linkage end **294** and a constraining end **295**. The mounting body end **288** of the linear actuator **286** is rotatably attached to the base structure **264** of the base **260**. The flywheel-support body end **292** of the first force-transfer body **290** is rotatably attached to the flywheel-support body **234**. The actuator end **293** of the first force-transfer body **290** is rotatably attached to the force-transfer body end **289** of the linear actuator **286** and also to the force-transfer linkage end **294** of the second force-transfer body **291**. The constraining end **295** of the second force-transfer body **291** is rotatably attached to the base structure **264** of the base **260**. Through the rotatable connections described above, the first force-transfer body **290** is connected to both the linear actuator **286** and the flywheel-support body **234**, and is therefore operable to transfer force between the linear actuator **286** and the flywheel-support body **234**. Further, the rotatable connection between the first force-transfer body **290** and the flywheel-support body **234** is positioned at a distance away from the precession axis **269**, such that linear extension or contraction of the linear actuator **286** may, by transferring force through the first force-transfer body **290**, apply a torque to and cause rotation of the flywheel-support body **234** around the precession axis **269** relative to the base **260** of the mounting body **236**, and, correspondingly, such that rotation of the flywheel-support body **234** around the precession axis **269** relative to the base **260** may cause linear extension or contraction of the linear actuator **286**. The rotatable connection between the mounting body end **288** of the linear actuator **286** and the base structure **264**, together with the second force-transfer body **291** and its rotatable connections to the first force-transfer body **290** and the base structure **263**, constrain a range of motion of the flywheel-support body **234**, the linear actuator **286**, and the first force-transfer body **290** such that the force transferred through the first force-transfer body **290** may be close to linearly related to the torque applied to the flywheel-support body **234**. FIGS. **33** to **35** provide a demonstration of this force-transfer relationship.

[0385] In the embodiment shown, each of the rotatable connections between the flywheel-support body **234** and the first force-transfer bodies **280** and **290** of the precession-control devices **274** and **275**, respectively, is positioned such that it at least partly overlaps with a width of the precession bearings **267** and **268**, respectively, along the precession axis **269**. More specifically, as shown in particular in FIG. **27**, the housing body **244** of the flywheel-support body **234** includes a linkage socket shown generally at **296** which is positioned such that it at least partly overlaps with a width of the precession bearing **267** along the precession axis **269**, and also includes a linkage socket shown generally at **297** which is positioned such that it at least partly overlaps with a width of the precession bearing **268** along the precession axis **269**. The flywheel-support body ends **282** and **292** of the first force-transfer bodies **280** and **290**, respectively, are rotatably connected to the housing body **244** within the linkage sockets **296** and **297**, respectively. Similarly, each of the rotatable connections between the first force transfer bodies **280** and **290** and the second force-transfer bodies **281** and **291**, between the first force transfer bodies **280** and **290** and the linear actuators **276** and **286**, between the linear actuators **276** and **286** and the base structures **263** and **264**, and between the second force-transfer bodies **281** and **291** and the base structures **263** and **264** is positioned such that it at least partly overlaps with a width of the precession bearings **267** and **268** along the precession axis **269**.

[0386] Thus, each of the precession-control devices **274** and **275** is operable to apply a force at least partly overlapping a width of a respective precession bearing (i.e., the precession bearing **267** or the precession bearing **268**, respectively) along the precession axis **269**. Furthermore, because the precession bearings **267** and **268** are fixed to the flywheel-support body **234** within the precession bearing sockets **270** and **271**, respectively, which are integrated directly into the flywheel-support body **234**, the precession-control devices **274** and **275** are operable to apply forces to the flywheel-support body **234** at least partly overlapping a width of the precession bearings along the precession axis **269**. Compared to other embodiments that have linkages

occupying space between the mounting body **236** and the flywheel-support body **234** (and thus requiring a gap along the precession axis **269** between the mounting body **236** and the flywheel-support body **234**), the configuration of the embodiment shown may permit a larger allowable size of the flywheel body **235** for a given size of the roll-stabilizer apparatus **233**.

[0387] For example, with reference to FIG. **25**, the size of the roll-stabilizer apparatus **233** may be considered to be represented by a width W of the base **260** of the mounting body **236** along the precession axis **269**, extending from an outermost surface of the base structure **263** to an outermost surface of the base structure **264**. Similarly, with reference to FIG. **27**, the size of the flywheel body **235** may be considered to be represented by a diameter D of the flywheel body **235**. Using these definitions, the configuration of the embodiment shown may allow a ratio of the diameter D to the width W to be greater than 62%. For example, in the embodiment shown, the ratio D:W may be about 63%, about 64%, about 65%, about 66%, about 67%, about 68%, about 69%, about 70%, about 71%, about 72%, about 73%, or about 74%. A larger flywheel body (i.e., with a larger radius) may generally allow a greater moment of inertia. Because of this, larger flywheel bodies may generally require a lower rotation speed to achieve a given angular momentum for roll stabilization. Lower operational rotation speeds may be advantageous because they can correspond to longer bearing life and lower power draw. Additionally, at lower speeds, there is less energy stored in the flywheel, which corresponds to shorter spin-up/spin-down times, as well as greater safety.

[0388] The description above refers to widths of precession bearings along the precession axis **269** and refers to a width W of the base **260** along the precession axis **269**. Such widths may describe embodiments in which the precession axis **269** extends horizontally and perpendicular to the longitudinal axis **106**, namely transversely relative to the hull **101**. However, references to widths of precession bearings and to a width W of a base may be understood more generally as references to dimensions that may be but are not necessarily widths. For example, in an embodiment in which a precession axis is vertical, generally vertical, or normal to or otherwise outside of a plane including longitudinal and transverse axes of at least one hull, references to widths of precession bearings and to a width W of a base may be understood as references to vertical or other dimensions that are not necessarily widths.

[0389] FIG. **56** illustrates a roll-stabilizer assembly shown generally at **409** that may be similar to the roll-stabilizer assembly **107** or that may include a different roll-stabilizer apparatus such as a roll-stabilizer apparatus as described herein for example. The roll-stabilizer apparatus of the roll-stabilizer assembly **409** includes a flywheel body such as one of the flywheel bodies described herein for example, and the flywheel body has a mass m and a moment of inertia I. The roll-stabilizer apparatus of the roll-stabilizer assembly **409** also includes a flywheel-support body such as one of the flywheel-support bodies described herein for example, and the flywheel-support body has a central-rotation axis such as the central-rotation axis **141** or **248**, for example. The roll-stabilizer assembly **409** has a largest transverse dimension **410** (or w) transverse to the central-rotation axis of the flywheel-support body of the roll-stabilizer apparatus of the roll-stabilizer assembly **409**.

[0390] In some embodiments, a ratio of I/mw^2 is greater than 0.34, greater than 0.35, greater than 0.36, greater than 0.37, greater than 0.38, greater than 0.39, greater than 0.40, greater than 0.41, greater than 0.42, greater than 0.43, greater than 0.44, greater than 0.45, greater than 0.46, greater than 0.47, greater than 0.48, greater than 0.49, greater than 0.50, greater than 0.51, greater than 0.52, greater than 0.54, or greater than 0.54.

Flywheel Controller

[0391] Referring now to FIGS. **25** and **26**, in the embodiment shown, the flywheel-support body **234** includes a flywheel controller **298** in communication with the roll-stabilizer controller **109** (shown in FIG. **1**) and with the electric motor/generator **259**. The flywheel controller **298** may receive one or more control signals from the roll-stabilizer controller **109**, and the flywheel controller **298** may in turn send one or more control signals to the electric motor/generator **259** to control the torque applied by the electric motor/generator **259** to the flywheel body **235** around the spin axis of rotation **237**, and/or the speed of rotation of the flywheel body **235** around the spin axis of rotation **237**. Mounting of the flywheel controller **298** directly on the flywheel-support body **234** may minimize an amount of wiring required to provide control of the electric motor/generator **259**. In some embodiments, the flywheel controller **298** may send one or more control signals to the electric motor/generator **259** to control the electric motor/generator **259** to vary the speed at which the flywheel body **235** rotates around the spin axis of rotation **237** depending on sea conditions. For example, the flywheel controller **298** may send control signals to the electric motor/generator **259** to cause the flywheel body **235** to rotate slowly in calm seas, which may save energy, and may send control signals to the electric motor/generator **259** to cause the flywheel body **235** to rotate quickly in rough seas, thus providing greater stabilization. This variable rotation speed control of the flywheel body **235** provided by the flywheel controller **298** may include multiple flywheel body **235** rotation speeds, or a continuous range of flywheel body **235** rotation speeds.

Brake Circuit

[0392] Referring now to FIG. **36**, in some embodiments, the electric motor/generator **259** may also be in electrical communication with a brake circuit such as brake circuit **299**. The brake circuit **299** includes a resistor bank **300** and a switch bank **301**. In the embodiment shown, the resistor bank **300** includes resistors **302**, **303**, and **304**, and the switch bank **301** includes switches **305**, **306**, and **307**. The switches **305**, **306**, and **307** are operable to reversibly electrically connect the electric motor/generator **259** to the resistors **302**, **303**, and **304**. Connection of the electric motor/generator **259** to the resistors **302**, **303**, and **304** may short circuit phase windings **308**, **309**, and **310** of the electric motor/generator **259** and may thus cause the electric motor/generator **259** to apply a resistive torque to the flywheel body **235** relative to the flywheel-support body **234** to dampen the rotation of the flywheel body **235** relative to the flywheel-support body **234**. In the embodiment shown in FIG. **36**, the brake circuit **299** is in communication with the roll-stabilizer controller **109** to receive one or more control signals from the roll-stabilizer controller **109**. For example, the roll-stabilizer controller **109** may be operable to provide

braking signals to the brake circuit **299**. In response to these braking signals, the switches **305**, **306**, and **307** of the brake circuit **299** may be configured to connect the electric motor/generator **259** to the resistors **302**, **303**, and **304**. The switches **305**, **306**, and **307** may also be configured to connect the electric motor/generator **259** to the resistors **302**, **303**, and **304** in response to, for example, a failure of the roll-stabilizer controller **109**.

Operation

[0393] Each of the precession-control devices **274** and **275** is also in communication with the roll-stabilizer controller **109** to receive one or more control signals from the roll-stabilizer controller **109**. The one or more control signals received from the roll-stabilizer controller **109** may be used to control the precession-control devices **274** and **275**, as described above with respect to the precession-control devices **120** and **121** of the roll-stabilizer apparatus **108**. Further, each of the precession-control devices **274** and **275** is an electromechanical actuator operable to extend and contract to apply a torque to, and to rotate, the flywheel-support body **234** around the precession axis **269** relative to the base **260** in response to, at least, one or more control signals from the roll-stabilizer controller **109**. Such a torque applied by the precession-control devices **274** and **275** may differ from a resistive torque because, for example, a torque applied by the precession-control devices **274** and **275** may cause rotation of the flywheel-support body **234** around the precession axis **269** relative to the base **260** in a same direction as the applied torque, and the applied torque may be independent of rotation of the flywheel-support body **234** around the precession axis **269** relative to the base **260**.

[0394] Further, each of the precession-control devices **274** and **275** is operable to generate electrical energy from rotation of the flywheel-support body **234** around the precession axis **269** relative to the base **260** and thereby dampen precession of the flywheel-support body **234** around the precession axis **269** relative to the base **260**. The precession-control devices **274** and **275** are electrically connected to the roll-stabilizer energy-storage device **110** such that electrical energy generated by the precession-control devices **274** and **275** may be stored by the roll-stabilizer energy-storage device **110**.

[0395] Referring now to FIG. **37**, in some embodiments, each of the linear actuators **276** and **286** of the precession-control devices **274** and **275** may have an actuator motor, such as actuator motor **311**. The actuator motor **311** may be in electrical communication with a damping circuit such as damping circuit **312**. The damping circuit **312** includes a resistor bank **313** and a switch bank **314**. In the embodiment shown, the resistor bank **313** includes resistors **315**, **316**, and **317**, and the switch bank **314** includes switches **318**, **319**, and **320**. The switches **318**, **319**, and **320** are operable to reversibly electrically connect the actuator motor **311** to the resistors **315**, **316**, and **317**. Connection of the actuator motor **311** to the resistors **315**, **316**, and **317** may short circuit phase windings **321**, **322**, and **323** of the actuator motor **311** and may thus cause the actuator motor **311** to apply a resistive torque to the flywheel-support body **234** relative to the mounting body **236** to dampen the rotation of the flywheel-support body **234** relative to the mounting body **236**. In some embodiments, the damping circuit **312** may be in communication with the roll-stabilizer controller **109** to receive one or more control signals from the roll-stabilizer controller **109**. For example, the roll-stabilizer controller **109** may be operable to provide damping signals to the damping circuit **312**. In response to these damping signals, the switches **318**, **319**, and **320** may be configured to connect the actuator motor **311** to the resistors **315**, **316**, and **317**. The switches **318**, **319**, and **320** may also be configured to connect the actuator motor **311** to the resistors **315**, **316**, and **317** in response to, for example, a failure of the roll-stabilizer controller **109** or a loss of power.

[0396] In some embodiments, minimizing backlash or lost motion between the flywheel-support body **234** and the precession-control devices **274** and **275**, or between the mounting body **236** and the precession-control devices **274** and **275**, may be important for controlling stability.

[0397] However, alternative embodiments may differ. For example, alternative embodiments may include more or fewer precession-control devices that may differ from the precession-control devices **274** and **275**. For example, a precession-control device according to an alternative embodiment may include a different electromechanical actuator, a different electric generator, or both, and some embodiments may omit such precession-control devices. Further, alternative embodiments may differ and may include hydraulic actuators, torsional actuators, or both, for example. Also, precession-control devices of alternative embodiments need not be actuators, but could apply only resistive forces or torques that simply resist or dampen movement of the flywheel-support body **234** relative to the mounting body **236**.

Other Precession-Control Devices

[0398] One example of an alternative embodiment with a different precession-control device is provided in FIGS. **38** and **39**. In FIG. **38**, a roll-stabilizer apparatus according to this alternative embodiment is shown generally at **324** and, similar to the roll-stabilizer apparatus **233**, includes a flywheel-support body **325**, a flywheel body (not shown) inside the flywheel-support body **325**, a mounting body **326**, and a precession-control device **327**. The precession-control device **327** of the roll-stabilizer apparatus **324** is similar to the precession-control devices **274** and **275** of the roll-stabilizer apparatus **233**, and is operable to control rotation of the flywheel-support body **325** relative to the mounting body **326** around a precession axis **328**.

[0399] As with the precession axis of rotation **119** and the precession axis **269**, the precession axis **328** in some embodiments may extend horizontally and perpendicular to the longitudinal axis **106**, namely transversely relative to the hull **101**. However, alternative embodiments may differ. For example, in some embodiments, the precession axis **328** may extend vertically or in another direction that is not parallel (and that may be perpendicular) to the longitudinal axis **106** of the marine vessel **100**.

[0400] However, as shown in greater detail in FIG. **39**, the precession-control device **327** has a different configuration than the precession-control devices **274** and **275**. More specifically, the precession-control device **327** includes an actuator **329** (such as a screw actuator, for example), a first force-transfer body **330**, and a second force-transfer body **331**. The actuator **329** includes a mounting body end **332** and a force-transfer body end **333**; the first force-transfer body **330** includes a constraining end **334**, an actuator end **335**, and a force-transfer linkage portion **336**; and the second force-transfer body **331** includes a force-transfer linkage end

337 and a flywheel-support body end **338**. The mounting body end **332** of the actuator **329** is rotatably attached to the mounting body **326**. The constraining end **334** of the first force-transfer body **330** is also rotatably attached to the mounting body **326**. The actuator end **335** of the first force-transfer body **330** is rotatably attached to the force-transfer body end **333** of the actuator **329**. The force-transfer linkage end **337** of the second force-transfer body **331** is rotatably attached to the force-transfer linkage portion **336** of the first force-transfer body **330**. The flywheel-support body end **338** of the second force-transfer body **331** is rotatably attached to the flywheel-support body **325**. Through the rotatable connections described above, the first force-transfer body **330** and the second force-transfer body **331** are operable to transfer force between the actuator **329** and the flywheel-support body **325**. Further, the rotatable connection between the second force-transfer body **331** and the flywheel-support body **325** is positioned at a distance away from the precession axis **328**, such that linear extension or contraction of the actuator **329** may, by transferring force through the first force-transfer body **330** and the second force-transfer body **331**, apply a torque to and cause and/or resist rotation of the flywheel-support body **325** around the precession axis **328** relative to the mounting body **326**, and, correspondingly, such that rotation of the flywheel-support body **325** around the precession axis **328** relative to the mounting body **326** may cause linear extension or contraction of the actuator **329**.

Precession Linkage Bearings

[0401] In some embodiments, such as embodiments of the roll-stabilizer apparatus **233** and/or embodiments of the roll-stabilizer apparatus **324**, the precession-control devices, such as the precession-control devices **274**, **275**, and **327**, may include one or more bearings, such as one or more roller bearings. For example, with reference FIG. **31**, the precession-control device **274** of the roll-stabilizer **233** may include one or more bearings as part of the precession linkage **277**.

[0402] As a more specific example, FIGS. **83** and **84** show a precession linkage **684** of a precession-control device **686** according to another embodiment. The precession-control device **686** may be similar to the precession-control device **274** and may be used in place of the precession-control device **274** in the roll-stabilizer apparatus **233**. The precession linkage **686** may be similar to the precession linkage **277** and may generally transfer forces at least between a mounting body and a flywheel-support body of a roll-stabilizer apparatus as described herein. The precession linkage **686** includes a first force-transfer body **688** similar to the first force-transfer body **280** and a second force transfer body **690** similar to the second force-transfer body **281**. An actuator end **692** of the first force-transfer body **688** is rotatably attached to a force-transfer linkage end **694** of the second force transfer body **690**, such that at least some of the force transferred by the precession linkage **684** between the mounting body and the flywheel-support body is transferred between the first force-transfer body **688** and the second force-transfer body **690**.

[0403] The precession linkage **684** of the precession-control device **686** includes bearings **696** and **698** between the actuator end **692** of the first force-transfer body **688** and the force-transfer linkage end **694** of the second force-transfer body **690** (i.e., where the first force-transfer body **688** is rotatably attached to the second force-transfer body **692**). The bearings **696** and **698** are supported in place by a pin **700**. In general, the bearings **696** and **698** are operable to support the first force-transfer body **688** for rotation relative to the second force-transfer body **690**. The bearings **696** and **698** may effectively preload the pin **700** in order to prevent or minimize any backlash (i.e., relative non-rotational movement between the pin **700** and one or both of the first and second force-transfer bodies **688** and **690**) caused when the precession linkage **684** transfer forces, for example, between the mounting body and the flywheel-support body.

[0404] In the embodiment shown, the precession linkage **684** also includes seals **702**, **704**, and **706**. The seals **702**, **704**, and **706** provide a fluid-tight seal between the first force-transfer body **688** and the second force-transfer body **690** around the bearings **696** and **698**. The seals **702**, **704**, and **706** thus isolate the bearings **696** and **698** from an external operating environment, which may be, for example, a marine environment.

Mounting Feet

[0405] In the embodiment shown in FIGS. **25** and **26**, the base **260** of the mounting body **236** also includes mounting feet, such as mounting foot **339** and mounting foot **340** attached to the base structure **264**. The mounting feet **339** and **340** are operable to mount the base **260**, and thus the mounting body **236**, to at least one hull of a vessel, such as the hull **101** of the marine vessel **100**. In some embodiments, the mounting feet **339** and **340** may be interchangeable with other mounting feet to allow for different mounting configurations. For example, the mounting feet of some embodiments may allow for adjustable mounting or for mounting to non-flat surfaces.

[0406] The mounting feet **339** and **340** are examples only, and alternative embodiments may differ. For example, alternative embodiments may include openings, which may be threaded, to receive bolts or other structures that may mount the base **260**, and thus the mounting body **236**, to at least one hull of a vessel. Other embodiments may include clamps, connectable support bodies, or other structures that may be interchangeable and that may mount the base **260**, and thus the mounting body **236**, to at least one hull of a vessel.

[0407] As with the precession axis of rotation **119**, the precession axis **269** in some embodiments may extend horizontally and perpendicular to the longitudinal axis **106**, namely transversely relative to the hull **101**. However, alternative embodiments may differ. For example, in some embodiments, the precession axis **269** may extend vertically or in another direction that is not parallel (and that may be perpendicular) to the longitudinal axis **106** of the marine vessel **100**.

[0408] The mounting feet **339** and **340**, or other structures such as those described above for example, may be positioned, orientated, or both such that the mounting body **236** is configured to be attached to at least one hull of a marine vessel such that the precession axis **269** extends transversely relative to the at least one hull. Other mounting bodies, such as the mounting bodies **114** and **326**, may include similar mounting feet or other structures that as those described above to mount the mounting bodies to at least one hull of a vessel.

[0409] For example, FIGS. **86** to **90** show a mounting body **708** for a roll-stabilizer apparatus according to another

embodiment. The mounting body **708** may generally be similar to the mounting body **236** and/or the mounting body **326** and may be used, for example, in place of the mounting body **236** in the roll-stabilizer apparatus **233** and/or the mounting body **326** in the roll-stabilizer apparatus **324**. That is, in general, the mounting body **708** may support a flywheel-support body and permit rotation of the flywheel-support body relative to the mounting body **708** around a precession axis **709** of the mounting body **708**.

[0410] The mounting body **708** includes mounting feet **710**, **712**, **714**, and **716**, which may generally function similarly to the mounting feet **339** and **340**. That is, the mounting feet **710**, **712**, **714**, and **716** are operable to mount the mounting body **708** to at least one hull of a vessel, such as the hull **101** of the marine vessel **100**. Also, in the embodiment shown, each of the mounting feet **710**, **712**, **714**, and **716** is removably attached to the mounting body **708**.

[0411] Considering as an example the mounting foot **710**, as shown in greater detail in FIGS. **88** to **90**, the mounting foot **710** is removably attached to the mounting body **708** at a mounting position shown generally at **722**. In the embodiment shown, the mounting foot **710** includes a first side **718** and a second side **720** opposite the first side **718**. In general, the mounting foot **710** is removably attachable to the mounting body **708** at the mounting position **722** in a first orientation relative to the mounting body **708**, with the first side **718** of the mounting foot **710** facing the mounting body **708**, as shown in FIGS. **86**, **88**, and **89**. More specifically, when the mounting foot **710** is attached to the mounting body **708** at the mounting position **722** in the first orientation, at least a portion of the first side **718** of the mounting foot **710** is in contact with the mounting body **708**. The mounting foot **710** is also removably attachable to the mounting body **708** at the mounting position **722** in a second orientation relative to the mounting body **708** which is different from the first orientation. As shown in FIGS. **87** and **90**, in the second orientation, the mounting foot **710** is removably attachable to the mounting body **708** with the second side **720** of the mounting foot **710** facing the mounting body **708**. More specifically, when the mounting foot **710** is attached to the mounting body **708** at the mounting position **722** in the second orientation, at least a portion of the second side **720** of the mounting foot **710** is in contact with the mounting body **708**. Thus, the mounting foot **710** may be attached to the mounting body **708** at the mounting position **722** in either the first orientation or the second orientation.

[0412] The mounting foot **710** may be operable to mount the mounting body **708** to a hull of a vessel when attached to the mounting body **708** at the mounting position **722** in the first orientation, or when attached to the mounting body **708** at the mounting position **722** in the second orientation, or when attached to the mounting body **708** at the mounting position **722** in the first or second orientation. That is, for mounting to some vessels, the mounting foot **710** may need to be in the first orientation, while for mounting to other vessels, the mounting **710** may need to be in the second orientation, and for mounting to yet other vessels, the mounting **710** may be in either orientation.

[0413] In the embodiment shown, when the mounting foot **710** is attached to the mounting body **708** at the mounting position **722** in the first orientation, the mounting foot **710** protrudes from the mounting body **708** a first distance **726**. When the mounting foot **710** is attached to the mounting body **708** at the mounting position **722** in the second orientation, the mounting foot **710** protrudes from the mounting body **708** a second distance **728**. As shown in particular in FIGS. **89** and **90**, the second distance **728** is greater than the first distance **726**. However, in alternative embodiments, a mounting foot may not necessarily protrude different distances when attached to the mounting body **708** in different orientations. For example, in some alternative embodiments, the mounting foot may protrude the same distance from the mounting body **708** when attached in different orientations, but may protrude in different directions. More generally, in some embodiments, a mounting foot may mount the mounting body **708** to a vessel at a first position on the vessel when attached to the mounting body **708** in a first orientation, and may mount the mounting body **708** to the vessel at a second position on the vessel when attached to the mounting body **708** in a second orientation different from the first orientation.

[0414] In the embodiment shown, the first side **718** of the mounting foot **710** is opposite the second side **720** of the mounting foot **710**, such that, when the mounting foot **710** is in the first orientation, rotation of the mounting foot **710** by about 180° orients mounting foot **710** in the second orientation. That is, the mounting foot **710** is reversibly mountable to the mounting body **708**. However, alternative embodiments may differ, and may include mounting feet which may be reoriented from one orientation to another by rotations other than 180°. Also, in some embodiments, a mounting foot may be removably attachable to its mounting position on the mounting body **708** in two orientations in which the same side of the mounting foot faces and is in contact with the mounting body **708**.

[0415] In the embodiment shown, the mounting foot **710** is removably attachable to the mounting body **708** at the mounting position **722** with a plurality of fasteners **724**. More specifically, the plurality of fasteners **724** include four bolts. However, alternative embodiments may differ. For example, in some alternative embodiments, a mounting foot may be removably attachable to the mounting body **708** using a different number of fasteners (e.g., two fasteners) and/or different type of fastener. In some alternative embodiments, a mounting foot may be removably attachable to the mounting body **708** without using any fasteners. Additionally, in some embodiments, one or more of the mounting feet **710**, **712**, **714**, and **716** may include an integrated isolation damper configured to vibrationally isolate the mounting body **708** from a vessel to which it is mounted vessel when the mounting feet **710**, **712**, **714**, and **716** mount the mounting body **708** to the vessel.

Roll-Stabilizer Housing

[0416] In some embodiments, a roll-stabilizer apparatus such as those described herein may include an outer housing surrounding some or all of the roll-stabilizer apparatus. For example,

[0417] FIGS. **91** to **94** show a roll-stabilizer apparatus **730** which may be similar to and/or interchangeable with any one of the roll-stabilizer apparatuses **108**, **233**, **324**, **374**, **419**, **434**, and/or **444**. The roll stabilizer apparatus **730** includes an outer housing **732** which surrounds at least a portion of a flywheel support body (not shown) of the roll stabilizer apparatus **730**, while permitting rotation of the flywheel-support body relative to a mounting body (not

shown) of the roll stabilizer apparatus **730** around a precession axis of the mounting body. In some embodiments, the outer housing **732** surrounds at least one third of the flywheel-support body. In some embodiments the outer housing **732** surrounds at least one half of the flywheel-support body.

[0418] The outer housing **732** of the embodiment shown includes a main shell portion **734** and removable portions **736** and **738**. Each of the removable portions **736** and **738** may be, for example, an access panel and/or a cover. Each of the removable portions **736** and **738** is removably attachable to the main shell portion **734** over one or more access openings defined by the main shell portion. For example, the removable portion **736** is removably attachable to the main shell portion **734** over an access opening shown generally at **740**.

[0419] The removable portion **736** is removably attached to the main shell portion **734** by tool-free mounts **742**. In general, the tool-free mounts **742** permit tool-less attachment and removal of the removable portion **736** to and from the main shell portion **734**. In the embodiment shown, the tool-free mounts **742** are ball-and-socket mounts. Also in the embodiment shown, each of the tool-free mounts **742** is configured to release the removable portion **736** from the main shell portion **734** at least when a separation force urges the removable portion **736** away from the main shell portion **734**. In some embodiments, one or more of the tool-free mounts **742** may be or may include a vibration isolation mount configured to vibrationally isolate the removable portion **736** from the main shell portion **734**.

[0420] The removable portion **738** is removably attached to the main shell portion **734** by captive fasteners **744**. Each of the captive fasteners **744** is non-removably retained by the removable portion **738**. In the embodiment shown, the removable portion **738** retains the captive fasteners while permitting rotation of the each of captive fasteners **744** relative to the removable portion **738**. Also in the embodiment shown, the captive fasteners **744** include captive screws. Also in the embodiment shown, the removable portion **738** includes resilient bodies **746** retaining each of captive fasteners **744**. More specifically, in the embodiment shown, the resilient body **746** are rubber isolators.

Interchangeability of Embodiments

[0421] Elements of embodiments as described above may be interchangeably used in other embodiments described above. For example, the flywheel assembly **115**, the stators **138** and **139**, and the axial active magnetic bearing **140** of the roll-stabilizer apparatus **108** may be interchangeable with the flywheel body **235**, the rotation-support body **250**, and the bearings **252** and **253** of the roll-stabilizer apparatus **233**. Similarly, the precession-control devices **274** and **275**, and/or the precession bearings **267** and **268**, of the roll-stabilizer apparatus **233** may be used to control and support rotation of the flywheel-support body **113** around the precession axis of rotation **119** in the roll-stabilizer apparatus **108**. The mounting feet **339** and **340** of the mounting body **236** of the roll-stabilizer apparatus **233** may also be used to mount the mounting body **114** of the roll-stabilizer apparatus **108** to the hull **101**.

CONCLUSION

[0422] Roll-stabilization apparatuses such as those described herein, for example, may be for marine vessels and may be preferable to other roll-stabilization apparatuses. For example, other active magnetic bearings may not have sufficient strength or controllability, or may be too large, for practical applications in roll stabilization.

[0423] Although specific embodiments have been described and illustrated, such embodiments should be considered illustrative only and not as limiting the invention as construed according to the accompanying claims.

1. A flywheel apparatus comprising:

a flywheel body;

a flywheel-support body supporting the flywheel body and permitting rotation of the flywheel body relative to the flywheel-support body around at least one axis of rotation comprising a spin axis of rotation of the flywheel body and a central-rotation axis of the flywheel-support body;

at least one plurality of bearings operable to support the flywheel body for rotation relative to the flywheel-support body around the at least one axis of rotation; and

at least one resilient body configured to resiliently urge together, along the central-rotation axis of the flywheel-support body, individual bearings of the at least one plurality of bearings.

2. The apparatus of claim **1** wherein the individual bearings of the at least one plurality of bearings are axially adjacent to one another along the central-rotation axis of the flywheel-support body.

3. The apparatus of claim **1** wherein the at least one resilient body preloads at least one of the individual bearings of the at least one plurality of bearings.

4. The apparatus of claim **3** wherein the at least one resilient body preloads each of the individual bearings of the at least one plurality of bearings.

5. The apparatus of claim **1** wherein each of the individual bearings of the at least one plurality of bearings is a mechanical bearing comprising an inner race and an outer race operable to rotate relative to the inner race and relative to the flywheel-support body.

6. The apparatus of claim **5** wherein the at least one resilient body is configured to resiliently urge the inner race of at least one of the individual bearings of the at least one plurality of bearings towards another one of the individual bearings of the at least one plurality of bearings.

7. The apparatus of claim **5** further comprising at least one spacer between outer races of adjacent ones of the at least one plurality of bearings, the at least one spacer maintaining axial separation, along the central-rotation axis of the flywheel-support body, between the outer races of the adjacent ones of the at least one plurality of bearings.

8. The apparatus of claim **5** wherein an outer race of one or more of the at least one plurality of bearings is larger in an axial dimension along the central-rotation axis of the flywheel-support body than an inner race of the one or more of the at least one plurality of bearings.

9. (canceled)

10. The apparatus of claim **1** wherein each of the individual bearings of the at least one plurality of bearings is a mechanical bearing comprising an outer race and an inner race operable to rotate relative to the outer race and relative to the flywheel-support body.

11. The apparatus of claim **10** wherein the at least one resilient body is configured to resiliently urge the outer race of at least one of the individual bearings of the at least one

plurality of bearings towards another one of the individual bearings of the at least one plurality of bearings.

12. The apparatus of claim **10** further comprising at least one spacer between inner races of adjacent ones of the at least one plurality of bearings, the at least one spacer maintaining axial separation, along the central-rotation axis of the flywheel-support body, between the inner races of the adjacent ones of the at least one plurality of bearings.

13. The apparatus of claim **10** wherein an inner race of one or more of the at least one plurality of bearings is larger in an axial dimension along the central-rotation axis of the flywheel-support body than an outer race of the one or more of the at least one plurality of bearings.

14. (canceled)

15. (canceled)

16. The apparatus of claim **1** wherein the at least one resilient body is axially adjacent to the at least one plurality of bearings along the central-rotation axis of the flywheel-support body.

17. The apparatus of claim **1** wherein the at least one resilient body comprises a first resilient body and a second resilient body, the first resilient body axially adjacent to the at least one plurality of bearings along the central-rotation axis of the flywheel-support body at a first axial end of the at least one plurality of bearings, and the second resilient body axially adjacent to the at least one plurality of bearings along the central-rotation axis of the flywheel-support body at a second axial end of the at least one plurality of bearings.

18. The apparatus of claim **1** wherein the at least one resilient body comprises at least one spring.

19. (canceled)

20. The apparatus of claim **1** wherein the at least one plurality of bearings comprises a pair of bearings.

21-110. (canceled)

111. A roll-stabilizer apparatus comprising:

a flywheel body;

a flywheel-support body supporting the flywheel body and permitting rotation of the flywheel body relative to the flywheel-support body around at least one axis of rotation comprising a spin axis of rotation of the flywheel body and a central-rotation axis of the flywheel-support body, the flywheel-support body defining at least one flywheel-support-body fluid channel comprising a first flywheel-support-body opening and a second flywheel-support-body opening, the at least one flywheel-support-body fluid channel operable to convey a fluid through at least some of the flywheel-support body between the first flywheel-support-body opening and the second flywheel-support-body opening; and

a mounting body supporting the flywheel-support body and permitting rotation of the flywheel-support body relative to the mounting body around a precession axis non-parallel to the at least one axis of rotation, the mounting body defining at least a first mounting-body fluid channel and a second mounting-body fluid channel, the first mounting-body fluid channel comprising a first mounting-body opening and a second mounting-body opening and operable to convey the fluid through at least some of the mounting body between the first mounting-body opening and the second mounting-body opening, the second mounting-body fluid channel comprising a third mounting-body opening and a fourth mounting-body opening and operable to convey the fluid through at least some of the mounting body between the third mounting-body opening and the fourth mounting-body opening;

wherein the second mounting-body opening is in fluid communication with the first flywheel-support-body opening, and wherein the second flywheel-support-body opening is in fluid communication with the third mounting-body opening.

112. The apparatus of claim **110** further comprising at least one precession bearing operable to support the flywheel-support body for rotation relative to the mounting body around the precession axis, the at least one precession bearing comprising an outer precession body surrounding an inner precession body, the outer precession body rotatable relative to the inner precession body and relative to the mounting body, wherein the flywheel-support body comprises a protruding portion defining the first flywheel-support-body opening and the second flywheel-support-body opening, and wherein at least a portion of the protruding portion is surrounded by the inner precession body of the at least one precession bearing.

113. (canceled)

114. (canceled)

115. The apparatus of claim **110** wherein the first flywheel-support-body opening is a first radial distance from the central-rotation axis of the flywheel-support body and the second flywheel-support-body opening is a second radial distance from the central-rotation axis of the flywheel-support body, the first radial distance different from the second radial distance.

116. The apparatus of claim **110** wherein the second mounting-body opening is a first distance from the central-rotation axis of the flywheel-support body and the third mounting-body opening is a second distance from the central-rotation axis of the flywheel-support body, first distance different from the second distance.

117-346. (canceled)

* * * * *