US 20250260240A1

(19) United States
(12) Patent Application Publication
OKAMOTO et al.
(10) Pub. No.: US 2025/0260240 A1
(43) Pub. Date: Aug. 14, 2025

(54) **SEMICONDUCTOR DEVICE AND OPERATING METHOD OF SEMICONDUCTOR DEVICE**

(71) Applicant: **SEMICONDUCTOR ENERGY LABORATORY CO., LTD.**, Atsugi-shi (JP)

(72) Inventors: **Yuki OKAMOTO**, Isehara (JP); **Takahiko ISHIZU**, Sagamihara (JP)

(21) Appl. No.: **19/195,776**

(22) Filed: **May 1, 2025**

Related U.S. Application Data

(62) Division of application No. 17/269,330, filed on Feb. 18, 2021, filed as application No. PCT/IB2019/057027 on Aug. 21, 2019.

(30) **Foreign Application Priority Data**

Aug. 31, 2018	(JP)	2018-163168
Oct. 25, 2018	(JP)	2018-201005
Nov. 22, 2018	(JP)	2018-219225
Dec. 21, 2018	(JP)	2018-239852

Publication Classification

(51) **Int. Cl.**

H02J 7/00	(2006.01)
H01M 10/42	(2006.01)
H01M 10/44	(2006.01)
H01M 10/48	(2006.01)
H10D 30/67	(2025.01)
H10D 86/40	(2025.01)
H10D 86/60	(2025.01)
H10D 87/00	(2025.01)

(52) **U.S. Cl.**

CPC ***H02J 7/0014*** (2013.01); ***H01M 10/425*** (2013.01); ***H01M 10/441*** (2013.01); ***H01M 10/48*** (2013.01); ***H10D 30/6755*** (2025.01); ***H10D 86/423*** (2025.01); ***H10D 86/60*** (2025.01); ***H10D 87/00*** (2025.01); *H01M 2010/4271* (2013.01)

(57) **ABSTRACT**

To provide a battery control circuit with a novel structure, a battery protection circuit with a novel structure, and a power storage device including the battery circuit. The semiconductor device includes n cell-balance circuits (n is an integer greater than or equal to 1). One secondary battery is electrically connected to one cell-balance circuit. The cell-balance circuit includes a comparison circuit, and a memory element is electrically connected to an inverting input terminal of the comparison circuit. The memory element includes a first transistor and a capacitor. A potential is retained. The retained potential changes in accordance with a change in a potential of a negative electrode of the secondary battery. The comparison circuit has a function of comparing the retained potential with a potential of a positive electrode of the secondary battery. Output from the comparison circuit controls a gate voltage of a second transistor electrically connected to the secondary battery in parallel. The first transistor includes a metal oxide including indium in a channel formation region.

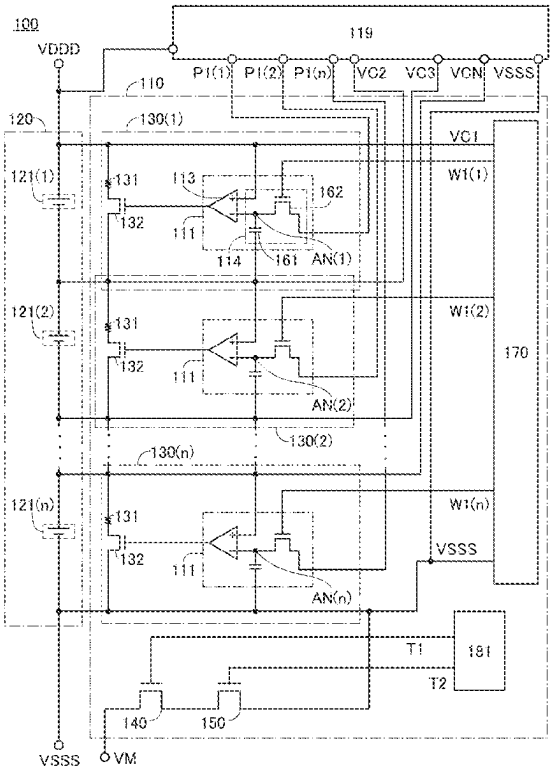

FIG. 1

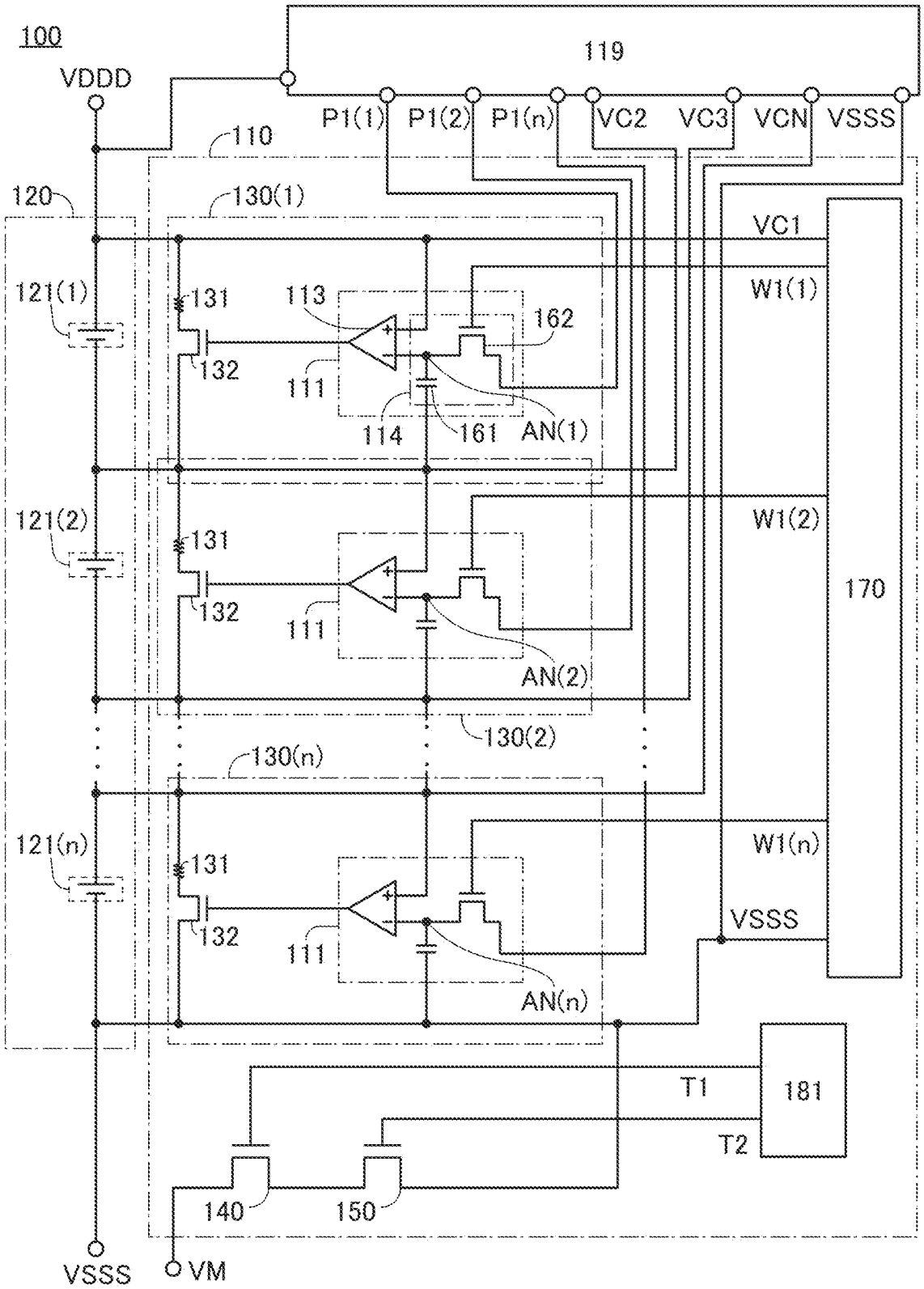
100
VDDD
119
P1(1)
P1(2)
P1(n)
VC2
VC3
VCN
VSSS
110
120
130(1)
VC1
121(1)
131
113
162
W1(1)
132
111
114
161
AN(1)
121(2)
W1(2)
131
132
111
170
AN(2)
130(2)
130(n)
121(n)
W1(n)
131
132
111
VSSS
AN(n)
T1
181
T2
140
150
VSSS
VM

FIG. 2

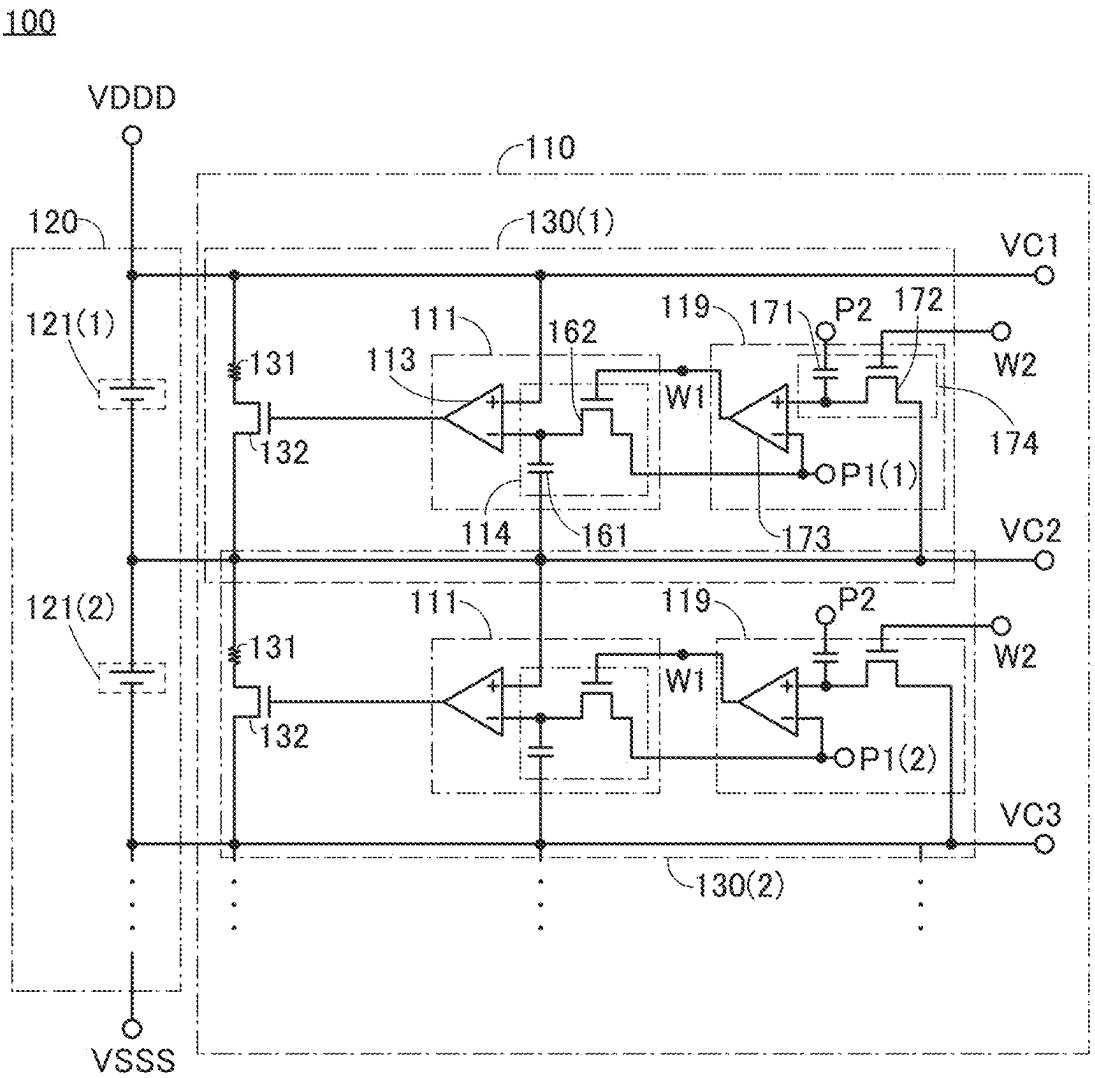
100
VDDD
110
120
130(1)
VC1
121(1)
111
162
119
171
P2
172
131
113
W1
W2
132
174
P1(1)
114
161
173
VC2
121(2)
111
119
P2
131
W1
W2
132
P1(2)
VC3
130(2)
VSSS

FIG. 3

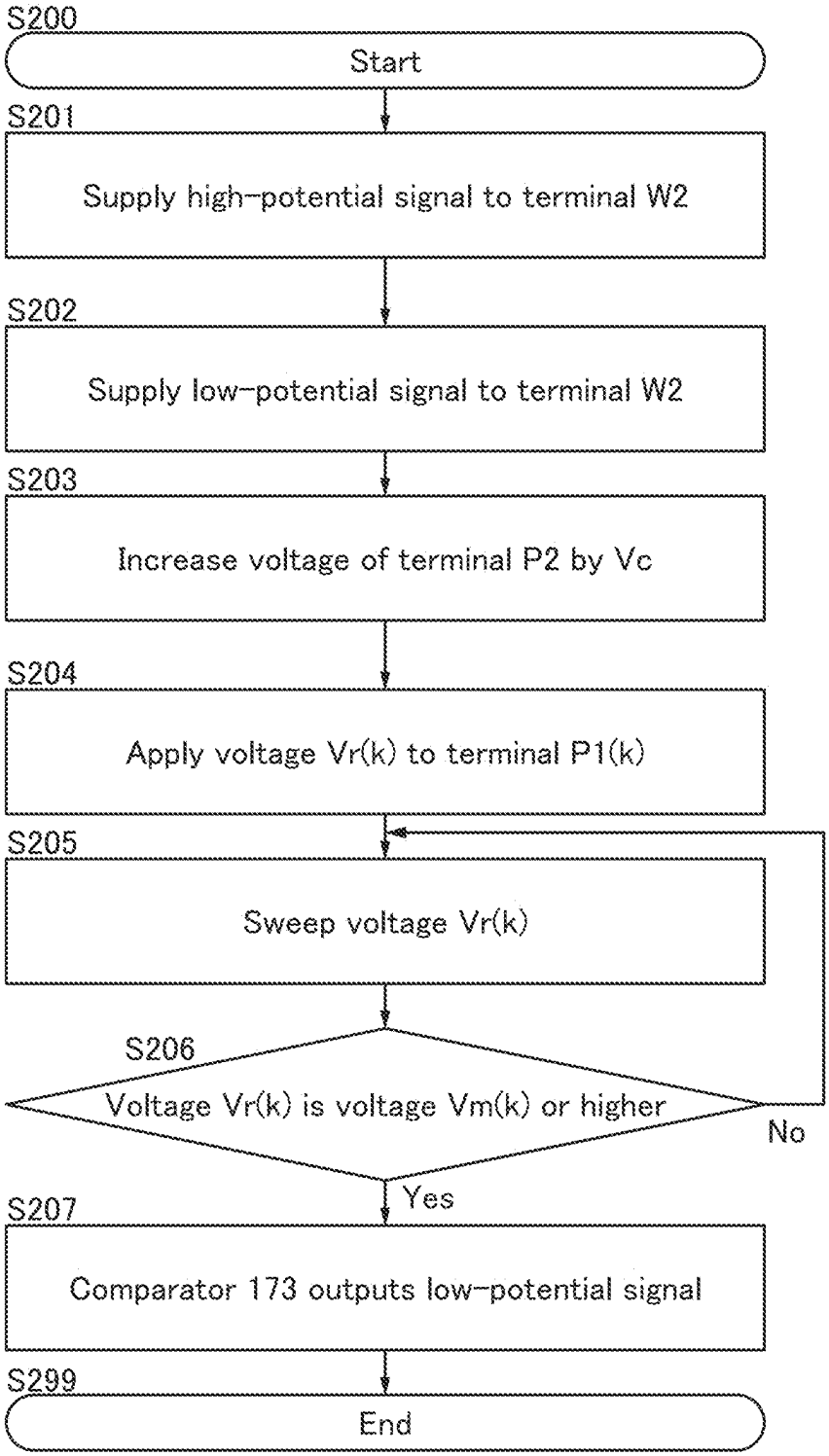
S200
Start
S201
Supply high-potential signal to terminal W2
S202
Supply low-potential signal to terminal W2
S203
Increase voltage of terminal P2 by Vc
S204
Apply voltage Vr(k) to terminal P1(k)
S205
Sweep voltage Vr(k)
S206
Voltage Vr(k) is voltage Vm(k) or higher
No
Yes
S207
Comparator 173 outputs low-potential signal
S299
End

FIG. 4

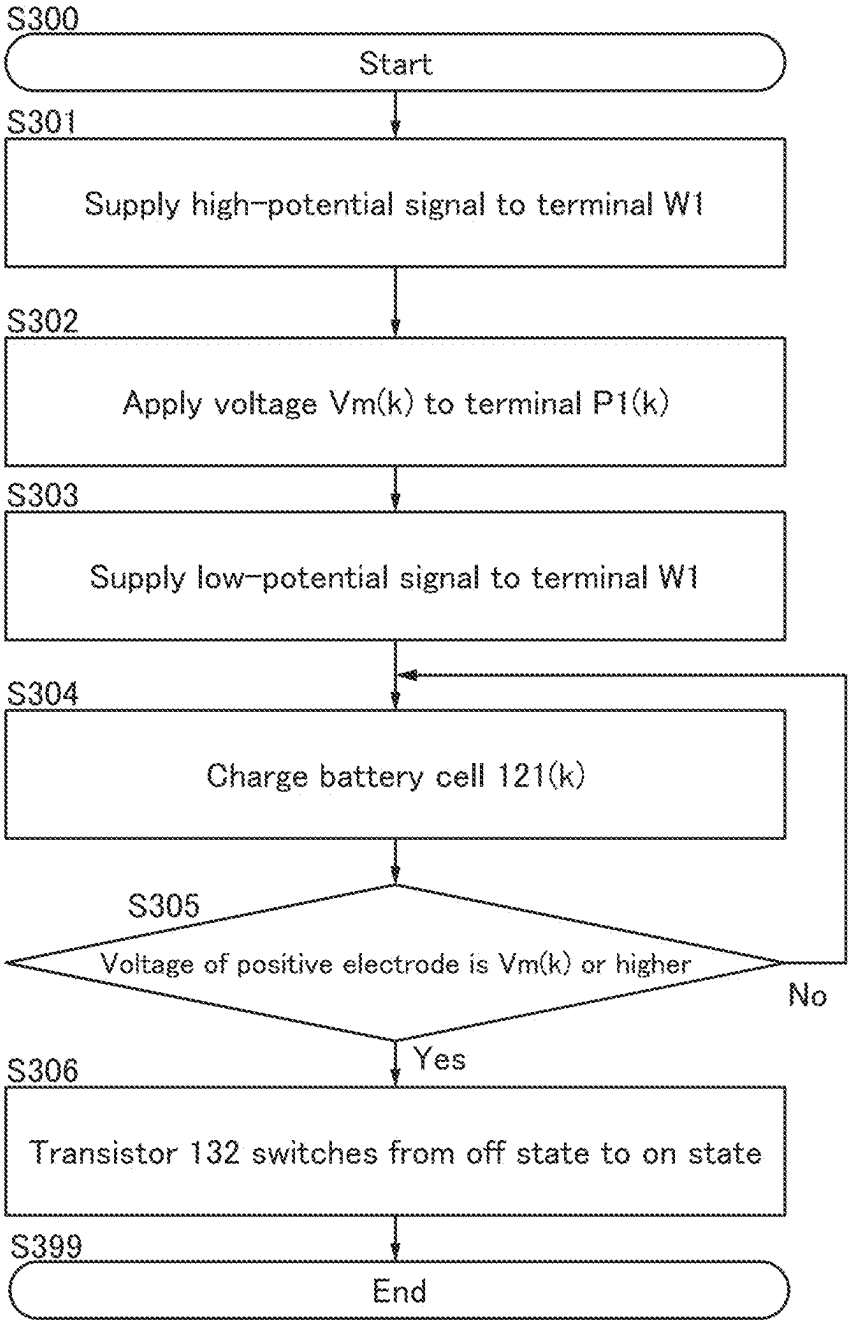
S300
Start
S301
Supply high-potential signal to terminal W1
S302
Apply voltage Vm(k) to terminal P1(k)
S303
Supply low-potential signal to terminal W1
S304
Charge battery cell 121(k)
S305
Voltage of positive electrode is Vm(k) or higher
No
Yes
S306
Transistor 132 switches from off state to on state
S399
End

FIG. 5

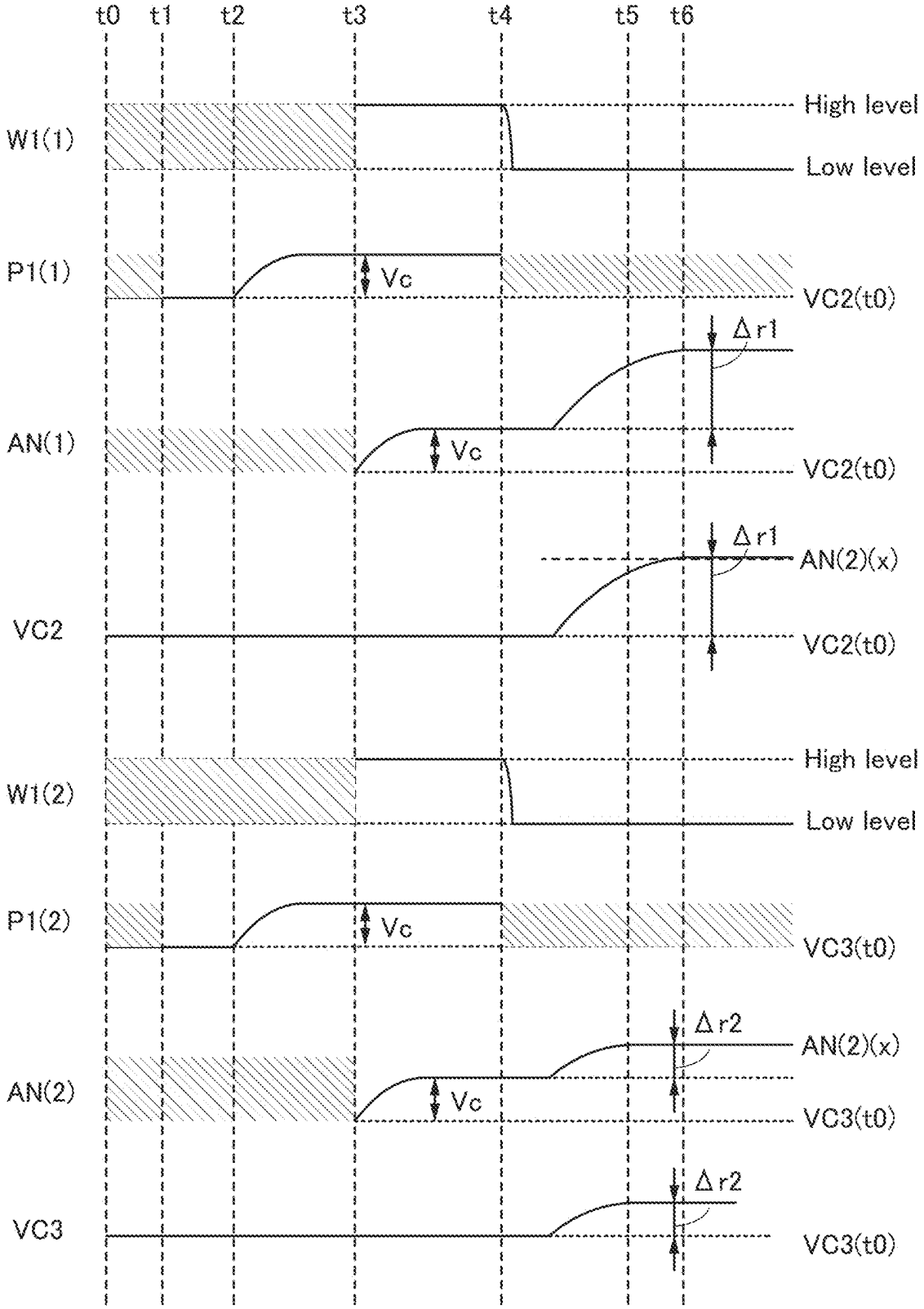
t0
t1
t2
t3
t4
t5
t6
W1(1)
High level
Low level
P1(1)
Vc
VC2(t0)
Δr1
AN(1)
Vc
VC2(t0)
Δr1
AN(2)(x)
VC2
VC2(t0)
W1(2)
High level
Low level
P1(2)
Vc
VC3(t0)
Δr2
AN(2)(x)
AN(2)
Vc
VC3(t0)
Δr2
VC3
VC3(t0)

FIG. 6

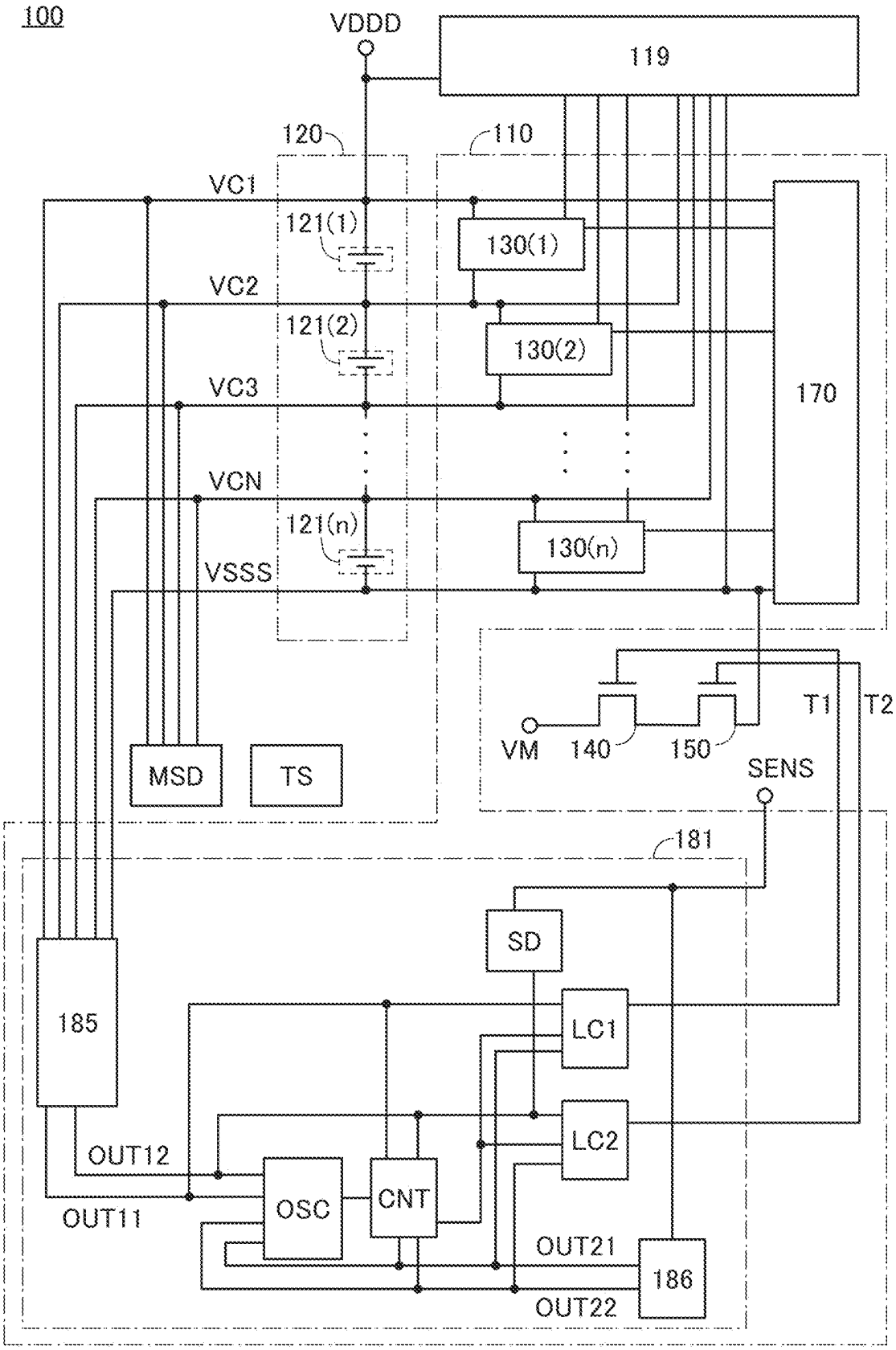
100
VDDD
119
120
110
VC1
121(1)
130(1)
VC2
121(2)
130(2)
VC3
170
VCN
121(n)
130(n)
VSSS
T1
T2
VM
140
150
SENS
MSD
TS
181
SD
185
LC1
LC2
OUT12
OUT11
OSC
CNT
OUT21
186
OUT22

FIG. 7

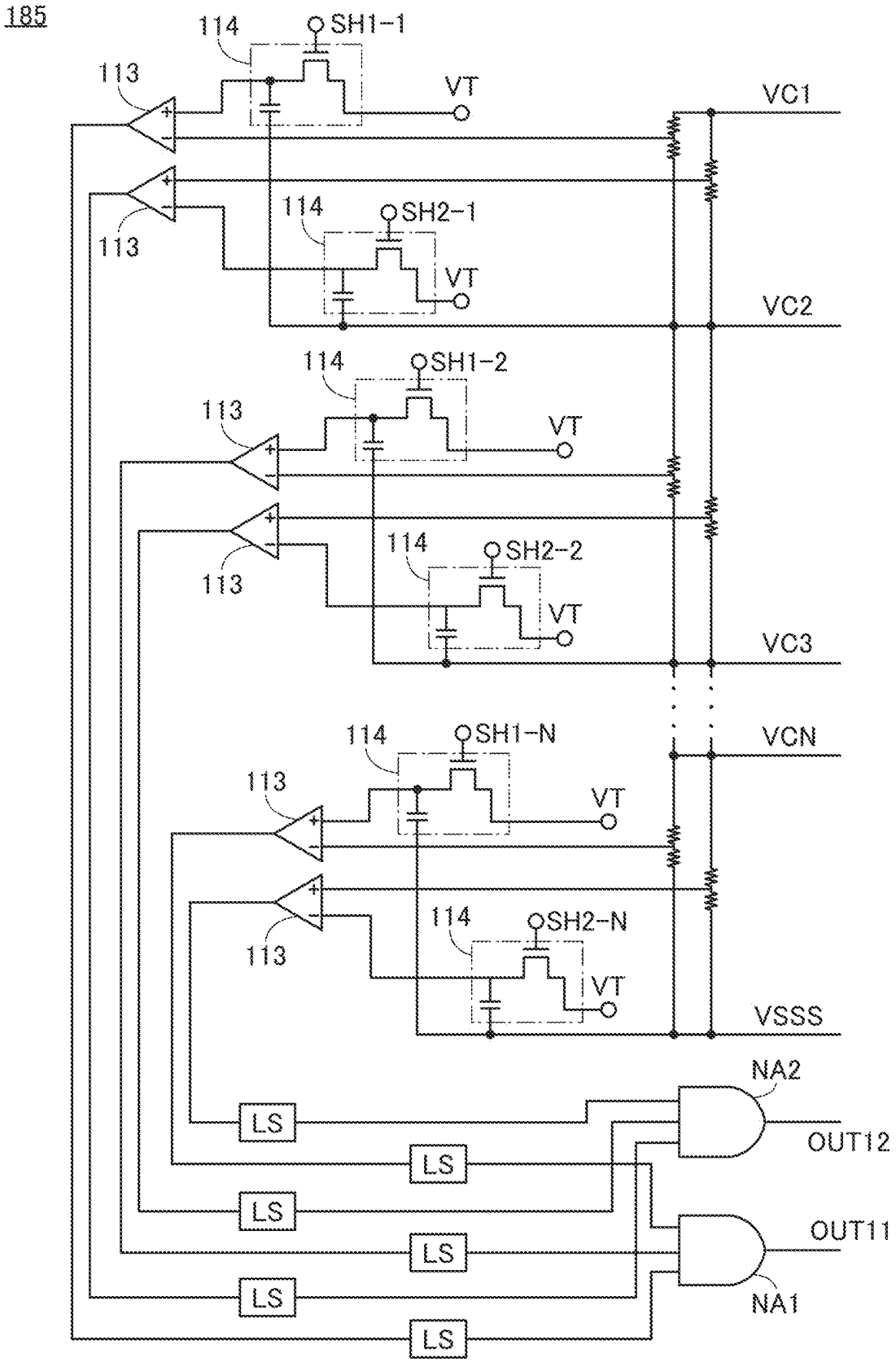
185
114
SH1-1
113
VT
VC1
114
SH2-1
113
VT
VC2
114
SH1-2
113
VT
114
SH2-2
113
VT
VC3
114
SH1-N
VCN
113
VT
114
SH2-N
113
VT
VSSS
NA2
LS
OUT12
LS
LS
OUT11
LS
LS
NA1
LS

FIG. 8A

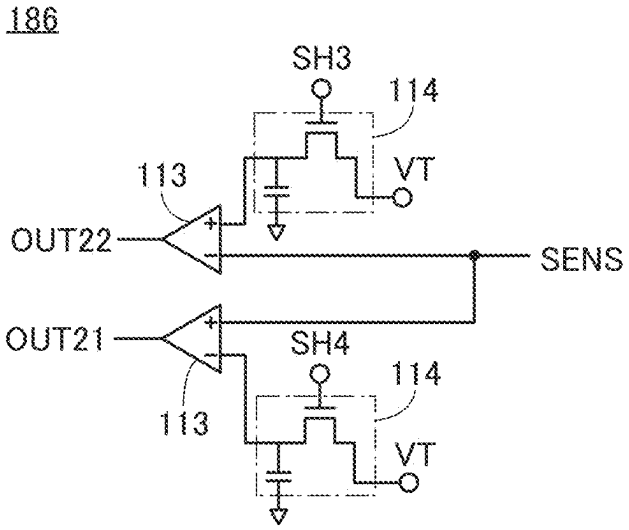
186
SH3
114
113
VT
OUT22
SENS
OUT21
SH4
114
113
VT

FIG. 8B

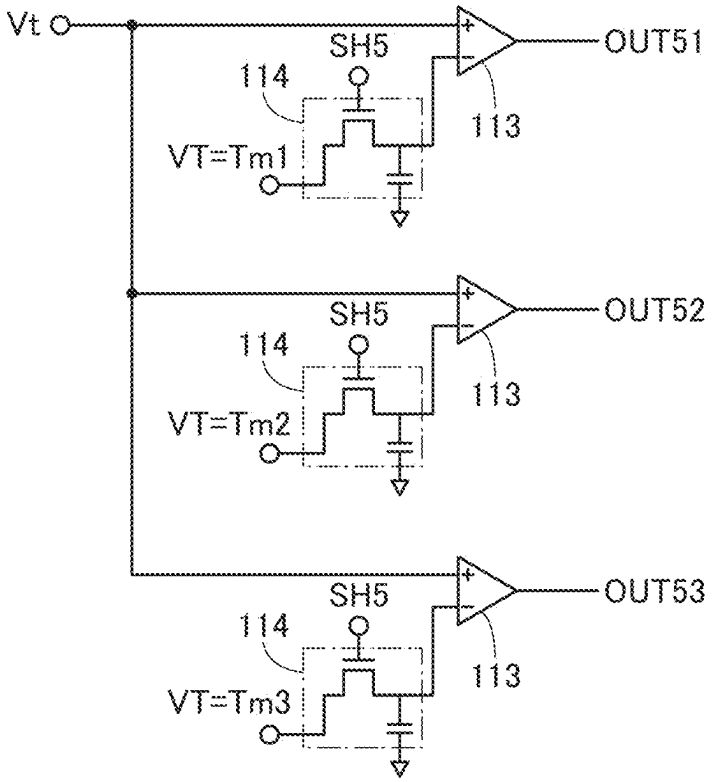
TS
Vt
OUT51
SH5
114
113
VT=Tm1
OUT52
SH5
114
113
VT=Tm2
OUT53
SH5
114
113
VT=Tm3

FIG. 9A

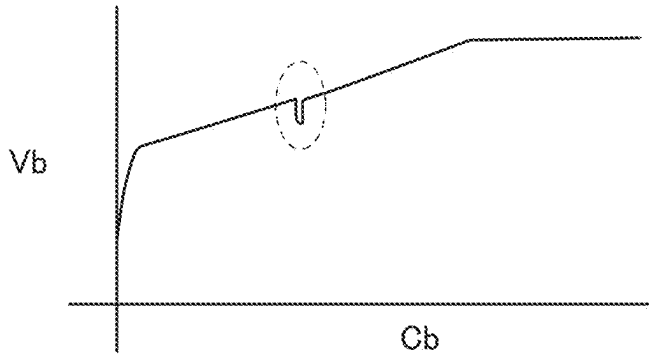

FIG. 9B

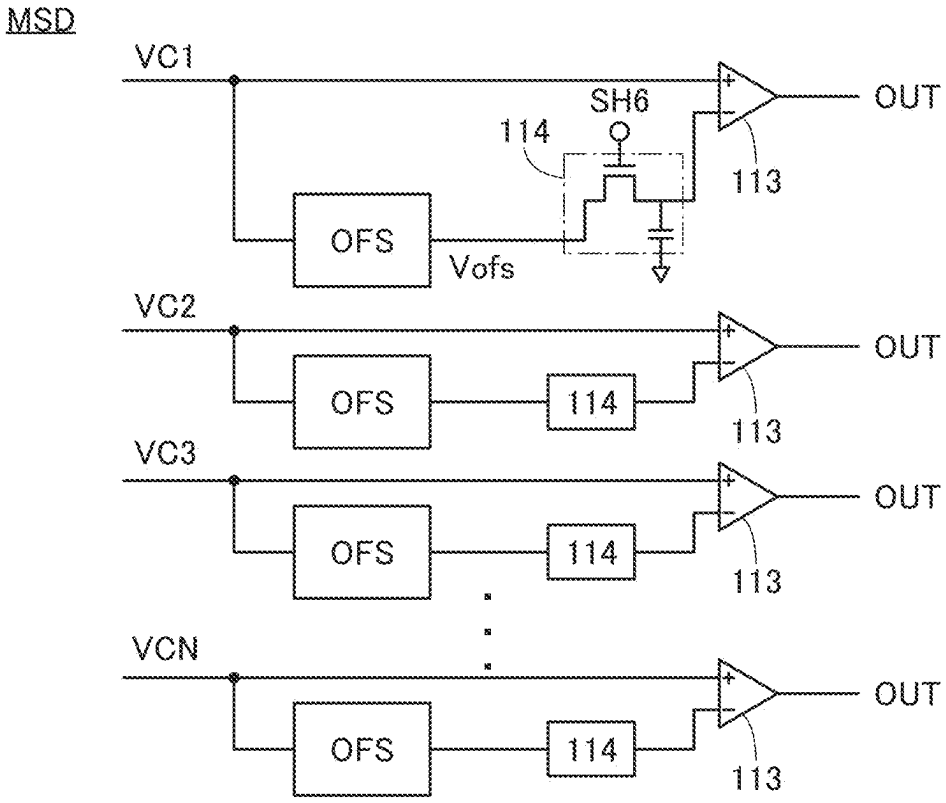

FIG. 9C

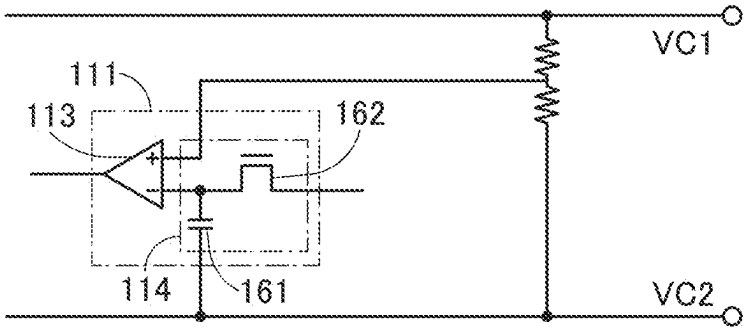

FIG. 10A

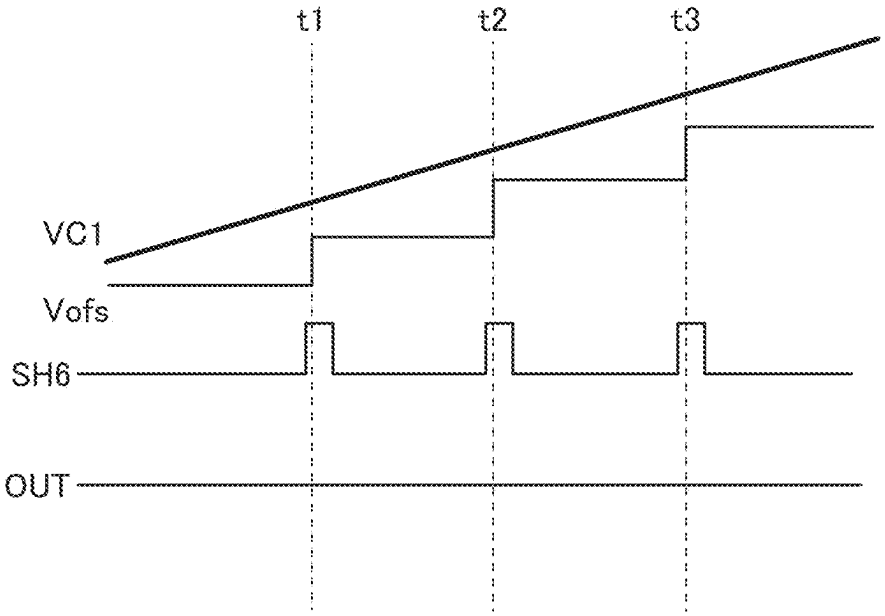

FIG. 10B

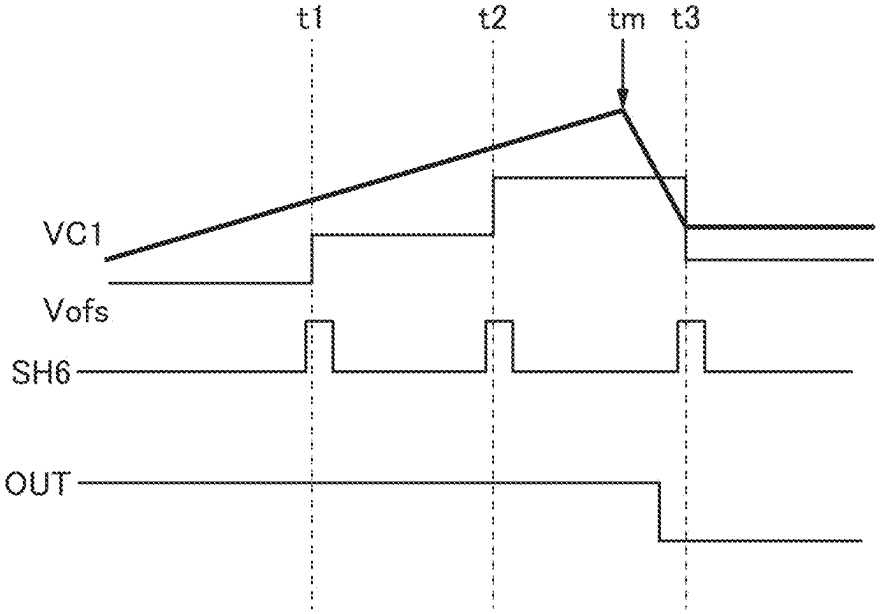

FIG. 11

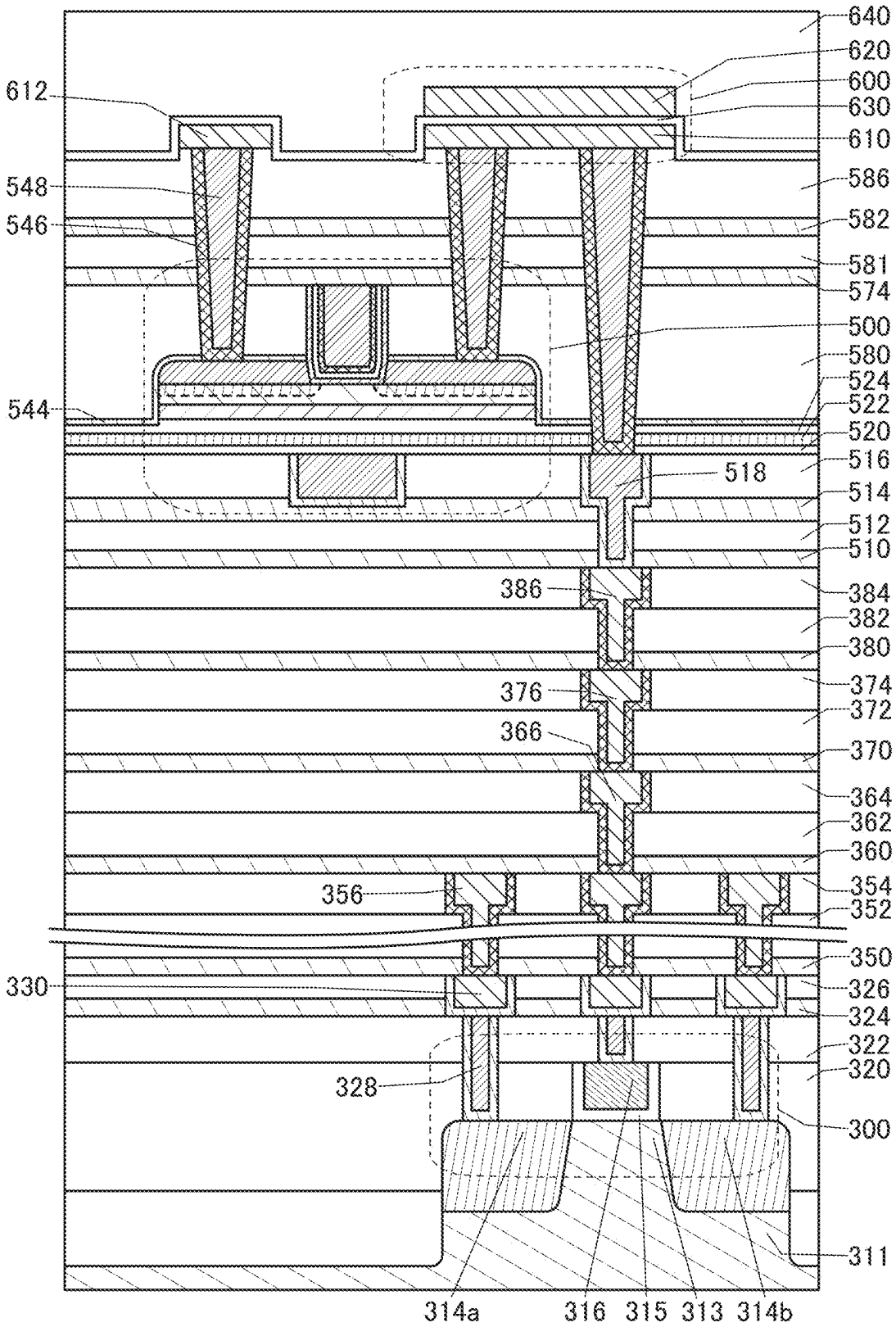
640
620
600
630
610
612
586
548
582
546
581
574
500
580
524
544
522
520
516
518
514
512
510
386
384
382
380
376
374
372
366
370
364
362
360
356
354
352
350
330
326
324
322
320
328
300
311
314a
316
315
313
314b

FIG. 12

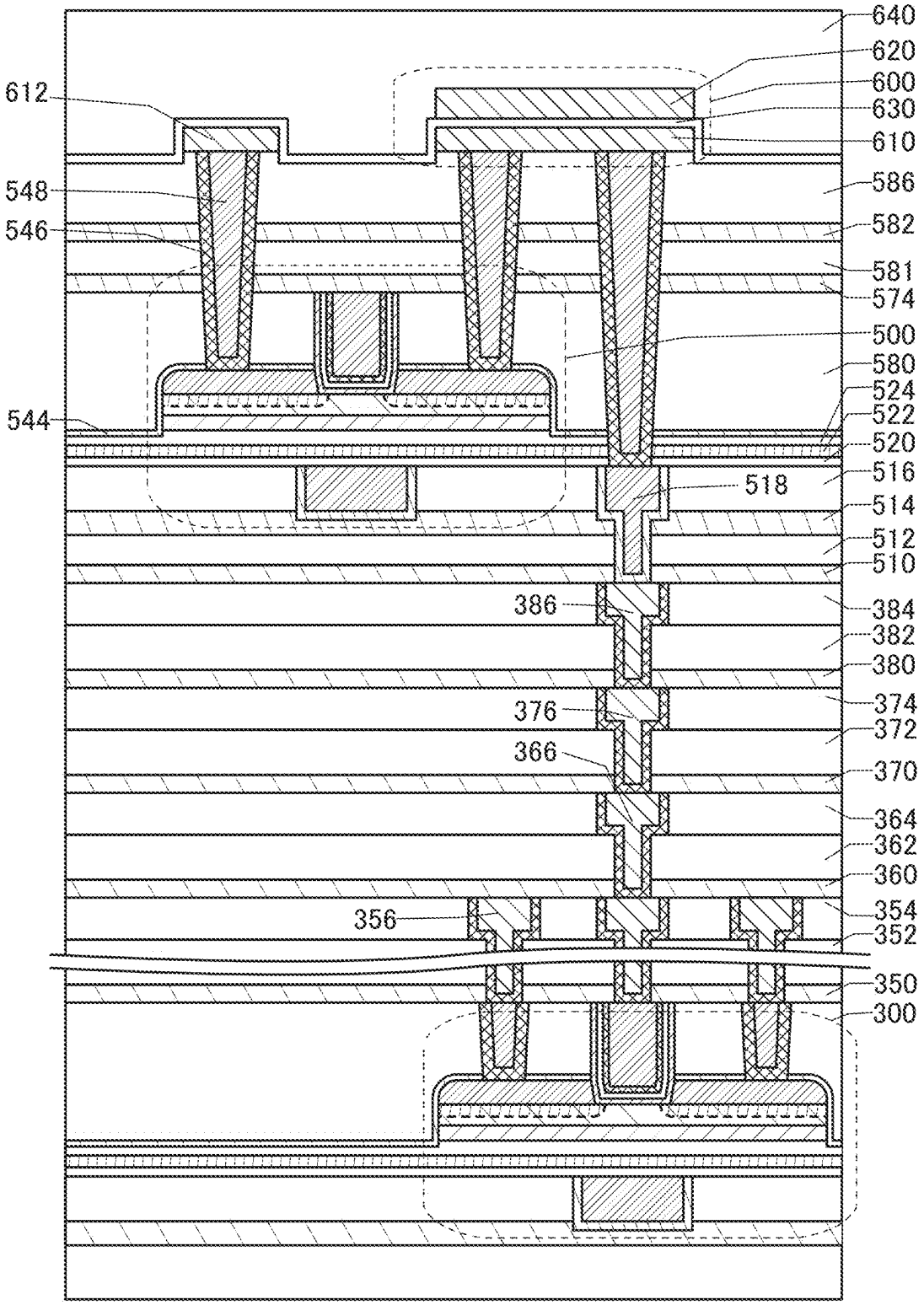
640
620
600
630
610
612
586
548
582
546
581
574
500
580
524
544
522
520
516
518
514
512
510
386
384
382
380
376
374
372
366
370
364
362
360
356
354
352
350
300

FIG. 13A

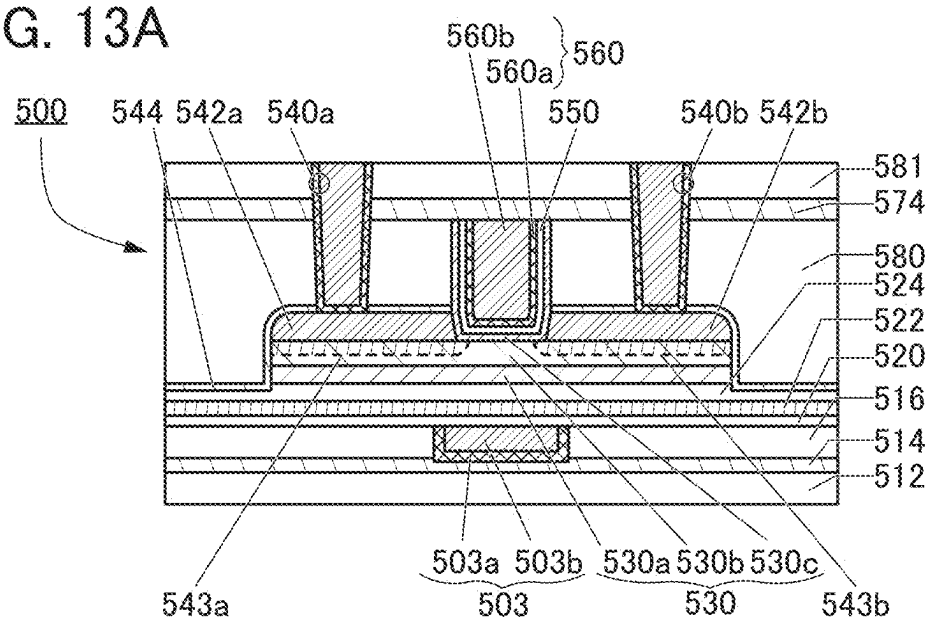

FIG. 13B

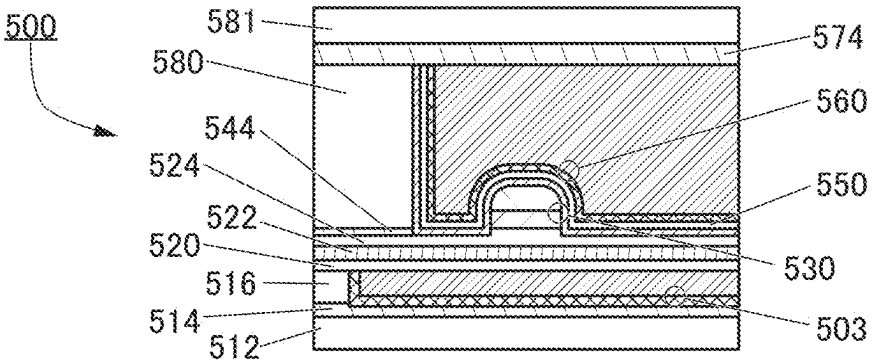

FIG. 13C

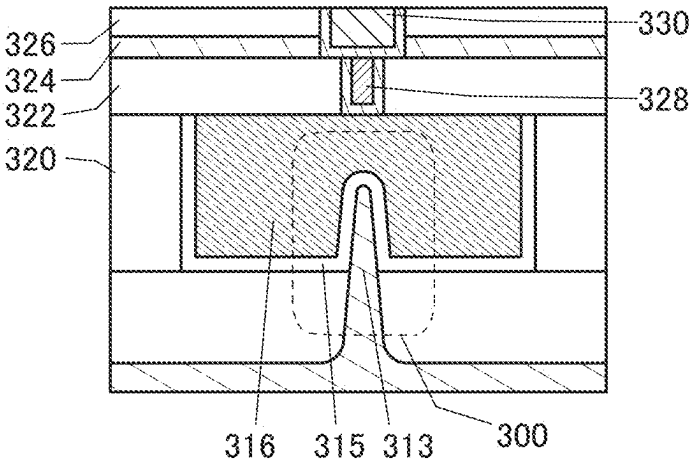

FIG. 14A

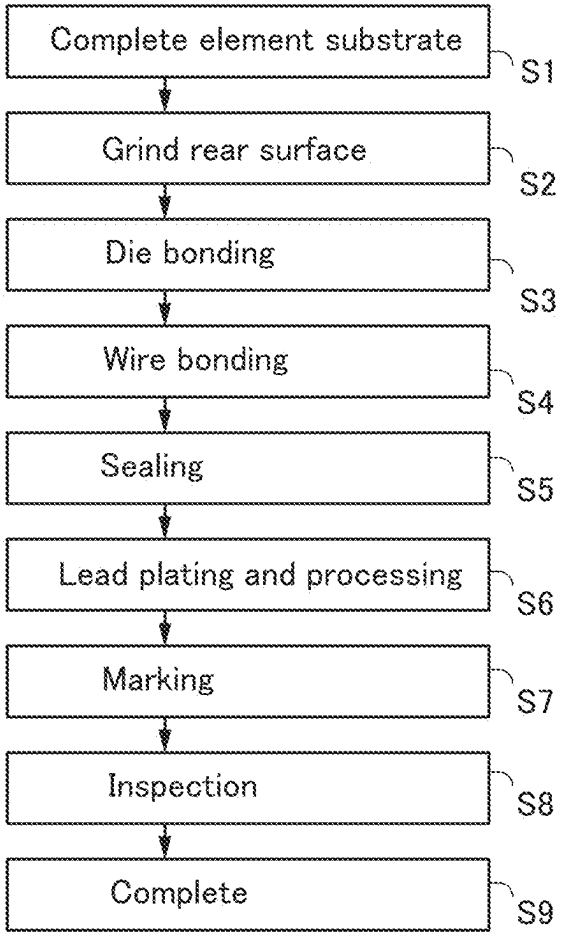

FIG. 14B

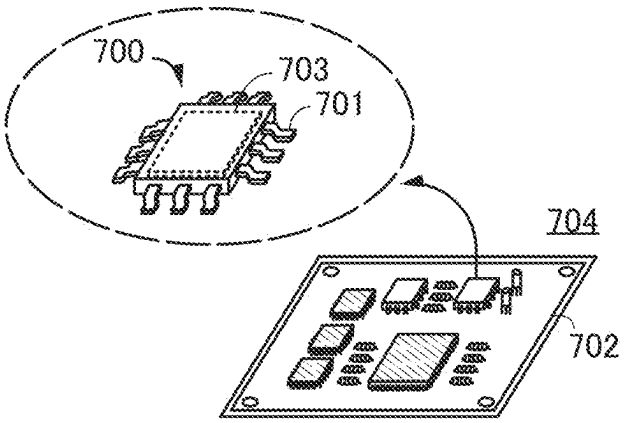

FIG. 15A

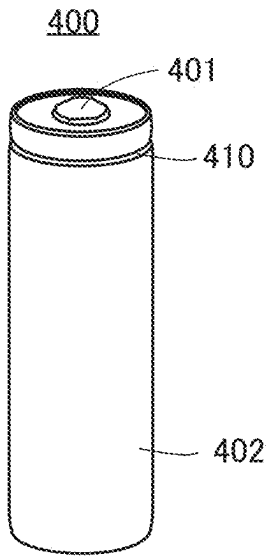

FIG. 15B

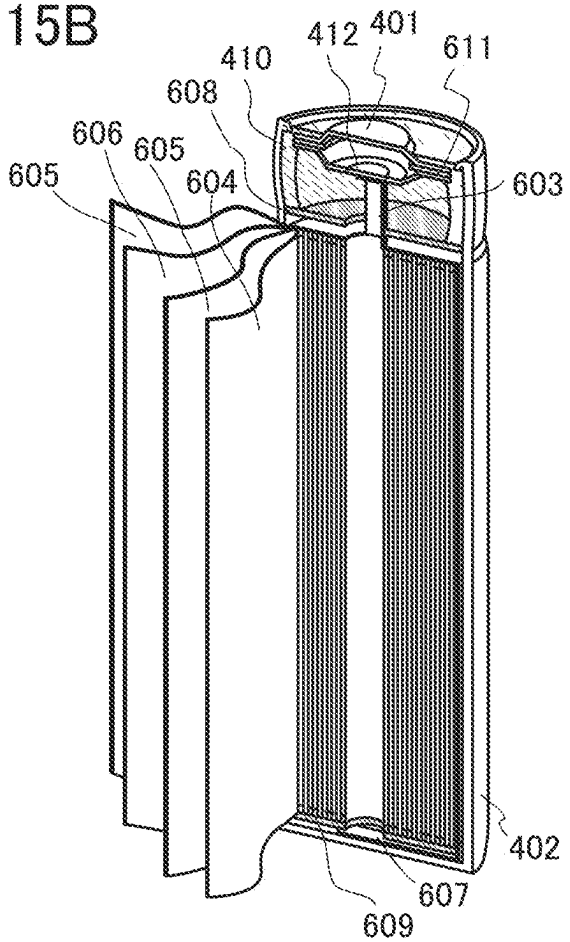

FIG. 15C

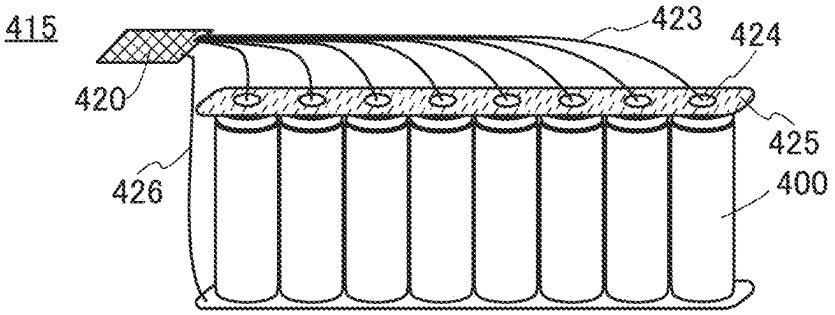

FIG. 15D

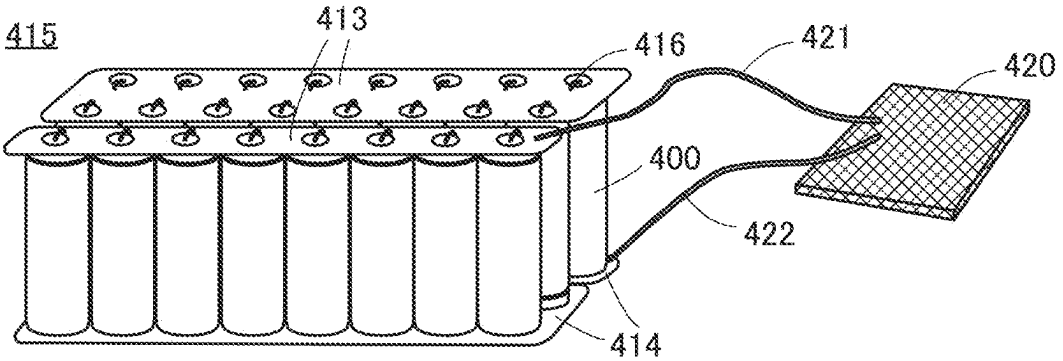

FIG. 16A

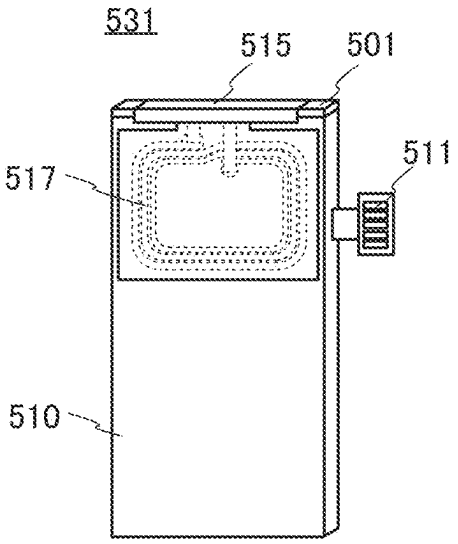

FIG. 16B

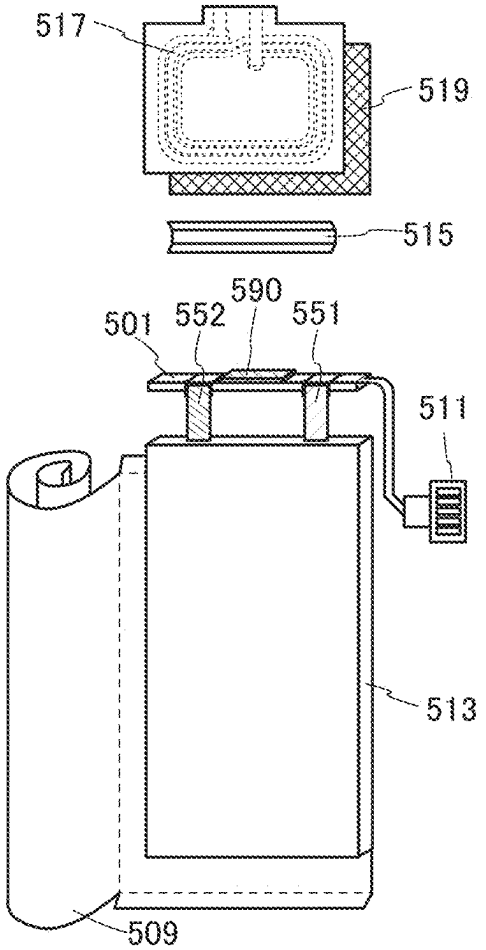

FIG. 16C

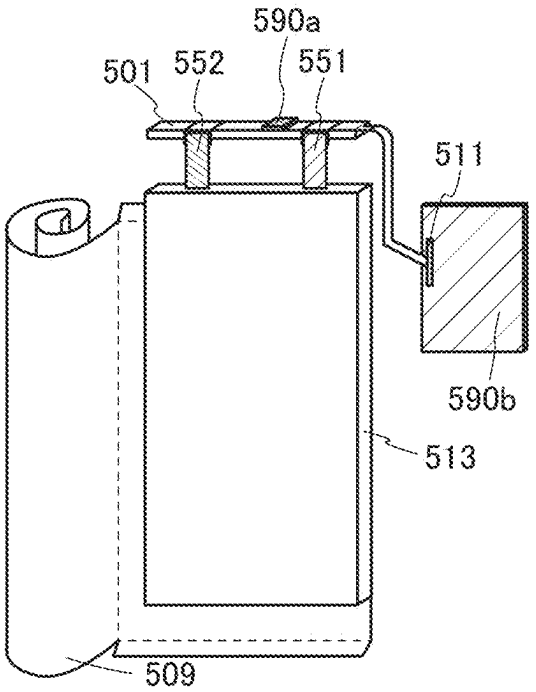

FIG. 17A

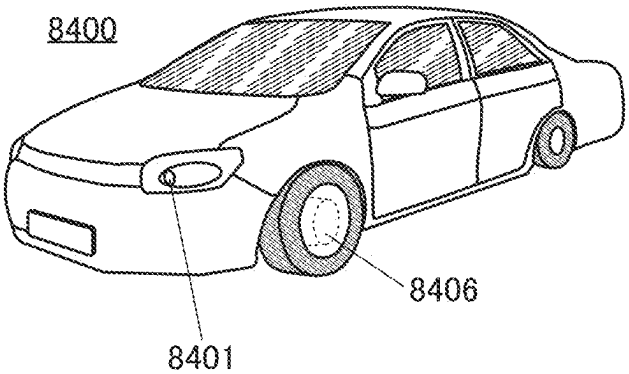

FIG. 17B

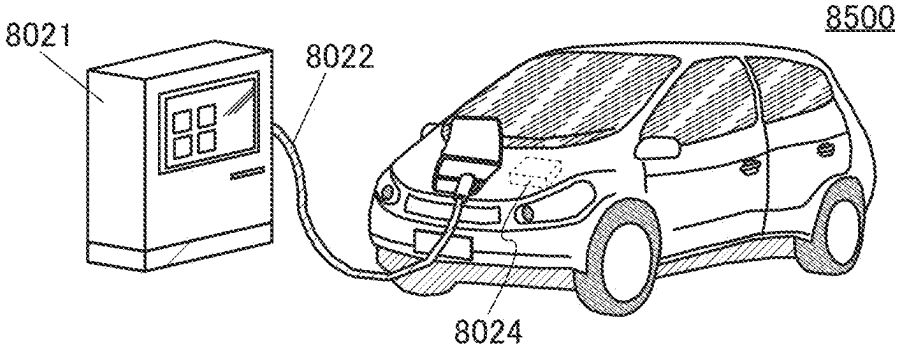

FIG. 17C

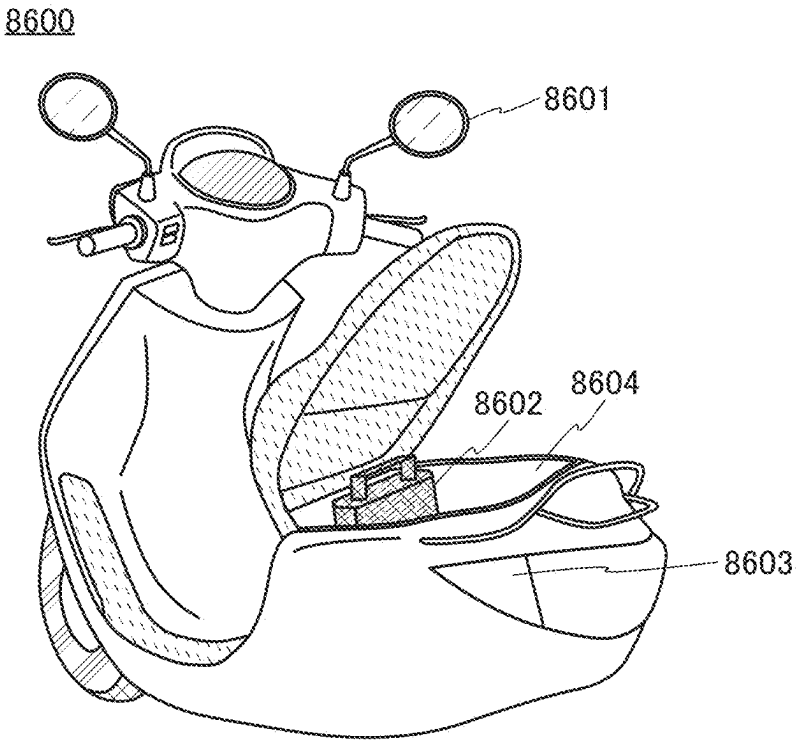

FIG. 18A

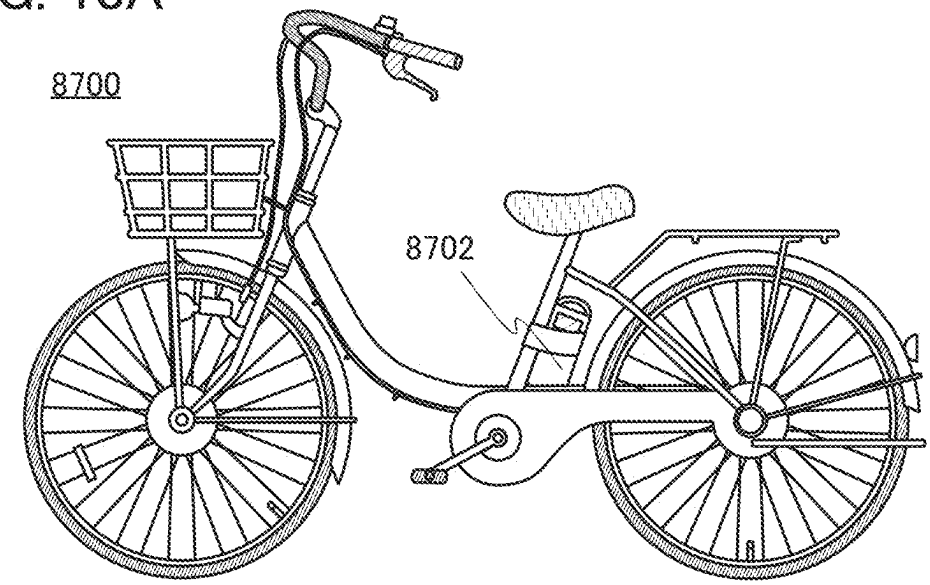

FIG. 18B

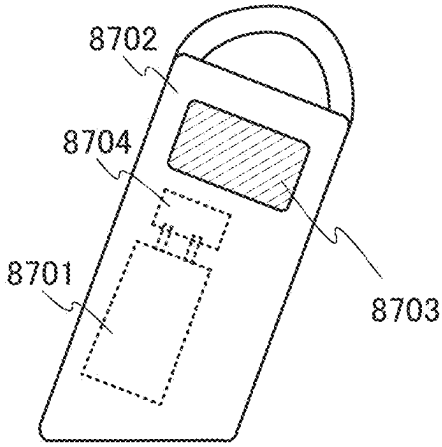

FIG. 19A

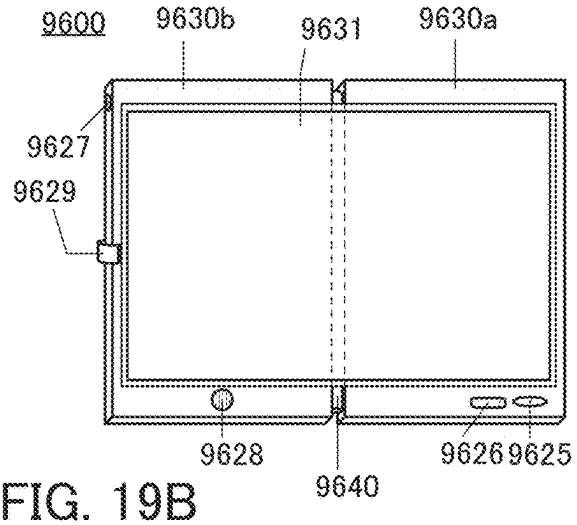

FIG. 19B

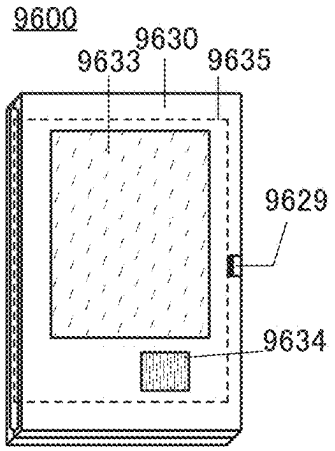

FIG. 19C

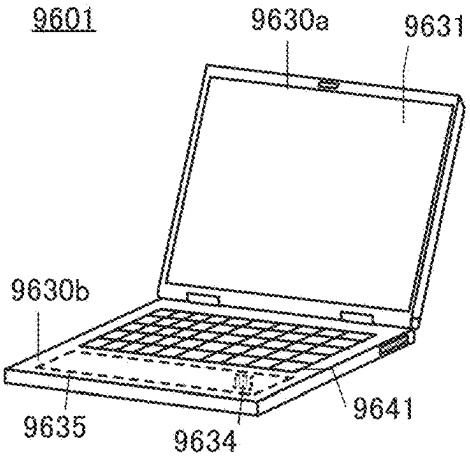

FIG. 20

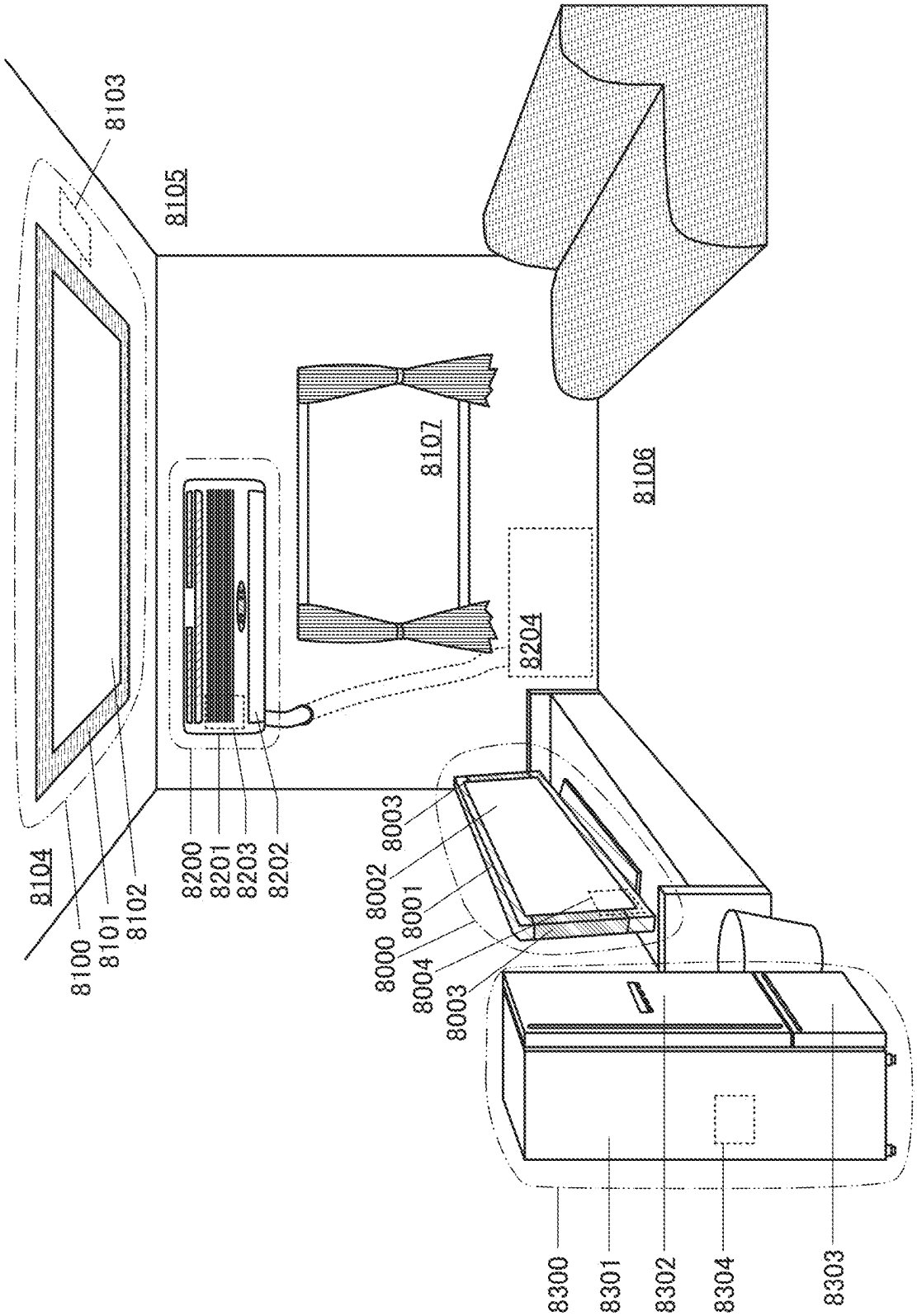
8103
8105
8107
8106
8204
8104
8100
8101
8102
8200
8201
8203
8202
8003
8002
8001
8000
8004
8003
8300
8301
8302
8304
8303

FIG. 21A

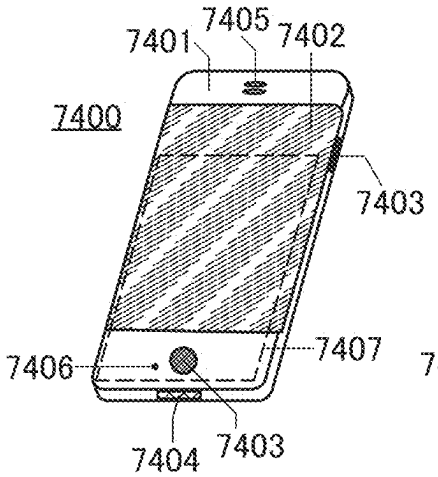

FIG. 21B

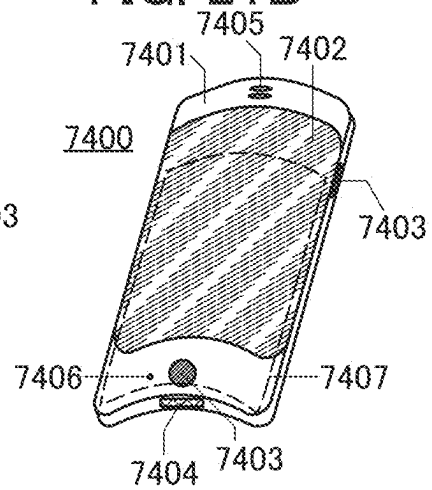

FIG. 21C

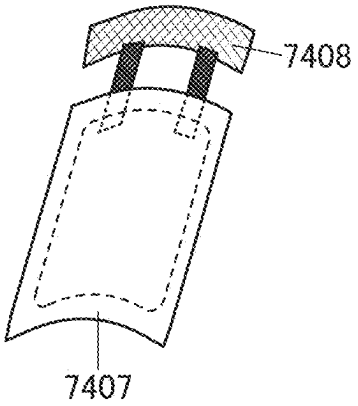

FIG. 21D

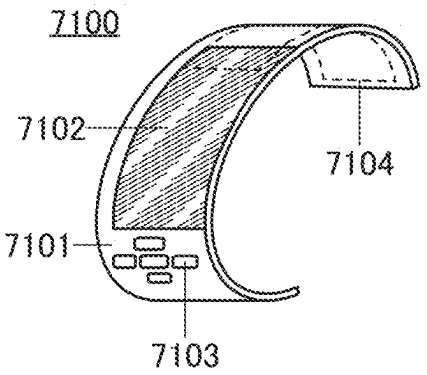

FIG. 21E

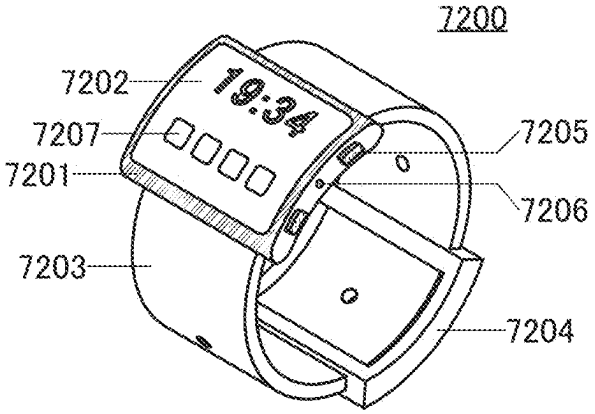

FIG. 22

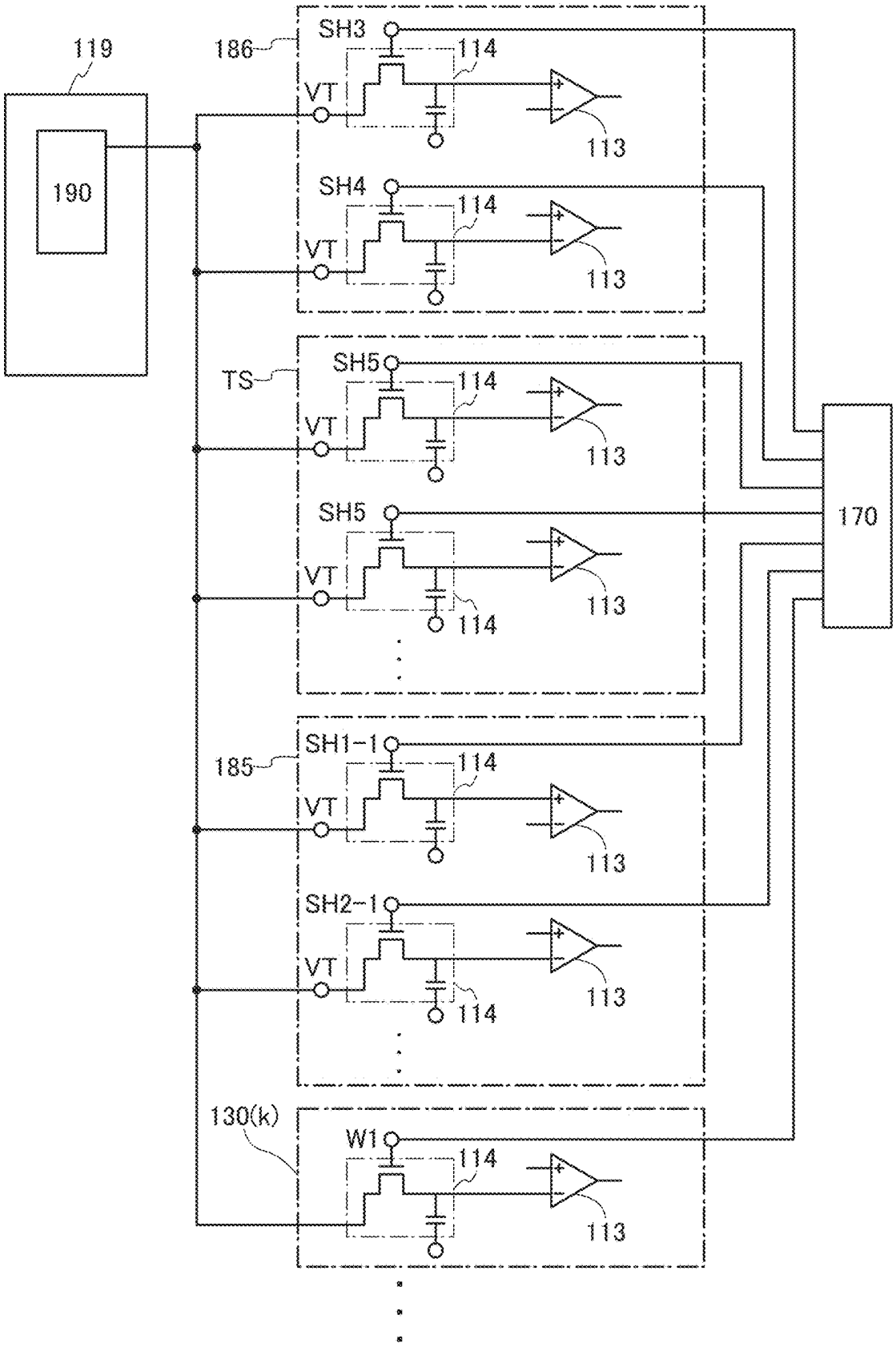
119
190
186
SH3
114
VT
113
SH4
114
VT
113
TS
SH5
114
VT
113
SH5
VT
113
114
170
185
SH1-1
114
VT
113
SH2-1
VT
113
114
130(k)
W1
114
113

FIG. 23

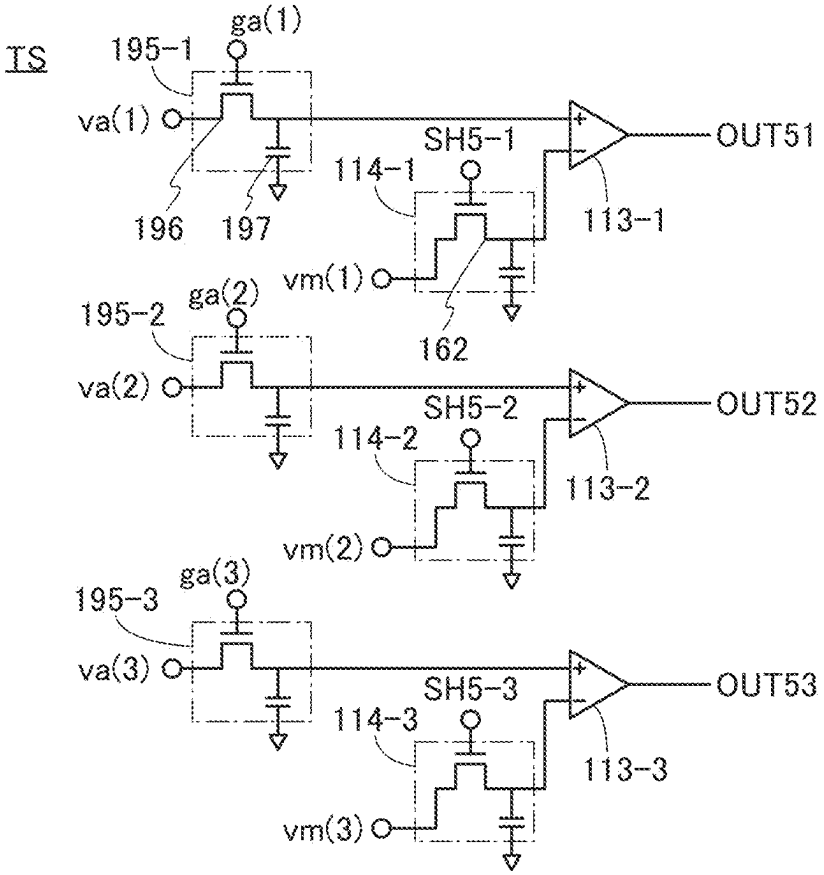
TS
ga(1)
195-1
va(1)
196
197
SH5-1
114-1
vm(1)
162
113-1
OUT51
ga(2)
195-2
va(2)
SH5-2
114-2
vm(2)
113-2
OUT52
ga(3)
195-3
va(3)
SH5-3
114-3
vm(3)
113-3
OUT53

FIG. 24

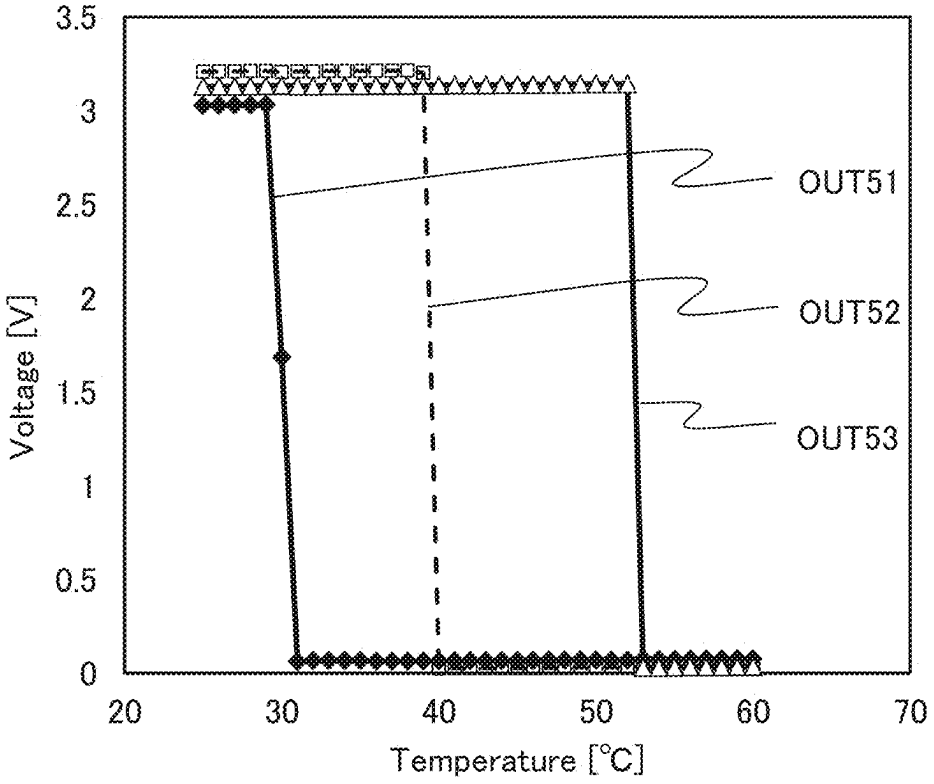
3.5
3
2.5
2
1.5
1
0.5
0
Voltage [V]
20
30
40
50
60
70
Temperature [°C]
OUT51
OUT52
OUT53

SEMICONDUCTOR DEVICE AND OPERATING METHOD OF SEMICONDUCTOR DEVICE

CROSS REFERENCE TO RELATED APPLICATIONS

[0001] This application is a divisional of U.S. application Ser. No. 17/269,330, filed Feb. 18, 2021, now allowed, which is incorporated by reference and is a U.S. National Phase Application under 35 U.S.C. § 371 of International Application PCT/IB2019/057027, filed on Aug. 21, 2019, which is incorporated by reference and claims the benefit of foreign priority applications filed in Japan on Aug. 31, 2018, as Application No. 2018-163168, on Oct. 25, 2018, as Application No. 2018-201005, on Nov. 22, 2018, as Application No. 2018-219225, and on Dec. 21, 2018, as Application No. 2018-239852.

TECHNICAL FIELD

[0002] One embodiment of the present invention relates to a semiconductor device and an operating method of the semiconductor device. One embodiment of the present invention relates to a battery control circuit, a battery protection circuit, a power storage device, and an electronic device.

[0003] Note that one embodiment of the present invention is not limited to the above technical field. The technical field of the invention disclosed in this specification and the like relates to an object, a method, or a manufacturing method. Alternatively, one embodiment of the present invention relates to a process, a machine, manufacture, or a composition of matter. Thus, more specifically, examples of the technical field of one embodiment of the present invention disclosed in this specification include a display device, a light-emitting device, a power storage device, an imaging device, a memory device, a driving method thereof, and a manufacturing method thereof.

BACKGROUND ART

[0004] Power storage devices (also referred to as batteries or secondary batteries) have been utilized in a wide range of areas from small electronic devices to automobiles. As the application range of batteries expands, the number of applications each with a multi-cell battery stack where a plurality of battery cells are connected in series increases.

[0005] The power storage device is provided with a circuit for detecting an abnormality at charge and discharge, such as overdischarge, overcharge, overcurrent, or a short circuit. In such a circuit performing protection and control of a battery, data of a voltage, a current, and the like is obtained in order to detect the abnormality at charge and discharge. Also in such a circuit, stop of charge and discharge, cell balance, and the like are controlled in accordance with the observed data.

[0006] Patent Document 1 discloses a protective IC that functions as a battery protection circuit. In the protective IC described in Patent Document 1, a plurality of comparators are provided, and a reference voltage and a voltage of a terminal to which a battery is connected are compared to detect an abnormality at charge and discharge.

[0007] Patent Document 2 discloses a battery state detector that detects a micro-short circuit of a secondary battery and a battery pack incorporating the same.

[0008] Patent Document 3 discloses a protection semiconductor device for protecting an assembled battery in which secondary battery cells are connected in series.

REFERENCE

Patent Document

[0009] [Patent Document 1] Specification of United States Patent Application Publication No. 2011-267726

[0010] [Patent Document 2] Japanese Published Patent Application No. 2010-66161

[0011] [Patent Document 3] Japanese Published Patent Application No. 2010-220389

SUMMARY OF THE INVENTION

Problems to be Solved by the Invention

[0012] An object of one embodiment of the present invention is to provide a novel battery control circuit, a novel battery protection circuit, a novel power storage device, a novel electronic device, and the like. Another object of one embodiment of the present invention is to provide a battery control circuit, a battery protection circuit, a power storage device, an electronic device, and the like which can reduce the power consumption.

[0013] Note that the objects of one embodiment of the present invention are not limited to the objects listed above. The objects listed above do not preclude the existence of other objects. Note that the other objects are objects that are not described in this section and will be described below. The objects that are not described in this section will be derived from the description of the specification, the drawings, and the like and can be extracted from the description by those skilled in the art. Note that one embodiment of the present invention is to solve at least one of the description listed above and/or the other objects.

Means for Solving the Problems

[0014] One embodiment of the present invention is a semiconductor device including n cell-balance circuits (n is an integer greater than or equal to 1). One secondary battery is electrically connected to one cell-balance circuit. The cell-balance circuit includes a comparison circuit, and a memory element is electrically connected to an inverting input terminal of the comparison circuit. The memory element includes a first transistor and a capacitor. A potential is retained. The retained potential changes in accordance with a change in a potential of a negative electrode of the secondary battery. The comparison circuit has a function of comparing the retained potential with a potential of a positive electrode of the secondary battery. Output from the comparison circuit controls a gate voltage of a second transistor electrically connected to the secondary battery in parallel. The first transistor includes a metal oxide including indium in a channel formation region.

[0015] One embodiment of the present invention is a semiconductor device including n cell-balance circuits (n is an integer greater than or equal to 1). One secondary battery is electrically connected to one cell-balance circuit. The cell-balance circuit includes a comparator, and a memory element is electrically connected to an inverting input terminal of the comparator. The memory element includes a first transistor and a capacitor. A potential is retained. The

retained potential changes in accordance with a change in a potential of a negative electrode of the secondary battery. The comparator has a function of comparing the retained potential with a potential of a positive electrode of the secondary battery. Output from the comparator controls a gate voltage of a second transistor electrically connected to the secondary battery in parallel. The first transistor includes a metal oxide including indium in a channel formation region.

[0016] One embodiment of the present invention is a semiconductor device including n cell-balance circuits (n is an integer greater than or equal to 1). The n cell-balance circuits are electrically connected to n secondary batteries. One secondary battery is electrically connected to one of the n cell-balance circuits. Each of the n cell-balance circuits includes a first comparison circuit, a first terminal electrically connected to a non-inverting input terminal of the first comparison circuit, a first transistor one of a source and a drain of which is electrically connected to an inverting input terminal of the first comparison circuit, a first capacitor one electrode of which is electrically connected to the inverting input terminal of the first comparison circuit, and a second terminal electrically connected to the other electrode of the first capacitor. The first transistor includes a metal oxide including indium in a channel formation region. The first terminal included in a k-th cell-balance circuit (k is an integer greater than or equal to 3 and less than or equal to n) is electrically connected to the second terminal included in a (k−1)th cell-balance circuit. The first terminal included in the (k−1)th cell-balance circuit is electrically connected to the second terminal included in a (k−2)th cell-balance circuit. A positive electrode of the secondary battery electrically connected to the k-th cell-balance circuit is electrically connected to the first terminal of the k-th cell-balance circuit, and a negative electrode thereof is electrically connected to the second terminal of the k-th cell-balance circuit.

[0017] In the above structure, in the case where a voltage difference between the first terminal and the second terminal included in an m-th cell-balance circuit (m is an integer greater than or equal to 2 and less than or equal to n) is larger than a voltage difference between the first terminal and the second terminal included in an (m−1)th cell-balance circuit, it is preferable that a high-potential signal be output from an output terminal of the comparison circuit included in the m-th cell-balance circuit and a low-potential signal be output from an output terminal of the comparison circuit included in the (m−1)th cell-balance circuit. Also in the above structure, each of the n cell-balance circuits preferably has a function of supplying the sum of a voltage of the second terminal and a voltage A to the inverting input terminal of the comparison circuit, and the voltage A is preferably greater than or equal to 3 V and less than or equal to 5 V.

[0018] One embodiment of the present invention is a method of operating a semiconductor device. The semiconductor device includes a first comparison circuit, a first transistor, a first capacitor, a first terminal, a second terminal, and a third terminal. The first terminal is electrically connected to a non-inverting input terminal of the first comparison circuit. One of a source and a drain of the first transistor and one electrode of the first capacitor are electrically connected to an inverting input terminal of the first comparison circuit. The second terminal is electrically connected to the other electrode of the first capacitor. The third terminal is electrically connected to the other of the source and the drain of the first transistor. The first transistor includes a metal oxide in a channel formation region. The metal oxide includes indium. A positive electrode terminal of a secondary battery is electrically connected to the first terminal. A negative electrode terminal of the secondary battery is electrically connected to the second terminal. The method has a first step of supplying a high-potential signal to a gate of the first transistor, a second step of supplying a first signal to the third terminal, a third step of supplying a second signal in accordance with the first signal to the inverting input terminal of the first comparison circuit, a fourth step of supplying a low-potential signal to a gate of the first transistor, a fifth step of outputting a low-potential signal from an output terminal of the first comparison circuit, and a sixth step of reducing a current of the secondary battery by changing a signal from the output terminal of the first comparison circuit from the low-potential signal to the high-potential signal. The first signal is the sum of a voltage of the second terminal and a voltage A, and the voltage A is greater than or equal to 3 V and less than or equal to 5 V.

[0019] In the above structure, a voltage difference between the first terminal and the second terminal in the fifth step is preferably smaller than a voltage difference between the first terminal and the second terminal in the sixth step. In the above structure, it is preferable that the semiconductor device include a second transistor, the first terminal or the second terminal be electrically connected to one of a source and a drain of the second transistor, and the output terminal of the first comparison circuit be electrically connected to a gate of the second transistor. In the above structure, the second signal supplied to the non-inverting input terminal of the first comparison circuit in the third step is preferably retained in the fourth step to the sixth step. In the above structure, it is preferable that the semiconductor device include a voltage generation circuit, the voltage generation circuit include a third transistor and a second capacitor, one electrode of the second capacitor be electrically connected to one of a source and a drain of the third transistor, the second terminal be electrically connected to the other of the source and the drain of the third transistor, the voltage generation circuit have a function of generating the first signal, and the third transistor include a metal oxide including indium in a channel formation region. In the above structure, it is preferable that the voltage generation circuit include a second comparison circuit, one of the source and the drain of the third transistor be electrically connected to a non-inverting input terminal of the second comparison circuit, the third terminal be electrically output to an inverting input terminal of a third comparison circuit, and a gate of the first transistor be electrically connected to an output terminal of the third comparison circuit.

[0020] Another embodiment of the present invention is a semiconductor device including a first comparison circuit, a second comparison circuit, a third comparison circuit, a control circuit, and a secondary battery. The first comparison circuit, the second comparison circuit, and the third comparison circuit have a function of supplying a signal to the control circuit. The control circuit has a function of controlling a charge current for the secondary battery in accordance with a signal supplied from the first comparison circuit. The control circuit has a function of stopping charge of the secondary battery in accordance with a signal supplied from the second comparison circuit. The control circuit has a

function of controlling an upper charge voltage limit of the secondary battery in accordance with a signal supplied from the third comparison circuit. The first comparison circuit has a function of comparing a potential of a positive electrode of the secondary battery with a first reference potential. The second comparison circuit has a function of comparing the potential of the positive electrode of the secondary battery with a second reference potential. The third comparison circuit has a function of comparing an ambient temperature with a third reference potential.

[0021] In the above structure, it is preferable that a source or a drain of a first transistor be electrically connected to a non-inverting input terminal or an inverting input terminal of the first comparison circuit, a source or a drain of a second transistor be electrically connected to a non-inverting input terminal or an inverting input terminal of the second comparison circuit, a source or a drain of a third transistor be electrically connected to a non-inverting input terminal or an inverting input terminal of the third comparison circuit, and a channel formation region of each of the first transistor, the second transistor, and the third transistor include a metal oxide including indium.

Effect of the Invention

[0022] One embodiment of the present invention can provide a novel battery control circuit, a novel battery protection circuit, a novel power storage device, a novel electronic device, or the like. Another embodiment of the present invention can provide a battery control circuit, a battery protection circuit, a power storage device, an electronic device, or the like with a novel structure capable of reducing power consumption.

[0023] Note that the effects of one embodiment of the present invention are not limited to the effects listed above. The effects listed above do not preclude the existence of other effects. Note that the other effects are effects that are not described in this section and will be described below. The other effects that are not described in this section will be derived from the description of the specification, the drawings, and the like and can be extracted from the description by those skilled in the art. Note that one embodiment of the present invention is to have at least one of the effects listed above and/or the other effects. Accordingly, depending on the case, one embodiment of the present invention does not have the effects listed above in some cases.

BRIEF DESCRIPTION OF THE DRAWINGS

[0024] FIG. **1** is a block diagram illustrating one embodiment of the present invention.

[0025] FIG. **2** is a block diagram illustrating one embodiment of the present invention.

[0026] FIG. **3** is a flow chart showing one embodiment of the present invention.

[0027] FIG. **4** is a flow chart showing one embodiment of the present invention.

[0028] FIG. **5** is a timing chart illustrating operation of a power storage device of one embodiment of the present invention.

[0029] FIG. **6** is a block diagram illustrating one embodiment of the present invention.

[0030] FIG. **7** is a circuit diagram illustrating one embodiment of the present invention.

[0031] FIG. **8**A is a circuit diagram illustrating one embodiment of the present invention.

[0032] FIG. **8**B is a circuit diagram illustrating one embodiment of the present invention.

[0033] FIG. **9**A shows a charge and discharge curve. FIG. **9**B is a circuit diagram illustrating one embodiment of the present invention. FIG. **9**C is a circuit diagram illustrating one embodiment of the present invention.

[0034] FIG. **10**A is a timing chart illustrating operation of a power storage device of one embodiment of the present invention. FIG. **10**B is a timing chart illustrating operation of a power storage device of one embodiment of the present invention.

[0035] FIG. **11** is a cross-sectional diagram illustrating a structure example of a semiconductor device.

[0036] FIG. **12** is a cross-sectional diagram illustrating a structure example of a semiconductor device.

[0037] FIG. **13**A is a cross-sectional diagram illustrating a structure example of a transistor. FIG. **13**B is a cross-sectional diagram illustrating a structure example of a transistor. FIG. **13**C is a cross-sectional diagram illustrating a structure example of a transistor.

[0038] FIG. **14**A is a flow chart showing a process of manufacturing an electronic component. FIG. **14**B is a schematic perspective diagram of the electronic component.

[0039] FIG. **15**A is a diagram illustrating an example of a secondary battery. FIG. **15**B is a diagram illustrating an example of a secondary battery. FIG. **15**C is a diagram illustrating a structure example of a plurality of secondary batteries. FIG. **15**D is a diagram illustrating a structure example of a plurality of secondary batteries.

[0040] FIG. **16**A is a diagram illustrating an example of a battery pack. FIG. **16**B is a diagram illustrating an example of a battery pack. FIG. **16**C is a diagram illustrating an example of a battery pack.

[0041] FIG. **17**A is a diagram illustrating a vehicle of one embodiment of the present invention. FIG. **17**B is a diagram illustrating a vehicle of one embodiment of the present invention. FIG. **17**C is a diagram illustrating a vehicle of one embodiment of the present invention.

[0042] FIG. **18**A is a diagram illustrating a vehicle of one embodiment of the present invention. FIG. **18**B is a diagram illustrating a power storage system of one embodiment of the present invention.

[0043] FIG. **19**A is a diagram illustrating an electronic device of one embodiment of the present invention. FIG. **19**B is a diagram illustrating an electronic device of one embodiment of the present invention. FIG. **19**C is a diagram illustrating an electronic device of one embodiment of the present invention.

[0044] FIG. **20** is a diagram illustrating electronic devices of one embodiment of the present invention.

[0045] FIG. **21**A is a diagram illustrating an electronic device of one embodiment of the present invention. FIG. **21**B is a diagram illustrating an electronic device of one embodiment of the present invention. FIG. **21**C is a diagram illustrating a secondary battery of one embodiment of the present invention. FIG. **21**D is a diagram illustrating an electronic device of one embodiment of the present invention. FIG. **21**E is a diagram illustrating an electronic device of one embodiment of the present invention.

[0046] FIG. **22** is a circuit diagram illustrating one embodiment of the present invention.

[0047] FIG. **23** is a circuit diagram illustrating one embodiment of the present invention.

[0048] FIG. **24** shows the evaluation results of a temperature sensor.

MODE FOR CARRYING OUT THE INVENTION

[0049] Embodiments will be described below with reference to the drawings. Note that the embodiments can be implemented with many different modes, and it will be readily understood by those skilled in the art that modes and details thereof can be changed in various ways without departing from the spirit and scope thereof. Therefore, the present invention should not be construed as being limited to the description of embodiments below.

[0050] Note that ordinal numbers such as "first," "second," and "third" in this specification and the like are used in order to avoid confusion among components. Thus, the ordinal numbers do not limit the number of components. In addition, the ordinal numbers do not limit the order of components. Furthermore, in this specification and the like, for example, a "first" component in one embodiment can be referred to as a "second" component in other embodiments or claims. Moreover, in this specification and the like, for example, a "first" component in one embodiment can be omitted in other embodiments or claims.

[0051] Note that in the drawings, the same elements, elements having similar functions, elements formed of the same material, elements formed at the same time, or the like are sometimes denoted by the same reference numerals, and repeated description thereof is omitted in some cases.

[0052] The position, size, range, and the like of each component illustrated in the drawings and the like are not accurately represented in some cases to facilitate understanding of the invention. Therefore, the disclosed invention is not necessarily limited to the position, size, range, and the like disclosed in the drawings and the like. For example, in the actual manufacturing process, a resist mask or the like might be unintentionally reduced in size by treatment such as etching, which is not illustrated in some cases for easy understanding.

[0053] In a top view (also referred to as a "plan view"), a perspective view, or the like, some components might be omitted for easy understanding of the drawings.

[0054] In this specification and the like, the term such as "electrode" or "wiring" does not limit the function of a component. For example, an "electrode" is used as part of a "wiring" in some cases, and vice versa. Furthermore, the term "electrode" or "wiring" can also mean a combination of a plurality of electrodes or wirings provided in an integrated manner, for example.

[0055] Note that the term "over" or "under" in this specification and the like does not necessarily mean that a component is placed directly over and in contact with or directly under and in contact with another component. For example, the expression "electrode B over insulating layer A" does not necessarily mean that the electrode B is on and in direct contact with the insulating layer A and can mean the case where another component is provided between the insulating layer A and the electrode B.

[0056] Furthermore, functions of a source and a drain are interchanged with each other depending on operation conditions, for example, when a transistor of different polarity is employed or when the direction of current flow is changed in circuit operation; therefore, it is difficult to define which is the source or the drain. Thus, the terms "source" and "drain" can be interchanged with each other in this specification.

[0057] In this specification and the like, the expression "electrically connected" includes the case where components are directly connected to each other and the case where components are connected through an "object having any electric function". There is no particular limitation on the "object having any electric function" as long as electric signals can be transmitted and received between components that are connected through the object. Thus, even when the expression "electrically connected" is used, there is a case where no physical connection is made and a wiring just extends in an actual circuit.

[0058] In this specification and the like, the term "parallel" indicates that the angle formed between two straight lines is greater than or equal to −10° and less than or equal to 10°, for example, and accordingly also includes the case where the angle is greater than or equal to −5° and less than or equal to 5°. The terms "perpendicular" and "orthogonal" indicate that the angle formed between two straight lines is greater than or equal to 80° and less than or equal to 100°, for example, and accordingly also includes the case where the angle is greater than or equal to 85° and less than or equal to 95°.

[0059] In this specification and the like, the terms "identical", "same", "equal", "uniform", and the like used in describing calculation values and actual measurement values allow for a margin of error of ±20% unless otherwise specified.

[0060] Furthermore, in this specification and the like, in the case where an etching treatment is performed after a resist mask is formed, the resist mask is removed after the etching treatment, unless otherwise specified.

[0061] A voltage refers to a potential difference between a given potential and a reference potential (e.g., a ground potential or a source potential) in many cases. Therefore, the terms "voltage" and "potential" can be replaced with each other in many cases. In this specification and the like, "voltage" and "potential" can be replaced with each other unless otherwise specified.

[0062] Note that a "semiconductor" has characteristics of an "insulator" when the conductivity is sufficiently low, for example. Thus, a "semiconductor" can be replaced with an "insulator". In that case, a "semiconductor" and an "insulator" cannot be strictly distinguished from each other because a border therebetween is not clear. Accordingly, a "semiconductor" and an "insulator" in this specification can be replaced with each other in some cases.

[0063] Furthermore, a "semiconductor" has characteristics of a "conductor" when the conductivity is sufficiently high, for example. Thus, a "semiconductor" can be replaced with a "conductor". In that case, a "semiconductor" and a "conductor" cannot be strictly distinguished from each other because a border therebetween is not clear. Accordingly, a "semiconductor" and a "conductor" in this specification can be replaced with each other in some cases.

[0064] Note that in this specification and the like, an "on state" of a transistor refers to a state in which a source and a drain of the transistor are electrically short-circuited (also referred to as a "conduction state"). Furthermore, an "off state" of the transistor refers to a state in which the source and the drain of the transistor are electrically disconnected (also referred to as a "non-conduction state").

[0065] In this specification and the like, in some cases, "on-state current" means a current that flows between a source and a drain when a transistor is in an on state, and "off-state current" means a current that flows between a source and a drain when a transistor is in an off state.

[0066] In this specification and the like, a high power supply potential VDD (hereinafter also simply referred to as "VDD" or an "H potential") is a power supply potential higher than a low power supply potential VSS. The low power supply potential VSS (hereinafter also simply referred to as "VSS" or an "L potential") is a power supply potential lower than the high power supply potential VDD. In addition, a ground potential can be used as VDD or VSS. For example, in the case where VDD is a ground potential, VSS is a potential lower than the ground potential, and in the case where VSS is a ground potential, VDD is a potential higher than the ground potential.

[0067] In this specification and the like, a gate refers to part or the whole of a gate electrode and a gate wiring. A gate wiring refers to a wiring for electrically connecting at least one gate electrode of a transistor to another electrode or another wiring.

[0068] In this specification and the like, a source refers to part or the whole of a source region, a source electrode, and a source wiring. A source region refers to a region in a semiconductor layer, where the resistivity is lower than or equal to a given value. A source electrode refers to part of a conductive layer that is connected to a source region. A source wiring refers to a wiring for electrically connecting at least one source electrode of a transistor to another electrode or another wiring.

[0069] In this specification and the like, a drain refers to part or the whole of a drain region, a drain electrode, and a drain wiring. A drain region refers to a region in a semiconductor layer, where the resistivity is lower than or equal to a given value. A drain electrode refers to part of a conductive layer that is connected to a drain region. A drain wiring refers to a wiring for electrically connecting at least one drain electrode of a transistor to another electrode or another wiring.

Embodiment 1

[0070] Structures of a battery control circuit and a power storage device including the battery control circuit will be described with reference to FIG. **1** and FIG. **2**.

[0071] A battery control circuit of one embodiment of the present invention or a power storage device including the battery control circuit is called "BTOS" in some cases. "BTOS" can build a system with low power consumption in some cases. "BTOS" can build a system with a simple circuit in some cases.

[0072] The battery control circuit of one embodiment of the present invention preferably has a function of protecting a battery. The battery control circuit of one embodiment of the present invention is called a battery protection circuit in some cases.

Example 1 of Power Storage Device

[0073] FIG. **1** illustrates an example of a power storage device. A power storage device **100** illustrated in FIG. **1** includes a battery control circuit **110** and an assembled battery **120**.

[0074] The assembled battery **120** includes a plurality of battery cells **121**. FIG. **1** illustrates an example in which n battery cells **121** are included. A k-th battery cell (k is an integer greater than or equal to 1 and less than or equal to n) is represented by a battery cell **121**(*k*) in some cases. The plurality of battery cells included in the assembled battery **120** are electrically connected in series.

[0075] Here, as the battery cell, a secondary battery of an embodiment described later can be used, for example. For example, a secondary battery including a wound battery element can be used. Furthermore, the battery cell preferably includes an exterior body. For example, a cylindrical exterior body, a rectangular exterior body, or the like can be used. As a material for the exterior body, a metal plate covered with an insulator, a metal film sandwiched between insulators, or the like can be used. The battery cell includes a set of positive and negative electrodes, for example. The battery cell may include a terminal electrically connected to the positive electrode and a terminal electrically connected to the negative electrode. In some cases, the battery cell includes some components of the battery control circuit of one embodiment of the present invention.

[0076] The battery control circuit **110** includes n cell-balance circuits **130**, a transistor **140**, a transistor **150**, a detection circuit **181**, and a control circuit **170**. The n cell-balance circuits **130** are collectively called a cell-balance control unit in some cases.

[0077] The control circuit **170** has functions of transmitting and receiving signals to/from the n cell-balance circuits **130**. The control circuit **170** has functions of transmitting and receiving signals to/from an external circuit. In some cases, the control circuit **170** includes a voltage generation circuit.

[0078] One cell-balance circuit **130** that corresponds to one battery cell **121** includes a voltage comparison unit **111** including a comparator **113** and a memory element **114**, and a transistor **132**. The memory element **114** includes a capacitor **161** and a transistor **162**. One of a source and a drain of the transistor **162** is electrically connected to a terminal P**1**, and the other thereof is electrically connected to one electrode of the capacitor **161**. Note that the potential of the terminal P**1** differs depending on the corresponding battery cell. The cell-balance circuit **130** corresponding to a battery cell **121**(*k*) is called a cell-balance circuit **130**(*k*), and the terminal P**1** included in the cell-balance circuit **130**(*k*) is called a terminal P**1**(*k*). A gate of the transistor **162** is electrically connected to a terminal W**1**. A first terminal (referred to as a terminal VC**1** in the case of a first battery cell, a terminal VC**2** in the case of a second battery cell, and a terminal VCN in the case of an n-th battery cell) is electrically connected to a positive electrode of one battery cell **121**, and a second terminal (referred to as a terminal VC**2** in the case of the first battery cell, a terminal VC**3** in the case of the second battery cell, and a terminal VSSS in the case of an n-th cell) is electrically connected to a negative electrode of the battery cell **121**. One of a source and a drain of the transistor **132** is electrically connected to the first terminal and the other thereof is electrically connected to the second terminal. A non-inverting input terminal of the comparator **113** is electrically connected to the first terminal. A gate of the transistor **132** is electrically connected to an output terminal of the comparator **113**. One electrode of the capacitor **161** is electrically connected to an

inverting input terminal of the comparator **113**, and the other electrode thereof is electrically connected to the second terminal.

[0079] The cell-balance circuit **130** may include a resistor **131** between the one of the source and the drain of the transistor **132** and a terminal electrically connected to the positive electrode of the battery cell, or between the other of the source and the drain of the transistor **132** and a terminal electrically connected to the negative electrode of the battery cell. In the example illustrated in FIG. **1**, the resistor **131** may be provided between the one of the source and the drain of the transistor **132** and the terminal electrically connected to the positive electrode of the battery cell.

[0080] As to two adjacent battery cells **121**, in the case where a negative electrode of a first battery cell **121** is electrically connected to a positive electrode of a second battery cell **121**, a terminal connected to the negative electrode of the first battery cell **121** and a terminal connected to the positive electrode of the second battery cell **121** are common, for example.

[0081] The terminals W**1** which correspond to the respective battery cells **121** are supplied with signals by the control circuit **170**.

[0082] The terminal P**1**(*k*) is supplied with voltage Vr(k). The voltage Vr(k) is a variable voltage, for example. Alternatively, the voltage Vr(k) may be a fixed voltage. A circuit for generating and controlling the voltage Vr(k) may be provided separately from the battery control circuit **110**, or the battery control circuit **110** may have a function of generating and/or controlling the voltage Vr(k).

[0083] As the transistor **162**, a transistor including an oxide semiconductor in its channel formation region (hereinafter referred to as an OS transistor) is preferably used. In one embodiment of the present invention, with the use of a memory element including an OS transistor, a desired voltage can be retained in the memory element because a leakage current flowing between a source and a drain when the transistor is off (hereinafter referred to as an off-state current) is extremely low.

[0084] The memory element **114** has a function of supplying the voltage Vr(k) supplied from the terminal P**1**(*k*) or voltage corresponding to the voltage Vr(k) to the inverting input terminal of the comparator **113**. Furthermore, when the voltage Vr(k) reaches a certain voltage (for example, Vm(k) described later), the memory element **114** has a function of making the inverting input terminal of the comparator **113** retain the voltage.

[0085] The terminal P**1**(*k*) has a function of supplying the sum (hereinafter referred to as voltage Vm(k)) of the voltage of the negative electrode of the corresponding battery cell **121**(*k*) (hereinafter referred to as voltage Vn(k)) and voltage Vc, which is a voltage to be supplied as a difference in voltage between the positive electrode and the negative electrode of the battery cell **121**, to the inverting input terminal of the comparator **113**. In FIG. **1**, a voltage Vn(**1**) is a voltage of the terminal VC**2**, and a voltage Vm(**1**), which is a potential supplied to a terminal P**1**(**1**), is the sum of the voltage of the terminal VC**2** and the voltage Vc. The voltage Vn(**2**) is a voltage of the terminal VC**3**, and a voltage Vm(**2**), which is a potential supplied to a terminal P**1**(**2**), is the sum of the voltage of the terminal VC**3** and the voltage Vc.

[0086] A voltage generation circuit **119** is preferably electrically connected to the terminal P**1**(*k*). Negative electrodes of the battery cells **121** are electrically connected to the voltage generation circuit **119**. The voltage generation circuit **119** has a function of generating the voltage Vm(k) as the sum of the voltage Vc and the voltage Vn(k) used as a reference. Note that the voltages Vn are different between the battery cells **121**. Accordingly, different voltages Vm are generated. That is, voltage supplied to the terminal P**1**(*k*) is different depending on the battery cell **121**, for example. The voltage generation circuit **119** or part thereof may be included in the cell-balance circuit **130**.

[0087] When the transistor **162** is turned off and a node AN connected to the inverting input terminal of the comparator **113** is brought into an electrically insulating state, the voltage Vm can be retained in the node AN. The node AN is connected to the negative electrode of the battery cell **121** through the capacitor **161**. Thus, in the case where the potentials of the negative electrodes of the battery cells **121** vary in accordance with charge and discharge of the cells, the potentials of the nodes AN also vary. At this time, the potential of the node AN varies to be the sum of the Vc and the potential of the negative voltage of the corresponding battery cell **121** used as a reference. Note that the node AN corresponding to the terminal P**1**(*k*) is referred to as a node AN(k) in some cases.

[0088] The comparator **113** compares the voltage of the positive electrode of the battery cell **121**(*k*) and the voltage Vm(k), and outputs a high-potential signal from the output terminal when the voltage of the positive electrode matches with the voltage Vm(k). The high-potential signal supplied to the transistor **132** turns on the transistor **132**, and part or most of current flowing through the battery cell **121** can flow to the transistor **132**. For example, by turning on the transistor **132**, a charge current for the battery cell **121** can be limited or charge can be stopped.

[0089] That is, the cell-balance circuit included in the power storage device of one embodiment of the present invention can monitor the voltage of the battery cell and limit the charge current at a certain voltage.

[0090] The voltage Vn is, for example, the voltage of the terminal VC**2** in the case of the first battery cell **121**, and is the voltage of the terminal VC**3** in the case of the second battery cell **121**.

[0091] A terminal VDDD and the terminal VSSS are electrically connected to the both ends of the assembled battery **120**. A charge control circuit is preferably electrically connected to the terminal VDDD and the terminal VSSS. The charge control circuit may be provided separately from the battery control circuit **110**, or the battery control circuit **110** may have a function of controlling charge.

[0092] A coulomb counter is preferably electrically connected to the terminal VDDD and the terminal VSSS. The coulomb counter may be provided separately from the battery control circuit **110**, or the battery control circuit **110** may have a function of the coulomb counter.

[0093] The cell-balance circuits **130** to which the plurality of battery cells **121** are connected have a function of controlling a difference between voltages of the both ends (a voltage difference between the positive electrode and the negative electrode) of the corresponding battery cell **121**. The cell-balance circuit **130** for each battery cell **121** can make the memory element **114** retain a preferable value as the upper limit voltage of the positive electrode. Furthermore, the cell-balance circuit **130** controls whether the transistor **132** is turned on or turned off in accordance with the relation between the voltage of the positive electrode of

the battery cell **121** and the voltage of the non-inverting input terminal of the comparator **113**. The control of the transistor **132** can adjust the ratio between the amount of current flowing through the resistor **131** and the amount of current flowing through the battery cell **121**. For example, in the case where charge of the battery cell **121** is stopped, a current is made to flow to the resistor **131** and a current flowing to the battery cell **121** is limited.

[0094] In FIG. **1**, the plurality of battery cells **121** are electrically connected in series between the terminal VDDD and the terminal VSSS. By making a current flow between the terminal VDDD and the terminal VSSS, the plurality of battery cells **121** are charged.

[0095] The case where the positive electrode of one battery cell **121** among the plurality of battery cells **121** reaches a certain voltage and a current is limited is considered. In such a case, a current flows through the transistor **132** and the resistor **131** which are connected in parallel to the battery cell, whereby charge of the other battery cells **121** whose positive electrodes do not reach the certain voltage can be continued without interruption of a current path between the terminal VDDD and the terminal VSSS. In other words, in the battery cell **121** where the charge is completed, the charge is stopped by turning on the transistor **132**, and in the battery cell **121** where the charge is not completed, the charge is continued by turning off the transistor **132**.

[0096] In the case where the battery cells **121** have different resistances, charge of a battery cell **121** with low resistance might be completed first, and charge of a battery cell **121** with high resistance might be insufficient. Here, insufficient charge means that, for example, the voltage difference between the positive electrode and the negative electrode is lower than a desired voltage. With the use of the cell-balance circuit **130**, the voltage of the positive electrode of the battery cell **121** during charge can be monitored using the voltage of the negative electrode of the battery cell as a reference.

[0097] In other words, the use of the n cell-balance circuits **130** can reduce variations of states of the plurality of battery cells **121** after being charged, for example, when being fully charged. Thus, the capacitance of the assembled battery **120** as a whole is increased in some cases. The increase in capacitance can reduce the number of charge and discharge cycles of the battery cell **121** in some cases, which may increase the durability of the assembled battery **120**.

[0098] FIG. **2** illustrates an example in which the cell-balance circuit **130** in the power storage device **100** includes the voltage generation circuit **119**. Although some components illustrated in FIG. **1**, such as the control circuit **170**, are omitted for simplicity, the cell-balance circuit **130** illustrated in FIG. **2** can include the components illustrated in FIG. **1**. In the power storage device **100** in the example illustrated in FIG. **2**, for each battery cell **121**, the corresponding voltage generation circuit **119** is provided.

[0099] The voltage generation circuit **119** illustrated in FIG. **2** includes a memory element **174** and a comparator **173**. The memory element **174** includes a capacitor **171** and a transistor **172**. One of a source and a drain of the transistor **172** and one electrode of the capacitor **171** are electrically connected to a non-inverting input terminal of the comparator **173**. The other electrode of the capacitor **171** is electrically connected to a terminal P**2**. A gate of the transistor **172** is electrically connected to a terminal W**2**. The other of the source and the drain of the transistor **172** is electrically connected to a terminal connected to the negative electrode of the corresponding battery cell **121**. An output terminal of the comparator **173** is electrically connected to the terminal W**1**, that is, the gate of the transistor **162** included in the voltage comparison unit **111**. The terminal P**1**(*k*) is electrically connected to an inverting input terminal of the comparator **173**.

[0100] The description of the memory element **114** may be referred to for the memory element **174**, for example.

[0101] An OS transistor is preferably used as the transistor **172**. With the use of an OS transistor as the transistor **172**, thanks to its extremely low leakage current which flows between a source and a drain when the transistor is off (hereinafter referred to as an off-state current), data can be stored in the memory element **174** in the case where the transistor **172** is turned off. Thus, a desired voltage can be retained in the non-inverting input terminal of the comparator **173**.

Operation Example 1

[0102] The voltage generation circuit **119** can generate a reference voltage of the positive electrode, for example, the voltage Vm(k), using the voltage of the negative electrode of the battery cell **121**(*k*), for example, the voltage Vn(k), as a reference in a manner described below with reference to FIG. **3**. An example in which the voltage Vm(k) is generated as the sum of the voltage Vc and the voltage Vn(k) used as a reference is described below.

[0103] First, the processing starts in Step S**200**.

[0104] Next, in Step S**201**, a high-potential signal is supplied to the terminal W**2**. By application of the high-potential signal to the terminal W**2**, the transistor **172** is turned on. When the transistor **172** is turned on, the voltage Vn can be applied to the non-inverting input terminal of the comparator **173**.

[0105] Next, in Step S**202**, a low-potential signal is supplied to the terminal W**2**. By supply of the low-potential signal to the terminal W**2**, the transistor **172** is turned off.

[0106] Next, in Step S**203**, the voltage of the terminal P**2** is increased by the voltage Vc. For example, when the terminal P**2** is a ground potential, the terminal P**2** may be the voltage Vc. When the voltage of the terminal P**2** is increased, the voltage of the non-inverting input terminal of the comparator **173** is increased by the voltage Vc due to capacitive coupling through the capacitor **171**. That is, the voltage of the non-inverting input terminal of the comparator **173** can be the voltage Vm(k) which is the sum of the voltage Vn and the voltage Vc.

[0107] As described above, the voltage generation circuit **119** can generate the voltage Vm(k) and can retain the voltage in the non-inverting input terminal. Here, the voltage Vn of the negative electrode of the battery cell **121** differs depending on the charging rate of the battery cell **121**. Thus, in the case where the voltage Vm is generated by the above-described method, the difference in charging rate between the plurality of battery cells **121** is preferably small. The voltage Vc is preferably set in accordance with the charging rate of the battery cell **121**.

[0108] Next, an example in which a desired voltage is applied to the inverting input terminal of the comparator **113** included in the voltage comparison unit **111** with the use of the voltage generation circuit **119** is described.

[0109] First, in Step S**204**, the voltage Vr(k) is applied to the terminal P**1**(*k*). Here, the voltage Vr(k) is a variable voltage.

[0110] Next, in Step S**205**, the voltage Vr(k) is swept. For example, a voltage gradually swept from the ground potential to the high voltage side may be applied. For example, a voltage increased by ΔVr may be applied. At this time, for example, the voltage applied to the terminal P**1**(*k*) is lower than the voltage Vm(k), and the high-potential signal is supplied to the gate of the transistor **162** from the comparator **173**, whereby the transistor **162** is on.

[0111] Next, in Step S**206**, when the voltage Vr(k) is higher than or equal to the voltage Vm(k), the processing goes to Step S**207**. When the voltage Vr(k) is lower than the voltage Vm(k), the processing goes back to Step S**205**.

[0112] Next, in Step S**207**, a low-potential signal is output from the comparator **173**. Thus, the low-potential signal is supplied to the gate of the transistor **162** included in the voltage comparison unit **111**, whereby the transistor **162** is turned off. When the transistor **162** is off, the voltage Vm(k) can be retained in the inverting input terminal of the comparator **113**. In the following Step S**299**, the processing ends.

[0113] As described above, with the use of the voltage generation circuit **119**, the voltage Vm(k) can be retained in the inverting input terminal of the comparator **113** included in the voltage comparison unit **111**.

Operation Example 2

[0114] An example of an operation method of the power storage device illustrated in FIG. **1** is described with reference to a flow chart shown in FIG. **4**.

[0115] Processing starts in Step S**300**.

[0116] In Step S**301**, a high-potential signal is supplied to the terminal W**1**.

[0117] In Step S**302**, the voltage Vm(k) is supplied to the terminal P**1**(*k*).

[0118] Next, in Step S**303**, a low-potential signal is supplied to the terminal W**1**. In this step, the voltage Vm(k) is retained in the inverting input terminal of the comparator **113**.

[0119] Next, the battery cell **121**(*k*) is charged in Step S**304**.

[0120] Next, in Step S**305**, when the voltage of the positive electrode is higher than or equal to Vm(k), the processing goes to Step S**306**, and when the voltage of the positive electrode is lower than Vm(k), the processing goes back to Step S**304**.

[0121] Next, in Step S**306**, the transistor **132** is switched from an off state to an on state. In this step, charge of the secondary battery is stopped. Alternatively, a current for the secondary battery is limited.

[0122] The processing ends in Step S**399**.

[0123] FIG. **5** is a timing chart showing an operation example of the power storage device illustrated in FIG. **1**. FIG. **5** is a timing chart corresponding to a battery cell **121**(**1**) and a battery cell **121**(**2**).

[0124] In Time t0, the processing starts.

[0125] In Time t1, the voltage of the negative electrode of the battery cell **121**(*k*) is applied to the terminal P**1**(*k*). In FIG. **5**, a voltage VC**2**(*t*0) is applied to the terminal P**1**(**1**) and a voltage VC**3**(*t*0) is applied to the terminal P**1**(**2**).

[0126] In Time t2, the sum of the voltage of the negative electrode of the battery cell **121**(*k*) and the voltage Vc is applied to the terminal P**1**(*k*). In FIG. **5**, the sum of the voltage VC**2**(*t*0) and the voltage Vc is applied to the terminal P**1**(**1**) and the sum of the voltage VC**3**(*t*0) and the voltage Vc is applied to the terminal P**1**(**2**).

[0127] In Time t3, a high-potential signal (High level) is applied to a terminal W**1**(*k*), and a potential is applied from the terminal P**1**(*k*) to the node AN(k). In FIG. **5**, high-potential signals are applied to a terminal W**1**(**1**) and a terminal W**1**(**2**), a potential is applied from the terminal P**1**(**1**) to the node AN(**1**), and a potential is applied from the terminal P**1**(**2**) to the node AN(**2**).

[0128] Although the negative electrode of the battery cell **121**(*k*) is shown constant between Time t1 to Time t3, actually, the potential is sometimes changed.

[0129] In Time t4, a low-potential signal (Low level) is supplied to the terminal W**1**(*k*), the potential of the node AN(k) is retained, and a reference potential is programmed to the inverting input terminal of the comparator **113**. Then, the potential of the node AN(k) varies in accordance with a change in the potential of the negative electrode. The comparator **113** compares the potential programmed to the inverting input terminal and a potential applied to the non-inverting input terminal. In the example shown in FIG. **5**, the potentials of the node AN(**2**) and the terminal VC**2** are compared.

[0130] For example, the potentials of the battery cells **121** are changed by charge or the like. In FIG. **5**, in a period from Time t4 to Time t6, the potential of VC**2**, which is the potential of the negative electrode of the battery cell **121**(**1**), is increased only by Δr**1**, and concurrently with that, the potential of the node AN(**1**) is also increased. In FIG. **5**, in a period from Time t4 to Time t5, the potential of VC**3**, which is the potential of the negative electrode of the battery cell **121**(**2**), is increased only by Δr**2**, and concurrently with that, the potential of the node AN(**2**) is also increased.

[0131] In Time t5 in FIG. **5**, the potential of VC**2** is lower than the potential of the node AN(**2**), and the comparator **113** in the cell-balance circuit **130**(**2**), which compares the potentials of the node AN(**2**) and the terminal VC**2**, outputs a low-potential signal. When the potential of VC**2** is higher than the potential of the node AN(**2**) in Time t6, the comparator **113** outputs a high-potential signal to turn on the transistor **132**, whereby charge of the battery cell **121**(**2**) is stopped.

[0132] Although the potential of the node AN(**2**) is shown constant between Time t5 to Time t6, actually, the potential is sometimes changed.

<Protection of Battery>

[0133] The battery control circuit **110** preferably has a function of a battery protection circuit.

[0134] The transistor **140** and the transistor **150** have a function of controlling charge or discharge of the assembled battery **120**. For example, a conduction state or a non-conduction state of the transistor **140** is controlled by a control signal T**1**, so that whether the assembled battery **120** is charged or not is controlled. A conduction state or a non-conduction state of the transistor **150** is controlled by a control signal T**2**, so that whether the assembled battery **120** is discharged or not is controlled. In the example of the battery control circuit illustrated in FIG. **1**, one of a source and a drain of the transistor **140** is electrically connected to a terminal VM. The terminal VM is electrically connected to

a negative electrode of a charger, for example. The terminal VM is electrically connected to a load at the time of discharge, for example.

[0135] The transistor **140** and the transistor **150** are preferably electrically connected to the detection circuit **181**. The detection circuit **181** preferably has a function of detecting overcharge and overdischarge of the assembled battery **120**. The detection circuit **181** preferably has a function of detecting discharge overcurrent and charge overcurrent of the assembled battery **120**. The detection circuit **181** preferably has a function of detecting a short circuit of a group of circuits which are operated with the use of the assembled batteries **120**. The detection circuit **181** is preferably electrically connected to the terminal VDDD and the terminal VSSS.

[0136] The detection circuit **181** may be electrically connected to the positive electrodes and the negative electrodes of the battery cells **121**. In such a case, the detection circuit **181** can detect overcharge and overdischarge of each battery cell **121** in some cases.

[0137] The detection circuit **181** has functions of transmitting and receiving signals to/from the control circuit **170**.

[0138] The battery control circuit **110** may have a function of observing a voltage value (a monitor voltage) of each of terminals of the battery cells **121** included in the assembled battery **120** and a current value (monitor current) flowing through the assembled battery. For example, the on-state current of the transistor **140** or the transistor **150** may be observed as the monitor current. Alternatively, a resistor may be provided in series with the transistor **140** or the like, and the current value of the resistor may be observed.

[0139] The battery control circuit **110** may have functions of measuring the temperature of the battery cell **121** and controlling charge and discharge of the battery cell in accordance with the measured temperature.

<Battery Cell>

[0140] A lithium-ion secondary battery cell can be used as the battery cell **121**. The battery cell **121** is not limited to a lithium-ion secondary battery cell and as a positive electrode material of the secondary battery, a material including an element A, an element X, and oxygen can be used, for example. The element A is one or more selected from the Group 1 elements and the Group 2 elements. As the Group 1 element, for example, an alkali metal such as lithium, sodium, or potassium can be used. In addition, as the Group 2 element, for example, calcium, beryllium, magnesium, or the like can be used. As the element X, for example, one or more selected from metal elements, silicon, and phosphorus can be used. Moreover, the element X is one or more selected from cobalt, nickel, manganese, iron, and vanadium. Typical examples include lithium-cobalt composite oxide ($LiCoO_2$) and lithium iron phosphate ($LiFePO_4$).

<Transistor>

[0141] In the structure of one embodiment of the present invention, with the use of a memory element including an OS transistor, a reference voltage can be retained in the memory element because a leakage current flowing between a source and a drain when the transistor is off (hereinafter referred to as an off-state current) is extremely low. In that case, power supply of the memory element can be off; thus, with the use of a memory element including an OS transistor, the reference voltage can be retained with extremely low power consumption.

[0142] The memory element including an OS transistor can retain an analog potential. For example, a voltage of the secondary battery can be retained in the memory element without being converted to a digital value with an analog-digital conversion circuit. Since the conversion circuit is unnecessary, the circuit area can be reduced.

[0143] In addition, the memory element using an OS transistor can rewrite and read the reference voltage by charging or discharging electric charge; thus, a substantially unlimited number of times of acquisition and reading of the monitor voltage is possible. Unlike a magnetic memory, a resistive random-access memory, or the like, the memory element using an OS transistor does not go through atomic-level structure change; thus, it is superior in rewrite endurance. In addition, in the memory element using an OS transistor, instability in characteristics due to an increase of electron trap centers, which is observed in a flash memory, is not observed even when rewrite operation is repeated.

[0144] An OS transistor has features of an extremely low off-state current and favorable switching characteristics even in a high-temperature environment. Accordingly, charge or discharge of the assembled battery **120** can be controlled without a malfunction even in a high-temperature environment.

[0145] A memory element using an OS transistor can freely be placed by being stacked over a circuit using an Si transistor or the like, so that integration can be easy. Furthermore, OS transistors can be manufactured with a manufacturing apparatus similar to that for Si transistors and thus can be manufactured at low cost.

[0146] In addition, when an OS transistor has a back gate electrode in addition to a gate electrode, a source electrode, and a drain electrode, the OS transistor can be a four-terminal semiconductor element. The OS transistor can be formed using an electric circuit network that can independently control input and output of signals flowing between a source and a drain depending on a voltage applied to the gate electrode or the back gate electrode. Therefore, it is possible to design circuits under the same thought as LSI. Furthermore, electrical characteristics of the OS transistor are better than those of a Si transistor in a high-temperature environment. Specifically, the ratio between an on-state current and an off-state current is large even at a high temperature higher than or equal to 100° C. and lower than or equal to 200° C., preferably higher than or equal to 125° C. and lower than or equal to 150° C.; thus, favorable switching operation can be performed.

[0147] OS transistors are preferably used as the transistor **162** and the transistor **172**. An OS transistor may be used as the transistor **132**. OS transistors may be used as the transistor **140** and the transistor **150**.

[0148] The comparator can be formed with a Si transistor. Alternatively, the comparator may be formed with an OS transistor.

Example 2 of Power Storage Device

[0149] FIG. **6** illustrates an example of the power storage device **100** of one embodiment of the present invention which includes a detection circuit **185**, a detection circuit **186**, an oscillator circuit OSC, a counter CNT, a logic circuit LC**1**, a logic circuit LC**2**, and a short-circuit detection circuit

SD in addition to the components illustrated in FIG. **1**. Note that these circuits are preferably included in the detection circuit **181** as illustrated in FIG. **6**. At least some of the oscillator circuit OSC, the counter CNT, the logic circuit LC**1**, and the logic circuit LC**2** may be included in the control circuit **170**.

[0150] The power storage device **100** illustrated in FIG. **6** further includes a temperature sensor TS and a micro short-circuit detection circuit MSD. These circuits may be included in the detection circuit **181**.

[0151] The detection circuit **185** has a function of detecting overcharge and overdischarge of the assembled battery **120**. The detection circuit **186** has a function of detecting discharge overcurrent and charge overcurrent of the assembled battery **120**. The details of the detection circuit **185** are illustrated in FIG. **7**, and the details of the detection circuit **186** are illustrated in FIG. **8**.

[0152] The short-circuit detection circuit SD has a function of detecting short circuit of a group of circuits which are operated with the use of the assembled batteries **120**. The detection circuit SD is electrically connected to a terminal SENS. The terminal SENS detects a charge current and a discharge current of the assembled battery **120**, for example.

[0153] A signal is supplied from an output terminal OUT**11** and an output terminal OUT**12** of the detection circuit **185** to the oscillator circuit OSC. Furthermore, signals are supplied from the output terminal OUT**11** to the logic circuit LC**1** and from the output terminal OUT**12** to the logic circuit LC**2**.

[0154] A signal is supplied from an output terminal OUT**21** and an output terminal OUT**22** of the detection circuit **186** to the oscillator circuit OSC. Furthermore, signals are supplied from the output terminal OUT**21** to the logic circuit LC**1** and from the output terminal OUT**22** to the logic circuit LC**2**.

[0155] The oscillator circuit OSC outputs a clock signal that oscillates at a predetermined frequency. The output terminal OUT**11** and the output terminal OUT**12** of the detection circuit **185** and the output terminal OUT**21** and the output terminal OUT**22** of the detection circuit **186** input signals to the oscillator circuit OSC, and the operation of the oscillator circuit OSC is controlled by these signals.

[0156] The counter CNT has a function of counting in synchronization with a clock signal output from the oscillator circuit OSC for a certain period. Signals counted by the counter CNT are input to the logic circuits LC**1** and LC**2**.

[0157] The logic circuit LC**1** and the logic circuit LC**2** control the assembled battery **120** in accordance with the signals counted by the counter CNT. For example, control signals are supplied to the transistor **140** and the transistor **150**, whereby the charge and discharge of the assembled battery **120** is controlled. The logic circuit LC**1** and the logic circuit LC**2** can shift voltage levels to control the transistor **140** and the transistor **150**.

[0158] As described with reference to FIG. **1**, as an operation example of the transistor **140**, a conduction state or a non-conduction state is controlled by the control signal T**1**, so that whether the assembled battery **120** is charged or not is controlled. As an operation example of the transistor **150**, a conduction state or a non-conduction state is controlled by the control signal T**2**, so that whether the assembled battery **120** is discharged or not is controlled.

[0159] As in the example illustrated in FIG. **6**, a configuration in which the transistor **140** and the transistor **150** are not included in the battery control circuit **110** and are provided on a chip or the like outside the battery control circuit **110** may be employed.

[0160] In FIG. **6**, one of a source and a drain of the transistor **150** is electrically connected to the terminal VSSS, and the other is electrically connected to the one of the source and the drain of the transistor **140**. The other of the source and the drain of the transistor **140** is electrically connected to the terminal VM. The terminal VM is electrically connected to a negative electrode of a charger, for example. The terminal VM is electrically connected to a load at the time of discharge, for example.

[0161] FIG. **7** illustrates an example of a circuit diagram of the detection circuit **185**. The detection circuit **185** illustrated in FIG. **7** is electrically connected to terminals at both ends (for example, the terminal VC**1**, the terminal VC**2**, the terminal VC**3**, the terminal VCN, the terminal VSSS, and the like) of each of the plurality of battery cells **121** included in the assembled battery **120**.

[0162] In the detection circuit **185**, a voltage between the terminal VC**1** and the terminal VC**2** is resistance-divided. The resistance-divided voltage is applied to an inverting input terminal of a first comparator (the comparator **113**), and a first memory element (the memory element **114**) is electrically connected to a non-inverting input terminal thereof. A signal SH**1**-**1** is supplied to a gate of a transistor included in the first memory element. The resistance-divided voltage is applied to a non-inverting input terminal of a second comparator (another comparator **113**), and a second memory element (another memory element **114**) is electrically connected to an inverting input terminal thereof. A signal SH**2**-**1** is supplied to a gate of a transistor included in the second memory element. Note that the resistance-divided voltage may be generated by the voltage generation circuit **119**.

[0163] The first memory element retains a voltage applied from the terminal VT. The retained voltage is a voltage corresponding to overcharge detection. When a voltage input to the inverting input terminal becomes higher than the voltage corresponding to overcharge detection, output from the first comparator is inverted. The output from the first comparator is supplied to an AND circuit NA**1** through a level shifter LS.

[0164] The second memory element retains a voltage applied from the terminal VT. The retained voltage is a voltage corresponding to overdischarge detection. When a voltage input to the non-inverting input terminal becomes lower than the voltage corresponding to overdischarge detection, output from the second comparator is inverted. The output from the second comparator is supplied to an AND circuit NA**2** through a level shifter LS.

[0165] The memory element including an OS transistor can retain a voltage stably for a long time. Accordingly, power supply of a circuit supplying a signal to the terminal VT can be stopped or part of operation of the circuit can be stopped, leading to a reduction in power consumption.

[0166] Similarly, two comparators that monitor a voltage between the terminal VC**2** and the terminal VC**3** are provided, and a signal SH**1**-**2** and a signal SH**2**-**2** are supplied as control signals. In addition, two comparators that monitor a voltage between the terminal VCN and the terminal VSSS are provided, and a signal SH**1**-N and a signal SH**2**-N are supplied as control signals.

[0167] Here, a voltage applied to each of the terminals VT electrically connected to the plurality of memory elements **114** included in the detection circuit **185** is preferably generated by the voltage generation circuit **119**. Different voltages can be applied to the terminals VT.

[0168] Note that the comparator included in the detection circuit **185** may be what is called a hysteresis comparator whose threshold is different between when the output is changed from the L level to the H level and when the output is changed from the H level to the L level.

[0169] Here, the structure of the detection circuit **185** may be used not only for detection of overcharge, overdischarge, and the like but also for control of a charge voltage, for example. More specifically, for example, at the time of charge, in the case where the charge voltage of the secondary battery is controlled to be within a certain voltage range including a desired charge voltage, the structure of the detection circuit **185** may be used for controlling the upper limit and the lower limit of the voltage range.

[0170] FIG. **8**A illustrates an example of a circuit diagram of the detection circuit **186**. The detection circuit **186** includes two comparators **113**.

[0171] A signal SH**3** is supplied to a non-inverting input terminal of one of the comparators **113**, and the memory element **114** which retains a voltage corresponding to discharge overcurrent detection is electrically connected to the non-inverting input terminal of one of the comparators **113**. The terminal SENS is electrically connected to the inverting input terminal. When an overcurrent is detected from the voltage applied to the inverting input terminal, output from the output terminal OUT**22** is inverted.

[0172] The terminal SENS is electrically connected to a non-inverting input terminal of the other of the comparators **113**. A signal SH**4** is supplied to an inverting input terminal of the other of the comparators **113**, and the memory element **114** corresponding to charge overcurrent is electrically connected to the inverting input terminal of the other of the comparators **113**. When an overcurrent is detected from the voltage applied to the non-inverting input terminal, output from the output terminal OUT**21** is inverted.

[0173] The temperature sensor TS has a function of measuring the temperature of the assembled battery **120** or the power storage device **100** including the assembled battery **120**. FIG. **8**B is a circuit diagram illustrating an example of the temperature sensor TS. Note that the circuit diagram in FIG. **8**B illustrates some circuits of the temperature sensor TS in some cases.

[0174] The temperature sensor TS in FIG. **8**B includes three comparators **113**, and voltages VT (VT=Tm**1**, Tm**2**, Tm**3**) which correspond to different temperatures are applied to inverting input terminals of the comparators. Each of the applied voltages VT is retained in the memory element **114** which is electrically connected to the inverting input terminal. The voltages Tm**1**, Tm**2**, and Tm**3** may be applied from, for example, the voltage generation circuit **119**. To output terminals OUT**51**, OUT**52**, and OUT**53**, the respective comparators **113** are electrically connected. The memory elements **114** are electrically connected to inverting output terminals of the comparators **113**. A terminal that is electrically connected to a gate of the transistor **162** included in each of the memory elements **114** is referred to as SH**5**. As the voltages VT,

[0175] Tm**1**, Tm**2**, and Tm**3** are applied to SH**5** of the transistors **162** included in the memory elements **114** which are electrically connected to the output terminals OUT**51**, OUT**52**, and OUT**53**. A voltage corresponding to the measured temperature is applied to an input terminal Vt. The input terminal Vt is supplied to the non-inverting input terminal of each of the three comparators **113**.

[0176] In accordance with the results of comparison of the voltage applied to the input terminal Vt with the voltage of the inverting input terminal of each of the comparators **113**, a signal is output from the output terminal (the output terminal OUT**51**, the output terminal OUT**52**, or the output terminal OUT**53**) of the comparator, whereby the temperature can be determined.

[0177] An OS transistor has a feature in that the resistance value becomes lower when the temperature rises. By utilizing this feature, the ambient temperature can be converted into a voltage. This voltage may be applied to the input terminal Vt, for example. That is, for example, a voltage based on the resistance value of the OS transistor can be applied to the input terminal Vt. Alternatively, for example, a voltage based on the resistance value of the OS transistor is applied to the input terminal Vt through a conversion circuit or the like.

[0178] The logic circuit LC**1** and the logic circuit LC**2** may be configured to detect output from the temperature sensor TS, and turn off the transistor **140** and (or) the transistor **150** to stop charge and (or) discharge when the temperature exceeds the temperature range in which the assembled battery **120** can operate.

[0179] The detection circuit MSD has a function of detecting a micro-short circuit of the assembled battery **120**. For example, by monitoring either a voltage or a current or the both, the micro-short circuit can be detected. FIG. **9**A shows an example of a waveform of charge which indicates a micro-short circuit. In FIG. **9**A, the horizontal axis represents charge capacity Cb of the secondary battery, and the vertical axis represents a voltage Vb of the secondary battery. A region or the like surrounded by a dotted line indicates a micro-short circuit.

[0180] A micro-short circuit refers to a minute short circuit in a secondary battery, and is not a short circuit of a positive electrode and a negative electrode of a secondary battery which makes charge and discharge impossible but a phenomenon in which a small amount of short-circuit current flows through a minute short circuit portion for a short period. A micro-short circuit is presumably caused in the following manner: a plurality of charge and discharge operations generate deterioration, a metal element such as lithium or cobalt is precipitated in the battery, the growth of the precipitate generates the local concentration of current in part of a positive electrode and part of a negative electrode, and the function of a separator partially stops or a by-product is generated.

[0181] FIG. **9**B is a circuit diagram illustrating an example of the detection circuit MSD. Note that the circuit diagram in FIG. **9**B shows some circuits of the detection circuit MSD in some cases. The detection circuit MSD is supplied with voltages from the terminal VC**1**, the terminal VC**2**, the terminal VC**3**, and the terminal VCN.

[0182] The detection circuit MSD includes the comparators **113** which correspond to the respective battery cells **121**. The memory element **114** is connected to the inverting input terminal of the comparator **113**. A signal SH**6** is supplied to the memory element **114**.

[0183] The non-inverting input terminal of the comparator **113** is supplied with the voltage of the battery cell **121** (e.g., the voltage of the positive electrode); and the inverting input terminal is supplied with a voltage Vofs, which is obtained by offsetting the voltage by an offset circuit OFS, in the case where the signal SH**6** is a high potential, and the supplied voltage is retained in the case where the signal SH**6** is a low potential. For example, the Vofs can be slightly lower than the voltage.

[0184] As an example illustrated in FIG. **9**C, in the comparator included in the circuit illustrated in FIG. **1** or the circuit illustrated in FIG. **9**B, resistance division between the terminal VC**1** and the terminal VC**2** may be performed to generate a voltage lower than that of the terminal VC**1** and the voltage may be applied to the non-inverting input terminal of the comparator **113**.

[0185] FIG. **10**A shows an example of a timing chart in normal operation at the time of charge of the battery cell **121**, and FIG. **10**B shows an example of a timing chart where a micro-short circuit is detected.

[0186] In FIG. **10**A, the voltage of the battery cell **121**, here, the voltage of the terminal VC**1** as an example, increases with time. When the signal SH**6** is a high potential, the voltage Vofs is a voltage obtained by offsetting the voltage of the terminal VC**1**, and when the signal SH**6** is a low potential, the applied voltage is retained. Thus, as shown in FIG. **10**A, the voltage Vofs increases from Time t1 to t2, and t3 in a stepwise manner. In FIG. **10**A, the voltage of the terminal VC**1** is constantly higher than the voltage ofs, and thus the output from the comparator **113** remains a high potential.

[0187] In FIG. **10**B, the voltage of the terminal VC**1** rapidly decreases at Time tm, and a micro-short circuit occurs. When the voltage of the terminal VC**1** is lower than the voltage Vofs, the output from the comparator **113** is a low potential, and a micro-short circuit is detected.

[0188] In the blocks included in the power storage device of one embodiment of the present invention, for example, in the cell-balance circuit **130**, the detection circuit **185**, the detection circuit **186**, the temperature sensor TS, and the like, an analog potential can be retained by the memory element including an OS transistor. That is, for example, in a period during which the power storage device performs protection of the secondary battery or monitoring, when the analog potential is supplied once, it is not necessary to supply the analog potential again (hereinafter expressed as rewrite) or it is possible to make the rewriting frequency extremely low. In the case where the analog potential is not retained, in order to supply the analog potential frequently, for example, conversion circuits corresponding to the blocks or potentials are used. In such a case, the circuit area is increased. In contrast, in the case where the analog potential is retained, for example, the rewriting frequency is extremely low; thus, the analog potentials may be sequentially output from one conversion circuit and the analog potentials may be retained. In other words, a conversion circuit can be used in common with respect to the blocks or the potentials.

[0189] FIG. **22** illustrates an example of electrical connection between the digital-analog conversion circuit **190** included in the voltage generation circuit **119** and the cell-balance circuit **130**(*k*), the detection circuit **185**, the detection circuit **186**, and the temperature sensor TS. Analog potentials output from the digital-analog conversion circuit **190** are supplied to the memory elements **114** included in the blocks and retained.

[0190] Since the supplied analog potentials are retained, power gating is possible in the digital-analog conversion circuit **190** in a period during which analog potentials are not supplied to the memory elements **114** included in the blocks; thus, power consumption is reduced.

<Circuit Evaluation Results>

[0191] The temperature sensor TS included in the power storage device of one embodiment of the present invention is evaluated. FIG. **23** illustrates a configuration of the temperature sensor TS used for the evaluation.

[0192] In FIG. **23**, the comparators **113** electrically connected to the output terminals OUT**51**, OUT**52**, and OUT**53** are referred to as comparators **113-1**, **113-2**, and **113-3**, respectively. The memory elements **114** electrically connected to inverting output terminals of the comparators **113-1**, **113-2**, and **113-3** are referred to as memory elements **114-1**, **114-2**, and **114-3**, respectively. Terminals electrically connected to the gates of the transistors **162** included in the memory elements **114-1**, **114-2**, and **114-3** are referred to as SH**5-1**, SH**5-2**, and SH**5-3**, respectively, and terminals that supply potentials to the transistors **162** are referred to as vm(1), vm(2), and vm(3), respectively.

[0193] As the transistors **162** included in the memory elements **114-1**, **114-2**, and **114-3**, OS transistors are used. Here, the transistors **162** are n-channel transistors.

[0194] In the temperature sensor TS illustrated in FIG. **23**, a sensor circuit **195** including an OS transistor **196** and a capacitor **197** is used as a sensor circuit. One of a source and a drain of the OS transistor **196** is electrically connected to a non-inverting output terminal of the comparator **113** and one electrode of the capacitor **197**, and a terminal va is electrically connected to the other of the source and the drain of the OS transistor **196**. A terminal ga is electrically connected to a gate of the OS transistor **196**. The sensor circuits **195** electrically connected to non-inverting output terminals of the comparators **113-1**, **113-2**, and **113-3** are referred to as sensor circuits **195-1**, **195-2**, and **195-3**, respectively. The terminals va electrically connected to the sensor circuits **195-1**, **195-2**, and **195-3** are referred to as terminals va(1), va(2), and va(3), respectively. The terminals ga electrically connected to the sensor circuits **195-1**, **195-2**, and **195-3** are referred to as terminals ga(1), ga(2), and ga(3), respectively.

[0195] The OS transistor can be used as a temperature sensor element by utilizing the threshold of the OS transistor that changes depending on temperature. That is, the OS transistor **196** has a function of a temperature sensor element. Here, the OS transistor **196** is an n-channel transistor.

[0196] Here, it is preferable that transistors with the same structure be used as the transistor **162** and the OS transistor **196**. For example, the channel length, the channel width, the gate capacitance, and the like are preferably the same.

[0197] Signals for 30° C., 40° C., and 50° C. are supplied to the temperature sensor TS. First, in an environment at 30° C., a high-potential signal is supplied to the terminal SH**5-1**, and low-potential signals are supplied to the terminal SH**5-2**, the terminal SH**5-3**, the terminal ga(1), the terminal ga(2), and the terminal ga(3). A voltage (here, referred to as a voltage vx) which causes threshold drop is applied to the terminal vm(1), whereby a voltage (vx-vth1) corresponding

to the threshold at 30° C. is stored in an inverting input terminal of the comparator **113-1**. Here, vth1 is the threshold of the transistor **162** at 30° C.

[0198] Here, an example of the voltage which causes threshold drop is, for example, the case where when the source voltage is 0 V, a value obtained by subtracting the voltage (here, the drain voltage) from the gate voltage is smaller than the threshold.

[0199] Next, a low-potential signal is supplied to the terminal SH**5-1**.

[0200] Next, a high-potential signal is supplied to the terminal SH**5-2** and the voltage vx is similarly applied to the terminal vm(2) in an environment at 40° C., whereby a voltage (vx-vth2) is stored in an inverting input terminal of the comparator **113-2**. Here, vth2 is the threshold of the transistor **162** at 40° C.

[0201] Next, a low-potential signal is supplied to the terminal SH**5-2**.

[0202] Next, a high-potential signal is supplied to the terminal SH**5-3** and the voltage vx is similarly applied to the terminal vm(3) in an environment at 50° C., whereby a voltage (vx-vth3) is stored in an inverting input terminal of the comparator **113-3**. Here, vth3 is the threshold of the transistor **162** at 50° C.

[0203] In the above manner, values corresponding to the temperatures are stored in the inverting input terminals of the comparators **113**.

[0204] Next, the ambient temperature of the temperature sensor TS is changed from 25° C. to 60° C., and voltages of the output terminal OUT**51**, the output terminal OUT**52**, and the output terminal OUT**53** are measured.

[0205] The voltage vx is applied to the terminals va included in the sensor circuits **195**. Although it is possible to constantly supply a high-potential signal to the terminal ga, intermittent supply of the high-potential signal can reduce the power consumption. The OS transistor can retain the applied voltage even when the terminal ga is supplied with a low-potential signal because its leakage current is extremely low. In this evaluation, a high-potential signal is supplied in a period of shorter than or equal to 100 us at intervals of 100 ms.

[0206] FIG. **24** shows the evaluation results. The horizontal axis represents the ambient temperature, and the vertical axis represents voltages of the output terminal OUT**51**, the output terminal OUT**52**, and the output terminal OUT**53**. It is found that low-potential signals are output from the comparators at certain temperatures.

[0207] Note that operations for writing data to the memory element **114-1**, the memory element **114-2**, and the memory element **114-3** at 30° C., 40° C., and 50° C., respectively, are described in the above; however, data corresponding to the threshold at the respective temperatures can be written regardless of the temperatures at the time of data writing.

[0208] This embodiment can be combined with any of the other embodiments as appropriate.

Embodiment 2

[0209] A structure example of a semiconductor device applicable to the battery control circuit described in the above embodiment will be described.

[0210] A semiconductor device illustrated in FIG. **11** includes a transistor **300**, a transistor **500**, and a capacitor **600**. FIG. **13**A is a cross-sectional diagram of the transistor **500** in the channel length direction, FIG. **13**B is a cross-sectional diagram of the transistor **500** in the channel width direction, and FIG. **13**C is a cross-sectional diagram of the transistor **300** in the channel width direction.

[0211] The transistor **500** is an OS transistor. Since the off-state current of the transistor **500** is low, when the transistor **500** is used as an OS transistor included in the semiconductor device, written data can be retained for a long time.

[0212] The transistor **500** is an n-channel transistor, for example.

[0213] Here, the battery control circuit described in the above embodiment may be formed with OS transistors. For example, part of the battery control circuit described in the above embodiment is preferably formed with OS transistors. For example, the transistor **162** and the transistor **172** included in the battery control circuit may be OS transistors. For example, the comparator included in the battery control circuit can be formed with an OS transistor. The comparator included in the battery control circuit may be formed with unipolar transistors, for example, only n-channel transistors.

[0214] The semiconductor device described in this embodiment includes the transistor **300**, the transistor **500**, and the capacitor **600**, as shown in FIG. **11**. The transistor **500** is provided above the transistor **300**, and the capacitor **600** is provided above the transistor **300** and the transistor **500**.

[0215] The transistor **300** is provided over a substrate **311** and includes a conductor **316**, an insulator **315**, a semiconductor region **313** that is part of the substrate **311**, and a low-resistance region **314***a* and a low-resistance region **314***b* each functioning as a source region or a drain region. Note that the transistor **300** can be used as the transistor included in the comparator in the above embodiment, for example.

[0216] As shown in FIG. **13**C, in the transistor **300**, a top surface and a side surface in the channel width direction of the semiconductor region **313** are covered with the conductor **316** with the insulator **315** therebetween. Such a Fin-type transistor **300** can have an increased effective channel width, and thus have improved on-state characteristics. In addition, since contribution of an electric field of a gate electrode can be increased, the off-state characteristics of the transistor **300** can be improved.

[0217] Note that the transistor **300** can be either a p-channel transistor or an n-channel transistor.

[0218] A region of the semiconductor region **313** where a channel is formed, a region in the vicinity thereof, the low-resistance region **314***a* and the low-resistance region **314***b* each functioning as a source region or a drain region, and the like preferably contain a semiconductor such as a silicon-based semiconductor, and preferably contain single crystal silicon. Alternatively, the regions may be formed using a material containing Ge (germanium), SiGe (silicon germanium), GaAs (gallium arsenide), GaAlAs (gallium aluminum arsenide), or the like. A structure may be employed in which silicon whose effective mass is controlled by applying stress to the crystal lattice and changing the lattice spacing is used. Alternatively, the transistor **300** may be an HEMT (High Electron Mobility Transistor) with the use of GaAs and GaAlAs, or the like.

[0219] The low-resistance region **314***a* and the low-resistance region **314***b* contain an element which imparts n-type conductivity, such as arsenic or phosphorus, or an element

which imparts p-type conductivity, such as boron, in addition to the semiconductor material used for the semiconductor region **313**.

[0220] For the conductor **316** functioning as a gate electrode, a semiconductor material such as silicon containing the element which imparts n-type conductivity, such as arsenic or phosphorus, or the element which imparts p-type conductivity, such as boron, or a conductive material such as a metal material, an alloy material, or a metal oxide material can be used.

[0221] Note that since the work function of a conductor depends on the material of the conductor, the threshold voltage of the transistor can be adjusted by selecting the material of the conductor. Specifically, it is preferable to use a material such as titanium nitride or tantalum nitride for the conductor. Moreover, in order to ensure both conductivity and embeddability, it is preferable to use stacked layers of metal materials such as tungsten and aluminum for the conductor, and it is particularly preferable to use tungsten in terms of heat resistance.

[0222] Note that the transistor **300** shown in FIG. **11** is an example and the structure is not limited thereto; an appropriate transistor is used in accordance with a circuit configuration or a driving method. For example, when the semiconductor device is composed of only OS transistors, the transistor **300** has a structure similar to that of the transistor **500** using an oxide semiconductor, as shown in FIG. **12**. Note that the details of the transistor **500** are described later.

[0223] An insulator **320**, an insulator **322**, an insulator **324**, and an insulator **326** are stacked sequentially and provided to cover the transistor **300**.

[0224] For the insulator **320**, the insulator **322**, the insulator **324**, and the insulator **326**, silicon oxide, silicon oxynitride, silicon nitride oxide, silicon nitride, aluminum oxide, aluminum oxynitride, aluminum nitride oxide, aluminum nitride, or the like is used, for example.

[0225] Note that in this specification, silicon oxynitride refers to a material that contains oxygen at a higher proportion than nitrogen, and silicon nitride oxide refers to a material that contains nitrogen at a higher proportion than oxygen. Furthermore, in this specification, aluminum oxynitride refers to a material that contains oxygen at a higher proportion than nitrogen, and aluminum nitride oxide refers to a material that contains nitrogen at a higher proportion than oxygen.

[0226] The insulator **322** may have a function of a planarization film for planarizing a level difference caused by the transistor **300** or the like provided below the insulator **322**. For example, a top surface of the insulator **322** may be planarized by planarization treatment using a chemical mechanical polishing (CMP) method or the like to increase planarity.

[0227] In addition, for the insulator **324**, it is preferable to use a film having a barrier property that prevents diffusion of hydrogen or impurities from the substrate **311**, the transistor **300**, or the like into a region where the transistor **500** is provided.

[0228] For the film having a barrier property against hydrogen, silicon nitride formed by a CVD method can be used, for example. Here, diffusion of hydrogen to a semiconductor element including an oxide semiconductor, such as the transistor **500**, degrades the characteristics of the semiconductor element in some cases. Therefore, a film that inhibits hydrogen diffusion is preferably used between the transistor **500** and the transistor **300**. The film that inhibits hydrogen diffusion is specifically a film from which a small amount of hydrogen is released.

[0229] The amount of released hydrogen can be analyzed by thermal desorption spectroscopy (TDS) or the like, for example. The amount of hydrogen released from the insulator **324** that is converted into hydrogen atoms per area of the insulator **324** is less than or equal to 10×10^{15} atoms/cm^2, preferably less than or equal to 5×10^{15} atoms/cm^2, in the TDS analysis in a film-surface temperature range of 50° C. to 500° C., for example.

[0230] Note that the dielectric constant of the insulator **326** is preferably lower than that of the insulator **324**. For example, the dielectric constant of the insulator **326** is preferably lower than 4, further preferably lower than 3. The dielectric constant of the insulator **326** is, for example, preferably 0.7 times or less, further preferably 0.6 times or less the dielectric constant of the insulator **324**. When a material with a low dielectric constant is used for an interlayer film, parasitic capacitance generated between wirings can be reduced.

[0231] In addition, a conductor **328**, a conductor **330**, and the like that are connected to the capacitor **600** or the transistor **500** are embedded in the insulator **320**, the insulator **322**, the insulator **324**, and the insulator **326**. Note that the conductor **328** and the conductor **330** each have a function of a plug or a wiring. Furthermore, a plurality of conductors functioning as plugs or wirings are collectively denoted by the same reference numeral in some cases. Moreover, in this specification and the like, a wiring and a plug connected to the wiring may be a single component. That is, there are cases where part of a conductor functions as a wiring and part of a conductor functions as a plug.

[0232] As a material for each of the plugs and wirings (the conductor **328**, the conductor **330**, and the like), a single layer or a stacked layer of a conductive material such as a metal material, an alloy material, a metal nitride material, or a metal oxide material can be used. It is preferable to use a high-melting-point material that has both heat resistance and conductivity, such as tungsten or molybdenum, and it is preferable to use tungsten. Alternatively, it is preferable to form the plugs and wirings with a low-resistance conductive material such as aluminum or copper. The use of a low-resistance conductive material can reduce wiring resistance.

[0233] A wiring layer may be provided over the insulator **326** and the conductor **330**. For example, in FIG. **11**, an insulator **350**, an insulator **352**, and an insulator **354** are stacked sequentially and provided. Furthermore, a conductor **356** is formed in the insulator **350**, the insulator **352**, and the insulator **354**. The conductor **356** has a function of a plug or a wiring that is connected to the transistor **300**. Note that the conductor **356** can be provided using a material similar to those for the conductor **328** and the conductor **330**.

[0234] Note that for example, as the insulator **350**, like the insulator **324**, an insulator having a barrier property against hydrogen is preferably used. Furthermore, the conductor **356** preferably contains a conductor having a barrier property against hydrogen. In particular, the conductor having a barrier property against hydrogen is formed in an opening of the insulator **350** having a barrier property against hydrogen. With this structure, the transistor **300** and the transistor **500**

can be separated by a barrier layer, so that diffusion of hydrogen from the transistor **300** into the transistor **500** can be inhibited.

[0235] Note that for the conductor having a barrier property against hydrogen, tantalum nitride is preferably used, for example. In addition, the use of a stack including tantalum nitride and tungsten, which has high conductivity, can inhibit diffusion of hydrogen from the transistor **300** while the conductivity of a wiring is kept. In that case, a structure is preferable in which a tantalum nitride layer having a barrier property against hydrogen is in contact with the insulator **350** having a barrier property against hydrogen.

[0236] A wiring layer may be provided over the insulator **354** and the conductor **356**. For example, in FIG. **11**, an insulator **360**, an insulator **362**, and an insulator **364** are stacked sequentially and provided. Furthermore, a conductor **366** is formed in the insulator **360**, the insulator **362**, and the insulator **364**. The conductor **366** has a function of a plug or a wiring. Note that the conductor **366** can be provided using a material similar to those for the conductor **328** and the conductor **330**.

[0237] Note that for example, as the insulator **360**, like the insulator **324**, an insulator having a barrier property against hydrogen is preferably used. Furthermore, the conductor **366** preferably contains a conductor having a barrier property against hydrogen. In particular, the conductor having a barrier property against hydrogen is formed in an opening portion of the insulator **360** having a barrier property against hydrogen. With this structure, the transistor **300** and the transistor **500** can be separated by a barrier layer, so that diffusion of hydrogen from the transistor **300** into the transistor **500** can be inhibited.

[0238] A wiring layer may be provided over the insulator **364** and the conductor **366**. For example, in FIG. **11**, an insulator **370**, an insulator **372**, and an insulator **374** are stacked sequentially and provided. Furthermore, a conductor **376** is formed in the insulator **370**, the insulator **372**, and the insulator **374**. The conductor **376** has a function of a plug or a wiring. Note that the conductor **376** can be provided using a material similar to those for the conductor **328** and the conductor **330**.

[0239] Note that for example, as the insulator **370**, like the insulator **324**, an insulator having a barrier property against hydrogen is preferably used. Furthermore, the conductor **376** preferably contains a conductor having a barrier property against hydrogen. In particular, the conductor having a barrier property against hydrogen is formed in an opening portion of the insulator **370** having a barrier property against hydrogen. With this structure, the transistor **300** and the transistor **500** can be separated by a barrier layer, so that diffusion of hydrogen from the transistor **300** into the transistor **500** can be inhibited.

[0240] A wiring layer may be provided over the insulator **374** and the conductor **376**. For example, in FIG. **11**, an insulator **380**, an insulator **382**, and an insulator **384** are stacked sequentially and provided. Furthermore, a conductor **386** is formed in the insulator **380**, the insulator **382**, and the insulator **384**. The conductor **386** has a function of a plug or a wiring. Note that the conductor **386** can be provided using a material similar to those for the conductor **328** and the conductor **330**.

[0241] Note that for example, as the insulator **380**, like the insulator **324**, an insulator having a barrier property against hydrogen is preferably used. Furthermore, the conductor **386** preferably contains a conductor having a barrier property against hydrogen. In particular, the conductor having a barrier property against hydrogen is formed in an opening portion of the insulator **380** having a barrier property against hydrogen. With this structure, the transistor **300** and the transistor **500** can be separated by a barrier layer, so that diffusion of hydrogen from the transistor **300** into the transistor **500** can be inhibited.

[0242] Although the wiring layer including the conductor **356**, the wiring layer including the conductor **366**, the wiring layer including the conductor **376**, and the wiring layer including the conductor **386** are described above, the semiconductor device of this embodiment is not limited thereto. Three or less wiring layers that are similar to the wiring layer including the conductor **356** may be provided, or five or more wiring layers that are similar to the wiring layer including the conductor **356** may be provided.

[0243] An insulator **510**, an insulator **512**, an insulator **514**, and an insulator **516** are stacked sequentially and provided over the insulator **384**. A substance having a barrier property against oxygen or hydrogen is preferably used for any of the insulator **510**, the insulator **512**, the insulator **514**, and the insulator **516**.

[0244] For example, for the insulator **510** and the insulator **514**, it is preferable to use a film having a barrier property that prevents diffusion of hydrogen or impurities from the substrate **311**, a region where the transistor **300** is provided, or the like into the region where the transistor **500** is provided. Therefore, a material similar to that for the insulator **324** can be used.

[0245] For the film having a barrier property against hydrogen, silicon nitride formed by a CVD method can be used, for example. Here, diffusion of hydrogen to a semiconductor element including an oxide semiconductor, such as the transistor **500**, degrades the characteristics of the semiconductor element in some cases. Therefore, a film that inhibits hydrogen diffusion is preferably provided between the transistor **500** and the transistor **300**. The film that inhibits hydrogen diffusion is specifically a film from which a small amount of hydrogen is released.

[0246] In addition, for the film having a barrier property against hydrogen, a metal oxide such as aluminum oxide, hafnium oxide, or tantalum oxide is preferably used for the insulator **510** and the insulator **514**, for example.

[0247] In particular, aluminum oxide has an excellent blocking effect that prevents the passage of both oxygen and impurities such as hydrogen and moisture which are factors of a change in electrical characteristics of the transistor. Accordingly, aluminum oxide can prevent mixing of impurities such as hydrogen and moisture into the transistor **500** in a manufacturing process and after manufacturing of the transistor. In addition, release of oxygen from the oxide included in the transistor **500** can be inhibited. Therefore, aluminum oxide is suitably used for a protective film of the transistor **500**.

[0248] In addition, for the insulator **512** and the insulator **516**, a material similar to that for the insulator **320** can be used, for example. Furthermore, when a material with a comparatively low dielectric constant is used for these insulators, parasitic capacitance generated between wirings can be reduced. A silicon oxide film, a silicon oxynitride film, or the like can be used for the insulator **512** and the insulator **516**, for example.

[0249] Furthermore, a conductor **518**, a conductor included in the transistor **500** (a conductor **503** for example), and the like are embedded in the insulator **510**, the insulator **512**, the insulator **514**, and the insulator **516**. Note that the conductor **518** has a function of a plug or a wiring that is connected to the capacitor **600** or the transistor **300**. The conductor **518** can be provided using a material similar to those for the conductor **328** and the conductor **330**.

[0250] In particular, the conductor **518** in a region in contact with the insulator **510** and the insulator **514** is preferably a conductor having a barrier property against oxygen, hydrogen, and water. With this structure, the transistor **300** and the transistor **500** can be separated by a layer having a barrier property against oxygen, hydrogen, and water; thus, diffusion of hydrogen from the transistor **300** into the transistor **500** can be inhibited.

[0251] The transistor **500** is provided above the insulator **516**.

[0252] As shown in FIGS. **13**A and **13**B, the transistor **500** includes the conductor **503** positioned to be embedded in the insulator **514** and the insulator **516**; an insulator **520** positioned over the insulator **516** and the conductor **503**; an insulator **522** positioned over the insulator **520**; an insulator **524** positioned over the insulator **522**; an oxide **530***a* positioned over the insulator **524**; an oxide **530***b* positioned over the oxide **530***a*; a conductor **542***a* and a conductor **542***b* positioned apart from each other over the oxide **530***b*; an insulator **580** that is positioned over the conductor **542***a* and the conductor **542***b* and is provided with an opening formed to overlap with a region between the conductor **542***a* and the conductor **542***b*; an oxide **530***c* positioned on a bottom and a side surface of the opening; an insulator **550** positioned on a formation surface of the oxide **530***c*; and a conductor **560** positioned on a formation surface of the insulator **550**.

[0253] In addition, as shown in FIGS. **13**A and **13**B, an insulator **544** is preferably positioned between the insulator **580** and the oxide **530***a*, the oxide **530***b*, the conductor **542***a*, and the conductor **542***b*. Furthermore, as shown in FIGS. **13**A and **13**B, the conductor **560** preferably includes a conductor **560***a* provided inside the insulator **550** and a conductor **560***b* provided to be embedded inside the conductor **560***a*. Moreover, as shown in FIGS. **13**A and **13**B, an insulator **574** is preferably positioned over the insulator **580**, the conductor **560**, and the insulator **550**.

[0254] Note that in the following description, the oxide **530***a*, the oxide **530***b*, and the oxide **530***c* are sometime collectively referred to as an oxide **530**.

[0255] Note that although a structure of the transistor **500** in which three layers of the oxide **530***a*, the oxide **530***b*, and the oxide **530***c* are stacked in a region where a channel is formed and its vicinity is shown, the present invention is not limited thereto. For example, a single layer of the oxide **530***b*, a two-layer structure of the oxide **530***b* and the oxide **530***a*, a two-layer structure of the oxide **530***b* and the oxide **530***c*, or a stacked-layer structure of four or more layers may be employed. Furthermore, although the conductor **560** is shown to have a stacked-layer structure of two layers in the transistor **500**, the present invention is not limited thereto. For example, the conductor **560** may have a single-layer structure or a stacked-layer structure of three or more layers. Moreover, the transistor **500** shown in FIG. **11**, FIG. **13**A, or the like is an example and the structure is not limited thereto; an appropriate transistor is used in accordance with a circuit configuration or a driving method.

[0256] Here, the conductor **560** functions as a gate electrode of the transistor, and the conductor **542***a* and the conductor **542***b* each function as a source electrode or a drain electrode. As described above, the conductor **560** is formed to be embedded in the opening of the insulator **580** and the region between the conductor **542***a* and the conductor **542***b*. The positions of the conductor **560**, the conductor **542***a*, and the conductor **542***b* with respect to the opening of the insulator **580** are selected in a self-aligned manner. That is, in the transistor **500**, the gate electrode can be positioned between the source electrode and the drain electrode in a self-aligned manner. Therefore, the conductor **560** can be formed without an alignment margin, resulting in a reduction in the area occupied by the transistor **500**. Accordingly, miniaturization and high integration of the semiconductor device can be achieved.

[0257] In addition, since the conductor **560** is formed in the region between the conductor **542***a* and the conductor **542***b* in a self-aligned manner, the conductor **560** does not have a region overlapping with the conductor **542***a* or the conductor **542***b*. Thus, parasitic capacitance formed between the conductor **560** and each of the conductor **542***a* and the conductor **542***b* can be reduced. As a result, the switching speed of the transistor **500** can be improved, and the transistor **500** can have high frequency characteristics.

[0258] The conductor **560** sometimes functions as a first gate (also referred to as top gate) electrode. In addition, the conductor **503** sometimes functions as a second gate (also referred to as bottom gate) electrode. In that case, the threshold voltage of the transistor **500** can be controlled by changing a potential applied to the conductor **503** independently of a potential applied to the conductor **560**. In particular, the threshold voltage of the transistor **500** can be higher than 0 V and the off-state current can be reduced by applying a negative potential to the conductor **503**. Thus, a drain current at the time when a potential applied to the conductor **560** is 0 V can be lower in the case where a negative potential is applied to the conductor **503** than in the case where a negative potential is not applied to the conductor **503**.

[0259] The conductor **503** is positioned to overlap with the oxide **530** and the conductor **560**. Thus, in the case where potentials are applied to the conductor **560** and the conductor **503**, an electric field generated from the conductor **560** and an electric field generated from the conductor **503** are connected, so that a channel formation region formed in the oxide **530** can be covered. In this specification and the like, a transistor structure in which a channel formation region is electrically surrounded by electric fields of a first gate electrode and a second gate electrode is referred to as a surrounded channel (S-channel) structure.

[0260] In addition, the conductor **503** has a structure similar to that of the conductor **518**; a conductor **503***a* is formed in contact with an inner wall of an opening in the insulator **514** and the insulator **516**, and a conductor **503***b* is formed on the inner side. Note that although the transistor **500** having a structure in which the conductor **503***a* and the conductor **503***b* are stacked is shown, the present invention is not limited thereto. For example, the conductor **503** may be provided as a single layer or to have a stacked-layer structure of three or more layers.

[0261] Here, for the conductor **503***a*, a conductive material that has a function of inhibiting diffusion of impurities such as a hydrogen atom, a hydrogen molecule, a water molecule,

and a copper atom (through which the impurities are less likely to pass) is preferably used. Alternatively, it is preferable to use a conductive material that has a function of inhibiting diffusion of oxygen (e.g., at least one of an oxygen atom, an oxygen molecule, and the like) (through which oxygen is less likely to pass). Note that in this specification, a function of inhibiting diffusion of impurities or oxygen means a function of inhibiting diffusion of any one or all of the impurities and oxygen.

[0262] For example, when the conductor **503***a* has a function of inhibiting diffusion of oxygen, a reduction in conductivity of the conductor **503***b* due to oxidation can be inhibited.

[0263] In addition, in the case where the conductor **503** also functions as a wiring, a conductive material with high conductivity that contains tungsten, copper, or aluminum as its main component is preferably used for the conductor **503***b*. In that case, the conductor **505** is not necessarily provided. Note that the conductor **503***b* is shown as a single layer but may have a stacked-layer structure, for example, a stack of the above conductive material and titanium or titanium nitride.

[0264] The insulator **520**, the insulator **522**, the insulator **524**, and the insulator **550** have a function of a second gate insulating film.

[0265] Here, as the insulator **524** in contact with the oxide **530**, an insulator that contains oxygen more than oxygen in the stoichiometric composition is preferably used. That is, an excess-oxygen region is preferably formed in the insulator **524**. When such an insulator containing excess oxygen is provided in contact with the oxide **530**, oxygen vacancies in the oxide **530** can be reduced and the reliability of the transistor **500** can be improved.

[0266] As the insulator including an excess-oxygen region, specifically, an oxide material that releases part of oxygen by heating is preferably used. An oxide that releases oxygen by heating is an oxide film in which the amount of released oxygen converted into oxygen atoms is greater than or equal to 1.0×10^{18} atoms/cm^3, preferably greater than or equal to 1.0×10^{19} atoms/cm^3, further preferably greater than or equal to 2.0×10^{19} atoms/cm^3 or greater than or equal to 3.0×10^{20} atoms/cm^3 in TDS (Thermal Desorption Spectroscopy) analysis. Note that the temperature of the film surface in the TDS analysis is preferably in a range of higher than or equal to 100° C. and lower than or equal to 700° C., or higher than or equal to 100° C. and lower than or equal to 400° C.

[0267] In addition, in the case where the insulator **524** includes an excess-oxygen region, it is preferable that the insulator **522** have a function of inhibiting diffusion of oxygen (e.g., an oxygen atom, an oxygen molecule, or the like) (through which oxygen is less likely to pass).

[0268] When the insulator **522** has a function of inhibiting diffusion of oxygen or impurities, oxygen contained in the oxide **530** is not diffused into the insulator **520** side, which is preferable. Furthermore, the conductor **503** can be inhibited from reacting with oxygen contained in the insulator **524** or the oxide **530**.

[0269] For the insulator **522**, a single layer or stacked layers of an insulator containing what is called a high-k material such as aluminum oxide, hafnium oxide, an oxide containing aluminum and hafnium (hafnium aluminate), tantalum oxide, zirconium oxide, lead zirconate titanate (PZT), strontium titanate ($SrTiO_3$), or $(Ba,Sr)TiO_3$ (BST) are preferably used, for example. As miniaturization and high integration of transistors progress, a problem such as leakage current might arise because of a thinner gate insulating film. When a high-k material is used for an insulator functioning as the gate insulating film, a gate potential during transistor operation can be reduced while the physical thickness is maintained.

[0270] It is particularly preferable to use an insulator containing an oxide of one or both of aluminum and hafnium, which is an insulating material having a function of inhibiting diffusion of impurities, oxygen, and the like (through which oxygen is less likely to pass). Aluminum oxide, hafnium oxide, an oxide containing aluminum and hafnium (hafnium aluminate), or the like is preferably used as the insulator containing an oxide of one or both of aluminum and hafnium. In the case where the insulator **522** is formed using such a material, the insulator **522** functions as a layer that inhibits release of oxygen from the oxide **530** and mixing of impurities such as hydrogen from the periphery of the transistor **500** into the oxide **530**.

[0271] Alternatively, aluminum oxide, bismuth oxide, germanium oxide, niobium oxide, silicon oxide, titanium oxide, tungsten oxide, yttrium oxide, or zirconium oxide may be added to these insulators, for example. Alternatively, these insulators may be subjected to nitriding treatment. The insulator over which silicon oxide, silicon oxynitride, or silicon nitride is stacked may be used.

[0272] In addition, it is preferable that the insulator **520** be thermally stable. For example, silicon oxide and silicon oxynitride are suitable because they are thermally stable. Furthermore, the combination of an insulator that is a high-k material and silicon oxide or silicon oxynitride enables the insulator **520** and an insulator **526** to have a stacked-layer structure that has thermal stability and a high dielectric constant.

[0273] Note that in the transistor **500** in FIGS. **13**A and **13**B, the insulator **520**, the insulator **522**, and the insulator **524** are shown as the second gate insulating film having a stacked-layer structure of three layers; however, the second gate insulating film may be a single layer or may have a stacked-layer structure of two layers or four or more layers. In that case, without limitation to a stacked-layer structure formed of the same material, a stacked-layer structure formed of different materials may be employed.

[0274] In the transistor **500**, a metal oxide functioning as an oxide semiconductor is preferably used as the oxide **530** including the channel formation region. For example, as the oxide **530**, a metal oxide such as an In-M-Zn oxide (the element M is one kind or a plurality of kinds selected from aluminum, gallium, yttrium, copper, vanadium, beryllium, boron, titanium, iron, nickel, germanium, zirconium, molybdenum, lanthanum, cerium, neodymium, hafnium, tantalum, tungsten, magnesium, and the like) is preferably used. The In-M-Zn oxide which can be used as the oxide **530** is preferably a CAAC (c-axis-aligned crystalline)-OS (oxide semiconductor) or a CAC (cloud-aligned composite)-OS. A CAAC-OS has c-axis alignment and a distorted crystal structure; in a CAAC-OS, nanocrystals are connected in the a-b plane direction. Furthermore, as the oxide **530**, an In—Ga oxide or an In—Zn oxide may be used.

[0275] The metal oxide functioning as the channel formation region in the oxide **530** has a band gap of more than or equal to 2 eV, preferably more than or equal to 2.5 eV. With

the use of a metal oxide having such a wide bandgap, the off-state current of the transistor can be reduced.

[0276] When the oxide **530** includes the oxide **530***a* under the oxide **530***b*, it is possible to inhibit diffusion of impurities into the oxide **530***b* from the components formed below the oxide **530***a*. Moreover, including the oxide **530***c* over the oxide **530***b* makes it possible to inhibit diffusion of impurities into the oxide **530***b* from the components formed above the oxide **530***c*.

[0277] Note that the oxide **530** preferably has a stacked-layer structure of oxides that differ in the atomic ratio of metal atoms. Specifically, the atomic ratio of the element M to the constituent elements in the metal oxide used as the oxide **530***a* is preferably higher than the atomic ratio of the element M to the constituent elements in the metal oxide used as the oxide **530***b*. In addition, the atomic ratio of the element M to In in the metal oxide used as the oxide **530***a* is preferably higher than the atomic ratio of the element M to In in the metal oxide used as the oxide **530***b*. Furthermore, the atomic ratio of In to the element M in the metal oxide used as the oxide **530***b* is preferably higher than the atomic ratio of In to the element M in the metal oxide used as the oxide **530***a*. Moreover, a metal oxide that can be used as the oxide **530***a* or the oxide **530***b* can be used as the oxide **530***c*.

[0278] In addition, the energy of the conduction band minimum of each of the oxide **530***a* and the oxide **530***c* is preferably higher than the energy of the conduction band minimum of the oxide **530***b*. In other words, the electron affinity of each of the oxide **530***a* and the oxide **530***c* is preferably smaller than the electron affinity of the oxide **530***b*.

[0279] Here, the energy level of the conduction band minimum gradually changes at junction portions of the oxide **530***a*, the oxide **530***b*, and the oxide **530***c*. In other words, the energy level of the conduction band minimum at the junction portions of the oxide **530***a*, the oxide **530***b*, and the oxide **530***c* continuously changes or is continuously connected. To change the energy level gradually, the densities of defect states in mixed layers formed at an interface between the oxide **530***a* and the oxide **530***b* and an interface between the oxide **530***b* and the oxide **530***c* is preferably made low.

[0280] Specifically, when the oxide **530***a* and the oxide **530***b* or the oxide **530***b* and the oxide **530***c* contain a common element (as a main component) in addition to oxygen, a mixed layer with a low density of defect states can be formed. For example, in the case where the oxide **530***b* is an In—Ga—Zn oxide, an In—Ga—Zn oxide, a Ga—Zn oxide, gallium oxide, or the like is preferably used as the oxide **530***a* and the oxide **530***c*.

[0281] At this time, the oxide **530***b* serves as a main carrier path. When the oxide **530***a* and the oxide **530***c* have the above structures, the densities of defect states at the interface between the oxide **530***a* and the oxide **530***b* and the interface between the oxide **530***b* and the oxide **530***c* can be made low. Thus, the influence of interface scattering on carrier conduction is small, and the transistor **500** can have a high on-state current.

[0282] The conductor **542***a* and the conductor **542***b* functioning as the source electrode and the drain electrode are provided over the oxide **530***b*. For the conductor **542***a* and conductor **542***b*, it is preferable to use a metal element selected from aluminum, chromium, copper, silver, gold, platinum, tantalum, nickel, titanium, molybdenum, tungsten, hafnium, vanadium, niobium, manganese, magnesium, zirconium, beryllium, indium, ruthenium, iridium, strontium, and lanthanum; an alloy containing the above metal element; an alloy containing a combination of the above metal element; or the like. For example, it is preferable to use tantalum nitride, titanium nitride, tungsten, a nitride containing titanium and aluminum, a nitride containing tantalum and aluminum, ruthenium oxide, ruthenium nitride, an oxide containing strontium and ruthenium, an oxide containing lanthanum and nickel, or the like. In addition, tantalum nitride, titanium nitride, a nitride containing titanium and aluminum, a nitride containing tantalum and aluminum, ruthenium oxide, ruthenium nitride, an oxide containing strontium and ruthenium, and an oxide containing lanthanum and nickel are preferable because they are oxidation-resistant conductive materials or materials that retain their conductivity even after absorbing oxygen. Furthermore, a metal nitride film of tantalum nitride or the like is preferable because it has a barrier property against hydrogen or oxygen.

[0283] In addition, although the conductor **542***a* and the conductor **542***b* each having a single-layer structure are shown in FIG. **13**A, a stacked-layer structure of two or more layers may be employed. For example, it is preferable to stack a tantalum nitride film and a tungsten film. Alternatively, a titanium film and an aluminum film may be stacked. Alternatively, a two-layer structure where an aluminum film is stacked over a tungsten film, a two-layer structure where a copper film is stacked over a copper-magnesium-aluminum alloy film, a two-layer structure where a copper film is stacked over a titanium film, or a two-layer structure where a copper film is stacked over a tungsten film may be employed.

[0284] Other examples include a three-layer structure where a titanium film or a titanium nitride film is formed, an aluminum film or a copper film is stacked over the titanium film or the titanium nitride film, and a titanium film or a titanium nitride film is formed over the aluminum film or the copper film; and a three-layer structure where a molybdenum film or a molybdenum nitride film is formed, an aluminum film or a copper film is stacked over the molybdenum film or the molybdenum nitride film, and a molybdenum film or a molybdenum nitride film is formed over the aluminum film or the copper film. Note that a transparent conductive material containing indium oxide, tin oxide, or zinc oxide may be used.

[0285] In addition, as shown in FIG. **13**A or the like, a region **543***a* and a region **543***b* are sometimes formed as low-resistance regions at an interface between the oxide **530** and the conductor **542***a* (the conductor **542***b*) and in the vicinity of the interface. In that case, the region **543***a* functions as one of a source region and a drain region, and the region **543***b* functions as the other of the source region and the drain region. Furthermore, the channel formation region is formed in a region between the region **543***a* and the region **543***b*.

[0286] When the conductor **542***a* (the conductor **542***b*) is provided to be in contact with the oxide **530**, the oxygen concentration in the region **543***a* (the region **543***b*) sometimes decreases. In addition, a metal compound layer that contains the metal contained in the conductor **542***a* (the conductor **542***b*) and the component of the oxide **530** is sometimes formed in the region **543***a* (the region **543***b*). In such a case, the carrier density of the region **543***a* (the region

543*b*) increases, and the region **543***a* (the region **543***b*) becomes a low-resistance region.

[0287] The insulator **544** is provided to cover the conductor **542***a* and the conductor **542***b* and inhibits oxidation of the conductor **542***a* and the conductor **542***b*. At this time, the insulator **544** may be provided to cover a side surface of the oxide **530** and to be in contact with the insulator **524**.

[0288] A metal oxide containing one kind or two or more kinds selected from hafnium, aluminum, gallium, yttrium, zirconium, tungsten, titanium, tantalum, nickel, germanium, neodymium, lanthanum, magnesium, and the like can be used as the insulator **544**. Alternatively, silicon nitride oxide, silicon nitride, or the like can be used for the insulator **544**.

[0289] It is particularly preferable to use an insulator containing an oxide of one or both of aluminum and hafnium, such as aluminum oxide, hafnium oxide, or an oxide containing aluminum and hafnium (hafnium aluminate), as the insulator **544**. In particular, hafnium aluminate has higher heat resistance than a hafnium oxide film. Therefore, hafnium aluminate is preferable because it is less likely to be crystallized by heat treatment in a later step. Note that the insulator **544** is not an essential component when the conductor **542***a* and the conductor **542***b* are oxidation-resistant materials or do not significantly lose their conductivity even after absorbing oxygen. Design is appropriately set in consideration of required transistor characteristics.

[0290] When the insulator **544** is included, diffusion of impurities such as water and hydrogen contained in the insulator **580** into the oxide **530***b* through the oxide **530***c* and the insulator **550** can be inhibited. Furthermore, oxidation of the conductor **560** due to excess oxygen contained in the insulator **580** can be inhibited.

[0291] The insulator **550** functions as a first gate insulating film. The insulator **550** is preferably positioned in contact with an inner side (a top surface and a side surface) of the oxide **530***c*. Like the insulator **524**, the insulator **550** is preferably formed using an insulator that contains excess oxygen and releases oxygen by heating.

[0292] Specifically, silicon oxide containing excess oxygen, silicon oxynitride, silicon nitride oxide, silicon nitride, silicon oxide to which fluorine is added, silicon oxide to which carbon is added, silicon oxide to which carbon and nitrogen are added, or porous silicon oxide can be used. In particular, silicon oxide and silicon oxynitride are preferable because they are thermally stable.

[0293] When an insulator from which oxygen is released by heating is provided as the insulator **550** in contact with the top surface of the oxide **530***c*, oxygen can be effectively supplied from the insulator **550** to the channel formation region of the oxide **530***b* through the oxide **530***c*. Furthermore, as in the insulator **524**, the concentration of impurities such as water or hydrogen in the insulator **550** is preferably reduced. The thickness of the insulator **550** is preferably greater than or equal to 1 nm and less than or equal to 20 nm.

[0294] Furthermore, to efficiently supply excess oxygen contained in the insulator **550** to the oxide **530**, a metal oxide may be provided between the insulator **550** and the conductor **560**. The metal oxide preferably inhibits diffusion of oxygen from the insulator **550** to the conductor **560**. Providing the metal oxide that inhibits diffusion of oxygen inhibits diffusion of excess oxygen from the insulator **550** to the conductor **560**. That is, a reduction in the amount of excess oxygen supplied to the oxide **530** can be inhibited. Moreover, oxidation of the conductor **560** due to excess oxygen can be inhibited. For the metal oxide, a material that can be used for the insulator **544** is used.

[0295] Note that the insulator **550** may have a stacked-layer structure like the second gate insulating film. As miniaturization and high integration of transistors progress, a problem such as leakage current might arise because of a thinner gate insulating film. For that reason, when the insulating film functioning as the gate insulating film has a stacked-layer structure of a high-k material and a thermally stable material, a gate potential during transistor operation can be reduced while the physical thickness is maintained. Furthermore, the stacked-layer structure can be thermally stable and have a high dielectric constant.

[0296] Although the conductor **560** that functions as the first gate electrode and has a two-layer structure is shown in FIGS. **13**A and **13**B, a single-layer structure or a stacked-layer structure of three or more layers may be employed.

[0297] For the conductor **560***a*, it is preferable to use a conductive material having a function of inhibiting diffusion of impurities such as a hydrogen atom, a hydrogen molecule, a water molecule, a nitrogen atom, a nitrogen molecule, a nitrogen oxide molecule (N_2O, NO, NO_2, and the like), and a copper atom. Alternatively, it is preferable to use a conductive material having a function of inhibiting diffusion of oxygen (e.g., at least one of an oxygen atom, an oxygen molecule, and the like). When the conductor **560***a* has a function of inhibiting diffusion of oxygen, it is possible to inhibit a reduction in conductivity of the conductor **560***b* due to oxidation caused by oxygen contained in the insulator **550**. As a conductive material having a function of inhibiting diffusion of oxygen, for example, tantalum, tantalum nitride, ruthenium, ruthenium oxide, or the like is preferably used. For the conductor **560***a*, the oxide semiconductor that can be used as the oxide **530** can be used. In that case, when the conductor **560***b* is deposited by a sputtering method, the conductor **560***a* can have a reduced electrical resistance value to be a conductor. Such a conductor can be referred to as an OC (Oxide Conductor) electrode.

[0298] In addition, a conductive material containing tungsten, copper, or aluminum as its main component is preferably used for the conductor **560***b*. Furthermore, the conductor **560***b* also functions as a wiring and thus a conductor having high conductivity is preferably used as the conductor **560***b*. For example, a conductive material containing tungsten, copper, or aluminum as its main component can be used. Moreover, the conductor **560***b* may have a stacked-layer structure, for example, a stacked-layer structure of the above conductive material and titanium or titanium nitride.

[0299] The insulator **580** is provided over the conductor **542***a* and the conductor **542***b* with the insulator **544** therebetween. The insulator **580** preferably includes an excess-oxygen region. For example, the insulator **580** preferably contains silicon oxide, silicon oxynitride, silicon nitride oxide, silicon nitride, silicon oxide to which fluorine is added, silicon oxide to which carbon is added, silicon oxide to which carbon and nitrogen are added, porous silicon oxide, resin, or the like. In particular, silicon oxide and silicon oxynitride are preferable because they are thermally stable. In particular, silicon oxide and porous silicon oxide are preferable because an excess-oxygen region can be easily formed in a later step.

[0300] The insulator **580** preferably includes an excess-oxygen region. When the insulator **580** that releases oxygen by heating is provided in contact with the oxide **530***c*,

oxygen in the insulator **580** can be efficiently supplied to the oxide **530** through the oxide **530***c*. Note that the concentration of impurities such as water or hydrogen in the insulator **580** is preferably reduced.

[0301] The opening of the insulator **580** is formed to overlap with the region between the conductor **542***a* and the conductor **542***b*. Accordingly, the conductor **560** is formed to be embedded in the opening of the insulator **580** and the region between the conductor **542***a* and the conductor **542***b*.

[0302] The gate length needs to be short for miniaturization of the semiconductor device, but it is necessary to prevent a reduction in conductivity of the conductor **560**. When the conductor **560** is made thick to achieve this, the conductor **560** might have a shape with a high aspect ratio. In this embodiment, the conductor **560** is provided to be embedded in the opening of the insulator **580**; thus, even when the conductor **560** has a shape with a high aspect ratio, the conductor **560** can be formed without collapsing during the process.

[0303] The insulator **574** is preferably provided in contact with a top surface of the insulator **580**, a top surface of the conductor **560**, and a top surface of the insulator **550**. When the insulator **574** is deposited by a sputtering method, excess-oxygen regions can be provided in the insulator **550** and the insulator **580**. Accordingly, oxygen can be supplied from the excess-oxygen regions to the oxide **530**.

[0304] For example, a metal oxide containing one kind or two or more kinds selected from hafnium, aluminum, gallium, yttrium, zirconium, tungsten, titanium, tantalum, nickel, germanium, magnesium, and the like can be used as the insulator **574**.

[0305] In particular, aluminum oxide has a high barrier property, and even a thin aluminum oxide film having a thickness of greater than or equal to 0.5 nm and less than or equal to 3.0 nm can inhibit diffusion of hydrogen and nitrogen. Accordingly, aluminum oxide deposited by a sputtering method serves as an oxygen supply source and can also have a function of a barrier film against impurities such as hydrogen.

[0306] In addition, an insulator **581** functioning as an interlayer film is preferably provided over the insulator **574**. As in the insulator **524** or the like, the concentration of impurities such as water or hydrogen in the insulator **581** is preferably reduced.

[0307] Furthermore, a conductor **540***a* and a conductor **540***b* are positioned in openings formed in the insulator **581**, the insulator **574**, the insulator **580**, and the insulator **544**. The conductor **540***a* and the conductor **540***b* are provided to face each other with the conductor **560** therebetween. The structures of the conductor **540***a* and the conductor **540***b* are similar to a structure of a conductor **546** and a conductor **548** that will be described later.

[0308] An insulator **582** is provided over the insulator **581**. A substance having a barrier property against oxygen or hydrogen is preferably used for the insulator **582**. Therefore, a material similar to that for the insulator **514** can be used for the insulator **582**. For the insulator **582**, a metal oxide such as aluminum oxide, hafnium oxide, or tantalum oxide is preferably used, for example.

[0309] In particular, aluminum oxide has an excellent blocking effect that prevents the passage of both oxygen and impurities such as hydrogen and moisture which are factors of a change in electrical characteristics of the transistor. Accordingly, aluminum oxide can prevent mixing of impurities such as hydrogen and moisture into the transistor **500** in the manufacturing process and after the manufacturing of the transistor. In addition, release of oxygen from the oxide included in the transistor **500** can be inhibited. Therefore, aluminum oxide is suitably used for the protective film of the transistor **500**.

[0310] In addition, an insulator **586** is provided over the insulator **582**. For the insulator **586**, a material similar to that for the insulator **320** can be used. Furthermore, when a material with a comparatively low dielectric constant is used for these insulators, parasitic capacitance between wirings can be reduced. A silicon oxide film, a silicon oxynitride film, or the like can be used for the insulator **586**, for example.

[0311] Furthermore, the conductor **546**, the conductor **548**, and the like are embedded in the insulator **520**, the insulator **522**, the insulator **524**, the insulator **544**, the insulator **580**, the insulator **574**, the insulator **581**, the insulator **582**, and the insulator **586**.

[0312] The conductor **546** and the conductor **548** have functions of plugs or wirings that are connected to the capacitor **600**, the transistor **500**, or the transistor **300**. The conductor **546** and the conductor **548** can be provided using materials similar to those for the conductor **328** and the conductor **330**.

[0313] Next, the capacitor **600** is provided above the transistor **500**. The capacitor **600** includes a conductor **610**, a conductor **620**, and an insulator **630**.

[0314] In addition, a conductor **612** may be provided over the conductor **546** and the conductor **548**. The conductor **612** has a function of a plug or a wiring that is connected to the transistor **500**. The conductor **610** has a function of an electrode of the capacitor **600**. Note that the conductor **612** and the conductor **610** can be formed at the same time.

[0315] For the conductor **612** and the conductor **610**, a metal film containing an element selected from molybdenum, titanium, tantalum, tungsten, aluminum, copper, chromium, neodymium, and scandium; a metal nitride film containing the above element as its component (a tantalum nitride film, a titanium nitride film, a molybdenum nitride film, or a tungsten nitride film); or the like can be used. Alternatively, it is possible to use a conductive material such as indium tin oxide, indium oxide containing tungsten oxide, indium zinc oxide containing tungsten oxide, indium oxide containing titanium oxide, indium tin oxide containing titanium oxide, indium zinc oxide, or indium tin oxide to which silicon oxide is added.

[0316] Although the conductor **612** and the conductor **610** each having a single-layer structure are shown in FIG. **11**, the structure is not limited thereto; a stacked-layer structure of two or more layers may be employed. For example, between a conductor having a barrier property and a conductor having high conductivity, a conductor that is highly adhesive to the conductor having a barrier property and the conductor having high conductivity may be formed.

[0317] The conductor **620** is provided to overlap with the conductor **610** with the insulator **630** therebetween. Note that a conductive material such as a metal material, an alloy material, or a metal oxide material can be used for the conductor **620**. It is preferable to use a high-melting-point material that has both heat resistance and conductivity, such as tungsten or molybdenum, and it is particularly preferable to use tungsten. In addition, in the case where the conductor **620** is formed concurrently with another component such as

a conductor, Cu (copper), Al (aluminum), or the like, which is a low-resistance metal material, is used.

[0318] An insulator **640** is provided over the conductor **620** and the insulator **630**. The insulator **640** can be provided using a material similar to that for the insulator **320**. In addition, the insulator **640** may function as a planarization film that covers an uneven shape therebelow.

[0319] With the use of this structure, a change in electrical characteristics can be inhibited and reliability can be improved in a semiconductor device using a transistor including an oxide semiconductor. Alternatively, a battery control circuit using a transistor including an oxide semiconductor can be miniaturized or highly integrated.

[0320] This embodiment can be combined with any of the other embodiments as appropriate.

Embodiment 3

[0321] In this embodiment, an example in which the battery control circuit described in the above embodiment is used as an electronic component will be described using FIG. **14**A and FIG. **14**B.

[0322] FIG. **14**A shows an example in which the battery management circuit described in the above embodiment is used as an electronic component. Note that the electronic component is also referred to as a semiconductor package or an IC package. For the electronic component, there are a plurality of standards and names corresponding to a terminal extraction direction and a terminal shape. Thus, examples thereof are described in this embodiment.

[0323] A circuit portion including an OS transistor or a Si transistor is completed by integrating a plurality of detachable components on a printed circuit board through an assembly process (a post-process).

[0324] The post-process can be completed through steps shown in FIG. **14**A. Specifically, after an element substrate obtained in a pre-process is completed (Step S**1**), a rear surface of the substrate is ground (Step S**2**). The substrate is thinned down at this stage, so that warpage or the like of the substrate in the pre-process is reduced and the size of the component is reduced.

[0325] The rear surface of the substrate is ground, and a dicing step is performed to divide the substrate into a plurality of chips. Then, a die bonding step of individually picking up the divided chips to be mounted on and bonded to a lead frame is performed (Step S**3**). To bond the chip and the lead frame in this die bonding step, a method such as bonding with resin or bonding with a tape is selected as appropriate depending on products. Note that in the die bonding step, chips may be mounted on and bonded to an interposer.

[0326] Next, wire bonding in which a lead of the lead frame and an electrode on the chip are electrically connected with a metal fine line (wire) is performed (Step S**4**). A silver line or a gold line can be used as the metal fine line. Furthermore, ball bonding or wedge bonding can be used as the wire bonding.

[0327] The wire-bonded chip is subjected to sealing with an epoxy resin or the like in a molding step (Step S**5**). With the molding step, the inside of the electronic component is filled with resin, so that damage to the circuit portion and the wire embedded by external mechanical force can be reduced, and degradation in characteristics due to moisture or dust can be reduced.

[0328] Next, the lead of the lead frame is subjected to plating treatment. Then, the lead is cut and processed (Step S**6**). This plating treatment prevents corrosion of the lead and enables more reliable soldering at the time of mounting the electronic component on a printed circuit board in a later step.

[0329] Next, printing treatment (marking) is performed on a surface of the package (Step S**7**). Then, through a final inspection step (Step S**8**), an electronic component that includes a circuit portion including a PLD is completed (Step S**9**).

[0330] Furthermore, FIG. **14**B shows a perspective schematic view of the completed electronic component. FIG. **14**B shows a perspective schematic view of a QFP (Quad Flat Package) as an example of the electronic component. A lead **701** and a circuit portion **703** of an electronic component **700** are shown in FIG. **14**B. The electronic component **700** shown in FIG. **14**B is mounted on a printed circuit board **702**, for example. A plurality of electronic components **700** that are combined and electrically connected to each other over the printed circuit board **702** can be mounted inside an electronic device. A completed circuit board **704** is provided in an electronic device or the like.

Embodiment 4

[0331] In this embodiment, structures of a power storage device and a power storage system to which an electronic component including the battery control circuit described in the above embodiment can be applied will be described.

[Cylindrical Secondary Battery]

[0332] An example of a cylindrical secondary battery is described with reference to FIG. **15**A. A cylindrical secondary battery **400** includes, as illustrated in FIG. **15**A, a positive electrode cap (battery lid) **401** on the top surface and a battery can (outer can) **402** on the side and bottom surfaces. The positive electrode cap **401** and the battery can (outer can) **402** are insulated from each other by a gasket (insulating packing) **410**.

[0333] FIG. **15**B is a schematic cross-sectional diagram of the cylindrical secondary battery **400**. As illustrated in FIG. **15**B, the cylindrical secondary battery **400** includes a positive electrode cap (battery lid) **401** on a top surface and a battery can (outer can) **402** on a side surface and a bottom surface. The positive electrode cap and the battery can (outer can) **402** are insulated from each other by a gasket (insulating packing) **410**.

[0334] Inside the battery can **402** having a hollow cylindrical shape, a battery element in which a belt-like positive electrode **604** and a belt-like negative electrode **606** are wound with a separator **605** located therebetween is provided. Although not shown, the battery element is wound centering around a center pin. One end of the battery can **402** is closed and the other end thereof is open. For the battery can **402**, a metal having a corrosion-resistant property to an electrolyte solution, such as nickel, aluminum, or titanium, an alloy of such a metal, or an alloy of such a metal and another metal (e.g., stainless steel) can be used. Alternatively, the battery can **402** is preferably covered with nickel, aluminum, or the like in order to prevent corrosion due to the electrolyte solution. Inside the battery can **402**, the battery element in which the positive electrode, the negative electrode, and the separator are wound is sandwiched between a

pair of insulating plates **608** and **609** that face each other. Furthermore, a nonaqueous electrolyte (not illustrated) is injected inside the battery can **402** provided with the battery element. As the nonaqueous electrolyte, a nonaqueous electrolyte that is similar to that for the coin-type secondary battery can be used.

[0335] Since a positive electrode and a negative electrode that are used for a cylindrical storage battery are wound, active materials are preferably formed on both surfaces of a current collector. A positive electrode terminal (positive electrode current collector lead) **603** is connected to the positive electrode **604**, and a negative electrode terminal (negative electrode current collector lead) **607** is connected to the negative electrode **606**. For both the positive electrode terminal **603** and the negative electrode terminal **607**, a metal material such as aluminum can be used. The positive electrode terminal **603** and the negative electrode terminal **607** are resistance-welded to a safety valve mechanism **412** and the bottom of the battery can **402**, respectively. The safety valve mechanism **412** is electrically connected to the positive electrode cap **401** through a PTC (positive temperature coefficient) element **611**. The safety valve mechanism **412** cuts off electrical connection between the positive electrode cap **401** and the positive electrode **604** when the internal pressure of the battery exceeds a predetermined threshold. In addition, the PTC element **611** is a thermally sensitive resistor whose resistance increases as temperature rises, and limits the amount of current by increasing the resistance to prevent abnormal heat generation. Barium titanate ($BaTiO_3$)-based semiconductor ceramics or the like can be used for the PTC element.

[0336] FIG. **15**C illustrates an example of a power storage system **415**. The power storage system **415** includes a plurality of secondary batteries **400**. Positive electrodes of the secondary batteries are in contact with conductors **424** isolated by an insulator **425** and are electrically connected. The conductor **424** is electrically connected to a control circuit **420** through a wiring **423**. Negative electrodes of the secondary batteries are electrically connected to the control circuit **420** through a wiring **426**. As the control circuit **420**, the battery control circuit described in the above embodiment can be used.

[0337] FIG. **15**D illustrates an example of the power storage system **415**. The power storage system **415** includes the plurality of secondary batteries **400**, and the plurality of secondary batteries **400** are sandwiched between a conductive plate **413** and a conductive plate **414**. The plurality of secondary batteries **400** are electrically connected to the conductive plate **413** and the conductive plate **414** through the wiring **416**. The plurality of secondary batteries **400** may be connected parallel to each other, connected in series, or connected in series after being connected parallel to each other. With the power storage system **415** including the plurality of secondary batteries **400**, large electric power can be extracted.

[0338] The case where the plurality of secondary batteries **400** are connected in parallel and then further connected in series is considered. In such a case, in the power storage device illustrated in FIG. **1** or FIG. **2**, for example, the battery cell **121** corresponds to the plurality of secondary batteries connected in parallel, and one cell-balance circuit **130** is electrically connected to the plurality of secondary batteries connected in parallel.

[0339] A temperature control device may be provided between the plurality of secondary batteries **400**. When the secondary batteries **400** are heated excessively, the temperature control device can cool them, and when the secondary batteries **400** are cooled too much, the temperature control device can heat them. Thus, the performance of the power storage system **415** is not easily influenced by the outside air temperature.

[0340] In FIG. **15**D, the power storage system **415** is electrically connected to the control circuit **420** through a wiring **421** and a wiring **422**. As the control circuit **420**, the battery control circuit described in the above embodiment can be used. The wiring **421** is electrically connected to the positive electrodes of the plurality of the secondary batteries **400** through the conductive plate **413**. The wiring **422** is electrically connected to the negative electrodes of the plurality of the secondary batteries **400** through the conductive plate **414**.

[Secondary Battery Pack]

[0341] Next, examples of the power storage system of one embodiment of the present invention are described with reference to FIG. **16**A, FIG. **16**B, and FIG. **16**C.

[0342] FIG. **16**A is an external view of a secondary battery pack **531**. FIG. **16**B illustrates a structure of the secondary battery pack **531**. The secondary battery pack **531** includes a circuit board **501** and a secondary battery **513**. A label **509** is attached onto the secondary battery **513**. The circuit board **501** is fixed by a sealant **515**. The secondary battery pack **531** also includes an antenna **517**.

[0343] The circuit board **501** includes a control circuit **590**. As the control circuit **590**, the battery control circuit described in the above embodiment can be used. For example, as illustrated in FIG. **16**B, the control circuit **590** is provided over the circuit board **501**. The circuit board **501** is electrically connected to a terminal **511**. The circuit board **501** is electrically connected to the antenna **517**, one **551** of a positive electrode lead and a negative electrode lead of the secondary battery **513**, and the other **552** of the positive electrode lead and the negative electrode lead.

[0344] Alternatively, as illustrated in FIG. **16**C, a circuit system **590***a* provided over the circuit board **501** and a circuit system **590***b* electrically connected to the circuit board **501** through the terminal **511** may be included. For example, a part of the control circuit of one embodiment of the present invention is provided in the circuit system **590***a*, and another part of the control circuit of one embodiment of the present invention is provided in the circuit system **590***b*.

[0345] The shape of the antenna **517** is not limited to a coil shape and may be a linear shape or a plate shape. An antenna such as a planar antenna, an aperture antenna, a traveling-wave antenna, an EH antenna, a magnetic-field antenna, or a dielectric antenna may be used. Alternatively, the antenna **517** may be a flat-plate conductor. This flat-plate conductor can serve as one of conductors for electric field coupling. That is, the antenna **517** can serve as one of two conductors of a capacitor. Thus, electric power can be transmitted and received not only by an electromagnetic field or a magnetic field but also by an electric field.

[0346] The secondary battery pack **531** includes a layer **519** between the antenna **517** and the secondary battery **513**. The layer **519** has a function of blocking an electromagnetic field from the secondary battery **513**, for example. As the layer **519**, for example, a magnetic body can be used.

[0347] The secondary battery **513** may include a wound battery element. The wound battery element is obtained through winding a sheet of a stack in which the negative electrode overlaps with the positive electrode with the separator interposed therebetween.

[0348] This embodiment can be combined with any of the other embodiments as appropriate.

Embodiment 5

[0349] In this embodiment, an example of a vehicle equipped with a power storage system which is one embodiment of the present invention is described. Examples of vehicles are automobiles, motorcycles, bicycles, and the like.

[0350] The use of power storage systems in vehicles enables production of next-generation clean energy vehicles such as hybrid electric vehicles (HEVs), electric vehicles (EVs), and plug-in hybrid electric vehicles (PHEVs).

[0351] FIG. **17**A, FIG. **17**B, and FIG. **17**C illustrate examples of vehicles using the power storage system which is one embodiment of the present invention. An automobile **8400** illustrated in FIG. **17**A is an electric vehicle that runs on an electric motor as a power source. Alternatively, the automobile **8400** is a hybrid electric vehicle capable of driving appropriately using either an electric motor or an engine. The use of one embodiment of the present invention can achieve a high-mileage vehicle. The automobile **8400** includes a power storage system. The power storage system is used not only for driving an electric motor **8406**, but also for supplying electric power to a light-emitting device such as a headlight **8401** or a room light (not illustrated).

[0352] The power storage system can also supply electric power to a display device of a speedometer, a tachometer, or the like included in the automobile **8400**. Furthermore, the power storage system can supply electric power to a navigation system or the like included in the automobile **8400**.

[0353] An automobile **8500** illustrated in FIG. **17**B can be charged when the power storage system **8024** included in the automobile **8500** is supplied with electric power from external charging equipment by a plug-in system, a contactless power feeding system, or the like. FIG. **17**B illustrates the state in which the power storage system **8024** included in the automobile **8500** is charged with a ground-based charging apparatus **8021** through a cable **8022**. In charge, a given method such as CHAdeMO (registered trademark) or Combined Charging System may be employed as a charging method, the standard of a connector, or the like as appropriate. The charging apparatus **8021** may be a charging station provided in a commerce facility or a power source in a house. With the use of a plug-in technique, the power storage system **8024** included in the automobile **8500** can be charged by being supplied with electric power from the outside, for example. The charge can be performed by converting AC electric power into DC electric power through a converter, such as an AC-DC converter.

[0354] Although not illustrated, the vehicle may include a power receiving device so that it can be charged by being supplied with electric power from an above-ground power transmitting device in a contactless manner. In the case of the contactless power feeding system, by fitting a power transmitting device in a road or an exterior wall, charge can be performed not only when the electric vehicle is stopped but also when driven. In addition, the contactless power feeding system may be utilized to perform transmission and reception of electric power between vehicles. A solar cell may be provided in the exterior of the automobile to charge the power storage system when the automobile stops or moves. To supply electric power in such a contactless manner, an electromagnetic induction method or a magnetic resonance method can be used.

[0355] FIG. **17**C is an example of a two-wheeled vehicle using the power storage system of one embodiment of the present invention. A motor scooter **8600** illustrated in FIG. **17**C includes a power storage system **8602**, side mirrors **8601**, and indicator lights **8603**. The power storage system **8602** can supply electricity to the indicator lights **8603**.

[0356] In the motor scooter **8600** illustrated in FIG. **17**C, the power storage system **8602** can be stored in a storage unit under seat **8604**. The power storage system **8602** can be stored in the storage unit under seat **8604** even with a small size.

[0357] FIG. **18**A is an example of an electric bicycle using the power storage system of one embodiment of the present invention. The power storage system of one embodiment of the present invention can be used for an electric bicycle **8700** illustrated in FIG. **18**A. The power storage system of one embodiment of the present invention includes a plurality of storage batteries, a protective circuit, and a neural network, for example.

[0358] The electric bicycle **8700** includes a power storage system **8702**. The power storage system **8702** can supply electricity to a motor that assists a rider. The power storage system **8702** is portable, and FIG. **18**B illustrates the state where the power storage system **8702** is detached from the bicycle. A plurality of secondary batteries **8701** included in the power storage system of one embodiment of the present invention are incorporated in the power storage system **8702**, and the remaining battery capacity and the like can be displayed on a display portion **8703**. The power storage system **8702** also includes a control circuit **8704** of one embodiment of the present invention. The control circuit **8704** is electrically connected to a positive electrode and a negative electrode of the storage battery **8701**. The battery control circuit described in the above embodiment can be used as the control circuit **8704**.

[0359] This embodiment can be combined with any of the other embodiments as appropriate.

Embodiment 6

[0360] In this embodiment, examples of electronic devices each including the power storage system described in the above embodiments will be described.

[0361] Next, FIG. **19**A and FIG. **19**B illustrate examples of a foldable tablet terminal (including a clamshell tablet). A tablet terminal **9600** illustrated in FIG. **19**A and FIG. **19**B includes a housing **9630***a*, a housing **9630***b*, a movable portion **9640** connecting the housing **9630***a* and the housing **9630***b*, a display portion **9631**, a display mode changing switch **9626**, a power switch **9627**, a power saving mode changing switch **9625**, a fastener **9629**, and an operation switch **9628**. A flexible panel is used for the display portion **9631**, whereby a tablet terminal with a larger display portion can be provided. FIG. **19**A illustrates the tablet terminal **9600** that is opened, and FIG. **19**B illustrates the tablet terminal **9600** that is closed.

[0362] The tablet terminal **9600** includes a power storage unit **9635** inside the housing **9630***a* and the housing **9630***b*.

The power storage unit **9635** is provided across the housing **9630***a* and the housing **9630***b*, passing through the movable portion **9640**.

[0363] Part of the display portion **9631** can be a touch panel region and data can be input when a displayed operation key is touched. When a position where a keyboard display switching button is displayed on the touch panel is touched with a finger, a stylus, or the like, keyboard buttons can be displayed on the display portion **9631**.

[0364] The display mode switch **9626** can switch the display between a portrait mode and a landscape mode, and between monochrome display and color display, for example. The power saving mode changing switch **9625** can control display luminance in accordance with the amount of external light in use, which is measured with an optical sensor incorporated in the tablet terminal **9600**. Another detection device including a sensor for detecting inclination, such as a gyroscope sensor or an acceleration sensor, may be incorporated in the tablet terminal, in addition to the optical sensor.

[0365] FIG. **19**B is a closed state and the tablet terminal includes the housing **9630**, a solar cell **9633**, and the power storage system of one embodiment of the present invention. The power storage system includes a control circuit **9634** and the power storage unit **9635**. The battery control circuit described in the above embodiment can be used as the control circuit **9634**.

[0366] The tablet terminal **9600** can be folded such that the housing **9630***a* and the housing **9630***b* overlap with each other when not in use. Thus, the display portion **9631** can be protected, which increases the durability of the tablet terminal **9600**.

[0367] The tablet terminal illustrated in FIG. **19**A and FIG. **19**B can also have a function of displaying various kinds of information (a still image, a moving image, a text image, and the like), a function of displaying a calendar, a date, the time, or the like on the display portion, a touch-input function of operating or editing data displayed on the display portion by touch input, a function of controlling processing by various kinds of software (programs), and the like.

[0368] The solar cell **9633**, which is attached on the surface of the tablet terminal, supplies electric power to a touch panel, a display portion, an image signal processor, and the like. Note that the solar cell **9633** can be provided on one or both surfaces of the housing **9630** and the power storage unit **9635** can be charged efficiently.

[0369] Note that although FIG. **19**A and FIG. **19**B illustrate a structure in which the battery control circuit described in the above embodiment is used for a foldable tablet terminal, another structure may be employed. For example, application to a clamshell laptop personal computer is possible as illustrated in FIG. **19**C. FIG. **19**C illustrates a laptop personal computer **9601** including a display portion **9631** in a housing **9630***a* and a keyboard portion **9641** in a housing **9630***b*. The laptop personal computer **9601** includes the control circuit **9634** and the power storage unit **9635** which are described with reference to FIG. **19**A and FIG. **19**B. The battery control circuit described in the above embodiment can be used as the control circuit **9634**.

[0370] FIG. **20** illustrates other examples of electronic devices. In FIG. **20**, a display device **8000** is an example of an electronic device including the power storage system of one embodiment of the present invention. Specifically, the display device **8000** corresponds to a display device for TV broadcast reception and includes a housing **8001**, a display portion **8002**, speaker portions **8003**, the secondary battery **8004**, and the like. A detection system according to one embodiment of the present invention is provided in the housing **8001**. The display device **8000** can receive electric power from a commercial power supply. Alternatively, the display device **8000** can use electric power stored in the secondary battery **8004**.

[0371] A semiconductor display device such as a liquid crystal display device, a light-emitting device in which a light-emitting element such as an organic EL element is provided in each pixel, an electrophoretic display device, a digital micromirror device (DMD), a plasma display panel (PDP), or a field emission display (FED) can be used for the display portion **8002**.

[0372] An audio input device **8005** also uses a secondary battery. The audio input device **8005** includes the power storage system described in the above embodiments. The audio input device **8005** includes a plurality of sensors (an optical sensor, a temperature sensor, a humidity sensor, a pressure sensor, an illuminance sensor, a motion sensor, and the like) including a microphone, in addition to wireless communication elements. In accordance with an instruction spoken by a user, another device can be operated; for example, powering of the display device **8000** can be controlled, the amount of light of a lighting device **8100** can be controlled, or the like. The audio input device **8005** is capable of audio operation of a peripheral device and replaces a manual remote controller.

[0373] The audio input device **8005** includes a wheel or a mechanical transfer means and is configured to be capable of, while listening to an instruction precisely with the incorporated microphone by moving in the direction in which speaking by a user can be heard, displaying the content on a display portion **8008** or performing a touch input operation on the display portion **8008**.

[0374] The audio input device **8005** can also function as a charging doc of a portable information terminal **8009** such as a smartphone. Electric power can be transmitted and received with a wire or wirelessly between the portable information terminal **8009** and the audio input device **8005**. The portable information terminal **8009** is not particularly need to be carried indoors, and a load on the secondary battery and degradation thereof are desirably avoided while a necessary capacity is ensured. Thus, control or maintenance of the secondary battery or the like is desirably performed by the audio input device **8005**. Since the audio input device **8005** includes the speaker **8007** and the microphone, hands-free conversation is possible even while the portable information terminal **8009** is charged. When the capacity of the secondary battery of the audio input device **8005** decreases, the audio input device **8005** moves in the direction indicated by the arrow and is charged by wireless charging from a charging module **8010** connected to an external power source.

[0375] The audio input device **8005** may be put on a stand. The audio input device **8005** may be provided with a wheel or a mechanical transfer means to move to a desired position. Alternatively, a stand or a wheel is not provided and the audio input device **8005** may be fixed to a desired position, for example, on the floor or the like.

[0376] Note that the display device includes, in its category, all of information display devices for personal computers, advertisement displays, and the like other than TV broadcast reception.

[0377] In FIG. **20**, the tabletop lighting device **8100** is an example of an electronic device using a secondary battery **8103** which is controlled by a microprocessor that controls charge (including an APS). Specifically, the lighting device **8100** includes a housing **8101**, a light source **8102**, the secondary battery **8103**, and the like. Although FIG. **20** illustrates the case where the secondary battery **8103** is provided in a roof **8104** on which the housing **8101** and the light source **8102** are installed, the secondary battery **8103** may be provided in the housing **8101**. The lighting device **8100** can receive electric power from a commercial power supply. Alternatively, the lighting device **8100** can use electric power stored in the secondary battery **8103**.

[0378] Note that although the tabletop lighting device **8100** provided on the roof **8104** is illustrated in FIG. **20** as an example, the secondary battery **8103** can be used as an installation lighting device provided in, for example, a sidewall **8105**, a floor **8106**, a window **8107**, or the like other than the roof **8104**. Alternatively, the secondary battery can be used in a tabletop lighting device or the like.

[0379] As the light source **8102**, an artificial light source which emits light artificially by using power can be used. Specifically, an incandescent lamp, a discharge lamp such as a fluorescent lamp, and a light-emitting element such as an LED or an organic EL element are given as examples of the artificial light source.

[0380] In FIG. **20**, an air conditioner including an indoor unit **8200** and an outdoor unit **8204** is an example of an electronic device using a secondary battery **8203**. Specifically, the indoor unit **8200** includes a housing **8201**, an air outlet **8202**, the secondary battery **8203**, and the like. Although FIG. **20** illustrates the case where the secondary battery **8203** is provided in the indoor unit **8200**, the secondary battery **8203** may be provided in the outdoor unit **8204**. Alternatively, the secondary batteries **8203** may be provided in both the indoor unit **8200** and the outdoor unit **8204**. The air conditioner can receive electric power from a commercial power supply. Alternatively, the air conditioner can use electric power stored in the secondary battery **8203**.

[0381] In FIG. **20**, an electric refrigerator-freezer **8300** is an example of an electronic device using a secondary battery **8304**. Specifically, the electric refrigerator-freezer **8300** includes a housing **8301**, a door for refrigerator compartment **8302**, a door for freezer compartment **8303**, the secondary battery **8304**, and the like. The secondary battery **8304** is provided in the housing **8301** in FIG. **20**. The electric refrigerator-freezer **8300** can receive electric power from a commercial power supply. Alternatively, the electric refrigerator-freezer **8300** can use electric power stored in the secondary battery **8304**.

[0382] In addition, in a time period when electronic devices are not used, particularly when the proportion of the amount of electric power which is actually used to the total amount of electric power which can be supplied from a commercial power source (such a proportion referred to as a usage rate of electric power) is low, electric power can be stored in the secondary battery, whereby an increase in the usage rate of electric power can be reduced in a time period when the electronic devices are used. For example, in the case of the electric refrigerator-freezer **8300**, electric power can be stored in the secondary battery **8304** in night time when the temperature is low and the door for refrigerator compartment **8302** and the door for freezer compartment **8303** are not often opened and closed. On the other hand, in daytime when the temperature is high and the door for refrigerator compartment **8302** and the door for freezer compartment **8303** are frequently opened and closed, the secondary battery **8304** is used as an auxiliary power source; thus, the usage rate of electric power in daytime can be reduced.

[0383] A secondary battery can be provided in any electronic device other than the above-described electronic devices. According to one embodiment of the present invention, the secondary battery can have excellent cycle characteristics. Thus, the microprocessor that controls charge (including an APS) of one embodiment of the present invention is mounted on the electronic device described in this embodiment, whereby an electronic device with a longer lifetime can be obtained. This embodiment can be implemented in appropriate combination with the other embodiments.

[0384] FIGS. **21**A to **21**E show examples of electronic devices including the power storage system of one embodiment of the present invention. Examples of electronic devices to which the power storage system of one embodiment of the present invention is applied are television sets (also referred to as televisions or television receivers), monitors of computers or the like, digital cameras, digital video cameras, digital photo frames, mobile phones (also referred to as cellular phones or mobile phone devices), portable game machines, portable information terminals, audio reproducing devices, and large game machines such as pachinko machines, and the like.

[0385] FIG. **21**A illustrates an example of a mobile phone. A mobile phone **7400** includes operation buttons **7403**, an external connection port **7404**, a speaker **7405**, a microphone **7406**, and the like in addition to a display portion **7402** incorporated in a housing **7401**. The mobile phone **7400** includes the power storage system of one embodiment of the present invention. The power storage system of one embodiment of the present invention includes a storage battery **7407** and the battery control circuit described in the above embodiment.

[0386] FIG. **21**B illustrates the state where the mobile phone **7400** is curved. When the mobile phone **7400** is entirely curved by external force, the storage battery **7407** provided therein may also be curved. In such a case, a storage battery having flexibility is preferably used as the storage battery **7407**. FIG. **21**C illustrates the state where the storage battery having flexibility is curved. A control circuit **7408** is electrically connected to the storage battery. The battery control circuit described in the above embodiment can be used as the control circuit **7408**.

[0387] A storage battery having a flexible shape can also be incorporated along a curved inside/outside wall surface of a house or a building or a curved interior/exterior surface of an automobile.

[0388] FIG. **21**D illustrates an example of a bangle-type display device. A portable display device **7100** includes a housing **7101**, a display portion **7102**, operation buttons **7103**, and the power storage system of one embodiment of the present invention. The power storage system of one

embodiment of the present invention includes a storage battery **7104** and the battery control circuit described in the above embodiment.

[0389] FIG. **21**E shows an example of a watch-type portable information terminal. A portable information terminal **7200** includes a housing **7201**, a display portion **7202**, a band **7203**, a buckle **7204**, an operation button **7205**, an input output terminal **7206**, and the like.

[0390] The portable information terminal **7200** is capable of executing a variety of applications such as mobile phone calls, e-mailing, viewing and editing texts, music reproduction, Internet communication, and a computer game.

[0391] The display surface of the display portion **7202** is curved, and images can be displayed on the curved display surface. The display portion **7202** includes a touch sensor, and operation can be performed by touching the screen with a finger, a stylus, or the like. For example, by touching an icon **7207** displayed on the display portion **7202**, application can be started.

[0392] With the operation button **7205**, a variety of functions such as time setting, power on/off, on/off of wireless communication, setting and cancellation of a silent mode, and setting and cancellation of a power saving mode can be performed. For example, the functions of the operation button **7205** can be set freely by setting the operation system incorporated in the portable information terminal **7200**.

[0393] The portable information terminal **7200** can employ near field communication that is a communication method based on an existing communication standard. For example, mutual communication between the portable information terminal and a headset capable of wireless communication can be performed, and thus hands-free calling is possible.

[0394] The portable information terminal **7200** includes the input output terminal **7206**, and data can be directly transmitted to and received from another information terminal via a connector. In addition, charge via the input output terminal **7206** is possible. The charge operation may be performed by wireless power feeding without using the input output terminal **7206**.

[0395] The portable information terminal **7200** includes the power storage system of one embodiment of the present invention. The power storage system includes a storage battery and the battery control circuit described in the above embodiment.

[0396] The portable information terminal **7200** preferably includes a sensor. As the sensor, for example, a human body sensor such as a fingerprint sensor, a pulse sensor, or a temperature sensor, a touch sensor, a pressure sensitive sensor, an acceleration sensor, or the like is preferably mounted.

[0397] This embodiment can be combined with any of the other embodiments as appropriate.

(Supplementary Notes on the Description in this Specification and the Like)

[0398] The description of the above embodiments and each structure in the embodiments are noted below.

[0399] One embodiment of the present invention can be constituted by combining, as appropriate, the structure described in each embodiment with the structures described in the other embodiments. In addition, in the case where a plurality of structure examples are described in one embodiment, the structure examples can be combined as appropriate.

[0400] Note that content (or may be part of the content) described in one embodiment can be applied to, combined with, or replaced with another content (or may be part of the content) described in the embodiment and/or content (or may be part of the content) described in another embodiment or other embodiments.

[0401] Note that in each embodiment, content described in the embodiment is content described using a variety of diagrams or content described with text disclosed in the specification.

[0402] Note that by combining a diagram (or may be part thereof) described in one embodiment with another part of the diagram, a different diagram (or may be part thereof) described in the embodiment, and/or a diagram (or may be part thereof) described in another embodiment or other embodiments, much more diagrams can be formed.

[0403] In addition, in this specification and the like, components are classified on the basis of the functions, and shown as blocks independent of one another in block diagrams. However, in an actual circuit or the like, it is difficult to separate components on the basis of the functions, and there are such a case where one circuit is associated with a plurality of functions and a case where a plurality of circuits are associated with one function. Therefore, blocks in the block diagrams are not limited by the components described in this specification, and the description can be changed appropriately depending on the situation.

[0404] Furthermore, in the drawings, the size, the layer thickness, or the region is shown with given magnitude for description convenience. Therefore, the size, the layer thickness, or the region is not necessarily limited to the illustrated scale. Note that the drawings are schematically shown for clarity, and embodiments of the present invention are not limited to shapes, values or the like shown in the drawings. For example, variation in signal, voltage, or current due to noise, variation in signal, voltage, or current due to difference in timing, or the like can be included.

[0405] In this specification and the like, expressions "one of a source and a drain" (or a first electrode or a first terminal) and "the other of the source and the drain" (or a second electrode or a second terminal) are used in the description of the connection relationship of a transistor. This is because the source and the drain of the transistor change depending on the structure, operating conditions, or the like of the transistor. Note that the source or the drain of the transistor can also be referred to as a source (drain) terminal, a source (drain) electrode, or the like as appropriate depending on the situation.

[0406] In addition, in this specification and the like, the terms "electrode" and "wiring" do not functionally limit these components. For example, an "electrode" is used as part of a "wiring" in some cases, and vice versa. Furthermore, the term "electrode" or "wiring" also includes the case where a plurality of "electrodes" or "wirings" are formed in an integrated manner, for example.

[0407] Furthermore, in this specification and the like, "voltage" and "potential" can be interchanged with each other as appropriate. The voltage refers to a potential difference from a reference potential, and when the reference potential is a ground voltage, for example, the voltage can be rephrased into the potential. The ground potential does not necessarily mean 0 V. Note that potentials are relative

values, and a potential applied to a wiring or the like is sometimes changed depending on the reference potential.

[0408] Note that in this specification and the like, the terms such as "film" and "layer" can be interchanged with each other depending on the case or according to circumstances. For example, the term "conductive layer" can be changed into the term "conductive film" in some cases. As another example, the term "insulating film" can be changed into the term "insulating layer" in some cases.

[0409] In this specification and the like, a switch has a function of controlling whether current flows or not by being in a conduction state (an on state) or a non-conduction state (an off state). Alternatively, a switch has a function of selecting and changing a current path.

[0410] In this specification and the like, channel length refers to, for example, the distance between a source and a drain in a region where a semiconductor (or a portion where current flows in a semiconductor when a transistor is in an on state) and a gate overlap with each other or a region where a channel is formed in a top view of the transistor.

[0411] In this specification and the like, channel width refers to, for example, the length of a portion where a source and a drain face each other in a region where a semiconductor (or a portion where current flows in a semiconductor when a transistor is in an on state) and a gate electrode overlap with each other or a region where a channel is formed.

[0412] In this specification and the like, the expression "A and B are connected" includes the case where A and B are electrically connected as well as the case where A and B are directly connected. Here, the expression "A and B are electrically connected" includes the case where electric signals can be transmitted and received between A and B when an object having any electric action exists between A and B.

REFERENCE NUMERALS

[0413] **100**: power storage device, **110**: battery control circuit, **111**: voltage comparison unit, **113**: comparator, **113-1**: comparator, **113-2**: comparator, **113-3**: comparator, **114**: memory element, **114-1**: memory element, **114-2**: memory element, **114-3**: memory element, **120**: assembled battery, **121**: battery cell, **121**(*k*): battery cell, **161**: capacitor, **162**: transistor, **119**: voltage generation circuit, **130**: cell-balance circuit, **130**(*k*): cell-balance circuit, **131**: resistor, **132**: transistor, **140**: transistor, **150**: transistor, **170**: control circuit, **171**: capacitor, **172**: transistor, **173**: comparator, **174**: memory element, **181**: detection circuit, **185**: detection circuit, **186**: detection circuit, **190**: digital-analog conversion circuit, **195**: sensor circuit, **195-1**: sensor circuit, **195-2**: sensor circuit, **195-3**: sensor circuit, **196**: transistor, **197**: capacitor

1. A semiconductor device comprising:

a first comparison circuit;

a second comparison circuit;

a third comparison circuit;

a control circuit; and

a secondary battery,

wherein the first comparison circuit, the second comparison circuit, and the third comparison circuit are configured to supply a signal to the control circuit,

wherein the control circuit is configured to control a charge current for the secondary battery in accordance with a signal supplied from the first comparison circuit,

wherein the control circuit is configured to stop charge of the secondary battery in accordance with a signal supplied from the second comparison circuit,

wherein the control circuit is configured to control an upper charge voltage limit of the secondary battery in accordance with a signal supplied from the third comparison circuit,

wherein the first comparison circuit is configured to compare a potential of a positive electrode of the secondary battery with a first reference potential,

wherein the second comparison circuit is configured to compare the potential of the positive electrode of the secondary battery with a second reference potential, and

wherein the third comparison circuit is configured to compare an ambient temperature with a third reference potential.

2. The semiconductor device according to claim **1**,

wherein a source or a drain of a first transistor is electrically connected to a non-inverting input terminal or an inverting input terminal of the first comparison circuit,

wherein a source or a drain of a second transistor is electrically connected to a non-inverting input terminal or an inverting input terminal of the second comparison circuit,

wherein a source or a drain of a third transistor is electrically connected to a non-inverting input terminal or an inverting input terminal of the third comparison circuit, and

wherein a channel formation region of each of the first transistor, the second transistor, and the third transistor comprises a metal oxide comprising indium.

3. A semiconductor device comprising:

a first comparison circuit;

a second comparison circuit;

a third comparison circuit; and

a first transistor,

wherein the first comparison circuit is configured to compare a potential of a positive electrode of a secondary battery with a first reference potential and output a first signal to a gate of the first transistor,

wherein the first transistor is configured to control a charge current of the secondary battery,

wherein the second comparison circuit is configured to compare the potential of the positive electrode of the secondary battery with a second reference potential and output a second signal to stop charge of the secondary battery, and

wherein the third comparison circuit is configured to compare an ambient temperature with a third reference potential and output a third signal to control an upper charge voltage limit of the secondary battery.

4. The semiconductor device according to claim **3**,

further comprising a memory element,

wherein the memory element comprises a second transistor and a capacitor,

wherein one electrode of the capacitor is electrically connected to one of a non-inverting input terminal and an inverting input terminal of the first comparison circuit,

wherein one of a source and a drain of the second transistor is electrically connected to the one of the non-inverting input terminal and the inverting input terminal of the first comparison circuit, and

wherein the memory element is configured to retain a voltage of the one of the non-inverting input terminal and the inverting input terminal of the first comparison circuit.

5. The semiconductor device according to claim **3**,

further comprising a resistor,

wherein the first transistor and the resistor are connected each other in series, and

wherein the first transistor and the resistor are connected in parallel to the secondary battery.

* * * * *