US 20250267095A1

(19) **United States**

(12) **Patent Application Publication** (10) **Pub. No.: US 2025/0267095 A1**

Patel et al. (43) **Pub. Date: Aug. 21, 2025**

(54) **SYSTEM AND METHOD FOR ROUTING A SERIAL DIGITAL INTERFACE (SDI) SIGNAL**

(71) Applicant: **Evertz Microsystems Ltd.**, Burlington (CA)

(72) Inventors: **Rakesh Thakor Patel**, Mississauga (CA); **Jeff Wei**, Richmond Hill (CA); **Konstantinos Lianos**, Mississauga (CA)

(73) Assignee: **Evertz Microsystems Ltd.**, Burlington (CA)

(21) Appl. No.: **19/064,139**

(22) Filed: **Feb. 26, 2025**

Related U.S. Application Data

(63) Continuation of application No. 17/701,733, filed on Mar. 23, 2022, now Pat. No. 12,261,774.

(60) Provisional application No. 63/164,856, filed on Mar. 23, 2021.

Publication Classification

(51) **Int. Cl.**

H04L 45/00	(2022.01)
G06F 13/42	(2006.01)
H04L 45/42	(2022.01)
H04L 45/745	(2022.01)

(52) **U.S. Cl.**

CPC ***H04L 45/566*** (2013.01); ***G06F 13/4282*** (2013.01); ***H04L 45/42*** (2013.01); ***H04L 45/745*** (2013.01)

(57) **ABSTRACT**

Apparatus, systems and methods for routing an input serial digital interface (SDI) signal from an input SDI port to an output SDI port are described. In at least one embodiment, at least one input card, at least one output card, a midplane coupled to the at least one input card and at least one output card and a controller coupled to the midplane are disclosed. At least one input card being configured to receive the input SDI signal at the input SDI port, process the input SDI signal to generate one or more packetized media streams, each including a plurality of packets, with each packet having a packet header including a source address corresponding to that packetized media stream, and transmit each packetized media stream from an IP output port to the midplane. The midplane being configured to identify the source address corresponding to each packet of a packetized media stream, process the corresponding packets to insert a destination address based on controller instructions, and generate and route a corresponding processed packetized media stream based on the destination address. The output card being configured to receive one or more processed packetized media streams at an input IP port, process the received streams to generate a corresponding output SDI signal, and provide the output SDI signal at the output SDI port.

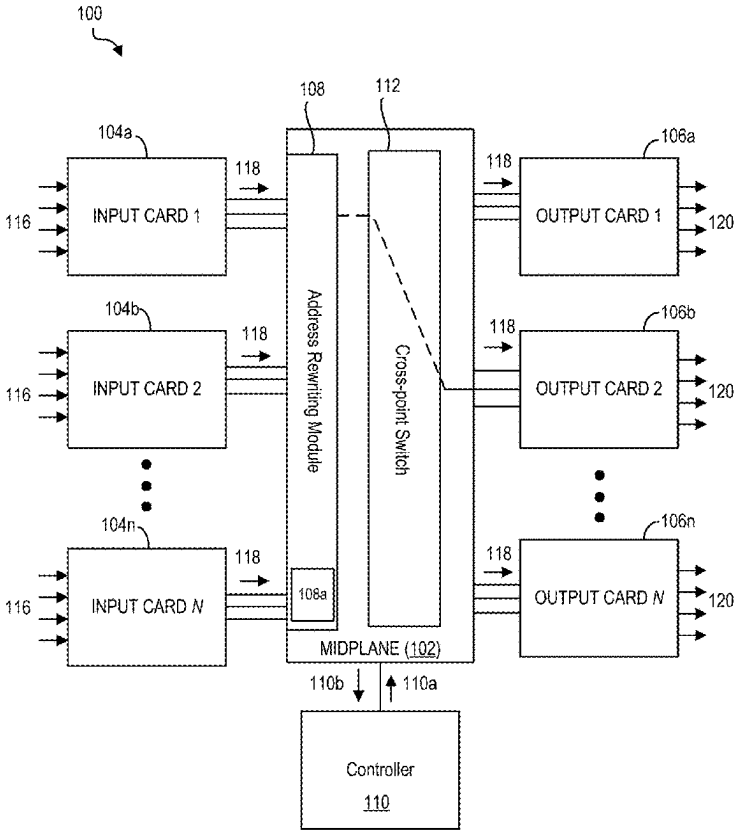

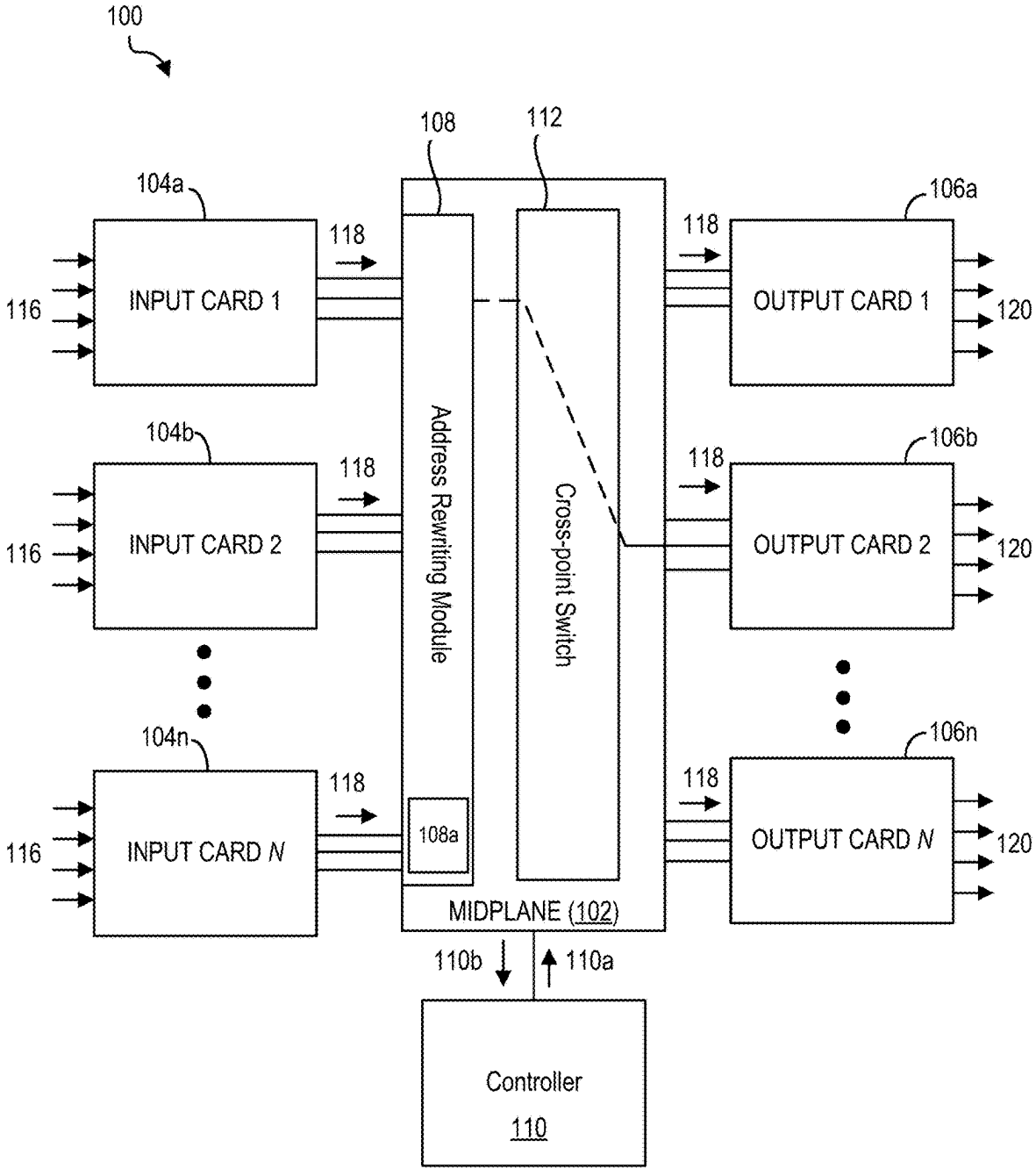
100
108
112
104a
106a
118
116
INPUT CARD 1
OUTPUT CARD 1
120
Address Rewriting Module
Cross-point Switch
104b
106b
INPUT CARD 2
OUTPUT CARD 2
104n
106n
INPUT CARD N
OUTPUT CARD N
108a
MIDPLANE (102)
110b
110a
Controller
110

FIG. 1

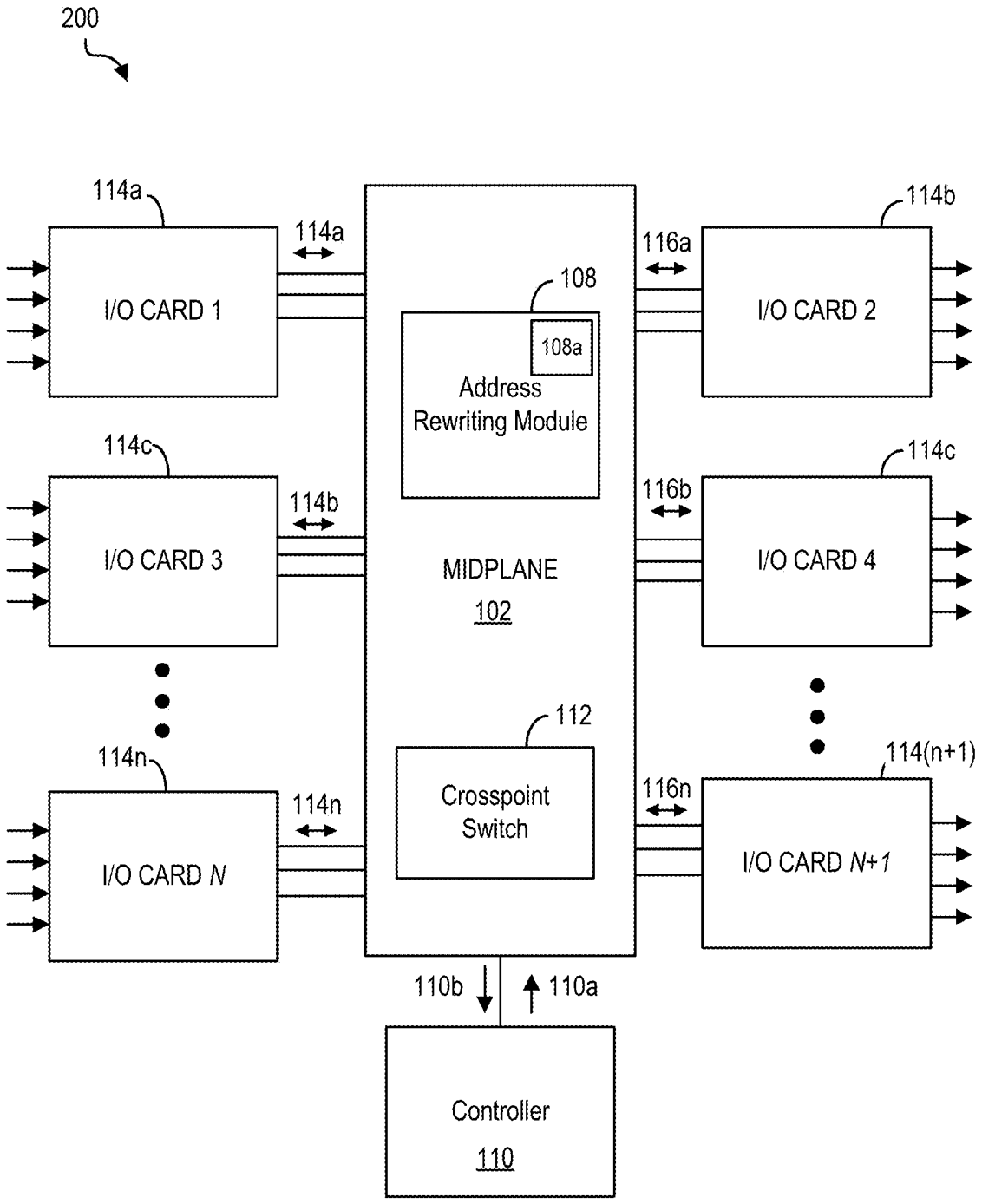
200
114a
I/O CARD 1
114a
108
108a
Address
Rewriting Module
114b
I/O CARD 2
116a
114c
I/O CARD 3
114b
MIDPLANE
102
116b
114c
I/O CARD 4
112
Crosspoint
Switch
114n
I/O CARD N
114n
116n
114(n+1)
I/O CARD N+1
110b
110a
Controller
110

FIG. 2

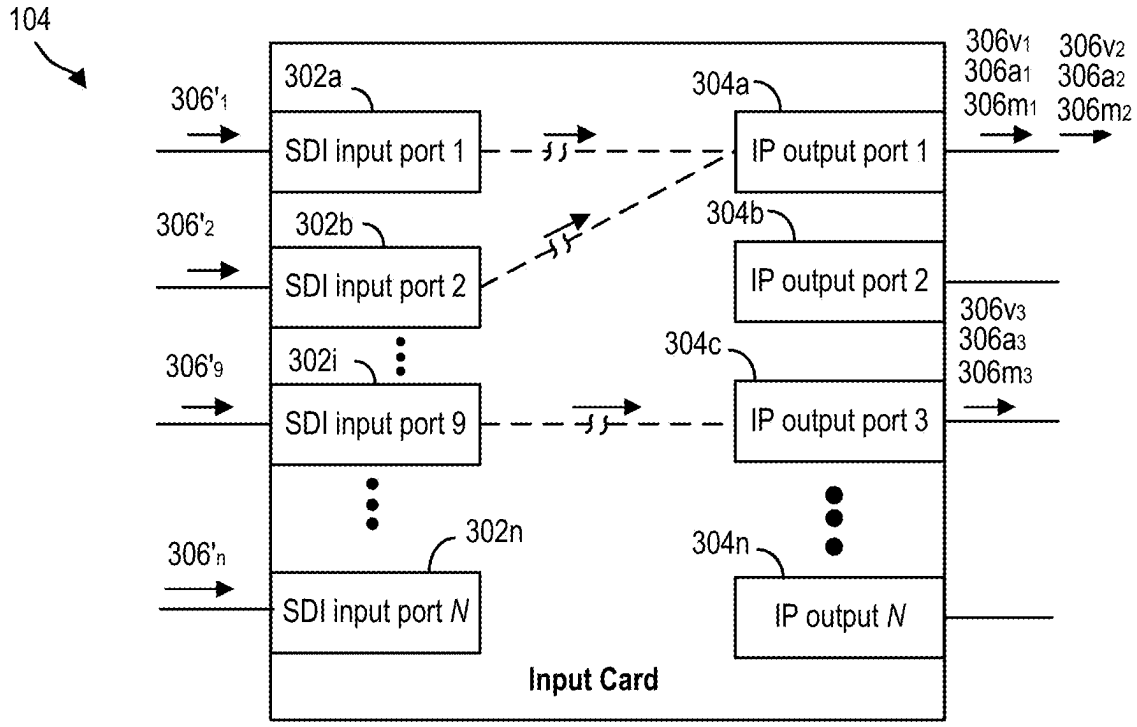
104
306'1
306'2
306'9
306'n
302a
SDI input port 1
302b
SDI input port 2
302i
SDI input port 9
302n
SDI input port N
304a
IP output port 1
304b
IP output port 2
304c
IP output port 3
304n
IP output N
Input Card
306v1
306a1
306m1
306v2
306a2
306m2
306v3
306a3
306m3

FIG. 3A

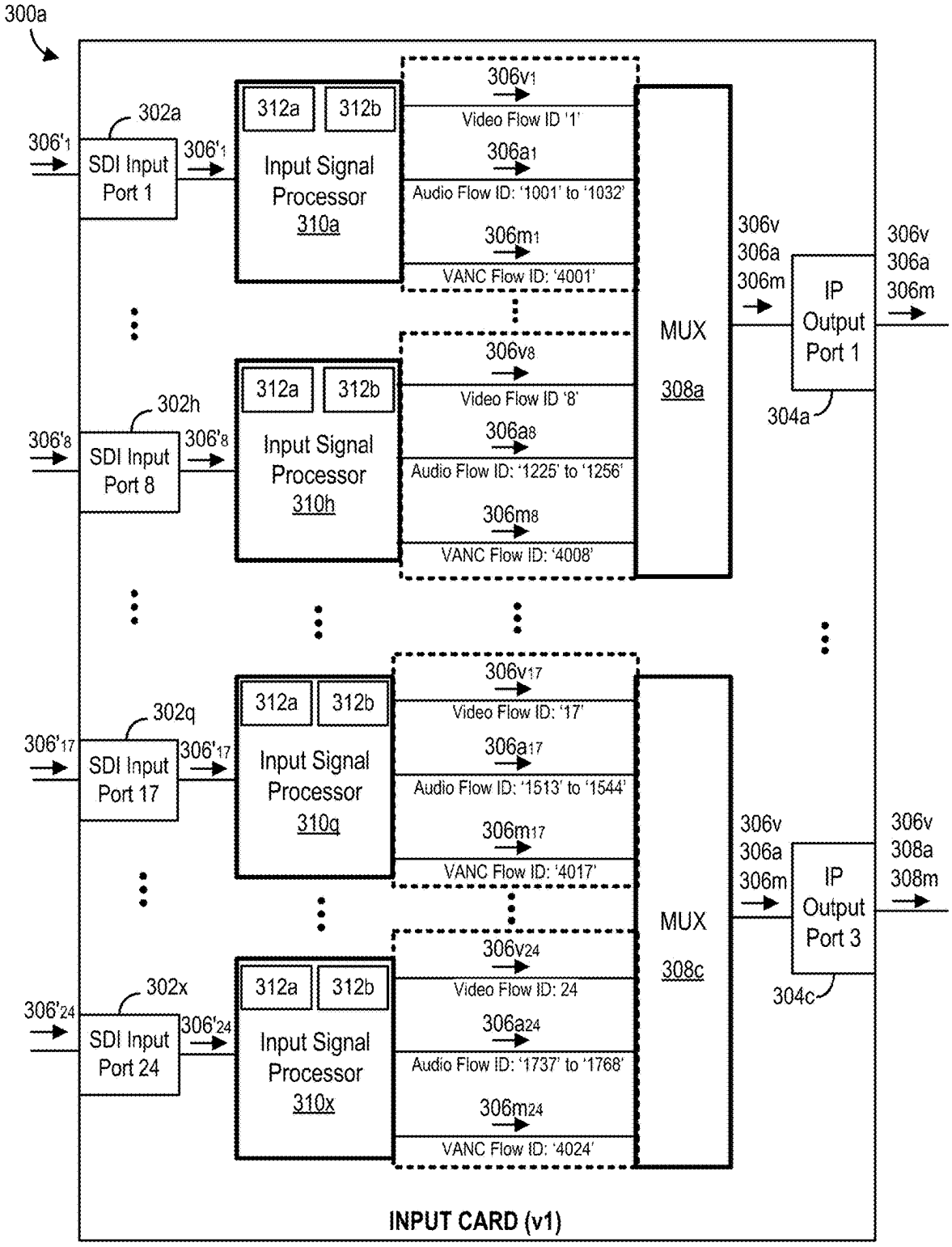
300a
302a
306'1
SDI Input Port 1
306'1
312a
312b
Input Signal Processor 310a
306v1
Video Flow ID '1'
306a1
Audio Flow ID: '1001' to '1032'
306m1
VANC Flow ID: '4001'
302h
306'8
SDI Input Port 8
306'8
312a
312b
Input Signal Processor 310h
306v8
Video Flow ID '8'
306a8
Audio Flow ID: '1225' to '1256'
306m8
VANC Flow ID: '4008'
MUX 308a
306v 306a 306m
IP Output Port 1
306v 306a 306m
304a
302q
306'17
SDI Input Port 17
306'17
312a
312b
Input Signal Processor 310q
306v17
Video Flow ID: '17'
306a17
Audio Flow ID: '1513' to '1544'
306m17
VANC Flow ID: '4017'
302x
306'24
SDI Input Port 24
306'24
312a
312b
Input Signal Processor 310x
306v24
Video Flow ID: 24
306a24
Audio Flow ID: '1737' to '1768'
306m24
VANC Flow ID: '4024'
MUX 308c
306v 306a 306m
IP Output Port 3
306v 308a 308m
304c
INPUT CARD (v1)

FIG. 3B

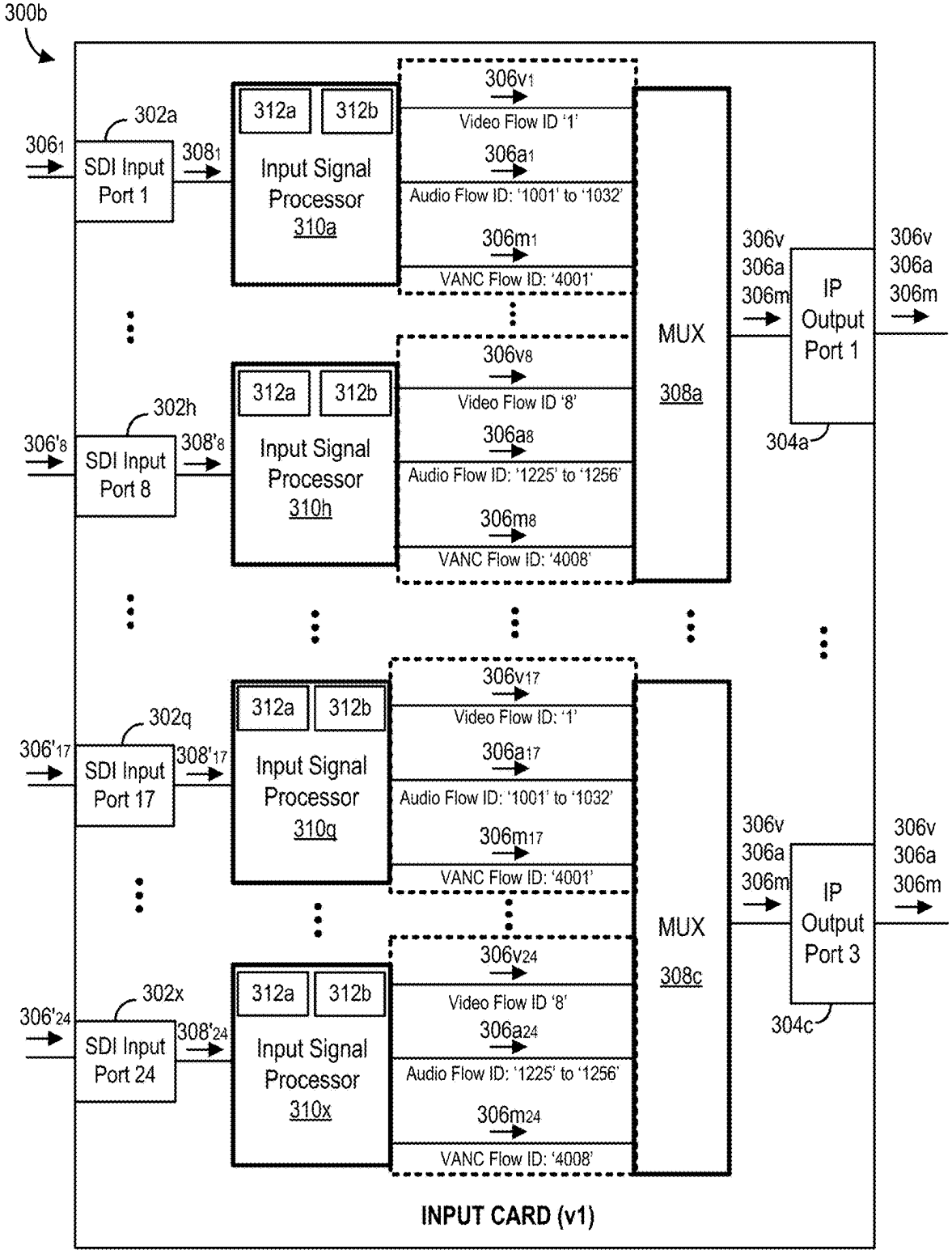
300b
302a
SDI Input Port 1
Input Signal Processor 310a
312a
312b
306v1
Video Flow ID '1'
306a1
Audio Flow ID: '1001' to '1032'
306m1
VANC Flow ID: '4001'
302h
SDI Input Port 8
Input Signal Processor 310h
306v8
Video Flow ID '8'
306a8
Audio Flow ID: '1225' to '1256'
306m8
VANC Flow ID: '4008'
MUX 308a
302q
SDI Input Port 17
Input Signal Processor 310q
306v17
Video Flow ID: '1'
306a17
Audio Flow ID: '1001' to '1032'
306m17
VANC Flow ID: '4001'
302x
SDI Input Port 24
Input Signal Processor 310x
306v24
Video Flow ID '8'
306a24
Audio Flow ID: '1225' to '1256'
306m24
VANC Flow ID: '4008'
MUX 308c
306v
306a
306m
IP Output Port 1
304a
IP Output Port 3
304c
INPUT CARD (v1)

FIG. 3C

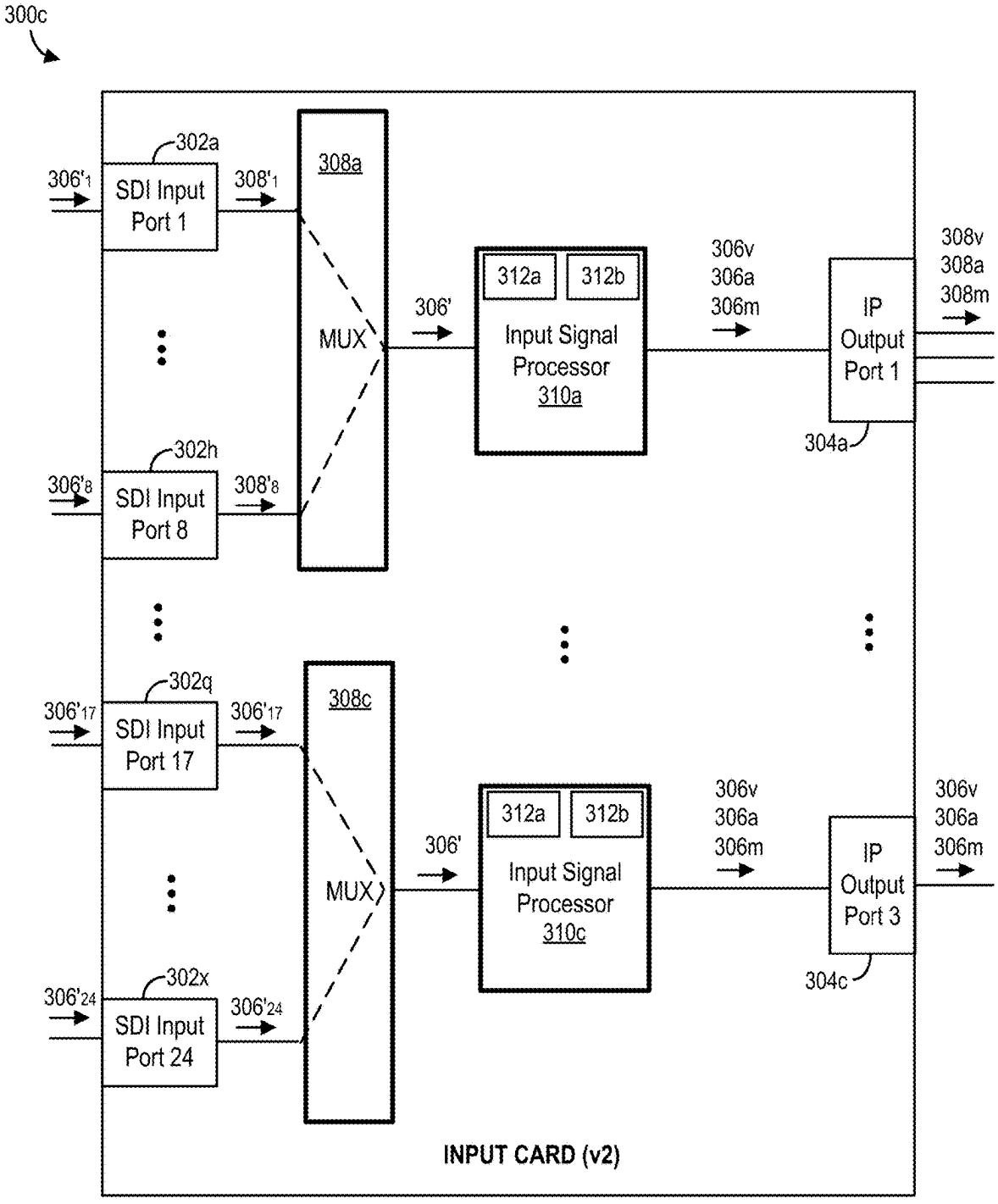
300c
302a
306'1
SDI Input Port 1
308'1
308a
MUX
306'
312a
312b
Input Signal Processor 310a
306v 306a 306m
IP Output Port 1
308v 308a 308m
304a
302h
306'8
SDI Input Port 8
308'8
302q
306'17
SDI Input Port 17
306'17
308c
MUX
306'
312a
312b
Input Signal Processor 310c
306v 306a 306m
IP Output Port 3
306v 306a 306m
304c
302x
306'24
SDI Input Port 24
306'24
INPUT CARD (v2)

FIG. 3D

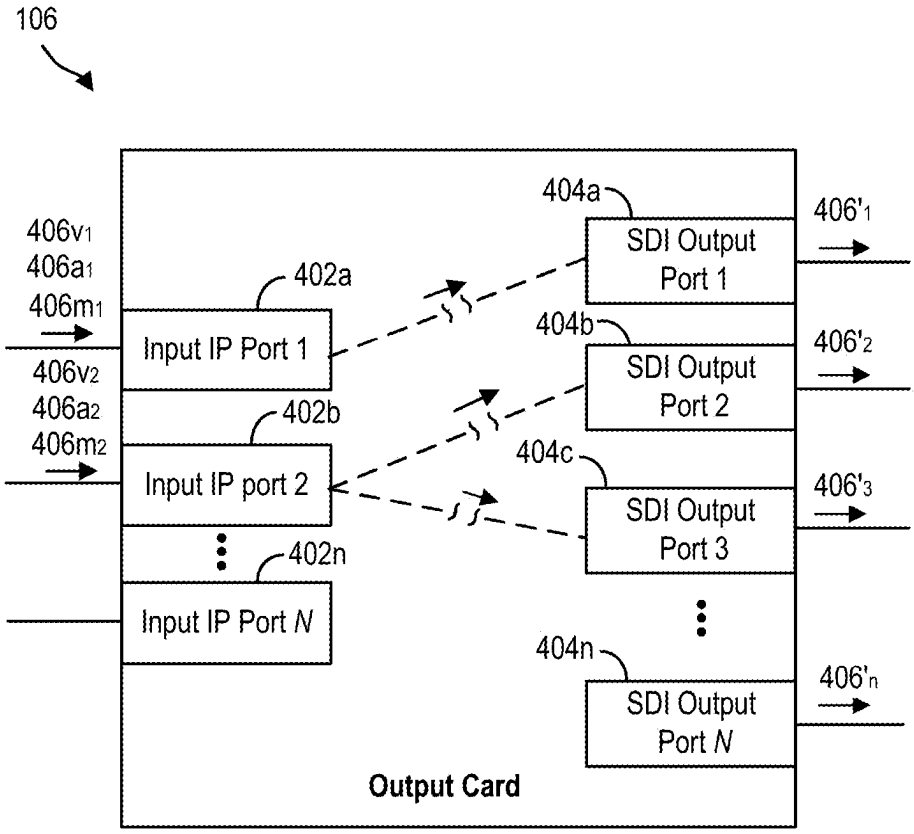
106
406v1
406a1
406m1
406v2
406a2
406m2
402a
Input IP Port 1
402b
Input IP port 2
402n
Input IP Port N
404a
SDI Output Port 1
404b
SDI Output Port 2
404c
SDI Output Port 3
404n
SDI Output Port N
406'1
406'2
406'3
406'n
Output Card

FIG. 4A

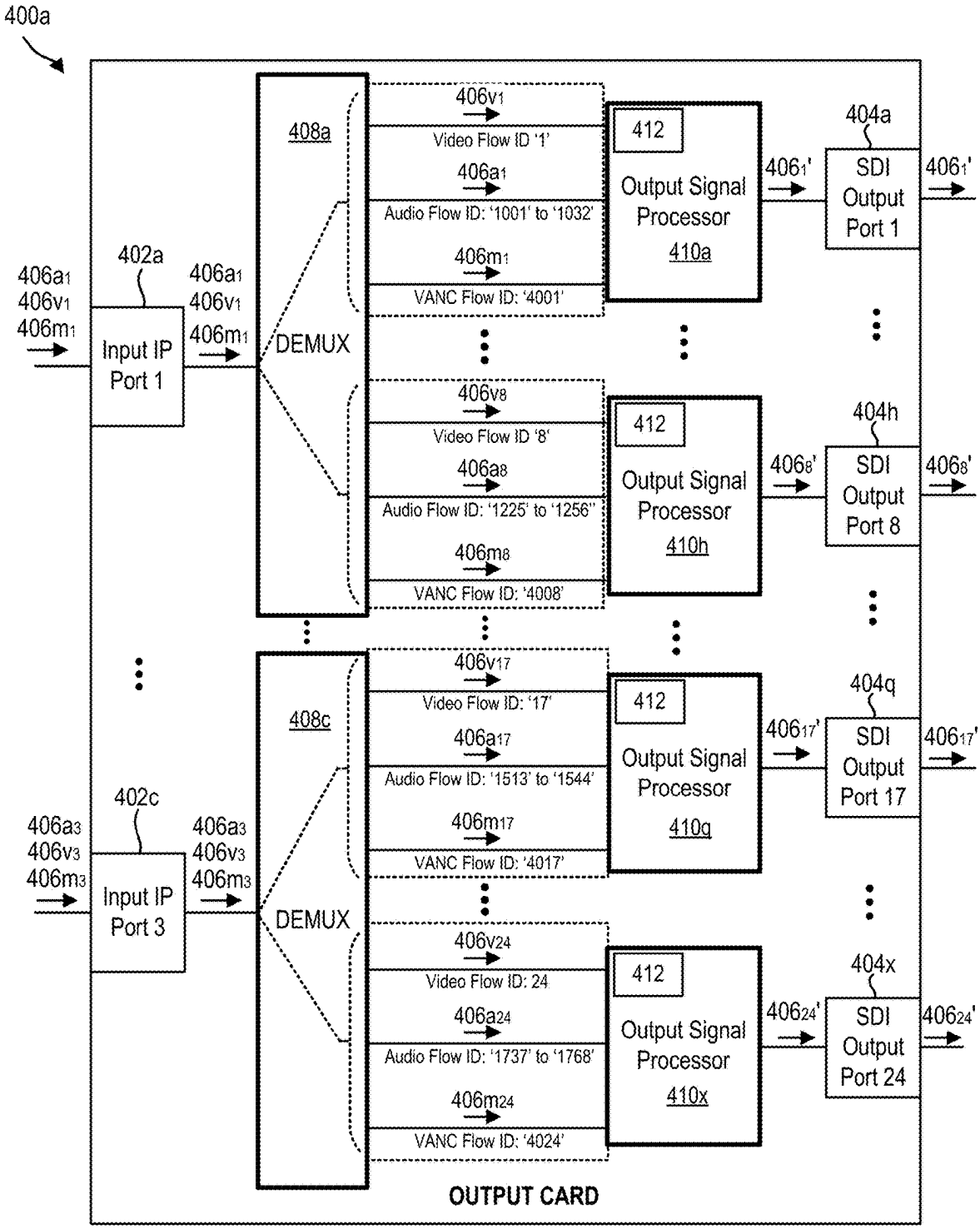
400a
402a
Input IP Port 1
406a1 406v1 406m1
406a1 406v1 406m1
DEMUX
408a
406v1
Video Flow ID '1'
406a1
Audio Flow ID: '1001' to '1032'
406m1
VANC Flow ID: '4001'
406v8
Video Flow ID '8'
406a8
Audio Flow ID: '1225' to '1256'
406m8
VANC Flow ID: '4008'
412
Output Signal Processor
410a
410h
404a
SDI Output Port 1
404h
SDI Output Port 8
406a3 406v3 406m3
402c
Input IP Port 3
406a3 406v3 406m3
DEMUX
408c
406v17
Video Flow ID: '17'
406a17
Audio Flow ID: '1513' to '1544'
406m17
VANC Flow ID: '4017'
406v24
Video Flow ID: 24
406a24
Audio Flow ID: '1737' to '1768'
406m24
VANC Flow ID: '4024'
410q
410x
404q
SDI Output Port 17
404x
SDI Output Port 24
OUTPUT CARD

FIG. 4B

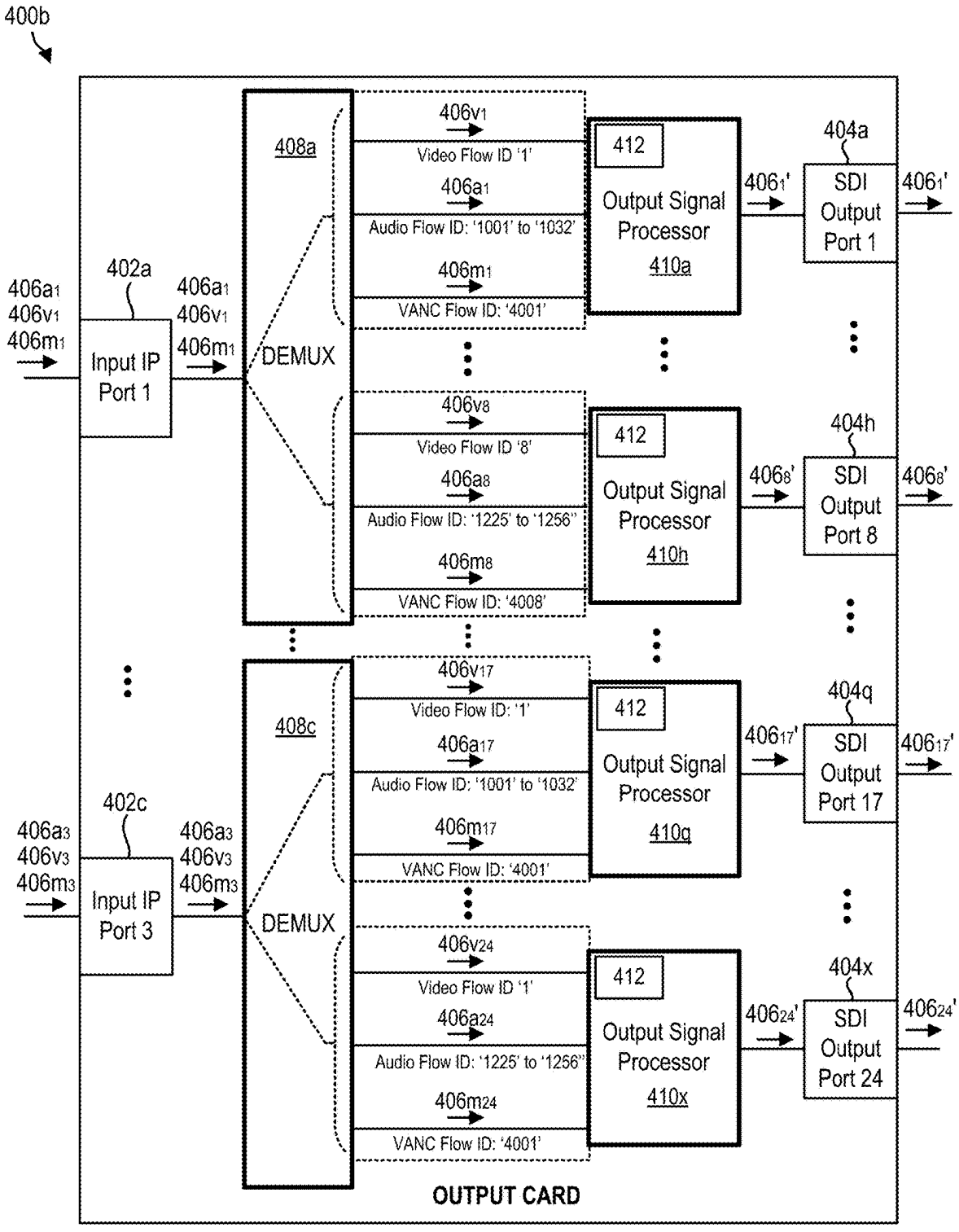
400b
402a
Input IP Port 1
406a1
406v1
406m1
DEMUX
408a
406v1
Video Flow ID '1'
406a1
Audio Flow ID: '1001' to '1032'
406m1
VANC Flow ID: '4001'
406v8
Video Flow ID '8'
406a8
Audio Flow ID: '1225' to '1256'
406m8
VANC Flow ID: '4008'
402c
Input IP Port 3
406a3
406v3
406m3
DEMUX
408c
406v17
Video Flow ID: '1'
406a17
Audio Flow ID: '1001' to '1032'
406m17
VANC Flow ID: '4001'
406v24
Video Flow ID '1'
406a24
Audio Flow ID: '1225' to '1256'
406m24
VANC Flow ID: '4001'
412
Output Signal Processor
410a
410h
410q
410x
404a
SDI Output Port 1
404h
SDI Output Port 8
404q
SDI Output Port 17
404x
SDI Output Port 24
OUTPUT CARD

FIG. 4C

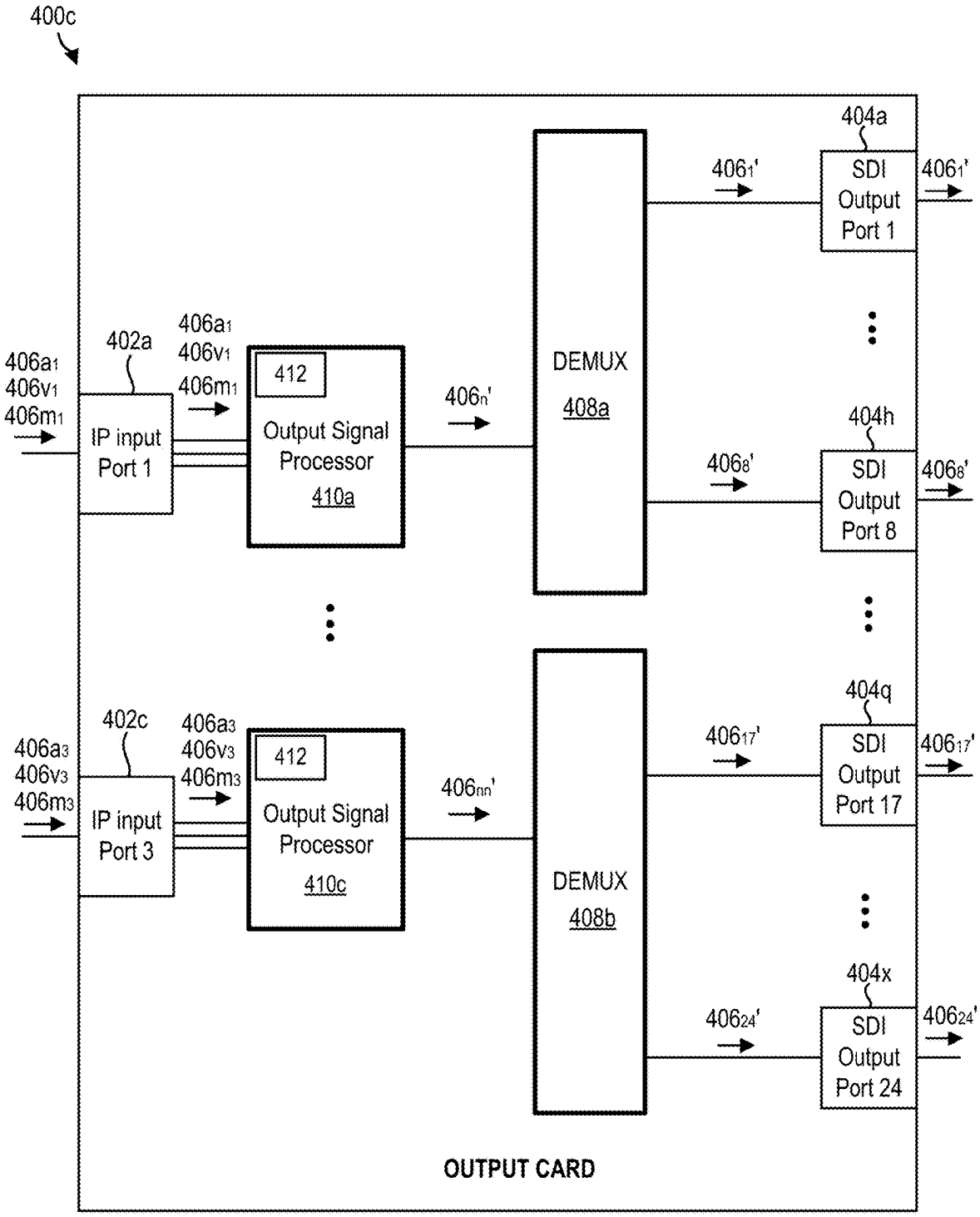
400c
406a1
406v1
406m1
402a
IP input
Port 1
406a1
406v1
406m1
412
Output Signal
Processor
410a
406n'
DEMUX
408a
406a3
406v3
406m3
402c
IP input
Port 3
406a3
406v3
406m3
412
Output Signal
Processor
410c
406nn'
DEMUX
408b
406₁'
404a
SDI
Output
Port 1
406₁'
406₈'
404h
SDI
Output
Port 8
406₈'
406₁₇'
404q
SDI
Output
Port 17
406₁₇'
406₂₄'
404x
SDI
Output
Port 24
406₂₄'
OUTPUT CARD

FIG. 4D

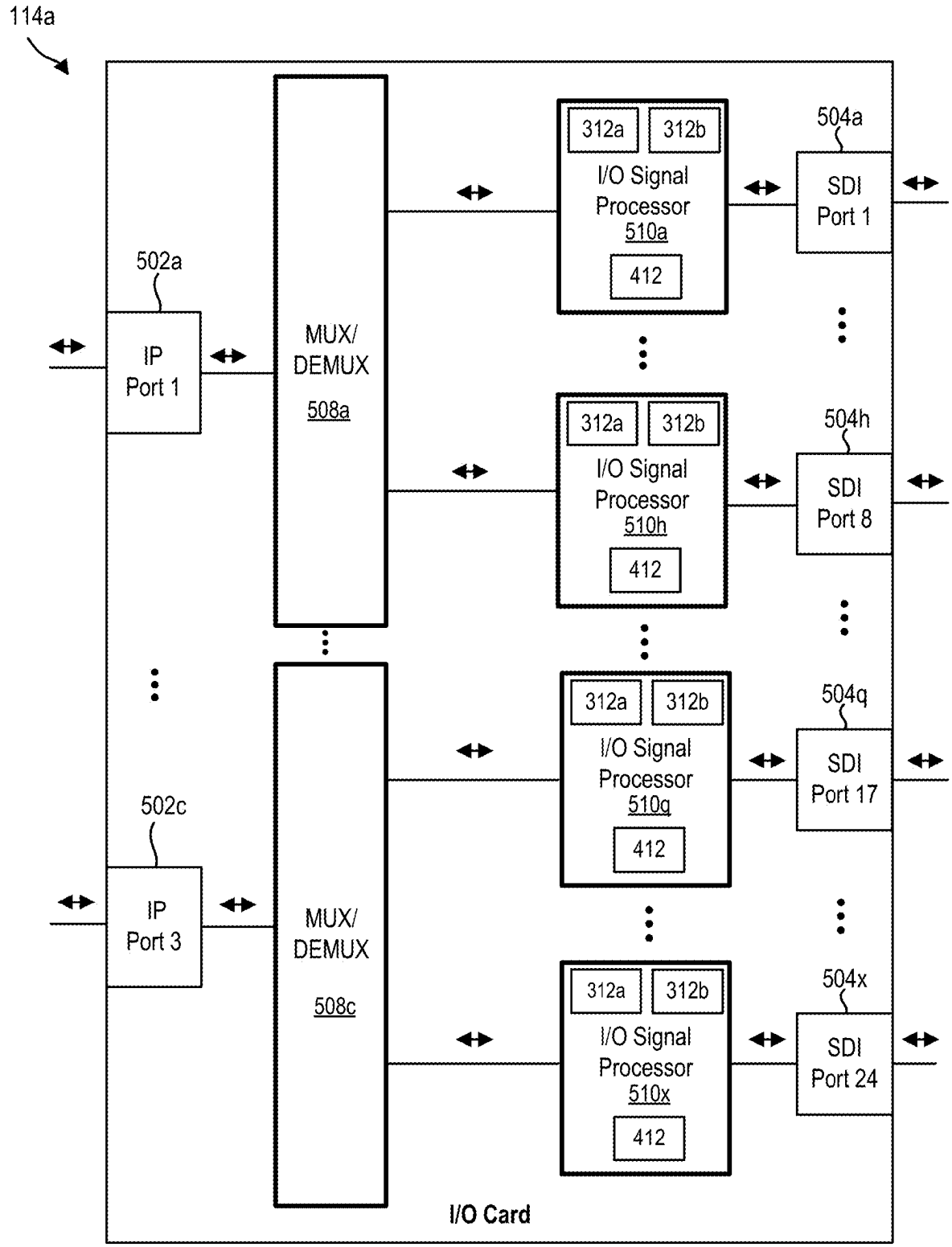
114a
502a
IP Port 1
502c
IP Port 3
MUX/ DEMUX 508a
MUX/ DEMUX 508c
312a
312b
I/O Signal Processor 510a
412
504a
SDI Port 1
I/O Signal Processor 510h
504h
SDI Port 8
I/O Signal Processor 510q
504q
SDI Port 17
I/O Signal Processor 510x
504x
SDI Port 24
I/O Card

FIG. 5A

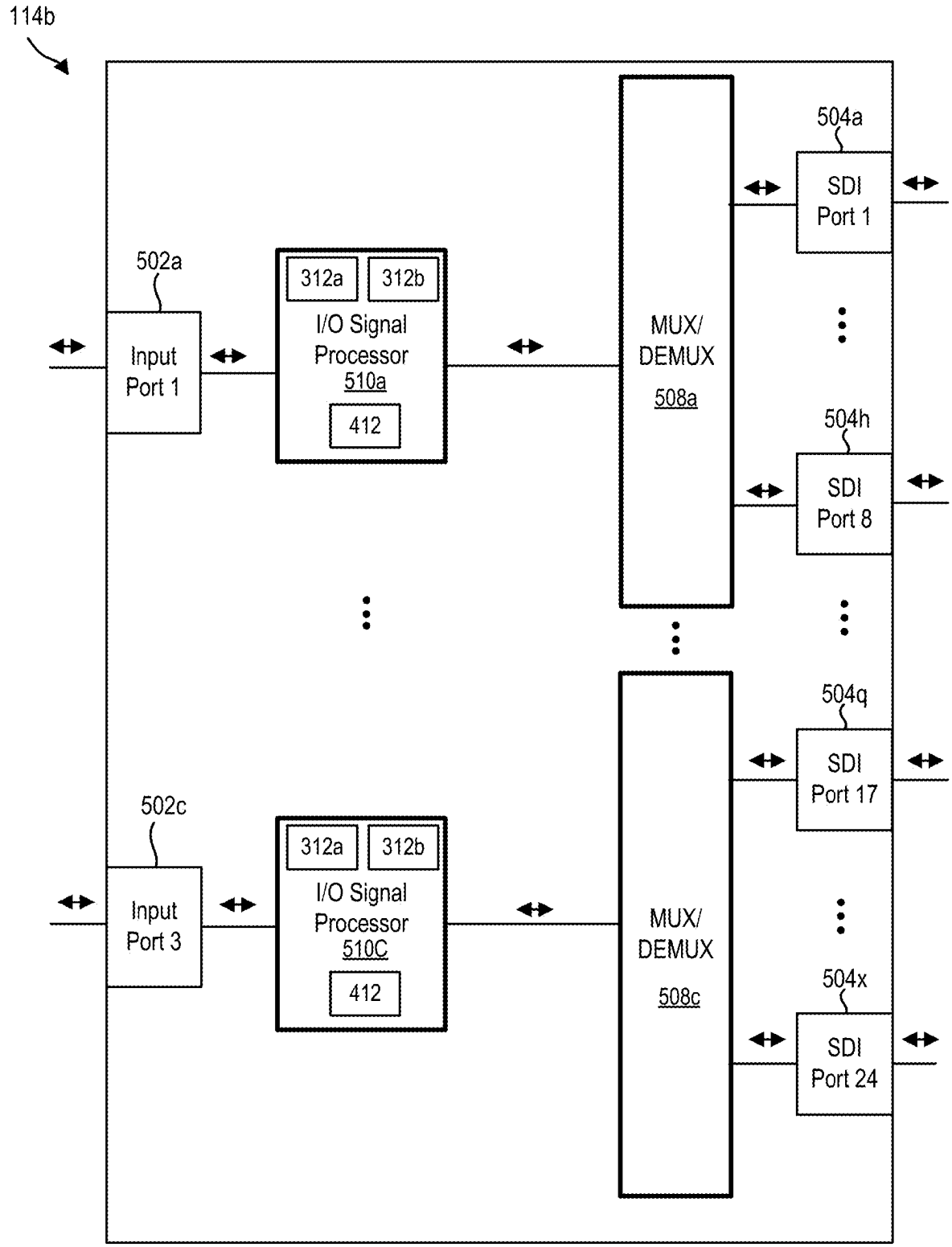
114b
502a
Input Port 1
312a
312b
I/O Signal Processor 510a
412
MUX/ DEMUX 508a
504a
SDI Port 1
504h
SDI Port 8
502c
Input Port 3
312a
312b
I/O Signal Processor 510C
412
MUX/ DEMUX 508c
504q
SDI Port 17
504x
SDI Port 24

FIG. 5B

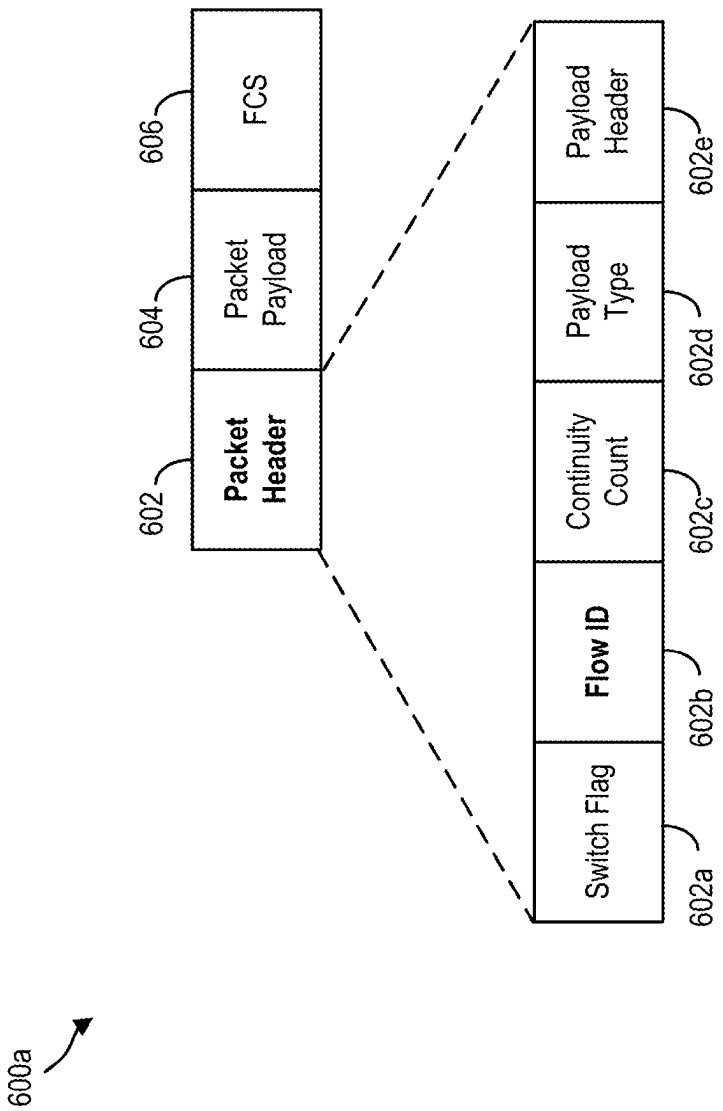
600a
602
Packet Header
604
Packet Payload
606
FCS
602a
Switch Flag
602b
Flow ID
602c
Continuity Count
602d
Payload Type
602e
Payload Header

FIG. 6A

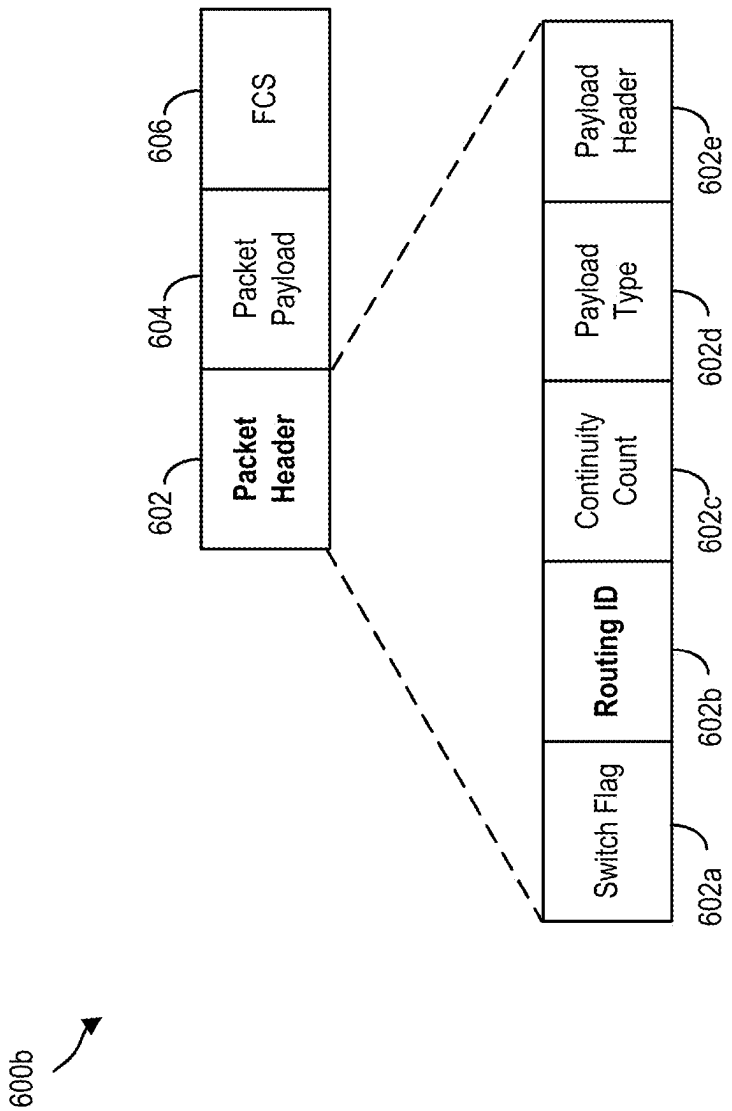
600b
602
Packet Header
604
Packet Payload
606
FCS
602a
Switch Flag
602b
Routing ID
602c
Continuity Count
602d
Payload Type
602e
Payload Header

FIG. 6B

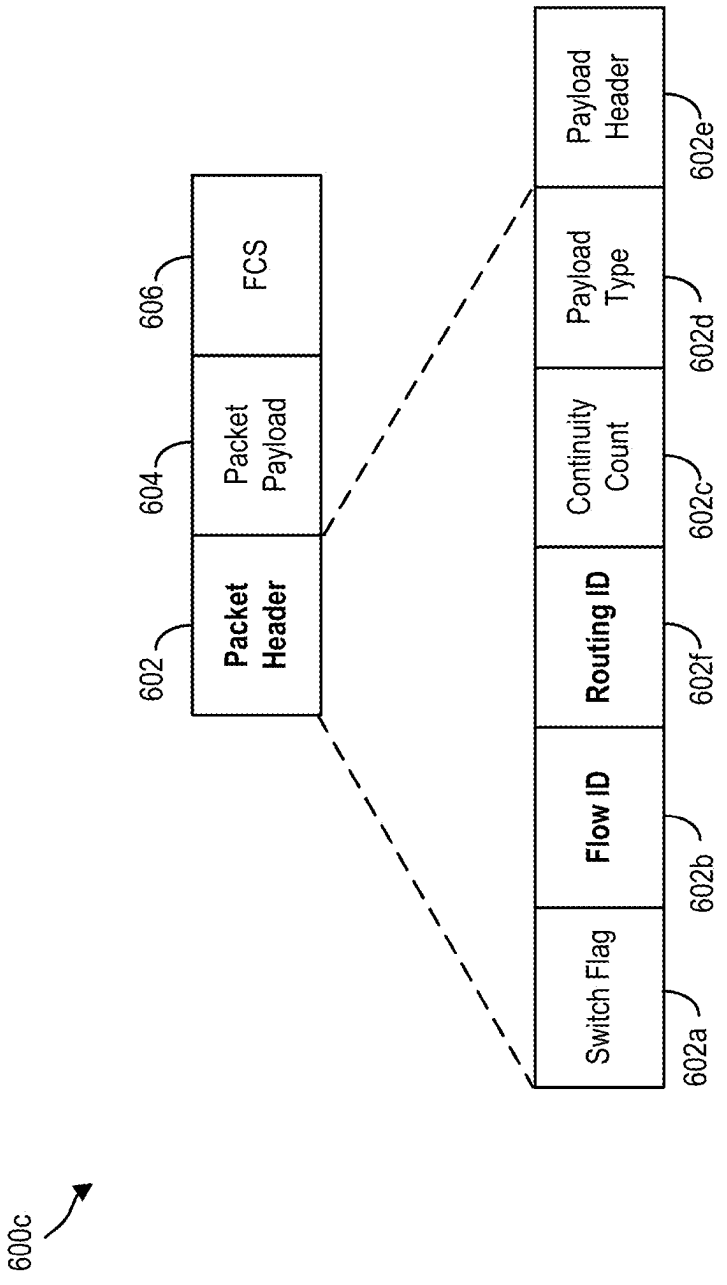
600c
602
Packet Header
604
Packet Payload
606
FCS
602a
Switch Flag
602b
Flow ID
602f
Routing ID
602c
Continuity Count
602d
Payload Type
602e
Payload Header

FIG. 6C

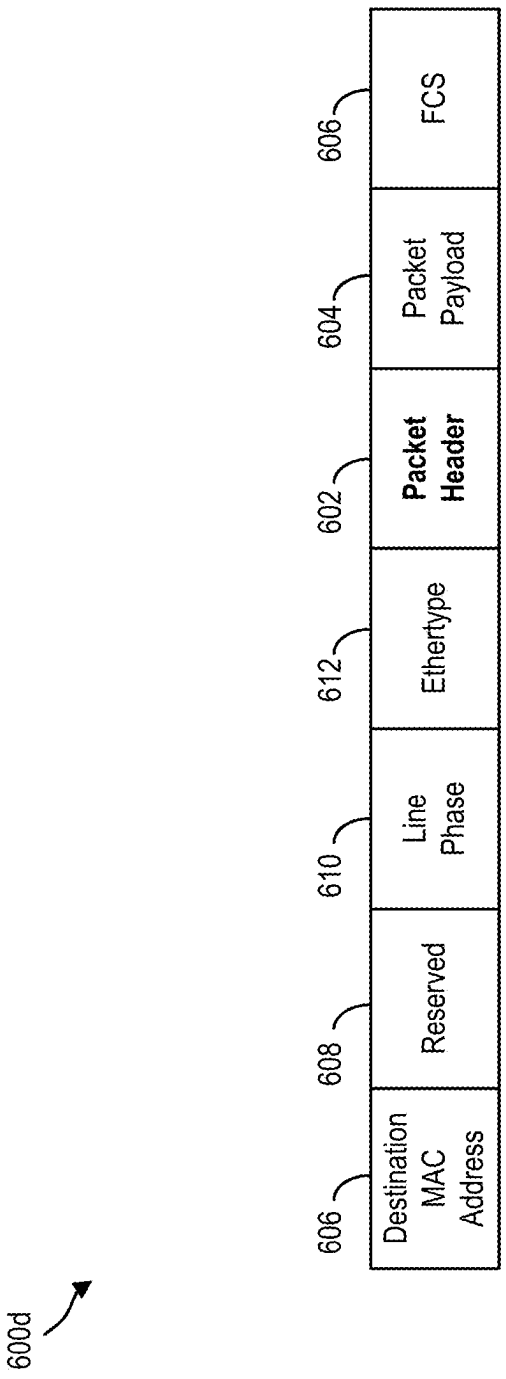
600d
606
Destination MAC Address
608
Reserved
610
Line Phase
612
Ethertype
602
Packet Header
604
Packet Payload
606
FCS

FIG. 6D

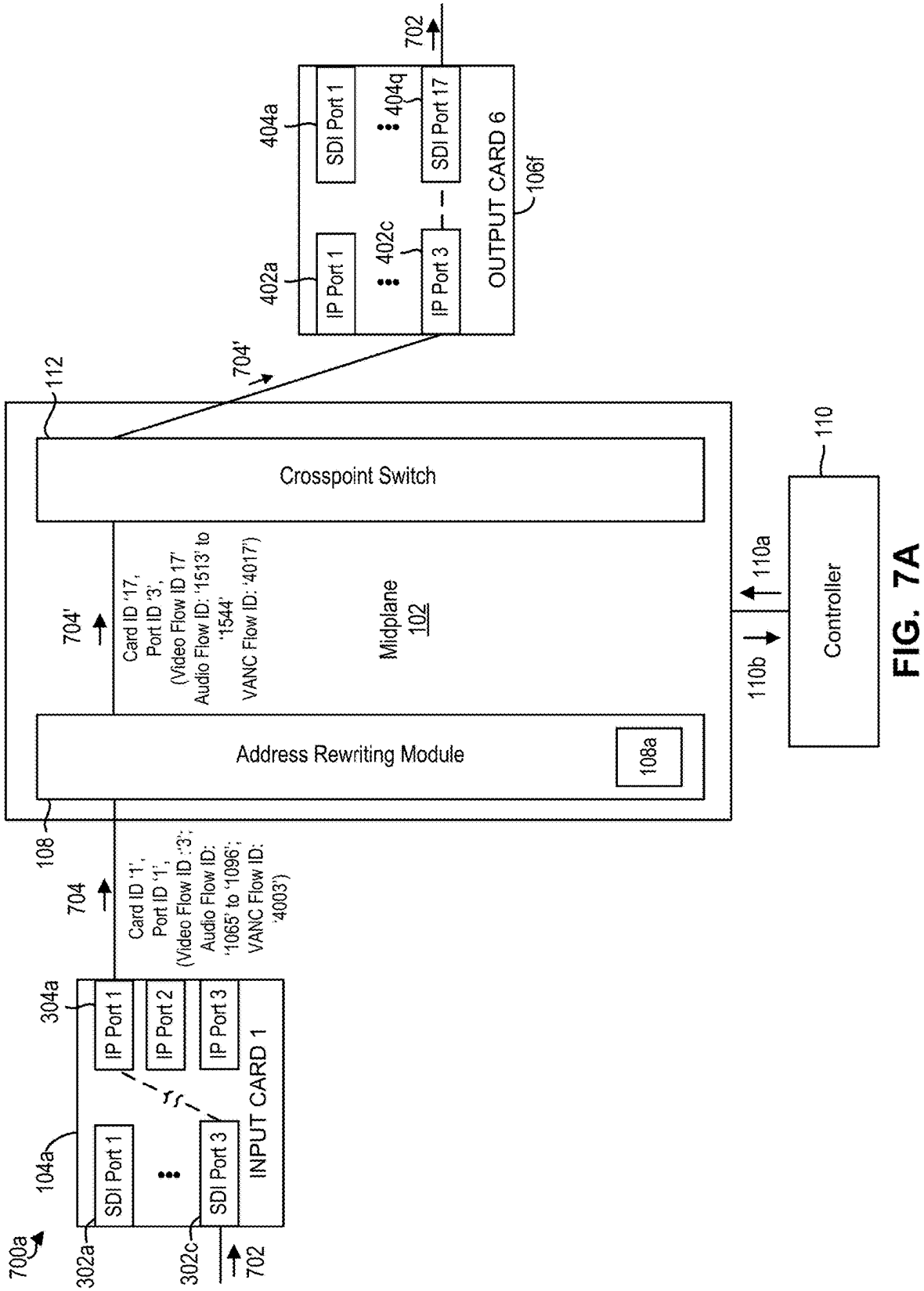
700a
302a
302c
702
104a
SDI Port 1
SDI Port 3
INPUT CARD 1
304a
IP Port 1
IP Port 2
IP Port 3
704
Card ID '1', Port ID '1', (Video Flow ID :'3'; Audio Flow ID: '1065' to '1096'; VANC Flow ID: '4003')
108
Address Rewriting Module
108a
704'
Card ID '17', Port ID '3', (Video Flow ID '17' Audio Flow ID: '1513' to '1544' VANC Flow ID: '4017')
Midplane 102
Crosspoint Switch
112
704'
402a
IP Port 1
402c
IP Port 3
404a
SDI Port 1
404q
SDI Port 17
OUTPUT CARD 6
106f
702
110b
110a
Controller
110

FIG. 7A

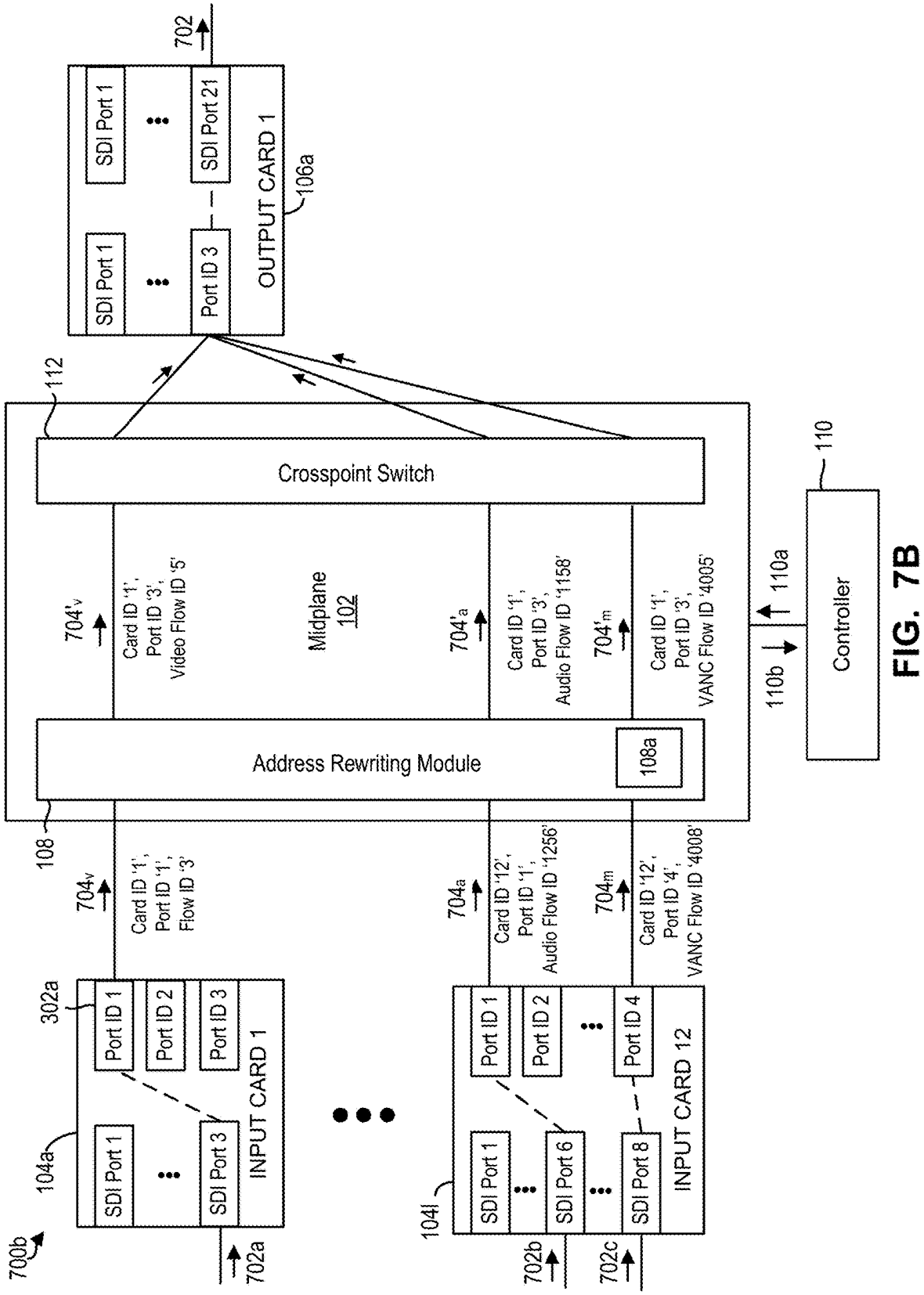
700b
104a
SDI Port 1
SDI Port 3
INPUT CARD 1
Port ID 1
Port ID 2
Port ID 3
302a
702a
104l
SDI Port 1
SDI Port 6
SDI Port 8
INPUT CARD 12
Port ID 1
Port ID 2
Port ID 4
702b
702c
108
704v
Card ID '1', Port ID '1', Flow ID '3'
704a
Card ID '12', Port ID '1', Audio Flow ID '1256'
704m
Card ID '12', Port ID '4', VANC Flow ID '4008'
112
Crosspoint Switch
704'v
Card ID '1', Port ID '3', Video Flow ID '5'
Midplane 102
704'a
Card ID '1', Port ID '3', Audio Flow ID '1158'
704'm
Card ID '1', Port ID '3', VANC Flow ID '4005'
Address Rewriting Module
108a
110
110a
110b
Controller
702
SDI Port 1
SDI Port 21
SDI Port 1
Port ID 3
OUTPUT CARD 1
106a

FIG. 7B

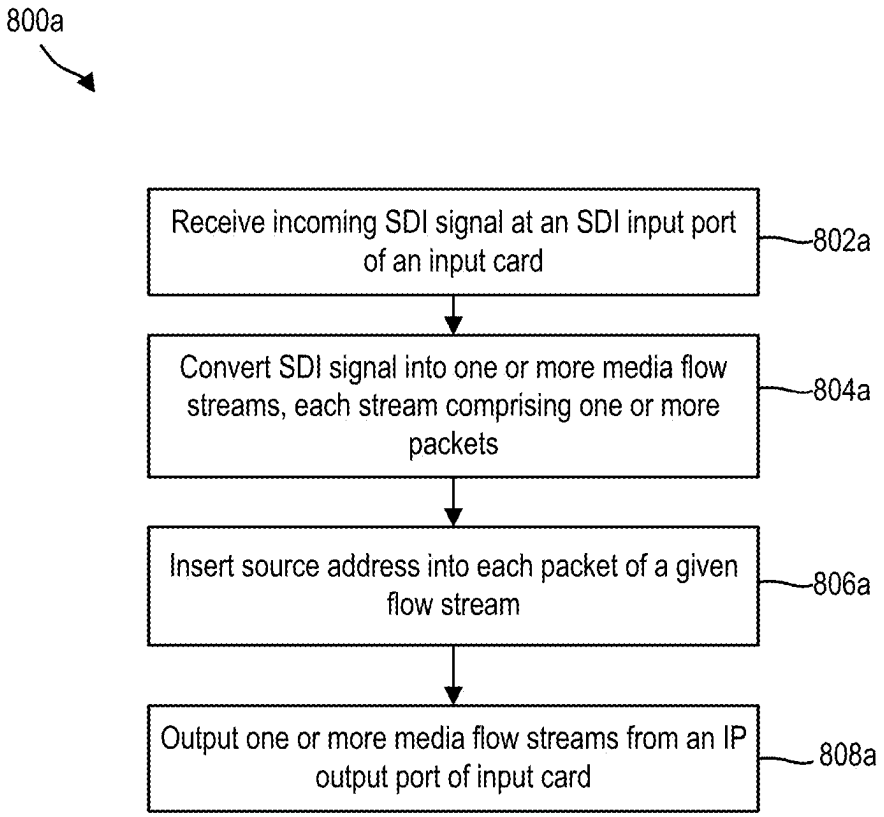
800a
Receive incoming SDI signal at an SDI input port of an input card
802a
Convert SDI signal into one or more media flow streams, each stream comprising one or more packets
804a
Insert source address into each packet of a given flow stream
806a
Output one or more media flow streams from an IP output port of input card
808a

FIG. 8A

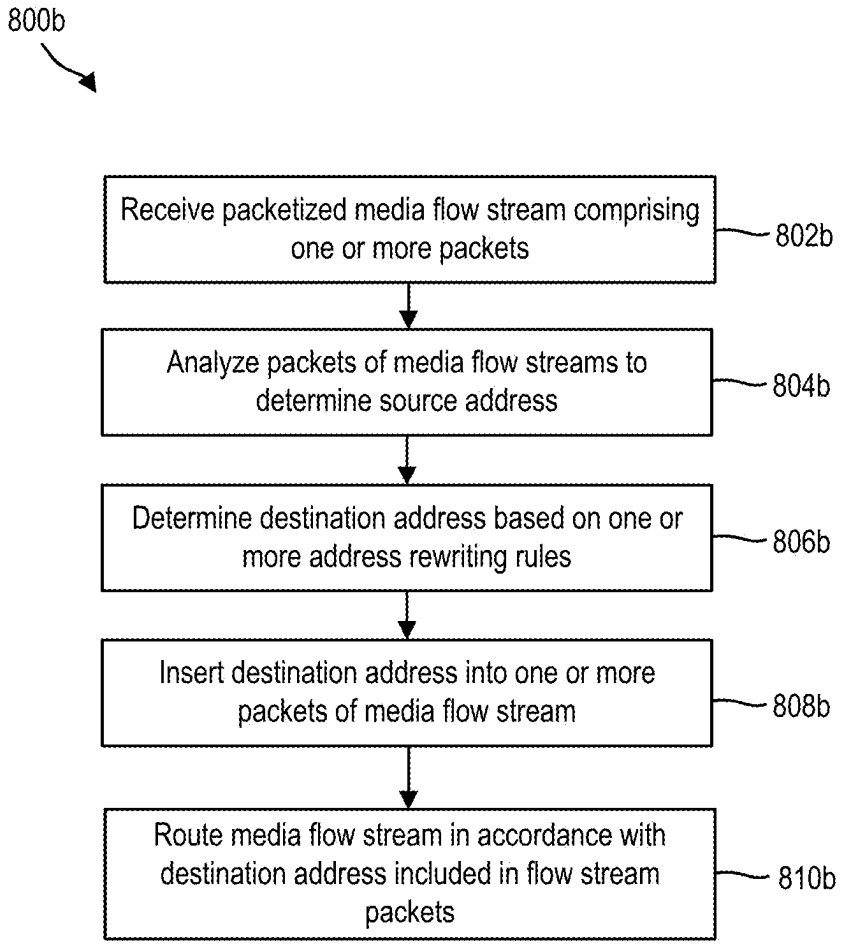
800b
Receive packetized media flow stream comprising one or more packets
802b
Analyze packets of media flow streams to determine source address
804b
Determine destination address based on one or more address rewriting rules
806b
Insert destination address into one or more packets of media flow stream
808b
Route media flow stream in accordance with destination address included in flow stream packets
810b

FIG. 8B

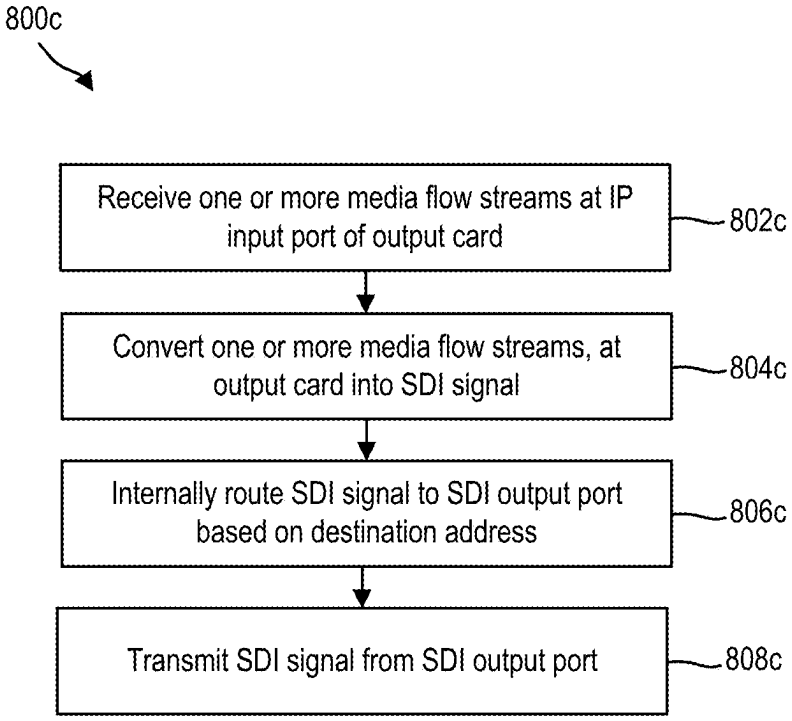
800c
Receive one or more media flow streams at IP input port of output card
802c
Convert one or more media flow streams, at output card into SDI signal
804c
Internally route SDI signal to SDI output port based on destination address
806c
Transmit SDI signal from SDI output port
808c

FIG. 8C

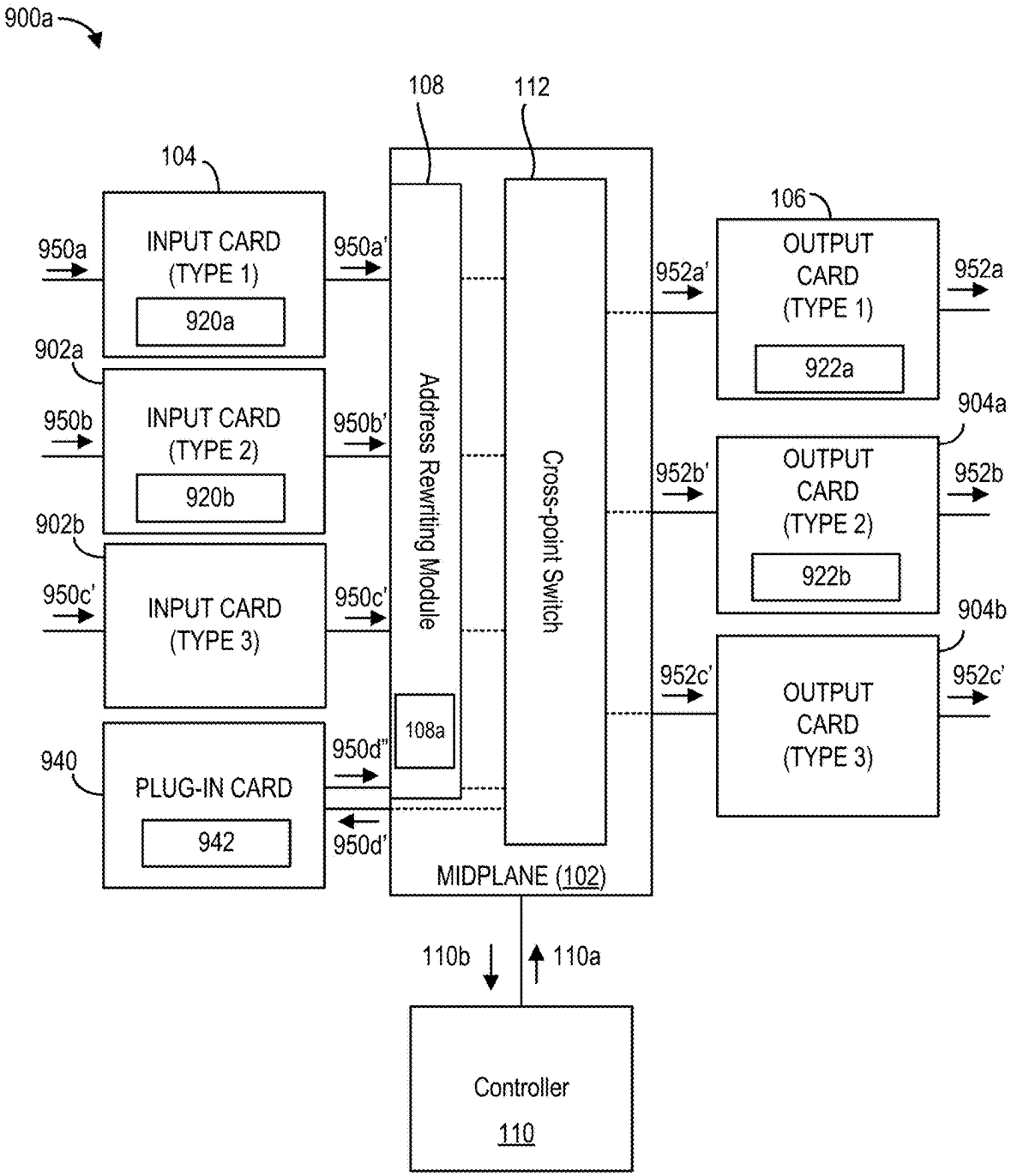
900a
108
112
104
106
950a
INPUT CARD
(TYPE 1)
920a
950a'
952a'
OUTPUT
CARD
(TYPE 1)
922a
952a
902a
950b
INPUT CARD
(TYPE 2)
920b
950b'
Address Rewriting Module
Cross-point Switch
952b'
OUTPUT
CARD
(TYPE 2)
922b
904a
952b
902b
950c'
INPUT CARD
(TYPE 3)
950c'
952c'
OUTPUT
CARD
(TYPE 3)
904b
952c'
108a
940
PLUG-IN CARD
942
950d"
950d'
MIDPLANE (102)
110b
110a
Controller
110

FIG. 9A

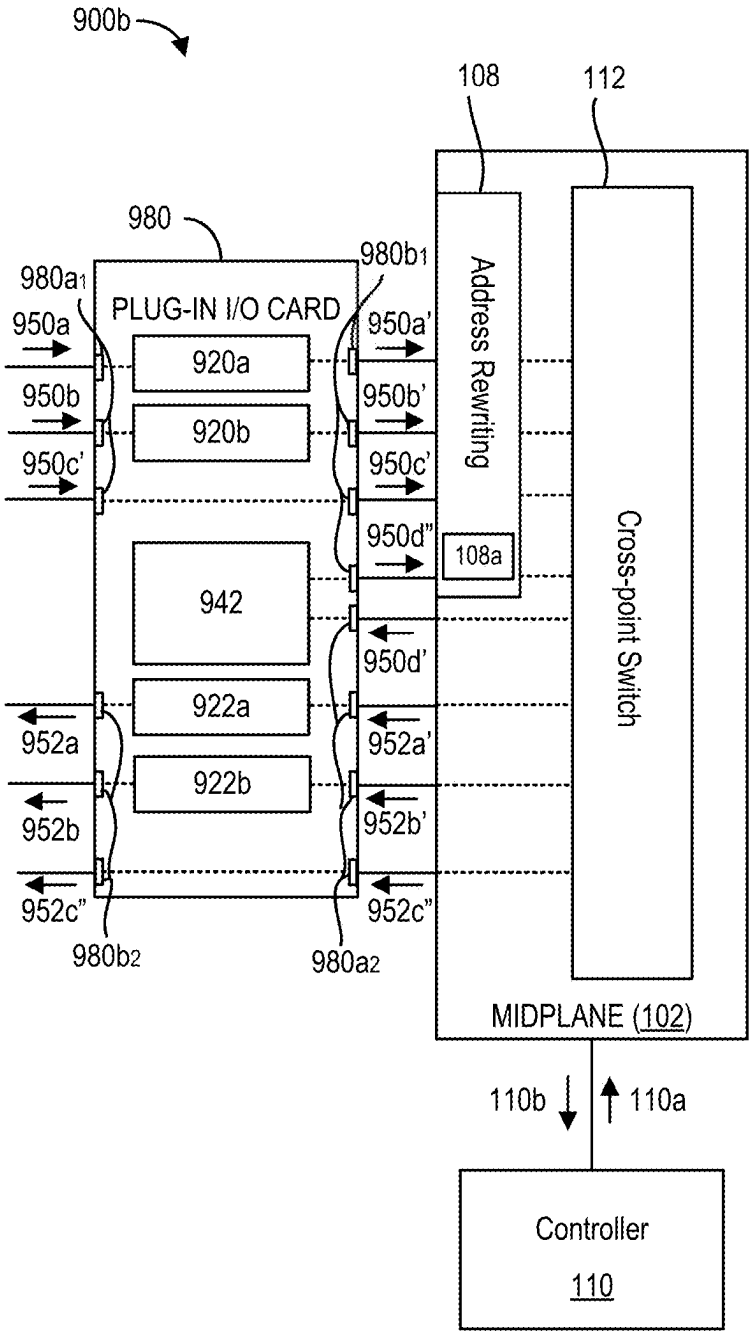
900b
108
112
980
980a1
980b1
PLUG-IN I/O CARD
Address Rewriting
Cross-point Switch
950a
950a'
920a
950b
950b'
920b
950c'
950c'
950d"
108a
942
950d'
922a
952a
952a'
922b
952b
952b'
952c"
952c"
980b2
980a2
MIDPLANE (102)
110b
110a
Controller
110

FIG. 9B

SYSTEM AND METHOD FOR ROUTING A SERIAL DIGITAL INTERFACE (SDI) SIGNAL

REFERENCE TO RELATED APPLICATIONS

[0001] This application is a continuation of U.S. application Ser. No. 17/701,733 filed on Mar. 23, 2022, which claims the benefit of U.S. Provisional Application No. 63/164,856 filed on Mar. 23, 2021, the complete disclosures of which are incorporated herein by reference.

FIELD

[0002] Various embodiments are described herein that generally relate to a routing system, and in particular, to an improved routing system for routing serial digital interface (SDI) signals between devices through a midplane capable of carrying packetized signals, and a method of operating the same.

INTRODUCTION

[0003] Current SDI routers suffer numerous drawbacks including, inter alia, poor scalability and operational inefficiencies. It is therefore desirable to provide an SDI router that can overcome at least some of these drawbacks.

SUMMARY OF VARIOUS EMBODIMENTS

[0004] In accordance with a broad aspect of the teachings herein, there is provided at least one embodiment a system for routing an input serial digital interface (SDI) signal from an input SDI port to an output SDI port, the system comprising:

[0005] at least one input card coupled to the input SDI port;

[0006] at least one output card coupled to the output SDI port;

[0007] a midplane coupled to the at least one input card and the at least one output card; and

[0008] a controller coupled to the midplane;

[0009] the at least one input card being configured to:

[0010] receive the input SDI signal at the input SDI port;

[0011] process the input SDI signal to generate one or more packetized media streams, each packetized media stream comprising a plurality of packets, wherein each packet has a packet header comprising a source address corresponding to that packetized media stream; and

[0012] transmit each packetized media stream from an IP output port to the midplane;

[0013] the midplane being configured to:

[0014] identify the source address corresponding to each packet of a packetized media stream;

[0015] update the corresponding packets of each packetized media stream with a destination address based on the control signal from the controller, and generate a corresponding processed packetized media stream; and

[0016] route the processed packetized media stream to an output card based on the destination address; and

[0017] the output card being configured to:

[0018] receive one or more processed packetized media streams at an input IP port;

[0019] process the one or more processed packetized media streams to generate a corresponding output SDI signal; and

[0020] providing the output SDI signal at the output SDI port.

[0021] In some embodiments, the source address includes a flow identifier uniquely identifying the corresponding packetized media stream.

[0022] In some other embodiments, the flow identifier is related to the SDI input port receiving the input SDI signal corresponding to the packetized media stream.

[0023] In some embodiments, the flow identifier identifies source information associated with the packetized media stream.

[0024] In some further embodiments, the flow identifier identifies the input card and the SDI input port receiving the input SDI signal corresponding to the packetized media stream, and the output IP port transmitting the packetized media stream.

[0025] In some other embodiments, the source address further includes a routing identifier, wherein the routing identifier identifies source information associated with the packetized media stream.

[0026] In some embodiments, the source address further includes a routing identifier, wherein the routing identifier identifies the input card and the SDI input port receiving the input SDI signal corresponding to the packetized media stream, and the output IP port transmitting the packetized media stream.

[0027] In some embodiments, the destination address includes a flow identifier uniquely identifying the corresponding processed packetized media stream.

[0028] In some other embodiments, the flow identifier is related to the SDI output port receiving the output SDI signal corresponding to the processed packetized media stream.

[0029] In some other embodiments, the flow identifier identifies destination information associated with the processed packetized media stream.

[0030] In some further embodiments, the flow identifier identifies the output card and the SDI output port providing the output SDI signal corresponding to the processed packetized media stream, and the input IP port receiving the processed packetized media stream.

[0031] In some embodiments, the destination address further includes a routing identifier, wherein the routing identifier identifies destination information associated with the processed packetized media stream.

[0032] In some other embodiments, the destination address further includes a routing identifier, wherein the routing identifier identifies the output card and the SDI output port providing the output SDI signal corresponding to the processed packetized media stream, and the input IP port receiving the packetized media stream.

[0033] In some embodiments, an address inserting module in the midplane is configured to replace the flow identifier associated with the source address with a flow identifier associated with the destination address.

[0034] In some other embodiments, an address inserting module in the midplane is configured to replace the routing identifier associated with the source address with a routing identifier associated with the destination address.

[0035] In accordance with another broad aspect of the teachings herein, there is provided at least one embodiment

a method for routing an input serial digital interface (SDI) signal from an input SDI port to an output SDI port, the method comprising:

[0036] receiving the input SDI signal at the input SDI port at an input card;

[0037] processing the input SDI signal to generate one or more packetized media streams, each packetized media stream comprising a plurality of packets, wherein each packet has a packet header comprising a source address corresponding to that packetized media stream;

[0038] transmitting each packetized media stream from an IP output port to a midplane;

[0039] In accordance with another broad aspect of the teachings herein, there is provided at least one embodiment a method for routing an input serial digital interface (SDI) signal from an input SDI port to an output SDI port, the method comprising:

[0040] receiving one or more packetized media streams at a midplane;

[0041] identifying a source address corresponding to each packet of a packetized media stream;

[0042] processing the corresponding packets of each packetized media stream with a destination address based on control signal from controller coupled to the midplane;

[0043] generating a corresponding processed packetized media stream; and

[0044] routing the processed packetized media stream to an output card based on the destination address.

[0045] In accordance with another broad aspect of the teachings herein, there is provided at least one embodiment a method for routing an input serial digital interface (SDI) signal from an input SDI port to an output SDI port, the method comprising:

[0046] receiving one or more processed packetized media streams at an input IP port at an output card based on a destination address;

[0047] processing the one or more processed packetized media streams to generate a corresponding output SDI signal; and

[0048] providing the output SDI signal at an output SDI port.

[0049] In some embodiments, the source address includes a flow identifier uniquely identifying the corresponding packetized media stream.

[0050] In some other embodiments, the flow identifier is related to the SDI input port receiving the input SDI signal corresponding to the packetized media stream.

[0051] In some embodiments, the flow identifier identifies source information associated with the packetized media stream.

[0052] In some further embodiments, the flow identifier identifies the input card and the SDI input port receiving the input SDI signal corresponding to the packetized media stream, and the output IP port transmitting the packetized media stream.

[0053] In some other embodiments, the source address further includes a routing identifier, wherein the routing identifier identifies source information associated with the packetized media stream.

[0054] In some embodiments, the source address further includes a routing identifier, wherein the routing identifier identifies the input card and the SDI input port receiving the input SDI signal corresponding to the packetized media stream, and the output IP port transmitting the packetized media stream.

[0055] In some embodiments, the destination address includes a flow identifier uniquely identifying the corresponding processed packetized media stream.

[0056] In some other embodiments, the flow identifier is related to the SDI output port receiving the output SDI signal corresponding to the processed packetized media stream.

[0057] In some other embodiments, the flow identifier identifies destination information associated with the processed packetized media stream.

[0058] In some further embodiments, the flow identifier identifies the output card and the SDI output port providing the output SDI signal corresponding to the processed packetized media stream, and the input IP port receiving the processed packetized media stream.

[0059] In some embodiments, the destination address further includes a routing identifier, wherein the routing identifier identifies destination information associated with the processed packetized media stream.

[0060] In some other embodiments, the destination address further includes a routing identifier, wherein the routing identifier identifies the output card and the SDI output port providing the output SDI signal corresponding to the processed packetized media stream, and the input IP port receiving the packetized media stream.

[0061] In some embodiments, an address inserting module in the midplane is configured to replace the flow identifier associated with the source address with a flow identifier associated with the destination address.

[0062] In some other embodiments, an address inserting module in the midplane is configured to replace the routing identifier associated with the source address with a routing identifier associated with the destination address.

[0063] It will be appreciated by a person skilled in the art that a system, method or computer readable medium disclosed herein may embody any one or more of the features contained herein and that the features may be used in any particular combination or sub-combination. These and other aspects and features of various embodiments will be described in greater detail below.

BRIEF DESCRIPTION OF THE DRAWINGS

[0064] For a better understanding of the various embodiments described herein, reference will be made, to the accompanying drawings. The drawings are not intended to limit the scope of the teachings described herein.

[0065] FIG. **1** is a block diagram of an SDI router in accordance with an example embodiment;

[0066] FIG. **2** is a block diagram of an SDI router in accordance with an example embodiment;

[0067] FIG. **3**A is a block diagram of an input card associated with an SDI router in accordance with an example embodiment;

[0068] FIG. **3**B is a block diagram of an input card associated with an SDI router in accordance with another example embodiment;

[0069] FIG. **3**C is a block diagram of an input card associated with an SDI router in accordance with a further example embodiment;

[0070] FIG. **3**D a block diagram of an input card associated with an SDI router in accordance with another example embodiment;

[0071] FIG. **4**A is a block diagram of an output card associated with an SDI router in accordance with an example embodiment;

[0072] FIG. **4**B is a block diagram of an output card associated with an SDI router in accordance with another example embodiment;

[0073] FIG. **4**C is a block diagram of an output card associated with an SDI router in accordance with a further example embodiment;

[0074] FIG. **4**D is a block diagram of an output card associated with an SDI router in accordance with a further example embodiment;

[0075] FIG. **5**A is block diagram of an input/output (I/O) card used in an SDI router in accordance with an example embodiment;

[0076] FIG. **5**B is a block diagram of an input/output (I/O) card used in an SDI router in accordance with another example embodiment;

[0077] FIG. **6**A is an example of a packet frame associated with a media stream in accordance with an example embodiment;

[0078] FIG. **6**B is an example of a packet frame associated with a media stream in accordance with another example embodiment;

[0079] FIG. **6**C is an example of a packet frame associated with a media stream in accordance with yet another example embodiment;

[0080] FIG. **6**D is an example embodiment of a packet frame associated with a media stream in accordance with another example embodiment;

[0081] FIG. **7**A is a flowchart illustrating an example method of operating an SDI router in accordance with an example embodiment;

[0082] FIG. **7**B is a flowchart illustrating an example method of operating an SDI router in accordance with another example embodiment;

[0083] FIG. **8**A is a flowchart illustrating an example method of operating an input card of an SDI router in accordance with an example embodiment;

[0084] FIG. **8**B is a flowchart illustrating an example method of operating a midplane of an SDI router in accordance with an example embodiment;

[0085] FIG. **8**C is a flowchart illustrating an example method of operating an output card of an SDI router in accordance with an example embodiment;

[0086] FIG. **9**A is a block diagram of an SDI router in accordance with other example embodiments; and

[0087] FIG. **9**B is a block diagram of an SDI router in accordance with still other example embodiments.

[0088] The drawings, described below, are provided for purposes of illustration, and not of limitation, of the aspects and features of various examples of embodiments described herein. For simplicity and clarity of illustration, elements shown in the drawings have not necessarily been drawn to scale. The dimensions of some of the elements may be exaggerated relative to other elements for clarity. For simplicity and clarity of illustration, where considered appropriate, reference numerals may be repeated among the drawings to indicate corresponding or analogous elements or steps.

DESCRIPTION OF VARIOUS EMBODIMENTS

[0089] Reference is made concurrently to FIGS. **1** and **2**, which show example embodiments of serial digital interface (SDI) routers **100** and **200** respectively.

[0090] FIG. **1** shows an example embodiment of an SDI router **100** that generally includes one or more input cards **104***a*-**104***n*, one or more output cards **106***a*-**106***n* and a midplane **102** which couples the one or more input cards **104***a*-**104***n* to the one or more output cards **106***a*-**106***n*. The router **100** further includes a controller **110**, which is communicably coupled to the midplane **102**. In various embodiments provided herein, the controller **110** is operable to control operations of the various components comprising the midplane **102**. FIG. **2** shows another example embodiment of an SDI router **200**. The SDI router **200** of FIG. **2** is generally analogous to the SDI router **100** of FIG. **1**, but includes a plurality of input/output (I/O) cards **114***a*-**114***n* instead of the input and output cards **104**, **106** allowing for bidirectional routing of SDI signals.

[0091] The SDI routers **100**, **200** will now be described, first at a generally high level, and then at a more granular and detailed level.

[0092] Referring first to FIG. **1**, which shows the SDI router **100**. The SDI router **100** of FIG. **1** generally operates as follows: each of the input cards **104** is configured to receive one or more SDI signals **116** at one or more SDI ports of the input cards **102**. The SDI signals **116** may be received, for example, from one or more upstream devices that are coupled to the SDI ports on each input card **104**. The upstream devices may include an SDI source device, or a device capable of processing or forwarding an SDI signal received from another device. The input cards **104** convert (i.e., transform) the received SDI signals **116** to generate one or more corresponding packetized media streams **118** (i.e., media streams comprising a plurality of packets that encapsulate data from the SDI signal). For example, an SDI signal may be received at an input card, and may include one or more of video, audio and ancillary data components. In some cases, the audio components may be embedded in the video components. In some other cases, the audio components may not be embedded in the video components. The input card **104** can extract (i.e., de-encapsulate) each of these media components, and convert each media component into a separate packetized stream. For example, the input card may be configured to generate a video stream, one or more audio streams, a VANC or vertical ancillary data stream, or one or more of derivative streams consisting of derivative(s) of the video, audio or VANC components etc.). Each packet, in each stream, carries a payload corresponding to at least a portion of the packetized media content. In some embodiments provided herein, the packetized streams may comprise packets that are modified internet protocol (IP) packets.

[0093] From the input cards **104**, the media streams **118** are transmitted to the midplane **102** through a corresponding IP output port of each input card **104**. Midplane **102** is configured to receive the media streams **118**, determine a corresponding destination output card **106** for each media stream **118** based on a controller signal, replaces the source address within the packets of each media stream **118** to a destination address, and route the media streams **118** to the appropriate output card **106**.

[0094] In some embodiments, the midplane **102** in FIGS. **1** and **2** (as well as in FIGS. **9**A and **9**B) comprises a router card having signal routing capabilities. In some other

embodiments, the midplane includes processing capabilities. For example, in such embodiments, the midplane **102** consists of a network processor card having routing as well as signal processing capabilities.

[0095] The output cards **106***a*-**106***n*, which are also connected to the midplane **102**, receive the media streams through one or more IP input ports of the output cards. The output cards **106***a*-**106***n* then convert the packetized media streams back into SDI signals. That is, each output card **106** de-encapsulates the one or more received packetized media streams to retrieve the corresponding content data, and construct an SDI output signal **120** from the retrieved content data, including one or more of video, audio and data (e.g. VANC) components. The SDI output signals **120** are then transmitted through one or more designated SDI ports of the output card **106** to downstream devices.

[0096] The SDI output signal **120** may or may not be identical, in terms of inherent media components, to the SDI input signal **116**. In some cases, the SDI input signal **116** may be routed to an output card **106** 'as is', i.e. without addition or removal of any other media content or component. In such cases, the SDI output signal **120** will include identical content to the SDI input signal **116**, but will be a reconstructed version of the SDI input signal **116**. For example, in such cases, the SDI input signal **116** will be packetized to generate one or more media streams, which will be re-addressed and routed by the midplane to an appropriate output card **106**, where the stream will be de-encapsulated (or depacketized) and the resultant content data will be combined to construct the SDI output signal **120**.

[0097] In some other cases, where, for example, the SDI output signal **120** may be a combination of two or more SDI input signals **116**, or SDI output signal **120** is a processed version of the SDI input signal **116** etc., the composition of the SDI output signal **120** will not be identical to the composition of any one SDI input signal **116**.

[0098] FIG. **2** shows an analogous SDI router **200** which does not include input and output cards, but includes bi-directional input/output (I/O) cards **114** which can either adopt the functionality of input cards (i.e., converting SDI signals into packetized media streams), and can adopt the functionality of output cards (i.e., converting packetized media streams back into SDI signals), depending on the flow direction of the signals and/or streams.

[0099] In the illustrated embodiments, the SDI routers **100**, **200** are operable to route one or more SDI signals by converting these SDI signals into packetized media streams and routing these media stream packets through the midplane **102**. The packetized media streams are routed through a midplane capable of routing packetized signals, and such midplanes may include a crosspoint switch, a switching fabric, a software defined network (SDN), or any other IP routing core, etc.

[0100] By routing SDI signals as packetized streams, the SDI routers may achieve increased scalability as compared to traditional SDI routers. Specifically, traditional SDI routers, which simply route SDI signals between input and output SDI ports, are often based on a fixed-size signal switching matrix, and when the router ports reach capacity, growing beyond the limits of the router framework tends to be disruptive and expensive. However, by converting SDI signals into packetized streams, the improved router can benefit from IP routing capabilities—which are not based on using fixed size crosspoint switches, and allow for scalability and greater flexibility.

[0101] In some embodiments, the SDI routers **100**, **200** are configured to receive a packetized signal directly from a source device. The packetized signal may include IP packets including a destination address in the packet header. In such embodiments, the SDI routers **100**, **200** are configurable to route the packetized signal to the destination source based, via the midplane **102**, based on the destination address in the packets. In some cases, the SDI routers **100**, **200** may be integrated with an IP router so that both SDI and IP signals can be transported through a single midplane **102**.

[0102] Reference is again made to FIG. **1**, which shows input cards **104***a*-**104***n*, where each input card includes SDI ports that are configured to receive SDI signals. In one example, router **100** includes 16 SDI ports per SDI card. In another example, router **100** includes 32 SDI ports per SDI card. The SDI signals received at the input cards **104** may include video signals (i.e., standard definition, high definition, 4K, ultraHD, etc.). Some non-limiting examples of SDI signals include SD-SDI, HD-SDI, 3G-SDI, 6G-SDI, and 12G-SDI signal. The SDI signals may alternatively be any other non-packetized serial signal.

[0103] In various cases, the received SDI signals also include embedded data, such as embedded audio data and/or embedded ancillary data. For example, in an SD-SDI and HD-SDI signal, there may be up to sixteen channels of embedded audio encapsulated into the SDI stream. In such cases, the SD-SDI signal may encapsulate audio data according to the SMPTE 272M standard, whereas an HD-SDI signal may encapsulate audio streams according to an SMPTE 299M standard. Similarly, in an 3G-SDI stream, up to 32 audio channels may be embedded (i.e., encapsulated) into the SDI stream. In many cases, SDI signals can also include embedded ancillary data, otherwise known as metadata (i.e., Horizontal Ancillary Data (HANC) or Vertical Ancillary Data (VANC)). This ancillary data can include, for instance, non-video and non-audio payloads, such as timecodes, closed captions, etc.

[0104] As previously stated, each of the input cards **104** is configured to receive the one or more SDI signals, and convert the SDI signals into one or more packetized media streams. The packetized streams may comprise a plurality of packets, where the packets may or may not be IP packets. In some embodiments, the packets within the stream are not IP packets. For example, the packets generated by the input cards **104** may not include the destination address for the packet. This may be because in various cases, the input cards **104** and the output cards **106** may be indifferent to each other, e.g. may not be aware of each other. That is, the input cards **102** need not be aware of the destination address for each generated packet in a media stream, and the output cards **106** need not be aware of the source address of each packet in the media stream. Rather, in the SDI routers **100**, **200**, only the controller **110** may be "aware" of the source, destination and routing path for each media stream, as between the input cards **104** and the output cards **106**.

[0105] In various embodiments, each stream generated by the input cards **104** consists of packets where the packet header only specifies a source address. In some cases, the source address includes an SDI input card number, an SDI port number, an IP port number and a flow identifier. In some other cases, the source address incudes an SDI input card

number, an IP port number and a flow identifier. In some further cases, the source address only includes a flow identifier. In these examples, the SDI input card number refers to the input card **104** where the input SDI signal is received. The SDI port number refers to the SDI port within the input card **104** where the input SDI signal is received. The IP port number refers to the IP port used to transmit the packetized media streams to the midplane **102** from the input card **104**. The flow identifier is an identifier associated with each packetized media stream generated by the input card **104**. All the packets within a same packetized media stream have a same flow identifier.

[0106] As shown in FIG. **1**, the midplane **102** may include an address inserting module **108** as well as a crosspoint switch **112**. Each of the address inserting module **108** and the crosspoint switch **112** may be controlled by various control signals **110** generated by the controller **100**.

[0107] The address inserting module **108** receives the packetized media streams generated by each input card **104**, and based on control signals **110***a* received from the controller **110** (i.e., addressing instructions), replaces the source address in each packet of the packetized media stream with a destination address. In other cases, the source address may not be overwritten by the address inserting module **108** to include the destination address, but rather, the destination address may be simply appended to each stream packet in addition to the source address. In some further cases, where the packets being received by the address inserting module **108** do not have any source address, the address inserting module **108** is configured to insert a destination address in the packets. In such cases, the controller **110** may provide instruction signals, identifying the destination address, to the address rewriting module **108** based on certain address inserting rules. Such address inserting rules may be predefined or dynamically changeable by an operator.

[0108] In various cases, the destination address includes information about the destination SDI output card **106** which is to receive the packetized stream(s). In some other cases, the destination address includes information identifying both the SDI output card **106** as well as the SDI output port within the SDI output card **106**. In some further cases, the destination address includes information additionally identifying the IP port receiving the media stream. In all cases, the destination address also includes a flow identifier uniquely identifying each packetized media stream to be received at the SDI output card **106**.

[0109] Once the address inserting module **108** adds the destination address into each packet of a given packetized stream, the packetized stream is forwarded to the appropriate IP port on an output card **106**, via the crosspoint switch **112**.

[0110] The crosspoint switch **112** is configured to route each packetized streams to the relevant IP input card for each output card **106** based on the destination address included in each packet of that stream. The crosspoint switch **112** may receive control signals **110***a* from the controller **110**, where the control signals **110** may include forwarding tables that indicate how to forward each stream through the corresponding routing nodes located in the crosspoint switch **112** such that stream arrives at the correct destination.

[0111] Once a stream has arrived at a corresponding IP input port at the correct output card **106**, the receiving output card **106** de-encapsulates one or more received streams to retrieve the content data contained within the packets and construct an output SDI signal **120** based on the retrieved content data. As noted previously, as each stream generated by an input card **104** may be separately routed through the midplane **102**, the output SDI signal **120** generated by the output card **106** can conceivably include streams from entirely different input cards, but which were addressed (i.e., by the address inserting module **108**) to the same destination. The SDI signal, generated by the output card **106**, is then transmitted from an SDI output port in accordance with the destination address included, by the address inserting module **108**, in each stream packet.

[0112] In various embodiments, each of the input cards **104** and the output cards **106** include field-programmable gate arrays (FPGAs). The FPGAs may be pre-programmed or pre-configured in some cases, and dynamically configurable by the controller **110** in some other cases. For example, in some cases, each of the input and output cards **104**, **106** include integrated circuitry which is pre-configured to convert input SDI signals into one or more packetized streams (i.e., at the input card), and convert one or more packetized streams into output SDI signals. In at least some embodiments, the input and output cards **104**, **106** are removably coupled to the midplane **102**.

[0113] In various disclosed embodiments, the controller **110** is configured to control all operation of the SDI router through exclusive communication with the midplane **102**, and in particular, communication with the address inserting module **108** and the crosspoint switch **122**.

[0114] Accordingly, and in view of the foregoing, another advantage of the disclosed SDI router may be that the controller **110** does not control and/or manipulate the edge devices (i.e., the input and output cards). Rather, the controller **110** can control all routing through commands transmitted to the address inserting module **108**, and crosspoint switch **112**. In turn, the edge devices **104**, **106** may be static, or otherwise off-the-shelf components, and do not otherwise require control or re-configuration in order to transmit or receive data packets. Further, the input and output cards **104**, **106** may not be aware of the destination and/or source addresses for transmitted and/or received media stream packets, as this is all handled by the controller **108** through communication with the address inserting module **108**. Consequently, inefficient, time costly and unreliable three-way handshake operations between packet transmitters and receivers may be avoided.

[0115] Referring now to FIG. **2**, which shows an alternative embodiment of an SDI router **200**. In this embodiment, as stated previously, each of the input and output cards are replaced by I/O cards **114**. Accordingly, each I/O card **114** may be operable to perform the combined functions of the input cards **104** and output cards **106**, as discussed herein. In this embodiment, an I/O card **114** may be an input card in some instances, and output card in some other instances. For example, each of the I/O cards **114** can be configured with integrated FPGA circuitry which can perform conversion between SDI signals and packetized media streams

[0116] Reference is now made to FIGS. **3**A to **3**C, which illustrate various example embodiments of the input card **104** of the SDI router **100**.

[0117] Referring first to FIG. **3**A, which illustrates a simplified and high-level block diagram of an example input card **104**.

[0118] As shown, each input card **104** generally includes one or more SDI input ports **302***a*-**302***n*, and one or more IP output ports **304***a*-**304***n*. Each SDI port **302** may be associ-

ated with a corresponding IP output port **304**. That is, the input card **104** may be pre-configured (i.e., via the integrated circuitry) such that SDI signals received at specific SDI input ports **302** are output by specific IP output ports **304**. For example—in the illustrated example embodiment—SDI signals received at SDI input port '1' **302***a* and SDI input port '2' **302***b* are output as packetized media streams from IP port '1' **304***a*. Similarly, SDI signals received at SDI input port '9' **302***i* may be output as packetized media streams from IP output port '3' **304***c*.

[0119] As illustrated, each SDI signal **306'**$_1$-**306'**$_n$ received at each SDI input port **302***a*-**302***n*, may undergo various transformations and processing to generate the one or more output media streams at the corresponding IP output port **304**. The processing and transformations to the received SDI signals is illustrated in FIG. **3**A by broken lines coupling the SDI input ports **302** to the corresponding IP output ports **304**.

[0120] In various cases, each SDI port **302** may be configured as a Bayonet Neill-Concelman (BNC) or small form-factor pluggable (SFP) connector. Each IP port **304** may be configured as, for example, a 25 gigabyte or 100 gigabyte ethernet link.

[0121] Referring now to FIG. **3**B, which shows an example embodiment an input card **104***a* in greater detail, and in accordance with some embodiments. The input card **300** is analogous to the input cards **104** of FIG. **1**.

[0122] As shown, the input card **104***a* includes the one or more SDI input ports **302** and the one or more IP output ports **304**.

[0123] For ease of discussion, only SDI input ports **302***a* (i.e., SDI input port '1'), SDI input port **302***h* (i.e., SDI input port '8'), SDI input port **302***q* (i.e., SDI input port '17') and SDI input port **302***x* (i.e., SDI input port '24') have been illustrated, although any number of SDI input ports may be provided. Further, only IP output port **304***a* (i.e., IP input port '1') and IP output port **304***c* (i.e., IP output port '3') have been illustrated, although any number of IP ports **304** may also be provided.

[0124] In the illustrated example embodiment, each IP output port **304** is associated with eight SDI ports. For example, SDI ports '1' to '8' are linked (i.e., coupled) to IP port '1', such that SDI signals received from any one of SDI ports '1' to '8' are transmitted as packetized media streams from IP port '1'. Similarly, SDI ports '17' to '24' are linked (i.e., coupled) to IP port '3', such that SDI signals received from any one of SDI ports '17' to '24' are transmitted as packetized streams from IP port '3'. In other embodiments, however, any other coupling configuration between SDI and IP ports may be provided.

[0125] As shown—the input card **104***a* includes one or more input signal processor **310***a*-**310***x* and one or more multiplexers **308***a*-**308***b* interposed between the SDI and IP ports. In the illustrated embodiment, an input signal processor **310** is provided for each SDI input port **302**, and a multiplexer is provided for each IP output port **304**. However, the input signal processors **310** may be coupled to the SDI input ports **302** in a different manner, based on a different coupling configuration.

[0126] The operation of the input card **102** will now be explained using the SDI port **302***a* as an example. In the illustrated example, the SDI signal **306'**$_1$ is received at the SDI port '1' and is fed into the input signal processor **310***a*. Each signal processor **310** may include one or more processing modules, including a signal conversion module **312***a* and a derivative signal generating module **312***b*.

[0127] Signal conversion module **312***a* is operable to convert the received SDI signal **306'**$_1$ to generate one or more packetized media streams. More particularly, signal conversion module **310***a* may receive the SDI signal **306'**$_1$, and de-encapsulate the SDI signal **306'**$_1$ to extract one or more media components embedded in the SDI signal **306'**$_1$. For example, the signal conversion module **312***a* can extract one or more of the SDI video component, SDI audio component(s), and ancillary data component(s). As discussed above, in various cases, an SDI signal may include up to 16 or 32 audio channels, where each may be separated and converted into a corresponding packetized media stream. Similarly, multiple ancillary data components can be extracted (e.g., timecode, subtitles, etc.) and converted into one or more packetized media streams.

[0128] Once the media components have been de-encapsulated from the SDI signal, the signal conversion module **312***a* may transform each media component into a corresponding packetized media stream. That is, each media component may be transformed into a media stream that comprises a plurality of individual media packets, with each media packet carrying a payload corresponding to a portion of the extracted media content.

[0129] For example, as shown in FIG. **3**B, each video component in the SDI signal **306'** can be transformed into a packetized video stream **308***v*. Further, each audio channel may also be transformed into a corresponding audio stream **308***a*. While FIG. **3**B illustrates only a single audio stream **308***a* generated by each input signal processor **310***a*, this has only been done for ease of discussion, and it will be appreciated that any number of audio streams **308***a* may be generated by the signal processor **310** corresponding to any number of extracted audio channels. Still further, the ancillary data components may be transformed into one or more packetized streams **306***m*.

[0130] Referring now briefly to FIGS. **6**A-**6**D, which show example structures for packets that can be included in a packetized media stream generated by the signal conversion module **312***a*.

[0131] Referring first to FIG. **6**A, which shows an example packet **600***a* that may be generated by the signal conversion module **312***a* in the input card **300***a*.

[0132] As shown, the packet **600***a* may comprise a modified ethernet frame having one or more data fields including, a packet header **602**, a packet payload **604** and in some cases, a frame check sequence (FCS) field **606**.

[0133] Packet payload **604** may carry data corresponding to the actual media content that is transmitted in the stream. For example, packet payload **604** may include at least a portion of the video content, audio content(s) and/or ancillary data content(s) that are generated from an SDI signal. In various cases, once the media content has been generated from an SDI signal, it may be divided into a plurality of portions, each portion being inserted into the packet payload **604** of a different packet frame **600***a*.

[0134] Packet header **602** may include various identifying information about the packet. In various cases, the packet header **602** can, itself, include multiple sub-data fields including, a switch flag **602***a*, a flow ID **602***b*, a continuity count **602***c*, a payload type **610***d* and a payload header **602***e*. In various cases, the packet header is a four (4) byte data element.

[0135] Considering each of the sub-data fields of the packet header **602**, the switch flag **602***a* may be a binary data field that is initially set to '0'. As explained, the switch flag **602***a* may be modified by the address inserting module **108** (FIGS. **1**, **2**) during audio channel switching.

[0136] Flow ID **602***b* is a field that identifies the particular packetized stream generated by the signal conversion module **312***a*. In some cases, the flow ID **602***b* is related to the SDI port, at the input card **104**, where the input SDI signal is received. In some other cases, the flow ID **602***b* is related to both the input card **104** and the input SDI port within the input card **104** where the input SDI signal is received. In some further cases, the flow ID **602***b* is related to the input card **104** and the input SDI port within the input card **104** where the input SDI signal is received as well as the IP port from where the corresponding packetized media streams are transmitted to the midplane.

[0137] As discussed below, the flow ID **602***b* is used by the address inserting module **108** to determine the source SDI port of the input card **104***a*, and accordingly determine a corresponding destination output card and SDI output port for the stream. To explain the flow ID **602***b*, reference is made briefly back to FIG. **3**B, and with continued concurrent reference to FIG. **6**A.

[0138] As illustrated, each of the input signal processors **310** may assign a flow ID **602***b* to a media stream packet based on the SDI input port **302** receiving the source SDI signal. For example—packets in the video stream **306***v*$_1$ are assigned a flow ID of '1' to indicate that the video stream was generated from an SDI signal received at SDI port '1'. Similarly, packets in the video stream **306***v*$_8$ are assigned a flow ID of '8', indicating that the video stream originated from an SDI signal at SDI port '8', and so forth for video streams **306***v*$_{17}$ (received at SDI port 17) and **306***v*$_{24}$ (received at SDI port 24).

[0139] Similarly, with respect to the audio streams, a range of flow IDs may be available where the flow IDs uniquely identify the SDI input port **302** where the corresponding input SDI signal is received. For example, packets in an audio stream **306***a*$_1$ are assigned a flow ID in a range of '1001' to '1032' (i.e., a range of 32 different audio flow IDs). The range of audio flow IDs correspond to different audio channels (i.e., 32 channels) that can be generated from an SDI signal. That is, different audio channels extracted from an SDI signal can be assigned a unique flow ID selected from the range of '1001' to '1032'. Likewise, audio streams from SDI port '8' may be assigned flow IDs in a range of '1225' to '1256' (i.e., another range of 32 different audio flow IDs). Still further, audio streams from SDI port '17' may be assigned flow IDs in a range of '1513' to '1544', and audio streams from SDI port '24' may be assigned flow IDs in a range of '1737' to '1768'.

[0140] Similarly, the ancillary data streams (or the miscellaneous streams) may also be assigned different flow IDs **602***b* based on the input SDI port (i.e., '4001' for SDI port 1, '4008' for SDI port 8, '4017' for SDI port 17 and '4024' for SDI port 24).

[0141] Accordingly, in the example input card **300***a* of FIG. **3**B, each of the flow IDs, for each type of stream, is unique across all SDI input ports **302**. That is, no two streams, across all input ports of a same input card, have the same flow ID. Rather, in some cases, such as the illustrated case, the flow IDs (or flow ID ranges) increase incrementally with the increase in the input SDI port number.

[0142] In the embodiments of FIG. **6**A, the source address corresponds to the information included in the routing ID field **602***b*.

[0143] FIG. **3**C, however, shows another example embodiment for an input card **104***b* that uses a different scheme for allocating flow IDs to the packetized media streams. In the example of FIG. **3**C, the flow IDs are recycled (or re-used) for different IP ports **304**. In other words, a set of eight (8) SDI ports linked to the same IP output port are assigned unique flow IDs. However, the same flow IDs are recycled for the next set of eight (8) SDI ports **302** linked to the next IP output port **304**. In such cases, the flow IDs may be uniquely related to the input card **104** and the input SDI port within the input card **104** where the input SDI signal is received as well as the IP port from where the corresponding packetized media streams are transmitted to the midplane. Accordingly, any scheme for assigning flow IDs based on SDI input port and/or output IP port may be used.

[0144] Referring back to FIG. **3**B, each signal processor **310** may additionally include stream include a derivative signal generating module **312***b*. The derivative signal module **312***b* is configured to generate one or more derivative streams corresponding to the media content included in the input SDI signal **306**. For example, the derivative signal module **312***b* may be configured to generate a sub-resolution video stream corresponding to the video content contained within the input SDI signal **306'**. Similarly, the derivative signal module **312***b* may be configured to generate another processed version of the video content contained within the input SDI signal **306'**. The derivative signal module **312***b* may also be configured to generate derivatives and/or processed versions of the audio and/or data content contained within the input SDI signal **306'**.

[0145] In FIG. **3**B, the derivative streams are broadly included in the miscellaneous stream **306***m* generated by the signal conversion module **312***a*, which also includes the extracted ancillary data. Each derivative stream is identified by a separate flow ID.

[0146] Next, the packetized media streams **306**, generated by each input signal processor **310**, are received by a multiplexer **308**.

[0147] In the illustrated embodiment, at least one multiplexer **308** is provided for each IP port **304**. Accordingly, media streams **306**, generated from SDI signals **306'** received at SDI input ports '1' to '8', are received by a first multiplexer **308***a* (i.e., associated with IP port '1'). Further, media streams **306**, generated from SDI signals received at SDI input ports '9' to '16', are received by a second multiplexer (i.e., associated with IP port '2') (not shown). Still further, media streams **306**, generated from SDI signals received at SDI input ports '17' to '24', are received by a third multiplexer **308***c* (i.e., associated with IP port '3').

[0148] Each multiplexer **308***a* is configured to select one of the many packets corresponding to one or more media streams to transmit, at a given time instance, to the corresponding IP port **304**. In this manner, the media streams are transmitted from the IP port **304**, and to the midplane **102**.

[0149] Reference is now made to FIG. **3**D, which shows another example embodiment of an input card **300***c*.

[0150] The input card **104***c* of FIG. **3**D is generally analogous to the input card **104***a* of FIG. **3**B, with the exception of the placement of the multiplexers **308** and the signal processors **310**. In the embodiment of FIG. **3**D, only

a single multiplexer **308** and signal processor **310** is provided for each corresponding IP port **304**.

[0151] In the embodiment of FIG. **3**D, SDI input signals **306'** are received from each SDI port **302**, and are forwarded to the relevant multiplexer **308**. Each multiplexer **308** selects one of the received input SDI signals **306'** to feed into the signal processor **310** at a given time instance. The input signal processors **310** receive the SDI signals **306'**, and generate the one or more corresponding packetized streams **306** as explained previously. The streams **306***v*, **306***a* and/or **306***m* are then transmitted to the relevant IP port **304**.

[0152] Referring back to FIG. **6**A, the packet header **602** may also include a continuity count field **602***c*. The continuity count field **602***c* comprises a counter of the numbered packet order of a particular packet in the stream. For example, if a stream includes 64 packets, the continuity count field **602***c* can include the ordered number of the packet among the **64** packets. In various cases, the continuity count can assist the system in determining if, during transmission, packets were lost in the stream (i.e., a packet having a continuity count is missing). In other cases, the continuity count can also assist the packets in a stream to be re-assembled at an output card **106** in accordance with their numeric ordering.

[0153] Payload type **602***d* can provide an indication of the type of payload being carried by the packet (i.e., video, audio, ancillary data, derivative data, etc.).

[0154] Payload header **602***e* may be a data field that is filled where the payload, itself, has a payload header, otherwise this field may be set to '0'.

[0155] Each packet **600***a* may also include the FCS **606** field, which is a standardized field in ethernet frames that assists in determining whether the frame of data was corrupted during transmission.

[0156] Referring now to FIG. **6**B, which shows another example packet frame structure **600***b* that may be generated by the signal conversion module **312***a* of the signal processor **310** in the input card **300***a*.

[0157] Packet frame **600***b* is generally analogous to the packet frame **600***a*, but includes a routing ID field **602***b* in place of the flow ID field in packet **600***a*. In some cases, the routing ID field includes an indication of the input card which generates the packet, as well as the IP output port **304** (i.e., of the input card **104**), which is transmitting the packet to the midplane **102**. In some other cases, the routing ID field additionally includes an indication of the input SDI port within the input card where the corresponding SDI signal is received.

[0158] The routing ID field **602***b* also includes a flow ID uniquely identifying each packetized media stream generated from the input SDI signal. In cases where the routing ID identifies the input SDI port, as discussed above, the flow ID need not be related to the input SDI port. In other cases, where the routing ID does not identify the input SDI port, the flow ID is related to the input SDI port.

[0159] In the embodiments of FIG. **6**B, the source address corresponds to the information included in the routing ID field **602***b*.

[0160] Referring now to FIG. **6**C, which shows another example packet frame structure **600***c* that may be generated by the signal conversion module **312***a* of the signal processor **310** in the input card **300***a*.

[0161] Packet frame **600***c* is generally analogous to the packet frame **600***b*, except that the routing ID **602***f* is now provided separately from the flow ID **602***b*. In the embodiment of FIG. **6**C, the source address corresponds to the information included in the flow ID field **602***b* and the routing ID field **602***f*.

[0162] Similar to the discussion above, the flow ID **602***b* may be a unique identifier for each packetized media stream, without any relationship with the source information, such as the input SDI card, input SDI port or output IP port from where the packetized media stream and/or the corresponding input SDI signal are received. In such cases, the routing ID **602***f* includes the relevant source identifying information. Similarly, in some other cases, the flow ID **602***b* either partially or fully identifies the source of the corresponding incoming SDI signal (e.g., the input card number and/or the input SDI port number), and in such cases, the routing ID **602***f* only identifies the output IP port number from which the packetized media stream is received.

[0163] In various embodiments, the flow ID **602***b* only uniquely identifies the packetized media stream without uniquely identifying the signal or packetized stream source information. In such embodiments, the signal or corresponding packetized stream source information is identified in the routing ID **602***f*. Accordingly, in such embodiments, when the address inserting module processes the incoming media stream packets to replace the source address with a destination address, as discussed in detail below, only the routing ID **602***f* is updated. In such embodiments, the routing ID **602***f* is updated to identify the destination address of the corresponding packet, where the destination address identifies the input IP port of an output SDI card and the output SDI card where the packetized stream needs to be routed, as well as the output SDI port from where the corresponding output SDI signal is transmitted.

[0164] Referring now to FIG. **6**D, which shows an example embodiment of a packet frame structure **600***d* that may be generated by the signal conversion module **312***a* of the signal processor **310** in the input card **300***a*.

[0165] The frame structure **600***d* is generally analogous to the frame structures **600***a*, **600***b* and **600***c*, but includes one or more additional data fields including a destination MAC address **606**, a reserved field **608**, a line phase field **610** and an ethertype field **612**. In various cases, the destination MAC address and reserved fields are set to '0'.

[0166] Reference is now made to FIGS. **4**A-**4**C, which show various example embodiments of output cards **106** that may be used in the SDI router **100** of FIG. **1**.

[0167] Referring first to FIG. **4**A, which illustrates a high-level simplified block diagram of an example embodiment of an output card **106**.

[0168] As explained previously, the outputs card **106** are configured to receive media streams (i.e., video, audio and miscellaneous streams) that are routed to the output card **106** through the midplane **102**. The output cards **106** are then operable to convert these streams back into output SDI signals that can then be transmitted to other downstream devices. Similar to the input card **104**, the output cards **106** may be configured as FPGAs having integrated circuitry that is configured to perform the transformation of media streams into SDI signals.

[0169] As shown, the output card **106** may generally include one or more IP input ports **402***a*-**402***n*, as well as one or more SDI output ports **404***a*-**404***n*.

[0170] The input IP ports **402** are connected to the midplane **102** (FIG. **1**), and are configured to receive packetized

media streams that are routed thereto by the crosspoint switch **112**. In various cases, each of the input IP ports **402** may be coupled to the midplane **102** by, for example, a 25 gigabyte or 100 gigabyte ethernet link. In various cases—each input IP port **402** may be configured to receive one or more media streams that are addressed to that particular IP port by the address inserting module **108**. The crosspoint switch **112** may be configured to route specific streams to specific IP input ports **402** of specific output cards **106** based on destination address included into each stream packet by the address inserting module **108**.

[0171] In the illustrated example—the input IP port **402***a* (i.e., port '1') may receive one or more of a video stream **406***v*$_1$, audio streams **406***a*$_1$ and miscellaneous streams **406***m*$_1$. In other words—the input IP port **402***a* can receive any combination of video, audio and miscellaneous streams **406**. Similarly, the input port **402***b* may receive one or more of a video stream **406***v*$_2$, audio streams **406***a*$_2$ and miscellaneous streams **406***m*$_2$. The video, audio and miscellaneous streams received at the IP ports may be received within a close time range (i.e., a few milliseconds) such that may be encapsulated together into a single SDI output signal by the output card **106**.

[0172] While only a single audio stream **406***a* is illustrated at each IP port **402** for ease of discussion, a plurality of audio streams may be received at a given IP port **402**. For example, a plurality of audio streams **406***a* can be received at each IP port **402**, each corresponding to a different audio channel. Similarly, while a single miscellaneous stream **406** is illustrated at each IP port **406***m* for ease of discussion, many miscellaneous streams **406** may be received, and may include ancillary data streams as well as various derivative data streams that may be generated by an input card **104**.

[0173] In various cases, the video, audio and miscellaneous streams received at a particular IP port may be generated by different input cards **104** and/or based on different input SDI signals. In many cases, the SDI router **100** may be operable to route to the same IP port **402**, at a given output card **106**, video, audio and miscellaneous streams generated by separate input cards **102** and/or generated based on separate input SDI signals. For example, in some cases, at an output card **106**, an output SDI signal encapsulate streams from varied sources is generated. This may be because each media stream may be independently routable through the midplane **102** to a destination card.

[0174] Referring still to FIG. **4**A, each output card **106** also includes one or more SDI output ports **404***a*-**404***n*. The SDI output ports **404** may include, for example, various BNC or SFP connectors that may allow the SDI output port to feed to various downstream devices (i.e., display devices, multi-viewers, etc.). Each SDI output port **404** may transmit a corresponding SDI signal **406'** (i.e., **406'**$_1$-**406'**$_n$) that encapsulates one or more media streams received at a given IP port **402**. Each SDI signal can encapsulate any combination of video, audio and miscellaneous streams **406**, based on which streams were received at each input IP port **402**.

[0175] As illustrated in FIG. **4**A by way of broken lines, each of the input IP ports **402** may couple to a corresponding SDI output port **404**. For example, input IP port **402***a* (i.e., IP port '1') may couple to the SDI output port **404***a* (i.e., SDI port '1'). Accordingly, streams **406***v*$_1$, **406***a*$_1$ and/or **406***m*$_1$ received at the input IP port **402***a* may be converted into an SDI output signal **406'**$_1$ where the SDI output signal **406'** is transmitted from the SDI output port **404***a*.

[0176] In at least some embodiments, a single input IP port may couple to more than one SDI output port. For example, the input IP port **402***b* (i.e., IP port '2') may couple to each of the SDI output port **404***b* (i.e., SDI port '2') and SDI output port **404***c* (i.e., SDI port '3'). Accordingly, media streams **406***v***2**, **406***a*$_2$ and/or **406***m*$_2$ received at the input IP port **402***b* may be converted into SDI output signals, which are transmitted from either of SDI output port **404***b* or **404***c*. The SDI output port which receives the streams from the IP port **402***b* is determined based on the destination address contained in the received streams. In various cases, the coupling of particular IP ports **402** and particular SDI ports may be pre-configured into the of the output card's FPGA integrated circuitry.

[0177] In some cases, the number of input IP ports **402** provided in each output card **106** may be equal to or greater than the number of SDI output ports **404**. In such cases, each input IP port **402** is configured to forward the incoming packetized media streams based on the destination address contained within the header of each packet within the incoming packetized media streams.

[0178] Referring now to FIG. **4**B, which shows an example embodiment of an output card **106***a* in greater detail, and in accordance with some embodiments.

[0179] As shown, the architecture of the output cards **106** is the general inverse of the of the architecture of the input cards **104**. Each of the output cards **106** includes one or more input IP ports **402**, the one or more SDI output ports **404**, as well as one or more demultiplexers **408** and one or more output signal processors **410**.

[0180] In the simplified example illustrated in FIG. **4**B, each input IP port **402** is coupled to eight (8) corresponding SDI output ports **404**.

[0181] For example, the first input IP port **402***a* (i.e., IP port '1') feeds to each of SDI output ports **404***a* to **404***h* (i.e., IP ports '1' to '8'). Accordingly, packetized streams received at the input IP port **402***a* may be routed to one or more of the SDI output ports **404***a* to **404***h* based on the destination address included in the received stream packets, as determined by the address inserting module **108** in the midplane **102**. Similarly, the output card **106***a* can include a second input IP port '2' that feeds to SDI output ports '9' to '16'. Still further, the third input IP port '3' may feed to SDI output ports '17' to '24', and so forth.

[0182] The coupling between IP and SDI ports illustrated in output card **106***a* is only provided by way of a non-limiting example. In some cases, each IP port **402** may be coupled to any number of SDI output ports **404**. In the illustrated embodiment, each input IP port **402** in the output card **106***a* is coupled to an equal number of SDI output ports **404**.

[0183] As further shown, media streams received at an input port **402** are directed to the demultiplexer **408**. In the illustrated example embodiment, the output card **106***a* includes a demultiplexer **408** corresponding to each input IP port **402** (i.e., demultiplexers **408***a*-**408***c* corresponding to input IP ports '1' to '3', respectively).

[0184] The function of each demultiplexer **408** is to internally "switch" (i.e., internally re-route) one or more received media flows streams from a corresponding IP port **402**, to one of the SDI output ports **404** that are "coupled" to that input IP port (or more particularly, to switch the received media streams to circuitry associated with an SDI output port **404** that is coupled to that IP port **402**).

[0185] For example, the demultiplexer **408***a* may receive one or more media streams from the input IP port **402***a*, and may switch the received media streams to circuitry associated with one of SDI output ports '1' to '8' (i.e., **404***a* to **404***h*), which are coupled to the input IP port **402***a*. Similarly, demultiplexer **408***c* may switch media streams received form input IP port **402***c* to one or more one of SDI output ports '17' to '24' (i.e., **404***q* to **404***x*).

[0186] In order to determine which SDI output port **404** should receive the media streams, each demultiplexer **408** may be configured to analyze the received media streams to determine the destination address included in that media stream. More particularly, the destination address, included in each packet of a media stream by the address inserting module **108**, may include information specifying the SDI output port **406** which should receive the media streams **406**.

[0187] In various cases, when a media stream is received at the address inserting module **108**, the module **108** may replace the source flow ID (i.e., **602***b* in FIG. **6**A) to correspond to a destination flow ID. The cross-switch **112** is then configured to route each packet, in a single stream, to the corresponding input IP port **402** for the relevant output card **106**. In other cases, the address inserting module **108** may rewrite the relevant portion of the routing ID (i.e., **602***b* of FIG. **6**B, **602***f* in FIG. **6**C).

[0188] In some embodiments where the address inserting module **108** is configured to insert or replace the flow ID, the flow IDs may correspond to an SDI output port **404** in a specific output card **106**. Within each output card **106**, specific flow IDs may be assigned to specific output SDI ports **404** (i.e., analogous to the assignment of specific flow IDs to specific SDI input ports **202** at the input card **102**). The assignment of the flow IDs to output SDI ports, for each output card **106**, may be known before hand to the controller **110**. In this manner, the address inserting module **108**, receiving signals from the controller **110**, may rewrite the flow ID to correspond to an SDI output port **404** at an output card **106**.

[0189] In some cases, the addressing of flow IDs in the output card **400***a* may follow an analogous addressing scheme as the addressing of flow IDs in the input card **300***a*. That is, each SDI output port **404** may be assigned a unique flow ID, or a unique range of flow IDs.

[0190] For example, video streams having a flow ID of '1' may be intended for the SDI output port '1'. Similarly, the audio streams having a flow ID in a range of '1001' to '1032' (i.e., corresponding to one of 32 channels), or miscellaneous streams having a flow ID of '4001', may also be intended for the SDI output port '1'. Accordingly, when the demultiplexer **408***a* receives a stream having one of these flow IDs (i.e., streams **406***v*$_1$, **406***a*$_1$ and **406***m*$_1$), it may automatically switch these streams to the circuitry associated with the SDI output port '1' (**404***a*). In this manner, the demultiplexer **408***a* may have knowledge of which flow IDs (or flow IDs range) correspond to each SDI output port **404**, and may analyze each streams for its flow ID and switch (i.e., internally re-route) to the corresponding SDI output port **404**. A similar arrangement is also adopted for each other SDI output ports.

[0191] In various embodiments, each input IP port **402** may only receive, from the midplane **102**, media streams having flow IDs for one or more of the SDI output ports **404** that are coupled to that input IP port.

[0192] For example, the input IP port '1' (**402***a*) may only receive media streams having flow IDs corresponding to one or more of SDI output ports '1' to '8'. For instance, the controller **110** (FIG. **1**) may be configured with knowledge of the SDI input ports **404** associated with each input IP port **402** for each output card **106**, and may configure the address inserting module **108** and the crosspoint switch **112** to route the streams to the appropriate input IP port **402** at the correct output card **106**. In this manner, the router avoids routing to the input IP port **402** (and the corresponding de-multiplexer **408**) media streams having flow IDs that are outside the range of SDI output ports **404** associated with that input IP port **402**.

[0193] In other embodiments, where the media stream packets are structed as shown in packet frame **600***b* of FIG. **6**B, the demultiplexer may switch incoming media streams to corresponding SDI output ports **404** based on analyzing the flow ID in the routing ID field **602***b*. In still further embodiments, the where the media stream packets are structed as shown in packet frame **600***c* of FIG. **6**C, the demultiplexer may switch incoming media streams to corresponding SDI output ports **404** based on analyzing the routing ID field **602***f*.

[0194] In some embodiments, rather than providing separate de-multiplexers **408** in the output card **106***a* for each input IP port **402**, a single de-multiplexer **408** may be provided for all input IP ports **402**. In this case, the demultiplexer **408** may be operable to switch incoming media streams to the appropriate SDI output port circuitry in accordance with addressing information included in those stream packets. In still other cases, any number of de-multiplexers **408** may be provided and associated with any number of input IP ports **402**.

[0195] As shown in FIG. **4**B, once the media streams are routed to the corresponding SDI output port circuitry (i.e., by the demultiplexer **408**), the media streams are received by a corresponding output signal processor **410**. In the illustrated example, the output card **106***a* includes an output signal processor **410** corresponding to each SDI output port **404**.

[0196] Each output signal processor **410** may include an associated stream conversion module **412**. The stream conversion module **412** is configured to receive one or more associated media streams **406** that are intended for the associated SDI port, and convert these media streams into one or more SDI signals **406'**.

[0197] For example, the output signal processor **410***a* may receive one or more of a video stream **406***v*$_1$, one or more audio streams **406***a*$_1$ and one or more miscellaneous streams **406***m*$_1$ and may encapsulate these streams into a corresponding SDI output stream **406'**$_1$. A similar process may be performed by each of output signal processors **410***b*-**410***x*.

[0198] Once encapsulated, the encapsulated SDI streams **406'** may then be transmitted forward through the corresponding SDI output port **404**.

[0199] Referring now to FIG. **4**C, which shows another example embodiment of an output card **400***b*, in accordance with some other embodiments. The output card **400***b* is analogous to the output card **106** of FIG. **1**.

[0200] The output card **400***b* is generally analogous to the output card **106***a* in FIG. **4**B, with the exception that a different destination addressing scheme is used to associate streams to SDI outports **404**.

[0201] Similar to the input card **300***b* of FIG. **3**C, the flow IDs assigned to each SDI output port **404** are not unique across all SDI output ports **404** in the output card **106**. Rather, the flow IDs are recycled as between SDI output ports associated with different input IP ports **402**.

[0202] For example, in the output card **400***b*, the video flow IDs assigned to SDI output ports '1' to '8' are unique because the SDI output ports '1' to '8' are all associated with the same input IP port '1' (e.g., video flows IDS '1' to '8'). However, the video flow IDs are recycled again for SDI output ports '17' to '24' (i.e., also assigned video flow IDs '1' to '8'), as these SDI output ports are associated with a different input IP port '3'. A similar format is used for each of the audio and miscellaneous flow IDs. In other cases, the flow ID portion of the routing ID **602***b* in FIGS. **6**B and **602***c* in FIG. **6**C, may be recycled as between SDI ports **404** associated with different input IP ports.

[0203] Referring now to FIG. **4**D, which shows another example embodiment of an output card **400***c*. The output card **400***c* is analogous to the output card **106** of FIG. **1**.

[0204] Output card **400***c* is generally analogous to each of the output cards **400***a* and **400***b*, except for the locations of the output signal processor **410** and the demultiplexer **408**.

[0205] In the output card **400***c*, an output signal processor **410** is provided in association with each input IP port **402** (e.g., processor **410***a* for input IP port **402***a*, and processor **420***c* for input IP port **402***c*, etc.). Accordingly, media streams **406** received at an IP input port **402** are initially transmitted to the corresponding output signal processor **410**. The stream conversion module **412**—inside the output signal processor **410**—may then de-encapsulate the media streams **406** to generate a corresponding output SDI signal **406'**.

[0206] For example, processor **410***a* can output an SDI signal **406***n*', wherein the subscript 'n' can correspond to a value of '1' to '8' (i.e., corresponding to one of SDI output ports '1' to '8'). Similarly, processor **410***c* can output an SDI signal $\mathbf{406}_{nn}$', wherein the subscript 'nn' can correspond to a value of '17' to '24' (i.e., corresponding to one of SDI output ports '17' to '24'). The output SDI signals **406'** are then transmitted to the demultiplexer **408**.

[0207] In some embodiments, each stream conversion module **412** extracts the flow ID from each media stream (i.e., video, audio and miscellaneous streams). The stream conversion module **412***c* then identifies all the packets containing the same destination address). The stream conversion module **412***c* extracts the content data from all such packets and constructs an output SDI signal **406'** based on the extracted content datastream. For example, in some cases, the stream conversion module **412***c* identifies all the packets containing the flow IDs that are assigned to a common SDI port **404** (e.g. from the routing ID field **602***f* in FIG. **6**C). In this manner, the stream conversion modules **412** can ensure that related media streams—intended for the same SDI output port **404**—are included in the same output SDI signal **406'**. In various embodiments, the SDI port identifier information, as extracted from the packets (e.g. packet header) is also transmitted to the demultiplexers **408** (not shown).

[0208] As shown, the output card **106***c* can include a single demultiplexer **408***a* per IP input port **402**. For example, a demultiplexer **408***a* can be associated with IP input port **402***a*, and demultiplexer **408***c* can be associated with IP input port **402***c*. The demultiplexers **408** may receive the SDI output signal **406'** from each output signal processor **410**—as well as the extracted indication about the receiving SDI port—and may switch (i.e., internally route) the SDI output signal to the correct SDI output port **404**. The SDI output signals **406'** may then be transmitted from the SDI output ports **404** to other downstream devices. In other cases, any number of demultiplexers **408** may be provided, and in association with any number of IP input ports **402**.

[0209] Reference is now made to FIGS. **5**A-**5**B, which illustrate various example embodiments of an input/output (I/O) card **114** as used in the SDI router **200** of FIG. **2**.

[0210] The I/O cards **114** incorporate the functionality of each of the input cards **104** and output cards **106** and allow for bi-directional SDI to packetized media stream conversions.

[0211] As shown, each I/O card may generally include one or more input IP ports **502** coupled to one or more SDI ports **504**. Interposed between the IP ports **502** and the SDI ports **504** may be one or more multiplexers/de-multiplexers **508** and I/O signal processors **510**. In the embodiment of FIG. **5**A, the I/O input card **114***a* includes a mux/demux **508** corresponding to each IP port **502**, and an I/O signal processor **510** corresponding to each SDI port **504**. In the illustrated embodiment, the number of mux/demux modules **508** is equal to the number of IP ports **502** in each I/O card **114**, and the number of I/O signal processors **510** is equal to the number of SDI ports **504** in each I/O card **114**.

[0212] In the embodiment of FIG. **5**B, the I/O card **114***b* includes mux/demux modules **508** and an I/O signal processors **510** corresponding to each IP port **502**. In this embodiment, the number of mux/demux modules **508** and the number of I/O signal processors **510** is equal to the number of IP ports **502** in each I/O card **114**.

[0213] As shown, each I/O signal processor **510** incorporates the functionalities of the input signal processor **310** of the input cards, which includes a signal conversion module **312***a* and/or a derivative stream generating module **312***b*. Additionally, each I/O signal processor **510** incorporates the functionality of the output signal processor **410**, which includes a stream conversion module **412**.

[0214] Similarly, each mux/demux module **508** includes the functionalities of the multiplexers and demultiplexers of both the input and output cards. The operation of each I/O signal processor **510**, as well as the mux/demux **508** may depend on the directional flow of data through the I/O card **114**.

[0215] While the input cards **104**, output cards **106** and I/O cards **114** have been shown herein with multiplexers, demultiplexers or mux/demux—these components may not always be necessarily included. For example, in some cases, one or more IP ports and SDI ports in a card may be directly linked together (i.e., a one-to-one link), in which cases, it is not necessary for signals to be routed through a switch (i.e., a mux, demux, or mux/demux).

[0216] Reference is now made to FIGS. **7**A-**7**B, which show various example embodiments of SDI routers in operation.

[0217] Referring first to FIG. **7**A, which shows an example operation of an SDI router **700***a*. The SDI router **700***a* may be analogous to the SDI router **100** of FIG. **1**, and may include one or more input cards **104** and one or more output cards **106**. For ease of description, only a single input card and output card is illustrated.

[0218] The input card **104***a* of FIGS. **7**A and **7**B may be any input card discussed herein, such as, for example, input card **300***a*-**300***c* (FIGS. **3**B-**3**D). The output card **106***f* of FIGS. **7**A and **7**B may be any output card discussed herein, such as, for example, output card **400***a*-**400***c* (FIGS. **4**B-**4**D).

[0219] FIG. **7**A illustrates a simple example where a single SDI signal is routed through the SDI router **700***a*. As shown, an SDI signal **702** is received at the input card **104***a* (i.e., input card '1') and is routed to an output card **106***f* (i.e., output card '6'). The output card **106***f* may then transmit the SDI signal **702'** to any downstream devices.

[0220] As shown, the SDI signal **702** is received at an SDI port '3' **302***c* of the input card **104***a*. In the illustrated embodiment, the input card **104***a* is configured such that each set of eight (8) SDI ports **302** are linked to a unique IP output port **304**. As shown, SDI port '3' is linked to IP output port '1' (**304***a*).

[0221] The input card **104***a* is operable to convert the received SDI signal **702** into one or more packetized media streams. In FIG. **7**A, a packetized media stream, generated from the SDI signal **702** by an input signal processor, such as the input signal processor **310**, is expressed as reference **704**. Packetized media stream **704** may be an audio stream, a video stream, a data stream, a derivative stream corresponding to a derivative signal of one or more of the original audio, video or data contained within the SDI signal **702**, or any other stream containing at least some of the content contained within the SDI signal **702**.

[0222] The input card **104***a* is also operable to assign a source address to the packetized media streams generated from the SDI signal **702**. Based on the addressing scheme used by the router **700***a*, the source address may be any one of the source address formats discussed in this application.

[0223] As shown in FIGS. **6**A-**6**C, the source address is included in the packet header **602** of each packet constituting the packetized media stream **704**. In some cases, where the frame structure **600***a* of FIG. **6**A is used within the router **700***a*, the source address consists of a flow ID included in the packet header, such as flow ID **602***b*. In the illustrated embodiment, the flow ID identifies the source SDI port where the corresponding input SDI signal is received, such as the source SDI port '3' **302***c*. In such cases, if the packetized media stream **704** is a video stream, then the flow ID assigned to the packets of the video stream **704** may be '3' (indicating that the corresponding SDI signal was received at SDI port '3'). Similarly, if the packetized media stream **704** is an audio stream, then the flow ID assigned to the packets of the audio stream **704** may be in the range of '1065' to '1096', based on the audio channel constituting the packetized media stream **704**. Similarly, if the packetized media stream **704** is a data stream, then the flow ID assigned to the packets of the data stream **704** may be '4003'.

[0224] Accordingly, an appropriate flow ID is inserted into each packet of a given packetized media stream based on the type of media carried in the packet payload. For a given media stream, each packet of that stream is assigned the identical flow ID. For example, each packet of a video stream, generated from the same SDI signal **702**, is designated the same flow ID, and similarly each packet in each separate audio stream and miscellaneous streams are assigned the same respective flow ID.

[0225] In some other cases, where the router **700***a* uses the frame structure **600***b* in FIG. **6**B, the routing ID field is updated to include the flow ID, as discussed above, as well as source identifying information, such as the source input card identifier and the output IP port identifier. For example, in the embodiment of FIG. **7**A, the routing ID may include the flow ID, as well as an indication that the media stream is generated from input card '3' (i.e., input card ID: '3'), and is transmitted into the midplane by an IP port '1' (i.e., IP output port ID: '1').

[0226] In some further cases, where the router **700***a* uses the frame structure **600***c* of FIG. **6**C, the routing ID may additionally include, compared to frame structure **600***b*, a source SDI input port ID identifying the SDI input port where the corresponding SDI signal is received. In such cases, the flow ID may be unrelated to the SDI ports, and may instead be any unique identifier able to uniquely identify each packetized media stream generated from the input SDI signal. In such cases, the source address consists of the flow ID and the routing ID.

[0227] The input signal processor, such as the input signal processor **310**, of the input card **104***a*, also populates the remaining fields in each packet frame of each packetized media stream.

[0228] Next, the packetized media stream **704** generated by the input card **104***a* is transmitted to the midplane **102**. At the midplane **102**, the media stream **704** is received by the address inserting module **108**. In various cases, packets from multiple packetized media streams are concurrently transmitted from an IP port **304** to the midplane **102**.

[0229] At the midplane **102**, the address inserting module **108** receives the packetized media stream **704** and, for each packet, analyzes the source address included in the packet header. The address inserting module **108** then determines a corresponding destination address for these packets. In various embodiments, the destination address for each packet is determined based on address inserting rules, which may be either stored in the address inserting module **108** (i.e., in a memory portion of the module **108**) or provided by the controller **110** via control instructions **110***a* in real-time. The address inserting rules may be stored or accessed in the form of a table, e.g. a look-up-table. The address inserting rules, stored in the address inserting module **108**, is updated by the controller **110**, via control signals **110***a*, based on factors, such as changes in downstream content requirements, inoperability of certain output cards and/or output ports, etc.

[0230] In various cases, the address inserting rules provided by the control signal **110***a* may be known to the controller **110** based on the controller's global "awareness" of which devices are connected to which SDI ports of the input and output cards, and therefore, which media streams are routed between which SDI ports. In some example cases, this information may be provided to the controller **110** through external means (i.e., through computers in communication with the controller **110**).

[0231] The address inserting module **108** accesses the address inserting rules to determine destination addresses for each packet of each media stream. The address inserting module **108** may then substitute, or otherwise append, the destination address in each packet.

[0232] The address inserting module **108** may be configured to write the destination address in the packet headers based on the addressing scheme used within the module **108**. The addressing scheme may be pre-programmed, or dynamically changeable by the controller **110**.

[0233] In some cases, where the packet frame structure **600***a* (FIG. **6**A) is used within the incoming packetized

media stream, the source flow ID is replaced with the destination flow ID. That is, while the flow ID field **602***b* was previously populated by the input card **104** to correspond to a flow ID associated with the source SDI port **302**; the address inserting module **108** replaces that flow ID to correspond to a destination flow ID corresponding to an output SDI port **402** of an output card **106** where the packetized media stream is routed. The destination flow ID will depend on the flow ID scheme used by the destination output card **106**, and may be known in advanced to the controller **110**.

[0234] In the example embodiment of FIG. **7**A, the output card **106***f* may be analogous to the output card **400***a* of FIG. **4**B. Accordingly, the SDI port '17' may be associated with a video flow ID of '17'; an audio flow ID range of '1513' to '1544' (i.e., depending on the audio channel); and a data flow ID of '4017'. Accordingly, based on the type of media stream, the address inserting module can substitute the flow ID field **602***b* with the appropriate destination flow ID.

[0235] In other cases, where the incoming media stream packets adopt a frame structure **600***b* as shown in FIG. **6**B, the address inserting module **108** substitutes the source routing ID with the destination routing ID in the field **602***b* of the packet header. In the illustrated embodiment, the source routing ID, identifying the input card ID (i.e., input card ID: '1') **104***a*, the IP input port ID **304***a* (i.e., Port ID: '1') and the source flow ID, is replaced with destination routing ID, identifying the output card ID (i.e., output card ID: '6'), the IP port ID **402***c* of the output card **106***f* (i.e., Port ID '3') and the destination flow ID.

[0236] In some further cases, where the media stream packets adopt a frame structure **600***c* as shown in FIG. **6**C, the address inserting module **108** substitutes the routing ID field **602***f* to include a destination routing ID, identifying the output card ID (i.e., output card ID: '6'), the IP port ID **402***c* of the output card **106***f* (i.e., Port ID '3') and the output SDI port ID **404***q* (i.e., output SDI port ID: '17') for the output card **106**. In such cases, depending on the addressing scheme selected by the controller **110**, the flow ID field **502***b* may or may not change. For example, in some cases, where the source flow ID is unrelated to the source identifying information, e.g. SDI card ID and/or SDI port ID of the input card, the source and destination flow ID may be identical. In some other cases, even when the source flow ID is unrelated to the source identifying information, the source flow ID is replaced with the destination flow ID, which uniquely identifies the packetized media stream, and its constituent packets, being routed to the destination.

[0237] In at least some cases, the address inserting module **108** may have before-hand knowledge of the frame structure used by each input card and output card. In some cases, this information may be provided to the address inserting module **108** by the controller **110**, which has a global awareness of how each input card and output card operates. In some cases, where the input cards **104** and the output cards **106** use different packet structures, the address inserting module **108** may be configured to modify the incoming packets to include a packet structure (i.e., a packet header format) that corresponds to the output card. In various cases, all input and output cards within a router may be configured to use the same packet structures.

[0238] In some cases, packets of the same packetized media stream are routed to multiple destinations. In such cases, the address inserting module **108** also includes a stream reproduction module **108***a*. The stream reproduction module **108***a* is configured to reproduce the content (e.g. payload) of the packetized media stream and encapsulate the packets in a separate packetized media stream or streams, each of which can be routed to a destination, independent of its corresponding original packetized media stream.

[0239] As shown, the packets of the readdressed media stream **704'** is transmitted by the address inserting module **108** to the crosspoint switch **112**. The crosspoint switch **112** routes the incoming packets to the appropriate IP port **402** of the correct output card **106** based on the destination address in the packet header.

[0240] In some cases, controller **110** may be configured to receive information signals **110***b* from the crosspoint switch **112**. For example, the routing fabric in the crosspoint switch **112** may be configured as a software defined network (SDN), and the controller **110** may receive various status indicators (i.e., traffic load information) for routing nodes in the SDN based crosspoint switch **112**.

[0241] Once the crosspoint switch **112** has routed the media stream packets to the appropriate output card **106***f*, the output card may convert the media streams back into SDI signals. In some cases, an output signal processor of the output card may de-encapsulate the incoming packets, retrieve the underlying content data and combine the content data into an output SDI signal, such as signal **702'**. The output SDI signal **702'** is transmitted from the appropriate SDI output port **404***q*.

[0242] Reference is next made to FIG. **7**B, which shows the example operation of an SDI router **700***b*. The SDI router **700***b* is analogous to the SDI router **700***a* of FIG. **7**A.

[0243] The SDI router **700***b* provides an example application where the output SDI signal **702'**, transmitted from the output card **106**, is composed of media streams generated by separate input cards **104**, such as input cards **104***a* and **104***l*, and separate input SDI signals received at the same input card **104**, such as input SDI signals **702***b* and **702***c* at the same input card **104***l*.

[0244] As shown, a first input SDI signal **702***a* is received at the SDI port '3' of input card '1' (i.e., **104***a*), and is processed to generate a video stream **704***v*. Further, a second SDI signal **702***b* is received at an SDI port '6' of the input card '12' (i.e., **104***l*) and is processed to generate an audio stream **704***a*. Similarly, a third SDI signal **702***c* is received an SDI port '8' of the input card '12', and is processed to generate an ancillary data stream **704***m*.

[0245] At the address inserting module **108**, each packetized media stream, received from the corresponding input cards, is configured with the same destination address. In the illustrated embodiment, the source addresses contained in packetized media streams **704***v*, **704***a* and **704***m* are replaced with the same destination address corresponding to an SDI port '21' on an output card '1' (i.e., **106***a*). The output card **106***a* may use a similar flow ID numbering scheme as shown in the output card **400***b* of FIG. **4**C, whereby flow IDs corresponding to SDI output ports are recycled for each group of SDI output ports **404** linked to a common IP input port **402**.

[0246] Each readdressed media stream **704'***v*, **704'***a*, and **704'***m* is then separately routed through the crosspoint switch **112** to the IP port '3' of output card 1. At the output card **106***a*, the media streams are de-encapsulated and the corresponding content is retrieved and combined to generate

an output SDI signal **702'**. The output SDI signal **702'** is transmitted from the SDI port '21' of the output card **106***a*.

[0247] Reference is now made to FIGS. **8**A-**8**C, which illustrate various example embodiments for method for operating an SDI router.

[0248] Referring first to FIG. **8**A, which shows an example embodiment of a method **800***a* for operating an input card **104**.

[0249] As shown, at **802***a*, an input card **104** receives an input SDI signal at an SDI input port, such as SDI input port **302** of input card **104**.

[0250] At **804***a*, the SDI signal is converted into one or more media streams based on the media content included in that SDI signal. For example, multiple media streams such as a video stream, one or more audio streams (i.e., corresponding to separate audio channels) and one or more miscellaneous streams (i.e., ancillary data) may be generated from the same input SDI signal. In some cases, the input card **104** can also generate one or more derivative streams from the same input SDI signal. The derivative stream may be a processed version of the video, audio and/or data content corresponding to the input SDI signal.

[0251] At **806***a*, source addresses are inserted into each packet of a given media stream. As explained previously, the source addresses can be expressed in accordance with various addressing schemed disclosed herein, such as, for example, packet formats of FIGS. **6**A-**6**C.

[0252] At **808***a*, the input card **104** transmits the one or more generated media streams from an IP output port, such as IP output port **304**, of the input card **104**. The packets of the one or more generated media streams are transmitted to the midplane **102**. In some cases, each input card **104** may be a stand-alone unit, and can be used to output generated media streams to any other device connected to the input card via the input card's IP output ports **304**.

[0253] Referring now to FIG. **8**B, which shows an example embodiment of a method **800***b* for operating a midplane **102**.

[0254] As shown, at **802***b*, the midplane **102** receives one or more packetized media streams (e.g., video, audio or miscellaneous media streams) at an input node of the midplane **102**. In various cases, the media streams may be received from one or more output IP ports **304** of input cards **102**.

[0255] At **804***b*, the packets of the media streams are analyzed to determine the source address include in each packet. In various embodiments, the packets are analyzed by the address inserting module **108** of the midplane **102**.

[0256] At **806***b*, the address inserting module **108** of the midplane **102** determines a destination address for each of the packets in the incoming media streams. In various embodiments, the destination address is determined based on one or more address inserting rules. The address inserting rules may be stored locally at the address inserting module **108** in some cases, and received from the controller **110** in real-time in some other cases.

[0257] At **808***b*, the address inserting module **108** replaces the source address in each packet header with the destination address for the packets. For example, one or more data fields in the packet header (i.e., the flow ID or routing ID) may be re-written, or appended, with the destination address.

[0258] At **810***b*, the modified media stream packets (or readdressed media stream packets) are routed by the crosspoint switch **112** in accordance with the destination address included in each packet header. The packets are routed by crosspoint switch **112** to a destination input IP port, such as input IP port **402**, of a destination output card **106**.

[0259] In accordance with method **800***b*, the midplane **102** may operate as a stand-alone structure which may be connected to any transmitter or receiver of packetized media streams, which may not always necessarily be the input cards, output cards or I/O cards.

[0260] Referring now to FIG. **8**C, which shows an example embodiment of a method **800***c* for operating an output card **106**.

[0261] As shown, at **802***c*, the output card **106** receives packets corresponding to one or more packetized media streams at an input IP port **404** of an output card **106**. In various embodiments, the media streams are received form the midplane **102**.

[0262] At **804***c*, the output card **106** transforms the one or more media streams into an SDI signal.

[0263] At **806***c*, the SDI signal is routed to an appropriate SDI output port based on the destination address included in the incoming media stream packets.

[0264] At **808***c*, the SDI signal is transmitted from the proper SDI output port (i.e., to downstream devices).

[0265] In accordance with method **800***c*, the output card **106** may also operate as a stand-alone structure which may receive packetized media streams and generate output SDI signals. The output card **106** may or may not be used with the midplane **102**.

[0266] Reference is now made to FIG. **9**A, which shows an example embodiment of serial digital interface (SDI) router **900***a*, in accordance with another embodiment.

[0267] The SDI router **900***a* is generally analogous to the SDI routers **100** and **200** of FIGS. **1** and **2**, respectively, but is adapted to accommodate different types of input and output signals.

[0268] As shown, SDI router **900***a* may accommodate several types of input cards **104** and **902***a*-**902***b*, which accommodate different types of input signals received from various upstream devices, networks and/or routers. In some embodiments, the input cards are removably connected to the SDI router **900***a*. In some other embodiments, some or all of the input cards are permanently connected to the SDI router **900***a*.

[0269] For example, SDI router **900***a* may accommodate an input card **104**, which is analogous to the input card **104** of SDI router **100** (FIG. **1**). This input card (also referred to herein as "type one" input card), can receive SDI signals **950***a*, and may convert these signals into one or more corresponding IP signals **950***a'*, as explained previously. The one or more IP signals **950***a'* are then transmitted to the address rewriting module **108** in the midplane **102** for routing by crosspoint switch **112**. As shown, the input card **104** may include input signal processing hardware **920***a* for performing the SDI-to-IP signal conversion, among other signal processing functions (e.g., frame synchronization, etc.).

[0270] SDI router **900***a* also accommodates a second type of input card **902***a* (also referred to herein as a "type two" input card). Input card **902***a* may receive one or more non-IP, non-SDI signals **950***b*, and may convert these signals into one or more corresponding IP signals **950***b'*. The IP signals **950***b'* are again transmitted to the address rewriting module **108** in the midplane **102**, and routed through the crosspoint switch **112**.

[0271] In one example, the received non-IP, non-SDI signal, at input card **902***a*, is an HDMI (High-Definition Multimedia Interface) interface signal, which is converted into one or more corresponding IP signals **950***b*'. The HDMI signal may carry uncompressed video data and/or compressed or uncompressed digital audio data from an upstream HDMI-source.

[0272] In this example, the input card **902***a* includes an input signal processing hardware **920***b* for effecting the signal conversion (e.g., HDMI-to-IP conversion), among other signal processing functionalities (e.g., frame synchronization, etc).

[0273] A third type of input card **902***b* is also connected to the midplane **102** (also referred to herein as a "type three" input card). Input card **902***c* may receive one or more IP signals **950***c*, and may simply pass these IP signals directly to the address rewriting module **108** in midplane **102**, i.e., without any further signal conversion processing. For example, the IP signals **950***c* may be received from other upstream IP devices and networks. In some cases, the IP signals **950***c* may be received directly from another upstream IP router. In some example cases, the upstream IP router may have a similar midplane **102** architecture as shown in router **900***a*. Accordingly, the IP signals may be received either directly from that router's crosspoint switch **112**, or indirectly though a respective pass-through output card of that router.

[0274] In some cases, input card **902***b* may include signal processing hardware (not shown). This hardware is not used to convert the IP signal to a different format, but to simply process the IP signals **950***c*' to generate one or more corresponding modified IP signals. The modified IP signals are then transmitted to the address re-writing module **108** of the midplane **102**. For example, the signal processing performed by the input card **902***b* may include video resolution conversion of received video IP signals (e.g., 4K to 1080p). In one example, where the end destination is a multiviewer, and where multiple video, audio and/or miscellaneous IP streams are received, the input card **902***b* may perform various resizing operations to compose a multiview. The resized signals are then sent to the midplane **102**. In other examples, the signal processing by input card **102** may involve frame synchronization between different IP streams.

[0275] Referring now to the output side of the mid plane **102**, the SDI router **900***a* may also include different types of output cards for transmitting different types of output signals to downstream devices, networks and/or routers. In some embodiments, the output cards are removably connected to the SDI router **900***a*. In some other embodiments, some or all of the output cards are permanently connected to the SDI router **900***a*.

[0276] As shown, the SDI router **900***a* can include an output card **106**, which is analogous to output card **106** in FIG. **1**. This output card (also referred to herein a "type one" output card), receives one or more IP signals **950***a*' from cross-point switch **112**, and converts these signals into SDI signals **950***a* for transport to downstream devices, networks and/or routers, as explained herein. This conversion processing may be effected by an output signal processor **922***a*.

[0277] SDI router **900***a* may also include a second type (or type two) output card **904***a*, which receives one or more IP signals **952***b*' from cross-point switch **112**, and may further convert these signals into one or more non-IP, non-SDI signals **952***b* (e.g., HDMI signals). This can be performed by an output signal processor **922***b* which performs the signal conversion (e.g., HDMI-to-IP conversion). In some cases, signal processor **922***b* can also perform other functions, e.g., frame synchronization between multiple associated IP signals **952***b'*.

[0278] A third type of output card **904***b* (or a type three output card) may also be included in the SDI router **900***a*. This output card is analogous to the "type three" input card **902***b*, and may also simply directly pass-through one or more received IP signals **952***c*' from cross-point switch **112** to other downstream devices and/or networks.

[0279] In some cases, the IP signals **952***c*' passed-through by the output card **904***a* may be transmitted to other downstream IP routers. In some example cases, the downstream IP routers may have a similar midplane **102** architecture as shown in router **900***a*, and the IP signals may therefore be transmitted to the respective address rewriting module **108** of that router (i.e., either directly, or via a respective pass-through input card of that IP router). In some cases, the downstream IP router may be the same router as the upstream IP router connected to the pass-through input card **902***b*.

[0280] In some cases, the output card **904***b* may include a signal processor (not shown) operable to perform various other non-conversion based signal processing functionalities to the IP signal **952***b*'. For example, these can include similar signal processing functionalities as explained with reference to the type three input card **902***b*. Accordingly, the output card **904***b* may pass-through one or more corresponding modified IP signals to the downstream devices, networks and/or routers.

[0281] While the SDI router **900***a* is shown as including a number of different input cards and output cards, it will be understood that each of these cards may equally function as an input/output (I/O) card, as shown in router **200** of FIG. **2**. For example, the type one input card **104** and type two output card **106** may be simply combined as a single I/O card **114** in FIG. **2**.

[0282] SDI router **900***a* can also include a plug-in card **940** coupled to the midplane **102**. Plug-in card **940** may receive IP streams **950***d*' directly from the cross-point switch **112** (e.g, associated or related video, audio and miscellaneous IP streams). The plug-in card **940** may include a signal processor **942** which processes these IP signals to generate corresponding modified IP streams **950***d*''. The modified IP streams are then transmitted back to the address rewriting module **108**. Accordingly, the plug-in card **940** does not perform any signal format conversion, but merely processes the IP signals for further internal routing using the signal processor **942**. This processing may be the same type of processing explained previously with respect to pass-through input card **902***b* and pass-through output card **904***b*.

[0283] While the plug-in card **940** is shown as being connected to the input side of the SDI router **900***a*, it will be understood that plug-in card **940** may also be coupled the "output side" of router **900***a* while accomplishing the same function.

[0284] While not shown, it is also possible that the plug-in card **940** may also receive external signals from other upstream IP signal sources (e.g., device, networks and/or routers). In this case, the plug-in card **940** can again process these external IP signals to generate corresponding modified IP signals. The modified IP signals may then be transmitted to one or more of: (i) the address rewriting module **108** of

midplane **102** for further routing, and/or (ii) other external downstream IP devices, networks and/or routers.

[0285] While only a single processor is shown in respect of each input, output and plug-in card, it will be appreciated that in other embodiments, each card may include multiple iterations of each type of signal processor. Each of the processors, within a given card, may be coupled to the same or different input and output ports of that card. Each of the processors can therefore provide independent and parallel processing functionality, to enable for higher processing capacity and data throughput for each card.

[0286] Reference is now made to FIG. **9**B, which shows an example embodiment of a serial digital interface (SDI) router **900***b*, in accordance with another embodiment.

[0287] As shown, router **900***b* includes a plug-in input/output (I/O) card **980** (also referred to herein as an augmented plug-in card **980**), which integrates the functionalities of the input cards **104**, **902***a*-**902***b*, output cards **106**, **904***a*-**904***b* and plug-in card **940** of router **900***a* of FIG. **9**A.

[0288] To this end, the augmented plug-in card **980** can include one or more input ports **980***a* and one or more output ports **980***b*. Input ports **980***a* may include two types of input ports, namely: (i) a first type of input port $\mathbf{980}a_1$ coupled to various upstream device, networks and/or routers, and (ii) a second type of input port $\mathbf{980}a_2$ coupled to cross-point switch **112** of the midplane **102**. Output ports **980***b* can also include two types of output ports, namely, (i) a first type of output port $\mathbf{980}b_1$ coupled to the address re-writing module **108** of the midplane **102**, and (ii) a second type of output port $\mathbf{980}b_2$ coupled to various downstream devices, networks and/or routers Augmented plug-in card **980** further includes various types of signal processors **920***a*, **920***b*, **920***c*, **922***a*, **922***b* and **942** which are analogous in function to those explained in FIG. **9**A. Each signal processor may couple to one or more processor-specific input and output ports of the plug-in card **980**.

[0289] By way of an example, input signal processor **920***a* may couple to one or more first input ports $\mathbf{980}a_1$, to receive SDI signals **950***a* therefrom. Signal processor **920***a* may process and convert these signals into corresponding IP signals **950***a*', and may transmit the IP signals to the address rewriting module **108** of midplane **102**, via one or more first output port $\mathbf{980}b_1$

[0290] Input signal processor **920***b* may couple to one or more input ports $\mathbf{980}a_1$, to receive non-SDI, non-IP signals **950***b* (e.g., HDMI signals) therefrom. Signal processor **920***b* may then process and convert these signals into corresponding IP signals **950***b*', and may transmit these IP signals to the address rewriting module **108** of midplane **102**, via one or more first output port $\mathbf{980}b_1$.

[0291] Output signal processor **922***a* may couple to one or more second input ports $\mathbf{980}a_2$, to receive one or more IP signals **952***a*' from the cross-point switch **112**. Signal processor **922***a* may then process and convert these signals into corresponding SDI signals **952***a*, and may transmit the SDI signals externally via one or more second output ports $\mathbf{980}b_2$.

[0292] Output signal processor **922***b* may couple to one or more second input ports **980***a***2**, to receive one or more IP signals **952***b*' from the cross-point switch **112**. Signal processor **922***b* may then process and convert these signals into corresponding non-IP, non-SDI signals **952***b* (e.g., HDMI signals), and may transmit these signals externally via one or more second output ports **980***b***2**.

[0293] SDI router **900***b* may also include the signal processor **942**, which can couple to one or more second input ports **980***a***2**, to receive one or more IP signals **950***d*' from the cross-point switch **112**. Signal processor **942** may then process these signals as explained herein, and may transmit one or more corresponding modified IP signals **950***d*" to the address rewriting module **108**, via one or more second output port $\mathbf{980}b_1$.

[0294] As explained previously, in some cases the same or a separate signal processor **942** may also receive external IP signals, and may process these signals to generate corresponding modified IP signals. The modified IP signals may then be transmitted to the address rewriting module **108** of midplane **102**, or otherwise, to other downstream IP devices, networks and/or routers.

[0295] Plug-in card **980** can also include one or more direct connections between input and output ports **980***a*, **980***b*. For example, one or more first input ports $\mathbf{980}a_1$ may receive IP signal(s) **950***c*' from upstream devices, networks and/or routers, and may pass-through these signals directly to one or more first output port $\mathbf{980}b_1$, i.e., coupled to the address re-writing module **108**.

[0296] Similarly, one or more second input ports $\mathbf{980}a_2$ of plug-in card **980** may receive one or more IP signals **950***c*" from the cross-point switch **112**, and may pass these signals directly to one or more second output port $\mathbf{980}b_2$ coupled to one or more downstream devices, networks and/or routers.

[0297] In some cases, prior to passing the signals through, the signals may be processed using a similar signal processor as processor **942**. In this manner, the passed through IP signals are modified versions of the received IP signals.

[0298] In some cases, the augmented card **980** may include multiple "copies" of each type of signal processor. For example, several of each type of signal processor may be connected to different input and output ports of the card **980** to provide independent and parallel processing functionality, and to enable for higher processing capacity and data throughput for the card **980**.

[0299] In some cases, rather than connecting each processor to a separate input and output port, several processors may share the same input and output ports. In these cases, the plug-in card may have a routing module (not shown) to direct or route incoming or outgoing signals to the correct processor. The routing functionalities may be independently controlled from with-in, or externally controlled by, for example, an external controller (e.g., controller **110**).

[0300] In some cases routing signals within plug-in card **980** to the appropriate signal processor (i.e., via the routing module) may be achieved by accounting for various routing parameters.

[0301] For example, routing can be determined based on a known source or destination of a signal. For instance, specific upstream or downstream sources may be known to transmit or receive specific types of signal formats (e.g., SDI, IP or non-IP, non-SDI). Accordingly, signals may be routed to, and processed by the relevant signal processor to achieve the necessary format conversion. In other cases, the routing parameters may be related to the time of day the signal is received or transmitted. For example, different formats of signals may be known to be received at different times of day, or are otherwise required to be transmitted in particular formats at different times of day. Monitoring the time may be performed by an internal clock of the routing module and/or external controller. Still further, the routing

module may have internal processing functionalities to analyze signals to determine the type of signal being received and/or the processing required to be applied to that signal. For example, a signal can be received and analyzed to determine that it's an HDMI signal, and therefore requires to, processing by signal processor **920***b*, etc.

[0302] In still other embodiment, rather than combining all of the signal processors **920**, **922** and **942** into a single augmented plug-in card **980**, the processors may be distributed among multiple augmented cards **980**. For example, some augmented cards **980** may include some signal processors (e.g., **920***a*, **920***b*, **942**), while other augmented cards **980** may include other signal processors (e.g., **922***a*, **922***b*). Some augmented cards **980** may further include a combination of signal processing and/or direct pass through functionality. Accordingly, it will be understood that, as used herein, an augmented card is any card having a combination of one or more signal processing and/or direct pass-through functionality.

[0303] In still yet other embodiments, a single processor can be provided in the augmented plug-in card **980** which provides all or some of the functionalities of the processors **920**, **922** and **942**. For example, the plug-in card **980** may include a single processor which preforms all functionalities of processors **920**, **922** and **940**, or in other cases, several separate processors that each perform different combined functionalities of processors **920**, **922** and **940**.

[0304] While the above description describes features of example embodiments, some features and/or functions of the described embodiments are susceptible to modification without departing from the spirit and principles of operation of the described embodiments. For example, the various characteristics which are described by means of the represented embodiments or examples may be selectively combined with each other. Accordingly, what has been described above is intended to be illustrative of the claimed concept and non-limiting. It will be understood by persons skilled in the art that other variants and modifications may be made without departing from the scope of the invention as defined in the claims appended hereto. The scope of the claims should not be limited by the preferred embodiments and examples, but should be given the broadest interpretation consistent with the description.

[0305] Various embodiments in accordance with the teachings herein are described to provide an example of at least one embodiment of the claimed subject matter. No embodiment described herein limits any claimed subject matter. The claimed subject matter is not limited to devices, systems or methods having all of the features of any one of the devices, systems or methods described below or to features common to multiple or all of the devices, systems or methods described herein. It is possible that there may be a device, system or method described herein that is not an embodiment of any claimed subject matter. Any subject matter that is described herein that is not claimed in this document may be the subject matter of another protective instrument, for example, a continuing patent application, and the applicants, inventors or owners do not intend to abandon, disclaim or dedicate to the public any such subject matter by its disclosure in this document.

[0306] For simplicity and clarity of illustration, where considered appropriate, reference numerals may be repeated among the figures to indicate corresponding or analogous elements or steps. In addition, numerous specific details are set forth in order to provide a thorough understanding of the example embodiments described herein. However, it will be understood by those of ordinary skill in the art that the embodiments described herein may be practiced without these specific details. In other instances, well-known methods, procedures and components have not been described in detail so as not to obscure the embodiments described herein. Also, the description is not to be considered as limiting the scope of the example embodiments described herein.

[0307] It should also be noted that the terms "coupled" or "coupling" as used herein can have several different meanings depending in the context in which these terms are used. For example, the terms coupled or coupling can have a mechanical, fluidic or electrical connotation. For example, as used herein, the terms coupled or coupling can indicate that two elements or devices can be directly connected to one another or connected to one another through one or more intermediate elements or devices via an electrical or magnetic signal, electrical connection, an electrical element or a mechanical element depending on the particular context. Furthermore coupled electrical elements may send and/or receive data.

[0308] Unless the context requires otherwise, throughout the specification and claims which follow, the word "comprise" and variations thereof, such as, "comprises" and "comprising" are to be construed in an open, inclusive sense, that is, as "including, but not limited to".

[0309] It should also be noted that, as used herein, the wording "and/or" is intended to represent an inclusive-or. That is, "X and/or Y" is intended to mean X or Y or both, for example. As a further example, "X, Y, and/or Z" is intended to mean X or Y or Z or any combination thereof.

[0310] It should be noted that terms of degree such as "substantially", "about" and "approximately" as used herein mean a reasonable amount of deviation of the modified term such that the end result is not significantly changed. These terms of degree may also be construed as including a deviation of the modified term, such as by 1%, 2%, 5% or 10%, for example, if this deviation does not negate the meaning of the term it modifies.

[0311] Furthermore, the recitation of numerical ranges by endpoints herein includes all numbers and fractions subsumed within that range (e.g. 1 to 5 includes 1, 1.5, 2, 2.75, 3, 3.90, 4, and 5). It is also to be understood that all numbers and fractions thereof are presumed to be modified by the term "about" which means a variation of up to a certain amount of the number to which reference is being made if the end result is not significantly changed, such as 1%, 2%, 5%, or 10%, for example.

[0312] Reference throughout this specification to "one embodiment", "an embodiment", "at least one embodiment" or "some embodiments" means that one or more particular features, structures, or characteristics may be combined in any suitable manner in one or more embodiments, unless otherwise specified to be not combinable or to be alternative options.

[0313] As used in this specification and the appended claims, the singular forms "a," "an," and "the" include plural referents unless the content clearly dictates otherwise. It should also be noted that the term "or" is generally employed in its broadest sense, that is, as meaning "and/or" unless the content clearly dictates otherwise.

[0314] The headings and Abstract of the Disclosure provided herein are for convenience only and do not interpret the scope or meaning of the embodiments.

[0315] Similarly, throughout this specification and the appended claims the term "communicative" as in "communicative pathway," "communicative coupling," and in variants such as "communicatively coupled," is generally used to refer to any engineered arrangement for transferring and/or exchanging information. Exemplary communicative pathways include, but are not limited to, electrically conductive pathways (e.g., electrically conductive wires, electrically conductive traces), magnetic pathways (e.g., magnetic media), optical pathways (e.g., optical fiber), electromagnetically radiative pathways (e.g., radio waves), or any combination thereof. Exemplary communicative couplings include, but are not limited to, electrical couplings, magnetic couplings, optical couplings, radio couplings, or any combination thereof.

[0316] Throughout this specification and the appended claims, infinitive verb forms are often used. Examples include, without limitation: "to detect," "to provide," "to transmit," "to communicate," "to process," "to route," and the like. Unless the specific context requires otherwise, such infinitive verb forms are used in an open, inclusive sense, that is as "to, at least, detect," to, at least, provide," "to, at least, transmit," and so on.

[0317] The example embodiments of the systems and methods described herein may be implemented as a combination of hardware or software. In some cases, the example embodiments described herein may be implemented, at least in part, by using one or more computer programs, executing on one or more programmable devices comprising at least one processing element, and a data storage element (including volatile memory, non-volatile memory, storage elements, or any combination thereof). These devices may also have at least one input device (e.g. a keyboard, mouse, touchscreen, or the like), and at least one output device (e.g. a display screen, a printer, a wireless radio, or the like) depending on the nature of the device.

1. A system for routing an input serial digital interface (SDI) signal, the system comprising:

an SDI input port corresponding to an input card for receiving the input SDI signal;

one or more input signal processors coupled to the SDI input port for processing the input SDI signal to generate one or more packetized media streams, each packetized media stream comprising a plurality of packets, wherein each packet has a packet header comprising a source address corresponding to that packetized media stream; and

one or more internet protocol (IP) output ports, wherein each IP output port is coupled to at least one input signal processor, and each IP output port being configured to receive at least one packetized media stream generated by a corresponding input signal processor and transmit the at least one packetized media stream to a midplane for routing.

2. A system for routing an input serial digital interface (SDI) signal, the system comprising:

a midplane; and

a controller coupled to the midplane, the controller transmitting control signals to control the operation of the midplane;

the midplane comprising an address inserting module configured to:

receive one or more packetized media streams, each packetized media stream having a plurality of packets and an associated source address;

identify the source address corresponding to each packet of a packetized media stream;

determine a destination address corresponding to that packet based on control signals transmitted by the controller; and

update the corresponding packet header with the destination address to generate a corresponding processed packet;

the midplane further comprising a routing switch coupled to the address inserting module, the routing switch being configured to:

receive the processed packet; and

route the processed packet to an output port based on the destination address and the control signals from the controller.

3. A system for routing an input serial digital interface (SDI) signal from an input SDI port to an output SDI port, the system comprising:

at least one input card coupled to the input SDI port;

at least one output card coupled to the output SDI port;

a midplane coupled to the at least one input card and the at least one output card; and

a controller coupled to the midplane;

the at least one input card being configured to:

receive the input SDI signal at the input SDI port;

process the input SDI signal to generate one or more packetized media streams, each packetized media stream comprising a plurality of packets, wherein each packet has a packet header comprising a source address corresponding to that packetized media stream; and

transmit each packetized media stream from an IP output port to the midplane;

the midplane being configured to:

identify the source address corresponding to each packet of a packetized media stream;

update the corresponding packets of each packetized media stream with a destination address based on the control signal from the controller, and generate a corresponding processed packetized media stream; and

route the processed packetized media stream to an output card based on the destination address; and

the output card being configured to:

receive one or more processed packetized media streams at an input IP port;

process the one or more processed packetized media streams to generate a corresponding output SDI signal; and

providing the output SDI signal at the output SDI port.

4. The system of claim **3**, wherein the source address includes a flow identifier uniquely identifying the corresponding packetized media stream.

5. The system of claim **4**, wherein the flow identifier is related to the SDI input port receiving the input SDI signal corresponding to the packetized media stream.

6. The system of claim **4**, wherein the flow identifier identifies source information associated with the packetized media stream.

7. The system of claim 4, wherein the flow identifier identifies the input card and the SDI input port receiving the input SDI signal corresponding to the packetized media stream, and the output IP port transmitting the packetized media stream.

8. The system of claim 4, wherein the source address further includes a routing identifier, wherein the routing identifier identifies source information associated with the packetized media stream.

9. The system of claim 4, wherein the source address further includes a routing identifier, wherein the routing identifier identifies the input card and the SDI input port receiving the input SDI signal corresponding to the packetized media stream, and the output IP port transmitting the packetized media stream.

10. The system of claim 3, wherein the destination address includes a flow identifier uniquely identifying the corresponding processed packetized media stream.

11. The system of claim 10, wherein the flow identifier is related to the SDI output port receiving the output SDI signal corresponding to the processed packetized media stream.

12. The system of claim 10, wherein the flow identifier identifies destination information associated with the processed packetized media stream.

13. The system of claim 10, wherein the flow identifier identifies the output card and the SDI output port providing the output SDI signal corresponding to the processed packetized media stream, and the input IP port receiving the processed packetized media stream.

14. The system of claim 10, wherein the destination address further includes a routing identifier, wherein the routing identifier identifies destination information associated with the processed packetized media stream.

15. The system of claim 10, wherein the destination address further includes a routing identifier, wherein the routing identifier identifies the output card and the SDI output port providing the output SDI signal corresponding to the processed packetized media stream, and the input IP port receiving the packetized media stream.

16. The system of claim 4, wherein an address inserting module in the midplane is configured to replace the flow identifier associated with the source address with a flow identifier associated with the destination address.

17. The system of claim 9, wherein an address inserting module in the midplane is configured to replace the routing identifier associated with the source address with a routing identifier associated with the destination address.

* * * * *