US012390011B2

(12) **United States Patent**
Junge

(10) **Patent No.: US 12,390,011 B2**
(45) **Date of Patent: Aug. 19, 2025**

(54) **MODULAR COMPONENT ASSEMBLY**

(71) Applicant: **fiVO Design, Inc.**, Andover, MA (US)

(72) Inventor: **Stewart Junge**, Boxford, MA (US)

(*) Notice: Subject to any disclaimer, the term of this patent is extended or adjusted under 35 U.S.C. 154(b) by 51 days.

(21) Appl. No.: **18/200,902**

(22) Filed: **May 23, 2023**

(65) **Prior Publication Data**

US 2023/0301431 A1 Sep. 28, 2023

Related U.S. Application Data

(63) Continuation-in-part of application No. 17/218,062, filed on Mar. 30, 2021, now Pat. No. 11,653,756.

(51) **Int. Cl.**
A47B 96/20 (2006.01)

(52) **U.S. Cl.**
CPC ***A47B 96/20*** (2013.01)

(58) **Field of Classification Search**
CPC ... A47B 96/20; A47B 47/042; A47B 47/0025; F16B 12/08
USPC 108/180, 158.12, 159, 60, 61; 220/4.28, 220/615, 682, 690; 297/440.13, 440.1; 312/257.1, 265.5, 107, 108, 263
See application file for complete search history.

(56) **References Cited**

U.S. PATENT DOCUMENTS

4,155,131 A * 5/1979 Harris A47C 19/005 312/263
5,011,228 A * 4/1991 Marcantel A47B 85/00 297/440.13
10,575,649 B2 * 3/2020 Pelletier A47C 4/021
11,653,756 B2 * 5/2023 Junge E04B 2/7405 108/180
2012/0279428 A1 * 11/2012 Brandenberg A47B 3/06 108/158.12
2019/0059594 A1 * 2/2019 Davis F16B 12/125
2022/0007856 A1 * 1/2022 Rose E05G 7/004

FOREIGN PATENT DOCUMENTS

FR 2974604 A1 * 11/2012 ..... A47B 47/042
GB 2353080 A * 2/2001 ..... A47B 13/04
WO WO-2014198991 A1 * 12/2014 ..... A47B 47/0066
WO WO-2021215997 A1 * 10/2021 ..... A47B 47/0075

OTHER PUBLICATIONS

WO2013198991 with English translation (Year: 2014).*
Hoek wb page, https://hoekhome.com/collections/home-office/products/home-office-desk, retrieved Sep. 29, 2023, "created_at":"2022-07-20T10:02:41-04:00".

(Continued)

Primary Examiner — Janet M Wilkens

(57) **ABSTRACT**

A modular frame assembly, comprising a first lateral frame member including a first end, the first end including a flange portion extending from a longitudinal axis of the first lateral frame member; a first side frame member including one or more receiving members; and wherein the one or more receiving members being sized and aligned to receive the flange portion to cooperatively secure the first lateral frame member and first side frame member together; and where the flange non-deformably cooperatively connects with the one or more receiving members.

17 Claims, 69 Drawing Sheets

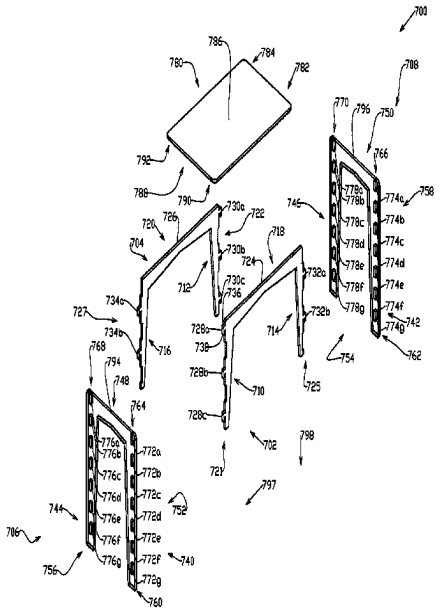

(56) **References Cited**

OTHER PUBLICATIONS

Thuma web page, https://www.thuma.co/products/the-bed?variant=7550696456220, retrieved Sep. 29, 2023, createdAt:"2023-08-02T17:15:31.530Z".
Work From Home Desks, https://workfromhomedesks.com/collections/wooden-standing-and-home-office-desks, retrieved Sep. 29, 2023, published_at":" 2022-08-31T20:32:45-07:00.

* cited by examiner

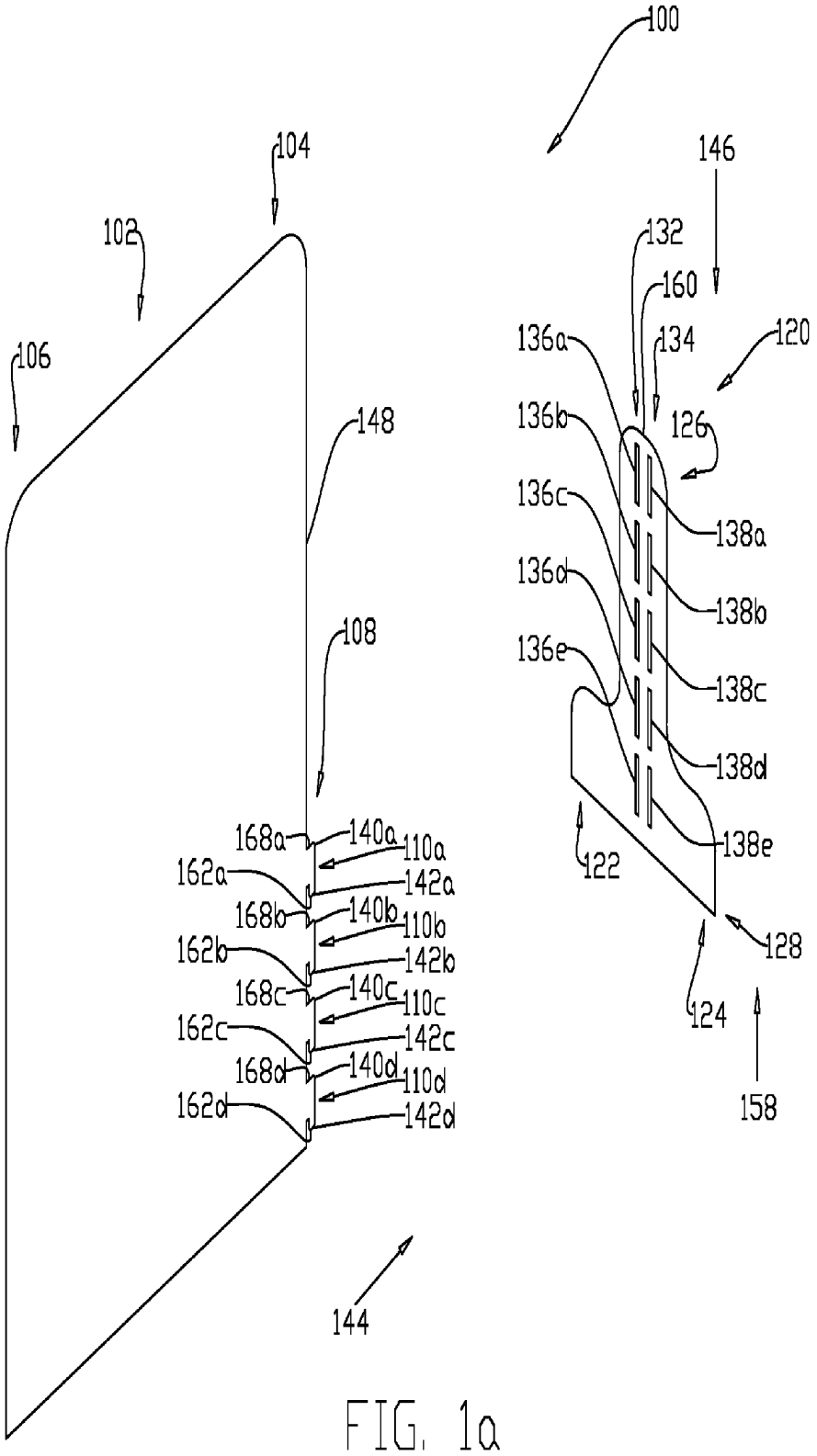
100
104
146
102
132
160
106
136a
134
120
136b
126
148
136c
138a
136d
138b
108
136e
138c
138d
168a
140a
110a
162a
142a
168b
140b
110b
162b
142b
168c
140c
110c
162c
142c
168d
140d
110d
162d
142d
122
138e
128
124
158
144

FIG. 1a

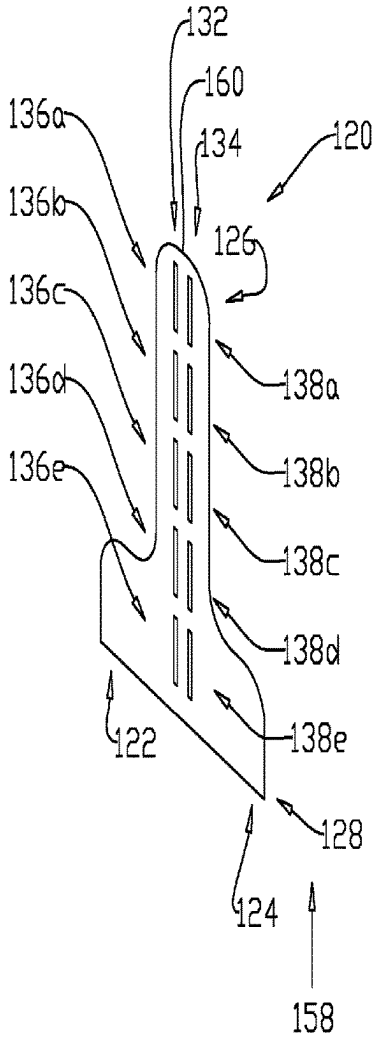
132
160
134
120
136a
136b
126
136c
136d
138a
136e
138b
138c
138d
122
138e
128
124
158

FIG. 1b

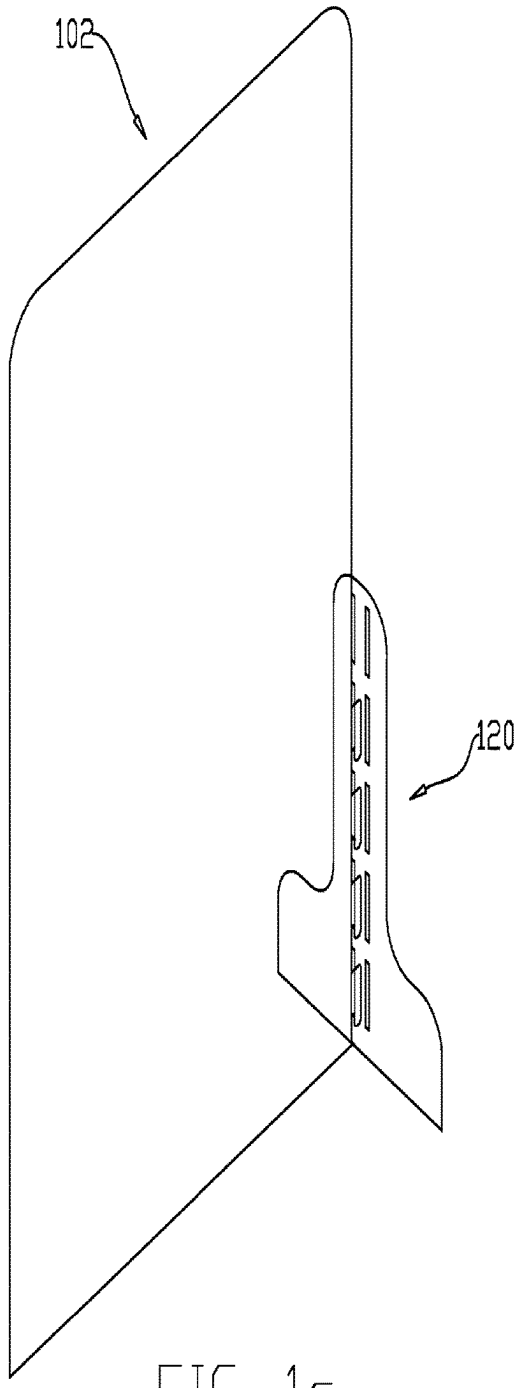
102
120

FIG. 1c

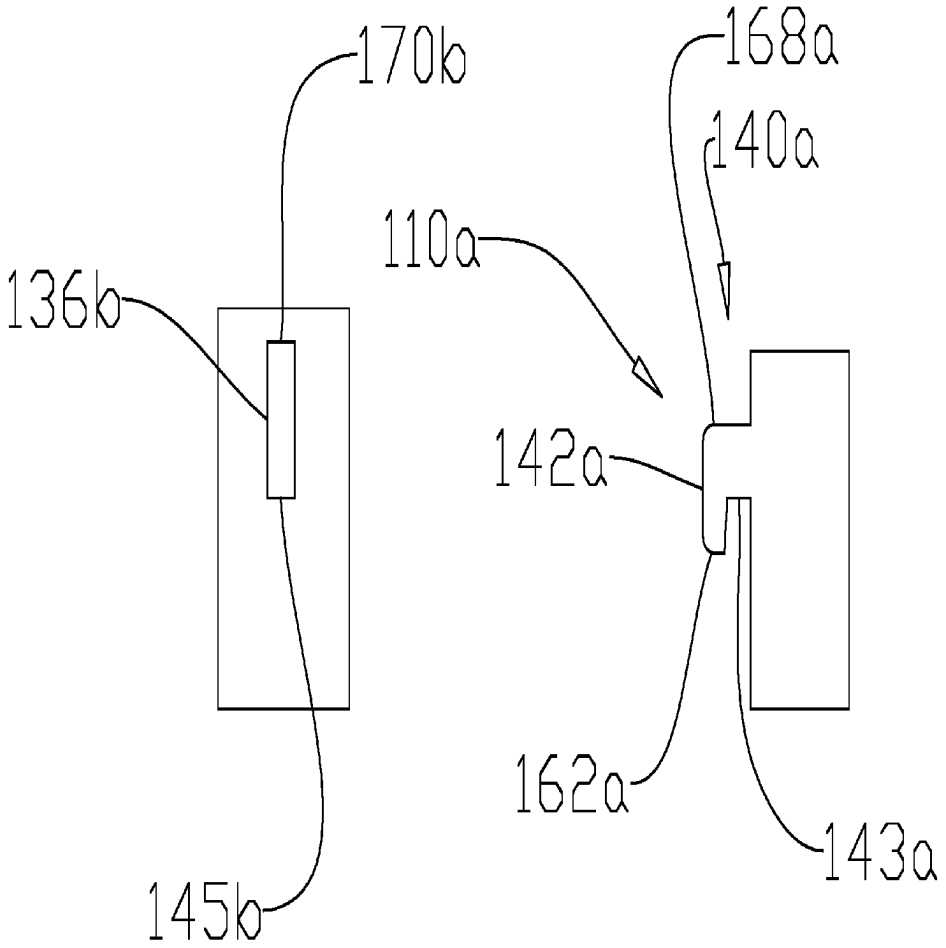

FIG. 1d

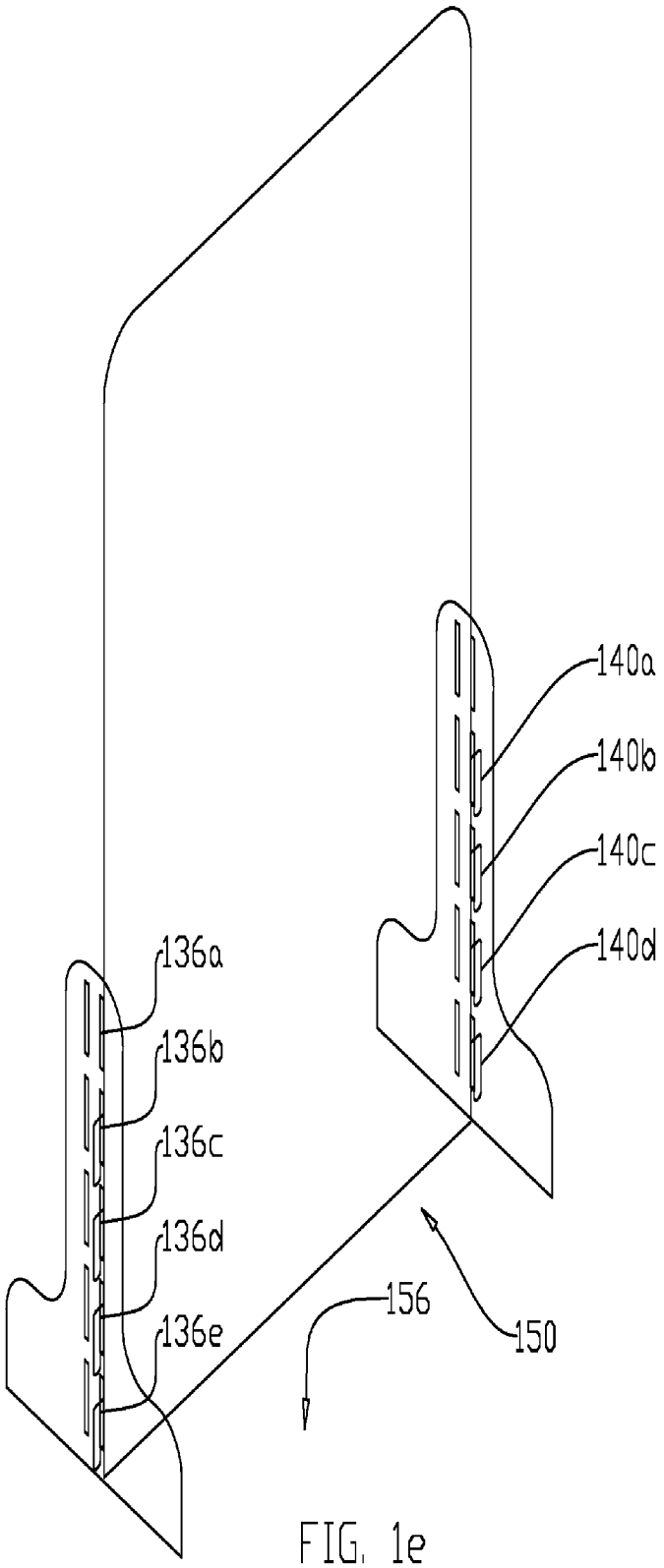

FIG. 1e

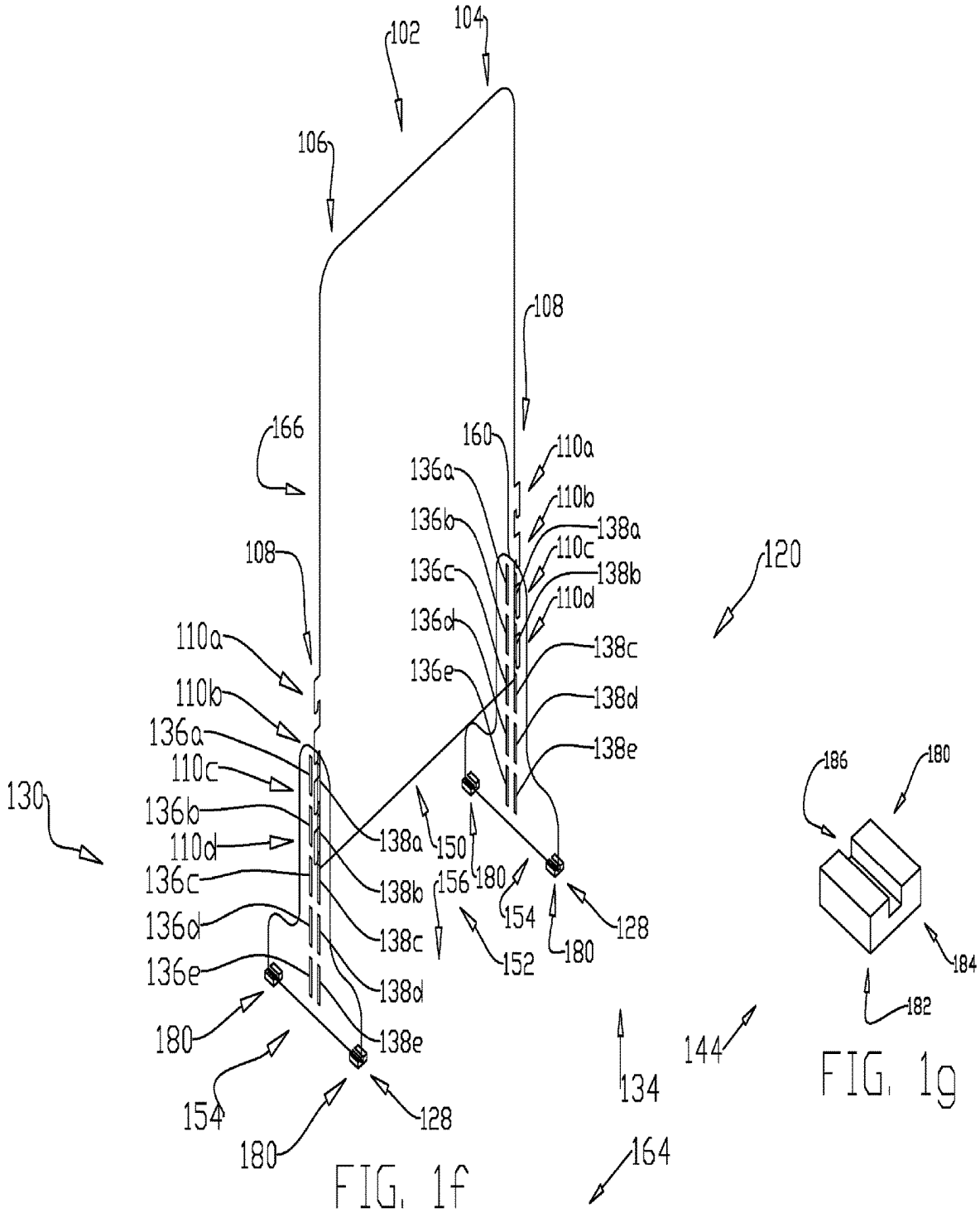
102
104
106
108
166
160
110a
110b
110c
110d
136a
136b
136c
136d
136e
138a
138b
138c
138d
138e
120
130
150
156
180
154
152
128
134
144
164

FIG. 1f

186
180
184
182

FIG. 1g

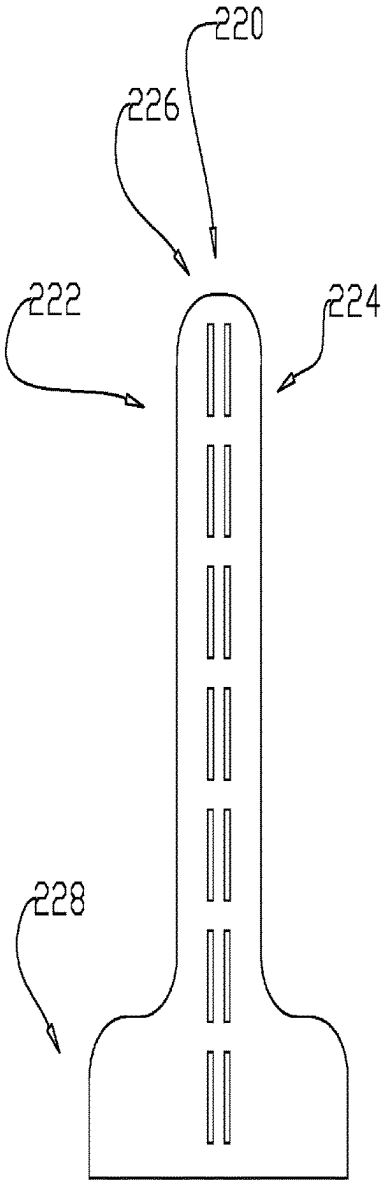

FIG. 2a

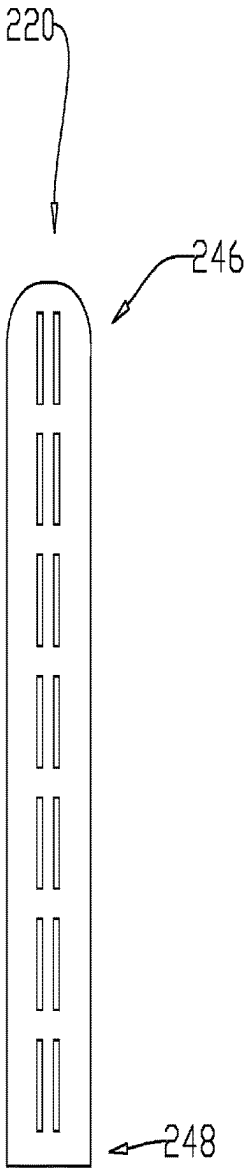

FIG. 2b

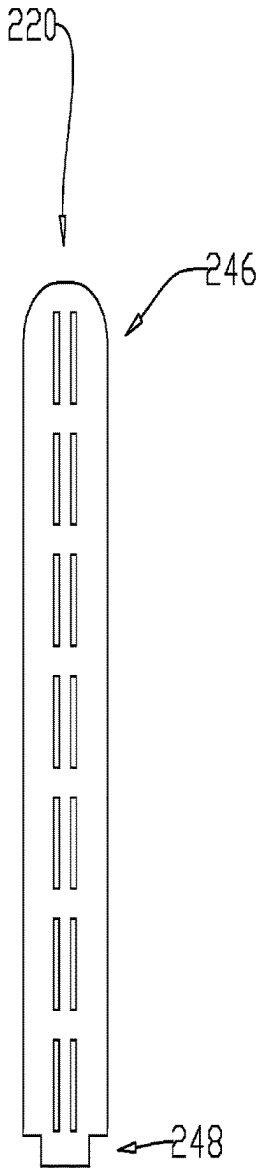

FIG. 2c

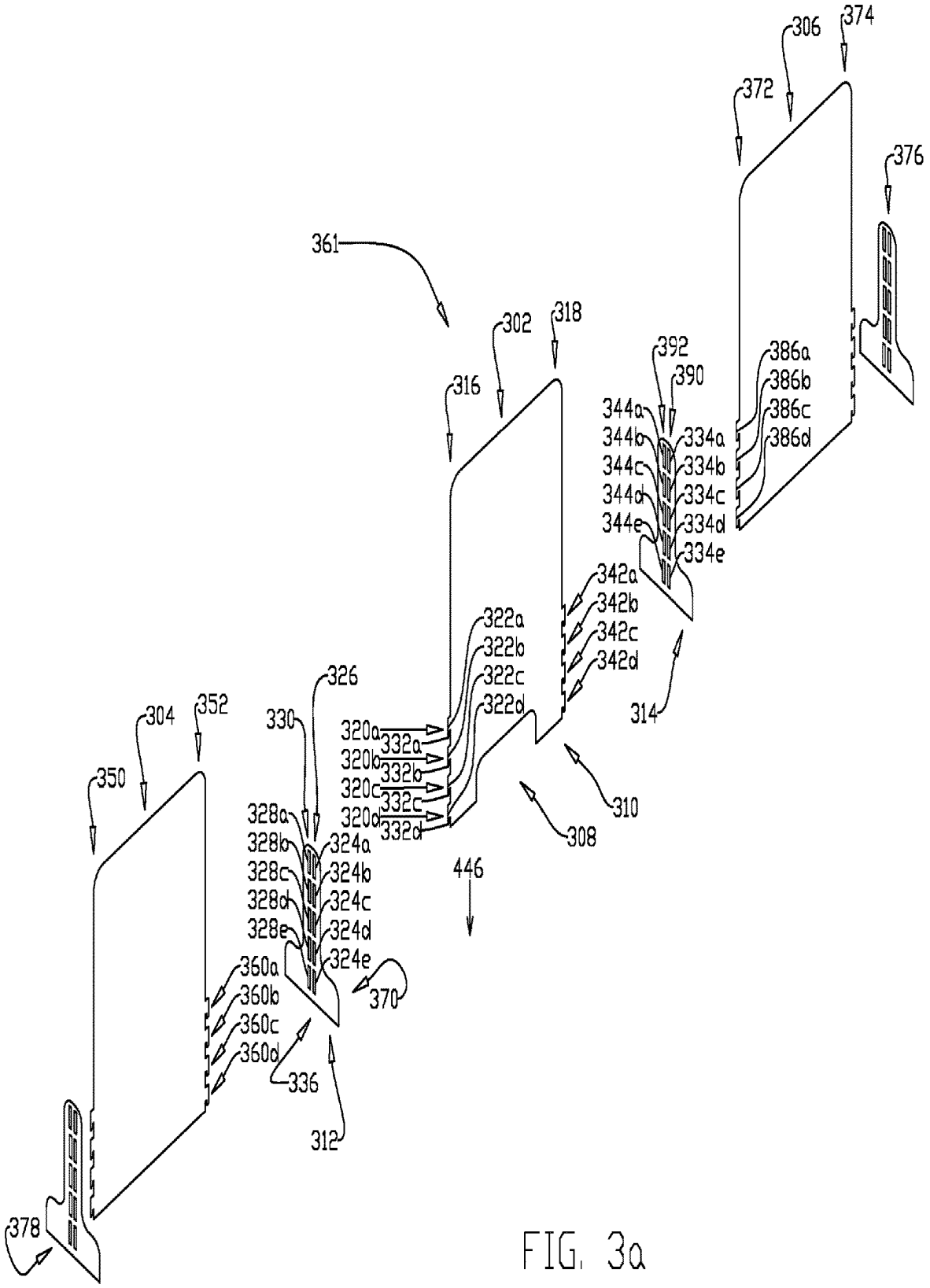
374
306
372
376
361
302
318
316
392
390
386a
386b
386c
386d
344a
344b
344c
344d
344e
334a
334b
334c
334d
334e
342a
342b
342c
342d
322a
322b
322c
322d
326
352
304
330
350
320a
320b
320c
320d
332a
332b
332c
332d
310
308
314
328a
328b
328c
328d
328e
324a
324b
324c
324d
324e
446
360a
360b
360c
360d
370
336
312
378

FIG. 3a

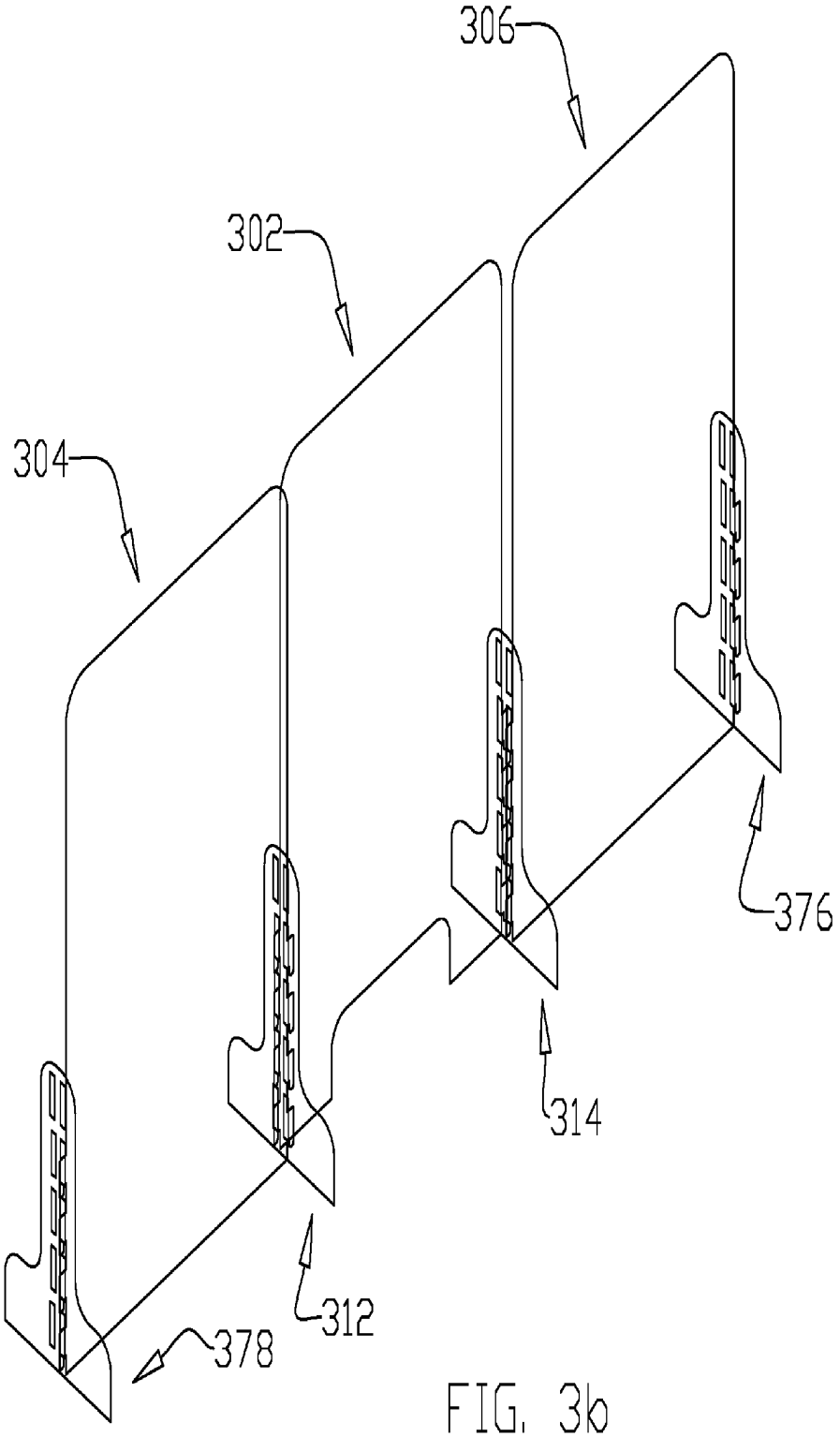

FIG. 3b

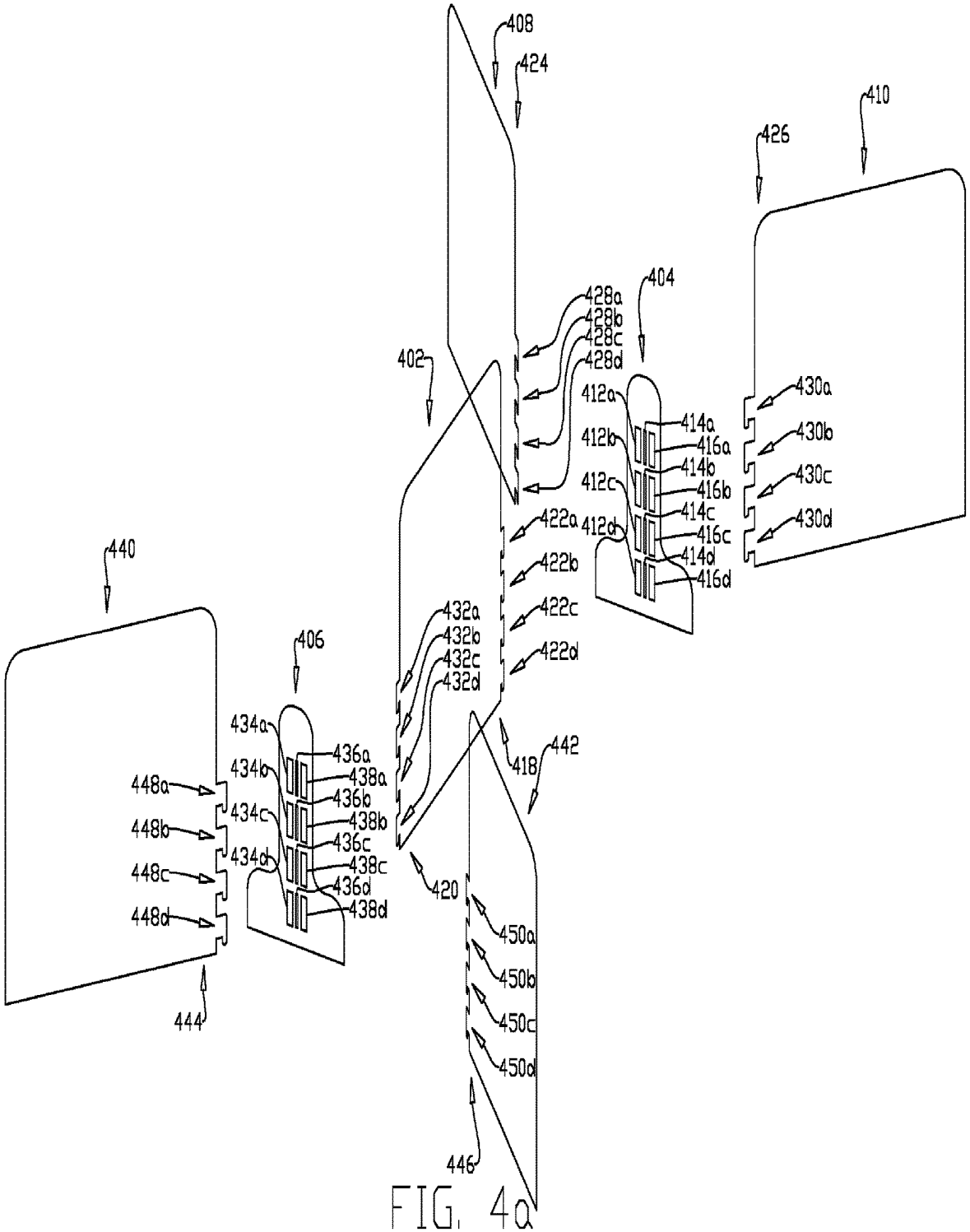
408
424
410
426
404
428a
428b
428c
428d
402
412a
412b
412c
412d
414a
416a
414b
416b
414c
416c
414d
416d
430a
430b
430c
430d
422a
422b
422c
422d
440
406
432a
432b
432c
432d
434a
434b
434c
434d
436a
438a
436b
438b
436c
438c
436d
438d
418
442
448a
448b
448c
448d
420
450a
450b
450c
450d
444
446

FIG. 4a

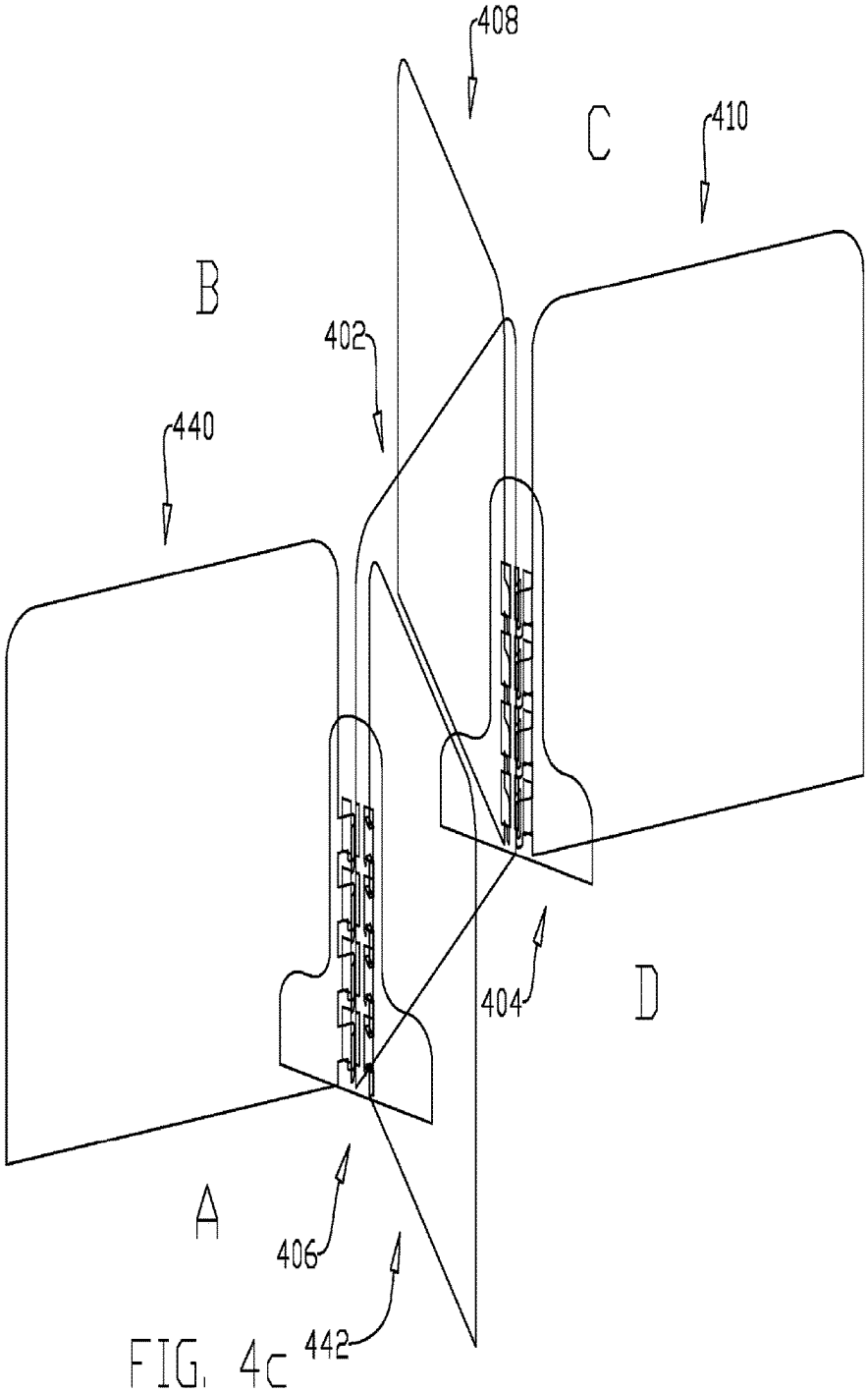
408
C
410
B
402
440
404
D
A
406
442

FIG. 4c

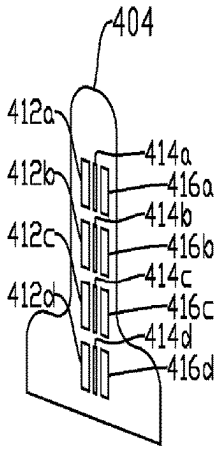
404
412a
412b
412c
412d
414a
416a
414b
416b
414c
416c
414d
416d

FIG. 4b

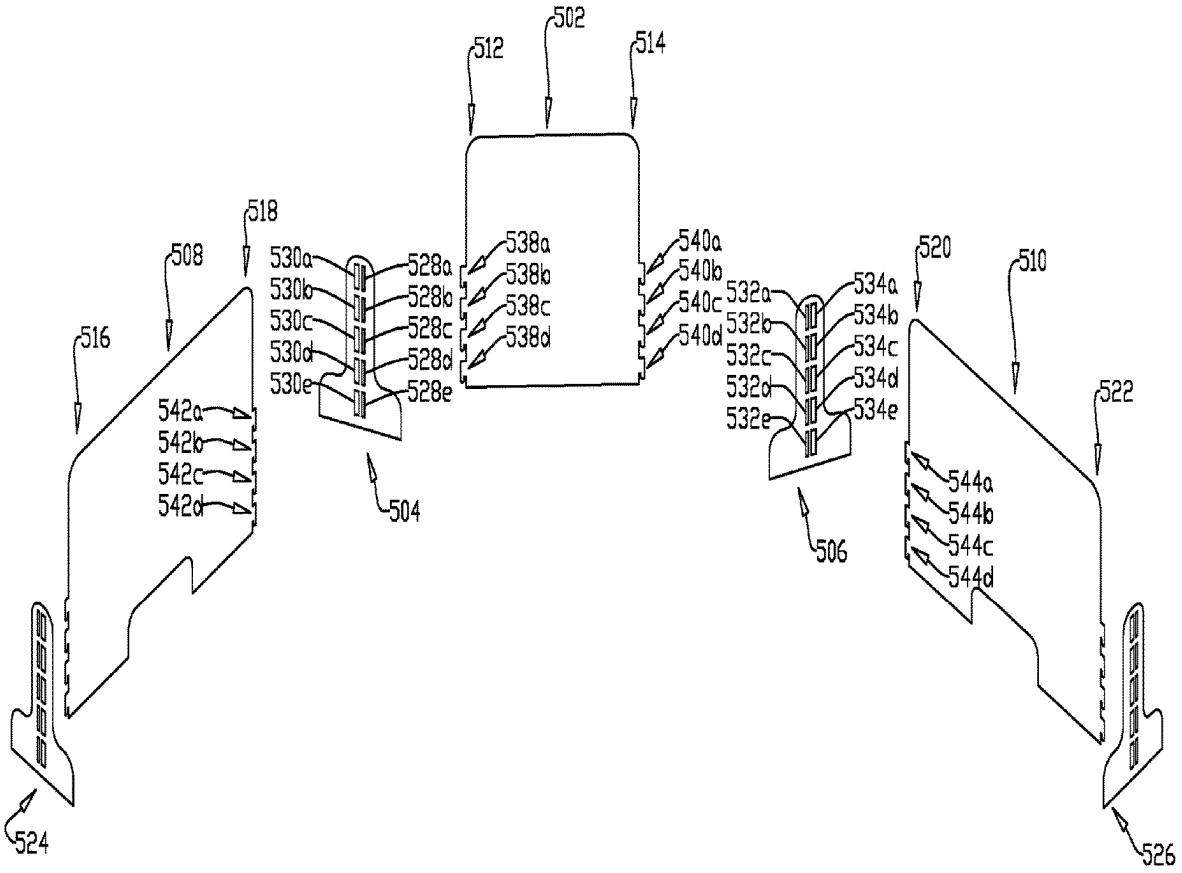
502
512
514
518
508
516
520
510
522
530a
530b
530c
530d
530e
528a
528b
528c
528d
528e
538a
538b
538c
538d
540a
540b
540c
540d
532a
532b
532c
532d
532e
534a
534b
534c
534d
534e
542a
542b
542c
542d
544a
544b
544c
544d
504
506
524
526

FIG. 5a

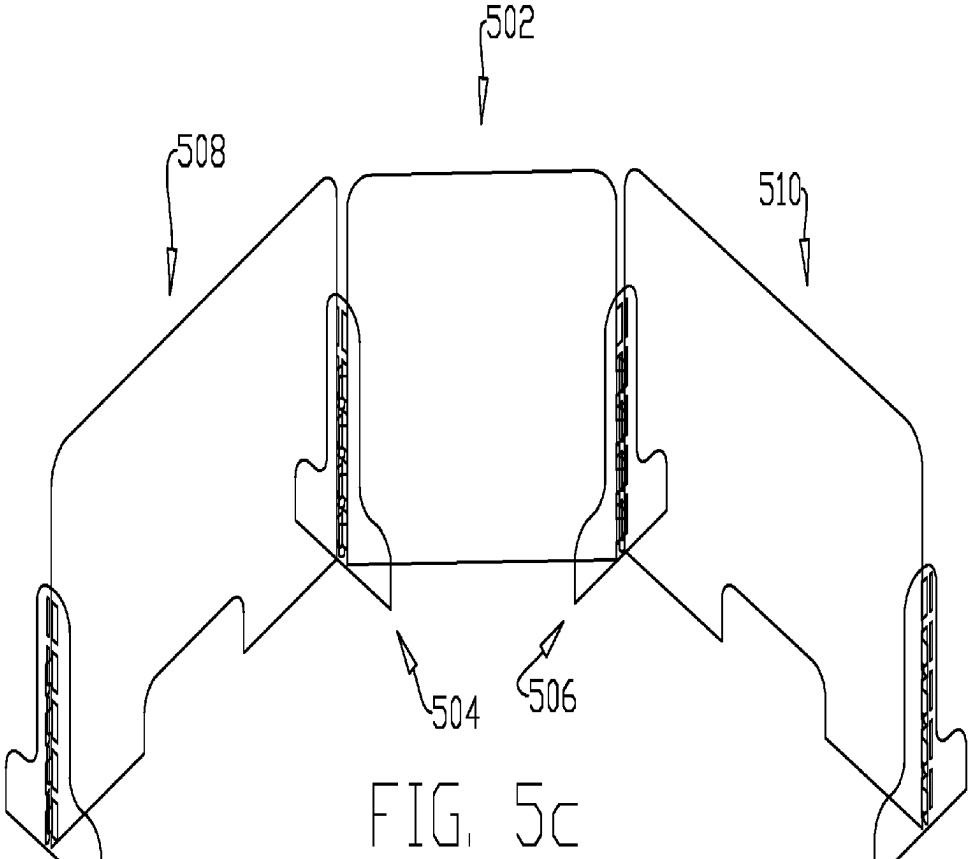
502
508
510
504
506
524
526

FIG. 5c

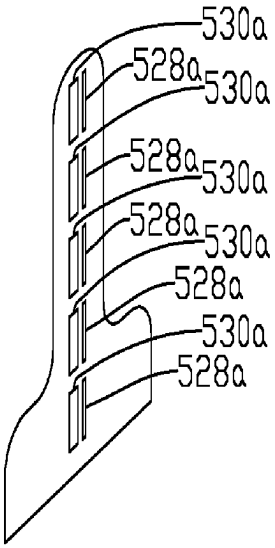
530a
528a
530a
528a
530a
528a
530a
528a
530a
528a

FIG. 5b

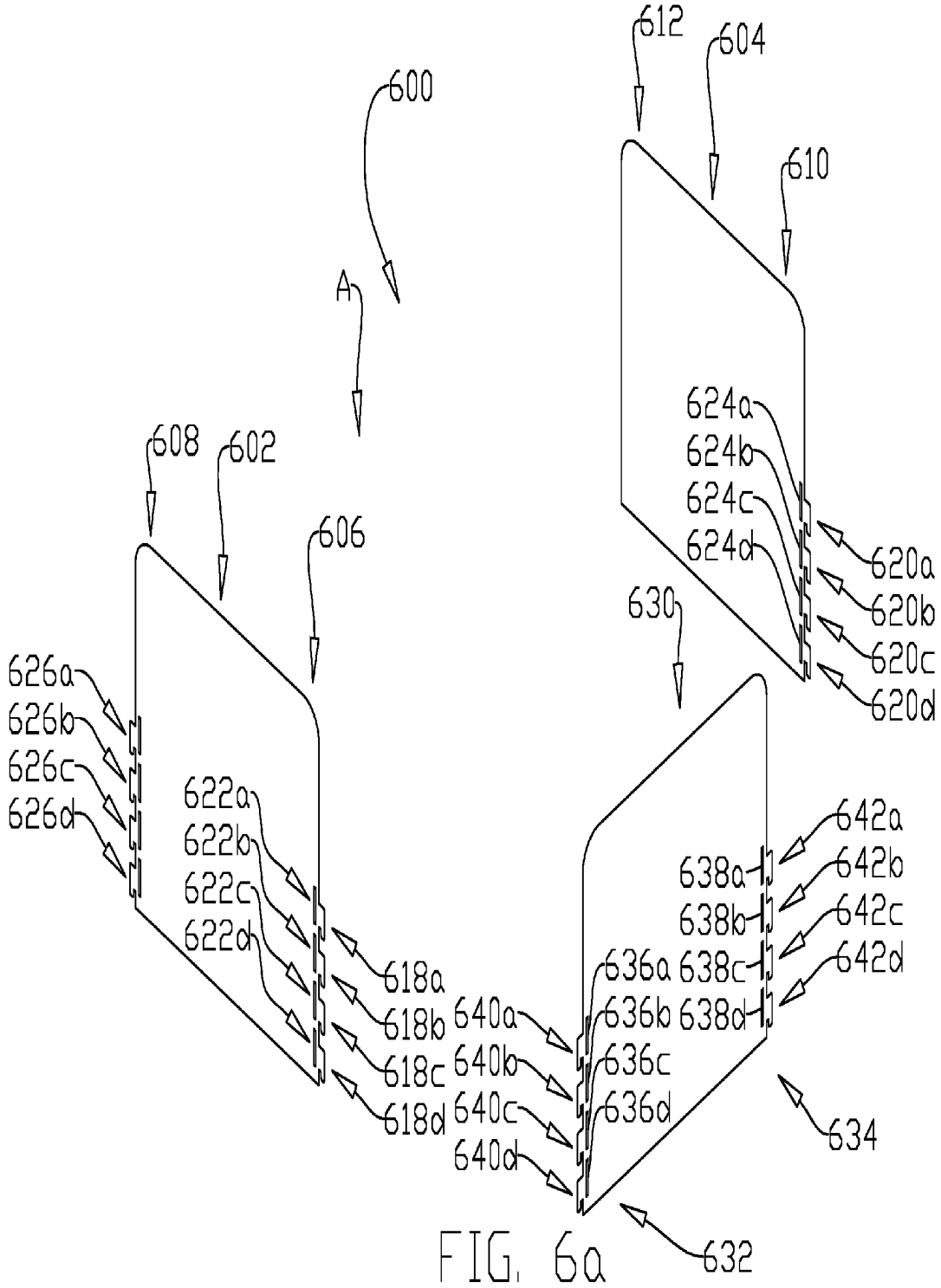
600
A
612
604
610
608
602
606
624a
624b
624c
624d
620a
620b
620c
620d
630
626a
626b
626c
626d
622a
622b
622c
622d
642a
642b
642c
642d
638a
638b
638c
638d
636a
636b
636c
636d
618a
618b
618c
618d
640a
640b
640c
640d
634
632

FIG. 6a

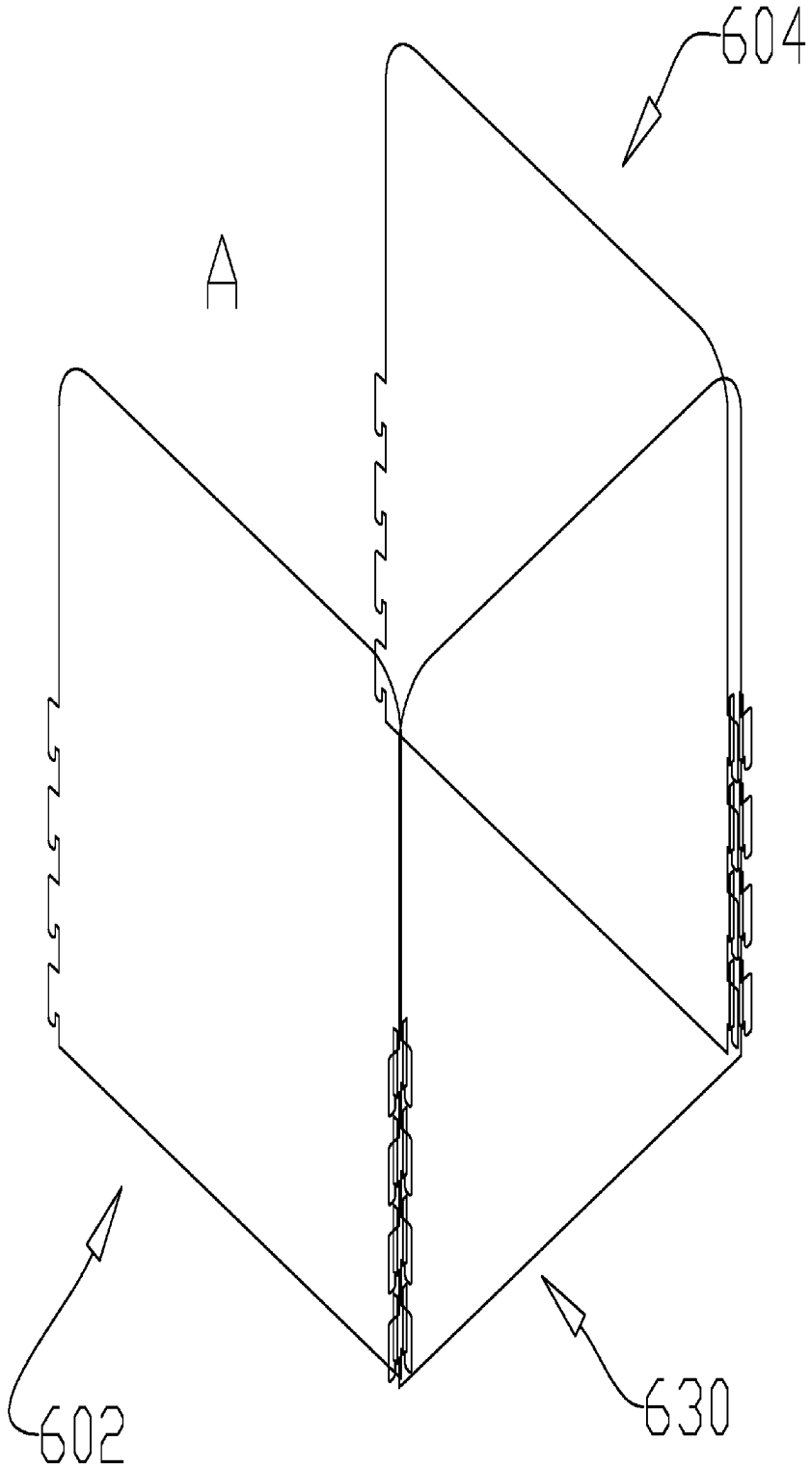

FIG. 6b

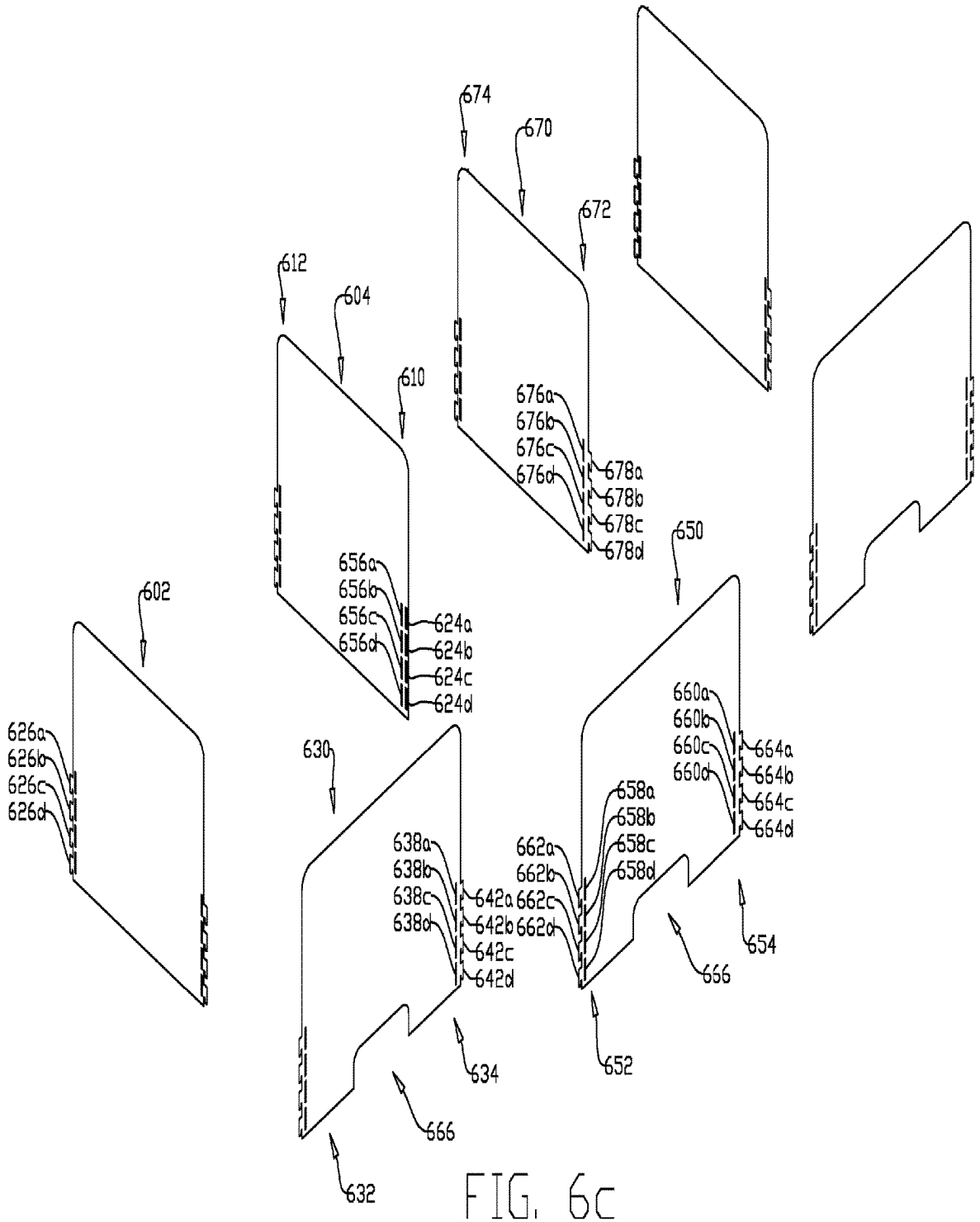
674
670
672
612
604
610
676a
676b
676c
676d
678a
678b
678c
678d
650
602
656a
656b
656c
656d
624a
624b
624c
624d
660a
660b
660c
660d
664a
664b
664c
664d
626a
626b
626c
626d
630
658a
658b
658c
658d
638a
638b
638c
638d
642a
642b
642c
642d
662a
662b
662c
662d
654
666
652
634
666
632

FIG. 6c

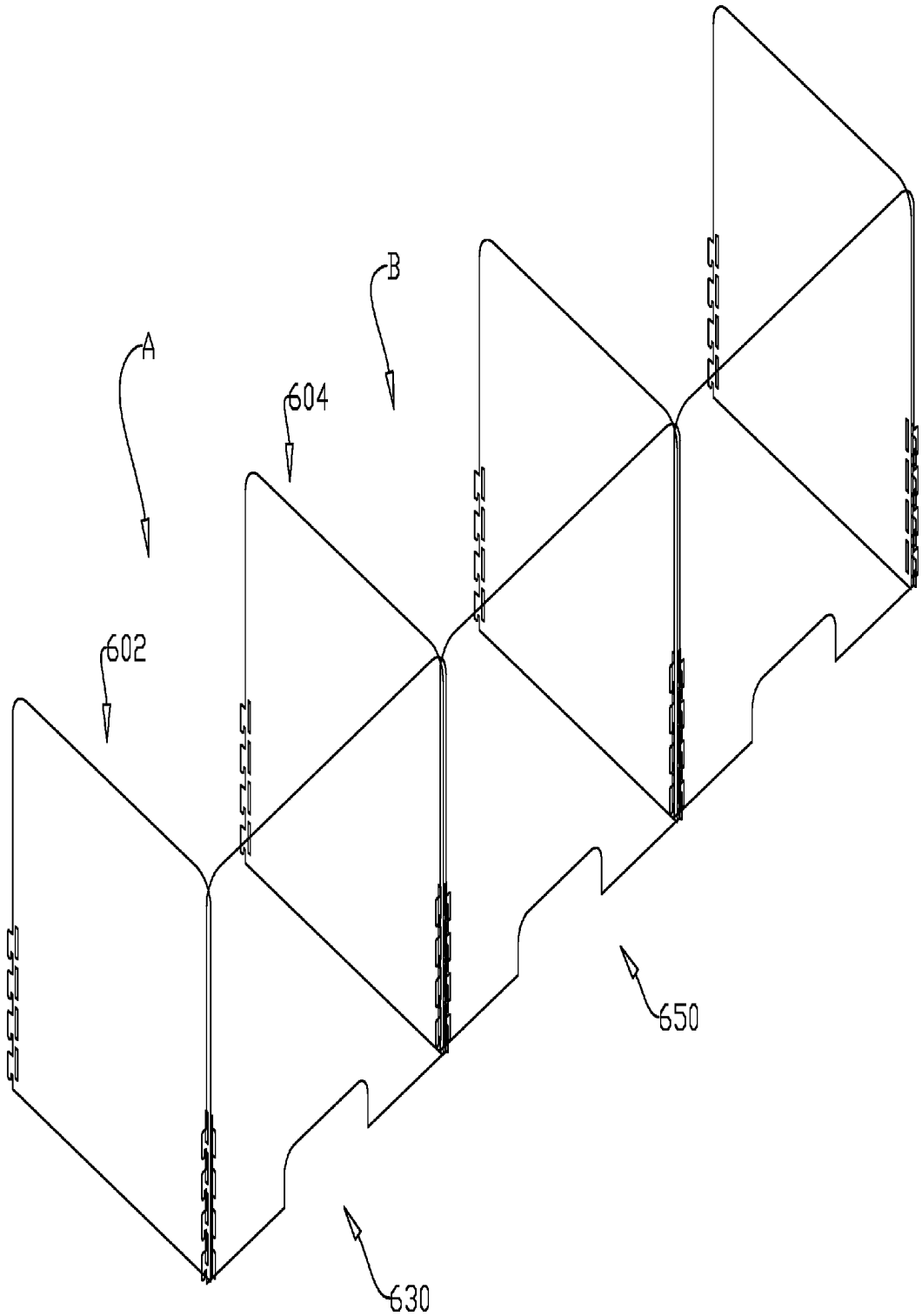

FIG. 6d

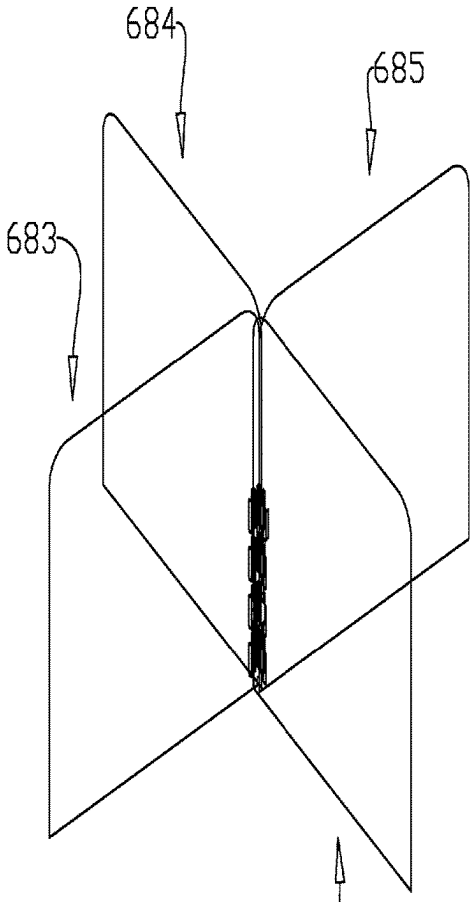
684
685
683
682

FIG. 6f

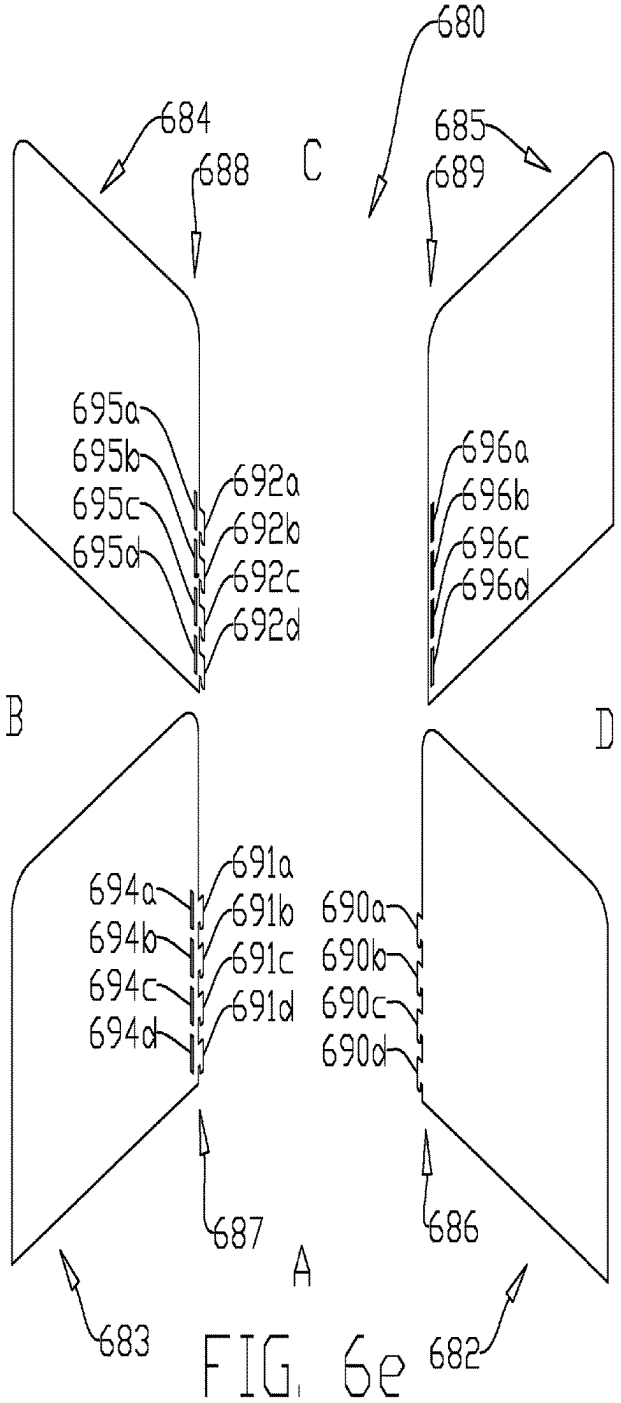
680
684
688
C
685
689
695a
695b
695c
695d
692a
692b
692c
692d
696a
696b
696c
696d
B
D
691a
691b
691c
691d
694a
694b
694c
694d
690a
690b
690c
690d
687
686
A
683
682

FIG. 6e

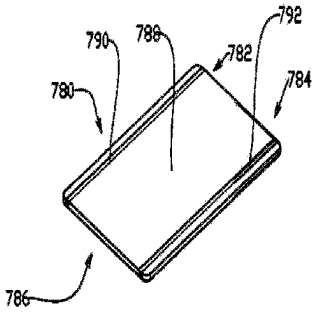
790
788
782
792
780
784
786

FIG. 7b

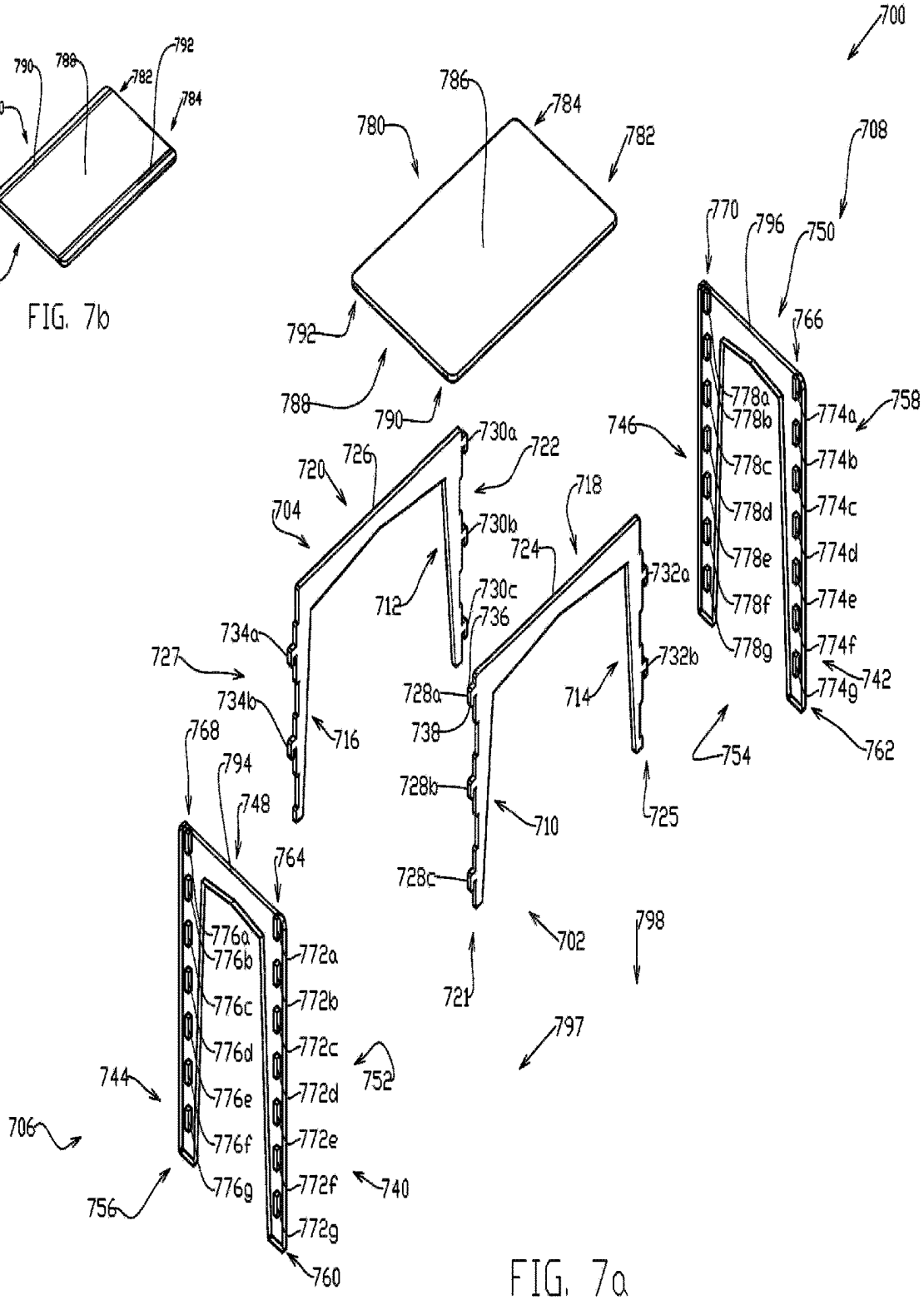
700
786
784
780
782
708
770
796
750
766
792
788
790
730a
722
746
778a
778b
774a
758
720
726
778c
774b
704
730b
718
778d
774c
724
778e
774d
732a
712
730c
736
778f
774e
734a
727
732b
778g
774f
742
728a
714
774g
734b
738
716
754
762
768
794
728b
710
725
748
764
728c
776a
776b
772a
702
798
776c
772b
721
776d
772c
797
744
752
776e
772d
706
776f
772e
756
776g
772f
740
772g
760

FIG. 7a

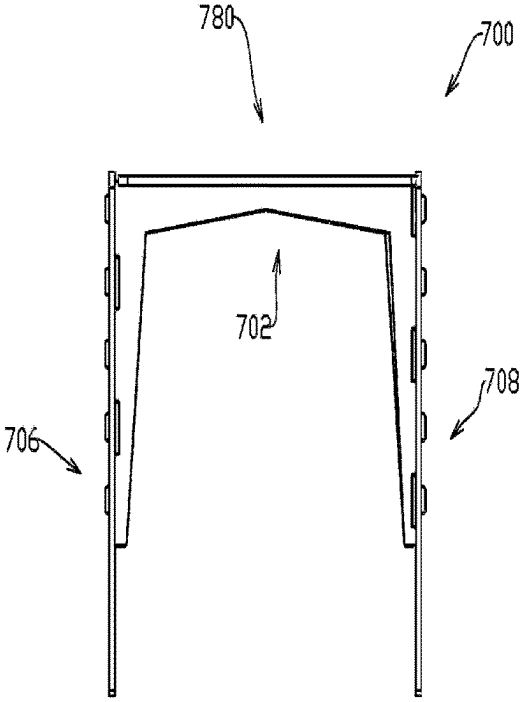

FIG. 7d

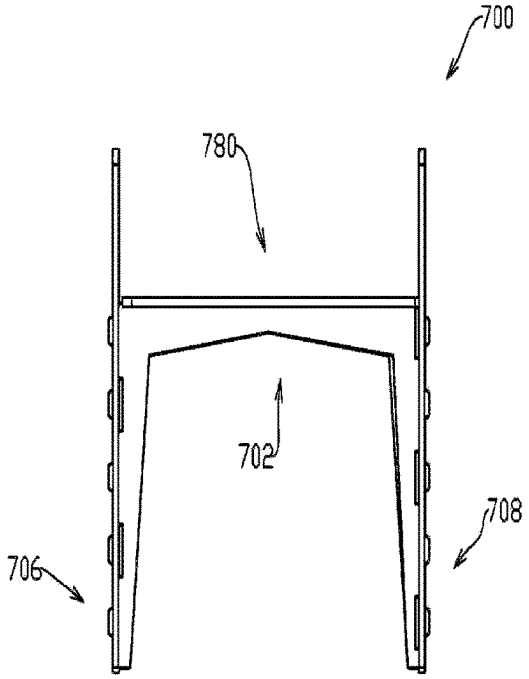

FIG. 7e

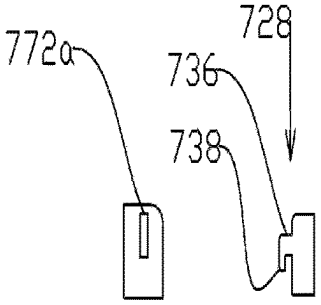

FIG. 7c

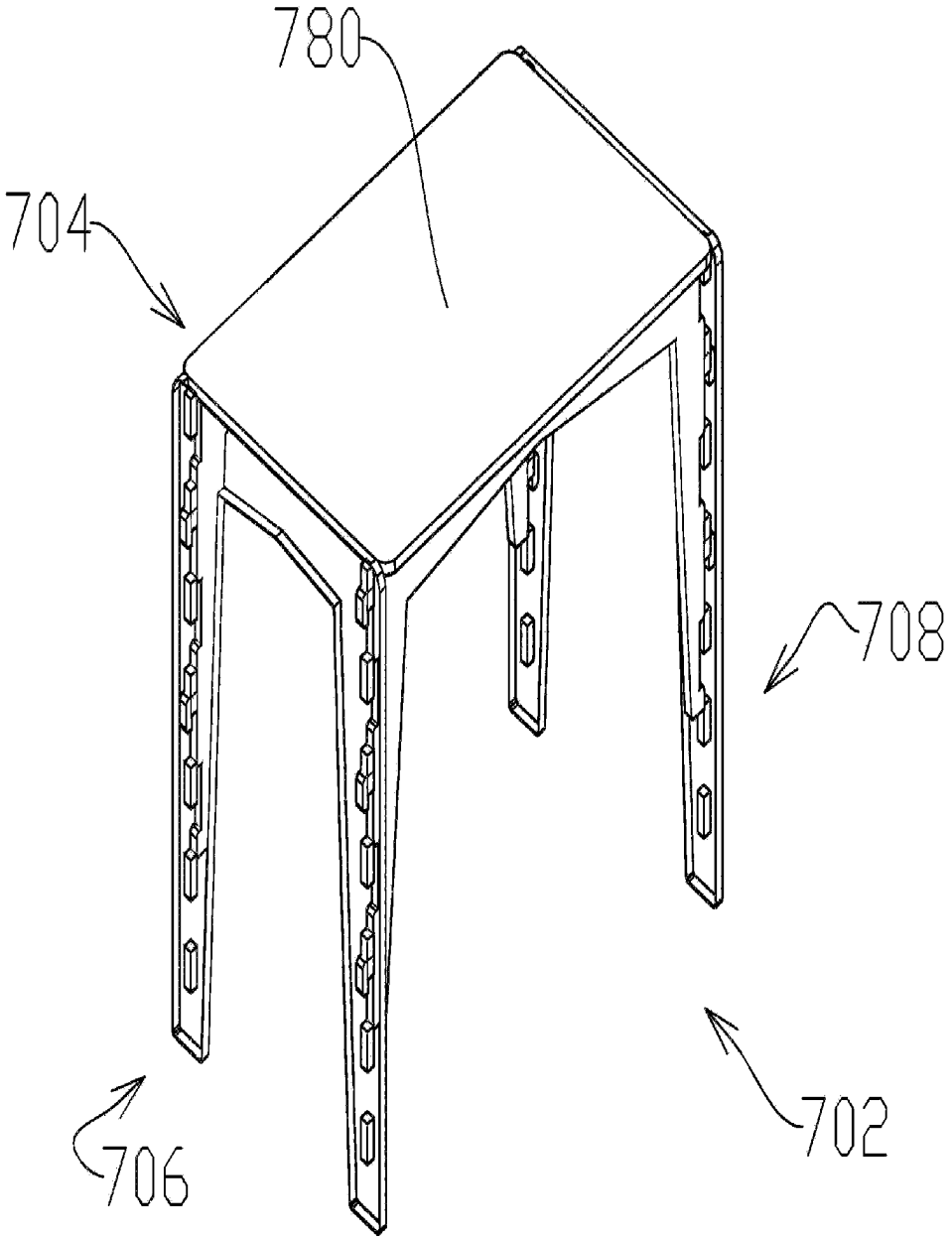

FIG. 7f

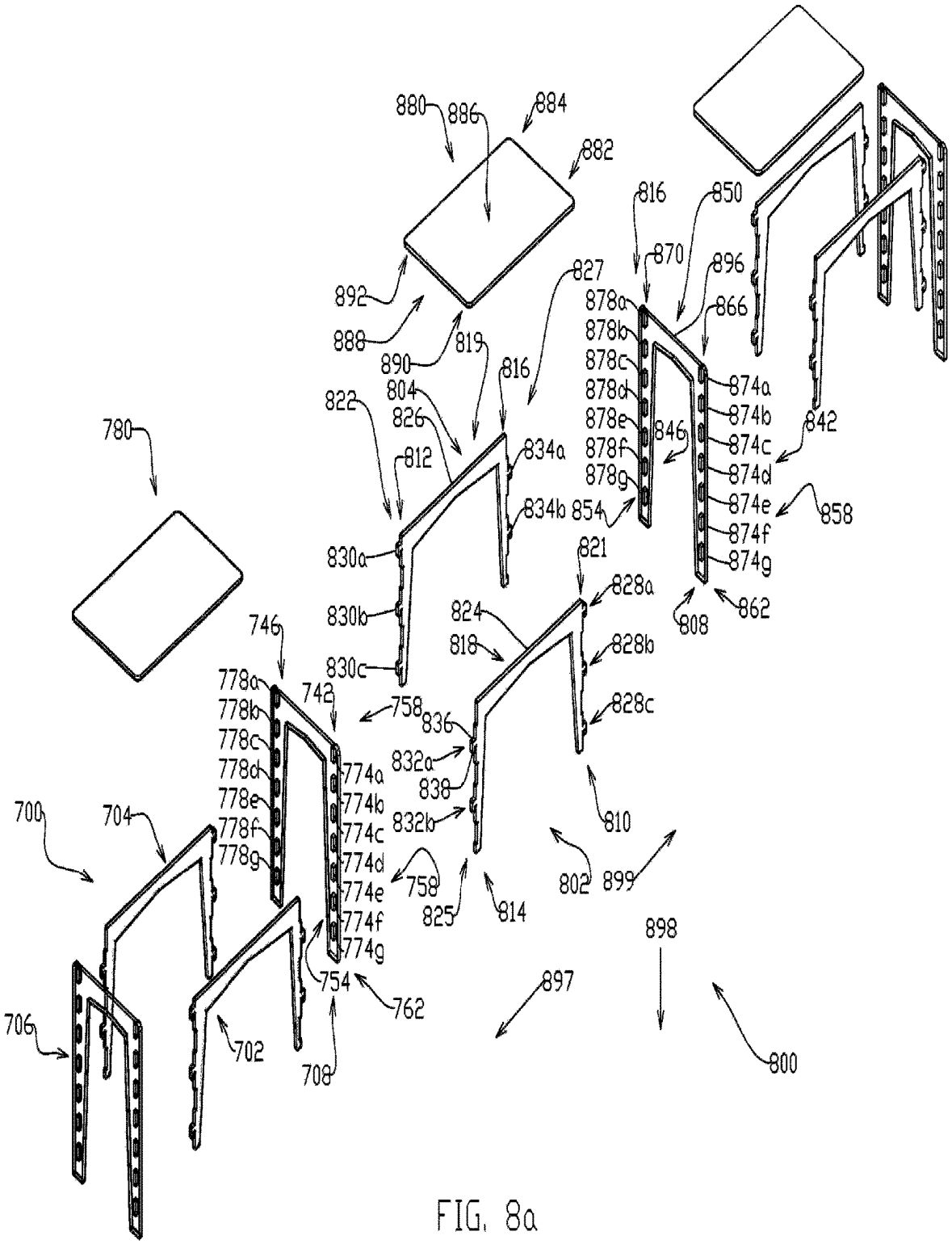
880
886
884
882
816
850
870
896
827
892
878a
878b
878c
878d
878e
878f
878g
866
888
890
819
816
874a
874b
874c
874d
874e
874f
874g
842
804
822
826
846
780
812
834a
834b
854
858
830a
821
828a
830b
824
808
862
746
818
828b
830c
778a
778b
778c
778d
778e
778f
778g
742
758
836
828c
832a
838
774a
774b
774c
774d
774e
774f
774g
700
704
832b
810
758
802
899
825
814
898
754
762
897
706
702
708
800

FIG. 8a

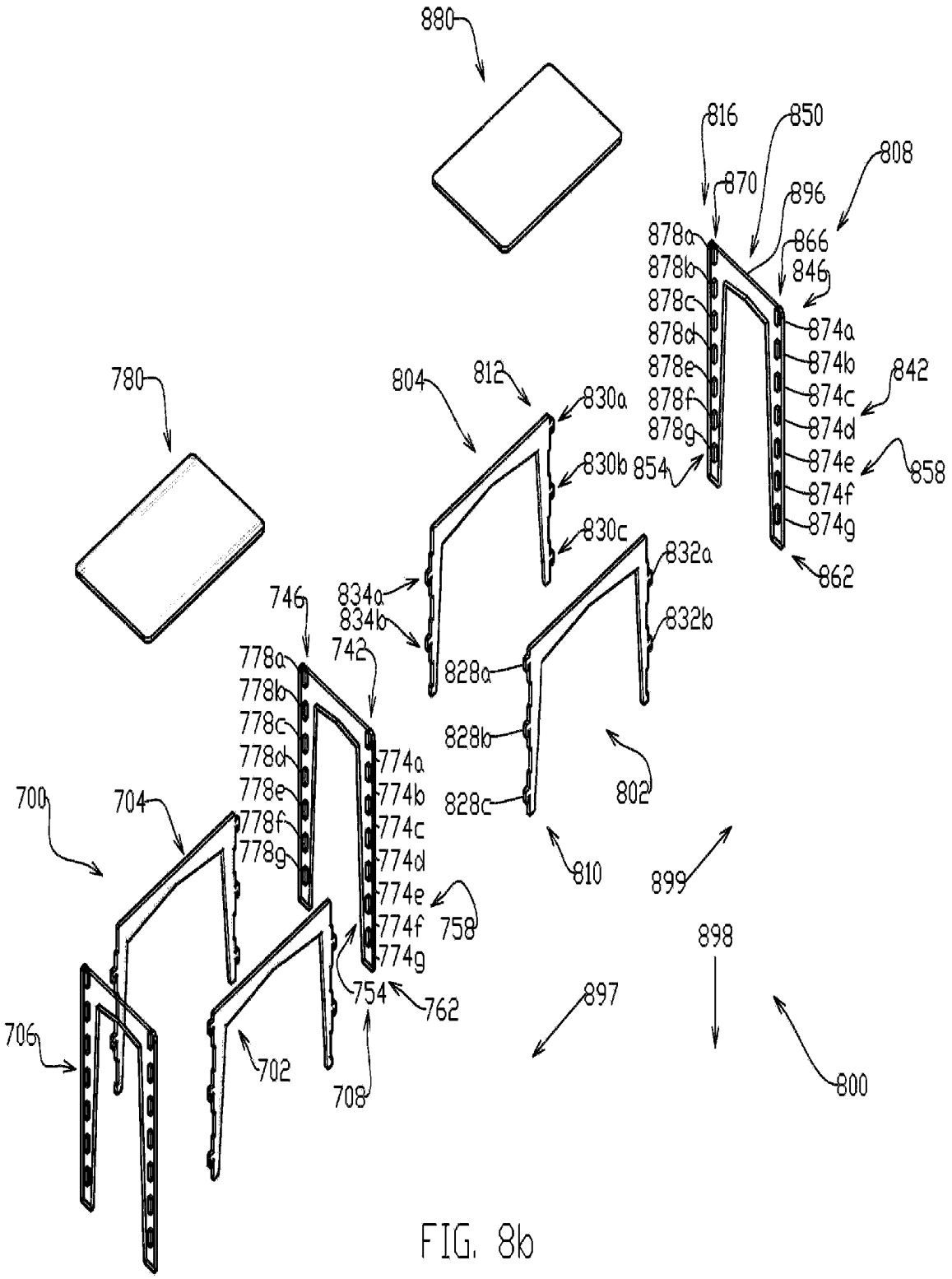
880
816
850
808
870
896
878a
866
878b
846
878c
874a
878d
874b
878e
842
874c
878f
874d
878g
874e
858
854
874f
874g
862
780
804
812
830a
830b
830c
832a
832b
834a
834b
746
742
778a
778b
778c
778d
778e
778f
778g
774a
774b
774c
774d
774e
774f
774g
758
754
762
828a
828b
828c
802
810
899
898
897
800
700
704
706
702
708

FIG. 8b

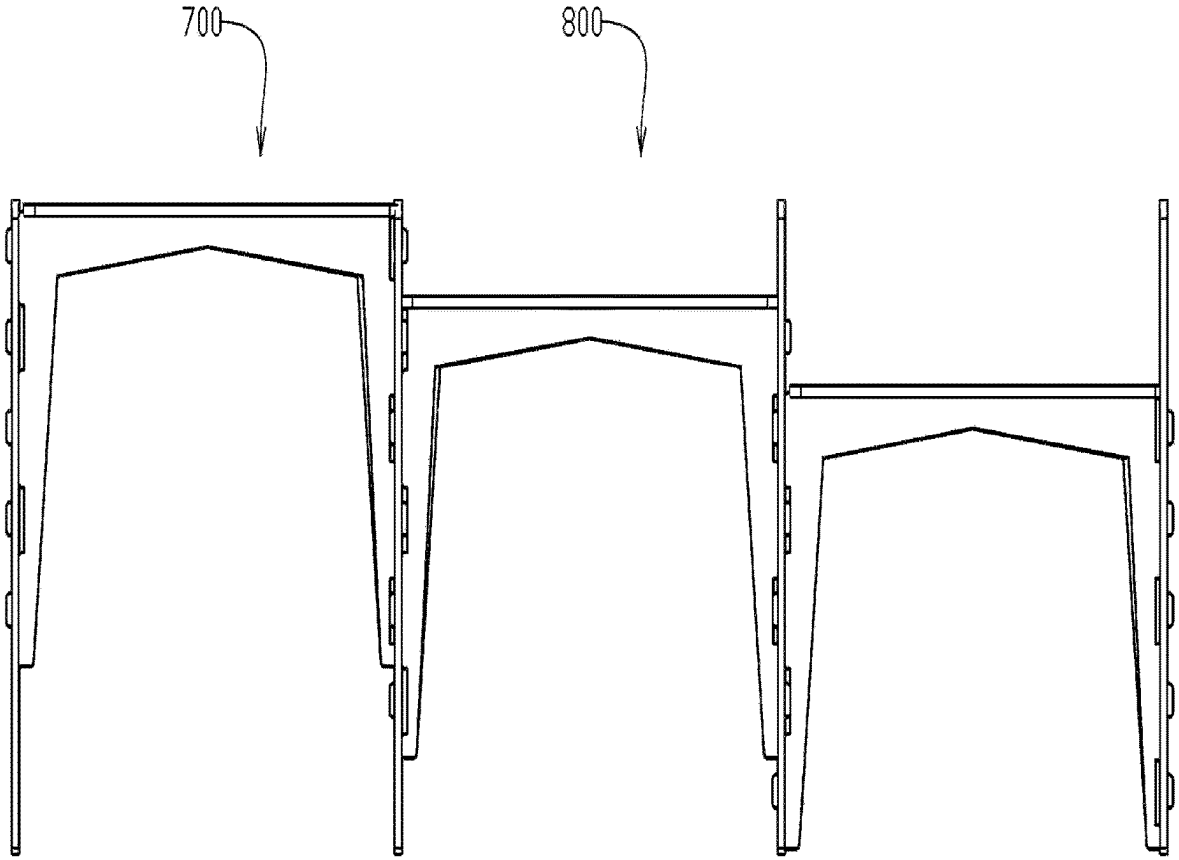

FIG 8c

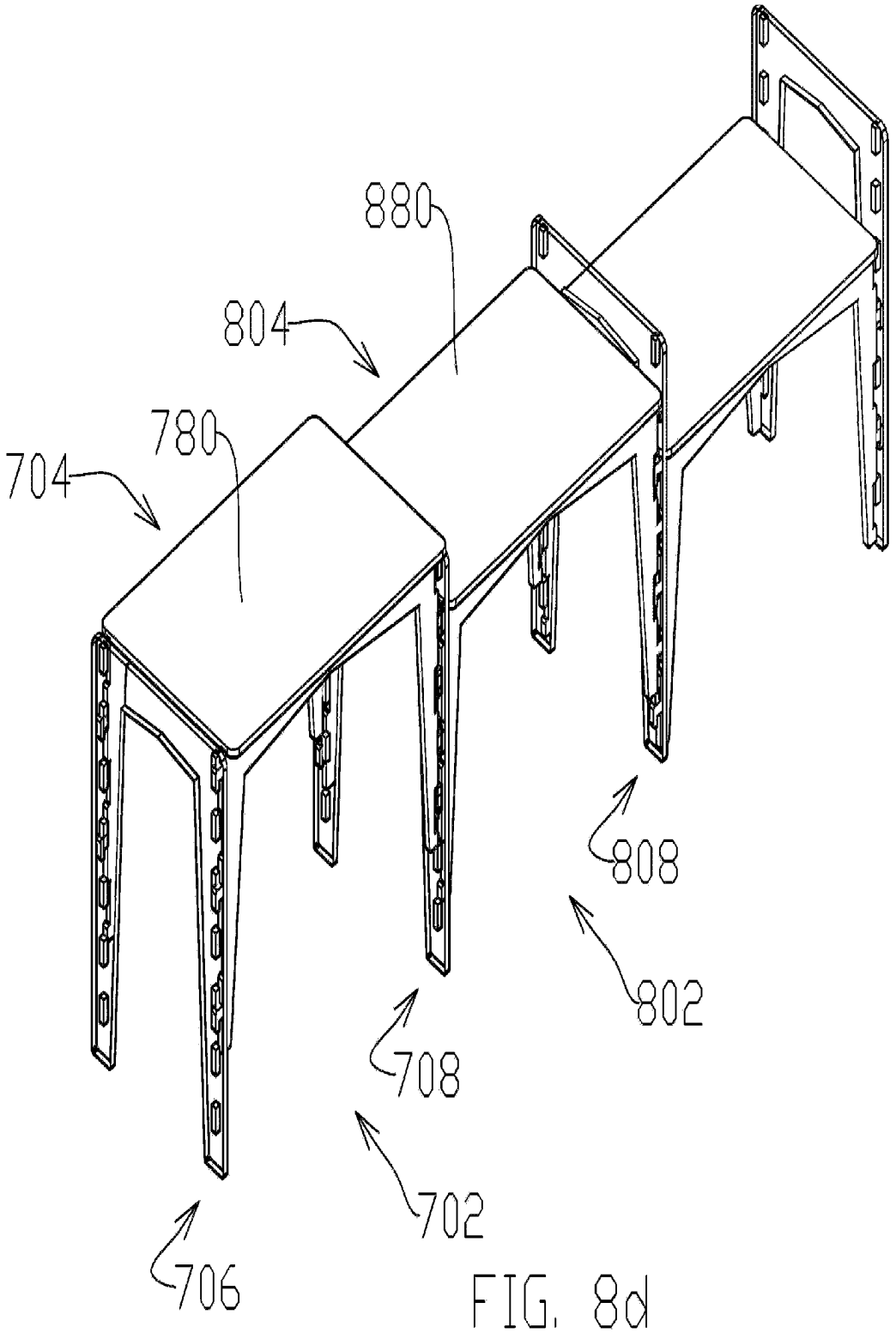

FIG. 8d

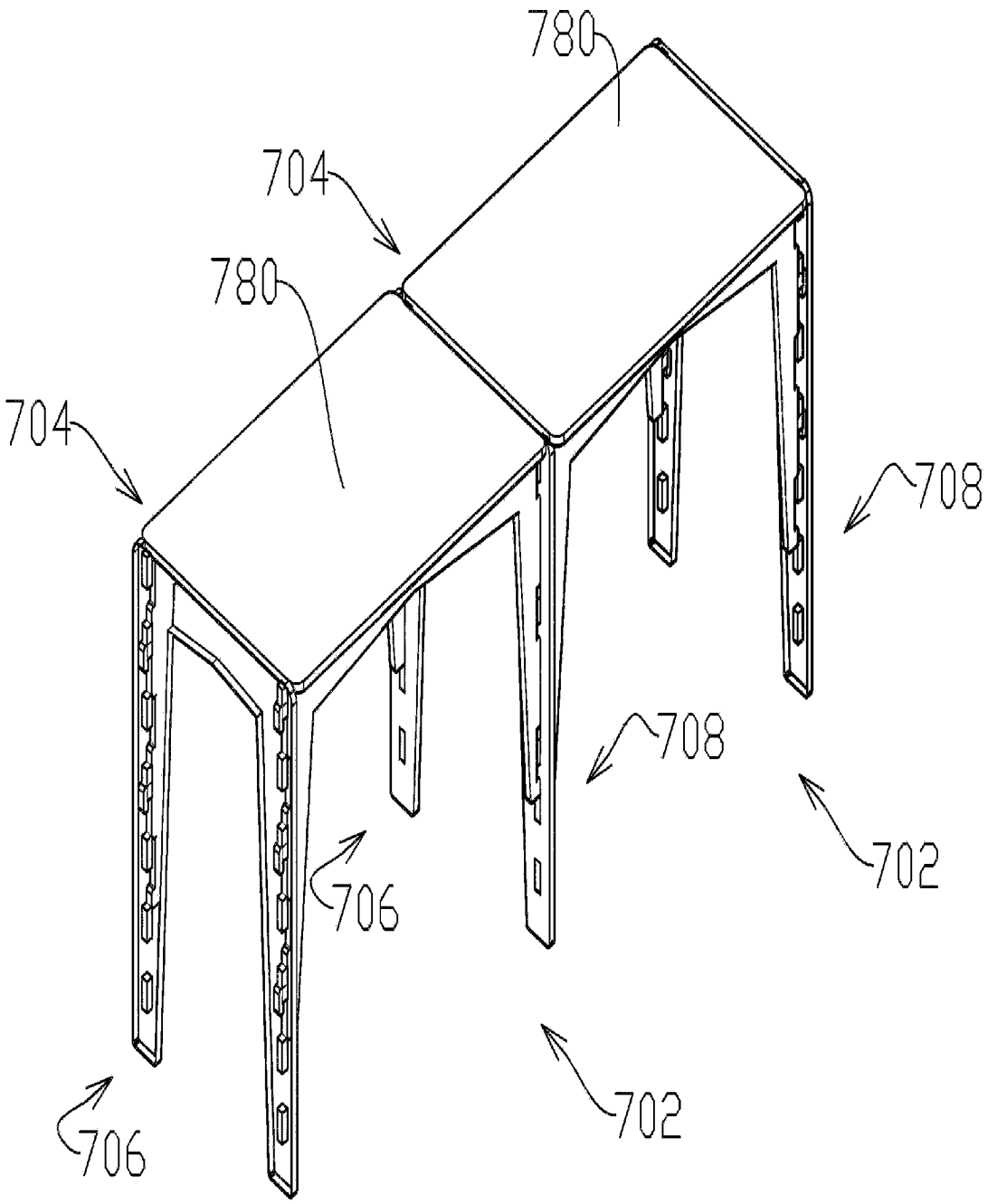

FIG. 8e

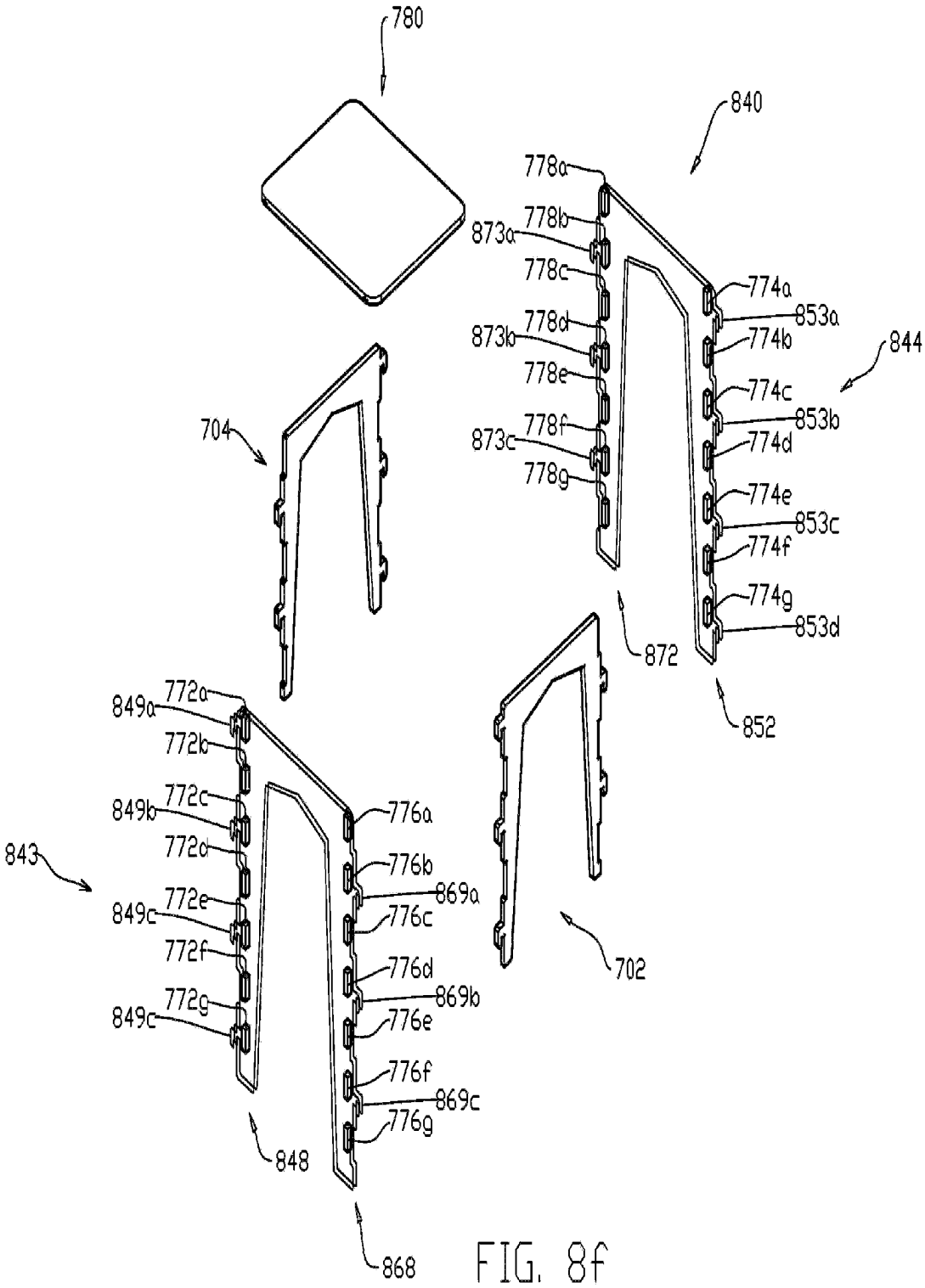
780
840
778a
778b
873a
778c
778d
873b
778e
778f
873c
778g
774a
853a
774b
844
774c
853b
774d
774e
853c
774f
774g
853d
704
872
852
849a
772a
772b
849b
772c
772d
843
772e
849c
772f
772g
849c
776a
776b
869a
776c
776d
869b
776e
776f
869c
776g
702
848
868

FIG. 8f

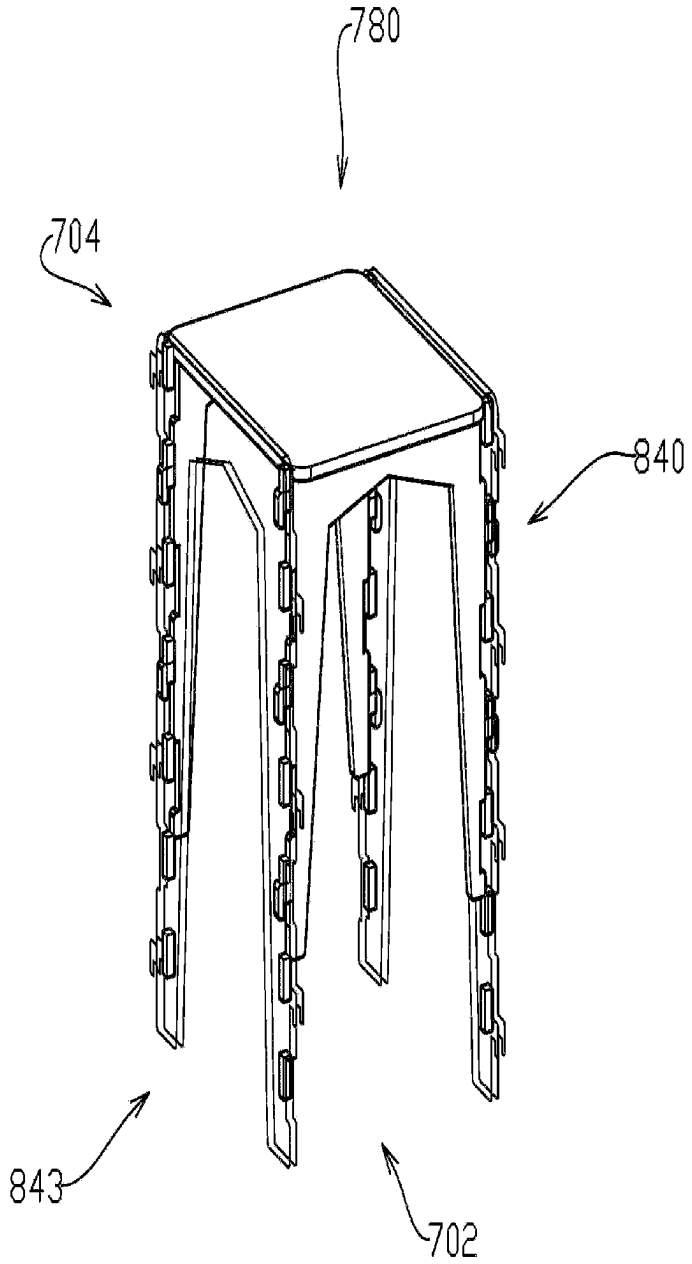

FIG. 8g

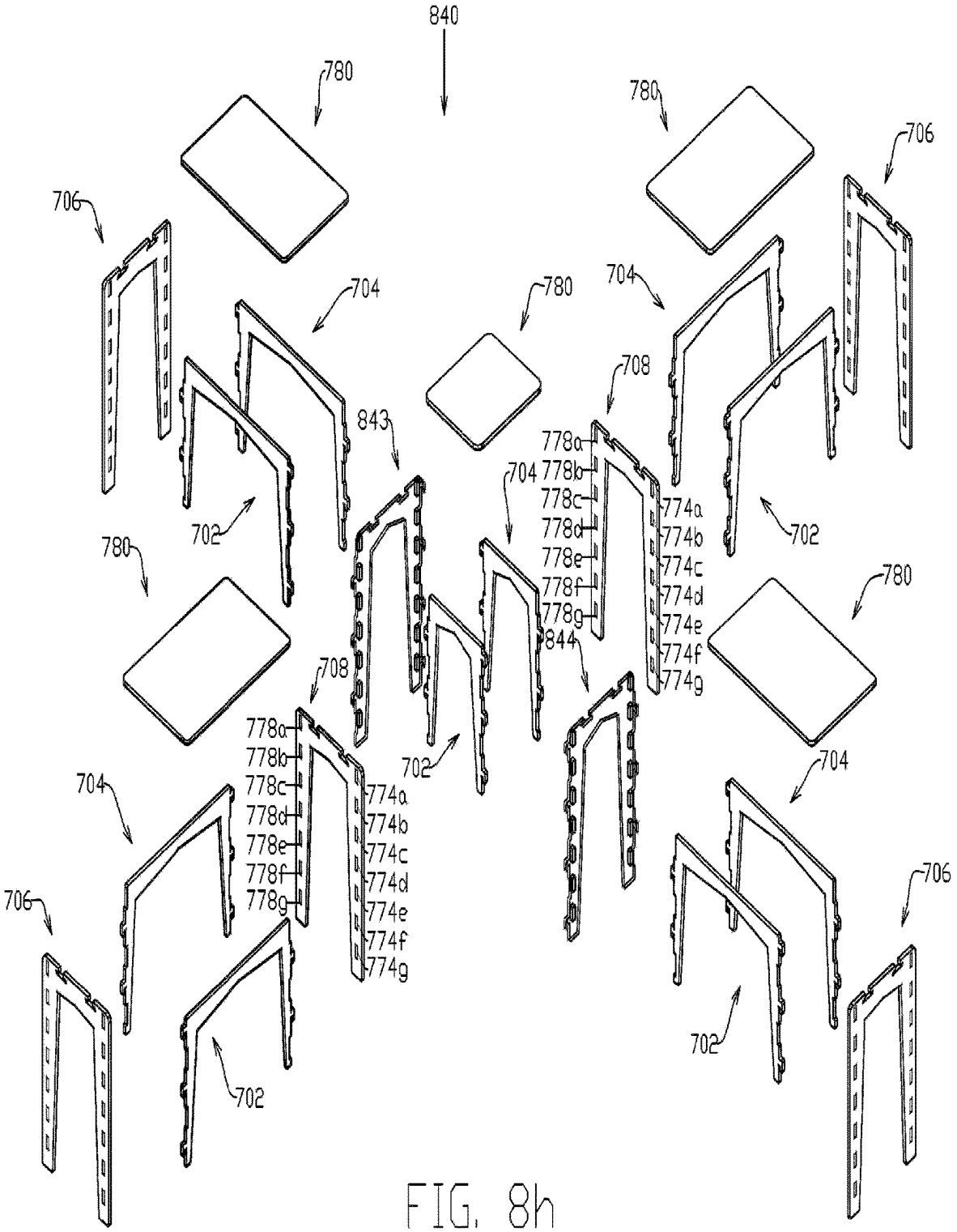
840
780
780
706
706
704
780
704
708
843
778a
704
778b
778c
778d
778e
778f
778g
844
774a
774b
774c
774d
774e
774f
774g
702
702
780
780
708
778a
778b
778c
778d
778e
778f
778g
774a
774b
774c
774d
774e
774f
774g
702
704
704
706
706
702
702

FIG. 8h

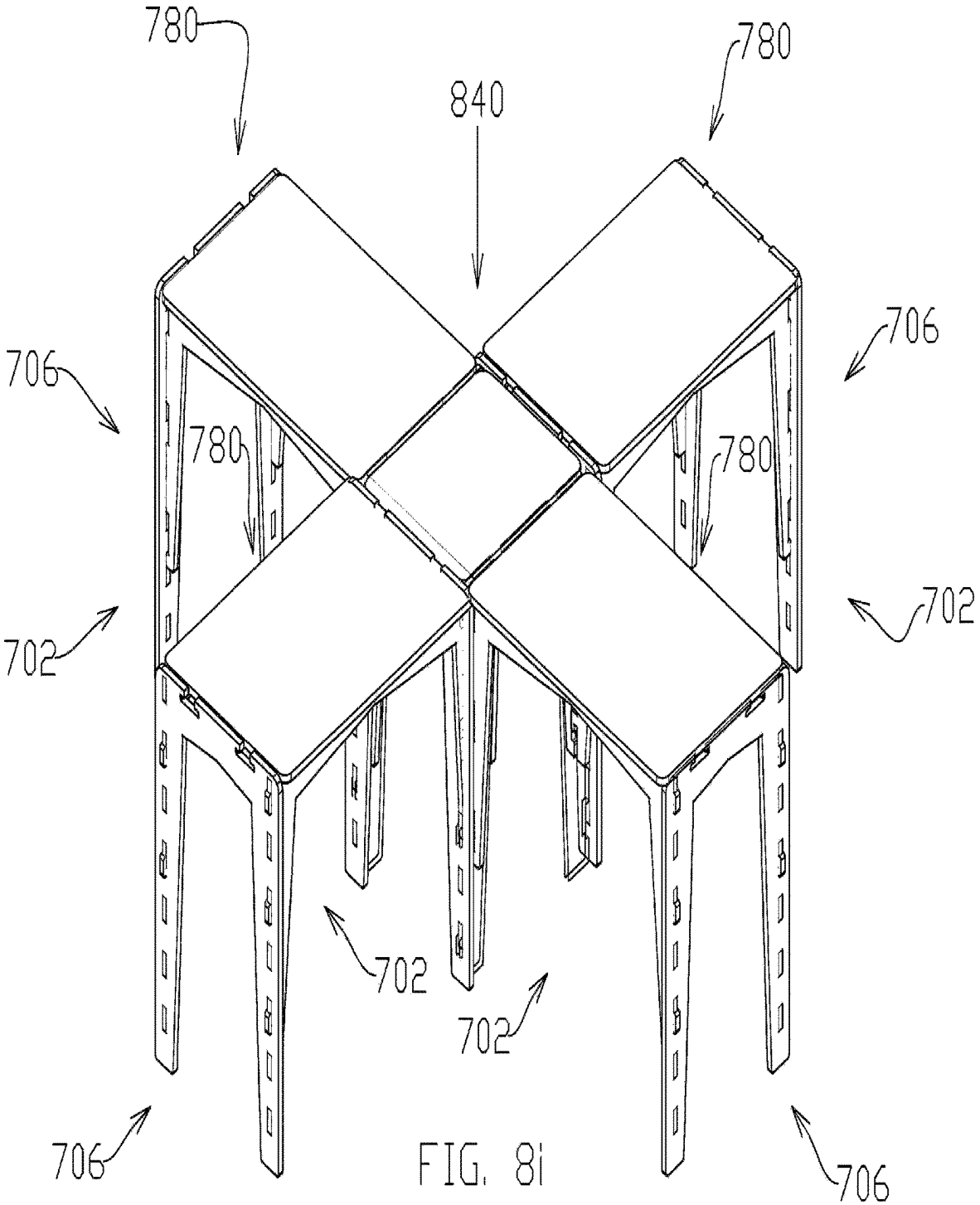

FIG. 81

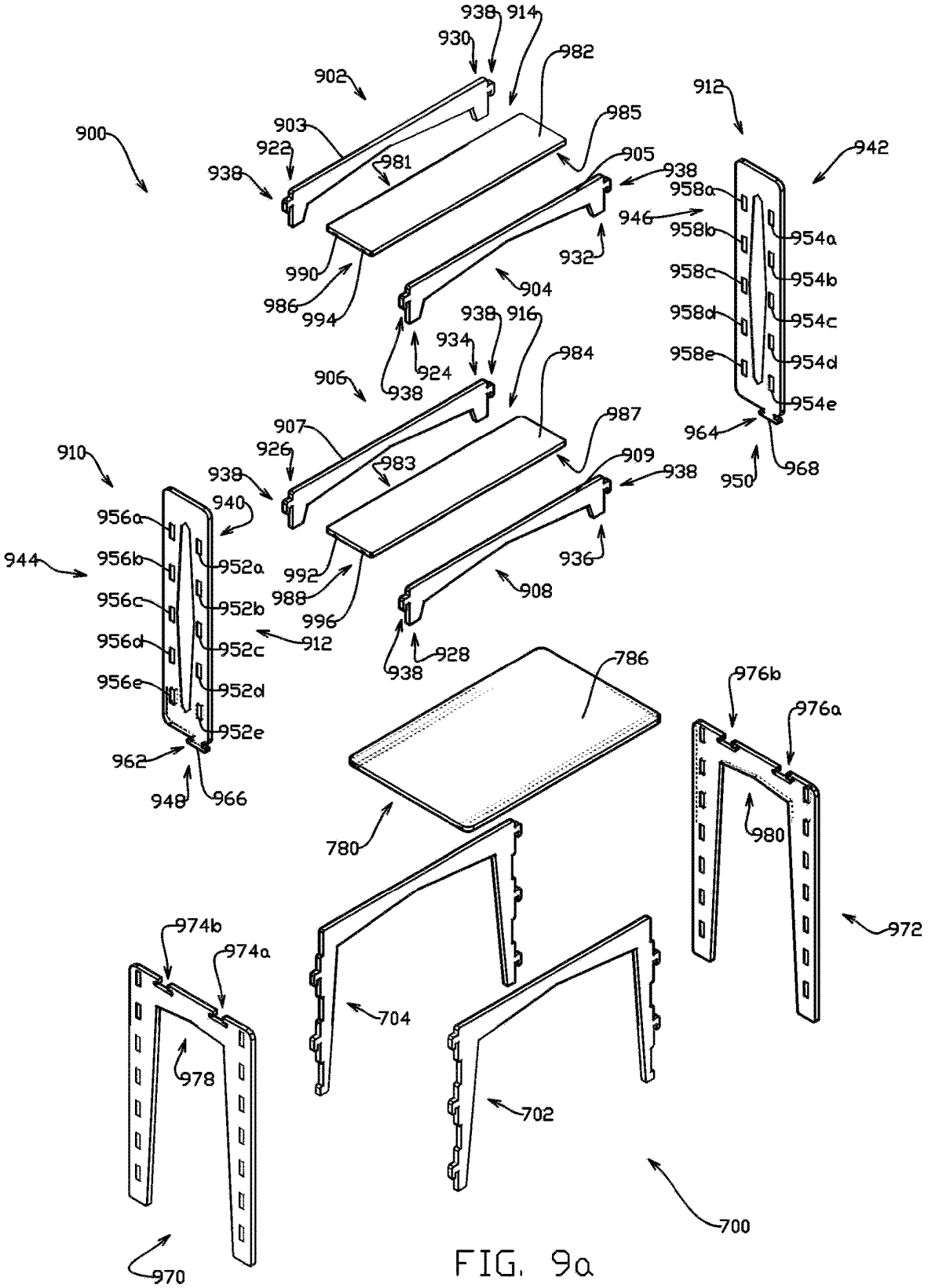
900
902
903
922
938
981
930
914
938
982
985
905
938
990
986
994
904
932
912
942
958a
946
958b
958c
958d
958e
954a
954b
954c
954d
954e
964
968
950
906
938
924
934
938
916
984
907
926
938
983
987
909
938
910
940
956a
956b
956c
956d
956e
944
952a
952b
952c
952d
952e
962
948
966
992
988
996
912
936
908
938
928
786
780
976b
976a
980
972
974b
974a
978
704
702
700
970

FIG. 9a

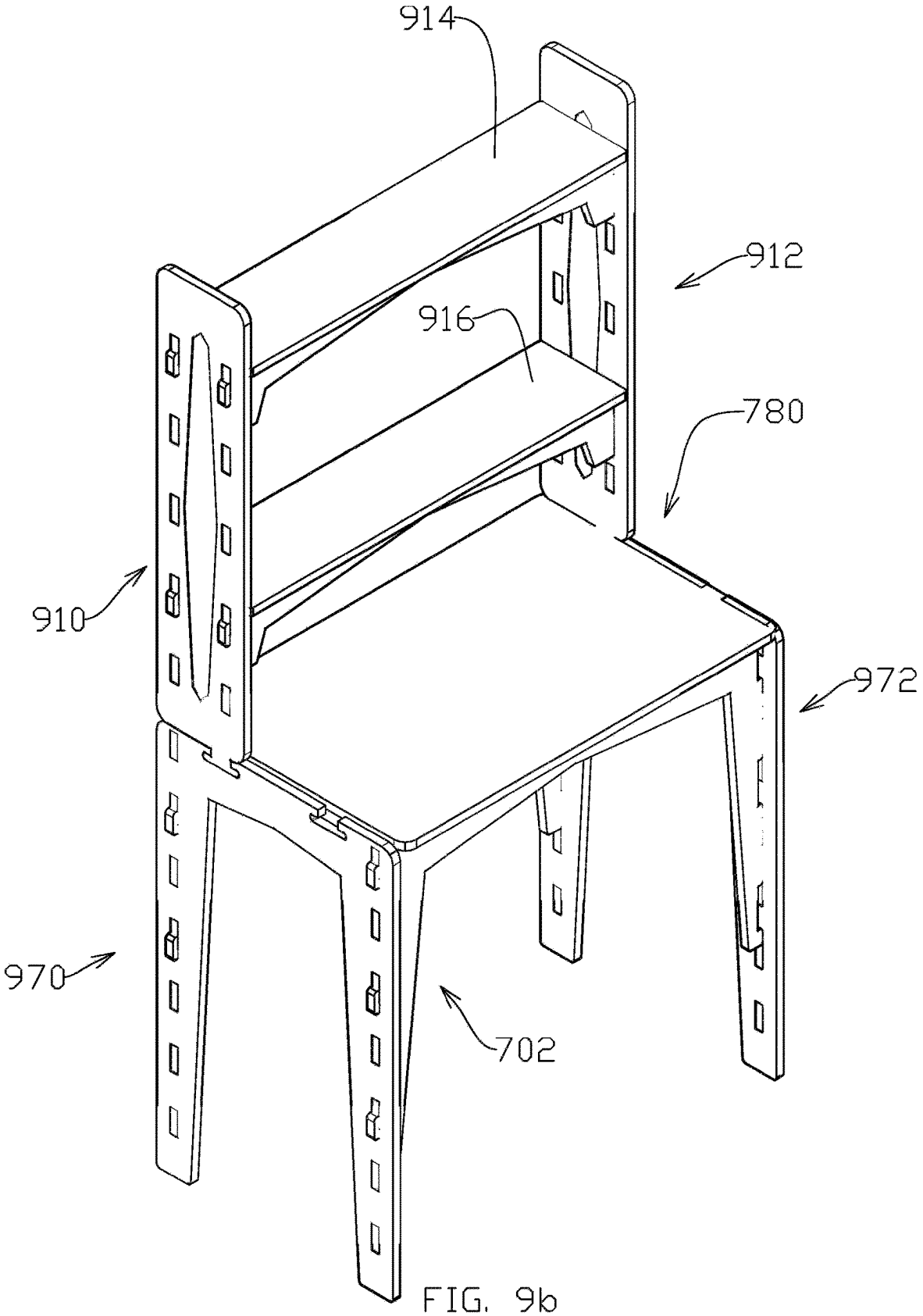

FIG. 9b

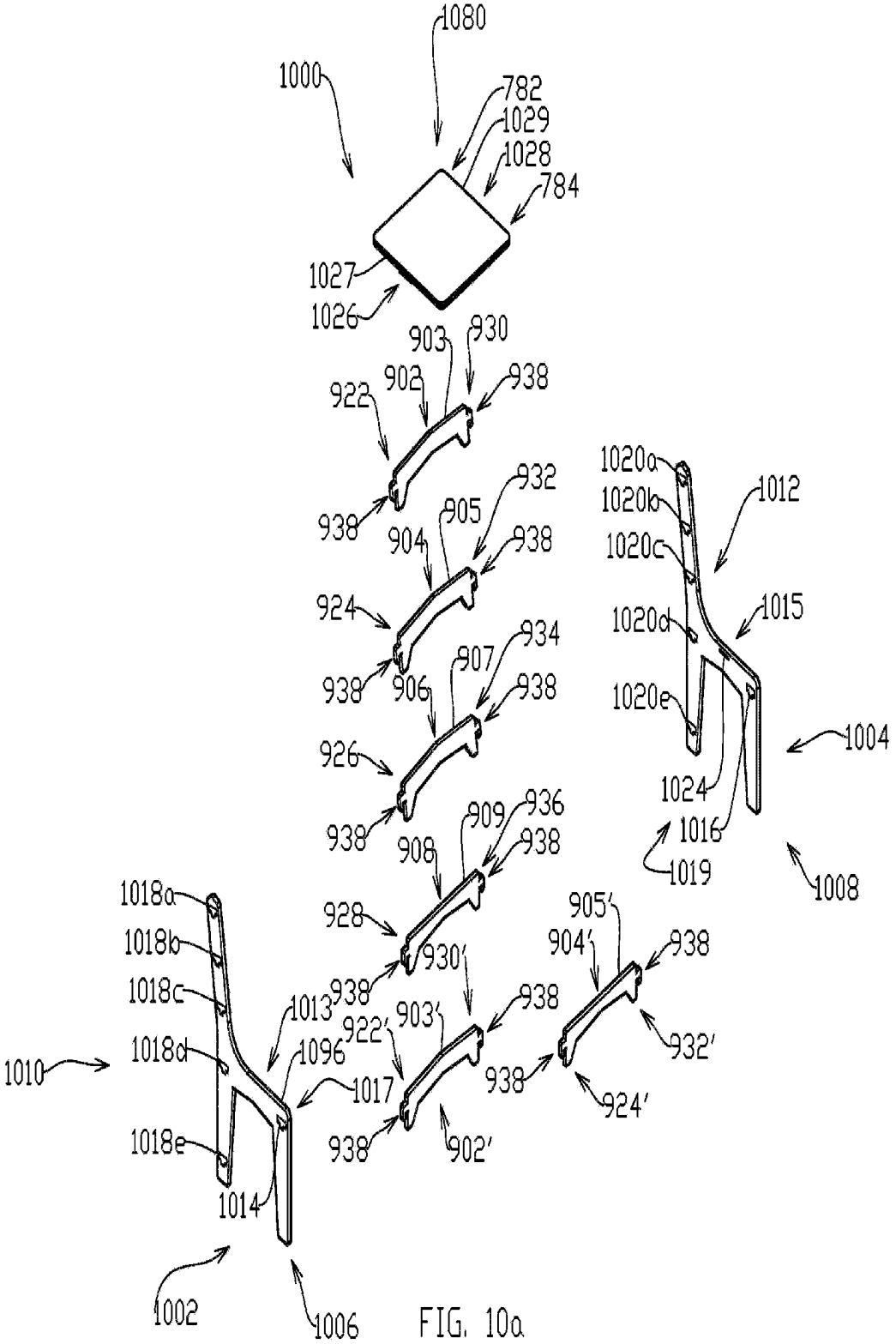
1080
1000
782
1029
1028
784
1027
1026
903
930
902
922
938
932
905
904
938
924
938
934
907
906
938
926
938
936
909
908
938
928
938
930'
905'
904'
938
1018a
1018b
1018c
1018d
1018e
1010
1013
1096
1017
1014
1002
1006
922'
903'
938
938
902'
938
932'
924'
1020a
1020b
1020c
1020d
1020e
1012
1015
1004
1024
1016
1019
1008

FIG. 10a

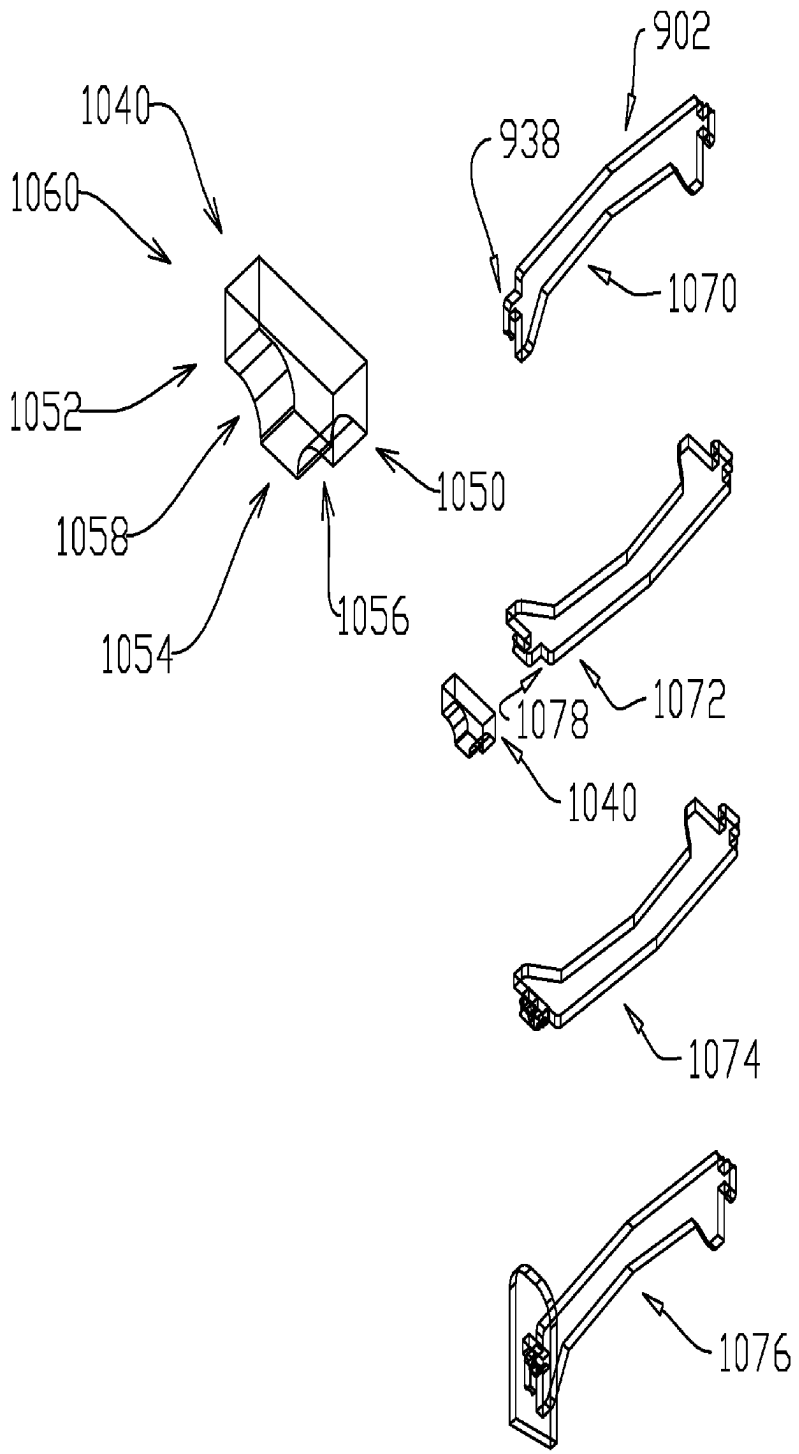
902
1040
938
1060
1070
1052
1050
1058
1056
1054
1072
1078
1040
1074
1076

FIG. 10b

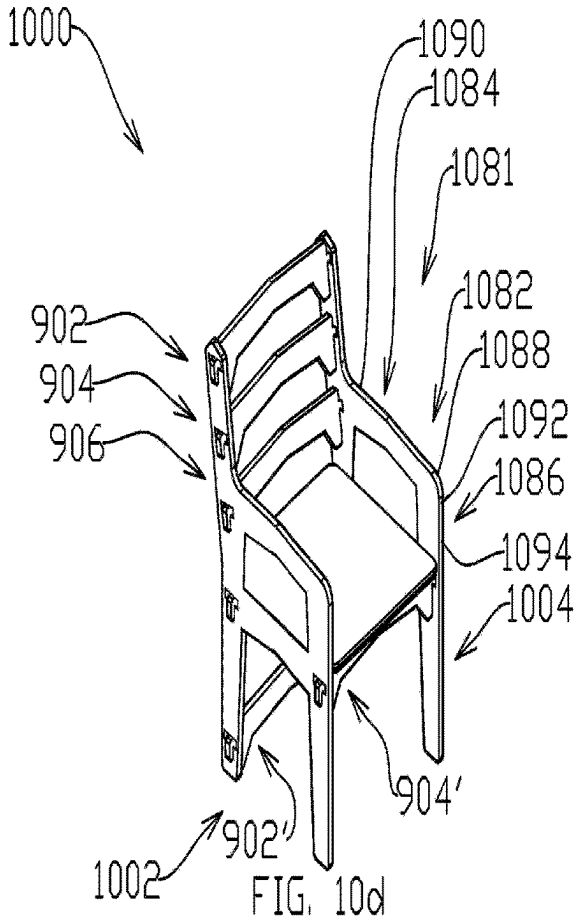

FIG. 10d

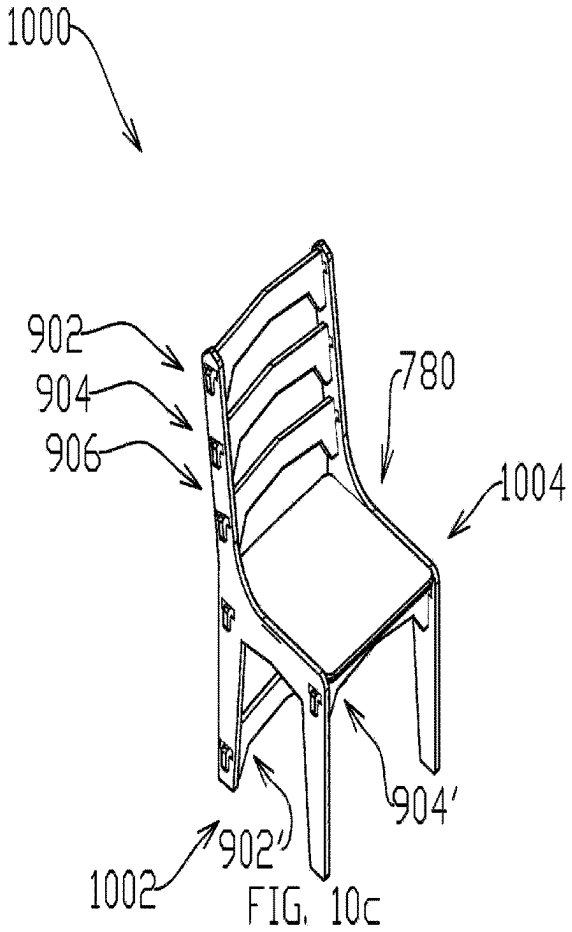

FIG. 10c

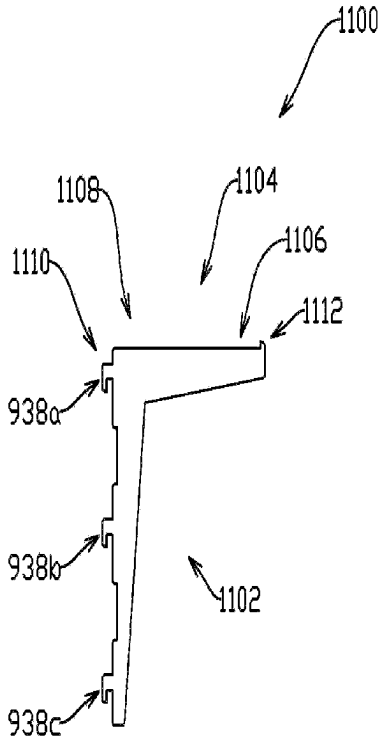

FIG. 11a

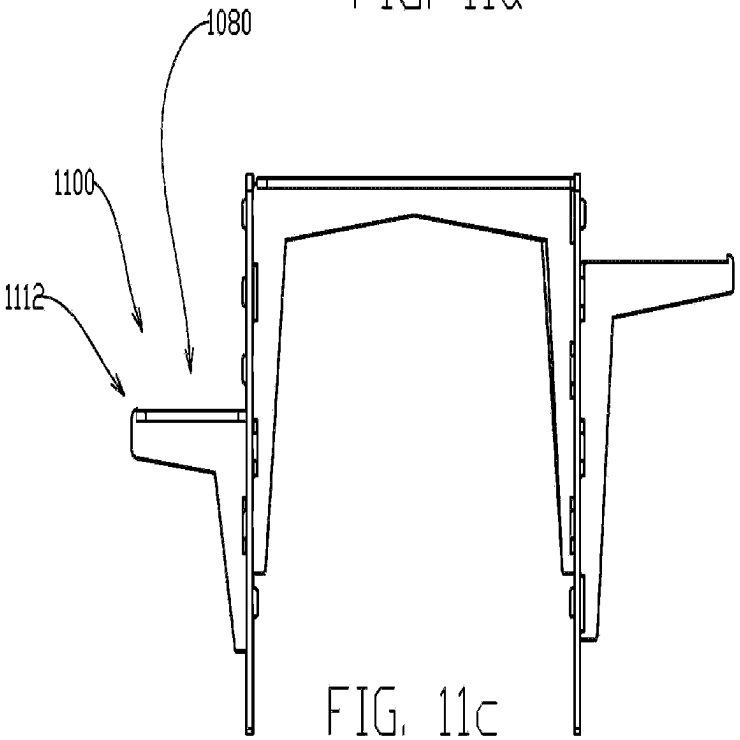

FIG. 11c

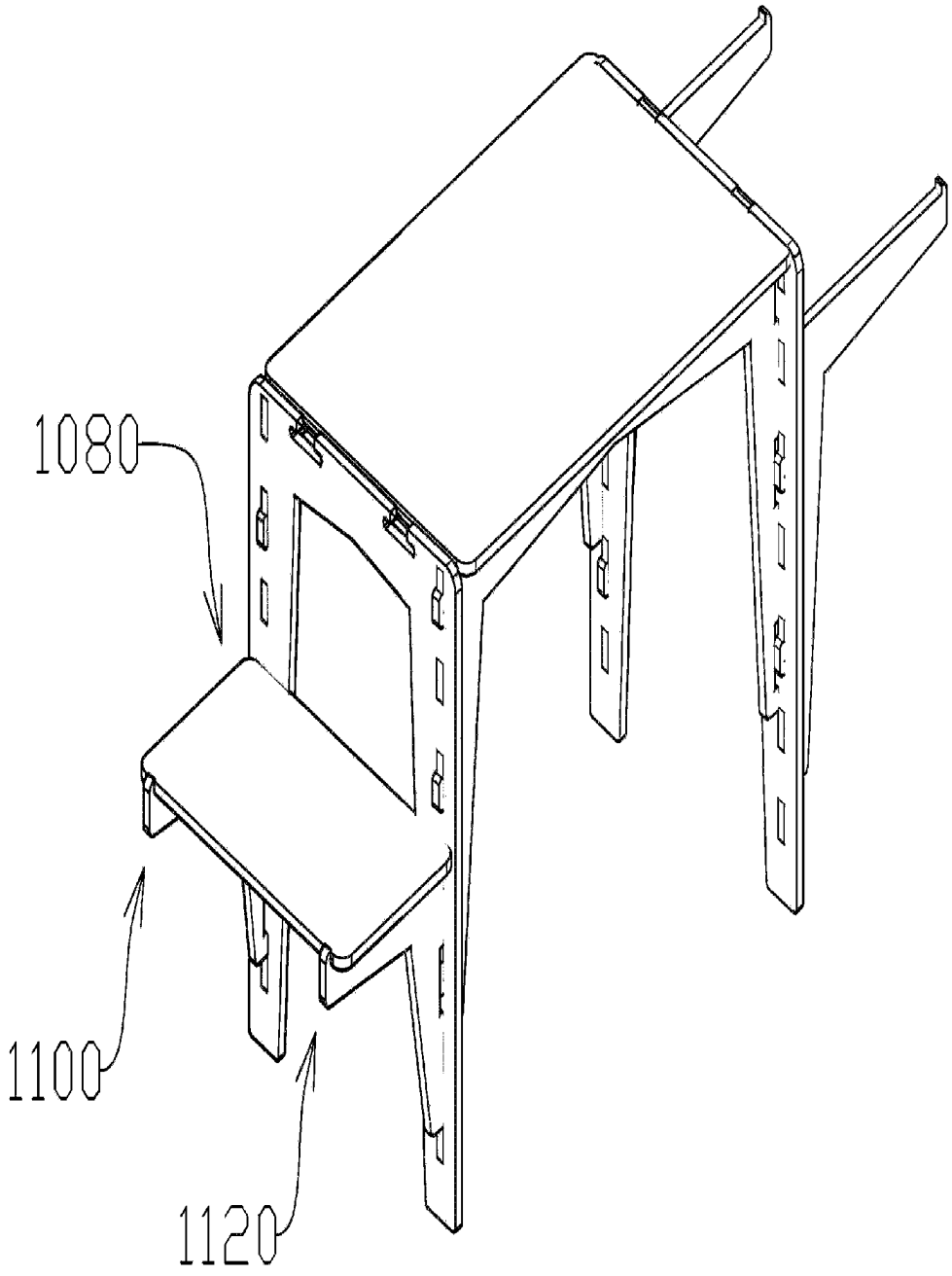

FIG. 11b

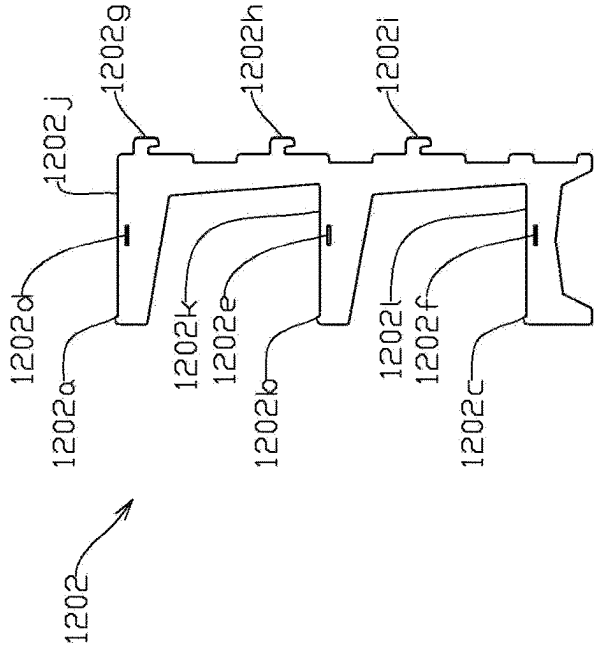

Fig. 12d

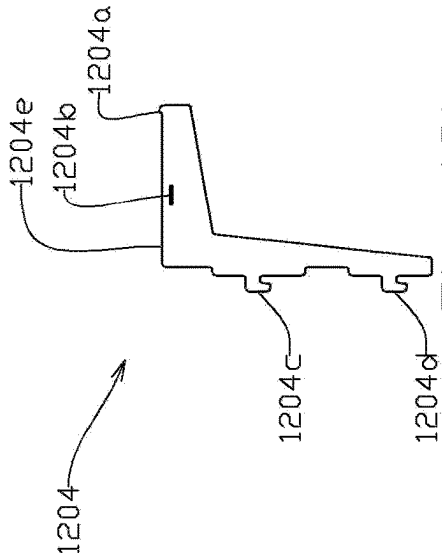

Fig. 12b

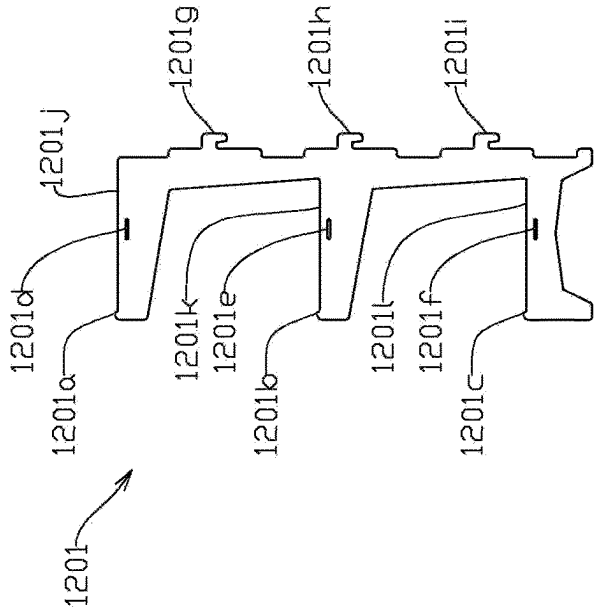

Fig. 12c

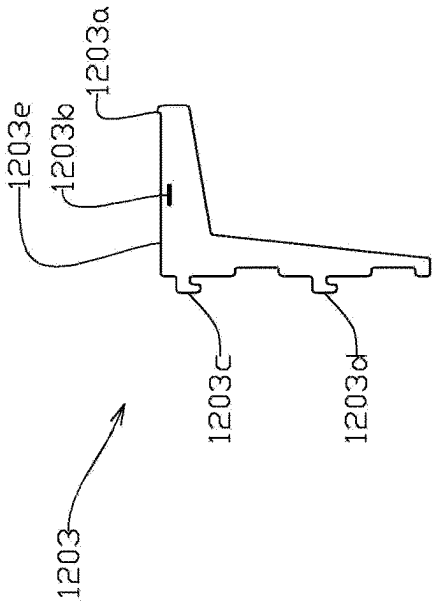

Fig. 12a

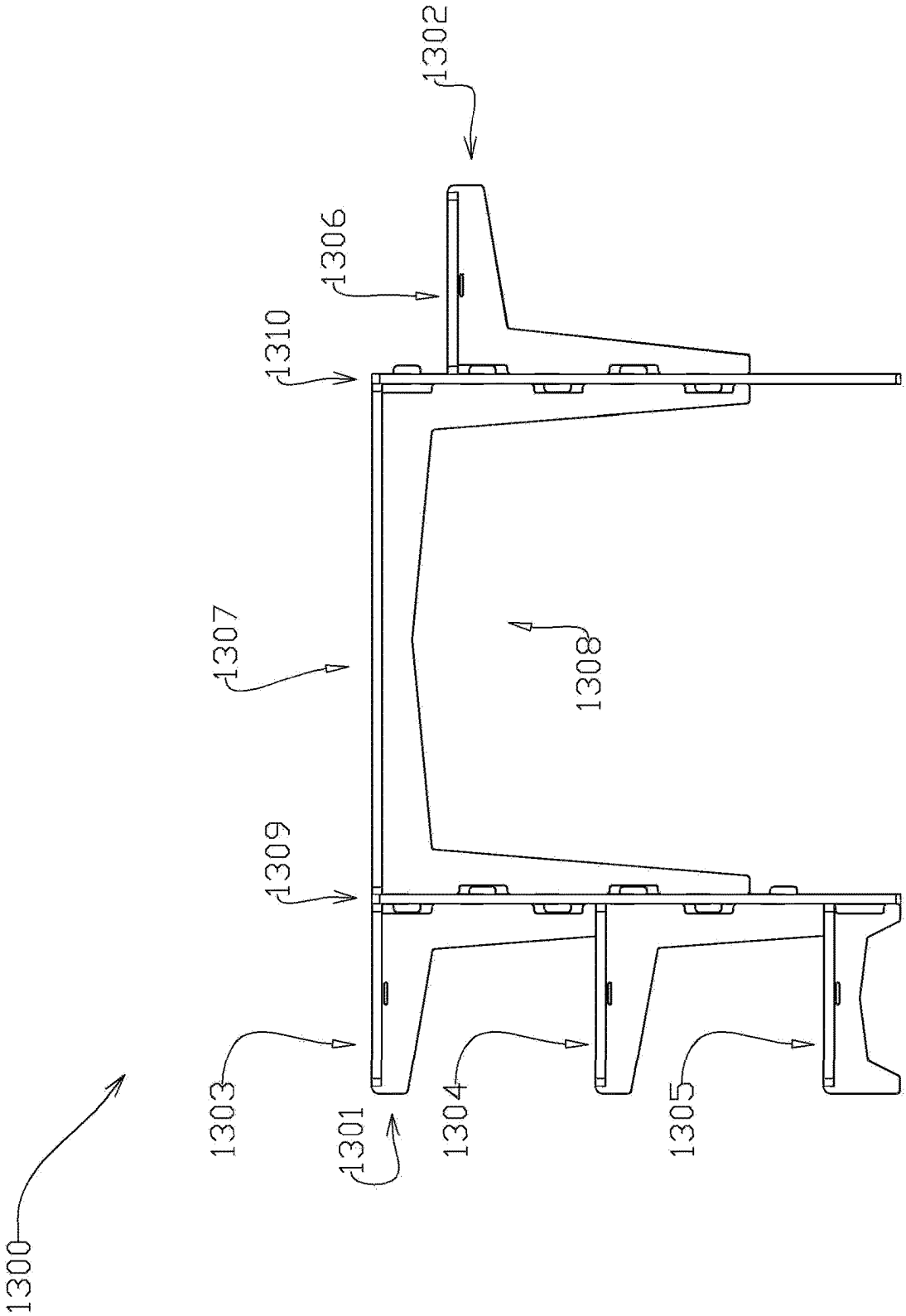

Fig. 13

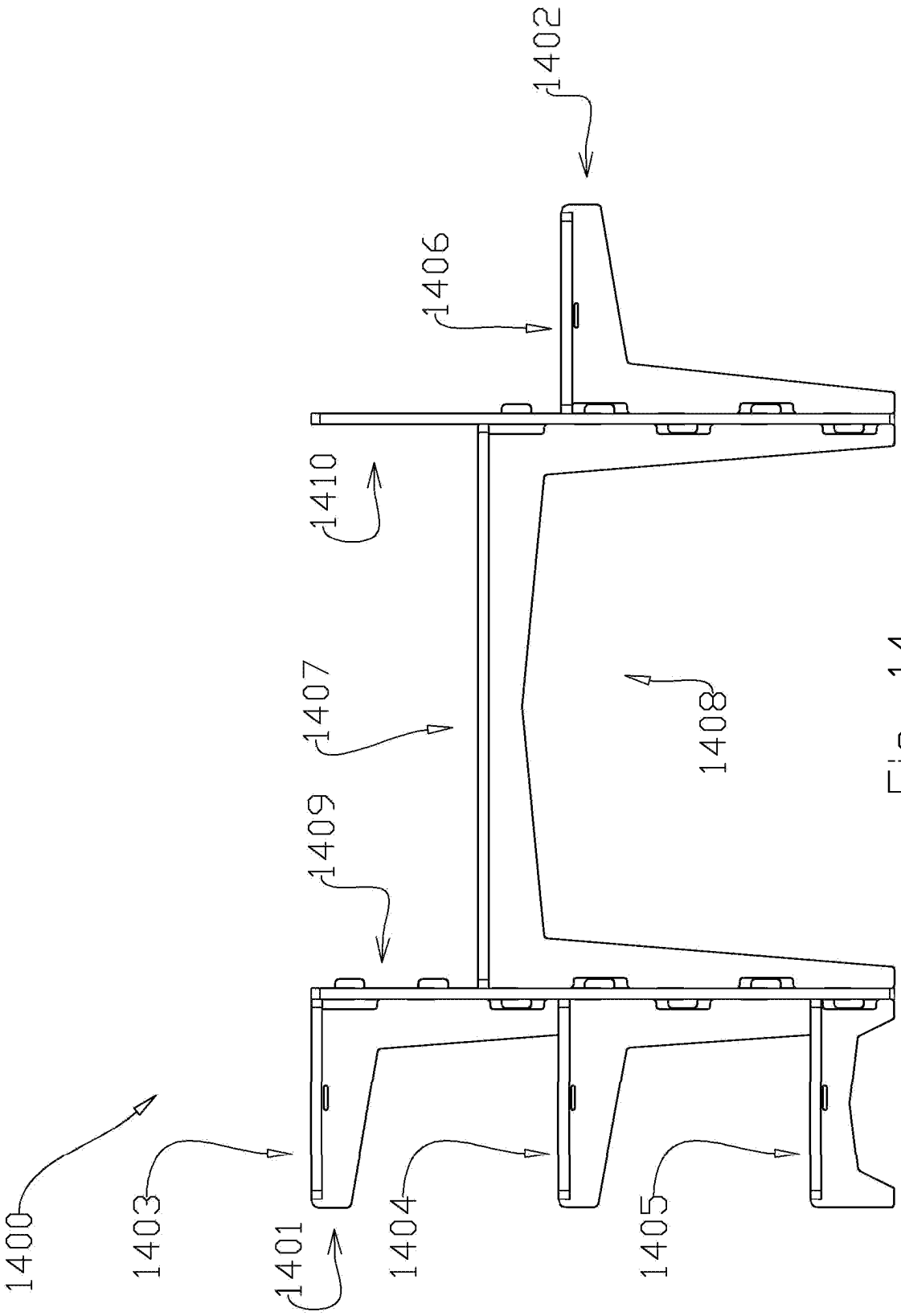

Fig. 14

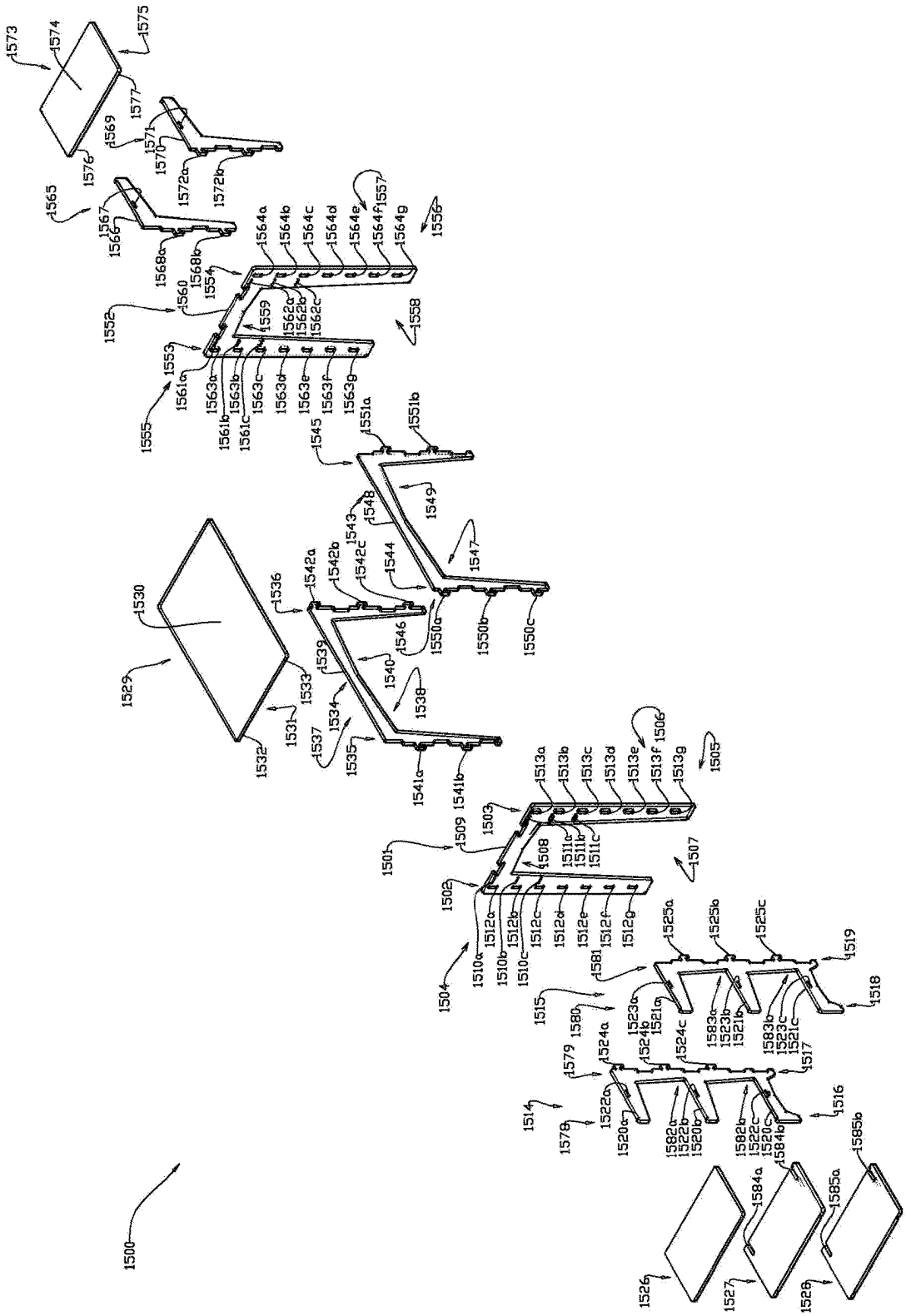

Fig. 15

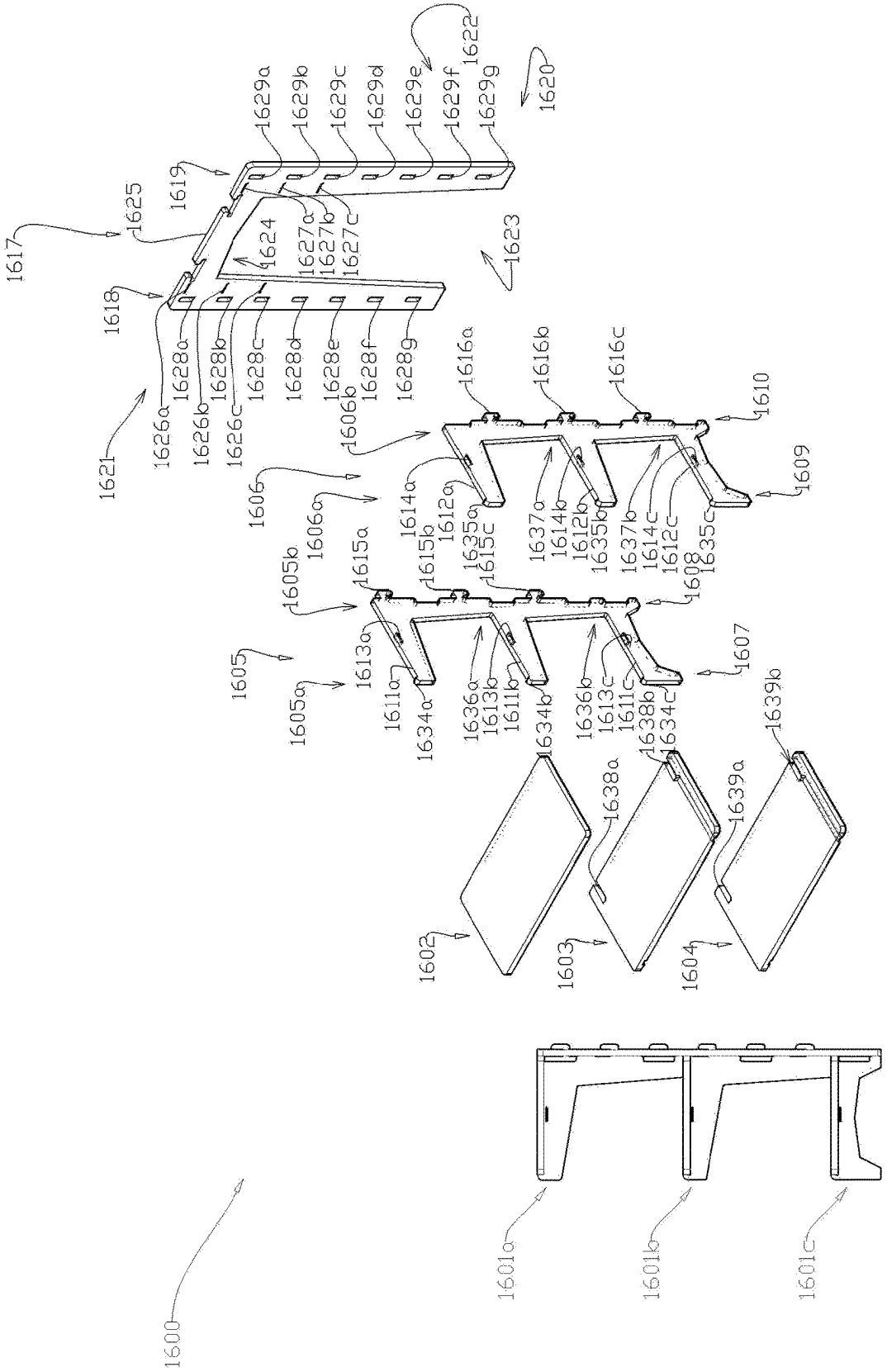

Fig. 16b

Fig. 16a

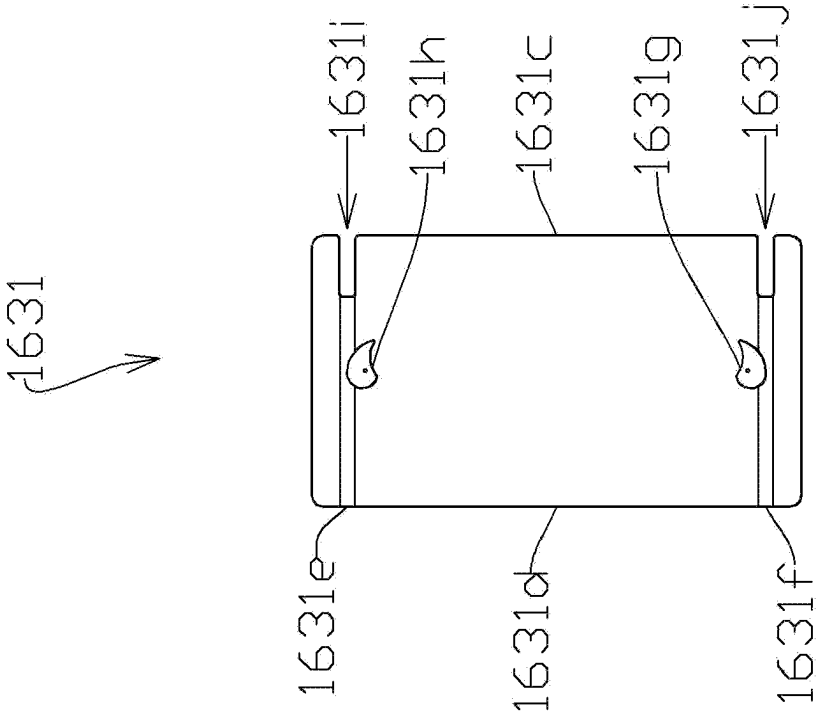

Fig. 16d

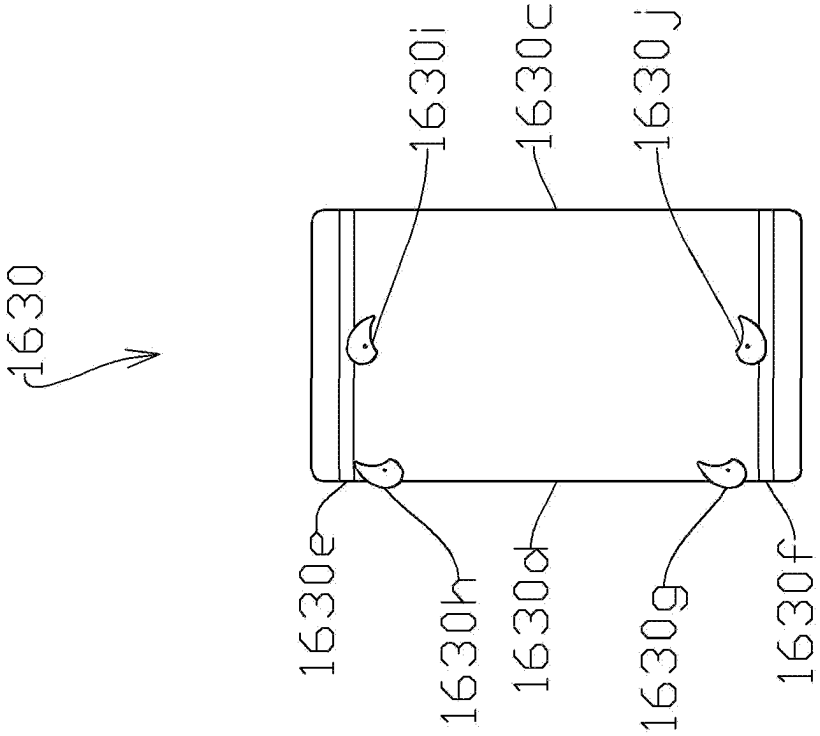

Fig. 16c

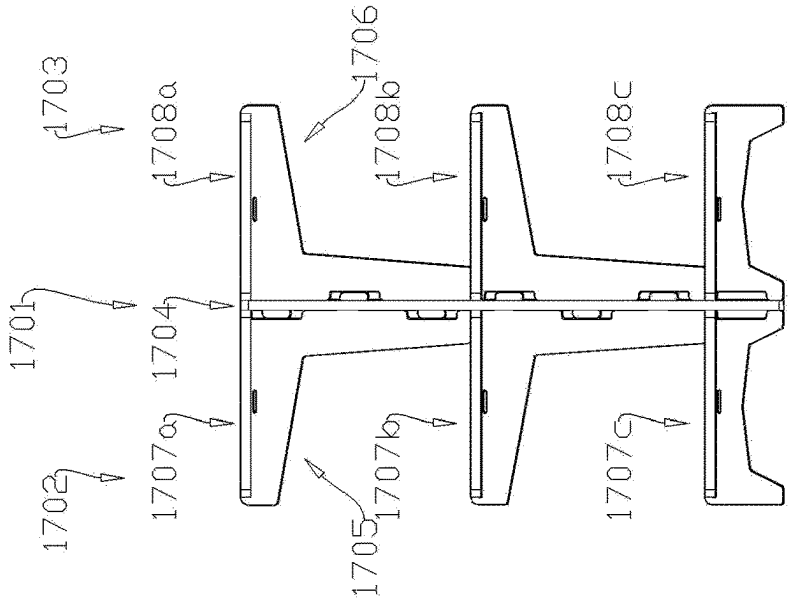

Fig. 17b

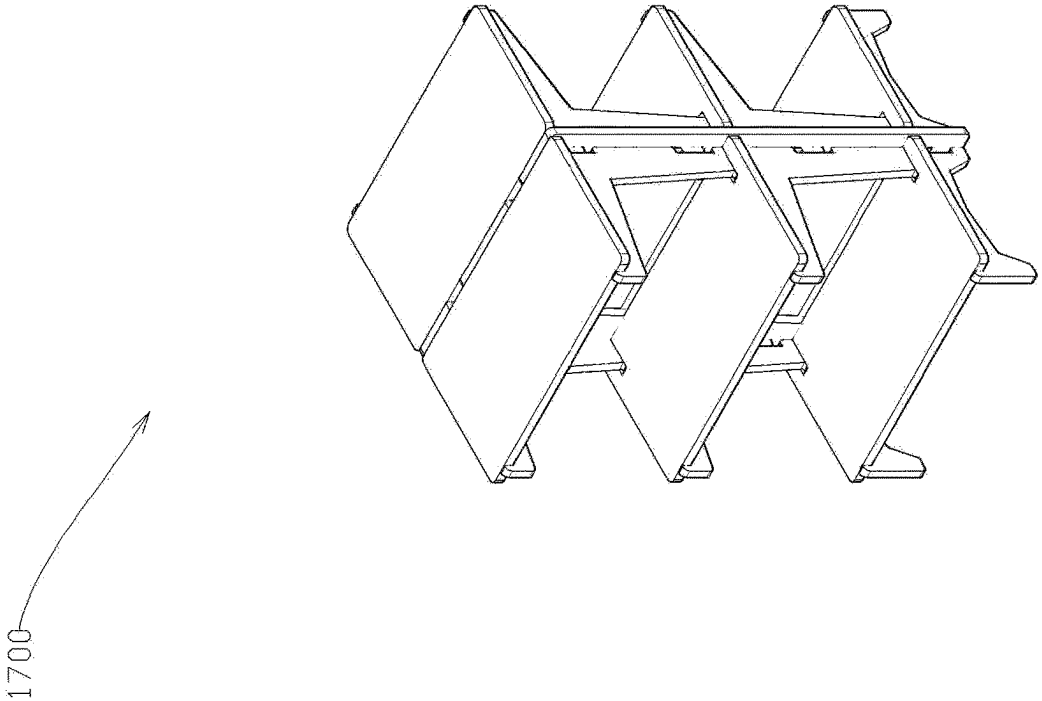

Fig. 17a

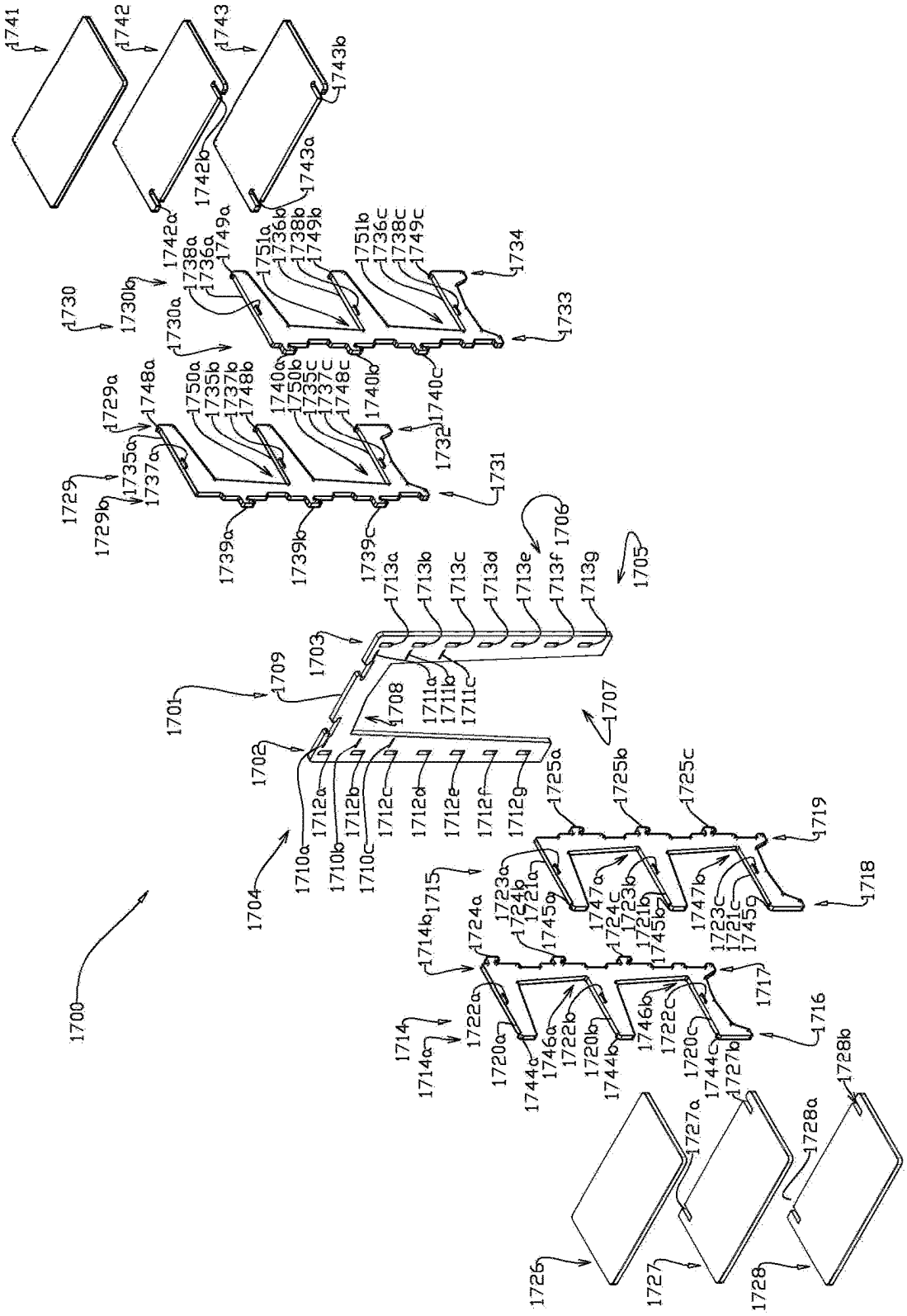
1700
1701
1702
1703
1704
1705
1706
1707
1708
1709
1710a
1710b
1710c
1711a
1711b
1711c
1712a
1712b
1712c
1712d
1712e
1712f
1712g
1713a
1713b
1713c
1713d
1713e
1713f
1713g
1714
1714a
1714b
1715
1716
1717
1718
1719
1720a
1720b
1720c
1721a
1721b
1721c
1722a
1722b
1722c
1723a
1723b
1723c
1724a
1724b
1724c
1725a
1725b
1725c
1726
1727
1727a
1727b
1728
1728a
1728b
1729
1729a
1729b
1730
1730a
1730b
1731
1732
1733
1734
1735a
1735b
1735c
1736a
1736b
1736c
1737a
1737b
1737c
1738a
1738b
1738c
1739a
1739b
1739c
1740a
1740b
1740c
1741
1742
1742a
1742b
1743
1743a
1743b
1744a
1744b
1744c
1745a
1745b
1745c
1746a
1746b
1747a
1747b
1748a
1748b
1748c
1749a
1749b
1749c
1750a
1750b
1750c
1751a
1751b

Fig. 17c

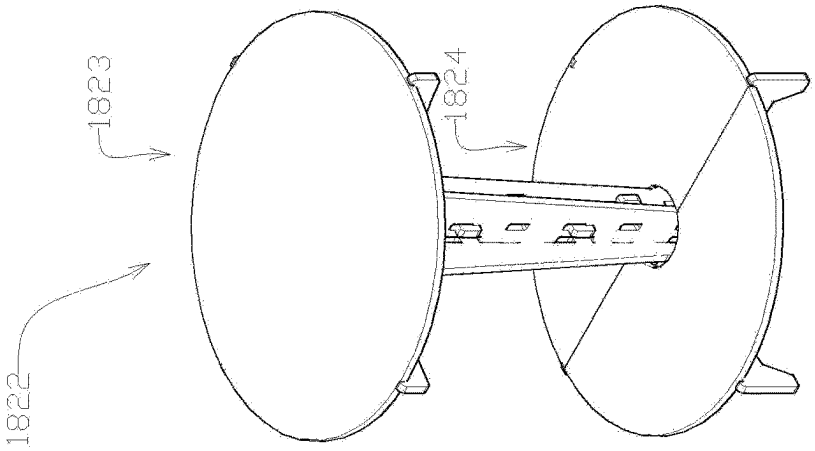

Fig. 18c

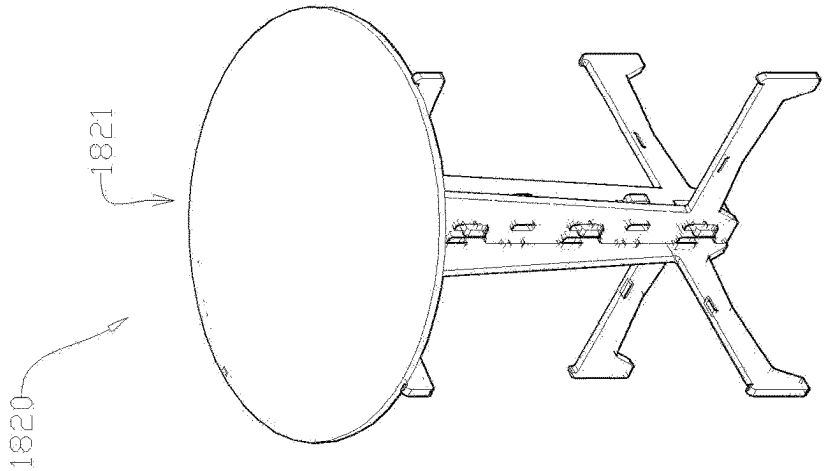

Fig. 18b

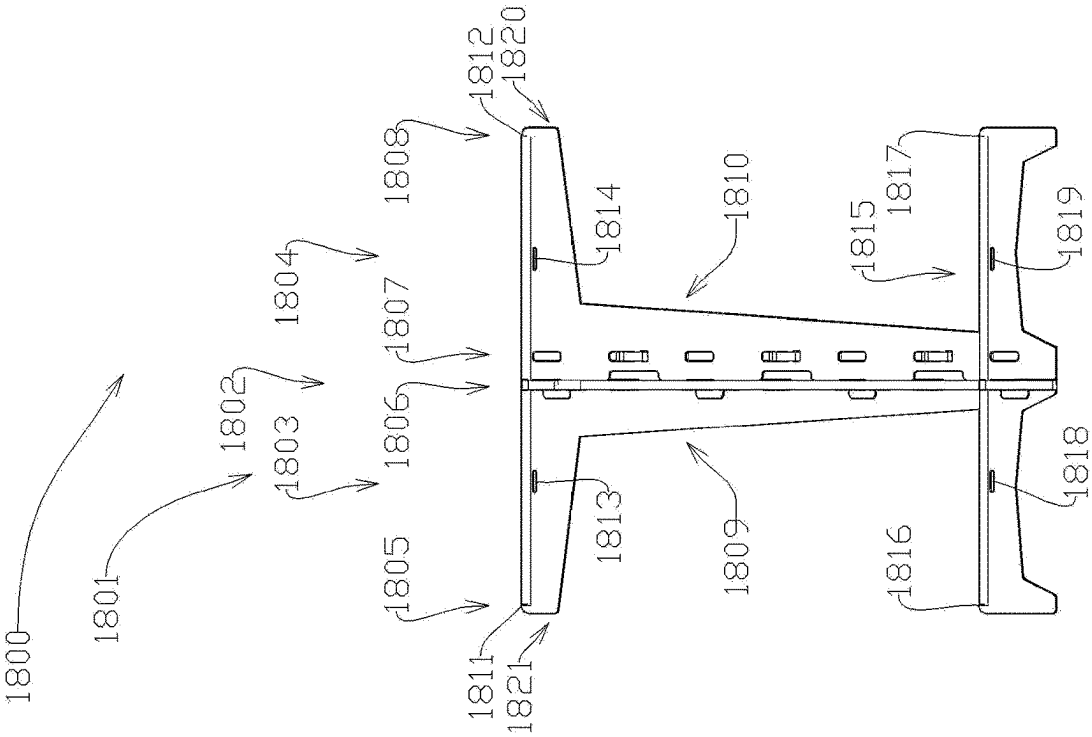

Fig. 18a

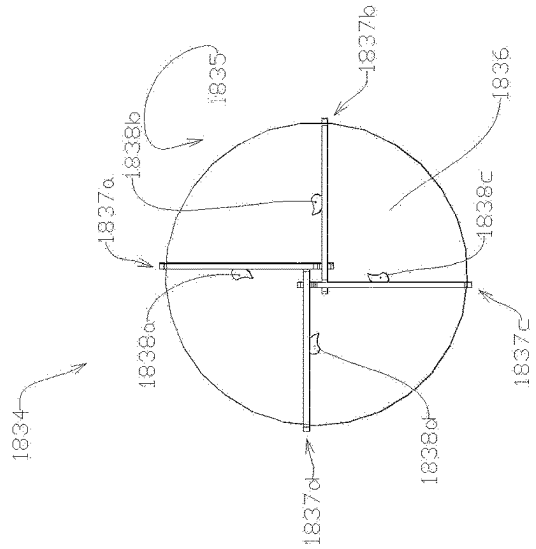

Fig. 18f

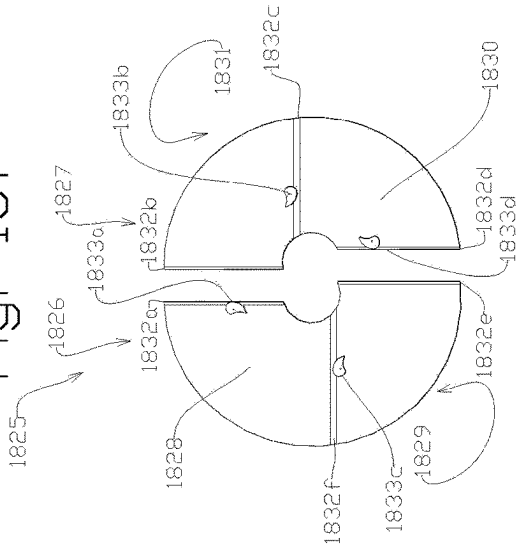

Fig. 18e

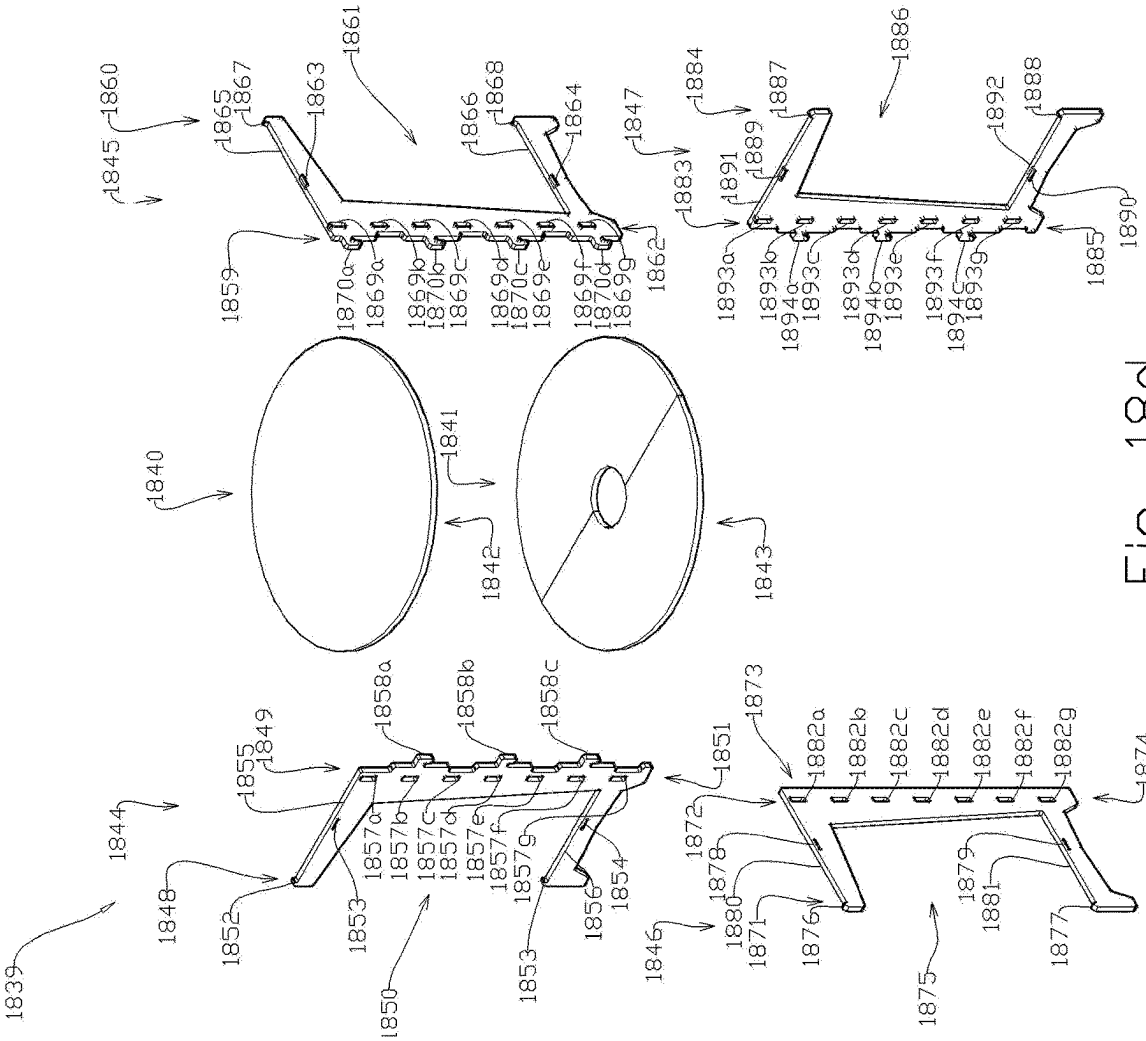

Fig. 18d

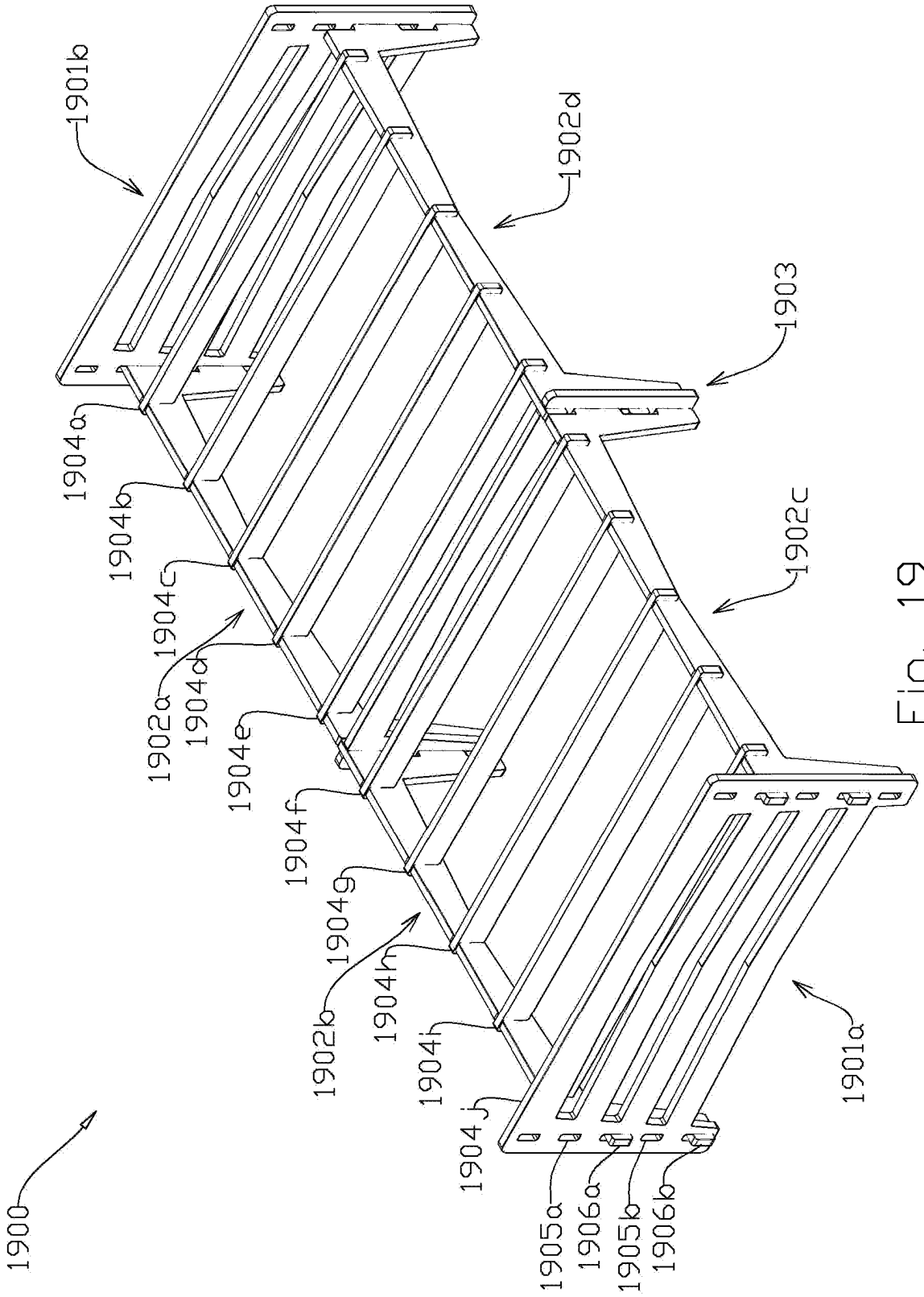
1900
1901b
1904a
1904b
1904c
1902a
1904d
1904e
1904f
1904g
1904h
1902b
1904i
1904j
1905a
1906a
1905b
1906b
1901a
1902c
1903
1902d

Fig. 19

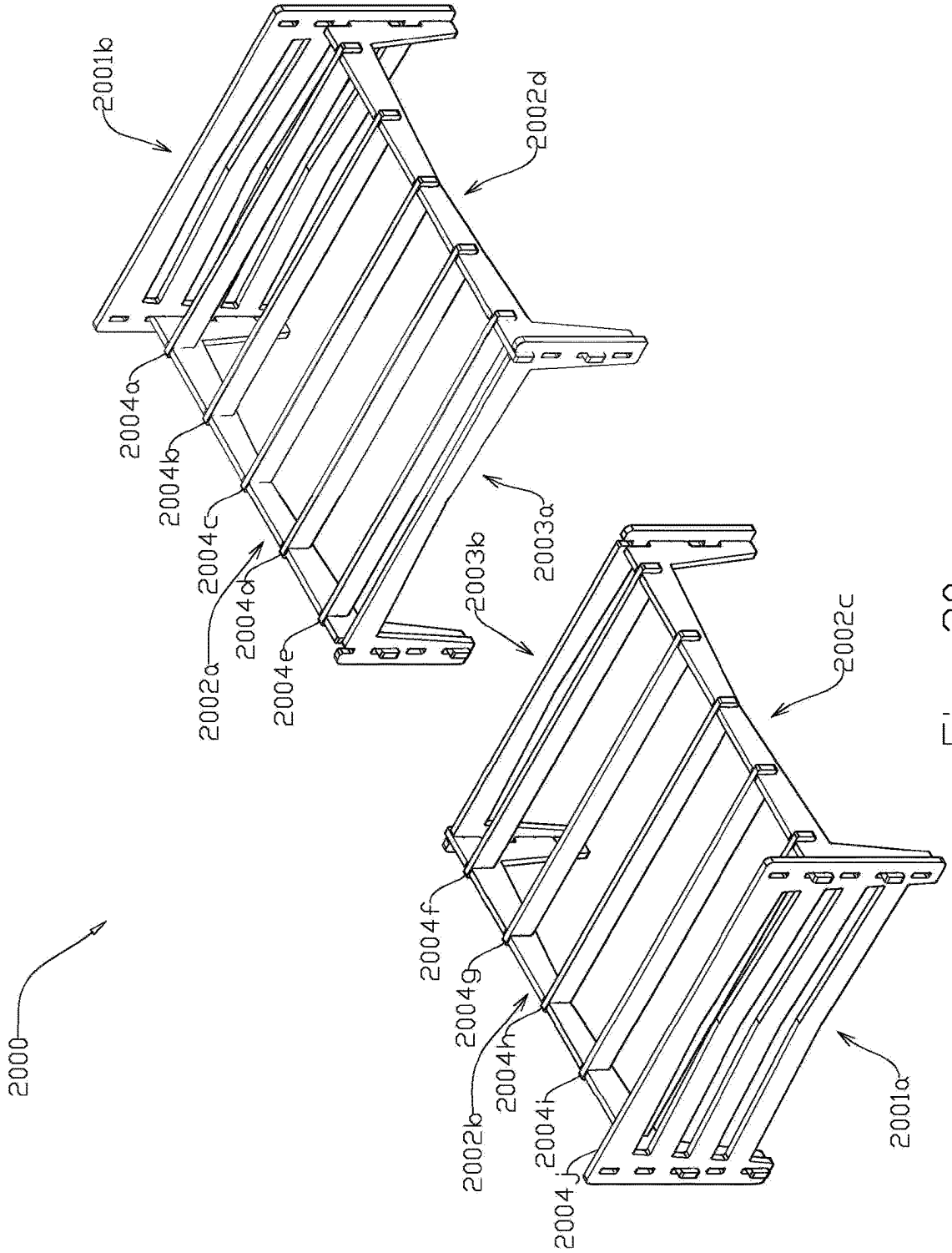
2000
2001b
2002d
2004a
2004b
2004c
2004d
2004e
2002a
2003a
2003b
2002c
2004f
2004g
2004h
2004i
2004j
2002b
2001a

Fig. 20

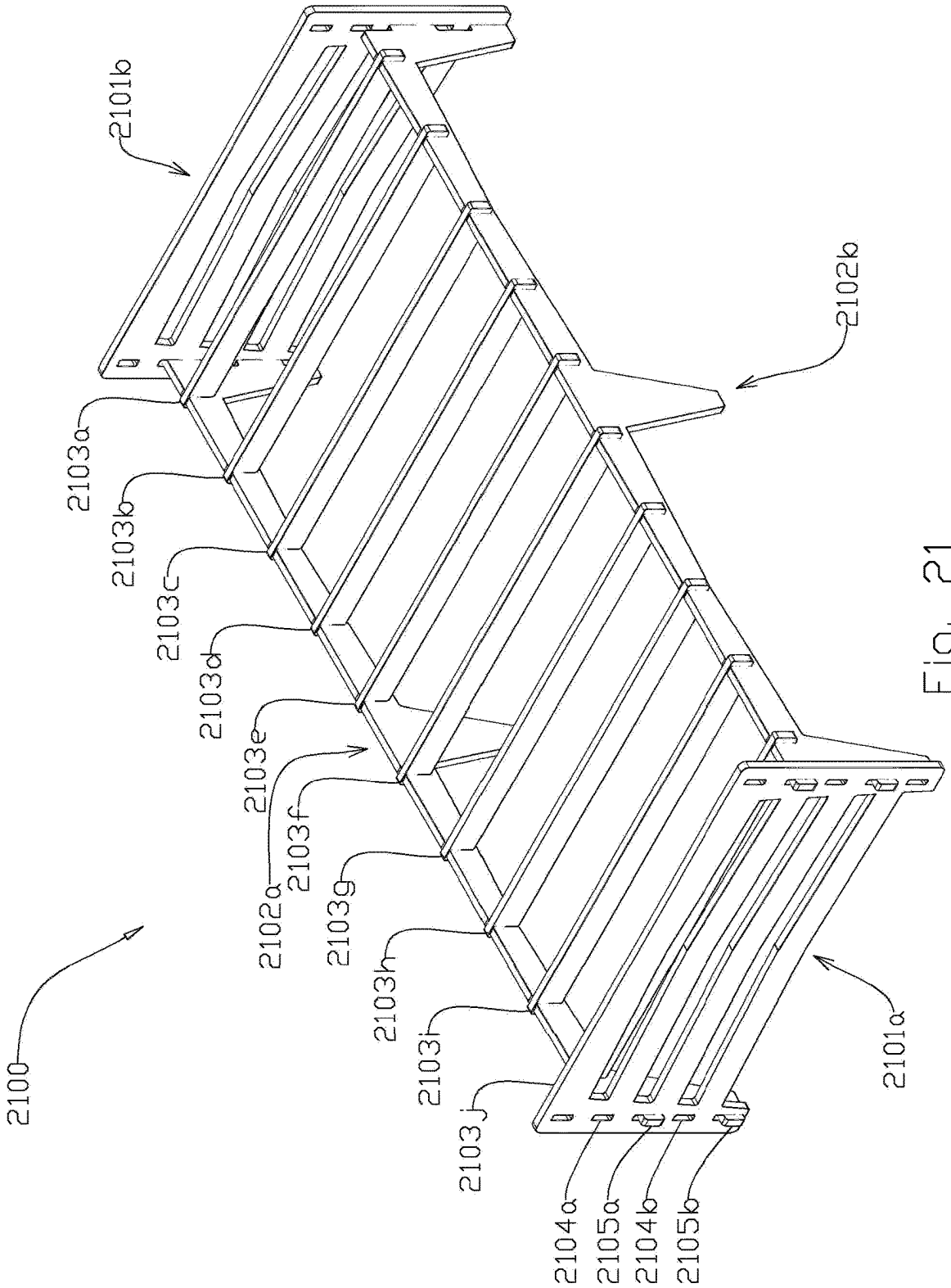
2100
2101b
2101a
2102a
2102b
2103a
2103b
2103c
2103d
2103e
2103f
2103g
2103h
2103i
2103j
2104a
2105a
2104b
2105b

Fig. 21

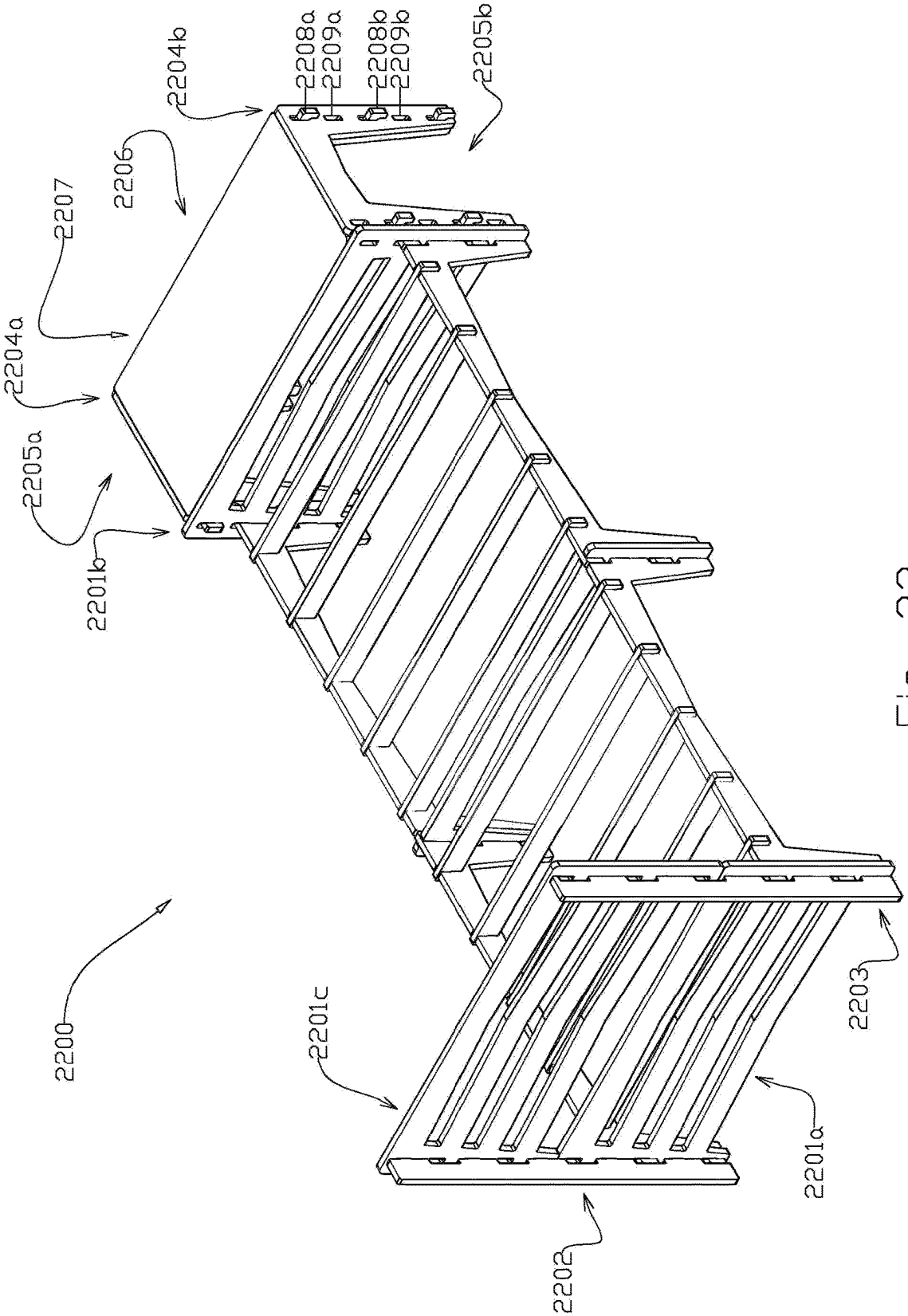
2204b
2208a
2209a
2208b
2209b
2205b
2206
2207
2204a
2205a
2201b
2200
2201c
2203
2201a
2202

Fig. 22

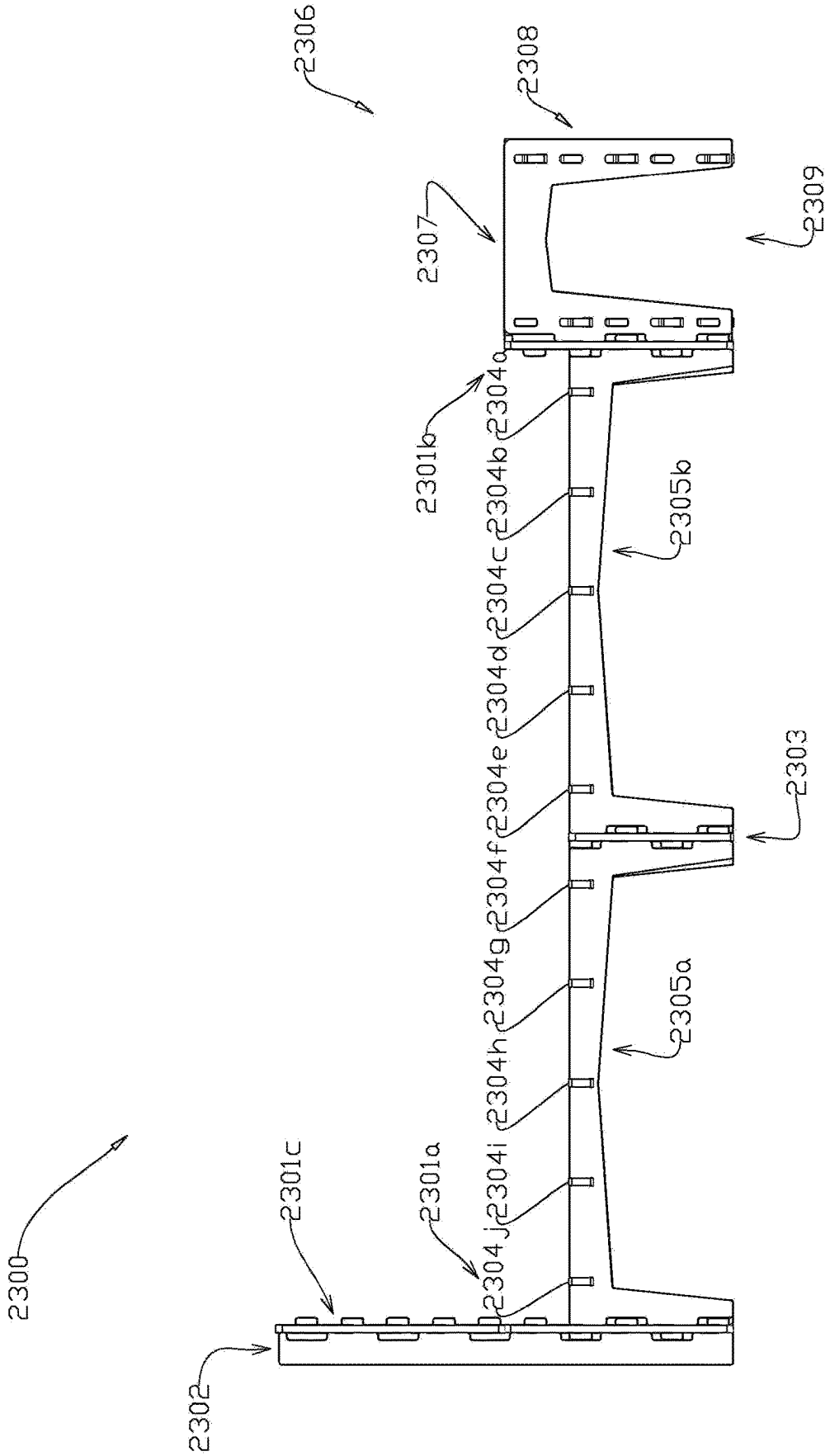
2306
2308
2307
2309
2301b
2304a
2304b
2304c
2304d
2304e
2304f
2304g
2304h
2304i
2304j
2305b
2303
2305a
2300
2301c
2301a
2302

Fig. 23

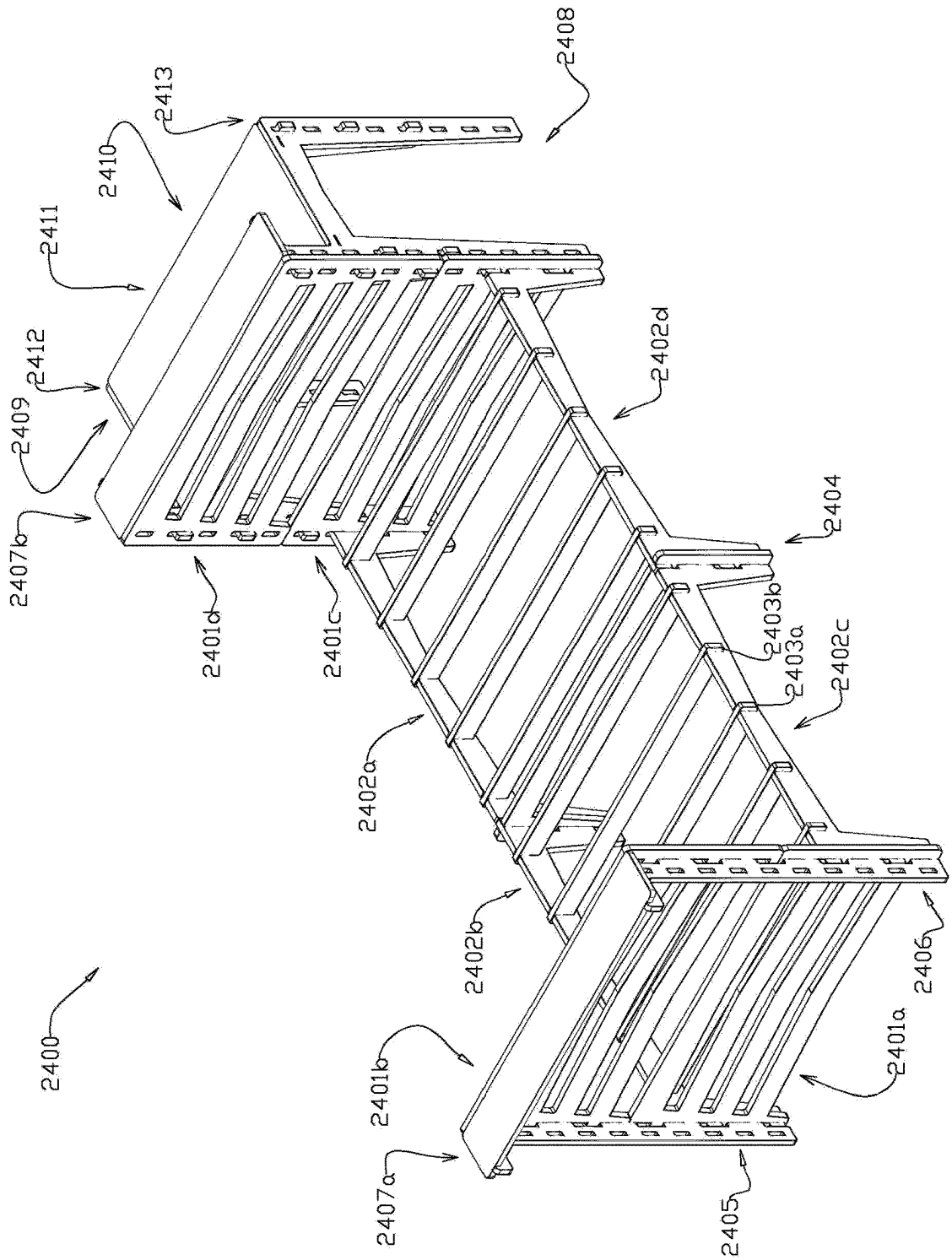
2400
2401a
2401b
2401c
2401d
2402a
2402b
2402c
2402d
2403a
2403b
2404
2405
2406
2407a
2407b
2408
2409
2410
2411
2412
2413

Fig. 24

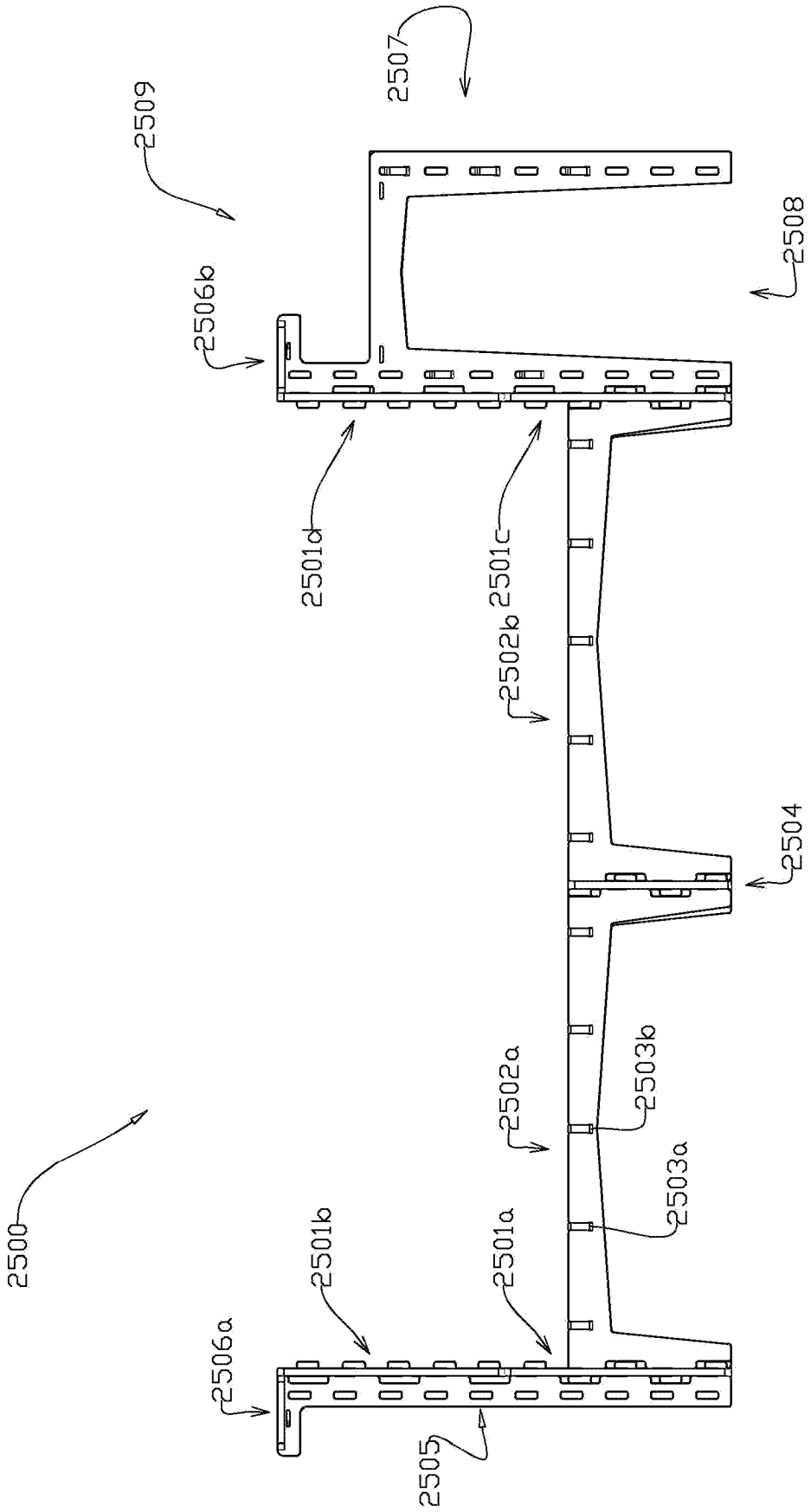
2500
2501a
2501b
2501c
2501d
2502a
2502b
2503a
2503b
2504
2505
2506a
2506b
2507
2508
2509

Fig. 25

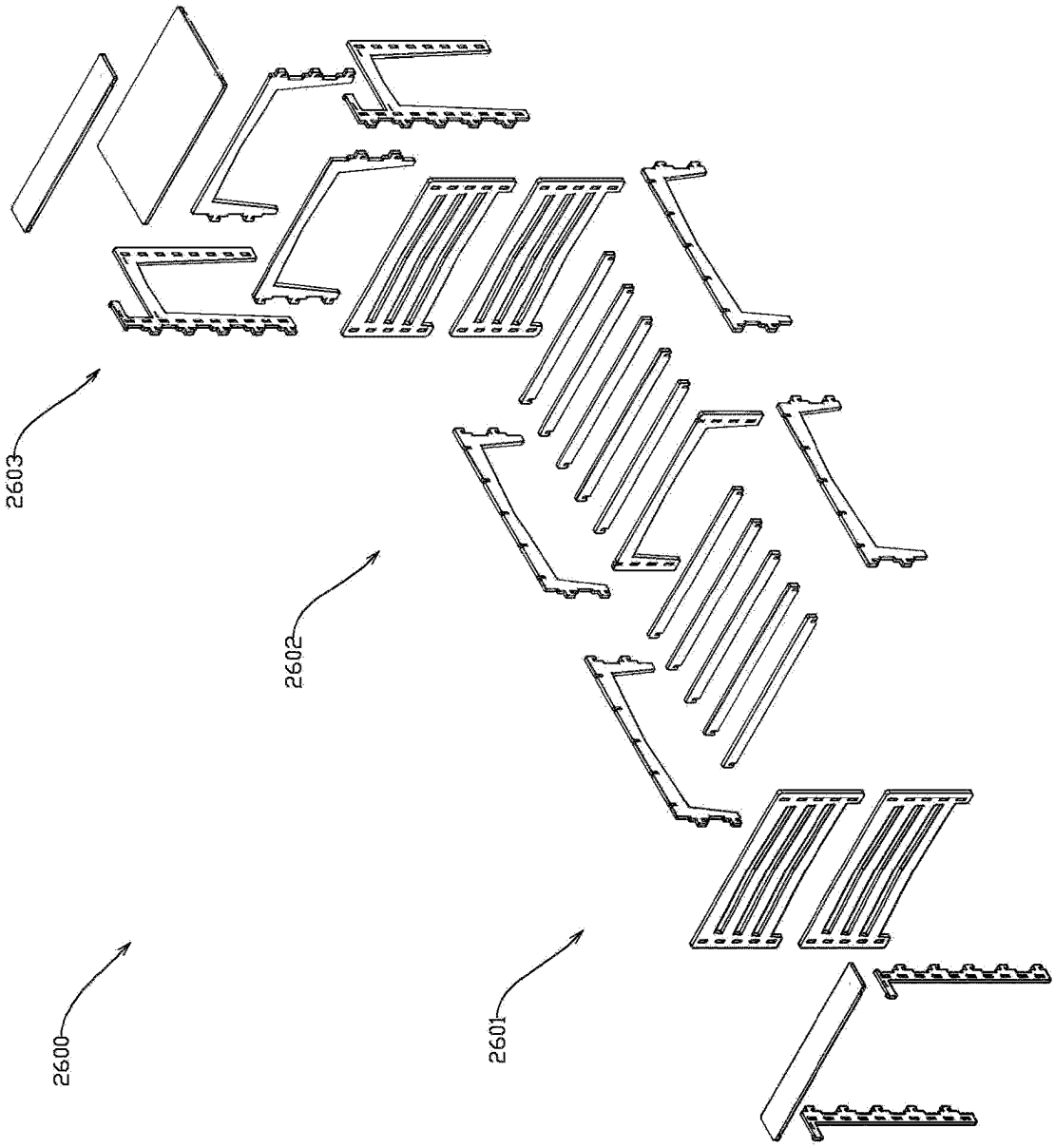

Fig. 26a

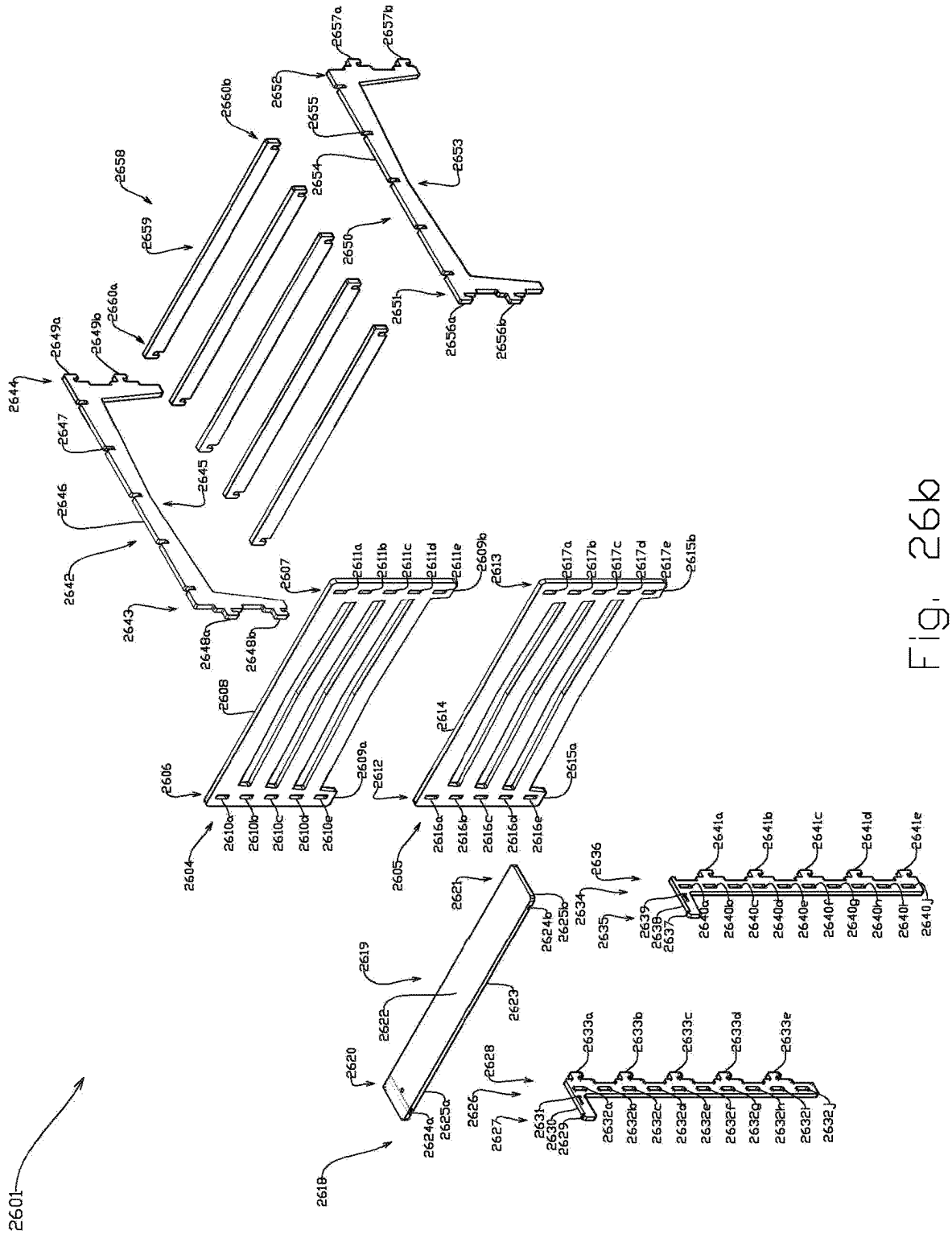
2601
2604
2605
2606
2607
2608
2609a
2609b
2610a
2610b
2610c
2610d
2610e
2611a
2611b
2611c
2611d
2611e
2612
2613
2614
2615a
2615b
2616a
2616b
2616c
2616d
2616e
2617a
2617b
2617c
2617d
2617e
2618
2619
2620
2621
2622
2623
2624a
2624b
2625a
2625b
2626
2627
2628
2629
2630
2631
2632a
2632b
2632c
2632d
2632e
2632f
2632g
2632h
2632i
2632j
2633a
2633b
2633c
2633d
2633e
2634
2635
2636
2637
2638
2639
2640a
2640b
2640c
2640d
2640e
2640f
2640g
2640h
2640i
2640j
2641a
2641b
2641c
2641d
2641e
2642
2643
2644
2645
2646
2647
2648a
2648b
2649a
2649b
2650
2651
2652
2653
2654
2655
2656a
2656b
2657a
2657b
2658
2659
2660a
2660b

Fig. 26b

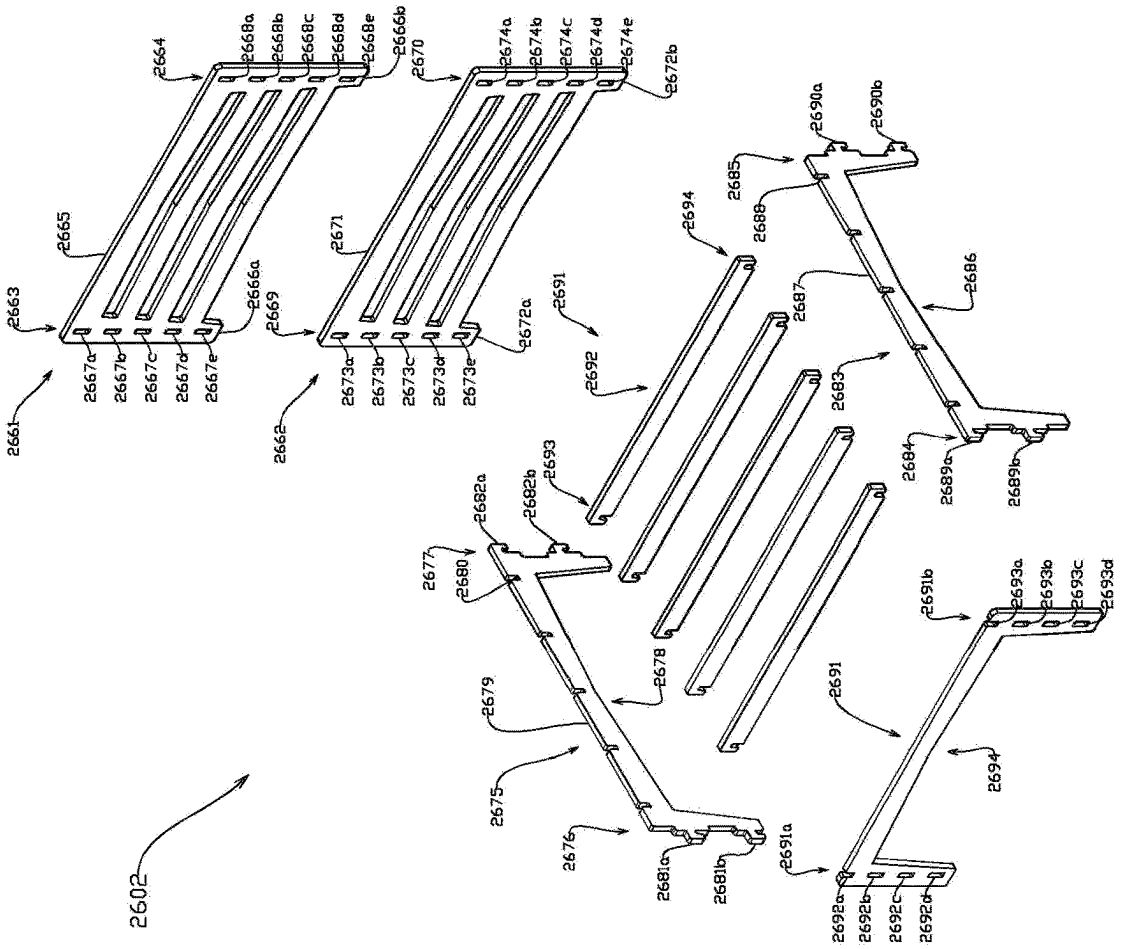
2602
2661
2662
2663
2664
2665
2666a
2666b
2667a
2667b
2667c
2667d
2667e
2668a
2668b
2668c
2668d
2668e
2669
2670
2671
2672a
2672b
2673a
2673b
2673c
2673d
2673e
2674a
2674b
2674c
2674d
2674e
2675
2676
2677
2678
2679
2680
2681a
2681b
2682a
2682b
2683
2684
2685
2686
2687
2688
2689a
2689b
2690a
2690b
2691
2691a
2691b
2692
2692a
2692b
2692c
2692d
2693
2693a
2693b
2693c
2693d
2694

Fig. 26c

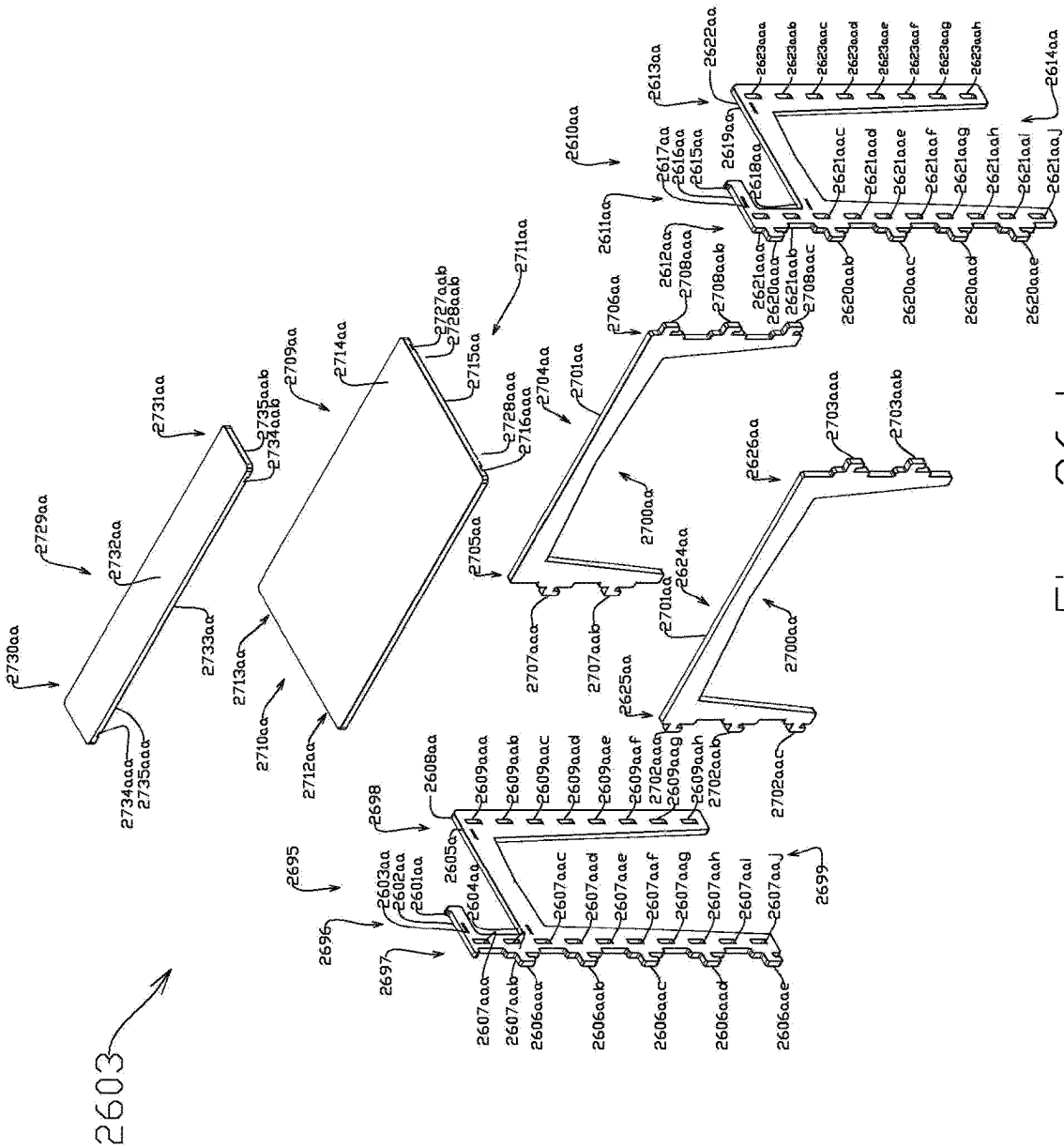
2603
2730aa
2729aa
2732aa
2731aa
2733aa
2734aaa
2735aaa
2735aab
2734aab
2713aa
2710aa
2712aa
2709aa
2714aa
2711aa
2727aab
2728aab
2715aa
2728aaa
2716aaa
2705aa
2707aaa
2707aab
2704aa
2701aa
2700aa
2706aa
2612aa
2708aaa
2708aab
2708aac
2611aa
2610aa
2613aa
2622aa
2623aaa
2623aab
2623aac
2623aad
2623aae
2623aaf
2623aag
2623aah
2614aa
2619aa
2618aa
2617aa
2616aa
2615aa
2621aac
2621aad
2621aae
2621aaf
2621aag
2621aah
2621aai
2621aaj
2621aaa
2620aaa
2621aab
2620aab
2620aac
2620aad
2620aae
2626aa
2703aaa
2703aab
2624aa
2701aa
2625aa
2702aaa
2702aab
2702aac
2608aa
2609aaa
2609aab
2609aac
2609aad
2609aae
2609aaf
2609aag
2609aah
2698
2605aa
2604aa
2603aa
2602aa
2601aa
2695
2696
2697
2607aaa
2607aab
2606aaa
2606aab
2606aac
2606aad
2606aae
2607aac
2607aad
2607aae
2607aaf
2607aag
2607aah
2607aai
2607aaj
2699

Fig. 26d

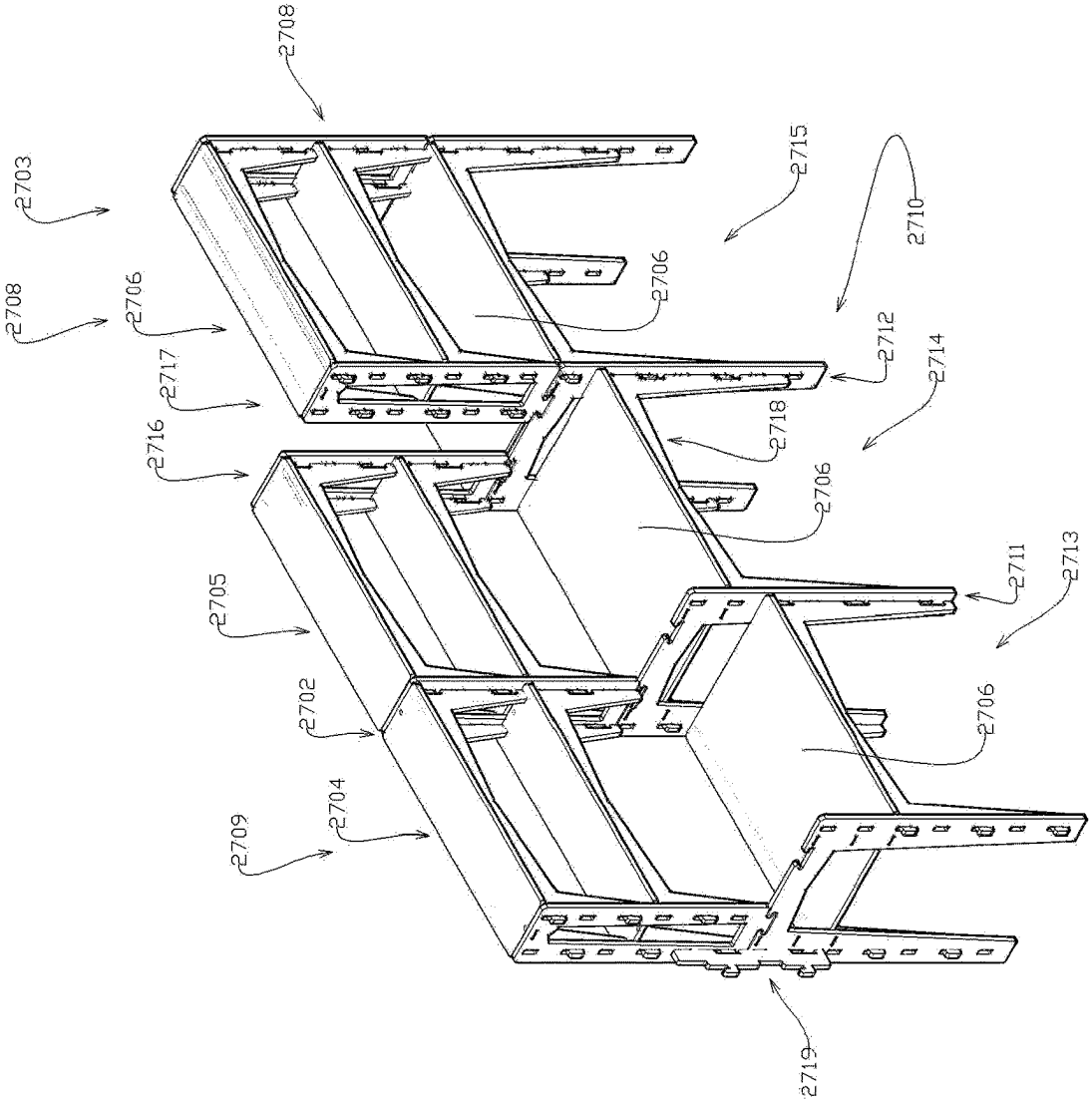

Fig. 27a

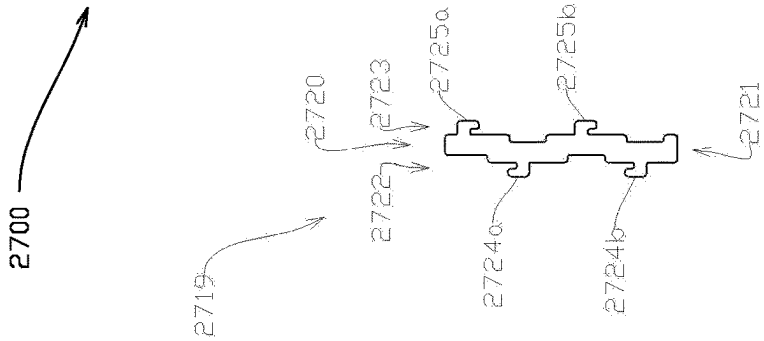

Fig. 27b

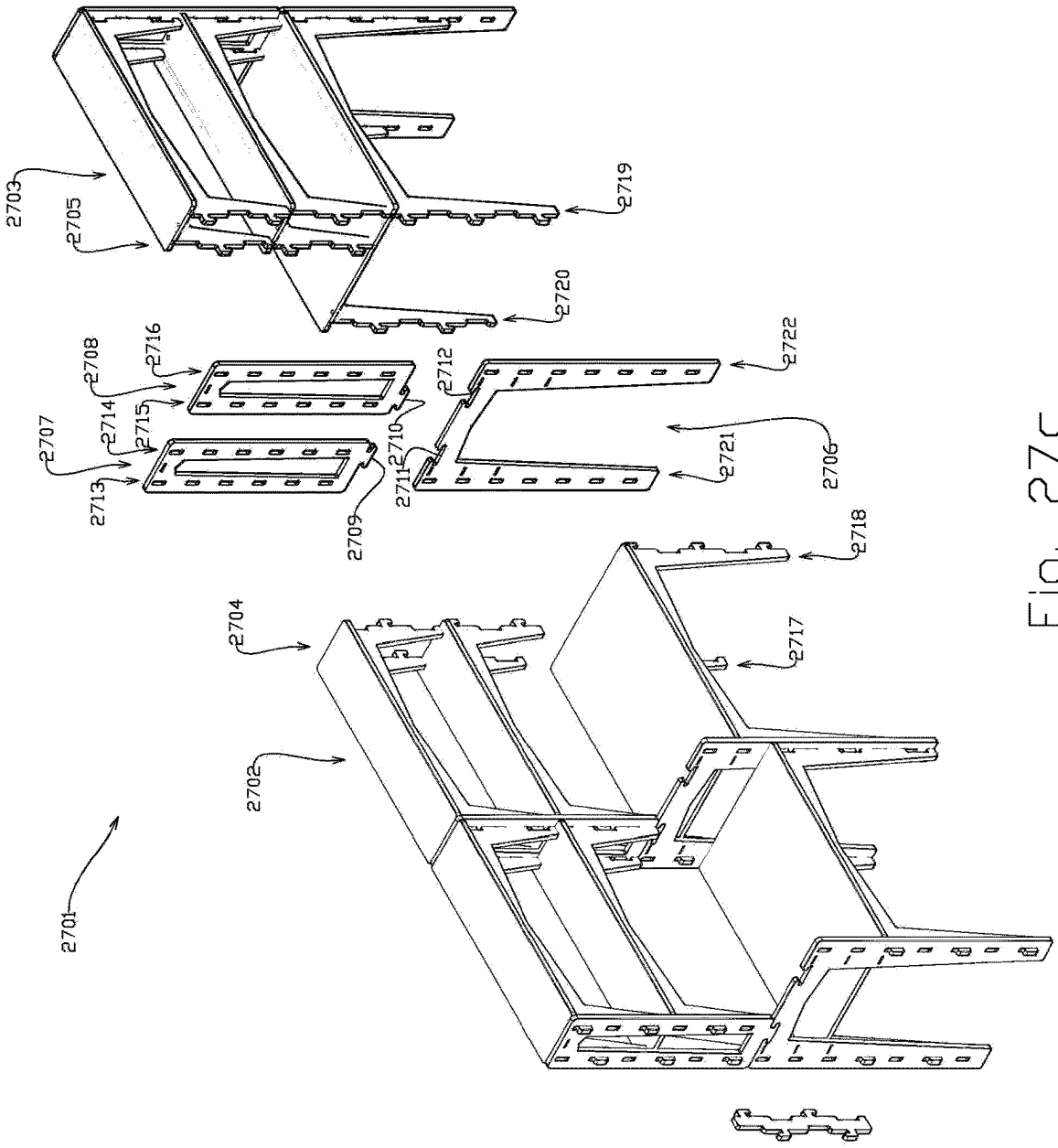
2701
2702
2703
2704
2705
2706
2707
2708
2709
2710
2711
2712
2713
2714
2715
2716
2717
2718
2719
2720
2721
2722

Fig. 27c

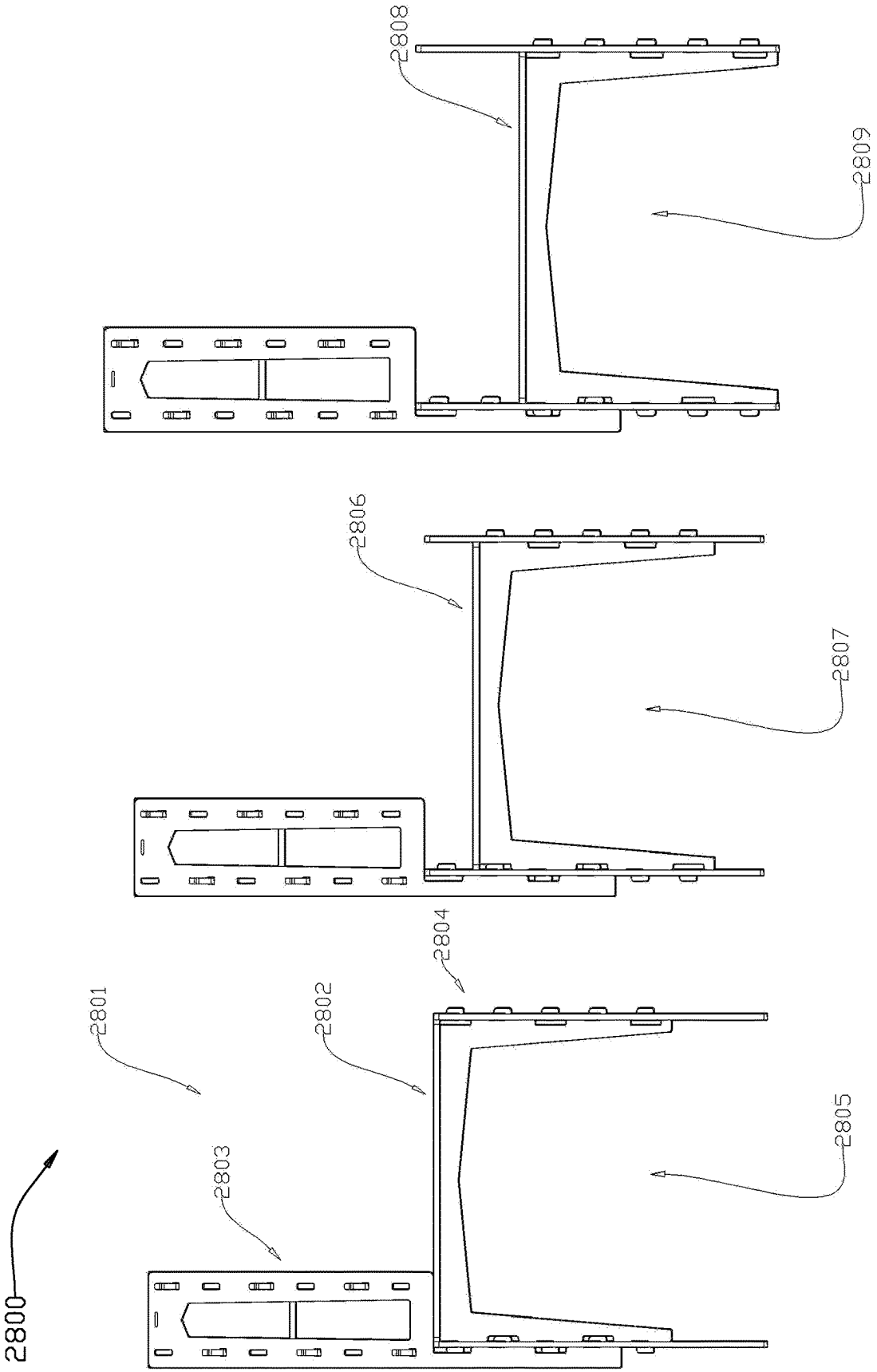

FIG. 28a

FIG. 28b

FIG. 28c

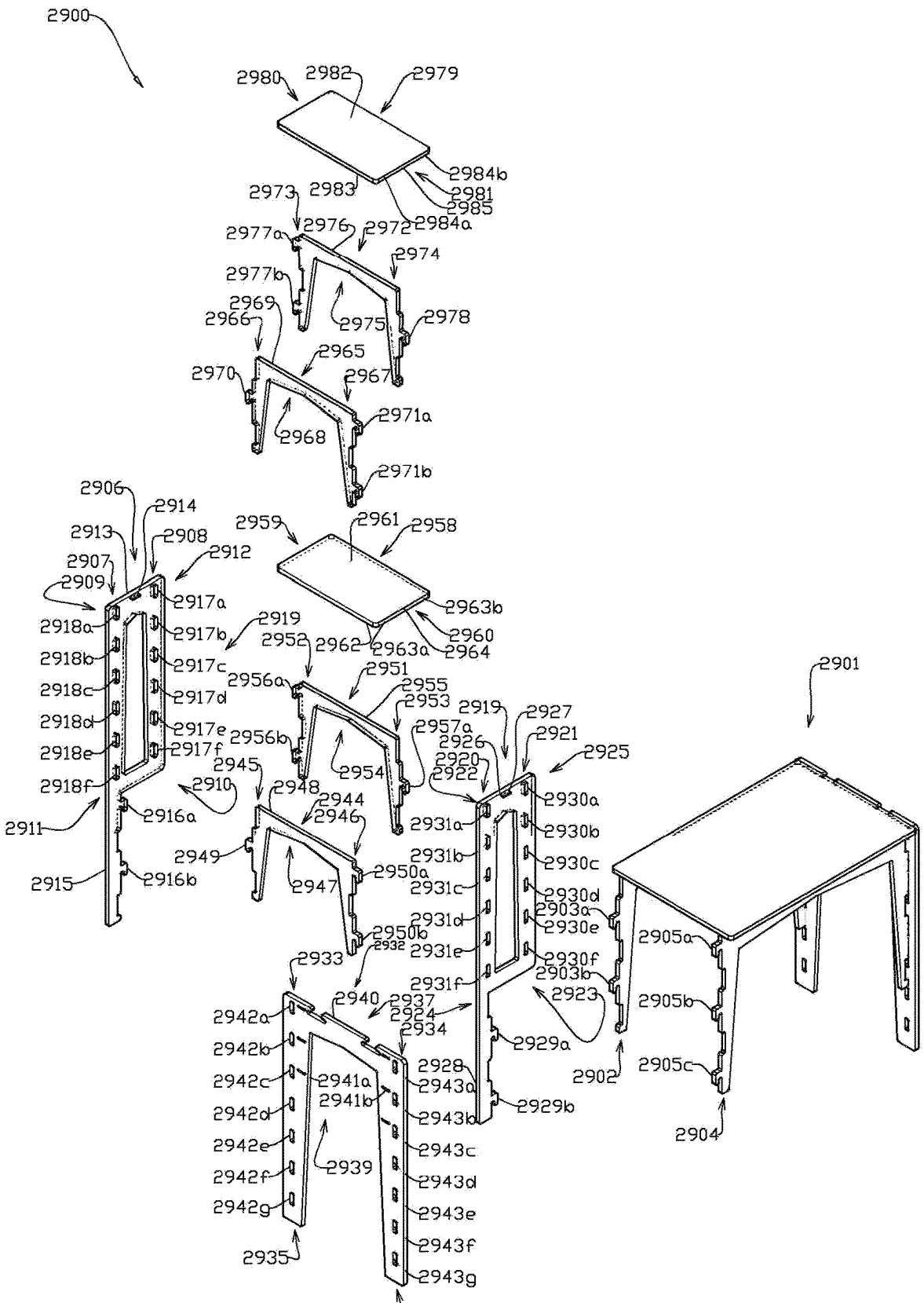
2900
2980
2982
2979
2984b
2981
2985
2984a
2973
2983
2977a
2976
2972
2974
2977b
2969
2966
2975
2978
2965
2970
2967
2971a
2968
2971b
2906
2914
2913
2908
2912
2907
2909
2917a
2918a
2917b
2919
2918b
2917c
2918c
2917d
2918d
2917e
2918e
2917f
2918f
2910
2916a
2911
2915
2916b
2959
2961
2958
2963b
2960
2952
2962
2963a
2964
2956a
2951
2955
2953
2919
2927
2921
2925
2956b
2957a
2926
2920
2922
2945
2954
2948
2944
2946
2949
2947
2950a
2950b
2932
2933
2942a
2942b
2942c
2942d
2942e
2942f
2942g
2935
2936
2940
2937
2924
2934
2941a
2941b
2939
2943a
2943b
2943c
2943d
2943e
2943f
2943g
2928
2929a
2929b
2930a
2930b
2930c
2930d
2903a
2930e
2930f
2903b
2923
2931a
2931b
2931c
2931d
2931e
2931f
2901
2905a
2905b
2905c
2902
2904

Fig. 29

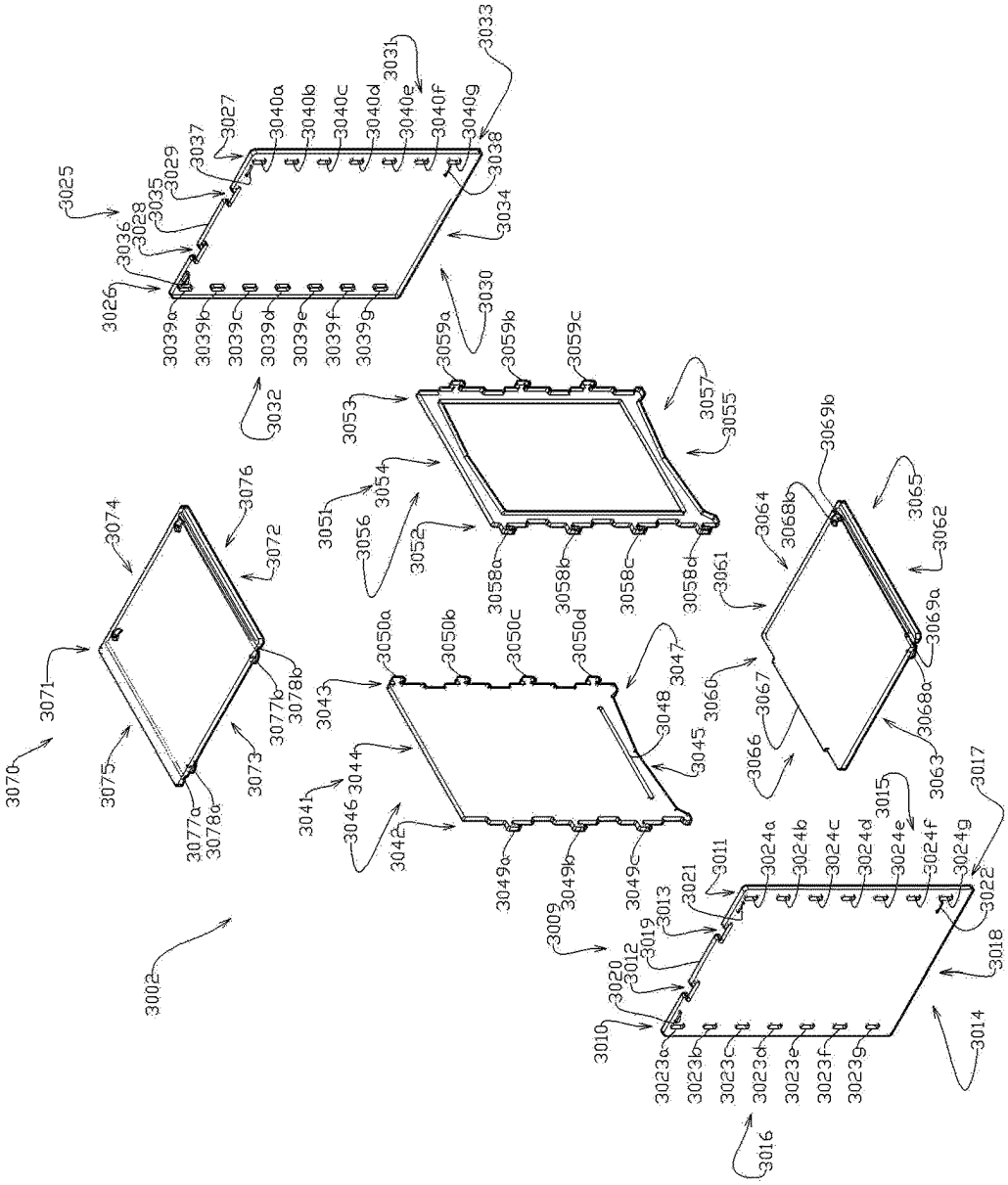

Fig. 30b

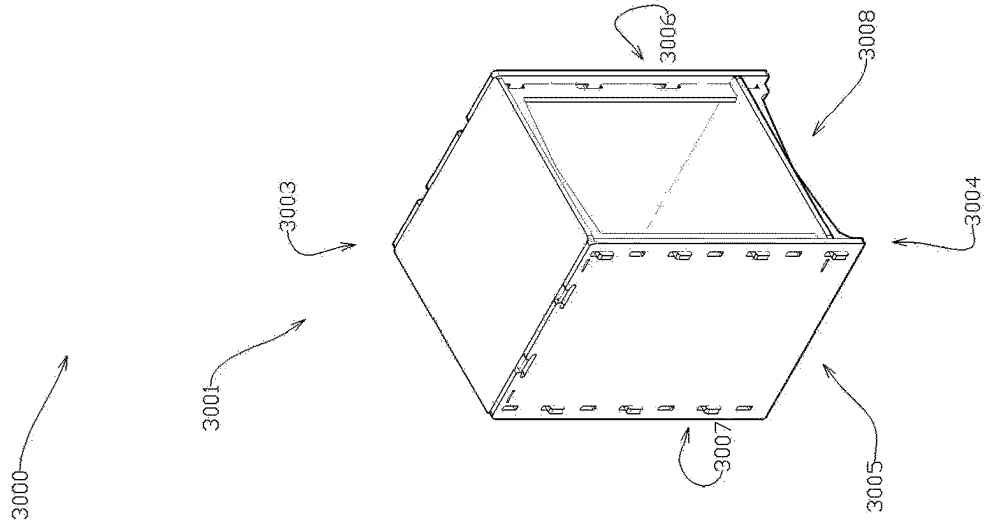

Fig. 30a

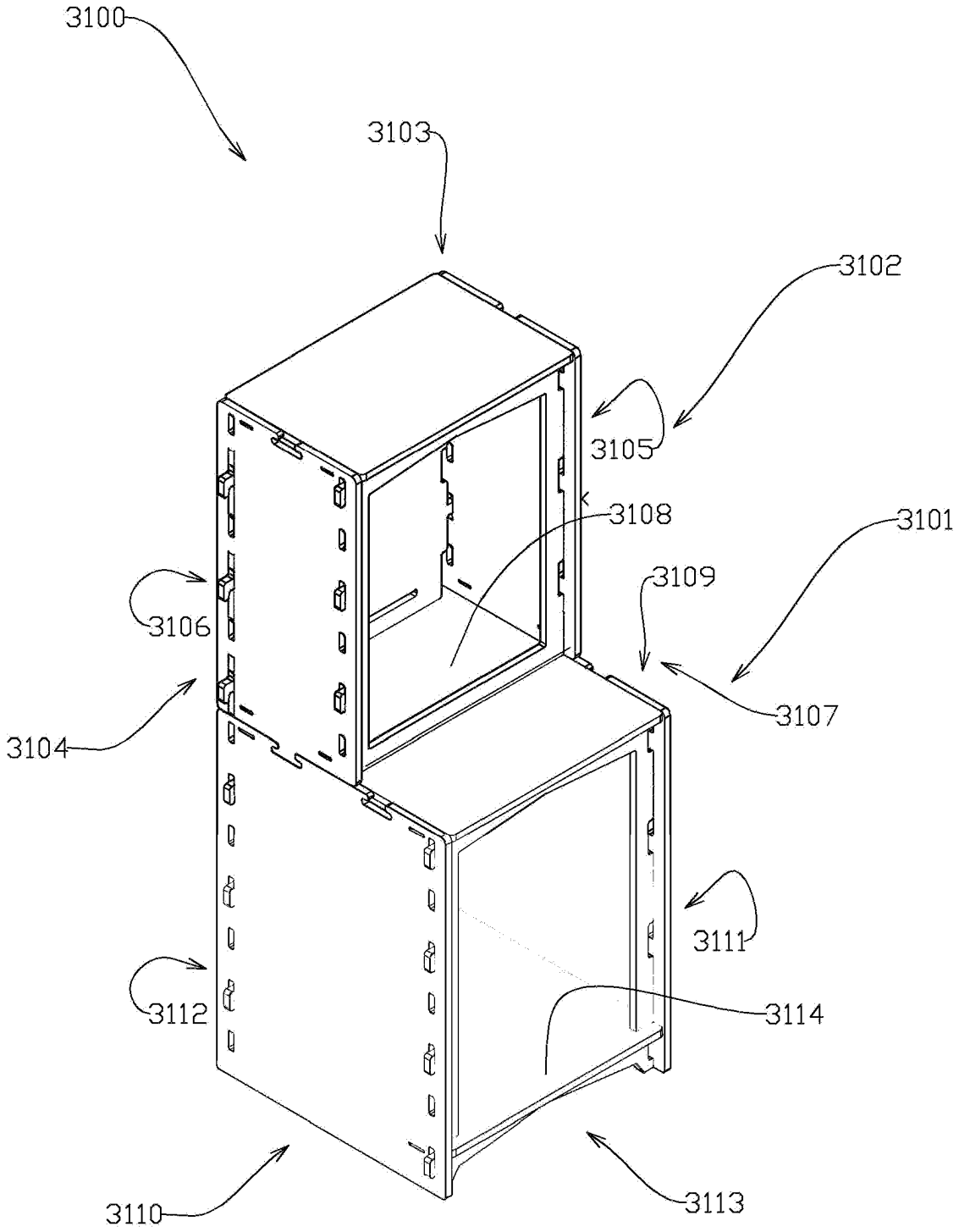
3100
3103
3102
3105
3108
3101
3109
3106
3107
3104
3111
3112
3114
3110
3113

Fig. 31a

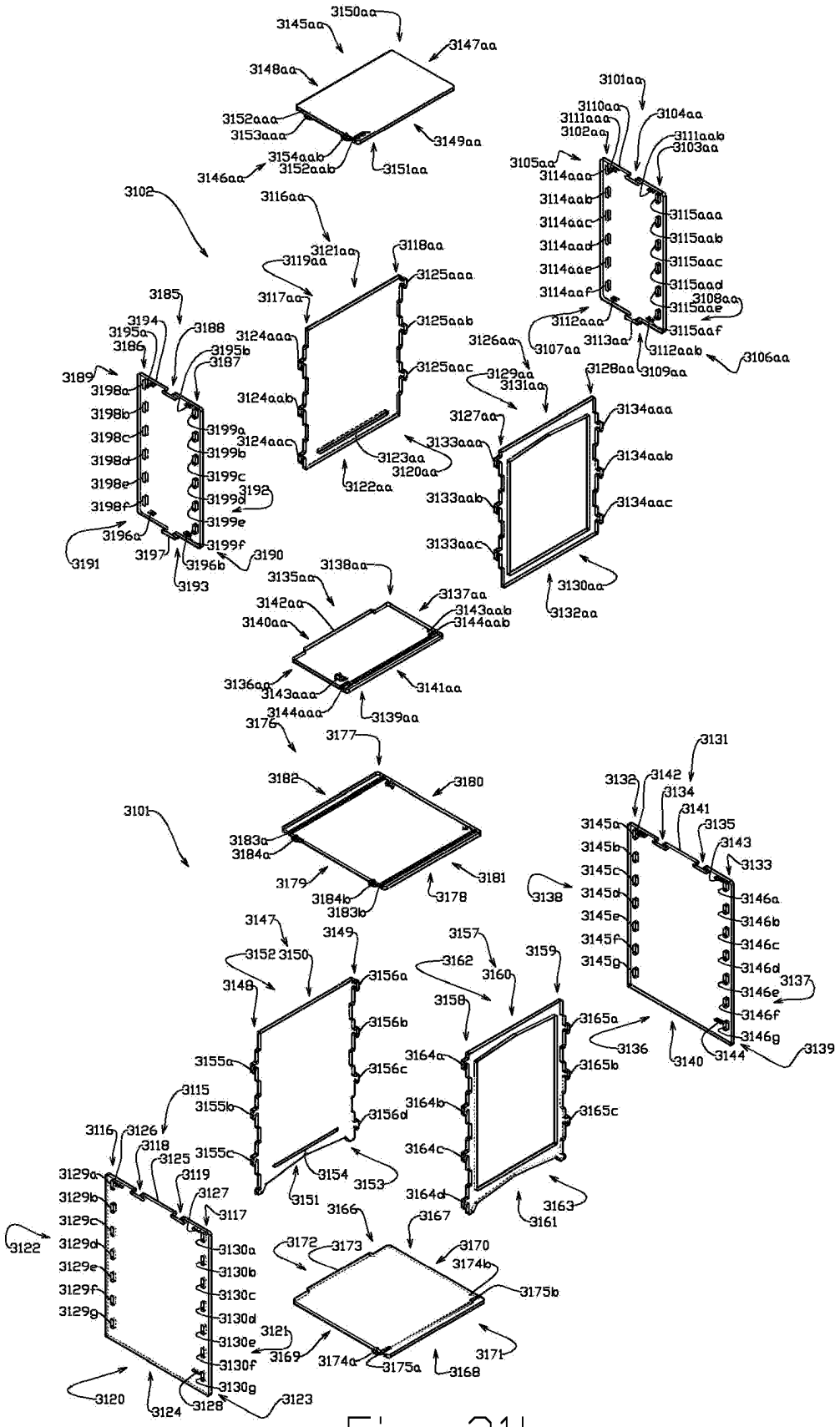
3150aa
3145aa
3147aa
3148aa
3152aaa
3153aaa
3154aab
3152aab
3149aa
3146aa
3151aa
3101aa
3110aa
3111aaa
3102aa
3104aa
3111aab
3103aa
3105aa
3114aaa
3114aab
3114aac
3114aad
3114aae
3114aaf
3115aaa
3115aab
3115aac
3115aad
3115aae
3115aaf
3108aa
3112aaa
3113aa
3112aab
3106aa
3107aa
3109aa
3102
3116aa
3121aa
3118aa
3119aa
3125aaa
3117aa
3125aab
3124aaa
3125aac
3124aab
3124aac
3123aa
3120aa
3122aa
3126aa
3129aa
3131aa
3128aa
3127aa
3134aaa
3133aaa
3134aab
3133aab
3134aac
3133aac
3130aa
3132aa
3185
3194
3195a
3186
3188
3195b
3187
3189
3198a
3198b
3198c
3198d
3198e
3198f
3199a
3199b
3199c
3199d
3192
3199e
3199f
3196a
3197
3196b
3190
3191
3193
3138aa
3135aa
3137aa
3142aa
3143aab
3140aa
3144aab
3136aa
3143aaa
3141aa
3144aaa
3139aa
3176
3177
3182
3180
3101
3183a
3184a
3179
3181
3184b
3178
3183b
3131
3132
3142
3134
3141
3135
3145a
3145b
3143
3133
3145c
3138
3145d
3146a
3145e
3146b
3145f
3146c
3145g
3146d
3137
3146e
3146f
3146g
3136
3140
3144
3139
3147
3149
3152
3150
3156a
3148
3156b
3155a
3156c
3115
3155b
3156d
3116
3126
3118
3125
3155c
3129a
3119
3129b
3127
3129c
3117
3122
3129d
3129e
3130a
3129f
3130b
3129g
3130c
3130d
3121
3130e
3130f
3130g
3120
3124
3128
3123
3157
3162
3160
3159
3158
3165a
3164a
3165b
3164b
3165c
3164c
3164d
3154
3153
3151
3166
3163
3161
3167
3172
3173
3170
3174b
3175b
3169
3174a
3175a
3171
3168

Fig. 31b

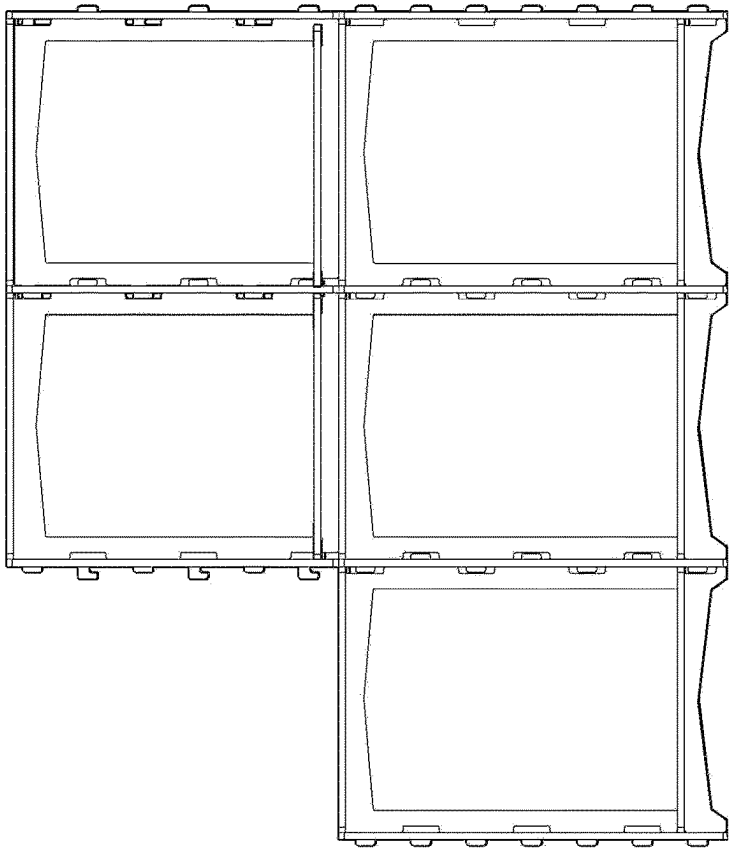

Fig. 32b

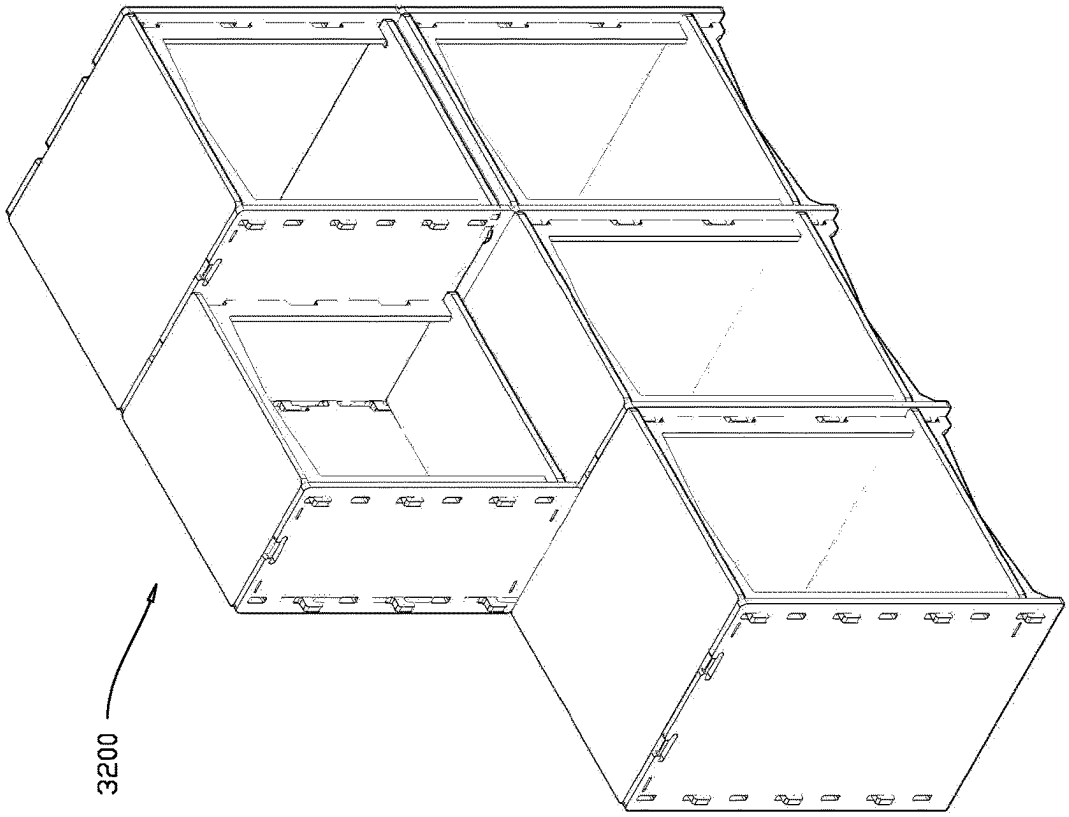

Fig. 32a

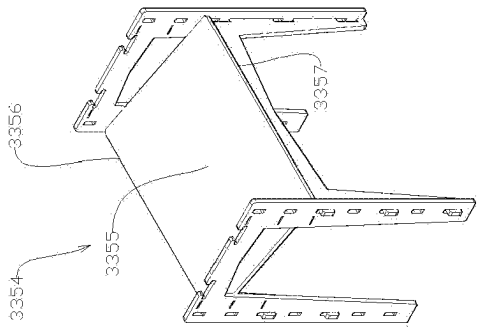

Fig. 33b

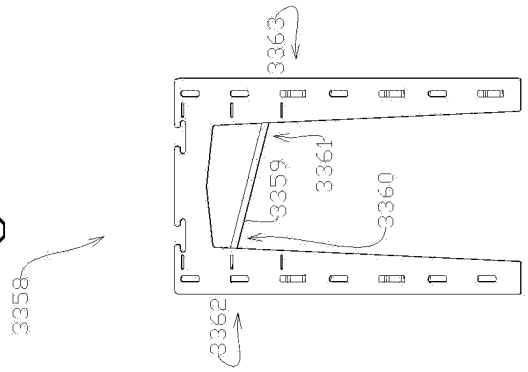

Fig. 33c

Fig. 33a

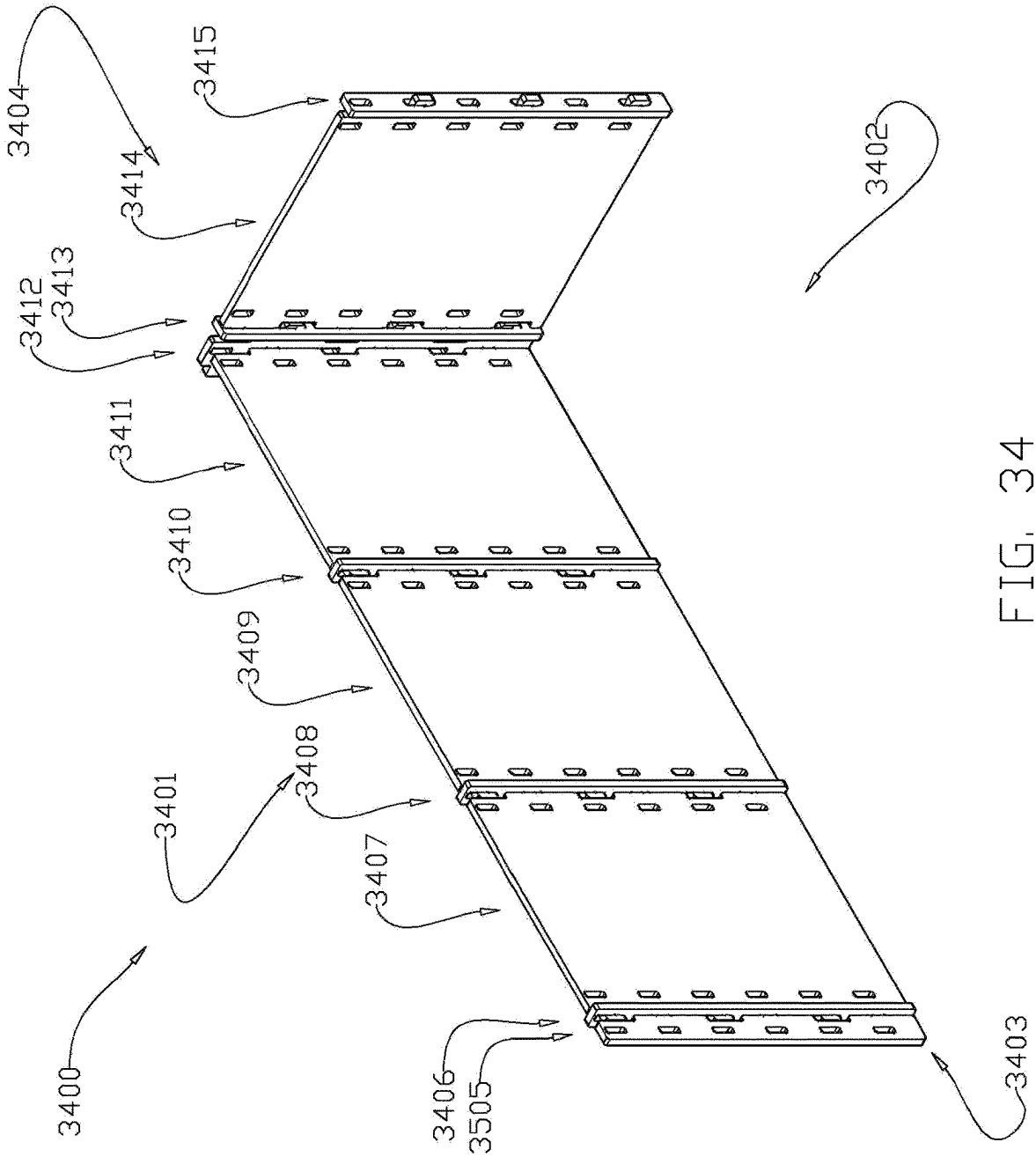
3404
3415
3414
3412
3413
3411
3410
3409
3408
3401
3407
3400
3406
3505
3402
3403

FIG. 34

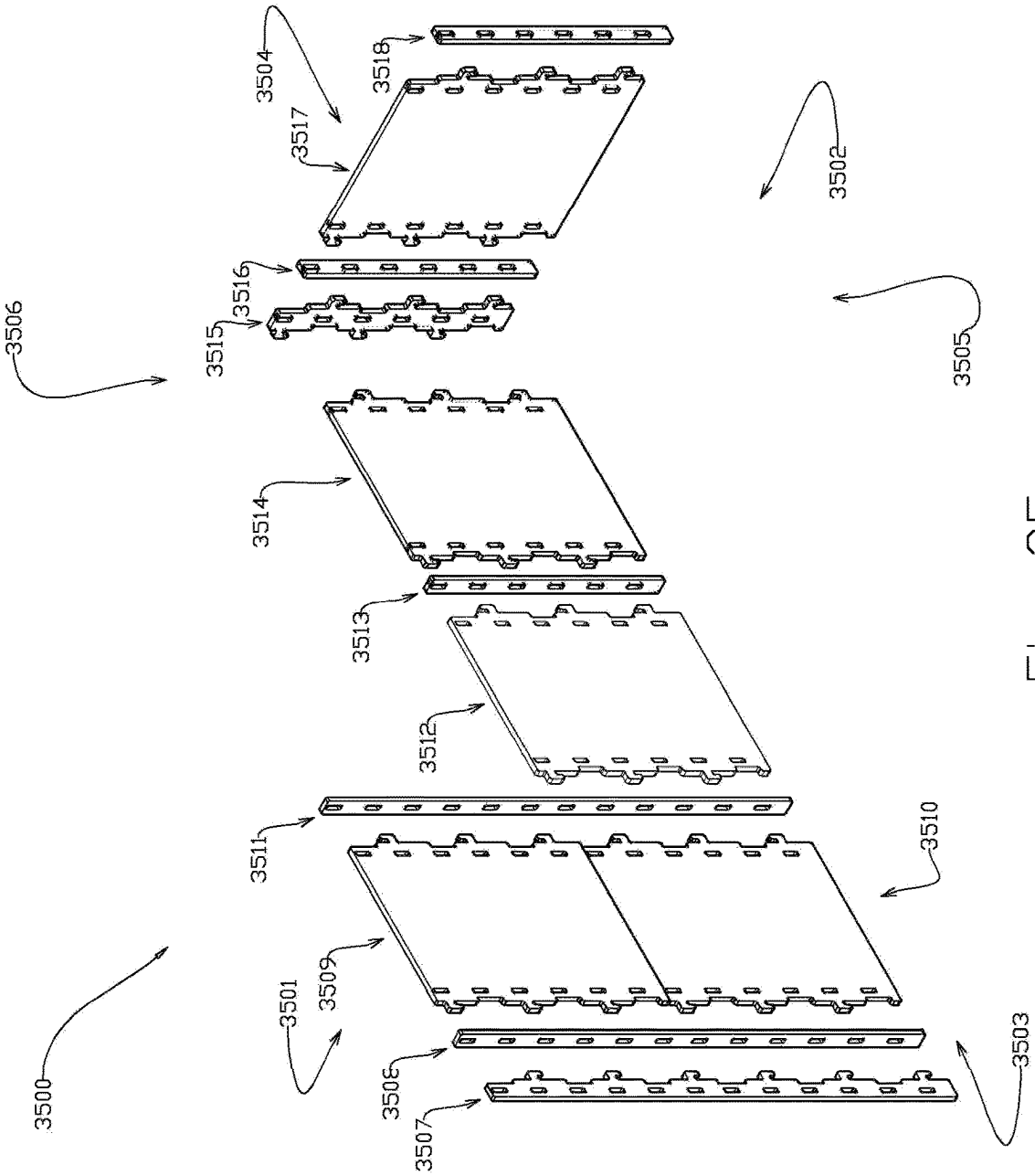
3500
3501
3502
3503
3504
3505
3506
3507
3508
3509
3510
3511
3512
3513
3514
3515
3516
3517
3518

Fig. 35

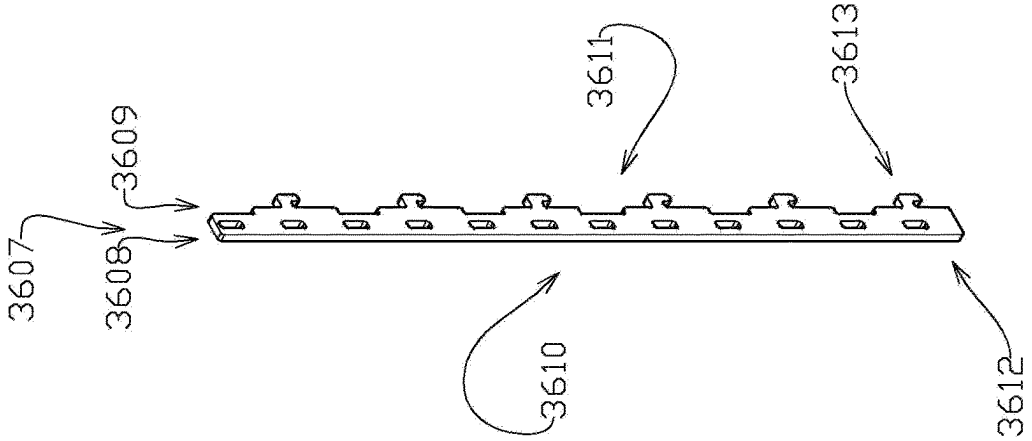

Fig. 36b

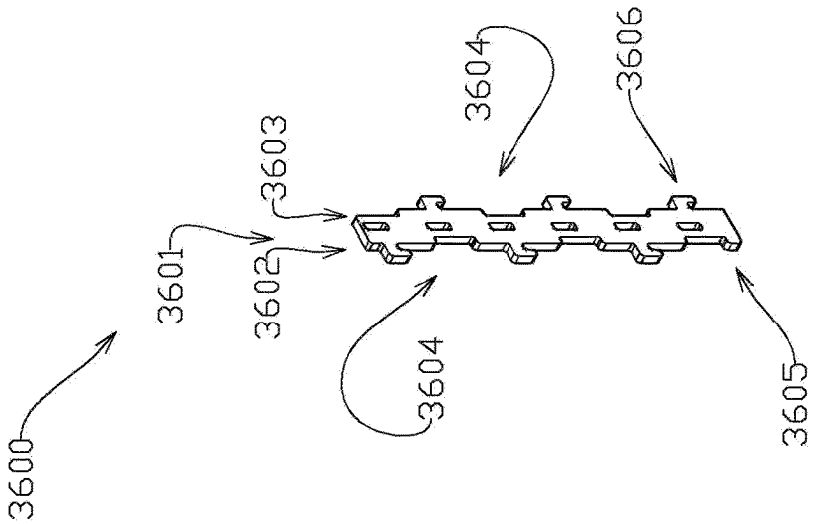

Fig. 36a

MODULAR COMPONENT ASSEMBLY

STATEMENT REGARDING FEDERALLY SPONSORED RESEARCH OR DEVELOPMENT

(Not Applicable)

BACKGROUND

Panel assemblies have been used for a number of years. Panel assemblies have been constructed through the use of magnetic frames, brackets and other fastening members. Panels may be joined together to form barriers, walls, enclosed spaces and furniture.

Such panel joining methods are often complicated, time-consuming, and burdensome for an end user to assemble or disassemble and require a variety of tools to connect or disconnect the panels, thereby creating an unwieldy and cumbersome environment. Such joining methods also create sequencing problems thereby delaying proper assemblage as well as alignment problems which result in the inadvertent disengagement, breakage of the panels, and opportunities for error. As a result, panel assemblies may be difficult to assemble and, if possible, disassemble. Additionally, such assembling difficulties may prevent reassembly of the panel assemblies once disassembled. Still further, such panel assemblies may not be able to be varied or adapted for different configurations and for different sized users.

In a similar situation, modular furniture may be difficult to assemble and disassemble due to complicated connection devices or fixtures. Modular furniture such as desks, beds, storage containers, tables and the like suffer from this difficulty to assemble and disassemble the modular structures. It is also difficult, if not impossible, to add additional components to the modular furniture so as to have multiple desks, beds, storage containers, tables and the like cooperatively connected to form a further extension of the modular furniture.

SUMMARY

Accordingly, there has been an unmet need to provide a system and method for assembling, disassembling and reconfiguring modular panel assemblies and modular furniture in a swift, efficient, and tool-free manner. Discussed herein are various examples of modular interlocking panels and modular furniture components which enable various and adaptable panel configurations and modular furniture to be cooperatively secured and fixed in place. The disclosed assembly and method provides improved modularity and configuration advantages. The panels and furniture of the modular assembly may be easily assembled, reassembled and reconfigured without the use of any tools or connecting devices, and without requiring any skilled labor to do so. Still further, the panels and furniture of the disclosed assembly may be easily reconfigured for transient use by end users of all ages. The panel assemblies and furniture may be quickly, and single handedly, disassembled and reconfigured for use by a toddler, adolescent, or adult, individually or together, or stored for purposes of space optimization or future use.

Accordingly, there is a need for a modular frame assembly that can be easily assembled, disassembled and reconfigured by a single user in numerous different arrangements for use in all commercial and residential settings.

In some examples, the frame assembly is configured as a modular barrier assembly. In particular, the modular barrier

assembly may be used to respond to various health and safety codes regulating the display of food or to various environmental safeguards attempting to minimize the spread of airborne particles in the environment.

In some examples, the frame assembly is configured as various pieces of furniture of the type described herein that would be light in weight, easily handled, very durable, and cooperatively secured together without the need for screws, bolts, or other connectors. Such furniture could be assembled and disassembled, stowed for storage or transport, and easily cooperatively secured together to form numerous different configurations.

Examples of the lightweight modular assemblies include beds, utility tables, inclined tables, modular storage units, and other modular constructions. These modular constructions may be extended in an X, Y, or Z direction through cooperative connections between other modular assemblies utilizing the flanges of one modular component fitting into the connecting slots of another modular component. The connecting slots are configured to be cut completely through the modular component from one side to another side and are configured to be completely enclosed or partially enclosed.

In the example of the modular assembly that forms a bed, there is a proximal end of the bed and a distal end of the bed. The proximal end of the bed and the distal end of the bed may be utilized differently. For instance, a stacked frame assembly may be constructed at the proximal end of the bed and an modular outrigger component or table may be constructed at the distal end of the bed. The proximal end of the bed may also be called the head of the bed and the distal end may also be called the foot of the bed.

In the example of a modular assembly that forms a table, the table may be comprised of multiple horizontal planes that are cooperatively connected to the modular assembly. The horizontal planes may also be fitted to the top of the modular assembly and held in place at the edges of the horizontal plane by modular components configured to accept the horizontal plane. The horizontal plane may also be fixedly attached to the modular assembly through the use of attachment devices such as locking cams that form an interference fit between the horizontal plane and the modular assembly. The locking cam or locking cams may have a curved surface that form a tighter interference fit as they are rotated into a connecting slot.

According to one embodiment of the invention, a modular frame assembly has a first lateral frame member including a first end including a flange portion extending from a longitudinal axis of the first lateral frame member. The assembly further includes a first side frame member including a longitudinal column defining one or more receiving members. The one or more receiving members are sized and aligned to receive the flange portions to cooperatively secure the first lateral frame member and first side frame member together.

According to another embodiment of the invention, a modular frame assembly has a first and second lateral frame member each having a first end, a second end, and a transverse portion extending therebetween. The first end and second end include a flange portion extending downward from a longitudinal axis of the first and second ends. The transverse portion includes an upper edge. A first and second side frame member each comprises a first end, a second end, and a cross panel extending therebetween. The first and second end include a lateral column defining one or more receiving members to receive the flange portions of the first and second lateral frame members. A top planar member has

an upper surface and lower surface. The lower surface of the top planar member includes two elongated chambers to receive the upper edges of the transverse portion of the first and second lateral frame members. The top planar member also includes at least two parallel edges where the at least two parallel edges are within the confines of the modular frame assembly. As an example, the top planar member may be a desk top or a table top with a square or rectangular shape where the square or rectangular shape has at least two of the parallel sides confined within the modular frame assembly and the other two parallel edges are not confined within the modular frame assembly. Alternatively, in another configuration, all four sides of the square or rectangle are confined within the confines of the modular frame assembly. In one example, the top planar member is confined by modular components configured to have a tab at the end of the linear surface such that the tab confines the edge of the top planar member.

In some embodiments, methods of forming a modular frame assembly are provided. In one embodiment, a method of forming a modular frame assembly is provided comprising the steps of providing a first lateral frame member, wherein the first lateral frame member includes a first end having a flange portion extending from a longitudinal axis of the first end operable to be cooperatively secured. A first side frame member is provided including one or more longitudinal columns defining one or more receiving members sized to receive the flange portion of the first lateral frame member. The flange portion of the first lateral frame member is aligned with the one or more receiving members of the first side frame member. The flange portion of the first lateral frame member is inserted into the one or more receiving members of the first side frame member to cooperatively secure the first lateral frame member to the first side frame member.

In another embodiment, a method of forming a modular frame assembly is provided comprising the steps of providing a first and second lateral frame member, wherein the first and second lateral frame members include a first end, a second end, and a transverse portion extending therebetween. The first end and second end of the first and second lateral frame members include a flange portion extending downward from a longitudinal axis of the first and second ends. The transverse portion includes an upper edge. A first and second side frame member are provided each including a first end, a second end, and a cross panel extending therebetween. The cross panel or panels may form a wall or walls. Multiple walls may form an enclosure. The cross panel or panels may also form partitions. These partitions may be utilized to segment working areas or commercial exposition areas such as in an office or trade show. The modular frame assembly may also be utilized to form room dividers where a single or multiple dividers be utilized to create smaller sections of a room area. The first and second end of the first and second side frame members include a lateral column defining one or more receiving members sized to receive the flange portions of the first and second lateral frame members. A top planar member having an upper surface and a lower surface is provided. The lower surface of the top planar member includes two elongated chambers to receive the upper edges of the transverse portion of the first and second lateral frame members. The flange portion of the first end of the first lateral frame member is aligned with and inserted into the one or more receiving members of the first end of the first side frame member to cooperatively secure the first lateral frame member to the first side frame member. The flange portion of the second end of the second lateral frame member is aligned with and inserted into the one or more receiving members of the second end of the first side frame member to cooperatively secure the second lateral frame member to the first side frame member. The flange portion of the second end of the first lateral frame member is aligned with and inserted into the one or more receiving members of the first end of the second side frame member to cooperatively secure the first lateral frame member to the second side frame member. The flange portion of the first end of the second lateral frame member is aligned with and inserted into the one or more receiving members of the second end of the second side frame member to cooperatively secure the second lateral frame member to the second side frame member. The elongated chambers on the lower surface of the top planar member are aligned with and positioned into the upper edges of the transverse portions of the first and second lateral frame members to secure the top planar member onto the first and second lateral frame member.

In other embodiments, modular frame assemblies are provided, and methods of forming other modular frame assemblies, wherein multiple lateral frame members are adapted to be cooperatively secured to a plurality of lateral frame members and/or side frame members. In preferred embodiments, the modular frame assemblies are provided in an assembled state to form a barrier guard. In other preferred embodiments, the modular frame assemblies are provided in an assembled state to form furniture, such as desks, desks with shelf assemblies, chairs, and other pieces of furniture.

The modular frame assembly may be composed of any useful and durable material, including wood, plastic, glass, metal, textile or other suitable materials. Plastics that may be used include polycarbonate, polyethylene, impact resistant nylon and glass filled nylon. The material may be configured to be weather resistant, and may be provided in a number of colors.

BRIEF DESCRIPTION OF THE SEVERAL VIEWS OF THE DRAWINGS

The subject matter is described in greater detail below, with reference to the accompanying drawings, in which:

FIG. **1***a* is a perspective view of an example implementation according to the present disclosure;

FIG. **1***b* is a perspective view of a side frame member according to the present disclosure;

FIG. **1***c* is a perspective view of an example implementation according to the present disclosure;

FIG. **1***d* is a perspective view of a locking mechanism according to the present disclosure;

FIG. **1***e* is a perspective view of an example implementation according to the present disclosure;

FIG. **1***f* is a perspective view of an example implementation according to the present disclosure;

FIG. **1***g* is a perspective view of a base member according to the present disclosure;

FIG. **2***a* is a side view of an example side frame member according to the present disclosure;

FIG. **2***b* is a side view of an example side frame member according to the present disclosure;

FIG. **2***c* is a side view of an example side frame member according to the present disclosure;

FIG. **3***a* is an exploded perspective view of an example implementation according to the present disclosure;

FIG. **3***b* is a perspective view of a modular barrier frame assembly according to the present disclosure;

FIG. **4***a* is an exploded perspective view of an example implementation according to the present disclosure;

FIG. **4***b* is a side view of a side frame member according to the present disclosure;

FIG. **4***c* is a perspective view of a modular barrier frame assembly according to the present disclosure;

FIG. **5***a* is an exploded perspective view of an example implementation according to the present disclosure;

FIG. **5***b* is a side view of a side frame member according to the present disclosure;

FIG. **5***c* is a perspective view of a modular barrier frame assembly according to the present disclosure;

FIG. **6***a* is an exploded perspective view of an example implementation according to the present disclosure;

FIG. **6***b* is a perspective view of a modular barrier frame assembly according to the present disclosure;

FIG. **6***c* is an exploded perspective view of an example implementation according to the present disclosure;

FIG. **6***d* is a perspective view of a modular barrier frame member according to the present disclosure;

FIG. **6***e* is an exploded perspective view of an example implementation according to the present disclosure;

FIG. **6***f* is a perspective view of a modular barrier frame assembly according to the present disclosure;

FIG. **7***a* is an exploded perspective view of a modular frame assembly in the configuration of a desk;

FIG. **7***b* is a perspective view of an example top planar member according to the present disclosure;

FIG. **7***c* is a perspective view of an example locking mechanism according to the present disclosure;

FIG. **7***d* is a side view of a modular frame assembly in the configuration of a desk;

FIG. **7***e* is a side view of an alternate modular frame assembly in the configuration of a desk;

FIG. **7***f* is a perspective view of a modular frame assembly in the configuration of a desk;

FIG. **8***a* is an exploded perspective view of a modular frame assembly in the configuration of a plurality of desks;

FIG. **8***b* is an exploded perspective view of an alternate modular frame assembly in the configuration of a plurality of desks;

FIG. **8***c* is a side view of a modular frame assembly in the configuration of a plurality of desks;

FIG. **8***d* is a perspective view of a modular frame assembly in the configuration of a plurality of desks;

FIG. **8***e* is a perspective view of an alternate modular frame assembly in the configuration of a plurality of desks;

FIG. **8***f* is an exploded perspective view of a modular frame assembly in the configuration of a corner assembly;

FIG. **8***g* is a perspective view of a modular frame assembly in the configuration of a corner assembly;

FIG. **8***h* is an exploded perspective view of an alternate modular frame assembly in the configuration of a plurality of desks;

FIG. **8***i* is a perspective view of an alternate modular frame assembly in the configuration of a plurality of desks;

FIG. **9***a* is an exploded perspective view of a modular frame assembly in the configuration of a desk and shelf assembly;

FIG. **9***b* is a perspective view of a modular frame assembly in the configuration of a desk and shelf assembly;

FIG. **10***a* is an exploded perspective view of a modular frame assembly in the configuration of a chair assembly;

FIG. **10***b* is an exploded perspective view of an alternate locking mechanism according to the present disclosure;

FIG. **10***c* is a perspective view of a modular frame assembly in the configuration of a chair assembly;

FIG. **10***d* is a perspective view of an alternate modular frame assembly in the configuration of a chair assembly;

FIG. **11***a* is a side view of an modular outrigger component according to the present disclosure;

FIG. **11***b* is a perspective view of a modular frame assembly in the configuration of a desk and modular outrigger component assembly; and

FIG. **11***c* is a side view of a modular frame assembly in the configuration of a desk and outrigger modular component assembly.

FIG. **12***a* is a side view of an modular outrigger component with one lateral component according to the present disclosure.

FIG. **12***b* is a side view of an modular outrigger component with one lateral component according to the present disclosure.

FIG. **12***c* is a side view of a modular outrigger component with three lateral components according to the present disclosure. The modular outrigger component may also be configured with a plurality of lateral components.

FIG. **12***d* is a side view of a modular outrigger component with three lateral components according to the present disclosure. The modular outrigger component may also be configured with a plurality of lateral components.

FIG. **13** is a front view of several modular outrigger components according to the present disclosure attached to a modular construction assembly.

FIG. **14** is a front view of several modular outrigger components according to the present disclosure attached to a modular construction assembly.

FIG. **15**. Is an exploded view of a modular construction with modular outrigger components and modular planar elements.

FIG. **16***a* is a side view of a single column of assembled modular outrigger components and modular planar elements.

FIG. **16***b* is an exploded view of assembled modular outrigger components and modular planar elements.

FIG. **16***c* is a planar element with locking cam elements and receiving chambers in the modular planar element.

FIG. **16***d* is a planar element with locking cam elements and receiving chambers in the planar element and where the chambers extend through one edge of the planar element forming an open slot.

FIG. **17***a* is a perspective view of a modular assembly of cooperatively connected modular outrigger components and stacked modular planar elements.

FIG. **17***b* is a side view of a modular assembly of cooperatively connected modular outrigger components and stacked modular planar elements.

FIG. **17***c* is an exploded view of a modular assembly of cooperatively connected modular outrigger components and stacked planar elements.

FIG. **18***a* is a side view of a modular assembly forming a table with two levels of circular planar elements.

FIG. **18***b* is a perspective view of a modular assembly forming a table with a single top located circular planar element.

FIG. **18***c* is a perspective view of a modular assembly forming a table with a single top located planar element and a single lower located circular planar element.

FIG. **18***d* is an exploded view of a modular assembly forming a table element with a top located circular planar element and a lower located circular planar element where the lower located circular planar element is comprised of two hemispheres.

FIG. **18***e* is a bottom view of the circular planar elements with locking cam elements and is comprised of two hemispheres.

FIG. **18***f* is a bottom view of a circular modular planar element with locking cam elements.

FIG. **19** is an assembled modular unit forming a modular bed assembly.

FIG. **20** is a partially exploded view of a modular bed assembly.

FIG. **21** is an assembled modular bed element with unitary connecting longitudinal elements.

FIG. **22** is an modular bed assembly and a connected modular table element.

FIG. **23** is a side view of an assembled modular bed and a connected table element.

FIG. **24** is an assembled modular unit forming a modular bed assembly with modular stacked ends and a modular table element connected on one end of the assembled modular bed element.

FIG. **25** is a side view of an assembled modular unit forming a modular bed assembly with modular stacked ends and a modular table element connected on one end of the modular bed assembly.

FIG. **26***a* is an exploded view of an assembled modular unit forming a modular bed assembly with modular stacked ends and a modular table element connected on one end of the modular bed assembly.

FIG. **26***b* is an exploded view of the **2601** group in FIG. **26***a*.

FIG. **26***c* is an exploded view of the **2602** group in FIG. **26***a*.

FIG. **26***d* is an exploded view of the **2603** group in FIG. **26***a*.

FIG. **27***a* is a perspective assembled view of several modular desk assemblies connected in a serpentine fashion.

FIG. **27***b* is a side view of modular element **2719** from FIG. **27***a*.

FIG. **27***c* is a semi-exploded perspective view of a group of modular desk assemblies.

FIG. **28***a* is a side view of a modular desk assembly with a modular planar element at a first elevation.

FIG. **28***b* is a side view of a modular desk assembly with a modular planar element at a second elevation.

FIG. **28***c* is a side view of a modular desk assembly with a modular planar element at a third elevation.

FIG. **29** is an exploded view of a modular desk assembly.

FIG. **30***a* is a perspective view of assembled modular storage assembly.

FIG. **30***b* is an exploded view of a modular storage assembly.

FIG. **31***a* is a perspective view of assembled and stacked modular storage assemblies.

FIG. **31***b* is an exploded view of FIG. **31***a* stacked modular storage assemblies.

FIG. **32***a* is a perspective view of multiple stacked and extended modular storage assemblies.

FIG. **32***b* is a front view of multiple stacked and extended modular storage assemblies.

FIG. **33***a* is an exploded view of a modular inclined table assembly.

FIG. **33***b* is a perspective view of a modular inclined table assembly.

FIG. **33***c* is a side view of a modular inclined table assembly.

FIG. **34** is a perspective view of an extended modular panel assemblies.

FIG. **35** is a perspective and semi-exploded view of a stacked and extended modular panel assemblies.

FIG. **36***a* is a modular component with L-bend connectors alternating on opposite sides and connecting slots in the central column in the central column of the modular component.

FIG. **36***b* is a modular component with L-bend connectors extending from one lateral edge of the modular component in the column of connecting slots running longitudinally in the central column of the modular component.

DETAILED DESCRIPTION

Referring to the drawings, FIGS. **1** through **36***b*, in which like elements are provided having like reference designations throughout the several views, an example implementation of a modular frame assembly is illustrated.

The modular frame assembly as used herein is constructed in whole or in part from any suitable material including, but not limited to a wood, glass, plastic, acrylic, metal, composite, or other durable material, sufficiently rigid and having sufficient strength, while being light weight, shatterproof, with suitable waterproofing as appropriate for the intended use. In one embodiment, the device comprises a frame assembly constructed from a plastic material, such as polycarbonate. The polycarbonate comprising the frame assembly provides for transparency, enabling a virtually invisible barrier. It is contemplated that the frame assembly may be easily assembled and reconfigured by a single user as needed. It is also contemplated that the frame assembly may be easily disassembled for replacement in the event of a scratch or damage to any of the members.

In another embodiment, the frame assembly is constructed from a durable material, such as wood. The wood comprising the frame assembly can be of various densities, including but not limited to balsam fir, spruce and white pine. In another embodiment, the frame assembly is constructed from plywood, engineered material, or engineered substrate. The frame assembly provided has structural characteristics such that the frame assembly has the capability of being light weight, (e.g., from about approximately 2 pounds to about approximately 15 pounds, typically from about approximately 5 pounds to about 11 pounds) thereby enabling a single user to easily lift, configure, assemble, disassemble and reconfigure, the frame assembly as desired.

The modular frame assembly may be used for barrier guards and methods for their construction and use. In particular, the modular frame assembly may be used to respond to various health and safety codes regulating the display of food or to various environmental safeguards attempting to minimize the spread of airborne particles in the environment. The use of a barrier guard placed between an individual and food, or between two individuals, serves to respond to such regulations and other safety concerns regarding airborne particle transmission. The barrier guards may be used in any environment, including schools, doctor's offices, point of sale counters in retail stores, bars and restaurants, etc. They also may be used in settings having a taller transaction top such as a banks, open concept office spaces and on conference tables. The transparent material of the frame assembly provides a virtually invisible in which a circulation of air is impeded.

Advantageously, some of the features of the frame assembly may be used to adjust the height and/or configuration of the barrier guard. For example, the position of the frame members may be adjusted by being cooperatively secured to side members having various sizes and configurations. Addi-

tionally, an unlimited number of frame members may be cooperatively secured together to create a near seamless barrier for expanded barriers and transaction tops. Still further, the frame members may be assembled and reassembled into numerous different configurations depending on the use of such barriers in a commercial setting where people interact with each other. Advantageously, the frame assembly as disclosed is light weight and may be easily and swiftly assembled in any configuration as needed, and disassembled as frequently as desired.

In still further embodiments, the frame assembly may be used for furniture of the type described herein that would be light in weight, easily handled, durable, and interlocked together, resisting disengagement, without the need for screws, bolts, or other connectors. Further, such furniture could be assembled and disassembled, stowed for storage or transport, and easily interlocked together by a single user to form numerous different configurations. Similar to the benefits of the frame assembly when used as a barrier guard, the frame assembly configured as furniture, such as desks, shelves, chairs, etc., enables a user to adjust the height of the desktop or seat portion of a chair by the selective repositioning of side members between a series of longitudinally selected positions. Additionally, an unlimited number of frame members may be engaged and interlockingly or cooperatively connected or fixed together for a seamless and expanded row of desks, chairs, etc.

The frame members may also be manufactured in any dimensional size, as well as in custom sized combinations, with custom selected variable positions, as desired by an end user. Thus, for example and without limitation, such frame members can have heights of about approximately 12" to about approximately 96". The illustrated configuration and dimensions are shown to provide one embodiment of the present disclosure. For use as a child's toy, such frame members can have heights of about approximately 1" to 24". It is recognized that various modifications to the configuration and dimensions are contemplated by the present disclosure.

Still further, the modularity of the frame assembly is illustrated by utilizing the same limited number of similar or identical frame members to assemble and reassemble a variety of different configurations depending on the desired use of such furniture. For example, the frame assembly used as a desk for an adult may be quickly, and single handedly, disassembled and reconfigured for use as a desk by a toddler or adolescent. Utilizing additional frame members similar or identical to those used to form a first desk, a toddler desk may be assembled alongside an adult sized desk, thereby optimizing the ease of assembly, the use of frame members, as well as the space required for such configurations.

In a first family of embodiments, referring to FIG. **1***a*, a modular interlocking frame assembly **100** is illustrated including at least one lateral frame member **102** including a first end **104** and a second end **106** opposite to the first end **104**. The first end **104** includes at least one flange portion **108** having a downwardly extending L-bend connector **110***a-d* along the longitudinal axis of the first end **104** of lateral frame member **102**.

The modular assembly components may have the same number of L-bend connectors or may have odd and even number of L-bend connectors. The odd or even number of L-bend connectors facilitates the connection of multiple modular components to a single column of slots where the odd and even L-bend connectors are configured to connect to opposite sides of a column of slots by utilizing alternating slots that connectively match the odd or even L-bend connector configurations. This alternating connectivity allows for expansion of the modular frame assembly in an X, Y, and/or Z plane. The L-bend connectors may be non-deformably connected with the connecting slots. A non-deformable connection means that the L-bend connectors are configured to pass freely through connecting slots without any compression or dimensional change of the L-bend connector when passing through the connecting slot in a horizontal direction or when locking into place in a vertical direction.

The frame assembly **100** further includes at least one side frame member **120**, as illustrated in FIG. **1***a*, including a first end **122** and a second end **124** opposite to the first end **122**. The side frame member **120** further includes an outer surface **126** and a thickness **128**. The side frame member **120** includes one or a plurality of receiving members, or slots. Receiving members may be configured in an arrangement such that the receiving members are aligned in one or more columns or offset from each other, parallel or skewed, in close or distant proximity, equal or different distance apart, or symmetrical or asymmetrical from each other. In an embodiment, as illustrated in FIGS. **1***a* and **1***b*, the receiving members are centrally disposed in columns **132**, **134**, each having five rectangular receiving members, or slots, **136***a-e*, **138***a-e*, respectively, however any number of slots can be provided. It is contemplated that the slots **136***a-e*, **138***a-e* may have any geometrical configuration, including but not limited to square, trapezoid, triangular, circular or oval. As illustrated in FIGS. **1***a*-**1***c*, the slots **136***a-e*, **138***a-e* are aligned to receive the L-bend connectors **110***a-f* of flange portion **108** of first end **104** of lateral frame member **102** to secure the lateral frame member **102** to the side frame member **120** so as to form the barrier frame assembly such as shown in FIG. **1***c*.

Referring to FIG. **1***a*, the flange portion **108** includes a column of a plurality, e.g., four adjacent L-bend connectors **110***a-d*, however, any number of L-bend connectors can be provided. In alternative embodiments, the flange portion may include L-bend connectors configured in an arrangement such that the L-bend connectors are aligned in one or more columns or offset from each other, parallel or skewed, in close or distant proximity, equal or different distance apart, or symmetrical or asymmetrical from each other. In an embodiment, as illustrated in FIGS. **1***a*-**1***f*, each of four L-bend connectors **110***a-d* includes a longitudinal protrusion **140***a*-**140***d* and a substantially perpendicular downward extending locking tab **142***a-d*. As shown in FIG. **1***a*, the locking tab **142***a-d* may be angled at approximately between 90 to 95 degrees from the bottom of a horizontal portion **143***a* of the longitudinal protrusion **140***a*. In use, the lateral frame member **102** is cooperatively secured with the side frame member **120** by positioning the lateral frame member **102** such that its flange portion **108** is aligned with a longitudinal column **132**, **134** of the side frame member **120**. Either longitudinal column **132** or **134** may be utilized as desired. Accordingly, each of the four L-bend connectors **110***a-d* may be aligned with the slots **136***a-e* or **138***a-e* of column **132** or **134**, respectively.

The L-bend connectors on the flange of a first modular assembly component are cooperatively connected or coupled with the slots in a second modular assembly component. The first and second modular frame components are cooperatively connected or coupled by moving at least one of the L-bend connectors of the first modular assembly component horizontally through the slots in the second modular assembly component such that the locking tab of the at least one L-bend connector protrudes beyond the

opposite side of the slot and then moving the at least one L-bend connector vertically such that the locking tab of the at least one L-bend connector forms an interference fit with the second modular frame component.

In an embodiment as shown in FIG. **1***a*-**1***e*, with the alignment of the longitudinal protrusions **140***a*-**140***d* with slots **136***b* through **136***e*, the bottom portion **150** of lateral frame member **102** remains abutting the horizontal mounting surface **156**. In use, as illustrated in FIGS. **1***a*-**1***e*, to secure the lateral frame member **102** to the side frame member **120**, the longitudinal protrusions **140***a*-**140***d* are aligned with slots **136***b*-**136***e*, and the longitudinal protrusions **140***a*-**140***d* are inserted into the respective slots **136***b*-**136***e* in direction **144** until the locking tabs **142***a*-**142***d* and longitudinal protrusions **140***a*-**140***d* pass through the thickness **128** of the side frame member **120** and protrude through the respective slots **136***b*-**136***e* such that the horizontal portion **143***a* engages onto the bottom portion **145***b* of slot **136***b*. The L-bend connectors **110***a-d* are then pressed downwardly by a user pressing the lateral frame member **102** in the direction of gravity as indicated by arrow **146**. Alternatively, the side frame member **120** may be pulled upward in the opposite to the direction of gravity as indicated by arrow **158**. These actions cause the downwardly extending locking tabs **142***a*-**142***d* of L-bend connectors **110***a-d* to be mechanically captured by the outer surface **126** of side frame member **120** directly beneath the slots **136***b*-**136***e* while engaging the longitudinal protrusions **140***a*-**140***d* in slots **136***b*-**136***e*. The forward edge **148** of the first end **104** of lateral frame member **102** thus becomes releasably and securely mechanically interlocked with the side frame member **120**. In use, each of the L-bend connectors **110***a-d* may be secured and released from the slots **136***b*-**136***e* singularly or simultaneously.

In another embodiment as illustrated in FIGS. **1***f*, the assembly includes a lateral frame member **102** and a first and second side frame members **120**, **130**, respectively. As shown, the lateral frame member **102** includes a first and second end **104**, **106**. The first and second ends **104**, **106** each includes a flange portion **108** having a downwardly extending L-bend connectors **110***a-d* along the longitudinal axis of the first and second ends **104**, **106** of lateral frame member **102**. The first and second side frame members **120**, **130**, respectively, each have one or a plurality of receiving members **136***a-e*, **138***a-e* to allow for the alignment and insertion of L-bend connectors **110***a-d* on both the first and second ends **104**, **106**, respectively, of the lateral frame member **102**. The L-bend connectors **110***a-d* of the first and second end **104**, **106** enable the lateral frame member **102** to be selectively repositioned in a direction relative to the longitudinal axis of the lateral frame member **102** and interlockingly secured to a first side frame member **120** between a series of longitudinal positioned receiving members **136***a-e*, **138***a-e* and to a second side frame member **130**.

In an embodiment, as illustrated in FIG. **1***f*, lateral frame member **102** is movable along a height of first side frame member **120** and second side frame member **130** within a longitudinal range as shown by the series of locations of the plurality of slots **136***a-e*, **138***a-e*, respectively, representing the two columns of slots **132**, **134** on the first and second side frame member **120**, **130**, respectively. As shown in FIG. **1***e*, by aligning the four L-bend connectors **110***a-d* of the first and second ends **104**, **106**, respectively, of the lateral frame member **102**, such that L-bend connectors **110***c* and **110***d* of the first and second ends **104**, **106**, respectively, align with and are inserted within the slots **138***a* and **138***b* of column **134** in each of the first and second side frame members **120**, **130**, respectively, the height of the lateral frame member **102** may be increased, as desired by a user, in a direction relative to the longitudinal axis of the lateral frame member **102**. As shown in FIG. **1***e*, in such configuration, the bottom portion **150** of lateral frame member **102** is no longer flush with its mounting surface **156**.

As shown in FIG. **1***f*, a desired vertical space **152** is created beneath the bottom portion **150** of lateral frame member **102** and the mounting surface **156** at an increased height above the mounting surface **156** approximately equal to the distance between slots **138***c* of the first and second side members **120**, **130**, respectively, and the bottom portion **154** of the first and second side members **120**, **130**, respectively. Such positioning creates the desired vertical space **152**, or transaction space, beneath the lateral frame member **102** and the mounting surface **156**. Depending on the desired height of the lateral frame member **102**, the lateral frame member **102** may be moved further upward or downward relative to the longitudinal axis of the lateral frame member **102**, as desired, by aligning the L-bend connectors **110***a-d* with and into any one or more of the one or a plurality of receiving members **136***a-e* in column **132** or one or a plurality of receiving members **138***a-e* in column **134**. Alternatively, the L-bend connectors **110***a-d* of the first end **104** of the lateral frame member **102** may be aligned with and inserted into the receiving members of column **132** and the second end **106** of the lateral frame member **102** may be aligned with and inserted into the receiving members of column **134**.

In use, the transaction space **152** may be created and increased by selectively repositioning the lateral frame member **102** such that the longitudinal protrusions **140***c-d* and extending locking tabs **142***c-d* are aligned with and inserted into slots **138***a-b*, bringing the top portions **168***c-d* of longitudinal protrusions **140***c-d* into contact with the top portion **170***a-b* of the slots **138***a-b*, thereby positioning the longitudinal protrusions **140***a* and **140***b* and extending locking tabs **142***a* and **142***b* disengaged from and above the first side frame member **120**, as shown in FIG. **1***f*. In such configuration, as shown in FIG. **1***f*, the bottom portion **162** of the locking tab **142***b* is aligned with the upper edge **160** of the side frame member **120** and the longitudinal protrusion **140***b* is passed through the thickness **128** of the side frame member **120** in direction **144** with respect to a first side frame member **120**, and in direction **164** with respect to a second side frame member **130** until the locking tab **142***b* engages with the upper edge **160** of the side frame members **120**, **130**, respectively.

In another alternative embodiment, the transaction space **152** may be still further increased by selectively repositioning the lateral frame member **102** such that only the longitudinal protrusions **140***d* and extending locking tabs **142***d* are aligned with slots **136***a* or **138***a* in the first and second side frame members **120**, **130** (not shown). Accordingly, a user may reconfigure the assembly to provide for various height transaction spaces **152** to enable the user an opportunity to transact business, exchange goods, money, documents, food, or the like to an individual on the outer surface **166** of the lateral frame member **102**.

Disengagement and removal of the lateral frame member **102** from the side frame member **120** is easily accomplished by lifting the lateral frame member **102** upwardly from its supported interlocked position with the side frame member **120** bringing the top portions **168***a-d* of longitudinal protrusions **140***a-d* of L-bend connectors **110***a-d* into contact with the top portion **170***b-e* of the slots **136***b-e* such that the L-bend connectors **110***a-d* are in a substantially parallel

relationship to the slots **136***b-e* whereupon the L-bend connectors **110***a-d* can be withdrawn through the slots **136***b-e*, thereby separating and removing the lateral frame member **102** from the side frame member **120**. The same method of disengagement may be performed for removing the second side frame member **130** from the lateral frame member **102**.

In an embodiment, as illustrated in FIGS. **1***f* and **1***g*, the bottom portions **154** of the side frame members **120**, **130**, respectively, may be mounted onto base members **180** to avoid damage to a mounting surface as well as to provide additional stability to the configured assembly. Base members **180** include a first rib **182** and a second rib **184** opposite to the first rib **182**. The first and second ribs **182**, **184**, respectively, have a rigid construction and define a longitudinal channel **186** disposed between the first and second ribs **182**, **184**, respectively. The longitudinal channel **186**, extending in the longitudinal direction of the ribs **182**, **184**, has a width of a sufficient size, e.g., approximately 1.1 times greater, than the size of the bottom portion **154** of a side frame member which may be inserted. In an alternative embodiment, a bottom portion of a lateral frame member may be inserted into the base members. The placement of the bottom portion **154** of the side frame member into the base members enables the bottom portion **154** of the side frame member to resist linear and angular movement on the mounting surface. In use, upon constructing a frame assembly, the first and second bottom portions **154** of each of the side frame members are inserted into base members **180**, as illustrated in FIG. **1***e*. In a constructed frame assembly, the base member of each side frame member each have a common elevation on a horizontal mounting surface, such as a top of a table, counter, floor, or other transaction area. The horizontal mounting surface for a table or desk or other modular component assembly falls within the confines of at least two parallel sides of the modular component assembly.

As shown in FIG. **2***a*, a side frame member **220** has a first end **222**, a second end **224** opposite to the first end **222**, a top portion, **226**, and a bottom portion **228**. Referring to FIG. **2***a*, the bottom portion **228** may be configured having a widening bottom portion extending outward from the top portion **226**. In an alternative embodiment, as shown in FIGS. **2***b* and **2***c*, respectively, the side frame member **220** may be configured having bottom portions **248** of equal or narrower dimensions than the top portions **246**. Additionally, in an alternative embodiment, it is contemplated that the first side frame member **220** may be configured with equal or different dimensions than the second side frame member **222** (not shown).

Although the lateral frame member is shown to be generally rectangular in geometry, it will be appreciated that essentially any shape or size of lateral frame member may be employed. As illustrated in FIG. **3***a*, in another embodiment, lateral frame member **302** is generally rectangular in geometry and is provided with a further modification which is suitable for enabling a transaction space without raising the entirety of the lateral frame member as described above with respect to FIG. **1***f*. The lateral frame member **302** is provided with a U-shaped cut out opening **308** in the bottom portion **310** of the lateral frame member **302**. The cut out opening **308**, which may be of any shape or size as desired by a user, enables a user the opportunity to transact business, exchange goods, money, documents, food, or the like to an individual on the outer surface **361** of the lateral frame member **302**.

In an embodiment, as shown in FIG. **3***a*, a lateral frame member **302** may be interlocked together with one or more additional lateral frame members, **304**, **306**, respectively, to form an extended barrier of lateral frame members. Similarly, additional lateral frame members (not shown) may be added to the lateral frame members **304**, **306**, respectively, to form a further extended barrier of lateral frame members. As shown in FIG. **3***a*, the lateral frame member **302** may be interlocked with first and second side frame members **312**, **314** by positioning the first side frame member **312** adjacent to a first side **316** of lateral frame member **302** such that L-bend connectors **320***a-d* of the first side **316** of lateral frame member **302** are aligned with a selective number of slots **324***a-e* from a first column of slots **326** or a selective number of slots **328***a-e* from a second column of slots **330** in the side frame member **312**. The L-bend connectors **320***a-d* of the first side **316** are then inserted into the selectively aligned slots **324***b-e*, and the lateral frame member **302** is then pressed down in the direction of gravity, as indicated by arrow **446**, and the downwardly extending locking tabs **332***a-d* of L-bend connectors **320***a-d* are mechanically captured by the outer surface **336** of side frame member **312** directly beneath the slots **324***b-e* while engaging the longitudinal protrusions **322***a-d* in slots **324***b-e*.

To interlock an additional second lateral frame member **304** onto the first lateral frame member **302**, an additional second lateral frame member **304**, having a first end **350** and a second end **352** is aligned adjacent to corresponding receiving members, or slots, of the first side frame member **312**. In the event the first column **326** of slots **328***a-e* received the L-bend connectors **320***a-d* of the first side **316** of the first lateral frame member **302**, then the second column **330** of slots **328***a-e* in the first side frame member **312** remain available to receive L-bend connectors **360***a-d* of the second end **352** of the second lateral frame member **304**. The L-bend connectors **360***a-d* can be aligned and slid into the slots **328***b-e* of column **330** of side frame member **312** in the same manner as the L-bend connectors **320***a-d* are inserted into the selectively aligned slots **324***b-e*. The lateral frame member **304** is then pressed down in the direction of gravity, as indicated by arrow **446**, and the downwardly extending locking tabs of L-bend connectors **360***a-d* are mechanically captured by the inner surface **370** of side frame member **312** directly beneath the slots **328***b-e* while engaging the longitudinal protrusions in slots **328***b-e*.

With the addition of a third lateral frame member **306**, having a first end **372** and a second end **374**, the third lateral frame member may be added to the second side frame member **314** in the manner described with respect to the addition of the second lateral frame member **304** being interlockingly secured to the first side frame member **312**. The slots on the side frame members may be configured such that at least one of the slots in a first set of slots **390** are offset from at least one of the slots in a second set of slots **392**, such slots being in any configuration. Accordingly, one lateral frame member uses one set of slots **390**, and another lateral frame member uses another set of slots **392** offset from the first set of slots. As shown in FIG. **3***a*, the first column **390** of slots **334***a-e* in the second side frame member **314** are occupied with the L-bend connectors **342***a-d* of the second side **318** of the first lateral frame member **302**. The L-bend connectors **386***a-d* of the first end **372** of the third lateral frame member **306** are then aligned with and inserted into the corresponding second column **392** of slots **344***a-e* in the second side frame member **314**. In this manner, a third side frame member **376** may be secured to the second side **374** of the third lateral frame member **306** and a fourth side frame member **378** may be secured to the first side **350** of the second lateral frame member **304** so as to form the barrier

frame assembly such as shown in FIG. **3***b*. An unlimited number of lateral frame members and side frame members may be secured to assemble any length of barrier as desired. In an embodiment, any of the lateral frame members may have a different geometry based upon the desired use by an end user. In a further embodiment, any of the lateral frame members may have U-shaped cut out openings **308** as shown in FIG. **3***a*.

In further embodiments, side frame members may have additional configurations of receiving members, or slots. As shown in FIGS. **4***a* and **4***b*, a rectangular first side frame member **404**, includes three parallel columns of four vertically disposed rectangular slots **412***a-d*, **414***a-d*, and **416***a-d*, respectively. In other embodiments, the slots on the side frame members may be configured such that at least one of the slots in a first set of slots are offset from at least one of the slots in a second set of slots, such slots being in any configuration. As shown in FIG. **4***b*, first side frame member **404** includes three parallel columns of four vertically disposed different sized rectangular slots **412***a-d*, **414***a-d*, and **416***a-d*. As shown in FIG. **4***b*, the left and right columns of slots **412***a-d*, **416***a-d* may be configured with a wider width than the center column of slots **414***a-d*. Alternatively, it is contemplated that the columns of slots may be of differing shapes and sizes, i.e., the center column of slots may have a wider width than the left and right columns of slots (not shown). In an alternative embodiment, the center column of slots may have an increased number of slots than the slots on the left and right columns of slots (not shown). An increased number of slots in a center column of slots enables a center frame member to be higher than one or a plurality of a frame members on its first and/or second sides.

Referring to FIGS. **4***a* and **4***b*, a first lateral frame member **402** is disposed between first and second side frame members **404**, **406**, respectively. First lateral frame member **402** includes a first end **418** and second end **420** opposite the first end **418**. First end **418** of first lateral frame member **402** includes L-bend connectors **422***a-d*. Center slots **414***a-d* on the first side member **404** are selectively aligned to receive the corresponding L-bend connectors **422***a-d* of the first end **418** of lateral frame member **402** to secure the first lateral frame member **402** to the side frame member **404**.

Referring to FIG. **4***a*, there is shown a second lateral frame member **408** having a first end **424**, and a third lateral frame member **410** having a first end **426**. Each of the first ends **424**, **426** of second and third lateral frame members **408**, **410**, respectively, include L-bend connectors **428***a-d*, **430***a-d*. The left and right columns of slots **412***a-d*, **416***a-d* of the first side frame member **404** are selectively aligned to slide the corresponding L-bend connectors **428***a-d* of the second lateral frame member **408** and L-bend connectors **430***a-d* of the third lateral frame member **410** into the slots **412***a-d* and **416***a-d*, respectively, to secure the second lateral frame member **408** and the third lateral frame member **410** to the first side frame member **404**.

Referring to FIG. **4***a*, there is shown a second rectangular side frame member **406** including three parallel columns of four vertically disposed rectangular slots **434***a-d*, **436***a-d*, and **438***a-d*, respectively. As shown in FIG. **4***b*, the left and right columns of slots **434***a-d*, **438***a-d* may be configured with a wider width than the center column of slots **436***a-d*. Alternatively, it is contemplated that the columns of slots may be of differing shapes and sizes, i.e., the center column of slots may have a wider width and a different number of slots than the left and right columns of slots (not shown).

Referring to FIG. **4***a*, there is shown a fourth lateral frame member **440** and fifth lateral frame member **442**, each having a first end **444**, **446**. The first ends **444**, **446** of the fourth and fifth lateral frame members **440**, **442** each have L-bend connectors **448***a-d*, **450***a-d*. The center slots **436***a-d* of the second side frame member **406** are selectively aligned to receive the corresponding L-bend connectors **432***a-d* of the second end **420** of the first lateral frame member **402** to secure the first lateral frame member **402** to the second side frame member **406**. The left and right columns of slots **434***a-d*, **438***a-d* of the second side frame member **406** are selectively aligned to slide the corresponding L-bend connectors **448***a-d* of the fourth lateral frame member **440** and L-bend connectors **450***a-d* of the fifth lateral frame member **442** into the slots **434***a-d* and **438***a-d*, respectively, to secure the fourth lateral frame member **440** and the fifth lateral frame member **442** to the second side frame member **406**, so as to form the barrier frame assembly such as shown in FIG. **4***c*.

Upon placement of the L-bend connectors **428***a-d* of the second lateral frame member **408** into wider slots **412***a-d*, L-bend connectors **430***a-d* of the third lateral frame member **410** into the wider slots **416***a-d*, L-bend connectors **448***a-d* of the fourth lateral frame member **440** into the wider slots **434***a-d*, and L-bend connectors **450***a-d* of the fifth lateral frame member **442** into the wider slots **438***a-d*, additional space is provided within the slots, **412***a-d*, **416***a-d*, **434***a-d* and **438***a-d*, respectively, for low friction independent pivotal and rotatable movement of the second, third, fourth and fifth lateral frame members **408**, **410**, **440**, **442**, respectively, to enable the second, third, fourth, and fifth lateral frame members **408**, **410**, **440**, **442** to be rotatable to approximately 90 degrees from the adjacent frame member and approximately 45 degrees from the longitudinal axis of the adjacent side frame member. Accordingly, the second and third lateral frame members **408**, **410**, respectively, are rotatable to approximately 90 degrees with respect to each other, and approximately 45 degrees from the longitudinal axis of the first side frame member **404**; the fourth and fifth lateral frame members **440**, **442**, respectively, are rotatable to approximately 90 degrees with respect to each other, and approximately 45 degrees from the longitudinal axis of the second lateral frame member **406**.

As shown in FIG. **4***a*, as the second, third, fourth and fifth lateral frame members, **408**, **410**, **440**, **442**, respectively, are pivoted or rotated, they may be positioned at a wide variety of orientations, from approximately parallel to the first lateral frame member **402**, when the second, third, fourth and fifth lateral frame members **408**, **410**, **440**, **442**, respectively, are not rotated from their initial position upon securement to the first lateral frame member **402**, to approximately perpendicular to the first lateral frame member **402**, when the second and third lateral frame members **408**, **410**, respectively, are each rotated approximately 90 degrees, in opposite directions, from their initial positions upon securement to the first lateral frame member **402**, and the fourth and fifth lateral frame members **440**, **442**, respectively are each rotated approximately 90 degrees, in opposite directions, from their initial positions upon securement to the first lateral frame member **402**. The pivotal movement of the second, third, fourth and fifth lateral frame members **408**, **410**, **440**, **442** enable each of the four lateral frame members **408**, **410**, **440**, **442**, respectively, to be selectively positioned at a plurality of different angular orientations to accommodate various transaction or work areas, thereby accommodating four distinct transaction or work areas, A, B, C, and D, as shown in FIG. **4***c*. In similar manner, in a further embodiment, additional side frame members may be interlockingly coupled to one or more of the second ends of the

second, third, fourth, or fifth lateral frame members **408**, **410**, **440**, **442**, respectively, to add additional distinct transaction or work areas to the assembly.

In an embodiment, upon selectively positioning one or more of the second, third, fourth or fifth lateral frame members, **408**, **410**, **440**, **452**, respectively, to a desired location, the lateral frame members may be stabilized in such desired position with the application of a removable adhesive attached to the bottom surface of the second, third, fourth, or fifth lateral frame members **408**, **410**, **440**, **452**, respectively, to adhere to the top of a mounting surface (not shown).

In another embodiment, as illustrated in FIGS. **5***a* and **5***b*, first and second side frame members **504**, **506** include parallel left and right columns of slots, **528***a-e*, **530***a-e* on the first side frame member and **532***a-e*, **534***a-e* on the second side frame member, configured such that one column of slots, **530***a-e* and **534***a-e* is wider than slots **528***a-e* and **532***a-e*. In this embodiment, one or a plurality of slots have widths greater than, e.g., 1.1 times greater than, the width of the corresponding L-bend connectors of a lateral frame member received in the slots such that the slots allow for low friction independent pivotal and rotatable movement of the lateral frame member, enabling a user to selectively position a lateral frame member at a plurality of different angular orientations to another lateral frame member, as shown in FIG. **5***c*, to allow curvatures of lateral frame members to accommodate various transaction or work areas. Referring to FIG. **5***a*, first lateral frame member **502** includes a first end **512** and a second end **514** opposite to first end **512**. The first and second ends **512**, **514**, respectively, each have L-bend connectors **538***a-d*, **540***a-d*, respectively. The L-bend connectors **538***a-d*, **540***a-d* can be selectively aligned and inserted into slots **528***b-e* and **532***b-e*, respectively, of first and second side frame members, **508**, **510**, to secure the first end **512** of the first lateral frame member **502** to the first side frame member **508** and the second end **514** of the first lateral frame member **502** to the second side frame member **510**.

The wider slots **530***b-e* of the first side frame member **504** are then selectively aligned to receive corresponding L-bend connectors **542***a-d* of a second side **518** of a second lateral frame member **508** to secure the second lateral frame member **508** to the first side frame member **504**. The wider slots **534***b-e* of the second side frame member **506** are selectively aligned to receive corresponding L-bend connectors **544***a-d* of a first side **520** of the third lateral frame member **510** to secure the third lateral frame member **510** to the second side frame member **506**. Upon placement of the L-bend connectors **542***a-d* of the second side **518** of a second lateral frame member **508** into the wider slots **530***b-e*, and L-bend connectors **544***a-d* of the first side **520** of the third lateral frame member **510** into the wider slots **534***b-e*, additional space is provided within the slots, **530***b-e*, **534***b-e*, respectively, for low friction independent pivotal and rotatable movement of the second and third lateral frame members **508**, **510**, respectively, to enable the second and third lateral frame members **508**, **510** to be rotatable and to provide a curved barrier along the second, first, and third lateral frame members, **508**, **502**, **510**, respectively, so as to form the barrier frame assembly such as shown in FIG. **5***c*. The degree of curvature of such extended barrier may be varied depending on the desired pivotal movement of the second and third lateral frame members **508**, **510**, with respect to the first lateral frame member **502**.

In still further embodiments, assemblies may be configured from lateral frame members having one or a plurality of receiving members, L-bend connectors, or both, on a first end and/or second end. In an embodiment, referring to FIGS. **6***a* and **6***b*, a modular interlocking frame assembly **600** is illustrated including a first and second lateral frame member **602**, **604**, each including a first end **606**, **610**, respectively and a second end **608**, **612**, respectively opposite to the first end **606**, **610**. The first ends **606**, **610** each include L-bend connectors **618***a-d*, **620***a-d*, respectively, and receiving members, and slots **622***a-d*, **624***a-d*, respectively, along the longitudinal axis of the first ends **606**, **610** of first and second lateral frame member **602**, **604**, however, any number of L-bend connectors or receiving members can be provided in any orientation or configuration. In an embodiment, as shown in FIG. **6***a*, the second end **608** of the first lateral frame member **602** can have L-bend connectors **626***a-d* along the longitudinal axis of the second end **608**. In alternative embodiments, the second end **608** of the first lateral frame member **602** may also have a plurality of slots (not shown). In an alternative embodiment, the second end **608** of the first lateral frame member **602** may have neither L-bend connectors nor slots (as shown in the second end **612** of second lateral member **604**.

Referring to FIG. **6***a*, the modular frame assembly **600** further includes a third lateral frame member **630** including a first end **632** and a second end **634** opposite to the first end **632**. The first and second ends **632**, **634**, respectively, each include a vertical column including a plurality of slots **636***a-d*, **638***a-d*, respectively, and L-bend connectors **640***a-d*, **642***a-d*, respectively, however any number of slots or L-bend connectors can be provided in any orientation or configuration. In use, the slots **636***a-d*, **638***a-d*, respectively, of the third lateral frame member **630** are aligned to receive the L-bend connectors **618***a-d* of the first end **606** of the first lateral frame member **602**, and L-bend connectors **620***a-d* of the first end **610** of the second lateral frame member **604**, to secure the first and third lateral frame members **602**, **630**, respectively, together and the second and third lateral frame members **604**, **630**, respectively, together, so as to form the barrier frame assembly such as shown in FIG. **6***b*, and thereby creating a partially enclosed and distinct transaction or work area A. In an embodiment, any one or a plurality of lateral frame members may be configured with a cut out opening, which may be of any shape or size as desired by a user. Alternatively, in use, the L-bend connectors **618***a-d* of the first end **632** of the third lateral frame member **630** are aligned and inserted into the slots **622***a-d* of the first end **606** of the first lateral frame member **602** and the L-bend connectors **620***a-d* of the first end **610** of the second lateral frame member **604** are aligned and inserted into the slots **638***a-d* of the second end **634** of the third lateral frame member **630** to secure the first and third lateral frame members **602**, **630**, respectively, together and the second and third lateral frame members **604**, **630**, respectively, together.

In alternative embodiments, any number of transaction or work areas may be configured in any configuration with the addition of lateral frame members. Referring to FIG. **6***c*, the first end **610** of the second lateral frame member **604** may be modified to include an additional plurality of slots **656***a-d* in a vertical configuration parallel to the slots **624***a-d*, however any configuration of slots may be provided. With the inclusion of the additional plurality of slots **656***a-d*, the first end **610** of the second lateral frame member **604** may also be modified to remove the L-bend connectors, as shown in FIG. **6***c*. A fourth lateral frame member **650** is provided. Fourth lateral frame member **650** includes a first end **652** and a second end **654** opposite to the first end **652**. The first and second ends **652**, **654**, respectively, each include a vertical

column including a plurality of slots **658***a-d*, **660***a-d*, respectively, and L-bend connectors **662***a-d*, **664***a-d*, respectively, however any number of slots or L-bend connectors can be provided in any orientation or configuration.

In use, as illustrated in FIG. **6***c*, the slots **656***a-d* of the first end **610** of the second lateral frame member **604** are aligned to receive the L-bend connectors **662***a-d* of the first end **652** of the fourth lateral frame member **650** to secure the second and fourth lateral frame members **604**, **650**, respectively, together. As shown in FIG. **6***c*, any one or a plurality of lateral frame members may be configured with a cut out opening **666**, which may be of any shape or size as desired by a user.

Referring to FIG. **6***c*, a fifth lateral frame member **670** is provided. Fifth lateral frame member **670** includes a first end **672** and a second end **674** opposite to the first end **672**. The first end **672** of the fifth lateral frame member **670** includes a plurality of slots **676***a-d* and L-bend connectors **678***a-d*. In use, the plurality of slots **676***a-d* on the first end **672** of the fifth lateral frame member **670** are aligned to receive the L-bend connectors **664***a-d* of the second end **654** of the fourth lateral frame member **650** to secure the fifth and fourth lateral frame members **670**, **650**, respectively, together. In an alternative embodiment, in use, the L-bend connectors **678***a-d* of the first end **672** of the fifth lateral frame member **670** are aligned and inserted into the slots **660***a-d* of the second end **654** of the fourth lateral frame member **650** to secure the fifth and the fourth lateral frame members **670**, **650**, respectively, together, thereby creating a partially enclosed and distinct transaction or work area B. As shown in FIG. **6***c*, any one or a plurality of lateral frame members may be configured with a cut out opening **666**, which may be of any shape or size as desired by a user. In similar manners, additional lateral frame members may be interlockingly secured to create additional barriers and additional transaction or work areas as discussed.

In an alternative embodiment, to create an extended barrier with third and fourth lateral frame members **630**, **650**, respectively, the first, third, and fifth lateral frame members **602**, **604**, **670**, respectively, could be replaced with side frame members as discussed in reference to FIGS. **1-5**, having a plurality of slots in a variety of configurations to receive the L-bend connectors of each of the third and fourth lateral frame members **630**, **650**, respectively (not shown).

Referring to FIG. **6***e*, the modular frame assembly **680** includes first, second, third and fourth lateral frame members **682**, **683**, **684**, **685**, respectively, each of which including first ends **686**, **687**, **688**, **689**. The first end **686** of the first lateral frame member **682** includes L-bend connectors **690***a-d*. The first ends **687**, **688**, of the second and third lateral frame members **683**, **684**, respectively, include L-bend connectors **691***a-d* and **692***a-d*, and first ends **687**, **688**, and **689** of the second, third and fourth lateral frame members, respectively, include slots **694***a-d*, **695***a-d*, **696***a-d*, respectively.

In use, the L-bend connectors **690***a-d* of the first end **686** of the first lateral frame member **682** are aligned and inserted into the slots **694***a-d* of the first end **687** of the second lateral frame member **683** to secure the first and second lateral frame members **682**, **683**, respectively, to each other. The L-bend connectors **691***a-d* on the first end **687** of the second lateral frame member **683** is aligned and inserted into the slots **695***a-d* of the first end **688** of the third lateral frame member **684** to secure the third lateral frame member **684** to the second lateral frame member **683**. The L-bend connectors **692***a-d* on the first end **688** of the third lateral frame member **684** is aligned and inserted into the slots **696***a-d* of the first end **689** of the fourth lateral frame member **685** to secure the fourth lateral frame member **685** to the third lateral frame member **684**. The L-bend connectors **693***a-d* on the first end **689** of the fourth lateral frame member **685** is aligned and inserted into the slots **690***a-d* of the first end **686** of the first lateral frame member **682** to secure the fourth lateral frame member **685** to the first lateral frame member **682**, thereby mechanically interlocking and releasably securing the first, second, third and fourth lateral frame members **682**, **683**, **684** and **685**, respectively, together, so as to form the barrier frame assembly such as shown in FIG. **6***f*, and creating four partially enclosed and distinct transaction or work areas A, B, C, and D.

In an alternative embodiment, the first end **686** of the first lateral frame member **682** also includes one or a plurality of slots (not shown). In such alternative embodiment, the L-bend connectors of the fourth lateral frame member may be aligned and inserted into the plurality of slots on the first end of the first lateral frame member. In a further alternative embodiment, the first end **689** of the fourth lateral frame member **685** may include only slots.

In an alternative embodiment, each of the first, second, third, and fourth lateral frame members **682**, **683**, **684**, **685**, respectively, include second ends opposite to the first ends having one or a plurality of L-bend connectors and/or one or a plurality of slots (not shown). Additional lateral frame members or side frame members may be interlockingly secured to the second ends of each of the first, second, third, and fourth lateral frame members **682**, **683**, **684**, **685**, respectively, to interlockingly secure additional lateral frame members and/or side frame members to one or a plurality of the first, second, third, or fourth lateral frame members **682**, **683**, **684**, **685**, respectively, to assemble various configurations of lateral frame members, as desired (not shown). This pattern may be repeated to permit any number of lateral frame members to be aligned in a row in such manner or to create a desired number of transaction or work areas as described.

The lateral frame members of the modular frame assembly may be variously shaped and assembled with each other to create any type of construction. In a second family of embodiments, the modular frame assembly is provided with frame members which may be implemented with alternative constructions, and shaped and sized for any practical use, such as, for example, structures such as furniture or a child's toy.

Referring to FIG. **7***a*, a modular interlocking frame assembly **700** is illustrated to include a pair of first and second lateral frame members **702**, **704**, respectively, positioned vertically and spaced apart from each other having a transverse portion along the longitudinal axis defining a length. The first and second lateral frame members **702**, **704** further include one or a plurality of flange portion(s). The flange portions can be disposed at any location on the lateral frame members. The lateral frame members are interlockingly connected to a pair of vertical first and second side frame members **706**, **708**, respectively, positioned between the pair of lateral frame members **702**, **704** and spaced apart from each other partially enclosing a space and forming a panel assembly which may be configured as a desk assembly, table assembly, shelf assembly, chair assembly, or other various configurations of furniture assemblies. In alternative embodiments, such furniture assemblies may also be configured as small construction frame assemblies for use as children's toys.

Referring to FIG. **7***a*, the first and second lateral frame members **702**, **704** include a first end **710**, **712**, respectively,

a second end **714**, **716**, respectively, opposite to the first end **710**, **712**, respectively, and a transverse portion **718**, **720**, respectively, extending between the first end **710**, **712**, respectively, and second end, **714**, **716**, respectively. The first ends **710**, **712**, respectively, and second ends **714**, **716**, respectively, each include at least one flange portion **721**, **722** on the first ends **710**, **712** and **725**, **727** on the second ends, **714**, **716**, respectively, transverse from a longitudinal axis of the first end **710**, **712**, respectively, and second end **714**, **716**, respectively, of lateral frame members **702**, **704**, respectively. The transverse portion **718**, **720**, respectively, includes an upper edge **724**, **726**, respectively. First and second lateral frame members **702**, **704** can be used on any of the modular frame assemblies described herein in connection with FIGS. **1-11** or any other modular frame assemblies described herein.

Referring to FIG. **7***a*, the flange portions **721** and **722** each include a column of three downwardly extending L-bend connectors **728***a-c*, **730***a-c* of the first ends **710**, **712** of the first and second lateral frame members **702**, **704**, respectively. The flange portions **725** and **727** each include a column of two downwardly extending L-bend connectors **732***a-b*, **734***a-b* of the second ends **714**, **716** of the first and second lateral frame members **702**, **704**, respectively. It is contemplated that any number or configuration of L-bend connectors can be provided to the first or second ends **710**, **712**, or **714**, **716** of the first or second lateral frame members **702**, **704**, respectively.

Referring to FIGS. **7***a* through **7***c*, the L-bend connectors **728***a-c*, **730***a-c*, **732***a-b*, and **734***a-b* each include an extension portion **736** and corresponding perpendicular locking tabs **738**. The extensions **736** have a length of approximately 0.5" to 3" and a width of approximately 0.125" to 2.0" and locking tabs **738** have a length of approximately 0.25" to 3" and a width of approximately 0.125" to approximately 2", as illustrated in FIG. **7***c*. The extension portions **736** and locking tabs **738** can be used on any of the modular frame assemblies described herein in connection with FIGS. **1-11** or any other modular frame assemblies described herein.

As illustrated in FIG. **7***a*, the first and second lateral frame members **702**, **704** are parallel and substantially identical to each other. Accordingly, the first and second lateral frame members **702**, **704** could be flipped over about a central lateral axis whereupon the first end would become the second end, and the second end would become the first end. This enables multiple L-bend connectors of lateral frame members to be inserted into slots on both an inner and outer surface of a pair of parallel and substantially identical side frame members, thereby enabling desk assemblies having a variety of different heights to be aligned in a row, as described in reference to FIGS. **7***a* through **7***f*, and FIGS. **8***a* through **8***g*.

As illustrated in FIG. **7***a*, the modular frame assembly **700** further includes a first and second side frame member **706**, **708** including first ends **740**, **742**, respectively, second ends **744**, **746**, respectively, opposite to the first ends **740**, **742**, respectively, and a cross panel **748**, **750**, respectively, extending therebetween the first and second side frame members **706**, **708**, respectively. The cross panels **748**, **750**, each having an upper edge **794**, **796**, respectively. The first and second side frame members **706**, **708**, respectively as shown in FIG. **7***a* are parallel and substantially identical. The first and second side frame members **706**, **708** include an inner surface **752**, **754**, respectively, an outer surface **756**, **758**, respectively, and a thickness **760**, **762**, respectively. In an alternative embodiment, the thicknesses **760**, **762** of the first and second side frame member **706**, **708** may differ from each other. First and second side frame members **706**, **708** can be used on any of the modular frame assemblies described herein in connection with FIGS. **1-11** or any other modular frame assemblies described herein.

The first ends **740**, **742** and second ends **744**, **746** of the first and second side frame members **706**, **708**, respectively, include a longitudinal column **764**, **766**, and **768**, **770** respectively, defining one or a plurality of receiving members, or slots. It is contemplated that receiving members, or slots, may be configured in an arrangement such that the receiving members are aligned in one or more columns or offset from each other, parallel or skewed, in close or distant proximity, equal or different distance apart, or symmetrical or asymmetrical from each other. It is also contemplated that the number or configuration of receiving members in a first end of a side member may be the same or different than in the second end of a side member, and that the number or configuration of receiving members in one side frame member may be different than in another side frame member.

Referring to FIG. **7***a*, the columns **764**, **766**, **768**, **770** of the first and second side frame members each includes seven slots **772***a-g*, **774***a-g*, **776***a-g* and **778***a-g*, respectively, however any number of slots in any shape, height, width or configuration, can be provided. In another embodiment, the height of the side frame members **706**, **708** may be adjusted thereby increasing or decreasing the number of slots within the columns **764**, **766**, **768**, **770**. A side frame member may be of about approximately 12" to 96" and include one or any number of slots. Alternate sized and shaped side frame members may be used in any of the assemblies contemplated herein.

Referring to FIGS. **7***a* and **7***b*, the modular frame assembly further includes a top planar member **780** having a first end **782** and a second end **784** opposite to the first end **782**. Top planar member **780** further includes an upper surface **786** and a lower surface **788**. The lower surface **788** of the top planar member **780** includes parallel chambers **790**, **792** on the first and second end of the lower surface **788** coincident with the longitudinal axis of the top planar member **780**. Top planar member **780** can be used on any of the modular frame assemblies described herein in connection with FIGS. **1-11** or any other modular frame assemblies described herein.

In use, to configure the frame members to assemble a table, desk, or any structure having a work surface, as illustrated in FIGS. **7***a*-**7***c*, the first lateral frame member **702** may be interlocked with the first side frame member **706** at a desired height by positioning the first end **710** of the first lateral frame member **702** such that the L-bend connectors **728***a-c* of the first end **710** of the first lateral frame member **702** are aligned with the desired slots of the plurality of slots **772***a-g* in the first end **740** of the first side frame member **706**. In one embodiment, as shown in FIG. **7***a*, as desired by the user, the upper edge **724** of the transverse portion **718** of the first lateral frame member **702** is positioned to be at substantially the same height as the upper edge **794** of the cross panel **748** of the first side frame member **706**. To assemble the frame members with such positioning, the three L-bend connectors **728***a-c* are individually or simultaneously aligned with and inserted in direction **797** into the corresponding first, third and fifth slots **772***a*, **772***c*, and **772***e* of the first end **740** of the first side frame member **706**, or in any corresponding unoccupied slots of slots **772***a-g* of the first end **740** of the first side frame member **706** directly aligned with the three L-bend connectors **728***a-c*, until the extension portions **736** and locking tabs **738** of each of the L-bend connectors **728***a-c* pass through the thickness **760** of

the first end **740** of the first side frame member **706** and the L-bend connectors **728***a-c* are then pressed downwardly simultaneously by a user pressing down the first end **710** of the first lateral frame member **702** in the direction of gravity as indicated by arrow **798**. This action causes the downwardly extending locking tabs **738** of L-bend connectors **728***a-c* to be mechanically captured by the outer surface **756** of the first end **740** of the first side frame member **706** directly beneath the slots **772***a*, **772***c*, and **772***e* while engaging the extension portions **736** in the slots **772***a*, **772***c*, and **772***e*, thereby mechanically interlocking and releasably securing the first lateral frame member **702** with the first side frame member **706**. The thickness **760** of the first end **740** of the first side frame member **706** being greater than, e.g., 1.1 times greater than, the width of the L-bend connectors **728***a-c* enable a friction fit of the extension portions **736** and locking tabs **738**.

Referring to FIGS. **7***a* through **7***f*, the second lateral frame member **704** may then be interlocked with the first side frame member **706** at the same height as the first lateral frame member **702**. Such assemblage may be performed by positioning the second end **716** of the second lateral frame member **704** such that its two L-bend connectors **734***a-b* are aligned with the second and fourth slots **776***b* and **776***d* in the second end **744** of the first side frame member **706**. Once aligned, the two L-bend connectors **734***a-b* on the second end **716** of the second lateral frame member **704** can be individually or simultaneously inserted into the corresponding slots **776***b* and **776***d* in the second end **744** of the first side frame member **706**, or in any corresponding unoccupied slots of slots **776***a-g* of the second end **744** of the first side frame member **706** directly aligned with the two L-bend connectors **734***a-b*, thereby mechanically interlocking and releasably securing the second lateral frame member **704** with the first side frame member **706** in the same manner described with respect to the first end **710** of the first lateral frame member **702** being secured with the first end **740** of the first side frame member **706**.

Referring to FIGS. **7***a* through **7***f*, the second end **714** of the first lateral frame member **702** is then interlockingly secured with the first end **742** of the second side frame member **708** to enable the height of the upper edge **796** of the cross panel **750** of the second side frame member **708** to be maintained at the substantially same height as the upper edge **724** of the transverse portion **718** of the first lateral frame member **702**. Such assemblage may be performed by positioning the two L-bend connectors **732***a-b* of the second end **714** of the first lateral frame member **702** such that they are simultaneously aligned with the corresponding second and fourth slots **774***b* and **774***d* in the first end **742** of the second side frame member **708** and then individually or simultaneously inserted into the second and fourth slots **774***b* and **774***d* in the first end **742** of the second side frame member **708**, or in any corresponding unoccupied slots of slots **774***a-g* in the first end **742** of the second side frame member **708** directly aligned with the two L-bend connectors **732***a*, **732***b* of the second end **714** of the first lateral frame member **702**, thereby mechanically interlocking and releasably securing the second side frame member **708** with the first lateral frame member **702** in the same manner described with respect to the first end **710** of the first lateral frame member **702** being secured with the first end **740** of the first side frame member **706**.

Referring to FIGS. **7***a* through **7***f*, the first end **712** of the second lateral frame member **704** may then be interlocked with the second end **746** of the second side frame member **708** to enable the height of the upper edge **796** of the cross panel **750** of the second side frame member **708** to be maintained at the substantially same height as the upper edge **726** of the transverse portion **720** of the second lateral frame member **704**. For such positioning, the three L-bend connectors **730***a-c* of the first end **712** of the second lateral frame member **704** are simultaneously aligned with the corresponding first, third and fifth slots **778***a*, **778***c*, and **778***e* in the second end **746** of the second side frame member **708** and then individually or simultaneously inserted into the first, third, and fifth slots **778***a*, **778***c*, and **778***e* in the second end **746** of the second side frame member **708**, or in any corresponding unoccupied slots of slots **778***a-g* in the second end **746** of the second side frame member **708** directly aligned with the three L-bend connectors **730***a-c* of the first end **712** of the second lateral frame member **704**, thereby mechanically interlocking and releasably securing the second side frame member **708** with the second lateral frame member **704** in the same manner described with respect to the first end **710** of the first lateral frame member **702** being secured with the first end **740** of the first side frame member **706**. It is contemplated that a user may assemble the interlocking frame members starting with either of the lateral frame members **702**, **704**, respectively, or side frame members **706**, **708**, respectively, as desired.

Referring to FIGS. **7***a* through **7***f*, the top planar member **780** is then assembled by aligning the parallel chambers **790**, **792** on the first and second end **782**, **784**, respectively, of the lower surface **788** with the upper edges **724**, **726** of the transverse portions **718**, **720**, respectively, of the first and second lateral frame members **702**, **704**, such that the chambers, **790**, **792**, having a width and position coincident with and approximately 1.1 times greater than the upper edges **724**, **726**, receive the upper edges **724**, **726** therein. By placing the top planar member **780** over the top of the transverse portions **718**, **720**, the top planar member **780** is fixed in place longitudinally by the upper edges **794**, **796**, respectively, of the cross panels **748**, **750** of the first and second side frame members **706**, **708** and laterally by the chambers **790**, **792** positioned over and receiving the upper edges **724**, **726** of the transverse portions **718**, **720**, respectively, of the first and second lateral frame members **702**, **704**, respectively, so as to form the desk or table assembly such as shown in FIGS. **7***d*, **7***e* and **7***f*. As shown in FIGS. **7***d*, **7***e* and **7***f*, in use, the top planar member **780** may serve as a writing surface or any support surface desired. The height of the desk surface may be variable and adjusted to be from approximately 12" from the surface of a floor or support surface to approximately 50" from the surface of a floor or support surface, with a typical height of a desk assembly for an adult being approximately 20" to 40". In the event the desk surface is utilized as a child's toy, the height of a desk assembly may be about approximately 1" to 24". Here, the top planar member **780** does not extend beyond the upper edges **794**, **796** such that further assemblies may be made to the distal or outer side of first and second side frame members **706** and **708** through the use of yet another set of first and second lateral frame members **702**, **704** without interference from the top planar member **780**. The first and second side frame members **706** and **708** are attached to the first and second lateral frame members **702** and **704** utilizing the odd or even reverse number of L-bend connectors through available slots. As an example, second lateral frame member **702** may be attached to the outer or distal portion of side frame members **706** through the available slots in longitudinal column **764** utilizing L-bend connectors **732***a*

and **732***b*. This action will be repeated with lateral frame member **704** attached to the outside or distal portion of longitudinal column **768**.

The first and second lateral frame members **702**, **704** may be selectively adjustable to increase or decrease the height of the top planar member **780** to accommodate different sized desks for different sized users or as desired, as shown in FIGS. **7***d* and **7***e*. If desired by a user, the height of the top planar member **782** may be adjusted by repositioning the three L-bend connectors **728***a-c* of the first end **710** of the first lateral frame member **702** into three corresponding slots of slots **772***a-g* that are disposed lower in the first end **740** of the first side frame member **706**. As illustrated in FIG. **7***e*, a top planar member may be adjusted to a lower height of approximately 12" for use by a toddler. This is performed by aligning the three L-bend connectors **728***a-c* of the first end **710** of the first lateral frame member **702** into the third, fifth and seventh slots **772***c*, **772***e*, and **772***g*, respectively, in the first end **740** of the first side frame member **706**. In another embodiment, the length of the first and second ends **710**, **712**, and **714**, **716**, respectively, of the first and second lateral frame members **702**, **704** may be a shorter length of approximately 6" to 12" and have one or a plurality of L-bend connectors closer or further away from each other (not shown).

To assemble the desk for a toddler, the second end **716** of the second lateral frame member **704** is also repositioned such that the two L-bend connectors **734***a-b* of the second end **716** of the second lateral frame member **706** are aligned with and inserted into the fourth and sixth slots, **776***d* and **776***f* in the second end **744** of the first side frame member **706**. Then the two L-bend connectors **732***a-b* of the second end **714** of the first lateral frame member **702** are repositioned to align with inserted into the fourth and sixth slots **774***d* and **774***f* in the first end **742** of the second side frame member **708**. The three L-bend connectors **730***a-c* of the first end **712** of the second lateral frame member **704** are repositioned to align with and inserted into the third, fifth and seventh slots **778***c*, **778***e*, and **778***g*, respectively, in the second end **746** of the second side frame member **708**. The top planar member **780** is then fixed into position over the upper edges **724**, **726** of the transverse portions **718**, **720**, respectively, of the first and second lateral frame members **702**, **704**, respectively. This readjustment and reconfiguration of the height of the top planar member **780** may be performed as many times as desired by a user.

As illustrated in FIG. **8***a*, in this same manner, another desk assembly **800** may be interlockingly secured to the desk assembly **700**, as illustrated in FIG. **7***a*, with the addition of substantially identical lateral frame members, side frame members, and top planar members. The positioning of the lateral frame members is determined by the height at which a user desires to position the top planar member of the additional desk assemblies. The assembly of the additional desk assemblies may be configured on either or both sides of the first desk assembly, as shown in FIGS. **8***a* through **8***i*.

In use, as shown in FIG. **8***a*, a user may desire for the top planar member of another interlockingly secured desk assembly **800** to be positioned at a lower height than the top planar member **780** of the first desk assembly **700**, or may desire for the top planar member **780** of the first desk assembly **700** to be lowered prior to the assembly of an adjacent desk assembly **800**.

As illustrated in FIG. **8***a*, the second desk assembly **800** may have a top planar member **880** lower than the top planar member **780** of the first desk assembly **700** for use for a child or any other desired purpose. The second desk assembly **800** includes the substantially identical frame members as utilized to assemble the first desk assembly **700**. As illustrated in FIG. **8***a*, a third and fourth lateral frame member **802**, **804**, respectively, substantially identical to the lateral frame members **702**, **704**, are positioned vertically and spaced apart from each other having a longitudinal axis defining a length. The third and fourth lateral frame members **802**, **804**, respectively, each include a first end **810**, **812**, respectively, a second end **814**, **816**, respectively, opposite to the first end **810**, **812**, respectively, and a transverse portion **818**, **819**, respectively, extending between the first end **810**, **812**, respectively, and second end, **814**, **816**, respectively. The first ends **810**, **812**, respectively, and second ends **814**, **816**, respectively, each include at least one flange portion **821**, **822** on the first ends **810**, **812** and **825**, **827** on the second ends, **814**, **816**, respectively, extending downward from a longitudinal axis of the first end **810**, **812**, respectively, and second end **814**, **816**, respectively, of third and fourth lateral frame members **802**, **804**, respectively. The transverse portion **818**, **819**, respectively, includes an upper edge **824**, **826**, respectively.

Referring to FIG. **8***a*, the flange portions **821** and **822** each include a column of three downwardly extending L-bend connectors **828***a-c*, **830***a-c* of the first ends **810**, **812** of the first and second lateral frame members **802**, **804**, respectively. The flange portions **825** and **827** each include a column of two downwardly extending L-bend connectors **832***a-b*, **834***a-b* of the second ends **814**, **816** of the first and second lateral frame members **802**, **804**, respectively. It is contemplated that any number or configuration of L-bend connectors can be provided to the first or second ends **810**, **812**, or **814**, **816** of the first or second lateral frame members **802**, **804**, respectively. Referring to FIG. **8***a*, the L-bend connectors **828***a-c*, **830***a-c*, **832***a-b*, and **834***a-b* each include an extension portion **836** and corresponding perpendicular locking tabs **838** identical to those illustrated in FIG. **7***a*, with respect to frame assembly **700**.

As illustrated in FIG. **8***a*, the third and fourth lateral frame members **802**, **804** are substantially identical to each other and to the first and second lateral frame members **702**, **704** of assembly **700**. In the frame assembly **800**, the placement and relative positioning of the third and fourth lateral frame members **802**, **804** will be determined by the desired height of the top planar member **880** relative to, and in conjunction with, the height of the top planar member **780** of the frame assembly **700**. The third and fourth lateral frame members **802**, **804** may be positioned in a substantially identical orientation to the first and second lateral frame members **702**, **704**, and at any height such first and second lateral frame members **702**, **704** may be positioned, or they may be flipped over about their central lateral axis whereupon the first ends **810**, **812** of the third and fourth lateral frame members **802**, **804** are in the substantially same orientation as the second ends **714**, **716** in the frame assembly **700**, as shown in FIG. **7***a*, and the second ends **814**, **816** are in the substantially same orientation as the first ends **710**, **712** in the frame assembly **700**, as shown in FIG. **7***a*. In the event the desired height of the top planar member **880** is at a different height than the top planar member **780** then depending on the precise lowered height desired, the orientation of the third and fourth lateral members may be substantially similar to the first and second lateral frame members shown in FIG. **7***a*, or they may be reversed, as shown in FIG. **8***a*.

As shown in FIG. **8***b*, in the event the height of the top planar member **880** is desired to be substantially equivalent

to the top planar member **780**, the third and fourth lateral frame members **802**, **804** are positioned in the same orientation as the first and second lateral frame members **702**, **704**, respectively, as shown in FIG. **7***a*. This positioning enables L-bend connectors **828***a-c*, **834***a-b* of the lateral frame members **802**, **804**, respectively, to be aligned and inserted into corresponding unoccupied slots **774***a*, **774***c*, **774***e* from among slots **774***a-g* and slots **778***b*, **778***d*, of the first end **742** and second **746** of second side frame member **708**, respectively, that are not occupied by the L-bend connectors **732***a-b* and **730***a-c* of the first and second lateral frame members **702**, **704**, respectively, so as to form an adjacent desk assembly **800** having a top planar member **880** with a height substantially similar to the top planar member **780**, as illustrated in FIG. **8***e*.

In another embodiment, in the event the desired height of the top planar member **880** is lower than the top planar member **780**, as shown in FIG. **7***a*, by a distance greater than the distance between two receiving members such as **774***a* and **774***b* on the second side frame member **708**, then the third and fourth lateral frame members **802**, **804** may also remain positioned in the same orientation as the first and second lateral frame members **702**, **704**, respectively, as shown in FIG. **7***a*. This positioning enables L-bend connectors **828***a-c*, **834***a-b* of the third and fourth lateral frame members **802**, **804**, respectively, to be aligned and inserted into corresponding unoccupied slots **774***c*, **774***e*, and **774***g* from among slots **774***a-g* and slots **776***d*, and **776***f*, of the first end **742** and second **746** of second side frame member **708**, respectively, that are not occupied by the L-bend connectors **732***a-b* and **730***a-c* of the first and second lateral frame members **702**, **704**, respectively, so as to form an adjacent desk assembly having a top planar member **880** having a height lower than the height of the top planar member **780** of desk assembly **700** (not shown).

As shown in FIG. **8***a*, in the event a user desires the height of the top planar member **880** to be lowered a distance substantially equivalent to the distance between two receiving members such as **774***a* and **774***b* on the second side frame member **708**, then the third and fourth lateral frame members **802**, **804** are positioned such that the orientation of the third and fourth lateral frame members **802**, **804** are in a reversed position to the orientation of the first and second lateral frame members **702**, **704**, respectively, as shown in FIG. **7***a*. This positioning enables L-bend connectors **832***a-b*, **830***a-c* of the third and fourth lateral frame members **802**, **804**, respectively, to be aligned and inserted into corresponding unoccupied slots **774***c*, **774***e* from among slots **774***a-g* and slots **778***b*, **778***d*, and **778***f*, of the first end **742** and second **746** of second side frame member **708**, respectively, that are not occupied by the L-bend connectors **732***a-b* and **730***a-c* of the first and second lateral frame members **702**, **704**, respectively, so as to form an adjacent desk assembly having a top planar member **880** having a height lower than the height of the top planar member **780** of desk assembly **700**.

As shown in FIG. **8***a*, the modular frame assembly **800** further includes a third side frame member **808** including first end **842**, second end **846** opposite to the first end **842**, and a cross panel **850** extending therebetween. The cross panel **850** includes an upper edge **896**. The third side frame member **808** is parallel and substantially identical to the second side frame member **708**. The third side frame member **808** further includes an inner surface **854**, an outer surface **858**, and a thickness **862** substantially equivalent to the thickness **762** of the second side frame member **708**. In an alternative embodiment, the thickness **862** of the third side frame member **808** is different than the thickness **762** of the second side frame member **708**.

The first and second ends **842**, **846** of the third side frame member **808** are substantially identical the first and second ends **742**, **746** of the second side frame member **708**, including longitudinal columns **866**, **870**, respectively, defining one or a plurality of receiving members, or slots **874***a-g*, **878***a-g*. It is contemplated that receiving members, or slots, in the first and second ends **742**, **746** of the third side frame member **808** may be configured in an arrangement such that the receiving members are aligned in one or more columns or offset from each other, parallel or skewed, in close or distant proximity, equal or different distance apart, or symmetrical or asymmetrical from each other. It is also contemplated that the number or configuration of receiving members in a first end of a side member may be the same or different than in the second end of a side member, the number or configuration of receiving members in one side frame member may be different than in another side frame member, and the height of the side members may be the same or different than each other. Referring to FIG. **8***a*, the columns **864**, **866**, of the third side frame member **808** each includes seven slots **874***a-g* and **878***a-g*, respectively, however any number of slots in any shape, height, width or configuration, can be provided.

Referring to FIG. **8***a*, the modular frame assembly **800** further includes a top planar member **880** having a first end **882** and a second end **884** opposite to the first end **882**. Top planar member **880** further includes an upper surface **886** and a lower surface **888**. The lower surface **888** of the top planar member **880** includes parallel chambers **890**, **892** on the first and second end of the lower surface **888** coincident with the longitudinal axis of the top planar member **880** (not shown), substantially similar to that shown in FIG. **7***b*. In use, a modular frame assembly **800** is configured in a substantially similar manner as the modular frame assembly **700** is configured in FIG. **7***a*, with the exception of the determination of whether the position of the third and fourth lateral frame members **802**, **804**, respectively will be assembled in a reverse manner. As illustrated in FIG. **8***a*, the two L-bend connectors **832***a-b* of the second end **814** of the third lateral frame member **802** are simultaneously aligned with the corresponding third and fifth slots **774***c*, **774***e* of the first end **742** of the second side frame member **708**. The first end **742** of the second side frame member **708** has second and fourth slots **774***b* and **774***d* filled with the L-bend connectors **732***b* and **732***d* of the second end of the first lateral frame member. Accordingly, the third and fifth slots **774***c*, **774***e*, respectively, of the first end **742** of the second side frame member **708** are empty or unoccupied ("unoccupied") and available and aligned to receive the L-bend connectors **832***a-b* of the second end **814** of the third lateral frame member. The L-bend connectors **832***a-b* are inserted in direction **897** into the corresponding third and fifth slots **774***c*, **774***e* from the outer surface **758** of the first end **742** of the second side frame member **708**, or in any corresponding unoccupied slots among the slots **774***a-g* of the first end **742** of the second side frame member **708** directly aligned with the two L-bend connectors **832***a-b*, until the extension portions **836** and locking tabs **838** of each of the L-bend connectors **832***a-b* pass through the thickness **762** of the first end **742** of the second side frame member **708** and the L-bend connectors **832***a-b* are then pressed downwardly simultaneously by a user pressing down the second end **814** of the third lateral frame member **802** in the direction of gravity as indicated by arrow **898**. This action causes the downwardly extending locking tabs **838** of L-bend connec-

tors **832***a-b* to be mechanically captured by the inner surface **754** of the first end **742** of the second side frame member **708** directly beneath the slots **774***c*, **774***e* while engaging the extension portions **836** in the slots **774***c* and **774***e*, thereby mechanically interlocking and releasably securing the third lateral frame member **802** with the second side frame member **708**.

Referring to FIG. **8***a*, the fourth lateral frame member **804** may then be interlocked with the second side frame member **708** at the same height as the third lateral frame member **802**. Such assemblage may be performed by positioning the first end **812** of the fourth lateral frame member **804** such that its three L-bend connectors **830***a-c* are aligned with the second, fourth and sixth slots **778***b*, **778***d*, and **778***f* in the second end **746** of the second side frame member **708**. Once aligned, the three L-bend connectors **830***a-c* on the first end **812** of the fourth lateral frame member **804** can be simultaneously inserted into the corresponding slots **778***b*, **778***d*, and **778***f* in the second end **746** of the second side frame member **708**, or in any corresponding unoccupied slots among slots **778***a-g* of the second end **746** of the second side frame member **708** directly aligned with the three L-bend connectors **830***a-c*, thereby mechanically interlocking and releasably securing the fourth lateral frame member **804** with the second side frame member **708**.

As illustrated in FIG. **8***a*, similarly, the three L-bend connectors **828***a-c* of the first end **810** of the third lateral frame member **802** are simultaneously aligned with and inserted in direction **899** into the corresponding second, fourth, and sixth slots **874***b*, **874***d*, and **874***f*, respectively, of the third side frame member **808** from the inner surface **854** of the third side frame member **808**, or in any corresponding unoccupied slots among the slots **874***a-g* of the first end **842** of the third side frame member **808** directly aligned with the three L-bend connectors **828***a-c*, until the extension portions **836** and locking tabs **838** of each of the L-bend connectors **828***a-c* pass through the thickness **862** of the first end **842** of the third side frame member **808** and the L-bend connectors **828***a-c* are then pressed downwardly simultaneously by a user pressing down the first end **842** of the third side frame member **808** in the direction of gravity as indicated by arrow **898**. This action causes the downwardly extending locking tabs **838** of L-bend connectors **828***a-c* to be mechanically captured by the inner surface **854** of the first end **842** of the third side frame member **808** directly beneath the slots **874***b*, **874***d*, and **874***f* while engaging the extension portions **836** in the slots **874***b*, **874***d*, and **874***f*, thereby mechanically interlocking and releasably securing the third lateral frame member **802** with the third side frame member **808**.

Referring to FIG. **8***a*, the second end **816** of the fourth lateral frame member **804** is then interlockingly secured with the second end **846** of the third side frame member **808**. Such assemblage may be performed by positioning the two L-bend connectors **834***a-b* of the second end **816** of the fourth lateral frame member **804** such that they are simultaneously aligned with the corresponding third and fifth slots **878***c* and **878***e* in the second end **846** of the third side frame member **808** and then simultaneously inserted into the third and fifth slots **878***c* and **878***e* in the second end **846** of the third side frame member **808**, or in any corresponding unoccupied slots among slots **878***a-g* in the second end **846** of the third side frame member **808** directly aligned with the two L-bend connectors **834***a-b* of the second end **816** of the fourth lateral frame member **804**, thereby mechanically interlocking and releasably securing the third side frame member **808** with the fourth lateral frame member **804**.

Referring to FIG. **8***a*, the top planar member **880** is then assembled onto the upper edges **824**, **826** of the third and fourth lateral frame members **802**, **804** in the same manner as the top planar member **780** was assembled onto the upper edges **724**, **726** of the first and second lateral frame members **702**, **704**, thereby fixing the top planar member **880** in place. With the addition of another desk assembly adjacent to desk assembly **800**, a row of desk assemblies may be configured as shown in FIG. **8***c*. As shown in FIGS. **8***c* and **8***d*, in use, the top planar member **880** may serve as a writing surface or any support surface desired.

As shown in FIGS. **8***a* through **8***e*, this pattern of assembling modular frame assemblies may be repeated to permit any number of desk assemblies to be aligned in a row. Additional desk assemblies may also be configured to enable a perpendicular row of desk assemblies to be constructed, as shown in FIGS. **8***h* and **8***i*. As shown in FIGS. **8***f* through **8***i*, a perpendicular row of desk assemblies may be configured with the use of a corner assembly **840**.

As shown in FIGS. **8***f* through **8***i*, corner assembly **840** is assembled using a substantially similar pair of first and second lateral frame members **702**, **704**, and a top planar member **780**, as described in the construction of modular frame assembly **700** in FIG. **7***a* and first and second corner side frame members **843**, **844**. The first and second corner side frame members **843**, **844** each include first ends **848**, **852** and second ends **868**, **872**. The first and second ends **848**, **852** and **868**, **872**, respectively, include a plurality of receiving members **772***a-g*, **774***a-g*, **776***a-g*, and **778***a-g*, as described with respect to the first and second ends **740**, **744** and **742**, **746** of the first and second side frame members **706**, **708** in FIG. **7***a*.

The first and second ends **848**, **852** and **868**, **872**, respectively, also include one or a plurality of L-bend connectors. As shown in FIG. **8***f*, the first ends, **848**, **852** include four L-bend connectors **849***a-d*, **853***a-d*, and the second ends, **868**, **872** include three L-bend connectors **869***a-c*, and **873***a-c*, respectively.

In use, as shown in FIG. **8***f*, a corner assembly **840** may be utilized when a user desires to configure desk assemblies adjacent to either of the first and/or second lateral frame members **702**, **704** and/or adjacent to either the first and/or second corner side frame member **843**, **844**, as shown in FIG. **8***h*. A corner assembly **840** is configured in a substantially similar manner as the modular frame assembly **700** was configured in FIG. **7***a*. As shown in FIGS. **8***f* and **8** *h*, the unoccupied receiving members **772***a-g*, **774***a-g*, **776***a-g*, and **778***a-g* of the first and second ends **848**, **852** and **868**, **872**, respectively are available to receive L-bend connectors of additional lateral frame members **702**, **704**, respectively, of additional desk assemblies extending down the longitudinal axis of the top planar member **780**. It is contemplated that a first and second end can be flipped over about a central lateral axis whereupon the first end **848** is in the position of the second end **868**, and the second end **868** is in the position of the first end **848**, as shown in FIG. **8***f*. Similarly, to assemble additional desk assemblies in a perpendicular orientation, the unoccupied L-bend connectors **849***a-d*, **853***a-d* on the first ends **848**, **852** and the unoccupied L-bend connectors **869***a-c* and **873***a-c* on the second ends **868**, **872**, respectively, are available to be aligned with and inserted into receiving members **774***a-g*, **778***a-g* of additional adjacent side frame members **708** of additional desk assemblies extending down the lateral axis of the top planar member **780**, thereby assembling the perpendicular desk assemblies as shown in FIG. **8***i*.

It is contemplated that other modular frame assemblies may be constructed from or in combination with the assemblies **700** or **800**, as illustrated in FIGS. **7***a*-**7***f* and **8***a*-**8***i*, such that a user can optionally use the frame members of FIGS. **7***a-g* and **8***a-i*, to provide a user with numerous and varied options for assembling the frame member to a desired function.

Referring to FIG. **9***a*, a modular interlocking shelf frame assembly **900** is illustrated. The shelf frame assembly **900** includes a desk assembly **700**, as shown in FIG. **7***a*. As shown in FIG. **9***a*, the first and second side frame members **706**, **708** of the desk assembly illustrated in FIG. **7***a* are modified to form first and second side frame members **970**, **972** each of which includes one or more receiving members, or dual-end slots, **974***a-b*, **976***a-b*, respectively, on the cross panels **978**, **980**, respectively.

The shelf frame assembly **900** further includes a pair of first and second lateral frame members of the desk assembly illustrated in FIG. **7***a* modified in length to form a pair of first and second lateral shelf frame members **902**, **904**, and **906**, **908**, respectively. The shelf frame assembly **900** further includes first and second side shelf frame members **910**, **912**, respectively. Shelf frame assembly **900** further includes additional top planar members forming a first and second top shelf planar member **914**, **916**. The first and second lateral shelf frame members **902**, **904**, **906**, **908**, respectively, first and second side shelf frame members **910**, **912**, and first and second top shelf planar members **914**, **916** form a shelf assembly above an upper surface **786** of the top planar member **780** of desk assembly **700** as illustrated in FIG. **7***a*.

The first and second lateral shelf frame members **902**, **904** and **906**, **908** each include a first end **922**, **924**, **926**, **928**, respectively, and a second end **930**, **932**, **934**, **936**, respectively, opposite to the first end **922**, **924**, **926**, **928**, respectively. The first ends **922**, **924**, **926**, **928**, respectively, and second ends **930**, **932**, **934**, **936**, respectively, each have at least one or more L-bend connectors **938**, the L-bend connector **938** having the same members and performing in the same manner as shown with respect to L-bend connector **728** in FIG. **7***c*. L-bend connectors **938** in FIG. **9**, or L-bend connectors **728** in FIG. **7***c*, can be used on any of the modular frame assemblies described herein in connection with FIGS. **1-11** or any other modular frame assemblies described herein.

The first and second side shelf frame members **910**, **912** include a first end **940**, **942** and second end **944**, **946** opposite to the first end **940**, **942**, and a bottom surface **948**, **950**. The first ends **940**, **942** and second ends **944**, **946** of the side shelf frame members **910**, **912** each having a plurality of receiving members **952***a-e*, **954***a-e*, and **956***a-e*, **958***a-e* configured along the longitudinal axis of the side shelf frame members **910**, **912**. In alternative embodiments, the side shelf frame members **910**, **912** may have one or a plurality of receiving members configured in an arrangement such that the receiving members are aligned in one or more columns or offset from each other, parallel or skewed, in close or distant proximity, equal or different distance apart, or symmetrical or asymmetrical from each other. First and second side shelf frame members **910**, **912** can be used on any of the modular frame assemblies described herein in connection with FIGS. **1-11** or any other modular frame assemblies described herein.

Referring to FIG. **9***a*, the receiving members **952***a-e*, **954***a-e*, and **956***a-e*, **958***a-e* are configured to receive the L-bend connectors **938** of the first end **922**, **924**, **926**, **928**, respectively, and a second end **930**, **932**, **934**, **936**, respectively, of the first and second lateral shelf frame members **902**, **904** and **906**, **908**, respectively. In an alternative embodiment, the first ends **940**, **942** and second ends **944**, **946** of the side shelf frame members **910**, **912** may have a single set of columns configured to receive the L-bend connectors **938** of the first and second lateral shelf frame members **902**, **904** and **906**, **908**. Referring to FIG. **9***a*, the bottom surfaces **948**, **950** of the side shelf frame members **910**, **912** have a flange portion **962**, **964**. The flange portion **962**, **964** includes a dual-end connector **966**, **968**. The dual-end connectors **966**, **968** can be received by the dual-end slots, **974***a* or **974***b*, and **976***a* or **976***b*, respectively, on the cross panels **978**, **980**, respectively. In an alternative embodiment, there may be one or a plurality of flange portions on the bottom surface **948**, **950** of the side shelf frame members **910**, **912**, having any shape, configuration or orientation. In one embodiment, the flange portion may be an L-bend connector **938**. It is contemplated that dual-end connectors can be used in the same manner as any L-bend connectors on any of the modular frame assemblies described herein in connection with FIGS. **1-11** or any other modular frame assemblies described herein.

In use, to configure the shelf frame assembly **900**, as shown in FIG. **9***a*, the dual-end connectors **966**, **968** on the bottom surface **948**, **950**, respectively, of the first and second side shelf frame members **910**, **912** are aligned adjacent to and received by the receiving member **974***b*, **976***b*, respectively, on the cross panel **978**, **980**, respectively, of the first and second side frame members **970**, **972**, by sliding the dual-end connectors **966**, **968** into the friction fit dual-end slot **974***b*, **976***b* on the cross panels **978**, **980**. In another embodiment, the flange portion may include a plurality of dual-end connectors, which slide individually or simultaneously into similarly shaped receiving members, or dual-end slots, **974***a-b*, **976***a-b*, respectively, on the cross panel of the first and second side frame members **970**, **972**. In an alternative embodiment, the first and second shelf side frame members **910**, **912** may be formed integral with the side frame members **970**, **972**, respectively.

The shelf lateral frame members **902**, **904**, **906**, **908** are vertically oriented and positioned in between the first and second shelf side frame members **910**, **912**. The shelf lateral frame members **902**, **904**, **906**, **908** each have an upper edge **903**, **905**, **907**, **909**, respectively. The shelf assembly is performed by aligning the L-bend connector **938** of the first end **922** of the first shelf lateral frame member with one of the receiving members **956***a-e* of the side shelf frame member **910**. A user may determine the desired receiving member **956***a-e* into which the L-bend connector **938** is aligned and inserted by determining the height at which it desires a first shelf to be positioned. A user will determine the height from a choice of selective locations or receiving members **956***a-e* on the side shelf frame member **910**. Additionally, a user may determine to position one or a plurality of shelves on the side shelf frame member **910**.

In use, as illustrated in FIG. **9***a*, in one embodiment, although any number of alternatives may be considered in any desired sequence, a user may align and insert the L-bend connector **938** of the first end **922** of the first shelf lateral frame member **902** with receiving member **956***a* of the side shelf frame member **910**. The L-bend connector **938** of the second end **930** of the first shelf lateral frame member **902** is then aligned with and inserted into receiving member **958***a* of the side shelf frame member **912**. The L-bend connector **938** of the first end **924** of the second shelf lateral frame member **904** is then aligned with and inserted into receiving member **952***a* of the side shelf lateral frame member **910**. The L-bend connector **938** of the second end

932 of the second shelf lateral frame member 904 is then aligned with and inserted into receiving member 954*a* of the side shelf lateral frame member 912. The L-bend connector 938 of the first end 926 of the third lateral frame member 906 is then aligned with and inserted into any of the unoccupied receiving member of the slots 956*b-e*. In one embodiment, the L-bend connector 938 of the first end 926 of the third lateral frame member 906 is aligned with and inserted into receiving member 956*d* of the side shelf lateral frame member 910. The L-bend connector 938 of the second end 934 of the third lateral frame member 906 is then aligned with and inserted into receiving member 958*d* of the side shelf lateral frame member 912. The L-bend connector 938 of the first end 928 of the fourth lateral frame member 908 is then aligned with and inserted into receiving member 952*d* of the side shelf lateral frame member 910. The L-bend connector 938 of the second end 936 of the fourth lateral frame member 908 is then aligned with and inserted into receiving member 954*d* of the side shelf lateral frame member 912.

In use, as illustrated in FIG. 9*a*, shelf top planar members 914, 916 are then longitudinally positioned on the top of the pair of shelf lateral frame members 902, 904, and 906, 908, respectively, and in between the first and second shelf side frame members 910, 912. The shelf top planar members 914, 916 each have a first end 981, 983 and a second end 985, 987 opposite to the first end 981, 983, and an upper surface 982, 984, respectively, and a lower surface 986, 988, respectively. As shown in FIG. 7*a* with respect to the top planar member 780, the lower surfaces 986, 988 of the shelf top planar members 914, 916 include parallel chambers 990, 992, and 994, 996, respectively, on first and second ends 981, 983, 985, 987, respectively, of the lower surfaces 986, 988, coincident with the longitudinal axis of the shelf top planar members 914, 916. In an alternative embodiment, any number of channels may be provided.

Referring to FIG. 9*a*, the chambers 990, 992, and 994, 996 each have a width and position coincident with upper edges 903, 905, 907, 909 of the shelf lateral frame members 902, 904, 906, 908, respectively, to receive the upper edges 903, 905, 907, 909, respectively, within the chambers 990, 992, and 994, 996, respectively. By placing the shelf top planar members 914, 916 over the top of the upper edges 903, 905, 907, 909, respectively, the shelf top planar members 914, 916 are fixed in place longitudinally by the first and second shelf side frame members 910, 912 and laterally by the chambers 990, 992, 994, 996, respectively, positioned over the upper edges 903, 905, 907, 909 of the shelf lateral frame members 902, 904, 906, 908, respectively. The shelf top planar members 914, 916 serve as a shelf surface so as to form the shelf frame assembly such as shown in FIG. 9*b*.

It is contemplated that other modular frame assemblies may be constructed from or in combination with the desk assemblies 700 or 800, as illustrated in FIGS. 7*a-g* and 8*a-i*, and the shelf assembly 900, as illustrated in FIG. 9*a* such that a user can optionally use the lateral frame members, side frame members and top planar member illustrated in FIGS. 1-9 to form a modular chair assembly 1000, as illustrated in FIGS. 10*a* through 10*c*.

Referring to FIG. 10*a*, modular chair assembly 1000 includes first and second lateral shelf frame members 902, 904, 906, 908, respectively, as well as an additional pair of first and second lateral shelf frame member 902' and 904'. The modular chair assembly 1000 further includes shelf side frame members 910, 912 of FIG. 9 modified to be formed integral with side frame members 970, 972, respectively, to form first and second side chair frame members 1002, 1004. In an alternative embodiment, the first and second side chair frame members 1002, 1004 may be configured from the shelf side frame members 910, 912 assembled with the first and second side frame members 970, 972, or first and second side frame members 706, 708, as desired by a user. The modular chair assembly 1000 further includes a top planar member 1080 modified from the top planar member 780, as shown in FIG. 7*a*, to include a rectangular projection 1026, 1028 on edges 1027, 1029 extending between the first end 782 and second end 784. It is understood that the projections 1026, 1028 may be of any shape or size.

In an alternative embodiment, as shown in FIG. 10*d*, the first and second side chair frame members 1002, 1004, may be modified to include an additional brace member 1081 to form a supporting arm member with the chair assembly 1000. The additional brace member 1081 includes an L-shaped support member 1082 having a horizontal extension 1084 and a vertical extension 1086. The horizontal extension 1084 has a first side 1088 and second side 1090 opposite to the first side 1088. The vertical extension 1086 has a first side 1092 and a second side 1094 opposite to the first side 1092. The brace member 1081 is formed integral with the side frame member 1002 whereby the second side 1090 of the horizontal extension 1084 is integral with a second end 1010 of side chair frame member 1002 at a height approximate to the height of the receiving member 1018*c* of the second end 1010, and the second side 1094 is formed integral with a top edge 1096 of the first end 1006 of side chair frame member 1002. The first side 1088 of the horizontal extension 1084 and the first side 1092 of the vertical extension 1086 being formed in a perpendicular manner to form a corner 1098. In an alternative embodiment, the brace member 1081 is added as an additional member to the chair assembly 1000, as shown in FIG. 10*a*.

Referring to FIG. 10*a*, first and second side chair frame members 1002, 1004, respectively, include a first end 1006, 1008, respectively, and a second end 1010, 1012, respectively, opposite to the first end 1010, 1012, respectively. The first ends 1006, 1008, respectively, and second ends 1010, 1012, respectively, each include at least one receiving member 1014, 1016 on the first ends 1006, 1008 and a plurality of receiving members 1018*a-e*, 1020*a-e* on the second ends, 1010, 1012. It is contemplated that any number or configuration of receiving members can be provided on the first and/or section ends 1006, 1008, 1010, 1012, respectively, of the first and/or second side chair frame members 1002, 1004, respectively. Referring to FIG. 10*a*, first and second side chair frame members 1002, 1004 further include a longitudinal portion 1013, 1015 extending between the first ends 1006, 1008 and second ends 1010, 1012, respectively. The longitudinal portions 1013, 1015 include a chamber, or groove 1023, 1024, disposed on the inner surface 1017, 1019 of the longitudinal portions 1013, 1015, respectively. The chamber or groove may be rectangularly shaped, as shown in FIG. 10*a*. It is understood that the chamber or groove 1023, 1024 may be of any shape or size.

Still further, it is contemplated that a user may optionally use a modified receiving member in any modular frame assemblies constructed from or in combination with the assemblies illustrated in FIGS. 1-34 herein or in any other assemblies described herein. As illustrated in FIG. 10*b*, a modified receiving member 1040 includes a T-shape receiving space having a first end 1050, a second end 1052 opposite to the first end 1050 and a bridge portion 1054 extending between the first and second ends 1050, 1052. The bridge portion 1054 extends downward in a perpendicular axis to the longitudinal axis of the receiving member 1040.

A first and second curvature **1056** and **1058** are curved inward between the first end **1050** and the bridge portion **1054**, and the second end **1052** and the bridge portion **1054**, respectively, so as to facilitate the rotation of an L-bend connector in the receiving member **1040**. Receiving member **1040** includes a thickness **1060**.

Referring to FIG. **10***a*, the lateral shelf frame members **902**, **904**, **906**, **908** include a transverse portion **903**, **905**, **907**, **909**, respectively, and one or a plurality of flange portion(s). As shown in FIG. **10***a*, the lateral shelf frame members **902**, **904**, **906**, **908** further include a first end **922**, **924**, **926**, **928**, respectively, and a second end **930**, **932**, **934**, **936**, respectively, opposite to the first end **922**, **924**, **926**, **928**, respectively. The flange portions include L-bend connectors **938**. Such L-bend connectors **938** extending transversely from first ends **922**, **924**, **926**, **928**, respectively, and second ends **930**, **932**, **934**, **936**, respectively, of the lateral shelf frame members **902**, **904**, **906**, **908**. The lateral shelf frame members **902'**, **904'** each include a first end **922'**, **924'**, respectively, and a second end **930'**, **932'**, respectively, opposite to the first end **922'**, **924'**, respectively. The first ends **922'**, **924'**, respectively, and second ends **930'**, **932'**, respectively, each have an L-bend connector **938** extending transversely therefrom.

As illustrated in FIG. **10***b*, in use, an L-bend connector **938** of first lateral shelf frame member **902** at position **1070** is rotated approximately 90 degrees about the longitudinal axis of a first lateral shelf frame member **902** to which the L-bend connector **938** is extending, to position **1072**, to insert an extension portion **736** and locking tab **738** of L-bend connector **938** into and through the first and second ends **1050**, **1052** of the receiving member **1040** with a friction fit until the locking tab **738** passes through the thickness **1060** and protrudes through the receiving member **1040** at position **1074**. The L-bend connector **938** is then rotated back 90 degrees upward about the longitudinal axis of the lateral frame member **902**. These actions cause the downwardly extending locking tab **738** of L-bend connectors **938** to be mechanically captured and locked by the bridge portion **1054** between the first and second ends **1050**, **1052**, respectively, while engaging the extension portion **736** in the bridge portion **1054**. A forward edge **1078** of the lateral frame member **902** thus becomes releasably and securely mechanically interlocked with the receiving member **1040**. The L-bend connector **938** may be released from the receiving member by similar rotation of the L-bend connector **938**. In an alternative embodiment, the receiving member may be oriented 180 degrees on the first and/or second side chair frame members **1002**, **1004**, respectively, thereby being maintained in a position such that the bridge portion **1054** remains upward upon the locking of the L-bend connector **938** in the receiving member **1040**. T-shaped receiving members **1040**, as shown in FIG. **10***b*, can be used on any of the modular frame assemblies described herein in connection with FIGS. **1-11** or any other modular frame assemblies described herein.

In use in one embodiment, although any number of alternatives may be considered in any desired sequence, a user may form a modular chair assembly by aligning and inserting the L-bend connector **938** of the first end **922** of the first shelf lateral frame member **902** into the receiving member **1018***a* of the second end **1010** of side chair frame member **1002**. The L-bend connector **938** of the first end **924** of the second shelf lateral frame member **904** is then aligned and inserted into the receiving member **1018***b* of the second end **1010** of side chair frame member **1002**. The L-bend connector **938** of the first end **926** of the third shelf lateral frame member **906** is then aligned and inserted into the receiving member **1018***c* of the second end **1010** of side chair frame member **1002**. The L-bend connector **938** of the first end **928** of the fourth shelf lateral frame member **908** is then aligned and inserted into the receiving member **1018***d* of the second end **1010** of side chair frame member **1002**. The L-bend connector **938** of the first end **922'** of the first shelf lateral frame member **902'** is then aligned and inserted into the receiving member **1018***e* of the second end **1010** of side chair frame member **1002**. The L-bend connector **938** of the first end **924'** of the second shelf lateral frame member **904'** is then aligned and inserted into the receiving member **1014** of the first end **1006** of side chair frame member **1002**.

In use, although any number of alternatives may be considered in any desired sequence, the L-bend connector **938** of the second end **930** of the first shelf lateral frame member **902** is then aligned and inserted into the receiving member **1020***a* of the second end **1012** of side chair frame member **1004**. The L-bend connector **938** of the second end **932** of the second shelf lateral frame member **904** is then aligned and inserted into the receiving member **1020***b* of the second end **1012** of side chair frame member **1004**. The L-bend connector **938** of the second end **934** of the third shelf lateral frame member **906** is then aligned and inserted into the receiving member **1020***c* of the second end **1012** of side chair frame member **1004**. The L-bend connector **938** of the second end **936** of the fourth shelf lateral frame member **908** is then aligned and inserted into the receiving member **1020***d* of the second end **1012** of side chair frame member **1004**. The L-bend connector **938** of the second end **930'** of the first shelf lateral frame member **902'** is then aligned and inserted into the receiving member **1020***e* of the second end **1012** of side chair frame member **1004**. The L-bend connector **938** of the second end **932'** of the second shelf lateral frame member **904'** is then aligned and inserted into the receiving member **1016** of the first end **1008** of side chair frame member **1004**.

Referring to FIG. **10***a*, the top planar member **1080** is then positioned and fixed over the top of the upper edge **909** of the top of shelf lateral frame member **908**, and upper edge **905'** of the top of shelf lateral frame member **904'**. The projections **1026**, **1028** on edges **1027**, **1029** are aligned and inserted into the grooves **1023** (not shown), **1024** on the inner surface **1017**, **1019** of the longitudinal portions **1013**, **1015**, respectively. The top planar member **1080** remains fixed in place longitudinally by the first and second chair side frame members **1002**, **1004** and laterally by the insertion of the projections **1026**, **1028** into the grooves **1023**, **1024** on the lower surface of the top planar member **1080**, so as to form the chair frame assembly such as shown in FIG. **10***c*. The top planar member **1080** functions as a seat portion of the chair assembly **1000**.

In another embodiment, a user may desire another work surface adjacent to a desk or table, as shown in FIGS. **7** through **10**. An additional work surface may be configured by assembling an additional desk assembly, as shown in FIGS. **7** through **10**. In addition, such work surface may also be configured with the use of a pair of outrigger modular component members, as illustrated in FIG. **11***a*. Outrigger modular component members **1100** include an L-bend body **1102** having an elongated support portion **1104** having a first end **1106** and a second end **1108** opposite to the first end **1106**. The second end **1108** of the support portion **1104** having a perpendicular flange portion **1110** extending downward therefrom. The first end **1106** includes a projection **1112** extending perpendicularly upward from the longitudi-

nal axis of the first end **1106**. The flange portion **1110** has one or a plurality of L-bend connectors **938** extending therefrom.

In use, as shown in FIG. **11***b*, one or a plurality of L-bend connectors **938** on a first and second outrigger modular component member **1100** is aligned with and inserted into one or more unoccupied slots on an outer surface of a first or second end of a first or second side frame member. A second L-bend connector **938** of a second outrigger modular component member **1120** is aligned with and interlocked with one or more unoccupied slots at the same height, as the first outrigger modular component member **1100**, as shown in FIG. **11***b*. A user may determine the desired height of the outrigger modular component members **1100**, **1120**. As illustrated in FIG. **11***b*, the first and second outrigger modular component, **1100**, **1120**, respectively, are interlocked with the fourth and sixth slots in the first or second ends of the first and/or second side frame member. As shown in FIGS. **11***b* and **11***c*, a top panel frame member **1080** is placed on the support member or portion **1104** of each of the first and second outrigger modular component members **1100**, **1120**, respectively. The top panel frame member **1080** is fixed on the first and second outrigger modular component members **1100**, **1120**, respectively, longitudinally by being fixed between the projection **1112** and the first or second end of the first or second side frame members, and laterally by the chambers **990**, **992** on the lower surface (not shown) of the top planar member **1080** positioned over the upper edges of the first and second outrigger modular component members **1100**, **1120**, respectively, so as to form an additional surface adjacent to a desk or table assembly **700**, as shown in FIGS. **11***b* and **11***c*. The top panel frame member provides a user with an additional surface on which to work. Additional outrigger modular components may be added to the opposite side of the desk or table assembly **700**, as shown in FIGS. **11***b* and **11***c*, at any height desired by a user, to receive additional top planar members. In another embodiment, outrigger modular components may be added at any height to any side frame member or corner assembly as desired. Outrigger modular component members **1100** can be used on any of the modular frame assemblies described herein in connection with FIGS. **1-11** or any other modular frame assemblies described herein.

FIG. **12***a* is a side view of a modular outrigger component with one lateral component according to the present disclosure. The modular component **1203** has two L-bend connectors **1203***c-d* with a connecting slot **1203***b*, an upper transverse portion **1203***e* with an upward extending tab **1203***a* on the lateral edge of the upper transverse portion **1203***e*. The upward extending tab **1203***a* is configured to confine a horizontal planar modular component on the outside edge of the horizontal planar modular component when the **1203** modular outrigger component is incorporated into a modular assembly.

FIG. **12***b* is a side view of a modular outrigger component with one lateral component according to the present disclosure. The modular component **1204** has two L-bend connectors **1204***c-d* with a connecting slot **1204***b*, an upper transverse portion **1204***e* with an upward extending tab **1204***a* on the lateral edge of the upper transverse portion **1204***e*. The upward extending tab **1204***a* is configured to confine a horizontal planar modular component on the outside edge of the horizontal planar modular component when the **1204** modular outrigger component is incorporated into a modular assembly.

FIG. **12***c* is a side view of a modular outrigger component **1201** with three lateral components according to the present disclosure. The modular outrigger component may also be configured with a plurality of lateral components. The modular component **1201** has three L-bend connectors **1201***g-i* with connecting slots **1201***d-f*, three upper transverse portions **1201***j***-1** with upward extending tabs **1201***a-c* on the lateral edge of the upper transverse portions **1201***j***-1**. The upward extending tabs **1201***a-c* are configured to confine horizontal planar modular components on the outside edge of the horizontal planar modular components when the **1201** modular outrigger component is incorporated into a modular assembly.

FIG. **12***d* is a side view of a modular outrigger component with three lateral components according to the present disclosure. The modular outrigger component may also be configured with a plurality of lateral components. The modular component **1202** has three L-bend connectors **1202***g-i* with connecting slots **1202***d-f*, three transverse portions **1202***j***-1** with upward extending tabs **1201***a-c* on the lateral edge of the transverse portions **1201***j***-1**. The upward extending tabs **1201***a-c* are configured to confine horizontal planar modular components on the outside edge of the horizontal planar modular components when the **1202** modular outrigger component is incorporated into a modular assembly.

FIG. **13** is a front view of several modular outrigger components according to the present disclosure attached to a modular construction assembly. The modular component assembly **1300** has four horizontal planar elements **1303**, **1304**, **1305**, and **1306** that are incorporated onto the upper lateral edge of the three modular outrigger components on one side of the modular assembly and onto the upper lateral edge of the single modular outrigger component on the opposite side of the modular assembly. The modular outrigger component assemblies are separated by a transverse modular component **1308** that is incorporated into the three modular outrigger components on one side by modular component **1309** and the singular modular outrigger component on the opposite side by modular component **1310** where modular components **1309** and **1310** are cooperatively connected through the use of L-bend connectors and connecting slots. The horizontal planar element **1307** is incorporated into the modular component assembly upper transverse edge of **1308** and the horizontal planar element **1307** is at the same level as the upper edge of modular components **1309** and **1310**.

FIG. **14** is a front view of several modular outrigger components according to the present disclosure attached to a modular construction assembly. The modular component assembly **1400** has four horizontal planar elements **1403**, **1404**, **1405**, and **1406** that are incorporated onto the upper lateral edge of the three modular outrigger components on one side of the modular assembly and onto the upper lateral edge of the single modular outrigger component on the opposite side of the modular assembly. The modular outrigger component assemblies are separated by a transverse modular component **1408** that is incorporated into the three modular outrigger modular components on one side by modular component **1409** and the singular modular outrigger component on the opposite side by modular component **1410** where modular components **1409** and **1410** are cooperatively connected through the use of L-bend connectors and connecting slots. The horizontal planar element **1407** is incorporated into the modular component assembly upper transverse edge of **1408** and the horizontal planar element **1407** is at a lower level than the upper edge of modular components **1409** and **1410**.

FIG. **15**. Is an exploded view of a modular construction with modular outrigger components and modular planar horizontal components. The entire modular assembly **1500** is comprised of multiple modular assembly subsystems that are configured to cooperatively connect together through the use of L-bend connectors and connecting slots. Three horizontal planar elements on one side of the modular assembly **1526**, **1527**, and **1528** are cooperatively connected to the modular assembly on the upper lateral edges of the lateral components of modular assemblies **1514** and **1515**. The upper lateral edges **1520***a-c* and **1521***a-c* support the underside of horizontal planar elements **1526**, **1527**, and **1528**. The lateral components of modular assemblies **1514** and **1515** also are configured with connecting slots **1522***a-c* in the lateral components of **1514** and **1523***a-c* in the lateral components of **1515** for further cooperative connection of modular components. Open connecting slots **1584***a* and **1584***b* of horizontal planar element **1527** cooperatively connect with the lateral edge of **1582***a* and **1583***a* of modular component **1514** and **1515** respectively. In a similar fashion, open connecting slots **1585***a* and **1585***b* of horizontal planar element **1528** cooperatively connect with the lateral edge of **1582***b* and **1583***b* of modular components **1514** and **1515** respectively. The front edge **1578** of modular component **1514** and the front edge **1580** of modular component **1515** are configured with upward facing tabs to contain the edge of horizontal planar elements **1526**, **1527**, and **1528**. The bottom legs **1516** and **1517** of modular assembly **1514** and the bottom legs **1518** and **1519** of modular assembly **1515** rest on a horizontal surface such as a floor. The L-bend connectors **1524***a-c* of modular component **1514** are cooperatively connected into the connecting slots **1512***a-g* of modular component **1501** and the L-bend connectors **1525***a-c* of modular component **1515** are cooperatively connected into the connecting slots **1513***a-g* of modular component **1501**. The connecting slots **1512***a-g* and **1513***a-g* of modular component **1501** are configured to form columns **1502** and **1503** respectively in modular component **1501**. The L-bend connectors **1524***a-c* and **1525***a-c* may alternate so as to connect to different level connecting slots and connecting slot columns **1502** and **1503** respectively. Modular component **1501** is configured to have a lateral side **1504** and an opposite lateral side **1505**. The connecting slot columns **1502** and **1503** of modular component **1501** are connected by transverse portion **1508**. Modular component **1501** has a front side **1507** and the backside **1506**. Modular component **1501** has an upper transverse edge **1509**. Modular component **1501** and modular component **1552** will connect to either lateral edge of modular component **1534** and **1543**. In one orientation, modular component **1543** has a transverse portion **1548** that connects to longitudinal end portions **1544**, with L-bend connectors **1550***a-c*, and **1545**, with L-bend connectors **1551***a-b*. The L-bend connectors on modular component **1543** in column **1544** may be cooperatively connected with the connecting slots in column **1503** while the L-bend connectors in column **1545** may be cooperatively connected with the connecting slots in column **1554** of modular component **1552**. In a similar fashion, modular component **1534** is configured with L-bend connectors in column **1535**, **1541***a-b*, that are cooperatively connected with the connecting slots in column **1502** of modular component **1501** and the L-bend connectors in column **1536**, L-bend connectors **1542***a-c*, may be cooperatively connected with column **1553**, connecting slots **1563***a-g*. In a similar fashion column **1545**, with L-bend connectors **1551***a-b*, may be cooperatively connected to the connecting slots in column **1554** utilizing connecting slots **1564***a-g*. Horizontal planar modular component **1529** may be configured to engage with the top lateral surface of the transverse section **1539** and **1548** where channels **1532** and **1533**, respectively, on the underside of horizontal planar modular component **1529** engage with the top lateral component **1539** and **1548** of **1534** and **1543** respectively. Further, modular components **1534** and **1543** are configured with a back face **1537** and a front face **1538** for **1534** and a back face of **1546** and a front face of **1547** for modular component **1543**. Modular component **1534** and **1543** are further configured with a transverse portion **1540** and **1549** respectively. It is important to note that the L-bend connectors that connect on either side of modular component **1501** and **1552** through the connecting slots in **1501** and **1552** utilize alternating connecting slots so that the modular component assembly **1500** may be extended in both directions. In a similar fashion to modular components **1514** and **1515**, modular components **1565** and **1569** are cooperatively connected to modular component **1552** utilizing L-bend connectors **1568***a-b* and **1572***a-b* that cooperatively connect with connecting slots **1563***a-g* in column **1553** and connecting slots **1564***a-g* in column **1554** respectively. Modular horizontal planar element **1573** is configured to have a top surface **1574** and a bottom surface **1575** and channels **1576** and **1577** where these channels cooperatively connect with the linear surfaces **1566** and **1570** respectively. The modular horizontal planar element **1573** may be locked in place utilizing locking cams and connecting slots **1567** and **1571**. The modular components **1565** and **1569** may be cooperatively attached to modular component **1552** at different heights through the utilization of different connecting slots for the L-bend connectors on both **1565** and **1569**. This cooperative connection at different heights of **1565** and **1569** will allow modular horizontal planar element **1573** to be at different heights depending upon the cooperative connection of **1565** and **1569** to modular component **1552**.

FIG. **16***a* is a side view of a single column of assembled modular outrigger components and modular planar elements with modular lateral components **1601***a*, **1601***b*, and **1601***c*.

FIG. **16***b* is an exploded view of assembled modular outrigger components and modular planar elements. Modular horizontal planar element **1602** will rest on the lateral top surface **1611***a* and **1612***a* of modular components **1605** and **1606** respectively. Modular horizontal planar element **1603** will rest on the lateral element **1611***b* and **1612***b* of modular components **1605** and **1606** modular components respectively with slot **1638***a* engaging with the column edge of **1605** and **1606** respectively. In a similar fashion, modular horizontal planar element **1604** will rest on lateral element **1611***c* and **1612***c* with slot **1639***a* and **1639***b* engaging with the edge **1636***b* and **1637***b* of column **1605** and **1606** respectively. Connecting slots **1613***a-c* and **1614***a-c* are located in the lateral components of modular components **1605** and **1606** respectively to provide further cooperative connections. The bottom legs **1607** and **1608** of modular component **1605** and the bottom legs **1609** at **1610** of modular component **1606** rest on a level surface such as a floor. The L-bend connectors **1615***a-c* of modular component **1605** are configured to cooperatively connect with the connecting slots **1628***a-g* of column **1618** of modular component **1617** and the L-bend connectors **1616***a-c* of modular component **1606** are configured to cooperatively connect with the connecting slots **1629***a-g* of column **1619** of modular component **1617**. Modular components **1617** has a front **1623** and the back **1622**. Connecting slots **1626***a-c* in column **1618** of modular component **1617** and connecting slots **1627***a-c* in column **1619** of modular component **1617**

are configured to accept further connections to modular component **1617**. Transverse upper lateral surface **1625** of modular component **1617** is configured to be flush with planar component **1602**. **1621** is one lateral side of the modular component **1617** and **1620** is the opposite lateral side of modular component **1617**. The open connecting slots **1638***a* and **1638***b* engage with the edge **1636***a* of modular component **1605** and the edge **1637***a* of modular component **1606** respectively. In a similar fashion, open connecting slots **1639***a* and open connecting slot **1639***b* engage with edge **1636***b* of modular component **1605** and edge **1637***b* of modular component **1606** respectively. Tabs **1634***a* and **1635***a* are configured to contain the edge of modular planar component **1602**. In a similar fashion, tabs **1634***b* and **1635***b* are configured to contain the edge of modular planar component **1603**. Also, tabs **1634***c* and **1635***c* are configured to contain the edge of modular planar component **1604** where the contained edge, as in **1602** and **1603**, is on the distal edge of **1602**, **1603**, and **1604** from proximal columns **1605***b* and **1606***b*. In modular component **1605**, **1605***a* designates the front edge of the linear projections from column **1605***b*. In a similar configuration, **1606***b* designates the front edge of the linear projections from column **1606***b*.

FIG. **16***c* is a planar element with locking cam elements and receiving chambers in the planar element. A modular planar element **1630** is comprised of two chambers **1630***e* and **1630***f* where these chambers may engage with the lateral surface of the modular component assembly. Locking cams **1630***i* and **1630***j* are configured to lock to another modular component that is engaged with channels **1630***e* and **1630***f*. In a similar fashion, locking cams **1630***h* and **1630***g* are configured to lock edge **1630***d* to another modular component. Edge **1630***c* is not engaged utilizing locking cams but will benefit from the interference fit of locking cams **1630***h, i, g*, and *j*.

FIG. **16***d* is a planar element with locking cam elements and receiving chambers in the planar element and where the chambers extend through one edge of the planar element forming an open slot. A modular planar element **1631** is comprised of two chambers **1631***e* and **1631***f* where these chambers may engage with the lateral surface of the modular component assembly and where open slot **1631***i* of channel **1631***e* and open slot **1631***j* of channel **1631***f* are configured to horizontally engage with a modular component. Locking cams **1631***h* and **1631***g* are configured to lock to another modular component that is engaged with channels **1631***e* and **1631***f*. Edge **1631***d* is not engaged utilizing locking cams but will benefit from the interference fit of locking cams **1631***h* and *g*, and slots **1631***i* and **1631***j*.

FIG. **17***a* is a perspective view of a modular assembly of cooperatively connected modular outrigger components and modular planar elements.

FIG. **17***b* is a side view of a modular assembly of modular outrigger components and modular horizontal planar elements. The modular component assembly **1701** consist of two opposite sides **1702** and **1703** that are joined together utilizing modular component **1704**. Modular horizontal planar elements **1707***a* and **1708***a* are on the top lateral surface of lateral modular components **1705** and **1706** respectively. Modular horizontal planar elements **1707***b-c* and **1708***b-c* are configured to be on an upper lateral surface of a lower modular component and horizontally engage with the lower section of upper lateral components utilizing channels and slots respectively.

FIG. **17***c* is an exploded view of a modular assembly of cooperatively connected modular outrigger components and modular planar elements. Modular horizontal planar element **1726** engages with the upper lateral surface **1720***a* and **1721***a* of modular components **1714** and **1715** respectively. Modular horizontal planar element **1727** engages with the upper lateral surface **1720***b* and **1721***b* of modular components **1714** and **1715** respectively. Open slots **1727***a* and **1727***b* cooperatively connect with edge **1746***a* and **1747***a* respectively. Modular horizontal planar element **1728** engages with the upper lateral surface **1720***c* and **1721***c* of modular components **1714** and **1715** respectively. Open slots **1728***a* and **1728***b* cooperatively connect with edge **1746***b* and **1747***b* respectively. The upward facing tabs **1744***a-c* and **1745***a-c* are configured to contain the front edge of modular horizontal planar elements **1726**, **1727**, and **1728** with the front edge of these modular horizontal planar elements distal from the proximal location of the L-bend connectors **1724***a-c* and **1725***a-c*. The modular components **1714** and **1715** are configured to have a proximal portion designated by column **1714***b* and distal column **1714***a* on modular component **1714** with a similar proximal and distal configuration in modular component **1715**. The lower legs **1716** and **1717** of modular component **1714** and the lower legs **1718** and **1719** of modular component **1715** rest on a flat surface such as a floor. Connection slots **1722***a-c* of modular component **1714** and connection slots **1723***a-c* of modular component **1715** allow for further cooperative connection of modular components. L-bend connectors **1724***a-c* of modular component **1714** are configured to cooperatively connect with connection slots **1712***a-g* of column **1702** of modular component **1701**. In a similar fashion but with alternating connection, L-bend connectors **1725***a-c* are configured to cooperatively connect with connecting slots **1713***a-g* of column **1703** of modular component **1701**. Modular component **1701** has a front **1707** and a back **1706** with one lateral side **1704** and opposite lateral side **1705** connected by a transverse section **1708**. In a similar configuration to the earlier modular horizontal planar elements, modular horizontal planar element **1741** engages with the upper linear surface of **1735***a* and **1736***a*. Modular horizontal planar element **1742** engages with the upper linear surface of **1735***b* and **1736***b* and horizontally engages with the column of modular component **1729** and **1730** utilizing slots **1742***a* and **1742***b* respectively. As with modular components **1714** and **1715**, modular components **1729** and **1730** are configured with elements **1731** and **1732** and **1733** and **1734**, respectively, as feet for the modular components **1729** and **1730**. Connection slots **1737***a-c* for modular component **1729** and **1738***a-c* for modular component **1730** provide further configurations for connections to the modular components. L-bend connectors **1739***a-c* of modular component **1729** and L-bend connectors **1740***a-c* of modular component **1730** are configured to cooperatively connect with the connection slots **1712***a-g* and **1713***a-g*, respectively. It is important to note that the L-bend connectors on the opposite sides of modular component **1701**, **1724***a-c* and **1725***a-c* on the **1707** side of modular component **1701** and **1739***a-c* and **1740***a-c* on the **1706** side of modular component **1701**, alternate when connecting to the connection slots **1712***a-g* and **1713***a-g*. In a similar fashion to modular components **1714** and **1715**, modular components **1729** and **1730** are configured with a proximal column **1729***b* and a distal column **1729***a* and a proximal column **1730***a* and a distal column **1730***b* respectively. The distal column **1729***a* is configured with an upward facing tabs **1748***a-c* while the distal column **1730***b* is configured with upward facing tabs **1749***a-c*. The upward facing tabs are configured to contain the front edges of modular horizontal planar elements **1741**, **1742**, and **1743**. Open connecting

slots **1742***a* and **1742***b* cooperatively connect with edge **1750***a* and **1751***a*. In a similar fashion, open connecting slots **1743***a* and **1743***b* cooperatively connect with edge **1750***b* and **1751***b*.

FIG. **18***a* is a side view of a modular assembly forming a table with two levels of circular planar elements. The modular assembly may be configured to have more than two levels of circular planar elements. Modular component assembly **1801** has an upper circular planar modular component **1802** and a lower circular planar modular component **1815** where the upper circular planar modular component **1802** is constrained by tabs **1812** and **1811** at the edge of linear components **1820** and **1821** and the lower circular planar modular component **1815** is similarly constrained by tabs **1816** and **1817**. Modular components **1809** and **1810** cooperatively connect utilizing L-bend connectors and connecting slots to form a modular assembly to support **1802** and **1815**. And modular connecting component **1806** is shown on edge and a column of connecting slots **1807** is depicted with some of the slots utilized by L-bend connectors. Designation **1803** and designation **1804** are pointed to the cooperative connection that is formed by locking cams and connecting slots **1813** and **1814** respectively. Connecting slots **1818** and **1819** are configured to cooperatively connect circular planar modular component **1815**. In a similar fashion, connecting slots **1813** and **1814** are configured to cooperatively connect circular planar modular component **1802**. Any planar polygon component may be substituted for the circular planar modular component and the modular assembly adjusted to contain the edges of the planar polygon component.

FIG. **18***b* is a perspective view of a modular assembly forming a table with a single top located circular planar element. Modular assembly **1820** is configured to accept a singular circular planar modular component **1821**. Here, any planar polygon component may be substituted for the circular planar modular component and the modular assembly adjusted to contain edges of the planar polygon component.

FIG. **18***c* is a perspective view of a modular assembly forming a table with a single top located planar element **1823** and a single lower located circular planar element **1824**. Here, any planar polygon component may be substituted for the circular planar modular component and the modular assembly adjusted to contain the edges of the planar polygon component.

FIG. **18***d* is an exploded view of a modular assembly **1839** forming a table element with a top located circular planar element with an upper surface **1840** and a lower surface **1842** and a lower located circular planar element where the lower located circular planar element has an upper surface **1841** and the lower surface **1843** and is comprised of two hemispheres. Four modular components, **1844**, **1845**, **1846**, and **1847** are cooperatively connected to form the stand for the circular planar element. The bottom portion **1842** of the top circular planar element will rest on the top linear surfaces **1865**, **1855**, **1880**, and **1891**. Tabs **1852**, **1867**, **1887**, and **1876** will contain the edge of the upper circular planar element on the top. Connecting slots **1863**, **1889**, **1878**, and **1853** are configured to cooperatively connect with the locking cams on the bottom of the top circular planar element. In a similar fashion, the bottom portion of the lower circular planar element will rest on the linear surface **1866**, **1892**, **1881**, and **1856**. Tabs **1888**, **1877**, **1853**, and **1868** will contain the edge of the lower circular planar element. Connecting slots **1890**, **1879**, **1854**, and **1864** are configured to cooperatively connect with the locking cams located on the bottom of the lower circular planar element. The four modular elements **1844**, **1845**, **1846**, and **1847** are cooperatively connected utilizing L-bend connectors and connecting slots. The connecting slots are arranged in columns **1849**, **1859**, **1883**, and **1872**. For instance, L-bend connectors **1858***a-c* are configured to connect with the connecting slots **1882***a-g* while the L-bend connectors **1870***a-d* are configured to cooperatively connect with the connecting slots **1857***a-g* and the L bend connectors **1894***a-c* are configured to cooperatively connect with the connecting slots **1869***a-g*. Spaces **1850**, **1861**, **1886**, and **1875** are left open under the single or multilevel modular assembly table. The lowest portion of the connecting slot columns **1851**, **1862**, **1885**, and **1874** will sit on a level surface such as a floor. Connecting slots **1893***a-g* are configured to cooperatively connect with other modular components. Here, any planar polygon component may be substituted for the circular planar modular component and the modular assembly adjusted to contain the edges of the planar polygon component. Modular components **1845**, **1847**, **1846**, and **1844** may be extended in height with an increased number of L-bend connectors and connecting slots. The modular component **1839** may also be configured with multiple levels of circular planar elements and for polygonal planar elements.

FIG. **18***e* is a bottom view of the circular planar elements with locking cam elements. The modular assembly **1825** is comprised of two modular component hemispheres **1826** and **1827**. Modular component **1826** has an underside **1828** and a top **1829**. Modular component **1827** has an underside **1830** and the top **1831**. Locking cams **1833***a* and **1833***c* are located on the underside of modular component **1826** and are configured to form an interference fit to lock the hemisphere modular component onto a second modular component or modular assembly. In similar fashion, locking cams **1833***b* and **1833***d* on the underside of hemisphere modular component **1827** and are configured to form an interference fit with a second modular component or modular assembly. Partial channels **1832***a* and **1832***b* are configured to be brought together in a shiplap joint to create a single channel that is then configured to cooperatively connect with a modular component that fits into the resulting channel. In a similar fashion, partial channels **1832***e* and **1832***d* are brought together in a shiplap joint to create a single channel that is then configured to cooperatively connect with a modular component that fits into the resulting channel. Channels **1832***f*, and **1832***c* are configured to cooperatively connect with a modular component that fits into the channels. Here, any planar polygon component may be substituted for the circular planar modular component and the modular assembly adjusted to contain the edges of the planar polygon component.

FIG. **18***f* is a bottom view of a circular modular planar element **1834**. The circular modular planar element is configured on the bottom side **1836** to cooperatively connect with another modular component or modular assembly while the top portion **1835** is configured to serve as a work surface. Locking cams **1838***a*, **1838***b*, **1838***c*, and **1838***d* are configured to cooperatively connect with a modular component or modular assembly through the use of an interference fit between the locking cams and the other modular component or modular assembly. In a similar fashion, channels **1837***a*, **1837***b*, **1837***c*, and **1837***d* are configured to cooperatively connect with a modular component or modular assembly where the modular component or modular assembly fits into the channels of the bottom side **1836** of the circular modular planar element **1834**. Here, any planar polygon component may be substituted for the circular

planar modular component and the modular assembly adjusted to contain the edges of the planar polygon component.

FIG. **19** is an assembled modular unit forming a bed element **1900**. Modular component **1901***a* is configured to form the distal end or foot of the bed while modular component **1901***b* is configured to form the proximal end or head of the bed. Modular lateral components **1902***a* and **1902***d* are cooperatively connected on one end to the proximal end of the bed and cooperatively connected on the other end to a central modular component **1903**. In a similar fashion modular lateral components **1902***b* and **1902***c* are connected on one end to the distal end of the bed and cooperatively connected on the other end to a central modular component **1903**. This connection of the lateral components **1902***a*, **1902***b*, **1902***c*, and **1902***d* to modular components **1901***b*, **1901***a* and **1903** form the frame of the modular bed assembly. Modular components **1904***a-j* are configured to form the cross slats of the modular bed assembly. Connecting slot **1905***a* and **1905***b* are configured to cooperatively connect L-bend connectors of other modular components as is shown with **1906***a* and **1906***b*.

FIG. **20** is a partially exploded view of a modular bed element **2000**. The distal end **2001***a* or foot of the bed is cooperatively connected to lateral components **2002***c* and **2002***b*. Lateral components **2002***c* and **2002***b* are also cooperatively connected to modular component **2003***b*. The proximal end **2001***b* or head of the modular bed assembly is cooperatively connected to lateral modular components **2002***a* and **2002***d*. Lateral modular components **2002***a* and **2002***d* are also cooperatively connected to modular component **2003***a* thus forming part of the frame of the modular bed assembly. Slats **2004** *a-j* are disposed between the lateral modular components.

FIG. **21** is an assembled modular bed element with unitary connecting longitudinal elements. The modular bed assembly **2100** is comprised of two main lateral components **2102***a* and **2102***b* that are cooperatively connected to a distal end or foot of the modular bed assembly **2101***a* and the proximal end or head of the modular bed assembly **2101***b* utilizing connecting slots and L-bend connectors as shown in **2104***a-b* and **2105***a-b*, respectively. Slats **2103***a-j* complete the frame construction of the modular bed assembly **2100**.

FIG. **22** is an assembled modular bed element and a connected modular assembly with a planar element. Modular additions may be made to both the proximal end and distal end of the modular bed assembly as is seen in the modular bed assembly **2200**. Modular components **2201***a* and **2201***c* are configured to be stacked and cooperatively connected in the stacked configuration utilizing modular components **2202** and **2203** to form the head or proximal end of the modular bed assembly. Modular component **2201***b* is cooperatively connected to the modular bed frame and forms the distal end or foot of the modular bed assembly. A planar element **2207** may be connected between modular components **2204***a* and **2204***b* to form a modular assembly. The modular assembly has two open sides **2205***a* and **2205***b* and an opened end **2206**. Connecting slots **2209***a-b* may be utilized to cooperatively connect L-bend connectors as is shown in **2208***a* and **2208***b*. The modular assembly attached to modular component **2201***b* may also be configured to be a six sided modular assembly with a top modular component, a bottom or lower modular component, a left side modular component, a right side modular component, a front side modular component and a rear side modular component. The top, front, left, and right modular components may be configured to be operable in an opening and closing action. As an example, the six sided modular assembly may be of footlocker where the top modular component is configured to open and close in a hinged manner.

FIG. **23** is a side view of an assembled bed element and a connected table element. The modular bed assembly **2300** is comprised of a proximal end or head **2302** that is comprised of two stacked modular components **2301***c* and **2301***a*. Lateral component **2305***a* cooperatively connects to both modular assembly **2302** and modular component **2303**. Lateral component **2305***b* cooperatively connects to modular component **2303** and cooperatively connects to modular element **2301***b*. Modular component **2306** is cooperatively connected to modular component **2301***b* and where modular component **2306** has open sides **2307** and **2309** and an open end **2308**. Slats **2304***a-j* complete the modular bed assembly. The modular assembly attached to modular component **2301***b* may also be configured to be a six sided modular assembly with a top modular component, a bottom or lower modular component, a left side modular component, a right side modular component, a front side modular component and a rear side modular component. The top, front, left, and right modular components may be configured to be operable in an opening and closing action. As an example, the six sided modular assembly may be of footlocker where the top modular component is configured to open and close in a hinged manner.

FIG. **24** is an assembled modular unit forming a bed element with modular stacked ends and a modular table element connected on one end of the assembled modular bed element. The modular bed assembly **2400** has a proximal end or head of the bed and is comprised of modular components **2401***b* stacked on top of **2401***a* and cooperatively connected to each other in the stack position utilizing modular components **2405** and **2406**. The stacked components are cooperatively connected utilizing connection slots and L-bend connectors. A modular component shelf **2407***a* is attached cooperatively to the top of modular components **2405** and **2506**. Linear modular components **2402***b* and **2402***c* are cooperatively attached to the proximal end modular component **2401***a* and the centrally located modular component **2404**. In a similar fashion, linear modular components **2402***a* and **2402***d* are cooperatively attached to **2401***c* at the distal end of the modular bed assembly and to **2404** at the middle of the modular bed assembly. These connections are cooperatively made utilizing connecting slots and L-bend connectors. A planar element **2407***b* that may be utilized as a shelf is cooperatively connected to the top of the modular components **2412** and **2413**. Another planar element **2411** may be located at the distal end of the modular bed assembly where the planar element **2411** has open sides **2408** and **2409** and an open end **2410**. Slats such as **2403***a* and **2403***b* are configured to be disposed across the lateral frame to complete the modular bed assembly. The planar element **2411** sits between sides **2408** and **2409**, allowing it to be located at different heights depending upon the cooperative connection with the side modular components. The modular assembly attached to modular components **2401***d* and **2401***c* may also be configured to be a six sided modular assembly with a top modular component, a bottom or lower modular component, a left side modular component, a right side modular component, a front side modular component and a rear side modular component. The top, front, left, and right modular components may be configured to be operable in an opening and closing action. As an example, the six sided modular assembly may be of

footlocker where the top modular component is configured to open and close in a hinged manner.

FIG. **25** is a side view of an assembled modular unit forming a bed element with modular stacked ends and a modular table element connected on one end of the assembled modular bed. Modular component **2501***b* is stacked on top of **2501***a* and secured in place utilizing modular component **2505** that cooperatively connects the stacked elements **2501***b* and **2501***a* utilizing connecting slots and L-bend connectors. A planar element **2506***a* is cooperatively connected to modular component **2505**. Linear element **2502***a* is cooperatively connected to modular component **2501***a* and modular component **2504**. In a similar fashion, linear element **2502***b* is cooperatively connected to modular component **2504** and modular component **2501***c*. Slats such as **2403***a* and **2403***b* are configured to be disposed across the lateral frame to complete the modular bed assembly. At the distal end of the modular bed assembly, modular component **2501***d* is stacked on top of modular component **2501***c* and cooperatively connected utilizing connecting slots and L-bend connectors. A planar modular component **2506***b* is cooperatively attached to modular component **2509**. The modular component at the distal end of the modular bed assembly **2500** has an open end **2507** and open sides **2508** and **2509**. The modular assembly attached to modular components **2501***d* and **2501***c* may also be configured to be a six sided modular assembly with a top modular component, a bottom or lower modular component, a left side modular component, a right side modular component, a front side modular component and a rear side modular component. The top, front, left, and right modular components may be configured to be operable in an opening and closing action. As an example, the six sided modular assembly may be of footlocker where the top modular component is configured to open and close in a hinged manner.

FIG. **26***a* is an exploded view of an assembled modular unit forming a bed element with modular stacked ends and a modular table element connected on one end of the assembled modular bed element. The modular bed assembly has three major subsystems **2601**, **2602**, and **2603**.

FIG. **26***b* is an exploded view of the **2601** subsystem in FIG. **26***a*. Modular component **2604** is stacked on top of modular component **2605** and cooperatively connected utilizing modular components **2626** and **2634**. L-bend connectors **2633***a-e* cooperatively connect with connecting slots **2610***a-e* and **2616***a-e*. In a similar fashion, L-bend connectors **2641***a-e* cooperatively connect with connecting slots **2611***a-e* and **2617***a-e*. The lower end of column **2606** represented by **2609***a* rests on the top of modular component **2614** at **2612**. In a similar fashion, the lower end of column **2607** shown by **2609***b* rest on the top of modular component **2605** at the linear edge **2614**. The lower end of column **2612** represented by **2615***a* and the lower end of column **2613** represented by **2615***b* rests on a level surface such as a floor. Planar modular component **2619** rests on top of the linear edge **2630** of modular component **2626** and the top linear edge **2638** of modular component **2634**. **2631** and **2639** are connecting slots that cooperatively connect with **2625***a* and **2625***b*. Tab **2629** and tab **2637** contain the planar element **2619** on the edge. Planar modular component **2619** has an underside **2623** and upper side **2622**. Modular components **2626** and **2634** are comprised of connecting slots **2632***a-j* and **2640***a-j* respectively to allow for further cooperative connection of modular components. Linear modular components **2642** and **2650** are cooperatively connected to modular component **2605** utilizing L-bend connectors **2648***a-b* and connecting slots **2616***a-e* and L-bend connectors **2656***a-b* and connecting slots **2617***a-e* respectively. Slats **2658** are comprised of a transverse section **2659** and a notch on either end of the transverse section designated as **2660***a* and **2660***b*. The notches on either end of the **2658** slats will cooperatively connect with the notches **2647** and **2655** on linear modular components **2642** and **2650** respectively. Linear modular component **2642** is further comprised of L-bend connectors **2649***a-b* and in a similar fashion linear modular component **2650** is further comprised of L-bend connectors **2657***a-b*.

FIG. **26***c* is an exploded view of the **2602** group in FIG. **26***a*. Linear modular components **2675** and **2683** cooperatively connected with modular component **2662** through the use of L-bend connectors **2682***a-b* and connecting slots **2673***a-e* and L-bend connectors **2690***a-b* and connecting slots **2674***a-e*, respectively. Modular components **2661** and **2662** are stacked on top of each other and cooperatively connected utilizing L-bend connectors and connecting slots. Modular component **2661** has a top transverse portion **2665** with columns of connecting slots on either end designated by column **2663** on one side and column **2664** on the opposite side. Column **2663** has connecting slots **2667***a-e* and column **2664** has connecting slots **2668***a-e*. In a similar fashion, modular component **2662** has a transverse portion **2671** with a column of connecting slots at **2669** and a second column of connecting slots on the opposite side of the transverse portion designated as **2670**. Connecting slots **2673***a-e* are in column **2669** and connecting slots **2674***a-e* are in column **2670**. The lower edge of column **2663** designated by **2666***a* will sit on top of column **2669** and in a similar fashion the bottom edge of column **2664** designated by **2666***b* will sit on top of column **2670**. The bottom of column **2669** designated by **2672***a* and the bottom of column **2670** designated by **2672***b* will sit on a linear surface such as a floor. Slats **2691** are comprised of a transverse portion **2692** with notches **2693** and **2694** on either end. Notch **2693** will cooperatively connect with notch **2680** and notch **2694** will cooperatively connect with notch **2688**. L-bend connectors **2681***a-b* and **2689***a-b* allow for further connection of linear modular components **2675** and **2683** respectively. Modular component **2691** is configured with a transverse portion **2694** and open connecting slots **2692***a* and **2693***a* on either end of the **2694** transverse portion of the **2691**. These open connecting slots are configured to cooperatively connect with L-bend connectors such as **2681***a-b* and **2689***a-b*. The L-bend connectors may also cooperatively connect with connecting slots **2692***b-d* and **2693***b-d*.

FIG. **26***d* is an exploded view of the **2603** group in FIG. **26***a*. Two lateral modular components **2695** and **2610***aa* are cooperatively attached to transverse modular components **2624***aa* and **2704***aa*. The cooperative attachment is through the use of L-bend connectors and connecting slots. In regards to modular component **2695**, the column **2697** of connecting slots **2607***aaa-aaj* and column **2698** of connecting slots **2609***aaa-aah* cooperatively connect to L-bend connectors **2702***aaa-aac* and **2707***aaa-aab* respectively. In regards to modular component **2610***aa*, the column **2613***aa* of connecting slots **2623***aaa-aah* and column **2612***aa* of connecting slots **2621***aaa-aaj* cooperatively connect to L-bend connectors **2708***aaa-aac* and **2703***aaa-aab* respectively. Modular planar element **2729***aa* which has a top **2732***aa* and a bottom **2733***aa* and has a proximal end **2731***aa* and a distal end **2730***aa* and is configured to cooperatively connect with linear surface **2616***aa* on the proximal **2731***aa* end and with lateral surface **2602***aa* on the **2730***aa* distal end utilizing channel **2735***aab* cooperatively connecting with lateral surface **2616***aa* and channel **2735***aaa* cooperatively

connecting with lateral surface **2602***aa* and to be locked in place through an interference fit utilizing locking cam **2734***aaa* and connection slot **2603***aa* and locking cam **2734***aab* and connecting slot **2617***aa*. The modular horizontal planar element **2729***aa* is contained by tab **2601***aa* of modular assembly **2695** and by tab **2615***aa* of modular assembly **2610***aa*. In a continuing explanation of the connection of modular subassembly **2603**, modular horizontal planar element **2709***aa* is configured to cooperatively go between **2622***aa* and linear surface **2608***aa* where edge **2710***aa* and edge **2711***aa*, respectively, rest between the linear surfaces and are locked in place utilizing locking cam **2728***aaa* and locking cam **2727***aab* into a connection slots **2618***aa* and **2619***aa* respectively on modular component **2610***aa* and locking cam **2612***aa* and locking cam **2713***aa* cooperatively connect with connection slot **2604***aa* and connection slot **2605***aa* and where channel **2716***aaa* and channel **2727***aab* cooperatively connect with linear surfaces **2701***aa* on transverse sections **2624***aa* and **2704***aa* respectively. The locking cams and the channels are on the bottom side of modular horizontal planar element **2709***aa* designated by **2715***aa* with the top of the modular horizontal planar element designated by **2714***aa*. Transverse sections **2624***aa* and **2704***aa* are also configured to have a transverse section **2700***aa* with columns **2625***aa* and **2626***aa* on either end of the transverse section of modular component **2624***aa* and column **2705***aa* and column **2706***aa* on either end of the transverse section **2700***aa* of modular component **2704***aa*. The modular assembly **2603** may also be configured to be a six sided modular assembly with a top modular component, a bottom or lower modular component, a left side modular component, a right side modular component, a front side modular component and a rear side modular component. The top, front, left, and right modular components may be configured to be operable in an opening and closing action. As an example, the six sided modular assembly may be of footlocker where the top modular component is configured to open and close in a hinged manner.

FIG. **27***a* is a perspective assembled view of several modular desk assemblies connected in a serpentine fashion. Modular component assembly **2700** utilizes modular component **2719** to align the upper portion of the modular desk assembly **2707** with the lower portion. The first end of the modular desk assembly **2709** and the last end **2708** are connected together using modular components **2702**, **2716**, **2717**. The top planar elements of the serpentine modular desk assembly are designated by **2704**, **2705**, and **2706**. The lower modular horizontal planar element of the serpentine desk assembly is designated by **2706** and may be configured to be at different heights in the different modular desk assemblies that comprise the serpentine desk modular assembly. Spaces available under the modular serpentine desk assembly are designated by **2713**, **2714**, and **2715**. The lower portion of the modular assembly component that cooperatively connects modular desk assembly **2704** and **2705** is designated by **2711** while the modular assembly component that cooperatively connects the lower portion of the modular desk assembly **2705** and **2706** is designated as **2712**. The designation **2702** is a modular component assembly that connects the top portion of the **2704** modular desk assembly while 2703 is a similar modular assembly component that connects the upper portion of modular desk assembly **2706**.

FIG. **27***b* is a side view of modular element **2719** from FIG. **27***a*. This is an important modular assembly component in that the L-bend connectors are configured in both an upward facing and a downward facing directions so as to allow for further modular component connections. As an example, L-bend connectors **2725***a* and **2725***b* are in a downward facing direction while L-bend connectors **2724***a* and **2724***b* are in an upward facing direction. The upper end of modular assembly component **2719** is designated by **2720** while the lower end is designated by **2721**. The different connecting sides of modular assembly component **2729**, showing both the alternating and directional characteristics of the L-bend connectors is shown by designation **2722** and **2723**.

FIG. **27***c* is a semi-exploded perspective view of a group of modular desk assemblies in a serpentine configuration. Here, modular assembly component **2706** is configured to cooperatively connect the lower sections of the modular serpentine desk assembly while modular assembly components **2707** and **2708** are configured to cooperatively connect the upper sections of the modular serpentine desk assembly. The lower edge of the desk assemblies and the **2706** modular assembly component are designated by **2717**, **2718**, **2721**, **2722**, **2720**, and **2719**. The T-connectors **2709** and **2710** are cooperatively connected to connection slots **2711** and **2712** respectively, locking the upper modular components with the lower modular components. The columns of connecting slots **2713** and **2714** of modular component **2707** along with the columns of connecting slots **2715** and **2716** of modular component **2708** are configured to cooperatively connect with the L-bend connectors on the upper portion of the modular serpentine desk assembly **2702** and **2703** where columns of L-bend connectors **2704** and **2705** respectively accomplish the cooperative connection with the connecting slots.

FIG. **28***a* is a side view of a modular desk assembly with a modular horizontal planar element at a first elevation. The modular horizontal planar element **2802** is incorporated into modular assembly **2801** through cooperative connection with modular components **2803** and **2804** utilizing L-bend connectors and connecting slots and is laid on the upper linear edge of the modular transverse component **2805**. Modular component **2803**, also designated as a side mounted hutch, is configured to cooperatively connect with other modular components regardless of the height where modular horizontal planar element **2802** is set.

FIG. **28***b* is a side view of a modular desk assembly with a modular horizontal planar element at a second elevation. Here modular horizontal planar element **2806** may be adjusted in height by moving modular transverse component **2807** lower by engaging the L-bend connectors in the lower connecting slots. In a similar fashion to FIG. **28***a*, modular component **2803**, also designated as a side mounted hutch, is configured to cooperatively connect with other modular components regardless of the height where modular horizontal planar element **2806** is set.

FIG. **28***c* is a side view of a modular desk assembly with a modular horizontal planar element at a third elevation. Here modular horizontal planar element **2808** is moved yet lower in the modular assembly by moving modular transverse component **2809** yet further lower in a cooperative connection of the L-bend connectors and connecting slots. In a similar fashion to FIG. **28***a*, modular component **2803**, also designated as a side mounted hutch, is configured to cooperatively connect with other modular components regardless of the height where modular horizontal planar element **2808** is set.

FIG. **29** is an exploded view of a modular desk assembly. The modular desk assembly **2900** connects modular components **2906** and **2919** to modular component **2932** by cooperatively connecting L-bend connectors **2916***a-b* of

2906 and 2929*a-b* of 2919 with connecting slots 2942*a-g* in column 2933 and 2943*a-g* in column 2934 respectively. Connecting slots 2918*a-f* of column 2907 and connecting slots 2917*a-f* of column 2908 in modular component assembly 2906 are configured to cooperatively connect with L-bend connectors so as to extend the modularity of modular component assembly 2900. In a similar fashion, modular component 2932 is configured to cooperatively connect with modular assembly 2901 utilizing L-bend connectors 2903*a-b* and 2905*a-c* to cooperatively connect with connecting slots 2942*a-g* and 2943*a-g* respectively. The column of L bend connectors 2903*a-b* and 2905*a-c* are configured with the lower portion 2902 and 2904. It is a critical aspect of the modular assembly that the L-bend connectors of modular component 2906 and 2919 alternate in the connecting slots 2942*a-g* and 2943*a-g* so that the L-bend connectors 2903*a-b* and 2905*a-c* may connect on the opposite side of modular component 2932. Modular components 2951 and 2944 are configured to cooperatively connect with modular component 2919 and 2906 utilizing L-bend connectors and connecting slots. The L-bend connectors 2957*a* and 2950*a-b* are configured to cooperatively connect with connecting slot column 2921 and 2920 respectively. In a similar fashion L-bend connectors 2949 and 2956*a-b* are configured to cooperatively connect with connecting slot column 2907 and 2908 respectively. These connections are made on the inside of 2906 designated by 2910 and the inside of 2919 designated by 2922. Further, planar element 2958, which is configured with an upper surface 2961 and a lower surface 2962, is configured to cooperatively connect with modular components 2951 and 2944 where the edges of 2951 designated by 2952 and 2953 are separated by transverse section 2954 as modular component 2944 has a transverse section 2947 that separates edges 2946 and 2945. The channels 2963*b* and 2963*a* are configured to cooperatively connect with the linear surfaces 2955 and 2948 of modular components 2951 and 2944 respectively. Modular horizontal planar element 2979 is configured to have an upper surface 2982 and a lower surface 2983 where the lower surface 2983 is configured to cooperatively connect with linear surface 2976 and 2969 of modular components 2972 and 2965 respectively. Locking cam elements 2985 and 2980 are configured to cooperatively connect with available connecting slots utilizing interference fit connections. The transverse section 2968 and 2975 of modular components 2965 and 2972 respectively separate two ends of the modular component 2966 and 2967 for modular component 2965 and ends 2973 and 2974 on modular component 2972. L bend connectors 2977*a-b*, 2970, 2978, and 2971*a-b* are configured to cooperatively connect with connecting slots so as to incorporate the modular components into a modular assembly.

FIG. 30*a* is a perspective view of assembled modular storage assembly. The modular assembly 3001 is configured to have a top 3003, a side 3005 and opposite side 3006, the bottom portion 3008, an underneath space 3004, and a back portion 3007.

FIG. 30*b* is an exploded view of a modular storage assembly. Here, connecting slots 3024*a-g* in column 3011 and connecting slots 3023*a-g* in column 3010 of modular component 3009 are configured to cooperatively connect with L-bend connectors 3049*a-c* in column 3042 of modular component 3041 and L-bend connectors 3058*a-d* of column 3052 of modular component 3051, respectively. In a similar fashion, connecting slots 3039*a-g* in column 3026 of modular component 3025 and connecting slots 3040*a-g* in column 3027 of modular component 3025 are configured to cooperatively connect with L-bend connectors 3050*a-d* in column 3043 of modular component 3041 and L-bend connectors 3059*a-c* of column 3053 in modular component 3051, respectively. Modular component 3060 is configured to cooperatively connect with modular component 3041 utilizing 3067 and connecting slot 3048. Locking cams 3068*a* and 3068*b* are configured to form an interference fit with connecting slots 3038 and 3022. The modular component 3060 is configured to have a back portion 3066, a right side 3064, a front portion 3065 a top portion 3061 and a bottom portion 3062. channel 3069*a* and 3069*b* is configured to engage onto column 3052 and 3053 of component 3051 above the transverse portion 3055. Modular horizontal planar element 3070 is configured to cooperatively connect with the linear surface of modular component 3041 designated as linear surface 3044 and the linear surface of modular component 3051 designated as linear surface 3054. The channels 3077*a* and 3078*b* cooperatively connect with the linear surface 3044 and 3054 respectively. Modular horizontal planar element 3070 is further configured to cooperatively connect with modular elements 3009 and 3025 utilizing connecting slots 3020 and 3021 forming an interference fit with locking cam 3078*a* and locking cam 3077*b* respectively. In a similar fashion, connecting slots 3036 and 3037 form an interference fit with locking cams along the edge 3074 of modular horizontal planar element 3070.

FIG. 31*a* is a perspective view of assembled and stacked modular storage assemblies. The stacked modular storage units 3100 comprised of two major subsystems, the lower modular storage assembly 3101 and the upper modular storage assembly 3102. Modular storage assembly 3101 is configured with a backside modular component 3112, a front side modular component 3113, a left side modular component 3110, and a right side modular component 3111, an upper modular component 3109, and a floor modular component in the lower modular storage assembly designated as 3114. The upper modular storage assembly is configured with backside modular component 3106, left side modular component 3104 right side modular component 3105 an upper modular component 3103 and the lower modular component or floor 3108. All of the modular components for both the upper modular storage assembly 3102 and the lower modular storage assembly 3101 are configured to cooperatively connect with each other utilizing L-bend connectors and connection slots.

FIG. 31*b* is an exploded view of FIG. 31*a* stacked modular storage assemblies. The lower modular storage assembly 3101 is comprised of a left side 3115 and the right side 3131 where connecting slots 3129*a-g* in column 3116 and connecting slots 3130*a-g* in column 3117 of modular component 3115 cooperatively connect with modular component 3147 utilizing L bend connectors 3155*a-c* in column 3148 and L-bend connectors 3164*a-d* in column 3158. In a similar fashion, modular component 3131 is configured with connecting slots 3145*a-g* in column 3132 and connecting slots 3146*a-g* in column 3133 to cooperatively connect with L-bend connectors 3156*a-d* in column 3149 and L-bend connectors 3165*a-c* in column 3159 respectively. The lower modular storage assembly 3101 further has a floor modular component 3166 that cooperatively connects with the lower portions of 3115, 3147, 3131, and 3157. Linear edge 3169 is locked in place utilizing locking cam 3174*a* and connecting slot 3128 to form an interference fit. The front edges of 3115 and 313 are designated by 3123 and 3139 respectively. Modular component 3131 and is locked in place utilizing locking cam 3174*b* and connecting slot 3144 to form an

interference fit. The rear linear edge of modular component **3166** is configured with tab **3173** that cooperatively connects with connecting slot **3154**. The front edge of modular component **3166** cooperatively connects with the inner edges of columns **3158** and **3159** of modular component **3157** utilizing connecting slots **3175***a* on the left and **3175***b* on the right. The upper portion of lower modular storage assembly **3101** is designated as **3176** which engages with the linear edge **3150** of modular component **3147** and the linear edge **3160** of modular component **3157** utilizing channel **3183***a* and channel **3183***b* respectively. Modular component **3176** is configured to be locked in place utilizing locking cams **3184***a* and **3184***b* and connecting slots **3126** and **3127** respectively. In a similar fashion, edge **3180** of modular component **3176** is configured to be cooperatively connected to the top edge **3141** of modular component **3131** utilizing locking cams and connecting slots to form an interference fit. The upper modular storage assembly **3102** consists of a left side modular component **3185**, a right side modular component **3101***aa*, a back modular component **3116***aa*, a front modular component **3126***aa*, a top modular component **3145***aa*, and a lower modular component **3135***aa*. Modular component **3185** is cooperatively connected to modular components **3116***aa* and **3126***aa* utilizing L-bend connectors and connecting slots. Connecting slots **3198***a-f* in column **3186** and connecting slots **3199***a-f* in column **3187** cooperatively connect with L-bend connectors **3124***aaa-aac* in column **3117***aa* and L-bend connectors **3133***aaa-aac* in column **3127***aa* respectively. In a similar fashion, connecting slots **3114***aaa-aaf* in column **3102***aa* and connecting slots **3115***aaa-aaf* in column **3103***aa* cooperatively connect with L-bend connectors **3125***aaa-aac* in column **3118***aa* and L-bend connectors **3134***aaa-aac* in column **3128***aa* respectively. Modular component **3145***aa* cooperatively connects with modular component **3185** utilizing locking cams **3153***aaa* and **3154***aab* cooperatively connecting with connecting slot **3195***a* and **3195***b* respectively. In a similar fashion, linear edge **3147***aa* cooperatively connects with modular component **3101***aa* utilizing locking cams and connecting slots **3111***aaa* and **3111***aab* to form an interference fit. Modular component **3145***aa* is configured with a back linear edge **3148***aaa*, a left linear edge **3146***aa*, a front linear edge **3149***aa* and a right linear edge **3147***aa*. Connecting slot **3188** in modular component **3185** and connecting slot **3104***aa* in modular component **3101***aa* allow for further modular connections to be made to the upper modular storage assembly **3102**. The lower modular component or floor or **3135***aa* of modular assembly **3102** is cooperatively connected to **3185** and **3101***aa* utilizing connecting slot **3196***b* and locking cam **3143***aaa* and connecting slot **3112***aab* and locking cam **3143***aab* to form an interference fit. Connecting slots **3144***aaa* and **3144***aab* cooperatively connect with the inner edges of columns **3127***aa* and **3128***aa* of modular component **3126***aa*. The rear edge **3140***aa* of modular component **3135***aa* is configured with a tab **3142***aa* that cooperatively connects with slot **3123***aa* in modular component **3116***aa*. To complete the attachment to the lower modular storage assembly **3101**, T connectors **3197** and **3113***aa* cooperatively connect with slots **3118** and **3134** respectively in one configuration or connecting slots **3119** and **3135** respectively in another configuration.

FIG. **32***a* is a perspective view of multiple stacked and extended modular storage assemblies represented by modular assembly **3200**.

FIG. **32***b* is a front view of multiple stacked and extended modular storage assemblies.

FIG. **33***a* is an exploded view of a modular inclined table assembly. Here, modular component **3301** is cooperatively connected to transverse modular components **3327** and **3336** through the use of L-bend connectors and connecting slots. Connecting slots **3312***a-g* in column **3302** and connecting slots **3313***a-g* in column **3303** cooperatively connect with L-bend connectors **3334***a-b* in column **3338** and **3343***a-c* in column **3337** respectively. In a similar fashion, connecting slots **3325***a-g* in column **3315** and connecting slots **3326***a-g* in column **3316** cooperatively connect with L-bend connectors **3335***a-c* in column **3329** and L-bend connectors **3344***a-b* in column **3338** respectively. From the perspective of the front edge **3347** of modular horizontal planar element **3345**, modular component **3301** has a left side and right side designated by **3307** and **3306** respectively and a back edge **3304** and a front edge **3305**. In a similar fashion, modular component **3314** is configured to have a right side **3319** and a left side **3320** and a back edge **3317** and a front edge **3318**. Modular component **3301** has a linear top edge **3309** as does modular component **3314** designated by **3322**. Connecting slots **3310***a-c* and connecting slots **3311***a-c* in modular component **3301** and connecting slots **3323***a-c* and connecting slots **3324***a-c* in modular component **3314** are configured to cooperatively connect with modular horizontal planar element **3345**. Channels **3352** and **3353** are cooperatively connected with linear surface **3333** and **3342** respectively. Modular horizontal planar element **3345** is configured to have parallel planar edges **3348** and **3349** and an upper surface **3350** and a bottom surface **3351**. A special aspect of modular assembly **3300** is that linear edge **3346** of modular component **3345** may be at different level than linear edge **3347** thus forming an inclined plane. The inclined plane is configured to be at any angle between positive 90° and −90° where the 0° is defined by the linear edge **3309** of modular component **3301** and the linear component **3322** as defined by modular component **3314**.

FIG. **33***b* is a perspective view of a modular inclined table assembly. The modular assembly **3354** is comprised of a modular horizontal planar element **3355** where the front edge **3357** of the modular horizontal planar element **3355** is lower in height than the rear edge **3356** of the modular horizontal planar element **3355** thus forming an inclined plane that is incorporated into a modular assembly.

FIG. **33***c* is a side view of a modular inclined table assembly. Here, modular assembly **3358** is configured to have a back **3362** and a front **3363** where the modular horizontal planar element **3359** is inclined in a downward fashion from the back edge **3360** to the front edge **3361** such that the front edge **3361** of the modular horizontal planar element **3359** is lower than the rear edge **3360**.

FIG. **34** is a perspective view of an extended modular panel assemblies. Modular assembly **3400** is comprised of three modular panel components **3407**, **3409**, **3411** that are arranged in a straight linear fashion and are cooperatively connected to each other utilizing modular component **3408**, and **3410** utilizing L-bend connectors and connecting slots. Modular component panel **3414** is arranged at an angle to the linear arrangement of modular component panels **3407**, **3409**, and **3411**. Modular component panel **3414** is cooperatively connected to the other three panels through the configuration of L-bend connectors and connecting slots. The modular assembly **3400** is configured to have a backside **3401**, a front side, **3402** a left side **3403** and the right side **3404**. Thus, panel **3414** is cooperatively attached to modular component **3413** which is subsequently cooperatively connected to modular component **3412** which is subsequently connected to modular component panel **3411** through the use

of L-bend connectors and connecting slots. In a similar fashion, modular component **3415** is cooperatively connected to modular component panel **3414** and is configured to allow for further modular component connections through the available connecting slots. Modular component **3505** is cooperatively connected to modular component **3406** which is subsequently cooperatively connected to modular component panel **3407**. In a similar fashion to modular component **3415**, modular component **3505** allows for further expansion of the modular assembly through the attachment of modular components utilizing the available connecting slots arranged in modular component **3505**.

FIG. **35** is a perspective and semi-exploded view of a stacked and extended modular panel assemblies. The modular assembly **3500** is comprised of several modular component panels in different orientations. Modular component panel **3509** is stacked on top of modular component panel **3510** and is cooperatively connected to modular component **3508** on the left side **3503** and **3511** on the right side **3504**. Modular component **3507** is cooperatively connected to modular component **3508** utilizing L-bend connectors and connecting slots. This cooperative connection scheme allows for modular component panels **3509** and **3510** to be cooperatively connected and stacked in a stable configuration. In a similar fashion, modular component panel **3512** is cooperatively connected to modular component **3511** on the left side **3503** and also configured to be connected to modular component **3513** which is configured to be cooperatively connected to modular component panel **3514** which is configured to be cooperatively connected to modular component **3515** which is configured to be cooperatively connected to modular component **3516**. Modular component **3516** is configured to be cooperatively connected to modular component panel **3517** which is configured to be cooperatively connected to modular component **3518**. The cooperative connection of the various modular components is accomplished through the use of L-bend connectors and connecting slots where the L-bend connectors are configured in an upward or downward configuration and alternate in an odd and even fashion connection to connecting slots on either side of a connecting slot column. The modular assembly of modular component panels is configured to have a backside **3501**, a front side **3502** a left side **3503** and the right side **3504** and a top side **3506** and a bottom side **3505**. The bottom edge of the modular component panels **3510** rest on a level surface such as a floor.

FIG. **36***a* is a modular component with L-bend connectors alternating on opposite sides and connecting slots in the central column of the modular component. The modular component **3600** is configured to have a central column of connecting slots **3601**, a flat side **3604**, a left edge **3605** and the right edge **3606**. The L-bend connectors in column **3602** are configured to alternate in a height relationship to the L-bend connectors in column **3603** so as to connect with connecting slots at different heights.

FIG. **36***b* is a modular component with L-bend connectors extending from one lateral edge of the modular component in the column of connecting slots running longitudinally in the modular component. The modular component depicted is configured to have a column of connecting slots **3607**, a straight column with no connections **3608**, and a column of L-bend connectors **3609**. The modular component is configured to have backside **3610**, front side **3611**, a left side **3612**, and a right side **3613**.

The methods, systems, and devices discussed above are examples. Various configurations may omit, substitute, or add various procedures or components as appropriate. For instance, in alternative configurations, the methods may be performed in an order different from that described, and that various steps may be added, omitted, or combined. Also, features described with respect to certain configurations may be combined in various other configurations. Different aspects and elements of the configurations may be combined in a similar manner. Also, technology evolves and, thus, many of the elements are examples and do not limit the scope of the disclosure or claims.

Specific details are given in the description to provide a thorough understanding of example configurations (including implementations). However, configurations may be practiced without these specific details. For example, well-known processes, structures, and techniques have been shown without unnecessary detail to avoid obscuring the configurations. This description provides example configurations only, and does not limit the scope, applicability, or configurations of the claims. Rather, the preceding description of the configurations provides a description for implementing described techniques. Various changes may be made in the function and arrangement of elements without departing from the spirit or scope of the disclosure.

Also, configurations may be described as a process that is depicted as a flow diagram or block diagram. Although each may describe the operations as a sequential process, many of the operations can be performed in parallel or concurrently. In addition, the order of the operations may be rearranged. A process may have additional stages or functions not included in the figure.

Having described several example configurations, various modifications, alternative constructions, and equivalents may be used without departing from the spirit of the disclosure. For example, the above elements may be components of a larger system, wherein other structures or processes may take precedence over or otherwise modify the application of the invention. Also, a number of operations may be undertaken before, during, or after the above elements are considered. Accordingly, the above description does not bound the scope of the claims.

A statement that a value exceeds (or is more than) a first threshold value is equivalent to a statement that the value meets or exceeds a second threshold value that is slightly greater than the first threshold value, e.g., the second threshold value being one value higher than the first threshold value in the resolution of a relevant system. A statement that a value is less than (or is within) a first threshold value is equivalent to a statement that the value is less than or equal to a second threshold value that is slightly lower than the first threshold value, e.g., the second threshold value being one value lower than the first threshold value in the resolution of the relevant system.

What is claimed is:

1. A modular frame assembly, comprising:

a first and second lateral frame member each including a transverse portion with an upper edge and a first end and a second end, the first end and the second end of each lateral frame member including a flange portion extending from each end of the longitudinal axis of the first and second lateral frame members; and

wherein the flange portion of the first end of the first and second lateral frame members alternate from the flange portion of the second end of the first and second lateral frame members; and

a first and second side frame member each comprising a first end, a second end, and a cross panel extending therebetween; the first and second end including one or more receiving members; and

wherein the one or more receiving members being sized and aligned to receive the flange portion to cooperatively connect the first end of the first lateral frame member and the first end of the first side frame member together, the second end of the second lateral frame member and the second end of the first side frame member together, the second end of the first lateral frame member and the first end of the second side frame member together, and the first end of the second lateral frame member and the second end of the second side frame member together; and

where the flange non-deformably cooperatively connects with the one or more receiving members; and

where the receiving members utilized by the first lateral frame member are in a different elevation from the receiving members utilized by the second lateral frame member; and

where the non-utilized receiving members of the first and second side frame members are open to receive additional modular frame components; and

where the modular frame assembly is configured to accept at least one modular horizontal planar member;

wherein the horizontal planar member has an upper surface and a lower surface, the lower surface of the horizontal planar member including one or a plurality of chambers to receive the upper edge of the transverse portion of the first and second lateral frame member; and

where the modular frame assembly and the horizontal planar member are cooperatively connected utilizing at least one locking cam element; and where the at least one locking cam element has a curve configuration on the outer portion of the cam element; and

where the at least one locking cam element with a curve configuration on the outer portion of the at least one locking cam element forms an interference fit between the modular frame assembly and the horizontal planar member; and

at least two parallel edges of the horizontal planar member are entirely within the confines of the upper edge of the modular frame assembly.

2. The modular frame assembly of claim **1** where a number of frame members may be engaged and cooperatively connected for an expanded group of modular assemblies.

3. The modular frame assembly in claim **1** where plural modular frame assemblies are cooperatively connected in a serpentine configuration.

4. The modular frame assembly in claim **1** where the flange is comprised of at least one L-bend connector.

5. The modular frame assembly in claim **1** where the one or more receiving members are connecting slots that are cut through a modular frame member from one side to another side and are completely enclosed or partially enclosed.

6. The modular frame assembly in claim **1** where the modular frame assembly is configured to form a bed.

7. The modular frame assembly in claim **1** further comprising at least one modular outrigger assembly that is cooperatively connected to a modular component configured to form a modular frame assembly.

8. The modular frame assembly in claim **1** where the modular frame assembly is configured to form a storage unit.

9. The modular frame assembly in claim **1** where the modular frame assembly is configured to form walls, panels or partitions.

10. The modular frame assembly in claim **1** where the modular frame assembly is configured to form a desk.

11. The modular frame assembly in claim **1** further comprising at least two modular outrigger assemblies that are cooperatively connected to a modular component configured to form a modular frame assembly.

12. A modular frame assembly, comprising: a first lateral frame member including a first end and a second end, the first end and second end including a flange portion extending from each end of the longitudinal axis of the first lateral frame member; at least one side frame member including one or more receiving members; and wherein the one or more receiving members being sized and aligned to receive the flange portion to cooperatively connect the first lateral frame member and at least one side frame member together; and where the flange non-deformably cooperatively connects with the one or more receiving members; and where the first lateral frame member and at least one side frame member are cooperatively connected to at least one second lateral frame member through connecting slots in the first side frame member or at least one side frame member where the at least one second lateral frame member is configured to couple to the first lateral frame member or at least one side frame member utilizing connecting slots in the first side frame member or at least one side frame member where the connecting slots utilized by the at least one second lateral frame member are different from the connecting slots utilized by the first lateral frame member; where the modular frame assembly is configured to accept at least one modular horizontal planar element; and where the modular frame assembly and the horizontal planar element are cooperatively connected utilizing at least one locking cam element; and where the at least one locking cam element has a curve configuration on the outer portion of the cam element; and where the at least one locking cam element with a curve configuration on the outer portion of the at least one locking cam element forms an interference fit between the modular frame assembly and the horizontal planar element.

13. The at least one second lateral frame member in claim **12** where the at least one lateral frame member is configured in a different plane other than the first lateral frame member.

14. The at least one second lateral frame member in claim **12** where the at least one second frame member is configured to have a proximal end and a distal end; and where the proximal end is cooperatively coupled to the first lateral frame member utilizing the side frame member and where the distal end of the at least one second lateral frame member is cooperatively coupled to a second side frame member.

15. The horizontal planar element of claim **12** where at least two parallel edges of the horizontal planar surface are entirely within the confines of the upper edge of the modular frame assembly.

16. The horizontal planar element of claim **12** where one edge of the horizontal planar element is at a different elevation than a second horizontal planar element parallel edge.

17. A method of constructing a modular frame assembly, comprising: supplying at least one L-bend connector and at least one connecting slot; and where the at least one L-bend connector is moved first in a horizontal plane through the at least one connecting slot; and where the at least one L-bend connector is subsequently moved in a vertical plane to form a cooperative connection between two modular frame assembly components; where a first modular frame component with at least one L-bend connector is cooperatively connected on one side of a column of connecting slots incorporated into a second modular frame component; and where a third modular frame component with at least one L-bend connector is cooperatively connected to the opposite

side of the second modular frame component; and where the first modular frame component is cooperatively connected to the second modular frame component utilizing alternating slots from the third modular frame connector.

* * * * *