US 20250256642A1

(19) United States
(12) Patent Application Publication
DASSANAYAKE et al.
(10) Pub. No.: US 2025/0256642 A1
(43) Pub. Date: Aug. 14, 2025

(54) **SEGMENTED DISPLAY WITH PHOTON RECYCLING CAVITY**

(71) Applicant: **eLUMIGEN, LLC**, Troy, MI (US)

(72) Inventors: **Mahendra DASSANAYAKE**, Bloomfield Hills, MI (US); **Brian PETKU**, Clarkston, MI (US)

(21) Appl. No.: **19/032,333**

(22) Filed: **Jan. 20, 2025**

Related U.S. Application Data

(63) Continuation-in-part of application No. 18/679,609, filed on May 31, 2024, now Pat. No. 12,205,495.

(60) Provisional application No. 63/613,293, filed on Dec. 21, 2023.

Publication Classification

(51) **Int. Cl.**

B60Q 1/50	(2006.01)
B60Q 1/26	(2006.01)
B60R 13/00	(2006.01)
G09F 13/04	(2006.01)
G09G 3/14	(2006.01)
H10H 29/24	(2025.01)
H10H 29/85	(2025.01)
H10H 29/856	(2025.01)

(52) **U.S. Cl.**

CPC ***B60Q 1/503*** (2013.01); ***B60Q 1/2696*** (2013.01); ***B60R 13/005*** (2013.01); ***G09F 13/0404*** (2013.01); ***G09F 13/044*** (2021.05); ***G09G 3/14*** (2013.01); ***H10H 29/24*** (2025.01); ***H10H 29/8506*** (2025.01); ***H10H 29/8508*** (2025.01); ***H10H 29/856*** (2025.01); *G09G 2380/10* (2013.01)

(57) **ABSTRACT**

A display includes a first housing portion having graphic openings and a second housing portion spaced apart from the first housing portion. A first circuit board has LEDs and is disposed between the first and second housing portions. A first side wall and a second side wall define photon recycling cavities in a sequence wherein adjacent photon recycling cavities have a shared end wall an LED. The first side wall has a first angular surface and the second side wall has a second angular surface. The first angular surface and the second angular surface redirecting light from an associated LED of the plurality of LEDs so that light from the plurality of light emitting diode is indirectly communicated through the graphic openings after reflecting from the first angular surface and the second angular surface.

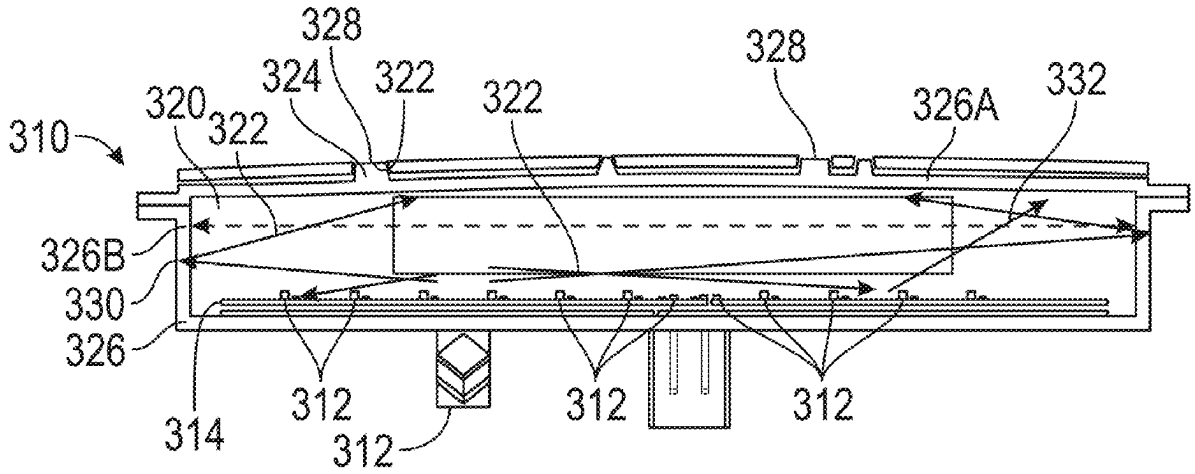

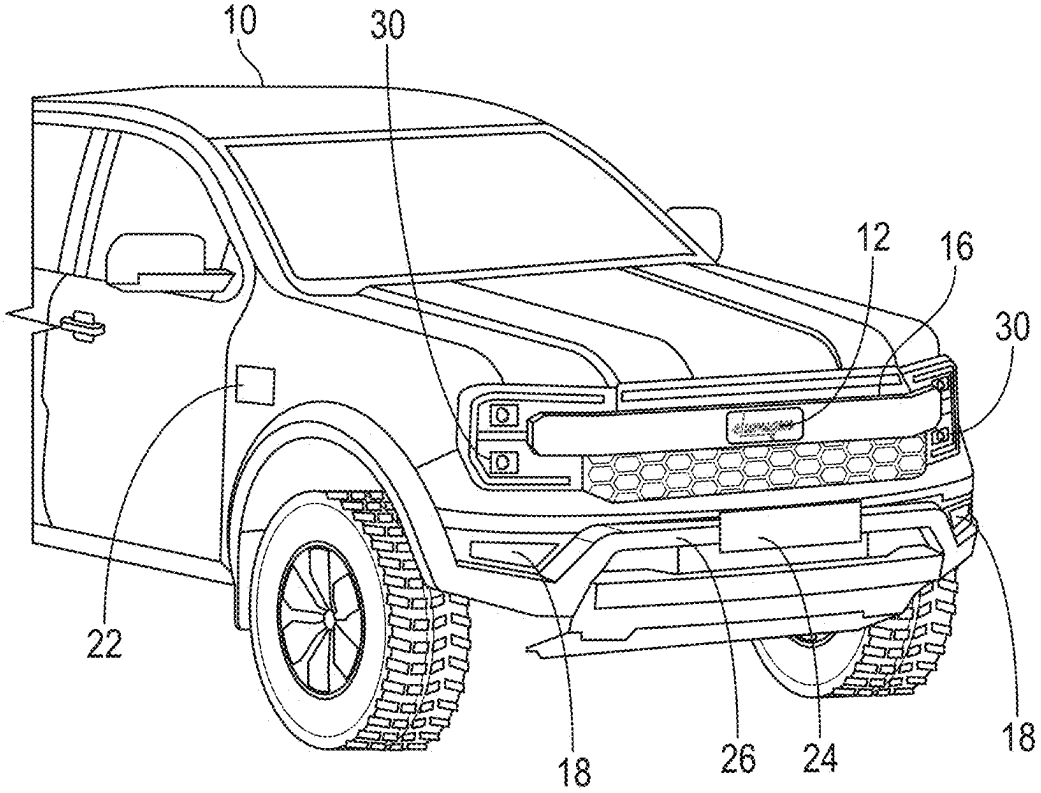

FIG. 1A

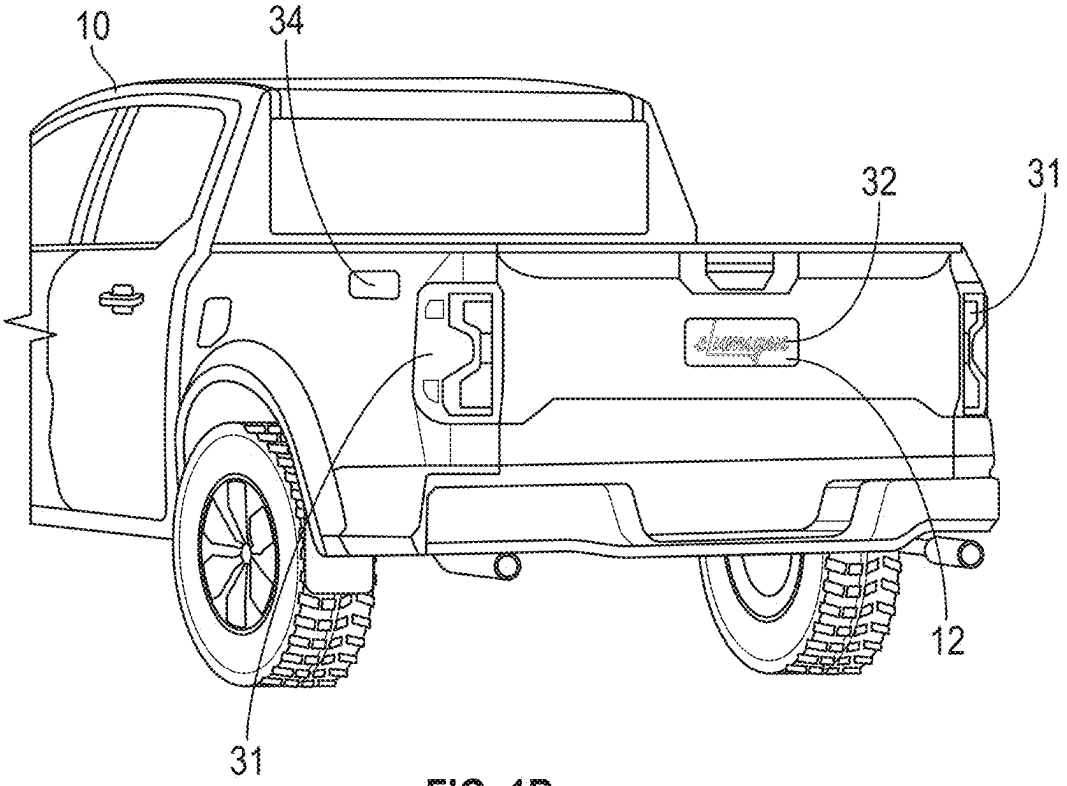

FIG. 1B

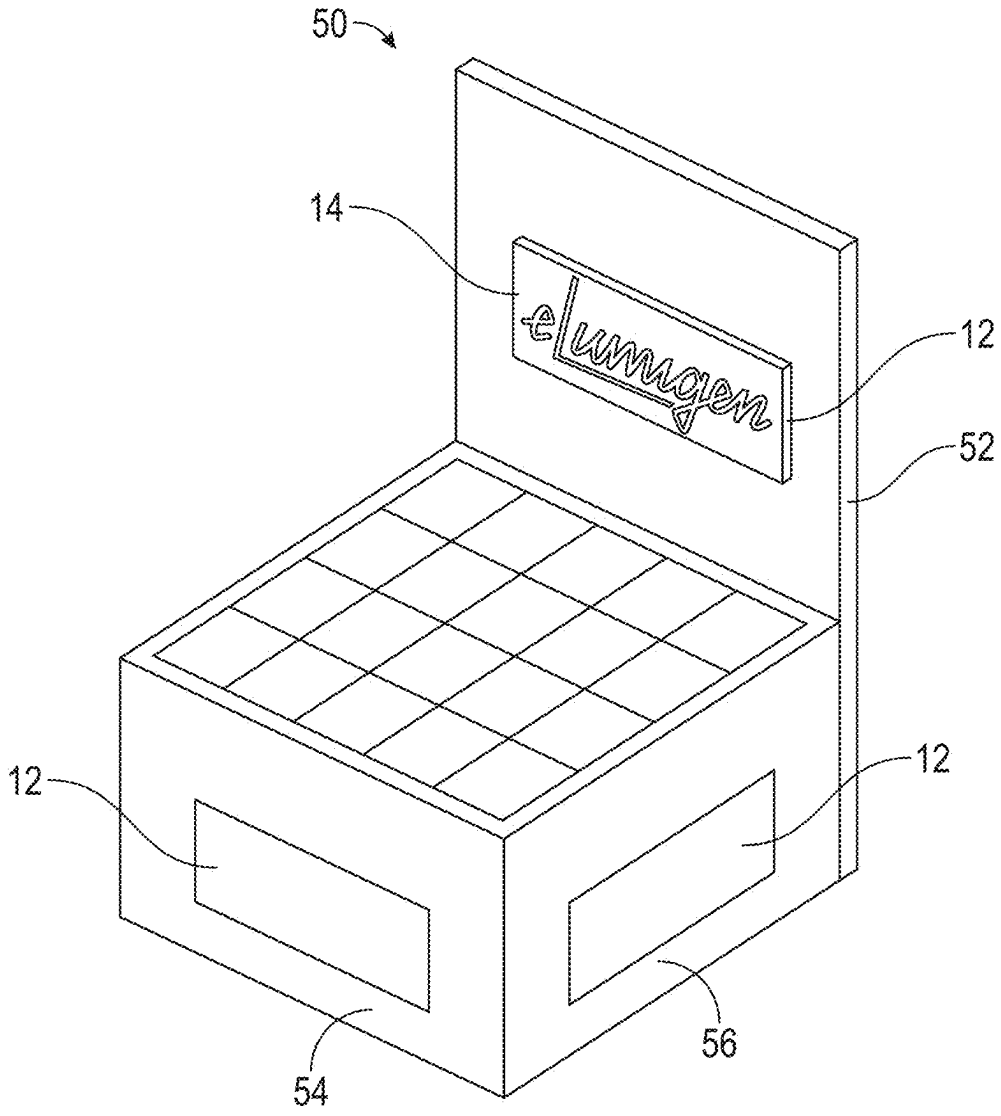

FIG. 1C

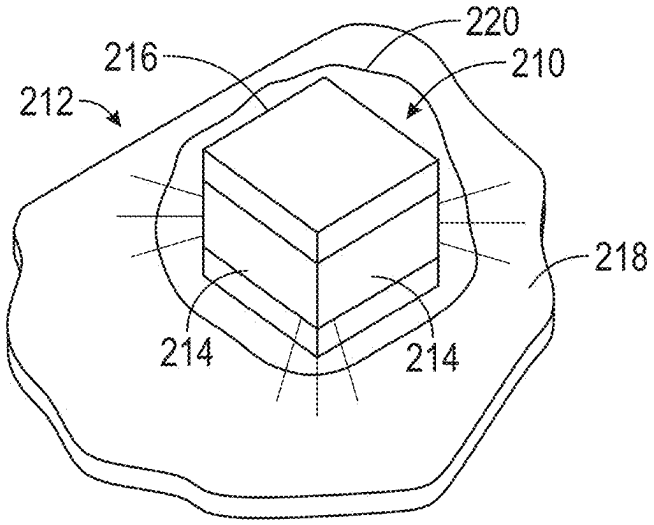
220
216
210
212
218
214
214

FIG. 2A

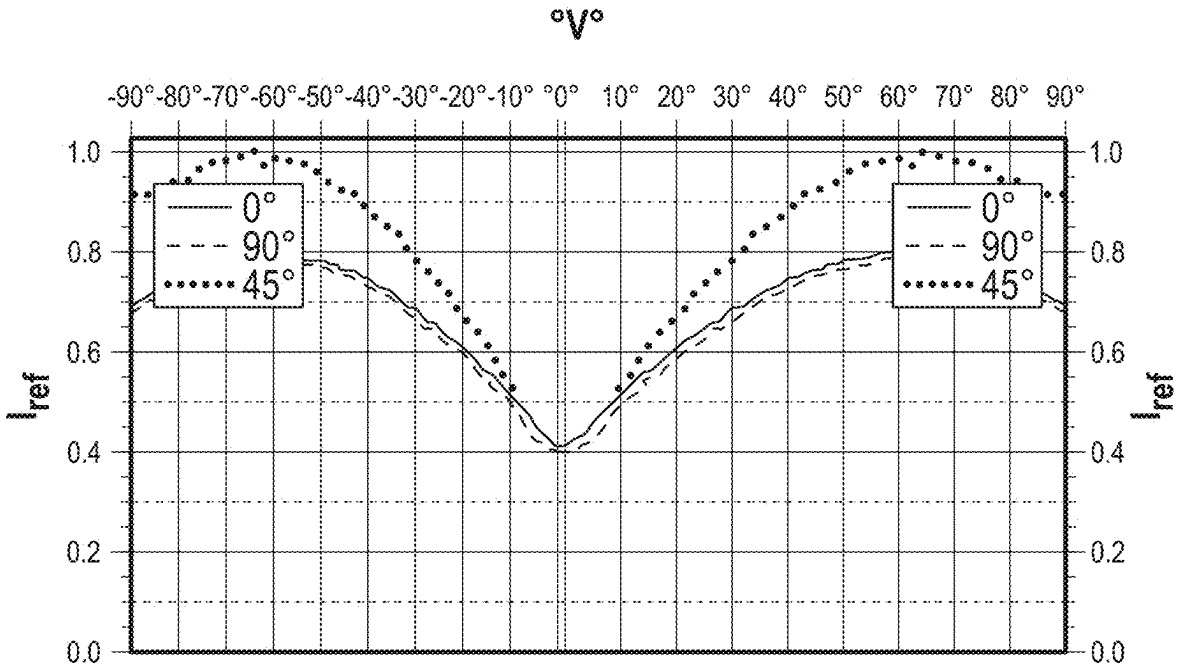
°V°
-90° -80° -70° -60° -50° -40° -30° -20° -10° °0° 10° 20° 30° 40° 50° 60° 70° 80° 90°
1.0
0.8
0.6
0.4
0.2
0.0
I_{ref}
0°
90°
45°

FIG. 2B

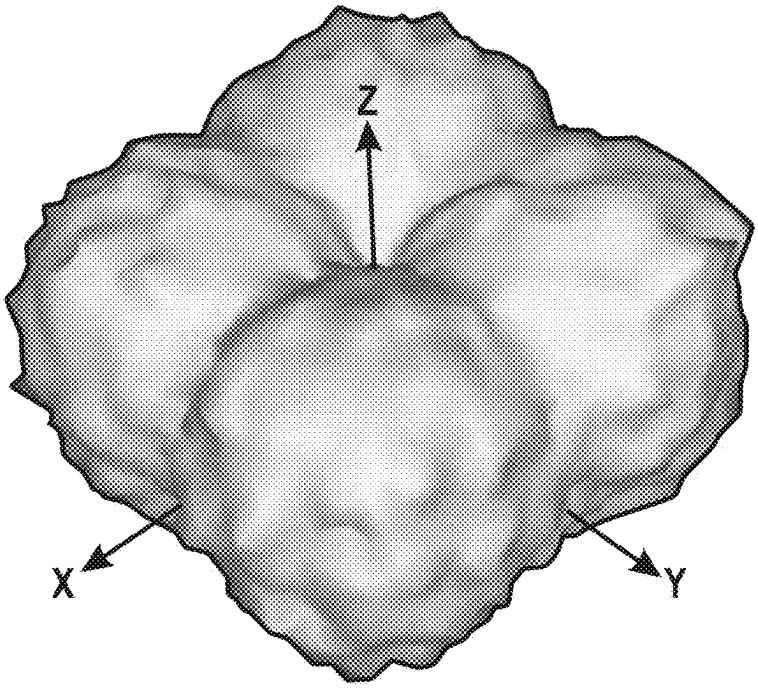
Z
X
Y

FIG. 2C

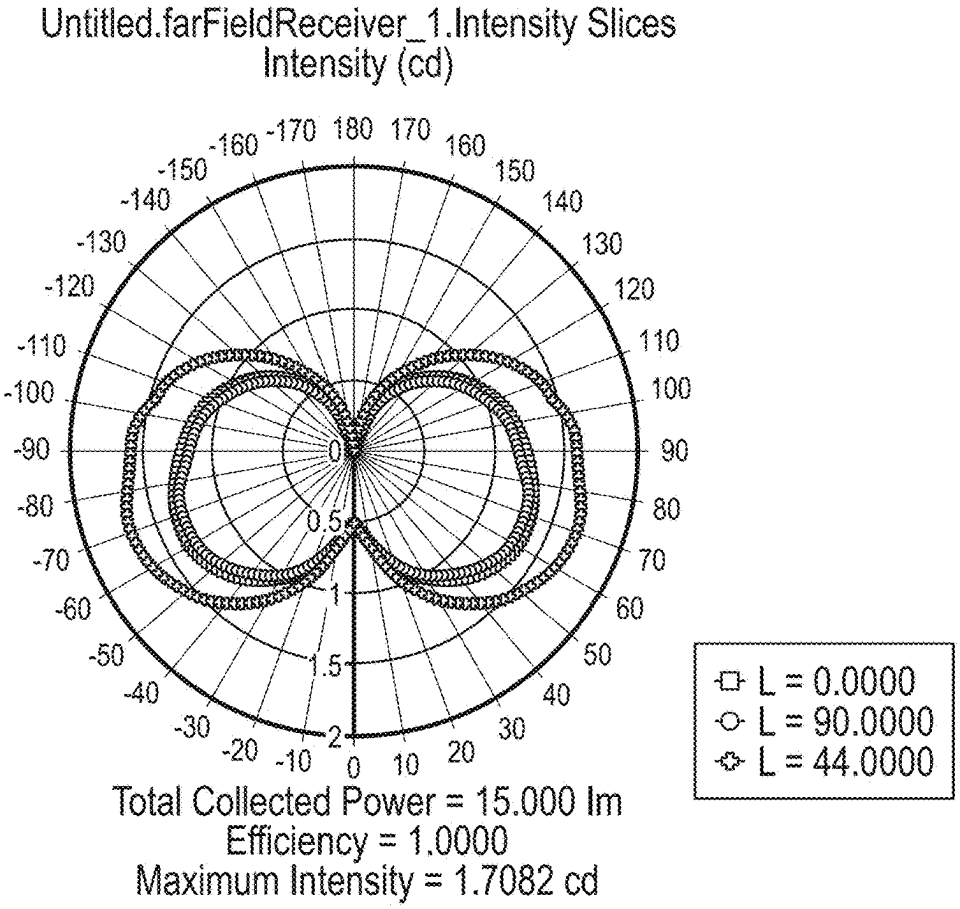
Untitled.farFieldReceiver_1.Intensity Slices
Intensity (cd)
180
170
160
150
140
130
120
110
100
90
80
70
60
50
40
30
20
10
0
-10
-20
-30
-40
-50
-60
-70
-80
-90
-100
-110
-120
-130
-140
-150
-160
-170
0
0.5
1
1.5
2
L = 0.0000
L = 90.0000
L = 44.0000
Total Collected Power = 15.000 lm
Efficiency = 1.0000
Maximum Intensity = 1.7082 cd

FIG. 2D

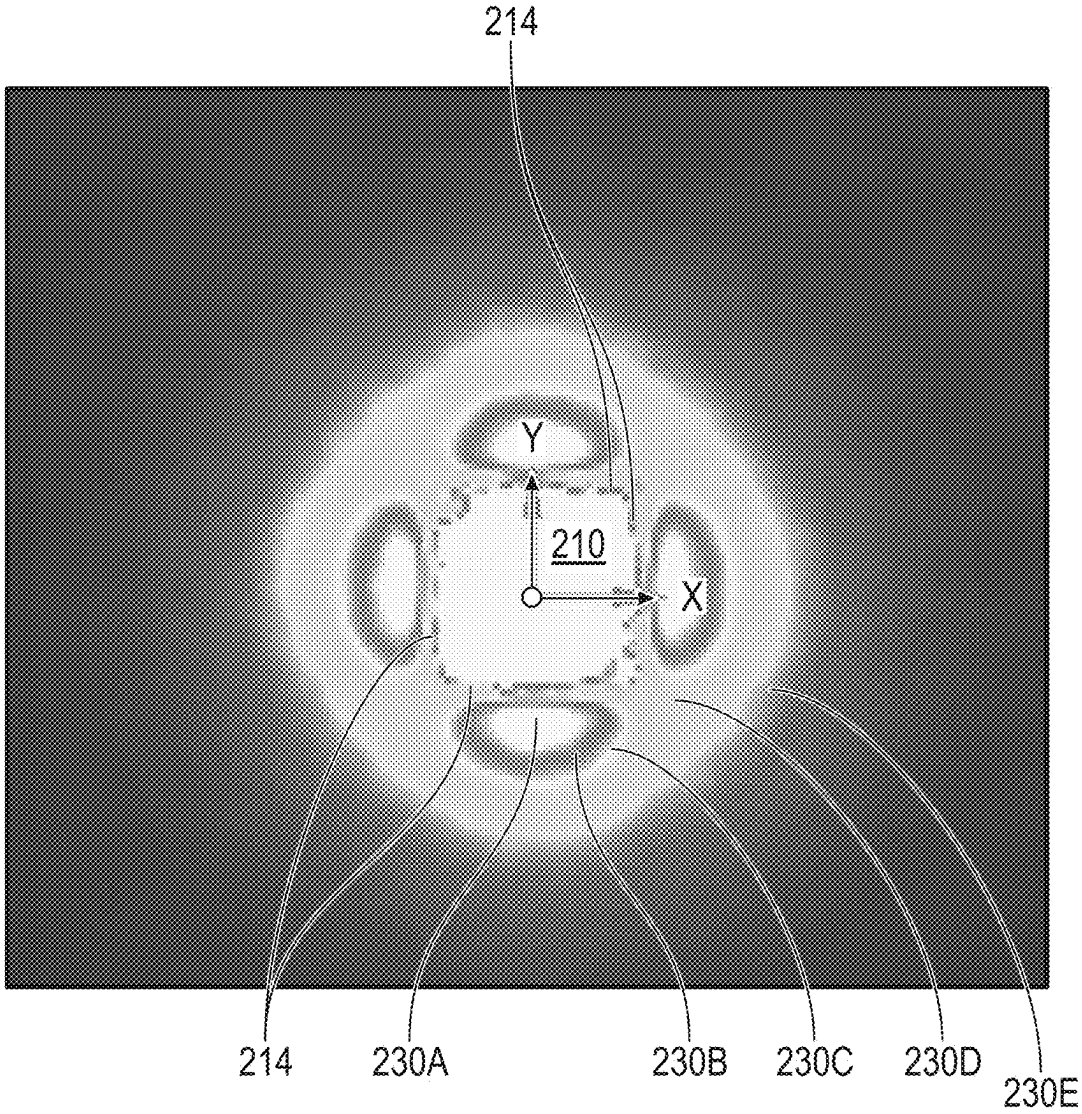
214
Y
210
X
214
230A
230B
230C
230D
230E

FIG. 2E

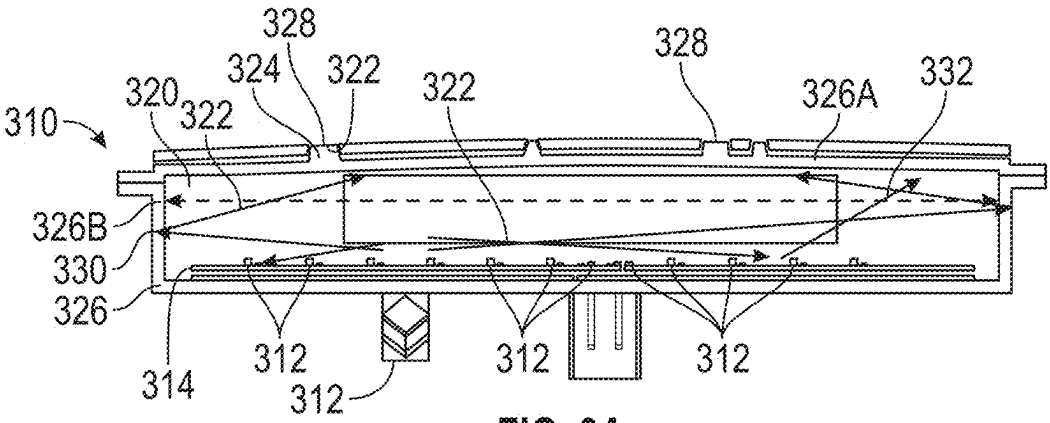
328
324
322
328
320
322
322
326A
332
310
326B
330
326
314
312
312
312
312

FIG. 3A

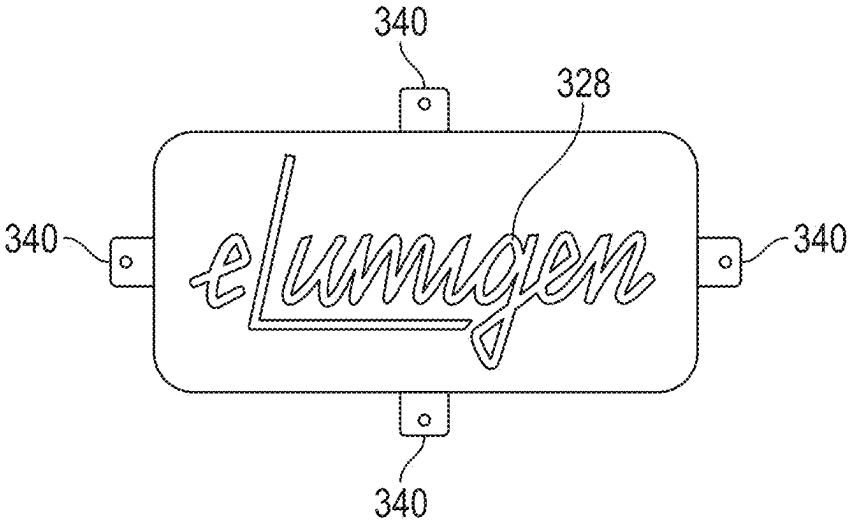

FIG. 3B

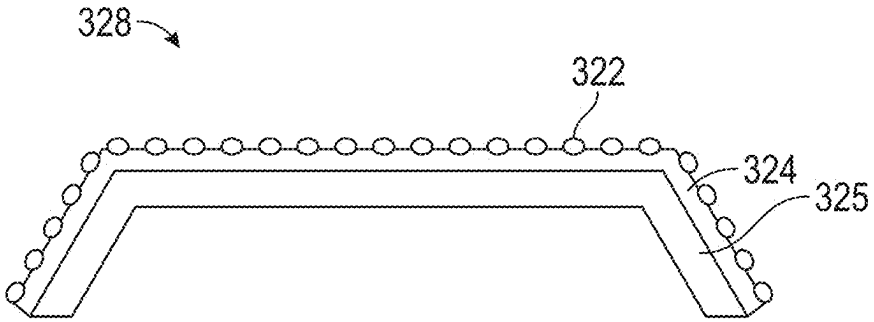

FIG. 3C

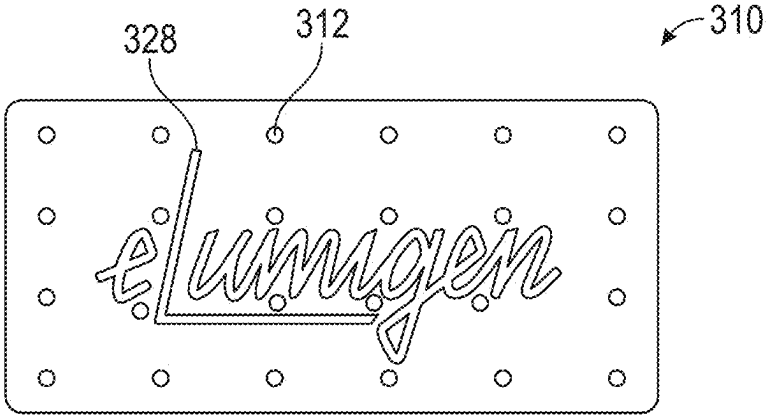

FIG. 3D

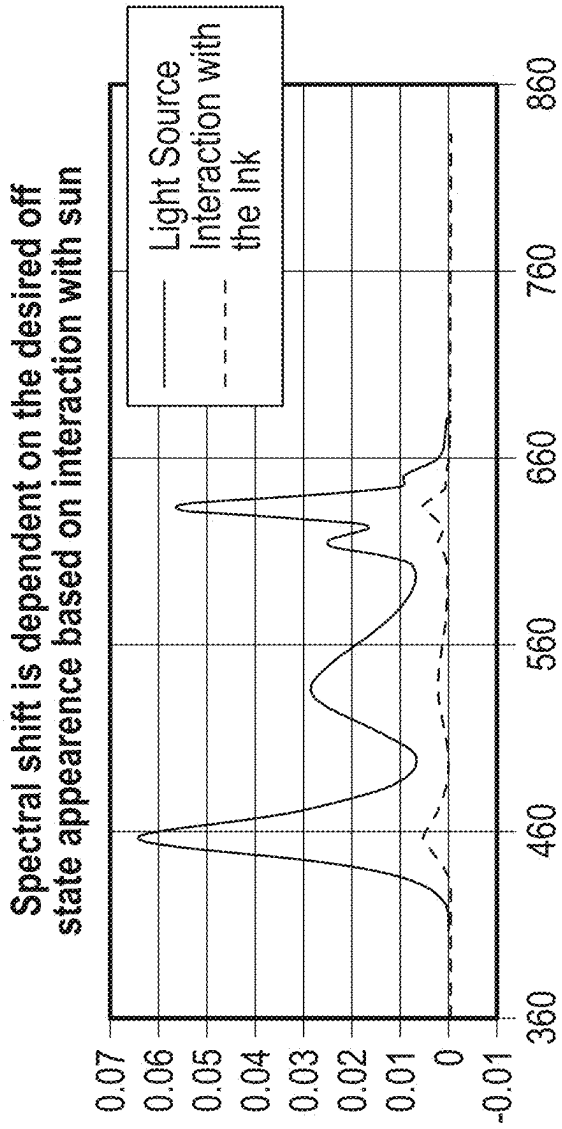
Spectral shift is dependent on the desired off state appearence based on interaction with sun
Light Source
Interaction with the Ink
0.07
0.06
0.05
0.04
0.03
0.02
0.01
0
-0.01
360
460
560
660
760
860

FIG. 3E

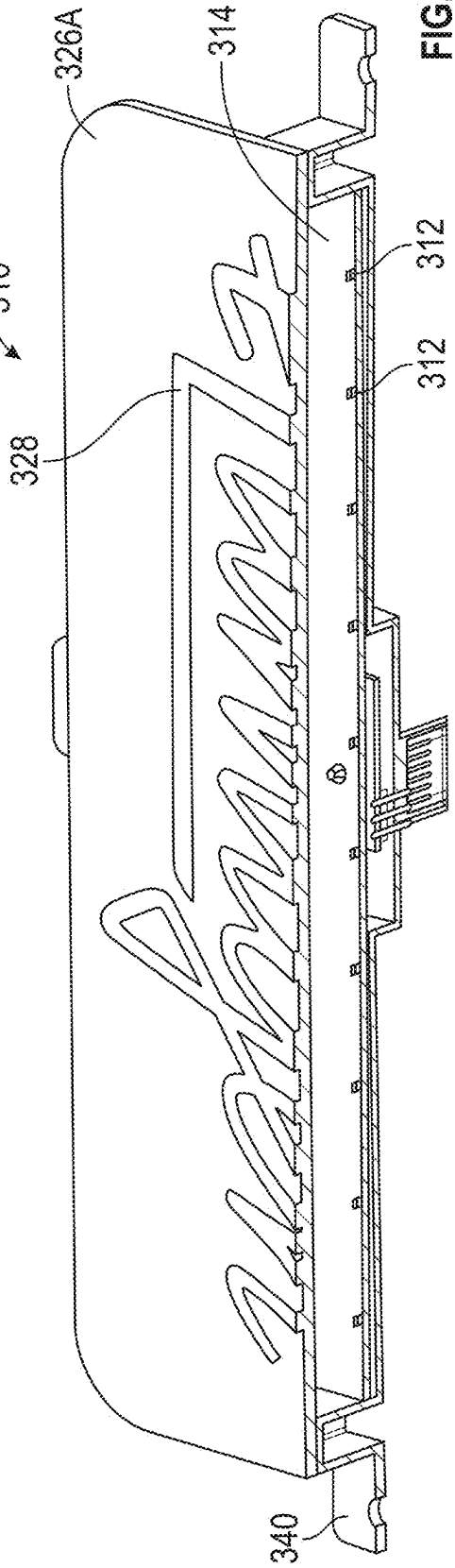
310
326A
314
312
312
328
340

FIG. 3F

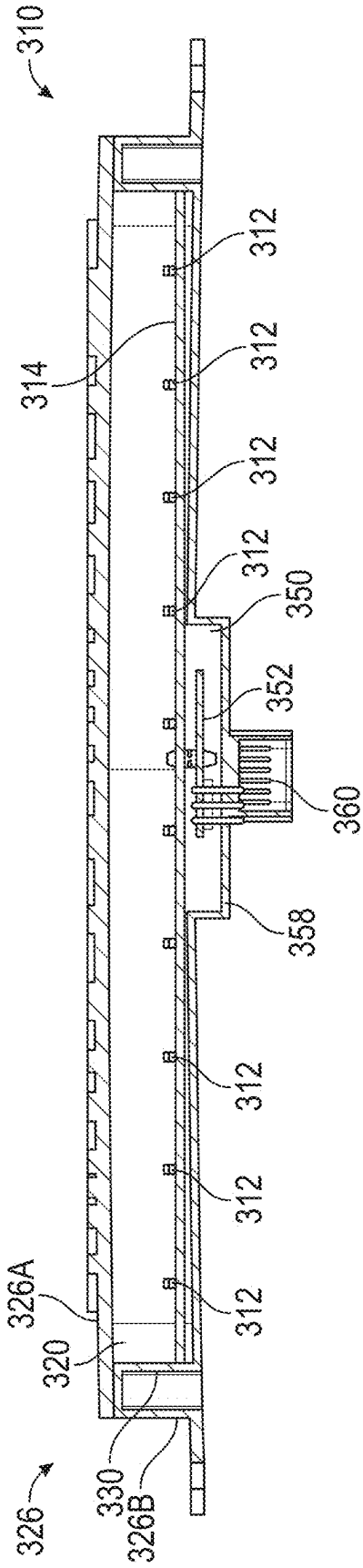
310
314
312
312
312
312
350
352
360
358
312
312
312
326A
320
330
326B
326

FIG. 3G

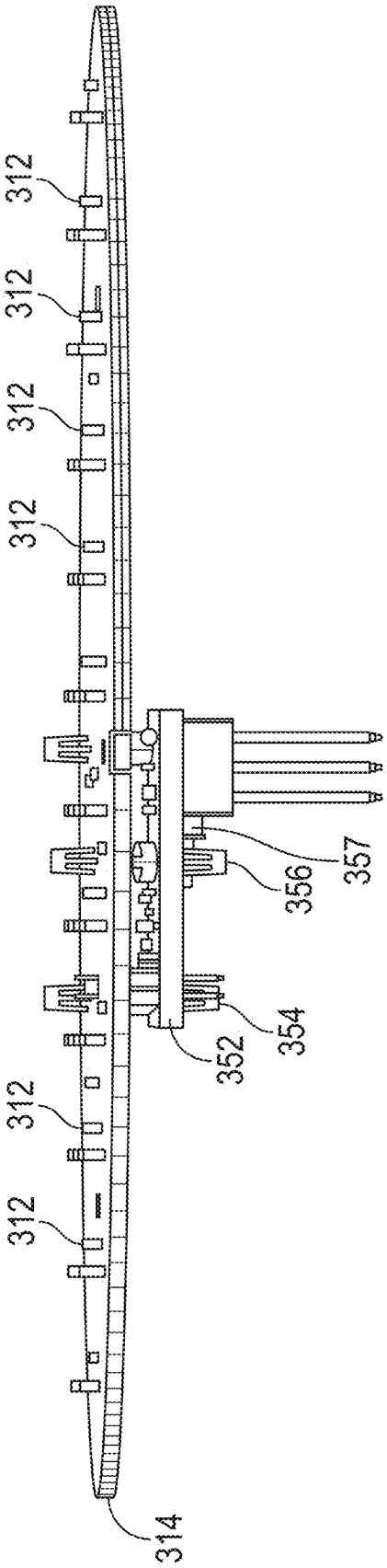
312
312
312
312
357
356
354
352
312
312
314

FIG. 3H

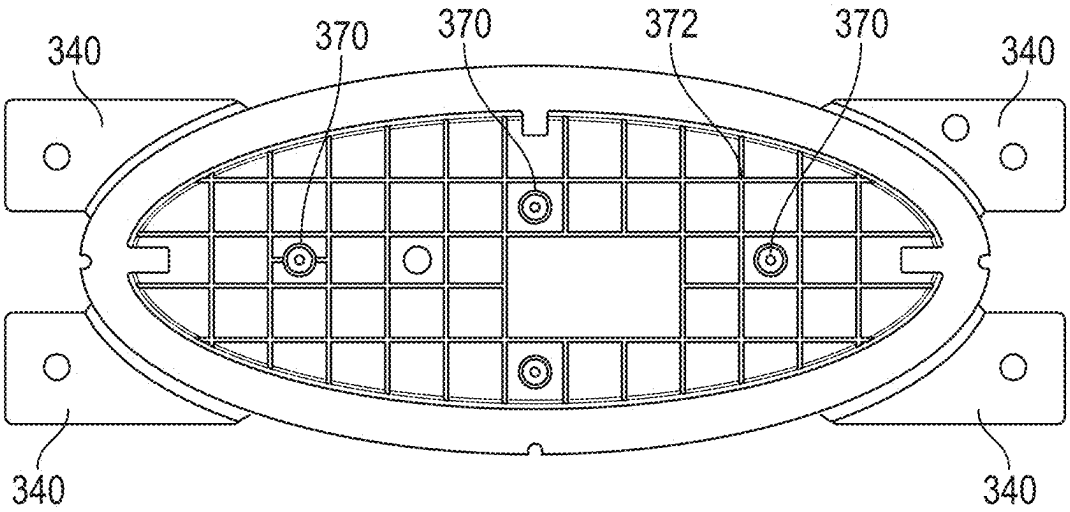
340
370
370
372
370
340
340
340

FIG. 3I

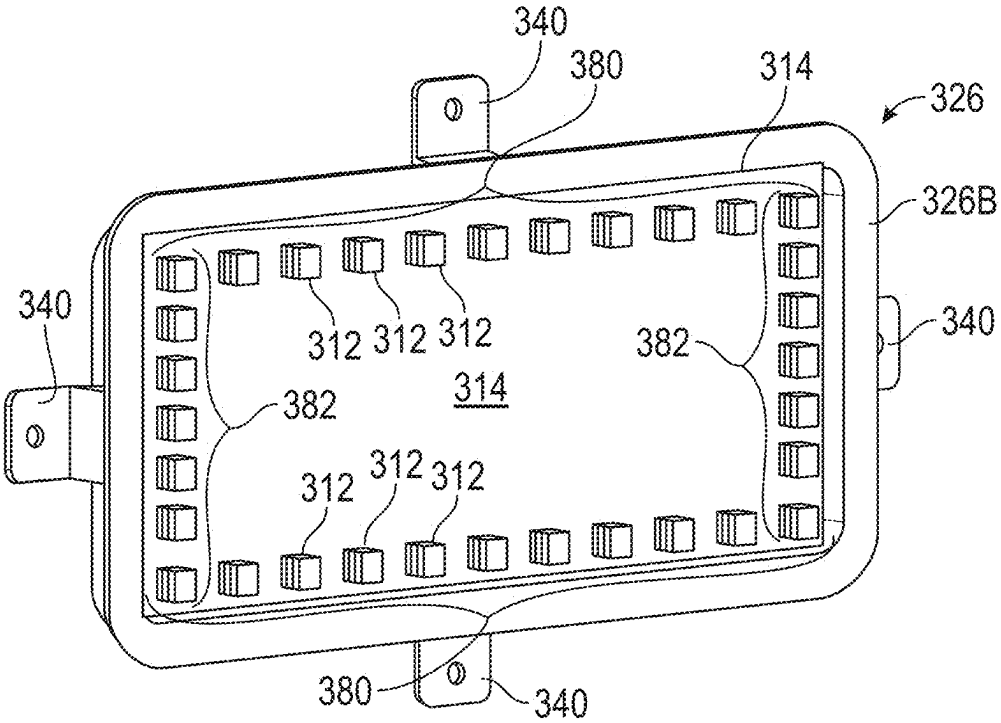
340
380
314
326
326B
340
312
312
312
382
340
314
382
312
312
312
380
340

FIG. 3J

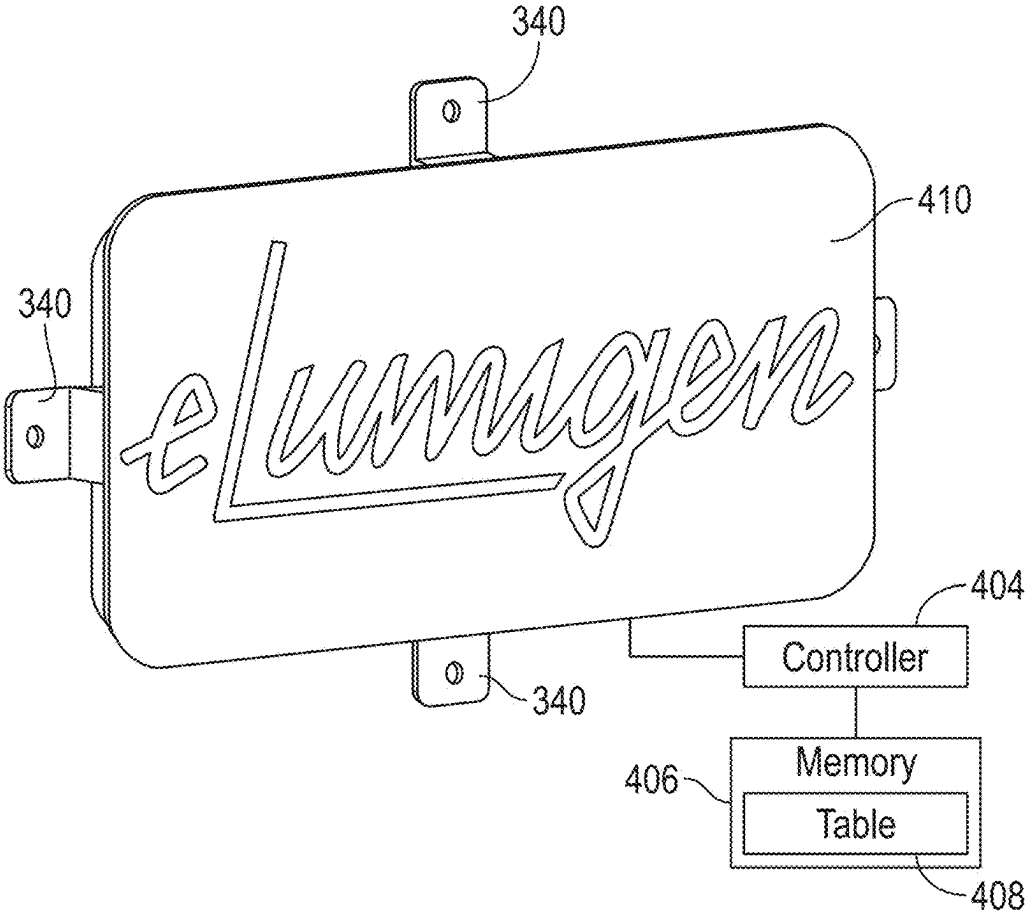
340
410
340
eLumigen
404
Controller
340
Memory
406
Table
408

FIG. 4A

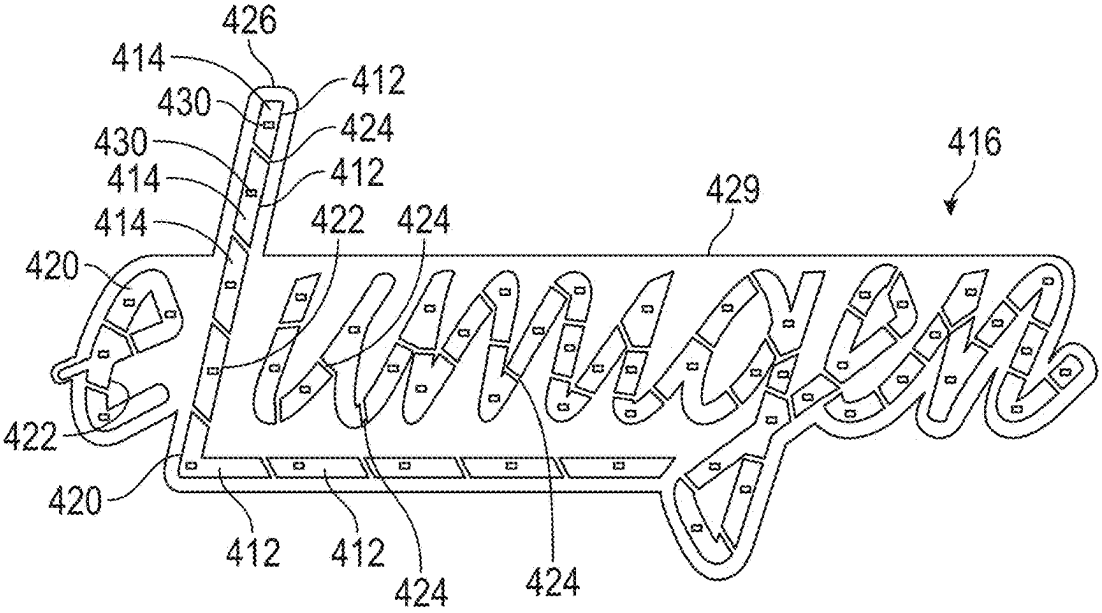
426
414
412
430
424
430
414
412
414
422
424
429
416
420
422
420
412
412
424
424

FIG. 4B

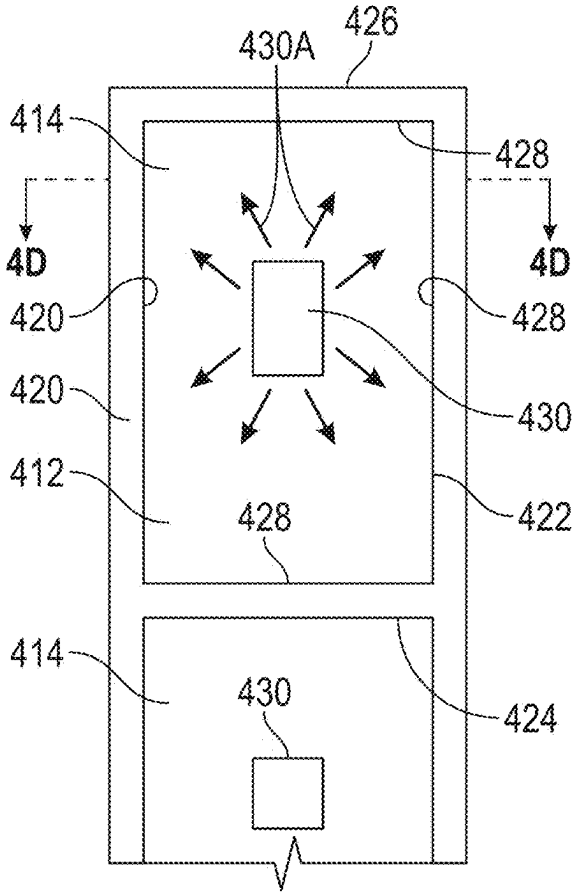
426
430A
414
428
4D
4D
420
428
420
430
412
422
428
414
430
424

FIG. 4C

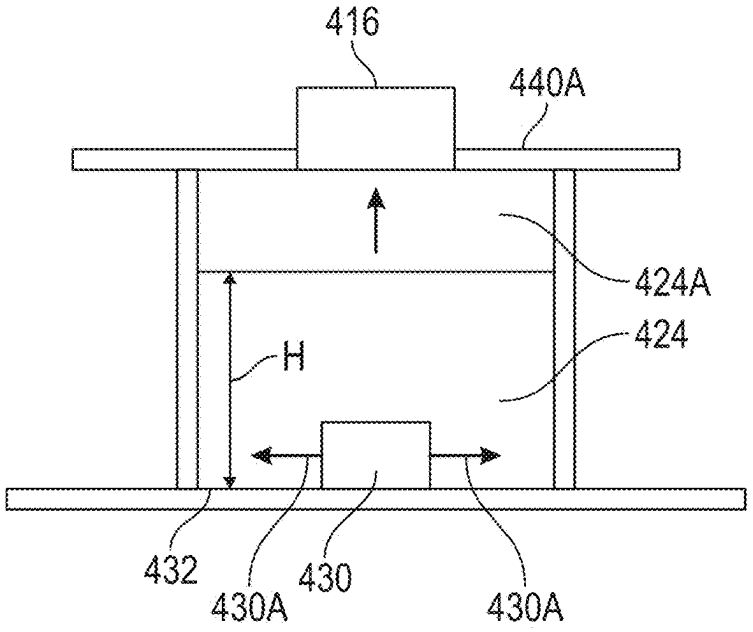
416
440A
424A
424
H
432
430A
430
430A

FIG. 4D

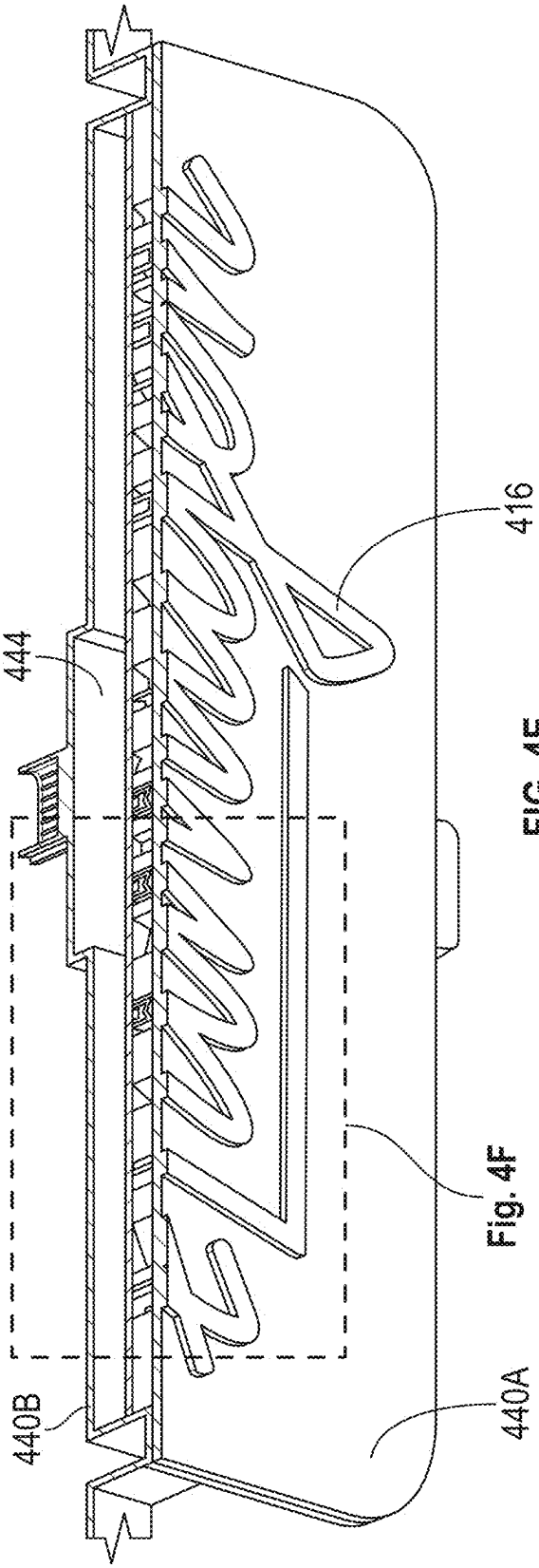
444
416
440B
440A
Fig. 4F

FIG. 4E

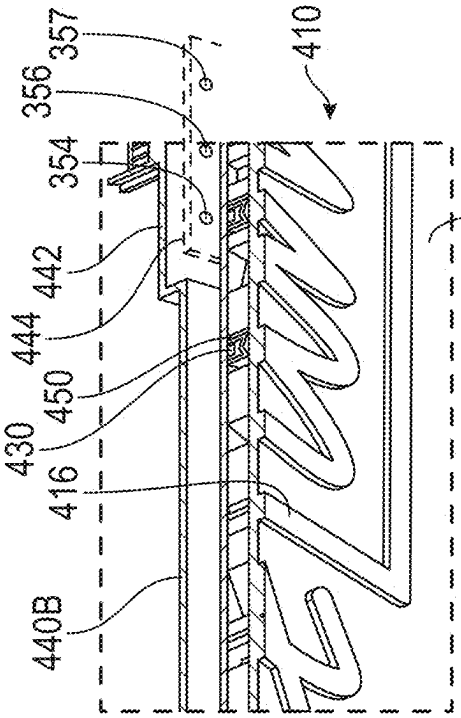
357
356
354
442
444
450
430
416
440B
410
440A

FIG. 4F

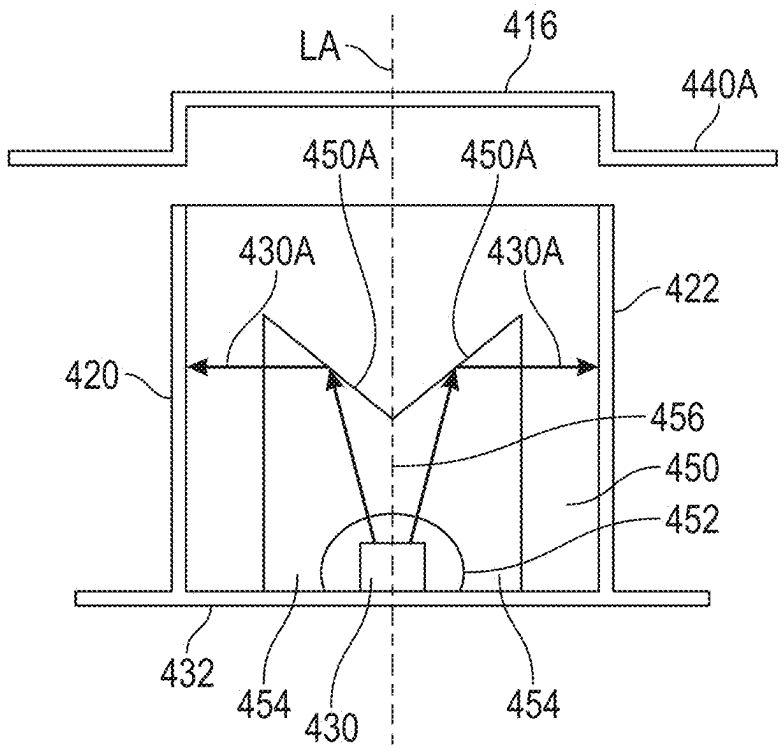
LA
416
440A
450A
450A
430A
430A
422
420
456
450
452
432
454
430
454

FIG. 4G

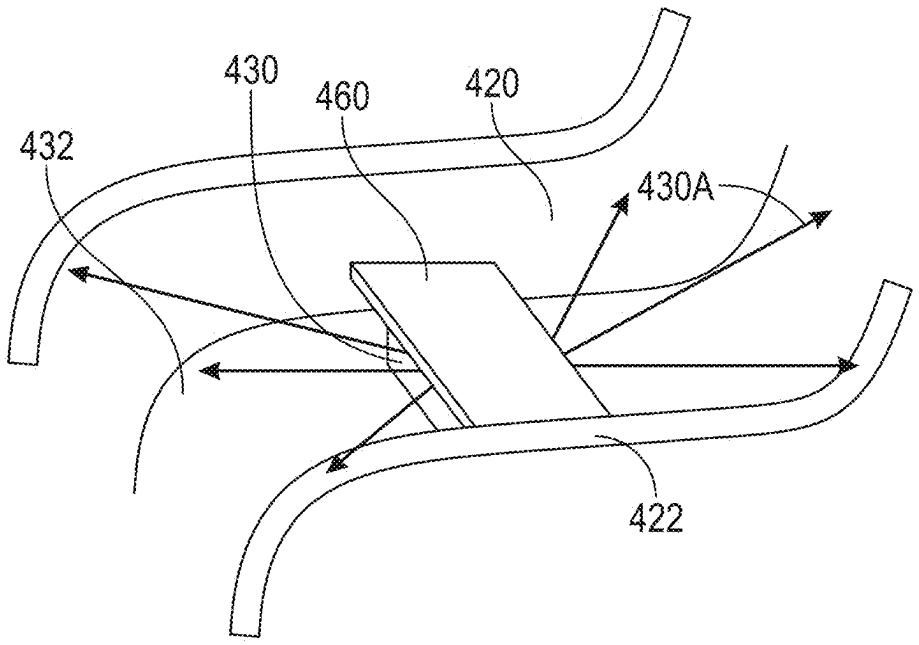
430
460
420
432
430A
422

FIG. 4H

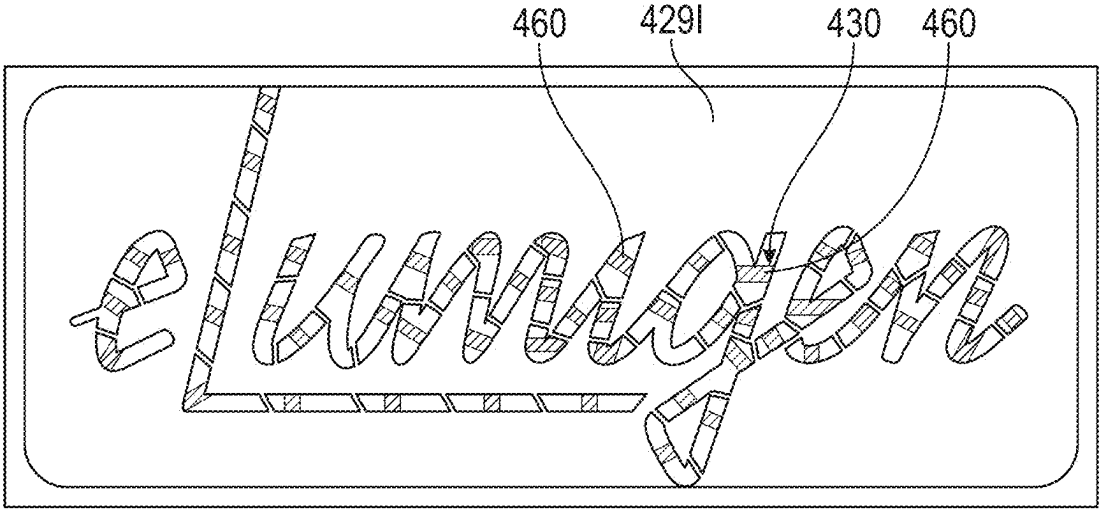
460
429I
430
460

FIG. 4I

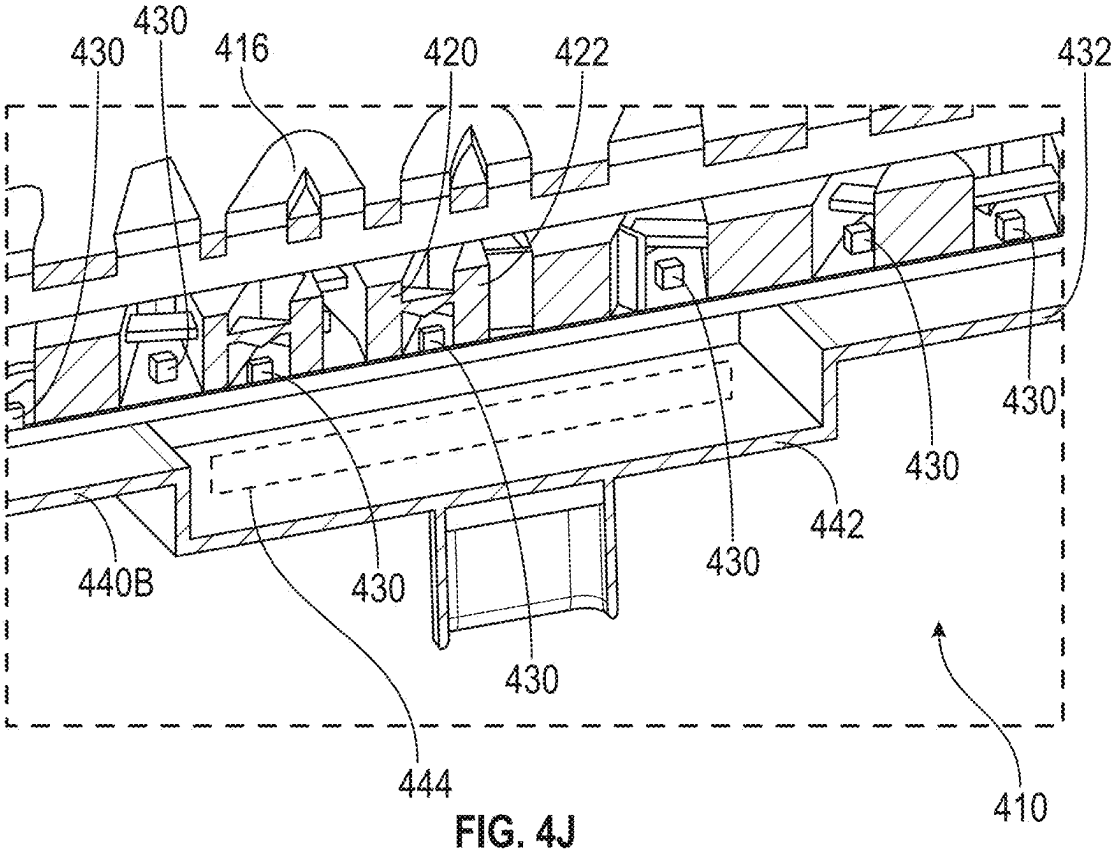
430
430
416
420
422
432
430
430
442
440B
430
430
430
444
410

FIG. 4J

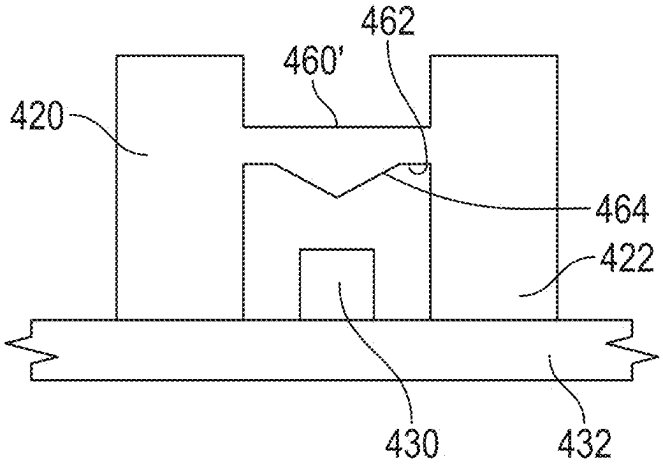

FIG. 4K

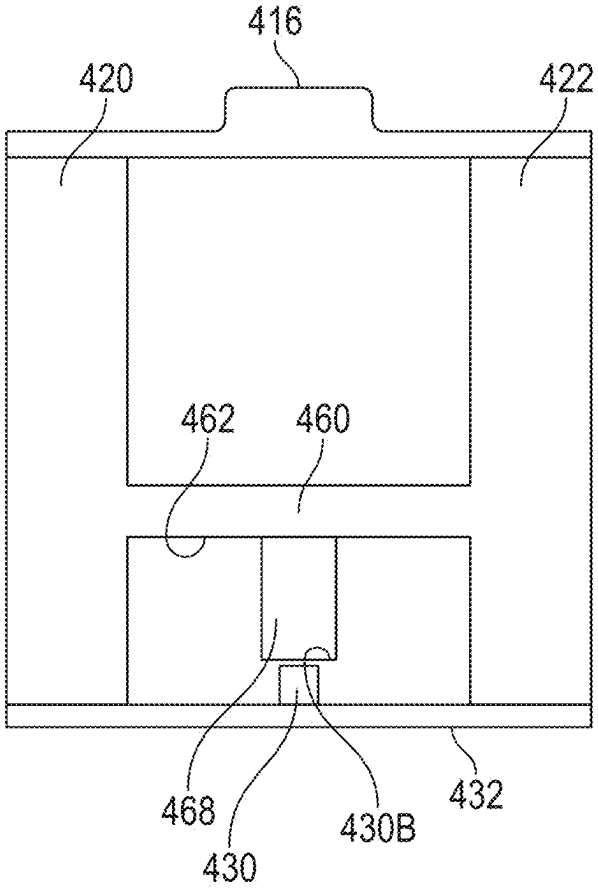

FIG. 4L

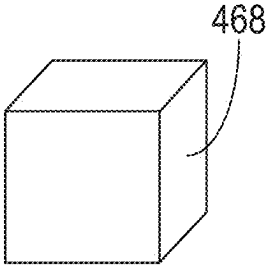

FIG. 4M

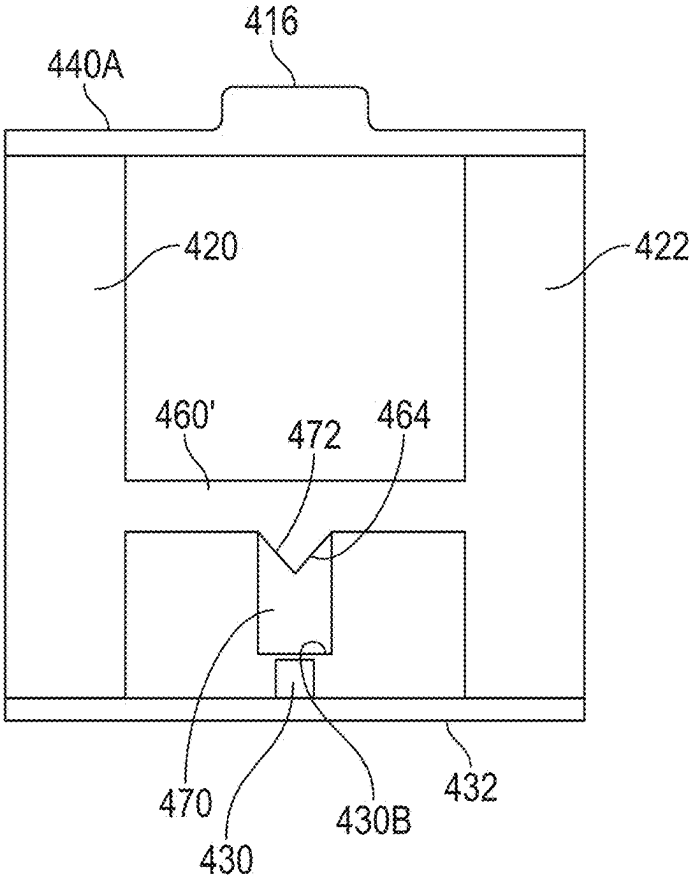

FIG. 4N

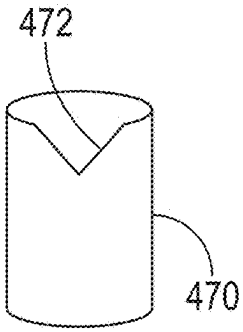

FIG. 4O

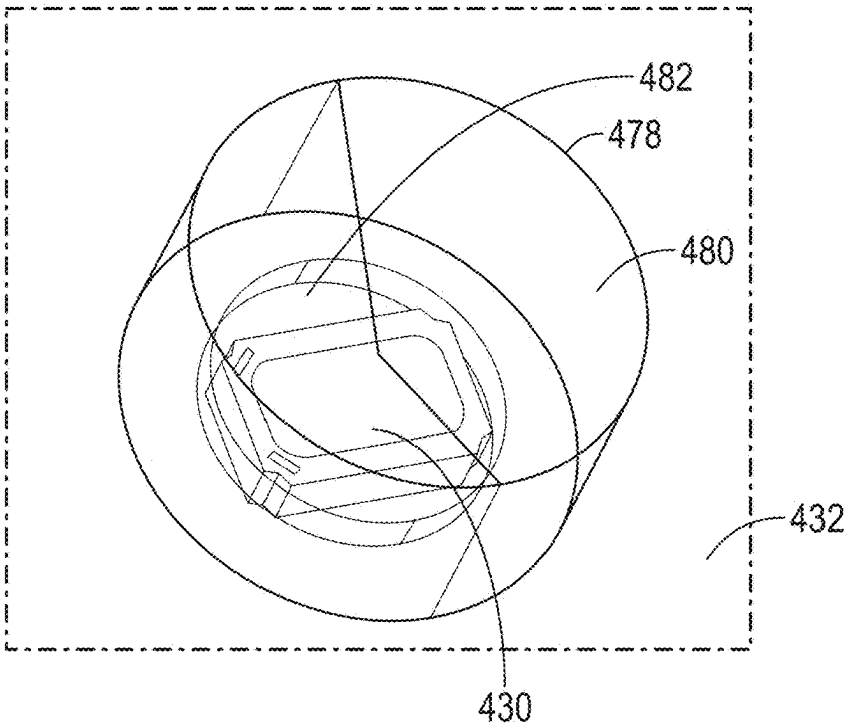

FIG. 4P

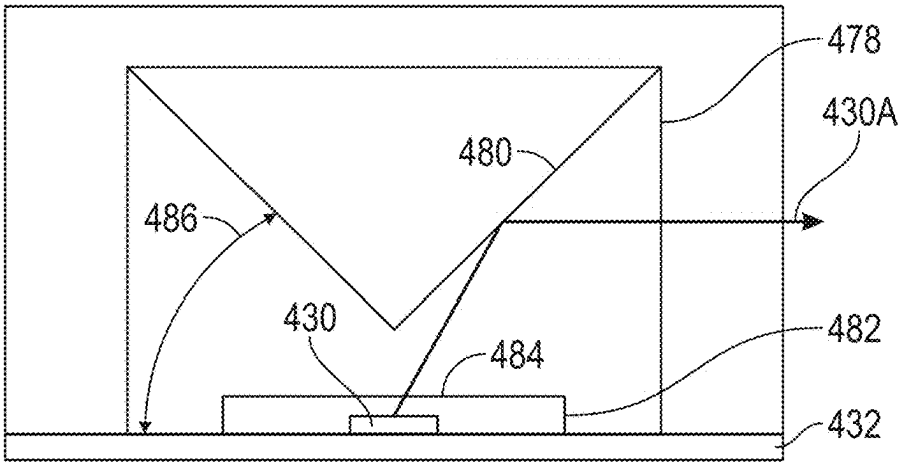

FIG. 4Q

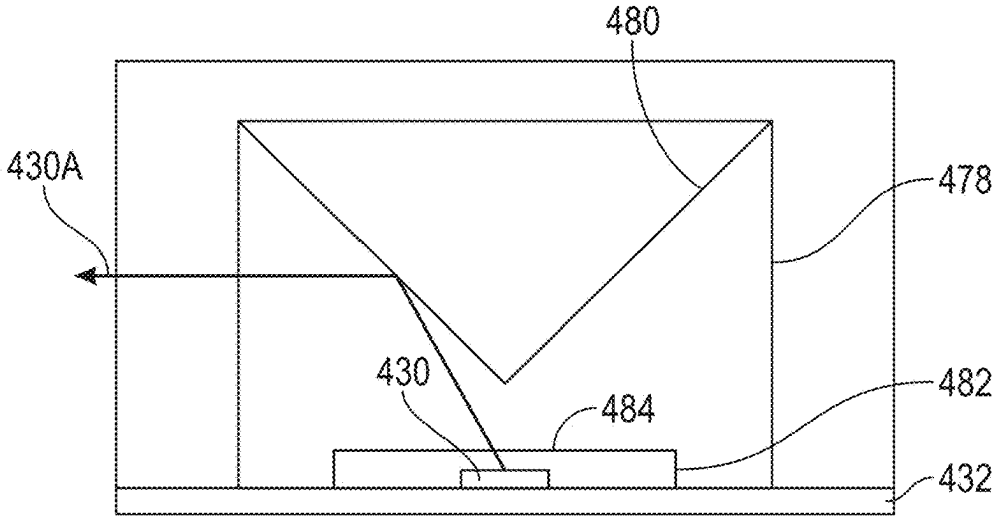

FIG. 4R

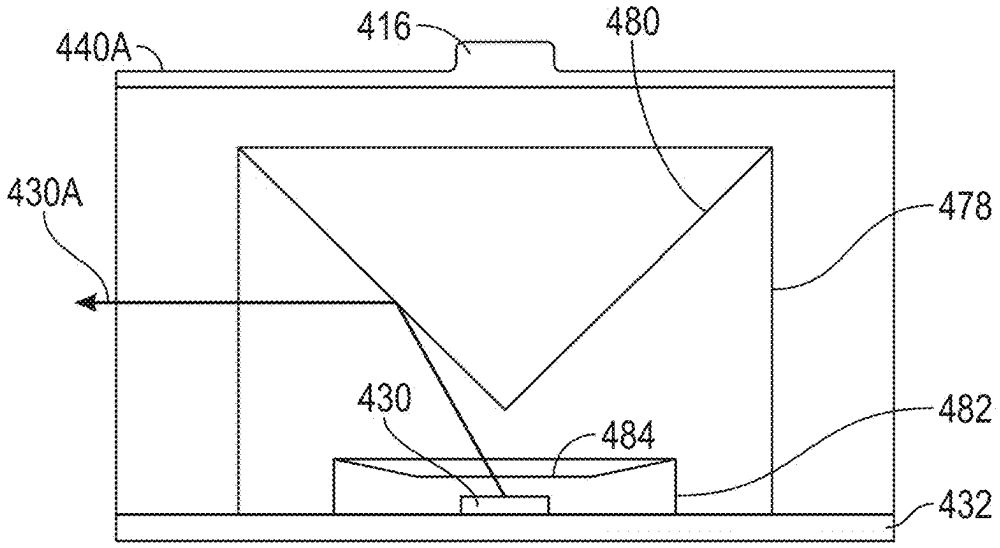

FIG. 4S

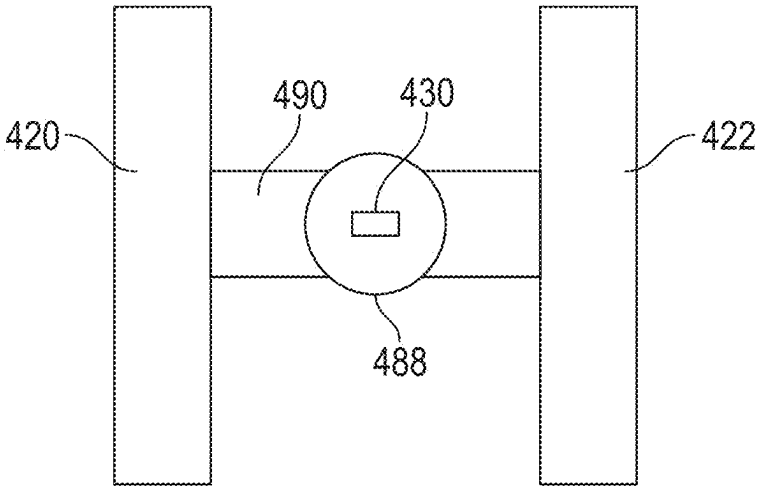

FIG. 4T

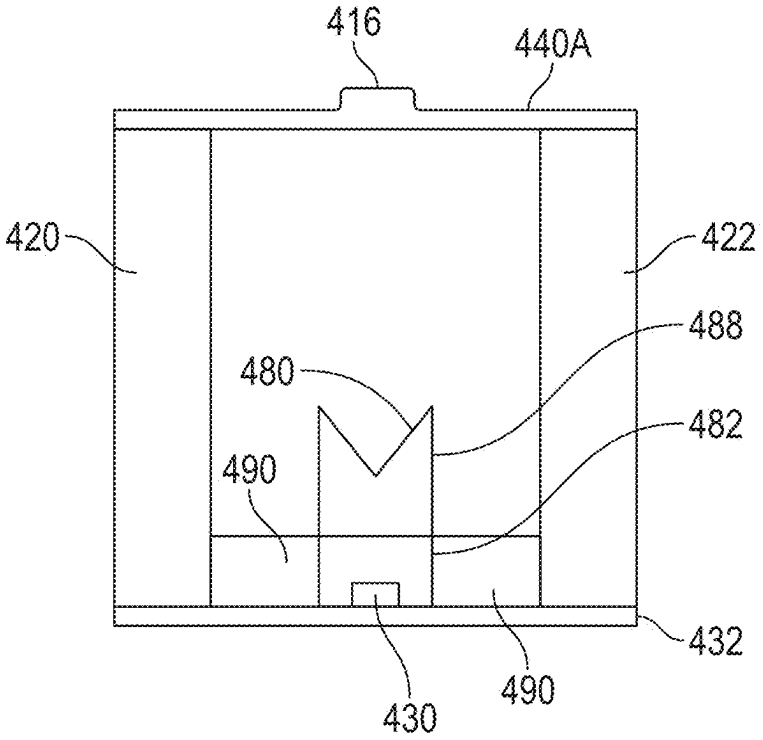

FIG. 4U

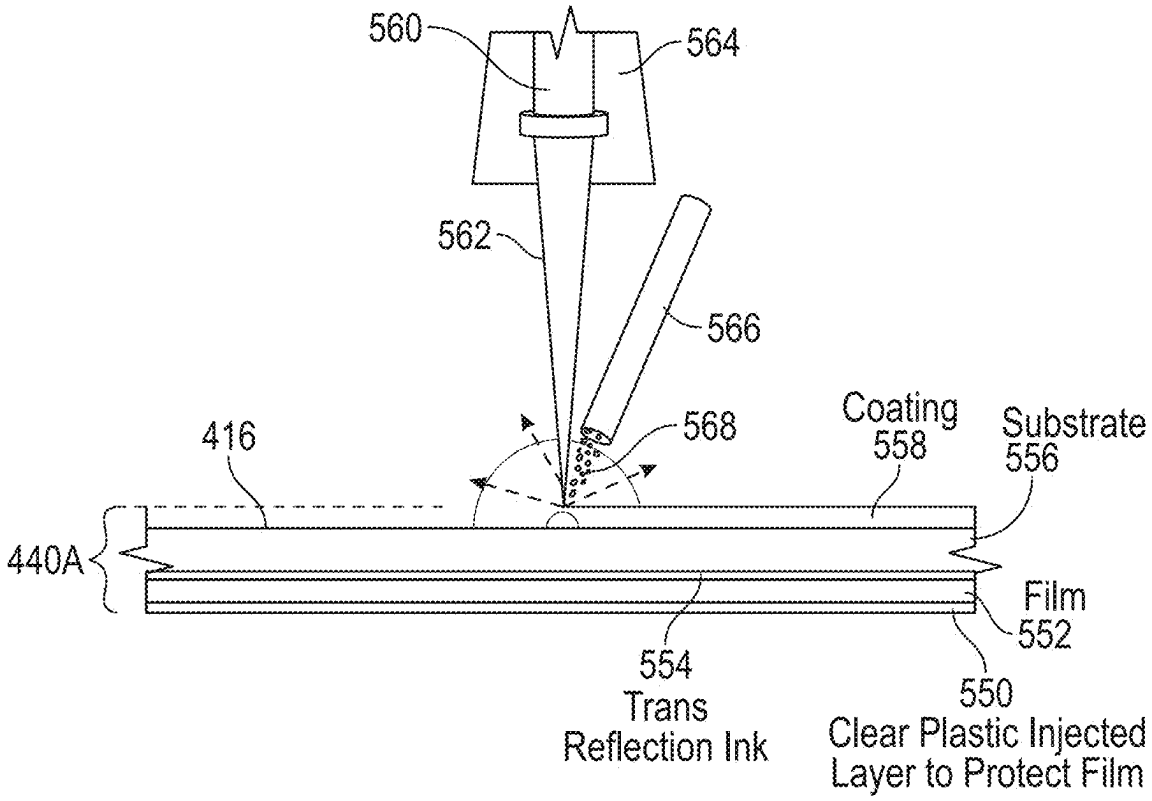
560
564
562
566
568
416
Coating
558
Substrate
556
440A
Film
552
554
Trans
Reflection Ink
550
Clear Plastic Injected
Layer to Protect Film

FIG. 5A

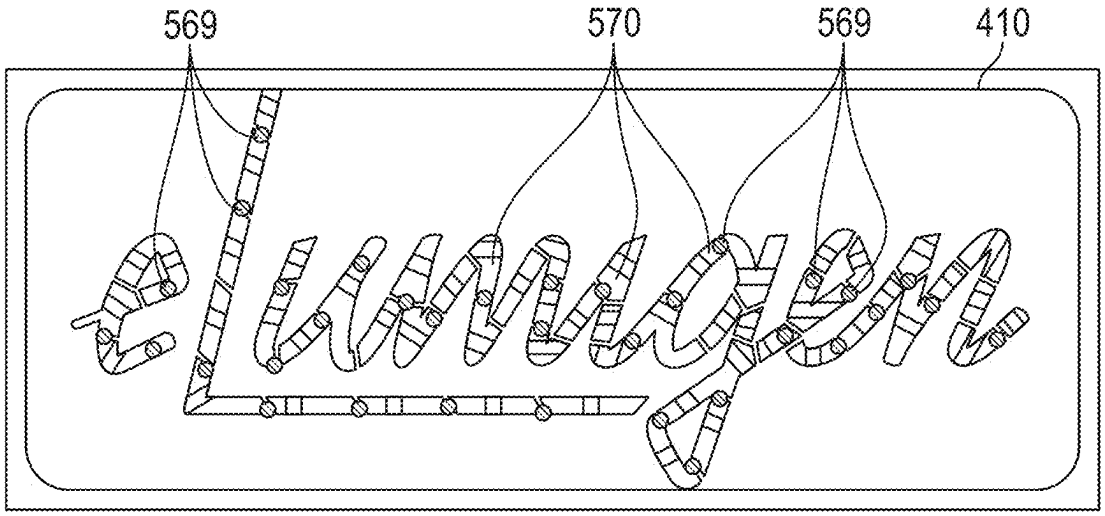
569
570
569
410

FIG. 5B

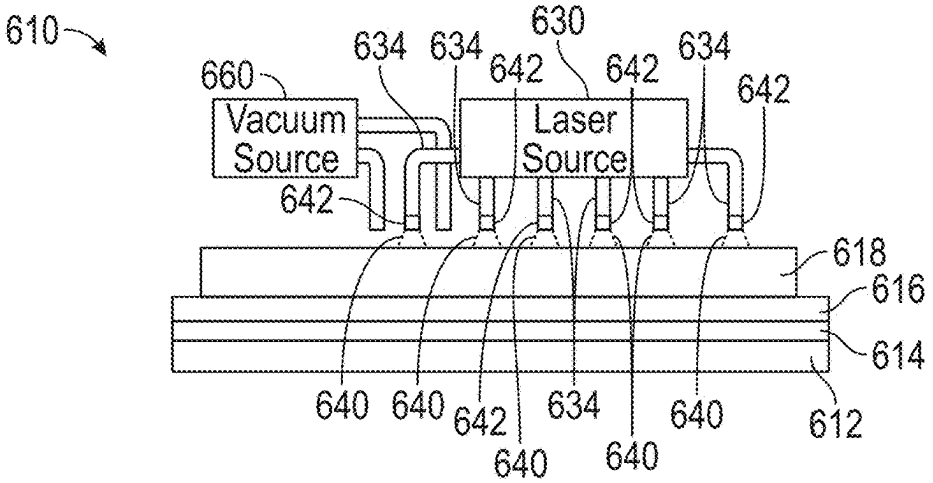

FIG. 6A

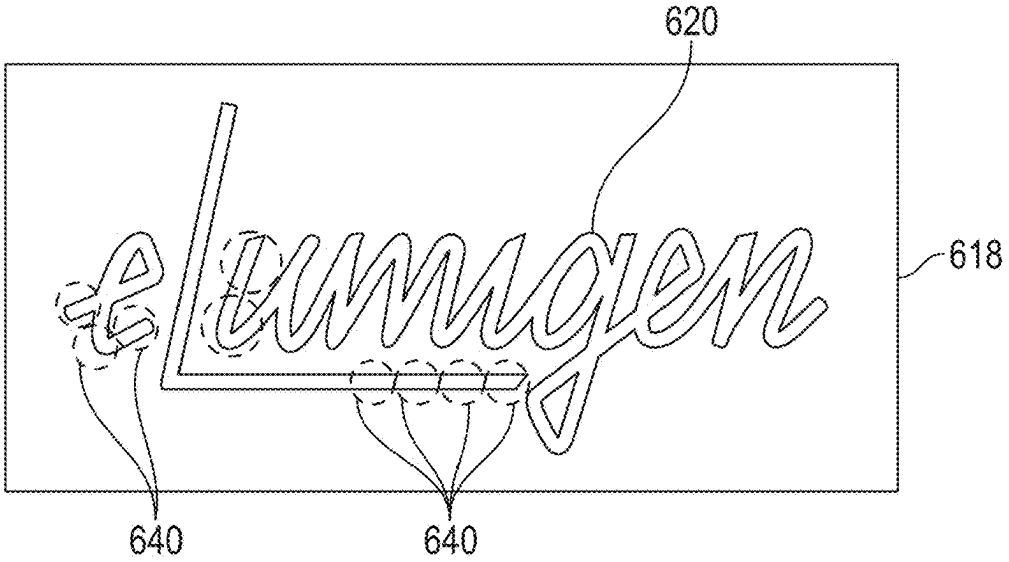

FIG. 6B

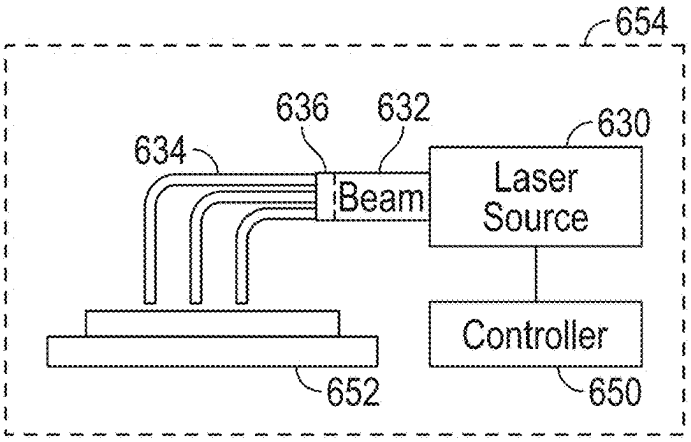

FIG. 6C

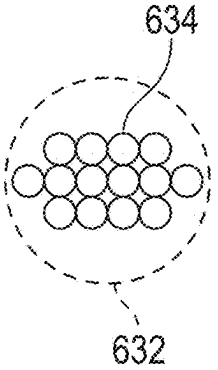

FIG. 6D

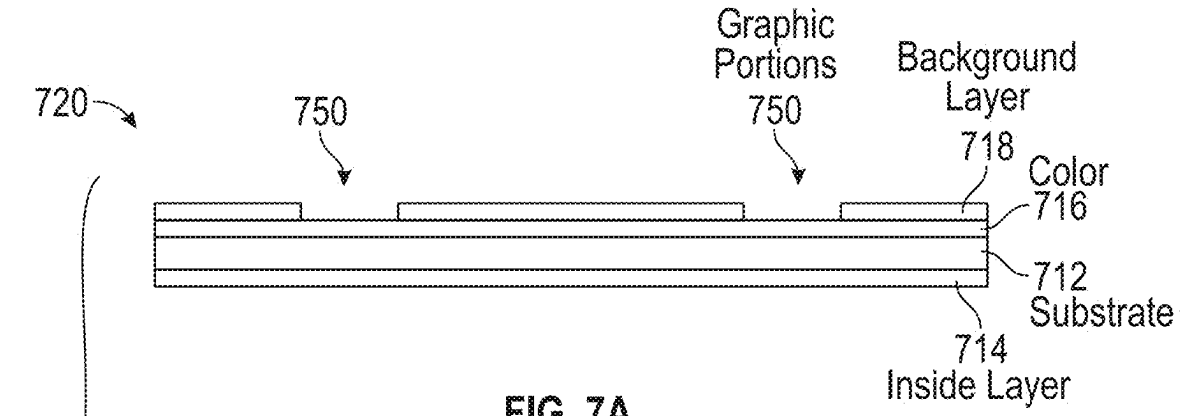
720
750
Graphic Portions
750
Background Layer
718
Color
716
712
Substrate
714
Inside Layer

FIG. 7A

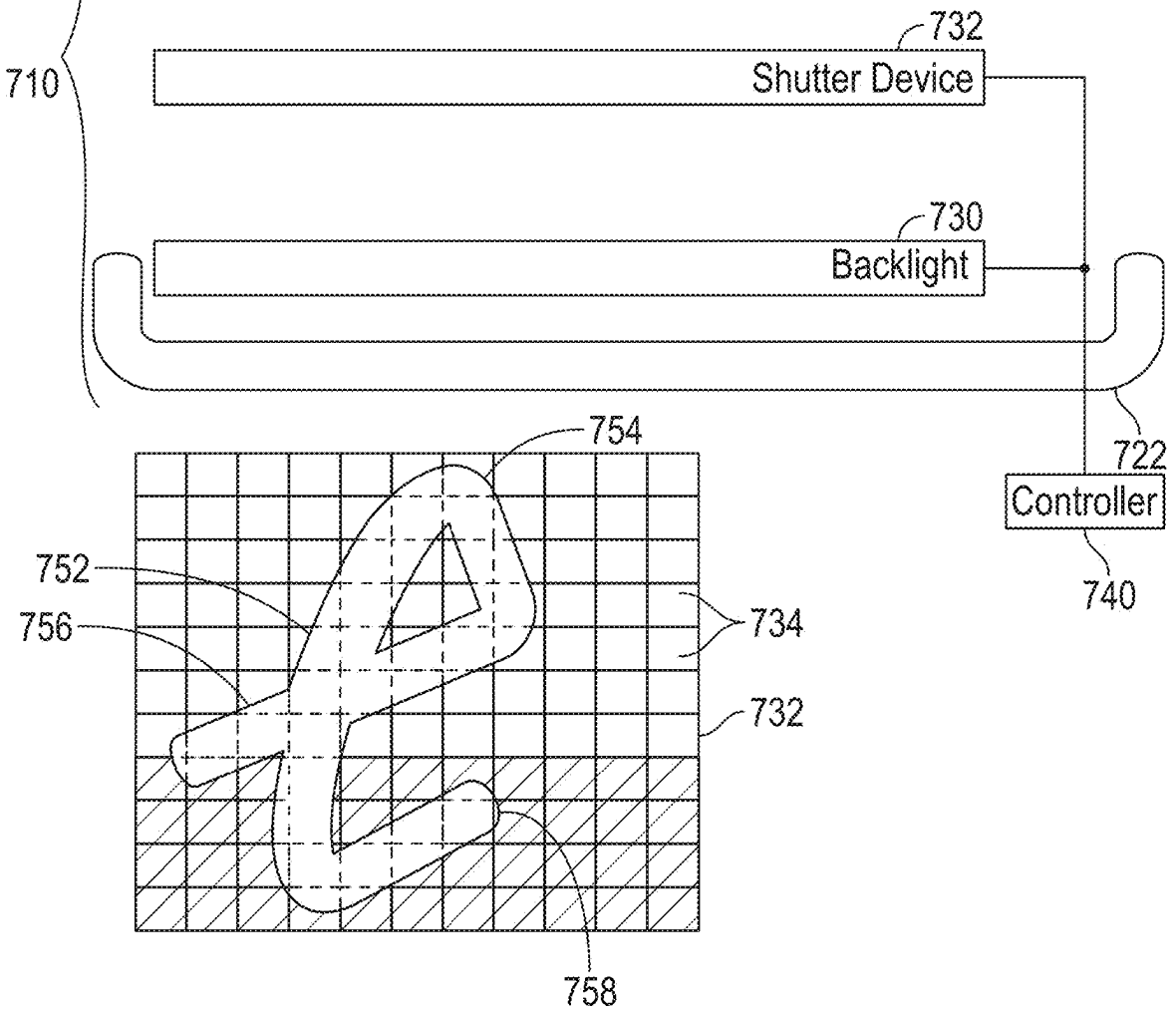
710
732
Shutter Device
730
Backlight
722
Controller
740
754
752
756
734
732
758

FIG. 7B

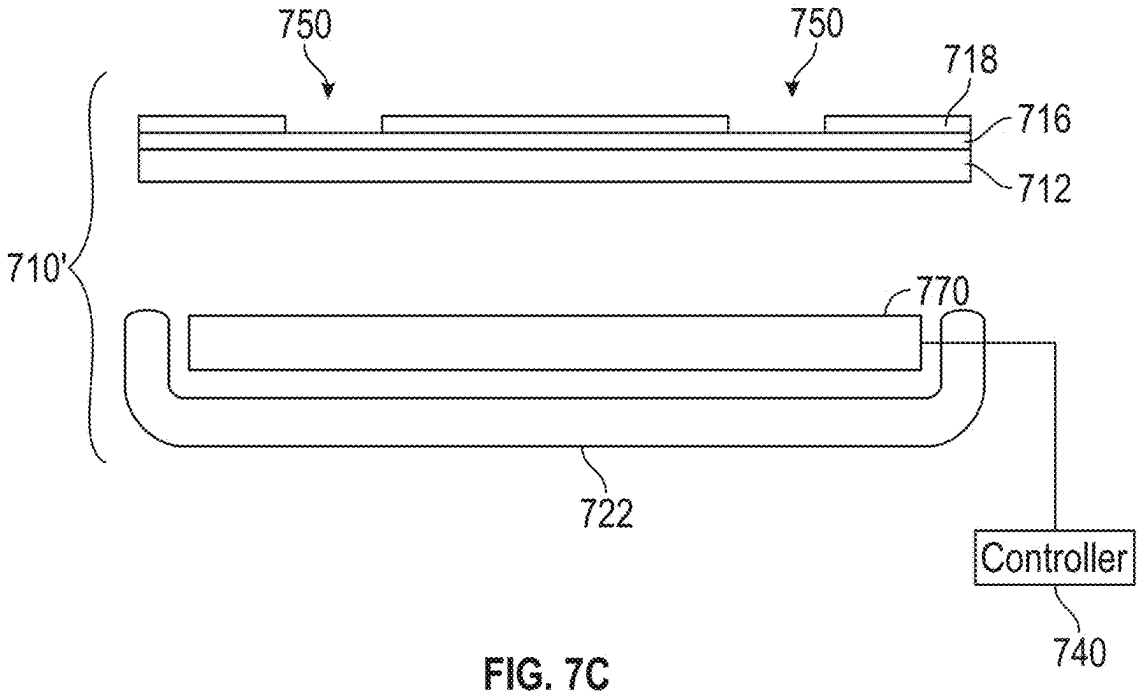

FIG. 7C

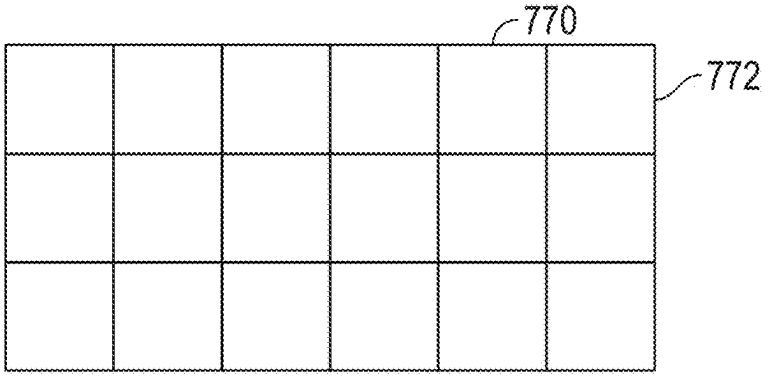

FIG. 7D

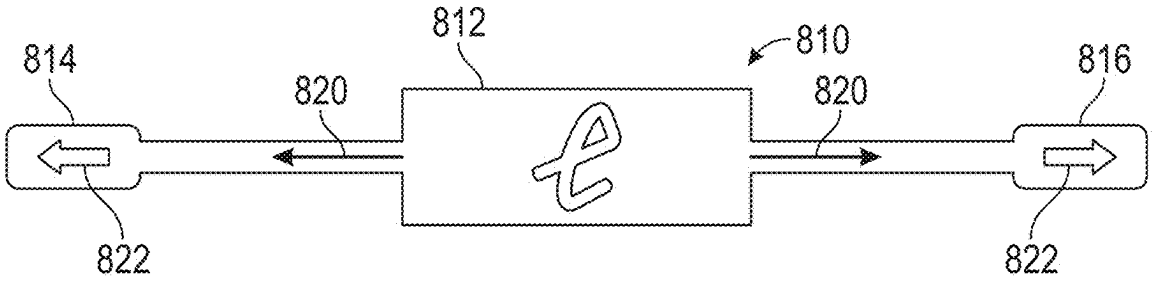

FIG. 8

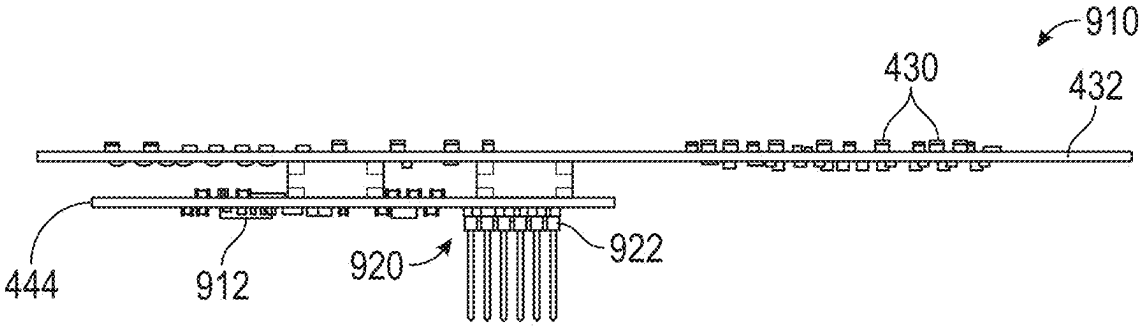

FIG. 9

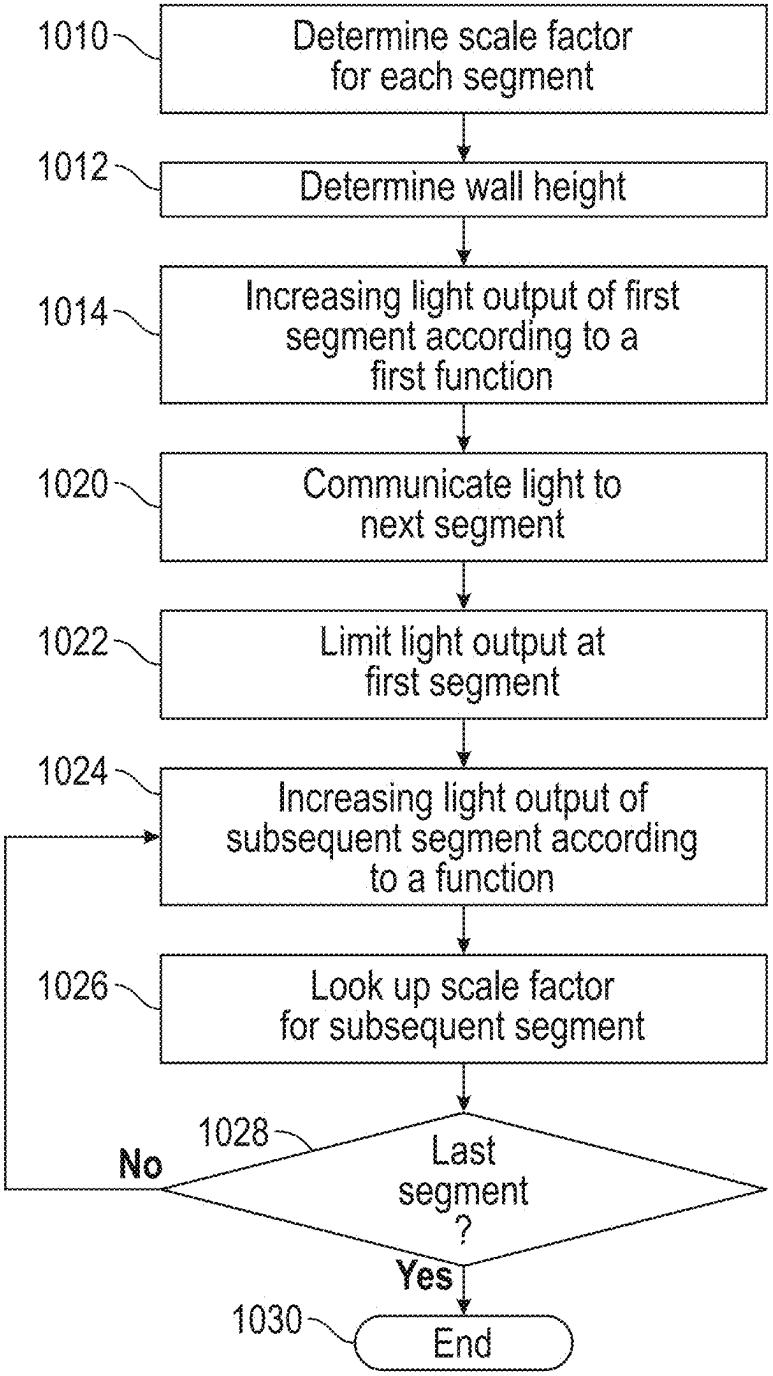
1010
Determine scale factor for each segment
1012
Determine wall height
1014
Increasing light output of first segment according to a first function
1020
Communicate light to next segment
1022
Limit light output at first segment
1024
Increasing light output of subsequent segment according to a function
1026
Look up scale factor for subsequent segment
1028
Last segment ?
No
Yes
1030
End

FIG. 10A

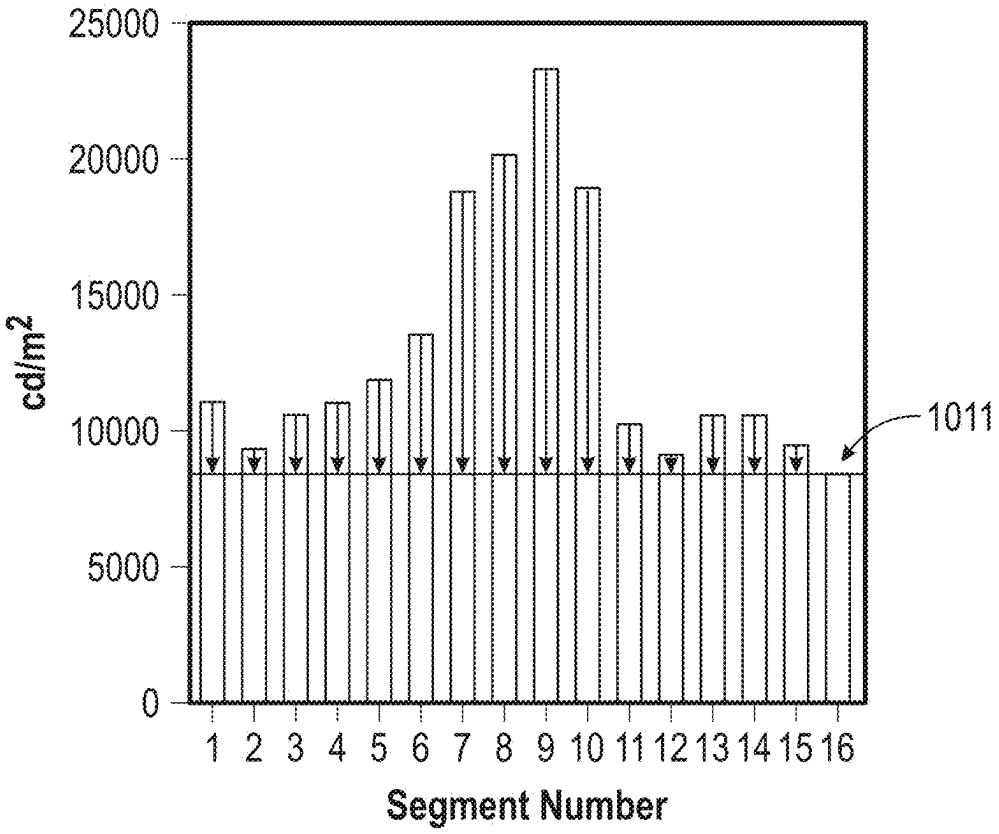

FIG. 10B

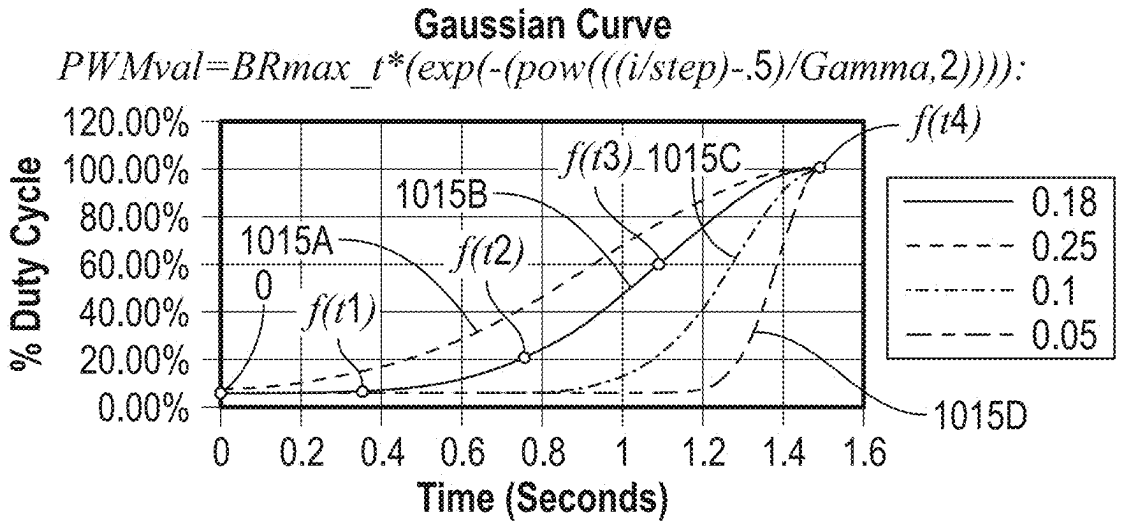

FIG. 10C

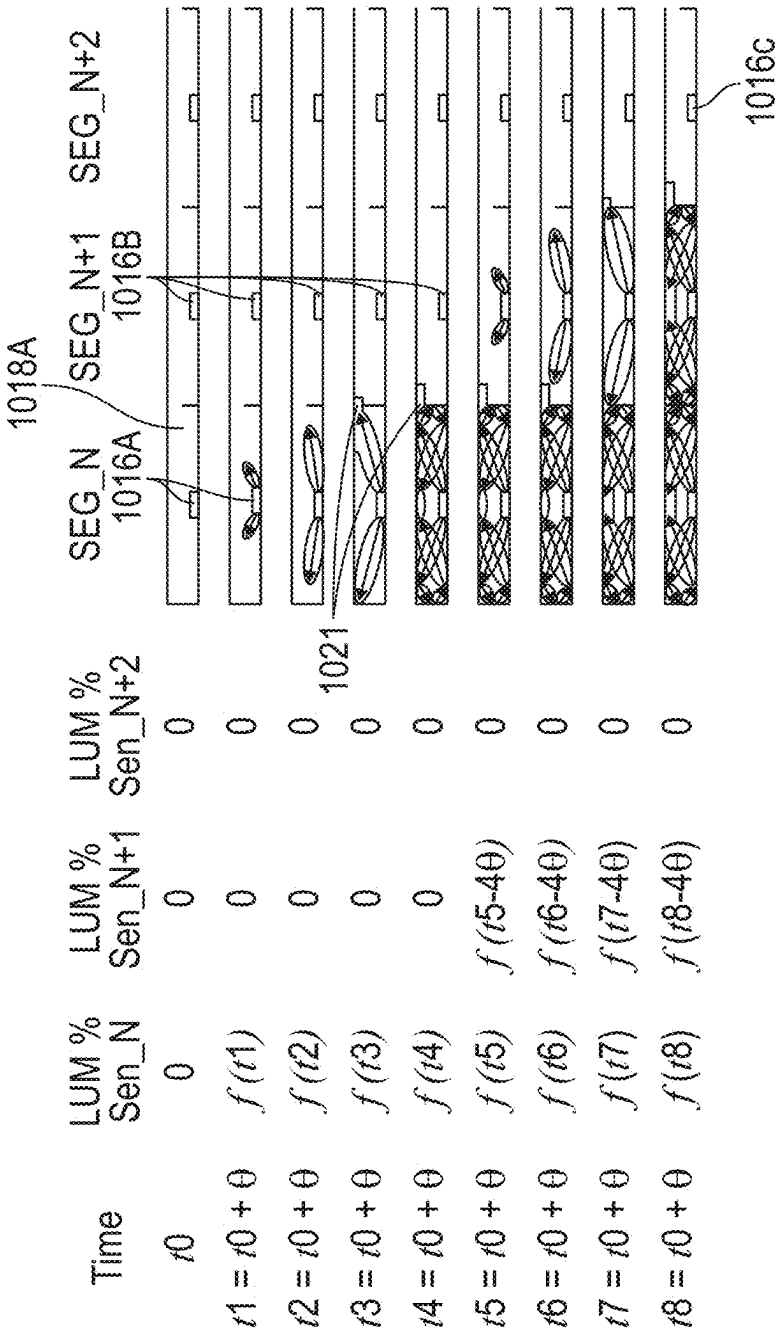
Time
LUM % Sen_N
LUM % Sen_N+1
LUM % Sen_N+2
t0 = t0 + θ
t1 = t0 + θ
t2 = t0 + θ
t3 = t0 + θ
t4 = t0 + θ
t5 = t0 + θ
t6 = t0 + θ
t7 = t0 + θ
t8 = t0 + θ
0
f (t1)
f (t2)
f (t3)
f (t4)
f (t5)
f (t6)
f (t7)
f (t8)
0
0
0
0
0
f (t5-4θ)
f (t6-4θ)
f (t7-4θ)
f (t8-4θ)
0
0
0
0
0
0
0
0
SEG_N
SEG_N+1
SEG_N+2
1018A
1016A
1016B
1021
1016c

FIG. 10D

2LED/SEG 1104	S01	S02	S03
1	8212.1	1368.9	32.6
2	593.2	6652.5	1538.3
3	19.3	658.0	6715.0
4	3.7	17.5	330.0

FIG. 10E

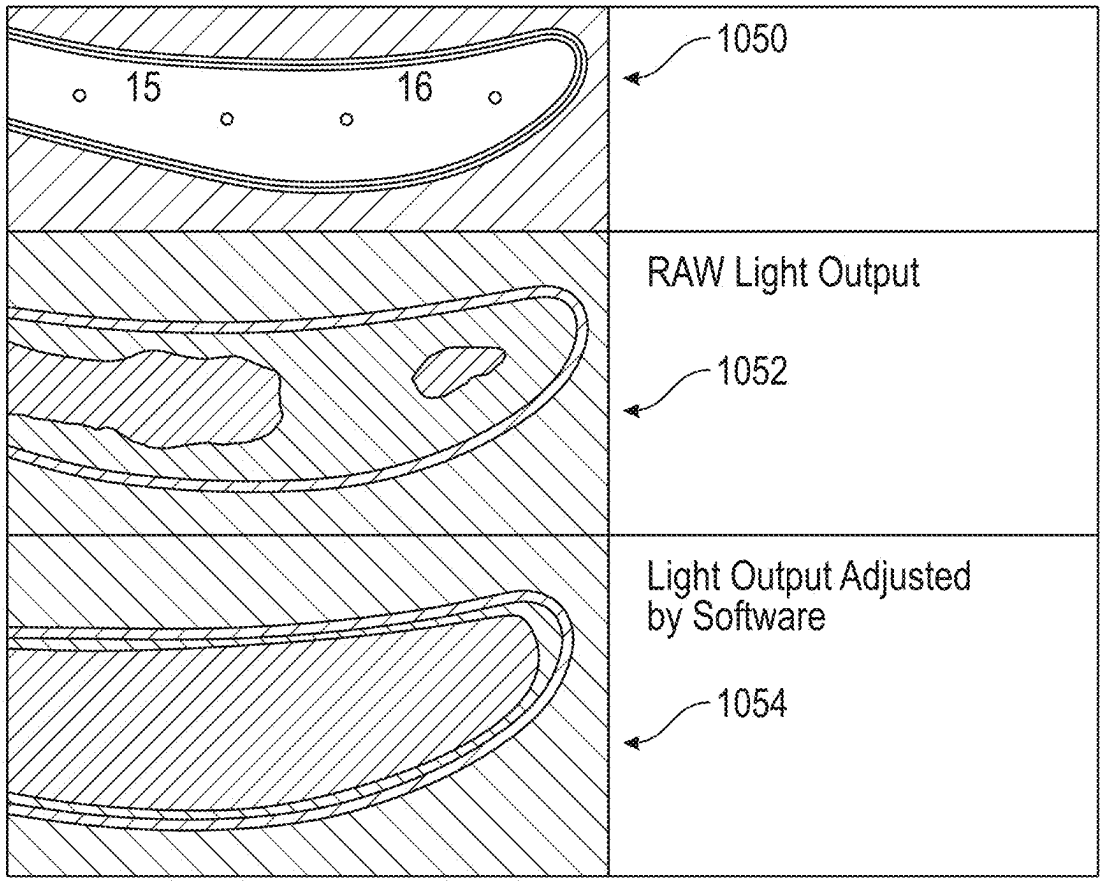

FIG. 10F

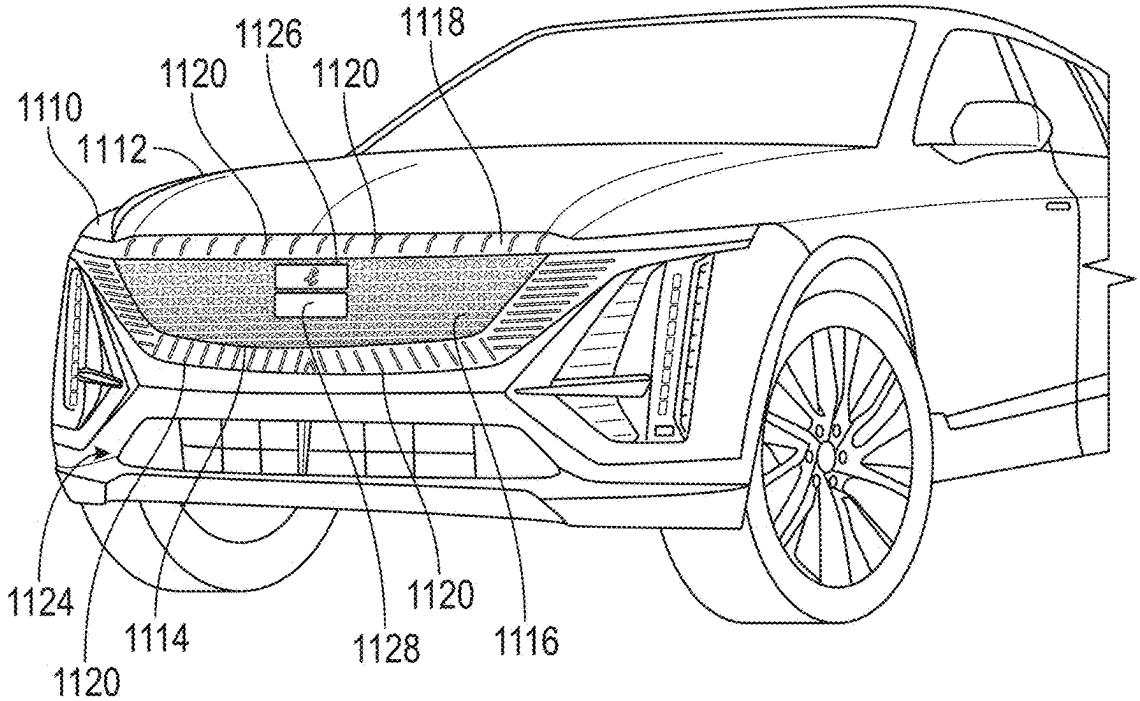

FIG. 11A

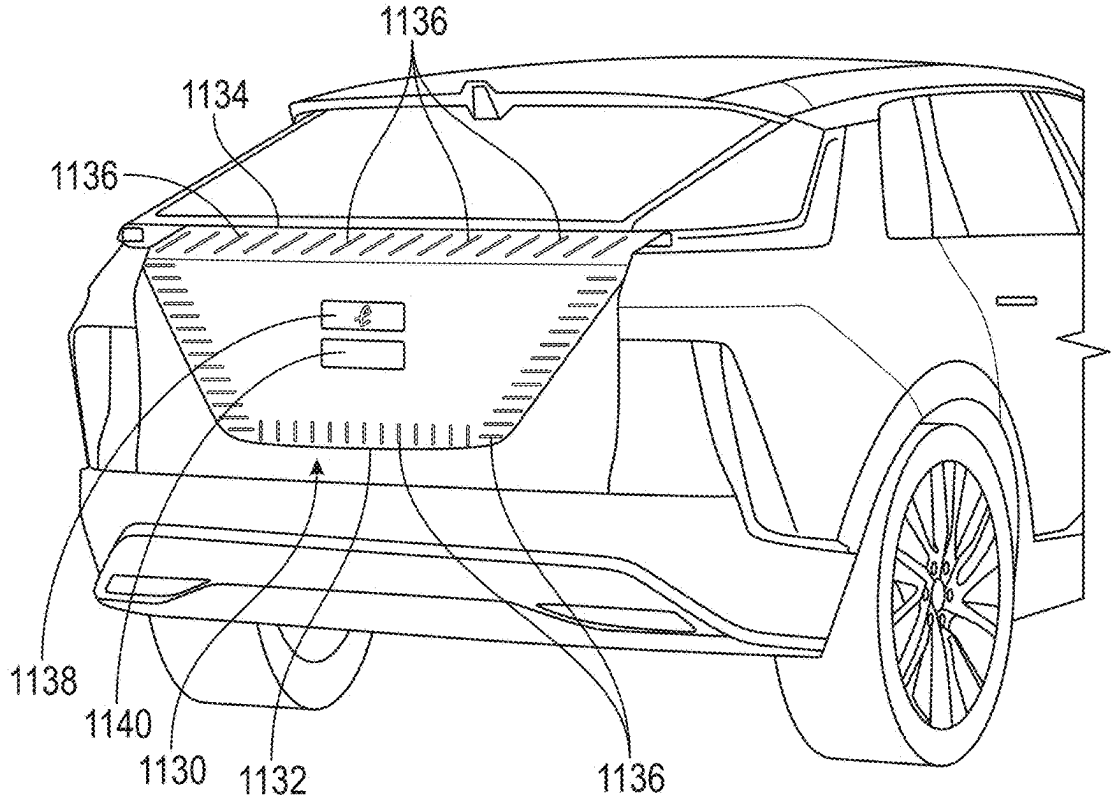

FIG. 11B

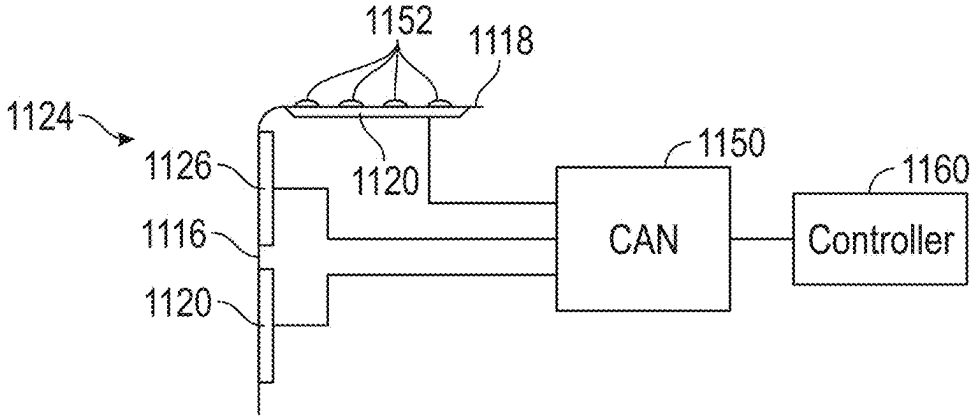

FIG. 11C

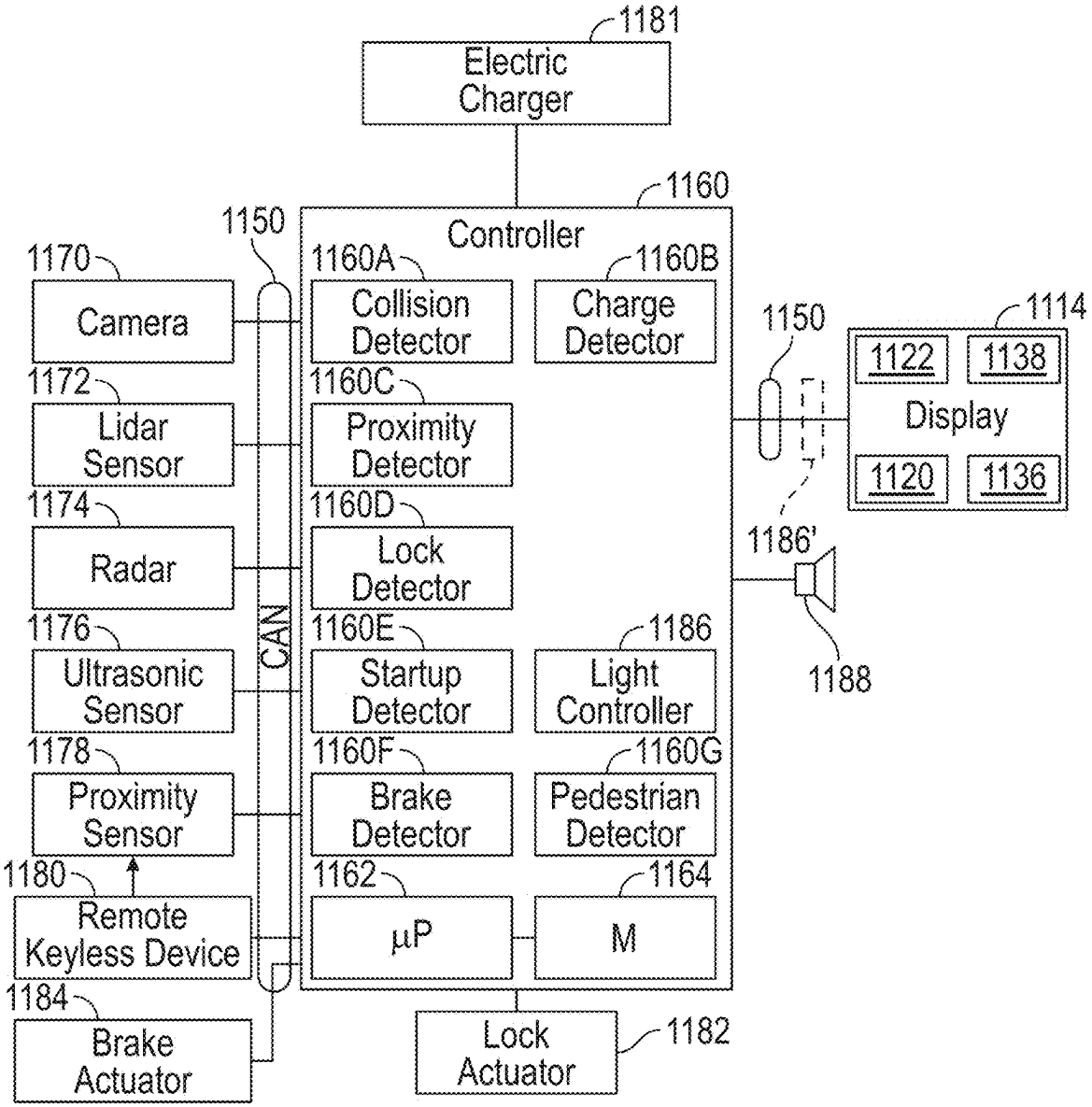

FIG. 11D

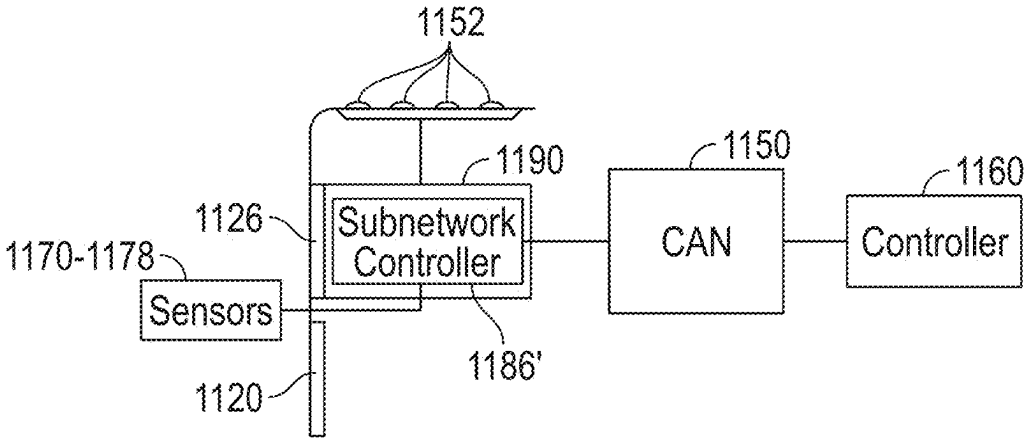

FIG. 11E

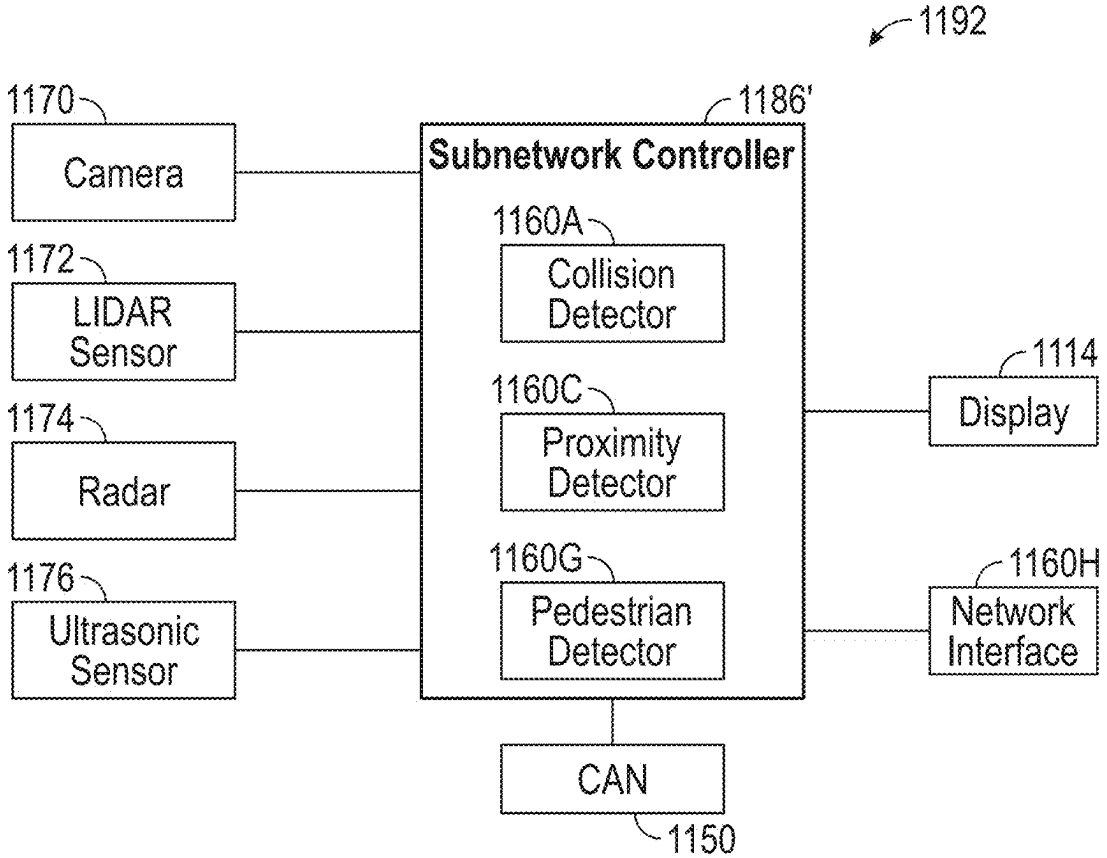

FIG. 11F

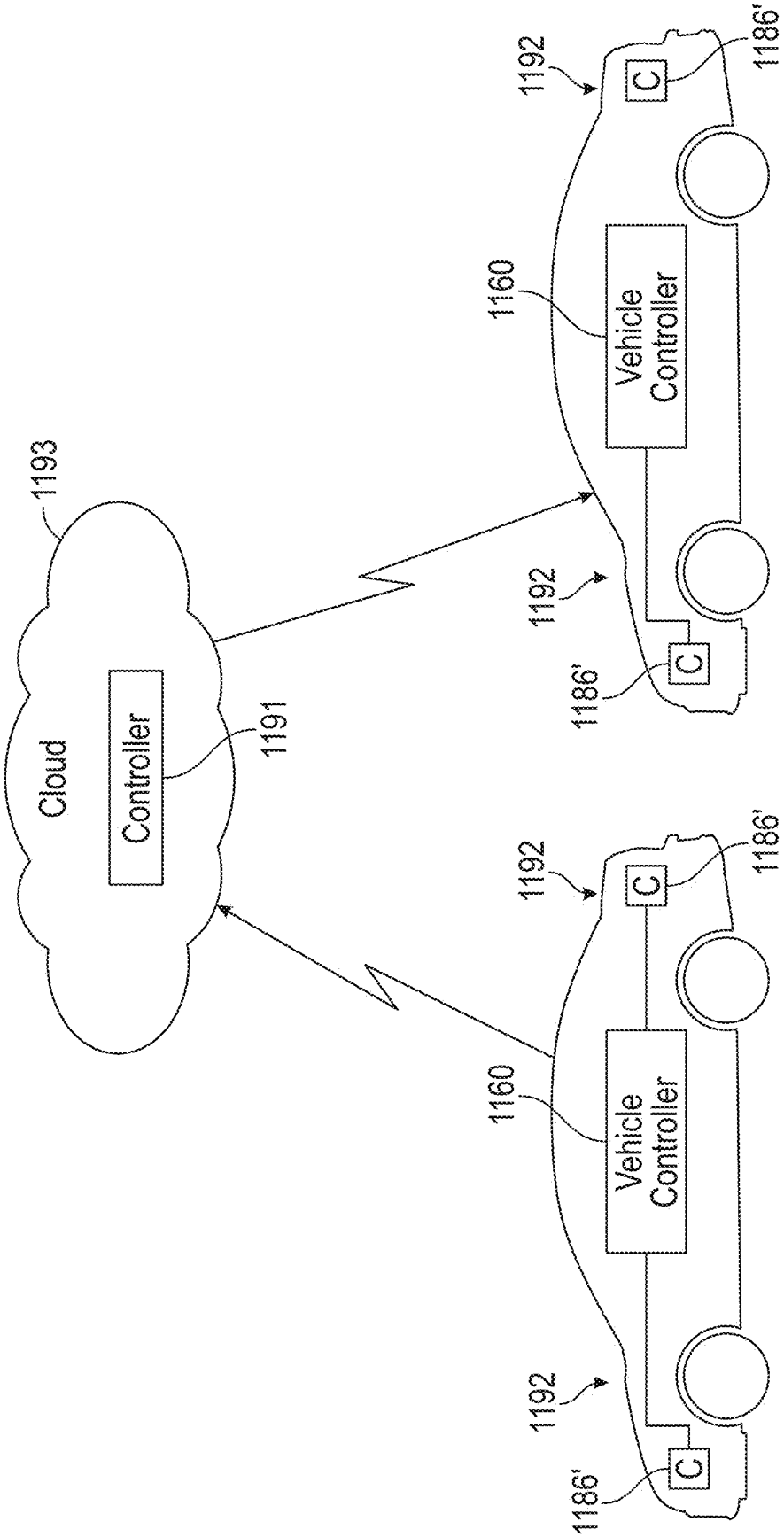
1193
Cloud
Controller
1191
1192
1160
Vehicle Controller
1186'
C
1192
1186'
C
1192
1160
Vehicle Controller
1186'
C
1192
1186'
C

FIG. 11G

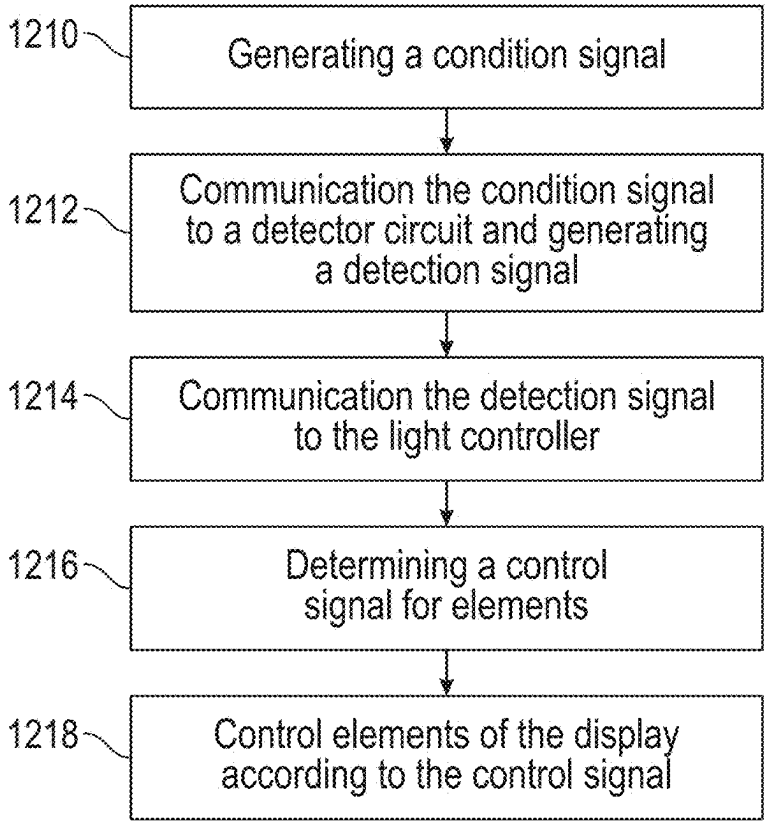

FIG. 12A

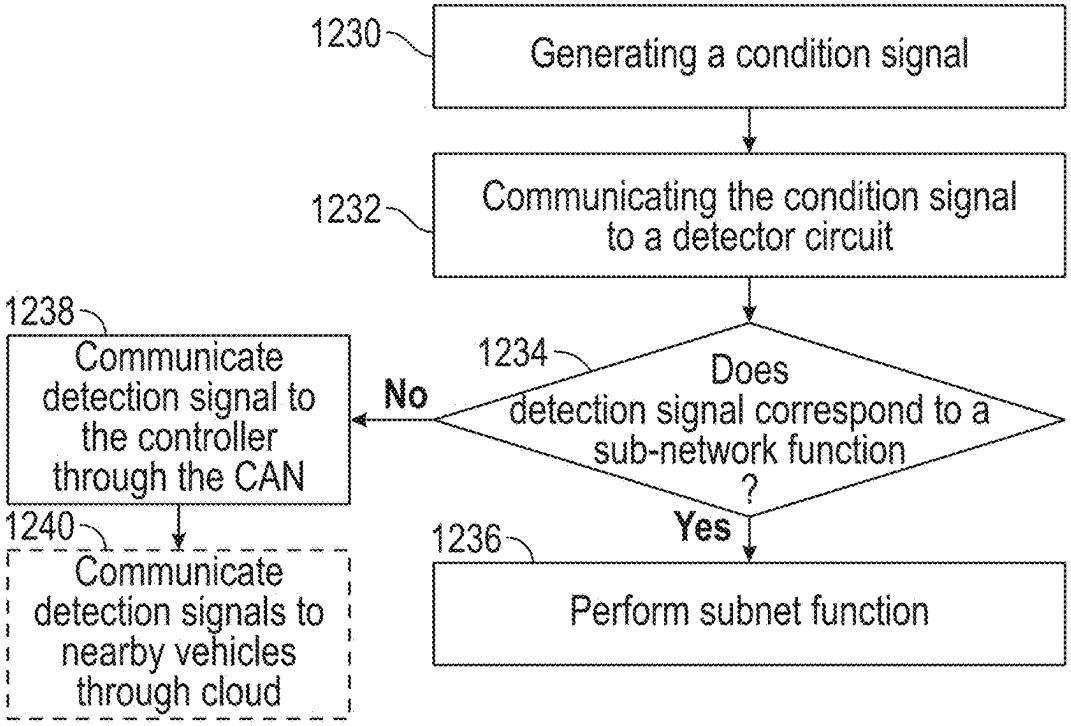

FIG. 12B

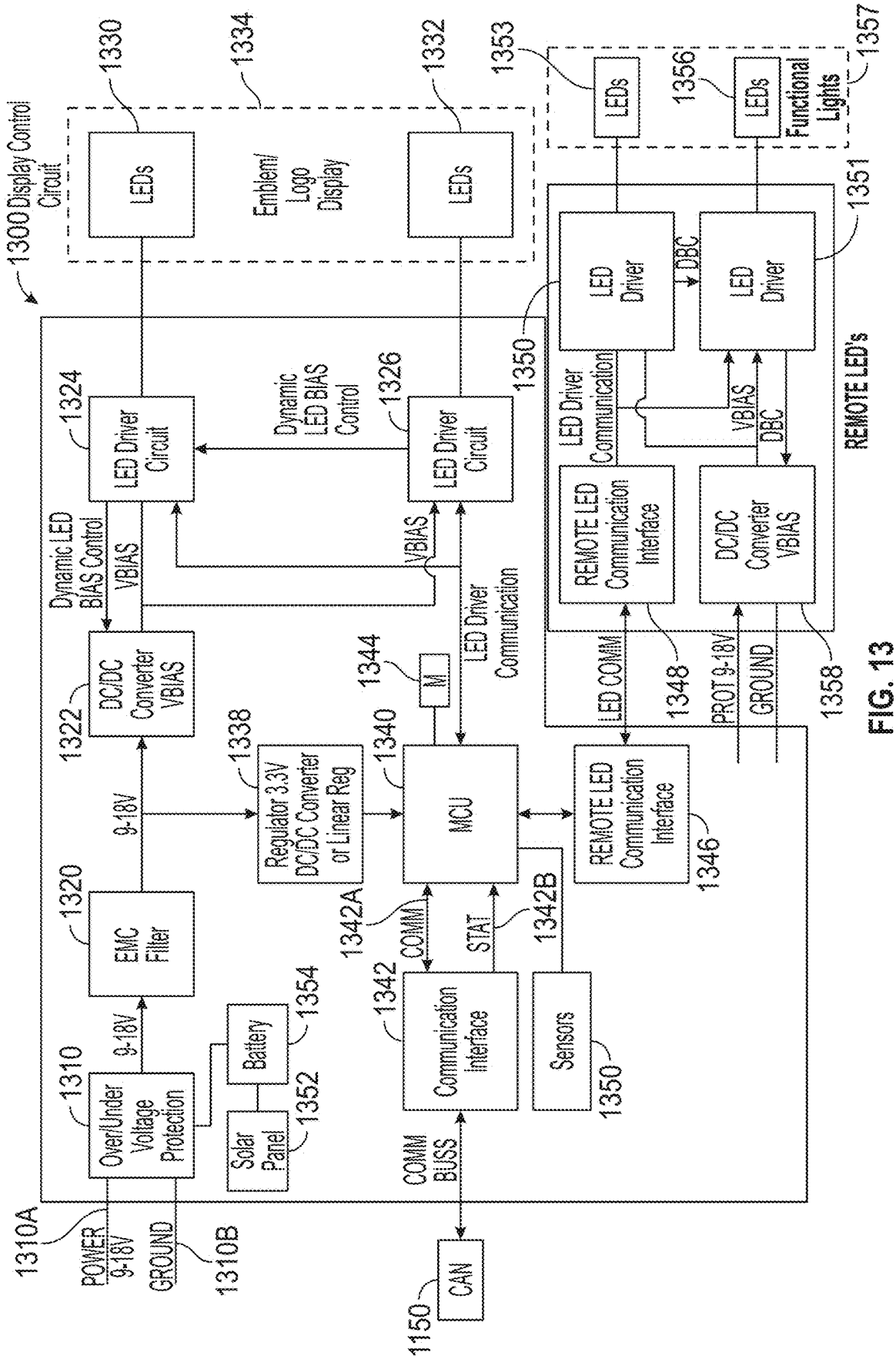
1300 Display Control Circuit
1330
LEDs
1334
Emblem/ Logo Display
1332
LEDs
1353
LEDs
1356
LEDs
1357
Functional Lights
1351
LED Driver
DBC
LED Driver
1350
LED Driver Communication
VBIAS
DBC
REMOTE LED's
1324
LED Driver Circuit
Dynamic LED BIAS Control
1326
LED Driver Circuit
Dynamic LED BIAS Control
VBIAS
VBIAS
LED Driver Communication
REMOTE LED Communication Interface
DC/DC Converter VBIAS
1348
1358
1344
M
1322
DC/DC Converter VBIAS
1338
Regulator 3.3V DC/DC Converter or Linear Reg
1340
MCU
LED COMM
PROT 9-18V
GROUND
REMOTE LED Communication Interface
1346
9-18V
1320
EMC Filter
1342A
COMM
STAT
1342B
1342
Communication Interface
Sensors
1350
1354
Battery
1310
Over/Under Voltage Protection
9-18V
1352
Solar Panel
COMM BUSS
1310A
POWER 9-18V
GROUND
1310B
1150
CAN

FIG. 13

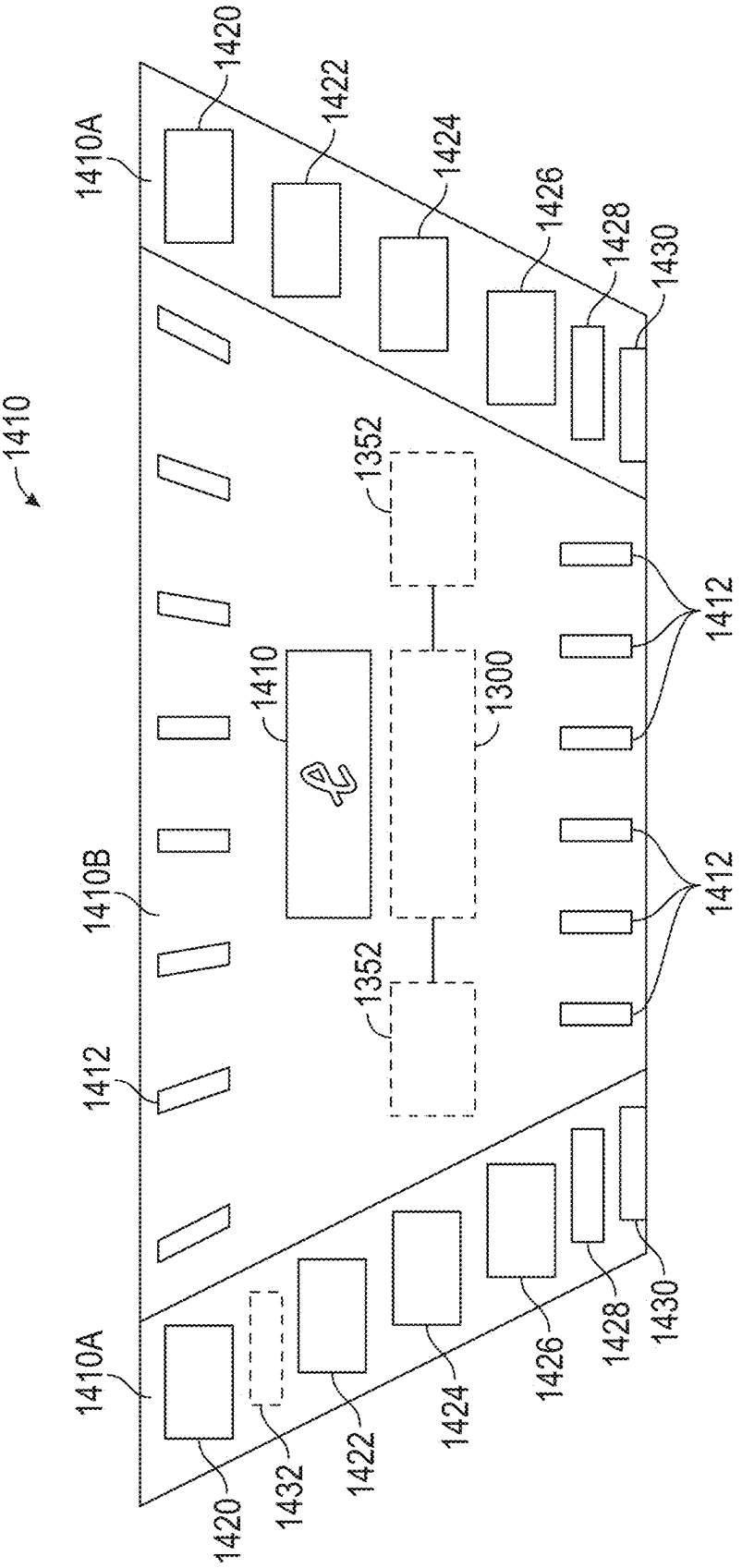
1410
1410A
1420
1422
1424
1426
1428
1430
1352
1410
1300
1412
1412
1410B
1352
1412
1410A
1420
1432
1422
1424
1426
1428
1430

FIG. 14

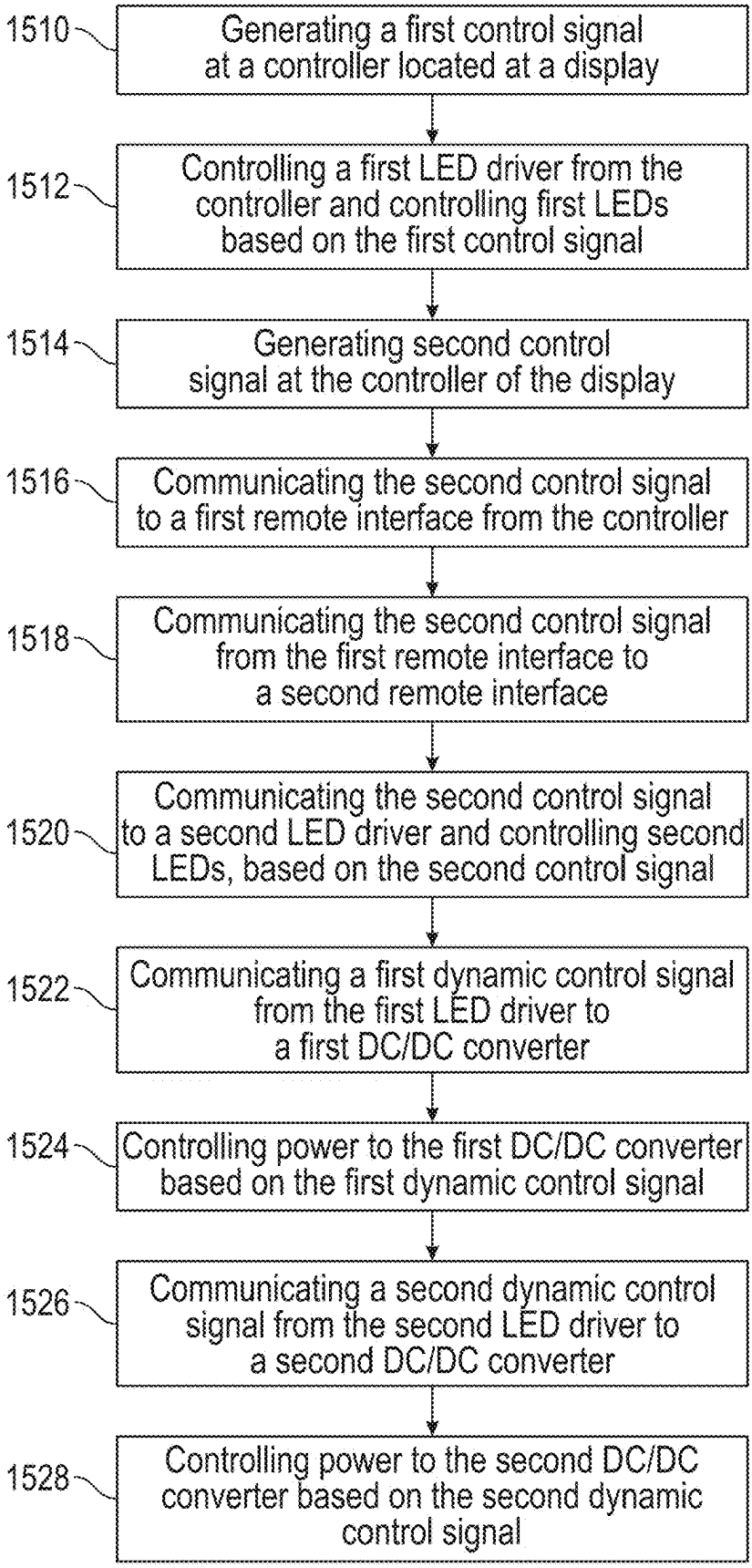
1510
Generating a first control signal at a controller located at a display
1512
Controlling a first LED driver from the controller and controlling first LEDs based on the first control signal
1514
Generating second control signal at the controller of the display
1516
Communicating the second control signal to a first remote interface from the controller
1518
Communicating the second control signal from the first remote interface to a second remote interface
1520
Communicating the second control signal to a second LED driver and controlling second LEDs, based on the second control signal
1522
Communicating a first dynamic control signal from the first LED driver to a first DC/DC converter
1524
Controlling power to the first DC/DC converter based on the first dynamic control signal
1526
Communicating a second dynamic control signal from the second LED driver to a second DC/DC converter
1528
Controlling power to the second DC/DC converter based on the second dynamic control signal

FIG. 15

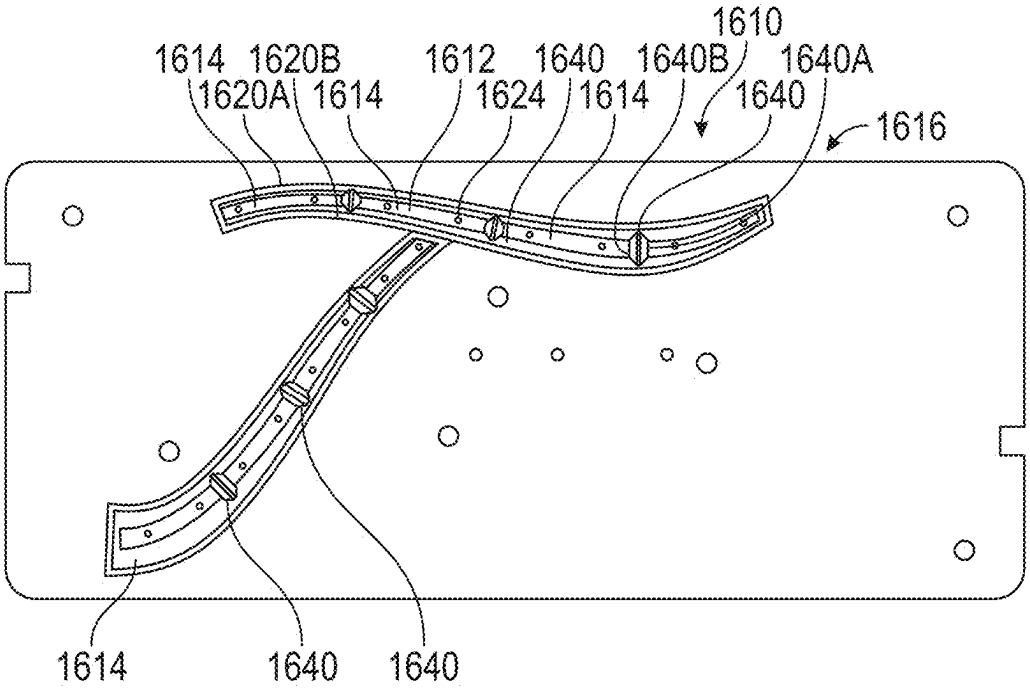

FIG. 16A

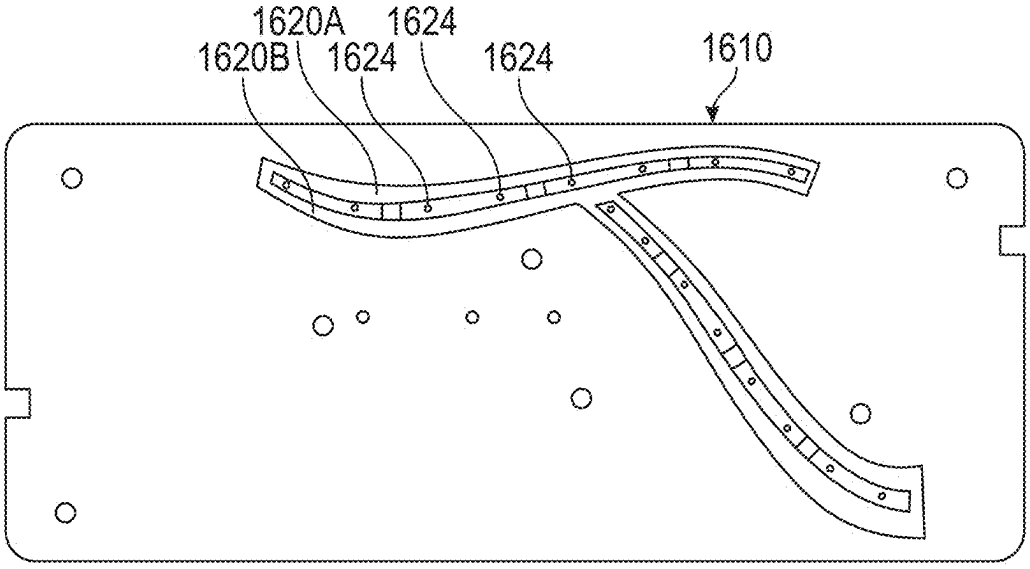

FIG. 16B

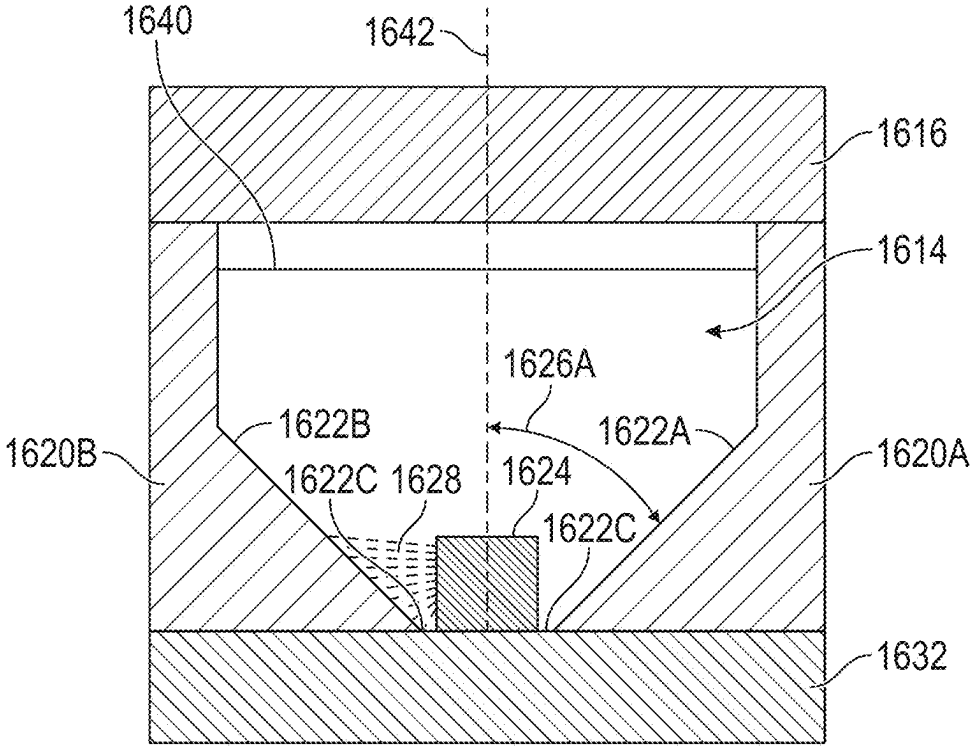

FIG. 16C

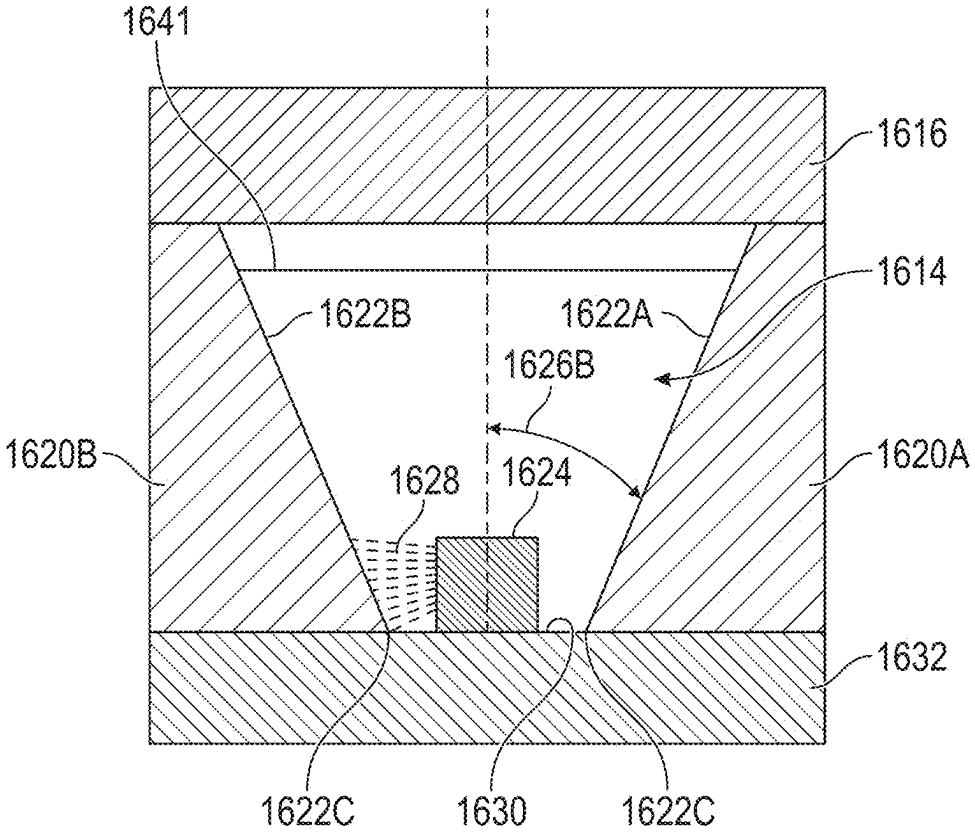

FIG. 16D

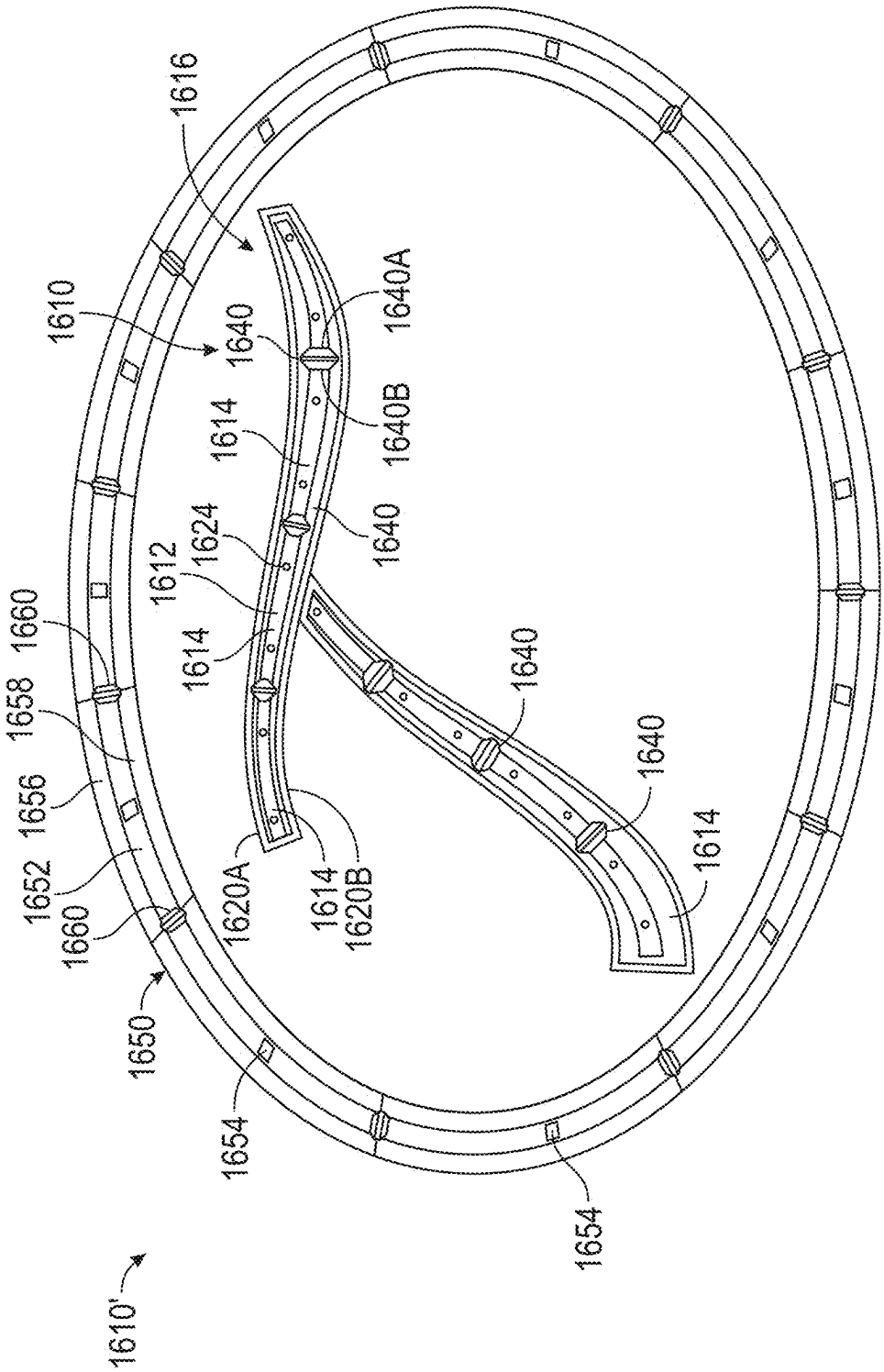
1610'
1654
1650
1660
1652
1656
1658
1660
1610
1616
1620A
1614
1620B
1612
1614
1624
1640
1614
1640
1640B
1640A
1640
1640
1614
1654

FIG. 16E

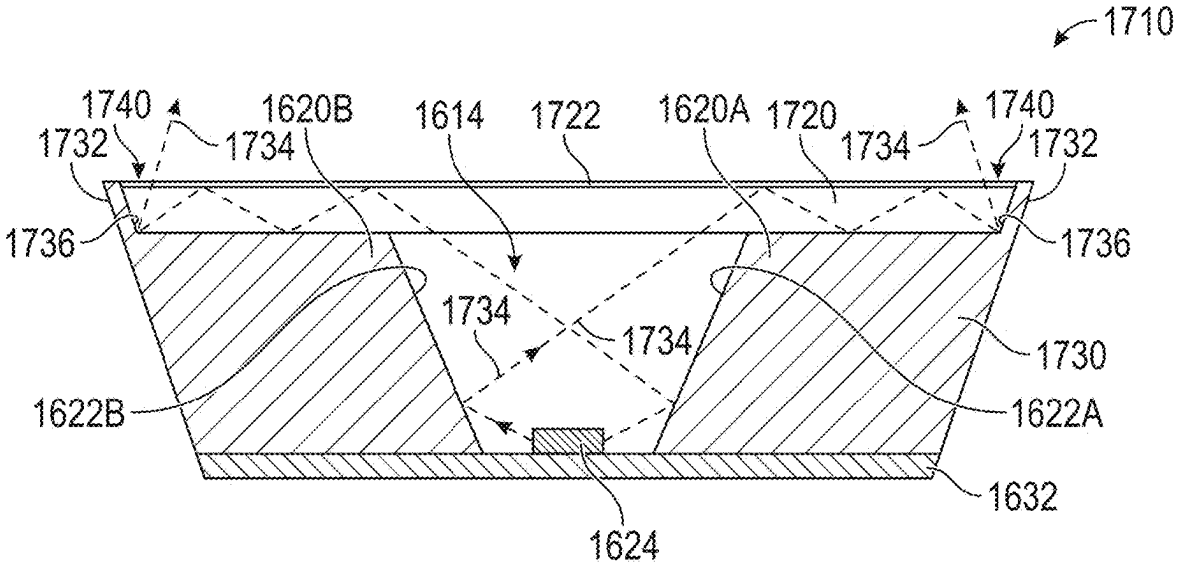

FIG. 17A

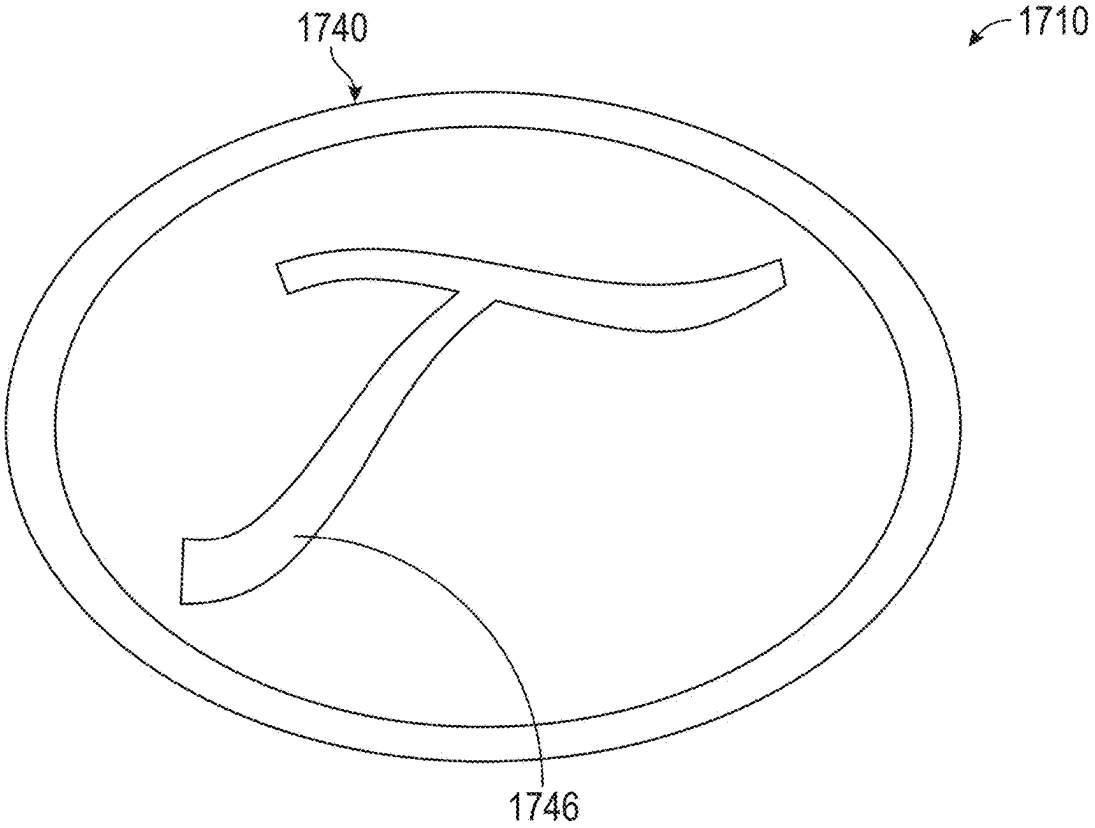

FIG. 17B

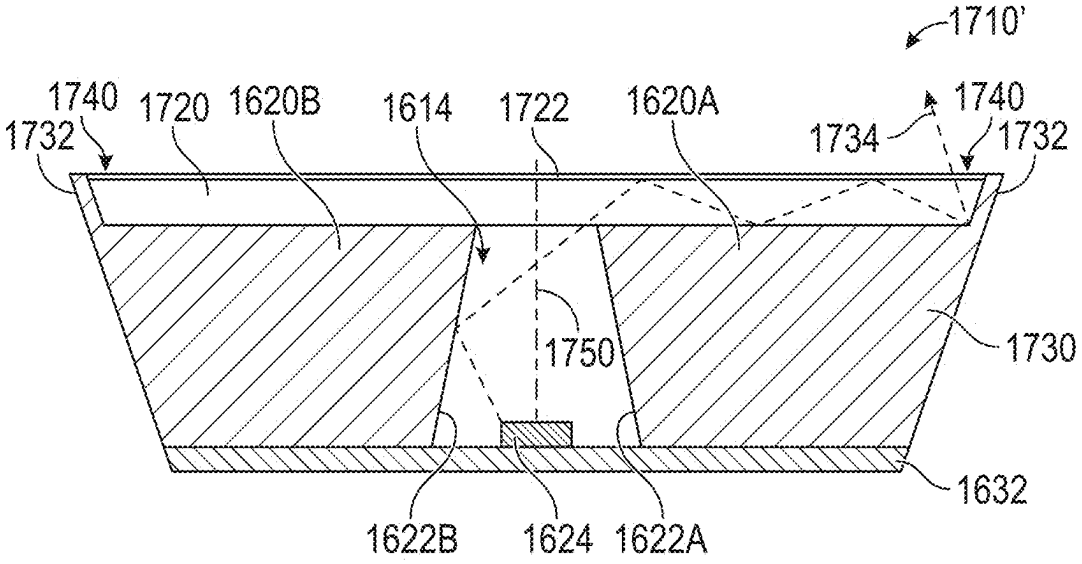

FIG. 17C

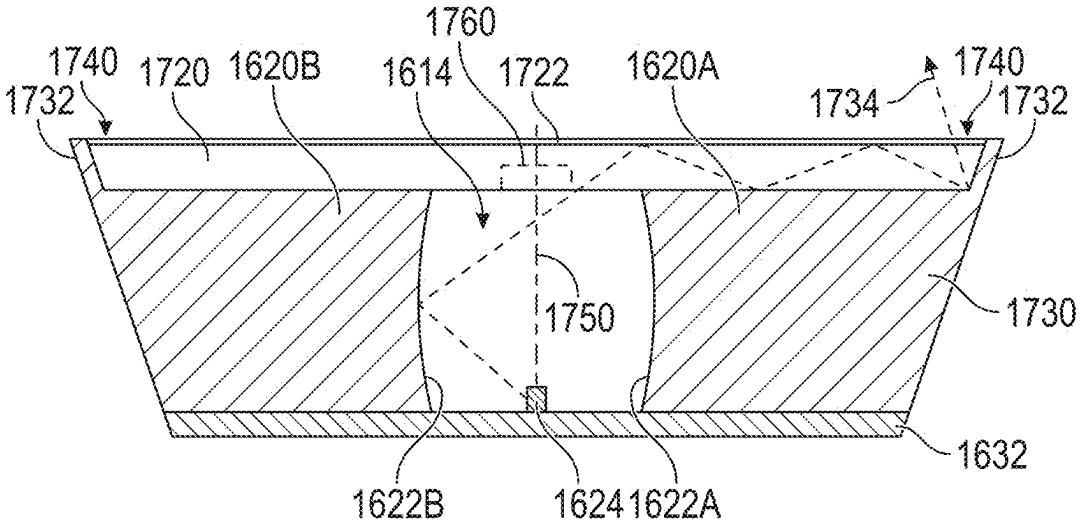

FIG. 17D

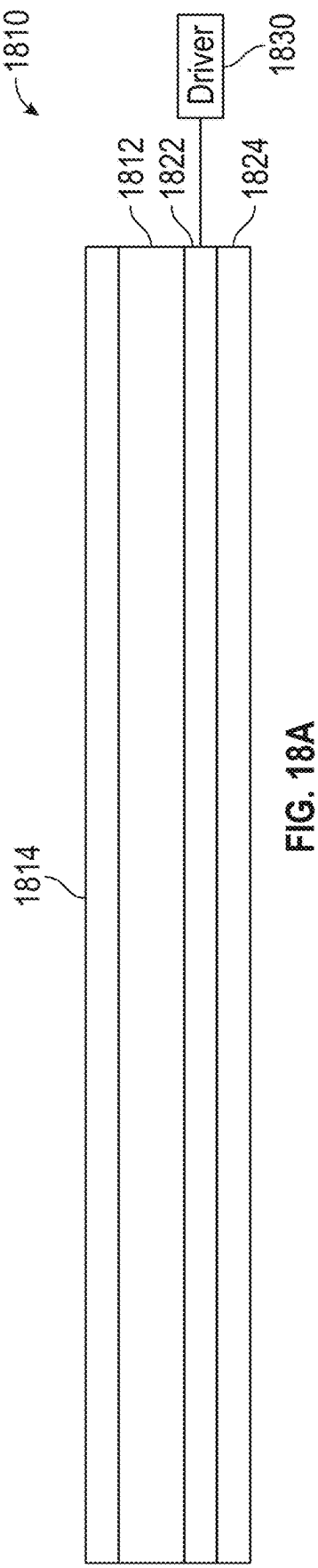

FIG. 18A

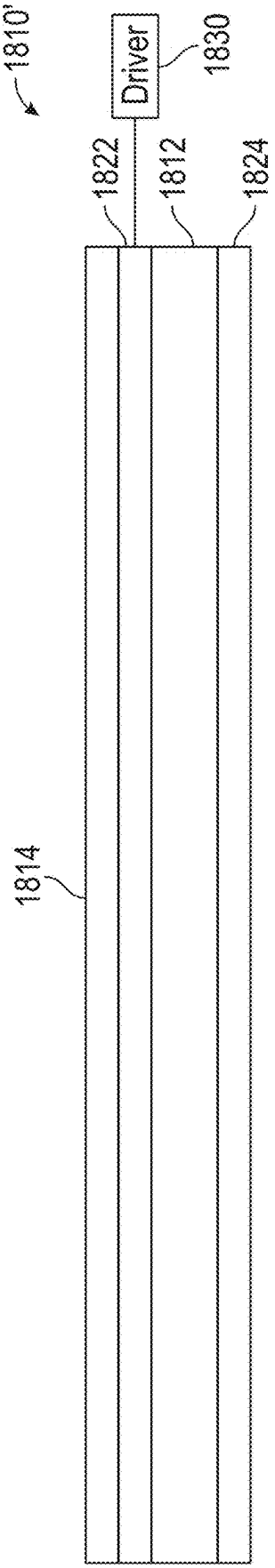

FIG. 18B

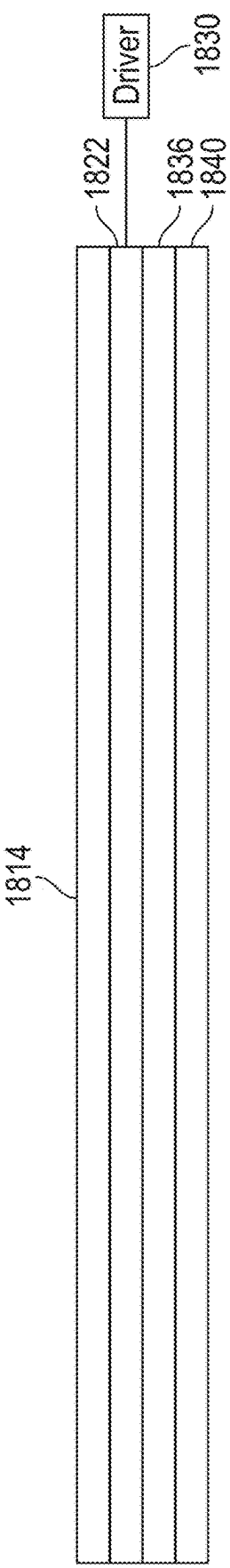

FIG. 18C

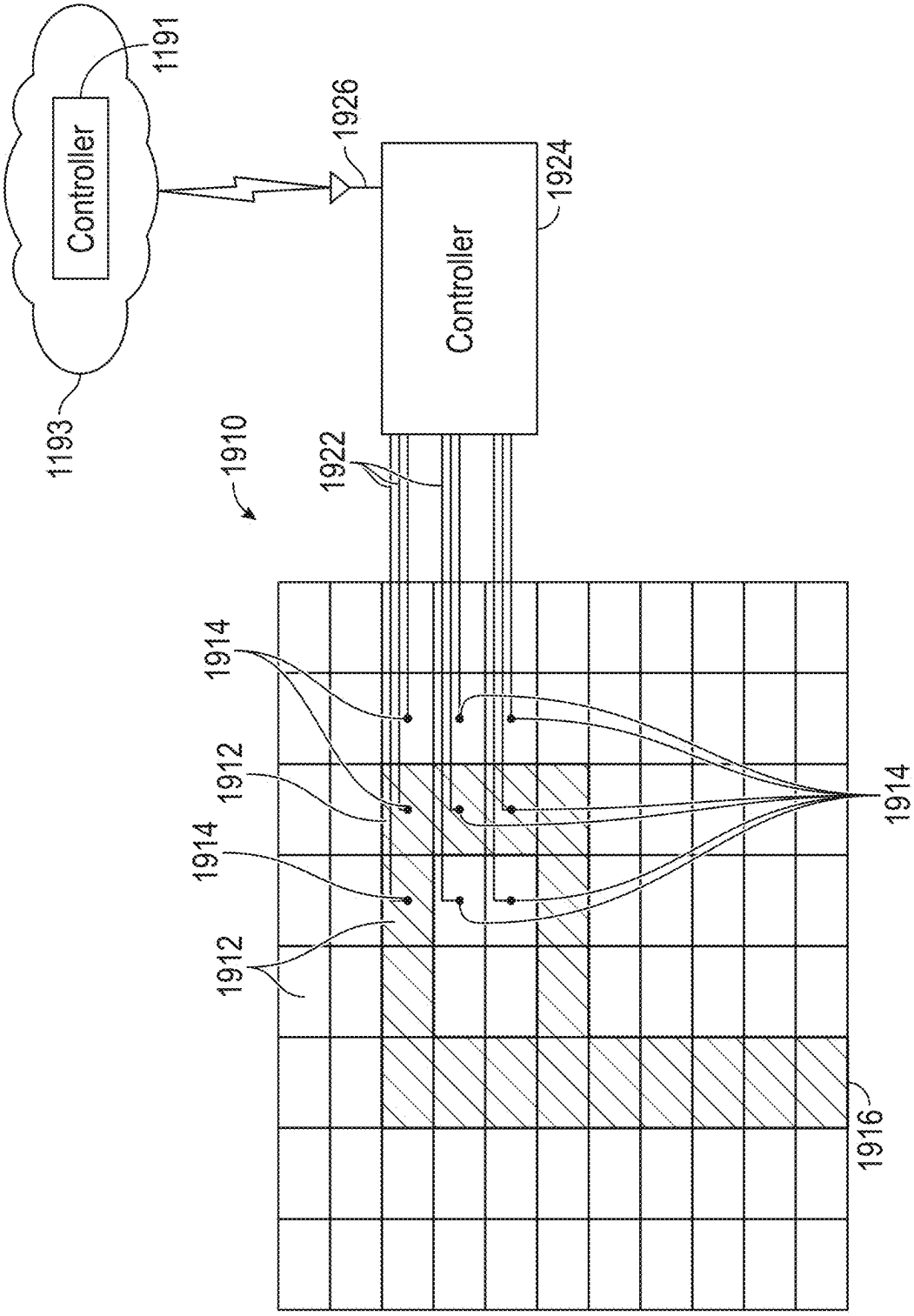
Controller
1191
1193
1926
Controller
1924
1910
1922
1914
1912
1914
1912
1914
1916

FIG. 19

SEGMENTED DISPLAY WITH PHOTON RECYCLING CAVITY

CROSS-REFERENCE TO RELATED APPLICATION

[0001] This application is a continuation-in-part of U.S. Ser. No. 18/679,609, filed May 31, 2024 (now U.S. Pat. No. 12,205,295) which claims the benefit of U.S. Provisional Application No. 63/613,293, filed on Dec. 21, 2023. The entire disclosure of the above application is incorporated herein by reference.

TECHNICAL FIELD

[0002] The present disclosure relates generally to a display using LED light sources and, more specifically, to a display using photon recycling cavities in a segmented display.

BACKGROUND

[0003] This section provides background information related to the present disclosure which is not necessarily prior art.

[0004] Backlit commercial billboards, brand signation elements, architectural lighting are highly prevalent in the commercial, industrial, transportation and other applications. Providing uniform distribution in a display provides an aesthetically pleasing product. However, many solutions in the industry provide non-ideal solutions lacking in uniform light output.

SUMMARY

[0005] This section provides a general summary of the disclosure and is not a comprehensive disclosure of its full scope or all of its features.

[0006] The present disclosure provides addressable illuminated elements at a potentially lower cost approach, to creating messages such as digital signatures of brands, architectural lighting and user experiences via scenario-based user interfaces. Badges on automotive vehicle grills, tailgates, side decoration and other vehicle components and panels may benefit from this application. In one example, the present disclosure uses the interaction of indirect radiation from a non-Lambertian emission with transflective materials enabling direct radiation falling on to it to reflect and transmit off-axis light from a backlight. The present disclosure may be used for dynamic or static commercial displays in industrial, transportation, retail and other sectors. Furthermore, if the backside of the graphic is printed with a light emissive ink such as phosphor-based or dye based, an impactful arrangement may be provided. Additionally, using a segmented OLED as an addressable source behind the transflective front visual graphic could result in extremely thin contoured packages. In another example, Lambertian or non-Lambertian distribution LEDs may be used with optics to redirect the light emitted to fill a chamber whose emissions are indirect.

[0007] In one general aspect, a display includes a first housing portion having graphic openings therein and a second housing portion spaced apart from the first housing portion. A first circuit board comprises a plurality of light emitting diodes (LEDs). The first circuit board is disposed between the first housing portion and the second housing portion. A first side wall and a second side wall are spaced apart from the first side wall. The first side wall and the second side wall define a plurality of photon recycling cavities in a sequence wherein adjacent photon recycling cavities having a shared end wall. At least one of the plurality of light emitting diodes is disposed in each of the plurality of photon recycling cavities. The first side wall comprises a first angular surface and the second side wall each comprise a second angular surface. The first angular surface and the second angular surface redirecting light from the associated LED of the plurality of LEDs so that light from the plurality of light emitting diode is indirectly communicated through the graphic opening after reflecting from the first side angular surface and the second angular surface.

[0008] In another general aspect a display includes a first housing portion having graphic openings therein. The display also includes a second housing portion spaced apart from the first housing portion. The display also includes a first circuit board that may include a plurality of light emitting diodes, said first circuit board disposed between the first housing portion and the second housing. The display also includes said first housing portion and the second housing portion form a first photon recycling cavity having the plurality of light emitting diodes disposed therein so that light from the plurality of light emitting diodes is indirectly communicated through the graphic opening after reflecting within the photon cavity.

[0009] Implementations may include one or more of the following features. The display may include a second circuit board electrically coupled to the first circuit board. The second circuit board may include a power supply. The power supply may include a buck power supply. The second circuit board is disposed in a pocket formed in the second housing. The first circuit board is parallel to the second circuit board within the pocket. The plurality of light emitting diodes is misaligned with the graphic openings. The plurality of light emitting diodes is aligned with opaque portions between the graphic openings. A transreflective ink is disposed on the first housing portion. The transreflective ink is between a light source and the graphic opening. The transreflective ink is applied to a film and thermoformed to an inner surface of the first housing portion. The second housing portion may include an outer wall having a white surface. The white surface is formed from white composite material. The plurality of light emitting diodes may include 360 degree side emitting diodes. A vehicle may include: a grill, and the display coupled to the grill. A vehicle may include: a tailgate, and the display coupled to the tailgate. A vehicle may include: a bumper or body panel, the display coupled to the bumper or body panel. A point of sale display unit may include: a panel, and the display coupled to the panel. The panel may include a back panel. The panel may include at least one of a front panel or a side panel.

[0010] In another general the display includes a first housing portion having graphic openings therein. The display also includes a second housing portion spaced apart from the first housing portion. The display also includes a first circuit board that may include a plurality of light emitting diodes (LEDs), said first circuit board disposed between the first housing portion and the second housing portion. The display also includes a first side wall and a second side wall spaced apart from the first side wall, said first side wall and the second side wall defining a plurality of photon recycling cavities in a sequence where adjacent photon recycling cavities having a shared end wall, at least

one of the plurality of light emitting diodes disposed in each of the plurality of photon recycling cavities, each LED associated with an optical element redirecting light within the associated one of the plurality of photon recycling cavities so that light from the plurality of light emitting diode is indirectly communicated through the graphic opening after reflecting within the photon recycling cavity.

[0011] Implementations may include one or more of the following features. The display where the first side wall and the second side wall are reflective. The shared end wall is reflective. The first side wall and the second side wall are molded into a monolithic structure. The monolithic structure is formed of white plastic. The monolithic structure is formed of opaque material. The optical element may include a bridge extending between the first side wall and the second side wall formed in the monolithic structure. A first LED of the plurality of LEDs is disposed between the bridge and the first circuit board. The bridge is opaque. The display may include a coupler disposed between the bridge and a first LED of the plurality of LEDs, said coupler directing light to the bridge, said bridge redirecting the light toward the first side wall and the second side wall. The coupler may include a rectangular solid. The bridge may include a redirection wall formed therein; the redirection wall being disposed to redirect light from the bridge. The redirection wall is formed from a conical surface. The redirection wall is coupled to a coupler disposed between the redirection wall and a first LED of the plurality of LEDs, where the redirection wall of the bridge redirects the light toward the first side wall and the second side wall. The coupler may include a cylindrical solid. The optical element may include a redirection element directing the light from a first LED of the plurality of LEDs toward the first side wall, the second side wall and the shared end wall. The redirection element may include an upper angled surface redirecting the light from the first LED. The redirection element may include an inverted conical upper surface redirecting the light from the first LED. The redirection element is coupled to the first circuit board. The redirection element surrounds the first LED. The redirection element may include an upper surface adjacent to the first LED. The upper surface is parallel to the first circuit board. The upper surface is concave. The upper surface is convex. The redirection element is formed of clear composite. The first side wall and the second side wall are molded into a monolithic structure using a first injection molding process and the redirection element is formed onto the monolithic structure using a second injection molding process for the clear composite. The monolithic structure is formed of white plastic. The display may include a second circuit board electrically coupled to the first circuit board. The second circuit board may include a power supply. The first housing portion has an inner surface and an outer surface, where a transreflective ink is applied on the inner surface. The transreflective ink is between a light source and the graphic opening. A vehicle may include: a grill, and the display coupled to the grill. A vehicle may include: a tailgate, and the display coupled to the tailgate. A vehicle may include: a bumper or body panel, the display coupled to the bumper or body panel. A point of sale display unit may include: a panel, and the display coupled to the panel. The panel may include a back panel. The panel may include at least one of a front panel or a side panel. Implementations of the described techniques may include hardware, a method or process, or computer software on a computer-accessible medium.

[0012] One general aspect includes a method of operating a segmented display. The method also includes in a first segment controlling an increase of light output from a first light emitting diode in the first segment according to a first function. The method also includes communicating at least part of the light output from the first segment to a second segment. The method also includes after communicating at least part of the light from the first segment to the second segment, controlling increase of light output from a second light emitting diode in the second segment according to a second function. Other embodiments of this aspect include corresponding computer systems, apparatus, and computer programs recorded on one or more computer storage devices, each configured to perform the actions of the methods.

[0013] Implementations may include one or more of the following features. The method where the first function corresponds to the second function. The first function is a gaussian function. The method may include adjusting a current or a duty cycle of the first light emitting diode and the second light emitting diode to generate adjusted light outputs from the first segment and the second segment. Adjusting the current or the duty cycle may include generating a plurality of scale factors for each of the plurality of segments. The method may include determining a minimum brightness for the plurality of segments, determining the plurality of scale factors for each segment so each segment generates the minimum brightness. Implementations of the described techniques may include hardware, a method or process, or computer software on a computer-accessible medium.

[0014] One general aspect includes the segmented display system including a first light emitting diode in a first segment. The system also includes a second light emitting diode in a second segment. The system also includes a controller programmed to control an increase of light output from a first light emitting diode in the first segment according to a first function so that at least part of the light output from the first segment is communicated to the second segment, and, after communicate at least part of the light from the first segment to the second segment, increasing of light output from a second light emitting diode in the second segment according to a second function. Other embodiments of this aspect include corresponding computer systems, apparatus, and computer programs recorded on one or more computer storage devices, each configured to perform the actions of the methods.

[0015] Implementations may include one or more of the following features. The segmented display system where the first function corresponds to the second function. The first function is a gaussian function. The controller is programmed to adjust a current or the duty cycle of the light emitting diode to generate adjusted light outputs from the first segment and the second segment. The controller is programmed to adjust a current or a duty cycle by generating a plurality of scale factors for each of the plurality of segments. The controller is programmed to determine a minimum brightness for the plurality of segments and determine the plurality of scale factors for each segment so each segment generates the minimum brightness. Implementations of the described techniques may include hardware, a method or process, or computer software on a computer-accessible medium.

[0016] One general aspect includes generating a laser beam at a laser source. The generating also includes coupling the laser beam to optical fibers to form sub-beams. The generating also includes directing the sub-beams simultaneously to the coating through a guide having a guide pattern. The generating also includes removing the first coating corresponding to the guide pattern simultaneously with each of the plurality of sub-beams.

[0017] Implementations may include one or more of the following features. The method where coupling the laser beam may include directing the laser beam into the sub-beams though an optic. Directing the sub-laser beams may include directing the sub-laser laser beams to the coating though an optic. Directing the laser beams though the optic may include directing the sub-beam to distribute energy evenly across the optical fiber. Directing the sub-beams simultaneously to the coating through the guide may include directing the sub-beams simultaneously to the coating through the guide pattern of an opaque guide. Directing the sub-beams simultaneously to the coating through the guide may include directing the sub-beams simultaneously to the coating through a metal guide. Removing the coating may include removing a first coating without removing a second coating between the first coating and the substrate. Implementations of the described techniques may include hardware, a method or process, or computer software on a computer-accessible medium.

[0018] One general aspect includes a system for removing a first layer from a substrate. The system also includes a laser source generating a laser beam. The system also includes a plurality of optical fibers having a first end receiving a portion of the laser beam to form sub-beams. The system also includes a guide having pattern of openings therethrough. The system also includes said plurality of optical fibers directing the sub-beams to the first layer of the substrate. The system also includes a controller controlling the laser beam to remove the first layer corresponding to the pattern simultaneously. Other embodiments of this aspect include corresponding computer systems, apparatus, and computer programs recorded on one or more computer storage devices, each configured to perform the actions of the methods.

[0019] Implementations may include one or more of the following features. The system may include an optic coupling the laser beam into the sub-beams. The system may include an optic directing the sub-laser laser beams to the coating. The optic directs the sub-beam to distribute energy evenly across the optical fiber. The guide is an opaque guide having the pattern therethrough. The guide is a metal guide having the pattern therethrough. Controller is programmed to remove a first coating without removing a second coating between the first coating and the substrate. Implementations of the described techniques may include hardware, a method or process, or computer software on a computer-accessible medium.

[0020] A system of one or more computers can be configured to perform particular operations or actions by virtue of having software, firmware, hardware, or a combination of them installed on the system that in operation causes or cause the system to perform the actions. One or more computer programs can be configured to perform particular operations or actions by virtue of including instructions that, when executed by data processing apparatus, cause the apparatus to perform the actions. One general aspect includes a display having a housing. The display also includes a substrate may include a graphic portion and an opaque portion. The display also includes a pixelated backlight disposed between the housing and the substrate, said pixelated back light may include plurality of elements. The display also includes a controller selective controlling the plurality of elements to communicate light therethrough. Other embodiments of this aspect include corresponding computer systems, apparatus, and computer programs recorded on one or more computer storage devices, each configured to perform the actions of the methods.

[0021] One general aspect includes a display that includes a housing. The display also includes a substrate may include a graphic portion and an opaque portion. The display also includes a backlight disposed between the housing and the substrate. The display also includes a shutter device disposed between the backlight and the substrate, said shutter device may include a plurality of elements. The display also includes a controller selectively controlling the plurality of elements. Other embodiments of this aspect include corresponding computer systems, apparatus, and computer programs recorded on one or more computer storage devices, each configured to perform the actions of the methods.

[0022] A system of one or more computers can be configured to perform particular operations or actions by virtue of having software, firmware, hardware, or a combination of them installed on the system that in operation causes or cause the system to perform the actions. One or more computer programs can be configured to perform particular operations or actions by virtue of including instructions that, when executed by data processing apparatus, cause the apparatus to perform the actions. One general aspect includes a display. The display also includes a condition sensor coupled to the display generating a condition signal corresponding to a condition; a controller area network communicating the condition signal; a detector circuit generating a detection signal based on the condition sensor signal; and a light controller receiving the detection signal, said controller generating a control signal to control the display in response to the control signal. Other embodiments of this aspect include corresponding computer systems, apparatus, and computer programs recorded on one or more computer storage devices, each configured to perform the actions of the methods.

[0023] Implementations may include one or more of the following features. The vehicle where the display is disposed in a front fascia. The front fascia may include a logo display. The front fascia may include a logo display and a plurality of display elements. The front fascia may include a forward facing surface and an upward facing surface, where the forward facing surface may include a first plurality of elements and the upward facing surface may include a second plurality of elements. The forward facing surface may include a logo display. The forward facing surface may include a sensor area. The front fascia may include a forward facing surface may include a logo display, and a plurality of light elements. The front fascia may include a forward facing surface may include a logo display, a plurality of light elements and a sensor area. The display is disposed in a rear fascia. The rear fascia may include a rearward facing surface and an upward facing surface. The rearward facing surface may include a first plurality of elements and the upward facing surface may include a second plurality of elements. The forward facing surface

may include a logo display. The forward facing surface may include a sensor area. The rear fascia may include a rearward facing surface may include a plurality of elements. The condition signal may include a proximity signal from a proximity sensor indicating a remote keyless device is within a predetermined distance. The condition signal may include a collision warning signal from a collision warning sensor. The collision warning sensor may include at least two of a camera, a lidar sensor, radar sensor and an ultrasonic sensor. The condition signal may include a charging signal from a charge detector corresponding to coupling to a charger. The condition signal may include a brake signal from a brake actuator. The light controller is disposed in a pocket formed in the rear of the display. The pocket is disposed adjacent to a logo display. The light controller receives the detection signal and operates the logo display and a plurality of light elements in a sequence determined in response to the detection signal. Implementations of the described techniques may include hardware, a method or process, or computer software on a computer-accessible medium.

[0024] One general aspect includes a method of operating a display. The method also includes generating a condition signal corresponding to a condition; generating a detection signal based on the condition sensor signal and generating a control signal to control the display in response to the control signal. Other embodiments of this aspect include corresponding computer systems, apparatus, and computer programs recorded on one or more computer storage devices, each configured to perform the actions of the methods.

[0025] A system of one or more computers can be configured to perform particular operations or actions by virtue of having software, firmware, hardware, or a combination of them installed on the system that in operation causes or cause the system to perform the actions. One or more computer programs can be configured to perform particular operations or actions by virtue of including instructions that, when executed by data processing apparatus, cause the apparatus to perform the actions. One general aspect includes a display may include. The display also includes a first plurality of light emitting diodes. The display also includes a first light emitting diode (led) driver coupled to the first plurality of light emitting diodes. The display also includes a second plurality of light emitting diodes. The display also includes a second LED driver coupled to the second plurality of light emitting diodes; a power source coupled to the first LED driver and the second LED driver, and a controller selectively controlling the first LED driver to selectively control the first plurality of LEDs using a first control signal and selectively controlling the second LED driver to selectively control the second plurality of LEDs using a second control signal. Other embodiments of this aspect include corresponding computer systems, apparatus, and computer programs recorded on one or more computer storage devices, each configured to perform the actions of the methods.

[0026] Implementations may include one or more of the following features. The display may include a first dc to dc converter coupling the power source to the first LED driver, said first LED driver communicating a first bias control signal to the first dc to dc converter. The display may include a second de to dc converter coupling the power source to the second LED driver, said second LED driver communicating a second bias control signal to the second dc to dc converter. The display may include a first remote communication interface communicating the second control signal to a second remote communication interface, said second remote communication interface communicating the second control signal to the second LED driver. The power source is a vehicle power source. The power source is a battery. The power source is a battery coupled to a solar panel. First control signal is generated in response to a sensor disposed at the display. Control signal is generated in response to a sensor disposed at the display. The first plurality of LEDs is disposed in a logo display of the display. The first plurality of LEDs is disposed in an aesthetic portion of the display. The second LEDs may include functional LEDs that are disposed in a functional portion of the display. The functional LEDs may include at least one of a high beam, a low beam, a turn signal, a fog light, brake light or a marker light. The method may include coupling a power source to the first LED driver through a first de to dc converter, communicating a first bias control signal to the first de to dc converter from the first LED driver. The method may include coupling the power source to the second LED driver through a second dc to dc converter, communicating a second bias control signal to the second dc to dc converter from the second LED driver. The method may include communicating the second control signal to a second remote communication interface from the controller said second remote communication interface. Implementations of the described techniques may include hardware, a method or process, or computer software on a computer-accessible medium.

[0027] One general aspect includes a method of controlling a display. The method also includes selectively controlling a first LED driver to selectively control a first plurality of LEDs using a first control signal from a controller disposed at the display. The method also includes selectively controlling a second LED driver to selectively control a second plurality of LEDs using a second control signal. Other embodiments of this aspect include corresponding computer systems, apparatus, and computer programs recorded on one or more computer storage devices, each configured to perform the actions of the methods.

[0028] Further areas of applicability will become apparent from the description provided herein. The description and specific examples in this summary are intended for purposes of illustration only and are not intended to limit the scope of the present disclosure.

DRAWINGS

[0029] The drawings described herein are for illustrative purposes only of selected examples and not all possible implementations and are not intended to limit the scope of the present disclosure.

[0030] FIG. **1**A is a perspective front view of a vehicle having display according to the present disclosure.

[0031] FIG. **1**B is a perspective rear view of the vehicle having display according to the present disclosure.

[0032] FIG. **1**C is a perspective front view of a point of sale device according to the present disclosure.

[0033] FIG. **2**A is a perspective view of a 360 degree side emitting LED.

[0034] FIG. **2**B is a light output plot for the LED of FIG. **2**A.

[0035] FIG. **2**C is a representation of lights emitted from the four sides of the 360 degree side emitting diode of FIG. **2**A.

[0036] FIG. **2**D is a plot of the light output from the from the four side of the 360 degree side emitting diode of FIG. **2**A.

[0037] FIG. **2**E is an intensity plot of the solder mask or circuit board around the four sides of the 360 degree side emitting diode of FIG. **2**A.

[0038] FIG. **3**A is a cross-sectional view of a first example of a display according to the present disclosure.

[0039] FIG. **3**B is a front view of the first example of the display of FIG. **3**A.

[0040] FIG. **3**C is an enlarged cross-sectional view of the graphic opening of the display of FIG. **3**A.

[0041] FIG. **3**D is a front view of the first example of the display of FIG. **3**A showing the placement of the LEDs.

[0042] FIG. **3**E is a plot of spectral shift relative to the sun.

[0043] FIG. **3**F is a perspective cross-sectional view of the display of FIG. **3**A.

[0044] FIG. **3**G is a cross-sectional view of the display of FIG. **3**A.

[0045] FIG. **3**H is a perspective edge view of the circuit board of FIGS. **3** G and **3**H.

[0046] FIG. **3**I is a front view of the heat sink of the display of FIG. **3**A.

[0047] FIG. **3**J is a perspective front view of a display according to another example.

[0048] FIG. **4**A is a front view of a segmented display.

[0049] FIG. **4**B is a monolithic structure having segments.

[0050] FIG. **4**C is an enlarged top view of two adjacent channel structures of FIGS. **3**A and **3**B.

[0051] FIG. **4**D is an end view of a channel of FIG. **4**C.

[0052] FIG. **4**E is a perspective cross sectional view of the display of FIG. **4**A.

[0053] FIG. **4**F is an enlarged cross sectional view of the display of FIG. **4**E.

[0054] FIG. **4**G is an end view of a first redirection optic.

[0055] FIG. **4**H is a is a perspective view of a channel having a second example of a redirection element.

[0056] FIG. **4**I is a is a top view showing the position of the second redirection elements.

[0057] FIG. **4**J is a cut away perspective view of another example of a redirection element.

[0058] FIG. **4**K is an enlarged end view of the redirection element of FIG. **4**K.

[0059] FIG. **4**L Is an end view of another example of a redirection element having a coupler.

[0060] FIG. **4**M is a perspective view of a coupler.

[0061] FIG. **4**N is an end view of another example of a redirection element.

[0062] FIG. **4**O is a perspective view of the coupler of FIG. **4**O.

[0063] FIG. **4**P is a perspective view of another example of redirection element.

[0064] FIG. **4**Q is a side view of a coupler of FIG. **4**P.

[0065] FIG. **4**R is a side view of the coupler of FIG. **4**A with a concave upper surface.

[0066] FIG. **4**S is a side view of the coupler of FIG. **4**A with a convex upper surface.

[0067] FIG. **4**T is a top view of another example of a redirection element.

[0068] FIG. **4**U is a side view of the couple of FIG. **4**T.

[0069] FIG. **5**A is a side view of a laser ablation system.

[0070] FIG. **5**B is a top view of a multi-laser positioning system.

[0071] FIG. **6**A is a diagrammatic view of an ablation system according to the present disclosure.

[0072] FIG. **6**B is a top view of a guide according to the present disclosure.

[0073] FIG. **6**C is a diagrammatic view of a control system for forming the display.

[0074] FIG. **6**D illustrates a plurality of optical fibers receiving a laser beam.

[0075] FIG. **7**A is an exploded view of a display having a back light and a shutter device.

[0076] FIG. **7**B is an enlarged portion of the display with controllable elements at the shutter device.

[0077] FIG. **7**C is a partially exploded view of an alternate display **710** having a pixelated backlight.

[0078] FIG. **7**D is an enlarged view of the pixelated backlight.

[0079] FIG. **8** is a front view of a display corresponding to a logo and turn signal indicators.

[0080] FIG. **9** is a perspective view of the circuit board having an alternate connector.

[0081] FIG. **10**A is a method for operating a multi-segment system.

[0082] FIG. **10**B is a histogram of segments illustrating how a scale factor is derived.

[0083] FIG. **10**C is a plot of different functions.

[0084] FIG. **10**D is a chart illustrating the illumination of sequential segments.

[0085] FIG. **10**E is a chart showing the amount of leakage to various segments.

[0086] FIG. **10**F are plots of light output raw and adjusted by software.

[0087] FIG. **11**A is a perspective view of a front of vehicle having a front fascia.

[0088] FIG. **11**B is a perspective view of a rear of vehicle having a rear fascia.

[0089] FIG. **11**C is a cross-sectional view of a perspective view of the fascia.

[0090] FIG. **11**D is a block diagrammatic view of a first example of a system for controlling the fascia.

[0091] FIG. **11**E is a block diagrammatic view of a second example of a system for controlling the fascia.

[0092] FIG. **11**F is a block diagrammatic view of a simplified subnetwork.

[0093] FIG. **11**G is a block diagrammatic view of vehicles that intercommunicate through the cloud.

[0094] FIG. **12**A is a flowchart of a first method for operating the system of FIG. **11**D.

[0095] FIG. **12**B is a flowchart of a second method for operating the system of FIG. **12**A.

[0096] FIG. **13** is a diagrammatic view of a display control circuit with a sub-network.

[0097] FIG. **14** is an alternate example of a display assembly.

[0098] FIG. **15** is a block diagrammatic view of a circuit for controlling a display.

[0099] FIG. **16**A is a front view of another example of a display.

[0100] FIG. **16**B is a back view of the display of FIG. **16**A.

[0101] FIG. **16**C is a cross-sectional view of a cavity of FIG. **16**A.

[0102] FIG. **16**D is an alternate cross-sectional view through a cavity of FIG. **16**A.

[0103] FIG. **16**E is a top view of a second member of a display having a perimeter display therearound.

[0104] FIG. **17**A is a cross-sectional view of an alternative display with a perimeter powered by the light emitting diode of the primary portion of the display.

[0105] FIG. **17**B is a top view of the display of FIG. **17**A.

[0106] FIG. **17**C is a cross-sectional view of an alternative configuration for the walls of the display of FIG. **17**A.

[0107] FIG. **17**D is another alternative designed for the walls of the display of FIG. **17**A.

[0108] FIG. **18**A is an alternative design for a display using a transparent LED film instead of discrete semiconductor LED chips.

[0109] FIG. **18**B is another alternative design for a display using a transparent LED film instead of discrete semiconductor LED chips.

[0110] FIG. **18**C is yet another alternative design for a display using a transparent LED film instead of discrete semiconductor LED chips.

[0111] FIG. **19** is a diagrammatic view of a pixelated display having optical fibers for communicating light to each pixel.

[0112] Corresponding reference numerals indicate corresponding parts throughout the several views of the drawings.

DETAILED DESCRIPTION

[0113] The following description is merely exemplary in nature and is not intended to limit the present disclosure, application, or uses. For purposes of clarity, the same reference numbers will be used in the drawings to identify similar elements. As used herein, the phrase "at least one of A, B, and C" should be construed to mean a logical (A or B or C), using a non-exclusive logical OR. It should be understood that steps within a method may be executed in different order without altering the principles of the present disclosure.

[0114] Referring now to FIG. **1**A, a front and passenger side perspective view of a vehicle **10** is illustrated. The present system provides a display **12** that may be used in various locations of the vehicle **10**. The display **12** is illustrated in various locations of the vehicle **10** and may be used for not only vehicle functions but for decorative purposes as well. Different configurations of the display **12** are set forth below. Different display designs may be used in various locations depending on the design requirement. The display **12** may have a common architecture with the final display housing suited for the final use. In the present example, a grill logo **14** is an example of the display **12** affixed to a vehicle grill **16**. The grill logo **14** may be provided as original equipment or as an aftermarket product. Likewise, the other locations of the display **12** on a vehicle **10** can be OEM or aftermarket.

[0115] In FIG. **1**A, the display **12** may include fog or decorative lights **18** that are located on the bumper **26** or lower grill. The display **12** may include decorative lights **20** on the sides of the grill **16**, decorative displays **22** on the quarter panel, decorative displays **24** on the front of the bumper may be used. A functional display such as turn signal **30** may also be implemented. It should be noted that the intensity of the light output of the display bay varies depending on the application.

[0116] In FIG. **1**B, the rear portion of vehicle **10** is set forth. The displays **12** according to the present disclosure may be in various locations including all or a portion of the taillights **31**, a tailgate logo display **32**, a decorative display **34** on the side of the vehicle **10**.

[0117] In FIG. **1**C, a point-of-sale display unit **50** having displays **12** formed according to one of the examples set forth below is illustrated. A back panel **52**, front panel **54** or side panel **56**, or combinations thereof may be all have one or more displays thereon panel **54** and a side panel **56**.

[0118] Referring now to FIGS. **2**A, a 360° side emission LED **210** is illustrated. The side emission LED **210** emits light **212** from the side surfaces **214**. The side surfaces **214** are perpendicular to the circuit board **218** and the solder mask **220** when mounted as illustrated below. The top surface **216** does not emit light. The solder mask **220** may increase the light reflected from the surface of the circuit board **218**. The solder mask **220** may have titanium dioxide or other constituents added thereto to increase the reflectivity.

[0119] Referring now also to FIG. **2**B, a light output plot of the LED **210** is illustrated for various angles.

[0120] Referring now to FIG. **2**C, a light output plot of the LED **210** is illustrated for various angles as lobes that emanate from the sides of the LED.

[0121] Referring now to FIG. **2**D, a light output plot of the LED **210** is illustrated in a polar plot for various angles. It should be noted that light at +/−90° are emitted straight outward in a direction normal to the plane of the sides. Therefore, if the LED **210** was horizontally disposed, the light at +/−90° is horizontally emitted.

[0122] FIG. **2**E is an intensity plot of the light reflecting from a surface of the circuit board or solder mask is set forth, A high intensity area **230** is surrounded by progressively lesser intensity areas **230**B, **230**C, and **230**E.

[0123] Referring now to FIGS. **3**A to **3**E, another example of a display **310** is illustrated in cross-section with a plurality of light sources such as light emitting diodes **312**, which may be the side emitting diode **210** illustrated above. Organic light emitting diodes may also be used as the light source. The light emitting diodes **312** are mounted on a circuit board **314**. The display **310** in this example has a non-addressable backlight construction. The first example is based on the interaction of indirect illumination from the LED **312** with a photon recycling cavity **320**. Transreflective ink **322** is screen printed on a film **324** on the front side of the cavity **320** which is then thermoformed or overmolded on the inside surface of a first portion **326**A of a housing **326**. The film **324** may be thermally formed with a clear plastic or composite layer **325** through which a desired graphic opening **328** is shown and illuminated to be visible when viewing the graphic. The housing **326** includes a second portion **326**B that has side walls **330**. The LEDs **312** emit light **332** in various directs as illustrated by the enlarged exaggerated LED **312**. When a side emitting LED is used, light is not emitted from the top (surface opposite the circuit board) of the LED **312** like a typical LED. The circuit board **314** and the LEDs **312** mounted thereon create indirect radiation at the graphic opening **328** of the display **310**. The light from a side emitting LED is non-Lambertian radiation that emits from the light source and is directed inside a highly reflective housing **326**. The housing **326** forms the photon recycling cavity **320** which has the side walls **330** the inside surfaces of which reflect the emitted light from the LEDs **312**. The walls **330** may be formed of a light colored plastic such as white or painted with a light color or white paint. Alignment of the LEDs **312** with the desired graphic

is not needed as would be needed with a direct lighting configuration. The LEDs **312** are therefore not directly aligned with the graphics as shown best in FIG. **3**D. Using misaligned LEDs **312** allows circuit board designers to space the LEDs **312** as necessary without regard to the optics or the display pattern. For a manufacturer, the same circuit board may be used to accommodate different designs of logos.

[0124] The photon recycling cavity **320** is used to scatter the light **332** therein. The light **332** exits after interacting with the ink pigments and spectrally shifts by engineering the composition of the ink **322**. The ink **322** may have RGB components. The spectral shift in one example was 2000K. The composition of the ink **322** defines the unique appearance of the signage. The ink **322** is printed on the clear film **324**. The printed film **324** is thermal formed and back injected with the layer **325** to provide structural strength as shown in FIG. **3**C.

[0125] Mounting flanges **340** may be integrally formed with the second portion **326**B of the housing **326**. In FIG. **3**B, four mounting flanges **340** are illustrated. However, various numbers of flanges **340** may be used depending on the overall design and position of the display relative to where it is mounted.

[0126] Referring now to FIG. **3**E, the daytime appearance is engineered based on the interaction of the daylight with the composition of the ink and the spectral shift from the ink is shown below for a backlighting situation. The light entering the photon recycling cavity receives and reflects outward. This allows the light generated by the LEDs **312** to add to the daylight so the illumination may still be visible in the daytime.

[0127] Referring now to FIG. **3**F-I, a similar example to that set forth in FIGS. **3**A-**3**D is set forth. Common elements are not described further. In this example, the second portion **326**B has a pocket **350** that houses a second circuit board **352** that has various components such as a controller **354**, a power supply **356** and a network interface **357**. The power supply **356** may be a switch mode power supply or more specifically a Buck power supply as described below. The buck power supply is suitable because it is uniquely capable of powering up to 9 Watts of power and operating between 9-16 Volts in the present example. This is suitable for automotive environments, in particular. A connector **360** may extend through the lower wall **358** of the pocket **350**.

[0128] In order to enable backlighting for different sizes of signature elements, branded logos and architectural lighting, the back-light (circuit board and LEDs **312**) in the photon recycling cavity **320** is powered on the daughter or the second board **352** packaged between the lower wall **358** of the second portion **326**B of the housing and the first circuit board **314**. The first circuit board **314** may be heat staked at the heat stakes **370** on to an internal heatsink **372** as shown in FIG. **3**I.

[0129] Referring now to FIG. **3**J, an alternate layout of the LEDs **312** on the circuit board **314** disposed in the second portion **326**B of the housing **326** is illustrated. The LEDs are disposed around the perimeter, which in this example, is a rectangle. Therefore, two rows **380** connected by two columns **382** are illustrated. In this example, no other LEDs are disposed between the two columns **382** and the two rows, **380**. In this manner no interference with graphics from many types of designs is present. This design may be referred to as generic since it may be used with multiple graphics. A custom first portion of the housing **326** with suitable graphics may be designed for a specific purpose while the generic second portion **326**B and circuit board **314** are used.

[0130] Referring now to FIGS. **4**A-D, in a second example of a display **410** is set forth coupled to a controller **448**. The controller **404** may be referred to as a processor that has a memory **406** for controlling the operation of the segments of the display **410**. The memory **406** is a non-transitory computer medium that includes machine readable instructions that are executable by the processor or controller. The instructions include ways to control ordered illumination of the segments in a sequence. The sequential control may provide a desired effect such as forming script. As will be described below, the display may be designed to provide consistent brightness for each of the segments and thus a table **408** in the memory **406** may store scale factors as described in greater detail below. The display **410** is a dynamically illuminated display comprising piece-wise continuous segment channels **412** formed of photon recycling cavities **414** using electronically addressable radially light emitting constructs such as light emitting diodes or organic light emitting diodes.

[0131] The second example includes piecewise linear segment channels or segmented thin light source structural elements depicting a given graphic opening or simply graphic **416**. Each channel **412** consists of radially emitting illumination constructs where the radial emission uniformly fills the segment cavity with indirect light. The channels **412** and the cavities **414** are formed by a first side wall **420**A and a second side wall **420**. Between consecutive or adjacent segment channels **412** and cavities **414** are a shared end wall **424**. At the end of the graphic **416**, where no adjacent segment channel is disposed, an end wall **426** is positioned. The walls **420**, **422**, **424** and **426** forming the cavities **414** are highly reflective walls. The walls **420**, **422**, **424** and **426** may have reflective surfaces **428** that a painted with a reflective material or are formed of a reflective material such as composite material such as polycarbonate. As is best shown in FIG. **4**B, a monolithic structure **429** is molded from white opaque composite to form the walls **420**, **422**, **424** and **426**. Other structures such as bridges may also be molded from the opaque composite or plastic material. The overall size and shape of the monolithic structure may be just bigger than the overall channel size. However, the molded material may be large to extend fully within the display **410** such as to fill the rectangular size of the display of FIG. **4**A. Further in a two shot injection molding process other optical components may be molded to the white opaque plastic such as couplers from clear plastic as described below.

[0132] A plurality of LEDS **430** is mounted to a first circuit board **432**. In some examples, 360 degree side emitting LEDS like those described in the first example may be used without an optic. A Lambertian LED, as illustrated, may also be used. The Lambertian LED emits light outward from the circuit board **432**. A segmented thin light source such as an organic light emitting diode or diodes may also be used. In FIG. **4**D, the height H of the wall (the distance from the circuit board **432** may vary to form a gap **424**A. That is, each cavity **414** or channel segment may have a certain amount of leakage of light to the adjacent cavity **414**, the amount of which is controlled the height H.

[0133] Referring now also to FIGS. **4**E and **4**F, the display **410** may be formed in a similar manner to that set forth

above in the first examples. The display **410** may comprise a housing **440** having a first housing portion **440**A and a second housing portion **440**B is formed in a similar manner to that set forth above. The second housing portion **440**B may have a pocket **442** for receiving a second circuit board **444**. In any of the segmented channel examples, the housing **440** may be formed in a similar manner. The height H of FIG. **4**D may thus be extended to vary the gap **424**A to the first housing portion **440**A. The configurations of FIGS. **4**A-**4**D may also include optics as described below.

[0134] In FIGS. **4**E-**4**G, various examples of redirection elements for redirecting light to provide an indirect light path through the graphics **416** are set forth. The indirect light path eliminates bright spots so that an aesthetically pleasing display is provided. In a first example of a redirection element, an optic **450** is coupled to the circuit board **432** and is positioned to receive the output of the LED **430** and redirect the light **430**A away from the outward direction to have the benefits of indirect lighting. The light **430**A that may have been directed through the graphic **416** is completely redirected toward the side walls **420**, **422** (and the coating **428**, if any) of the channels **412**. In this example, the solid optic **450** may be a rotated shape. The optic **450** is a cylindrical solid and has a rotated angular upper surface **450**A that extends inward toward the circuit board **432** and the LED **430**. The angled surface **450**A is conical and through the principles of total internal reflects the light **430**A away from the longitudinal axis LA of the optic **450**. If the optic **450** is a rectangular solid (or cube), an inverted pyramid or cone redirects light laterally toward the side walls **420**, **422** and toward the end wall **426** or shared end wall **424**. In the present example, the upper surface is disposed at a 45 degrees angle to the longitudinal axis. The solid optic **450** has a recess **452** the LED **430** disposed therein near the circuit board **432**. The shape of the recess **452** may be spherical so that the light incident on the surface enters the optic normal to the surface to minimize reflection. A leg or legs **454** may be used to mount the optic **450** to the circuit board **432** while allowing air flow in between if the leg or legs are discontinuous around the perimeter of the optic **450**. The optic **450**, this example, is cylindrical and has an inverted cone opposite the LED **430** so that the light **430**A from the LED **430** reflects all around the cavity **414**. Each of the segmented channels **412** and the cavities **414** may be configured the same but with slightly different channel shapes to form the desired graphic. The longitudinal axis LA of the cylindrical optic is aligned with the LED **430** and the apex **456** of the cone. All of the light **430**A from the LEDS **430** is initially redirected away from the graphics **416**. The cavities **414** are photon recycling piece-wise continuous cavities that eventually emit the light **430**A from the graphic **416** after reflection from the walls **420**, **422**, **424** and **426** of the display **410**.

[0135] The second circuit board **444** has various components such as a controller **354**, a power supply **356** and the network interface **357** (as described above). Each illumination construct in the cavities **414** may be addressed electronically based on the network the dynamically illuminated signage belongs to. The networks could be Wi-Fi, ZigBee, a CAN of a vehicle, CAN-FD, Ethernet etc. The electronic controller **354** that interfaces the network through the network interface **357** and the power supply **356** to power the radial light emitting constructs are on the second circuit board **444** as shown below.

[0136] The graphic **416** may be formed as described above with transflective ink formed on a film and injected with thermal plastic. The cavity has side walls that are in the longitudinal direction of the segmented graphics.

[0137] The controller **354** may be used to control the sequence, the slope of the ramp up voltage and other characteristics of the graphics presentation of the display **410**. In script writing, for example, as the LED **430** of a first cavity **414** is powered up, the first cavity **414** takes some time to fill with light as power to the LED **430** is ramped up. A small amount of light eventually can leak through the gap **424**A between top of the shared end wall **424** and the first housing portion **440**A before proceeding to illuminate the next cavity **414** in the next segment of the sequence. This can be controlled by sizing the height H of the shared end wall **426** appropriately to allow no leakage or by providing a controlled amount of leakage. In some constructs, the gap **424**A may be minimized. Therefore, the illumination looks like a smooth script being written rather than choppy segments being turned on sequentially. That is, the height H of the shared end walls **424** is used to control the gap to provide a controllable transition from segment to segment. In many instances, the light bleeding through is minimized.

[0138] The dynamically addressable radial construct can be electronically accessed based on the scenarios, situation or the messages one wants to communicate. If the signage is the signature of an individual, it can be addressed based on the way the individual executes the signature. If the message is continuous the radially emitting constructs could be accessed accordingly. If the message is wanning, the LEDS can be accessed accordingly. Depending on the packaging constraints these structures could also contain Infrared, Red, Green, Blue, White and UV light sources or combinations thereof to change the effects of the message.

[0139] Referring now to FIG. **4**H and **4**I, another example of a redirection element is illustrated. A bridge **460** may be placed over the top of the LED **430** so that the bridge **460** is between the LED **430** and the second portion **440**A of the housing **440**. The LED **430** is not in alignment with the graphic **416** so the light **430**A bounces from the walls **420** and **422**. Although a small portion of the LED **430** is illustrated, from the top-down view of FIG. **4**I, the LED **430** (one of which is represented) is covered by the bridge **460**. The bridge **460** may be spaced apart from the LED **430** to allow sufficient space for thermal considerations. However little or no space may be left between the bottom of the bridge **460** and the LED **430**. The distance between the bottom of the bridge **460** and the top of the LED **430** may therefore vary. The bridge **460** has a width that is sized based on the LED characteristics to prevent direct light from leaving through the graphics **416**. That is, reflected/redirected light fills the cavity, when there is a scattering bridge in the piece-wise continuous photon recycling cavities **414**.

[0140] The bridge **460** may be integrally formed with the walls **420**, **422** alone or part of a monolithic structure **419'** as illustrated in FIG. **4**I.

[0141] Another advantage of the scattering bridge is that a six pin RGB LEDs could be packaged underneath the scattering bridge, so that other features to the signage could be attributed such as charge state indication, pedestrian protection in the transportation sector, safe or unsafe use of an item, and ingress egress signage in the buildings.

[0142] Referring now to FIGS. **4**J and **4**K, another example of a redirection element a bridge **460'** is set forth.

The bridge **460'** is integrally formed or molded with the walls **420** and **422**. In this example, the bottom surface **462** of the bridge **460'** has a redirection wall **464** or walls extending therefrom. The redirection wall or walls **464** may be a conical surface or 3 to 6 surface pyramidal structure extending toward the LED from the bottom surface **462** of the bridge **460'**. The walls help the dispersion of light particularly with Lambertian distribution or top distribution LEDs.

[0143] Referring now to FIGS. **4**L and **4**M, an alternative redirection element from FIGS. **4**H and **4**I is set forth. The bridge **460** is opaque plastic that has a clear plastic coupler **468** such as polycarbonate disposed between the bottom surface **462** of the bridge **460** and a top surface **430**B of the LED **430**. The coupler **468**, in this example, is a rectangular solid such as a cube bridge **460**. This example is useful to redirect light from the LED so that neither the light nor the LED is in alignment with the graphic opening **416**. The formation of the coupler **468** may be performed with a two shot injection molding process where opaque material is used to form a monolithic structure including the walls **420**, **422** and bridge **460** in a first shot and in a second shot form the coupler **468** to the opaque material.

[0144] Referring now to FIGS. **4**N and **4**O, an alternative redirection element from FIGS. **4**J and **4**K is set forth. The bridge **460'** is opaque plastic and has a clear plastic coupler **470** such as polycarbonate disposed between the bottom surface **462** of the bridge **460'** and a top surface **430**B of the LED **430**. The coupler **470**, in this example, is a cylindrical solid having a conical wall **472** extending inward toward the LED **430** directly adjacent the wall **464** extending from the bottom **462** of the bridge **460'**. This example is useful to redirect light from the LED so that neither the light nor the LED **430** is in alignment with the graphic opening **416**. The formation of the coupler **470** may be performed with a two shot injection molding process where opaque material is used to form a monolithic structure including the walls **420**, **422** and bridge **460'** in a first shot and in a second shot form the coupler **470** to the opaque material.

[0145] Referring now to FIGS. **4**P-**4**S, examples of a clear plastic couplers **478** made of a clear composite such as polycarbonate is set forth as a redirection element. The couplers **478** are disposed on the circuit board **432** and surround the LED **430** without using a bridge as set forth above. The coupler **478**, in this example, is a cylindrical solid having a first end having a conical wall **480** extending inward toward the LED **430**. A second end of the coupler **478** has a recess **482** that houses the LED **430** when assembled. The difference between FIGS. **4**Q-**4**S is that the recess **482** has an upper surface **484** that is parallel to the circuit board **432** in FIG. **4**Q, concave as in FIG. **4**R or convex as in FIG. **4**S. The shapes of the concave and convex surface may be spherical or conical sections depending on the angle and dispersion of the desired output. The angle **486** of the conical wall **480** may vary as well such as between 45-50 degrees. Various combinations may be used depending on design considerations. This example is useful to redirect light from the LED so that neither the light nor the LED **430** is in optical alignment with the graphic opening **416**.

[0146] Referring now to FIGS. **4**T and **4**U, a top view and side view of an alternate configuration of an optic **488** as a redirection element is set forth. The optic **488** is similar to that in FIGS. **4**P-R and therefore the common elements are labeled the same. In this example, the recess **482** is relatively larger. Supports **490** space the optic **488** away from the circuit board **432**. The recess **482** in this example does not surround the LED **430**. In this example, the supports **490** and the optic **488** may be a monolithic structure itself or may be formed as a second shot of the monolithic structure (first shot) forming the supports **490**. The top of the optic **488** may be shaped as a conical surface **480** as described above with varying angles also described above. All the light from a top emitting LED is redirected laterally from the optic **488** so that the light must bounce before leaving the graphic opening.

[0147] Referring now to FIGS. **5**A and **5**B, local laser ablation may be used to form the graphic opening **416** in the first portion **440**A of the housing **440**. The first portion **440**A may be formed in many ways with many different layers as described above. For example, a clear plastic injected layer **550** may be used to protect a film layer **552** that has transreflective ink **554** applied thereon. The layers **550** through **554** may be applied to a substrate **556**. The substrate **556** may be completely coated with a coating **558** such as paint. To expose the substrate or a coating layer under the coating **558**, the coating **558** may be selectively removed to form the graphic **416**. Laser ablation is based on a line of site laser **560** using a laser beam **562** traveling above the painted or coating on the surface of the substrate **556** lifting the layer of coating **558** to show the substrate color for the graphic **416** that the laser is creating. In order to create the graphic **416**, the laser **560** is traveling on a programmable robotic head **564** following the pattern of the graphic **416**. A vacuum **566** is used to remove particles of the coating of the

[0148] This method using a single laser **560** is not conducive for very high-volume creation of laser ablated graphics, due to the time it takes. Hence, reflective material as aluminum may have multiple expanded lasers **560** attached thereto to align with each of the piece-wise segmented cavities **570** to fire all of the lasers simultaneously based on the power required to do laser ablation of a given coating or paint for a given segment as shown in FIG. **5**B. Each laser may therefore use a different amount of power. The power required is based on mW/area that needs to be impinging on the paint surface associated with the graphic segment.

[0149] Another approach to using lasers may be using different optical fibers in the middle of the cavities (at the positions **569**) and the fibers could be bundled to form the input end for a high-powered laser. But the input to the fiber tip above the graphic may not be controlled. Hence, the distance of the fiber tip to the substrate and the angle of emission could be controlled to manage the power density hitting the substrate, via each piece-wise segment.

[0150] Referring now to FIG. **6**A, a system **610** for ablating layers from a substrate **612** is illustrated. The substrate **612** has one or more coating layers such as paint thereon. In this example, a first layer **614** is a layer of white paint that is translucent. A second layer **616** is disposed on the first layer **614**. The second layer **614** may be a paint or another type of coating and may be translucent or opaque. The substrate **612** may be coated fully by both layers **614** and **616**. To form a display, the second layer **616** is removed to expose the white layer **614** so that light positioned behind the substrate **612** may be transmitted therethrough. Various numbers of layers such as one layer of three or more layers may be used. Layers may be selectively removed as needed to achieve the desired effect.

[0151] Referring now also to FIG. **6**B, a guide **618** having a pattern **620** therethrough is set forth. That is, the guide **618** may be formed of a metal such as aluminum to reflect and not absorb laser light. The pattern **620** may be various shapes and correspond to the color to be displayed by the display.

[0152] Referring now also to FIGS. **6**C and **6**D, a laser source **630** is used to generate a laser beam **632**. The laser beam **632** is coupled into a plurality of optical fibers **634**. The plurality of optical fibers **634** may be bundled together to receive the laser beams **632**. The laser beam **632** is thus divided into the plurality of optical fibers **634** to form sub-beams **640** within each of the optical fibers **634**. The sub-beams **640** are emitted from the ends of each of the optical fibers **634**. The sub-beams **640** may cover the entire pattern **620** so that the simultaneous ablation of the layer **616** may take place simultaneously. As is illustrated best in FIG. **6**B, the sub-beams **640** may extend beyond the pattern **620** so that when placed adjacent to each other coverage of at least the openings of the pattern is covered by the sub-beams **640**. In FIG. **6**B, only a portion of the sub-beams **640** simultaneously generated are illustrated.

[0153] Referring back to FIG. **6**C, the laser source **630** has a controller **650** coupled thereto. The controller **650** is used to control the operation of the laser beam **632** such as the duration of the beam. The duration of the laser beam **632** is such to provide an amount of energy to the layer **616** to ablate or remove the layer at the position of the laser sub-beams **640**. Any overlap outside of the pattern **620** is blocked by the guide **618** so that only the areas of the coating within the pattern **620** are ablated or removed. The beam **632** may have an optic **636** that promotes the coupling of the laser beam into the optical fibers **634**.

[0154] The other end of the optical fibers may have an optic **642** that allows even distribution of the energy of the sub-beam **640** at the second end of the optical fibers **634**. An even distribution will allow even ablation across the entire sub-beam and the entire pattern **620**, no matter where in the pattern the sub-beam **640** is incident.

[0155] A vacuum source **660** may also be provided adjacent to the optical fiber **634** and the sub-beam **640** generated thereby. The vacuum source **660** may be used for removing the particles ablated from the first layer **616**.

[0156] In operation, the controller **650** is used to control the layer source **630** to generate the laser beam **632**. When the laser beam **632** is generated, the laser beam is coupled into the optical fibers **634** to form the sub-beams **640** which are sized to have a sufficient amount of energy to ablate or remove the layer **616** from the substrate **612**.

[0157] This design may also be used for various numbers of layers and sublayers. For example, the sublayers **614** may be different colors so that when the layer **616** is removed, the display may generate different colors. This may be suitable for displays in which, for example, the first letter of a display may be desired to be displayed in a different color.

[0158] The number of layers is illustrated as two in FIG. **6**A. However, more translucent layers may be provided. For example, an intermediate layer between the layer **614** and the layer **616** may also be provided. In some locations, the laser sub-beams **640** may be tuned to remove the intermediate layer between the layers **614** and **616** as well as the outer layer **616**. At other sub-beams, the layer **616** may be removed. When the controller **650** acts to form the beam **632**, the ablation may be referred to as a "flash" ablation because the ablation is performed at the same time with all the sub-beams. The controller **650**, the laser **630**, and a fixture **652** for holding the substrate may be part of an automated processing machine **654**.

[0159] In the following figures, alternate designs for displays are set forth. In the following, segmented spatial light modulators that use surface emissions for contrast enhancement are set forth. Segmented thin light sources (surface emitters) are used. The displays may be used for displays on vehicles as well as for disinfecting purposes when UV light sources are used.

[0160] Referring now to FIGS. **7**A and **7**B, a display **710** has a substrate **712** that may include an inside layer **714** that is made with transflective material as described above. On the opposite side of the substrate **712**, a first layer **716** is disposed on the substrate **712**. The first layer **716** may be a display color such as white. A second layer **718** is disposed on the first layer **716** and forms a background layer in a similar manner to that described above. The substrate **712** may be formed according to that illustrated in FIG. **6**. The substrate and the layers may be referred to as a substrate assembly **720**. The substrate assembly **720** may be coupled to a housing **722**. The substrate assembly **720** may be coupled in various ways to the housing **722** using fasteners, seals, adhesives, vibration welding and the like. The display **710** includes a backlight **730**. The backlight **730** may be a thin surface emitter that generates surface emissions. The backlight **730** generates light in the direction of the substrate **712**. The backlight **730**, in this example, may be continuously on. To control the display **710**, a shutter device **732** may be disposed between the backlight **730** and the substrate assembly **720**. The backlight **730** and the shutter device **732** may be selectively controlled by a controller **740**. The controller **740** may be a matrix controller that controls elements **734** of the shutter device **732**.

[0161] In FIG. **7**B, a plurality of elements **734** are illustrated that may be controlled by the controller **740**. The size of the elements **734** may vary. By controlling the elements **734** from an on state to off state or states therebetween, the amount of light through the graphic portion **750** may be controlled. That is, the controller **740** selectively controls the elements **734**. In FIG. **7**B, an arrow **752** illustrates that the elements may be controlled to form a script. That is, the elements **734** from the start of the arrow to the arrowhead may be controlled in a sequential fashion to allow the display **710** to be illuminated sequentially in a direction. In this example, the lower case "e" **754** is illuminated from a first end **756** to a second end **758** by sequentially controlling the elements **734**, which can have appropriate sizes size or pitches. Of course, the entire logo or display may be illuminated in various ways and in various sequences to form the desired display and the effect of the display.

[0162] In an automotive vehicle, the display **710** may perform differently under different conditions. For example, during charging of an electric vehicle, the display may slowly cycle from on to off and back to on again. For a turn signal, when the turn signal indicator is on and flashing, the display **710** may turn on sequentially in the direction of the turn signal. Of course, other effects may be performed. As mentioned above, the display **710** may be part of a logo on the front grill or on the front of the vehicle or the rear of the vehicle. On the rear of the vehicle, the display may act as an additional taillight or brake light in which layer **716** is red in color.

[0163] The controller **740** may control the elements **734** to gradually illuminate when forming the script pattern. That is, the elements **734** may gradually be changed from opaque to transparent in the sequence to allow a visually pleasing display to be formed.

[0164] Referring now to FIG. **7**C, a modification to the display **710** is illustrated as display **710'**. In this example, the backlight **730** and the shutter device **732** have been removed and replaced by a pixelated backlight **770**. The pixelated backlight **770** may have a plurality of elements **772** that are controlled by the controller **740** in a similar manner to that described above. However, in this example, each element **772** may be turned on or off or be illuminated in between to allow the display to display according to a particular design.

[0165] In operation, FIGS. **7**C and **7**D have the elements **772** individually controlled to form the desired display or the effect desired. The control may be controlled in a similar manner to that described above in FIGS. **7**A-**7**B in that motion or script can be controlled. The elements **772** may be of different pitches to allow the resolution of the display to be changed. A matrix driver may be disposed within the controller to individually control the various elements.

[0166] Referring now to FIG. **8**A, one example of a multi-portion display **810** is set forth. In this example, the first portion **812** is a central logo that may be positioned on a grille or rear portion of a vehicle. A first side portion **814** and a second side portion **816**, in this example, are turn signal indicators. The first portion **812** may be continually illuminated. When the turn signal indicator is illuminated, LEDs may be sequentially illuminated along the arrows **820** depending on which direction has been selected. Sequential illumination may extend from the first portion **812** to either the second portion **814** or the third portion **816**. Arrows **822** are optional features that may or may not be used depending on the desired design considerations.

[0167] Referring now to FIG. **9**, a circuit board assembly **910** is illustrated. The circuit board assembly **910** has the light sources **430** disposed thereon and the light sources **430** with radial light emitting constructs are on the top of the circuit board **432** with piece-wise addressability control optics. The optic may have heat sinking capability. The electronics controller **912** on the second circuit board **444** addresses radially emitting constructs based on mathematical profiles such as gaussians, step functions, piece-wise time stepped function etc. Emission modulation of these radially emitting elements is accessed based on different intensities that define segment intensity levels that enable total output intensity levels from the addressable illuminated graphic.

[0168] Referring now to FIG. **10**, a method of controlling light output of a multi-segment display such as that illustrated in FIGS. **4**A-**4**U is set forth. In this example, the variations set forth in FIGS. **4**A-**4**U may be implemented. However, the general features are set forth. In step **1010**, a scale factor for each segment is determined at the controller **404**. The scale factor may be determined experimentally and form the scale factor table **408** in the memory **406** that is used to scale the light output of each segment provides the same brightness. Providing a uniform display is important in many designs. Therefore, providing uniform brightness at all of the segments is aesthetically pleasing. The determination of uniform brightness may be performed using the histogram illustrated in FIG. **10**B. A minimum brightness line **1011** is determined from the segment with the lowest output. In this example, segment number **16** has the lowest output as indicated by the line **1011**. The light output of the other segments is illustrated and therefore must be reduced to prevent the segment from being greater than the brightness of the minimum segment. The table **408** is formed to provide a scale factor for each of the segments. The segment size and position may vary and therefore the amount of light output per segment may vary as well. Prior to a final design, the scale factor for each segment may be determined and the current or pulse width duty cycle may be reduced to allow the light output of the segment to remain at the line **1011**.

[0169] In step **1012**, the wall height H, such as that illustrated in FIG. **4**D, may be determined. The higher the wall height, the less leakage from one segment to adjacent segments is performed. However, a lower wall height allows more leakage to occur. Designers may experiment with the height of the wall to allow a smooth transition. This is especially important where a continuous sequential illumination is to be provided. It may be desirable to not have a wall height H to the top of the display because a dark spot may result as the illumination is occurring. It has been found that some leakage between segments is desirable. In step **1014**, the light output of the first assembly according to a first function may be performed. In some examples, the light output may transition from off (zero) to 100%. However, it has been found that following another function, such as a gaussian function, illustrated in FIG. **10**C may be performed. In FIG. **10**C, four examples of a gaussian functions are set forth. As noted, the curves for each of the gaussian functions **1015**A-**1015**D provide different outputs between zero and 100% duty cycle. The curve **1015**B and the times thereof will be described in greater detail in FIG. **10**D. In FIG. **10**D, the first segment is illustrated as SEG_N. The various times T**1**, T**2**, T**3** and T**4** are set forth. At time T**0**, the light source such as LED **1016**A, in a first segment **1018**A, is in the off state. The LEDs may be various types of light sources including OLEDs. Light starts to emanate from the LED **1016**A at time T**1** and increases at time T**2** and T**3**. At time T**3**, light begins to travel through the gap **1021** and at time T**4**, more light enters the second segment SEG_N+1. At time T**5**, light continues to enter the second segment SEG_N+1 while the second LED **1016**B begins illuminating.

[0170] Referring back to FIG. **10**A, the light being communicated in step **1020** to the second segment is performed. In step **1022**, the light from the first LED **1016** may be limited as mentioned above by a scale factor that limits the current or the duty cycle. In step **1024**, the light output increases at the second or subsequent LED according to a function. The function may be the same function or a different function as that used in the first segment. At times T**6**, T**7** and T**8**, the light eventually begins to leak into the third segment SEG_N+2 at times T**7** and T**8**. After time T**8** the third LED **1016**C is controlled. The full light output may be achieved at time T**8** but may be scaled according to the scale factor in step **1026**. The process repeats until the last segment **1028**. When the last segment is not reached, steps **1024** and **1026** are repeated. When the last segment has been reached, the process ends in step **1030**.

[0171] Referring now to FIG. **10**E, the chart sets forth the leakage for different segments. Segment **1** generates a certain amount of light output which transmits to segment **2** and segment **3**. The light output of segment **2** transmits back to segment **1** and segment **3** and so on.

[0172] Referring now to FIG. **10**F, a plot of the light output is illustrated at **1050**. The raw light output is illustrated at **1052** and the light output at **1054** illustrates a more uniform light output that is corrected by the scale factor from the table.

[0173] In one example, a connector **920** has a connector shroud **922** molded so the connection system is sealed. In one example, the sealed assembly may use a Gortex® patch to prevent water condensation inside the display assembly. In one example, the design uses laser welding technology to seal housing. Vibration welding is also a viable solution.

[0174] Referring now to FIG. **11**A, a front perspective view of a vehicle **1110** is illustrated. In this example, the vehicle **1110** includes a door **1112** which may be used to cover an engine compartment or a front trunk (frunk). The vehicle **1110** has a display **1114** that includes a first portion **1116** and a second portion **1118**. The first portion **1116** includes a plurality of display elements **1120**. The display elements **1120** are illuminated elements and are constructed as elongated narrow elements in the present example. The display elements **1120** may each be formed of a single channel with a single light source in each channel. However, segmented channels like those in FIGS. **4**A-**4**U may also be used. However, various styles, shapes, areas and colors of the elements **1120** may be implemented. As well, the sequence and timing within each segment of each element **1120** may be controlled to achieve the desired visual and optical effect.

[0175] The first portion **1116**, in this example, has a logo portion **1126** disposed therein. The logo portion **1126** may be formed by one of the methods illustrated above. However, rather than being a standalone element, the logo **1116** may be incorporated into the larger structures such as the front fascia **1124** of the vehicle **1110**. The first portion **1116** is a forward facing portion of the front fascia **1124**. An upward facing portion or second portion **1118** faces upward. Front and upward directions are relative to the vehicle **1110**.

[0176] Referring now to FIG. **11**B, a rear fascia **1130** having a first portion **1132** and a second portion **1134** is set forth. In this example, the first portion **1132** and the second portion **1134** may have elements **1136** disposed thereon. The elements **1136** disposed on the second portion **1134** may face in an upward direction. The first portion **1132** may have a logo portion **1138** and a sensor portion **1140**. The logo portions **1126**, **1138** of the front and rear displays may not be identical in that different logos may be displayed. Likewise, the sensor areas **1128** and **1140** may house different types of sensors.

[0177] The elements **1136** may be arranged and shaped in various geometries as mentioned above relative to the elements **1120**. The elements **1120**, **1136** may be sequentially controlled and/or color controlled in various sequences and colors to indicate various functions and/or aesthetics.

[0178] Referring now also to FIG. **11**C, a cross-sectional view of the front fascia **1124** is illustrated. However, those skilled in the art will recognize the rear fascia **1130** may be configured in a similar manner. The display elements or logo portion **1120**, **1126**, **1134**, and **1138** may all be controlled by a controller area network **1150**. The controller area network **1150** may be part of the vehicle and interact with various components of the vehicle **1110**. Ultimately, the controller area network **1150** may generate control signals to control the operation of each of the elements **1120** and the displays **1126** and **1138**. The controller area network **1150** may generate signals so that the individual light sources within the individual elements may be controlled as mentioned in detail above.

[0179] In this example, the elements **1120** on the second portion **1118** may have optical elements **1152** that are used to disperse the light from the elements **1120** in the second portion **1118**. The elements **1120**, **1136** may be part of the welcome sequence when a user is approaching the vehicle, when the vehicle is charging and used as an indicator of charging or full, or used as a warning such as brake indicator or a collision warning. In front of the vehicle, the element **1120** may be used as a collision warning that is visible by the vehicle operator when looking forward and over the door **1112**. The optical elements **1152** direct light in various directions including rearward toward the vehicle operator in a driving position.

[0180] Referring now also to FIG. **11**D, a controller **1160** that may be part of the vehicle control system **1110** is coupled to the controller area network **1150** as illustrated. The controller **1160** may have a microprocessor **1162** coupled to a memory **1164**. The memory **1164** is a non-transitory computer-readable medium including machine-readable instructions that are executable by the processor **1162** to perform various functions. The various functions will be described in greater detail below. The controller **1160** has a plurality of circuits that generate a detection signal used to ultimately generate a control signal. The circuits may include a collision detector circuit **1160**A that uses condition signals from one or more sensors to detect that the vehicle may be in an impending collision. The collision detector circuit **1160**A may also determine the relative distance to a parked vehicle when entering or leaving a parking spot. A proximity sensor **1170**A generates a condition signal corresponding to the proximity of a remote keyless **1180** relative to the vehicle. The remote keyless device **1180** may be a handheld key or a phone as a key device. The condition signal corresponds to the remote keyless device **1180** being within a certain range of the vehicle. In response to the remote keyless device condition signal, a startup sequence may be performed at the display.

[0181] The controller **1160** may also have charge detector **1160**B that is coupled to an electric charger **1181** and generates a condition signal corresponding to being coupled to (or not coupled to) to a battery charger **1181**.

[0182] A lock detector **1160**D may be coupled to a lock actuator **1182** and is used for detecting whether the doors are locked and unlocked by generating a locked or unlocked condition signal.

[0183] A startup detector **1160**E detects whether the vehicle is being started and generates a startup condition signal.

[0184] A brake detector **1160**F is coupled to a brake actuator **1184** to detect whether the brakes are being actuated. A condition signal generated by the brake detector indicated whether or not the brakes are being activated.

[0185] Each of the detector circuits **1160**A-**1160**F generate detection signals from the condition signals that are used by a light controller **1186** to generate control signals control the display **1114** and the elements thereof.

[0186] In one example, the collision detector **1160**A may control the elements **1120** on the second portion **1118** to illuminate to make the driver aware that a collision is impending. It is common for a collision warning system to operate a speaker **1188** and generate a visual warning that is

projected on the windshield. In this example, the collision detector **1160**A illuminates the elements **1120** and together with the optical elements **1152** allows the driver to visually receive a warning of an impending collision. That is, the collision detector **1160**A generates a collision signal that is communicated to the light controller **1186** and using the control area network controls one or more elements of the display **1114**.

[0187] The charge detector **1160**B generates a charge detection signal that generates a charge control signal that is communicated to the light controller to control one or more of the elements **1120-1136** based upon the vehicle being connected and charging. The charge detector **1160**B may generate a charging signal or a charging complete signal that indicates that the battery is full. A different type of display such as the elements illuminating faster or slower or at a different color may be performed. Both front elements **1120** and/or the rear elements **1136** may be controlled in the same or a different manner.

[0188] The proximity detector **1160**C may generate a proximity detection signal that corresponds to the distance of the remote keyless device **1180**. Based upon the proximity signal, the light controller **1186** may generate a light sequence to welcome a vehicle operator to the vehicle. The operating sequence may be a sequential illumination of the front elements **1120** or the rear elements **1136**.

[0189] The startup detector **1160**E generates a startup detection signal that corresponds to when the vehicle is started. The detection of a key in a tumbler or the pressing of a button in a keyless ignition system may be detected and communicated to the light controller **1186**. The light controller **1186** may generate a series or sequence of light controls when the startup detector generates a startup signal. The brake detector **1160**F may generate a brake signal that corresponds to the brake pedal being activated. The brake signal is communicated to the light controller **1186** that may generate a redundant display by controlling one of the elements **1136**. That is, one or more elements **1136** may generate a brake signal indicator. A pedestrian detector **1160**G may also determine whether a collision is impending with a pedestrian based on one or more of the sensors such as the camera **1170**, lidar **1172**, radar, **1174** or the ultrasonic sensor **1176** or combinations thereof.

[0190] Referring now to FIGS. **11**E, **11**F, an alternate configuration to that illustrated above with respect to FIG. **11**D is set forth. In this example, a subnetwork **1186'** may be disposed in a pocket **1190** as part of the display **1114**. The pocket **1190** having the sub-network controller **1186'** may be adjacent to the logo display **1126** such as behind or to the side thereof. Of course, other locations are possible. The subnetwork controller **1186'** may act as a controller for a sub-network within the display. Both a front and rear displays may form a sub-network. Likewise, doors of the vehicle and the headliner of the vehicle (and the sensors therein) may also form sub-networks. All of the sub-networks may selectively communicate with the vehicle controller **1160** through the CAN **1150**. The benefit too the sub-network controller **186'** is that not all signals are to be communicated through the CAN **1150**. Some calculations and determinations are made within the controller **1186'**.

[0191] The sub-network controller **1186'** may perform the same functions as light controller **1186** and additional functions. However, in this example, the controller area network **1150** communicates a detection signal corresponding to the detection of a condition through the controller area network **1150** from the controller **1160**. In this manner the controller **1186'** is a control node controlled by the controller **1160** through the CAN **1150** The light controller **1186'** operates the logo display **1126** or the light elements **1120** in a sequence or pattern to obtain the desired effect based on a detection signal received through the CAN **1150**.

[0192] The sensors **1170-1178** may communicate sensor signals directly to the controller **1186'** rather than through the CAN **1150** as illustrated in FIG. **11**D. A decision may be made as to whether to pass the sensor signals to the CAN **1150**. That is, the light controller **1186'** may determine whether the sensor signal is for a local function or a network function. In other words, the light controller **1186'** may form a subnetwork with the CAN acting as the main network. That is, should a sensor signal be used to activate or control one of the elements **1120** and that is the only function needed for that sensor signal, the controller **1186'** does not need to pass the signal to the CAN **1150**.

[0193] In FIG. **11**F, the light controller **1186'** may include some of all of the detector circuits **1160**A and **1160**F. In this example, the collision detector **1160**A, a proximity detector **1160**C and the pedestrian detector **1160**G are illustrated in the light controller **1186'** forming the sub-network **1192**. In this example, when the function, such as generating a warning display using the elements **1120** is to be performed, the light controller **1186'** can choose to perform the sub-network function without communicating the signal through the CAN **1150** to reduce the control burden within the CAN **1150**.

[0194] As is illustrated in FIGS. **11**F and **11**G, the sub-network controller **1186'** may also include a network interface **1160**H that communicates may also communicate with a cloud controller **1191** in a cloud computing environment **1193**. For example, the sub-network may communicate with another vehicle subnetwork **1192** instead of or in addition to communicating with its own controller **1160**. This may have several advantages in operation. Including providing detections for other vehicles. The other vehicles may have faulty or blocked sensors. Blocked sensors may be because of snow, for example. If the second vehicle is an autonomous vehicle or semi-autonomous in an active cruise control scenario, the first vehicle may act to provide sensed conditions to the second vehicle to confirm or supplement the sensing on the second vehicle.

[0195] Referring now to FIG. **12**A, a method for operating the display is set forth. In step **1210**, a condition signal is generated at one of the sensors which includes the camera **1170**, a lidar sensor **1172**, the radar **1174**, the ultrasonic sensor **1176**, the proximity sensor **1178**, the lock actuator **1182** and the brake actuator **1184**.

[0196] In step **1212**, the condition signal is communicated to the controller **1160** through the controller area network **1150**. In particular, the various detector circuits **1160**A-**1160**F are used to generate detection signals corresponding to a detection based on the condition signals. In step **1214**, the detection signals are communicated to the light controller **1186**. The light controller **1186**, in step **1216**, generates a control signal that is communicated through the controller area network to control the elements **1120**, **1136** and even the logo areas **1126** and **1138**. That is, in step **1218**, the elements of the display are controlled according to the control signal.

[0197] Referring now to FIG. **12**B, a second method for operating the display is set forth that corresponds to FIG. **11**F. In step **1230**, a condition signal is generated at one of the sensors which includes the camera **1170**, a lidar sensor **1172**, the radar **1174**, the ultrasonic sensor **1176**, the proximity sensor **1178**, the lock actuator **1182** and the brake actuator **1184**.

[0198] In step **1232**, the condition signal is communicated to the controller **1186'** In particular, the various detector circuits **1160**A-**1160**F may be within or associated with the sub-network controller **1186'** are used to generate detection signals corresponding to a detection based on the condition signals.

[0199] In step **1234**, the detection signals are used to determine whether the functions correspond to a sub-network function. In step **1238**, when the detection signal or signals correspond exclusively to a sub-network function in step **1234**, the function is performed in the sub-network by generating a control signal and the detection signal is not communicated to the controller **1160** through the CAN **1150**. That is, in step **1238**, the elements of the display **1114** are controlled according to a control signal.

[0200] In step **1238**, the detection signals are communicated to the controller **1260** through the controller area network **1150** to perform various functions or make certain determinations in the vehicle when the detection signals are not exclusive to the sub-network. In step **1238** the sub-network controller **1238** may also communicate signals to nearby vehicles directly or through the cloud controller **1191**. The detection signals may detect that a vehicle behind is approaching too fast. The vehicle in front may detect this and communicate to the behind vehicle to apply braking or perform other collision avoidance. The behind vehicle may be sensing an anomaly with a sensor, or the sensor may be obstructed due to weather, dirt or other reasons. Signals may therefore be communicated from arear display through the cloud controller to a front display (or directly to the vehicle controller or the behind car).

[0201] Referring now to FIG. **13**, an example of a display control circuit for driving the display is set forth. In this example, a voltage protection circuit **1310** receives power and ground from elsewhere in the vehicle through a power terminal **1310**A and a ground terminal **1310**B. The protection circuit **1310** provides both over voltage and under voltage protection. That is, the protection circuit **1310** protects the voltage to the display control circuit **1300** from operating an above maximum circuit operating condition and below a negative voltage condition.

[0202] The output of the voltage protection circuit **1310** is a voltage signal that is provided to an electromagnetic capability (EMC) filter circuit **1320**. The EMC filter circuit **1320** prevents conducted noise from exiting through the power terminal **1310**A and the ground terminal **1310**B. The filtered voltage signal from the EMC filter circuit **1310** is provided to a DC/DC converter **1322**. The DC/DC converter **1322** generates a VBIAS signal that is provided to a first LED driver circuit **1324** and a second LED driver circuit **1326**. The VBIAS signal is a dynamic LED bias control signal that is communicated to both of the LED driver circuits **1324**, **1326** to ensure all LEDs, such as the LEDs **1330** coupled to the LED driver circuit **1324** and the LEDs **1332** coupled to the LED driver circuit **1326**, have the correct voltage.

[0203] The LED driver circuit **1326** generates a dynamic LED bias control signal that is communicated to the LED driver circuit **1324**. The LED driver circuit **1324**, in turn, communicates a dynamic LED bias control signal to the DC/DC converter **1322**. The bias control signal is used to adjust the LED voltage VBIAS to minimize the power consumption and heat generated by the LED driver circuits **1324**, **1326** and the LEDs **1330**, **1332**. The LEDs **1330**, **1332** may be part of the emblem or logo display **1334***cv* illustrated above.

[0204] The EMC filter **1320** also provides the filter voltage to a regulator such as a voltage control circuit **1338** such as a DC/DC converter or a linear regulator. The regulator **1338** provides regulated voltage, such as 3.3 volts, in this example, so that the microcontroller **1342** has a stable proper voltage for operation. A high current application for the circuit **1338** is chosen to allow the microcontroller **1340** to run for a period of time after the power is removed to perform housekeeping functions such as EEPROM emulator using FLASH.

[0205] A communication interface **1342** communicates with the communication area network **1150** illustrated above. The communication area network **1150** provides and receives signals from the communication interface **1342**. Communication signals **1342**A are provided to and from the microcontroller **1340**. Status signals **1342**B are provided from the communication interface to the microcontroller **1340**. The microcontroller **1340** has a memory **1344** associated therewith. The memory **1344** is a non-transitory computer-readable medium including machine-readable instructions that are executable by the processor. The machine-readable instructions include instructions for operating the LEDs **1330** and **1332** in a way desirable by the vehicle designers. The microcontroller **1340** is in communication with a first remote LED communication interface **1346**.

[0206] It should be noted that although the CAN **1150** is illustrated, various types of communications methods or systems, such as FD-CAN, UART, **12**C, SPI, Ethernet and more ways of communications may be provided.

[0207] The first remote LED communication interface **1346** communicates control signals to an LED driver **1350** and **1352**. The communication interface **1346** allows the sequencing and operation of the LEDs **1354**, **1356** associated with the respective LED driver circuits **1350**, **1352**.

[0208] A DC/DC converter **1350** generates a DC/DC converter signal (VBIAS) to the LED driver circuits **1350**, **1352** so that a regulated voltage is provided to each of the driver circuits **1350**, **1352**. A dynamic bias control signal (DBC) is communicated from the LED driver **1350** to the LED driver **1352**. The LED driver **1352** generates a dynamic bias control signal (DBC) which is communicated to the DC/DC converter **1358**. The dynamic bias control signal (DBC) is used by the DC/DC converter **1350** to allow the LED voltage to be adjusted to minimize power consumption and the heat generated by the LEDs **1354**, **1356** and the driver circuits **1350**, **1352**. The voltage for the DC/DC converter **1358** may be provided from the EMC filter **1320**.

[0209] The microcontroller **1340** may also be coupled to sensors **1350**. The sensors **1350** may be one or more of the sensors described above such as the camera sensor **1170**, the LIDAR sensor **1172**, the radar sensor **1174** and the ultrasonic sensor **1176**. As mentioned above, the microcontroller **1340** may control the LED drivers **1324**, **1326**, **1350** and **1352** to

illuminate in a controlled way according to the conditions sensed by the sensors **1350**. Control examples are provided above.

[0210] As mentioned above, power may be provided from an external source through the power terminal **1310**A and the ground terminal **1310**B. However, the display control circuit **1300** may also be coupled to a solar panel **1351** and/or a battery **1353**. The solar panel **1351** may be used to charge the battery **1353** so that the operation of the LEDs **1330**, **1332**, **1354** and **1356** may be performed without the external power. The solar panel **1351** may be used to maintain the battery **1353** at a charged level. The output of the battery **1353** and/or the solar panel **1351** may be coupled to the voltage protection circuit **1310** which, in turn, provides filtered power to the rest of the circuit through the EMC filter **1320**.

[0211] The LEDs **1330** and **1332** may be part of an emblem or logo display **1334**. Of course, other functions may be provided for the LEDs **1330**, **1332**.

[0212] The LEDs **1354**, **1356** may perform various display functions. One or more of the LEDs **1330**, **1332**, **1354**, **1356** may perform various other types of functions in a vehicle such as turn signals, high beams, low beams, fog lights, marker lights, decorative display lights and other lighting functions.

[0213] It should be noted that the sub-network described above may be formed by the controller **1340**, the communication interface **1346**, the communication interface **1348**, the converter **1358** and the LED drivers **1350-1352** as well as the LEDs **1354** and **1356**.

[0214] Referring now to FIG. **14**, another example of a display **14** is illustrated. The display **1410** may have a functional portions **1410**A and aesthetic portions **1410**B. The functional portion **1410**A and the aesthetic portion **1410**B may be integrally formed into the single display **1410**. The aesthetic portion **1410**B has an emblem or logo display **1410** and light elements **1412**. The display control circuit **1300** may be coupled behind the display **14**. The display control circuit **1300** may include the sensors **1350** and the other portions of the circuit **1310-1352**. The display control circuit **1300** may also include the solar panels **1351**. However, the solar panels **1351** are illustrated as separate components in FIG. **14**.

[0215] The functional portions **14**A may have various functional LEDs including high beams **1420**, low beams **1422**, brake lights **1424**, fog lights **1426**, marker lights **1428** and turn signals **1430**. Although the functional portions **14**A are illustrated as completely separate, the various lights **1420-1430** may be incorporated into the aesthetic portion **14**B. One or more of the LEDs **1330**, **1332**, **1354** and **1356** may be used to form the functional elements **1420-1430**.

[0216] Should the display **1410** be a rear display, the high beams **1420** and the low beams **1422** may be replaced by a brake lights **1432**.

[0217] It should be noted that FIGS. **12**A and **12**B may be used to operate the examples set forth in FIG. **13**. That is condition signals may be generated at the sensors **1350** and the controller **1340** may act as the light controller that is used for controlling the elements. Likewise, in FIG. **12**B, condition signals may be generated from the sensors **1350** and the controller **1340** may determine whether or not to communicate the signals back through the controller area network **1150**. The sub-network function described in step **1236** may be performed by controlling the LED drivers and the LEDs within the control circuit **1300** under the control of the controller **1340**.

[0218] Referring now to FIG. **15**, a method of controlling the circuit of FIG. **13** is set forth. In step **1510**, a first control signal is generated at the controller **1340** of the display control circuit which is located at the display. As mentioned above, a pocket or other device may be used to secure the control circuit to the display. In step **1512**, a first LED driver is controlled from the controller for controlling the first LEDs based on the first control signal.

[0219] In step **1514**, a second control signal is generated at the controller of the display. The second control signal is communicated to a communication interface near the controller **1340**. Ultimately, the first communication interface communicates with a second communication interface that is located near the LEDs and the LED drivers for the second group of LEDs. In step **1520**, the second control signals communicated to a second LED driver that controls the second LEDs based on the second control signal. In step **1522**, a dynamic control signal is generated at the first LED driver and is communicated to the first DC/DC converter. In step **1524**, power is controlled at the DC/DC converter based on the first dynamic control signal. By providing the dynamic biased control signal, the amount of power to the LEDs is controlled to ensure that all of the LEDs have the correct voltage for operation. This is important in a display that uses multiple LEDs because the amount of light output from the LEDs should be consistent throughout the display.

[0220] In step **1526**, a second dynamic control signal is communicated from the second LED driver to a second DC/DC converted. In step **1528**, the power to the second DC/DC converter is controlled based on the second dynamic control signal.

[0221] Referring now to FIGS. **16**A-**16**D, an alternate design for a display **1610** is set forth. In this example, the brightness of the display and/or the current to the light emitting diodes may be reduced from that illustrated in FIGS. **4**A-**4**U. Segmented channels **1612** are illustrated and form photon recycling cavities **1614**. The channels **1612** may be piece-wise continuous segment channels that are electronically addressable by a controller that is associated with a memory such as the controller **404** and the memory **406** which is not repeated in FIG. **16**A. In this example, each of the cavities form a graphic **1616**. In the present example, a capitalized letter T is illustrated. However, various other types of displays may be obtained using the teachings set forth herein.

[0222] Each cavity **1614** may be formed of a first sidewall **1620**A and **1620**B. The sidewalls **1620**A, **1620**B may have an angle surface **1622**A that are integrally formed with the rest of the sidewalls. In this example, each cavity **1614** has two light emitting diodes **1624** disposed therein. However, one diode or more than two diodes **1624** may be used in a segment depending on the size and the desired light output for the cavity. The angle surfaces may have an angle **1626**A which about 45° in FIG. **16**C. In FIG. **16**D, a greater angle **1626**B is used.

[0223] The position of the angled surfaces **1622**A, **1622**B may be such that a light pattern **1628** generated by the light emitting diode **1624** is at least partially intercepted by the angular surfaces **1622**A and **1622**B. That is, the lower edge **1622**C of each of the angled surfaces may be within the radiation pattern as is illustrated in particular as the radiation

pattern **230**A-**230**E of FIG. **2**E. By redirecting light through the graphic **1616** of the display, more intense light or the same intensive with a lower current to the LEDs may be used. Providing lower current to the LEDs reduces the amount of heat dissipation required. This is advantageous in a design.

[0224] A portion of the radiation pattern **1628** may be incident on the surface **1630** of the circuit board **1632**. As mentioned above, the circuit board **1632** may have a solder mask or be painted to reflect more light. A solder mask may include additional mounts of titanium dioxide to increase the reflectivity. Likewise, white paint may also be used on the surface **1630**. Light reflected from the surface **1630** is also reflected toward the surfaces **1622**A and **1622**B.

[0225] Each of the cavities **1614** may also have shared end walls **1640**. Each of the shared end walls **1640** may also have angled surfaces **1640**A and **1640**B in adjacent cavities **1614**. The angled surfaces may be formed in a similar manner to those illustrated in FIGS. **16**C and **16**D with appropriate angles that experimentally determined to increase the intensity of light from the light emitting diodes **1624**. The angle of each of the angled surfaces **1640**A and **1640**B may depend on various design factors including the length of each of the respective cavities. The end walls **1640**, the sidewalls **1620**A and **1620**B may be integrally molded into a monolithic structure from opaque composite or plastic material. For example, the plastic material may be white or painted. The plastic material and any coatings thereon increase the reflectivity of the sidewalls **1620**A and **1620**B. The end walls **1640** may be formed in a similar manner to that described above in that the sidewalls may not extend to the outer portions of the display at **1616**. This is to allow a controlled amount of light leakage to an adjacent cavity when the cavities are sequentially operated and illuminated. The same discussion regarding the height of the end walls is therefore not repeated. Likewise, the construction illustrated in FIGS. **4**A-**4**V above may also be used. For example, the display **1616** may be a first housing portion with a transreflective link disposed on the inner surface.

[0226] The angle **1626**A and **1626**B may vary from a line **1642** normal to the planar surface **1630** of the circuit board **1632**.

[0227] Referring now to FIG. **16**E, an alternate display **1610'** is illustrated. In this example, the display **1610'** has the capitalized letter T that is illustrated in FIG. **16**A and therefore the same components are labeled the same in FIG. **16**E. However, in this example, a perimeter channel **1650** is provided. The perimeter channel **1650** is formed from a plurality of segmented channels **1652**. Each of the segmented channels **1652** has at least one light emitting diode **1654** as illustrated. However, more than one light emitting diode **1654** may be provided. In this example, the segmented channels **1652** are formed in a similar manner to those illustrated in FIGS. **16**A-**16**D. That is, angular surfaces **1656** and **1658** may extend longitudinally relative to each of the segmented channels **1652**. The segmented channels **1652** are bounded by shared end walls **1660**. However, depending on the design effect, the shared end walls **1660** of the segmented channels **1652** may be removed to form a continuous (non-segmented) channel around the perimeter of a particular logo or display. Because of the design of the angled walls **1656**, **1658**, the number of light emitting diodes **1654** can be reduced from other designs. In this example, the light emitting diodes **1654** are side emitting diodes that were mentioned previously. The angled walls **1656**, **1658** provide a two dimensional restriction of the four dimensional radiation from the light emitting diodes **1654**. This allows more light to be directed outward through the perimeter display **1650** using fewer light sources.

[0228] Although an oval is illustrated in FIG. **16**E, the perimeter display may be any shape, such as circular, closed polygonal or the like. The shape may be an open polygon as well or a random shape. From a design perspective, the reduction in the number of light emitting diodes reduces the overall costs of the system. Reducing the number of light emitting diodes also reduces the amount of heat dissipation required by the entire system.

[0229] Referring now to FIG. **17**A, an alternate display **1710** is illustrated. In this example, the first sidewall **1620**A and the second sidewall **1620**B may be formed in a similar manner to that set forth in FIG. **16**A-**16**D. Other similar components include the circuit board **1632** and the light emitting diode **1624**. In this example, however, the graphic **1616** is replaced by a clear plastic member **1720**. The clear plastic member **1720** may have a film **1722** affixed thereto. The film **1722** may be printed with a graphic to form the desired logo or message for the display **1710**. A second member **1730** has the walls **1620**A and **1620**B formed therein. The second member **1730** may be partially hollow or may be a solid as illustrated in FIG. **17**A. In this example, the second member **1730** is affixed to the first member **1720** to form a watertight seal so the display may be used in an exterior environment. The second member **1730** may be formed of a white plastic material so that the surfaces **1622**A and **1622**B are formed therein. As will be described in greater detail below, the first member **1720** and the second member **1730** may be formed in a two shot process to form a sealed system. The circuit board **1732** and the display **1720** may be placed into a display housing such as a grille of a vehicle or the tailgate of a vehicle as described above. Advertising displays may also benefit from the teachings set forth herein.

[0230] The second member **1730** has extending walls **1732** that extend outward and adjacent to the first member **1720**. Because the walls **1730** is made of a reflective material such as white plastic, any light **1734** that enters the first member **1720** and is reflected therethrough is reflected as illustrated by the light rays **1734**.

[0231] If the first member **1720** and the second member **1730** are formed from two separate components, the first member **1720** and the second member **1730** may have a coupling portion **1736** that may be adhesive, glue, tape, laser welding or vibration welding.

[0232] As mentioned above, the film **1722** may have a transreflective ink that is disposed thereon. The light rays **1734** that are communicated through the film **1722** may have a white transreflective portion **1740** to allow the light reflecting from the walls **1736** to be emitted from the display **1710**. It should be noted that any coupling portion **1736** may have the same refracted index as the walls **1732** to allow the light to be reflected from the wall and directed outward from the film **1722**.

[0233] Referring now also to FIG. **17**B, a front or top view of the display **1710** of FIG. **17**A is illustrated. In this example, the display portion **1740** is illustrated that allows light to be transmitted from the light emitting diode **1624** through the clear plastic member **1720** toward the walls **1732**. In this manner, separate light emitting diodes are not

required as illustrated in FIG. **16**E. The diodes **1654** and the channels illustrated in FIG. **16**E have been eliminated and the light emitting diodes **1624** in the display portion communicate light to the sidewalls **1734** for reflection through the portions **1740**. The transreflective ink on the film **1722** may be disposed at the portions **1740** and at the display print **1746**.

[0234] Referring now to FIG. **17**C, an alternative display **1710'** is illustrated. In this example, the same reference numerals as FIG. **17**A are used and therefore the description is not repeated. As will be noted in FIG. **17**A, the walls angle outward so that the photon recycling cavity **1614** becomes wider as the walls extend away from the circuit board **1632** and the light emitting diode **1624**. In this example, the walls **1620**A and **1620**B and therefore the reflected surfaces **1622**A and **1622**B, the angle of the walls **1620**A and **1620**B and therefore the surfaces **1622**A and **1622**B relative to a normal **1750** to the circuit board **1632** may vary depending on the configuration, the size of the display and the like.

[0235] In the embodiment set forth in FIG. **17**C, a two shot molding process may be used. Ultimately, the first member **1720** may be formed in a first shot and the second member **1730** may be formed in a second shot of a mold. The film **1740** may be applied after the entire monolithic structure formed by the two shot process is generated. However, the film **1740** may also be applied into the mold and then the first member **1720** is injected onto and bonded with the film **1722**. A protective layer may optionally be applied to the film once removed from the mold.

[0236] Referring now to FIG. **17**D, the surfaces **1622**A and **1622**B may also be curved. The amount of curve and the kind of curve may depend on the overall design and dimensions of the system. The curves of the walls **1622**A and **1622**B may be irregularly shape. However, the walls **1620**A and **1620**B and therefore the surfaces **1622**A and **1622**B may be regular conic sections. For example, parabolic, hyperbolic, spherical and the like may be used. In this example, a portion of the light from the emitting diodes **1624** is communicated into the member **1720** so that it can internally reflected toward the walls **1732** illustrated in FIGS. **17**A and **17**C.

[0237] In FIG. **17**D, a radiation equilibrium cavity **1760** may be employed. In the present example, it may be desirable to have the amount of light emitting straight outward from the graphic portion to be the same as the perimeter portion at **1740**. The radiation equilibrium cavity may provide way for the brightness to be equal on the perimeter versus the various portions of the other parts of the display such as the display print **1746** illustrated in FIG. **17**B. The shape of the radiation equilibrium cavity **1760** may be such that light is reduced at the display print **1746** so that the intensity of light is balanced across the entire display. The shape may be various shapes that may be experimentally determined by analytical simulation. The analytical simulation will take into consideration the geometries of the cavities, the angles of the walls, the intensity of the light sources and the like.

[0238] Referring now to FIG. **18**A, an alternative display for a display **1810** is illustrated. In this example, a first member **1812** may be formed in a similar manner to the member **1720** described above. The member **1812** may be clear plastic member that has film **1814** disposed thereon. The film **1814** may be a transreflective film. The member **1812** may have a micro LED array **1822** coupled thereto. The micro LED array layer **1822** is a transparent LED film array that has been developed by Osram. A backing **1824** may be used to protect the film **1822** that comprises the LEDs. The LEDs disposed within the layer **1822** may be positioned at desired locations that correspond to the desired display pattern of the display **1810**.

[0239] A driver **1830** may be coupled to the layer **1822** to control the operation of the LEDs formed in the layer **1822**. The driver **1822** may interconnect to the vehicle or other control system to allow the driver **1830** based on communication from the vehicle.

[0240] Referring now to FIG. **18**B, an alternative display for a display **1810'** is illustrated. In this example, the first member **1812** may be formed in a similar manner to the member **1720** described above but as a second shot in a mold. The member **1812** may be clear plastic member that is formed to the transflective film **1814** and **1812** film. The transflective film **1814** and the micro LED array layer **1822** may be laminated together in a press or mold. Thereafter, the layer **1812** have be overmolded to form a unitary structure. The backing layer **1824** may be used to protect the assembly of layers **1814**, **1822** and **1812**, which may be the unitary structure. The layer **1812** may be a UV curable silicone or thin film silicone. Likewise, layer **1812** may be a UV curable polyresin.

[0241] Referring now to FIG. **18**C, another display **1810"** is illustrated. In this example the transreflective ink layer **1814**, the LED layer **1822** may be laminated together with a reflective film layer **1836**. The LED layer **1822** may emit in a forward and rearward direction. Therefore, the use of the reflective film layer **1836** may increase the amount of light emitting from the transreflective layer **1814** by reflecting rearward reflecting light therefrom. The assembly of layers may be coupled to a surface or housing **1840** for use in various products including vehicle displays and consumer products.

[0242] In all three examples directly above, the LED layer **1822** may have a reduced density of LEDs disposed within the layer **1822**. That is, the density of LEDs may vary. The greater the number of LEDs, the greater the cost. By providing the reflective layer **1814**, the density of the LEDs (pixel density) may be reduced. In the third display **1810"**, the reflective layer **1814** increases the forward directing light through the transflective layer **1814** so that a reduced density of LEDs may be used. Of course, design consideration such as lumens output, the size of the display and other conditions may be considered.

[0243] Referring now to FIG. **19**, a system for controlling a pixelated display **1920** is set forth. In this example, each pixel **1912** is formed by one light guide outlet **1914**. Each pixel **1920** may be selectively used to form a display message **1916** which in this example is the letter capital "P." Light guides **1922** may be optical fibers that make the pixels addressable. Depending on the pitch of the light guide outlets **1914** messages may be generated or controlled. In one example, a message may be controlled by a controller **1924** though the light guides **1922** which may be in communication with a vehicle controller. The light guides **1922** may be controlled on and off by the controller **1924**. Color control may also be used by controller **1924**. That is, the controller **1924** may allow RGB color control at each light guide outlet **1914**.

[0244] The display **1910** may be incorporated into a rear center high-mounted brake light, a tailgate or another rear-

facing display. Messages may be incorporated such as road conditions, vehicle conditions or weather conditions. For example, "hard braking", "ice", "road congestion ahead" may be displayed. The conditions may also be communicated to the cloud **1193** and the cloud controller **1191** where the message may be communicated to different vehicles through the antenna **1926**. The trailing vehicle may recognize the words or indicators generated so that systems like braking or collision avoidance systems of the trailing vehicle is controlled. Signals from the cloud controller may be used in controlling the trailing vehicle as well based on the messages from the leading vehicle and the display thereof.

[0245] The present system provides a benefit of creating the interaction of the ink and light via a transflective surface. The transflective surface that transmits and reflects light giving both a daytime and nighttime appearance. The ink interacts with light and creates spectral modifications. In one example, the ink may be screen printed. Control is implemented to drive the LEDs to enable the visual interface. In a vehicle setting the visual interface may change. For example, in an electric vehicle plugged into a charger, the visual interface may blink slowly or change color or both while charging. Then, when the battery is charged, the visual appearance may change to a second visual interface. For example, a steady green light may indicate the battery being charged. The use of the daughter board is used for control and strategy to mitigate RF emission. RF emission can take place using EMC filtering on the daughter board. The daughter board is between the LED circuit board and the back side of the housing (away from the direction of illumination). EMC issues may be further reduced by making the back housing from metal or metal particles injected into the plastic. The PB board having the LEDS thereon may be formed of or have a layer of metal. When combined with a metal rear housing, the PCB and the rear housing form a Faraday cage around the controller reducing EM emissions therefrom. This may reduce the requirement for other EM filtering. For the animation, the illumination of the inks via piecewise segmented illuminated elements is controlled and may also be user controllable. The LED driver and the channel architecture are set up along with the Gaussian function to create segment to segment transitions in illumination. There is an optothermal nature of the animation optics with segment-to-segment transitions. When implemented in a vehicle, software enabling direct drive from the vehicle may be used. RGB enhancements via photon recycling channels with a transflective ink structure may be used. FNV4 LRM as a non-FMVSS illumination strategy and 2D free for curve with Photon recycling channels may be used. Interaction of the PWM signal light mixing interactions with the structure to eliminate visual flicker. Uniform luminance in the channels enabling uniform interaction of light with the ink pigments.

[0246] The foregoing description of the examples has been provided for purposes of illustration and description. It is not intended to be exhaustive or to limit the invention. Individual elements or features of a particular example are generally not limited to that particular example, but, where applicable, are interchangeable and can be used in a selected example, even if not specifically shown or described. The same may also be varied in many ways. Such variations are not to be regarded as a departure from the invention, and all such modifications are intended to be included within the scope of the invention.

What is claimed is:

1. A display comprising:

a first housing portion having graphic openings therein,

a second housing portion spaced apart from the first housing portion;

a first circuit board comprising a plurality of light emitting diodes (LEDs), said first circuit board disposed between the first housing portion and the second housing portion; and

a first side wall and a second side wall spaced apart from the first side wall, said first side wall and the second side wall defining a plurality of photon recycling cavities in a sequence wherein adjacent photon recycling cavities having a shared end wall, at least one of the plurality of light emitting diodes disposed in each of the plurality of photon recycling cavities, said first side wall comprising a first angular surface and the second side wall comprises a second angular surface, said first angular surface and the second angular surface redirecting light from the an associated LED of the plurality of LEDs so that light from the plurality of light emitting diode is indirectly communicated through the graphic openings after reflecting from the first angular surface and the second angular surface.

2. The display of claim **1** wherein the plurality of LEDs generate a light radiation pattern, in a direction toward the first circuit board, wherein the first side wall and the second side wall are disposed within the radiation pattern.

3. The display of **1** wherein the shared end wall comprises angled surfaces so that light from the plurality of light emitting diodes is indirectly communicated through the graphic openings after reflecting from angled surfaces of the end walls.

4. The display of claim **1** wherein the first side wall, the second side wall and the shared end wall are reflective.

5. The display of claim **1** wherein the first side wall, the first angular surface, the second side wall, and the second angular surface are molded into a monolithic structure.

6. The display of claim **5** wherein the monolithic structure is formed of white plastic.

7. The display of claim **5** wherein the monolithic structure is formed of opaque material.

8. The display of claim **1** wherein the first angular surface and the second angular surface receive light directly from a first LED of the plurality of LEDs.

9. The display of claim **1** wherein the first angular surface and the second angular surface are at between a 40-50 degree angle from a normal to a plane of the circuit board.

10. The display of claim **1** wherein the first circuit board comprises a reflective area between the LED and the first angular surface.

11. The display of claim **10** wherein the reflective area is a reflective solder mask.

12. The display of claim **1** wherein the plurality of LEDs comprises 360 degree side emitting diodes.

13. The display of claim **1** further comprising a second circuit board electrically coupled to the first circuit board.

14. The display of claim **13** wherein the second circuit board comprises a power supply.

15. The display of claim **1** wherein the first housing portion has an inner surface and an outer surface, wherein a transreflective ink applied on the inner surface.

16. The display of claim **15** wherein the transreflective ink is between a light source and the graphic openings.

17. A vehicle comprising:
a grill; and
the display of claim **1** coupled to the grill.
18. A vehicle comprising:
a tailgate; and
the display of claim **1** coupled to the tailgate.
19. A vehicle comprising:
a bumper or body panel,
the display of claim **1** coupled to the bumper or body panel.
20. A method of operating a segmented display comprising:
in a first segment controlling an increase of light output from a first light emitting diode in the first segment according to a first function;
communicating at least part of the light output from the first segment to a second segment;
after communicating at least part of the light from the first segment to the second segment, controlling increase of light output from a second light emitting diode in the second segment according to a second function.

* * * * *