US012396045B2

(12) **United States Patent**
Iyer et al.

(10) **Patent No.: US 12,396,045 B2**
(45) **Date of Patent: *Aug. 19, 2025**

(54) **PAIRING DEVICES BY PROXY**

(71) Applicant: **Apple Inc.**, Cupertino, CA (US)

(72) Inventors: **Deepak Iyer**, Sunnyvale, CA (US); **Thomas Alsina**, Burlingame, CA (US); **Edward T. Schmidt**, Burlingame, CA (US); **Elena Leyfman**, Los Gatos, CA (US); **David P. Saracino**, Alameda, CA (US); **Astrid Yi**, Sunnyvale, CA (US); **Adam A. Sonnanstine**, San Francisco, CA (US); **Jonathan A Bennett**, San Francisco, CA (US); **Gregory R. Chapman**, San Jose, CA (US); **Aparna S. Akella**, Mountain View, CA (US); **Shreyas Nandagudi Sreesha**, Los Altos, CA (US)

(73) Assignee: **Apple Inc.**, Cupertino, CA (US)

(*) Notice: Subject to any disclaimer, the term of this patent is extended or adjusted under 35 U.S.C. 154(b) by 0 days.

This patent is subject to a terminal disclaimer.

(21) Appl. No.: **18/606,898**

(22) Filed: **Mar. 15, 2024**

(65) **Prior Publication Data**

US 2024/0224356 A1 Jul. 4, 2024

Related U.S. Application Data

(63) Continuation of application No. 17/212,897, filed on Mar. 25, 2021, now Pat. No. 11,974,338, which is a (Continued)

(51) **Int. Cl.**
H04W 76/14 (2018.01)
H04W 4/80 (2018.01)
(Continued)

(52) **U.S. Cl.**
CPC ***H04W 76/14*** (2018.02); ***H04W 4/80*** (2018.02); ***H04W 12/50*** (2021.01); ***H04W 76/11*** (2018.02)

(58) **Field of Classification Search**
None
See application file for complete search history.

(56) **References Cited**

U.S. PATENT DOCUMENTS

4,807,224 A 2/1989 Naron et al.
5,534,911 A 7/1996 Levitan
(Continued)

FOREIGN PATENT DOCUMENTS

CN 102959544 A 3/2013
CN 103327377 A 9/2013
(Continued)

OTHER PUBLICATIONS

Slim Devices, Inc., "Slim Devices: Squeezebox: Free Your Music'.," obtained from http://www.slimdevices.com/index.html, generated Jun. 8, 2006, copyright 2002-2004, 1-pg.
(Continued)

Primary Examiner — Christine T Duong
(74) *Attorney, Agent, or Firm* — Invoke

(57) **ABSTRACT**

In some implementations a system can be configured to reduce the burden of pairing user devices with playback devices. For example, all users (or user devices) who commonly operate within a particular environment (e.g., a home) can be configured as authorized users of playback devices within the particular environment. When one of the authorized users pairs a user device with a playback device, all of the user devices for all authorized users can be automatically paired with the playback device as a result of the single pairing. Thus, only a single authorized user is
(Continued)

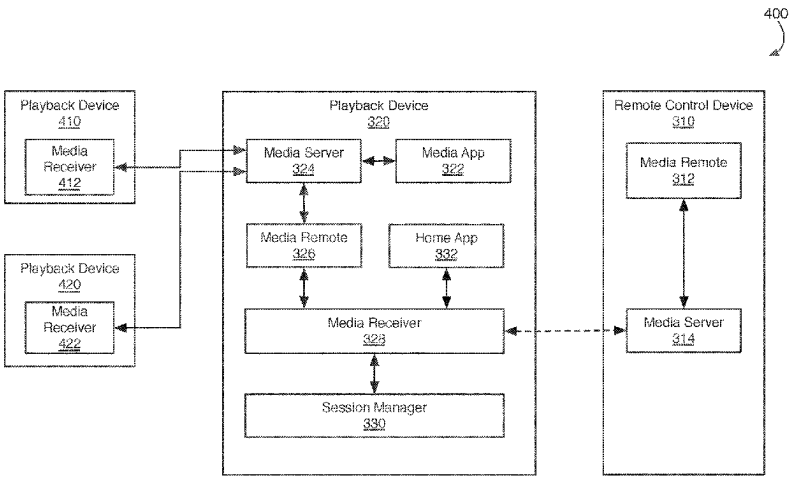

burdened with the pairing process in order to pair all authorized users with the playback device.

17 Claims, 23 Drawing Sheets

Related U.S. Application Data

continuation of application No. 16/287,999, filed on Feb. 27, 2019, now Pat. No. 10,993,274.

(60) Provisional application No. 62/679,967, filed on Jun. 3, 2018, provisional application No. 62/650,692, filed on Mar. 30, 2018.

(51) **Int. Cl.**
H04W 12/50 (2021.01)
H04W 76/11 (2018.01)

(56) **References Cited**

U.S. PATENT DOCUMENTS

5,535,381 A 7/1996 Kopper
5,553,222 A 9/1996 Milne et al.
5,559,945 A 9/1996 Beaudet et al.
5,583,993 A 12/1996 Foster et al.
5,587,404 A 12/1996 Kroener et al.
5,613,863 A 3/1997 Klaus et al.
5,616,876 A 4/1997 Cluts
5,640,566 A 6/1997 Victor et al.
5,664,044 A 9/1997 Ware
5,664,226 A 9/1997 Czako et al.
5,666,530 A 9/1997 Clark et al.
5,696,948 A 12/1997 Cruz et al.
5,709,521 A 1/1998 Glass et al.
5,710,922 A 1/1998 Alley et al.
5,721,949 A 2/1998 Smith et al.
5,722,041 A 2/1998 Freadman
5,727,202 A 3/1998 Kucala
5,739,451 A 4/1998 Winsky et al.
5,745,583 A 4/1998 Koizumi et al.
5,751,997 A 5/1998 Kullick et al.
5,790,521 A 8/1998 Lee et al.
5,815,297 A 9/1998 Ciciora
5,835,721 A 11/1998 Donahue et al.
5,835,732 A 11/1998 Kikinis et al.
5,845,282 A 12/1998 Alley et al.
5,864,868 A 1/1999 Contois
5,867,668 A 2/1999 Spirakis et al.
5,875,354 A 2/1999 Charlton et al.
5,918,213 A 6/1999 Bernard et al.
5,918,303 A 6/1999 Yamaura et al.
5,923,757 A 7/1999 Hocker et al.
5,925,843 A 7/1999 Miller et al.
5,931,906 A 8/1999 Fidelibus et al.
5,953,350 A 9/1999 Higgins
5,963,916 A 10/1999 Kaplan
5,969,283 A 10/1999 Looney et al.
6,000,000 A 12/1999 Hawkins et al.
6,006,274 A 12/1999 Hawkins et al.
6,008,777 A 12/1999 Yiu
6,038,199 A 3/2000 Pawlowski et al.
6,041,023 A 3/2000 Lakhansingh
6,061,306 A 5/2000 Buchheim
6,085,252 A 7/2000 Zhu et al.
6,092,119 A 7/2000 Rossmere et al.
6,101,591 A 8/2000 Foster et al.
6,125,369 A 9/2000 Wu et al.
6,138,245 A 10/2000 Son et al.
6,166,314 A 12/2000 Weinstock et al.
6,172,948 B1 1/2001 Keller et al.
6,208,044 B1 3/2001 Viswanadham et al.
6,212,359 B1 4/2001 Knox
6,216,131 B1 4/2001 Liu et al.
6,240,555 B1 5/2001 Shoff et al.
6,243,328 B1 6/2001 Fenner et al.
6,243,725 B1 6/2001 Hempleman et al.
6,243,772 B1 6/2001 Ghori et al.
6,247,135 B1 6/2001 Feague
6,248,946 B1 6/2001 Dwek
6,263,313 B1 7/2001 Milsted et al.
6,263,503 B1 7/2001 Margulis
6,272,545 B1 8/2001 Flanagin et al.
6,282,714 B1 8/2001 Ghori et al.
6,283,764 B2 9/2001 Kajiyama et al.
6,295,541 B1 9/2001 Bodnar et al.
6,332,175 B1 12/2001 Birrell et al.
6,338,044 B1 1/2002 Cook et al.
6,341,316 B1 1/2002 Kloba et al.
6,345,256 B1 2/2002 Milsted et al.
6,356,971 B1 3/2002 Katz et al.
6,374,177 B1 4/2002 Lee et al.
6,380,947 B1 4/2002 Stead
6,389,467 B1 5/2002 Eyal
6,397,388 B1 5/2002 Allen
6,411,943 B1 6/2002 Crawford
6,429,880 B2 8/2002 Marcos et al.
6,453,281 B1 9/2002 Walters et al.
6,489,986 B1 12/2002 Allen
6,490,432 B1 12/2002 Wegener et al.
6,493,758 B1 12/2002 McLain
6,523,124 B1 2/2003 Lunsford et al.
6,529,233 B1 3/2003 Allen
6,529,804 B1 3/2003 Draggon et al.
6,546,428 B2 4/2003 Baber et al.
6,563,769 B1 5/2003 Van Der Meulen
6,587,403 B1 7/2003 Keller et al.
6,587,404 B1 7/2003 Keller et al.
6,587,480 B1 7/2003 Sanders
6,621,768 B1 9/2003 Keller et al.
6,630,963 B1 10/2003 Billmaier
6,636,873 B1 10/2003 Carini et al.
6,659,861 B1 12/2003 Faris et al.
6,664,981 B2 12/2003 Ashe et al.
6,665,803 B2 12/2003 Lunsford et al.
6,684,060 B1 1/2004 Curtin
6,694,200 B1 2/2004 Naim
6,718,348 B1 4/2004 Novak et al.
6,721,489 B1 4/2004 Benyamin et al.
6,728,585 B2 4/2004 Neoh
6,728,729 B1 4/2004 Jawa et al.
6,731,312 B2 5/2004 Robbin
6,744,738 B1 6/2004 Park et al.
6,757,913 B2 6/2004 Knox
6,760,721 B1 7/2004 Chasen et al.
6,763,345 B1 7/2004 Hempleman et al.
6,766,376 B2 7/2004 Price
6,779,019 B1 8/2004 Mousseau et al.
6,785,542 B1 8/2004 Blight et al.
6,794,566 B2 9/2004 Pachet
6,798,838 B1 9/2004 Ngo
6,801,964 B1 10/2004 Mahdavi
6,831,881 B2 12/2004 Patil et al.
6,845,398 B1 1/2005 Galensky et al.
6,874,037 B1 3/2005 Abram et al.
6,898,159 B2 5/2005 Kudo
6,920,179 B1 7/2005 Anand et al.
6,925,595 B1 8/2005 Whitledge et al.
6,928,433 B2 8/2005 Goodman et al.
6,929,058 B2 8/2005 Liu et al.
6,935,627 B2 8/2005 Jung
6,941,324 B2 9/2005 Plastina et al.
6,944,880 B1 9/2005 Allen
6,947,598 B2 9/2005 Yogeshwar et al.
6,956,562 B1 10/2005 O'Hara et al.
6,959,288 B1 10/2005 Medina et al.
6,959,562 B2 11/2005 Navedo et al.
6,978,127 B1 12/2005 Bulthuis et al.
6,981,259 B2 12/2005 Luman et al.
6,985,966 B1 1/2006 Gupta et al.
6,987,221 B2 1/2006 Platt
6,993,532 B1 1/2006 Platt et al.
6,993,722 B1 1/2006 Greer et al.

(56) **References Cited**

U.S. PATENT DOCUMENTS

6,999,826	B1	2/2006	Zhou et al.
7,010,758	B2	3/2006	Bate
7,016,443	B1	3/2006	Splett
7,022,905	B1	4/2006	Hinman et al.
7,024,214	B2	4/2006	Loveland
7,024,491	B1	4/2006	Hanmann et al.
7,024,575	B2	4/2006	Lienhart et al.
7,034,891	B2	4/2006	Joung et al.
7,039,656	B1	5/2006	Tsai et al.
7,047,308	B2	5/2006	Deshpande
7,069,058	B2	6/2006	Kawashima
7,075,000	B2	7/2006	Gang et al.
7,076,204	B2	7/2006	Richenstein et al.
7,082,310	B2	7/2006	Hirayama et al.
7,082,320	B2	7/2006	Kattukaran et al.
7,084,898	B1	8/2006	Firestone et al.
7,096,271	B1	8/2006	Omoigui et al.
7,111,009	B1	9/2006	Gupta et al.
7,130,892	B2	10/2006	Mukai
7,136,934	B2	11/2006	Carter et al.
7,142,934	B2	11/2006	Janik
7,143,939	B2	12/2006	Henzerling
7,146,322	B2	12/2006	Cowgill
7,166,791	B2	1/2007	Robbin et al.
7,174,560	B1	2/2007	Crinon
7,184,774	B2	2/2007	Robinson et al.
7,185,084	B2	2/2007	Sirivara et al.
7,194,692	B2	3/2007	Marcos et al.
7,200,357	B2	4/2007	Janik et al.
7,228,054	B2	6/2007	Cowgill
7,260,714	B2	8/2007	Dawson et al.
7,266,713	B2	9/2007	Lienhart et al.
7,281,141	B2	10/2007	Elkayam et al.
7,283,880	B2	10/2007	Dick
7,289,393	B2	10/2007	Keller et al.
7,295,809	B2	11/2007	Moore
7,295,983	B2	11/2007	Fujiwara et al.
7,302,239	B2	11/2007	Jitsuhara
7,305,691	B2	12/2007	Cristofalo
7,312,785	B2	12/2007	Tsuk et al.
7,330,868	B2	2/2008	Kawasaki et al.
7,336,675	B2	2/2008	Naik et al.
7,343,553	B1	3/2008	Kaye
7,346,698	B2	3/2008	Hannaway
7,359,671	B2	4/2008	Richenstein et al.
7,367,701	B2	5/2008	Lee
7,369,532	B2	5/2008	Silvester
7,370,129	B2	5/2008	Green et al.
7,391,791	B2	6/2008	Balassanian et al.
7,406,294	B1	7/2008	Liu
7,418,472	B2	8/2008	Shoemaker et al.
7,418,673	B2	8/2008	Oh
7,424,024	B2	9/2008	Chen et al.
7,430,753	B2	9/2008	Gray et al.
7,437,158	B2	10/2008	Russell
7,444,388	B1	10/2008	Svendsen
7,447,815	B2	11/2008	Weaver et al.
7,461,130	B1	12/2008	Abdelaziz et al.
7,469,283	B2	12/2008	Eyal et al.
7,471,988	B2	12/2008	Smith et al.
7,474,677	B2	1/2009	Trott
7,477,653	B2	1/2009	Smith et al.
7,480,746	B2	1/2009	Simon et al.
7,483,538	B2	1/2009	McCarty et al.
7,502,604	B2	3/2009	Knox
7,505,483	B2	3/2009	Jeon et al.
7,508,815	B2	3/2009	Lapeyre et al.
7,519,681	B2	4/2009	Edwards et al.
7,519,686	B2	4/2009	Hong et al.
7,532,862	B2	5/2009	Cheshire
7,539,777	B1	5/2009	Aitken
7,542,784	B2	6/2009	Passier et al.
7,543,245	B2	6/2009	Irimajiri
7,555,291	B2	6/2009	Wassingbo
7,561,215	B2	7/2009	Kim et al.
7,577,261	B2	8/2009	Liu et al.
7,606,570	B2	10/2009	Karaoguz et al.
7,617,513	B2	11/2009	McCafferty et al.
7,620,011	B2	11/2009	Kim et al.
7,627,343	B2	12/2009	Fadell et al.
7,634,227	B2	12/2009	De Jong
7,647,346	B2	1/2010	Silverman et al.
7,650,470	B2	1/2010	Poo
7,657,706	B2	2/2010	Iyer et al.
7,680,849	B2	3/2010	Heller et al.
7,689,095	B2	3/2010	Sugiyama et al.
7,698,297	B2	4/2010	Jawa et al.
7,698,723	B2	4/2010	Hicks et al.
7,706,901	B2	4/2010	Berreth
7,724,780	B2	5/2010	Baird et al.
7,725,912	B2	5/2010	Margulis
7,734,688	B2	6/2010	Langdon
7,765,326	B2	7/2010	Robbin et al.
7,769,903	B2	8/2010	Robbin et al.
7,797,446	B2	9/2010	Heller et al.
7,821,574	B2	10/2010	Black
7,827,259	B2	11/2010	Heller et al.
7,853,341	B2	12/2010	McCarty et al.
7,890,661	B2	2/2011	Spurgat et al.
7,899,915	B2	3/2011	Reisman
7,903,690	B2	3/2011	Wakid
7,950,037	B2	5/2011	Mensch
7,996,505	B2	8/2011	Krantz et al.
8,037,220	B2	10/2011	Moore et al.
8,041,438	B2	10/2011	Batson et al.
8,169,938	B2	5/2012	Duchscher et al.
8,171,177	B2	5/2012	Rostaing et al.
8,184,657	B2	5/2012	Dacosta
8,185,674	B2	5/2012	Moore et al.
8,214,447	B2	7/2012	Deslippe et al.
8,266,657	B2	9/2012	Margulis
8,284,739	B2	10/2012	Doyle et al.
8,285,727	B2	10/2012	Weber et al.
8,301,790	B2	10/2012	Morrison et al.
8,374,087	B2	2/2013	Dacosta
8,423,893	B2	4/2013	Ramsay et al.
8,443,038	B2	5/2013	Robbin et al.
8,539,533	B2	9/2013	Caspi et al.
8,689,036	B2	4/2014	Millington et al.
8,797,926	B2	8/2014	Kearney et al.
8,918,541	B2	12/2014	Morrison et al.
8,957,972	B2	2/2015	Gluskin et al.
9,182,777	B2	11/2015	Millington
9,189,011	B2	11/2015	Millington
9,195,258	B2	11/2015	Millington
9,207,905	B2	12/2015	Millington
9,389,745	B1	7/2016	Leatham
9,417,689	B1	8/2016	Ramaswamy
9,448,683	B2	9/2016	Robbin et al.
9,729,630	B2	8/2017	Bradley et al.
9,763,018	B1	9/2017	McPherson et al.
9,826,012	B2	11/2017	Hao et al.
10,209,953	B2	2/2019	Millington
10,362,346	B2	7/2019	Mayalil et al.
10,439,896	B2	10/2019	Millington et al.
10,448,080	B1	10/2019	Nijim et al.
10,523,740	B2	12/2019	Igoe
2001/0004310	A1	6/2001	Kono
2001/0008535	A1	7/2001	Lanigan
2001/0011308	A1	8/2001	Clark et al.
2001/0018858	A1	9/2001	Dwek
2001/0021053	A1	9/2001	Colbourne et al.
2001/0021305	A1	9/2001	Sugiyama et al.
2001/0021998	A1	9/2001	Margulis
2001/0041021	A1	11/2001	Boyle et al.
2001/0044835	A1	11/2001	Schober et al.
2001/0048642	A1	12/2001	Berhan
2001/0052123	A1	12/2001	Kawai
2002/0002413	A1	1/2002	Tokue
2002/0013784	A1	1/2002	Swanson
2002/0013852	A1	1/2002	Janik
2002/0013853	A1	1/2002	Baber et al.
2002/0019984	A1	2/2002	Rakib
2002/0022453	A1	2/2002	Balog et al.

(56) **References Cited**

U.S. PATENT DOCUMENTS

2002/0045960 A1 4/2002 Phillips et al.
2002/0046315 A1 4/2002 Miller et al.
2002/0055934 A1 5/2002 Lipscomb et al.
2002/0073139 A1 6/2002 Hawkins et al.
2002/0074413 A1 6/2002 Henzerling
2002/0078075 A1 6/2002 Colson et al.
2002/0081098 A1 6/2002 Scally
2002/0095663 A1 7/2002 Joory
2002/0103554 A1 8/2002 Coles et al.
2002/0113824 A1 8/2002 Myers
2002/0116082 A1 8/2002 Gudorf
2002/0118848 A1 8/2002 Karpenstein
2002/0133515 A1 9/2002 Kagle et al.
2002/0133824 A1 9/2002 Mensch
2002/0138606 A1 9/2002 Robison
2002/0156921 A1 10/2002 Dutta et al.
2002/0161865 A1 10/2002 Nguyen
2002/0164973 A1 11/2002 Janik et al.
2002/0174243 A1 11/2002 Spurgat et al.
2002/0174269 A1 11/2002 Spurgat et al.
2002/0194309 A1 12/2002 Carter et al.
2002/0196912 A1 12/2002 Norris
2003/0013332 A1 1/2003 Lin
2003/0013492 A1 1/2003 Bokhari et al.
2003/0013493 A1 1/2003 Irimajiri et al.
2003/0030733 A1 2/2003 Seaman et al.
2003/0037254 A1 2/2003 Fischer et al.
2003/0045955 A1 3/2003 Janik
2003/0046434 A1 3/2003 Flanagin et al.
2003/0050058 A1 3/2003 Walsh et al.
2003/0065802 A1 4/2003 Vitikainen et al.
2003/0074457 A1 4/2003 Kluth
2003/0076301 A1 4/2003 Tsuk et al.
2003/0079038 A1 4/2003 Robbin et al.
2003/0083954 A1 5/2003 Namba
2003/0097379 A1 5/2003 Ireton
2003/0112279 A1 6/2003 Irimajiri
2003/0120742 A1 6/2003 Ohgami et al.
2003/0131360 A1 7/2003 Joung et al.
2003/0134589 A1 7/2003 Oba
2003/0158737 A1 8/2003 Csicsatka
2003/0167318 A1 9/2003 Robbin et al.
2003/0181203 A1 9/2003 Cheshire
2003/0182315 A1 9/2003 Plastina et al.
2003/0191756 A1 10/2003 Oh
2003/0197725 A1 10/2003 Tuli
2003/0210821 A1 11/2003 Yogeshwar et al.
2003/0221161 A1 11/2003 Balassanian et al.
2003/0221541 A1 12/2003 Platt
2003/0229900 A1 12/2003 Reisman
2004/0001395 A1 1/2004 Keller et al.
2004/0001396 A1 1/2004 Keller et al.
2004/0001494 A1 1/2004 Barrack et al.
2004/0003151 A1 1/2004 Bateman et al.
2004/0004338 A1 1/2004 Jung
2004/0017997 A1 1/2004 Cowgill
2004/0027930 A1 2/2004 Kudo
2004/0031058 A1 2/2004 Reisman
2004/0045030 A1 3/2004 Reynolds et al.
2004/0055446 A1 3/2004 Robbin et al.
2004/0057446 A1 3/2004 Varsa et al.
2004/0068536 A1 4/2004 Demers et al.
2004/0072584 A1 4/2004 Kern
2004/0076086 A1 4/2004 Keller et al.
2004/0078416 A1 4/2004 Kawasaki et al.
2004/0128198 A1 7/2004 Register et al.
2004/0128402 A1 7/2004 Weaver et al.
2004/0132510 A1 7/2004 Yamashita
2004/0133908 A1 7/2004 Smith et al.
2004/0139180 A1 7/2004 White et al.
2004/0139233 A1 7/2004 Kellerman et al.
2004/0139844 A1 7/2004 Tsuboi
2004/0143442 A1 7/2004 Knight
2004/0157548 A1 8/2004 Eyer
2004/0174896 A1 9/2004 Caspi et al.
2004/0177063 A1 9/2004 Weber et al.
2004/0177371 A1 9/2004 Caspi et al.
2004/0177377 A1 9/2004 Lin et al.
2004/0179540 A1 9/2004 Lee et al.
2004/0193900 A1 9/2004 Nair
2004/0215611 A1 10/2004 Jawa et al.
2004/0215810 A1 10/2004 Tan et al.
2004/0216108 A1 10/2004 Robbin
2004/0220926 A1 11/2004 Lamkin et al.
2004/0221088 A1 11/2004 Lisitsa et al.
2004/0223622 A1 11/2004 Lindemann et al.
2004/0225762 A1 11/2004 Poo
2004/0234088 A1 11/2004 McCarty et al.
2004/0236568 A1 11/2004 Guillen et al.
2004/0242224 A1 12/2004 Janik et al.
2004/0250273 A1 12/2004 Swix et al.
2004/0252604 A1 12/2004 Johnson et al.
2004/0255326 A1 12/2004 Hicks et al.
2004/0261040 A1 12/2004 Radcliffe et al.
2004/0261112 A1 12/2004 Hicks et al.
2004/0267825 A1 12/2004 Novak et al.
2005/0010616 A1 1/2005 Burks
2005/0055444 A1 3/2005 Venkatasubramanian
2005/0071375 A1 3/2005 Houghton et al.
2005/0080915 A1 4/2005 Shoemaker et al.
2005/0089052 A1 4/2005 Chen et al.
2005/0147130 A1 7/2005 Hurwitz et al.
2005/0174488 A1 8/2005 Chennakeshu
2005/0201360 A1 9/2005 Redstone
2005/0201398 A1 9/2005 Naik et al.
2005/0207726 A1 9/2005 Chen
2005/0210101 A1 9/2005 Janik
2005/0226233 A1 10/2005 Kryuchkov et al.
2005/0235015 A1 10/2005 Abanami et al.
2005/0235048 A1 10/2005 Costa-Requena et al.
2005/0240494 A1 10/2005 Cue et al.
2005/0240661 A1 10/2005 Heller et al.
2005/0240745 A1 10/2005 Iyer et al.
2005/0254447 A1 11/2005 Miller-Smith
2005/0262528 A1 11/2005 Herley et al.
2005/0265316 A1 12/2005 Liu et al.
2005/0273790 A1 12/2005 Kearney et al.
2005/0282494 A1 12/2005 Kossi et al.
2005/0289224 A1 12/2005 Deslippe et al.
2006/0007943 A1 1/2006 Fellman
2006/0015580 A1 1/2006 Gabriel et al.
2006/0027080 A1 2/2006 Schultz
2006/0030961 A1 2/2006 Lin
2006/0062242 A1 3/2006 Dacosta
2006/0062243 A1 3/2006 Dacosta
2006/0067463 A1 3/2006 Hack et al.
2006/0069724 A1 3/2006 Langdon
2006/0074637 A1 4/2006 Berreth
2006/0083194 A1 4/2006 Dhrimaj et al.
2006/0090202 A1 4/2006 Liu et al.
2006/0092844 A1 5/2006 Jeon et al.
2006/0100978 A1 5/2006 Heller et al.
2006/0106806 A1 5/2006 Sperling et al.
2006/0117371 A1 6/2006 Margulis
2006/0126667 A1 6/2006 Smith et al.
2006/0143455 A1 6/2006 Gitzinger
2006/0159109 A1 7/2006 Lamkin et al.
2006/0167982 A1 7/2006 Jawa et al.
2006/0168340 A1 7/2006 Heller et al.
2006/0168351 A1 7/2006 Ng et al.
2006/0224620 A1 10/2006 Silverman et al.
2006/0245451 A1 11/2006 Wakid
2006/0253279 A1 11/2006 Sung
2006/0274747 A1 12/2006 Duchscher et al.
2006/0277216 A1 12/2006 Shukhman
2006/0288057 A1 12/2006 Collins et al.
2007/0033052 A1 2/2007 Cowgill
2007/0038941 A1 2/2007 Wysocki et al.
2007/0067309 A1 3/2007 Klein et al.
2007/0067808 A1 3/2007 DaCosta
2007/0073723 A1 3/2007 Ramer et al.
2007/0073728 A1 3/2007 Klein et al.
2007/0074118 A1 3/2007 Robbin et al.
2007/0084333 A1 4/2007 Robbin et al.

(56) **References Cited**

U.S. PATENT DOCUMENTS

2007/0088727	A1	4/2007	Kindig
2007/0088764	A1	4/2007	Yoon et al.
2007/0110074	A1	5/2007	Bradley et al.
2007/0124680	A1	5/2007	Robbin et al.
2007/0130541	A1	6/2007	Louch et al.
2007/0169115	A1	7/2007	Ko et al.
2007/0185919	A1	8/2007	Kaplan et al.
2007/0203954	A1	8/2007	Vargas et al.
2007/0220552	A1	9/2007	Juster et al.
2007/0250761	A1	10/2007	Bradley et al.
2007/0271312	A1	11/2007	Heller et al.
2007/0291323	A1	12/2007	Roncal
2008/0018927	A1	1/2008	Martin et al.
2008/0028008	A1	1/2008	Brunet et al.
2008/0040758	A1	2/2008	Beetcher et al.
2008/0065247	A1	3/2008	Igoe
2008/0086494	A1	4/2008	Heller et al.
2008/0164581	A1	7/2008	Cho et al.
2008/0168185	A1	7/2008	Robbin et al.
2008/0168245	A1	7/2008	De et al.
2008/0168391	A1	7/2008	Robbin et al.
2008/0168525	A1	7/2008	Heller et al.
2008/0168526	A1	7/2008	Robbin et al.
2008/0168568	A1	7/2008	Brodersen et al.
2008/0229335	A1	9/2008	Robbin et al.
2009/0006671	A1	1/2009	Batson et al.
2009/0170546	A1	7/2009	Nishida
2009/0172200	A1	7/2009	Morrison et al.
2009/0290725	A1	11/2009	Huang
2010/0309962	A1	12/2010	Freundlich et al.
2011/0210820	A1	9/2011	Talty et al.
2011/0264732	A1	10/2011	Robbin et al.
2012/0180093	A1	7/2012	Ishihara et al.
2013/0007819	A1	1/2013	Choi et al.
2013/0058593	A1	3/2013	Kanalakis et al.
2013/0174208	A1	7/2013	Lee et al.
2013/0243199	A1	9/2013	Kallai et al.
2013/0311694	A1	11/2013	Bhamidipati et al.
2014/0006946	A1	1/2014	Robbin et al.
2014/0006947	A1	1/2014	Garmark et al.
2014/0032778	A1	1/2014	Sim
2014/0037097	A1	2/2014	Mark
2014/0096165	A1	4/2014	Bei et al.
2014/0178028	A1	6/2014	Park et al.
2014/0181202	A1	6/2014	Gossain
2014/0244863	A1	8/2014	Bradley et al.
2014/0250219	A1	9/2014	Hwang
2014/0302787	A1	10/2014	Rantala et al.
2014/0307585	A1	10/2014	Kearney et al.
2014/0351876	A1	11/2014	Kano
2014/0380167	A1	12/2014	Bloch et al.
2015/0092947	A1	4/2015	Gossain et al.
2015/0181286	A1	6/2015	Gonzalez
2015/0373401	A1	12/2015	Kwon et al.
2016/0027399	A1	1/2016	Wilde et al.
2016/0044367	A1	2/2016	Matsubara et al.
2016/0066184	A1	3/2016	Bhargav-Spantzel et al.
2016/0073197	A1	3/2016	Hammer et al.
2016/0140546	A1	5/2016	Taratine et al.
2016/0149891	A1	5/2016	Kuper et al.
2016/0198198	A1	7/2016	Iwami et al.
2016/0219329	A1	7/2016	Jee et al.
2016/0255391	A1	9/2016	Noble
2016/0266868	A1	9/2016	Allen
2016/0342378	A1	11/2016	Coburn
2017/0019443	A1	1/2017	Conan et al.
2017/0054774	A1	2/2017	Robbin et al.
2017/0208357	A1	7/2017	Greene
2017/0242651	A1	8/2017	Lang et al.
2017/0242653	A1*	8/2017	Lang G06F 3/167
2017/0242656	A1*	8/2017	Plagge H04L 12/2803
2017/0269900	A1	9/2017	Triplett
2017/0311368	A1	10/2017	Kandur et al.
2018/0049146	A1	2/2018	Daley et al.
2018/0070122	A1	3/2018	Baek et al.
2018/0167373	A1	6/2018	Anderson et al.
2018/0337924	A1	11/2018	Graham et al.
2018/0337953	A1	11/2018	Maher et al.
2021/0344669	A1	11/2021	Yang et al.

FOREIGN PATENT DOCUMENTS

CN	104469413	A	3/2015
CN	104581190	A	4/2015
CN	104980820	A	10/2015
CN	105144130	A	12/2015
CN	105379177	A	3/2016
CN	105493115	A	4/2016
CN	106063283	A	10/2016
CN	106254903	A	12/2016
CN	106412665	A	2/2017
CN	106416130	A	2/2017
CN	106452644	A	2/2017
CN	106465057	A	2/2017
CN	110677700	A	1/2020
EP	0146334	A2	6/1985
EP	0830026	A2	3/1998
EP	0917077	A2	5/1999
EP	0982732	A1	3/2000
EP	1028425	A2	8/2000
EP	1112931	A2	7/2001
EP	1122931	A2	8/2001
EP	1143719	A2	10/2001
EP	1353269	A2	10/2003
EP	1408427	A2	4/2004
EP	1429569	A1	6/2004
EP	1463334	A2	9/2004
EP	1523171	A1	4/2005
EP	1548740	A2	6/2005
EP	1751949	A1	2/2007
EP	1942430	A1	7/2008
EP	2360887	A1	8/2011
EP	2375678	A1	10/2011
JP	2000-339917	A	12/2000
JP	2001-093226	A	4/2001
JP	2001-117800	A	4/2001
JP	2003-077214	A	3/2003
JP	2003-303137	A	10/2003
JP	2003-319485	A	11/2003
KR	10-2001-0063284	A	7/2001
KR	10-2001-0079176	A	8/2001
KR	10-2002-0001127	A	1/2002
KR	10-2002-0011027	A	2/2002
KR	10-2006-0035634	A	4/2006
KR	10-0599204	B1	7/2006
WO	94/08337	A1	4/1994
WO	95/16950	A1	6/1995
WO	00/16533	A1	3/2000
WO	00/43914	A1	7/2000
WO	01/26374	A1	4/2001
WO	01/33569	A1	5/2001
WO	01/67753	A1	9/2001
WO	02/25610	A1	3/2002
WO	02/25935	A2	3/2002
WO	02/65723	A1	8/2002
WO	02/65732	A1	8/2002
WO	2003/009601	A1	1/2003
WO	2003/023786	A2	3/2003
WO	03/38637	A1	5/2003
WO	2003/036541	A1	5/2003
WO	2004/004338	A1	1/2004
WO	2004/034286	A1	4/2004
WO	2004/057474	A1	7/2004
WO	2004/084413	A2	9/2004
WO	2005/060387	A2	7/2005
WO	2005/114472	A1	12/2005
WO	2005/122531	A1	12/2005
WO	2006/007322	A2	1/2006
WO	2006/047578	A2	5/2006
WO	2007/079360	A1	7/2007

(56) **References Cited**

FOREIGN PATENT DOCUMENTS

WO	2007/079334 A3	8/2007
WO	2008/033771 A2	3/2008

OTHER PUBLICATIONS

Slim Devices, Inc., "Squeezebox 2: Owners Guide," copyright 2005, 28-pgs.
Slim Devices, Inc., "Squeezebox: Owner's Guide," copyright 2006, 32-pgs.
Slim Devices. Inc. "Slim Devices: Squeezebox: Overview." obtained from http://www.slimdevices.com/pi_overview.html. generated Jun. 21, 2006. copyright 2002-2006. 3-pgs.
Slim Devices. Inc. "Slim Devices: Support: FAQ." obtained from http://www.slimdevices.com/su_faq.html.generated Jun. 21, 2006. copyright 2002-2006. 31-pgs.
SNARFED.ORG, "History of Synchronizing mp3 playback," http://snarfed.org/exec/history?name=synchronizing+mp3+playback, generated Jun. 8, 2006, 2 pgs.
SNARFED.ORG, "libmsntp," obtained from http://snarfed.org/space/libmsntp, generated Jun. 8, 2006, undated, 2-pgs.
SoundJam MP Plus Manual, version 2.0—MP3 Player and Encoder for Macintosh by Jeffrey Robbin, Bill Kincaid and Dave Heller, manual by Tom Negrino, published by Casady & Greene, Inc. 2000. 80 pages (U.S. Appl. No. 11/519,429).
Steinberg, "Sonicblue Rio Car," Product Review, Dec. 12, 2000 (downloaded from http://electronics.cnet.com/electronics/0-6342420-1304-4098389.html).
Stenton, Stuart P., Richard Hull, Patrick M. Goddi, Josephine E. Reid, Ben JC Clayton, Tom J. Melamed, and Susie Wee." Mediascapes: Context-aware multimedia experiences." IEEE Multi Media 14, No. 3 (2007): 98-105. (Year: 2007).
Stewart et al., "Request for Comments: 3758," Network Working Group, May 2004, 22-pgs.
Titmus, Richard, "Softsqueeze 2.0," obtained from http://softsqueeze.souceforge.net/, generated Jun. 8, 2006, copyright 2004, 2005, 3-pgs.
Top Stores of Dec. 18, 2001: Apple posts Automated Scripts for iTunes 2.03. downloaded 9 pages on Apr. 11, 2012 from the internet at: http://www.xlr8yourmac.com/archive/dec01/121801.html (U.S. Appl. No. 11/519,429).
Travis Butler, "Archos Jukebox 6000 Challenges Nomad Jukebox," Aug. 13, 2001, available from http://db.tidbits.com/getbits.acgi?tbart=06521—Downloaded Jul. 13, 2011 @ http://www.tidbits.com/article/6521?printversion=1 (U.S. Appl. No. 11/519,429).
Travis Butler, "Portable MP3: The Nomad Jukebox," Aug. 1, 2001, available from http://db.tidbits.com/getbits.acgi?tbart=06261. downloaded Jul. 13, 2011 at http://www.tidbits.com/article/6261 (U.S. Appl. No. 11/519,429).
TuneBase 100 User Guide, A CD Library Management System, Escient, Inc. copyright 1999. (101 Pages) (U.S. Appl. No. 11/519,429).
TuneBase Pro Mk-II User's Guide, Escient, Inc., (1999) Downloaded Jul. 25, 2011 (U.S. Appl. No. 11/519,429).
Vetro et al., "Media Conversions to Support Mobile Users," IEEE Canadian Conference on Electrical and Computer Engineering, Piscataway, NJ, May 13, 2001, pp. 606-612 pp. 1-6 from IEEE on Jul. 2011 (U.S. Appl. No. 11/519,429).
Wikipedia, "IEEE 1394" (Firewire and also known as Sony's ilink) (downloaded from https://en.wikipedia.org/wiki/IEEE1394).
Wikipedia: "iTunes", www.wikipedia.com, May 9, 2005, 6 pages. (U.S. Appl. No. 11/519,429).
Window's Media Player 6.4, Microsoft Corp., copyright 1999, software available at http://www.oldversion.com/program.php?n=wmp [.about. Downloaded Jul. 13, 2011 at: http://www.microsoft.com/download.en/confirmation.axps?displaylang-en&id =-22758] (U.S. Appl. No. 11/519,429).
Zheng et al., "MobiGATE: a mobile gateway proxy for the active deployment of transport entities," Proceedings of the 2004 International Conference on Parallel Processing, Piscataway, NJ, Aug. 15, 2004 pp. 1-8 from IEEE on Jul. 2011 (U.S. Appl. No. 11/519,429).
"Communication Relating to the Results of the Partial International Search" received in corresponding PCT Application No. PCT/US2006/062355 dated May 3, 2007.
Apple Inc. "Apple Introduces iTunes—World's Best and Easiest To Use Jukebox Software," MacWorld Expo, San Francisco, 2 pp. Jan. 9, 2001 (https://www.apple.com/pr/library/2001/01/09Apple-Introduces-iTunes-Worlds-Best-and-Easiest-To-Use-Jukebox-S.
Apple Inc., "Apple Announces iTunes 2," Press Release, 2 pp. Oct. 23, 2001 (downloaded from http://www.apple.com/pr/library/2001/10/23Apple-Announces-iTunes-2.html).
Apple Inc., "iTunes 2, Digital Music for the Mac," Specification Sheet, 2 pgs, Oct. 2001.
Apple Inc., "iTunes, Playlist Related Help Screens," iTunes v1.0, 8 pgs, Jan. 2001.
Apple Introduces iTunes—World's Best and Easiest to Use Jukebox Software, Macworld Expo, San Francisco, Jan. 9, 2011 [.about.2 pages Downloaded on Jul. 14, 2011 at http://www.apple.com/pr/library/2001/01/09Apple-Introduces-iTunes-Worlds--Best and Ea . . .] (U.S. Appl. No. 11/519,429).
Apple, "AirPort Express," Technology Overview, Jul. 2004, 31-pgs.
Apple, "Mac OS X: Bonjour," Technology Brief, Apr. 2005, 6-pgs.
Awbrey, "Apple's iPod Available in Stores Tomorrow," Press Release, Nov. 9, 2001 (downloaded Jul. 14, 2011 from http://www.apple.com/pr/library/2001/11/09Apple-s-iPod-Available).
Book, "Special Edition Using Microsoft 1-18 Windows Millennium Passage", Special Edition Using Microsoft Windows Millennium Edition, Nov. 3, 2000, pp. 1-24. (U.S. Appl. No. 11/519,429).
Bridgman, "Windows XP Expert Zone Community Columnist", Using Windows Mobile-based Portable Media Centers and Windows Media Player 10, Aug. 25, 2004, 1-11. (U.S. Appl. No. 11/519,429).
Butler, "Archos Jukebox 6000 Challenges Nomad Jukebox," 6 pgs, Aug. 13, 2001 (from http://db.tidbits.com/getbits.acgi?tbart=06521 (downloaded Jul. 13, 2011 from http://www.tidbits.com/article/6521?printversion=1).
Butler, "Portable MP3: The Nomad Jukebox," Aug. 1, 2001 (http:Ildb.tidbits.com/getbits.acgi? tbart=06261, downloaded Jul. 13, 2011 from http://www.tidbits.com/article/6261).
Chakarova et al., "Digital Still Cameras, Downloading Images to a Computer," Multi-Media Reporting and Convergence, 2 pgs.
Clifton, David, Pipe.c, A Kla2 Module', 2003, 10 pages. (Retrieved on Oct. 17, 2011) from http://www.codelode.com/Kemel/kla2pepec.html. [Apr. 18, 2012 downloaded from http:/web.archive.org/2004010719482/http://www.codelode.com/Kernel/kla2p-ipec . . .] (U.S. Appl. No. 11/306,557).
Communication from European Patent Office for European Patent Application No. EP05731980, dated Dec. 8, 2010; 6 pages.
Compaq Computer Corp., "Personal Jukebox," 2 pgs, Jan. 24, 2001 (downloaded from http://research.compaq.com/SRC/pjb/).
Compaq Computer Corp., "Systems Research Center and PAAD," Personal Jukebox (PJB), 25 pgs, Oct. 13, 2000 (downloaded from http://research.compaq.com/SRC/pjb/; redownloaded Apr. 2016 from http://birrell.org/andrew/talks/pjb-overview.pdf).
Search Report and Written Opinion received in Co-pending PCT patent application (PCT/US2005/011635) dated Oct. 21, 2005.
D-Link's New Wireless Media Device Plays Digital Music, Videos, and Photos on Home Television and Stereo; Retrieved from URL:http://presslink.dlink.com/pr/?prid=136, dated Jan. 20, 2004; 2-pgs.
De Herrera, Chris, "Microsoft ActiveSync 3.1" Version 1.02, (Oct. 13, 2000 Downloaded Aug. 16, 2011 From http://www.pocketpcfaq.com/wce/activesync3.1.htm (U.S. Appl. No. 11/519,429).
Engst, "SoundJam Keeps on Jammin'," Jun. 19, 2000, (http://db.tidbits.com/getbits.acgi? tbart=05988, downloaded Jul. 25, 2011 from http ?..db.tidbits.com/article/5988?print version+1).
Erdmann et al., "iPod+iTunes," O'Reilly, 157 pgs, 2006 (German).
Etchison, "Accelerated discrete Adjustment of the Parameters of a Process", IBM Technical Disclosure Bulletin, vol. 15, No. 5, Oct. 1, 1972, 2 pgs. (U.S. Appl. No. 11/519,429).
Extended European Search Report for EP Patent Application No. EP10184674 mailed on Dec. 13, 2010, 9 pages.

(56) **References Cited**

OTHER PUBLICATIONS

Final Office Action of Apr. 27, 2011 for U.S. Appl. No. 11/306,557, 13 pages.
Final Office Action of Jun. 23, 2011 for U.S. Appl. No. 11/696,679, 19 pages.
Final Office Action of Nov. 25, 2008, for U.S. Appl. No. 10/862,115, 22 pages.
Final Office Action of Nov. Aug. 9, 2010 for U.S. Appl. No. 11/306,557; 24 pages.
Firewire, IEEE 1394 (also known as Sony's iLink), (http://www.wikipedia.org/wiki/Firewire (1995)). Download Jul. 13, 2011—http://en.wikipedia.org/wiki/IEEE.sub.~1393.sub-interface (U.S. Appl. No. 11/519,429).
Fukuda, "Perfect Guide for Digital/Auio Technique to Enjoy Music in PC," Nikkei Click, Japan, Nikkei Business Publications, Inc., vol. 6, No. 10, pge 169, Sep. 8, 1999.
Glenn Fleishman, "Handheld iPod joins MP3 band a bit late, but is standout player," Nov. 6, 2001, http://seattletimes,nwsource.com/html/businesstechnology/134361811.sub.---ptmacc040.html. [Downloaded Jul. 21, 2011 from http://web.archive.org/...001110233639/http://seattletimes.nwsource.com/h-tml/businesstechnology/134361811.sub.--ptmacc040.html] (U.S. Appl. No. 11/519,429).
Handbook for Palm.TM. m500 Series Handhelds, User Manual.—(286 pages) (U.S. Appl. No. 11/519,429).
Harmony Central, "Diamond Multimedia Announces Rio PMP300 Portable MP3 Music Player", Press Release, 4 pp. Sep. 14, 1998 (http://news.harmony-central.com/Newp/1988/Rio-Pump300.html, downloaded Aug. 16, 2011 from http://web.archive.org/web/20030705005208/http:/.
Hei et al., "iPod+iTunes," iTunes7, Markt+Technik Verlag, 54 pgs, Dec. 22, 2006 (German).
Hewlett Packard, "Hewlett Packard Jornada 525 Color Pocket PC," (downloaded Jan. 25, 2002, http://www.pc4d.com/electronics/ products/56/jornada 525 color pocket pc.shtml).
International Preliminary Report on Patentability of Dec. 28, 2006 and Written Opinion for PCT Patent Application No. PCT/US2005/020139, 12 pages.
International Search Report and Written Opinion for Patent Application No. PCT/US2006/062003 mail date of Jul. 10, 2007, 21 pages.
International Search Report and Written Opinion for PCT/US2007/078043, mailed Aug. 18, 2008 (U.S. Appl. No. 11/519,429).
International Search Report and Written Opinion received in corresponding PCT application No. PCT/US2006/062003 dated Aug. 30, 2007.
International Search Report of Mar. 29, 2006 for PCT Patent Application No. PCT/US2005/020139, 7 pages.
International Search Report received in PCT application No. PCT/US2006/062355 dated Jun. 6, 2007.
Interview Summary of Nov. 1, 2010 for U.S. Appl. No. 11/306,557; 3 pages.
Inver, "PMP140/120," 2 pgs, Sep. 13, 2004.
IPod +iTunes, Markt+Technik Verlag, 2007. (U.S. Appl. No. 11/519,429).
ITunes 2, Playlist Related Help Screens, iTunes v2.0 Apple Computer, Inc., Oct. 23, 2001 (U.S. Appl. No. in U.S. Appl. No. 11/519,429).
itunes, Digital Music for your Mac, Apple Computer, Inc., downloaded Oct. 22, 2011, http://www.apple.com/itunes/ (U.S. Appl. No. 11/519,429).
itunes-Perl, copyright 2004-2006 by Jay McGavren, obtained from the Internet at http://code.googlecom, pp. 7. (downloaded 5 p. on Jan. 13, 2012 from http://code.google.com/p/itunes-perl/wiki/Usage) (U.S. Appl. No. 11/519,429).
K*Software, "KQUERY.COM," obtained from http://www.kquery.com/index.php?page=software.sub.--info&subpage=1&id=8, generated Jun. 8, 2006, copyright 2004, 4-pgs.
Lindauer, "What's in Your Pocket?," Edgereview, 2 pgs (downloaded Jan. 25, 2002 from http://www.edgereview.com/print.cfm?Type+aag&ID=286).
Linksys "New Linksys Wireless Home Products Showcased at CEBIT 2004" Internet Article (Mar. 18, 2004) www.broadbandbuyer.co.uk/Shop/pageTextDetail.asp?Setl0=2&Text10=473.
Markt+Technik Verlag, "iPod+iTunes," 2007 (German).
Maulik and Ryan, "Synchronizing mp3 playback, version #7," http://snarfed.org/exec/version?name=synchronizing+mp3+playback&version=7, generated Jun. 8, 2006, version #7 dated Feb. 21, 2005 in history, 3 pgs.
McGavren, "iTunes-perl," 2004-2006 (http://code.googlecom, 5 pgs (downloaded Jan. 13, 2012 from http://code.google.com/p/itunes-perl/wiki/ Usage).
MediaGate, "Portable MPEG4 Player (MG-25)," 3 pgs, Jul. 29, 2004.
Microsoft Corp., "Window's Media Player 6.4," 2 pgs, 1999 (software downloadable at http://www.oldversion.com/program php?n=wmp, downloaded Jul. 13, 2011 from http://www.microsoft.com/download/en/confirmation.axps?displaylangen&id=2- 2758).
Mills, David L., "Request for Comments: 1305," Network Working Group, Mar. 1992, 113-pgs.
Miniman, "Applian Software's Replay Radio and Player v1.02," Product review, pocketnow.com, http://www.pocketnow.com/review/replay.htm, Jul. 31, 2001. Downloaded Aug. 25, 2011 http://web/archive.org/web/20010805081914/http://www.pocketnow.com/review- s/reply/reply.HTM (U.S. Appl. No. 11/519,429).
MusicMatch, "About MusicMatch Jukebox," MusicMatch Jukebox v4 Help, 4 pgs, 1999.
MusicMatch, "Musicmatch and Xing Technology Introduce Musicmatch Jukebox," May 18, 1998 (http://www.musicmatch.com/info/company/press/rel eases/?year +1998& release=2, downloaded Aug. 16, 2011 from http://www.thefreelibrary.com/MusicMatch+and+Xing+Technolo).
Myradus, LLC, "Myradus Media Player Puppeteer for iTunes," obtained from http://www.myradus.com/Product_MediaPlayerPuppeteerForm.aspx, generated Jun. 8, 2006, copyright 2004-2005, 1-pg.
Nilsson, "ID3 tag version 2.3.0," 30 pgs, Feb. 3, 1999 (downloaded from http://www.id3.org/id3v2.3.0?action=print).
Nilsson, "IDS tag versions 2.4.0.—Main Structure," Nov. 1, 2000 (downloaded from http://www.id3.org/id3v2.4.0-structure?-action=print).
Nomad Jukebox, User Guide, Creative Technology Ltd., Version 1, Aug. 2000. [38 pages downloaded Aug. 16, 2011] (U.S. Appl. No. 11/519,429).
Non-final office action for U.S. Appl. No. 11/306,557 dated Jul. 19, 2011.
Non-Final Office Action of Feb. 4, 2010 for U.S. Appl. No. 11/306,557; 25 pages.
Non-Final Office Action of Jan. 4, 2011 for U.S. Appl. No. 11/696,679, 18 pgs.
Non-Final Office Action of Jan. 4, 2011 for U.S. Appl. No. 11/696,679; 18 pages.
Non-Final Office Action of Jul. 19, 2011 for U.S. Appl. No. 11/306,557; 14 pages.
Non-Final Office Action of Mar. 20, 2008 for U.S. Appl. No. 10/862,115; 16 pages.
Non-Final Office Action of Nov. 21, 2008 for U.S. Appl. No. 11/306,557; 18 pages.
Non-Final Office Action of Nov. 22, 2010 for U.S. Appl. No. 11/306,557; 14 pages.
NormSoft, Inc., "Pocket Tunes 5.0.0," pp. 1-25, 2009 (http://www.pocket- tunes.com/userguide/en.win, downloaded 18 pages on Apr. 10, 2012 from http://www.pocket- tunes.com/userguide/enl).
Nullsoft, "winamp.com / Plug-ins," obtained from http://winamp.com/plugins/details.php?id=15667, generated Jun. 8, 2006, copyright 2006, 2 pgs.
Nutzel et al., "Sharing System for Future HiFi Systems", Proceedings of the Fourth International Conference on Web Delivering of Music, Sep. 13, 2004, 8 pgs. [9 pages downloaded] (U.S. Appl. No. 11/519,429).
Office Action for U.S. Appl. No. 11/530,855 dated Oct. 12, 2010.
Office Action for U.S. Appl. No. 11/306,557 dated Aug. 18, 2009.
Office Action for U.S. Appl. No. 11/530,855 dated Apr. 5, 2011.
Office Action for U.S. Appl. No. 11/530,855 dated Dec. 29, 2009.

(56) **References Cited**

OTHER PUBLICATIONS

Office Action for U.S. Appl. No. 11/530,855 dated Jun. 24, 2009.
Office Communication of Dec. 30, 2009 for U.S. Appl. No. 10/862,115, Board of Patent Appeals and Interferences Docketing Notice, 2 pages.
Palacharla, S. et al., "Design and implementation of a Real-time Multimedia Presentation System using RTP", Computer Software and Applications Conference, COMPSAC '97, Aug. 1997, pp. 376-381.
Palm, Inc., "Handbook for Palm™ m500 Series Handhelds, User Manual," 109 pgs.
Perkins, C., "RTP Audio and Video for the Internet, Chapter 5, RTP Control Protocol", 2003, Addison-Wesley, Boston, USA, pp. 95-111.
Personal Jukebox (PJB), "Systems Research Center and PAAD," Compaq Computer Corp., Oct. 13, 2000, http://research.compaq.com/SRC/pjb/. (U.S. Appl. No. 11/519,429).
Pocket PC Phone User Manual, High Tech Computer Corp., 2006; 208 pages, Downloaded Jul. 2011 www.htc.com (U.S. Appl. No. 11/519,429).
Pocket Tunes 5.0.0. copyright 2002-2009 Normsoft, Inc., (pp. 1-25, obtained from the Internet at: http://www.pocket-tunes.com/userguide/en.win)—(Downloaded 18 pages on Apr. 10, 2012 at http://www.pocket-tunes.com/userguide/en/) (U.S. Appl. No. 11/519,429).
RCA, "Lyra User's Guide," RD2201/2202/2204, www.lyrazone.com, pp. 1-37, 1999.
Real Networks, Inc., "RealJukebox Plus Manual," pp. 1-83, 1999 (downloaded Oct. 27, 2005 http://www.real.com/Jukebox/release notes.html#).
Replay Gain, "Replay Gain—A proposed Standard," Oct. 7, 2001 (downloaded from http://replaygain.hydrogenaudio.org/index.html and http://replaygain.hydrogenaudio.orgioutline.html).
Robbin et al., "SoundJam MP Plus Digital Audio System Version 2," Representative Screens, published by Cassady & Greene, Inc., Salinas, CA, 6 pgs, 2000.
Rosenberg, J. et al., "SIP: Session Initiation Protocol", 20020601; 20020600, Jun. 1, 2001, Retrieved from ftp://frp-editor.org/in-notes/rfc3261.txt on Aug. 18, 2011, 232 pages.
Schulzrinne Comumbia U A RAO Netscape R Lanphier RealNetworks H: "Real Time Streaming Protocol (RTSP)" IETF Standard, Internet Engineering Task Force, IETF, CH, April.
Shulzrinne et al., "Request for Comments: 2326," Network Working Group, Apr. 1998, 92-pgs.
Shulzrinne et al., "Request for Comments: 3550," Network Working Group, Jul. 2003, 104-pgs.
Sinitsyn, "A Synchronization Framework for Personal Mobil Servers," Proceedings of the Second IEEE Annual Conference on Pervasive Computing and communications Workshops, Piscataway, NJ, Mar. 14, 2004, pp. 1-4 5 pages retrieved from IEEE on Jul. 2011 (U.S. Appl. No. 11/519,429).
Skarlatos et al., "Sprite Backup 5.0", Internet Publication, Mar. 6, 2005 (downloaded www.pocketnow.com/index.php?a+portal print &t=review&id=788).

* cited by examiner

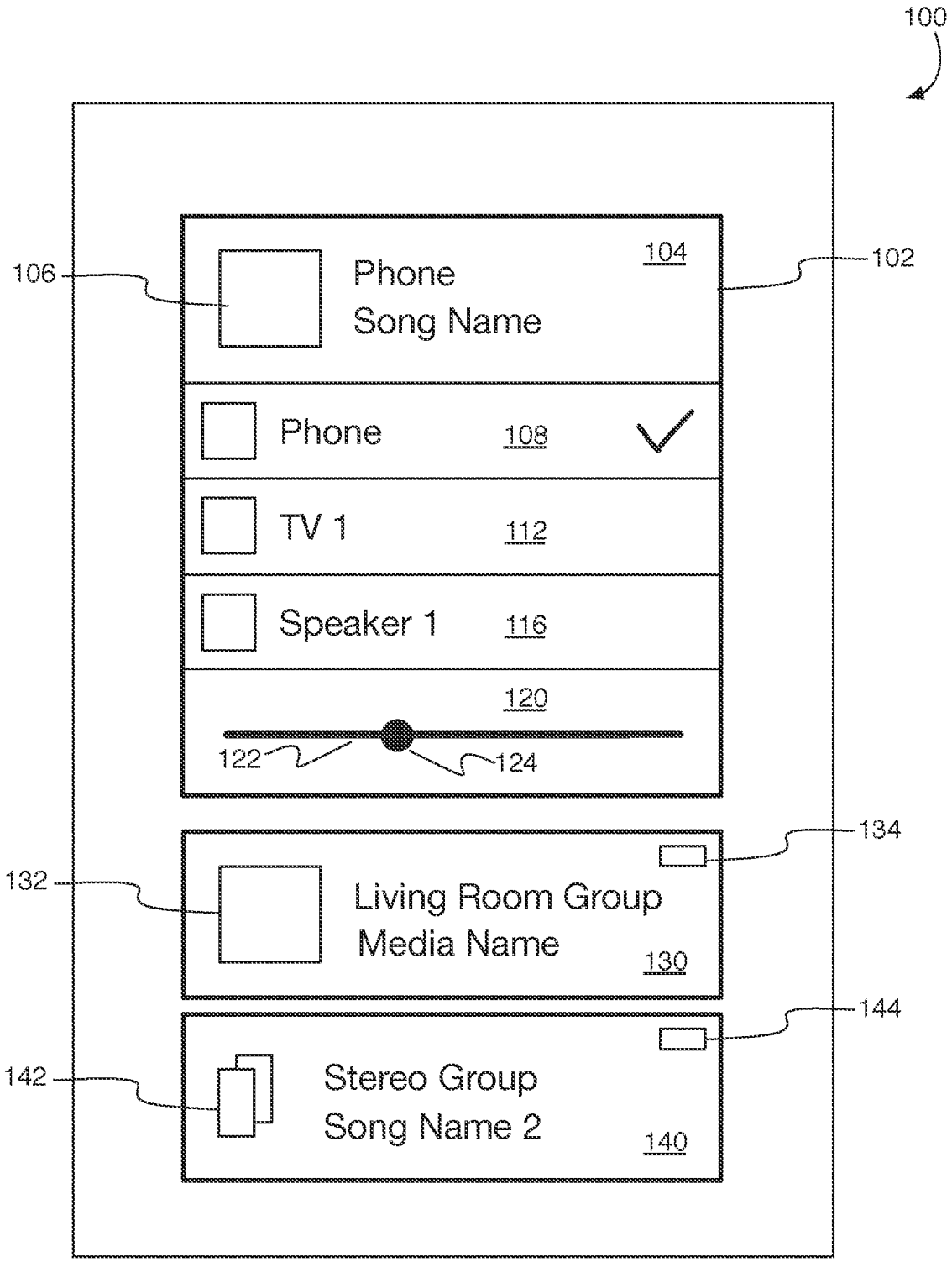
100
102
104
106
Phone
Song Name
Phone
108
TV 1
112
Speaker 1
116
120
122
124
134
132
Living Room Group
Media Name
130
144
142
Stereo Group
Song Name 2
140

FIG. 1

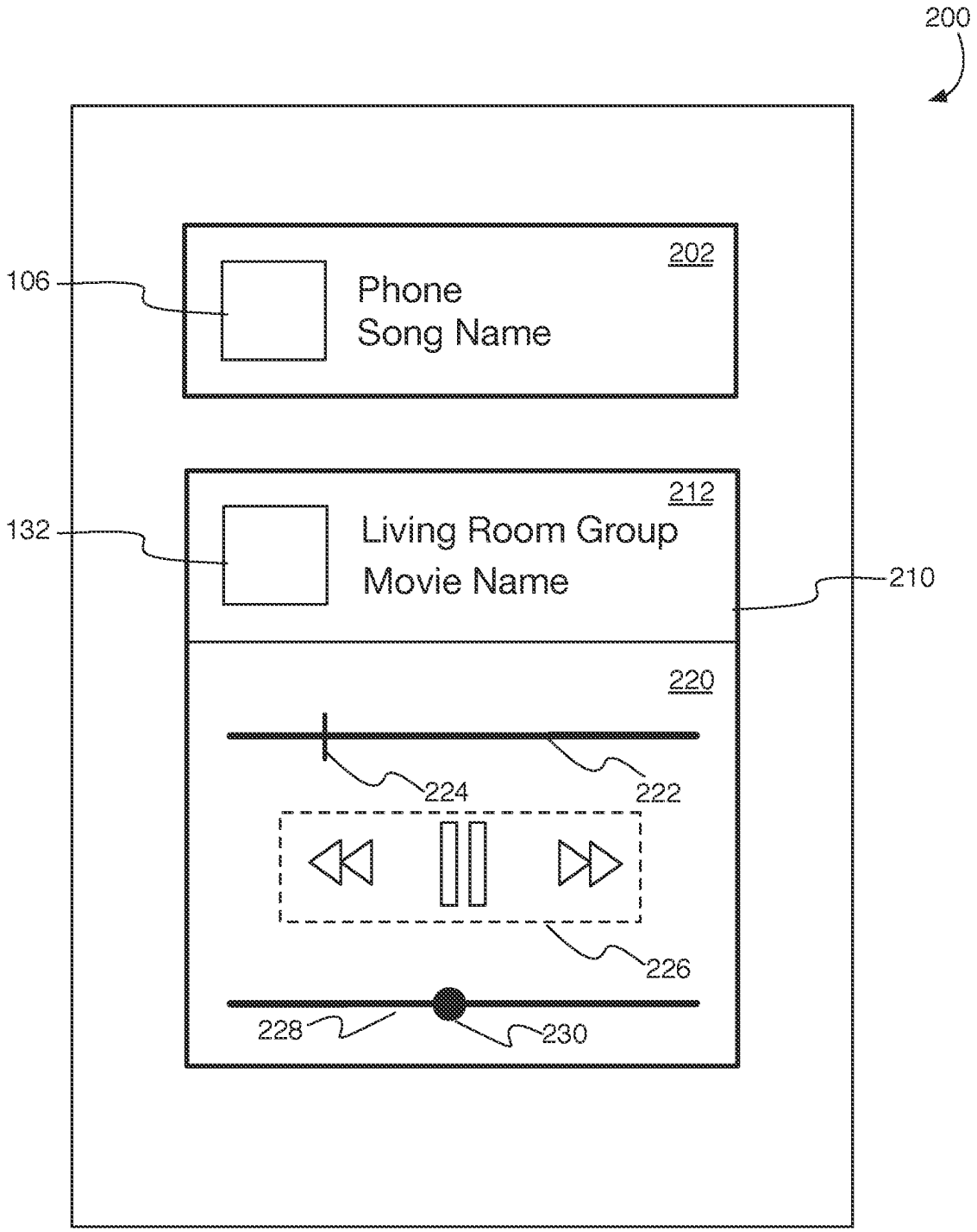
200
202
106
Phone
Song Name
212
132
Living Room Group
Movie Name
210
220
224
222
226
228
230

FIG. 2

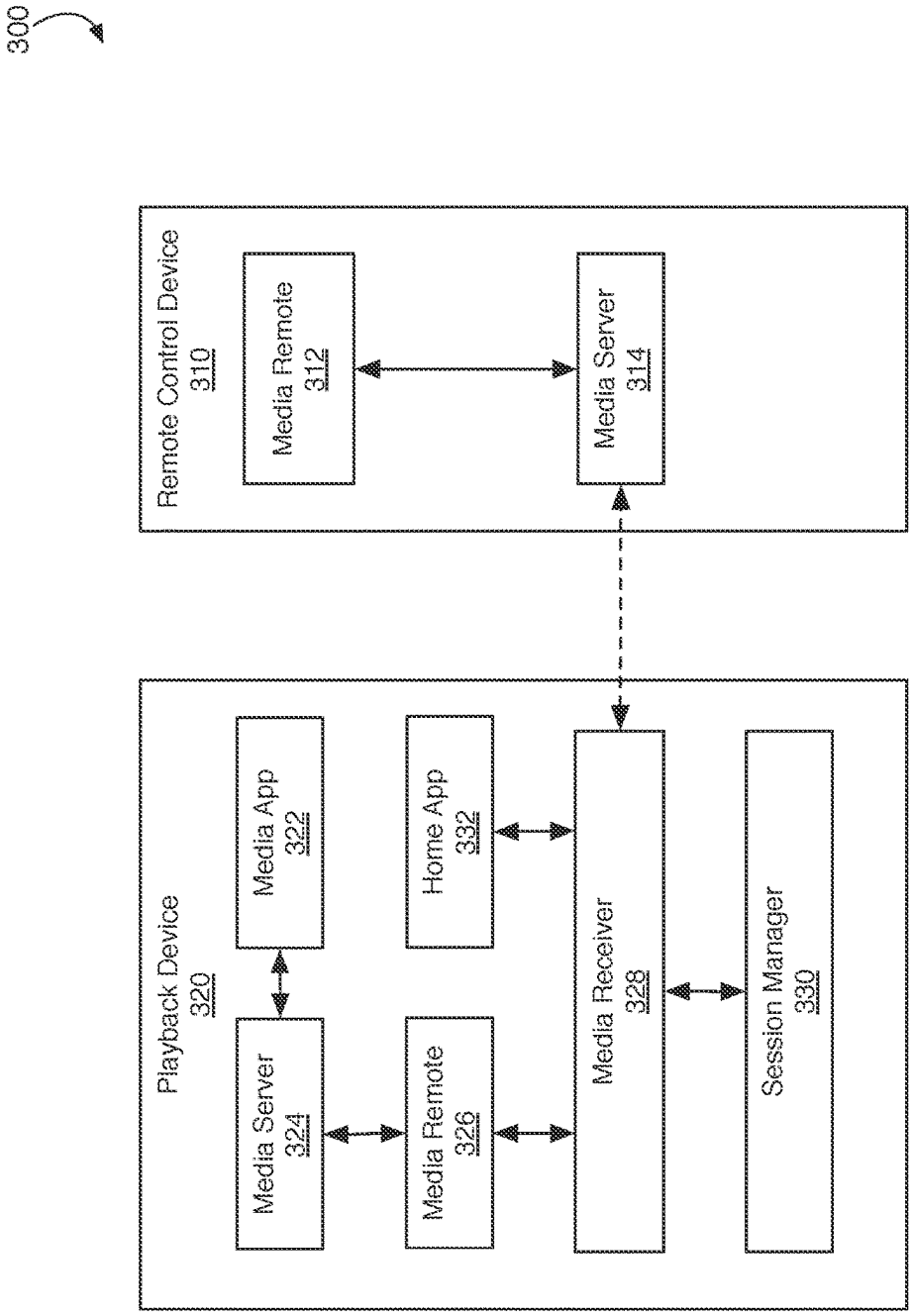
300
Remote Control Device
310
Media Remote
312
Media Server
314
Playback Device
320
Media App
322
Media Server
324
Home App
332
Media Remote
326
Media Receiver
328
Session Manager
330

FIG. 3

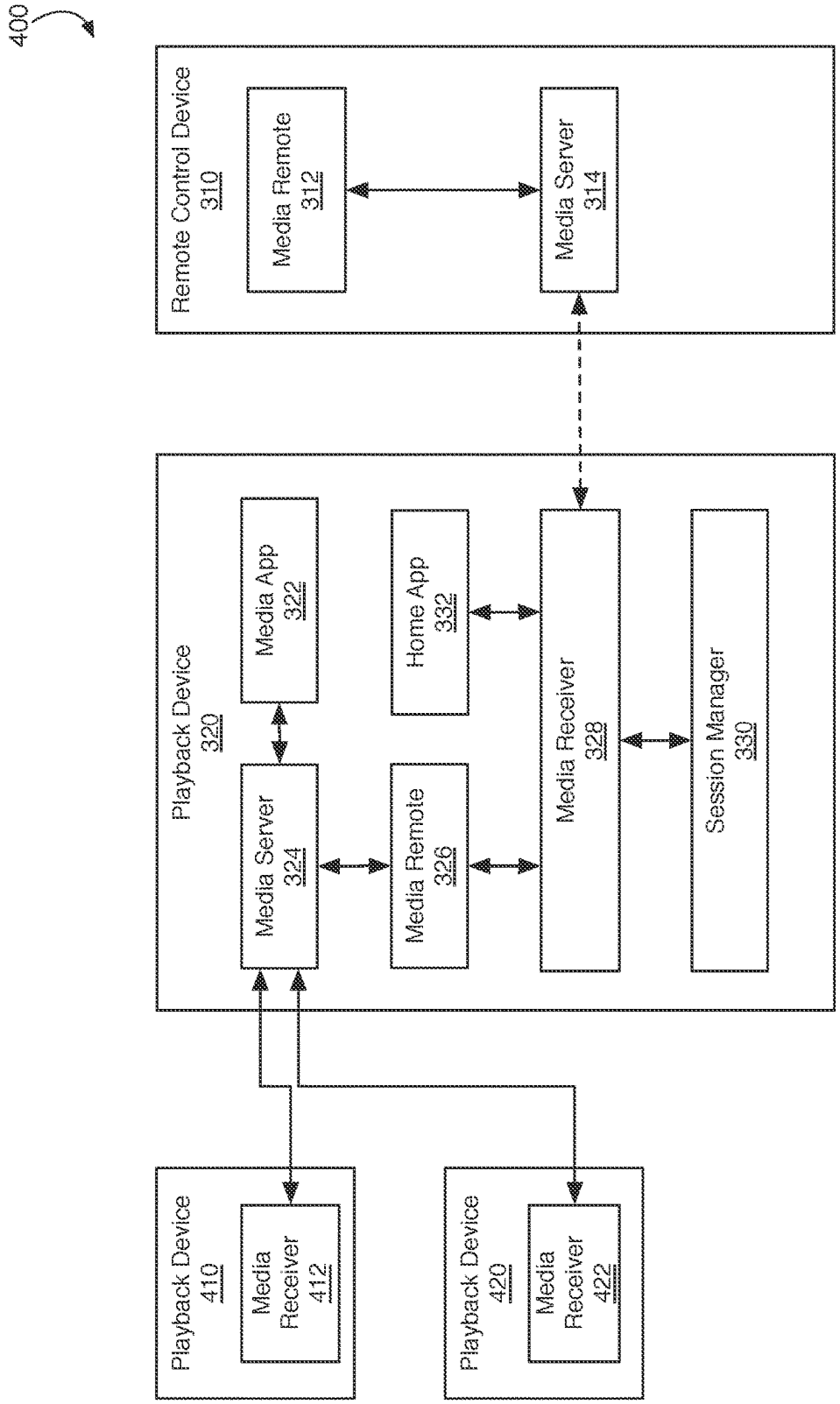
400
Remote Control Device
310
Media Remote
312
Media Server
314
Playback Device
320
Media App
322
Media Server
324
Home App
332
Media Remote
326
Media Receiver
328
Session Manager
330
Playback Device
410
Media
Receiver
412
Playback Device
420
Media
Receiver
422

FIG. 4

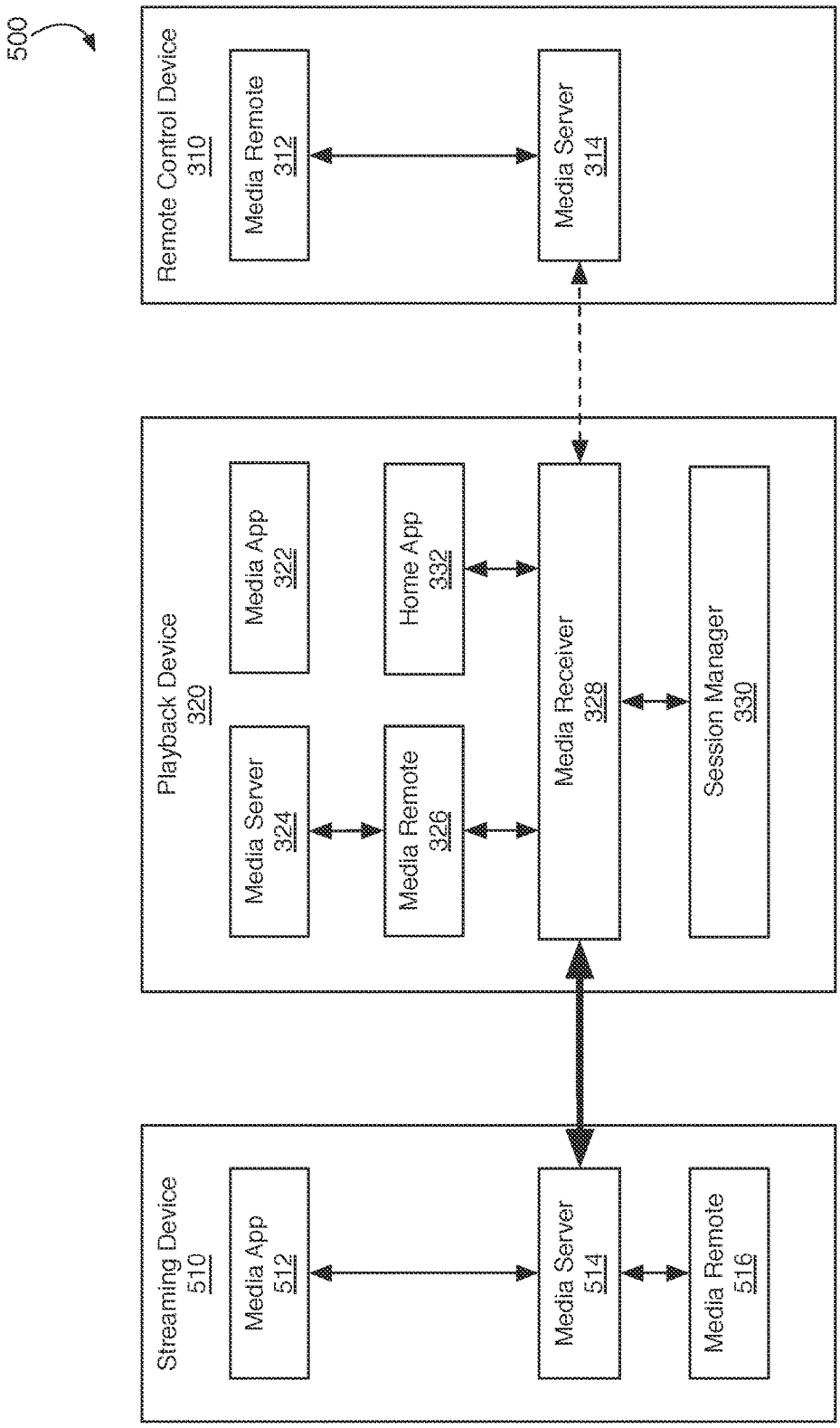
500
Remote Control Device
310
Media Remote
312
Media Server
314
Playback Device
320
Media App
322
Home App
332
Media Server
324
Media Remote
326
Media Receiver
328
Session Manager
330
Streaming Device
510
Media App
512
Media Server
514
Media Remote
516

FIG. 5

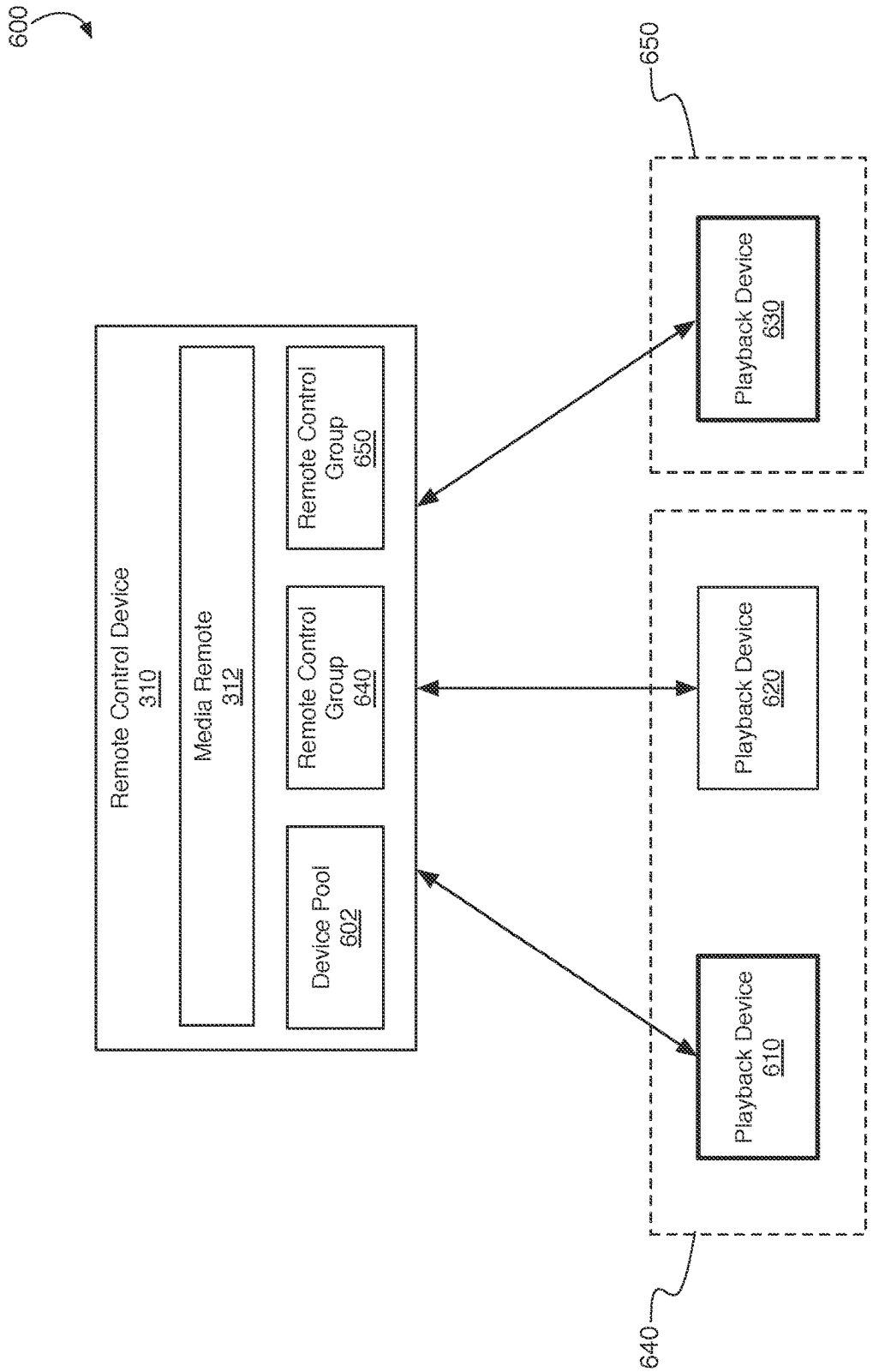
600
Remote Control Device
310
Media Remote
312
Device Pool
602
Remote Control
Group
640
Remote Control
Group
650
Playback Device
610
Playback Device
620
Playback Device
630
640
650

FIG. 6

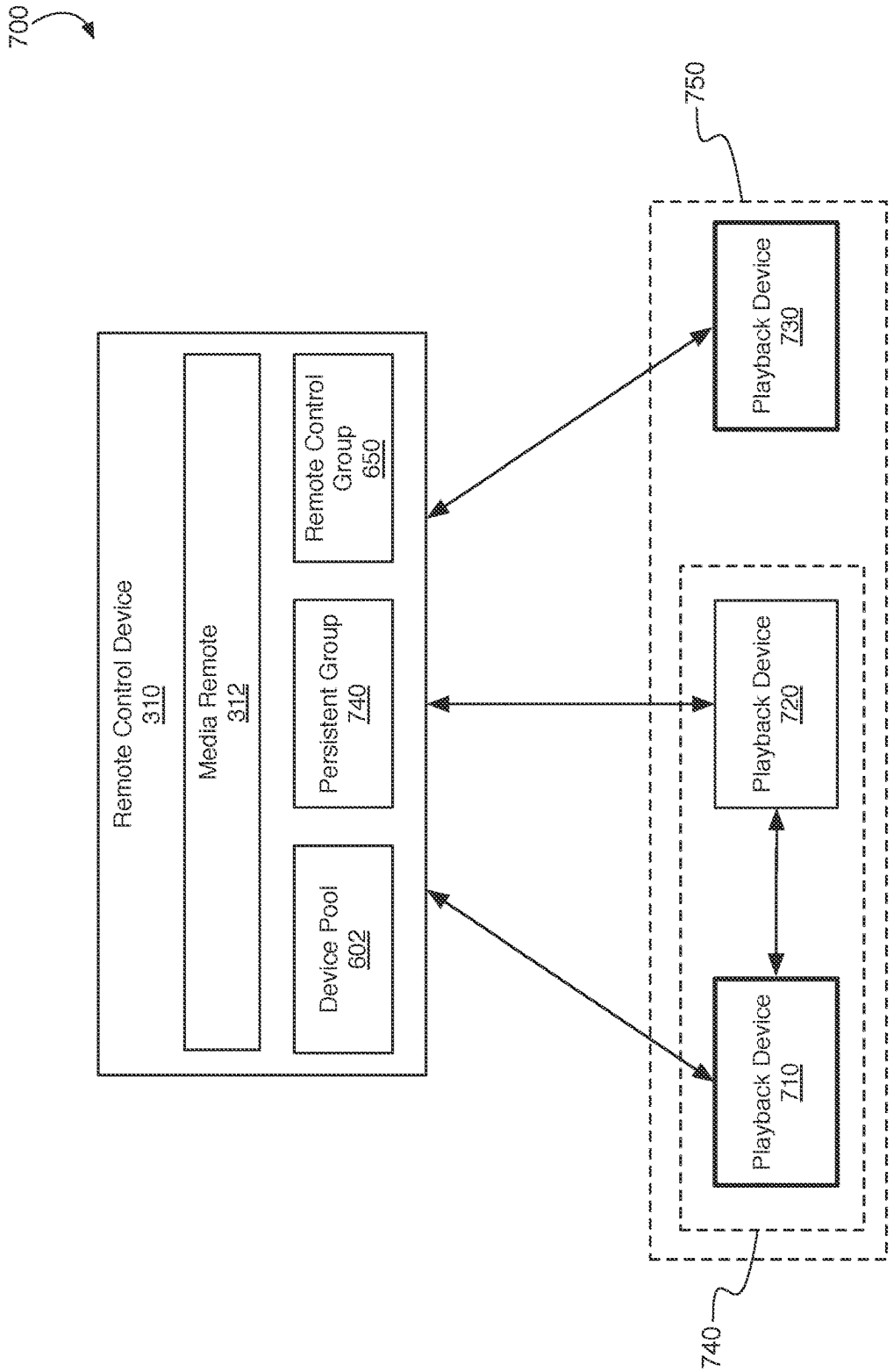
700
Remote Control Device
310
Media Remote
312
Device Pool
602
Persistent Group
740
Remote Control
Group
650
Playback Device
710
Playback Device
720
Playback Device
730
740
750

FIG. 7

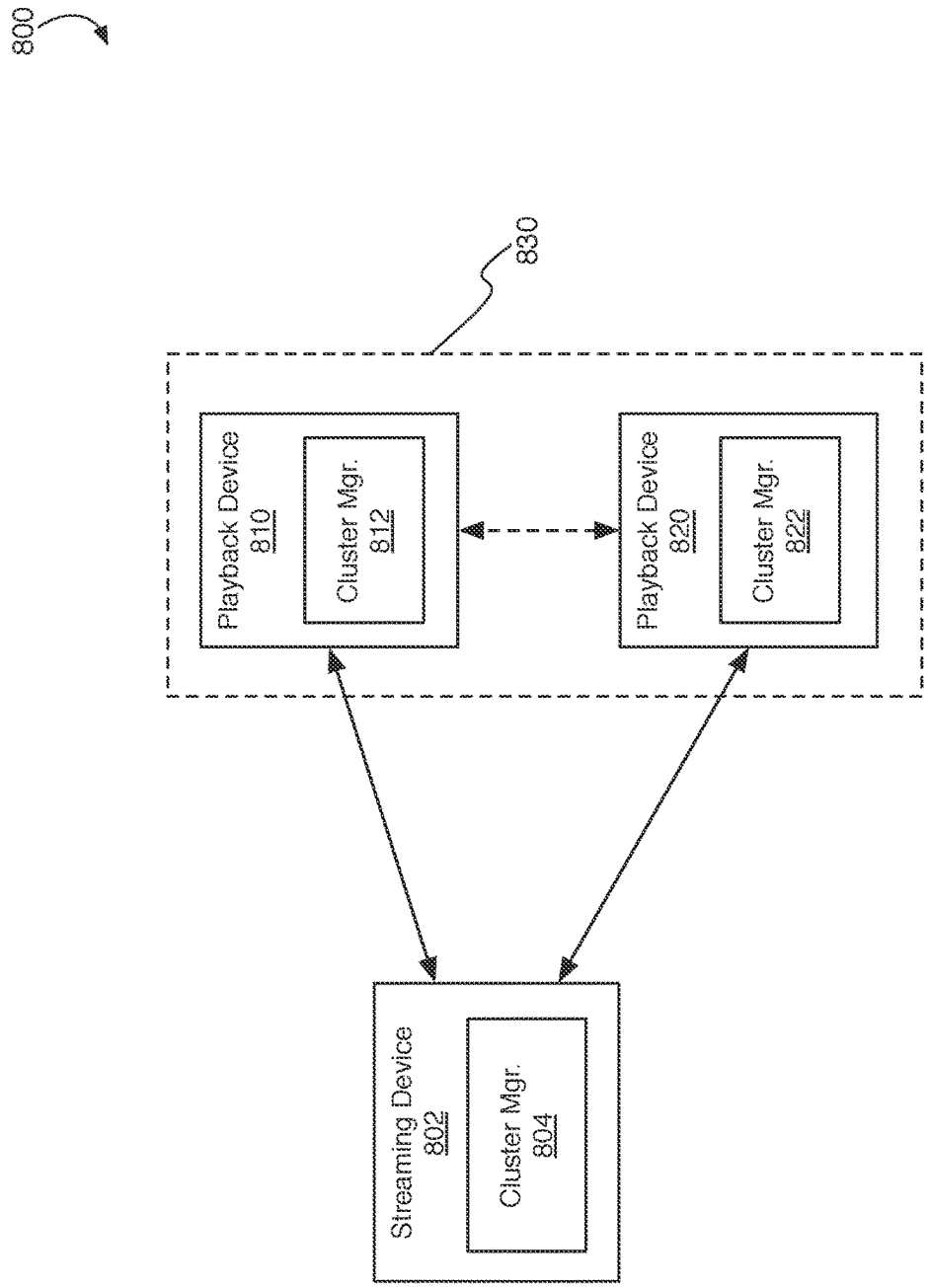
800
830
Playback Device
810
Cluster Mgr.
812
Playback Device
820
Cluster Mgr.
822
Streaming Device
802
Cluster Mgr.
804

FIG. 8

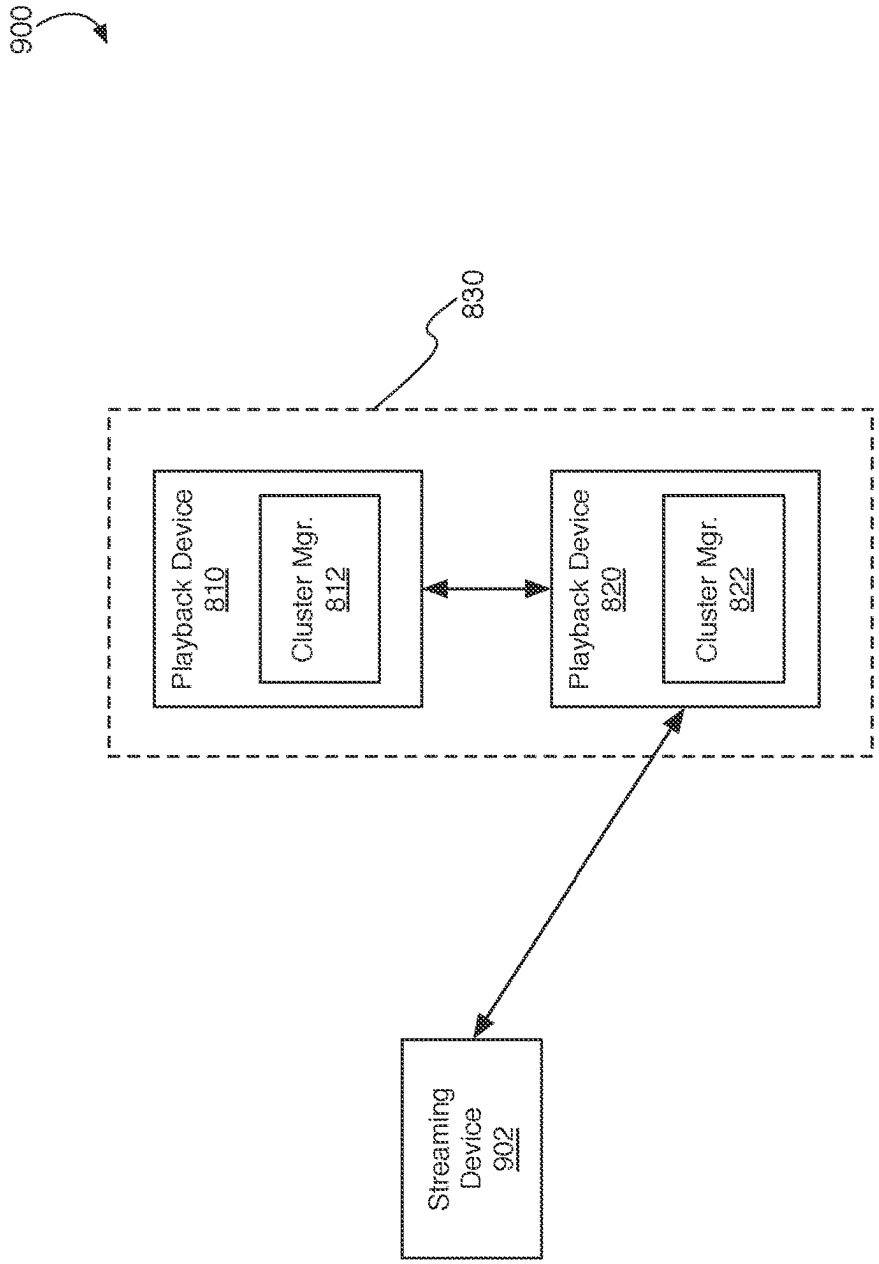
900
830
Playback Device
810
Cluster Mgr.
812
Playback Device
820
Cluster Mgr.
822
Streaming
Device
902

FIG. 9

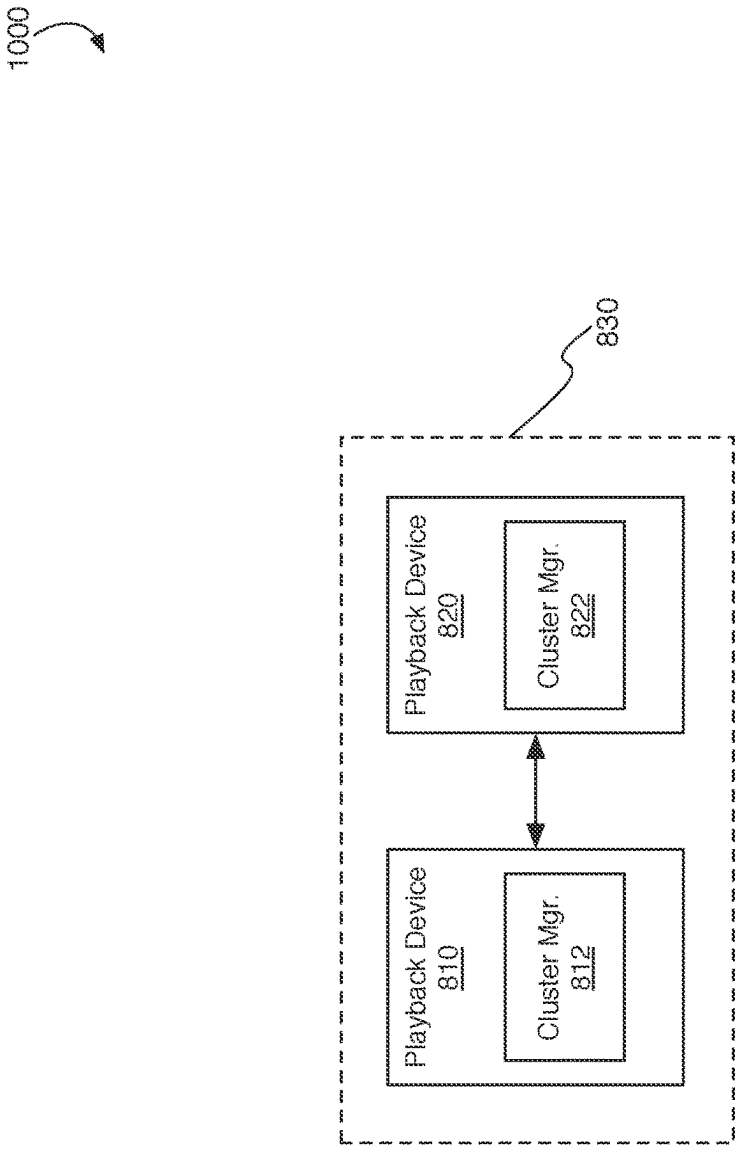
1000
830
Playback Device
820
Cluster Mgr.
822
Playback Device
810
Cluster Mgr.
812

FIG. 10

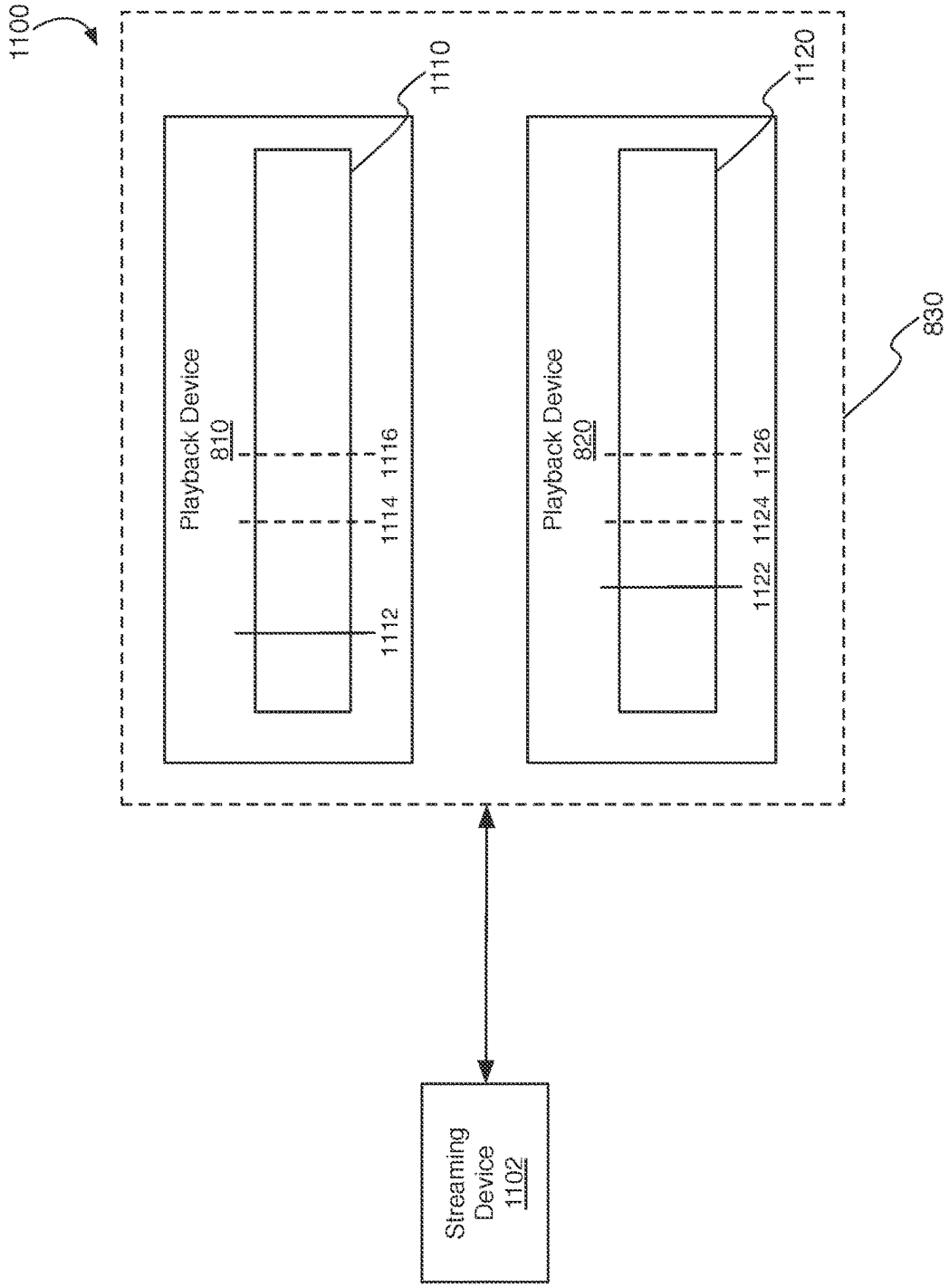
1100
Playback Device
810
1110
1112
1114
1116
Playback Device
820
1120
1122
1124
1126
830
Streaming Device
1102

FIG. 11

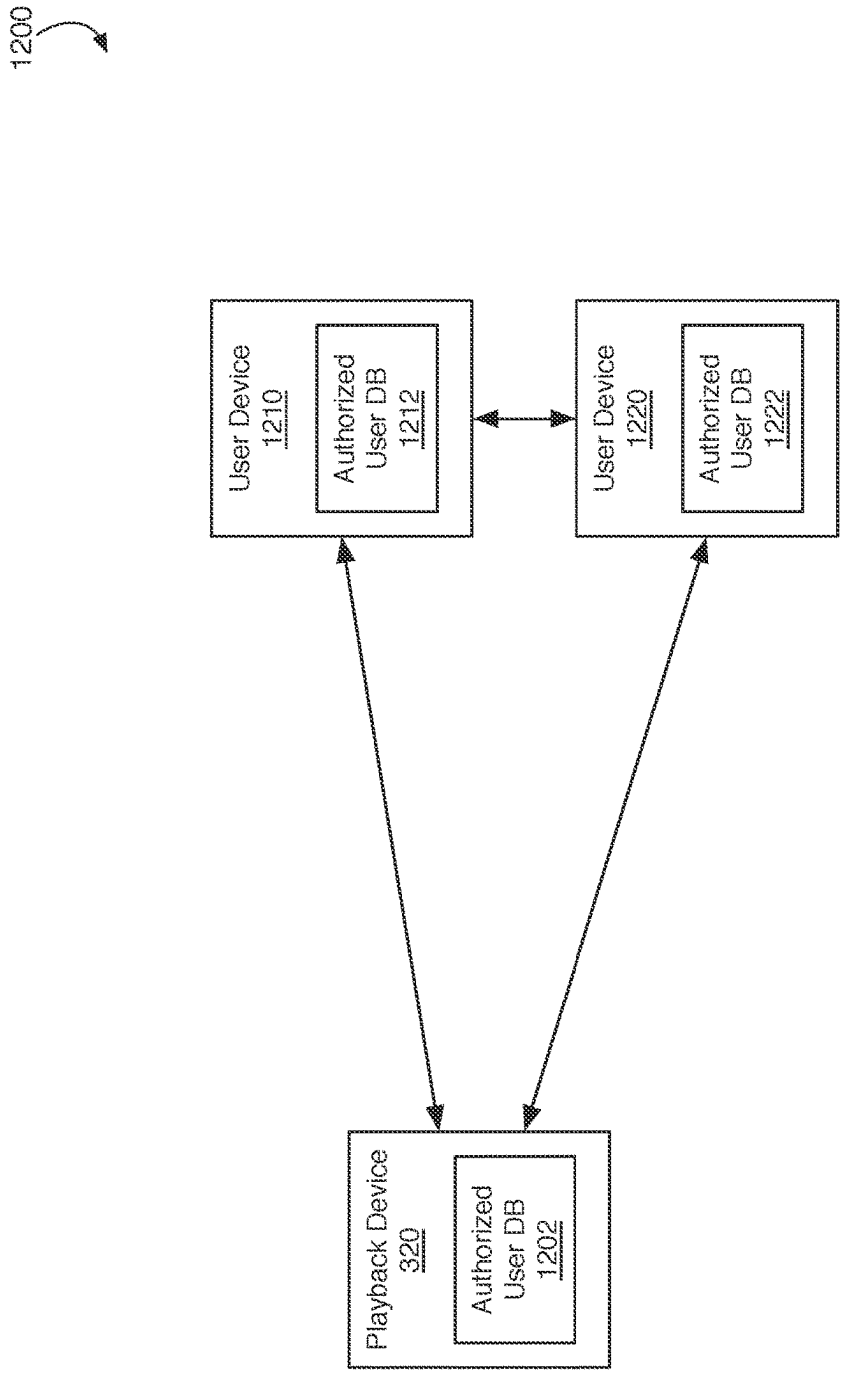
1200
User Device
1210
Authorized
User DB
1212
User Device
1220
Authorized
User DB
1222
Playback Device
320
Authorized
User DB
1202

FIG. 12

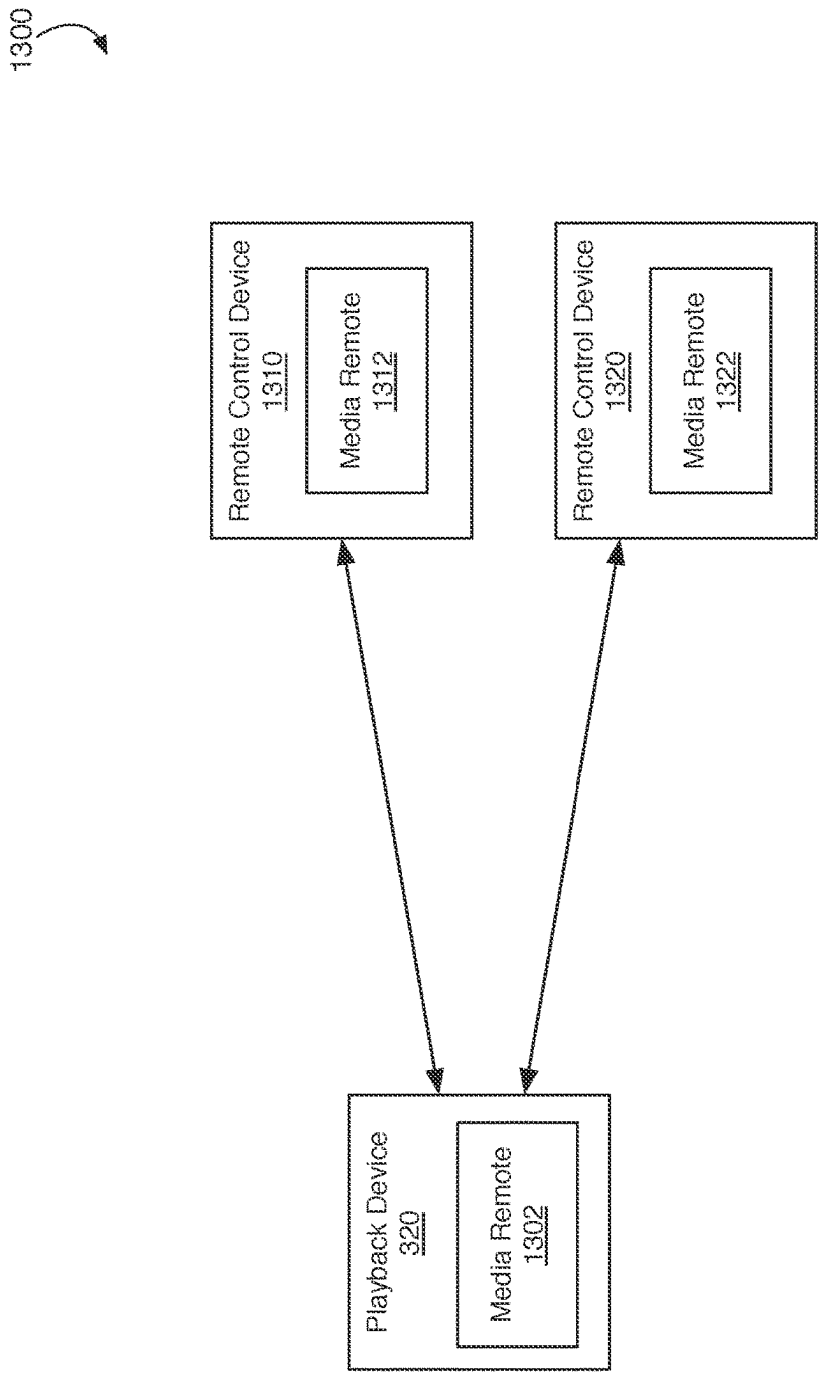
1300
Remote Control Device
1310
Media Remote
1312
Remote Control Device
1320
Media Remote
1322
Playback Device
320
Media Remote
1302

FIG. 13

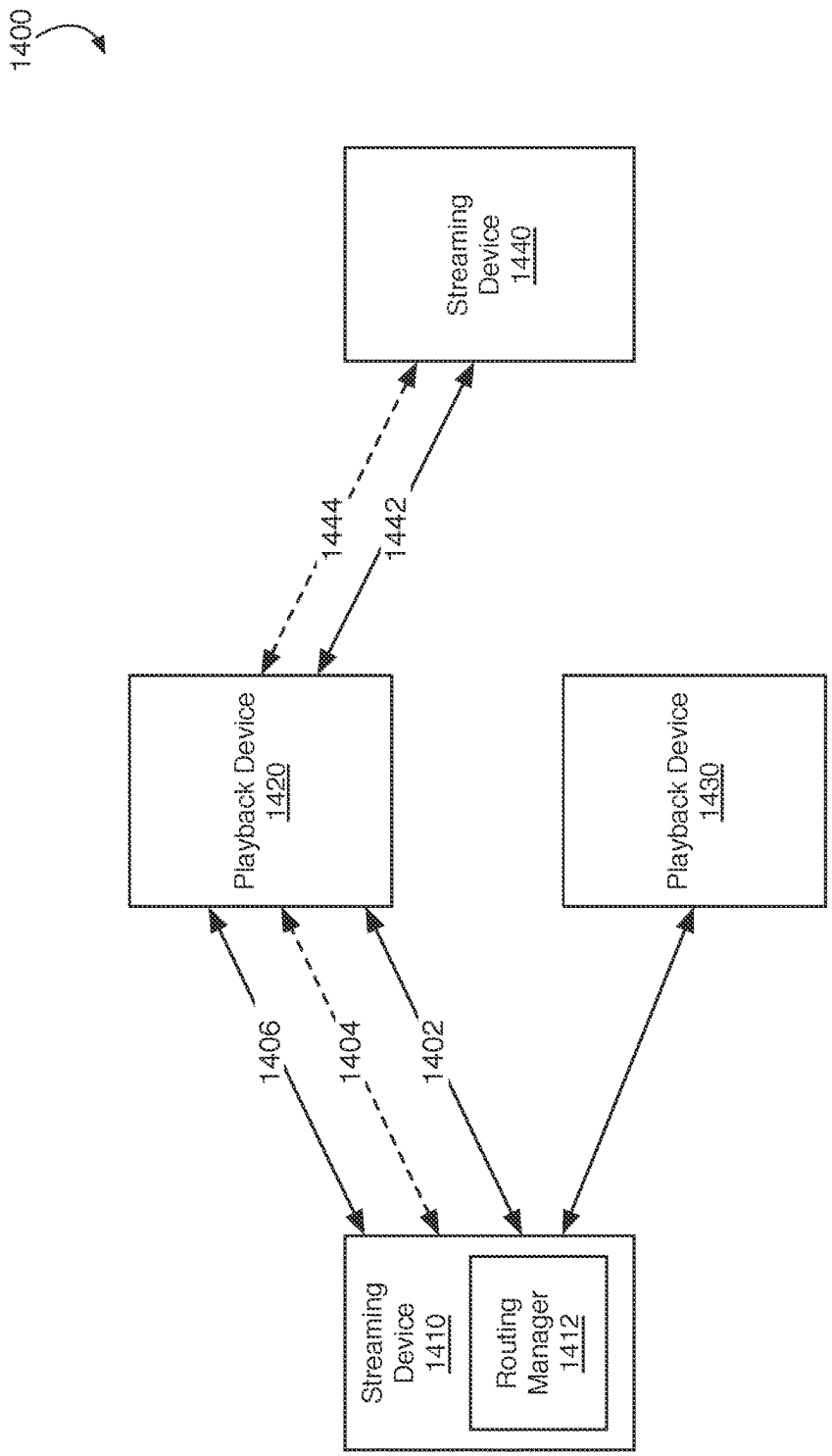
1400
Streaming Device 1440
1444
1442
Playback Device 1420
Playback Device 1430
1406
1404
1402
Streaming Device 1410
Routing Manager 1412

FIG. 14

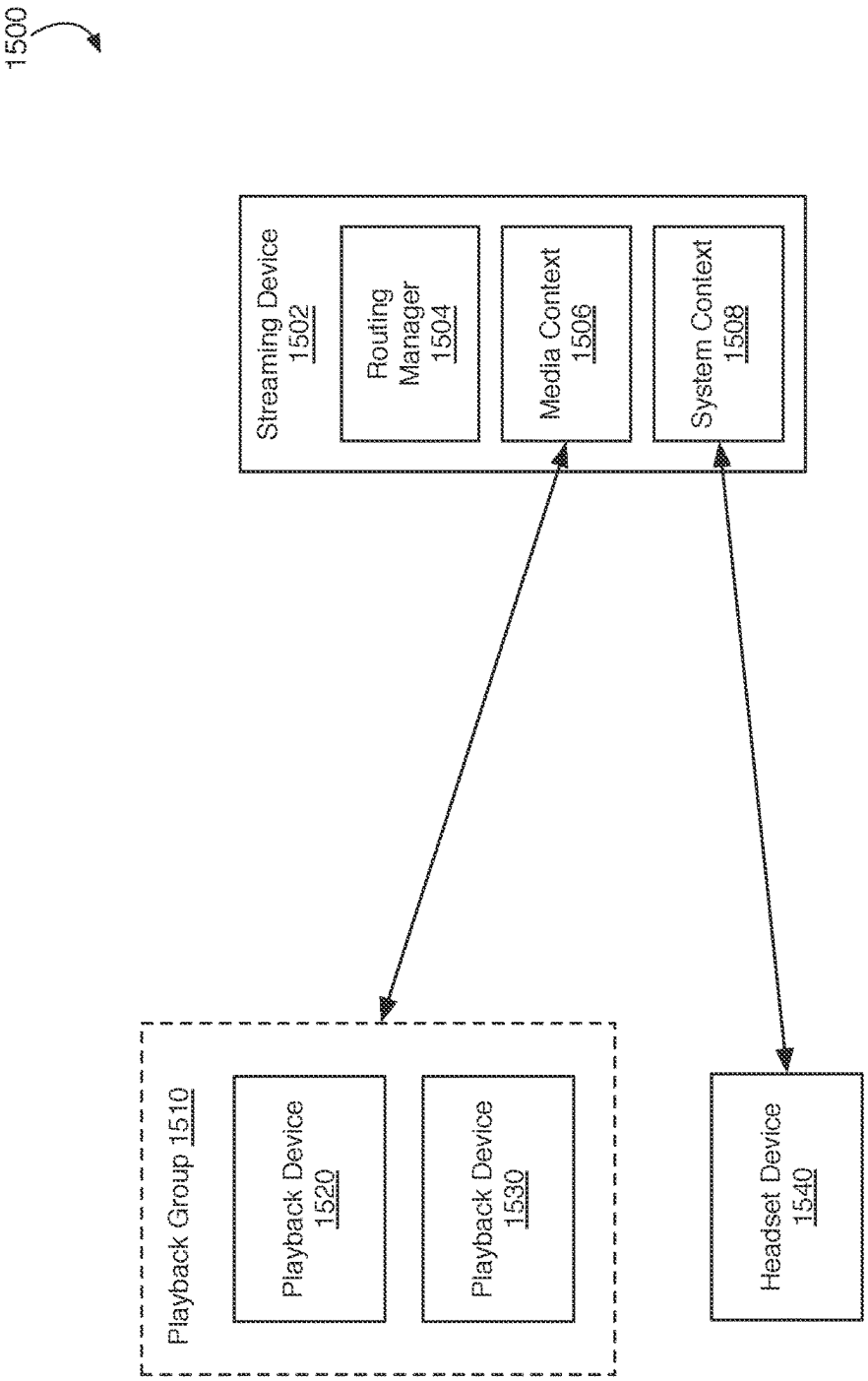
1500
Streaming Device 1502
Routing Manager 1504
Media Context 1506
System Context 1508
Playback Group 1510
Playback Device 1520
Playback Device 1530
Headset Device 1540

FIG. 15

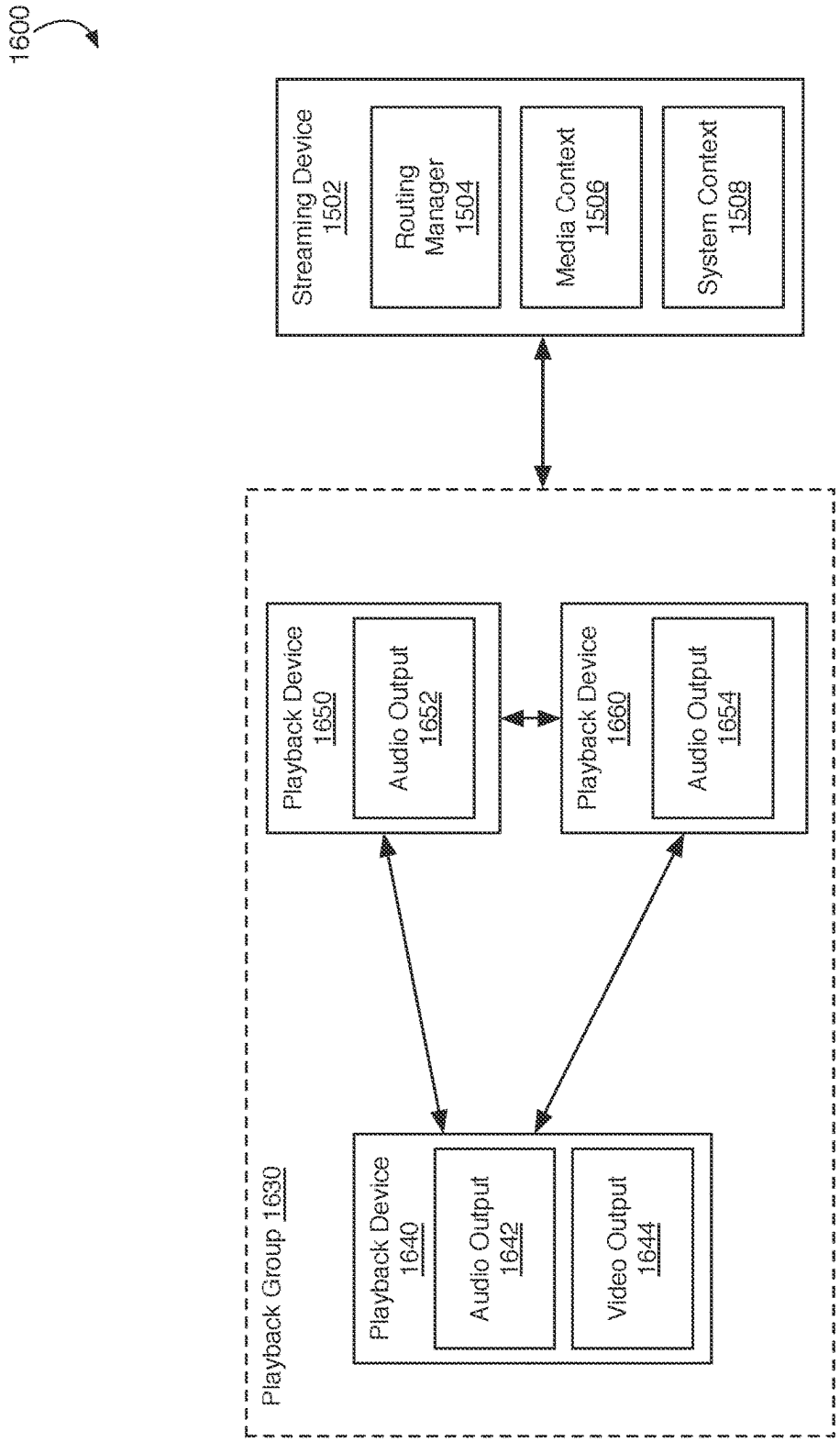
1600
Streaming Device 1502
Routing Manager 1504
Media Context 1506
System Context 1508
Playback Device 1650
Audio Output 1652
Playback Device 1660
Audio Output 1654
Playback Group 1630
Playback Device 1640
Audio Output 1642
Video Output 1644

FIG. 16

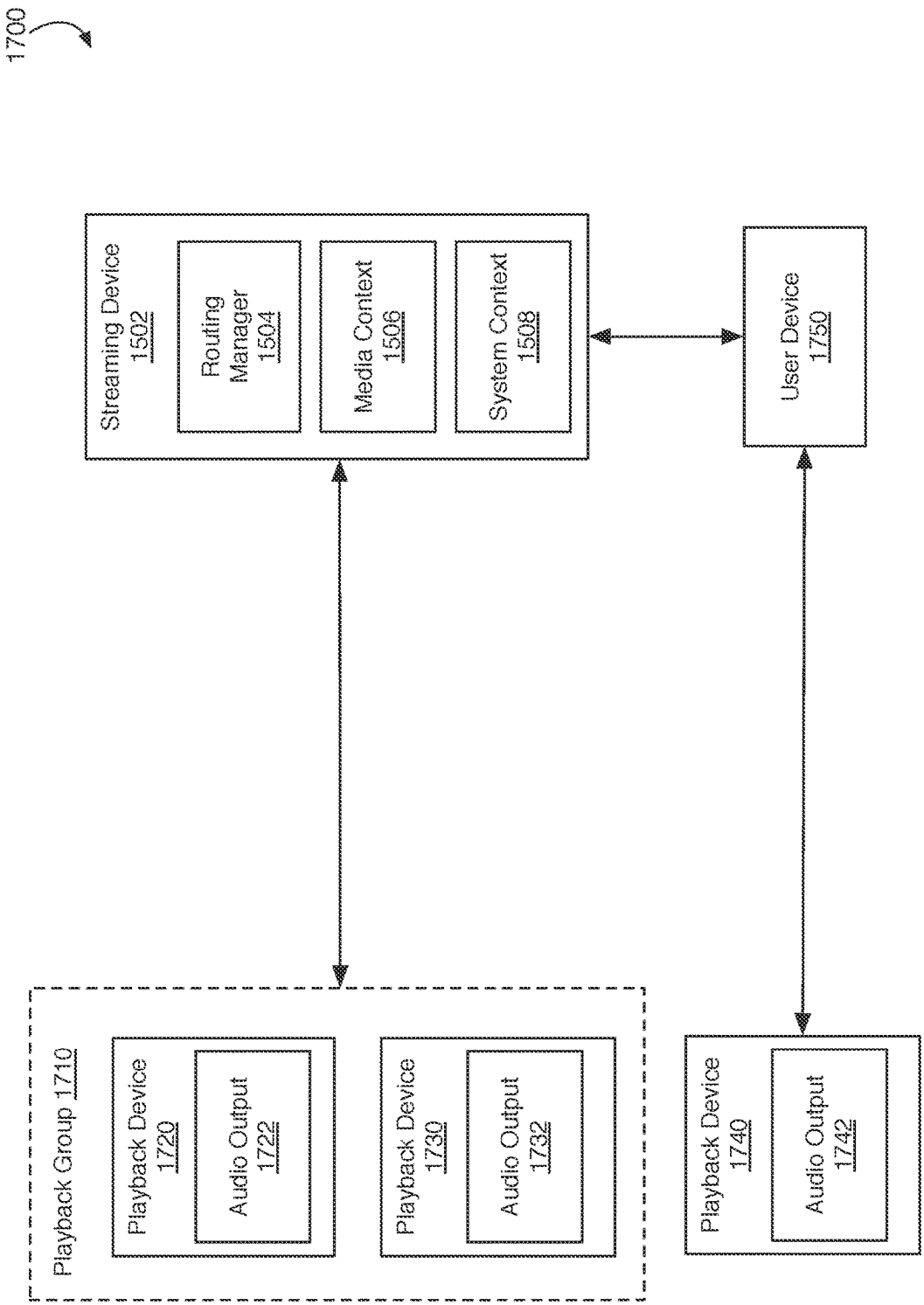
1700
Streaming Device 1502
Routing Manager 1504
Media Context 1506
System Context 1508
User Device 1750
Playback Group 1710
Playback Device 1720
Audio Output 1722
Playback Device 1730
Audio Output 1732
Playback Device 1740
Audio Output 1742

FIG. 17

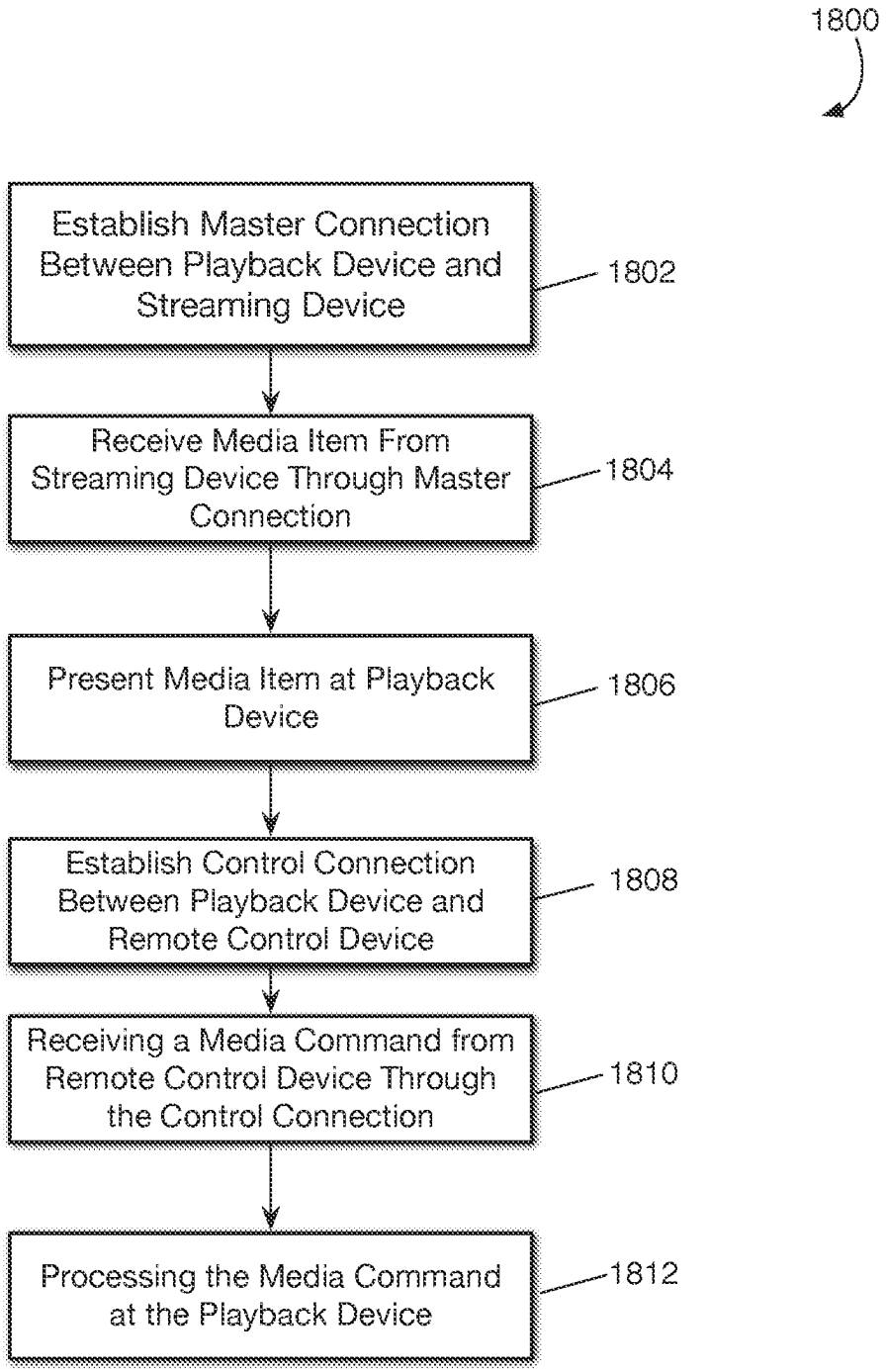
1800
Establish Master Connection Between Playback Device and Streaming Device
1802
Receive Media Item From Streaming Device Through Master Connection
1804
Present Media Item at Playback Device
1806
Establish Control Connection Between Playback Device and Remote Control Device
1808
Receiving a Media Command from Remote Control Device Through the Control Connection
1810
Processing the Media Command at the Playback Device
1812

FIG. 18

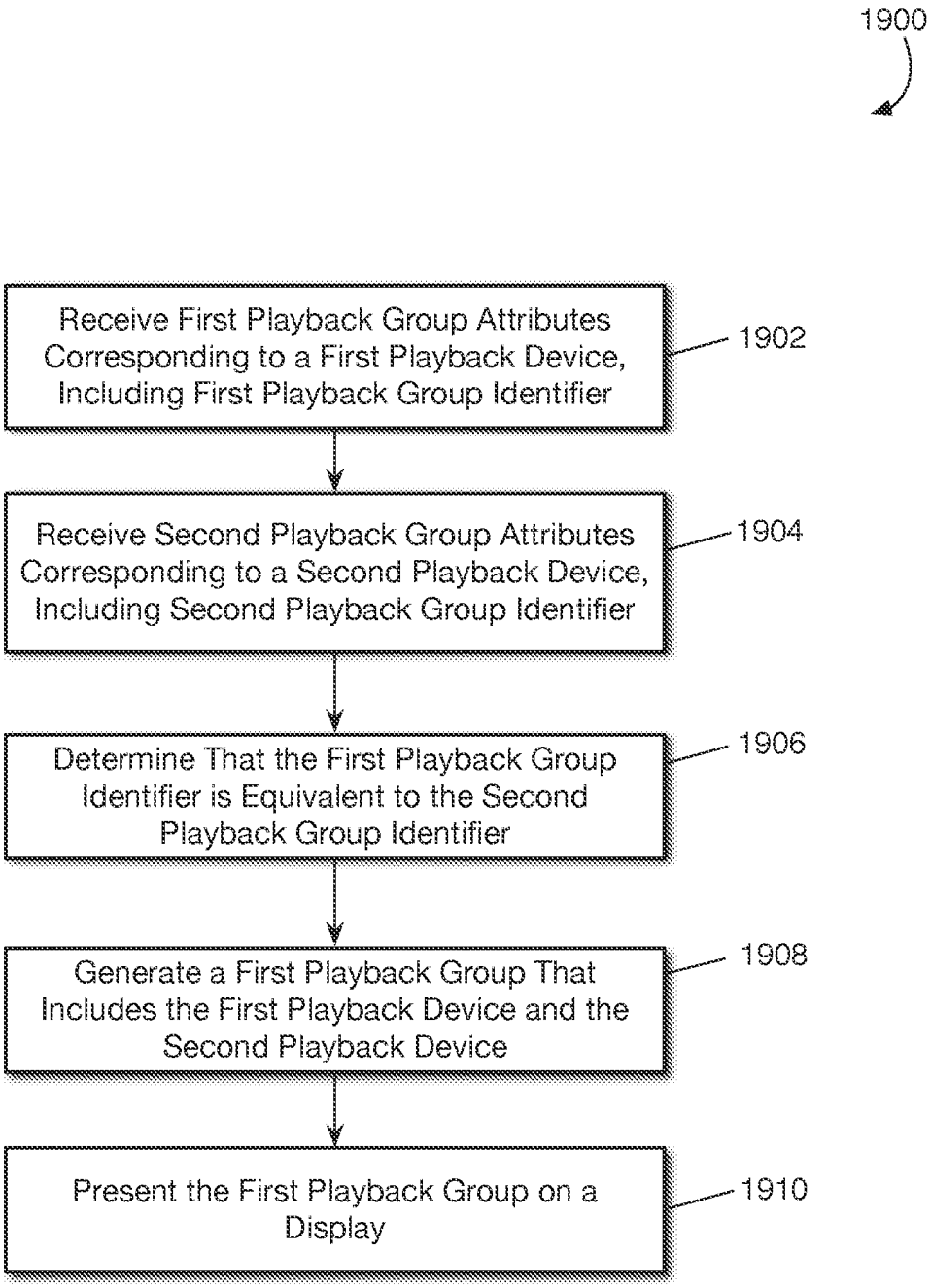
1900
Receive First Playback Group Attributes Corresponding to a First Playback Device, Including First Playback Group Identifier
1902
Receive Second Playback Group Attributes Corresponding to a Second Playback Device, Including Second Playback Group Identifier
1904
Determine That the First Playback Group Identifier is Equivalent to the Second Playback Group Identifier
1906
Generate a First Playback Group That Includes the First Playback Device and the Second Playback Device
1908
Present the First Playback Group on a Display
1910

FIG. 19

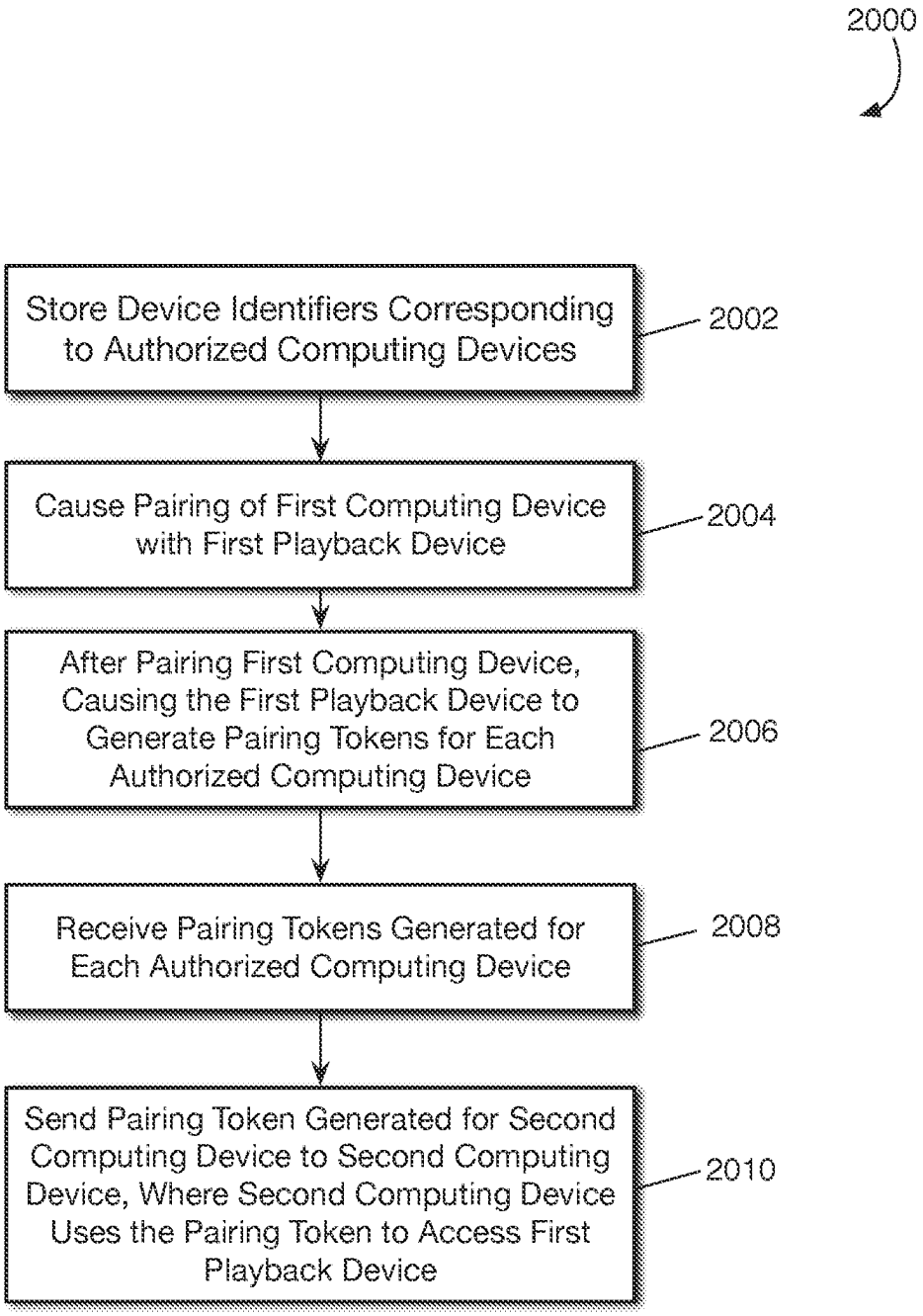
2000
Store Device Identifiers Corresponding to Authorized Computing Devices
2002
Cause Pairing of First Computing Device with First Playback Device
2004
After Pairing First Computing Device, Causing the First Playback Device to Generate Pairing Tokens for Each Authorized Computing Device
2006
Receive Pairing Tokens Generated for Each Authorized Computing Device
2008
Send Pairing Token Generated for Second Computing Device to Second Computing Device, Where Second Computing Device Uses the Pairing Token to Access First Playback Device
2010

FIG. 20

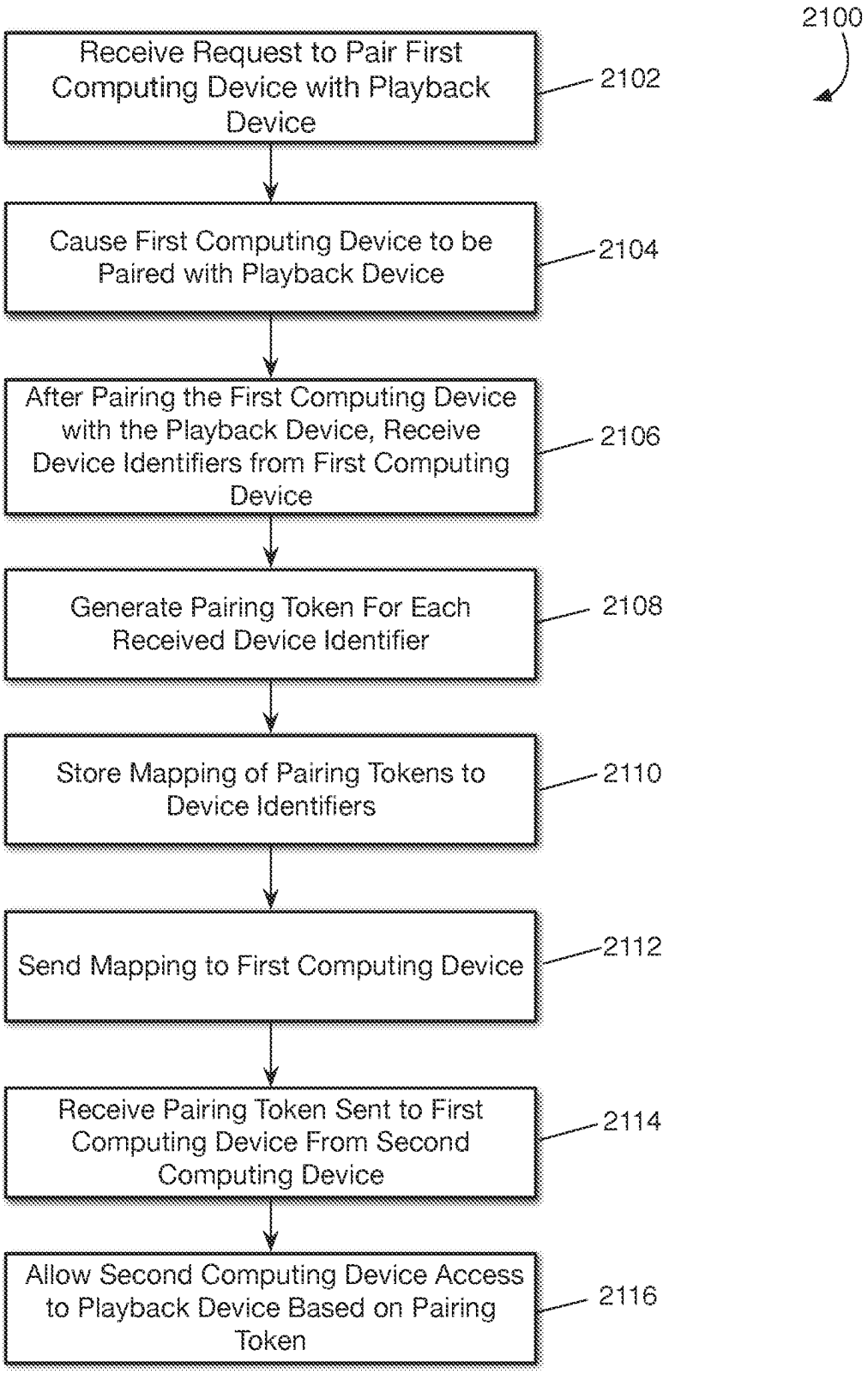
2100
Receive Request to Pair First Computing Device with Playback Device
2102
Cause First Computing Device to be Paired with Playback Device
2104
After Pairing the First Computing Device with the Playback Device, Receive Device Identifiers from First Computing Device
2106
Generate Pairing Token For Each Received Device Identifier
2108
Store Mapping of Pairing Tokens to Device Identifiers
2110
Send Mapping to First Computing Device
2112
Receive Pairing Token Sent to First Computing Device From Second Computing Device
2114
Allow Second Computing Device Access to Playback Device Based on Pairing Token
2116

FIG. 21

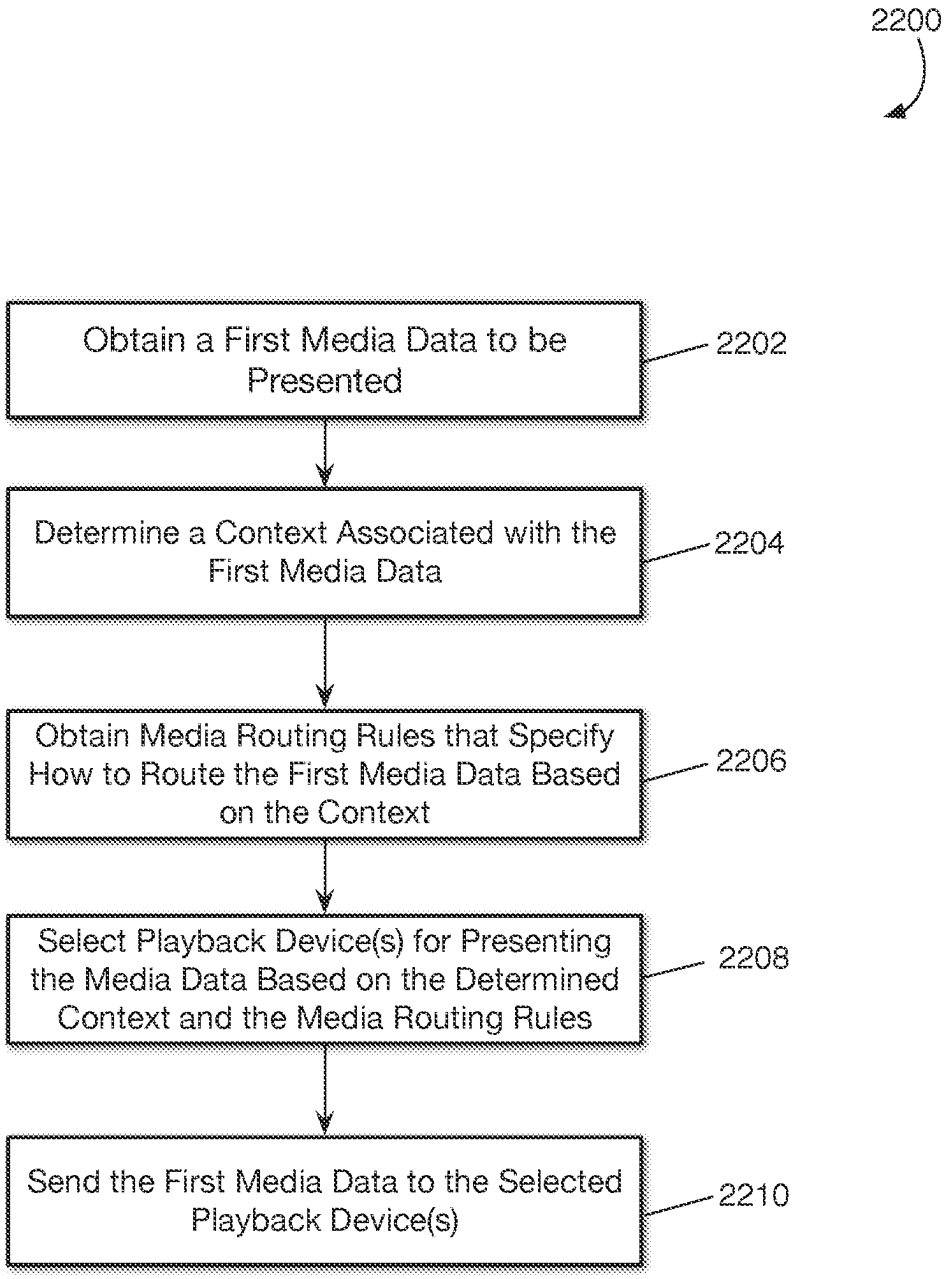
2200
Obtain a First Media Data to be Presented
2202
Determine a Context Associated with the First Media Data
2204
Obtain Media Routing Rules that Specify How to Route the First Media Data Based on the Context
2206
Select Playback Device(s) for Presenting the Media Data Based on the Determined Context and the Media Routing Rules
2208
Send the First Media Data to the Selected Playback Device(s)
2210

FIG. 22

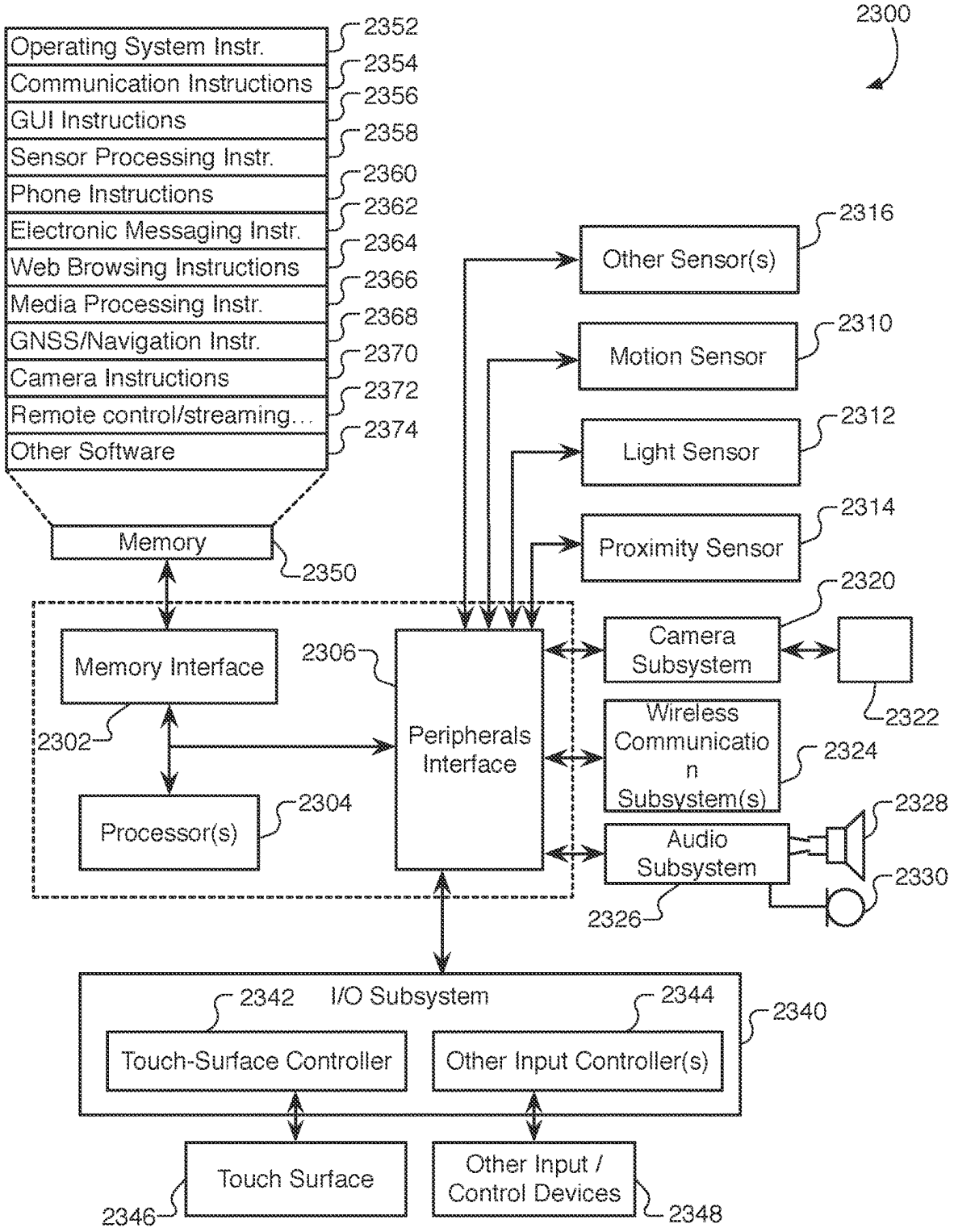
2300
Operating System Instr.
Communication Instructions
GUI Instructions
Sensor Processing Instr.
Phone Instructions
Electronic Messaging Instr.
Web Browsing Instructions
Media Processing Instr.
GNSS/Navigation Instr.
Camera Instructions
Remote control/streaming...
Other Software
2352
2354
2356
2358
2360
2362
2364
2366
2368
2370
2372
2374
Memory
2350
Other Sensor(s)
2316
Motion Sensor
2310
Light Sensor
2312
Proximity Sensor
2314
Memory Interface
2302
2306
Peripherals Interface
Processor(s)
2304
Camera Subsystem
2320
2322
Wireless Communication Subsystem(s)
2324
Audio Subsystem
2326
2328
2330
I/O Subsystem
2342
2344
2340
Touch-Surface Controller
Other Input Controller(s)
Touch Surface
2346
Other Input / Control Devices
2348

FIG. 23

PAIRING DEVICES BY PROXY

INCORPORATION BY REFERENCE; DISCLAIMER

Each of the following applications are hereby incorporated by reference: application Ser. No. 17/212,897 filed on Mar. 25, 2021; application Ser. No. 16/287,999 filed on Feb. 27, 2019; application no. 62/679,967 filed on Jun. 3, 2018; application no. 62/650,692 filed on Mar. 30, 2018. The Applicant hereby rescinds any disclaimer of claim scope in the parent application(s) or the prosecution history thereof and advises the USPTO that the claims in this application may be broader than any claim in the parent application(s).

TECHNICAL FIELD

The disclosure generally relates to managing media playback across networked playback devices.

BACKGROUND

Wireless audio/video (A/V) devices are becoming ubiquitous. For example, wireless speaker systems are used in many homes to play music. Wireless streaming devices are used to play video to television sets and/or audio through connected speaker systems. Sometimes the wireless speaker systems and/or streaming devices are smart computing devices that can be configured to stream and/or receive streaming audio and video data. In some cases, several smart A/V devices can be placed around the home and in different configurations to provide various A/V capabilities throughout the home and/or in different rooms of the home. Systems are needed for configuring, monitoring, and controlling these various A/V devices.

SUMMARY

In some implementations, a system can be configured to allow remote control devices to quietly obtain status information related to various audio/video playback devices. For example, a streaming device (e.g., a user device, phone, etc.) can establish a streaming connection to a playback device. The playback device can be configured to only accept a single streaming connection (i.e., master connection). A remote control device (e.g., a user device, phone, etc.) can quietly connect (i.e., control connection) to the playback device without interrupting the master connection to obtain status information related to the playback device and or the media being streamed to the playback device. The remote control device can provide commands through the control connection to adjust the playback of the streamed media at the playback device.

In some implementations, a system can be configured to manage groups of playback devices. For example, playback devices can be dynamically grouped in a variety of ways. Each playback device can store attributes that define the group to which the playback device belongs. Each playback device can send its group attributes to remote control devices and the remote control devices can determine groups of playback devices based on the group attributes. The remote control devices can then configure and present graphical user interfaces that represent the various groups of playback devices. In some implementations, a group of playback devices can be configured as a persistent group. For example, a pair of playback devices (e.g., wireless speakers) can be configured as a stereo pair. The pair of playback devices can store and send attribute data indicating that the pair of playback devices is a persistent group so that remote control devices can present and control the persistent group as a single device.

In some implementations, a system can be configured to reduce the burden of pairing user devices with playback devices. For example, all users (or user devices) who commonly operate within a particular environment (e.g., a home) can be configured as authorized users of playback devices within the particular environment. When one of the authorized users pairs a user device with a playback device, all of the user devices for all authorized users can be automatically paired with the playback device as a result of the single pairing. Thus, only a single authorized user is burdened with the pairing process in order to pair all authorized users with the playback device.

In some implementations, a system can be configured to route media data to playback devices based on a context associated with the media data. For example, the media data can include audio and/or video data associated with media items, such as music, movies, television shows, etc. The media data can include audio and/or video data generated by software, such as audio/video output from gaming applications and/or an operating system. The context can be determined based on the source of the media data and the media data can be routed to playback devices based on the determined context. For example, when the context is a media context associated with a media item source, the media data can be routed to remote playback devices for presentation. When the context is a system context associated with a software source, the media data can be presented by a local device.

Details of one or more implementations are set forth in the accompanying drawings and the description below. Other features, aspects, and potential advantages will be apparent from the description and drawings, and from the claims.

DESCRIPTION OF DRAWINGS

FIG. **1** is an example graphical user interface (GUI) for controlling playback devices.

FIG. **2** illustrates an example graphical user interface for presenting controls for a playback group.

FIG. **3** is a block diagram of an example system for remotely controlling playback devices from a remote control device.

FIG. **4** is a block diagram of an example system for remotely controlling a playback group from a remote control device.

FIG. **5** is a block diagram of an example system for remotely controlling a non-discoverable playback device from a remote control device.

FIG. **6** is a block diagram of an example system for managing dynamic playback device groups.

FIG. **7** is a block diagram of an example system for managing persistent playback groups.

FIG. **8** is a block diagram of a system for streaming media items to a persistent group.

FIG. **9** is a block diagram of a system for streaming media items to a persistent group.

FIG. **10** is a block diagram of a system for presenting media items streamed from a primary playback device within a persistent group.

FIG. **11** is a block diagram of an example system for synchronizing resumption of playback between playback devices in a playback group.

FIG. **12** is a block diagram of an example system for automatically pairing user devices with playback devices.

FIG. **13** is a block diagram of an example system for managing volume changes among networked playback devices.

FIG. **14** is a block diagram of an example media system configured to automatically establish streaming media connections between playback devices.

FIG. **15** is a block diagram of an example media system configured to dynamically route media data to playback devices.

FIG. **16** is a block diagram of an example media system for dynamic routing based on playback device capabilities.

FIG. **17** is a block diagram of an example media system for providing access to media data in a second language.

FIG. **18** is flow diagram of an example process **1800** for remotely controlling a playback device.

FIG. **19** is a flow diagram of an example process for managing playback groups.

FIG. **20** is a flow diagram of an example process for efficiently pairing authorized user devices with a playback device.

FIG. **21** is a flow diagram of an example process for generating pairing tokens for multiple user devices.

FIG. **22** is a flow diagram of an example process for contextual routing of media data.

FIG. **23** is a block diagram of an example computing device that can implement the features and processes of FIGS. **1-22**.

Like reference symbols in the various drawings indicate like elements.

DETAILED DESCRIPTION

FIG. **1** is an example graphical user interface (GUI) **100** for controlling playback devices. For example, GUI **100** can be presented by a computing device, such as a smartphone, a tablet computer, a laptop computer, a wearable computing device or any other type of computing device that has a connected display. To generate GUI **100**, the computing device (e.g., a remote control device, streaming device, etc.) can wirelessly connect to various playback devices (e.g., wireless speakers, set top boxes, televisions, etc.) and collect state and attribute information from the playback devices. Based on the received attribute data, the computing device can generate GUI **100** that includes representations of individual playback devices (e.g., in graphical element **102**) and/or groups of playback devices (e.g., represented by graphical elements **130** and **140**). Using the state information provided by the playback devices, the computing device can present information describing the media currently being played by the playback devices, the playback controls available for adjusting the playback of the media being played, and/or other information, as may be described further herein below.

In some implementations, GUI **100** can include graphical element **102** for selecting and/or controlling individual playback devices. For example, individual playback devices can advertise the ability of the playback devices to receive media streamed from the computing device. When the computing device receives the information identifying the individual playback devices, the computing device can generate graphical element **102** that identifies the playback devices. In some implementations, the computing device itself can be identified within graphical element **102**. For example, graphical element **102** can include display area **104** for identifying the media item (e.g., song, movie, television show, etc.) being played and the device playing the media. In the example of FIG. **1**, display area **104** indicates that the user's phone is playing a song.

In some implementations, graphical element **102** can include graphical elements **108**, **112**, and/or **116** that identify playback devices. In the example of FIG. **1**, the computing device presenting GUI **100** is the user's phone, so the user's phone is identified in graphical element **108**. Also, graphical element **108** can include an indicator (e.g., checkmark) indicating that the user's phone is the currently selected playback device. Graphical element **102** may also include graphical element **112** indicating that a television or set-top-box is available for playing the selected media item. Graphical element **102** may include graphical element **116** indicating that a wireless speaker is available for playing the selected media item. When the computing device (e.g., user's phone) receives a selection of one or both of graphical elements **112** and/or **116**, the computing device can stream the selected media item (e.g., song) to the selected playback devices and stop playing the selected media item through the output components (e.g., speakers, display, etc.) of the computing device. When streaming media from the computing device, the computing device becomes the master device relative to the playback device or devices to which the media item is being streamed. In some implementations, each playback device is configured to only have one master device. Thus, if a second computing device starts streaming to one of the selected playback devices, the second computing device takes over (e.g., hijacks) the connection and becomes the master of the playback device.

In some implementations, graphical element **102** can include media playback control area **120**. For example, area **120** can include media playback controls (e.g., play button, rewind button, fast forward button, volume control, etc.) for the media being played by or streamed from the computing device. In the example of FIG. **1**, area **120** presents a volume control **122** for specifying and/or adjusting the volume at which the media item is played by the selected playback devices. For example, the user can slide volume handle **124** along the volume slider **122** to adjust the volume up or down.

In some implementations, GUI **100** can include graphical element **130** representing a dynamic playback device group. For example, a user can provide input to the computing device to configure playback devices into playback device groups (i.e., playback groups). In some implementations, the user can provide input to a software application (e.g., home application **332**, described below) on the computing device to indicate which playback devices should be included in a particular dynamic playback group. For example, the user can drag and drop playback devices into the particular dynamic playback group. The user can designate that playback devices within the same room of the user's house (e.g., as determined by home application **332**) should be part of the particular dynamic playback group. The user can, for example, designate that two playback devices (e.g., wireless speakers) in the user's living room should playback media as a group. The dynamic playback group can be configured and reconfigured according to the user's desires. For example, the user may want to listen to music in the living room and create a group of speakers in the living room. Later, the user may wish to group speakers in the living room and kitchen and can reconfigure the playback devices in the living room and kitchen into a new group. In some implementations, a single playback device can be part of multiple different dynamic playback groups. For example, the user may configure a dynamic playback group that includes living room

playback devices. The user may configure a different dynamic playback group that includes kitchen playback devices. The user may configure yet another dynamic playback group that includes living room and kitchen playback devices. Thus, a playback device in the living room may belong to the living room playback group and the combined kitchen/living room playback group.

In response to receiving the group designation, the designated playback devices can be dynamically configured with group attributes that identify to other devices (including the computing device) that the designated playback devices belong to the same group, as described in more detail below. For example, the software application (e.g., home application **332**) on the computing device can send group attributes corresponding to the designated groups for each playback device to each playback device.

When the computing device receives the group attributes from the playback devices in the group, the computing device can determine that the playback devices belong to the same group and present graphical element **130** representing the playback group. For example, graphical element **130** can include state information reported by the playback group (e.g., the name of the group, the media item being played by the group, an image **132** representing the group, identifiers for the playback devices in the group, etc.). The user can select graphical element **134** to cause the computing device to present GUI **200** of FIG. **2** so that the user can view the state of the playback group and control the playback group.

In some implementations, GUI **100** can include graphical element **140** representing a persistent playback device group. For example, the user may want to configure two or more playback devices into a persistent playback device group (e.g., analogous to a stereo configuration or surround sound configuration). When the user creates a persistent group of playback devices, the playback devices can be treated by the computing device as if the persistent group of playback devices is a single device (e.g., single playback device). Thus, the persistent group of playback devices is not subject to the same dynamic rearrangement as described above with respect to the dynamic group of playback devices. However, the persistent group may be a member of a dynamic group such that the persistent group is treated as a single playback device within the dynamic group of devices. Because the persistent playback device group is considered a single playback device, in some implementations, the persistent playback group can be presented as a single playback device in graphical element **102** (e.g., like the television and/or speaker playback devices). Similarly to dynamic playback device groups, the user can select graphical element **144** to cause the computing device to present GUI **200** of FIG. **2** so that the user can view the state of the persistent playback group and control the playback group.

In some implementations, the computing device can establish remote control connections (i.e., control connections) to playback devices to collect state information and control playback at the playback devices. For example, as opposed to the master connection which is hijacked by other streaming devices when the other streaming devices wish to stream media to a playback device, the control connection is a quiet connection that does not interrupt the master connection. The control connection does not stream media to the playback device(s). Instead, the control connection is used to obtain state information and control the playback of the media being played by the playback device(s). Thus, the computing device may both stream media to a first set of playback devices and receive and present status information related to another set of playback devices.

FIG. **2** illustrates an example graphical user interface **200** for presenting controls for a playback group. For example, GUI **200** can be presented by the computing device in response to the user selecting graphical element **134** or graphical element **144** of FIG. **1**, described above. For example, when the computing device receives a selection of graphical element **134** or graphical element **144**, the computing device can minimize graphical element **102** into graphical element **202** corresponding to display area **104** of FIG. **1**. Thus, graphical element **102** represents the media item being played or streamed by the computing device.

When the computing device receives a selection of graphical element **134** or graphical element **144**, the computing device can expand the corresponding graphical element **130** or **140** representing a dynamic playback group or persistent playback group into graphical element **210** to present additional information and/or controls for the selected playback group. For example, graphical element **210** can include information area **212** that identifies the name of the playback group and/or the media item being played (or recently played) by the playback group.

Graphical element **210** can include control area **220** for presenting controls for the playback group. For example, the controls presented in control area **220** can be dynamically determined based on the capabilities and/or features of the playback devices in the playback group, the media item being played by the playback group, and/or the software application providing the media item being played by the playback group. For example, if the playback group includes a device with video capability, then video controls can be presented in area **220**. However, if the playback group does not include a device with video capability, only audio controls may be presented. For example, control area **220** can include media playback timeline **222** and indicator **224** (e.g., play head) to indicate the current playback location of the media item in the playback timeline. Control area **220** can include playback controls **226** (e.g., play, pause, rewind, fast forward, etc.) for controlling the playback of the playing media item in the playback group. Control area **220** can include volume control **228**. For example, the user can use touch input (e.g., touch, drag, release, etc.) to adjust the volume of playback at the playback devices within the playback group by selecting volume handle **230** and sliding it along volume control **228**.

When the user interacts with the playback controls to specify settings for the various playback controls for the playback group, the computing device can send the specified settings to the playback group. In some implementations, the playback settings can be sent to a primary playback device in the playback group and the primary playback device can propagate the playback settings to other playback devices within the playback group. In some implementations, the computing device can send the playback settings directly to each playback device in the playback group. In either case, the playback settings can be sent to playback devices using the non-hijacking (e.g., quiet) control connection, described above.

FIG. **3** is a block diagram of an example system **300** for remotely controlling playback devices from a remote control device. For example, remote control device **310** can correspond to the computing device that presents graphical user interfaces **100** and **200**, as described above. FIG. **3** is used here to describe how playback device status data and control commands are managed between remote control device **310** and playback device **320**.

As used throughout this specification, a remote control device (e.g., remote control device **310**) represents a com-

puting device (e.g., smartphone, tablet computer, laptop computer, etc.) that establishes a quiet, non-hijacking, control connection (e.g., control channel, control pipe, etc.) with the playback device (e.g., playback device **320**) represented in the figures. However, the remote control device may establish a control connection with playback device **320** to obtain state information for playback device **320** and provide control input to playback device **320**, while also maintaining a streaming connection with another playback device (not shown). Thus, remote control device **310** may also be a streaming device (i.e., a master device) with respect to another playback device, as described further below.

As used throughout this specification, playback device (e.g., playback device **320**) represents a computing device (e.g., a wireless speaker, a television, a set-top-box, etc.) configured to present audio and/or video to one or more users. A playback device can originate media streams through software applications installed on the playback device. A playback device can receive media streams from other computing devices. For example, playback devices can advertise (e.g., using wireless signals) that they are capable of receiving and presenting media streams. Other computing devices (e.g., other playback devices, streaming devices, etc.) can detect the advertisement and connect to the playback device to stream media to the playback device, as described above with reference to FIG. **1**. Thus, playback devices are discoverable by other devices that are in close proximity to the playback devices and/or on the same local area network as the playback devices and/or otherwise reachable. This is in contrast to other computing devices (e.g., single user devices such as a smartphone or tablet computer) that may not be discoverable, as described further below. The various devices (e.g., remote control device, playback device, streaming device, etc.) can communicate using through various types of networks, including wide area networks, local area networks, Wi-Fi, Bluetooth, and/or various peer to peer connections (e.g., over Bluetooth, Wi-Fi, etc.).

In some implementations, system **300** includes remote control device **310** and playback device **320**. In the example of FIG. **3**, playback device **320** is originating the media stream being played by playback device **320**. For example, playback device **320** can include media application **322**. Media application **322** can be a music application, a video application, or any other type of media software application. Media application **322** can obtain media for playback by playback device **320** from a local media library on playback device **320**. Media application **322** can obtain media for playback by playback device **320** from a remote source, such as an internet media service. Media application **322** can cause playback device **320** to present media by sending the media stream to media server **324**. For example, media server **324** can be a software service that manages playback of media items on playback device **320**. Thus, media server **324** can provide an interface to the media presentation components (e.g., speakers, display, etc.) of playback device **320**.

In some implementations, playback device **320** can include media remote **326**. For example, media remote **326** can be a software server or service that allows for remotely controlling media server **324**. Remote control devices (e.g., remote control device **310**) can request playback state information from media remote **326** and send media playback control settings to media remote **326**. Media remote **326** can communicate with media server **324** to obtain the playback state information and/or provide the playback control settings to media server **324**.

In some implementations, playback device **320** can include media receiver **328**. For example, media receiver **320** provides the network and/or logical interfaces for receiving media streams and remote control requests from other computing devices. Media receiver **328** works in conjunction with session manager **330** to route messages to and from connected external devices, such as remote control device **310**. For example, session manager **330** manages the network and/or logical communication channels for streaming media connections and control connections for playback device **320**. Session manager **330** can maintain a database of channels or connections. For example, when a computing device connects to media receiver **320**, session manager **330** can store information that identifies the type of connection (e.g., streaming/master connection or remote control connection) and an identifier (e.g., token) for the computing device making the connection. Since playback device **320** may only have one master connection (e.g., incoming streaming connection), session manager **330** can store information describing a single master connection and, possibly, multiple control connections. This connection data can be used by media receiver **328** and/or session manager **330** to route control messages and/or streaming media to the various devices connected to playback device **320**.

In some implementations, system **300** can include remote control device **310**. For example, media remote **312** (e.g., a software service) on remote control device **310** can be configured to present the graphical user interfaces **100** and/or **200** described above on a display of remote control device **310**. In order to obtain the playback state information necessary to generate GUIs **100** and **200**, remote control device **310** must connect to the proximate playback devices, including playback device **320**. For example, remote control device **310** can detect the advertisement messages broadcast by playback device **320** indicating that playback device **320** is available to receive streaming playback. Based on the received advertisement, media remote **312** can request state information from playback device **320**. For example, media remote **312** can send a message to media server **314** on remote control device **310** indicating that media server **314** should request state information from playback device **320**. Media server **314** can send a message to media receiver **328** on playback device **320** requesting the playback state information. The message can indicate that the request is a control request (e.g., as opposed to a streaming request) so that the request does not hijack the streaming media communication channel and cause playback device **320** to stop playing the currently playing media. The message can include a token or identifier that identifies the requesting remote control device **310**.

In some implementations, media receiver **328** can cause session manager **330** to store the communication channel information so that subsequent messages can be routed to remote control device **310**. For example, the communication channel information can include a channel type (e.g., control, streaming) and a channel identifier (e.g., an identifier associated with the requesting device). After media receiver **328** receives the playback state request, media receiver **328** can send the request to media remote **326**. Media remote **326** can obtain playback state information from media server **324** and send the playback state information to media receiver **328**. For example, the playback state information can include descriptive information (e.g., title, artwork, artist, length, etc.) about the media item being played. The playback state information can indicate a current position or location within the media item at which playback device **320** is playing. The playback state information can include

information describing the capabilities and/or features of media application **322** and/or playback device **320** so that media remote **312** can generate and present the appropriate user interface controls. Media receiver **328** can then send the playback state information to media server **314** on remote control device **314** over the previously established control communication channel. Media server **314** can send the playback state information to media remote **312**. Media remote **312** can generate GUI **100** and/or GUI **200** using the playback state information received from playback device **320**.

In some implementations, after generating GUI **100** and/or GUI **200**, media remote **312** on remote control device **310** may send playback commands to playback device **310**. For example, the user of remote control device may select a playback control (e.g., volume, fast forward, rewind, skip, pause, etc.) from one of the graphical user interfaces generated by media remote **312**. Media remote **312** can detect the selection of the control and send a corresponding control command to media server **314**. Media server **314** can send the control command to media receiver **328** and media receiver can send the control command to media remote **326**. Media remote **326** can then cause media server **324** to perform the indicated media control command (e.g., adjust volume, play, pause, fast forward, etc.). After the command is executed, media remote **326** can send playback state information back to media remote **312** on remote control device **310**, as described above so that media remote **312** can update its graphical user interfaces.

FIG. **4** is a block diagram of an example system **400** for remotely controlling a playback group from a remote control device. For example system **400** can be similar to system **300**. However, in system **400** playback device **320** is not only playing a media item (e.g., through a local speaker) but is also streaming the media item to playback device **410** and playback device **420** for synchronous playback. Thus, playback device **320**, playback device **410**, and playback device **420** form a group (e.g., dynamic or persistent) of playback devices. The group may be dynamic or persistent depending on configuration, as described further below. Playback devices **410** and/or **420** may be configured similarly to playback device **320**. Playback devices **410** and/or **420** may have the same features (e.g., all wireless speakers) or may have different features (e.g., set-top-box and wireless speakers).

In some implementations, remote control device **310** can connect to and receive playback state information from playback device **410** and/or playback device **420** in a similar manner as playback device **320**. For example, while all of the components of playback device **320** are not represented in playback device **410** and playback device **420**, these components exist within these playback devices. Thus, remote control device **310** can establish a quiet control channel to media receiver **412** on playback device **410** and media receiver **422** on playback device **420** and receive playback state information using similar mechanisms as described above for playback device **320**. Since playback device **320** is the device streaming media to playback device **410** and playback device **420**, playback device **320** will establish a streaming communication channel (e.g., a master channel) with media receiver **412** on playback device **410** and media receiver **422** on playback device **420**.

In some implementations, remote control device **310** will only send control commands playback device **320** (e.g., the primary device, master device, etc.). For example, although remote control device **310** establishes network connections with all three playback devices, remote control device will only send information requests and commands to the primary or master playback device (e.g., discoverable streaming device) that is controlling playback of the media item. Remote control device **310** can determine the primary playback device based on group member attributes provided to remote control device **310** by each playback device. For example, the group member attributes can be sent from each playback device to remote control device **310** when remote control device **310** establishes a network connection with each playback device.

The group member attributes can include a group identifier. The group identifier can be assigned to playback devices by the primary playback device. For example, each playback device **410**, **420**, and **320** can initially be considered a group of one, where each playback device is the primary device in the group and each device has a different group identifier. When the user commands playback device **320** to stream media to playback device **410** and playback device **420**, playback device **320** can push its group identifier to playback devices **410** and **420** so that they also have the same group identifier.

The group member attributes can include a group leader flag. For example, if the playback device (e.g., playback device **320**) is the group leader (e.g., primary playback device), the group leader flag will be set to true. If the playback device (e.g., playback device **410**) is not the group leader, the group leader flag will be set to false. Thus, media remote **312** on remote control device **310** can quickly identify the primary playback device based on the group leader flags received from the playback devices.

The group member attributes can include a flag indicating whether the group leader is discoverable. For example, some streaming devices are discoverable (e.g. wireless speakers, set-top-boxes, televisions, etc.) and some streaming devices are not discoverable (e.g., single user devices, smartphones, tablet computers, etc.). The group leader discoverable flag indicates whether the group leader (e.g., primary playback device, streaming device, etc.) can be reached directly by remote control device **310**. If the streaming device is not discoverable, then one of the forwarding mechanisms described below will be used to pass messages, requests, or commands to the non-discoverable streaming device.

In some implementations, the group member attributes can include a flag indicating whether the playback device supports relaying messages to non-discoverable streaming devices (e.g., primary or master devices). If this flag is set to true, then the playback device can be used to forward messages from remote control device **310** to a non-discoverable streaming device, as described below. Additional group member attributes may be described below when describing persistent groups.

In some implementations, media remote **312** can present a group of playback devices as a single entity on GUI **100** and/or GUI **200**, as described above. For example, when remote control device **310** receives group member attributes from playback device **320**, playback device **410**, and playback device **420**, media remote **312** can determine that all three playback devices have the same group identifier and, therefore, belong to the same playback group. Thus, instead of presenting three different playback devices on GUI **100** and/or GUI **200**, media remote **312** will present a single playback group graphical element (e.g. graphical element **130**, graphical element **140**) to represent all three devices.

When the user provides input to a playback control on GUI **200** to adjust the media playback (e.g., volume, play, pause, skip, etc.) of the playback group, media remote **312** will send the command to adjust the media playback to the

primary playback device (e.g., playback device **320**), as indicated by the playback group member attributes. Upon receipt of the command, primary playback device **320** will adjust the media playback for all members of the playback group. For example, primary playback device **320** will cause secondary playback devices **410** and **420** to adjust playback according to the command received from media remote **312**.

FIG. **3** and FIG. **4** above describe the playback and remote control architecture where the primary playback device (e.g., streaming device, master device, etc.) is directly reachable by remote control device **310**. For example, playback device **320** is reachable because it advertises its existence and ability to accept control and/or streaming connections. FIG. **5** below describes the playback and remote control architecture where the primary playback device (e.g., streaming device, master device, etc.) is not directly reachable by remote control device **310**. In this situation, remote control device **310** relies upon a playback device (e.g., playback device **320**) to relay or forward requests and commands to the primary playback device using the streaming connection established by the primary playback device.

FIG. **5** is a block diagram of an example system **500** for remotely controlling a non-discoverable playback device from a remote control device. As described above, a non-discoverable playback device can be a computing device that does not advertise its existence and where a connection to the non-discoverable device cannot be initiated by another device.

In some implementations, system **500** can include remote control device **310**, playback device **320**, and/or streaming device **510**. For example, streaming device **510** may be a non-discoverable device. Streaming device **510** may be a computing device with features similar to remote control device **310**. For example, streaming device **510** may be both a streaming device that streams media to playback device **320** and a remote control device that is connected to other playback devices (not shown).

In some implementations, streaming device **510** can include media application **512**. For example, media application **512** can be an application configured to play media from a local media library on streaming device **510** or from a network resource, like a network media service. The user of streaming device **510** can provide input to media application **512** to cause media application **512** to stream media to playback device **320**. Media application **512** can send a request to media server **514** to establish a streaming connection (e.g., a master connection) with playback device **320**. Media server **514** can establish a streaming connection by sending a request to establish a streaming connection to media receiver **328** on playback device **320**. If another streaming device is already streaming media to playback device **320**, media receiver **328** may terminate the existing streaming connection and establish a streaming connection with streaming device **510**. Thus, streaming device **510** effectively hijacked the streaming connection to playback device **320**. After establishing the streaming connection (indicated by bold line with arrows), session manager **330** can store connection information indicating the type of connection (e.g., streaming or master) and an identifier for the connection (e.g., a device identifier for streaming device **510**).

After establishing the streaming connection to media receiver **328**, media application **512** can send media data to media server **514** and media server **514** can stream the media data (e.g., song, movie, tv show, podcast, etc.) to media receiver **328**. Media receiver **328** can send the streamed media data to media server **324** and media server **324** can cause the media data to be presented by playback device **320** (e.g., through speakers, display, etc.). In some implementations, if playback device **320** is part of a playback group, playback device **320** can send the streamed media to the other playback devices in the group for playback. In some implementations, if playback device **320** is part of a playback group, streaming device **510** can send the streamed media directly to the other playback devices in the group for playback. Streaming device **510** can determine the playback devices that are members of the same group based on the group attribute information described above.

In some implementations, playback device **320** relays messages from remote control device **310** to streaming device **510**. As described above, since streaming device **510** is not discoverable, remote control device **310** cannot send control messages directly to streaming device **510**. To obtain playback state information and send playback commands to streaming device **510**, remote control device **310** can send requests and commands for the master device (e.g., streaming device **510**) to playback device **320** and playback device **320** can forward the requests and commands to streaming device **510**.

As described above, media remote **312** can receive group attribute information from playback device **320**. If the group attributes indicate that the group leader is not discoverable and that playback device **320** supports relaying requests to the group leader (e.g., streaming device **510**), then media remote **312** can determine that remote control requests and commands should be routed to streaming device **510** through playback device **320**.

In some implementations, media remote **312** on remote control device **310** can send a request to media server **314** to obtain playback state information for the playback group corresponding to playback device **320**. Media receiver **328** can determine that, since playback device **320** is not the group leader (e.g., primary device), the request should be forwarded to streaming device **510**. Media receiver **328** can send the request for playback state information to media server **514** on streaming device **510** along with an identifier for the control channel established for remote control device **310**. Media server **514** can send the playback state request to media remote **516** on streaming device **510**. Media remote **516** can determine the playback state information and send the playback state information to media receiver **328** on playback device **320** along with the identifier for the control channel associated with remote control device **310**. Media receiver **328** can use the identifier to determine which control channel managed by session manager **330** to use to send the playback state information to remote control device **310**. After determining the correct control channel, media receiver **328** can send the playback state information to media server **314** on remote control device **310**. Media server **314** can send the playback state information to media remote **312** on remote control device **310** so that media remote **312** can generate and present GUI **100** and/or GUI **200** having the state information provided by streaming device **510**.

In some implementations, media playback control commands can be routed from remote control device **310** to streaming device **510** through playback device **320** in a similar manner as playback state information request. When media remote **516** on streaming device **510** receives the playback control command, media remote **516** can execute the command locally (e.g., on streaming device **510**) and cause all playback devices being streamed to (e.g., playback device **320**) to execute the same command. However, in

some situations, media playback control commands that are forwarded by playback device **320** can be intercepted and executed at playback device **320**. For example, instead of waiting to receive a "pause" command from streaming device **510** that was routed through playback device **320**, playback device **320** can intercept the pause command as it is routed from remote control device **310** through playback device **320** to streaming device **510** and execute the pause command. Thus, playback device **320** can stop playing the currently playing media more quickly than if playback device **320** waited to receive the pause command from streaming device **510**.

FIG. **6** is a block diagram of an example system **600** for managing dynamic playback device groups. In some implementations, system **600** can be configured similarly to systems **300**, **400**, and **500** described above. For example, system **600** can include remote control device **310** and playback devices **610**, **620**, and/or **630**. Playback devices **610**, **620**, and/or **630** can be configured similarly to playback device **320** described above. For example, playback devices **610**, **620**, and/or **630** can advertise their availability using wired or wireless network broadcasts. Playback devices **610**, **620**, and/or **630** can advertise the services they provide, such as the streaming media receiver and message relay services described above.

After receiving the advertisement messages, remote control device **310** can establish network connections (e.g., wired, wireless, peer-to-peer, Wi-Fi, etc.) with each of the playback devices **610**, **620**, and/or **630**. These network connections may be maintained (e.g., persistent), even though the type of logical connection (e.g., master, control, streaming, etc.) and/or data routing to or through these playback devices may change. Maintaining a persistent network connection with each of these playback devices allows remote control device **310** to adjust to the dynamically changing topology of the network (e.g., changing playback groups) without having to incur the expense (e.g., in both time and processing) of tearing down and reestablishing the network connections, as may be required if remote control device **310** only established a network connection with the primary playback device in a group.

In some implementations, remote control device **310** may store and maintain playback device pool **602**. For example, device pool **310** can be a database that stores information describing or identifying each network connection to each playback device (e.g., playback devices **610**, **620**, **630**). Device pool **310** can store all of the playback group attributes (e.g., dynamic and/or persistent group attributes) reported by each playback device. For example and as briefly described above, each playback device can report (e.g., broadcast, advertise, etc.) its playback group attributes to remote control device **310** upon establishing a network connection with remote control device **310** and/or anytime these playback group attributes change.

In some implementations, the playback group attributes can include a group identifier that identifies the dynamic playback group or dynamic playback groups to which the playback device belongs. The playback group attributes can include a group leader flag that when set to true indicates that the reporting playback device is the leader or primary device of the dynamic playback group. The playback group attributes can include a flag (e.g., true, false) indicating whether the dynamic playback group leader is discoverable, as described above. The playback group attributes can include a flag that when set to true, indicates that the reporting playback device supports relaying messages to/from a non-discoverable group leader (e.g., master device, streaming device, single user device, etc.).

In some implementations, the playback group attributes can include persistent group attributes. For example, the persistent group attributes can include a persistent group identifier that can be used to identify playback devices that belong to the same persistent group (e.g., stereo pair of playback devices, surround sound group of playback devices. In some implementations, playback devices that have the same persistent group identifier can be treated as if they were a single device, as described above. The persistent group attributes can include a persistent group leader flag that indicates whether the reporting playback device is the leader or primary device within the persistent group. The persistent group attributes can include a group member is reachable flag that indicates whether all other persistent group members are reachable or not. In the case of a stereo pair of playback devices (e.g., a persistent group of two), when the group member is reachable flag is set to false, this indicates that the other playback device in the persistent group is not reachable. In the case of a surround sound speaker group (e.g., persistent group of more than two playback devices), when the group member is reachable flag is set to false, this indicates that at least one other playback device in the persistent group is not reachable. This reachable flag can have an impact on streaming media and/or control message routing, as described further below.

After collecting group attributes from each connected playback device (e.g., playback devices **610**, **620**, **630**, etc.), media remote **312** on remote control device **310** can determine how to group the reporting playback devices based on the playback group attributes stored in device pool **602**. For example, playback device **610** may report a playback group identifier value of one (1), a group leader flag value of true, and a group leader discoverable flag value of true, among other group attributes. Playback device **620** may report a playback group identifier value of one (1), a group leader flag value of false, and a group leader discoverable flag value of true, among other group attributes. Playback device **630** may report a playback group identifier value of two (2), a group leader flag value of true, and a group leader is discoverable flag value of true, among other group attributes.

Based on these reported group attributes, media remote **312** can determine that playback device **610** and playback device **620** are members of the same playback group **640** because they have reported the same playback group identifier (e.g., playback group identifier=1). Media remote **312** can also determine that playback device **610** is the group leader based on the fact that playback device **610** reported a playback group leader flag value of true. Thus, a logical control channel can be established between playback device **610** and remote control device **310** so that playback state and playback control requests for playback group **640** can be directed to playback device **610** since playback device **610** is the leader or primary device in group **640**. Media remote **312** can also determine that playback state and control requests can be routed directly to playback device **610**, e.g., rather than being forwarded or relayed through another device, since the playback group leader is discoverable flag reported by playback device **610** has a value of true.

Similarly, media remote **312** can determine that playback device **630** is in a group **650** by itself since playback device **630** is the only playback device to report a playback group identifier having the value two (2). Media remote **312** can determine that playback device **630** is the group leader for playback group **650** based on the fact that playback device

610 reported a playback group leader flag value of true. Thus, a logical control channel can be established between playback device 630 and remote control device 310 so that playback state and playback control requests for playback group 650 can be directed to playback device 630 since playback device 630 is the leader or primary device in group 650. Media remote 312 can also determine that playback state and control requests can be routed directly to playback device 630, e.g., rather than being forwarded or relayed through another device, since the playback group leader is discoverable flag reported by playback device 610 has a value of true.

As described above, a single playback device can belong to multiple dynamic playback groups. For example, playback device 610 and playback device 620 can report group attributes that indicate they belong to the same dynamic playback group 640. Playback device 620 and playback device 630 can report group attributes that indicate they belong to the same dynamic playback group that is different than group 640. Thus, playback device 620 may belong to and report group attributes for two different playback dynamic groups.

After media remote 312 determines the playback groups based on the reported playback group attributes, media remote 312 can generate GUI 100 and/or GUI 200 based on the determined playback groups. The user of remote control device 310 can then view playback status information related to the playback groups and/or control the playback of media being played by the playback groups using the user interface features described above with respect to FIG. 1 and FIG. 2.

In some implementations, playback groups can be dynamically reorganized. For example, a user can provide input to remote control device 310, a playback device (e.g., playback device 610, 620, or 630), and/or streaming device 510 to combine or split playback devices into new or different groups. For example, the user can provide input to playback device 630 indicating that playback device 630 should stream media to playback group 640 (or individual playback devices 610 and 620). In response to this input, playback device 630 can push its playback group identifier and group leader discoverable flag to playback devices 610 and 620. Playback devices 610 and 620 can change their playback group identifiers to match the group identifier of playback device 630. Playback devices 610 and 620 can change their playback group leader discoverable flag to match the flag provided by playback device 630. Playback device 610, previously the group leader of playback group 640, can change its playback group leader flag to false to indicate that it is no longer a group leader.

After changing these playback group attributes, playback devices 610, 620, and/or 630 can report the playback attributes to remote control device 312 and remote control device 310 can store the playback group attributes in device pool 602 as described above. After receiving the updated playback group attributes from playback devices 610, 620, and/or 630 at remote control device 310, media remote 312 can determine, based on the reported playback group attributes, that playback devices 610, 620, and/or 630 now belong to the same playback group (e.g., playback group 650) and that playback device 630 is the primary playback device in the playback group. Media remote 312 can then reconfigure GUI 100 and/or GUI 200 to represent the new playback group topology and send playback state information requests and/or playback commands for playback group 650 to the primary playback device, playback device 630. Thus, playback groups can be dynamically configured and reconfigured and media remote can dynamically configure and reconfigure the GUIs needed to remotely control the playback groups.

In some implementations, remote control device 310 can be a streaming device similar to streaming device 510 described above. The user of remote control device 310 can provide input to remote control device 310 to stream media to playback group 650 (now including playback device 610, 620, and 630). In some implementations, remote control device 310 can stream media to only the primary playback device in playback group 650 (e.g., playback device 630) and the primary playback device can stream the received media to other playback devices in the group. In some implementations, remote control device 310 can stream media directly to each playback device in playback group 650 and avoid the delays and connectivity issues involved in forwarding the media stream from the primary playback device to the other playback devices in the playback group.

FIG. 7 is a block diagram of an example system 700 for managing persistent playback groups. For example, system 700 can correspond to system 600 described above. System 700 can include remote control device 310 and playback devices 710, 720, and/or 730. As described above, remote control device 310 can establish a network connection with each playback device 710, 720, and 730. Each playback device can report its playback group attributes, including persistent group attributes, to remote control device 310. Remote control device 310 can store the playback group attributes, network connection identifiers, control channel identifiers, and/or streaming channel identifiers in device pool 602.

In some implementations, the playback group attributes reported by playback devices 710, 720, and/or 730 can include persistent group attributes. For example, a user can configure two or more devices as a persistent group. For example, the user can configure a persistent group to operate as a stereo pair of smart speakers. The user can configure a persistent group to operate as a surround sound system (e.g., 5.1 surround sound).

In some implementations, the persistent group attributes can include a persistent group identifier. Similar to dynamic playback groups, playback devices that are members of a persistent playback group can be assigned the same persistent group identifier. For example, initially, individual playback devices can each have a unique persistent group identifier. When playback devices are combined into a persistent playback group, the playback group identifier of one of the playback devices (e.g., the playback device the user is interacting with to create the persistent playback group) can be pushed to the other playback devices in the persistent playback group so that all playback devices in the persistent playback group have the same persistent group identifier. If a user provides input to playback device 710 having a persistent group identifier of 10 to create a persistent playback group with playback device 720, playback device 710 can send the persistent group identifier 10 to playback device 720 and playback device 720 can change its persistent group identifier to 10. Thus, playback device 710 and playback device 720 can be configured as a stereo pair (e.g., of speakers) and can both be assigned a persistent group identifier of 10. When media remote 312 analyzes the data in device pool 602, media remote 312 can determine that playback device 710 and playback device 720 have the same persistent group identifier and can determine that playback device 710 and playback device 720 form persistent group 740. Media remote 312 can then present persis-

tent group **740** on GUI **100** and/or GUI **200** as if persistent group **740** were a single device.

In some implementations, the persistent group attributes can include a flag indicating whether the reporting playback device is the persistent group leader. Media remote **312** can use the leader flag to determine to which playback device in a persistent group to send control requests (e.g., information requests, control commands, etc.). For example, even though remote control device **310** maintains network connections to each playback device, media remote information requests and/or commands are directed to the leader (e.g., primary device, master device, etc.) in each persistent group.

In some implementations, the persistent group attributes can include a group member is reachable flag that indicates whether the other playback devices in a persistent group are reachable by the reporting playback device. For example, members of a persistent group can monitor the availability of other members of the persistent group. For example, playback device **710** can establish a control connection with playback device **720**. If playback device **720** is unplugged, moved, or otherwise unavailable, playback device **710** will determine that playback device **720** is unreachable and will set its group member is reachable flag to false. After changing this persistent group attribute (or any group attribute), playback device **710** will report the updated group attributes to remote control device **310**. Media remote **312** can then update its GUIs to reflect the change in status of the persistent playback group.

In some implementations, a persistent group can be a playback device within a dynamic playback group. For example, persistent group **740** can be added to a dynamic playback group **750** where playback device **730** is the primary device within the dynamic playback group. Upon adding persistent group **740** to dynamic group **750**, the dynamic group identifier for playback device **730** can be pushed to playback devices **710** and **720**, as described above with reference to FIG. **6**. However, playback devices **710** and **720** will have a different persistent group identifier (e.g., identifier **10**) than playback device **730**. Thus, playback device **710** and playback device **720** will be treated as a persistent group **740** within the dynamic group **750**.

This difference between persistent groups and dynamic groups may cause differences in how each playback device presents media items. For example, a media item (e.g., a music track, movie, etc.) can be composed of different audio/video channels (e.g., left, right, front left, front center, front right, rear right, rear left, subwoofer, etc.). When combined into a persistent group, a playback device may present just one channel. For example, in the stereo pair persistent group **740**, playback device **710** may be configured to play the right channel of audio for a music media item while playback device **720** may be configured to play the left channel of audio for the same music media item thereby creating stereo playback. Similarly, in a 5.1 surround sound persistent group configuration having six playback devices, each playback device can be configured to present one of six audio channels associated with a movie media item soundtrack (e.g., front left, front center, front right, rear right, rear left, subwoofer, etc.). This is different than how playback device **730** would behave since playback device **730** is not part of a persistent group. When the same music media item is streamed to playback device **730**, playback device **730** would present all of the audio channels for the music media item.

In some implementations, when a member of a persistent group is not reachable, the remaining members revert back to non-persistent group behavior. For example, in the stereo pair persistent group **740**, playback device **710** may be configured to play the right channel of audio for a music media item while playback device **720** may be configured to play the left channel of audio for the same music media item thereby creating stereo playback. If playback device **720** becomes unreachable, playback device **710** can revert to non-persistent group behavior and play all audio channels (e.g., both right and left audio channels) for the music media item. When playback device **720** becomes reachable again, playback device **710** and playback device **720** can dynamically return to playing right and left audio channels as a stereo pair persistent group. Playback devices in a persistent playback group corresponding to a 5.1 surround sound configuration can behave similarly to the stereo pair persistent group.

In some implementations, a persistent group can include a streaming device (e.g., streaming device **510**). For example, the persistent group can include streaming device **510** (e.g., a set-top-box, streaming media player, etc.) and one or more playback devices. The streaming device **510** can be configured as the primary playback device in the persistent group. In some implementations, the playback devices can correspond to a persistent playback group (e.g., stereo pair, 5.1 surround sound, etc.). Thus, the persistent group can be configured to emulate the functionality of a wired in-home entertainment system that includes video (e.g., set-top-box, television, etc.) and stereo or surround sound audio output. Moreover, by configuring streaming device **510** and the playback devices into a persistent group, the audio output from the streaming device **510** will be routed to the playback devices whenever audio output is provided by any media item presented by streaming device **510**. Thus, the playback devices in the persistent group can playback media items as if they were a single device.

In some implementations, playback devices within a persistent group are inseparable. For example, if playback device **710** and playback device **720** are both reachable and working properly, the both playback devices **710** and playback device **720** will playback media items together or not at all. For example, if playback device **710** is playing a music media item, then playback device **720** will be playing the same music media item. If playback device **710** receives a command to pause playback, then playback on playback device **720** will be paused as well. If the connection to playback device **720** is hijacked (e.g., a streaming device starts streaming media to playback device **720**), then the connection to playback device **710** will be hijacked as well. This behavior for the persistent group ensures that the playback devices within the persistent group behave as a single playback device.

In some implementations, older versions of remote control device **310** may not be able to determine dynamic and/or persistent groups based on group attributes received from playback devices. Thus, instead of presenting one graphical element on GUI **100** and/or GUI **200** for each playback group (e.g., dynamic or persistent), the older remote control devices may represent each playback device individually on GUI **100** and/or GUI **200**, described above. To avoid presenting members of a group individually, the playback devices can be configured such that only the primary playback device (e.g., group leader, primary device, master device, etc.) in a playback group advertises its availability and connects to remote control devices. In another variation on this approach, primary playback devices may be configured to advertise to older remote control devices using an advertisement message that the older devices are configured to receive, while secondary playback devices in the playback

group advertise to new remote control devices (e.g., remote control device **310**) using advertising messages that only newer remote control devices are configured to receive. Thus, newer remote control devices can be configured to receive the old and the new advertisement messages and generate and present playback groups based on the playback attributes that they receive, while older remote control devices will only present the primary playback devices in each playback group which can serve as a proxy for the playback group when presenting GUI **100** and GUI **200**, as described above.

FIG. **8** is a block diagram of a system **800** for streaming media items to a persistent group. In some implementations, streaming devices can interact with persistent groups in various ways. For example, system **800** can correspond to any of the systems described above. System **800** can include streaming device **802** (e.g., corresponding to streaming device **510**) and/or playback devices **810** and **820** (e.g., corresponding to playback device **320**). Streaming device **802** may have all of the same capabilities of remote control device **310**, described above, and therefore is able to determine or detect dynamic and persistent playback groups.

In the example of FIG. **8**, playback devices **810** and **820** can be configured as a persistent group **830** (e.g., stereo pair). Based on its software and/or hardware configuration, streaming device **802** may be able to stream to only one playback device or streaming device **802** may be able to stream to multiple playback devices simultaneously. In the example of FIG. **8**, streaming device **802** is capable of streaming media items to multiple playback devices simultaneously. Therefore, when the user of streaming device **802** provides input indicating that streaming device **802** should stream media items to persistent group **830**, cluster manager **804** of streaming device **802** may establish and manage streaming connections to both playback device **810** and playback device **820**. When the streaming connections are established, cluster manager **812** and/or cluster manager **822** can determine (e.g., based on software or hardware version information provided by streaming device **802**) that streaming device **802** is capable of streaming to multiple playback device simultaneously and will not attempt to forward the media stream to the other playback device(s) in the persistent group **830**.

As described above, when playback device **810** and **820** are configured as a stereo pair, one playback device (e.g., playback device **810**) can be configured to present the left audio channel for the streamed media item and the other playback device (e.g., playback device **820**) can be configured to present the right audio channel for the streamed media item. If playback device **810** in persistent group **830** becomes unreachable (e.g., unplugged, moved out of range, etc.), then playback device **820** can detect the absence of playback device **810** and automatically play both left and right audio channels. When playback device **810** becomes reachable again, playback device **820** can detect that playback device **810** is reachable and send a message to streaming device **802** to cause streaming device **802** to reconnect to playback device **810**. Playback device **820** can then automatically resume presenting only the right audio channel and playback device **810** can resume playing the left audio channel of the media item streamed from streaming device **802**.

FIG. **9** is a block diagram of a system **900** for streaming media items to a persistent group. In some implementations, streaming devices can interact with persistent groups in various ways. For example, system **900** can correspond to any of the systems described above. System **900** can include streaming device **902** (e.g., configured similarly to streaming device **510**) and/or playback devices **810** and **820** (e.g., configured similarly to playback device **320**). Streaming device **802** may have all of the same capabilities of remote control device **310**, described above, and therefore is able to determine or detect dynamic and persistent playback groups.

In the example of FIG. **9**, playback devices **810** and **820** can be configured as a persistent group **830** (e.g., stereo pair). Based on its software and/or hardware configuration, streaming device **902** may be able to stream to only one playback device or streaming device **902** may be able to stream to multiple playback devices simultaneously. In the example of FIG. **9**, streaming device **902** is capable of streaming media items to only one playback device at a time. Therefore, when the user of streaming device **902** provides input indicating that streaming device **902** should stream media items to persistent group **830**, streaming device **902** will establish a streaming connection to the leader or primary playback device in persistent group **830**, playback device **820**. When the streaming connection is established, cluster manager **822** can determine (e.g., based on software or hardware version information provided by streaming device **902**) that streaming device **902** is not capable of streaming to multiple playback device simultaneously and will forward the media stream to the other playback device (s) (e.g., playback device **810**) in the persistent group **830**.

As described above, when playback device **810** and **820** are configured as a stereo pair, one playback device (e.g., playback device **810**) can be configured to present the left audio channel for the streamed media item and the other playback device (e.g., playback device **820**) can be configured to present the right audio channel for the streamed media item. If playback device **810** in persistent group **830** becomes unreachable (e.g., unplugged, moved out of range, etc.), then playback device **820** can detect the absence of playback device **810**, will stop forwarding the media stream to playback device **810**, and will automatically begin playing both left and right audio channels. When playback device **810** becomes reachable again, playback device **820** can detect that playback device **810** is reachable and resume forwarding the media stream to playback device **810**. Playback device **820** can then automatically resume presenting only the right audio channel and playback device **810** can resume playing the left audio channel of the media item streamed from streaming device **902**.

FIG. **10** is a block diagram of a system **1000** for presenting media items streamed from a primary playback device within a persistent group. For example, system **1000** can correspond to any of the systems described above. System **1000** can include playback devices **810** and **820** (e.g., configured similarly to playback device **320**). Playback devices **810** and/or **820** may have all or some of the same capabilities of remote control device **310**, described above, and therefore is able to determine and/or detect dynamic and persistent playback groups.

In the example of FIG. **10**, playback devices **810** and **820** can be configured as a persistent group **830** (e.g., stereo pair, 5.1 surround sound configuration, etc.). When a user provides input (e.g., voice input, touch input, etc.) to playback device **810** to cause playback device **810** to begin playing a media item (e.g., from an internal media application, media application **322**, etc.), playback device **810** can become the primary playback device in persistent group **830**. Cluster manager **812** on playback device **810** can then control or manage the streaming connections to the playback devices

(e.g., playback device **820**) within the persistent group and/or manage streaming the media item to playback device **820**.

In some implementations, within a persistent group, the playback device receiving the user input becomes the primary playback device within the persistent group. Because the cluster manager is responsible for managing the devices within the persistent group, the cluster manager only runs on the primary device. Thus, the cluster manager may run on different playback devices depending on with which playback device in a persistent group the user chooses to interact. The cluster manager is configured such that when the primary playback device is playing a media item, the cluster manager causes other playback devices in the persistent group to play the media item as well as long as the other playback devices are available or reachable.

As described above, when playback device **810** and **820** are configured as a stereo pair, one playback device (e.g., playback device **810**) can be configured to present the left audio channel for the streamed media item and the other playback device (e.g., playback device **820**) can be configured to present the right audio channel for the streamed media item. If playback device **810** in persistent group **830** becomes unreachable (e.g., unplugged, moved out of range, etc.), then cluster manager **822** on playback device **820** can detect the absence of playback device **810**, will cause playback device **820** stop streaming the media stream to playback device **810**, and will cause playback device **810** to automatically begin playing both left and right audio channels. When playback device **810** becomes reachable again, cluster manager **822** on playback device **820** can detect that playback device **810** is reachable and resume streaming the media stream to playback device **810**. Playback device **820** can then automatically resume presenting only the right audio channel and playback device **810** can resume playing the left audio channel of the media item streamed from playback device **820**.

FIG. **11** is a block diagram of an example system **1100** for synchronizing resumption of playback between playback devices in a playback group. For example, system **1100** can correspond to any of the systems described above. System **1100** can include playback devices **810** and **820** (e.g., configured similarly to playback device **320**). Playback devices **810** and/or **820** may have all or some of the same capabilities of remote control device **310**, described above, and therefore is able to determine and/or detect dynamic and persistent playback groups. System **1100** can include streaming device **1102**. Streaming device **1102** can correspond to streaming device **510**, described above. Streaming device **1102** can correspond to a playback device, such as playback device **320**, **810**, or **820**, described above. Media items can be streamed from streaming device **510** to playback group **830** using any of the mechanisms described above.

In some implementations, streaming device **1102** can synchronize the resumption of playback between playback devices. For example, when streaming media to playback devices **810** and **820**, streaming device **1102** can send media data to the playback devices faster than the playback devices can play the media data. Thus, each playback device **810** and **820** can store the media data in respective buffers **1110** and **1120** as it is received and present the media data according to a defined timeline or speed so that the audio and/or video output from playback device **810** and **820** is synchronized.

When the user provides input (e.g., touch, voice, etc.) to streaming device **1102** to pause playback of the streamed media item, streaming device **1102** can send a command to each playback device **810** and **820** to stop playback of the media data. However, due to network latency issues or other causes of delay in receiving the stop command, playback device **810** may stop playback of the media item at a media sample corresponding to location **1112** in buffer **1110** and playback device **820** may stop playback of the media item at a media sample corresponding to location **1122** in buffer **1120**. Location **1112** may correspond to media sample at time 1:00 (e.g., one minute) into the media item, for example, while location **1122** may correspond to a media sample at 1:05 into the media item. Since played media samples are removed from the buffers, playback device **820** does not have the media samples necessary to resume playback from location **1112** (e.g., time index 1:00). Thus, if playback is resumed from location **1112**, playback device **820** will be silent until playback device **810** reaches location **1122** (e.g., time index 1:05).

To avoid the situation where playback device **810** in playback group **830** plays while playback device **820** in playback group **830** is silent, playback can be resumed from a location in buffers **1110** and **1120** where both playback devices **810** and **820** have media samples available. To accomplish this, in response to receiving the pause command from streaming device **1102**, each playback device **810** and **820** can report the position within their respective buffers **1110** and **1120** where each actually stopped playback. Stated differently, each playback device **810** and **820** can report its first available media sample in their respective buffers **1110** and **1120**. For example, playback device **810** can send streaming device **1102** an identifier (e.g., time index) for the media sample at location **1112** in buffer **1110**. Playback device **820** can send streaming device **1102** an identifier (e.g., time index) for the media sample at location **1122** in buffer **1120**.

In some implementations, streaming device can generate a resume playback command that includes a time index and network time for anchoring a playback timeline, and a time index for playing audible sound so that playback of the media item at each playback device **810** and **830** is synchronized. For example, the anchor time index can be used to identify a media item sample in media buffers **1110** and **1120**. The anchor time index can be selected such that it occurs at or after the latest (e.g., largest) time index reported by each playback device in the playback group **830**. Continuing the example above, since playback device **820** reported a last played sample time index of 1:05 (e.g., corresponding to location **1122**) and playback device **810** reported a last played sample time index of 1:00 (e.g., corresponding to location **1112**), streaming device **1102** can select anchor sample time index that is 1:05 or later.

Streaming device **1102** can also select an anchor network time for the playback timeline. For example, when streaming device **1102** receives user input indicating that the user wishes to resume playback, streaming device **1102** can select a network time that is close to the current time.

Streaming device **1102** can also select a presentation sample time index for beginning audible (and/or visual) playback of the media item. For example, if streaming device **1102** has determined that the anchor sample time index is 1:10 at network time 'T', then the playback timeline for the media item can start from sample time index 1:10 at network time T. However, the audible and/or visual playback of the media item does not have to occur until a later time specified by the determined presentation sample time index (e.g., at time index 1:10). When streaming device **1102** sends a command to playback devices **810** and **820** to resume playback and specifies an anchor sample time index

of 1:10 and an anchor network time 'T' with a presentation sample time index of 1:15, then each playback device **810** and **820** can start their respective playback timelines at sample index 1:10 (e.g., buffer locations **1114**/**1124**) at network time 'T' and delay presenting any audio or video output until sample time index 1:15 (e.g., buffer locations **1116**/**1126**). This allows the devices to synchronize their playback timelines and also begin (resume) human perceptible playback simultaneously. By specifying an anchor sample time index, an anchor network time, and a presentation sample time index, streaming device **1102** can ensure that both playback devices **810** and **820** resume playback at the same time.

FIG. **12** is a block diagram of an example system **1200** for automatically pairing user devices with playback devices. For example, system **1200** can correspond to any of the systems described above. Because user devices (e.g., streaming devices, remote control devices, etc.) can connect to the playback devices through peer-to-peer connections (e.g., Bluetooth, peer to peer Wi-Fi, etc.), user devices typically need to go through a pairing process in order to connect to playback devices. The pairing process often requires that each user device connect to a playback device and that a user enters a code or password to pair to and interact with (e.g., stream media, obtain state information, etc.) the playback devices. This pairing process often has to be repeated for each playback device and each user device. System **1200** can reduce the burden of pairing user devices with playback devices by automatically pairing authorized user devices.

In some implementations, a user of user device **1210** can generate authorized users database **1212**. For example, user device **1210** may include a home application **332** that allows the user (e.g., home owner, home administrator, etc.) of user device **1210** to specify users and/or user devices (e.g., user device **1220**) that are authorized to user playback devices (e.g., playback device **320**) within the user's home or other environment. Authorized user database **1212** can include user identifiers and/or device identifiers for each authorized user and/or user device. If the identified users and/or user devices have already been paired with some playback devices, the authorized user database **1212** can include pairing tokens generated and provided by the paired playback devices. For example, authorized user database **1212** can include a mapping of authorized user device identifiers to corresponding pairing tokens generated for each of the authorized user device identifiers. However, when authorized user database **1212** is first created on user device **1210**, the authorized user database may not include any pairing tokens.

In some implementations, user device **1210** may be paired with playback device **320**. For example, user device **1210** may receive an advertisement from playback device **320** indicating that playback device **320** is available and provides some services (e.g., media streaming, remote control access, etc.). User device **1210** can present a notification to the user of user device **1210** indicating that playback device **320** has been detected. The user of user device **1210** can provide input to user device **1210** to initiate a pairing process between playback device **320** and user device **1210**. For example, playback device **320** may present a code to the user and the user can enter the code into a user interface of user device **1210**. User device **1210** can send the code to playback device **320** to verify that user device **1210** is proximate to playback device **320** and should be paired.

In some implementations, after pairing with playback device **320**, user device **1210** can automatically pair the user devices identified in authorized user database **1212** with playback device **320**. To initiate the pairing of the user devices identified in authorized user database **1212** with playback device **320**, user device **1210** can send authorized user database **1212** to playback device **320**. For example, user device **1210** can send the authorized user database **1212**, or a portion of the database **1212** that includes the user identifiers and/or device identifiers for the authorized users in authorized user database **1212**, to playback device **320**. Playback device **320** can store the received portion of authorized user database **1212** as authorized user database **1202**. Playback device **320** can then generate unique pairing tokens for each identified user and/or identified user device in authorized user database **1202**. Playback device **320** can store the pairing tokens in authorized user database **1202** in association with each token's respective user identifier and/or device identifier. Playback device **320** can then send a copy of authorized user database **1202**, including the pairing tokens, to user device **1210** to complete the pairing process. User device **1210** can then update authorized user database **1212** with the pairing tokens received from playback device **320** so that each user identifier and/or user device identifier in authorized user database **1212** is associated with the appropriate pairing token generated for the user identifier and/or user device identifier by playback device **320**.

In some implementations, user device **1210** can synchronize authorized user database **1212** with other authorized user devices. For example, user device **1220** may be an authorized user device of an authorized user identified in authorized user database **1212**. User device **1210** can send a portion of the authorized user database **1212** related to the user of user device **1220**, including the pairing tokens generated by playback device **320**, to user device **1220**. For example, user device **1220** can receive and store in authorized user database **1222** the user identifier, devices identifiers, and/or pairing tokens associated with the user of user device **1220**. User device **1220** will not receive and store user identifiers, devices identifiers, and/or pairing tokens associated with other users of other devices since the user of user device **1220** is not the home or environment administrator or owner.

User device **1220** can store the received authorized user database **1212** as authorized user database **1222** or update authorized user database **1222** with the data and/or tokens in authorized user database **1212**. After saving or updating authorized user database **1222**, database **1222** now has the pairing token generated for the device identifier of user device **1220** and/or the user identifier of the user of user device **1220** by playback device **320**. When user device **1220** attempts to pair with playback device **320** for the first time, user device **1220** can send the pairing token and its device identifier and/or user identifier to playback device **320** instead of requiring the user to participate in the pairing process by entering a code or other input. When playback device **320** receives the user identifier or device identifier and the pairing token from user device **1220**, playback device **320** can compare the pairing token with the pairing tokens stored in authorized user database **1202** to verify that the received pairing token is the same as the pairing token generated by playback device **320** for the identified user or device. After the pairing token is verified (or validated), playback device **320** can allow user device **1220** to utilize the services provided by playback device **320**. Thus, user device **1220** can be paired with playback device **320** without requiring the user to participate in the pairing process since the pairing process was performed on behalf of user device **1220** by user device **1210**. Thus, user device **1210** served as

a proxy for user device **1220** while performing the pairing process on behalf of user device **1220**. If the pairing token cannot be verified, playback device **320** can prevent user device **1220** from accessing playback device **320** and/or can initiate a user interactive pairing process with user device **1220**, as described above. For example, when the pairing token does not match a token in authorized user database **1202** or when the user identifier or device identifier provided by user device **1220** cannot be found in authorized user database **1202**, then playback device **320** can initiate a user interactive pairing process with user device **1220**, as described above.

FIG. **13** is a block diagram of an example system **1300** for managing volume changes among networked playback devices. For example, system **1300** can correspond to any of the systems described above. Remote control devices **1310** and/or **1320** can be configured similarly to remote control device **310** described above. Media remote **1312** and media remote **1322** can be configured to present GUI **100** and/or GUI **200** described above and may present volume controls for remotely controlling the playback volume of playback device **320**. Media remote **1312** and media remote **1322** can communicate with media remote **1302** using the mechanisms described above to adjust the playback volume on playback device **320** and/or a playback group (e.g., dynamic or persistent group) where playback device **320** is the primary or master playback device in the playback group.

In order to reduce network traffic related to volume input errors, in some implementations, remote control device **1310** can implement an adaptive volume change threshold. For example, volume changes at remote control device **1310** with respect to the volume at playback device **320** where the difference in volume is less than a threshold amount can be ignored and not sent to playback device **320**. Volume changes that are less than the threshold can be considered input error (e.g., related to inaccuracies in touch input) and ignored. This threshold can be adaptive such that volume changes at higher volumes (e.g., toward the louder end of the volume range) have a larger change threshold (e.g., 5% of the volume range) that must be exceeded before sending a volume change while volume changes at lower volumes (e.g., closer to zero volume) have a smaller change threshold (e.g., 1% of the volume range) that must be exceeded before sending a volume change to playback device **320**.

In some implementations, remote control device **1310** can implement a delay before sending a volume change to playback device **320**. For example, instead of sending volume changes to playback device **320** immediately, remote control device **1310** can cache volume changes for a period of time (e.g., 0.5 seconds, 1 second, etc.) after the user has stopped providing input to change the volume and before sending the volume change. Delaying sending the volume change to playback device **320** allows the user time to finalize his or her volume change decision and prevents immediately sending volume changes that the user may not actually want to apply to playback device **320**.

In some implementations, remote control device **1310** can delay updating the volume user interface control to reflect the current volume at a network device when the user is currently providing input to the volume user interface control or when the user has recently finished providing input to the user interface control. For example, the user of remote control device **1310** may be providing input to a volume user interface control (e.g., volume control **228**, handle **230** of FIG. **2**) while another user of remote control device **1320** also adjusts the volume of playback device **320**. To avoid a situation where the volume handle **230** moves away from the user's finger while providing the user input to adjust volume, remote control device **1310** can delay updating the volume control display to reflect the actual volume of playback device **320** until a period of time has passed after the user stops providing input to the volume control. For example, if the delay period is one second, then if the user is providing input or was providing input within the last one second, any volume status information received from playback device **320** will be ignored. However, one second after the user stops providing volume input, the volume control presented by media remote **1312** on remote control device **1310** will be updated to reflect the actual volume of playback device **320**. Thus, the user will not be confused by a volume control that is not consistent with the user input provided.

FIG. **14** is a block diagram of an example media system **1400** configured to automatically establish streaming media connections between playback devices. For example, a streaming device can be configured to automatically establish and/or reestablish media streaming connections to playback devices after the connections have been hijacked by another media streaming device.

In some implementations, media system **1400** can include streaming device **1410**. For example, streaming device **1410** can correspond to streaming device **510** and/or playback device **320** described above. For example, in some instances, streaming device **1410** can be a playback device **320** that performs the media streaming functions described with reference to streaming device **510**.

In some implementations, streaming device **1410** can include routing manager **1412**. For example, routing manager **1412** can correspond to session manager **330** described above. Routing manager **1412** can manage a repository of routing information describing available playback devices (e.g. playback devices **1420**, **1430**, etc.), current connections between streaming device **1410** and other devices, previous connections between streaming device **1410** and other devices, and/or playback group configurations (e.g., which playback devices are in which room of a house, which playback devices are in which dynamic and/or persistent playback groups, etc.).

In some implementations, streaming device **1410** can stream media data to playback device **1420** and/or playback device **1430**. For example, streaming device **1410** may be a media streaming device connected to a television, speakers, etc. A user of streaming device **1410** can provide input to streaming device **1410** to cause streaming device **1410** to stream media data (e.g., audio data, video data, etc.) to playback device **1420** and/or playback device **1430**. In some implementations, this user input designating playback device **1420** and/or playback device **1430** as playback devices for streaming device **1410** can cause streaming device **1410** to automatically create a dynamic playback group that includes playback device **1420**, playback device **1430** and/or streaming device **1410**. Streaming device **1410** can establish a connection to playback device **1420** and/or playback device **1430** and stream the user selected media to playback device **1420** and/or playback **1430**.

In some implementations, routing manger **1412** can store routing information identifying the routing of the streamed media to playback devices. For example, routing manager **1412** can store routing information indicating the last (e.g., most recent) media routing configuration for streaming device **1410**. Thus, routing manager **1412** can store routing information indicating that streaming device **1410** is routing media data to playback device **1420** and/or playback device **1430**. Active connections between the devices are represented by solid double arrow lines in FIG. **14**. For example,

the current streaming media connection between streaming device **1410** and playback device **1420** is represented by line **1402**.

As described above, streaming media connections are established between devices using a connection hijacking mechanism. For example, the last device to request the streaming media connection gets to use the streaming media connection. Thus, when streaming device **1440** (e.g., another device similar to streaming device **1410**) starts streaming media data to playback device **1420** (e.g., connection **1442**), streaming device **1440** will hijack the streaming connection **1402** to playback device **1420**. Thus, the connection **1402** between streaming device **1410** and playback device **1420** may be terminated, as illustrated by dashed line **1404**.

In some implementations, streaming device **1410** can stop (e.g., pause) presenting (e.g., streaming, playing, etc.) a media item when a playback device is hijacked away from streaming device **1410**. For example, when streaming device **1440** hijacks the connection to playback device **1420**, streaming device **1410** may receive a message that the connection to playback device **1420** has been hijacked. When playback device **1420** is hijacked away from streaming device **1410**, streaming device **1410** may stop presenting (e.g., playing, streaming, etc.) the media item that streaming device **1410** was streaming to playback device **1420**. In some implementations, streaming device **1410** will continue presenting the media item when the playback device hijacked by streaming device **1440** is in a different room (e.g., in a house, office, building, etc.) than streaming device **1410**.

In some implementations, streaming device **1410** will continue presenting video corresponding to the media item while muting audio corresponding to the media item when the playback device hijacked by streaming device **1440**. For example, when streaming device **1410** is streaming live media (e.g., media that cannot be paused, a live sporting event, etc.), streaming device **1410** can continue presenting or streaming video data corresponding to the live media while stopping the stream of audio data when a playback device is hijacked away from streaming device **1410**.

In some implementations, a playback device **1420** can prevent a streaming device **1440** from hijacking a connection to playback device **1420**. For example, playback device **1420** can receive from streaming device **1410** information indicating the type of media item being streamed from streaming device **1410** to playback device **1420**. If the media item is of a particular type (e.g., a movie), playback device **1420** can refuse a streaming media connection requested by another streaming device (e.g., streaming device **1440**). Thus, the user or users of streaming device **1410** can continue to enjoy the media item (e.g., movie) being played by streaming device **1410** uninterrupted. Playback device **1420** can send a notification to streaming device **1440** indicating the reason for the refused connection. Streaming device **1440** can then present a message indicating the reason for the refused connection on a display associated with streaming device **1440** or through speakers (e.g., using speech) associated with streaming device **1440**.

In some implementations, streaming device **1410** can automatically reconnect to playback device **1420**. For example, streaming device **1410** can be configured to automatically hijack the connections to playback devices identified in the last media routing configuration for playback device **1420** stored by routing manager **1412**. For example, when streaming device **1410** receives user input indicating that streaming device **1410** should present a media item, streaming device **1410** can determine the playback devices identified in the last (e.g., previous) media routing configuration (e.g., playback device **1420** and/or playback device **1430**) and re-hijack the media streaming connections to playback devices **1420** and **1430**, as necessary. For example, streaming device **1410** can re-hijack the connection to playback device **1420** thereby establishing streaming connection **1406** and terminating connection **1442** between streaming device **1440** and playback device **1420**, as indicated by dashed line **1444**.

In some implementations, this automatic hijacking mechanism can be implemented by a group of streaming devices **1410**. For example, a dynamic playback group can be created that includes multiple streaming devices **1410**. Each streaming device **1410** can be configured to stream media data to a different set of playback devices. When the group receives input to start presenting a media item, each streaming device **1410** (e.g., video streaming devices) can re-hijack their respective last playback devices and present the media item. An example of this could include a multi-television environment (e.g., sports bar, home with multiple TVs, etc.) where each streaming device **1410** presents video for the media item on respective televisions simultaneously while streaming audio output for the media item to wireless speakers (e.g., playback devices).

Dynamic Media Routing

FIG. **15** is a block diagram of an example media system **1500** configured to dynamically route media data to playback devices. For example, media system **1500** can correspond to media system **1400** described above. In some implementations, Media system **1500** can be configured to dynamically route media data (e.g., audio data, video data, etc.) to playback devices based on media data source contexts.

In some implementations, media system **1500** can include streaming device **1502**. For example, streaming device **1502** can correspond to streaming device **510** and/or playback device **320** described above. For example, in some instances, streaming device **1502** can be a playback device **320** that performs the media streaming functions described with reference to streaming device **510**.

In some implementations, streaming device **1502** can include routing manager **1504**. For example, routing manager **1504** can correspond to session manager **330** described above. Routing manager **1504** can manage a repository of routing information describing available playback devices (e.g. playback devices **1420**, **1430**, etc.), current connections between streaming device **1410** and other devices, previous connections between streaming device **1410** and other devices, and/or playback group configurations (e.g., which playback devices are in which room of a house, which playback devices are in which dynamic and/or persistent playback groups, etc.). Routing manager **1504** can be configured with rules that define how to route media data based on media data source contexts, playback devices connections, type of playback device that is connected to streaming device **1502**, and/or other criteria.

In some implementations, routing manager **1504** can be configured to route media data based on media context **1506** and/or system context **1508**. For example, media data sources corresponding to media items, such as music, movies, television shows, podcasts, audiobooks, etc., can correspond to media context **1506**. Media data sources corresponding to software (e.g., software applications that generate sounds, gaming applications, operating system, etc.) can correspond to system context **1508**. Stated differently, true media items (e.g., media files, media items,

movies, music, etc.) can correspond to the media context, while media data generated by software and/or hardware (e.g., separately from media items) can correspond to system context **1508**.

In some implementations, routing manager **1504** can route media data corresponding to media context **1506** to playback devices and/or playback groups while presenting media data corresponding to system context **1508** locally on or by streaming device **1502**. For example, a user can provide input to streaming device **1502** indicating that streaming device **1502** should stream media data to playback group **1510**. For example, playback group **1510** (e.g., dynamic playback group, persistent playback group, etc.) can include playback device **1520** and/or playback device **1530**. Routing manager **1504** can determine a context (e.g., media context **1506**, system context **1508**) for media data generated by streaming device **1502** and stream the media data to playback group **1510** based on the context. For example, routing manager **1502** can stream media data corresponding to media context **1506** to playback group **1510** while presenting media data corresponding to system context **1508** locally by streaming device **1502** or a personal playback device (e.g., a headset, small personal speaker, small personal display screen, etc.) connected to streaming device **1502**. For example, while streaming device **1502** is streaming audio for a movie to playback group **1510** for presentation, operating system input sounds (e.g., clicks) generated by streaming device **1502** can be presented by streaming device **1502**. If streaming device **1502** is part of a persistent playback group (e.g., considered one logical device), then media data corresponding system context **1508** can be presented by each device in the persistent playback group.

In some implementations, media system **1500** can include headset device **1540**. For example, headset device **1540** can be a particular type of playback device **320**. Headset device **1540** can be a personal playback device worn on or in the ears of a user of streaming device **1502**, for example. Routing manager **1504** can determine how to route media data corresponding to media context **1506** and/or system context **1508** based on the type of playback device (e.g., headset, speakers, etc.) connected to streaming device **1502**. For example, routing manager **1504** can implement special routing rules for headset playback devices, as described below.

In some implementations, routing manager **1504** can send media data corresponding to system context **1508** to headset device **1540**. For example, if streaming device **1502** is a personal device (e.g., single user device, a smartphone, smart watch, etc.), then routing manager **1504** can route (e.g., send), media data corresponding to system context **1508** to headset device **1540** when headset device **1540** is connected to streaming device **1502**.

In some implementations, routing manager **1504** can send media data corresponding to media context **1506** to headset device **1540**. For example, if streaming device **1502** is a public device (e.g., set-top-box, smart speaker, etc.), then routing manager **1504** can route (e.g., send), media data corresponding to media context **1506** to headset device **1540** when headset device **1540** is connected to streaming device **1502**. As a particular example, streaming device **1502** can be streaming audio for a movie to playback group **1510**. When the user connects headset device **1540** to streaming device **1502**, routing manager **1504** can automatically change the routing for the movie audio such that headset device **1540** receives and presents the movie audio and playback group **1510** no longer receives and/or presents the movie audio. When the user later disconnects headset **1540** from streaming device **1502**, routing manager **1504** can resume streaming the media data corresponding to media context **1506** to playback group **1520**.

In some implementations, routing manager **1502** can be configured with time-based rules for routing media data. For example, streaming device **1502** can be configured with a time period to playback device/playback group mapping that defines which playback devices to route media data to at corresponding times of the day. In a particular example, routing manger **1504** can be configured with a daytime routing configuration and a nighttime (e.g., 8 pm-9 am) routing configuration. The daytime routing configuration can specify that during the daytime time period (e.g., 9 am-8 pm), media data streamed from streaming device **1502** should be routed to a 5.1 surround sound speaker group (e.g., dynamic playback group, persistent playback group, etc.). The nighttime routing configuration can specify that during the night time period (e.g., 8 pm-9 am), media data streamed from streaming device **1502** should be routed to a single playback device or small group of playback devices (e.g., stereo pair, dynamic playback group, persistent playback group, etc.). The daytime and/or nighttime routing configuration can specify other playback parameters, including audio volume for the playback devices (e.g., higher volume during the daytime period, lower volume during the nighttime period).

FIG. **16** is a block diagram of an example media system **1600** for dynamic routing based on playback device capabilities. For example, media system **1600** can correspond to media system **1500** described above. Media system **1600** can be configured to dynamically route media data to playback devices based on the capabilities of the respective playback devices. For example, streaming device **1502** can determine the routing of media data based on the playback capabilities of playback devices when streaming media data to a playback group (e.g. playback group **1630**). Alternatively, the primary playback device (e.g., group leader) in a playback group can determine how to route media data received by the playback group based on the capabilities of playback devices in a playback group.

In some implementations, media system **1600** can include playback group **1630**. For example, playback group **1630** can be a dynamic or persistent playback group. Playback group **1630** can include playback device **1640**, playback device **1650**, and/or playback device **1660**. Each playback device can have different capabilities. For example, playback device **1640** may be capable of audio output **1642** (e.g., to speakers) and video output **1644** (e.g., to a display), while playback devices **1650** and/or **1660** may be capable of audio output **1652** and **1654**, but not video output. The capabilities of each playback device can be reported or broadcast to the devices in playback group **1630** and/or streaming device **1502**, for example. Thus, when streaming device **1502** streams a media item that includes audio and video data, streaming device **1502** can determine the playback capabilities of each device and route the media data for the media item accordingly. For example, streaming device **1502** can send audio and video media data to playback device **1640** while sending only audio media data to playback devices **1650** and **1660**.

Alternatively, streaming device **1502** can send audio and video media data for the media item to the primary device in playback group **1630**. When the primary device (e.g., playback device **1650**) receives the audio and video media data, the primary device can determine the playback capabilities of each device in playback group **1630** and route the

media data for the media item accordingly. For example, playback device **1650** (e.g., primary device) can present the audio data for the media item and send audio and video media data to playback device **1640** while sending only audio media data to playback devices **1660**.

In some implementations, each playback device in playback group **1630** can determine how to process received media data based on each device's capabilities. For example, each playback device in playback group **1630** can receive all of the media data (e.g., audio and/or video) for the media item streamed by streaming device **1502**. Each device can present or not present the received audio media data and/or video media data based on each device's capabilities. Moreover, a playback device can determine which media presentation subsystems of the playback device to enable based on the received media data. For example, playback device **1640** can be configured for audio output **1642** and video output **1644**. When playback device **1640** receives media data that includes audio and not video data, playback device **1640** can present the audio data while disabling video output. For example, playback device **1640** can provide audio output through speakers connected to playback device **1640** while keeping a connected display powered off.

FIG. **17** is a block diagram of an example media system **1700** for providing access to media data in a second language. For example, system **1700** can correspond to media system **1500** described above.

In some implementations, streaming device **1502** can be presenting a media item while streaming audio data for the media item to playback group **1710**. Each playback device (e.g., playback device **1720**, playback device **1730**, etc.) in playback group **1710** (e.g., dynamic group, persistent group, etc.) can present audio output **1722**, **1732** according to a language (e.g., English) configured in or by streaming device **1502**.

In some implementations, the media item can include additional audio data that provides dialog in different languages. For example, the media item (e.g., a movie) can include dialog tracks (e.g., corresponding to speech translations for the dialog in the movie) in various languages (e.g., French, Chinese, Vietnamese, etc.).

In some implementations, routing manager **1504** can route dialog tracks to user devices based on languages specified by the user devices. For example, media system **1700** can include user device **1750** (e.g., a smartphone, tablet computer, etc.). User device **1750** may be configured to present data to a user in a language (e.g., second language) that is different than the presentation language configured in streaming device **1502**. For example, while streaming device **1502** is configured to present information and/or media items in English, user device **1750** may be configured to present information and/or media items in Chinese.

A user (e.g., Chinese speaking user) of user device **1750** can provide input to connect user device **1750** to streaming device **1504**. For example, when connected to streaming device **1502**, user device **1750** can send information specifying the presentation language (e.g., Chinese) of user device **1750** to streaming device **1504**. When the language specification for user device **1750** is received by streaming device **1502**, routing manager **1503** can generate routing data indicating that Chinese language media data (e.g., Chinese dialog track for the movie) should be routed to user device **1750**. Thus, while streaming device **1502** and/or playback group **1710** present the media item in the first language (e.g., English), streaming device **1502** can stream the media data (e.g., Chinese language dialog track) corresponding to the second language of user device **1750** to user device **1750**.

In some implementations, media system **1700** can include playback device **1740**. For example, playback device **1740** can be a headset, speaker, or other audio output device that provides audio output **1742**. The user of user device **1750** can connect playback device **1740** to user device **1750** so that the second language media track received by user device **1750** from streaming device **1502** can be presented by playback device **1740**. For example, the Chinese speaking user can wear a headset (playback device **1740**) that presents dialog for a movie in Chinese, while watching the movie presented by streaming device **1502** on a television while other users listen to the movie dialog presented in English by playback group **1710**.

Artificial Intelligence Interface

In some implementations, the media systems described herein can be configured to provide an artificial intelligence interface that can process spoken voice input provided by a user of the media systems. For example, the artificial intelligence (AI) interface can determine how to process media related input commands based on the type of media item, the playback groups (e.g., dynamic playback groups, persistent playback groups, etc.), and/or the specific playback devices specified in the user's voice input. For example, the spoken voice input can be received by a streaming device (e.g., streaming device **1502**) through an AI interface of the streaming device.

In some implementations, streaming device **1502** can receive a voice input command to play a media item everywhere. For example, "everywhere" can include all playback devices connected to a network environment (e.g., home, work, etc.) or associated with an environment (e.g., home, work, etc.) configured in home application **332**. In some implementations, "everywhere" can include all playback devices for which routing manager **1504** has connection and/or routing information. When streaming device **1502** receives the "play everywhere" command with respect to a media item, routing manager **1504** can determine how to route the media item based on the type of media item. For example, if the media item is an audio media item (e.g., music, audiobook, podcast, etc.), then routing manager **1504** can stream the audio media item to all playback devices capable of audio output, as described above. Alternatively, if the media item is an audio media item (e.g., music, audiobook, podcast, etc.), then routing manager **1504** can stream the audio media item only to playback devices capable of only audio output. If the media item is an audio/video media item (e.g., movie, television show, etc.), then routing manager **1504** can stream the audio media item to all playback devices capable of audio output or video output, as described above.

In some implementations, streaming device **1502** can receive a voice input command to play a media item to a playback group or playback groups. For example, when streaming device **1502** receives a "play to group" voice command, routing manager **1504** can determine, based on the playback group data stored on streaming device **1504**, the playback devices associated with the playback group identified in the voice command. For example, the playback group can correspond to a dynamic group, a persistent group, a room group, or any other type of configured group. Streaming device **1502** can then stream the media item identified in the voice input command to the specified group. In some implementations, routing manager **1504** can stream

the media item to the playback devices in the specified group based on the output capabilities of the playback devices, as described above.

In some implementations, streaming device **1502** can receive a voice input command to play a media item to specific types of devices. For example, the different types of devices can include set-top-boxes, smart speakers, specific models of devices, etc. The voice input command can specify that streaming device **1502** should send the media item to all set-top-boxes or all streaming devices for example. When streaming device **1502** receives the voice input command, routing manager **1504** can determine which playback devices correspond to the specified type of device and stream the media item identified in the voice input command to the playback devices of the specified type.

Example Processes

To enable the reader to obtain a clear understanding of the technological concepts described herein, the following processes describe specific steps performed in a specific order. However, one or more of the steps of a particular process may be rearranged and/or omitted while remaining within the contemplated scope of the technology disclosed herein. Moreover, different processes, and/or steps thereof, may be combined, recombined, rearranged, omitted, and/or executed in parallel to create different process flows that are also within the contemplated scope of the technology disclosed herein. Additionally, while the processes below may omit or briefly summarize some of the details of the technologies disclosed herein for clarity, the details described in the paragraphs above may be combined with the process steps described below to get a more complete and comprehensive understanding of these processes and the technologies disclosed herein.

FIG. **18** is flow diagram of an example process **1800** for remotely controlling a playback device. For example, process **1800** can be performed by a playback device to allow a remote control device to provide remote control commands through a control connection while the playback device maintains an active streaming connection (e.g., master connection) with a streaming device. The remote control connection and the master connection can be separate connections that have separate functionality. For example, the remote control connection can be used to receive commands from remote control devices and/or send state information to the remote control devices without interrupting, impacting, or hijacking the master connection. The master connection can be used to receive streaming media data from the streaming device and/or communicate with the streaming device.

At step **1802**, the playback device can establish a master connection between the playback device and the streaming device. For example, the playback device can broadcast a message advertising its availability to other devices. The message can include data that receiving devices (e.g., streaming device) can use to connect to the playback device. For example, the message can include a device identifier for the playback device that can be used by the streaming device to connect to the playback device over a local area network, wi-fi network, or some other network to which both the playback device and the streaming device are connected. When the streaming device receives the advertisement, the streaming device can present a graphical user interface identifying the playback device. The user of the streaming device can then select the playback device as the playback device for a selected media item or other media data. After receiving the user's selection of the playback device, the streaming device can communicate with the playback device to establish the master connection. Since playing multiple media items simultaneously at the playback device would make for an unpleasant experience for the user, the playback device may only manage a single master connection at a time.

At step **1804**, the playback device can receive a media item from the streaming device through the master connection. For example, the streaming device can stream the media item to the playback device through the master connection, send the entire media item through the master connection, or send a reference (e.g., link, URL, etc.) to the media item through the master connection. Thus, when this specification describes sending or streaming media items from a streaming device to a playback device, the sending or streaming can be performed by streaming the media item to the playback device through the master connection, sending the entire media item through the master connection, or sending a reference (e.g., link, URL, etc.) to the media item that the playback device can use to obtain the media item. Alternatively, the streaming device can send an identifier for the media item to the playback device through the master connection and the playback device can obtain the media item from another source (e.g., a network source, locally from storage on the playback device, etc.).

At step **1806**, the playback device can present the media item at the playback device. For example, if the media item is an audio media item (e.g., music), then the playback device can play the audio media item through speakers of the playback device. If the media item is a video media item, then the playback device can present the media item using a display of the playback device.

At step **1808**, the playback device can establish a control connection between the playback device and a remote control device. For example, the remote control device can receive the advertisement message broadcast by the playback device as described above. The remote control device can use the data in the advertisement message to send a message the playback device to establish a control connection that allows the remote control device to obtain playback status information and/or send commands that allows the remote control device to control the playback of a media item being presented by the playback device. Since multiple remote control devices may present playback status information and may provide remote control commands, the playback device may manage multiple control connections to multiple different remote control devices. Moreover, because the control connection is not a master connection, the control connection can be established without interrupting playback of the currently playing media item and without disrupting or hijacking the master connection.

At step **1810**, the playback device can receive a media command from the remote control device through the control connection. For example, the media command can be a request for playback status information (e.g., identification of the currently playing media item, the position of playback in the media item, current volume level, functions supported by the application presenting the media item, capabilities of the playback device, etc.). The media command can be a playback control command that stops, starts, skips, fast forwards, rewinds, adjusts volume, or commands some other change to the playback of the currently playing media item.

At step **1812**, the playback device can process the media command. For example, the playback device can process the media command by executing the media command locally at the playback device. For example, stop playback commands, status requests, etc., may be executed locally at the playback device. Alternatively, the playback device can process the

media command by forwarding the media command to the streaming device through the master connection. For example, since the streaming device is the source of the media item, the streaming device is managing playback of the media item and may need to coordinate playback across multiple playback devices. Thus, the playback device may forward the media command (e.g., status request, skip command, fast forward command, pause command, volume adjustments, etc.) to the streaming device so that the streaming device can process the media command and make corresponding adjustments at the playback devices that are presenting the media item.

FIG. **19** is a flow diagram of an example process **1900** for managing playback groups. For example, process **1900** can be performed by a computing device (e.g., a remote control device, a streaming device, etc.) to determine groupings of playback devices based on playback device attributes received from various playback devices. After the playback device groups are determined, the computing device can present the playback device groups on a display of the computing device and the user of the computing device can select a playback group to which to stream media items so that all playback devices in the selected group can present the user-selected media items.

At step **1902**, the computing device can receive playback group attributes corresponding to a first playback device. For example, the computing device can receive the playback group attributes in a message broadcast by the playback device advertising the playback device's availability and/or capabilities. The playback group attributes can include a first playback group identifier. For example, the first playback group identifier can be a dynamic playback group identifier. The first playback group identifier can be a persistent playback group identifier. The playback group attributes can include other attributes as described above.

At step **1904**, the computing device can receive playback group attributes corresponding to a second playback device. For example, the computing device can receive the playback group attributes in a message broadcast by the playback device advertising the playback device's availability and/or capabilities. The playback group attributes can include a second playback group identifier. For example, the second playback group identifier can be a dynamic playback group identifier. The second playback group identifier can be a persistent playback group identifier. The playback group attributes can include other attributes as described above.

At step **1906**, the computing device can determine that the first playback group identifier is equivalent to the second playback group identifier. For example, the computing device can compare the first playback group identifier to the second playback group identifier and determine that the first playback group identifier and the second playback group identifier are identical and that the first playback device and the second playback device belong to the same playback device group.

At step **1908**, the computing device can generate a first playback group that includes the first playback device and the second playback device. For example, the computing device can store playback group data indicates that the first playback device and the second playback device are in the same playback device group. The playback group data can also include information identifying the type of playback group (e.g., persistent, dynamic) and/or the capabilities of the playback devices in the playback group. In some implementations, a single playback device may belong to multiple dynamic playback groups. Thus, the second playback device may provide playback group attributes that identify multiple dynamic playback groups. Moreover, a single playback device may belong to both a persistent playback group and a dynamic playback group. For example, the persistent playback group that includes the second playback device may also be a playback device included in a dynamic playback group, as described above. Thus, the second playback device may provide playback group attributes that identify multiple dynamic playback groups and a single persistent playback group.

At step **1910**, the computing device can present the first playback group on a display of the computing device. For example, the computing device can present the first playback device and the second playback device as a single entity or as a single device on a display of the computing device. This allows the user to make a single group selection, instead of selecting multiple playback devices, when the user wishes to send the playback of a media item to multiple playback devices. When the user selects a playback group, the computing device can send (e.g., stream) a user selected media item to the playback group so that each playback device in the selected playback group can synchronously present the media item with other playback devices in the same playback group, as described above.

FIG. **20** is a flow diagram of an example process **2000** for efficiently pairing authorized user devices with a playback device. For example, process **2000** can be performed by a user device (e.g., a streaming device, a remote control device, etc.). The user device can, for example, be configured with device identifiers (or user identifiers) for devices that are authorized to access or interact with playback devices within an environment (e.g., home environment, office environment, etc.). The environment can be defined based on geographic area. The environment can be defined based on networks used to manage or interact with playback devices within an environment. When the user device is paired with a playback device, the user device can send the authorized device identifiers to the playback device to cause the playback device to generating pairing tokens for the authorized device identifiers. Thus, user device can serve as a proxy for, and perform the pairing process on behalf of, the other authorized user devices.

At step **2002**, the user device can store device identifiers corresponding to authorized computing devices. For example, an administrator or other authorized user of the environment can provide input to the user device, or another computing device, to identify users and/or user devices that are authorized to access playback devices within the environment. For example, the administrator (e.g., a parent) within a home environment can provide input to the user device to identify other users (e.g., spouse, children, friends, etc.) who should be allowed to access playback devices within the home environment. The user device can then store the device identifiers for the authorized computing devices in an authorized user database on the user device. This authorized user database, or individual records therein, may be shared or synchronized with the other authorized computing devices.

At step **2004**, the user device can cause the user device to be paired with a first playback device. For example, the user of the user device (e.g., the first computing device) can provide input to the user device indicating that the user device should connect to, or pair with, the first playback device. The user device and the first playback device can perform a pairing process, e.g., including receiving user input of a pairing code, to pair the user device and the first playback device. If the pairing is successful, the first playback device can send a pairing token to the first playback

device that the first playback device can use to access the services and/or functionality of the first playback device without having to perform the pairing process again. For example, the user device can include the pairing token in subsequent requests to the first playback device. The first playback device can determine that the user device is authorized to access the first playback device based on the pairing token, as described above.

At step **2006**, the user device can cause the first playback device to generate pairing tokens for each authorized computing device. For example, after successfully pairing the user device with the playback device, the user device can automatically send the device identifiers for the authorized computing devices (e.g., other user devices) to the first playback device. When the authorized device identifiers are received, the first playback device can generate pairing tokens for each of the authorized device identifiers. Thus, by sending the authorized device identifiers to the first playback device to generate the pairing tokens, the user device has performed the pairing process on behalf of each of the identified authorized devices thereby saving the user's of the authorized devices the burden of having to go through the pairing process themselves which may be even more burdensome when pairing with multiple playback devices.

At step **2008**, the user device can receive the pairing tokens generated for each authorized computing device. For example, after the first playback device generates the pairing tokens for each authorized device identifier, the first playback device can send to the user device data mapping each authorized device identifier to its respective pairing token. The user device can then store the mapping of device identifiers to pairing tokens in the authorized user database stored on the user device.

At step **2010**, the user device can send a pairing token generated for a second computing device to the second computing device. For example, after performing the pairing process on behalf of the authorized computing devices, the user device can send the pairing tokens to each authorized computing device. For example, the pairing token generated for the second computing device by the first playback device can be sent to the second computing device. The second computing device can then use the pairing token to access the functionality, features, and/or services of the first playback device.

Although process **2000** is described with reference to a single playback device (e.g., first playback device), the environment may include multiple playback devices. Thus, process **2000** can be performed for each playback device within the environment to pair the authorized computing devices with each playback device without forcing the users of the authorized computing devices to go through the pairing process with each playback device. However, if a playback device that receives a pairing token from a computing device fails to validate the pairing token, or if the playback device does not have an identifier for the computing device stored on the playback device, then the playback device can prevent the computing device from accessing the playback device until the computing device performs a pairing process with the computing device that requires user input of a code or performs some other pairing process, as described above.

FIG. **21** is a flow diagram of an example process **2100** for generating pairing tokens for multiple user devices. For example, process **2100** can be performed by a playback device to generate pairing tokens for multiple authorized user devices (e.g. authorized computing devices) so that a separate, user involved pairing process does not have to be performed with each authorized user device.

At step **2102**, the playback device can receive a request to pair a first computing device with the playback device. For example, the playback device can receive a request from a user device to pair the user device with the playback device.

At step **2104**, the playback device can cause the first computing device to be paired with the playback device. For example, the playback device can present a code that a user of the user device (e.g., the first computing device) can enter into the user device. The user device can send the code to the playback device and if the playback device determines that the code received from the user device matches the code presented by the playback device, the playback device can generate a pairing token for the user device. The playback device can send the pairing token to the user device so that the user device can use the pairing token to access the playback device. Once the playback device sends the pairing token to the user device the devices are paired.

At step **2106**, the playback device can receive device identifiers from the first computing device. For example, the paired user device can send the device identifiers for other authorized user devices (e.g., authorized computing devices) to the playback device to initiate pairing on behalf of the other authorized user devices. The user device can send the device identifiers after pairing with the playback device and/or along with the pairing token generated for the paired user device so that the playback device can determine that the user device is authorized to perform the pairing process on behalf of the other authorized user devices.

At step **2108**, the playback device can generate a pairing token for each received device identifier. For example, the playback device can generate a unique pairing token for each identified authorized user device.

At step **2110**, the playback device can store a mapping of pairing tokens to device identifiers. For example, the playback device can store a database (e.g., an authorized user database) that maps device identifiers to corresponding unique pairing tokens so that when a pairing token is later received from a computing device that is attempting to access the playback device, the playback device can compare the device identifier and pairing token provided by the computing device to the mapping to determine if the computing device is currently paired with the playback device.

At step **2112**, the playback device can send the mapping to the first computing device. For example, the playback device can send the mapping of device identifiers to pairing tokens to the first computing device. The first computing device can then distribute the pairing tokens to the appropriate authorized computing devices, as described above.

At step **2114**, the playback device can receive a pairing token sent to the first computing device from a second computing device. For example, the playback device can receive a particular pairing token and a device identifier from the second computing device. The playback device may receive a pairing token from the second computing device generated by the playback device even though the playback device may have never communicated with, or provide a pairing token to, the second computing device before.

At step **2116**, the playback device can allow the second computing device access to the playback device based on the pairing token. For example, the playback device can compare the device identifier and the pairing token received from the second computing device to the device identifiers and pairing tokens stored in the authorized user database (e.g., mapping) stored on the playback device. If the pairing

token-device identifier pair are found within the authorized user database, then playback device can allow the second computing device to access the playback device. If the device identifier is not found within the authorized user database, or if the token mapped to the device identifier does not match the received pairing token, then playback device can prevent the second computing device from accessing the playback device until the second computing device successfully pairs with the computing device.

FIG. **22** is a flow diagram of an example process **2200** for contextual routing of media data. For example, process **2200** can be performed by computing device (e.g., a streaming device) to route audio and/or video output associated with media items, software applications, and/or operating systems to an appropriate playback device.

At step **2202**, the computing device can obtain a first media data to be presented. For example, the media data can correspond to a media item (e.g., movie, music, audio book, etc.). The media data can correspond to sounds or images generated by software, such as game application sounds, operating system sounds, etc. Thus, the computing device can obtain the first media data from software applications configured to present movies, music, etc., from gaming software applications, operating system software, or any other audio or video generating component of the computing device.

At step **2204**, the computing device can determine a context associated with the first media data. For example, the context can be a system context associated with software generated sounds or images. The context can be a media context associated with the presentation of media items, such as movies, music, etc. The context can be determined based on the source of the media data. For example, if the source is a movie or music application, then the computing device can determine that the context is the media context. If the source is a game application or the operating system, then the computing device can determine that the context is the system context.

At step **2206**, the computing device can obtain media routing rules that specify how to route the first media data based on the context. For example, the rules can specify that media data associated with the system context should be routed locally. For example, routing locally can include presenting the media data on the local computing device or presenting the media data through personal playback devices (e.g., headsets, personal speakers, personal display devices, etc.) connected to the local computing device. The rules can specify that media data associated with the media context should be routed to remote playback devices. For example, if the computing device is currently routing playback of media items to a remote playback device (or group of devices) or if the computing device has previously routed playback of media items to a remote playback device, then the computing device can route media data associated with the media context to the remote playback device.

At step **2208**, the computing device can select a playback device or playback devices for presenting the media data based on the determined context and the media routing rules. For example, can compare the determined context to the media routing rules to determine which playback device to select for presenting the media data. Based on the rules, the computing device can select the computing device (e.g., local device and/or personal playback devices) as the playback device when the media data is associated with the system context. Based on the rules, the computing device can select a remote playback device (or group of playback devices) as the playback device when the media data is associated with the media context.

At step **2210**, the computing device can send the first media data to the selected playback device or devices. For example, the computing device can send the first media data to the speakers and/or display of the computing device or personal playback devices connected to the computing device. The computing device can send the first media data to a remote playback device or group of playback devices for presentation.

In some implementations, the computing device can simultaneously route system context media data and media context media data. For example, the computing device may be streaming a movie to a remote playback group while presenting video game output on the display and through the speakers of the computing device. Thus, the computing device can process and route multiple instances of media data to different playback devices simultaneously.

Graphical User Interfaces

This disclosure above describes various Graphical User Interfaces (GUIs) for implementing various features, processes or workflows. These GUIs can be presented on a variety of electronic devices including but not limited to laptop computers, desktop computers, computer terminals, television systems, tablet computers, e-book readers and smart phones. One or more of these electronic devices can include a touch-sensitive surface. The touch-sensitive surface can process multiple simultaneous points of input, including processing data related to the pressure, degree or position of each point of input. Such processing can facilitate gestures with multiple fingers, including pinching and swiping.

When the disclosure refers to "select" or "selecting" user interface elements in a GUI, these terms are understood to include clicking or "hovering" with a mouse or other input device over a user interface element, or touching, tapping or gesturing with one or more fingers or stylus on a user interface element. User interface elements can be virtual buttons, menus, selectors, switches, sliders, scrubbers, knobs, thumbnails, links, icons, radio buttons, checkboxes and any other mechanism for receiving input from, or providing feedback to a user.

Privacy

The present disclosure recognizes that the use of such personal information data, in the present technology, can be used to the benefit of users. For example, the personal information data can be used to deliver targeted content that is of greater interest to the user. Accordingly, use of such personal information data enables calculated control of the delivered content. Further, other uses for personal information data that benefit the user are also contemplated by the present disclosure.

The present disclosure further contemplates that the entities responsible for the collection, analysis, disclosure, transfer, storage, or other use of such personal information data will comply with well-established privacy policies and/or privacy practices. In particular, such entities should implement and consistently use privacy policies and practices that are generally recognized as meeting or exceeding industry or governmental requirements for maintaining personal information data private and secure. For example, personal information from users should be collected for legitimate and reasonable uses of the entity and not shared or sold outside of those legitimate uses. Further, such collection should occur only after receiving the informed consent of the users. Additionally, such entities would take any needed steps for safeguarding and securing access to such personal

information data and ensuring that others with access to the personal information data adhere to their privacy policies and procedures. Further, such entities can subject themselves to evaluation by third parties to certify their adherence to widely accepted privacy policies and practices.

Despite the foregoing, the present disclosure also contemplates embodiments in which users selectively block the use of, or access to, personal information data. That is, the present disclosure contemplates that hardware and/or software elements can be provided to prevent or block access to such personal information data. For example, in the case of advertisement delivery services, the present technology can be configured to allow users to select to "opt in" or "opt out" of participation in the collection of personal information data during registration for services. In another example, users can select not to provide location information for targeted content delivery services. In yet another example, users can select to not provide precise location information, but permit the transfer of location zone information.

Example System Architecture

FIG. **23** is a block diagram of an example computing device **2300** that can implement the features and processes of FIGS. **1-22**. The computing device **2300** can include a memory interface **2302**, one or more data processors, image processors and/or central processing units **2304**, and a peripherals interface **2306**. The memory interface **2302**, the one or more processors **2304** and/or the peripherals interface **2306** can be separate components or can be integrated in one or more integrated circuits. The various components in the computing device **2300** can be coupled by one or more communication buses or signal lines.

Sensors, devices, and subsystems can be coupled to the peripherals interface **2306** to facilitate multiple functionalities. For example, a motion sensor **2310**, a light sensor **2312**, and a proximity sensor **2314** can be coupled to the peripherals interface **2306** to facilitate orientation, lighting, and proximity functions. Other sensors **2316** can also be connected to the peripherals interface **2306**, such as a global navigation satellite system (GNSS) (e.g., GPS receiver), a temperature sensor, a biometric sensor, magnetometer or other sensing device, to facilitate related functionalities.

A camera subsystem **2320** and an optical sensor **2322**, e.g., a charged coupled device (CCD) or a complementary metal-oxide semiconductor (CMOS) optical sensor, can be utilized to facilitate camera functions, such as recording photographs and video clips. The camera subsystem **2320** and the optical sensor **2322** can be used to collect images of a user to be used during authentication of a user, e.g., by performing facial recognition analysis.

Communication functions can be facilitated through one or more wireless communication subsystems **2324**, which can include radio frequency receivers and transmitters and/or optical (e.g., infrared) receivers and transmitters. The specific design and implementation of the communication subsystem **2324** can depend on the communication network(s) over which the computing device **2300** is intended to operate. For example, the computing device **2300** can include communication subsystems **2324** designed to operate over a GSM network, a GPRS network, an EDGE network, a Wi-Fi or WiMax network, and a Bluetooth™ network. In particular, the wireless communication subsystems **2324** can include hosting protocols such that the device **100** can be configured as a base station for other wireless devices.

An audio subsystem **2326** can be coupled to a speaker **2328** and a microphone **2330** to facilitate voice-enabled functions, such as speaker recognition, voice replication, digital recording, and telephony functions. The audio subsystem **2326** can be configured to facilitate processing voice commands, voiceprinting and voice authentication, for example.

The I/O subsystem **2340** can include a touch-surface controller **2342** and/or other input controller(s) **2344**. The touch-surface controller **2342** can be coupled to a touch surface **2346**. The touch surface **2346** and touch-surface controller **2342** can, for example, detect contact and movement or break thereof using any of a plurality of touch sensitivity technologies, including but not limited to capacitive, resistive, infrared, and surface acoustic wave technologies, as well as other proximity sensor arrays or other elements for determining one or more points of contact with the touch surface **2346**.

The other input controller(s) **2344** can be coupled to other input/control devices **2348**, such as one or more buttons, rocker switches, thumb-wheel, infrared port, USB port, and/or a pointer device such as a stylus. The one or more buttons (not shown) can include an up/down button for volume control of the speaker **2328** and/or the microphone **2330**.

In one implementation, a pressing of the button for a first duration can disengage a lock of the touch surface **2346**; and a pressing of the button for a second duration that is longer than the first duration can turn power to the computing device **2300** on or off. Pressing the button for a third duration can activate a voice control, or voice command, module that enables the user to speak commands into the microphone **2330** to cause the device to execute the spoken command. The user can customize a functionality of one or more of the buttons. The touch surface **2346** can, for example, also be used to implement virtual or soft buttons and/or a keyboard.

In some implementations, the computing device **2300** can present recorded audio and/or video files, such as MP3, AAC, and MPEG files. In some implementations, the computing device **2300** can include the functionality of an MP3 player, such as an iPod™.

The memory interface **2302** can be coupled to memory **2350**. The memory **2350** can include high-speed random-access memory and/or non-volatile memory, such as one or more magnetic disk storage devices, one or more optical storage devices, and/or flash memory (e.g., NAND, NOR). The memory **2350** can store an operating system **2352**, such as Darwin, RTXC, LINUX, UNIX, OS X, WINDOWS, or an embedded operating system such as VxWorks.

The operating system **2352** can include instructions for handling basic system services and for performing hardware dependent tasks. In some implementations, the operating system **2352** can be a kernel (e.g., UNIX kernel). In some implementations, the operating system **2352** can include instructions for performing voice authentication. For example, operating system **2352** can implement the features as described with reference to FIGS. **1-22**.

The memory **2350** can also store communication instructions **2354** to facilitate communicating with one or more additional devices, one or more computers and/or one or more servers. The memory **2350** can include graphical user interface instructions **2356** to facilitate graphic user interface processing; sensor processing instructions **2358** to facilitate sensor-related processing and functions; phone instructions **2360** to facilitate phone-related processes and functions; electronic messaging instructions **2362** to facilitate electronic-messaging related processes and functions; web browsing instructions **2364** to facilitate web browsing-related processes and functions; media processing instructions **2366** to facilitate media processing-related processes and

functions; GNSS/Navigation instructions **2368** to facilitate GNSS and navigation-related processes and instructions; and/or camera instructions **2370** to facilitate camera-related processes and functions.

The memory **2350** can store other software instructions **2372** to facilitate other processes and functions, such as the processes and functions as described with reference to FIGS. **1-22**.

The memory **2350** can also store other software instructions **2374**, such as web video instructions to facilitate web video-related processes and functions; and/or web shopping instructions to facilitate web shopping-related processes and functions. In some implementations, the media processing instructions **2366** are divided into audio processing instructions and video processing instructions to facilitate audio processing-related processes and functions and video processing-related processes and functions, respectively.

Each of the above identified instructions and applications can correspond to a set of instructions for performing one or more functions described above. These instructions need not be implemented as separate software programs, procedures, or modules. The memory **2350** can include additional instructions or fewer instructions. Furthermore, various functions of the computing device **2300** can be implemented in hardware and/or in software, including in one or more signal processing and/or application specific integrated circuits.

What is claimed is:

1. A method comprising:

generating, by a playback device, a device-specific pairing token for a first computing device;

storing, by the playback device, a mapping that defines a relationship between the device-specific pairing token and a device identifier corresponding to the first computing device;

transmitting, by the playback device, the device-specific pairing token to a second computing device, wherein the second computing device transmits the device-specific pairing token to the first computing device;

receiving, by the playback device, the device-specific pairing token from the first computing device;

wherein receiving, by the playback device, the device-specific pairing token from the first computing device comprises: receiving, by the playback device from the first computing device, a request to access the playback device, the request including the device identifier corresponding to the first computing device and the device-specific pairing token; and

allowing, by the playback device, the first computing device to access the playback device based at least on the device-specific pairing token.

2. The method of claim **1**, wherein allowing, by the playback device, the first computing device to access the playback device based at least on the device-specific pairing token comprises allowing the first computing device to access one or more services provided by the playback device based at least on the device-specific pairing token.

3. The method of claim **2**, wherein the one or more services provided by the first playback device are selected from a group comprising: audio playback, video playback, media streaming, and remote control of media playback.

4. The method of claim **1**, wherein allowing, by the playback device, the first computing device to access the playback device based at least on the device-specific pairing token comprises:

obtaining, by the playback device, from the mapping, a second pairing token associated with the device identifier;

determining, by the playback device, that the second pairing token is identical to the device-specific pairing token; and

based on the determination, allowing the first computing device to access the playback device.

5. The method of claim **1**, wherein the device-specific pairing token is sent from the playback device to the second computing device and is not sent from the playback device to the first computing device.

6. The method of claim **1**, wherein the mapping defines relationships between a plurality of tokens and respective device identifiers for a plurality of devices, wherein the plurality of devices are associated with a user of the first computing device, and wherein the plurality of devices are authorized to access the playback device.

7. A system comprising:

one or more processors; and

a non-transitory computer readable medium including one or more sequences of instructions that, when executed by the one or more processors, cause the processors to perform operations comprising:

generating, by a playback device, a device-specific pairing token for a first computing device;

storing, by the playback device, a mapping that defines a relationship between the device-specific pairing token and a device identifier corresponding to the first computing device;

transmitting, by the playback device, the device-specific pairing token to a second computing device, wherein the second computing device transmits the device-specific pairing token to the first computing device;

receiving, by the playback device, the device-specific pairing token from the first computing device;

wherein receiving, by the playback device, the device-specific pairing token from the first computing device comprises: receiving, by the playback device from the first computing device, a request to access the playback device, the request including the device identifier corresponding to the first computing device and the device-specific pairing token; and

allowing, by the playback device, the first computing device to access the playback device based at least on the device-specific pairing token.

8. The system of claim **7**, wherein allowing, by the playback device, the first computing device to access the playback device based at least on the device-specific pairing token comprises allowing the first computing device to access one or more services provided by the playback device based at least on the device-specific pairing token.

9. The system of claim **8**, wherein the one or more services provided by the first playback device are selected from a group comprising: audio playback, video playback, media streaming, and remote control of media playback.

10. The system of claim **7**, wherein allowing, by the playback device, the first computing device to access the playback device based at least on the device-specific pairing token comprises:

obtaining, by the playback device, from the mapping, a second pairing token associated with the device identifier;

determining, by the playback device, that the second pairing token is identical to the device-specific pairing token; and

based on the determination, allowing the first computing device to access the playback device.

11. The system of claim **7**, wherein the device-specific pairing token is sent from the playback device to the second computing device and is not sent from the playback device to the first computing device.

12. The system of claim **7**, wherein the mapping defines relationships between a plurality of tokens and respective device identifiers for a plurality of devices, wherein the plurality of devices are associated with a user of the first computing device, and wherein the plurality of devices are authorized to access the playback device.

13. A non-transitory computer readable medium including one or more sequences of instructions that, when executed by one or more processors, cause the processors to perform operations comprising:

generating, by a playback device, a device-specific pairing token for a first computing device;

storing, by the playback device, a mapping that defines a relationship between the device-specific pairing token and a device identifier corresponding to the first computing device;

transmitting, by the playback device, the device-specific pairing token to a second computing device, wherein the second computing device transmits the device-specific pairing token to the first computing device;

receiving, by the playback device, the device-specific pairing token from the first computing device;

wherein receiving, by the playback device, the device-specific pairing token from the first computing device comprises: receiving, by the playback device from the first computing device, a request to access the playback device, the request including the device identifier corresponding to the first computing device and the device-specific pairing token; and

allowing, by the playback device, the first computing device to access the playback device based at least on the device-specific pairing token.

14. The non-transitory computer readable medium of claim **13**, wherein allowing, by the playback device, the first computing device to access the playback device based at least on the device-specific pairing token comprises allowing the first computing device to access one or more services provided by the playback device based at least on the device-specific pairing token.

15. The non-transitory computer readable medium of claim **14**, wherein the one or more services provided by the first playback device are selected from a group comprising: audio playback, video playback, media streaming, and remote control of media playback.

16. The non-transitory computer readable medium of claim **13**, wherein allowing, by the playback device, the first computing device to access the playback device based at least on the device-specific pairing token comprises:

obtaining, by the playback device, from the mapping, a second pairing token associated with the device identifier;

determining, by the playback device, that the second pairing token is identical to the device-specific pairing token; and

based on the determination, allowing the first computing device to access the playback device.

17. The non-transitory computer readable medium of claim **13**, wherein the device-specific pairing token is sent from the playback device to the second computing device and is not sent from the playback device to the first computing device.

* * * * *