US 20250258526A1

(19) United States
(12) Patent Application Publication
Saravis
(10) Pub. No.: US 2025/0258526 A1
(43) Pub. Date: Aug. 14, 2025

(54) **TEMPERATURE REGULATING MOUNT WITH MAGNETIC POWER MOUNT**

(71) Applicant: **Darren Saravis**, Long Beach, CA (US)

(72) Inventor: **Darren Saravis**, Long Beach, CA (US)

(21) Appl. No.: **19/061,467**

(22) Filed: **Feb. 24, 2025**

Related U.S. Application Data

(63) Continuation of application No. 17/948,289, filed on Sep. 20, 2022, now Pat. No. 12,235,695, which is a continuation-in-part of application No. 17/683,043, filed on Feb. 28, 2022, now abandoned, which is a continuation of application No. 16/690,420, filed on Nov. 21, 2019, now Pat. No. 11,262,816.

(60) Provisional application No. 62/770,653, filed on Nov. 21, 2018.

Publication Classification

(51) **Int. Cl.**

G06F 1/20	(2006.01)
G06F 1/16	(2006.01)
H05K 7/20	(2006.01)

(52) **U.S. Cl.**

CPC ***G06F 1/203*** (2013.01); ***G06F 1/1626*** (2013.01); ***G06F 1/1628*** (2013.01); ***G06F 1/1632*** (2013.01); ***G06F 1/206*** (2013.01); ***H05K 7/20172*** (2013.01)

(57) **ABSTRACT**

A magnet mount assembly is provided for quickly mounting and releasing the portable electronic device to various objects, including stands, clamps and/or holders (i.e., support mount) to support the portable electronic device in elevated positions at a variety of angles. The magnet mount assembly may attach to the back of the temperature control device or electronics case or to the back of the portable devices by, for example, connecting to the universal mount. The mount may further include pong pins or other electrical connectors for supplying power and/or data to the cooling mount and/portable electronic device when the magnet mount assembly.

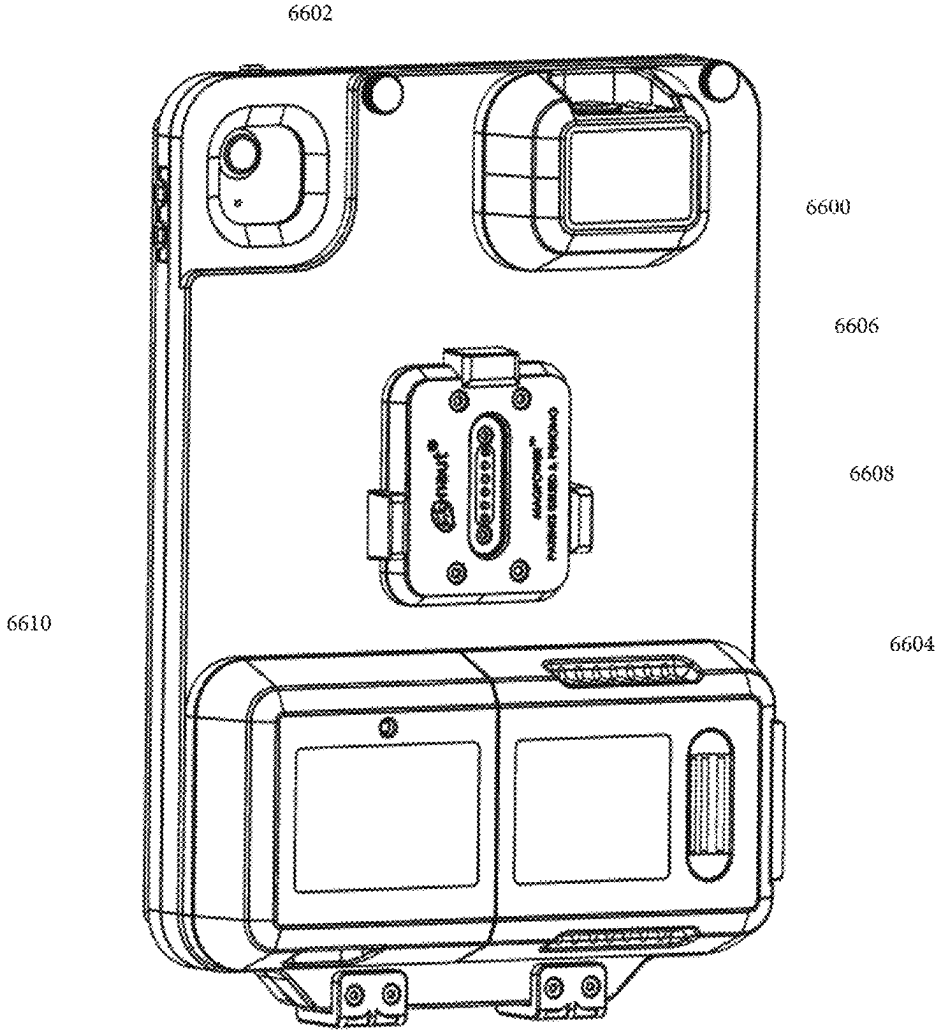

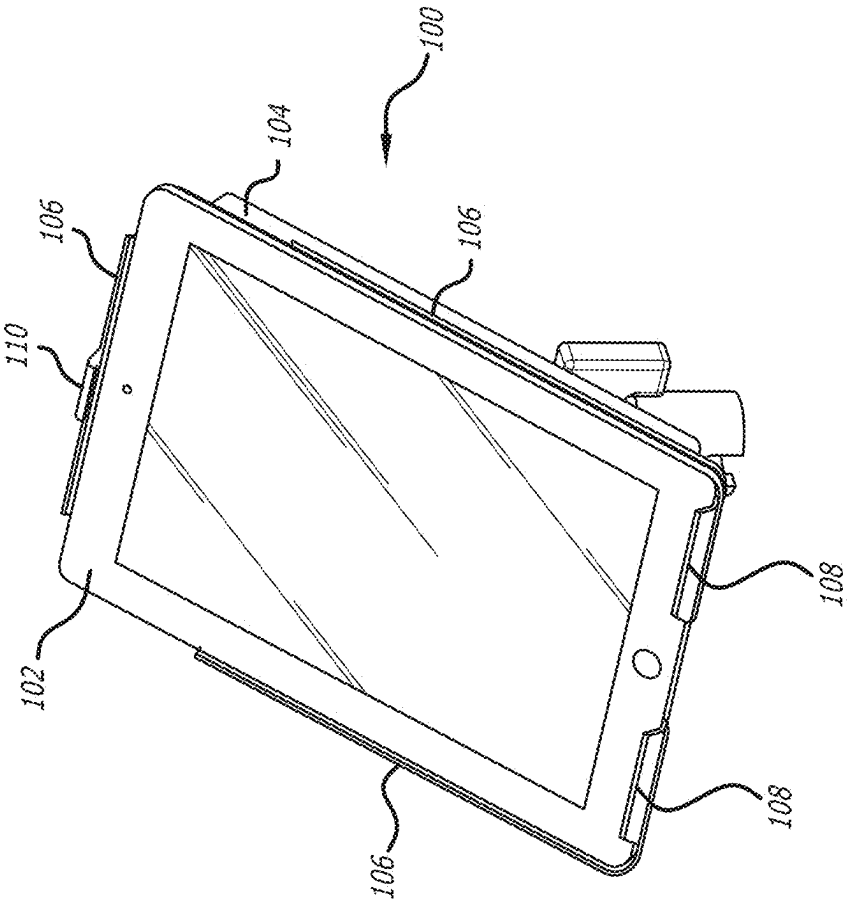

FIG. 1

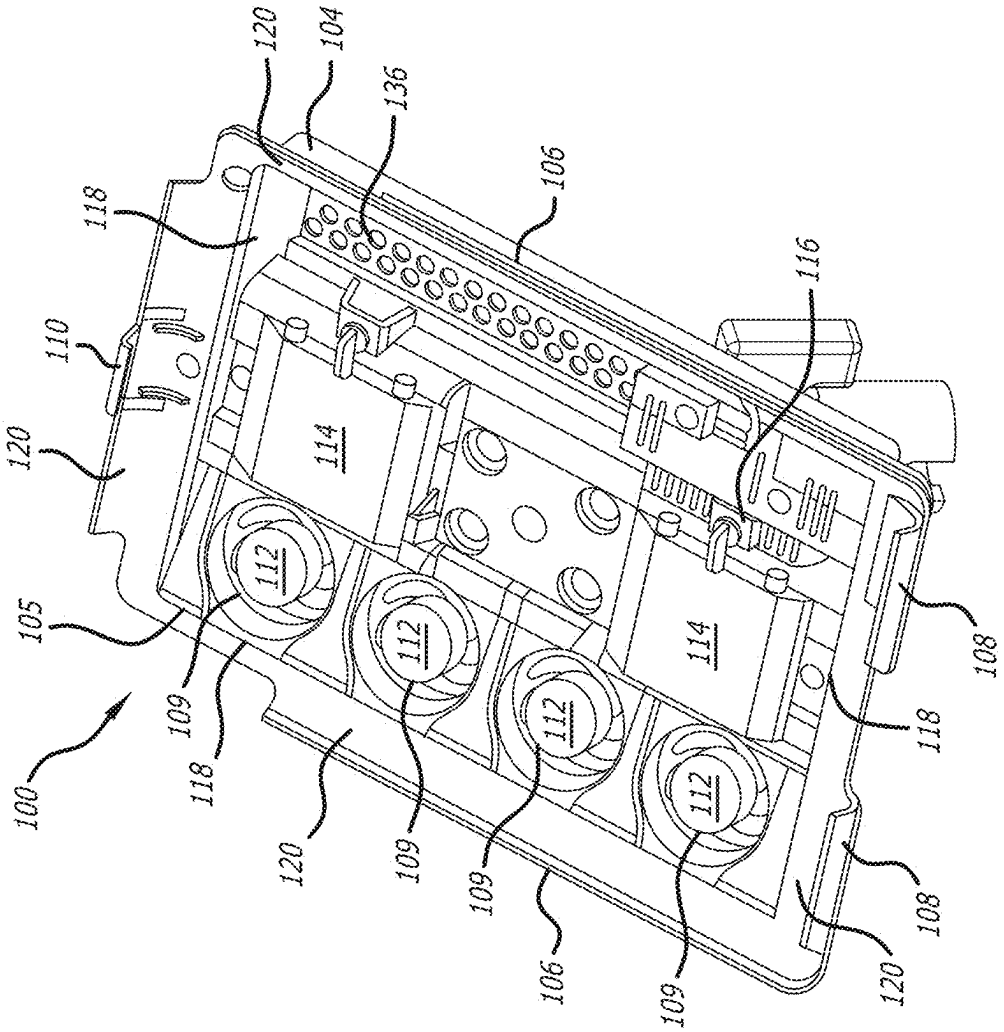
100
105
120
110
118
120
104
136
106
116
114
112
109
118
120
109
112
109
106
112
114
109
112
118
108
108
120

FIG. 2

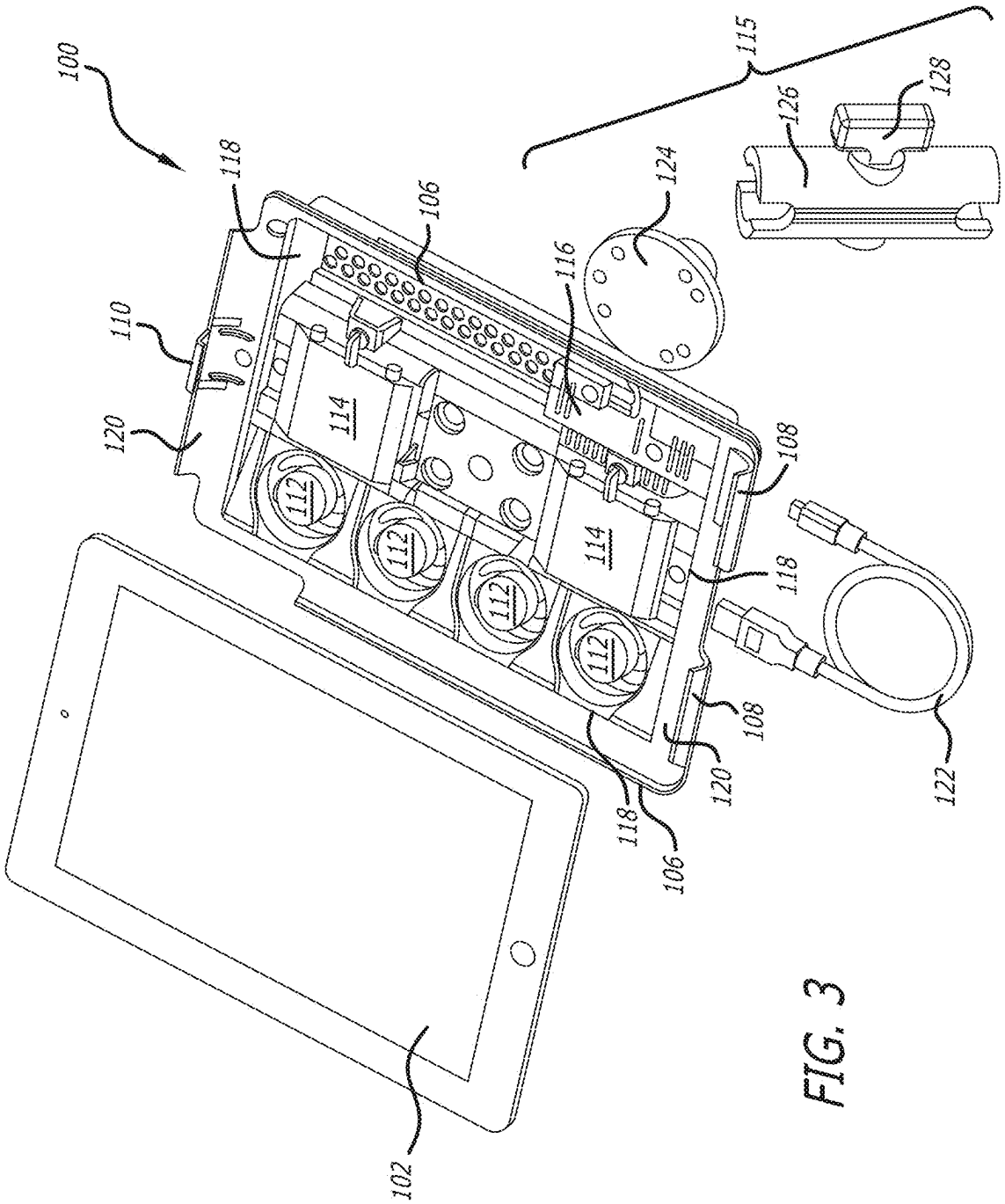
100
118
110
120
106
114
112
112
112
112
114
116
124
115
126
128
108
118
108
120
118
106
122
102

FIG. 3

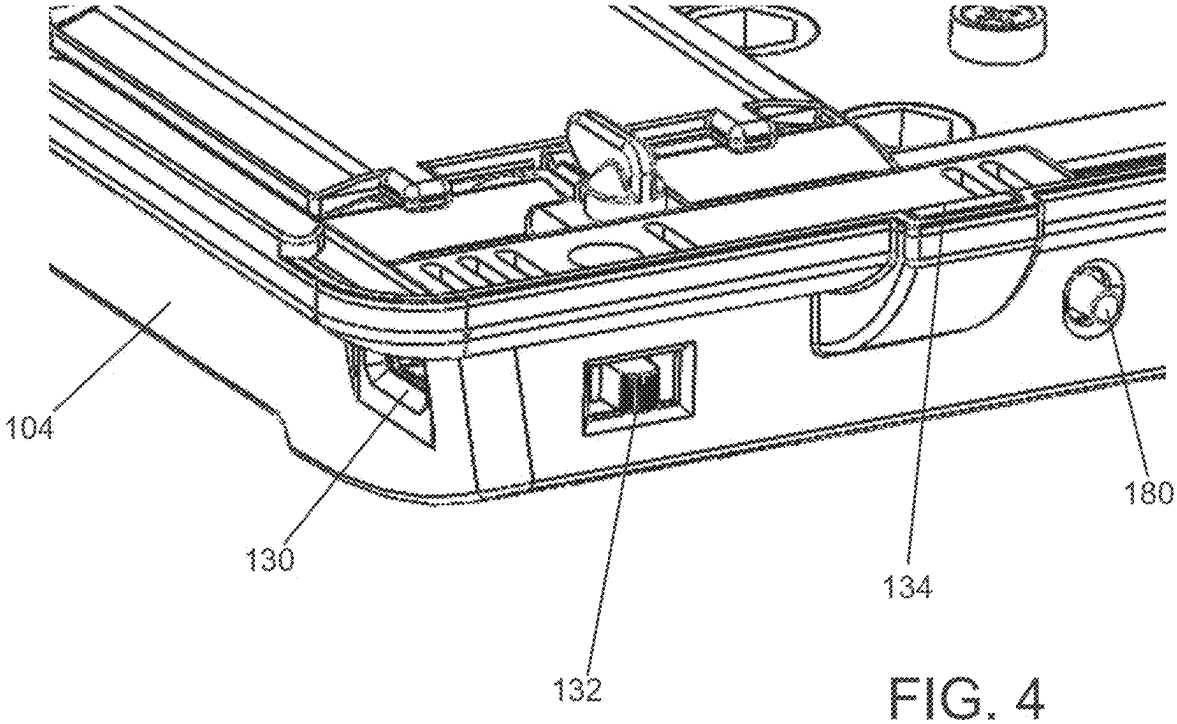

FIG. 4

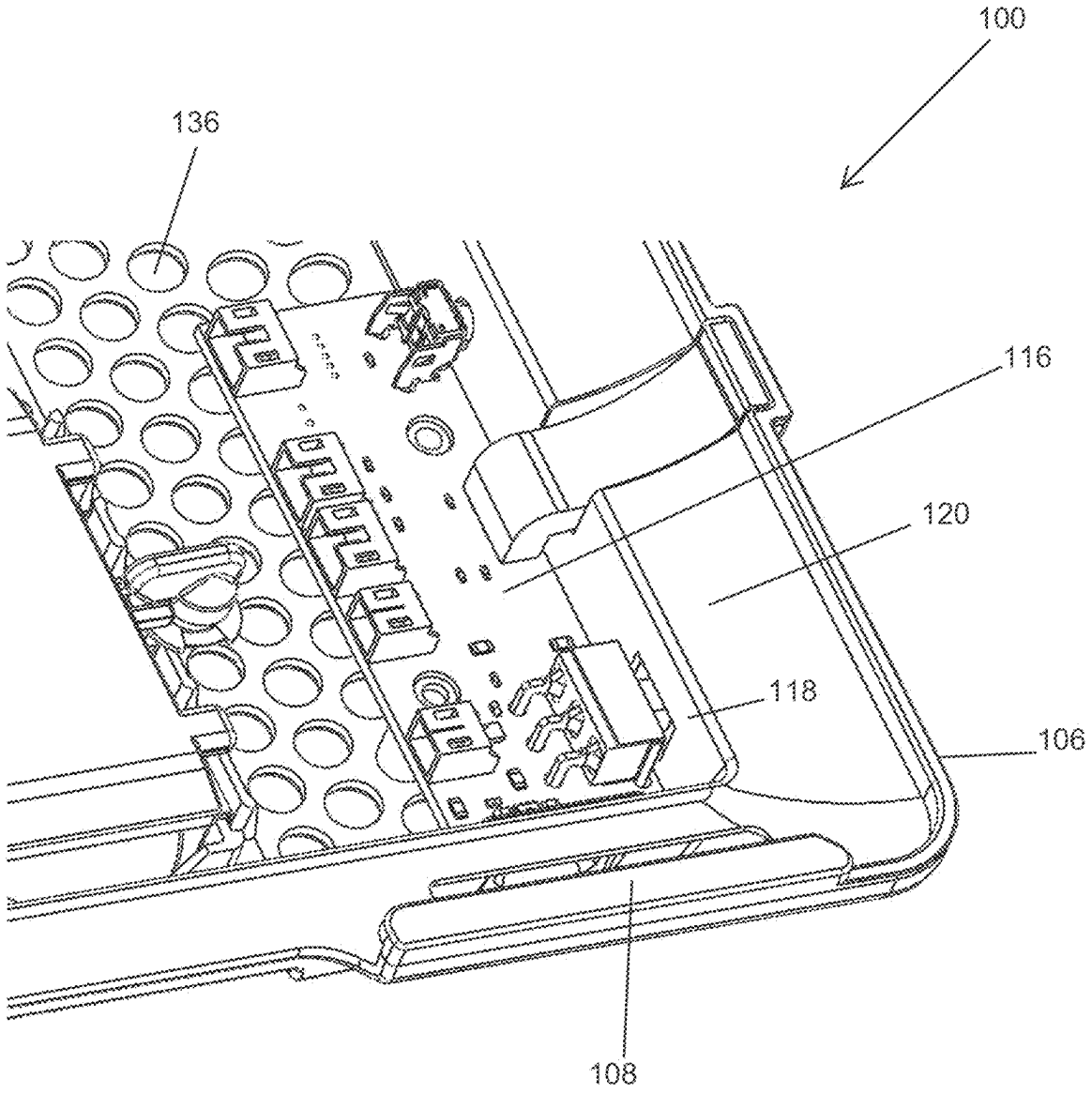

FIG. 5

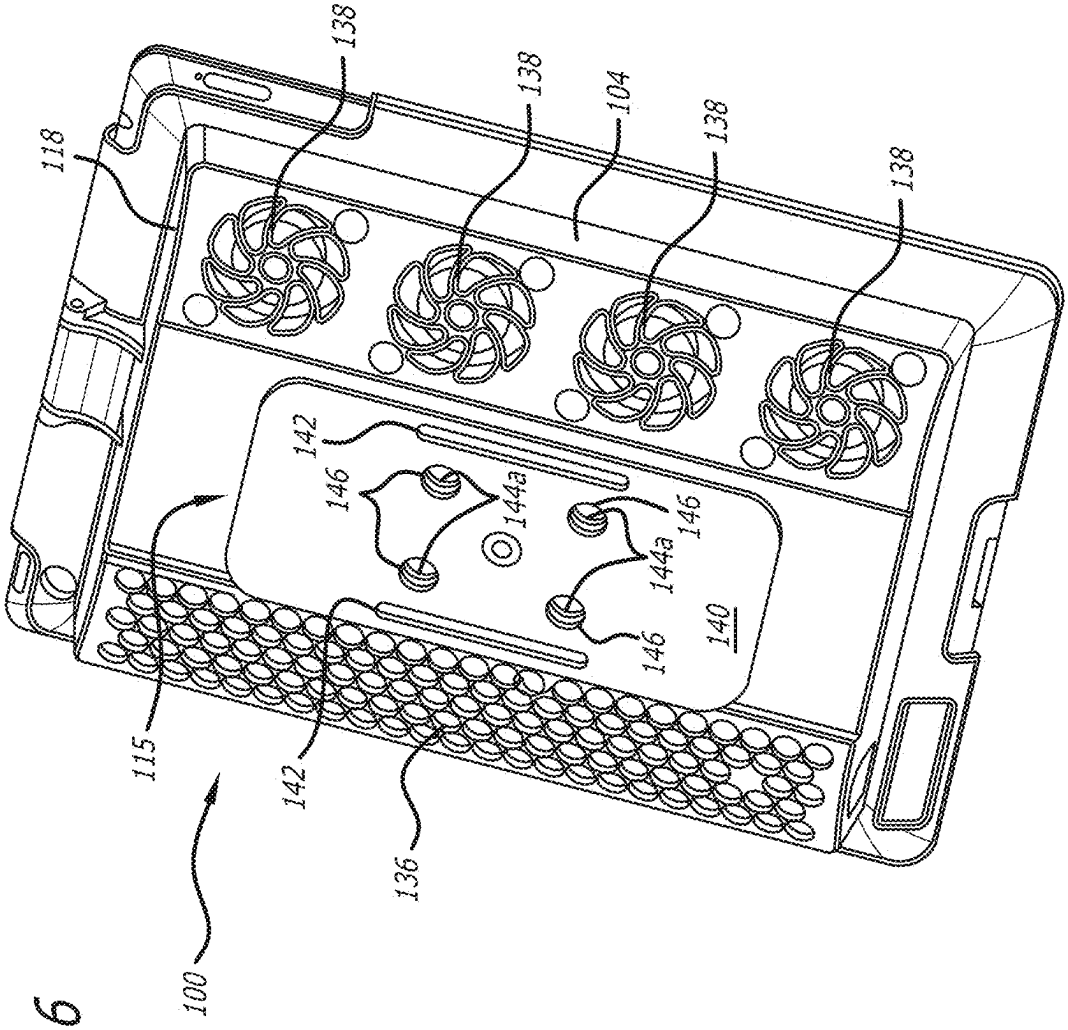
100
115
118
136
138
138
138
138
104
142
142
144a
144a
146
146
146
140

FIG. 6

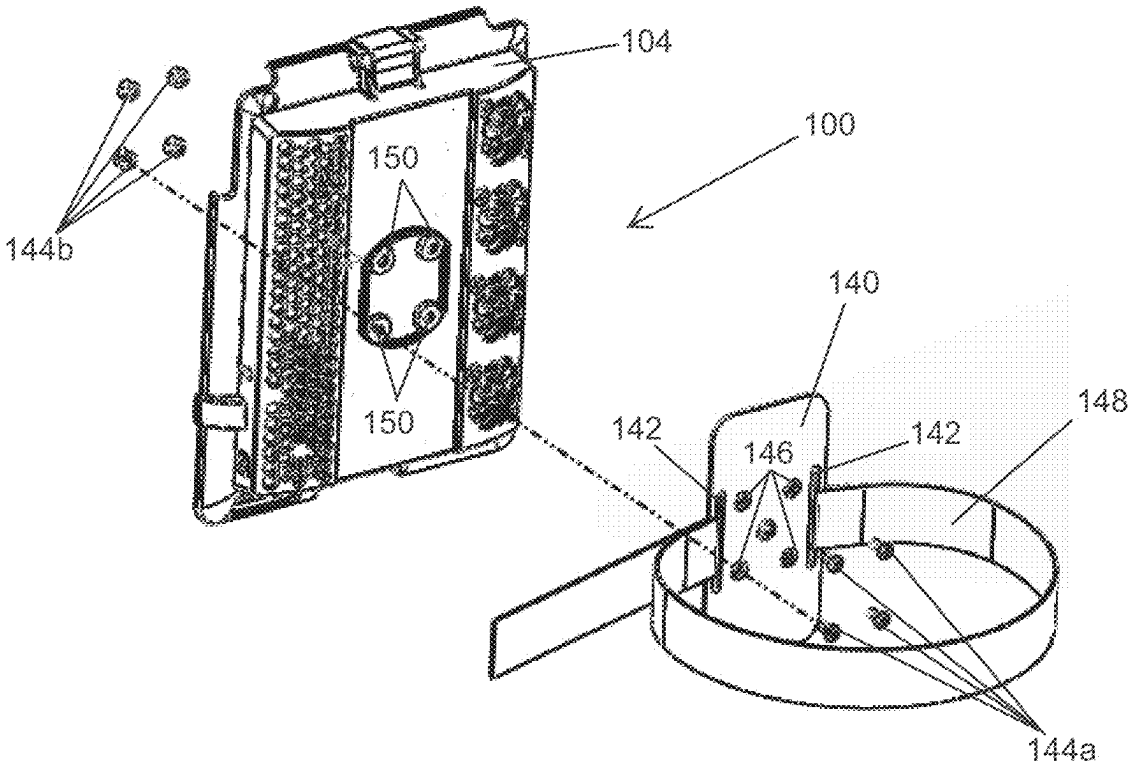

FIG. 7

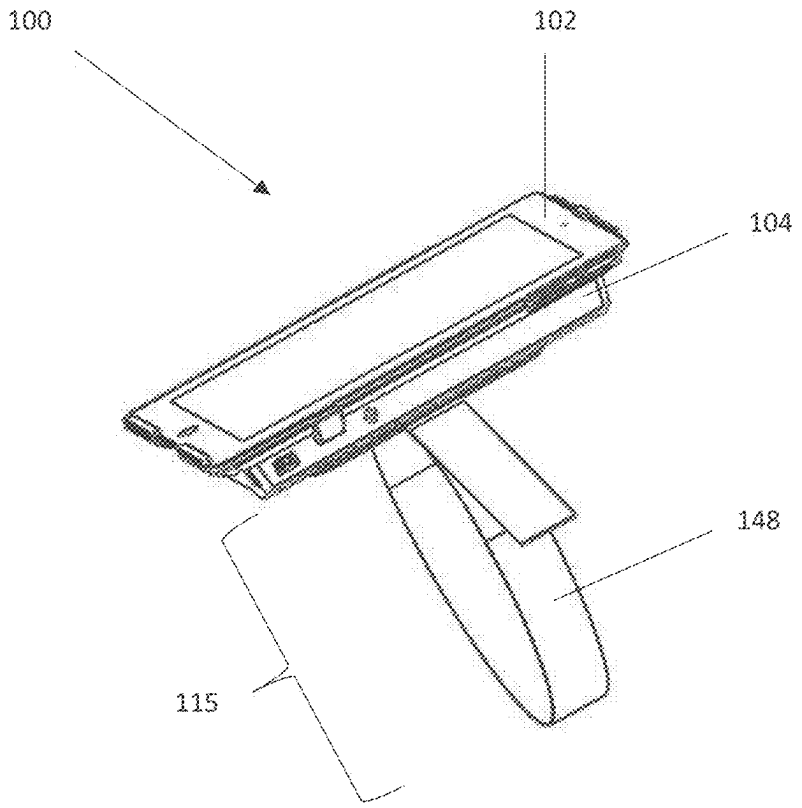

FIG. 8

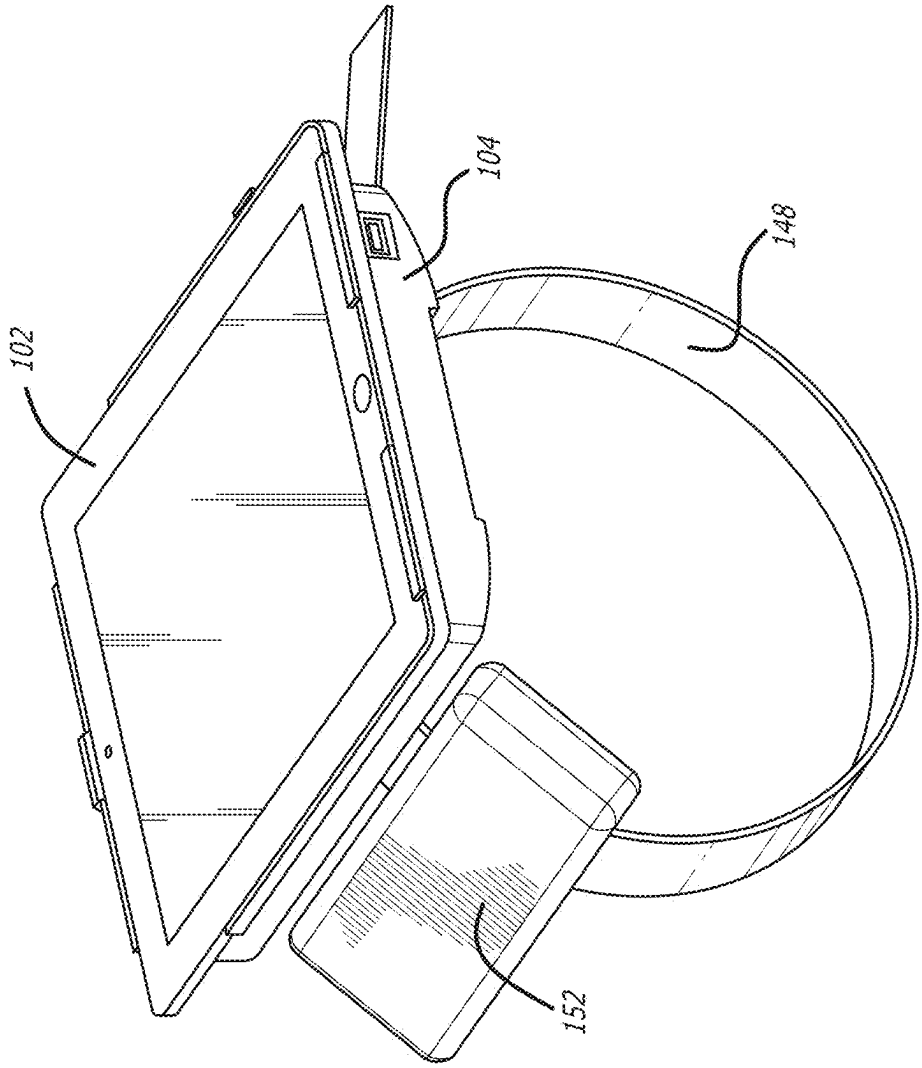

FIG. 9

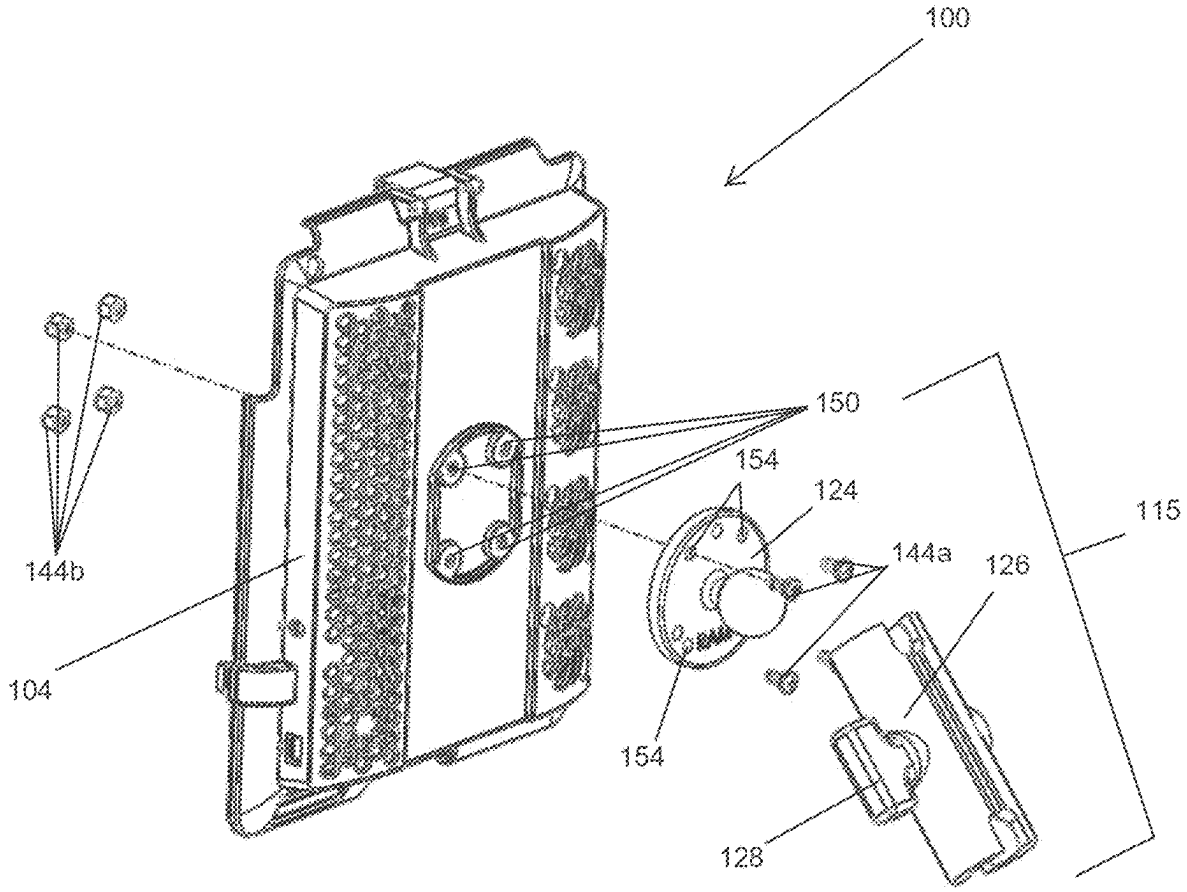

FIG. 10

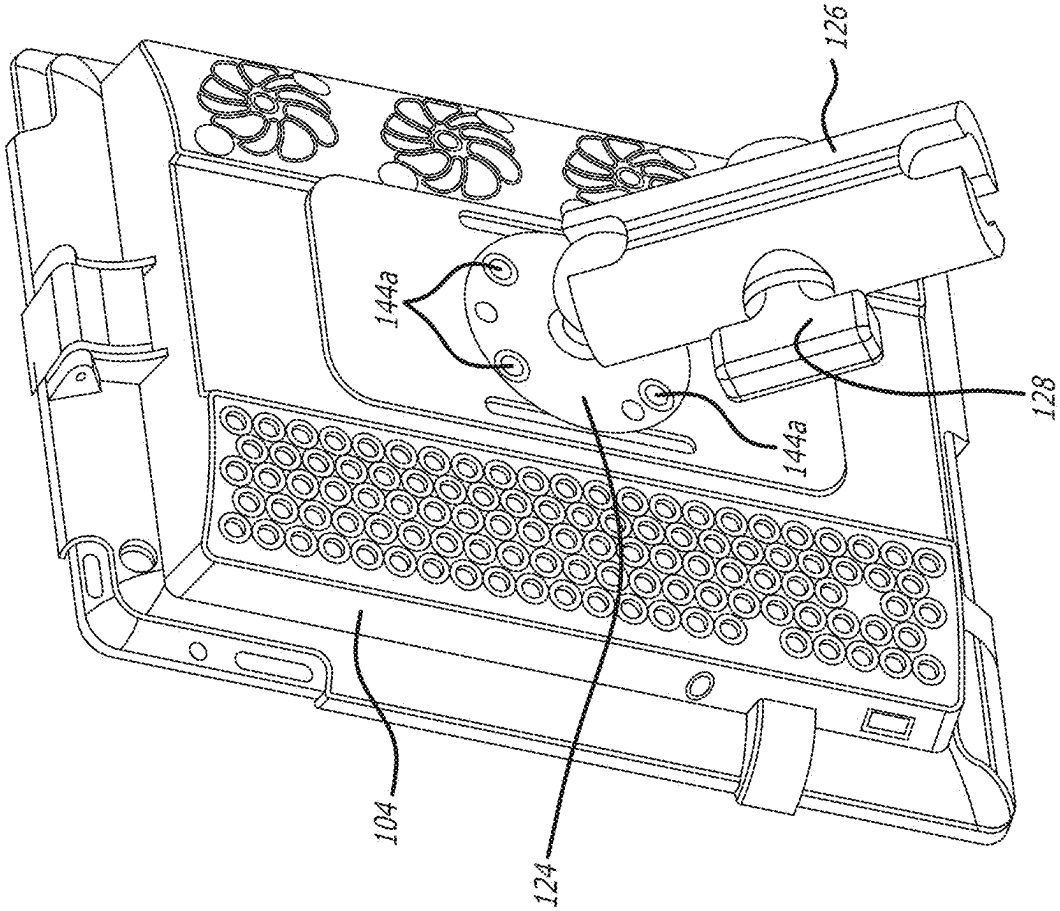

FIG. 11

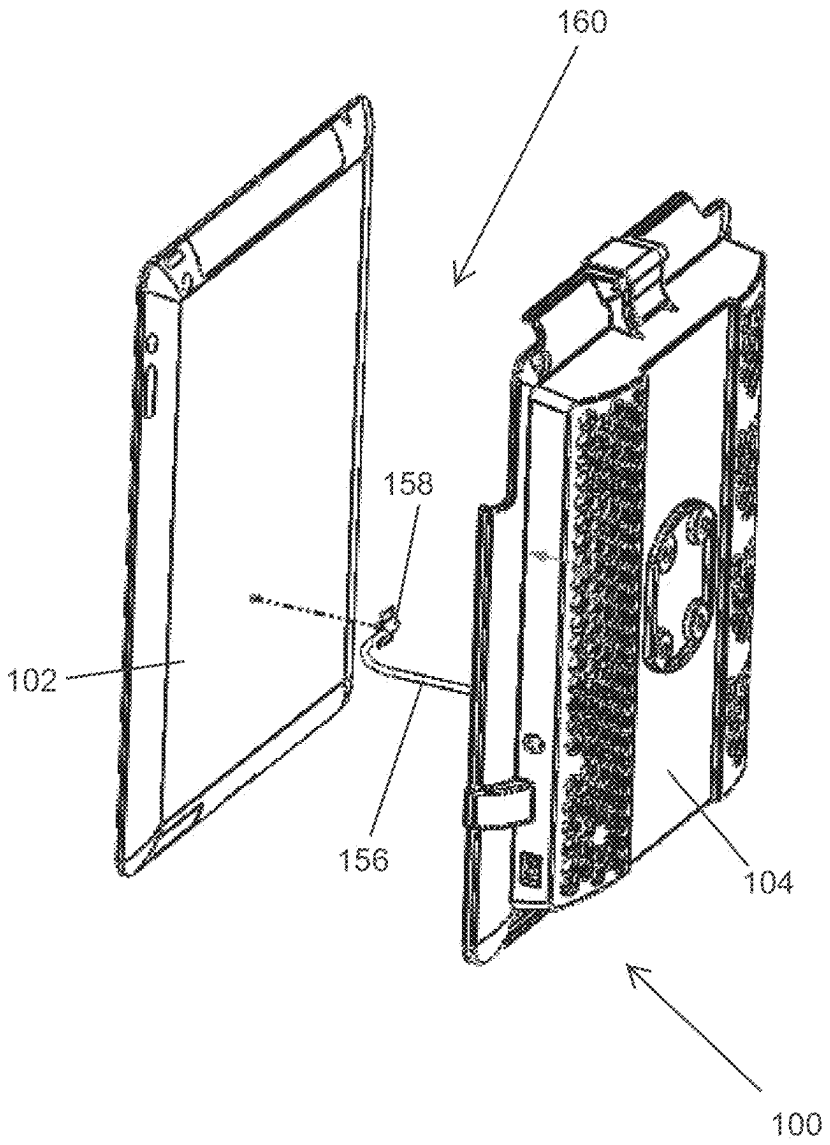

FIG. 12

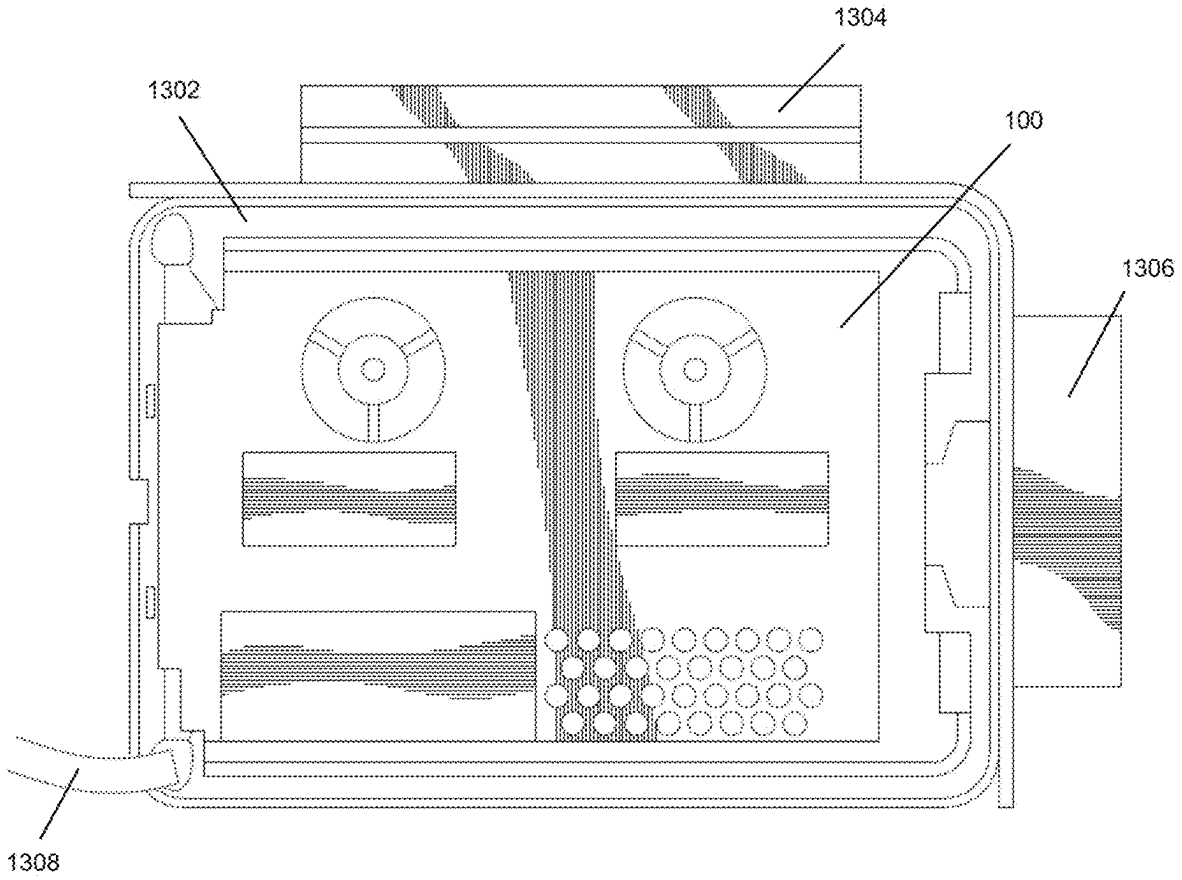

FIG. 13

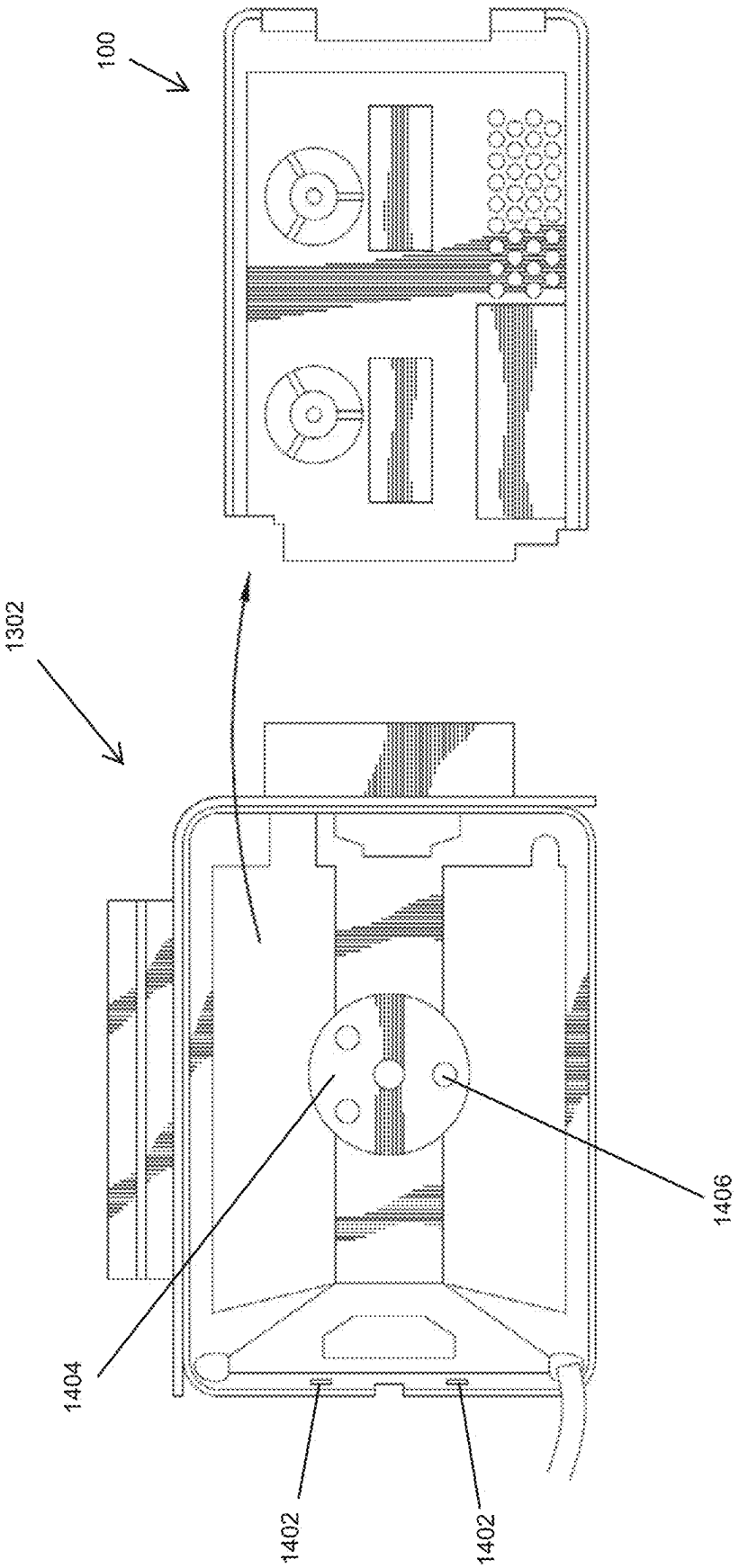

FIG. 14A

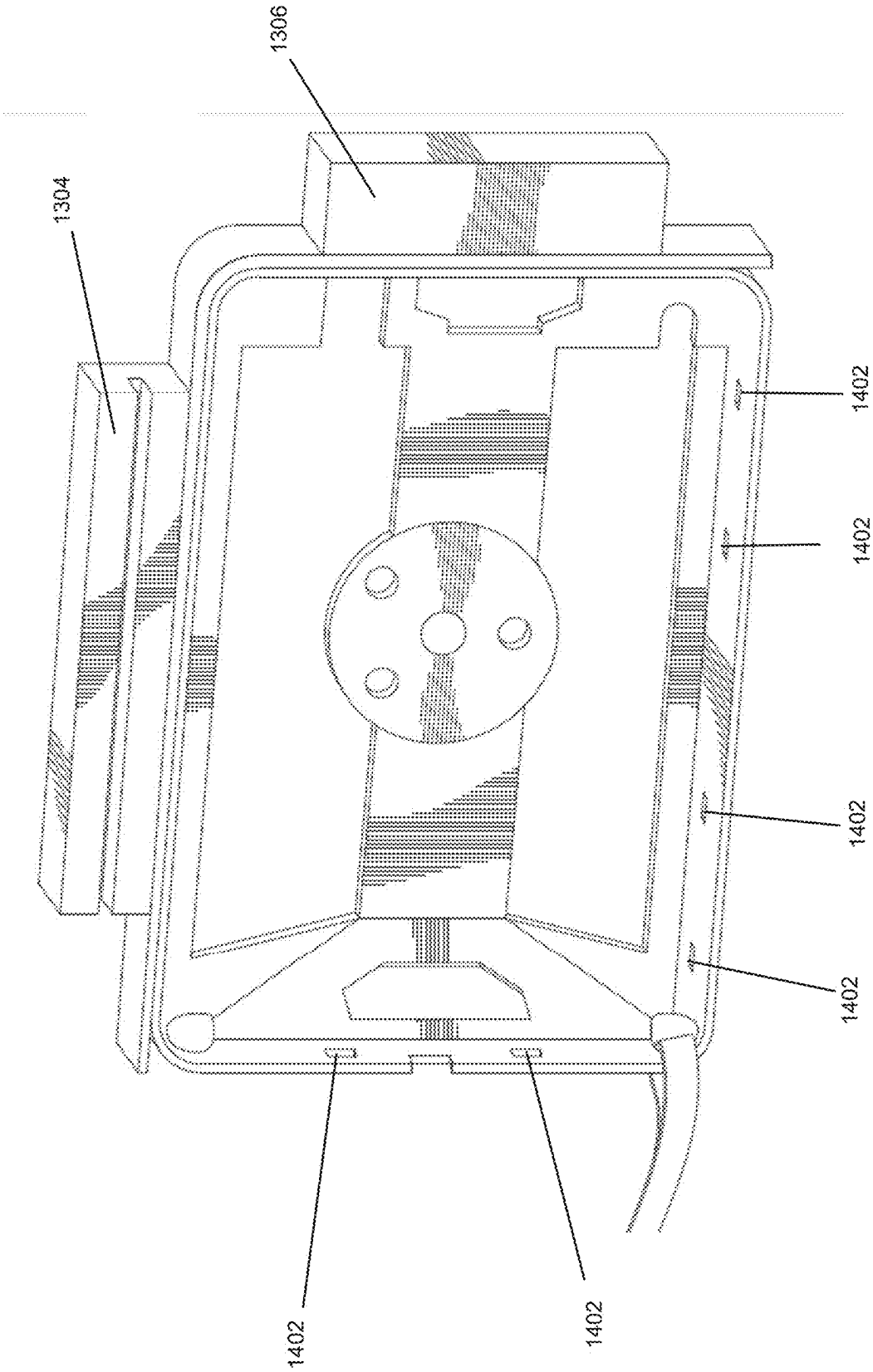

FIG. 14B

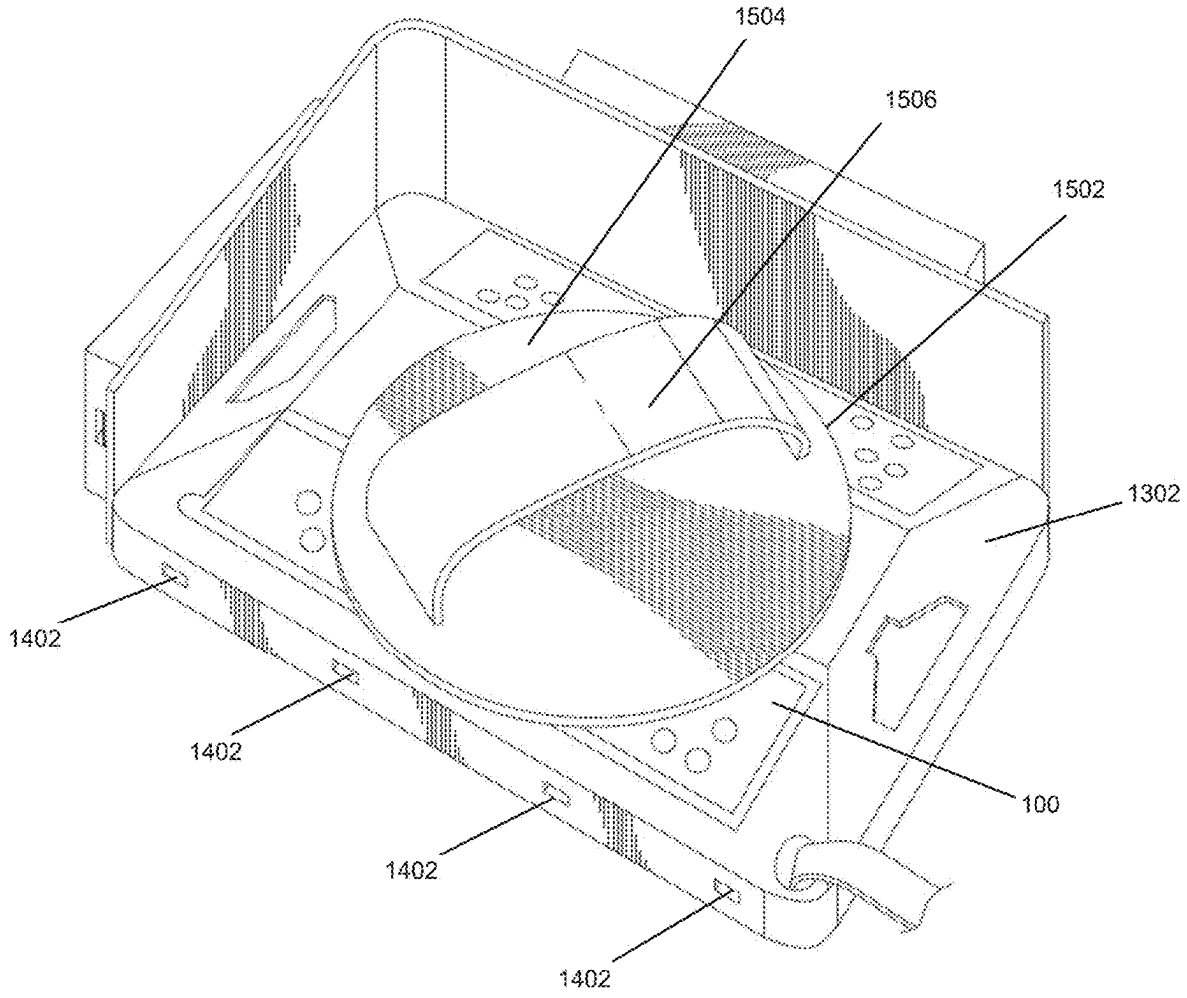

FIG. 15

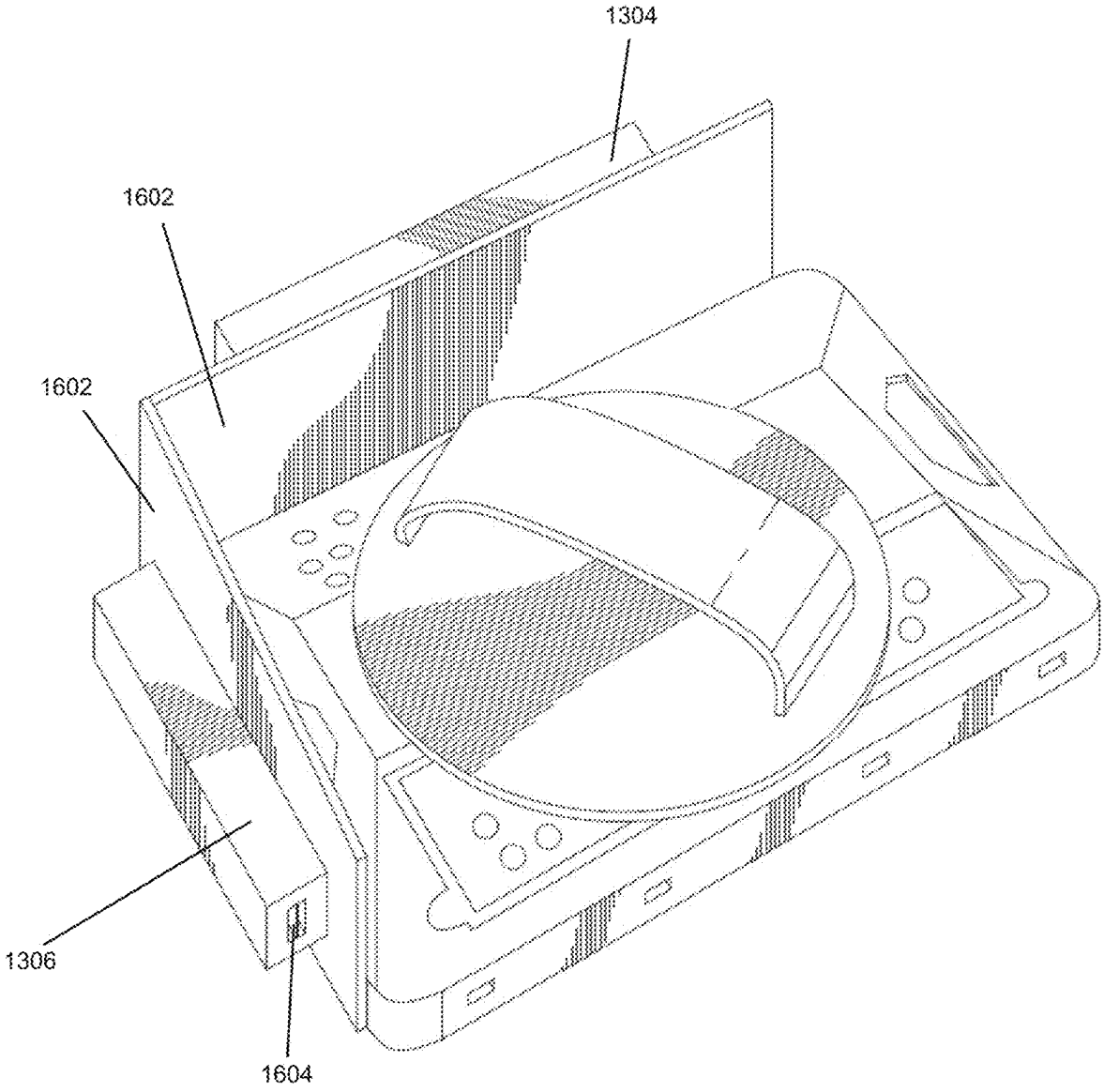

FIG. 16

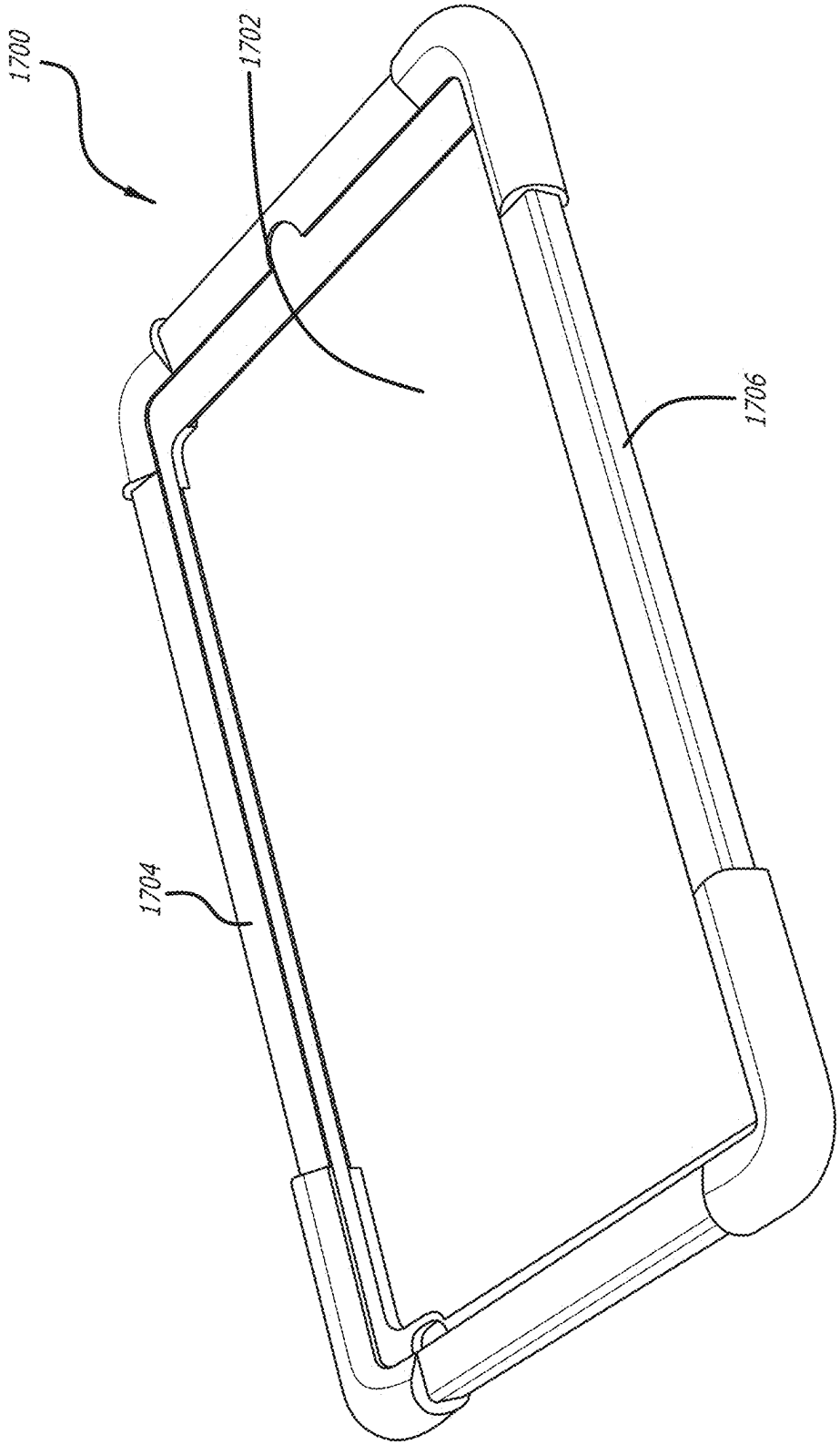

FIG. 17

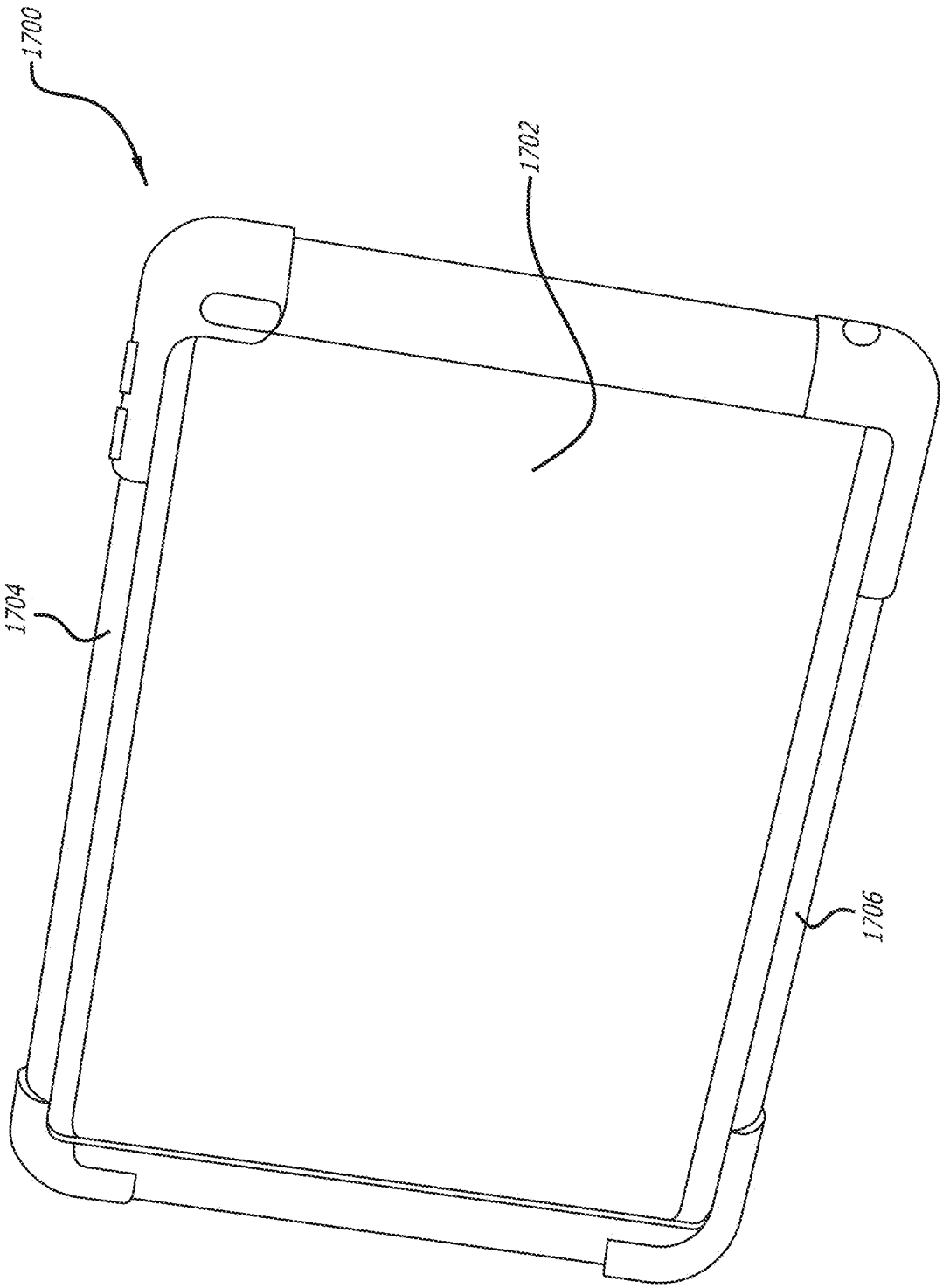

FIG. 18

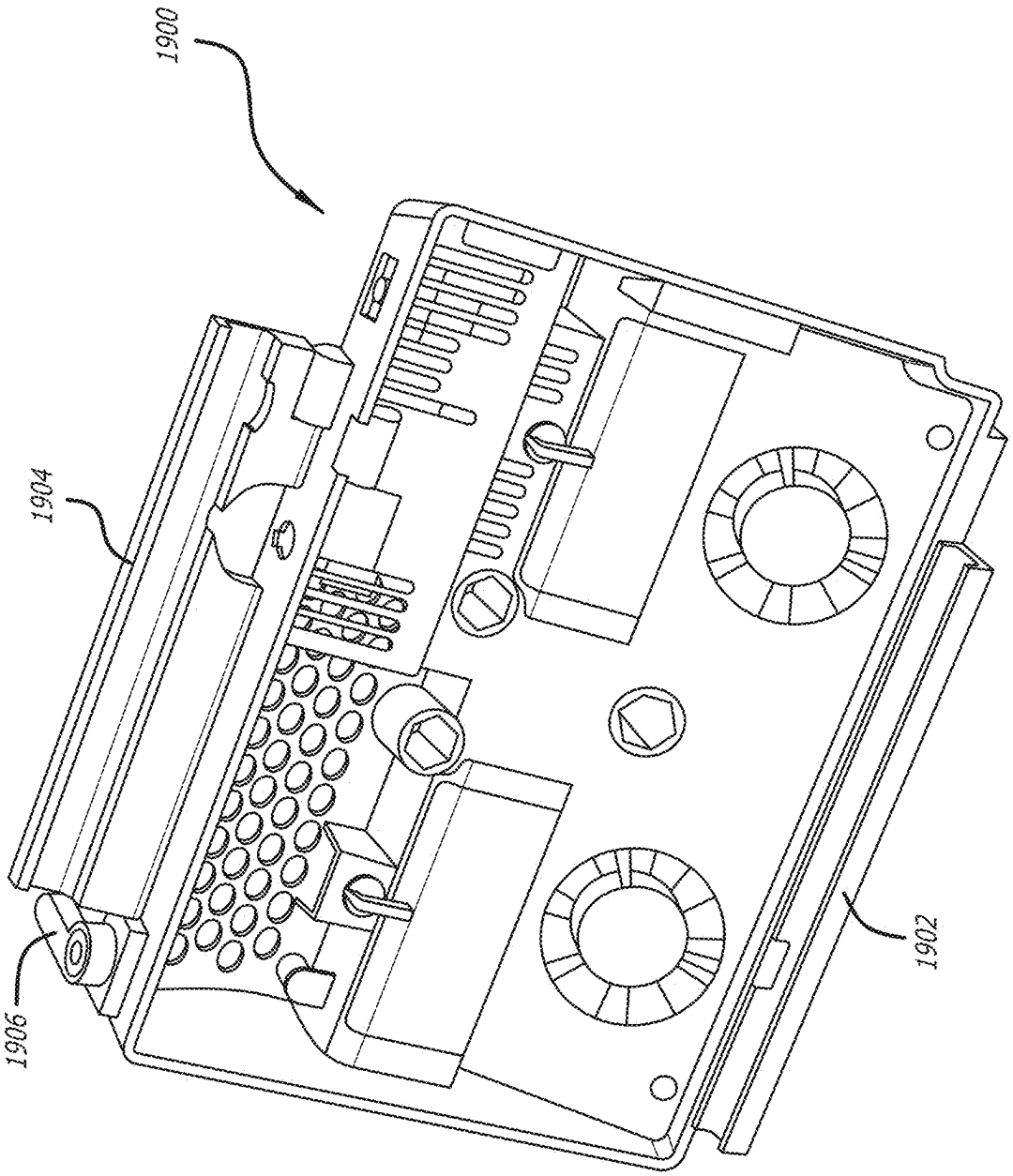

FIG. 19

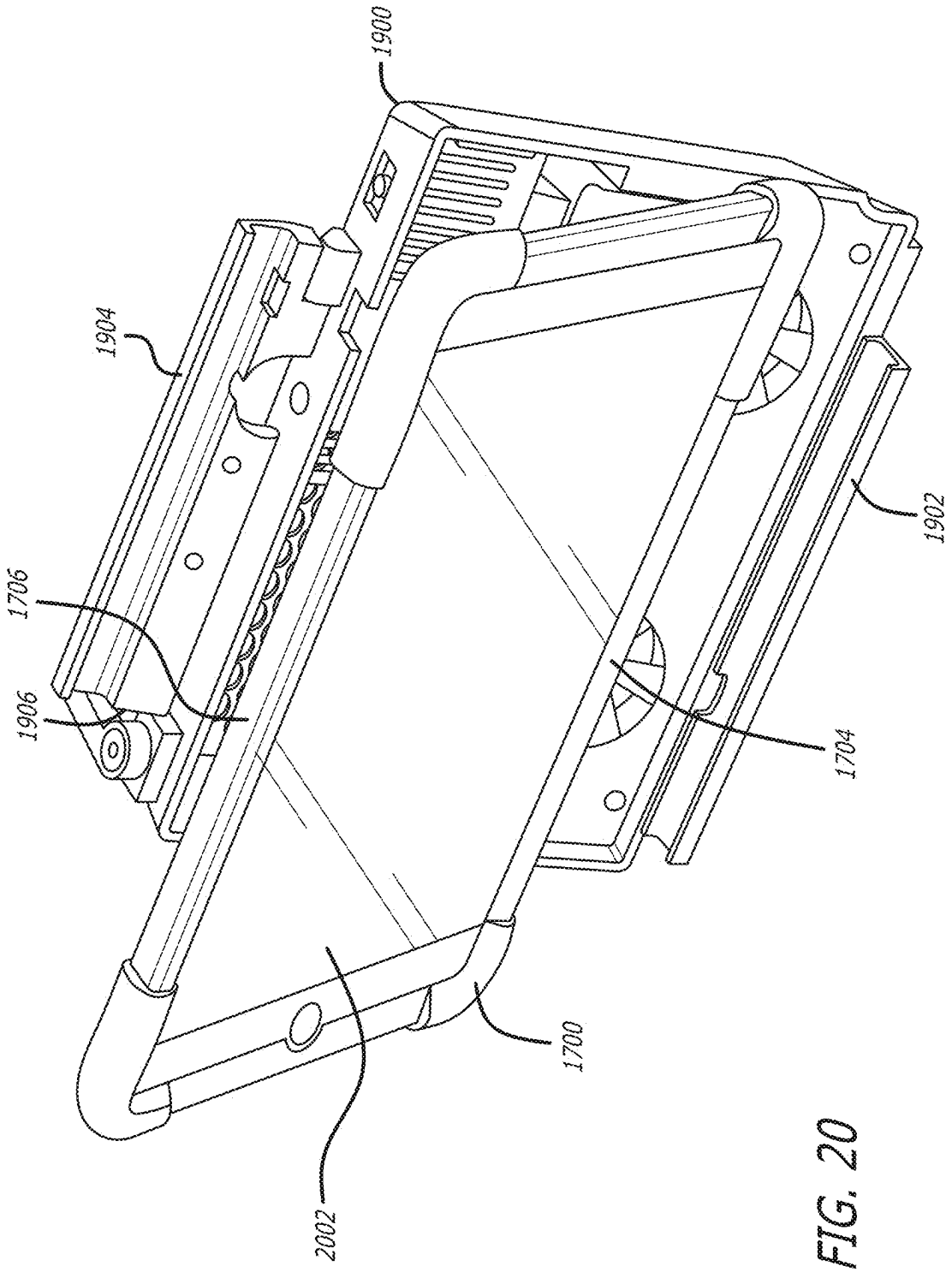

FIG. 20

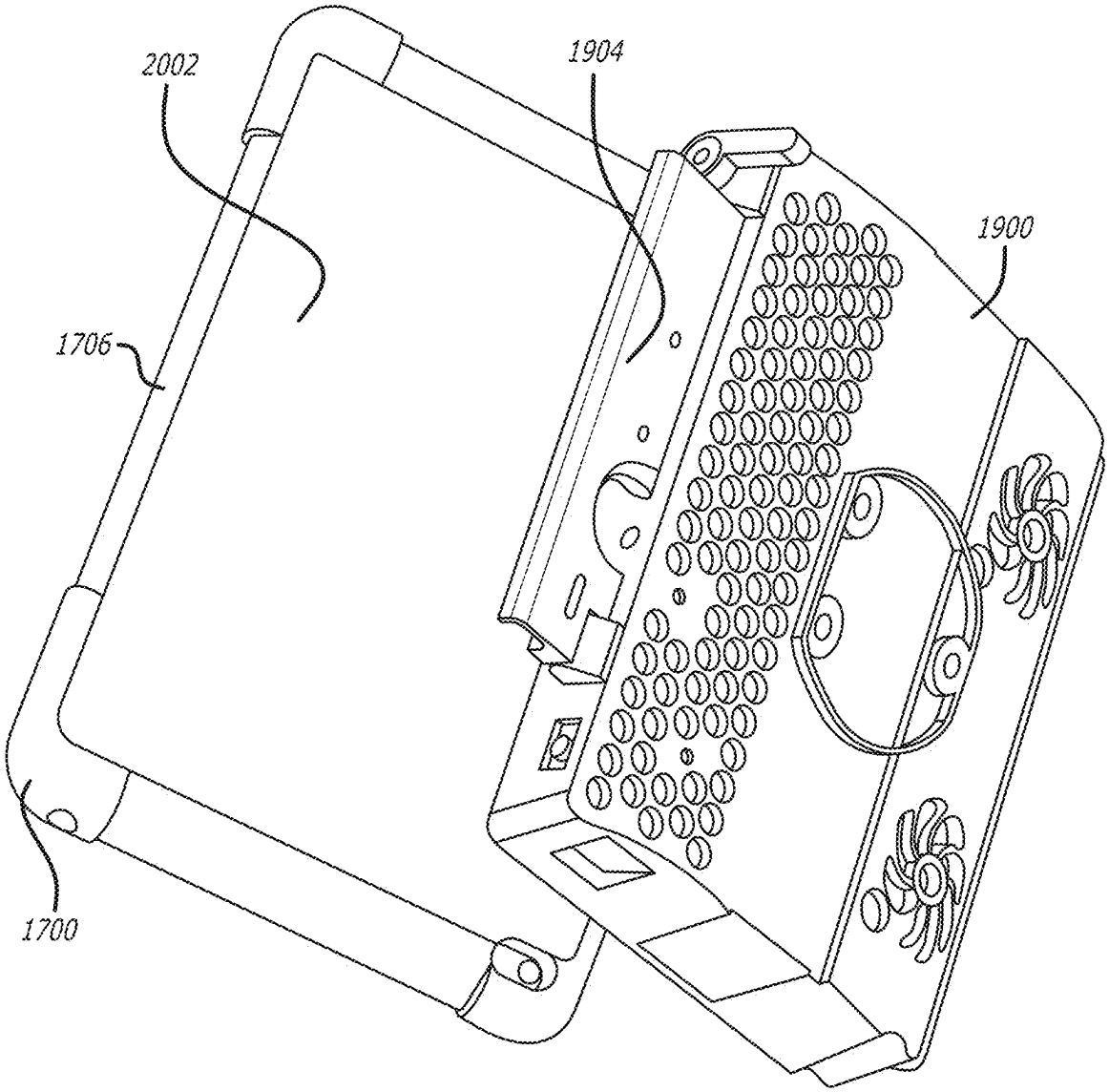

FIG. 21

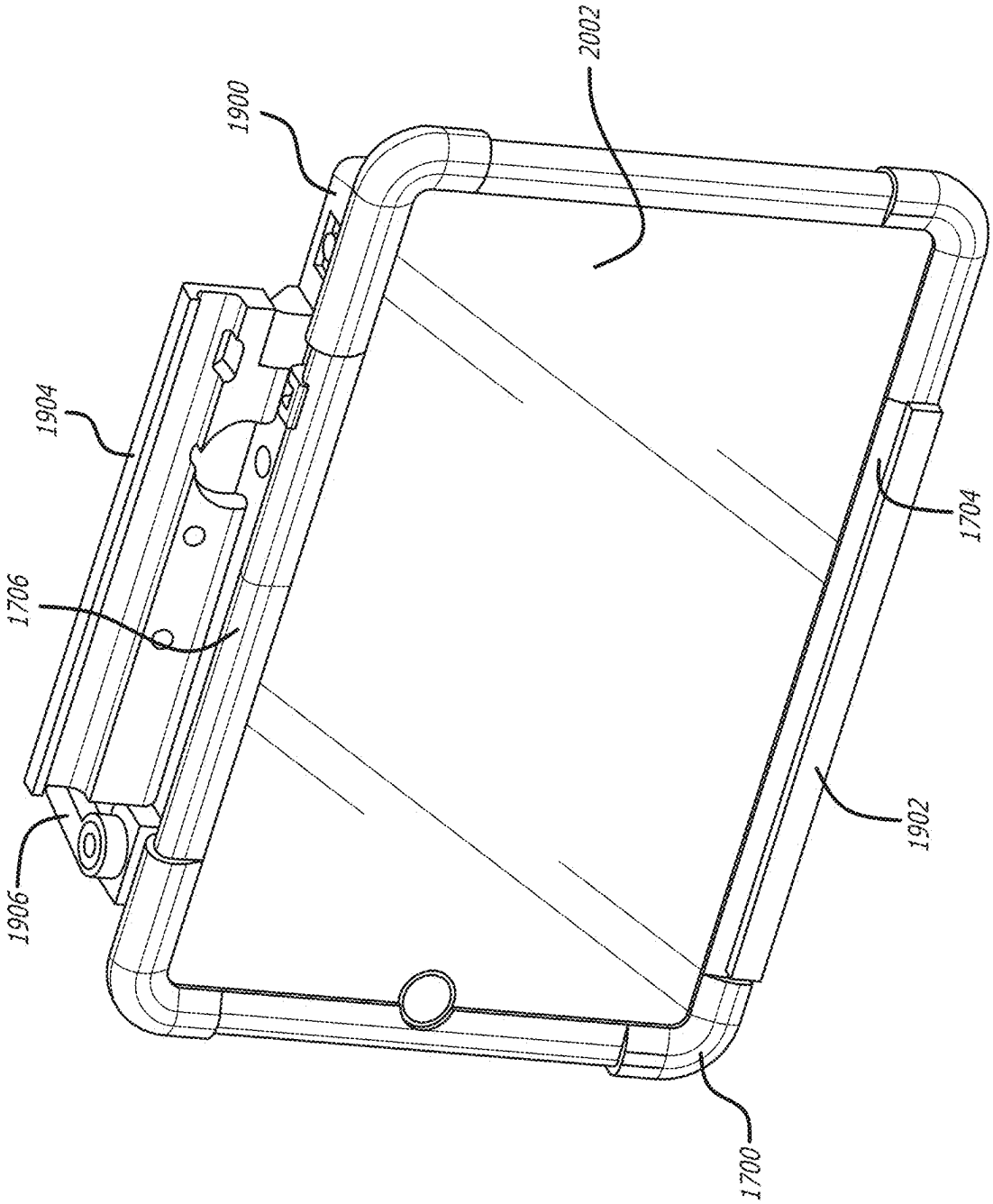

FIG. 22

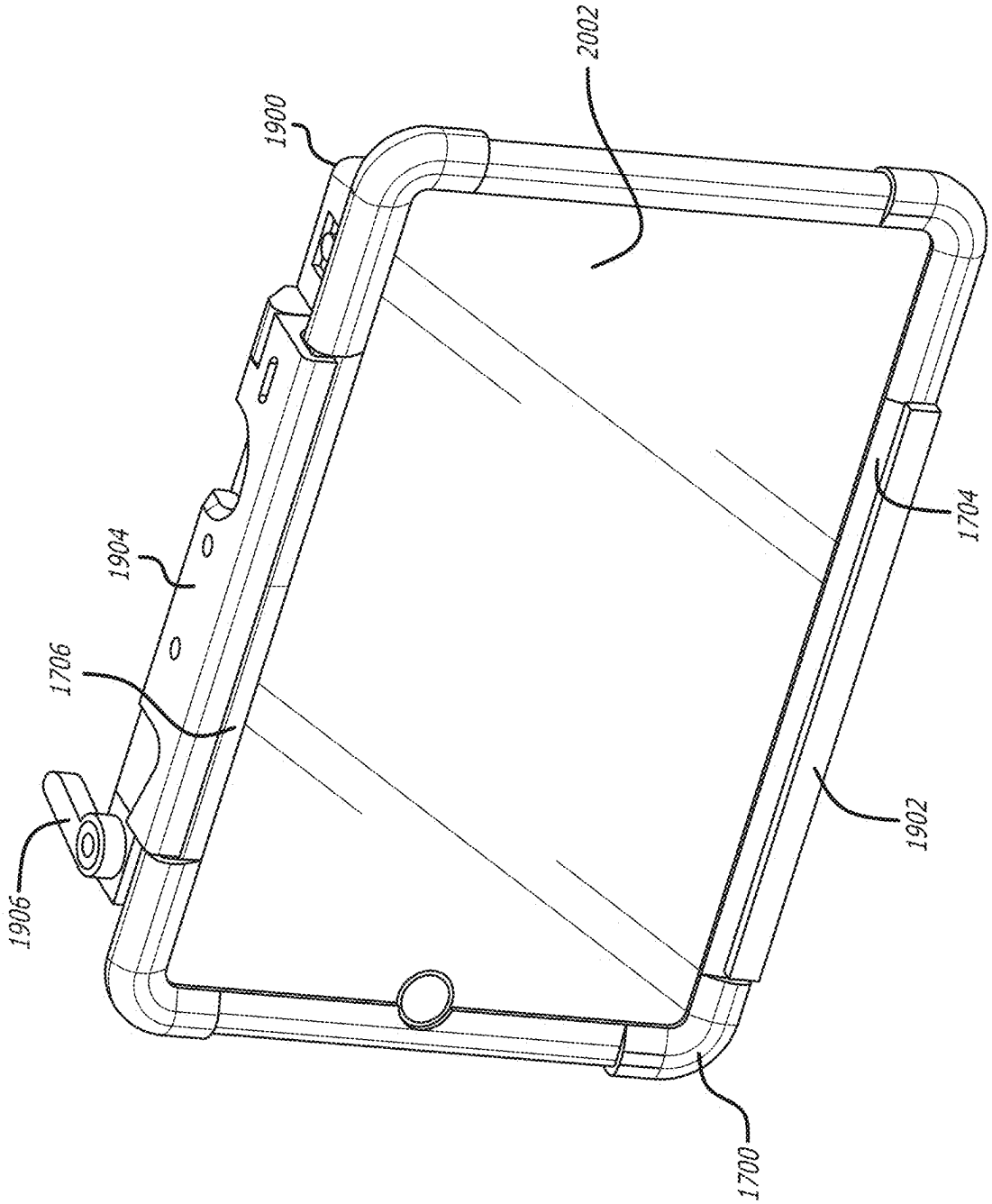

FIG. 23

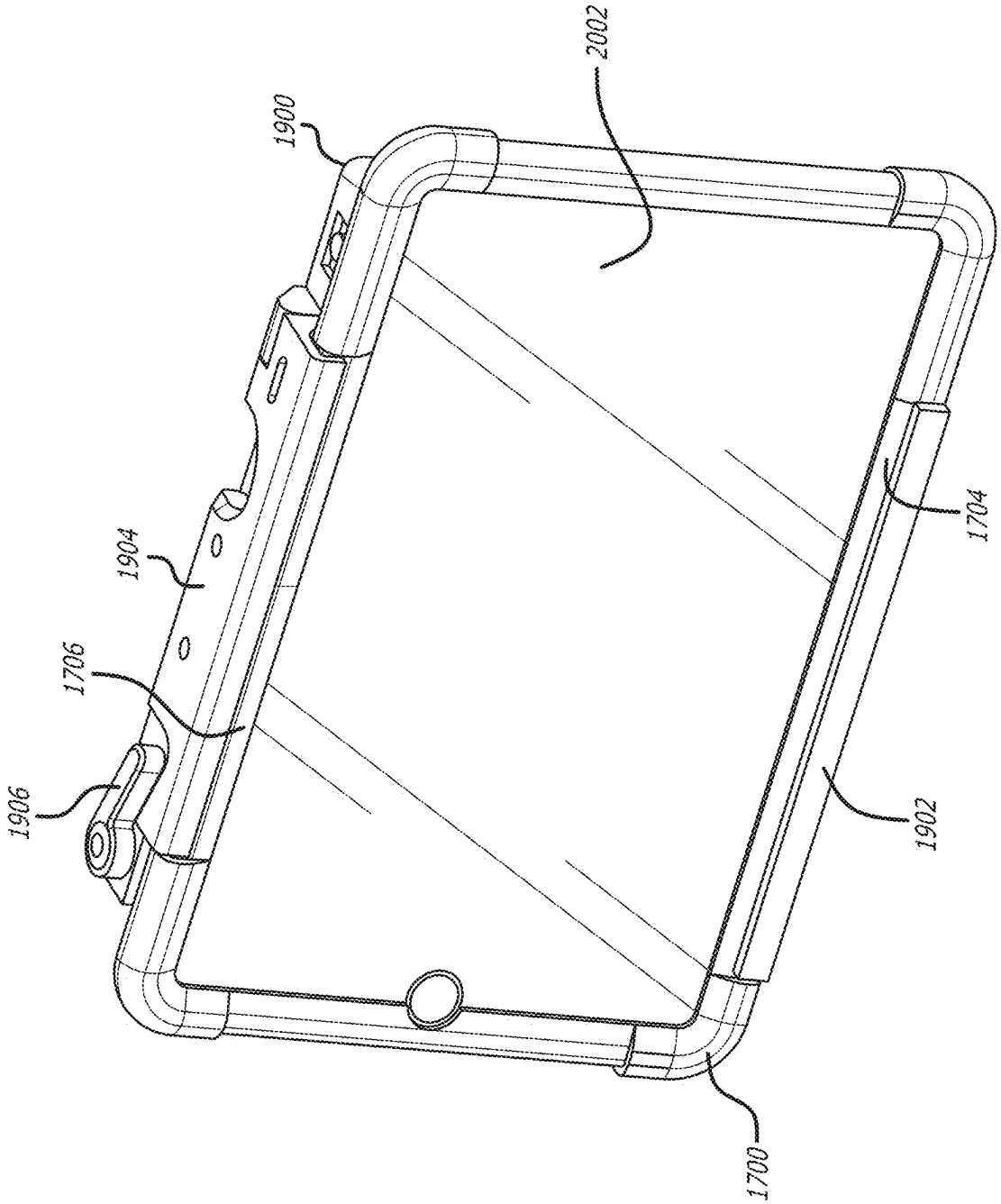

FIG. 24

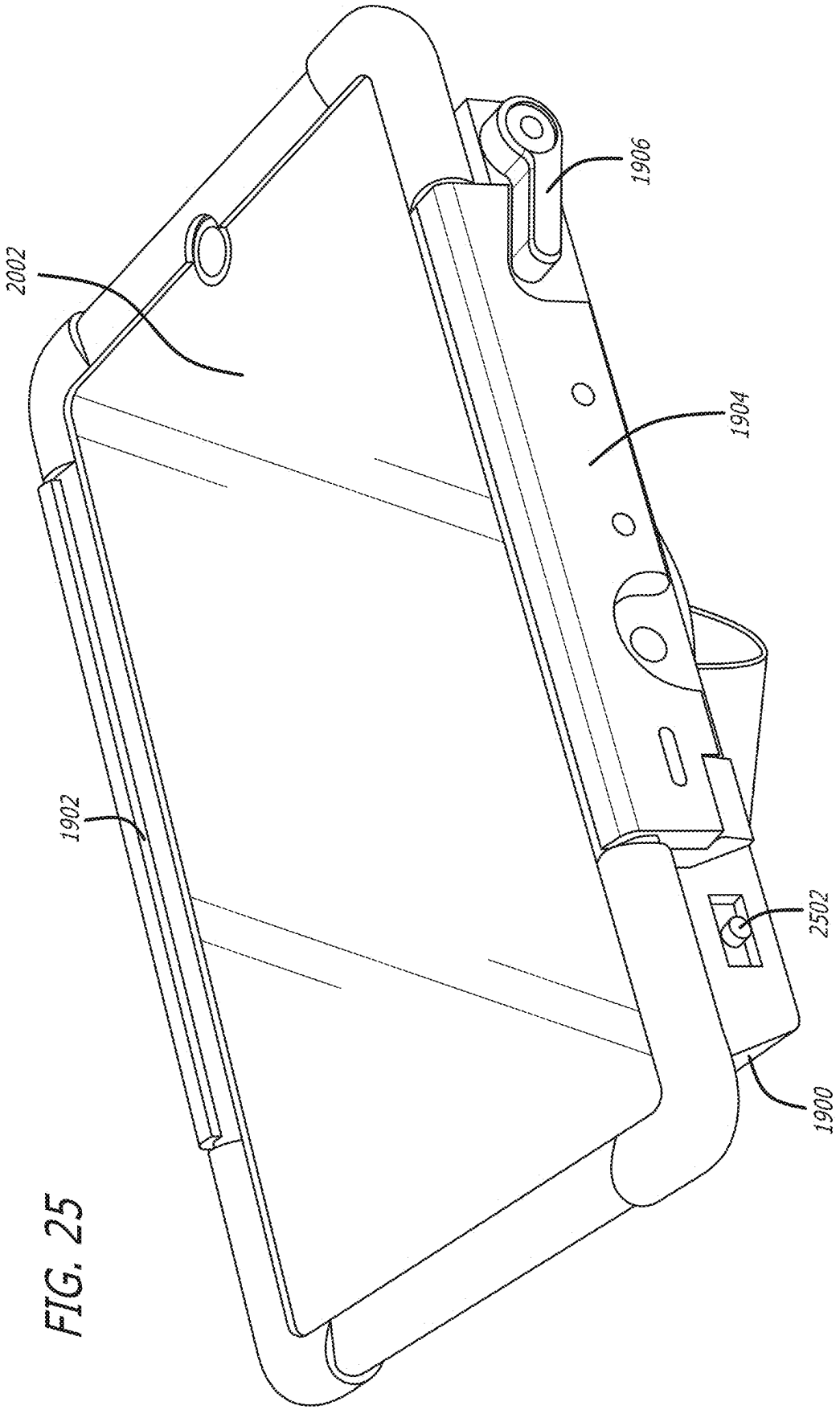

FIG. 25

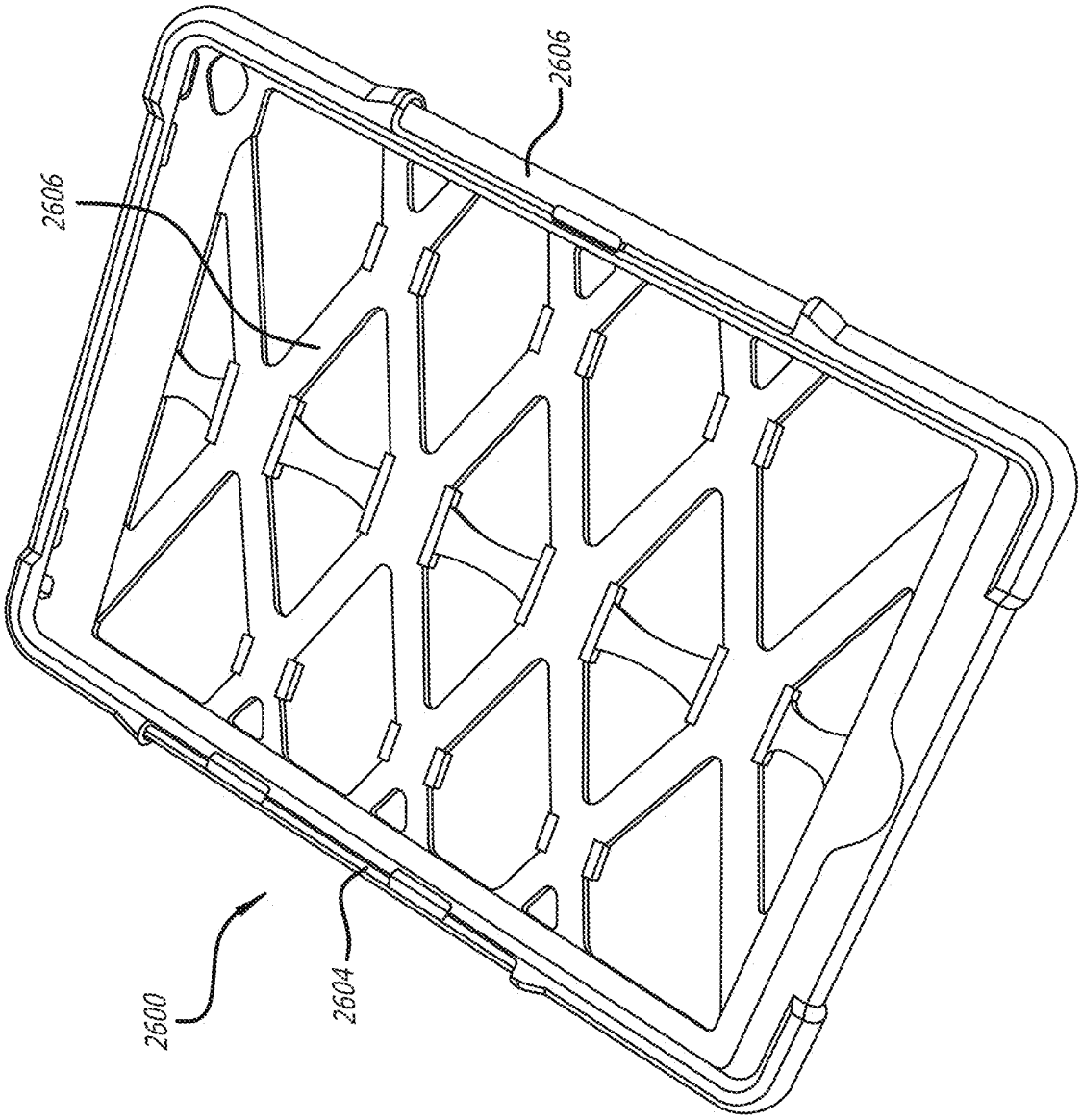

FIG. 26

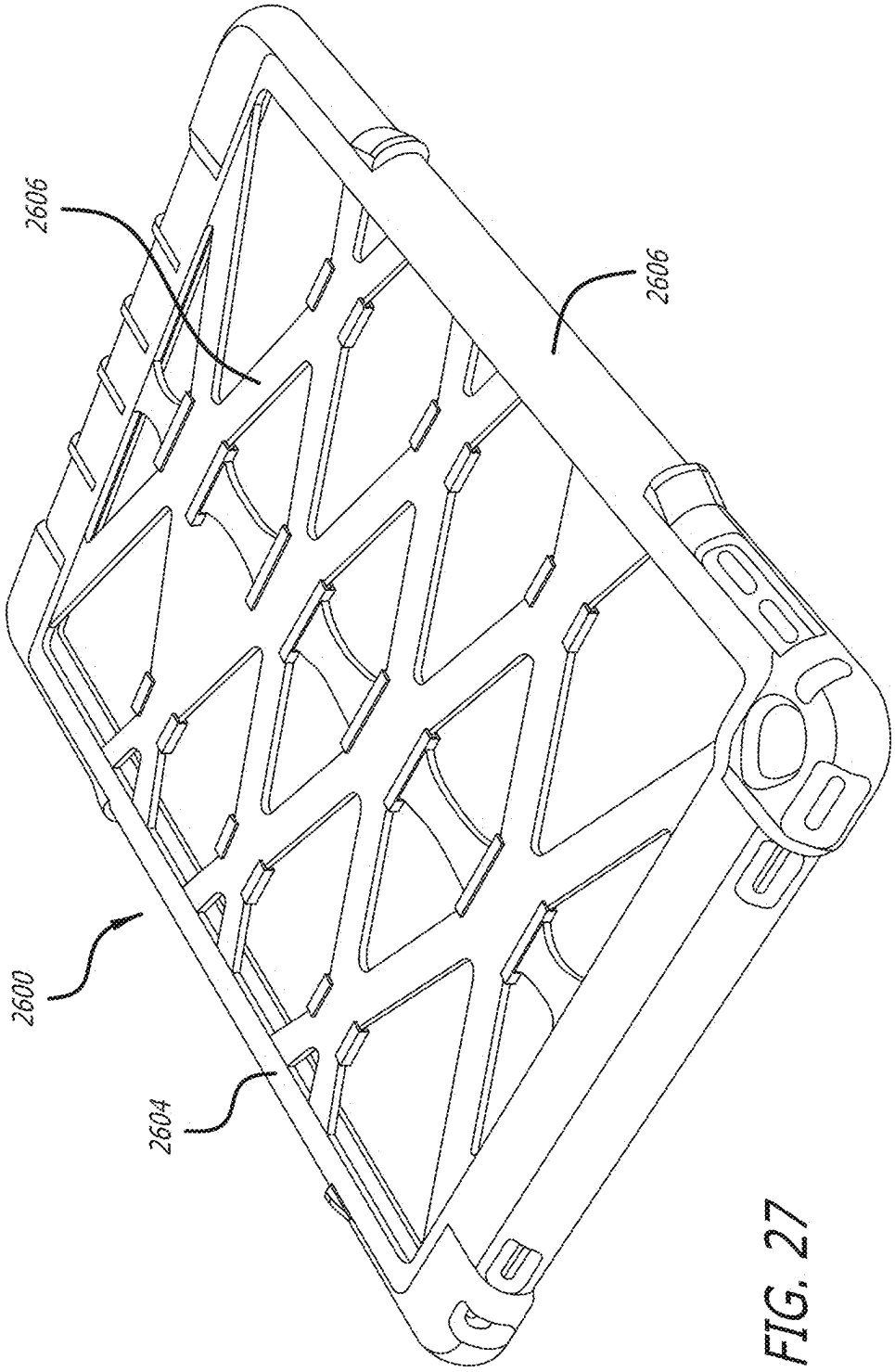

FIG. 27

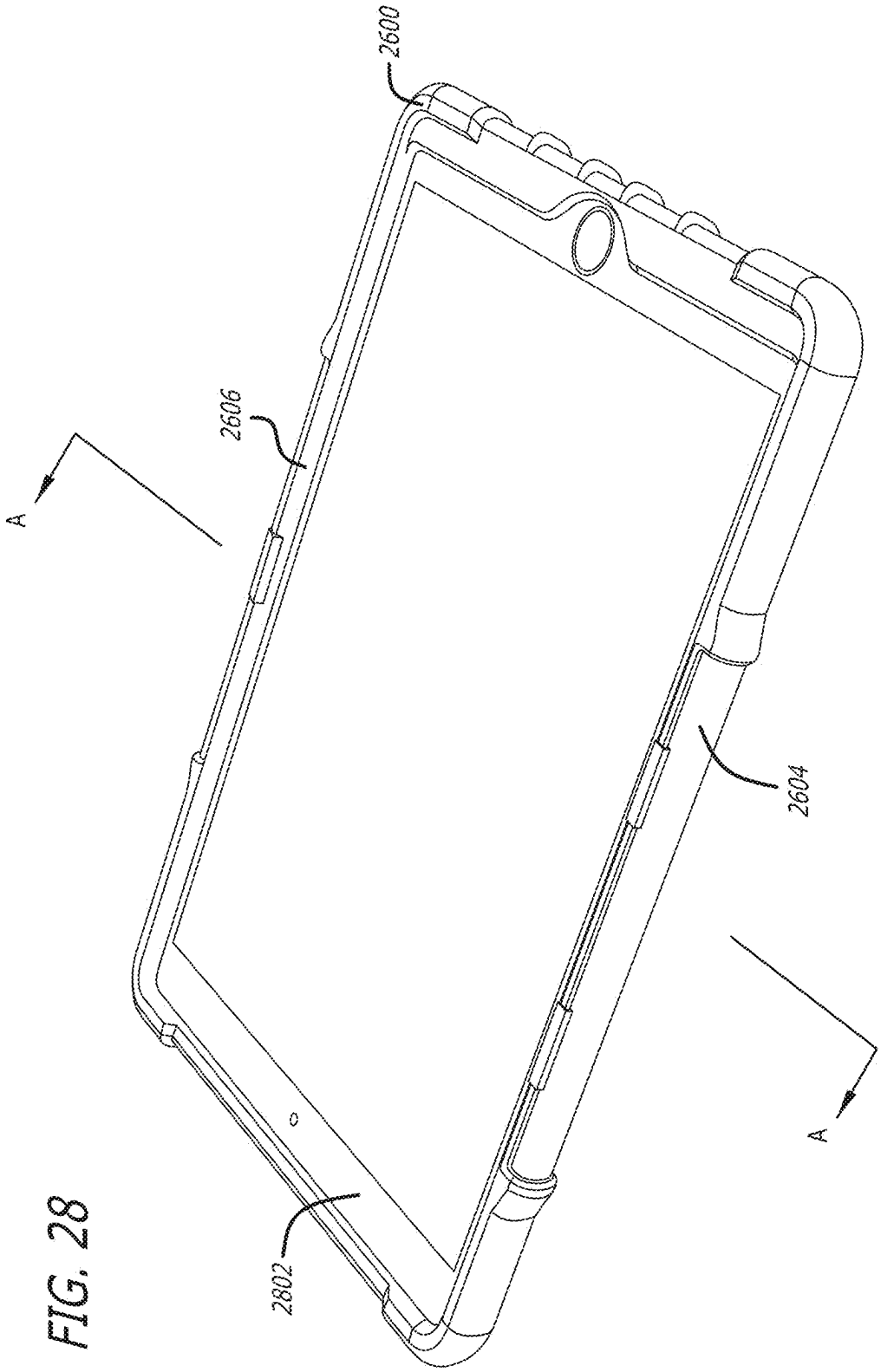

FIG. 28

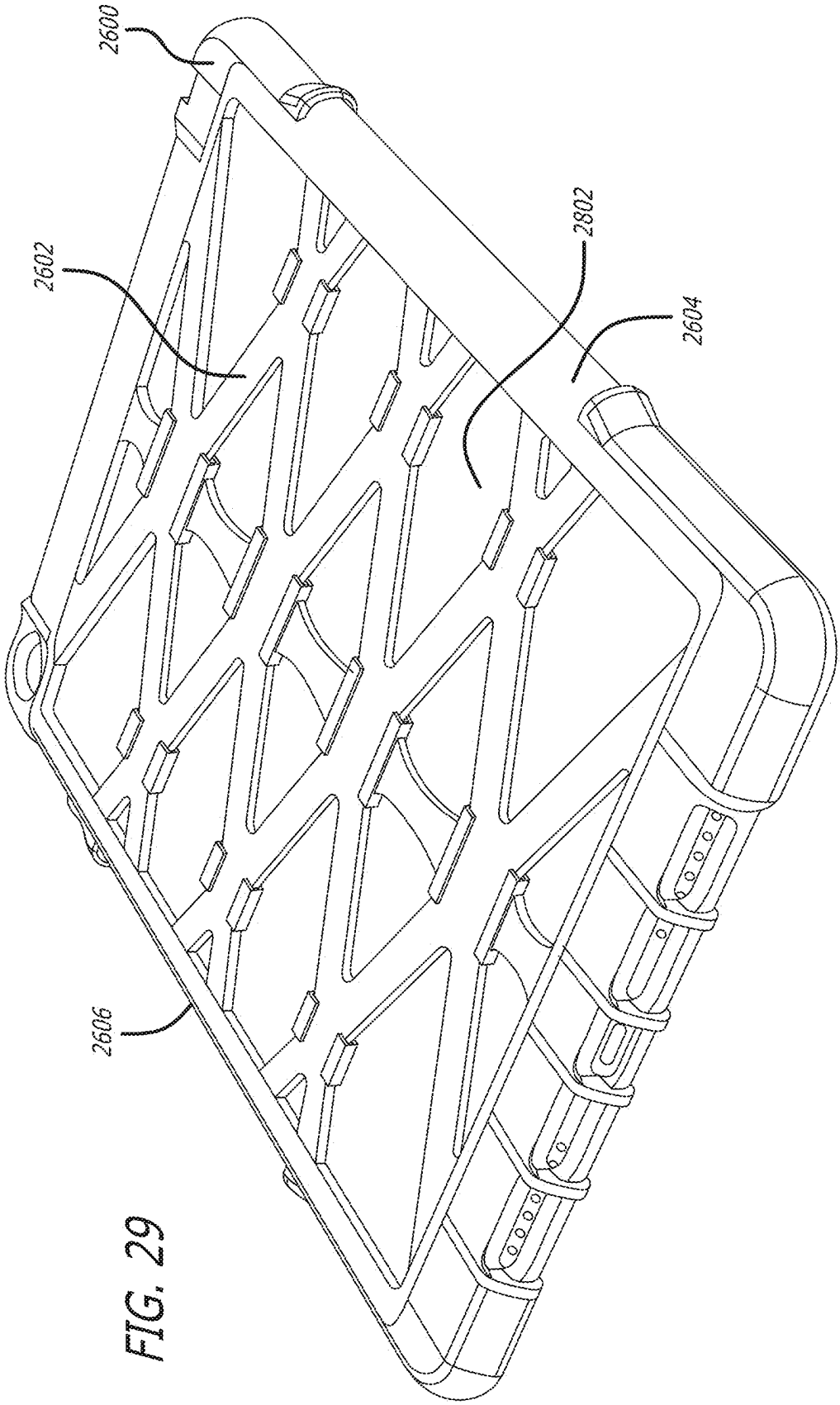

FIG. 29

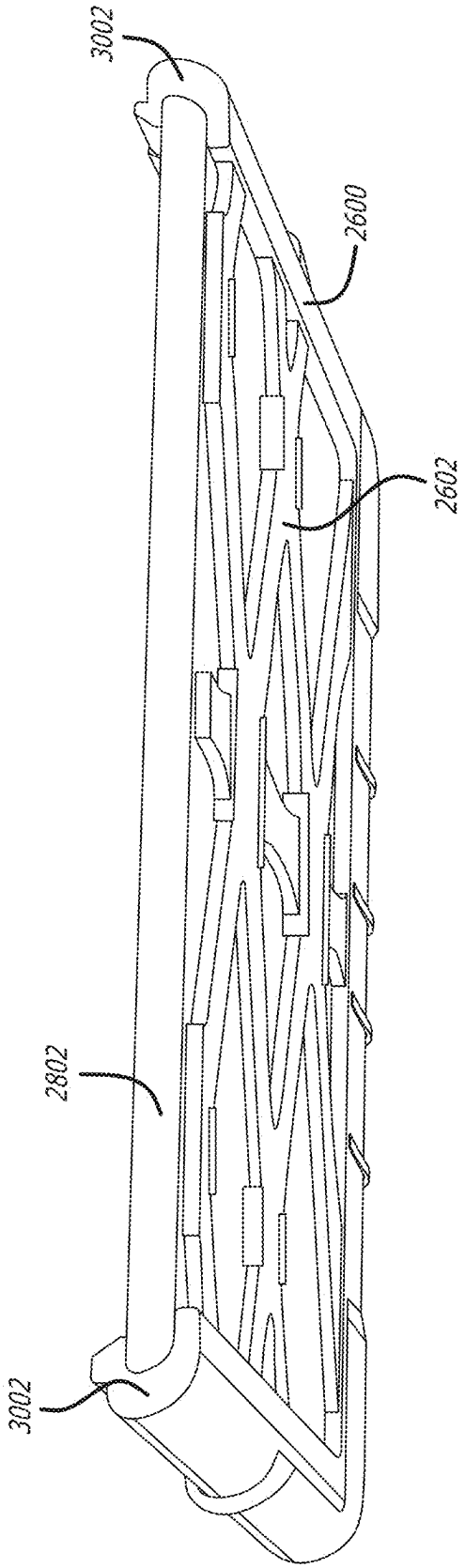

FIG. 30

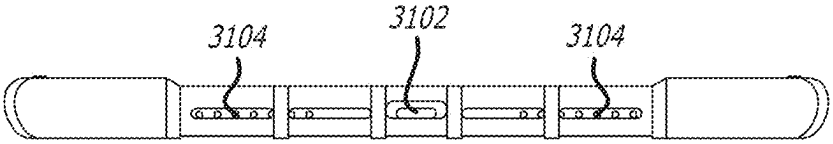

FIG. 31

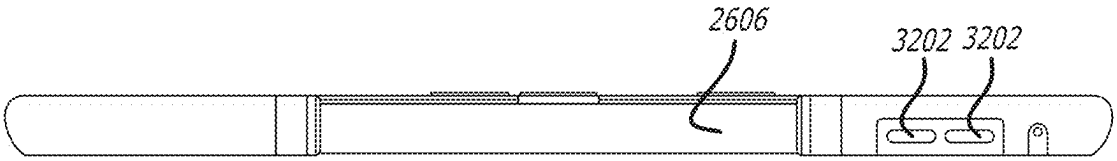

FIG. 32

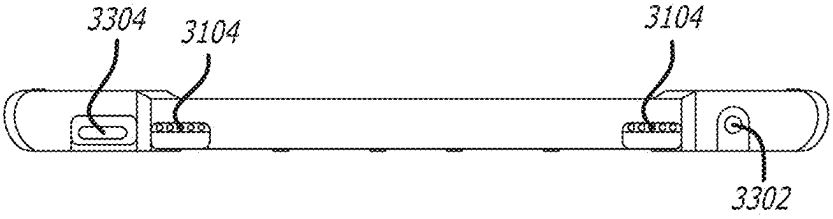

FIG. 33

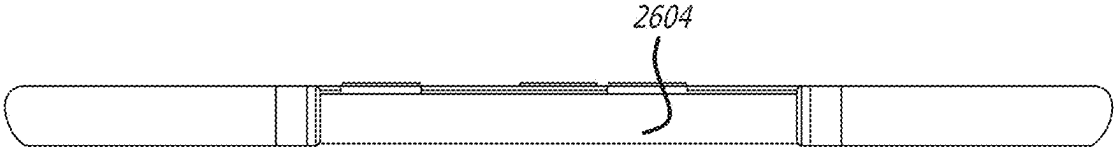

FIG. 34

FIG. 35

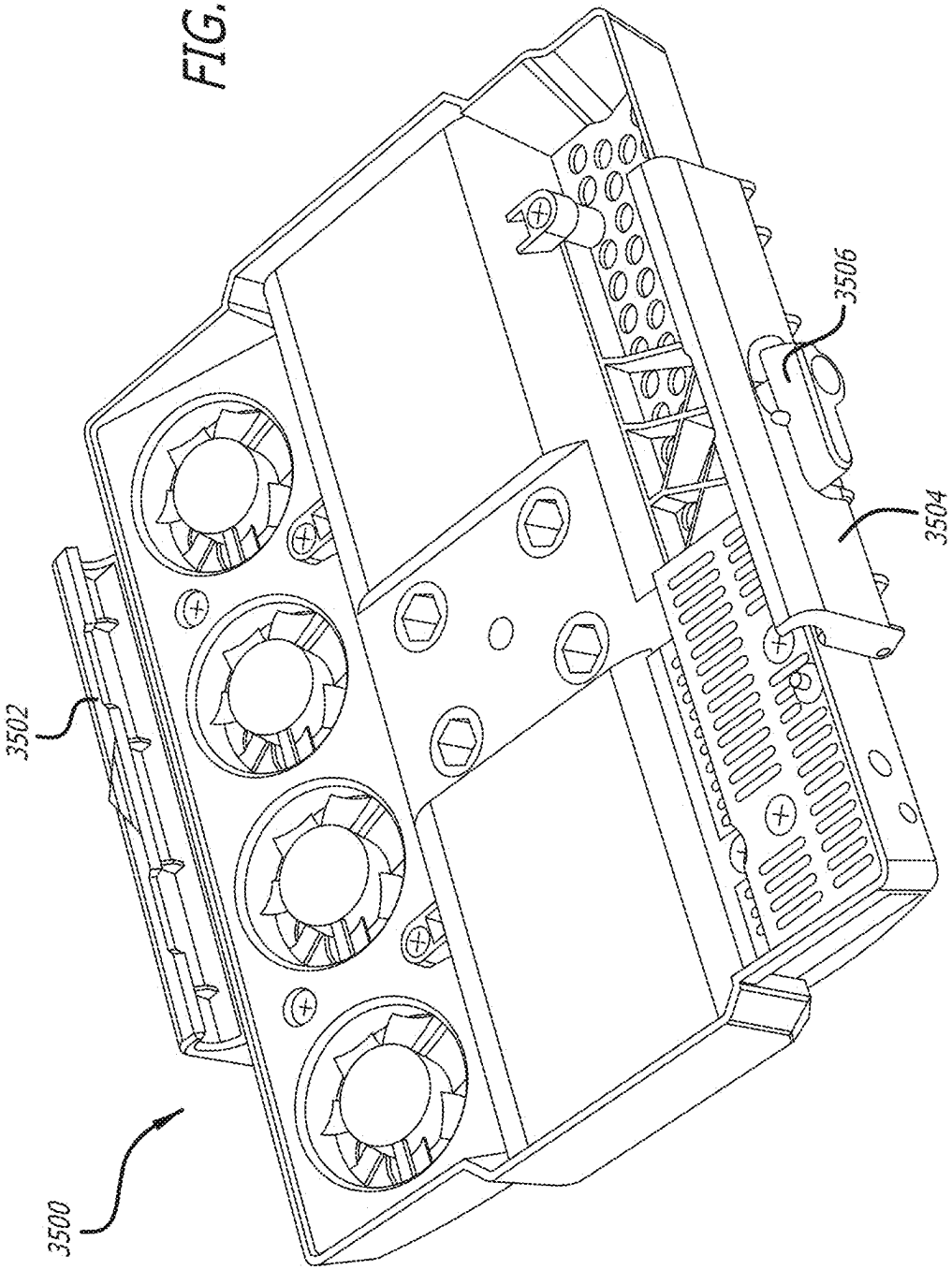

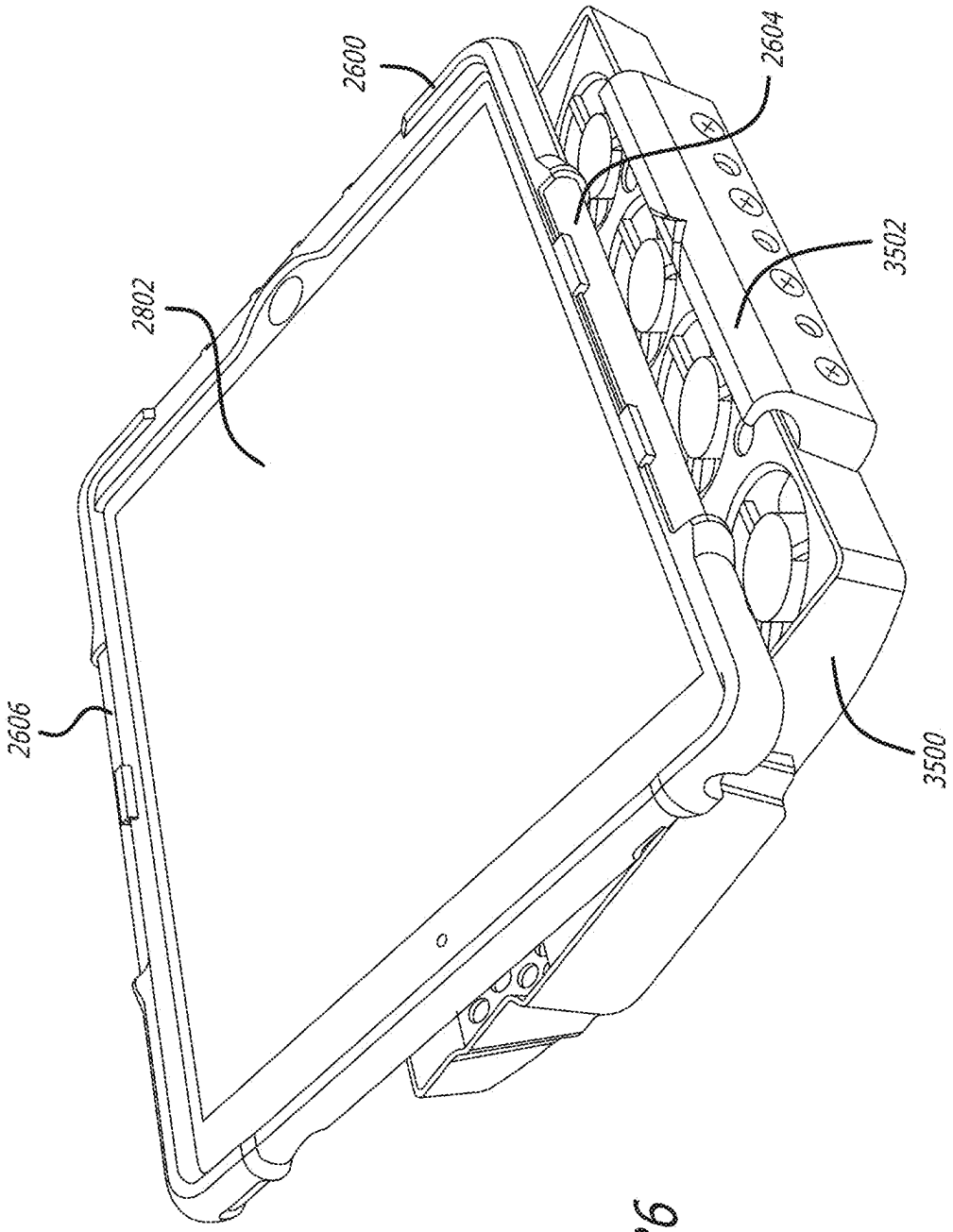

FIG. 36

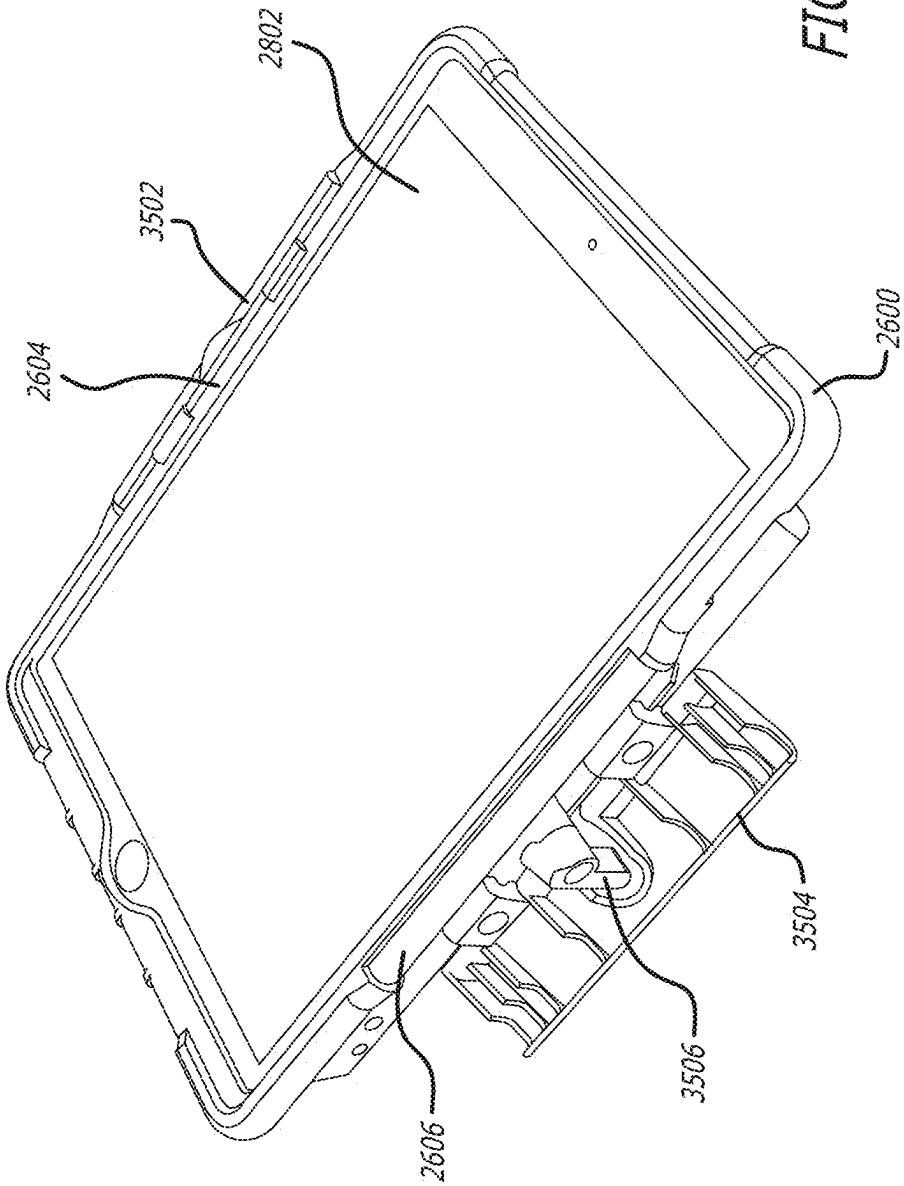

FIG. 37

FIG. 38

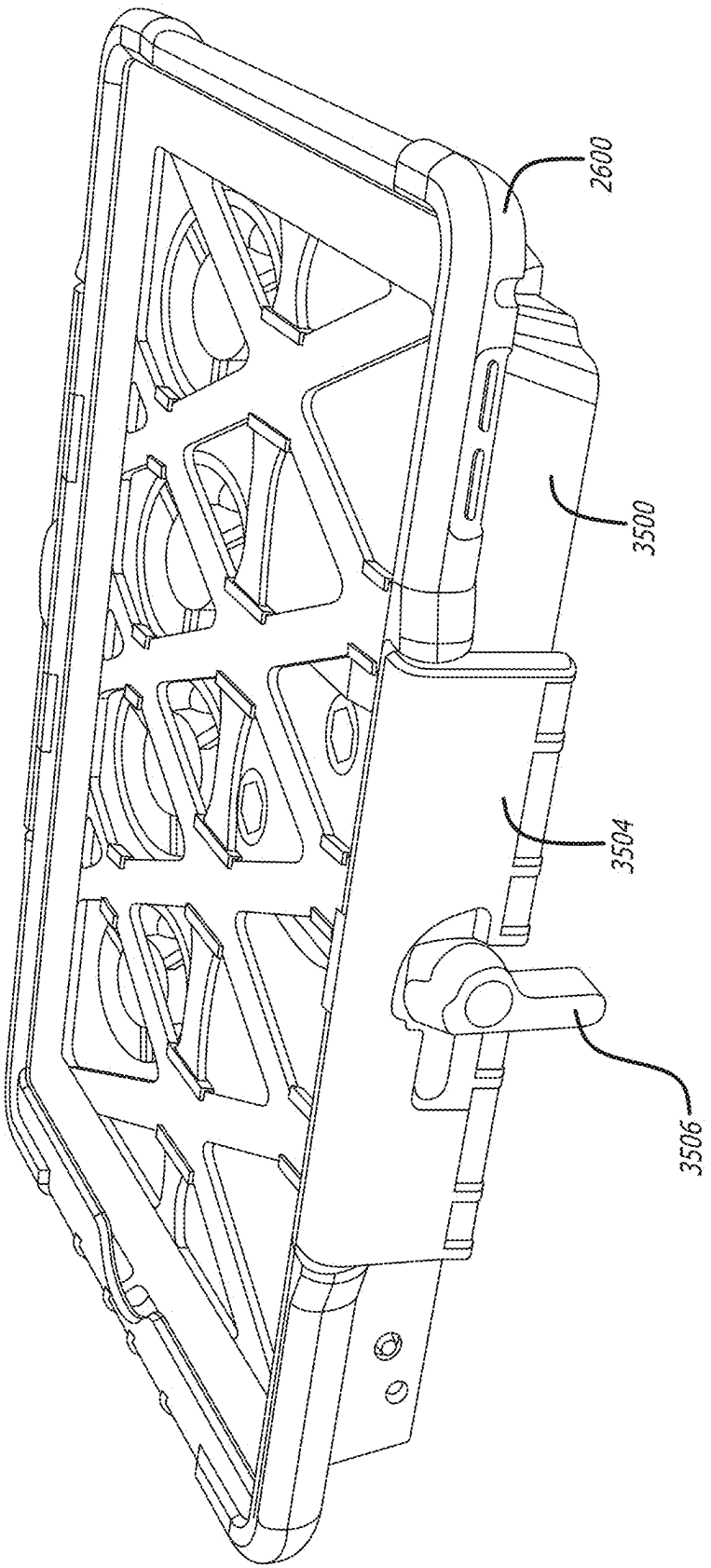

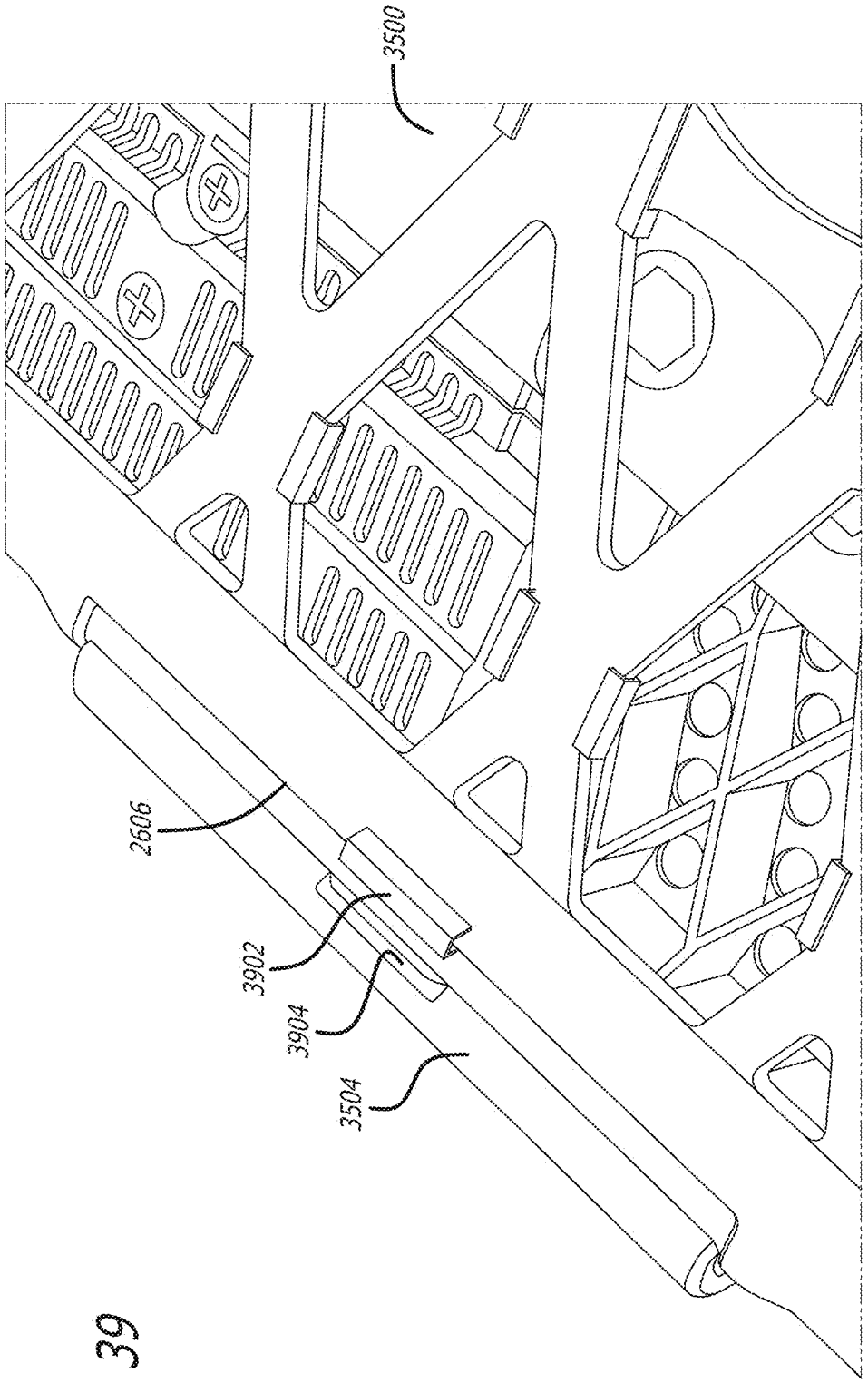

FIG. 39

FIG. 40

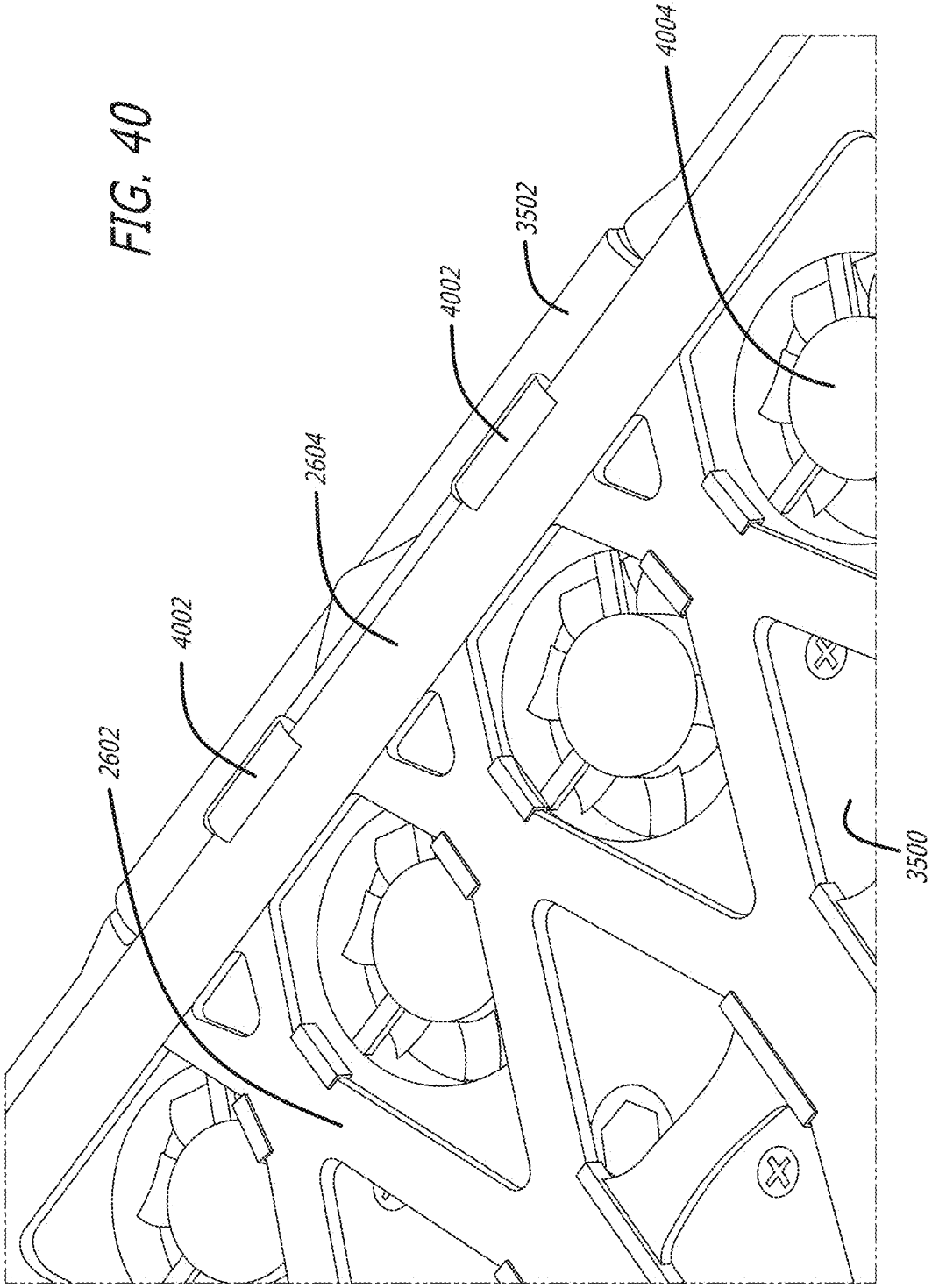

FIG. 41

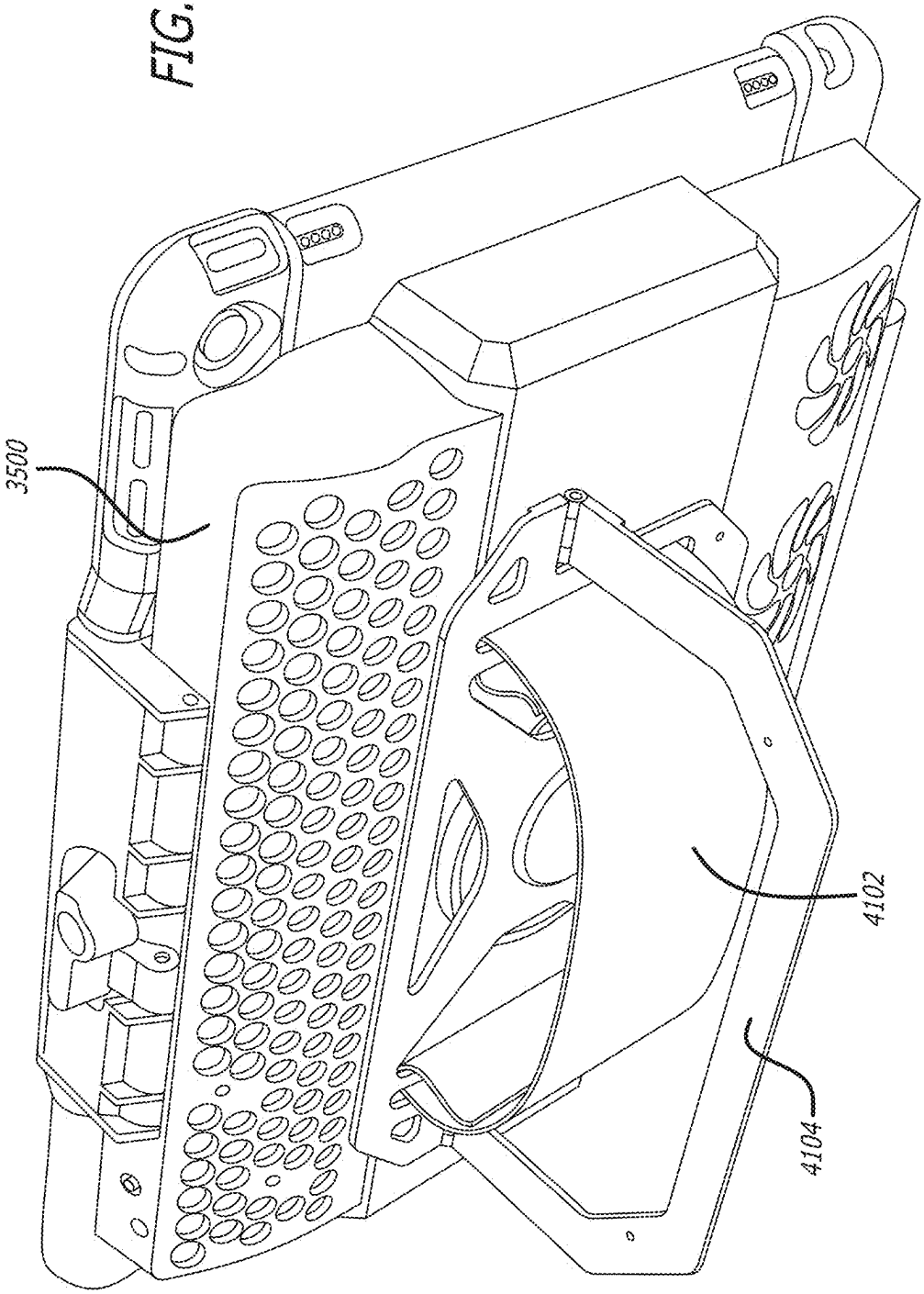

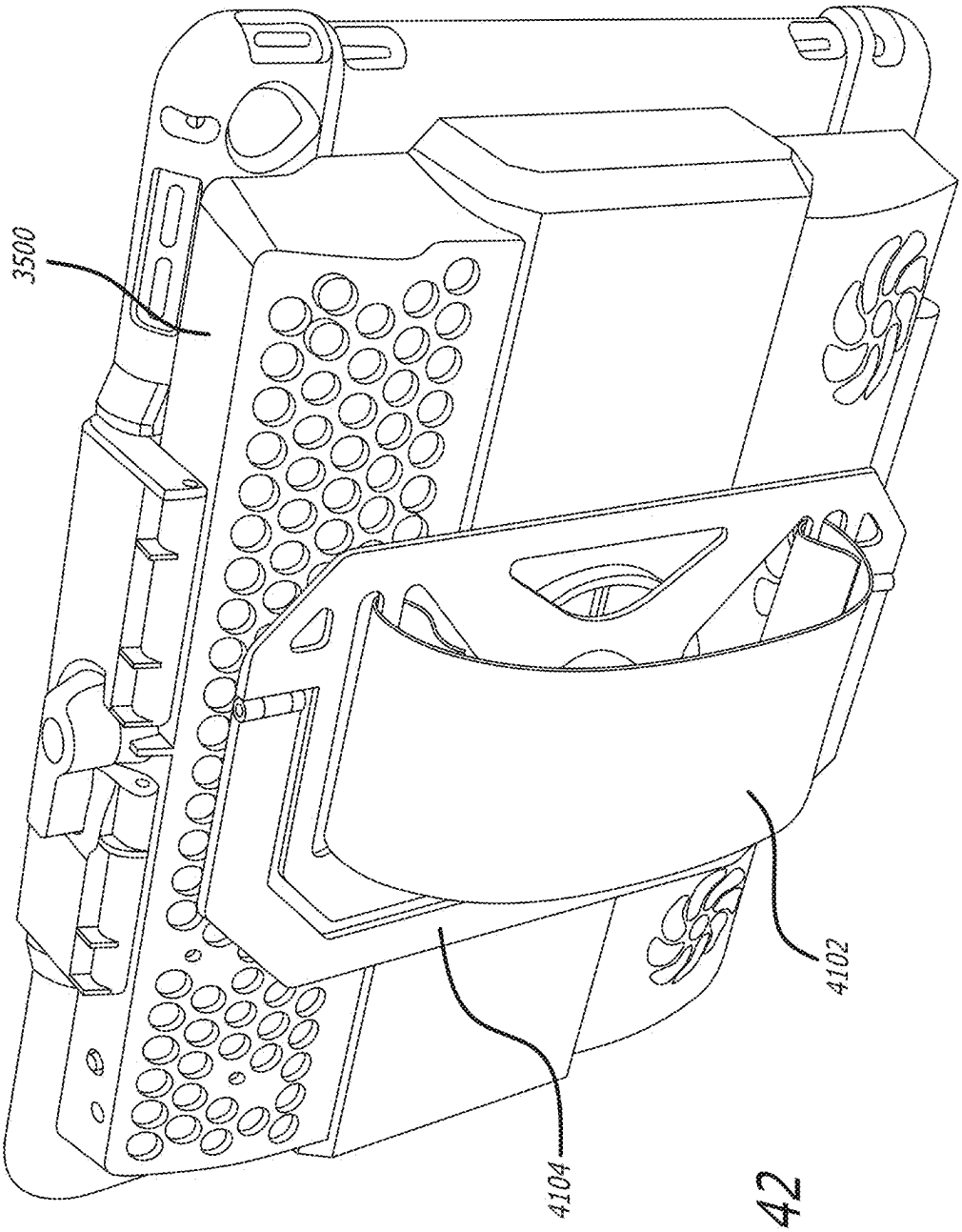

FIG. 42

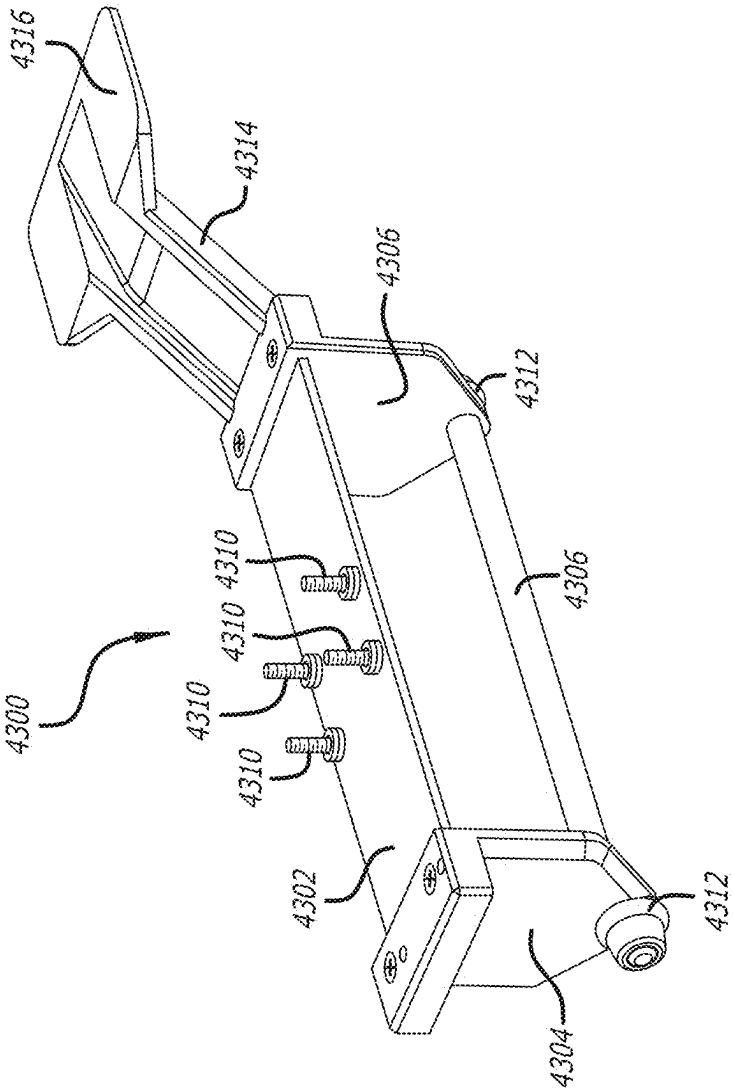
4316
4314
4306
4312
4310
4310
4310
4310
4300
4306
4302
4312
4304

FIG. 43

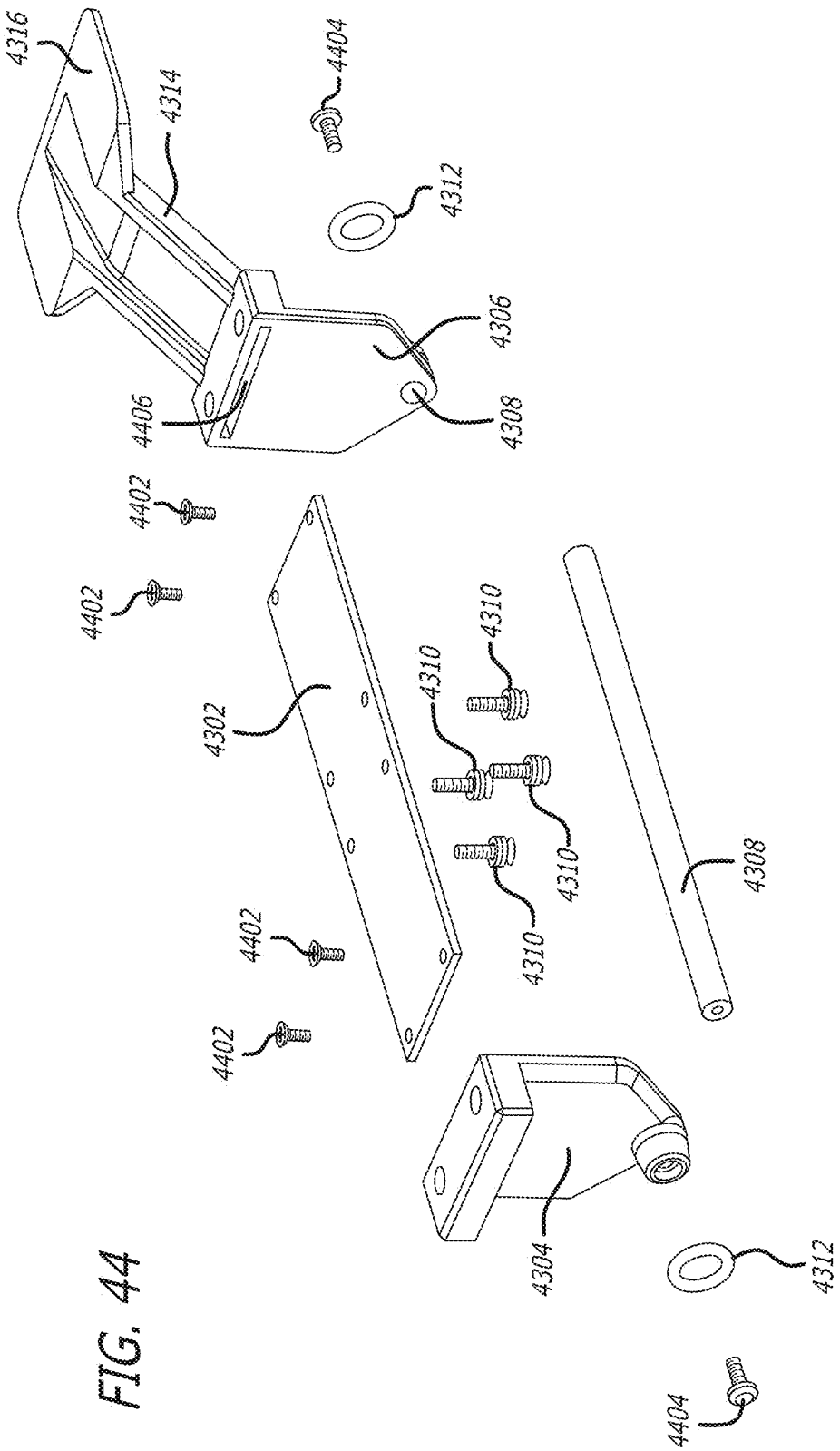
4316
4314
4404
4312
4306
4406
4308
4402
4402
4302
4310
4310
4310
4310
4308
4402
4402
4304
4312
4404

FIG. 44

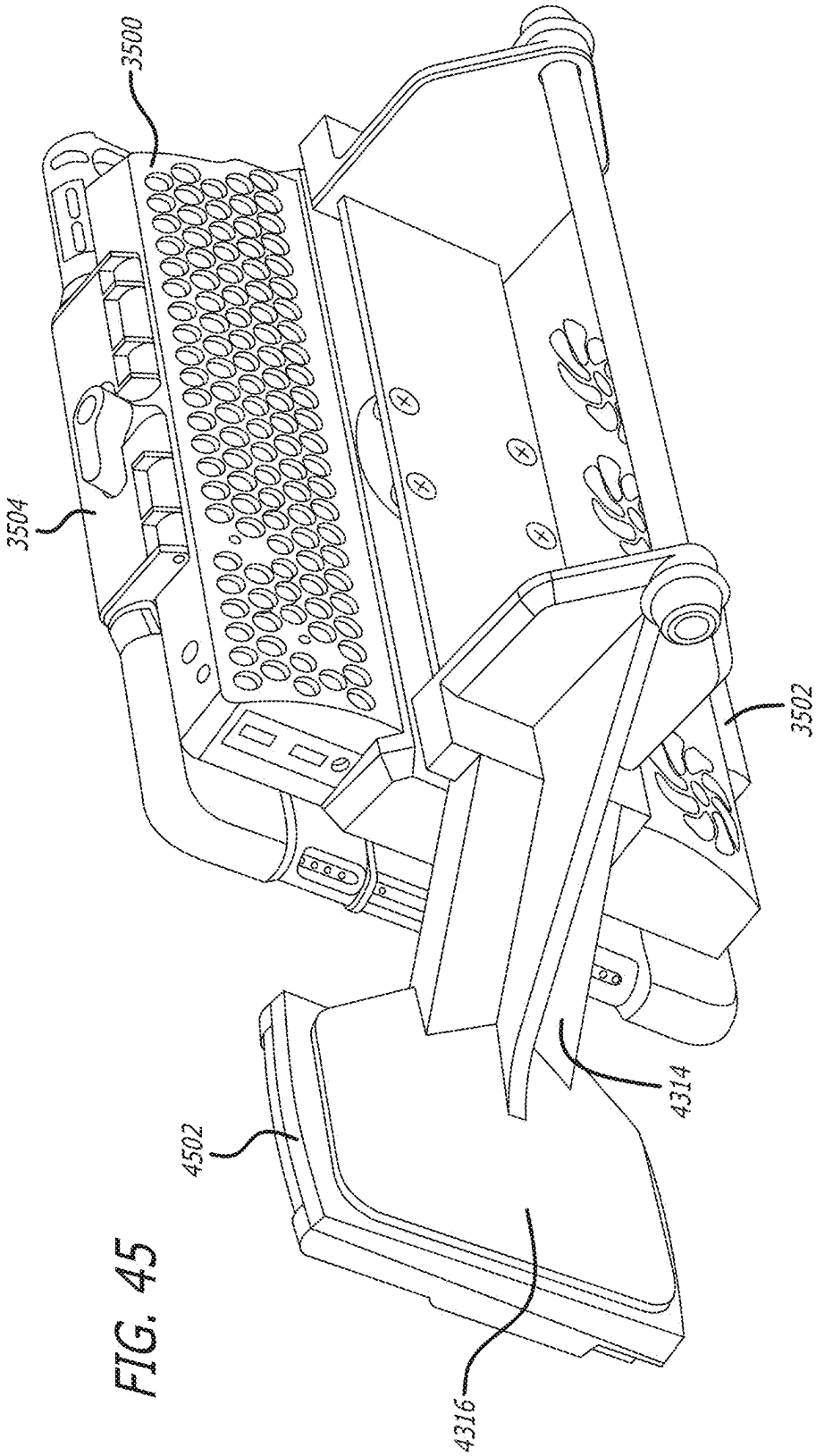

FIG. 45

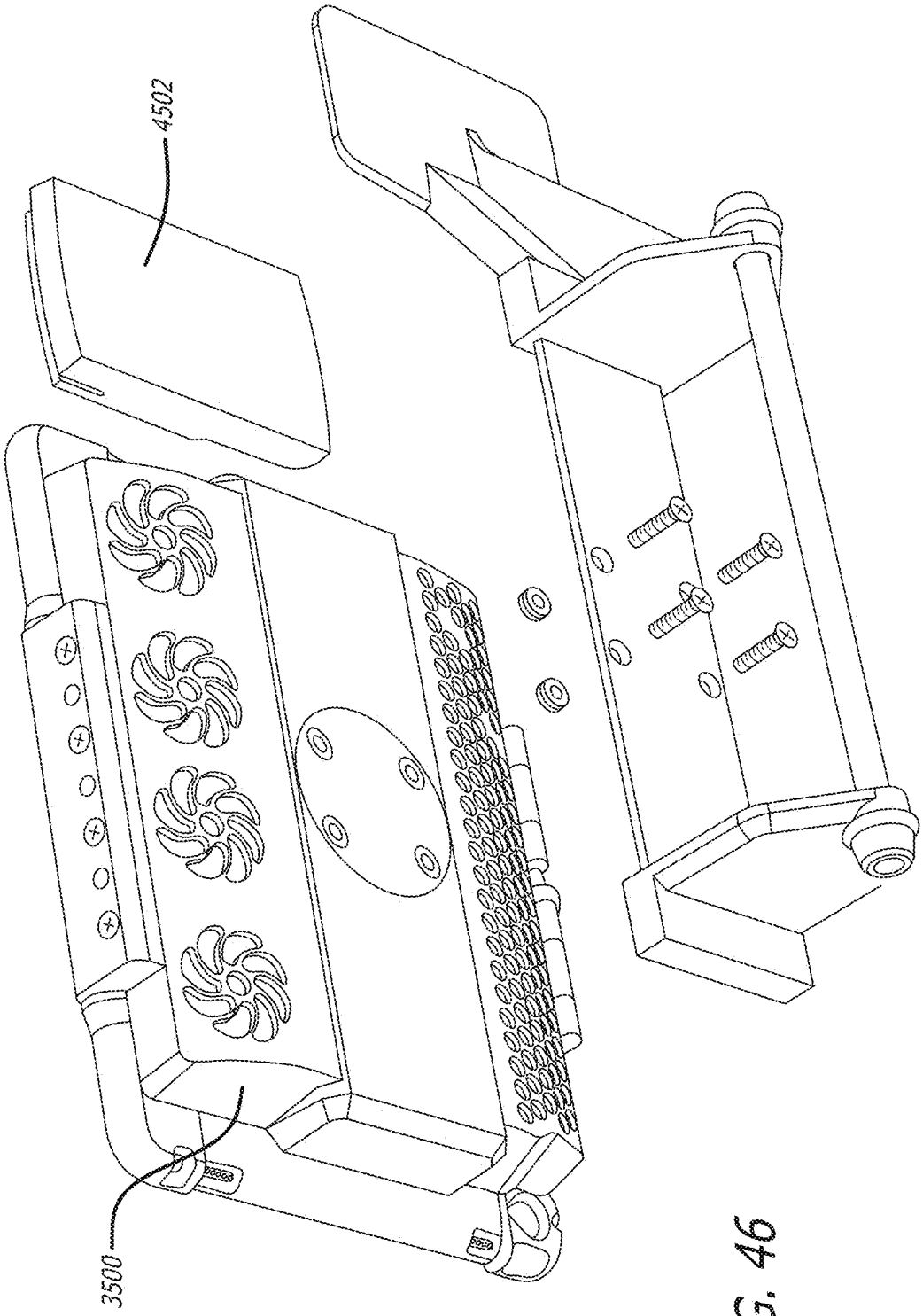

FIG. 46

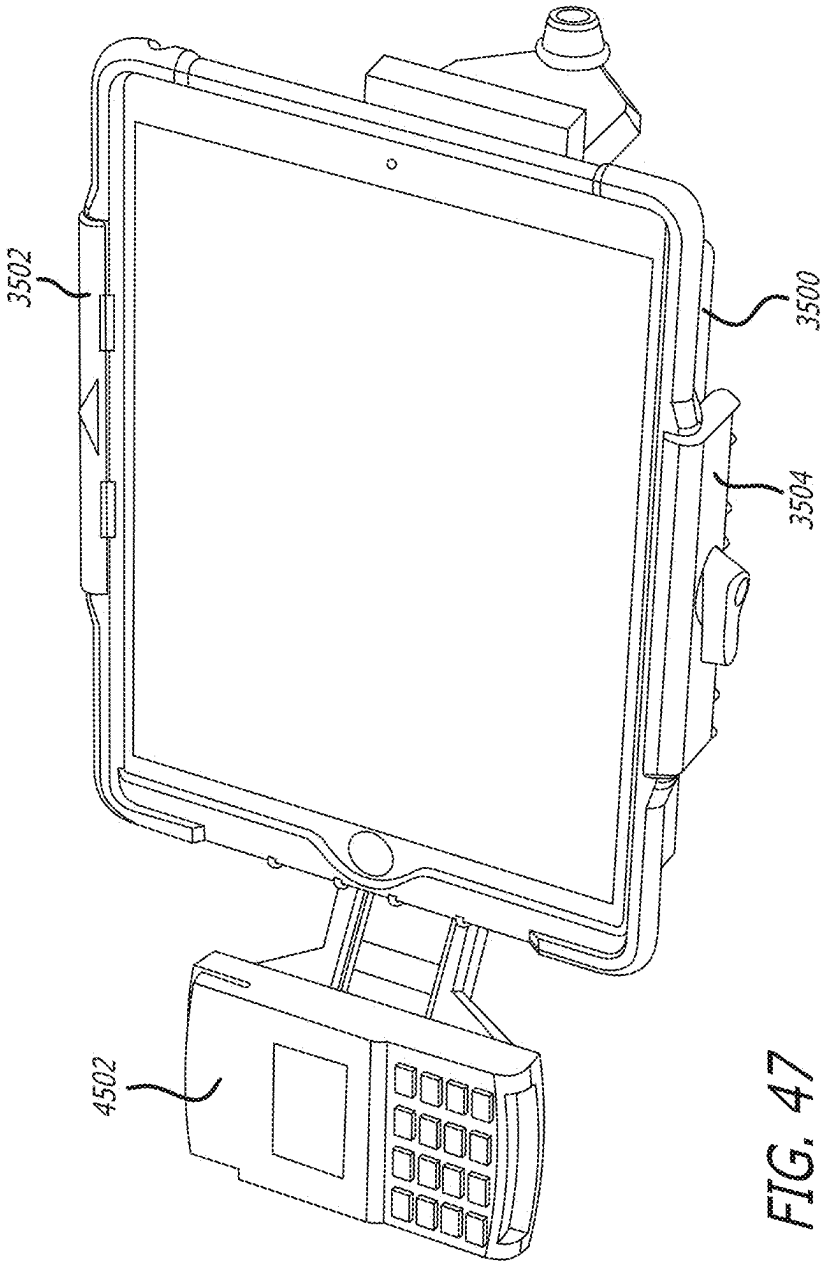

FIG. 47

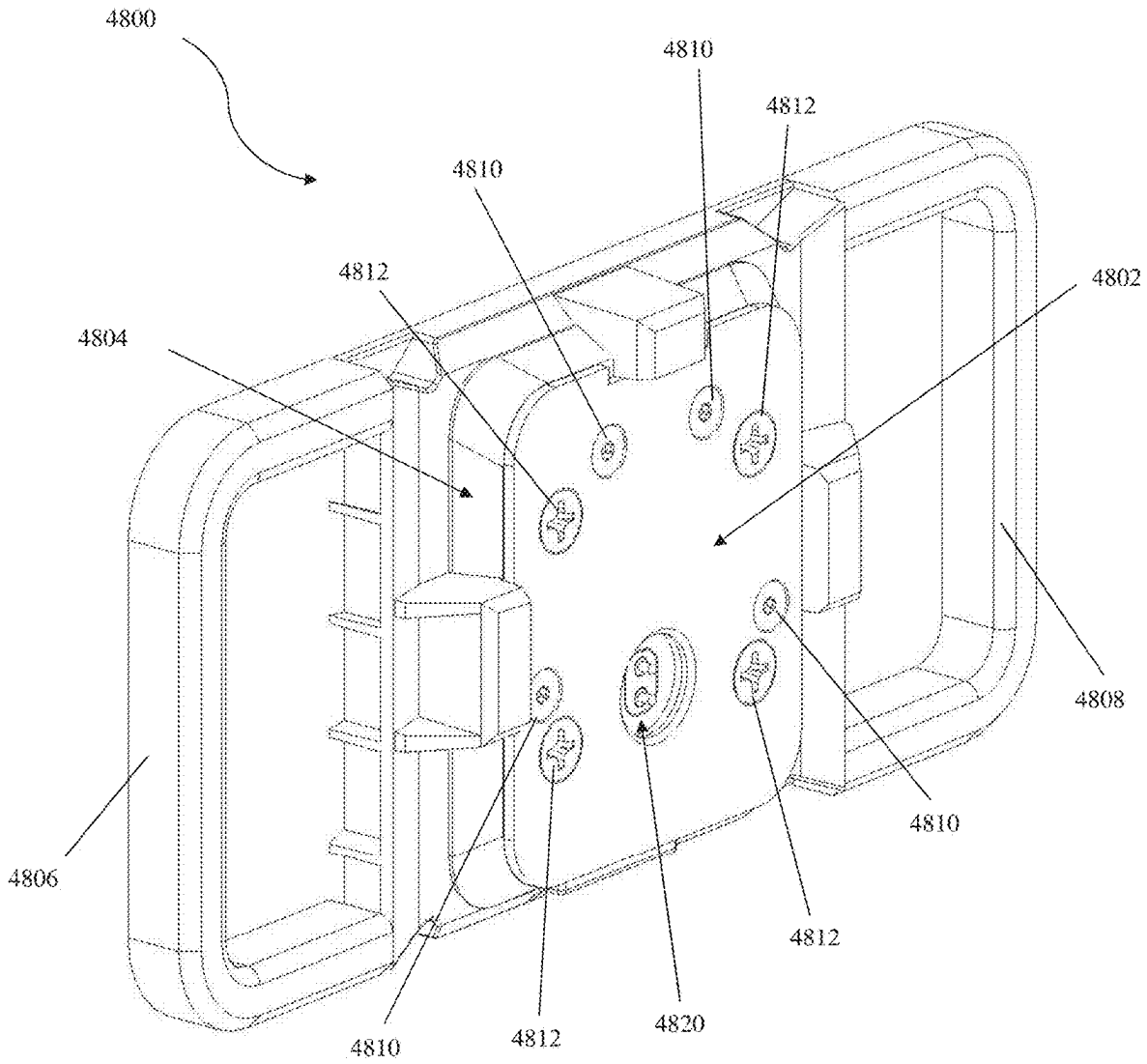
4800
4810
4812
4810
4812
4802
4804
4808
4810
4806
4812
4810
4812
4820

FIG. 48

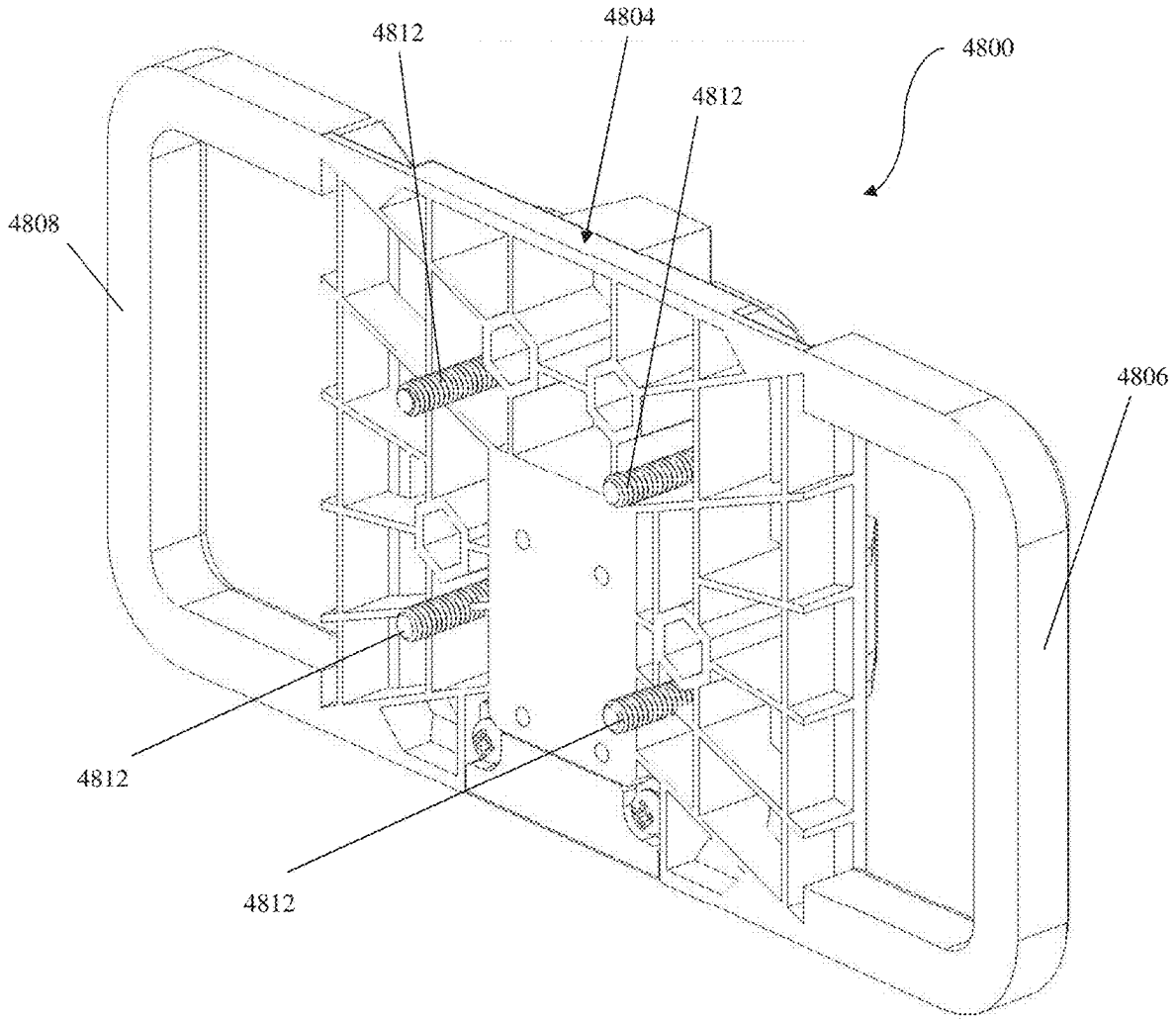

FIG. 49

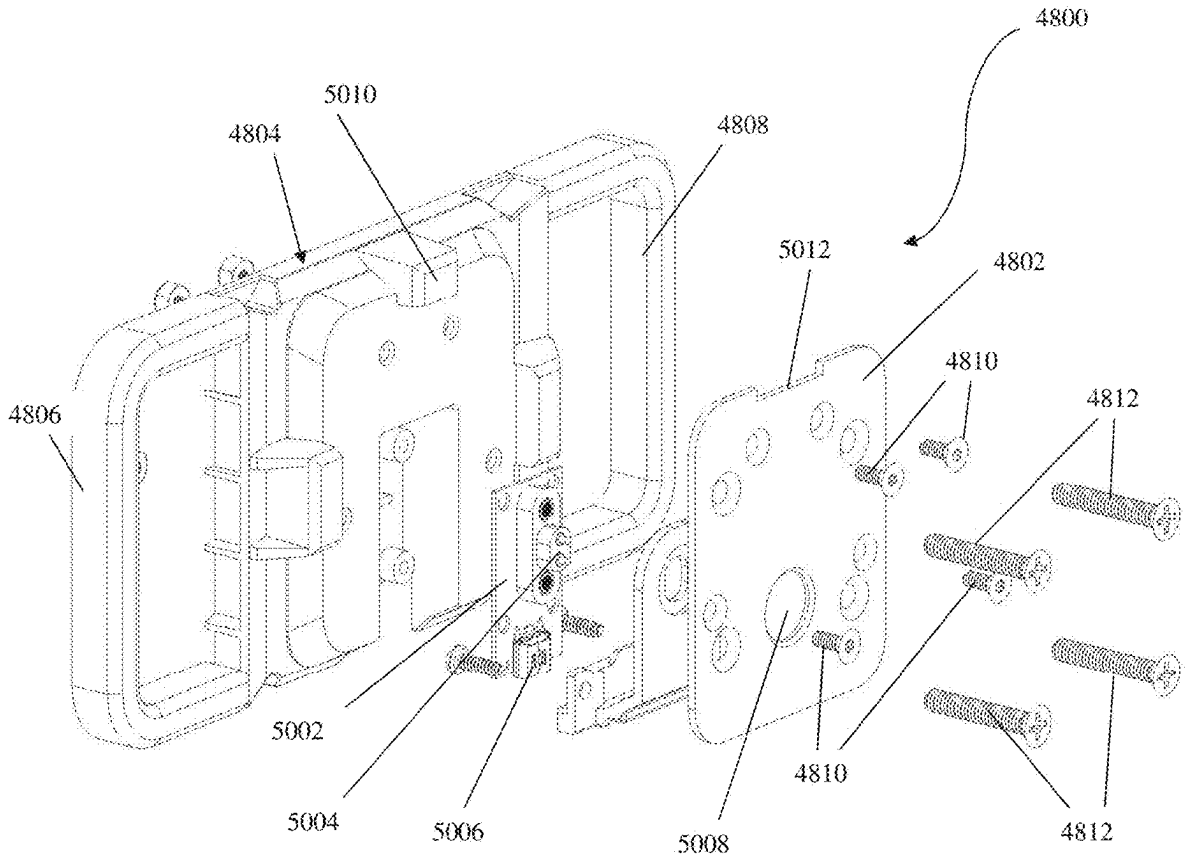
4800
5010
4804
4808
5012
4802
4810
4812
4806
5002
5004
5006
5008
4810
4812

FIG. 50

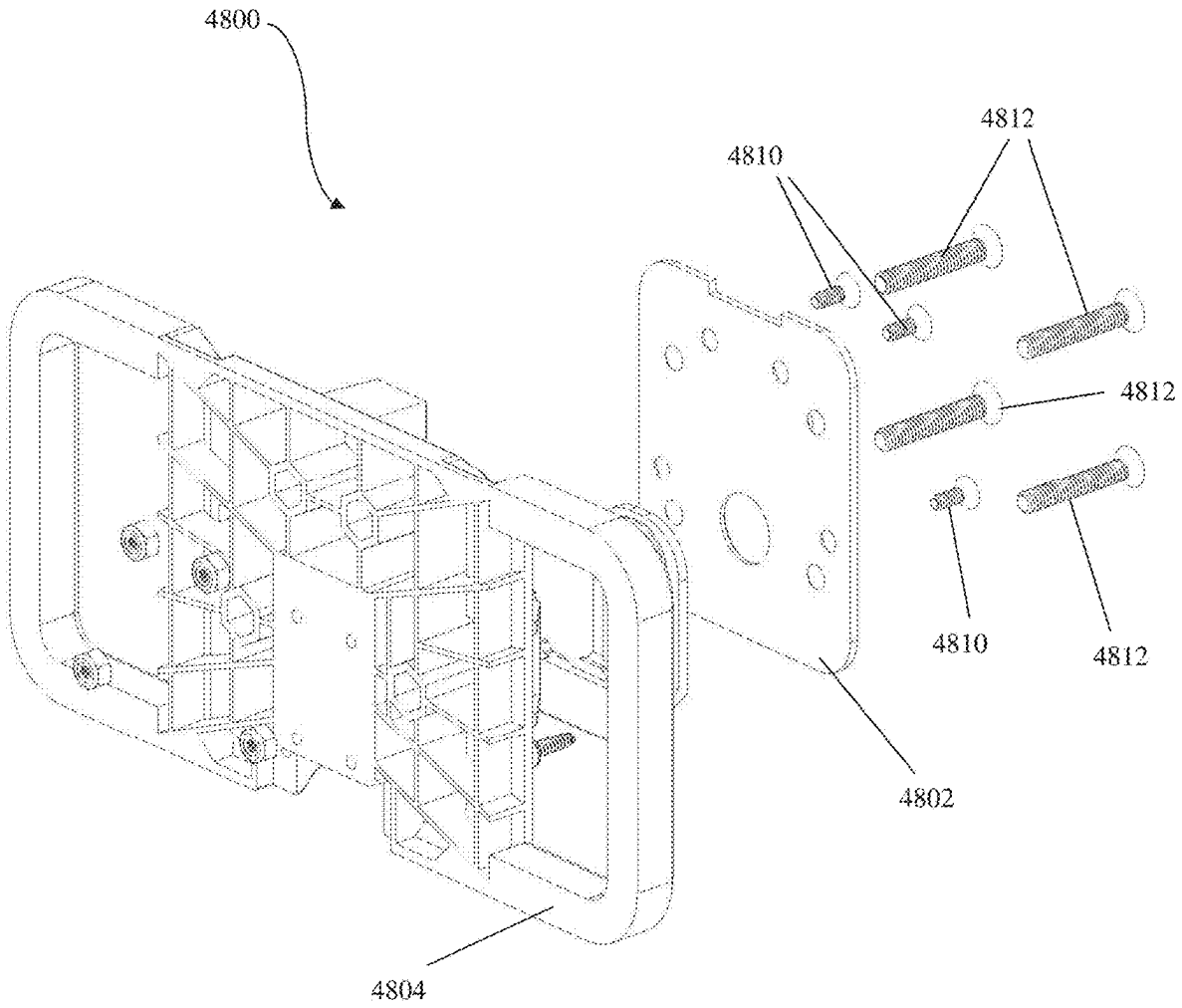

FIG. 51

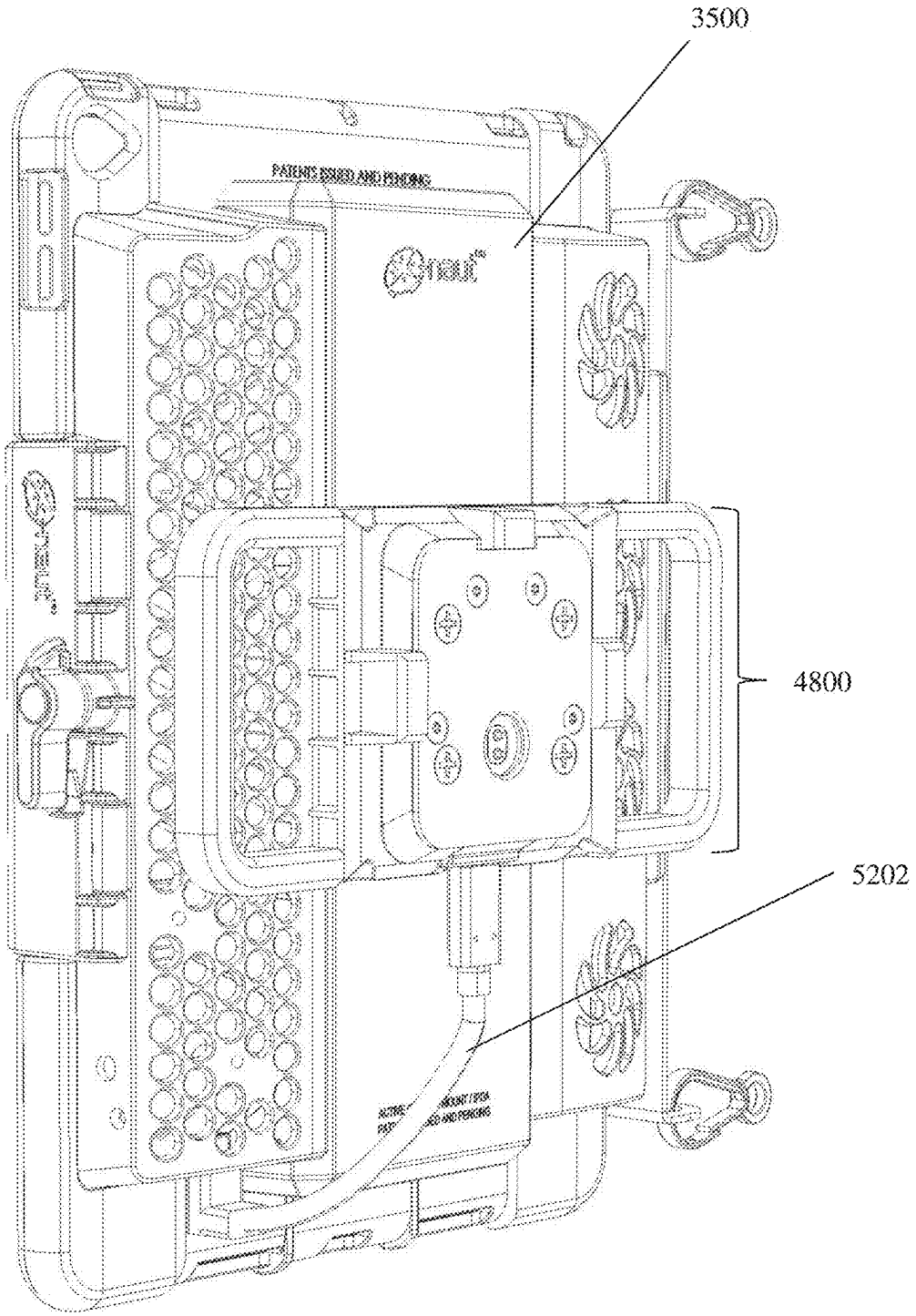

FIG. 52

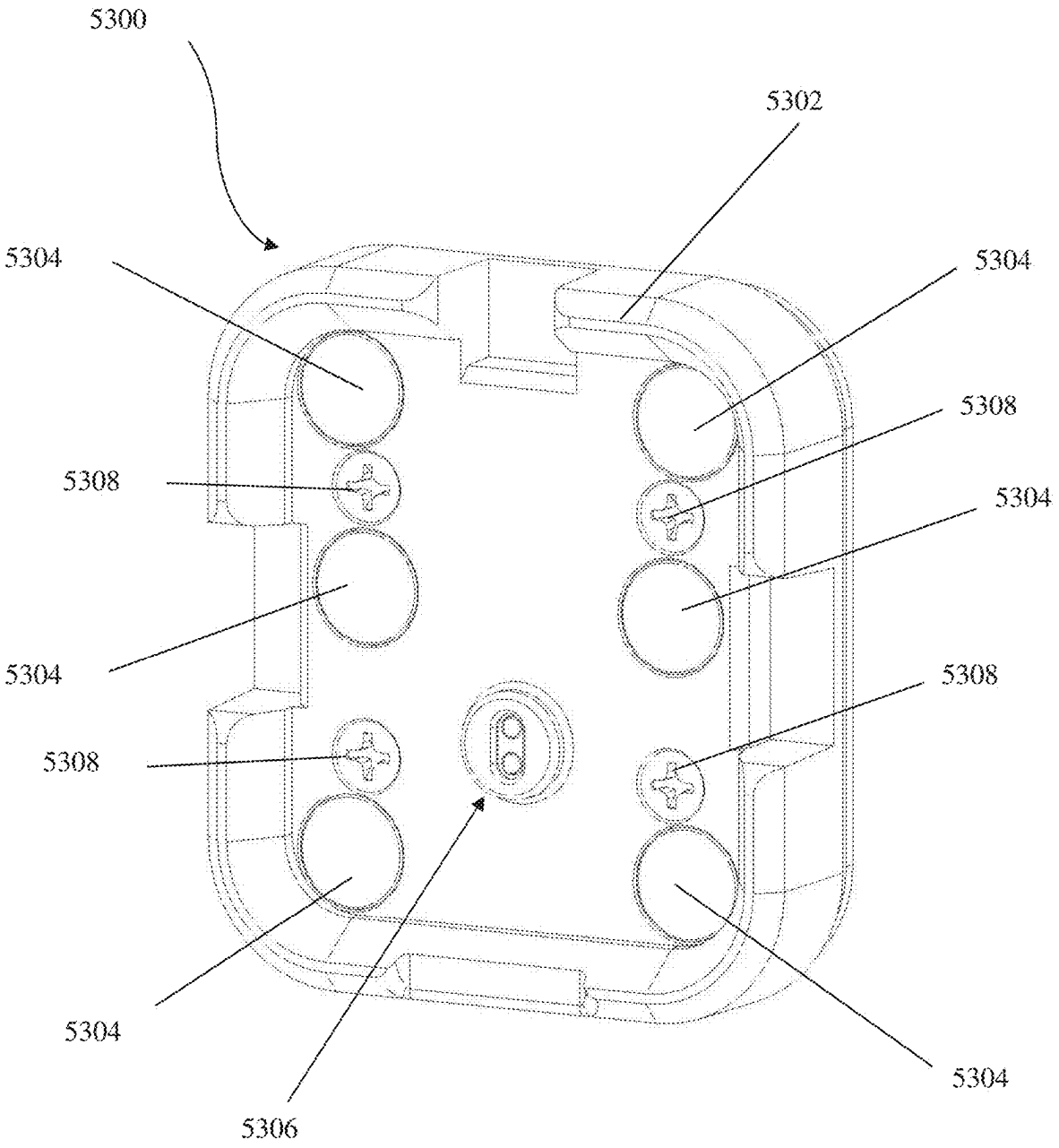
5300
5302
5304
5304
5308
5308
5304
5304
5308
5308
5304
5304
5306

FIG. 53

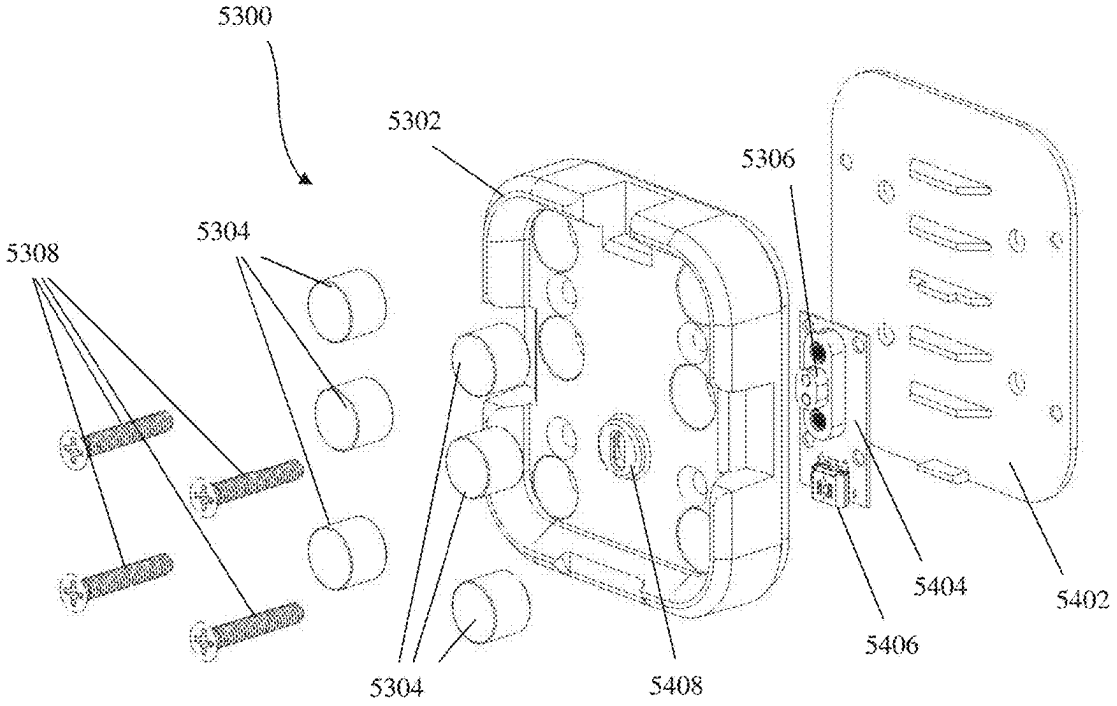
5300
5302
5306
5304
5308
5404
5402
5406
5304
5408

FIG. 54

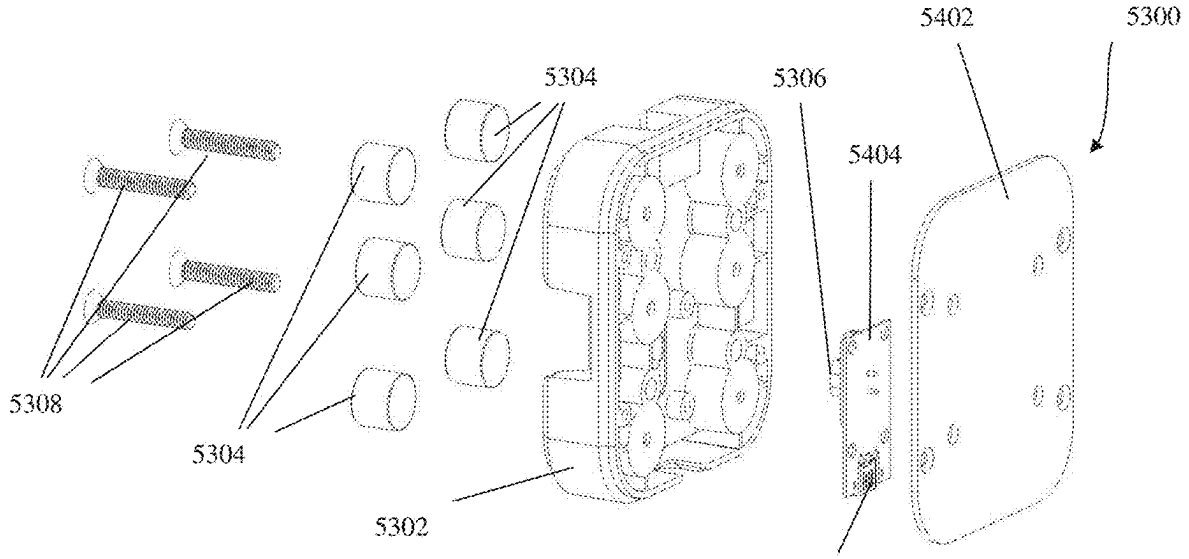
5402
5300
5304
5306
5404
5308
5304
5302
5406

FIG. 55

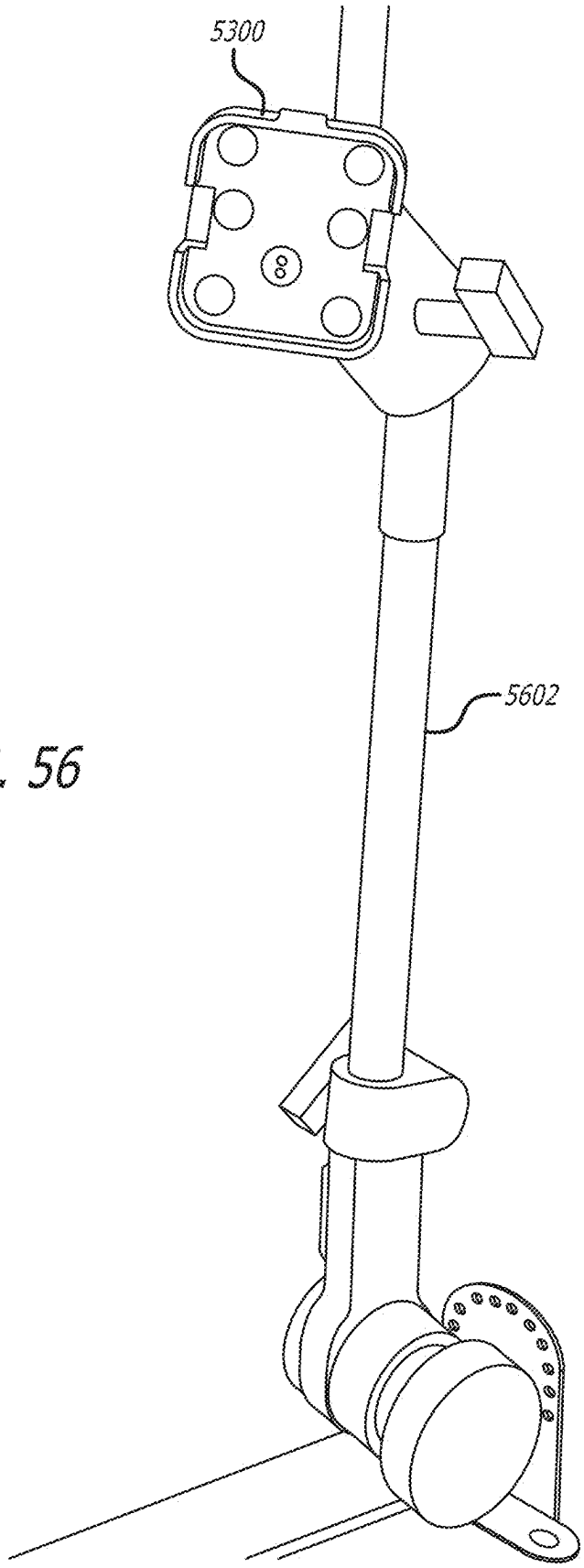

FIG. 56

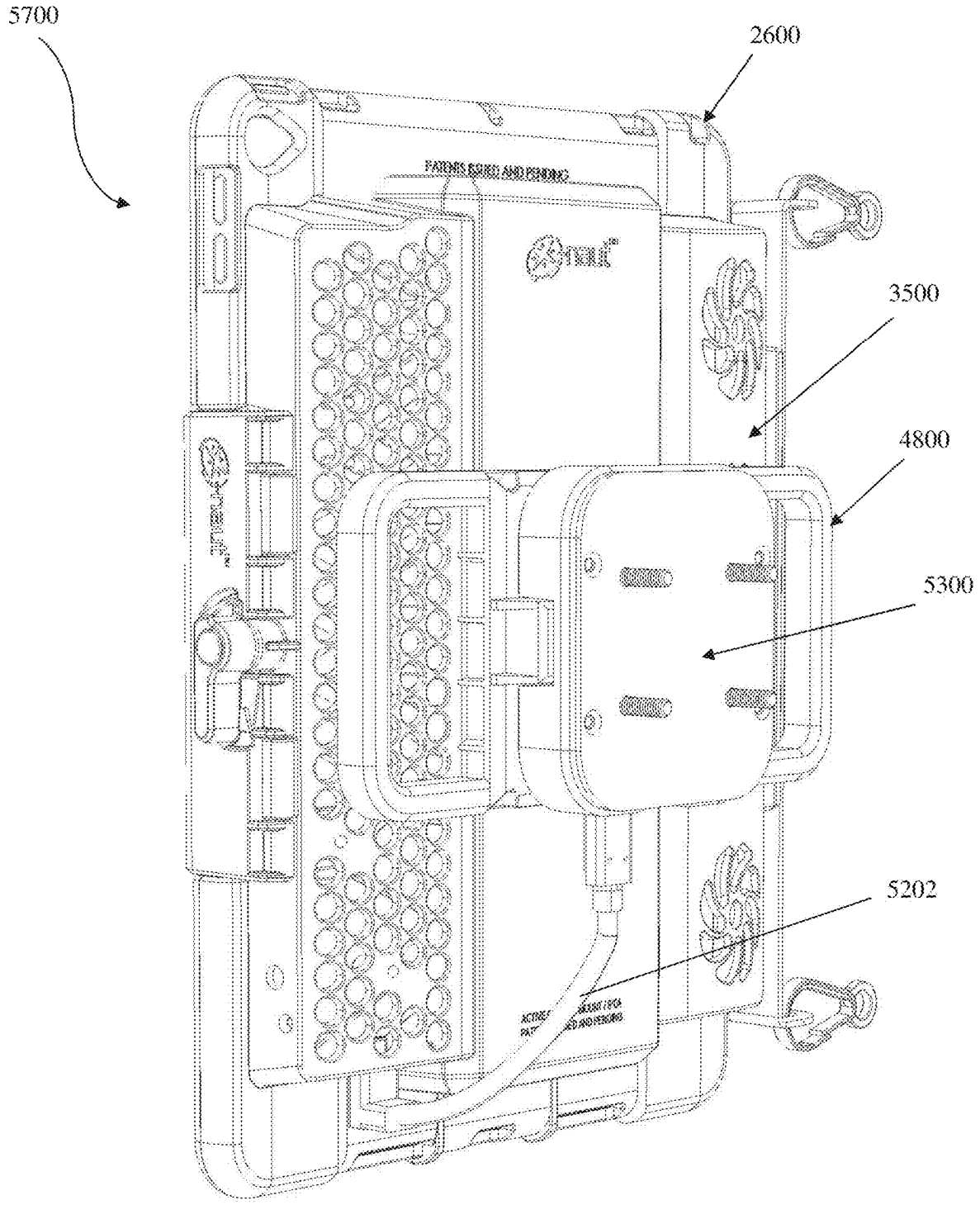

FIG. 57

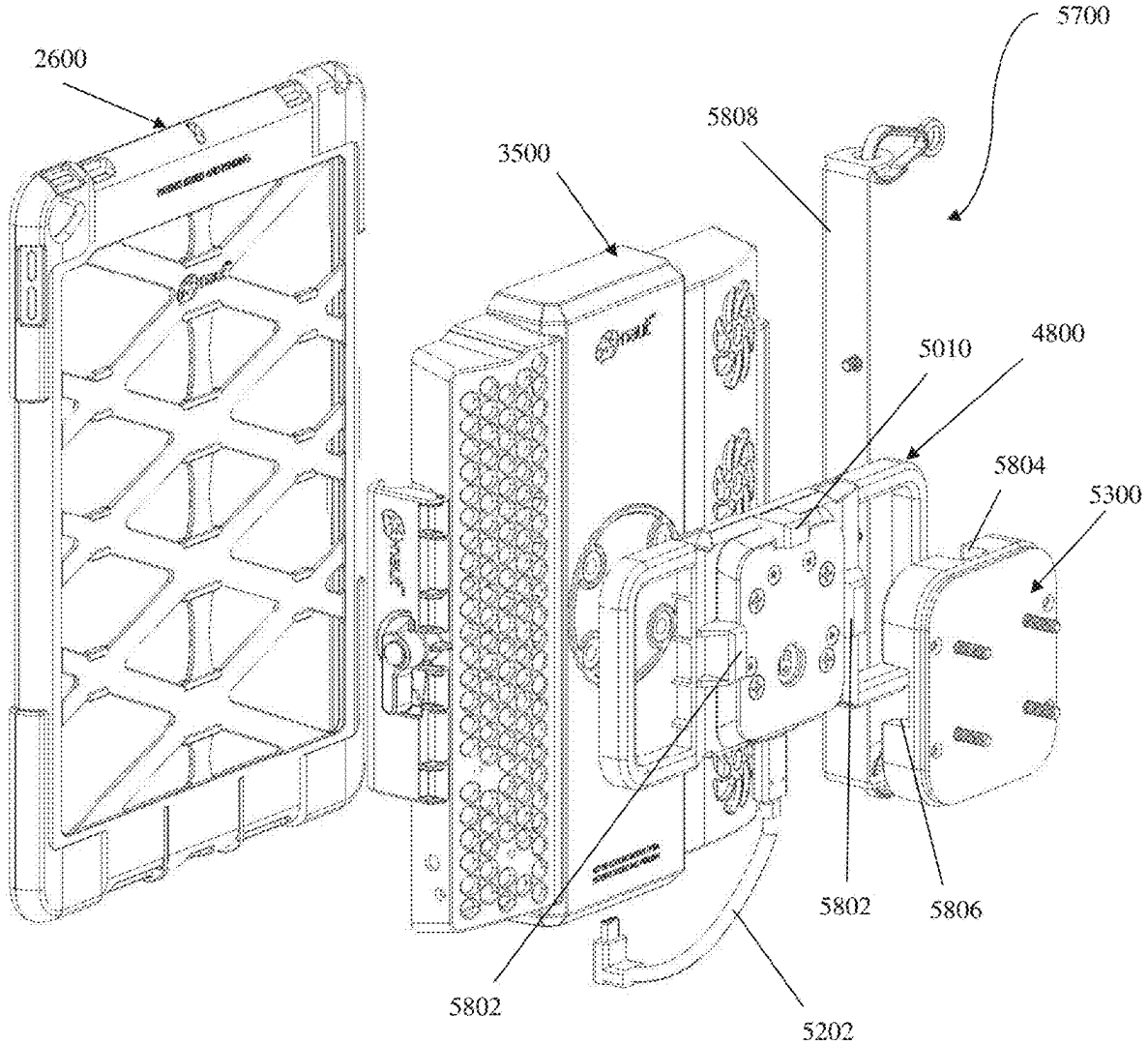

FIG. 58

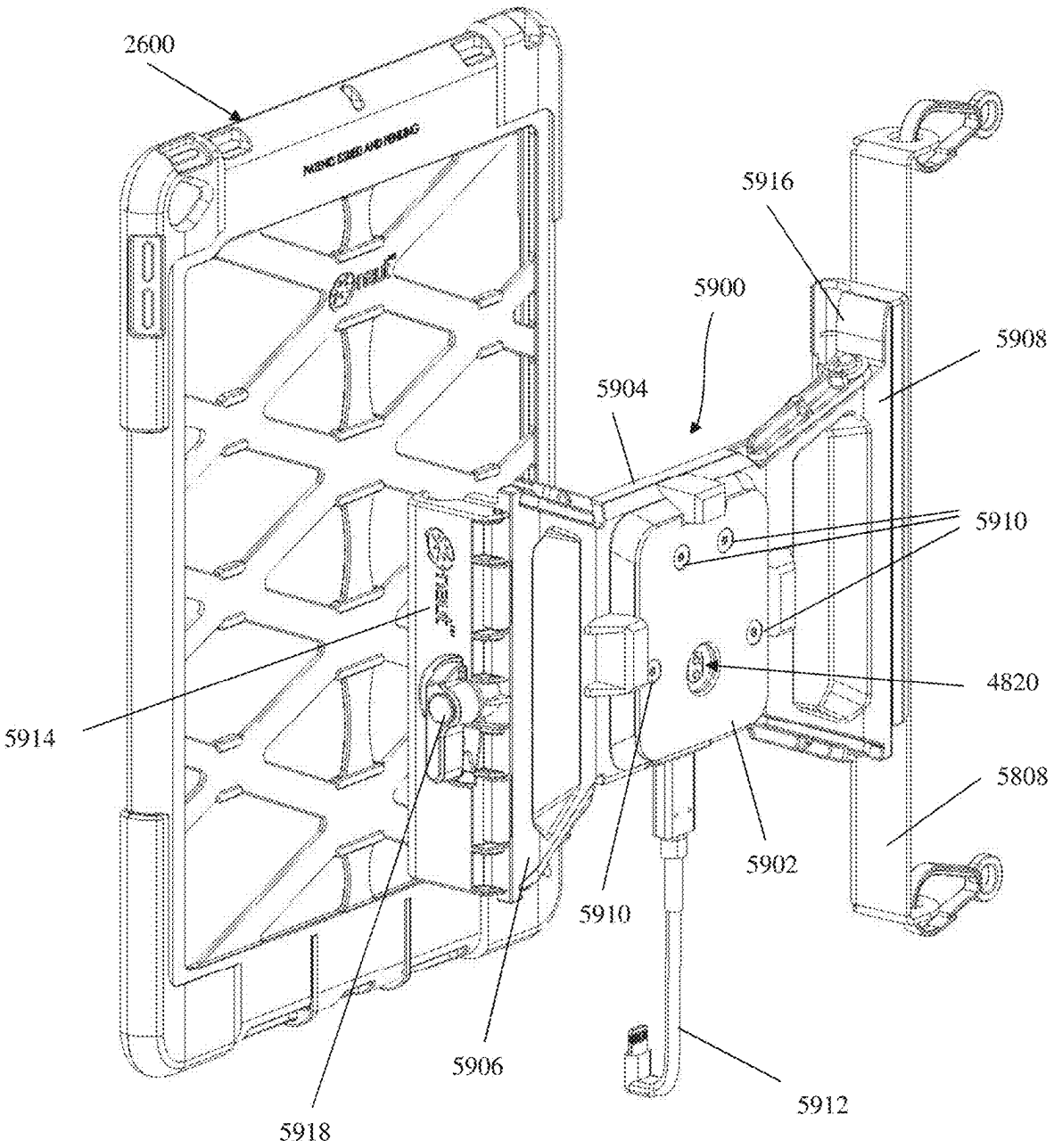
2600
5916
5900
5908
5904
5910
4820
5914
5808
5902
5910
5906
5912
5918

FIG. 59

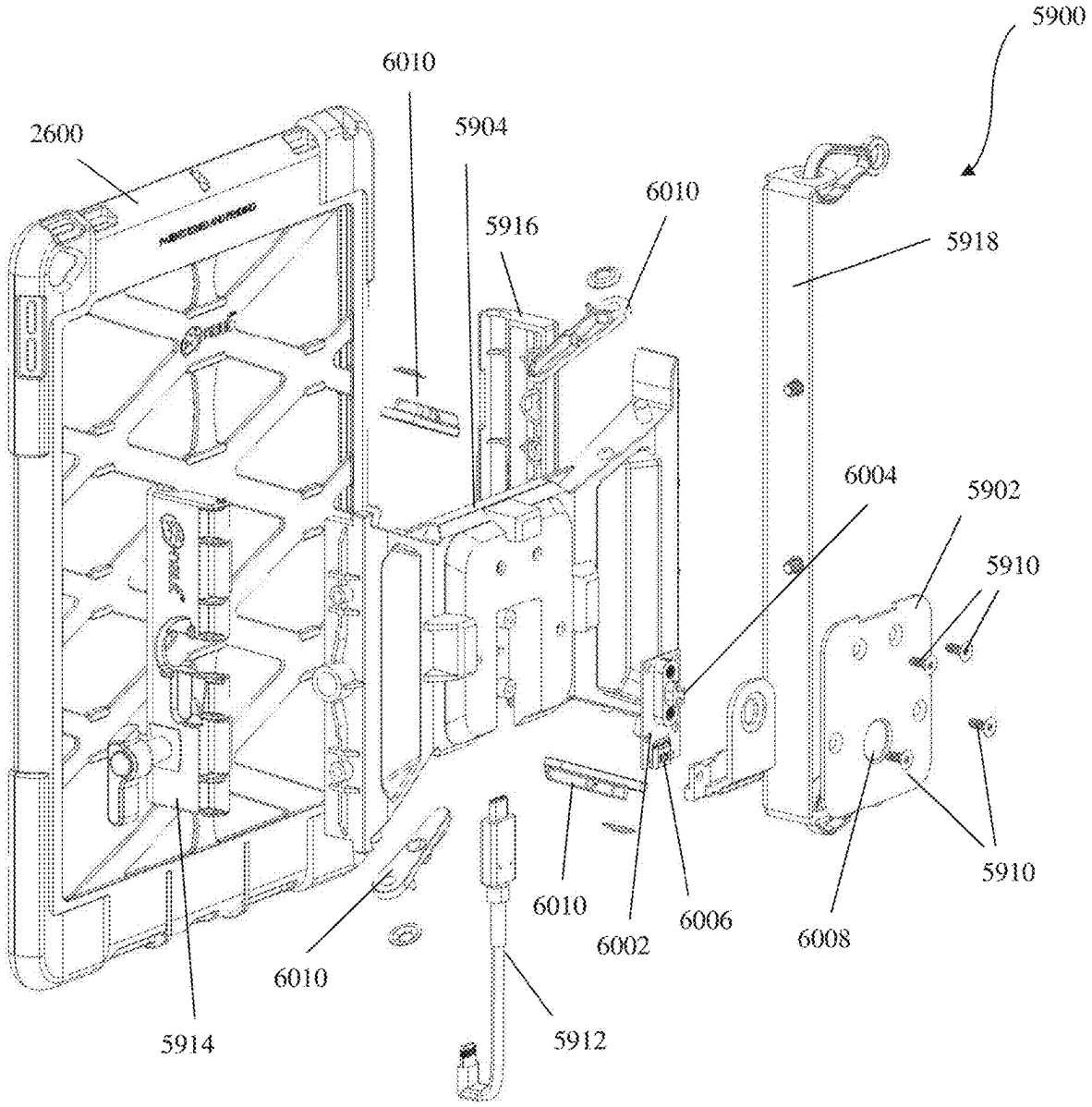
5900
6010
2600
5904
6010
5916
5918
6004
5902
5910
5910
6010
6002
6006
6008
6010
5914
5912

FIG. 60

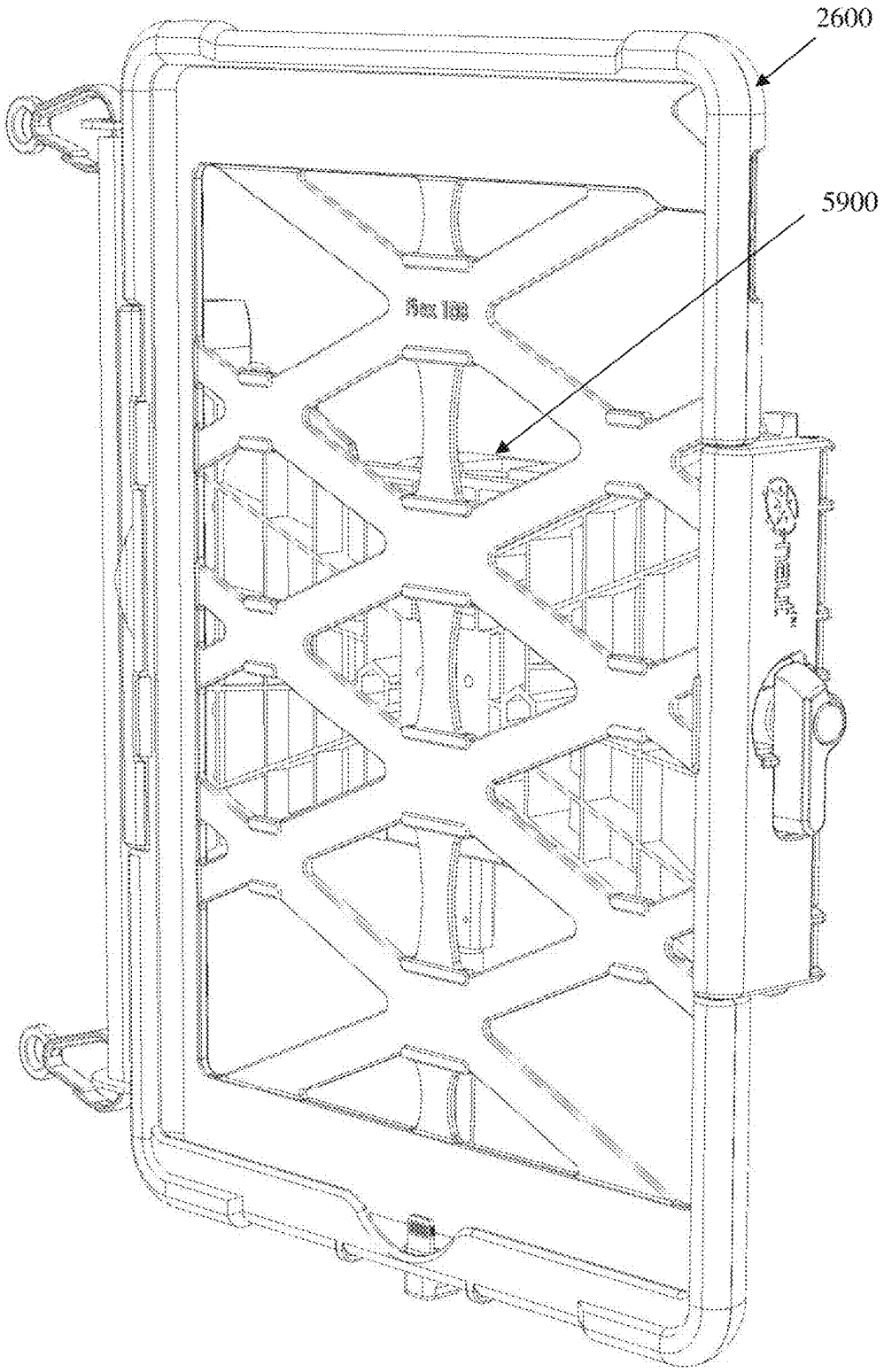

FIG. 61

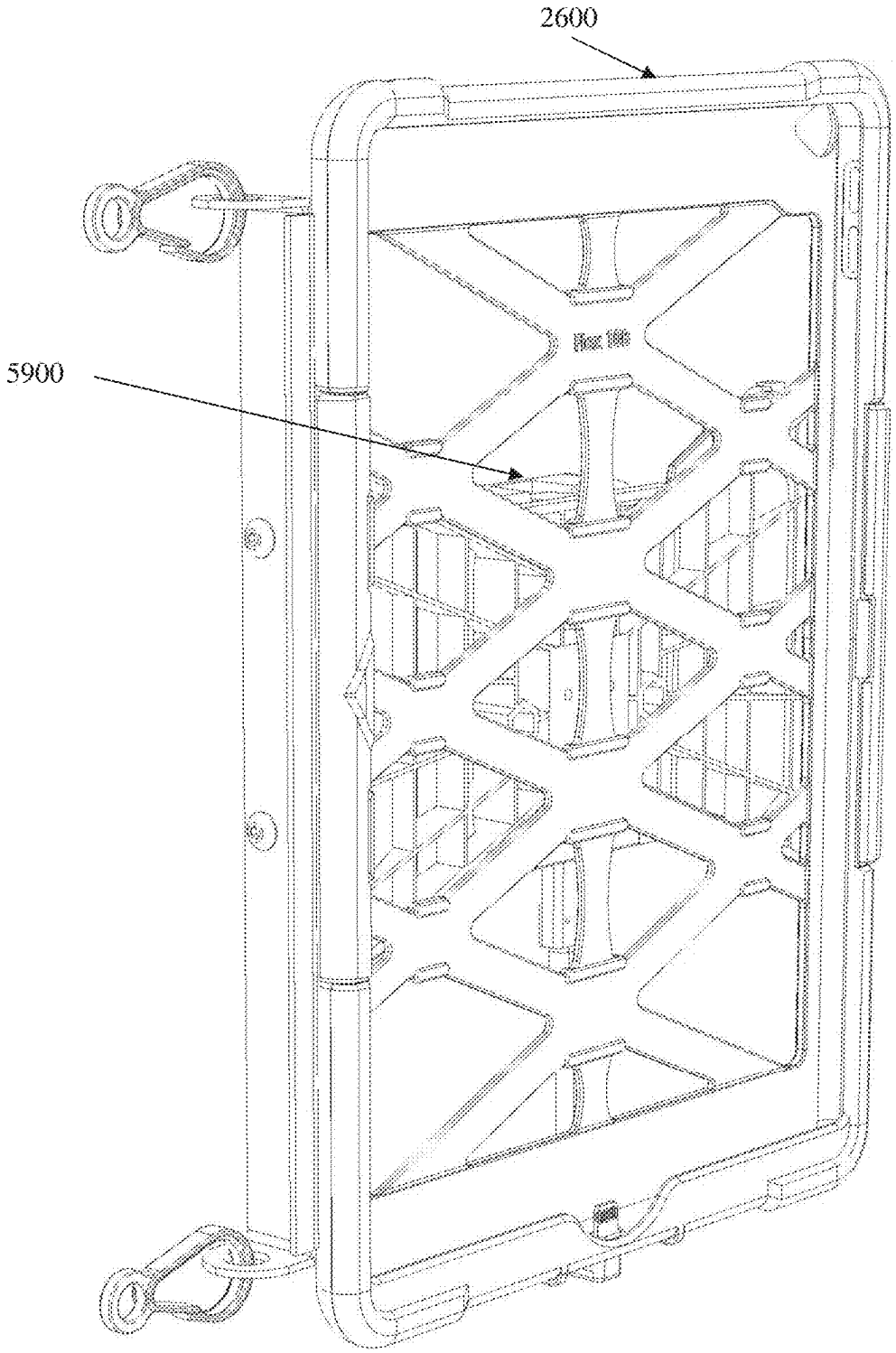

FIG. 62

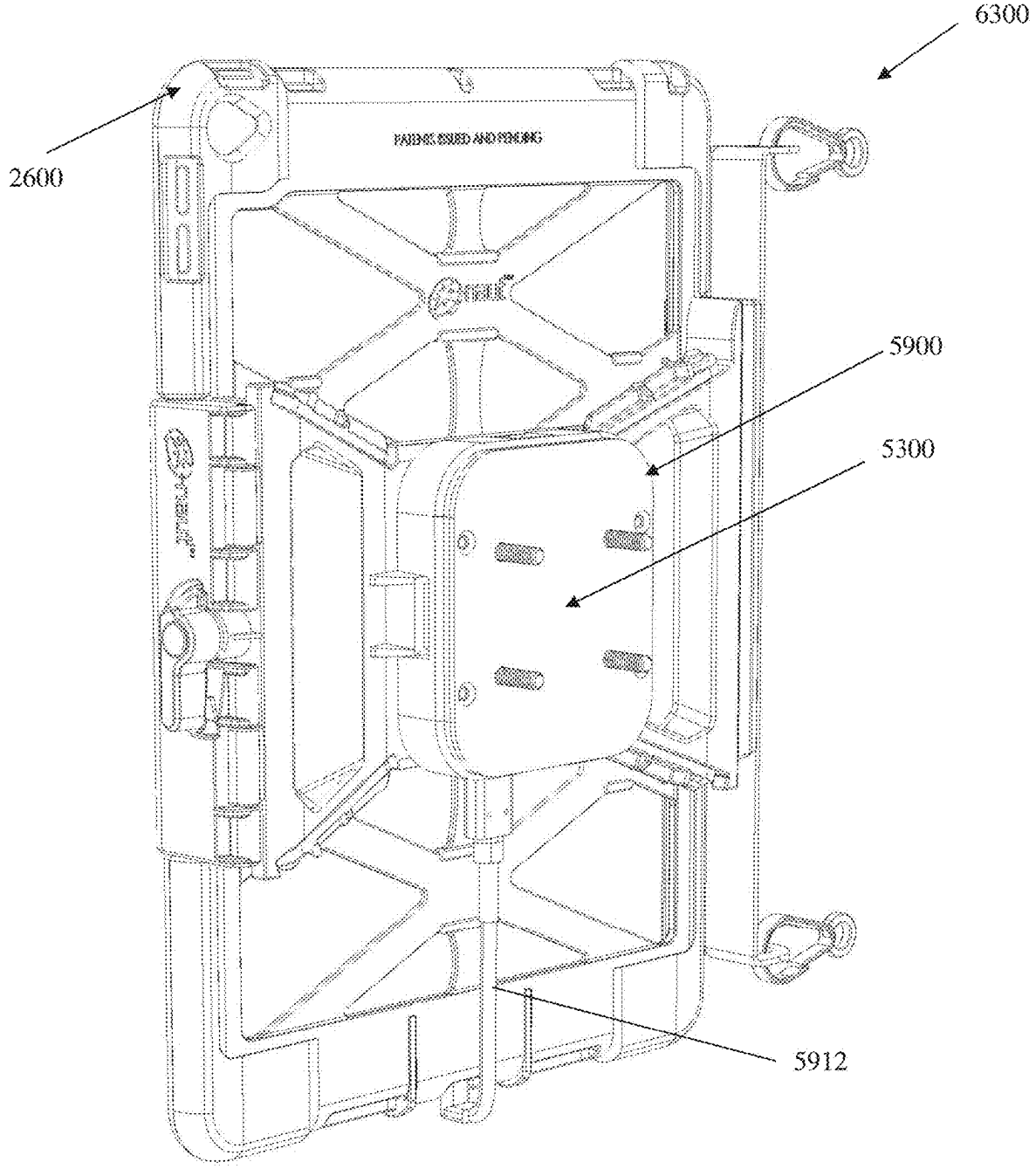

FIG. 63

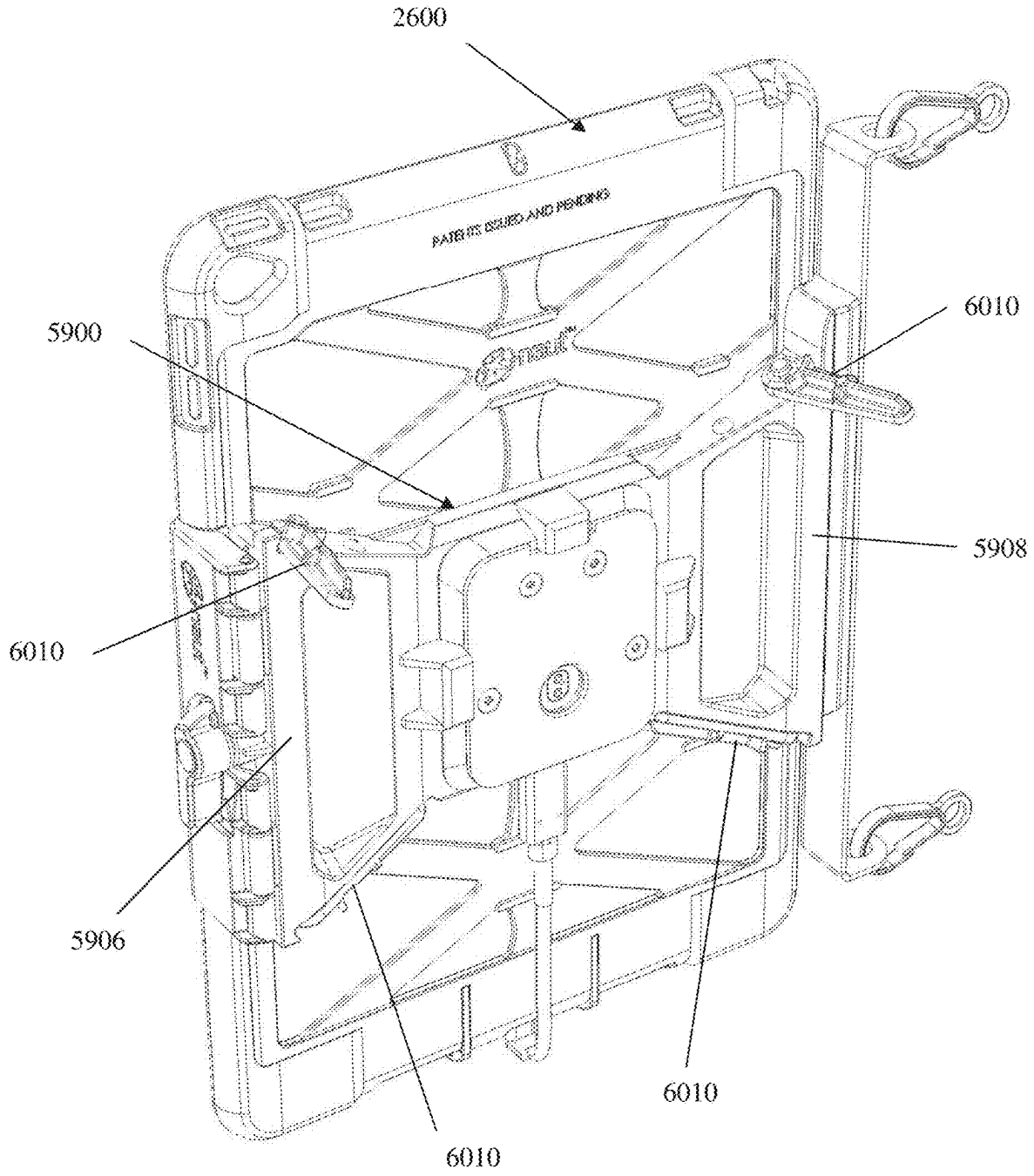
2600
PATENTS ISSUED AND PENDING
5900
6010
5908
6010
5906
6010
6010

FIG. 64

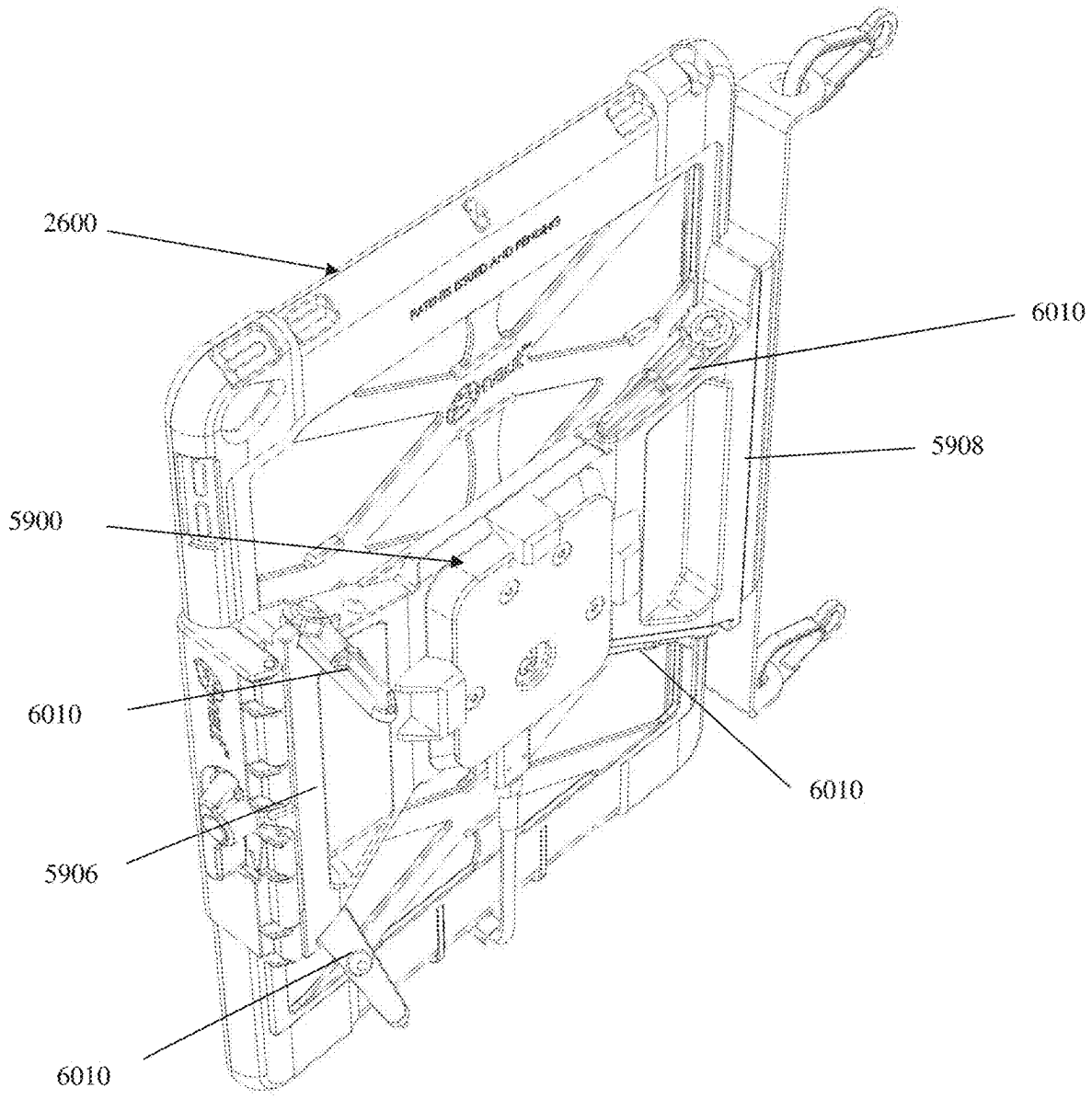

FIG. 65

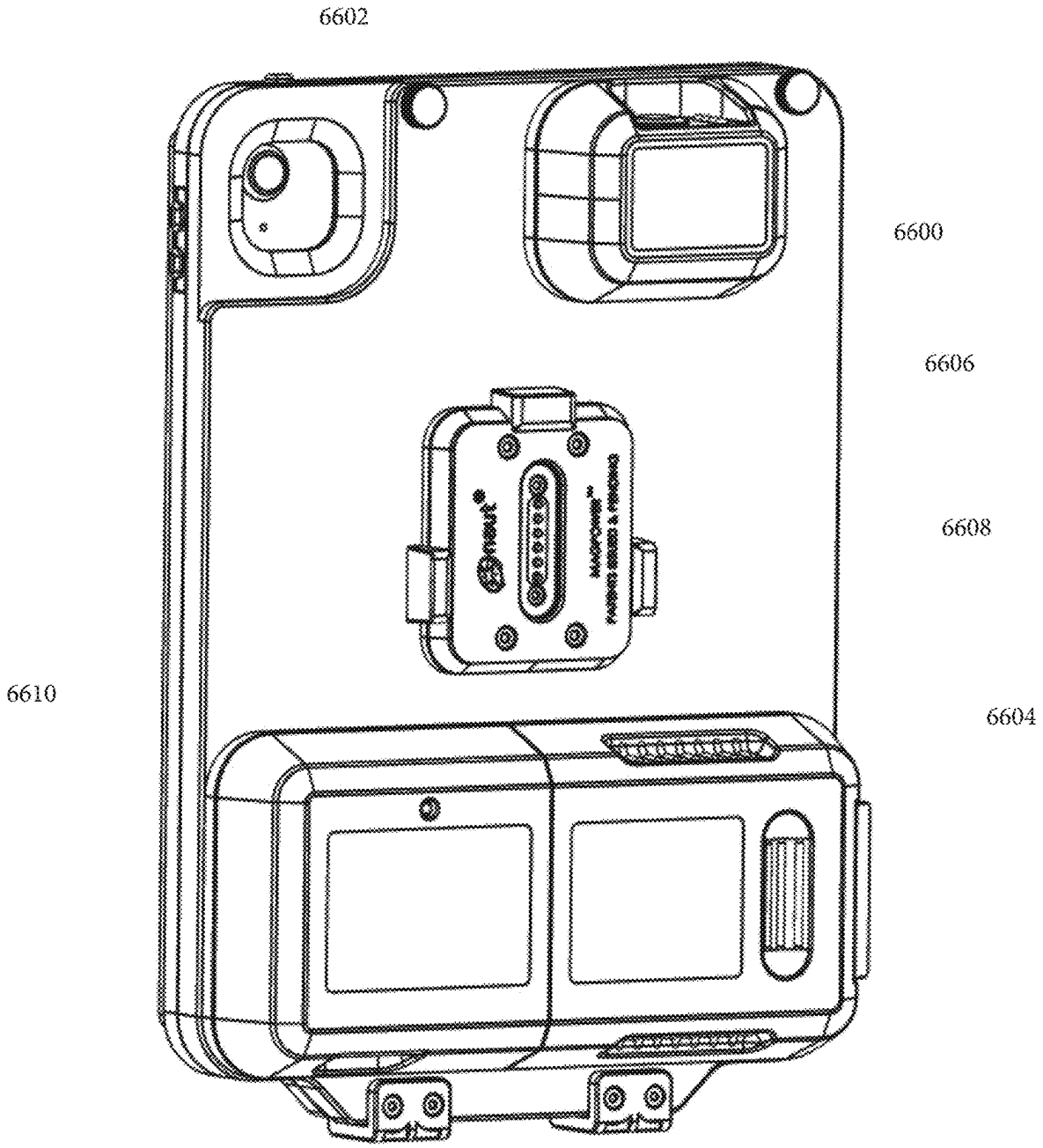

FIG. 66

6700

6706

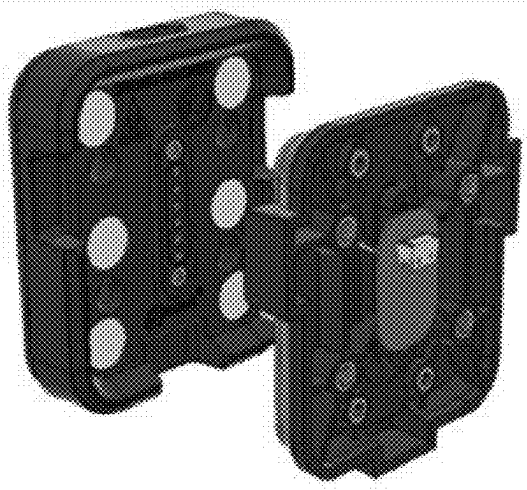

6704

6710

6606

6702

FIG. 67

6700

6706

6610

6606

6608

6702

FIG. 68

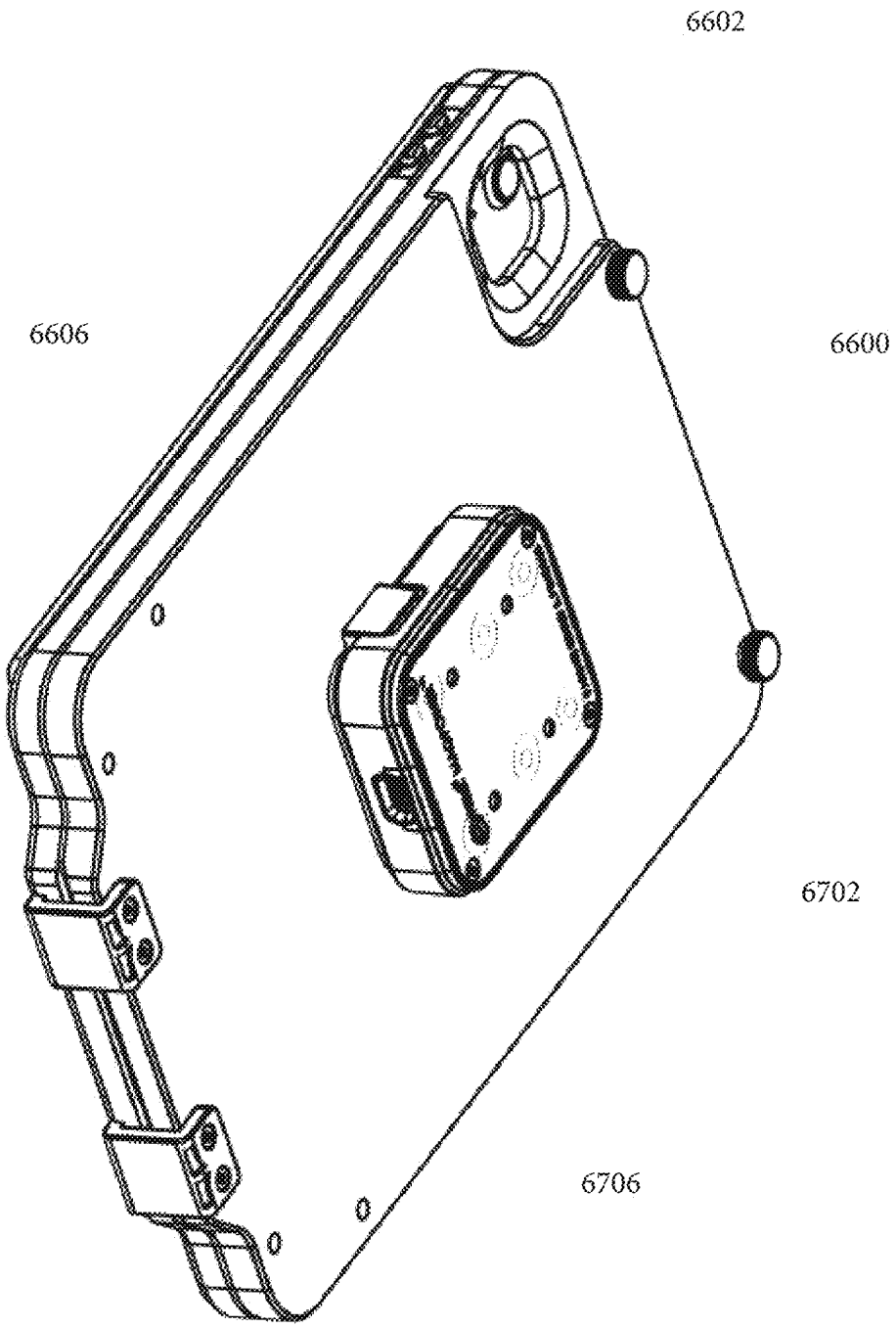

FIG. 69

TEMPERATURE REGULATING MOUNT WITH MAGNETIC POWER MOUNT

CROSS REFERENCE TO RELATED APPLICATIONS

[0001] This application is a continuation of U.S. patent application Ser. No. 17/948,289, titled TEMPERATURE REGULATING MOUNT WITH MAGNETIC POWER MOUNT, filed Sep. 20, 2022, which is a continuation-in-part of U.S. patent application Ser. No. 17/683,043, titled TEMPERATURE REGULATING MOUNT WITH MAGNETIC POWER MOUNT, filed Feb. 28, 2022, which is a continuation of U.S. patent application Ser. No. 16/690,420, titled TEMPERATURE REGULATING MOUNT WITH MAGNETIC POWER MOUNT, filed Nov. 21, 2019 (now U.S. Pat. No. 11,262,816), which application claims priority to U.S. Provisional Patent Application No. 62/770,653, titled TEMPERATURE REGULATING MOUNT, filed Nov. 21, 2018, all of the above of which are incorporated into this application in its entirety.

FIELD OF THE INVENTION

[0002] The invention relates to a cooling mount for portable electronic devices having a magnetic mount with power supply and related accessories.

BACKGROUND OF THE INVENTION

[0003] Portable electronic devices, including tablets, such as iPADs, iPAD Airs and iPAD minis; smart phones, such as iPhones and Android phones; mobile phones; and personal computers, all of which are typically powered by a battery so that users may carry them about and use them as needed, including when operating a vehicle, such as an aircraft, boat or car. Frequently, these devices provide navigation information to users, and for many, such a device has become a required navigational item. More recently, such devices have been used to process sales transaction and for other commercial purposes, which requires the tablet to be used consistently for long hours both indoors and outdoors.

[0004] When in use, it can become problematic if the electronic device is exposed to extreme heat or direct sunlight, especially if used to guide the operation of land, water and aircraft. The screen of the electronic device, being almost completely black, can get extremely hot if left in direct sun and/or the device can become overheated if used continuously for long periods of time. As a protective measure, some electronic devices may automatically shut down upon reaching a critical temperature and stay shut down until they cool off. The primary reason for this is to protect the electronic device's internal battery. However, if the electronic device is the primary source for navigation, it can become problematic and/or dangerous to the user if the device automatically shuts down during use.

[0005] Currently, if a device overheats, the user's only option is to get the device to a cooler environment and lower its internal temperature, usually by removing it from direct sunlight, and/or cease use for an extended period of time. Once the device's internal temperature lowers, it may automatically switch back on, but in the interim, there is nothing else for the user to do once the device overheats. Similar problems may also occur with a portable electronic device is exposed to extremely cold temperatures. A need exists for portable electronic devices to be used in all temperatures and for long-durations without interruption from overheating or exposure to extreme temperatures. A need further exists for a quick mount for portable electronic devices having a power supply, which quick mount can be used with or without the temperature control devices, to allow the hands-free operation of the devices at varying angles.

SUMMARY OF THE INVENTION

[0006] The current invention relates to a temperature regulating mount for portable electronic devices, including, but not limited to, tablets, such as iPADs, IPAD Airs and iPAD minis; smart phones, such as iPhones and Android phones; cell phones; and personal computers that will not only extend product life, but also prevent critical temperature shutdowns and general overheating of the device, which can make user contact uncomfortable or even dangerous. As illustrated and explained further below, in one example, the present invention is a cooling mount that provides forced air across the rear of the portable electronic device using fans and either internal battery power or external power. The mount can also include other types of temperature control units, including but not limited to heating units, that may also provide the user with the ability to heat the portable electronic device for use in cold weather environments. For the purposes of this application, the term "cooling mount" is interchangeable with "temperature control unit," "temperature control device" or "temperature control mount" in that all function to control the temperature of the portable electronic device.

[0007] In one implementation, the invention consists of a polygonal housing made of a rigid material having a front face in the general shape of a portable electronic device for mounting the electronic device on the cooling mount. The housing has a back portion and four side walls. The back portion contains two battery housings, a circuit board and electric fans. The cooling mount is constructed so that the portable electronic device, when engaged within the cooling mount, is held away from the back, permitting air flow from the fans to circulate across the back of the electronic device to lower its internal temperature.

[0008] Optionally, the invention can include a device for fastening the cooling mount to objects. For example, the cooling mount may include a strap for attaching the mount to a user's leg or to clamp for attaching the cooling mount to various objects within a cabin or cockpit, on a dash board or on objects in the area immediately surrounding the user.

[0009] The invention may also optionally include a probe with a temperature-sensitive head that mounts onto the back of a portable electronic device when it is engaged within the cooling mount. The temperature-sensitive probe can detect with the when the ambient temperature or the temperature of the portable electronic device reaches a certain predetermined level and initiate cooling of the device.

[0010] In another example, a temperature regulating mount for portable electronic devices is provided that includes a temperature control unit for preventing portable electronic devices from reaching critical temperatures during operation to avoid undesired shut down of the electronic device. The mount is further accompanied by a protective perimeter casing for protecting the electronic device and allowing the device to mate with a universal mount. The perimeter casing leaves the back of the device open or exposed (e.g., through webbing) for temperature control. The protective perimeter casing includes grooves and

indents for mating with guide rails and a movable clamping mechanism for securing the electronic device to the mount in a particular orientation to maximize the mounts ability to regulate the temperature of the electronic device.

[0011] In yet another example, the magnet mount comprising a magnet plate securing mount having a central portion for receiving the magnet plate, where the magnet plate securing mount further includes at least one electrical connection exposed through an opening in the magnet plate and at least one data connection, where the electrical connection includes electrical connectors for receiving power from a power supply and cable connection for interfacing with a portable electronic device to provide power to the portable electronic device through the magnet mount, and where the at least one data connection receives data and transmits data to the portable electronic device through the cable connection. The magnet mount may further include a receiving mount for mating with the magnet mount having magnets and at least one second electric connection for mating with the at least one electric connection on the magnet mount for supplying power to the magnet mount. The magnet mount receiving mount may further include at least one second data connection for mating with the at least on data connection on the magnet mount for supply data to the magnet mount.

[0012] In even another example, a magnet mount assembly is provided having a magnet mount and a receiving mount for mating with the magnet mount. The magnet mount has a magnet plate mounted to a central portion of the magnet mount, the magnet mount further including an electrical connection exposed through an opening in the magnet plate, where the electrical connection includes at least two electrical connectors for receiving power from a power supply and at least two data connection for sending and receiving data and at least one cable connection for interfacing with a portable electronic device to provide power and data to the portable electronic devices through the magnet mount. The receiving mount includes magnets that are magnetically attracted to the magnet plate on the magnet mount and at least two second electrical connection and at least two second data connections for mating with the at least two electrical connections and the at least two data connection on the magnet mount for supplying power and data to the magnet mount. The magnet mount assembly may further include an electronic port for receiving data and power, where the electronic port may be a USB-C port.

[0013] Optionally, the invention can further include a magnet mount assembly for quickly mounting and releasing the portable electronic device to various objects, including stands, clamps and/or holders (i.e., support mount) to support the portable electronic device in elevated positions at a variety of angles. The magnet mount assembly may attach to the back of the temperature control unit or to the back of the portable devices by, for example, engaging the protective perimeter casing. The mount may further include pong pins or other electrical connectors for supplying power to the cooling mount and/portable electronic device when the magnet mount assembly is connected to a support mount.

[0014] Other devices, apparatus, systems, methods, features and advantages of the invention will be or will become apparent to one with skill in the art upon examination of the following figures and detailed description. It is intended that all such additional systems, methods, features and advantages be included within this description, be within the scope of the invention, and be protected by the accompanying claims.

BRIEF DESCRIPTION OF THE FIGURES

[0015] The invention may be better understood by referring to the following figures. The components in the figures are not necessarily to scale, emphasis instead being placed upon illustrating the principles of the invention.

[0016] FIG. **1** is a perspective view of one example of an implementation of a cooling mount of the present invention as it appears engaged with a tablet.

[0017] FIG. **2** is a front perspective view of the cooling mount of FIG. **1** with the tablet removed.

[0018] FIG. **3** is a perspective view of the cooling mount of FIG. **1** separated from the tablet.

[0019] FIG. **4** is a perspective elevation view of the bottom left side of the cooling mount of FIG. **1**.

[0020] FIG. **5** is a close-up top perspective view of the bottom right corner of the cooling mount of FIG. **1**.

[0021] FIG. **6** is a rear perspective view of the cooling mount of FIG. **1**.

[0022] FIG. **7** is a rear perspective exploded view of the cooling mount of FIG. **1** showing one example of a mounting mechanism that may be attached to the back of the cooling mount.

[0023] FIG. **8** illustrates a side perspective view of one example of the cooling mount of FIG. **1** having a mounting mechanism attached to the rear of the cooling mount.

[0024] FIG. **9** is a perspective elevation view of the cooling mount of FIG. **1** showing an example of an external power supply mounted onto a mounting mechanism.

[0025] FIG. **10** is a rear perspective exploded view of the cooling mount of FIG. **1** showing an example of another mounting mechanism that may be attached to the back of the cooling mount.

[0026] FIG. **11** is a rear perspective view of the cooling mount of FIG. **1** showing the mounting mechanism of FIG. **10** attached to the back of the cooling mount.

[0027] FIG. **12** is rear perspective exploded view of the cooling mount of FIG. **1** having a temperature sensing device for measuring the temperature of the portable electronic device engaged by the cooling mount.

[0028] FIG. **13** is a top view of the cooling mount of FIG. **1** positioned in a perimeter mount for adding additional functionality to the cooling mount.

[0029] FIG. **14**A is a top view of the cooling mount of FIG. **13** removed from the perimeter mount.

[0030] FIG. **14**B is a front perspective view of the perimeter mount of FIG. **13**.

[0031] FIG. **15** is a back perspective view of the perimeter mount of FIG. **13** where a hand strap device is mounted to the back of the perimeter mount.

[0032] FIG. **16** is another back perspective view of the perimeter mount of FIG. **13** where a hand strap device is mounted to the back of the perimeter mount.

[0033] FIG. **17** is a front perspective view of one example of a perimeter casing that can be placed around the perimeter of an electronic device.

[0034] FIG. **18** is a back perspective view of the perimeter casing of FIG. **17**.

[0035] FIG. **19** is a front perspective view of another example of a cooling mount of the present invention.

[0036] FIG. **20** is a front perspective view of an electronic device secured by the perimeter casing of FIG. **17** being placed in the cooling mount of FIG. **19**.

[0037] FIG. **21** is a back perspective view of an electronic device secured in the perimeter casing of FIG. **17** being placed in the cooling mount of FIG. **19**.

[0038] FIG. **22** is a front perspective view of an electronic device secured in the perimeter casing of FIG. **17** being placed in the cooling mount of FIG. **19** with the clamping mechanism being in an open position.

[0039] FIG. **23** is a front perspective view of an electronic device secured in the perimeter casing of FIG. **17** being placed in the cooling mount of FIG. **19** with the clamping mechanism being in a closed position.

[0040] FIG. **24** is a front perspective view of an electronic device secured in the perimeter casing of FIG. **17** being placed in the cooling mount of FIG. **19** with the locking mechanism being in a locked position.

[0041] FIG. **25** is another front perspective view of an electronic device secured in the perimeter casing of FIG. **17** being placed in the cooling mount of FIG. **19**.

[0042] FIG. **26** is a front perspective view of another example of a perimeter casing that can be placed around the perimeter of an electronic device.

[0043] FIG. **27** is a back perspective view of the perimeter casing of FIG. **26**.

[0044] FIG. **28** is a front perspective view of an electronic device secured by the perimeter casing of FIG. **26**.

[0045] FIG. **29** is a back perspective view of an electronic device secured by the perimeter casing of FIG. **26**.

[0046] FIG. **30** is a perspective cross sectional view taken along line A-A of FIG. **28**.

[0047] FIG. **31** is a bottom side view of the perimeter casing of FIG. **26**.

[0048] FIG. **32** is a side view of the right side of the perimeter casing of FIG. **26**.

[0049] FIG. **33** is a top side view of the perimeter casing of FIG. **26**.

[0050] FIG. **34** is a side view of the left side of the perimeter casing of FIG. **26**.

[0051] FIG. **35** is a front perspective view of another example of a cooling mount of the present invention.

[0052] FIG. **36** is a front perspective view of an electronic device secured by the perimeter casing of FIG. **26** being placed in the cooling mount of FIG. **35**.

[0053] FIG. **37** is a front perspective view of an electronic device secured in the perimeter casing of FIG. **26** being placed in the cooling mount of FIG. **35** with the clamping mechanism being in an open position.

[0054] FIG. **38** is a front perspective view of the perimeter casing of FIG. **26** being placed in the cooling mount of FIG. **35** with the clamping mechanism being in a closed position and locking mechanism being in an unlocked position.

[0055] FIG. **39** is a close-up front perspective view of the clamping mechanism of the cooling mount of FIG. **35**.

[0056] FIG. **40** is a close-up front perspective view of the guide rail of the cooling mount of FIG. **35**.

[0057] FIG. **41** is a back perspective view of an example of a rotatable strap having a kickstand that is extended mounted to the back of the cooling mount of FIG. **35**.

[0058] FIG. **42** is back perspective view of an example of the rotatable strap of FIG. **41** mounted to the back of the cooling mount of FIG. **35** where the kickstand is retracted.

[0059] FIG. **43** is a perspective view of a flip mount.

[0060] FIG. **44** is an exploded view of the flip mount of FIG. **43**.

[0061] FIG. **45** is a back perspective view of the flip mount of FIG. **43** mounted to the back of the cooling mount of FIG. **35**.

[0062] FIG. **46** is an exploded view of the flip mount of FIG. **43** being mounted to the back of the cooling mount of FIG. **35**.

[0063] FIG. **47** is a front perspective view of the flip mount of FIG. **43** mounted to the back of the cooling mount of FIG. **35**.

[0064] FIG. **48** is a rear perspective view of one example of a magnet mount of the magnet mount assembly of the present invention.

[0065] FIG. **49** is a front perspective view of the magnet mount of FIG. **48**.

[0066] FIG. **50** is a rear exploded view of the magnet mount of FIG. **48**.

[0067] FIG. **51** is a front exploded view of the magnet mount of FIG. **49**.

[0068] FIG. **52** illustrates the magnet mount of FIG. **48** mounted to the back of the cooling mount of FIG. **35**.

[0069] FIG. **53** is a front perspective view of a magnet receiving mount of the magnet mount assembly of the present invention.

[0070] FIG. **54** is a front exploded view of the magnet receiving mount of FIG. **53**.

[0071] FIG. **55** is a rear exploded view of the magnet receiving mount of FIG. **53**.

[0072] FIG. **56** is a photograph of magnet receiving mount being mounted to a table stand.

[0073] FIG. **57** illustrates another example of an implementation of a magnet mount assembly in accordance with the present invention.

[0074] FIG. **58** illustrates an exploded view of the magnet mount assembly of FIG. **57**.

[0075] FIG. **59** is the rear of another example of a magnet mount in accordance with the present invention.

[0076] FIG. **60** is an exploded view of the back of the magnet mount of FIG. **59**.

[0077] FIGS. **61** and **62** illustrate front perspective views of the magnet mount of FIG. **59** secured to the perimeter casing of FIG. **26**.

[0078] FIG. **63** illustrates back perspective views of another example of a magnet mount assembly in accordance with the present invention.

[0079] FIGS. **64** and **65** illustrate the folding feet of the magnet mount of FIG. **59**.

[0080] FIG. **66** is another example of a magnetic mount mounted on the back of an electronics case.

[0081] FIG. **67** is a front side perspective view of another example of a magnetic mount assembly of the present invention.

[0082] FIG. **68** is a rear side perspective view of the magnetic mount assembly of FIG. **67**.

[0083] FIG. **69** is a bottom rear perspective view of the magnetic mount assembly of FIG. **67** mounted on a case.

DETAILED DESCRIPTION

[0084] As illustrated in FIGS. **1-69**, the current invention relates to a cooling mount **100** for portable electronic devices **102** that will not only extend product life, but also prevent critical temperature shutdowns and general overheating of the devices **102**. As illustrated and explained

further below, the cooling mount **100** of the present invention houses a portable electronic device **102** in a manner that allows for air flow across the rear of the device **102** to cool the electronic device during use. In one example implementation, fans, powered by internal and/or external power sources, may be used in the cooling mount to produce airflow across the back of the device. As further illustrated below, the cooling mount may include a mechanism for fastening the cooling mount to a person or object, may include an external power source for use as primary or back-up power supply and may also include a temperature probe for monitoring the temperature of the electronic device and/or air surrounding the device and initiating air flow when predetermined temperatures are detected. The cooling mount may further include a heating element to prevent the portable electronic device from shutting down in cold temperatures, creating an overall temperature regulating mount, device or unit. The temperature regulating unit of the present invention may cool the portable electronic device, heat the portable electronic device, or provide both heating and cooling of the portable electronic device.

[0085] As seen in FIGS. **47-65**, the invention may further include a magnet mount assembly for quickly mounting and releasing the portable electronic device to various objects, including stands, clamps and/or holders (i.e., support mount) to support the portable electronic device in elevated positions at a variety of angles. The magnet mount assembly may attach to the back of the temperature control unit or to the back of the portable device by, for example, engaging the protective perimeter casing. The mount may further include pong pins or other electrical connectors for supplying power to the cooling mount and/portable electronic device when the magnet mount assembly is connected to a support mount.

[0086] Turning now to FIG. **1**. FIG. **1** is a perspective view of one example of an implementation of a cooling mount **100** of the present invention as it appears engaged with a portable electronic device **102**, which in this example, is a tablet. As illustrated in FIG. **1**, the cooling mount **100** includes a generally polygonal shaped housing **104** made of a general rigid material having a front face of the general shape of a portable electronic device **102**. Although the portable electronic device **102** in FIG. **1** is a tablet, such as an iPAD, the present invention can be designed of varying sizes and shapes to engage other types and sizes of portable electronic devices **102**, such as smart phones and personal computers. Further the cooling mount **100** may include adapters (not shown) for accommodating various types of the devices without modifying the overall design.

[0087] While FIG. **1** shows the cooling mount **100** and portable electronic device **102** in a portrait orientation, the position of cooling mount **100** may easily be changed to a landscape orientation or other orientation, depending on the orientation of the electronic device. Further, although the housing **104** is illustrated as a rectangular polygonal shape, the cooling mount **100** is not so limited in shape and may be designed of any shaping having a front face for mounting the electronic device **102**.

[0088] The portable electronic device **102** is mounted on the front face of the cooling mount **100**. The front face of the cooling mount **100** includes a general raised perimeter **106** having a retaining device **108**, **110** for receiving and retaining the portable electronic device **102** on the front face of the cooling mount **100**. For example, and as illustrated in FIG. **1**, the device **102** may be retained along various points around its perimeter by raised **106**, channeled **108** or clipping **110** mechanisms that are positioned along the housing **104** sidewalls securing, hooking and/or clipping the device to the front of the cooling mount **100**.

[0089] FIG. **2** is a front perspective view of the cooling mount **100** of FIG. **1** with the tablet **102** removed. As illustrated in FIG. **2**, the cooling mount **100** provides a user with the ability to lower the internal and external temperatures of the device **102** through a cooling unit **105**, which in this is example, is a series of fans **112** that blow across thermodynamically designed airflow paths **109** through ports **136**. In this example, the fans **112** are powered by an internal power source **114**, which in this example, are batteries within a battery housing. An electronic circuit board **116** may also be provided to further control the operation of the fans **112** and optionally provide external power to the fans **112** from an external power source (not shown). Optionally, and as further described below, the electronic circuit board **116** may be in communication with a temperature sensing device **160** for determining when to turn on and/or off the cooling unit **105** and control other functions and features of the mount **100** (e.g., power low light indicator).

[0090] As illustrated, in this example, the cooling mount **100** includes generally inwardly angled side walls **120** that converge toward a recessed compartment **118** for housing the cooling unit **105**, power supply (i.e. batteries) located within the battery housings **114** and circuit board **116**. To allow for cooling unit **105** in the cooling mount **100** to blow air across the airflow paths **109**, the portable electronic device **102**, when engaged with the cooling mount **100**, rests above the fans **112**, power supply (i.e. batteries) located within the battery housings **114** and circuit board **116**. Accordingly, the cooling unit **105** is positioned in the recessed compartment **118** at the rear of the cooling mount **100** to maintain a predetermined amount of air space between the back of the electronic device **102** and recessed compartment **118**.

[0091] By having the sides walls **120** angle downwardly and inward toward the recessed compartment **118**, the portable electronic device **102** is maintained on the front face of the cooling mount **100**, resting against the perimeter edges of the side walls **102** and engaged by raised **106**, channeled **108** or clipping **110** mechanisms. Breaks in the sidewalls **120** and the raised **106**, channeled **108** or clipping **110** mechanisms allow the portable electronic device **102** to be slid easily into the cooling mount **100** and further permits access to such things as the external power port, on/off switch, microphone, speakers, volume controls and/or other buttons on the top and sides of portable electronic device.

[0092] FIG. **3** is a perspective view of the cooling mount **100** of FIG. **1** separated from the electronic device **102** and best illustrates the cooling unit **105** and component parts housed in the recessed compartment **118**. Shown from the front are the exposed fans **112**, battery housings **114** and circuit board **116**. When the portable electronic device **102** is removed, unhinged or unhooked from the invention, access to the internal power source (i.e. batteries) located within the battery housings **114** becomes readily available. This facilitates the quick and easy changing of batteries when power is low during operation. FIG. **3** also illustrates an external power cord **122** that may be used to connect the mount **100** to an external power source, which as illustrated in connection with FIG. **9** below, may be an external battery.

Additionally, FIG. **3** illustrates one example of a mounting mechanism **115** that may be connected to the back of the cooling mount **100**, as will be further described in connection with FIG. **10** below, for mounting the cooling mount **100** to an object. In this example, the mounting mechanism **115** consists of a ball pivot mechanism **124**, a clamping device **126** into which the ball pivot fits and a nut adjustment assembly **128**.

[0093] FIG. **4** is a perspective elevation view of the bottom left side of the cooling mount **100** of FIG. **1**. FIG. **4** illustrates an external power connection port **130** in the cooling mount housing **104** which may be connected to an external power source in lieu of battery power and a power switch **132** and that provides a means for selecting power input source (either internal or external, e.g., USB or internal batteries). External power can be applied to the invention, for example, through a USB or micro USB connector **122** (i.e., power switch-over is initiated by a slide switch). Extended shrouding can protect the micro USB power connector.

[0094] FIG. **4** further shows a battery indicator light **134** that in a specific implementation emits a green light if the internal batteries are in a high power condition, a yellow light if the batteries are in a low power condition and a red color if the batteries need to be replaced. However, in other implementations, the indicator can emit any color or wavelength of visible light as desired. FIG. **4** also illustrates a battery test button **180** for the invention that if pushed allows a user to test the strength of the internal batteries. While these components are illustrated as positioned on the bottom left side of the cooling mount **100**, those skilled in the art will recognize that these features may be located at various locations along the mount **100**.

[0095] FIG. **5** is a close-up top perspective view the bottom right corner of the cooling mount **100** of FIG. **1** showing the circuit board **116**, the recessed compartment **118** and the side walls **120** and raised **106** and channeled **108** mechanism within or upon which the portable electronic device **102** rests.

[0096] FIG. **6** is a rear perspective view of the cooling mount **100** of FIG. **1** illustrating the ventilation holes **138** for the fans **112** and one example of a mounting mechanism **115** attached to the cooling mount **100**. FIG. **6** best illustrates the recessed compartment **118** of the portable cooling mount **100** which houses the fans **112**, battery housings **114** and circuit board **116** outward and away from the back of the electronic device **102**. As illustrated in FIG. **6**, the recessed compartment **118** includes angled panels for mounting the fans **112** at an inward angle to blow across the cooling mount **100** and the back of the electronic device **100**. FIG. **6** illustrates the opposing and angled nature of the series of fans **112** directing air flow across the back of the portable electronic device **102** when inserted into the cooling mount **100**. The air from the fans **112** is vented out of holes or ports **136** on the backing of the cooling mount. The ports **136**, as illustrated may be positioned on an angled panel opposing the panel for mounting the fans **112**. Also illustrated in FIG. **6** is one example of a mounting mechanism **115** for the invention, which in this case is a mounting plate **140** that is affixed to the back of the housing **104** of the cooling mount **100** by fasteners **144***a* through holes **146** in the mounting plate **140**.

[0097] FIG. **7** is a rear perspective exploded view of the cooling mount **100** of FIG. **1** showing one example of a mounting mechanism **115** that may be attached to the back of the cooling mount **100**. While various mounting mechanisms **115** may be used to mount the cooling mount **100**, in this example, the mounting mechanism **115** is a leg strap **148** for mounting the cool mount **100** to a user's leg. The mounting mechanism **115** includes a mounting plate **140**, a leg strap **148** that passes through slots **142** in the mounting plate **140** and fasteners **144***a* and **144***b* that pass through holes **146** in the plate **140** for mounting the plate **140** to corresponding holes **150** on the back of the cooling mount **100**. The strap **148** may be, for example, an adjustable strap for attaching the cooling mount **100** and portable electronic device **102** directly to a part of the user, such as the user's leg, or, alternative, a large and stable object. The strap **148** may be adjustable and secured by means of Velcro or other fastening device to adjust the position and size of the strap **148** around the object to which it is mounted.

[0098] FIG. **8** shows the mounting mechanism **115** of FIG. **7** affixed to the back of the housing **104** of the cooling mount **100**. In operation, as explained above, the strap **148** attaches the cooling mount **100** and portable electronic device **102** directly to the user (i.e., the user's leg) or to another object.

[0099] FIG. **9** is a perspective elevation view of the cooling mount **100** of FIG. **1** showing an example of an external power supply **152** mounted onto the leg strap **148** of a mounting mechanism **115**. Optionally, an external power source, such as battery pack **152**, may be utilized to power the cooling mount **100** or, alternative, provide external power for the portable electronic device **102**. In this example, the mounting mechanisms **115** for mounting the cooling mount **100** may include an additional feature for holding and supporting an external power supply **152**. The external power device may also be mounted onto the back of the portable tablet cooling device (not shown) or at another location on the mounting mechanism **115**, such as the mounting plate **140**. In use, the internal power source, such as the batteries pack, may also be charged periodically through the power port using an external power supply or the back-up battery pack.

[0100] FIG. **10** is a rear perspective exploded view of the cooling mount **100** of FIG. **1** showing another example of a mounting mechanism **115** that may be attached to the back of the cooling mount **100**. In this example, the mounting mechanism **115** includes a ball pivot mechanism **124**, which can be affixed to the back of the cooling mount housing **104** using fasteners **144***a* and **144***b* that pass through holes **154** in the ball joint assembly **124** that engage holes **150** on the back of the housing **104**. The ball joint may then snap into a clamping device **126** with a nut adjustment assembly **128** that permits the user to clamp the cooling mount **100** and engaged portable electronic device **102** onto an object within the cabin, cockpit or immediate area surrounding the user (e.g., dashboard) operating a land, air or water vehicle positioned within the reach or vicinity of the user. The ball joint **124** permits the cooling mount **100** and device **102** to be repositioned easily by allowing for a pivotal mount.

[0101] FIG. **11** shows the mounting mechanism of FIG. **10**, mounted on the rear of the cooling mount housing **104** with fasteners **144***a*, with its ball joint snapped into the clamping device **126**. In this example, the ball joint assembly **140** is mounting to the mounting plate **140** rather than directly to the back of the cooling mount **100**. In this manner, the ball joint assembly **140** can be removed to provide access to the leg mount device without requiring the mounting plate

of the leg mount to be secured to the cooling mount **100**, facilitating easier interchangeability between mounts.

[0102] FIG. **12** is rear perspective exploded view of the cooling mount of FIG. **1** having a temperature sensing device **160** for measuring the temperature of the portable electronic device **102** engaged by the cooling mount **100**. In this example, a temperature sensing device **160** includes a probe **158** that may be positioned on the back of the portable electronic device **102** for monitoring the temperature of the portable electronic device **102**. The temperature sensor or probe **158** may be in electronic communication with cooling unit **105** and may control the operation of the cooling unit **105** based upon measure temperatures of the electronic device **102** and/or the ambient air surrounding the device **102**. Controls may trigger the operation of the cooling unit **105** from an on to an off state depending upon the detected temperatures. Optionally, an in other implementations, applications on the electronic device **102** may be also be able to measure the internal and/or external temperature of the device **102** and communicate such temperature information to the cooling mount **100**.

[0103] FIG. **13** is a top view of the cooling mount **100** of FIG. **1** positioned in a perimeter mount **1302** for adding additional functionality to the cooling mount **100**. The perimeter mount **1302** may be a flex-frame that hooks directly to the cooling mount **100** to provide multiple mounting or attachment points for additional supports and/or electronic devices, including, but not limited to, point of sale systems, hand straps, sash straps and external battery packs. For example, FIG. **13** shows external devices such as a point of sale system **1304** that can be used to swipe credit cards, debit cards or any other forms of payment when making a sale, and an external battery pack **1306** for providing additional power to either the cooling mount **100** and/or to an electronic device mounted on the cooling mount.

[0104] While FIG. **13** shows the point of sale system **1304** and external battery pack **1306** on specific perimeter sides of the perimeter mount **1302**, it should be understood that additional supports or external devices may be located on any side of the perimeter mount **1302**. Additionally, additional supports and/or external devices may be attached to the perimeter mount in a variety of different ways, including but not limited to, screws, hooks, bolts, glue, tape and Velcro. For example, as shown in FIG. **13**, point of sale system **1304** may be attached to perimeter mount **1302** using Velcro while external battery pack **1306** may be attached to perimeter mount **1302** through the use of hooks or screws that go in openings or slots **1402** (shown in FIG. **14**) that may be located on the side of perimeter mount **1302**.

[0105] FIG. **13** further illustrates a lanyard **1308** attached to perimeter mount **1302**. Lanyard **1308** may be attached to a shoulder strap (not shown) using a clip, carabiner, or any other attachment mechanism such that the perimeter mount can be supported by the shoulder of the user. The shoulder strap may comprise of any material known in the art and can be adjustable. In use, for example, a server standing outside, such as in a drive through restaurant, may be able to take someone's order using the cooling mount **100** and perimeter mount **1302**. The user can carry or support the perimeter mount **1302** over the shoulder using a shoulder strap and then hold the mount **1302** using the hand strap device **1502** in either the horizontal and/or vertical position to access the electronic device positioned on the perimeter mount **1302** for taking a food order. The point of sale system **1304** attached to the perimeter mount **1302** may then be used to swipe a customer's credit card once the order is place. The perimeter mount **1302** and cooling mount **100** will prevent electronic devices such as iPads from overheating and may allow for the full processing of any purchasing order, including taking credit card, debit card or other payments.

[0106] FIG. **14**A is a top view of the cooling mount **100** of FIG. **13** removed from the perimeter mount **1302**. As shown in FIG. **14**A, the back of the perimeter mount **1302** may have a mounting plate **1404**. The mounting plate **1404** may include holes **1406** for securing or bolting to the cooling mount **100** and/or additional devices, like hand straps and point of sale systems. Further, the mounting plate **1404** can include attachments for cable management. Additional items that can be secured to the mounting plate **1404**, may include, but not be limited to, sun shades.

[0107] FIG. **14**A also illustrates attachment slots **1402** for attaching elongated sides **1602** (shown in FIG. **16**) and/or additional electronic devices **102** to the perimeter mount **1302** that may operate in conjunction with the electronic device held by the cooling mount **100**, such as point of sale devices **1304** and/or external battery packs **1306**. Attachment slots **1402** may be located on any side of perimeter mount **1302**. FIG. **14**B illustrates a front perspective view of perimeter mount **1302**. In particular, FIG. **14**B shows attachment slots **1402** located on the longer side of perimeter mount **1302**.

[0108] FIG. **15** is a back perspective view of perimeter mount **1302** illustrating the attachment of a hand strap device **1502** to the mounting plate **1404**. The hand strap device **1502** may include a rotatable disc **1504** and strap **1506**. The rotatable disc **1504** may be capable of rotating **360** degrees along its central axis. Thus, the hand strap device **1502**, when mounted to the mounting plate **1404** of perimeter mount **1302** may be capable of rotating the perimeter mount **1302** along its central axis such that the electronic device **102** that is located within the perimeter mount **1302** may be oriented in either a landscape or portrait position while the user's hand is in the hand strap device **1502**.

[0109] FIG. **16** is another back perspective view of perimeter mount **1302** illustrating the perimeter mount having elongated sides **1602** for the attachment of additional external devices such as external battery pack **1306**, point-of-sale devices **1304** or any other associated electronics. The external battery pack **1306** may have a USB port **1604** or any other port that provides power to either the cooling mount **100** and/or electronic device **102**. The elongated side **1602** may be made of plastic or any other rigid material. The elongated side **1602** may also serve as a dual purpose, one which is to provide attachment means to an external device but also to act as a stand for perimeter mount **1302**. It should be understood that elongated sides **1602** may be located on one or more perimeter sides of the perimeter mount **1302**. For example, FIG. **15** illustrates elongated sides **1602** located on two perimeter sides of the perimeter mount **1302**.

[0110] FIG. **17** illustrates a front perspective view of one example of a perimeter casing **1700** that can be placed around the perimeter of an electronic device **2002** (FIG. **20**). As illustrated in FIG. **17**, a perimeter casing **1700**, such as a silicon perimeter or sleeve, may be designed for placement around the perimeter and/or edges of the electronic device **2002**. The perimeter casing **1700** may protect the electronic device **2002** from damage.

[0111] While FIG. **17** shows the perimeter casing **1700** having a central opening **1702** for exposing both the front and back of electronic device **2002**, in another example, the perimeter casing **1700** may include a screen protector (not shown) for protecting the screen on the front of the electronic device **2002** to protect the screen from cracking or shattering, or protecting the screen from direct sunlight. The longer sides **1704**, **1706** of the perimeter casing **1700** may also include a grooved or indented area for engaging and securing to cooling mount **1900** (shown in FIG. **19**). As will be discussed further below, another purpose of the perimeter casing **1700** is to allow cooling mount **1900** to accommodate various sizes or models of electronic devices including but not limited to tablets such as iPADs, IPAD Airs and iPAD minis, by altering the thickness of the perimeter casing **1700**.

[0112] FIG. **18** illustrates a back perspective view of perimeter casing **1700** of FIG. **17**. As illustrated in FIG. **18**, perimeter casing **1700** is open in the back and is only placed around the perimeter of electronic device **2002**. This allows the back of the electronic device **2002** to be cooled by the cooling mount **1900** when the electronic device is placed within the cooling mount **1900**. Although the cooling mount **1900** is designed to cool, the mount **1900** can also be used in general, to regulate the temperature of the electronic device **2002**. For example, in colder climates or environments, heat elements or heat packs (not shown) could also be included behind the electronic device **2002** in the mount **1900**. These heating elements can be useful to prevent the electronic device from freezing when used in colder environments and maximizing the operational performance of the electronic device. As the back of electronic device **2002** is still exposed when protected by the perimeter casing **1700**, the electronic device **2002** may be cooled or heated by the mount **1900** as needed depending on the surrounding climate or environment. The cooling mount **1900** may also be referred to as a temperature regulating mount when the mount can be used either to cool, heat and/or to cool or heat an electronic device **2002**. The cooling or heating unit positioned in the mount **1900**, as described herein, may be referred to as a temperature control unit.

[0113] As stated above, the size of the perimeter casing **1700** may vary depending upon the size of the electronic device **2002**. In particular, while the outer dimensions of the perimeter casing **1700** may remain the same, the size of the inner dimensions or central opening **1702** of the perimeter casing may vary depending on the size of the electronic device that is intended to be used. For example, if an electronic device is smaller (such as an IPad mini), the opening **1702** of the perimeter casing **1700** may be sized to also be smaller to accommodate the smaller electronic device such that the perimeter casing **1700** fits securely around the smaller electronic device. Additionally, the thickness of the perimeter casing **1700** may also vary to accommodate various thickness sizes of electronic devices. Having the central opening **1702** of the perimeter casing **1700** to be of any size, the cooling mount **1900** can act to fit any number of different sized electronic devices by using perimeter casings **1700** that are sized to both fit in the mount **1900** and around any given type of electronic device **2002** to allow the cooling mount **1900** to be a universal mount. In this manner, the mount **1900** may come with different sized perimeter casings **1700** for different types and sizes of electronic devices **2002**. While the height of the perimeter casing (distance from side **1704** to **1706**) may remain the same, in some examples, the length of the longer sides **1704**, **1706** of the perimeter casing **1700** may be varied to accommodate various different sized electronic devices, without impact its fit within the mount **1900**.

[0114] FIG. **19** is a front perspective view of another example of a cooling mount **1900** of the present invention. As shown in FIG. **19**, to mount the electronic device **2002** with perimeter casing **1700** in the cooling mount **1900**, the cooling mount **1900** may be designed to hold the electronic device **2002** in place at opposing sides **1704**, **1706** of casing **1700**. As seen in FIG. **19**, the mount **1900**, on the bottom or side edge, may include a guide rail **1902** in which one side edge **1704** or **1706** of casing **1700** can be positioned. On the opposing side of cooling mount **1900** is a clamping mechanism **1904** that can move from an open to a closed positioned and then be locked in place by locking mechanism **1906** to secure electronic device **2002** in cooling mount **1900**. It should be noted that all features and functions incorporated or that may be incorporated in cooling mount **100** may also be incorporated in cooling mount **1900**.

[0115] In the illustrated example, the clamping mechanism **1904** is moveable and pivots from an open position (FIG. **22**) to a closed positioned (FIG. **23**). In the closed position, the clamping mechanism **1904** engages the electronic device **2002** such that electronic device **2002** is maintained between the guide rail **1902** and the clamping mechanism **1904** in the cooling mount **1900**. The clamping mechanism **1904** is then locked into place by a movable or pivotable locking mechanism **1906**.

[0116] FIG. **20** is a front perspective view of an electronic device **2002** secured by perimeter casing **1700** being placed in the cooling mount **1900** of FIG. **19**. As illustrated in FIG. **20**, in operation, side **1704** of perimeter casing **1700** may be first placed in the guide rail **1902** along the bottom or side opposing the clamping mechanism **1904**. When placing the electronic device **2002** in the guide rail **1902**, the clamping mechanism **1904** is in the open position. While FIG. **19** shows side **1704** of the perimeter casing **1700** engaging with guide rail **1902**, it should be understood that perimeter casing **1700** may be mounted to cooling mount **1900** such that side **1706** of the perimeter casing **1700** is engaged with guide rail **1902**.

[0117] FIG. **21** is a back perspective view of an electronic device being placed in the cooling mount **1900** of FIG. **19**. FIG. **21** best illustrates that the back of the electronic device **2002** remains exposed to allow the temperature of the electronic device **2002** to be better controlled by the mount **1900**.

[0118] FIG. **22** is a front perspective view of electronic device **2002** being placed in the cooling mount **1900** such that the guide rail **1902** engages with the grooved or indented area of side **1704** of perimeter casing **1700**. The guide rail **1902** may include a lip that comes over the top side of the electronic device **2002** to contact both the side and top edge of the electronic device **2002** to maintain it in place. As illustrated in FIG. **22**, the clamping mechanism **1904** is in an open position. In this example, the clamping mechanism **1904** can pivot between an open position and a closed position. The clamping mechanism **1904** in the open position may be angled away from cooling mount **1900** at, for example, a 45-90 degree angle, or more, to receive the perimeter casing **1700** and electronic device **2002**.

[0119] FIG. **23** is a front perspective view of an electronic device **2002** being placed in the cooling mount **1900** of FIG.

29 with the clamping mechanism **1904** in a closed position. When in the closed position, the clamping mechanism **1904** is positioned against the electronic device **2002** such that the clamping mechanism **1904** fits within the grooves of side **1706** of perimeter casing **1700**. In this example, the clamping mechanism **1904** may be generally parallel to the side **1706** of the perimeter casing **1700** to engage the side of the electronic device **2002**. The clamping mechanism **1904** may include a lip that comes over the top side of the electronic device **2002** to contact both the side and top edge of the electronic device **2002** to maintain it in place.

[0120] FIG. **24** is a front perspective view of an electronic device **1702** being placed in the cooling mount **1900** of FIG. **19** with the locking mechanism **1906** in a locked position. To lock the clamping mechanism **1904** in a closed position, the locking mechanism **1906** may pivot between a closed and open state and may be pivoted over the clamping mechanism **1904** to lock and prevent clamping mechanism **1904** from opening.

[0121] FIG. **25** is another front perspective view of an electronic device **2002** being held in the cooling mount **1900** of FIG. **19** with the clamping mechanism **1904** in a closed position and locked by locking mechanism **1906**. As illustrated in FIG. **25**, openings **2502** or attachment points may be located on the cooling mount **1900** for attaching additional accessories (e.g. point of sale devices or battery packs) as illustrated and described above to the sides of cooling mount **1900**.

[0122] FIG. **26** illustrates a front perspective view of another example of a perimeter casing **2600** that can be placed around the perimeter of an electronic device **2802** (shown in FIG. **28**). It should be noted that all features and functions incorporated or that may be incorporated in perimeter casing **1700** may also be incorporated in perimeter casing **2600**. As illustrated in FIG. **26**, perimeter casing **2600**, which can be made from any elastomer material such as silicon (to provide both rigidness and flexibility), may be designed such that it can be placed around the perimeter and/or edges of the electronic device **2802** and may protect the electronic device **2802** from damage. Additionally, the longer sides **2604**, **2606** of perimeter casing **2600** may also include a grooved or indented area for engaging and securing to cooling mount **3500** (shown in FIG. **35**).

[0123] Unlike perimeter casing **1700**, perimeter casing **2600** may include a web configuration **2602** on the back of the casing **2600** that includes openings or holes to protect the back of electronic device **2802** and provide further stability to electronic device **2802**. The openings or holes in the web configuration allows the back of electronic device **2802** to be cooled by cooling mount **3500** (FIG. **35**). Although the mount **3500** is designed to cool, the mount **3500** can also be used in general, to regulate the temperature of the electronic device **2802**. For example, in colder climates or environments, heat elements or heat packs (not shown) could also be included behind the electronic device **2802** in the mount **3500**. These heating elements can be useful to prevent the electronic device from freezing when used in colder environments and maximizing the operational performance of the electronic device. As the back of electronic device **2802** is still exposed through the web configuration **2602** when protected by perimeter casing **2600**, electronic device **2802** may be cooled and/or heated by cooling mount **3500** as needed depending on the surrounding climate or environment.

[0124] As stated above for perimeter casing **1700**, the size of perimeter casing **2600** may vary depending upon the size of the electronic device **2802**. In particular, while the outer dimensions of the sides of perimeter casing **2600** may remain the same, the size of the inner dimensions of the sides of the perimeter casing may vary depending on the size of the electronic device that is intended to be used. For example, if an electronic device is smaller (such as an IPad mini), the inner dimensions of the sides of the perimeter casing **2600** may be sized smaller to accommodate the smaller electronic device such that the perimeter casing **2600** fits securely around the smaller electronic device. Additionally, the thickness of the sides of perimeter casing **2600** may also vary to accommodate various thickness sizes of electronic devices. Having the inner dimensions of the sides of perimeter casing **2600** to be of any size, the cooling mount **3500** can act to fit any number of different sized electronic devices by using perimeter casings **2600** that are sized to both fit in the mount **3500** and around any given type of electronic device **2802** to allow the cooling mount **3500** to be a universal mount. In this manner, the mount **3500** may come with different sized perimeter casings **2600** for different types and sizes of electronic devices **2802**. While the height of the perimeter casing may remain the same (measured from side **2604** to **2606**), in some examples, the length of the longer sides **2604**, **2606** of perimeter casing **2600** may be varied to accommodate various different sized electronic devices without varying the thickness of the perimeter walls of the casing.

[0125] FIG. **27** illustrates a back perspective view of perimeter casing **2600** of FIG. **26**. As stated above, web configuration **2602**. While perimeter casing **2600** illustrates a particular web configuration design **2602**, any web configuration design can be utilized having different sizes/shapes of holes or openings. For example, web configuration **2602** may be configured such that the amount of holes corresponds to the number of fans located in cooling mount **3500** and/or the holes are located in the same location as the fans on the cooling mount **3500** when the electronic device **2802** is mounted within the cooling mount to allow airflow from the fans to directly contact the back of electronic device **2802** for sufficiently regulating the temperature of the electronic device **2802** (as shown in FIG. **40**).

[0126] FIG. **28** illustrates a front perspective view of the front of perimeter casing **2600** when electronic device **2802** is placed within and secured by perimeter casing **2600**. As shown in FIG. **28**, the screen of electronic device **2802** is fully exposed when electronic device is encased by perimeter casing **2600**. In another example, perimeter casing **2600** may also include a screen protector (not shown) for protecting the screen on the front of electronic device **2802** to protect the screen from cracking or shattering, or protecting the screen from direct sunlight.

[0127] FIG. **29** illustrates a back perspective view of perimeter casing **2600** when electronic device **2802** is placed within and secured by perimeter casing **2600**. A shown in FIG. **29**, web configuration **2602** on the back of the casing **2600** may include openings or holes to allow the back of electronic device **2802** exposed such that when electronic device **2802** is mounted in cooling mount **3500** (as shown in FIGS. **36** and **37**), cooling mount **3500** can more efficiently regulate the temperature of electronic device **2802**. While the case may have an open back, it may be desired to provide

a webbed or semi-open back to provide rigidity to the casing **2600** and further protect the electronic device **2802**.

[0128] FIG. **30** is a perspective cross-sectional view of electronic device **2802** when placed within and secured by perimeter casing **2600** taken along line A-A of FIG. **28**. As shown in FIG. **30**, perimeter casing has side walls **3002** for engaging the sides of electronic device **2802**. The side walls **3002** of perimeter casing **2600** may have elasticity to confine the electronic device **2802** so that electronic device **2802** is secured in the casing **2600**. The thickness of side walls **3002** can be varied to be thicker or thinner to accommodate different sized electronic devices **2802**. For example, without changing the perimeter dimension of the casing **2600**, a large electronic device **2802** can fit within a casing **2600** having thinner walls **3200** than a casing with thicker walls **3200**, which will accommodate a smaller electronic device **2802**. In this manner, a temperature regulating mount can operate as a universal mount for all sized electronic devices. The temperature regulating mount will sized to accommodate the largest tablet and the thickness of the perimeter casings will vary (at least on two opposing sides) to allow for any sized portable electronic device to be held within the temperature regulating mount.

[0129] FIGS. **31-34** illustrate side views of each side of perimeter casing **2600** with electronic device **2802** secured in casing **2600**. FIGS. **31-34** all show perimeter casing **2600** facing upwards such that the front of perimeter casing **2600** is on the top and back of perimeter casing **2600** is on the bottom.

[0130] In particular, FIG. **31** illustrates the bottom side of perimeter casing **2600**, FIG. **32** illustrates a side view of the right side **2606** of perimeter casing **2600**, FIG. **33** illustrates a side view of the top side of perimeter casing **2600**, and FIG. **34** illustrates a side view of the left side **2604** of perimeter casing **2600**. As shown in FIGS. **31-34**, the sides of perimeter casing **2600** may include holes located at specific areas to correspond with various ports (e.g. charging port **3102** and auxiliary port **3302**) (i.e., port holes) speaker **3104** and buttons (e.g. volume buttons **3202**, power button **3304**) located on electronic device **2802**. It should be understood that perimeter casing **2600** may incorporate any hole in any location to correspond with any function or feature located on an electronic device, regardless of the model or size of the electronic device.

[0131] FIG. **35** is a front perspective view of another example of an implementation of a cooling mount **3500** of the present invention. As shown in FIG. **35**, to mount electronic device **2802** with perimeter casing **2600** in cooling mount **3500**, cooling mount **3500** may be designed to hold electronic device **2802** in place at opposing sides **2604**, **2606** of casing **2600**. As shown in FIG. **35**, the mount **3500** may include a guide rail **3502** in which side **2604** of casing **2600** can be positioned. On the opposing side of cooling mount **3500** is a clamping mechanism **3504** that can move from an open position to a closed positioned after engaging with side **2606** and then be locked in place by locking mechanism **3506** to secure electronic device **2802** in cooling mount **3500**. Also shown in FIG. **35**, are the different lengths of guide rail **3502** and clamping mechanism **3504** for corresponding to the different lengths of the elongated grooved areas on sides **2604** and **2606**. The purpose of having these different lengths is to ensure that perimeter casing **2600** can only be mounted to cooling mount **3500** in one orientation such that guide rail **3502** can only engage with side **2604** and clamping mechanism **3504** can only engage with side **2606**. The purpose of having the perimeter casing **2600** capable of being mounted in the cooling mount **3500** in only one orientation is to maximize the cooling efficiency of the cooling mount **3500** as will be discussed in further detail below in connection with FIG. **39**.

[0132] It should also be noted that all features and functions incorporated or that may be incorporated in cooling mount **100** and/or **1900** may also be incorporated in cooling mount **3500**. For example, any features such as the temperature sensor or probe **158** shown and described herein with respect to cooling mount **100** and **1900**, including any external attachments such as various mounts described above, may be incorporated in cooling mount **3500**. Additionally, cooling mount **3500** may also incorporate a mechanism, button, or sensor (not shown) that automatically turns the fans of cooling mount **3500** "on" when an electronic device or protective casing **2600** is mounted or secured within the cooling mount **3500**. This automatic "turn on" mechanism may also be incorporated in cooling mount **100** and/or **1900**.

[0133] In the illustrated example, the clamping mechanism **3504** is moveable and pivots from an open position (FIG. **37**) to a closed positioned (FIG. **38**). In the closed position, the clamping mechanism **3504** engages perimeter casing **2600** (in which an electronic device may be held within) such that electronic device **2802** is maintained between guide rail **3502** and clamping mechanism **3504** in cooling mount **3500**. The clamping mechanism **3504** is then locked into place by a movable or pivotable locking mechanism **3506**.

[0134] FIG. **36** is a front perspective view of an electronic device **2802** secured by perimeter casing **2600** being placed in cooling mount **3500** of FIG. **35**. As illustrated in FIG. **36**, in operation, side **2604** of perimeter casing **2600** may be first placed in the guide rail **3502** along the bottom or side opposing the clamping mechanism **3504**. When placing the electronic device **2802** in the guide rail **3502**, the clamping mechanism **3504** is in the open position.

[0135] FIG. **37** is a front perspective view of electronic device **2802** being placed in the cooling mount **3500** such that the guide rail **3502** engages with the grooved or indented area of side **2604** of perimeter casing **2600**. The guide rail **3502** may include a lip that comes over the top side **2604** of perimeter casing **2600** to maintain it in place. As illustrated in FIG. **37**, the clamping mechanism **3504** is in an open position. In this example, the clamping mechanism **3504** can pivot between an open position and a closed position. The clamping mechanism **3504** in the open position may be angled away from cooling mount **3500** at, for example, a 45-90 degree angle, or more, to receive the perimeter casing **2600** and electronic device **2802**.

[0136] FIG. **38** is a front perspective view of an electronic device **2802** being placed in the cooling mount **3500** of FIG. **35** with the clamping mechanism **3504** in a closed position. When in the closed position, the clamping mechanism **3504** is positioned against the electronic device **2802** such that the clamping mechanism **3504** fits within the grooves of side **2606** of perimeter casing **2600**. In this example, the clamping mechanism **3504** may be generally parallel to the side **2606** of the perimeter casing **2600** to engage the side of the electronic device **2802**. The clamping mechanism **3504** may include a lip that comes over the top side **2606** of perimeter casing **2600** to maintain it in place. To lock the clamping

mechanism **3504** in a closed position, the locking mechanism **3506** may pivot between a closed and open state and may be pivoted over the clamping mechanism **3504** (as show in FIG. **35**) to lock and prevent clamping mechanism **3504** from opening.

[0137] FIG. **39** illustrates a close-up front perspective view of clamping mechanism **3504** when engaging with side **2606** of perimeter casing **2600**. As shown in FIG. **39**, clamping mechanism may include a lip that comes over the top of side **2606** of perimeter casing **2600** to maintain the perimeter casing **2600** in place. FIG. **39** also shows side **2606** having a raised tab **3902** that engages with corresponding groove **3904** of the clamping mechanism **3504**.

[0138] Unlike side **2606**, side **2604** (as shown in FIG. **40**) has two raised tabs **4002** for engaging with corresponding grooves on guide rail **3502**. The purpose of having different number of raised tabs on sides **2604** and **2606** is to ensure that perimeter casing **2600** (and the electronic device **2802** encased within the perimeter casing **2600**) can only be mounted in cooling mount **3500** in a specific orientation where side **2604** may only engage with guide rail **3502** and side **2606** may only engage with clamping mechanism **3504**. Electronic devices such as tablets tend to have uneven heat distribution across the back surface. In other words, some areas on the back of electronic devices tend to get hotter than others. Therefore, to maximize cooling efficiency and/or temperature regulation of the electronic device **2802** when electronic device **2802** is mounted in cooling mount **3500**, it is important to have the fans **4004** in cooling mount **3500** located closer to the areas in the back of electronic device **2802** that tends to get the hottest. Given that fans **4004** are located closer to guide rail **3502** (as shown in FIG. **40**) than to clamping mechanism **3504**, the purpose of having different number of raised tabs **3902**, **4002** on sides **2604** and **2606** is to make sure that the hottest areas on the back of electronic device **2802** is located near the fans **4004** when electronic device **2802** is encased in perimeter casing **2600** and mounted in cooling mount **3500**. It should also be noted that any shape, size, or number of raised tabs may be incorporated in perimeter casing **2600** and cooling mount **3500** such that perimeter casing **2600** can only be mounted in cooling mount **3500** in one orientation. Additionally, visual indicators such as matching colors or marks may also be incorporated to aid a user in mounting the perimeter casing **2600** in the cooling mount **3500** in one orientation.

[0139] FIG. **40** illustrates a close-up front perspective view of guide rail **3502** when engaging with side **2604** of perimeter casing **2600**. As shown in FIG. **40**, guide rail **3502** may also include a lip that comes over the top of side **2604** of perimeter casing **2600** to maintain the perimeter casing **2600** in place and a groove for engaging with raised tabs **4002**. Also shown in FIG. **40** are holes in the web configuration **2602** located in the same location as the fans **4004** on the cooling mount **3500** when the perimeter casing **2600** is mounted within the cooling mount **3500** to allow airflow from the fans **4004** to directly contact the back of electronic device **2802** for sufficiently regulating the temperature of the electronic device **2802**.

[0140] FIG. **41** illustrates a back perspective view of cooling mount **3500** with rotatable strap **4102** having a kickstand **4104** where the kickstand **4104** is extended. As shown in FIG. **41**, a rotatable strap **4102** may be mounted to the back of cooling mount **3500**. Rotatable strap **4102** may have the same functionality as rotatable strap **1502** (shown in FIG. **15**). However, rotatable strap **4102** may also include a kickstand **4104** that rotates with rotatable strap **4102**. Kickstand **4104** is also capable of holding cooling mount **3500** at an angle when in the extended position (as shown in FIG. **41**).

[0141] FIG. **42** illustrates a back perspective view of cooling mount **3500** with rotatable strap **4102** having a kickstand **4104** where the kickstand **4104** is retracted.

[0142] FIG. **43** is a perspective view of a flip mount **4300**. Flip mount **4300** may comprise of a mounting plate **4302**, a side plates **4304**, **4306**, and rod **4308**. Side plate **4304** may connect to one end of the mounting plate **4302** while side plate **4306** may connect to an opposing end of mounting plate **4302**. Similarly, side plate **4304** may connect to one end of rod **4308** while side plate **4306** may connect to an opposing end of rod **4308**. Side plate **4306** may also be molded to an extended arm **4314** having an end plate **4316** in which point of sale systems can be used thereon (as shown in FIGS. **46** and **47**). The mounting plate may also have holes in which screws **4310** are inserted for mounting to the back of cooling mount **3500** as shown in FIG. **45**. The opposing ends of flip rod **4308** may also have rubber rings **4312** for providing grip and for allowing the flip mount to flip from one side to another side when flip mount **4300** is mounted to the back of cooling mount **3500**.

[0143] In the illustrated example, the side plates **4304** and **4306** may be shaped general like a pentagon or a plate having a square base with a triangular element positioned on top, such that side plates **4304** and **4306** pivot on the point of the pentagon or triangular top element and rests on opposing angled sides when being flip from one direction to the other. In operation, the mount **3500** is flipped over the top to present in opposing front and back directions by pivoting on the point of the side plates **4304** and **4036** and then resting on the sides of the cooling mount **3500** and the opposing angled sides of the side plates **4304** and **4036**. Those skilled in the art will recognize that it is not necessary to shape the sides plates **4304** and **4036** as shown or rest the mount **3500** on the opposing sides of the plate **4304** and **4036**.

[0144] FIG. **44** is an exploded view of flip mount **4300**. In particular, FIG. **44** shows how the connection is made between side plates **4304**, **4306** and mounting plate **4302**. In particular, the opposing ends of mounting plate **4302** may be inserted into slots **4406** located on side plates **4304**, **4306** and then secured by screws **4402**. Additionally, FIG. **44** shows how the connection is made between side plates **4304**, **4306** and rod **4308**. In particular, the opposing ends of rod **4308** may be inserted into holes **4408** located on side plates **4304**, **4306** and then secured by screws **4404**.

[0145] FIG. **45** is a back perspective view of the flip mount of FIG. **43** mounted to the back of the cooling mount of FIG. **35**. In particular, flip mount **4300** acts as a stand for cooling mount **3500**. As shown in FIG. **45**, a point of sale system **4502** may be attached to plate **4316** of arm **4314**. The point of sale system **4502** may be attached to plate **4316** by any mechanism known in the art including but not limited to Velcro. Cooling mount **3500** may be supported in an upright position by flip mount **4300** such that the guide rail side **3502** of the cooling mount **3500** contacts the ground. Alternatively, flip mount **3500** allows cooling mount **3500** to be flipped such that the clamping mechanism side **3504** of the cooling mount **3500** contacts the ground (as shown in FIG. **47**). This flipping feature allows greater efficiency and

convenience for sales transactions to be made. For example, in operation, a cashier can quickly flip the cooling mount toward a customer so that the customer can make a credit card payment on the point of sale system and then quickly flip the cooling mount back to the cashier to complete the transaction.

[0146] FIG. **46** is an exploded view of the flip mount of FIG. **43** being mounted to the back of the cooling mount of FIG. **35**. It should also be noted that flip mount **4300** may also be mounted to the back of cooling mounts **100** and **1900**.

[0147] FIG. **47** is a front perspective view of the flip mount of FIG. **43** mounted to the back of the cooling mount of FIG. **35**. As shown on FIG. **47**, the point of sale system **4502** may comprise of a keypad, display and credit card slot. However, any point of sale system known in the art may be utilized.

[0148] FIGS. **48-65** illustrate one example of a magnet mounting assembly for portable electronic devices capable of supplying power to the portable electronic device through the mounting assembly. The magnet mounting assembly can be used with or without the cooling mount or temperature control device, and functions to allow the hands-free operation of the portable electronic devices at varying angles and various elevations. As will be illustrated below, the mounting assembly includes a magnet mount **4800** (FIG. **48**) that is received or engaged by a receiving mount or a support mount **5300** (FIG. **53**). The magnet mount **4800** is positioned on the back of the portable electronic device to magnetically engage the receiving mount or support mount **5300** in a manner that allows for the quick release of the portable electronic device from the receiving mount **5300**.

[0149] FIG. **48** is a rear perspective view of one example of a magnet mount **4800**. The magnet mount **4800** may be mounted to the back of cooling mount **3500** or to the back of a portable electronic device. Magnet mount **4800** includes a magnet plate **4802**, magnet plate securing mount **4804**, electrical connection **4820**, printed circuit board **5002** (shown in FIG. **50**), screws **4810** for mounting the magnet plate to the magnet securing mount **4804** and screws **4812** for mounting the magnet mount **4800** to the back of cooling mount **3500** (as shown in FIG. **52**). The magnet plate securing mount **4804** may further comprise of handles **4806**, **4808** on opposite sides of the magnet plate securing mount **4804** for a user to grip when the magnet mount **4800** is mounted to the back of cooling mount **3500**. As will be discussed further in connection with FIG. **50**, the printed circuit board **5002** may comprise of two male pogo pins **5004**, or other electrical connectors and USB port **5006**. As will also be discussed further in connection with FIG. **50**, magnet plate **4802** may include a hole or opening **5008** for the electrical connection **4820** in which the two male pogo pins **5004** may project through. The electrical connection **4820** includes electrical connectors for receiving power from a power supply and cable connection for interfacing with the magnet mount **4800** to provide power to the electrical connection in magnet mount **4800** to power a personal electronic device and/or a temperature regulating mount **3500**.

[0150] FIG. **49** is a front perspective view of the magnet mount **4800** of FIG. **48**. In particular, FIG. **48** illustrates screws **4812** that project out from the front of the magnet mount **4800** for mounting to the back of cooling mount **3500**. These screws **4812** are secured through the magnet plate **4802** and magnet plate securing mount **4804** to secure the magnet mount **4800** to the cool mount **3500**. Those skilled in the art will recognize that other fastening mechanisms besides screws **4812** may be used to fasten the magnet mount **4800** to the cooling mount **3500**, including but not limited to adhesive, friction fit connections, slide connections, or other know fastening mechanisms for secure two parts together.

[0151] FIG. **50** is a rear exploded view of the magnet mount **4800** of FIG. **48**, and FIG. **51** is a front exploded view of the magnet mount **4800** of FIG. **49**. FIG. **50** most clearly illustrates the printed circuit board **5002**, which may be located between magnet plate **4802** and magnet plate securing mount **4804**. Male pogo pins **5004** and USB port **5006** may be located on printed circuit board **5002**. While two male pogo pins are illustrated in FIG. **50**, it should be recognized that any number of male pogo pins may be utilized in connection with magnet mount **4800**. Male pogo pins **5004** and USB port **5006** are electrically connected to one another through printed circuit board **5002** such that when power is received by male pogo pins **5004**, power is transmitted through USB port **5006**. Additionally, a charging cable **5202** (shown in FIG. **52**) may connect USB port **5006** to the charging port located on any electronic device as discussed in this application. Therefore, when power is receive by male pogo pins **5004**, the electronic device mounted within cooling mount **3500** may get charged through charging cable **5202**. FIG. **50** further shows securing block **5010** that may engage with groove **5012** located on magnet plate **4802** for providing further security when magnet plate **4802** is mounted to magnet plate securing mount **4804**.

[0152] FIG. **52** illustrates the magnet mount **4800** of FIG. **48** mounted to the back of cooling mount **3500**. While magnet mount **4800** is shown to be mounted to the back of cooling mount **3500**, it should be understood that magnet mount **4800** may also be mounted to the back of cooling mounts **100** and **1900**, or other implementations thereof. Additionally, it should further be understood that the number and placement of screws **4812** may vary in order to mount magnet mount **4800** to any of cooling mounts **3500**, **100** and **1900**. As further shown in FIG. **52**, a charging cable **5202** may connect USB port **5006** to any electronic device in connection with the present invention in order to charge the electronic device.

[0153] FIG. **53** is a front perspective view of a magnet receiving mount **5300** for receiving and engaging the magnet mount **4800**. The magnet receiving mount **5300** may include a receiver plate **5302**, printed circuit board **5404** (shown in FIG. **54**), receiver plate securing mount **5402** (shown in FIG. **54**), magnets **5304**, and screws **5308** for securing receiver plate **5302** to receiver plate securing mount **5402**. As further illustrated in FIG. **53**, six cylindrical magnets **5304** may be located within receiver plate **5302**. It should be recognized that any number, size, or shape of magnets may be used in connection with the present invention. Optionally, the receiver plate **5302** may be made of ferromagnetic material. Magnets **5304** may further be located within receiver plate **5302** such that the magnets are flush with the receiver plate **5303**. Receiver plate **5302** may further comprise of an opening **5408** (illustrated in FIG. **54**) that exposes two female pogo pins **5306** (which are connected to printed circuit board **5404**) for mating with the electrical connection **4812** of the magnet mount **4800**.

[0154] FIG. **54** is a front exploded view of the magnet receiving mount **5300** of FIG. **53**. FIG. **55** is a back exploded view of the magnet receiving mount **5300** of FIG. **53**. FIGS. **54** and **55** most clearly illustrate printed circuit board **5404**, which may be located between receiver plate **5302** and receiver plate securing mount **5402**. Female pogo pins **5306** and USB port **5406** may be located on printed circuit board **5404**. While two female pogo pins are illustrated in FIG. **54**, it should be recognized that any number of female pogo pins may be utilized in connection with magnet receiving mount **5300**. Female pogo pins **5306** and USB port **5406** are electrically connected to one another through printed circuit board **5404** such that when power is received by USB port **5404**, power is transmitted through female pogo pins **5306**. While not shown, USB port **5406** may receive power from any external power source such as a power outlet.

[0155] The magnet receiving mount **5300** may from part of any support mechanism, such as a stand, clamp and/or holder. FIG. **56** illlustrates on example of the magnet receiving mount **5300** incorporated into an adjustable height, pivotal stand. In particular, FIG. **56** is a photograph of a magnet receiving mount **5300** mounted to table stand **5602**. Magnet receiving mount may be mounted to table stand **5602** by screws **5308**. It should further be noted that any stand, holder, clamp or support device known in the art may be used for mounting magnet receiving mount **5300**.

[0156] For example, the receiving mount **5300** may be incorporated into floor stands, cup holders, vent clips, dash stands or other engagement devices typically used in a person's vehicle to support an electronic device. Further, the receiving mount **5300** may used in connection with any of the different types of mounts previously described above for engaging the cooling mount **3500**. FIG. **57** illustrates one example of a magnet mount assembly **5700** in accordance with the present invention, with the magnet mount **4800** and receiving mount **5300** engaged on the back of cooling mount **3500**. In particular, magnet mount assembly **5700** comprises the front of magnet mount **4800** secured to the back of cooling mount **3500** and the back of magnet mount **4800** connected to the front of magnet receiving mount **5300**. The back of magnet mount **4800** may connect to the front of magnet receiving mount **5300** by the attraction of magnet plate **4802** to magnets **5304**. It should be recognized that the pull force of the magnet plate **4802** with magnets **5304** may vary depending on the strength of connection desired, but may be, in one implementation, at least **15** lbs. of pull force required to disconnect the magnet mount **4800** from the receiving mount **5300**.

[0157] When the back of magnet mount **4800** is connected to the front of magnet receiving mount **5300** by magnetic force, a connection is also made between the male pogo pins **5004** and female pogo pins **5306**. As should be understood in the art, male pogo pins **5004** usually take the form of a slender cylinder containing a spring-loaded pin and when pressed with female pogo pins **5306**, the points at each end of the male pogo pins **5004** make secure contacts with the two printed circuit boards **5002** and **5404** and thereby electrically connect them together. Therefore, in operation, external power may be provided to USB port **5406**, which in turn transmits power to female pogo pins **5306** through printed circuit board **5404**. The power from female pogo pins **5306** is then received by male pogo pins **5004** and transmitted to USB port **5006** through printed circuit board **5002**. A charging cable **5202** connected to USB port **5006** may then provide charging to any electronic device located within perimeter casing **2600** as discussed above. Therefore, the magnetic connection between the magnet mount **4800** and magnet receiving mount **5300** may ultimately allow for the charging to any electronic device as discussed above. Those skilled in the art will recognize that the invention is not limited to the use of USB ports and that other pin connectors and adapters may be used to receive and supply power from the receiving mount **5300** to the magnet mount **4800** to supply power to the electrical device. Further, the present invention may be adapted to also supply power to the cool mount **3500**. The electrical connection includes electrically connectors for receiving power from a power supply and cable connection for interfacing with the magnet mount **4800** to provide power to the electrical connection in magnet mount **4800** to power a personal electronic device and/or a temperature regulating mount **3500**.

[0158] FIG. **58** illustrates an exploded view of the magnet mount assembly **5700** of FIG. **57**. FIG. **58** further illustrates securing block **5010** that may engage with groove **5804** located on receiver plate **5302** and securing blocks **5802** engaging with grooves **5806** for providing further security when magnet receiving mount **5300** is mounted to magnet mount **4800**, and for properly aligning the magnet mount **4800** with the receiving mount **5300**.

[0159] FIG. **59** is the rear of another example of a magnet mount **5900** in accordance with the present invention. Unlike magnet mount **4800**, magnet mount **5900** may attach directly to the back of perimeter casing **2600**. Similar to magnet mount **4800**, magnet mount **5900** may comprise of magnet plate **5902**, magnet plate securing mount **5904**, electrical connection **4820**, printed circuit board **6002** (shown in FIG. **60**), and screws **5910** for mounting the magnet plate **5902** to the magnet securing mount **5904**.

[0160] The magnet plate securing mount **5904** may further comprise of handles **5906**, **5908** on opposite sides of the magnet plate securing mount **5904** for a user to grip when the magnet mount **5900** is mounted to the back of perimeter casing **2600**. In this example, the magnet plate securing mount **5904** includes a central portion where the magnet plate is secured against the magnet plate securing mount. The handles **5906**, **5908** extend outward from the sides of the central portion in opposing manner, extending between the central portion of the magnet plate securing mount **5904** and the guide rail **5916** on one side and the clamping mechanism **5914** on the other sides.

[0161] As further shown on FIG. **59**, guide rail **5916** may be attached to one side on handle **5908** of the magnet plate securing mount **5904** and clamping mechanism **5914** may attach to the opposite side on handle **5906** of magnet plate securing mount **5904**. Guide rail **5916** and clamping mechanism **5914** may have the same features and functionalities as those associated with guide rail **3502** and clamping mechanism **3504**. For example, similar to clamping mechanism **3504**, clamping mechanism **5914** may pivot from an open position to a closed positioner. In the closed position, clamping mechanism **5914** may engage perimeter casing **2600** (in which an electronic device may be held within) such that the electronic device is maintained between guide rail **5916** and clamping mechanism **5914** in magnet plate securing mount **5904**. The clamping mechanism **5914** may then lock into place by a movable or pivotable locking mechanism **5918**. Therefore, the same mechanism for securing perimeter casing **2600** to cooling mount **3500** may be

used to secure perimeter casing **2600** to magnet mount **5900**. Additionally, external accessories, such as shoulder strap clips **5918** may be mounted on magnet mount **5900**. Guide rail **5916** and clamp mechanism **5914** may further mate with grooves or indents in the sides of the perimeter casing **2600**, in the same manner as previously described above.

[0162] FIG. **60** is an exploded view of the back of magnet mount **5900** of FIG. **59**. FIG. **60** most clearly illustrates printed circuit board **6002**, which may be located between magnet plate **5902** and magnet plate securing mount **5904**. The features and functionalities of the printed circuit board **6002** may be the same as those discussed for printed circuit board **5002**. For example, male pogo pins **6004** and USB port **6006** are electrically connected to one another through printed circuit board **6002** such that when power is received by male pogo pins **6004**, power is transmitted through USB port **6006**. Additionally, a charging cable **5912** (shown in FIG. **59**) may connect USB port **6006** to the charging port located on any electronic device as discussed in this application. Also shown in FIG. **60**, are folding feet **6010** that allow the perimeter casing to lie on a flat surface at an angle on either a portrait position or landscape position. These folding feet **6010** are also illustrated in connection with FIGS. **64** and **65**, and are able to move independent of one another.

[0163] FIGS. **61** and **62** illustrate front perspective views of magnet mount **5900** when secured to perimeter casing **2600**. FIGS. **63** illustrates a back perspective views of one example of a magnet mount assembly **6300** in accordance with the present invention, with the magnet mount **5900** and receiving mount **5300** engaged on the back of cooling mount **3500**. In particular, magnet mount assembly **6300** comprises the front of magnet mount **5900** secured to the back of perimeter casing **2600** and the back of magnet mount **5900** connected to the front of magnet receiving mount **5300**. The back of magnet mount **5900** may connect to the front of magnet receiving mount **5300** in the same way as magnet mount **4800** is connected to magnet receiving mount **5300**, which is by the attraction of magnet plate **5902** to magnets **5304**. Similarly, the magnetic connection between the magnet mount **5900** and magnet receiving mount **5300** may ultimately allow for the charging to any electronic device secured in perimeter casing **2600** as discussed above.

[0164] FIGS. **64** and **65** illustrate the folding feet of magnet mount **5900**. Also shown in FIGS. **64-65**, the folding feet **6010** allow the perimeter casing to lie on a flat surface at an angle on either a portrait position (FIG. **64**) or landscape position (FIG. **65**). In this example, the four folding feet **6010** are pivotally connect to the handles **5906**, **5908** such that two are on the two sides of the handles and two are on the bottom sides of the handles **5906**, **5908**. In particular, FIG. **64** illustrates two of the folding feet located on the top of the handles **5906**, **5908** in an open position such that perimeter casing **2600** may be angled in a portrait position. FIG. **65** illustrates two of the folding feet on the same side of handle **5906** in an open position such that perimeter casing **2600** may be angled in a landscape position.

[0165] In operation the magnet mount and receiving mount of FIGS. **48-65** are magnetically attracted to one another through the magnetic in the receiving mount and magnetic plate in the magnet mount. The magnet mount and receiving mount engage on another when positioned in close proximity. Corresponding protrusions and groove in the magnet mount and receiving mount align allowing an electrical connection between the magnet mount and receiving mount for powering the electronic device or temperature regulating mount. External power is supplied to the receiving mount. The receiving mount may incorporated into any support structure designed to engage any number of objects or rest on a surface.

[0166] The magnet mount can be used in connection with a number of different types of cases and can be designed to provide not only power to electronic devices, but also data, which can be particularly helpful in applications where the use of RF, WiFi or Bluetooth would be prohibited or undesirable for security or reliability reasons.

[0167] FIGS. **66-69** illustrate yet another example of a magnet mount assembly **6700** used in connection with an electronic device **6602** to provide power and/or data to an electronic device **6602**, such as an iPad or iPhone. Here, FIG. **66** illustrates a magnet mount **6606** having a plurality of electrical and/or data connections **6608** secured to the back of a case **6600**. The plurality of connections **6608** can be used to transfer both power and data to the electronic device **6602**.

[0168] In this example, the case **6600** further includes a rechargeable battery pack **6604** affixed to the back of the case **6600**, and the magnet mount **6606** includes six connector **6608**, which are shown as pogo pins. Those skilled in that art will recognize that in this example, as well as those set forth above, other types of electrical and data connectors **6608** can be provided, including but not limited to contact plates and aviation plug type connections. In this example, two connectors **6608** may be used to supply power to the electronic device **6602** and the remaining four connectors **6608** may be used to transfer data.

[0169] Those skilled in the art will recognize that any number of pogo pins **6608** or other type of connector can be provided to transfer both power and/or data. Where additional data or power is required, additional connectors **6608** may be further required. While the illustrated example includes six connectors **6608**, some applications may require less, such as two or four, and other applications, such that those used for high-speed data or that require more power, may require as many as eight, ten, twelve or even more connectors.

[0170] As with prior described examples, the magnet mount **6606** includes a magnet plate **6610** for attracting a magnet receiving mount **6702**. In particular, the magnet mount assembly **6700**, as illustrated in FIGS. **66** and **67**, includes the magnet mount **6606** and the receiving mount **6702**. FIG. **67** is a front side perspective view of another example of a magnet mount assembly **6700**, and FIG. **68** is a rear side perspective view of the magnet mount assembly **6700** of FIG. **67**. The front of magnet mount **6606** is secured to the back of the case **6600** and the back of the magnet mount **6606** is connected to the front of the receiving mount **6702**. The back of the magnet mount **6606** may connect to the front of receiving mount **6702** by the attraction of the magnetic plate **6610** to magnets **6704**.

[0171] When the back of the magnet mount **6606** is connected to the front of the receiving mount **6702** by magnetic force, as illustrated in FIG. **69**, a connection is also made between the male pogo pins **6608** and female pogo pins **6708**. As described above, male pogo pins **6608** usually take the form of a slender cylinder containing a spring-loaded pin and when pressed with female pogo pins **6708**,

the points at each end of the male pogo pins **6608** make secure contacts with the electrical components, such as those on printed circuit boards housing within the magnet mount **6606** and receiving mount **6702** (as describe above), thereby electrically connecting them together.

[0172] In operation, external power and data may be provided to the receiving mount **6702** via a plug(s) or port(s) that supply power and data, which in the illustrated example, is a single USB-C port **6706**, which is capable of providing both power and data to the circuitry in the receiving mount **6702** and female pogo pins **6708**. The power and data from the female pogo pins **6708** is then received by male pogo pins **6608** and transmitted to power and/or data port(s) **6710** on the front of the magnet mount **6606**, which in this case is also a USB-C port. A cable connected to USB-C port **6710** may then interface at its opposing end with the electronic device **6602** and provide charging and/or data to any electronic device **6602** located within casing **6600**, in the same manner as the cables provide power, as described above.

[0173] Those skilled in the art will recognize that the invention is not limited to the use of USB-C ports and that other plugs, ports, connectors, and adapters may be used to receive and supply power and data from the receiving mount **6702** to the magnet mount **6606** and the electronic device **6602**. Further, hubs may be connected to the port **6706** to allow the electronic device **6602** to communicate with various data sources and to allow a wired connection with peripheral devices, such as a mouse and keyboard, which can even receive power from the electronic device **6602**. When the receiving mount **6702** is connected to a hub, the peripheral devices, like a mouse and keyboard can remain connected despite the electronic device **6602** being undocked from the receiving mount **6702**.

[0174] FIG. **69** is a bottom rear perspective view of the magnet mount assembly **6700** of FIG. **67** mounted on a case **6600**. Here, the magnet mount assembly **6700** is shown attached directly to the back of the case **6600**, with the receiving mount **6702** in alignment with the mounting member **6606**. The port **6706** can be seen on the underside of the receiving mount **6702** to supply data and power to the electronic device **6602** via the mounting member **6606** as further described above in connection with this and other illustrated embodiments.

[0175] Other features may also be optionally implemented into the cooling mounts described herein, without departing from the scope of the invention. For example, other cooling units or mechanism for cooling the portable electronic device, such as induction cooling, may be used in addition to or in lieu of fans. Depending upon the type of cooling unit, contact may be desired between the electronic device and the cooling unit **105**. Further, the cooling mounts may include WiFi access, Bluetooth and other hardware and software to facilitate communications between the cooling mounts and the portable electronic devices and an internal or external network. Bluetooth, WiFi, radio and or other wired or wireless communications may be established between the portable electronic devices and cooling mounts to increase functionality by placing the cooling mounts in signal communication with the portable electronic devices. For example, speakers or other accessories may be included in the cooling mounts that are accessible through communication between the portable electronic devices and cooling mounts.

[0176] It will be understood that the component parts of the system taught herein may further be in signal communication with one another. The term "in signal communication" as used herein means that two or more systems, devices, components, modules, or sub-modules are capable of communicating with each other via signals that travel over some type of signal path. The signals may be communication, power, data, or energy signals, which may communicate information, power, or energy from a first system, device, component, module, or sub-module to a second system, device, component, module, or sub-module along a signal path between the first and second system, device, component, module, or sub-module. The signal paths may include physical, electrical, magnetic, electromagnetic, electrochemical, optical, wired, or wireless connections. The signal paths may also include additional systems, devices, components, modules, or sub-modules between the first and second system, device, component, module, or sub-module.

[0177] More generally, terms such as "communicate" and "in . . . communication with" (for example, a first component "communicates with" or "is in communication with" a second component) are used herein to indicate a structural, functional, mechanical, electrical, signal, optical, magnetic, electromagnetic, ionic or fluidic relationship between two or more components or elements. As such, the fact that one component is said to communicate with a second component is not intended to exclude the possibility that additional components may be present between, and/or operatively associated or engaged with, the first and second components. For purposes of this application, the hardware and/or software necessary to establish signal communication between two components shall be "communications components."

[0178] The foregoing description of an implementation has been presented for purposes of illustration and description. It is not exhaustive and does not limit the claimed inventions to the precise form disclosed. Modifications and variations are possible in light of the above description or may be acquired from practicing the invention. The claims and their equivalents define the scope of the invention.

What is claimed is:

1. A magnet mount, the magnet mount comprising a magnet plate, a magnet plate securing mount having a central portion for receiving the magnet plate, where the magnet plate securing mount further includes at least one electrical connection exposed through an opening in the magnet plate and at least one data connection, where the electrical connection includes electrical connectors for receiving power from a power supply and cable connection for interfacing with a portable electronic device to provide power to the portable electronic device through the magnet mount, and where the at least one data connection receives data and transmits data to the portable electronic device through the cable connection.

2. The magnet mount of claim **1** further including a receiving mount for mating with the magnet mount, where the receiving mount includes magnets and at least one second electrical connection for mating with the at least one electrical connection on the magnet mount for supplying power to the magnet mount.

3. The magnet mount of claim **2** where the receiving mount further includes at least one second data connection for mating with the at least on data connection on the magnet mount for supply data to the magnet mount.

4. The magnet mount of claim **1** where the magnet plate securing mount further includes at least two opposing handles with one handle extending outward from one side of the central portion and the other handling extending outward from the opposing side of the central portion.

5. The magnet mount of claim **1** further including a fastening mechanism for fastening the back of the magnet mount to a case that engages the portable electronic device.

6. A magnet mount assembly, the magnet mount assembly comprising a magnet mount having a magnet plate mounted to a central portion of the magnet mount, the magnet mount further including an electrical connection exposed through an opening in the magnet plate, where the electrical connection includes at least two electrical connectors for receiving power from a power supply and at least two data connection for sending and receiving data and at least one cable connection for interfacing with a portable electronic device to provide power and data to the portable electronic devices through the magnet mount; and

a receiving mount for mating with the magnet mount, where the receiving mount includes magnets that are magnetically attracted to the magnet plate on the magnet mount and at least two second electrical connection and at least two second data connections for mating with the at least two electrical connections and the at least two data connection on the magnet mount for supplying power and data to the magnet mount.

7. The magnet mount assembly of claim **6** where the receiving mount further includes an electronic port for receiving data and power.

8. The magnet mount assembly of claim **7** where the electronic port is a USB-C port.

9. The magnet mount assembly of claim **6** where the magnet mount includes two opposing handles where one handle extends outward from one side of the central portion and the other handle extends outward from the opposing side of the central portion.

10. The magnet mount assembly of claim **6** further including a fastening mechanism for fastening the back of the magnet mount to a case that engages an electronic device.

* * * * *