US 20250264021A1

(19) **United States**

(12) **Patent Application Publication** (10) **Pub. No.: US 2025/0264021 A1**

Birchwood et al. (43) **Pub. Date: Aug. 21, 2025**

(54) **ESTIMATION OF THE STATIC BULK MODULUS OF A ROCK FROM A PRESSUREMETER TEST**

(71) Applicant: **Schlumberger Technology Corporation**, Sugar Land, TX (US)

(72) Inventors: **Richard A. Birchwood**, Cambridge, MA (US); **Jean Elkhoury**, Cambridge, MA (US); **Romain Prioul**, Cambridge, MA (US)

(21) Appl. No.: **19/054,346**

(22) Filed: **Feb. 14, 2025**

Related U.S. Application Data

(60) Provisional application No. 63/553,754, filed on Feb. 15, 2024.

Publication Classification

(51) **Int. Cl.**
E21B 49/00 (2006.01)
G01N 3/08 (2006.01)

(52) **U.S. Cl.**
CPC ***E21B 49/006*** (2013.01); ***G01N 3/08*** (2013.01); *G01N 2203/0075* (2013.01)

(57) **ABSTRACT**

A method including obtaining measurements of one or more first parameters of a packer during an actuation of the packer in a borehole, obtaining measurements of one or more second parameters related to a geometrical change in the borehole caused by the actuation of the packer, and analyzing a plurality of first and second parameters, a plurality of derivatives of the first and second parameters, or a combination thereof to estimate at least a static bulk modulus (K) of a geological formation surrounding the borehole.

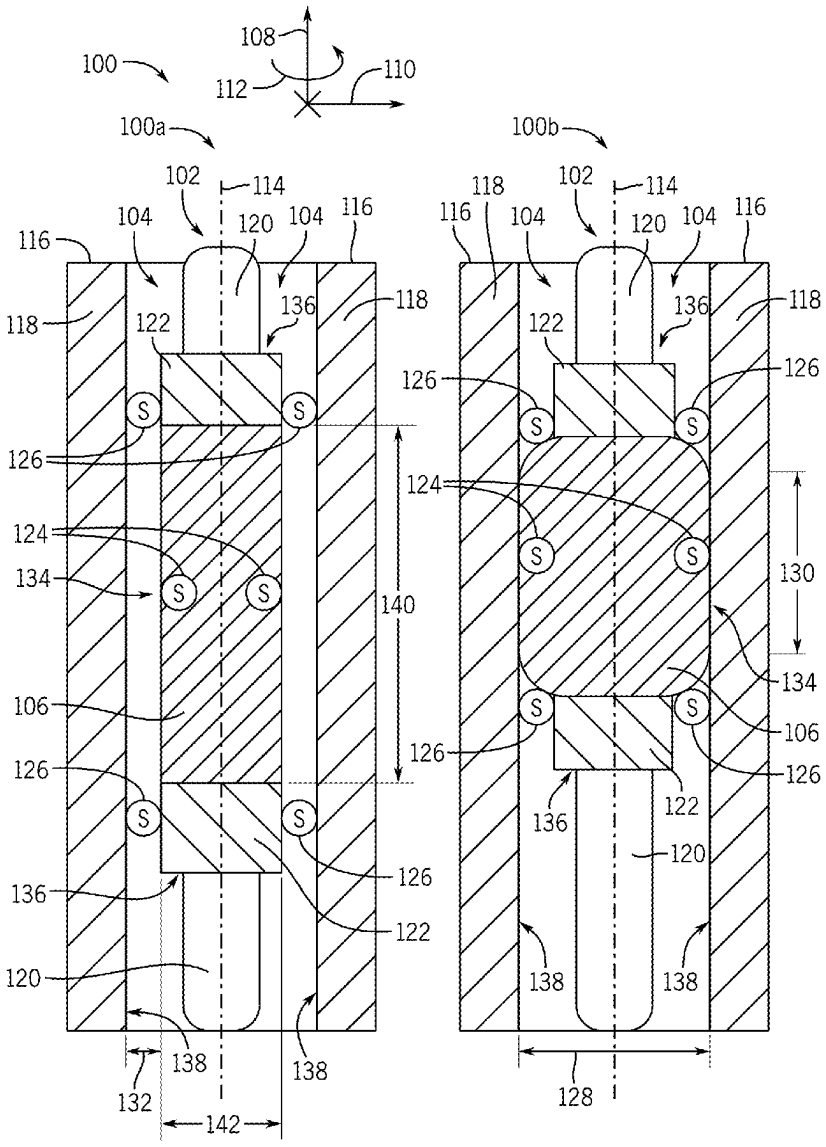

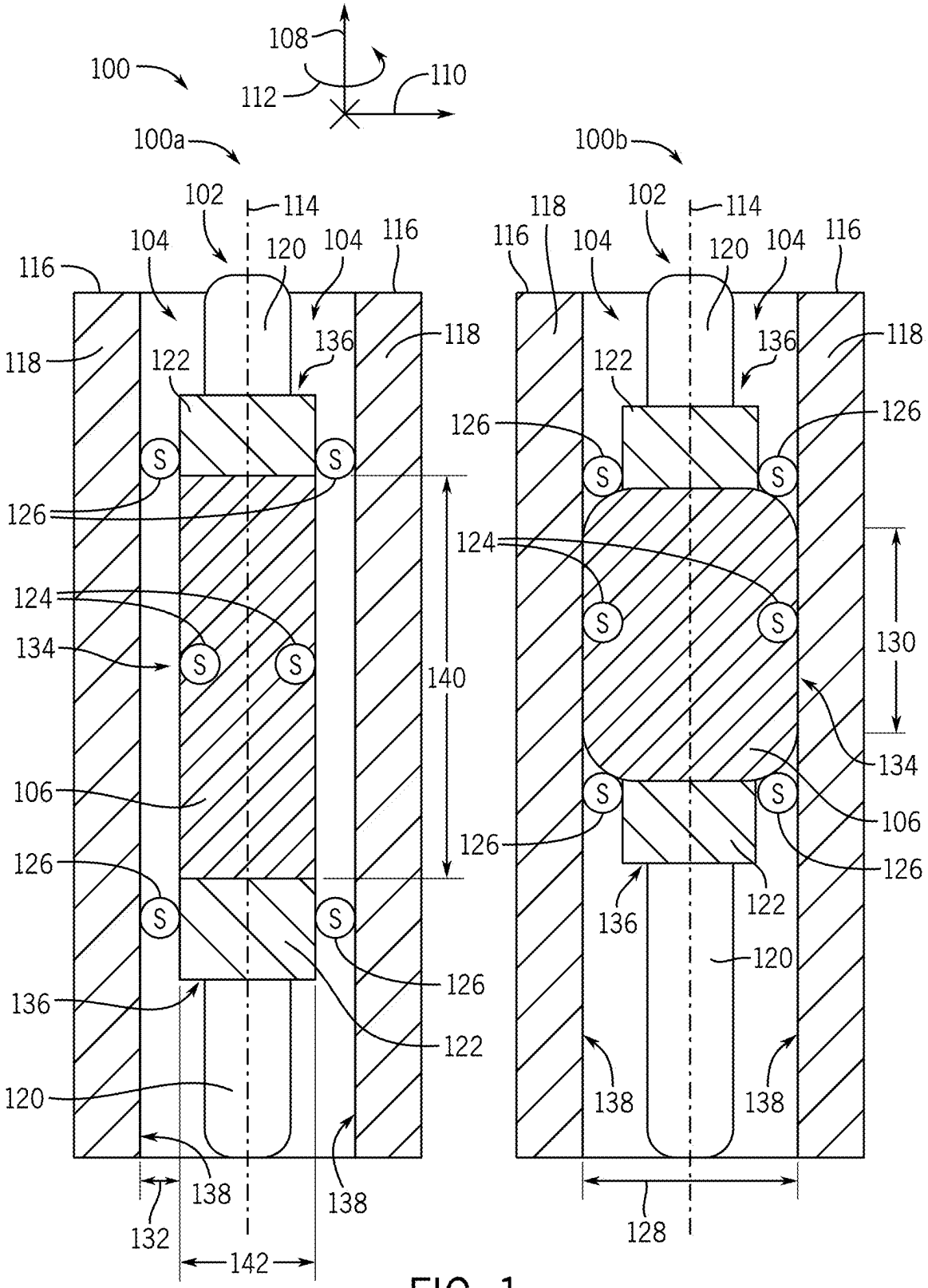
100
108
112
110
100a
100b
102
114
104
120
116
118
122
136
126
124
134
140
106
130
138
132
142
128
S

FIG. 1

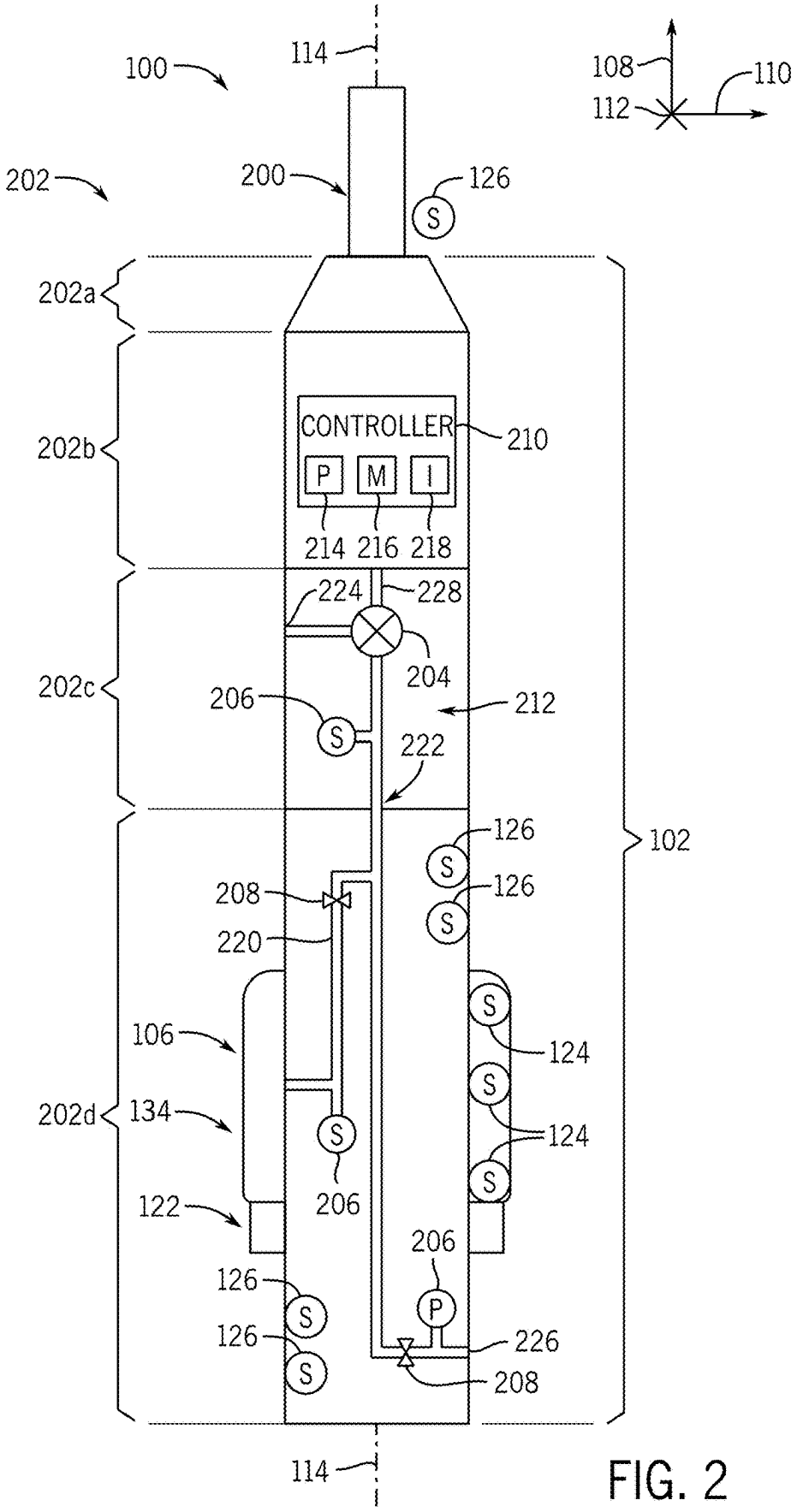
100
114
108
110
112
202
200
126
S
202a
202b
CONTROLLER
210
P
M
I
214
216
218
224
228
204
202c
206
212
222
126
102
208
220
106
124
202d
134
122
206
126
P
226
208
114

FIG. 2

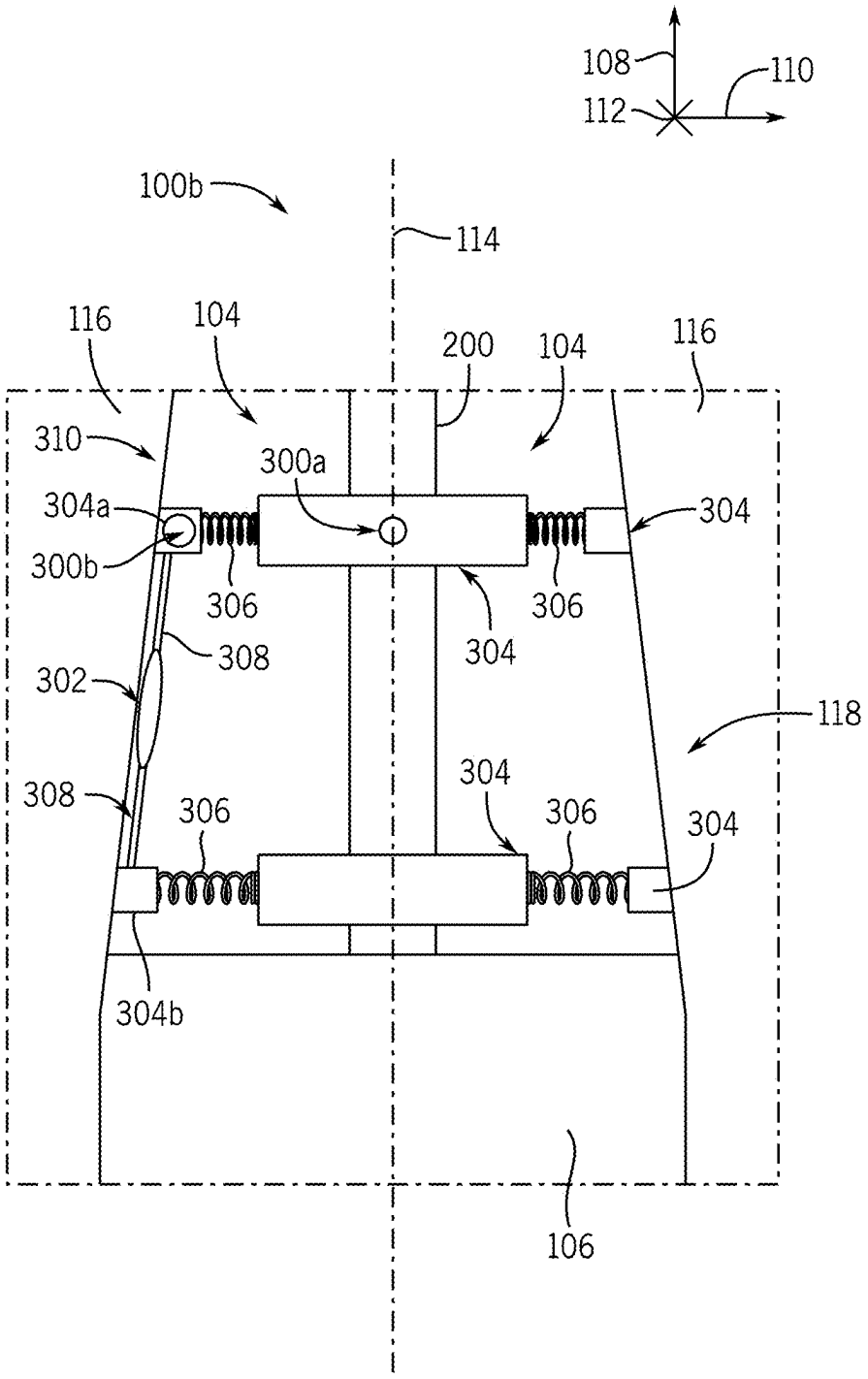
108
110
112
100b
114
116
104
200
104
116
310
300a
304a
304
300b
306
306
304
308
302
118
304
308
306
306
304
304b
106

FIG. 3

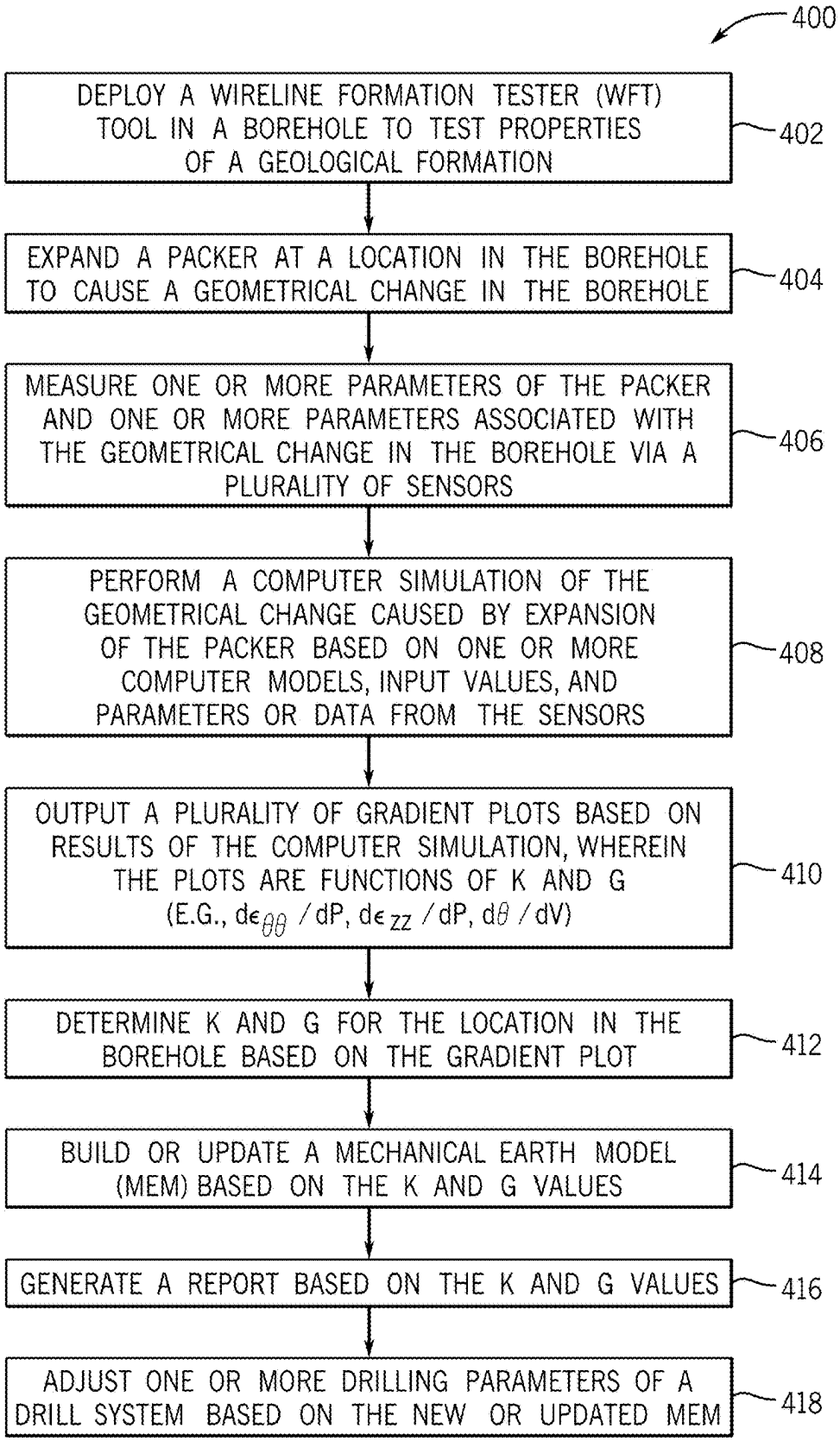
400
DEPLOY A WIRELINE FORMATION TESTER (WFT) TOOL IN A BOREHOLE TO TEST PROPERTIES OF A GEOLOGICAL FORMATION
402
EXPAND A PACKER AT A LOCATION IN THE BOREHOLE TO CAUSE A GEOMETRICAL CHANGE IN THE BOREHOLE
404
MEASURE ONE OR MORE PARAMETERS OF THE PACKER AND ONE OR MORE PARAMETERS ASSOCIATED WITH THE GEOMETRICAL CHANGE IN THE BOREHOLE VIA A PLURALITY OF SENSORS
406
PERFORM A COMPUTER SIMULATION OF THE GEOMETRICAL CHANGE CAUSED BY EXPANSION OF THE PACKER BASED ON ONE OR MORE COMPUTER MODELS, INPUT VALUES, AND PARAMETERS OR DATA FROM THE SENSORS
408
OUTPUT A PLURALITY OF GRADIENT PLOTS BASED ON RESULTS OF THE COMPUTER SIMULATION, WHEREIN THE PLOTS ARE FUNCTIONS OF K AND G (E.G., $d\epsilon_{\theta\theta}/dP$, $d\epsilon_{zz}/dP$, $d\theta/dV$)
410
DETERMINE K AND G FOR THE LOCATION IN THE BOREHOLE BASED ON THE GRADIENT PLOT
412
BUILD OR UPDATE A MECHANICAL EARTH MODEL (MEM) BASED ON THE K AND G VALUES
414
GENERATE A REPORT BASED ON THE K AND G VALUES
416
ADJUST ONE OR MORE DRILLING PARAMETERS OF A DRILL SYSTEM BASED ON THE NEW OR UPDATED MEM
418

FIG. 4

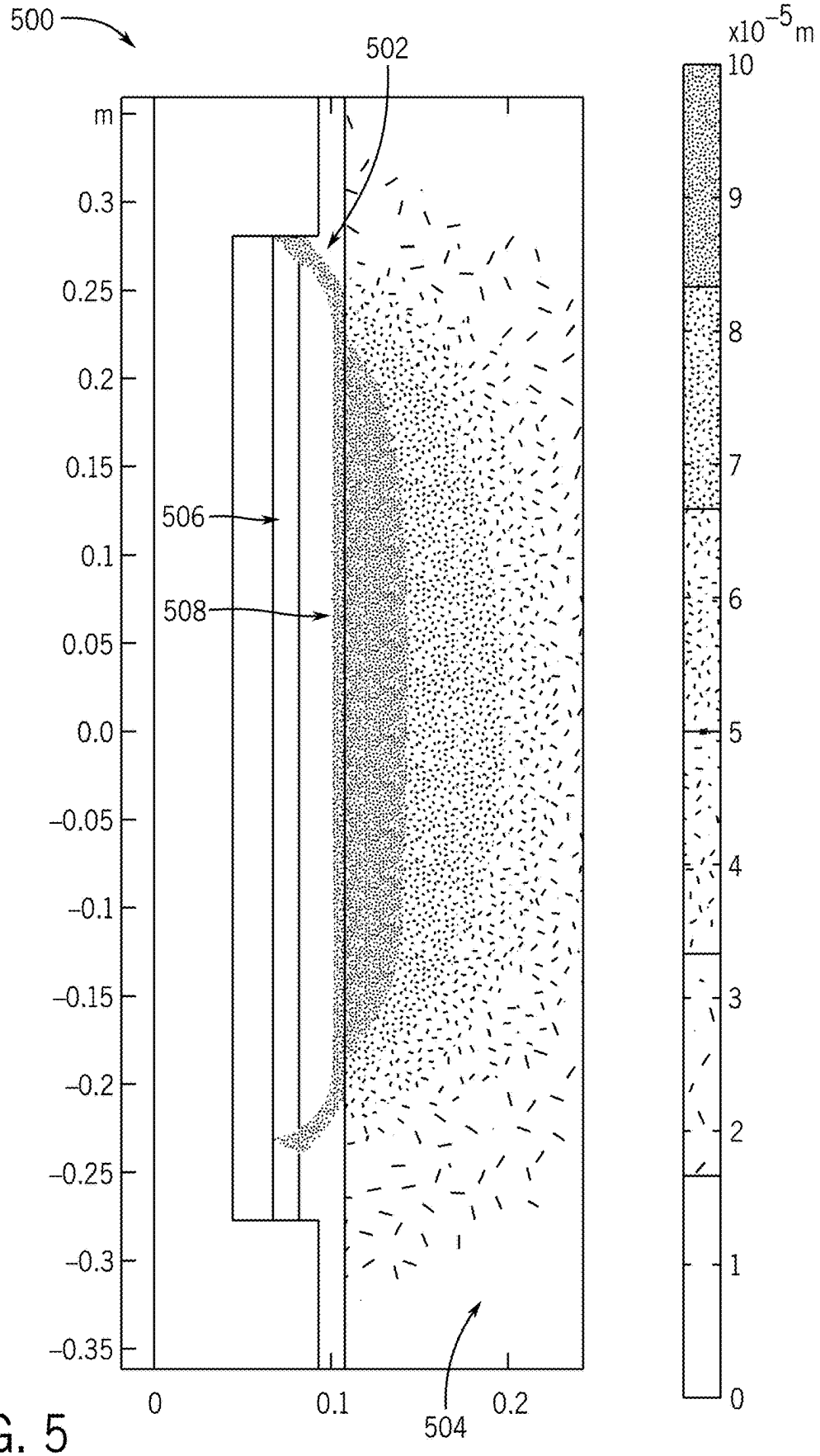
500
502
m
0.3
0.25
0.2
0.15
0.1
0.05
0.0
−0.05
−0.1
−0.15
−0.2
−0.25
−0.3
−0.35
506
508
0
0.1
0.2
504
x10−5 m
10
9
8
7
6
5
4
3
2
1
0

FIG. 5

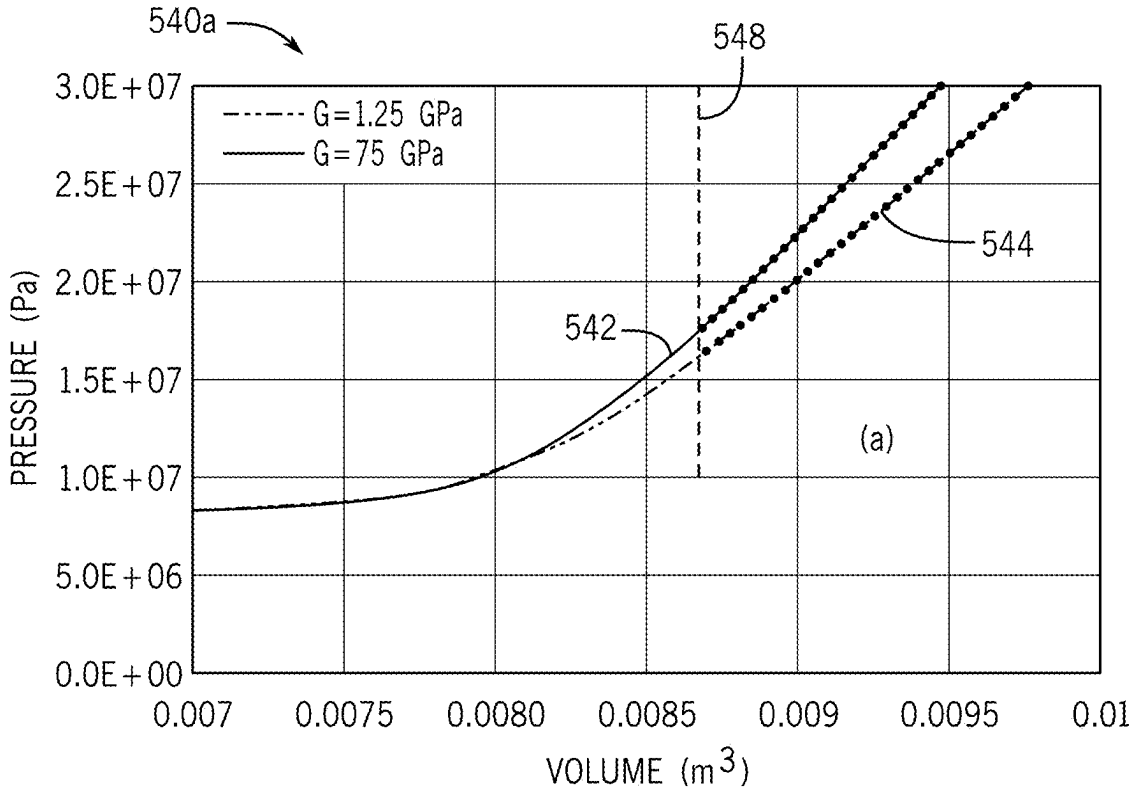
540a
548
3.0E+07
2.5E+07
2.0E+07
1.5E+07
1.0E+07
5.0E+06
0.0E+00
PRESSURE (Pa)
G=1.25 GPa
G=75 GPa
542
544
(a)
0.007
0.0075
0.0080
0.0085
0.009
0.0095
0.01
VOLUME (m3)

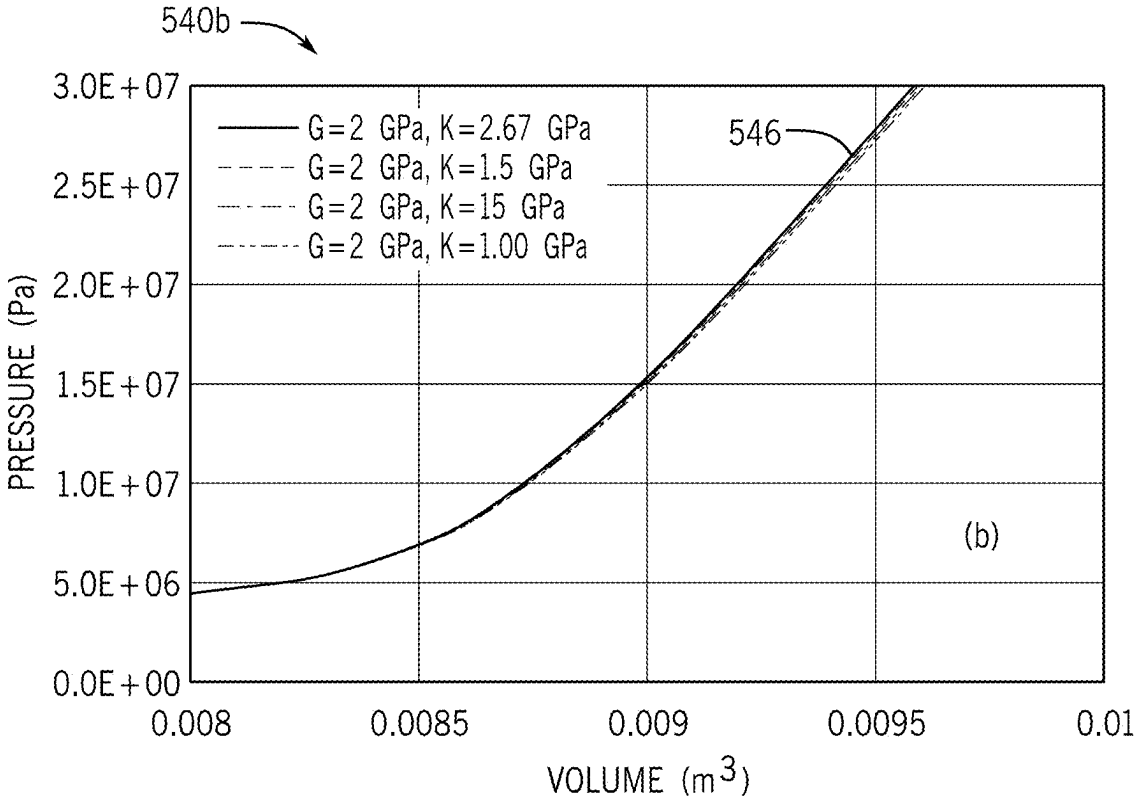
540b
3.0E+07
2.5E+07
2.0E+07
1.5E+07
1.0E+07
5.0E+06
0.0E+00
PRESSURE (Pa)
G=2 GPa, K=2.67 GPa
G=2 GPa, K=1.5 GPa
G=2 GPa, K=15 GPa
G=2 GPa, K=1.00 GPa
546
(b)
0.008
0.0085
0.009
0.0095
0.01
VOLUME (m3)

FIG. 6

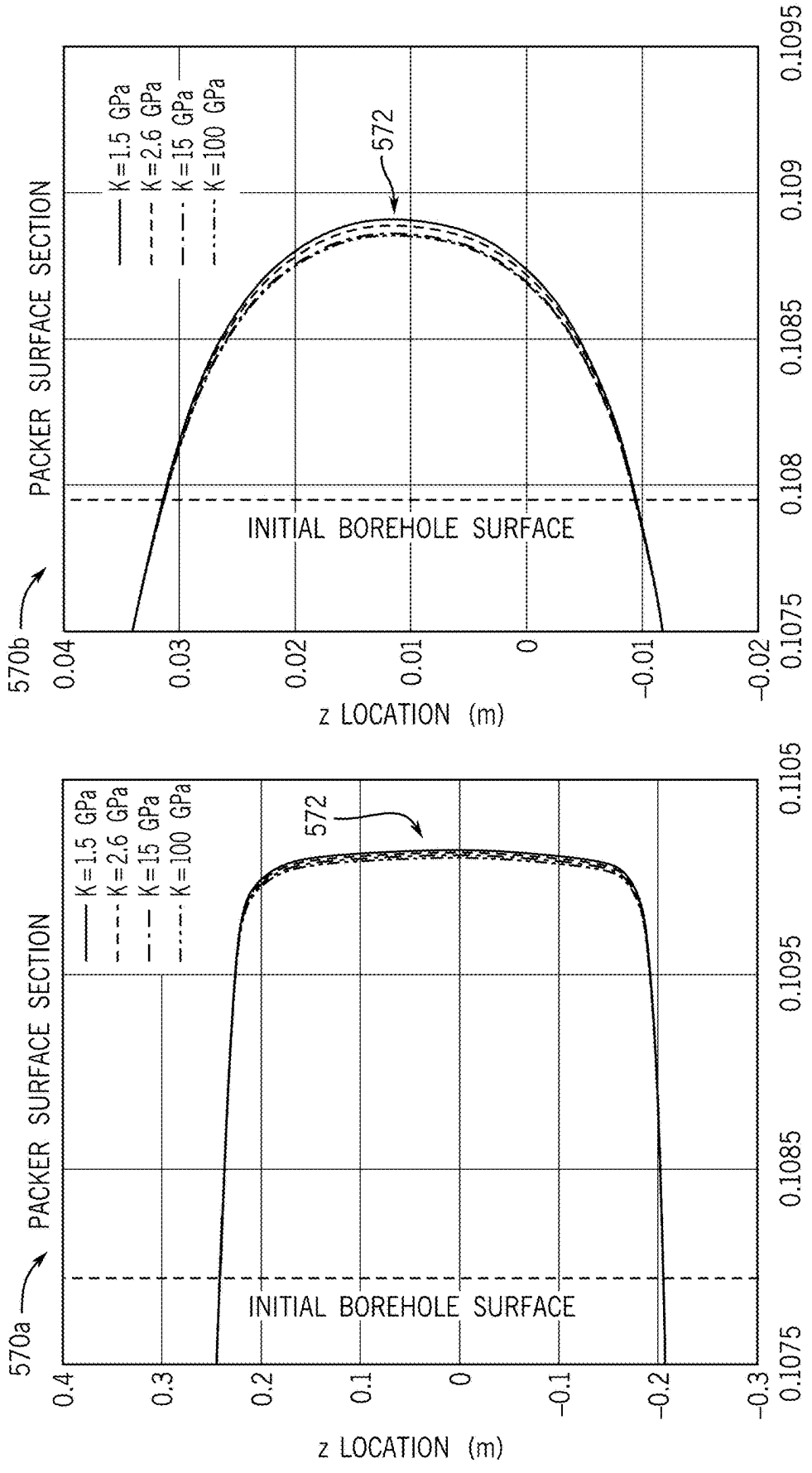
570b
PACKER SURFACE SECTION
K=1.5 GPa
K=2.6 GPa
K=15 GPa
K=100 GPa
572
INITIAL BOREHOLE SURFACE
0.04
0.03
0.02
0.01
0
−0.01
−0.02
z LOCATION (m)
0.1095
0.109
0.1085
0.108
0.1075
r LOCATION (m)
570a
PACKER SURFACE SECTION
K=1.5 GPa
K=2.6 GPa
K=15 GPa
K=100 GPa
572
INITIAL BOREHOLE SURFACE
0.4
0.3
0.2
0.1
0
−0.1
−0.2
−0.3
z LOCATION (m)
0.1105
0.1095
0.1085
0.1075
r LOCATION (m)

FIG. 7

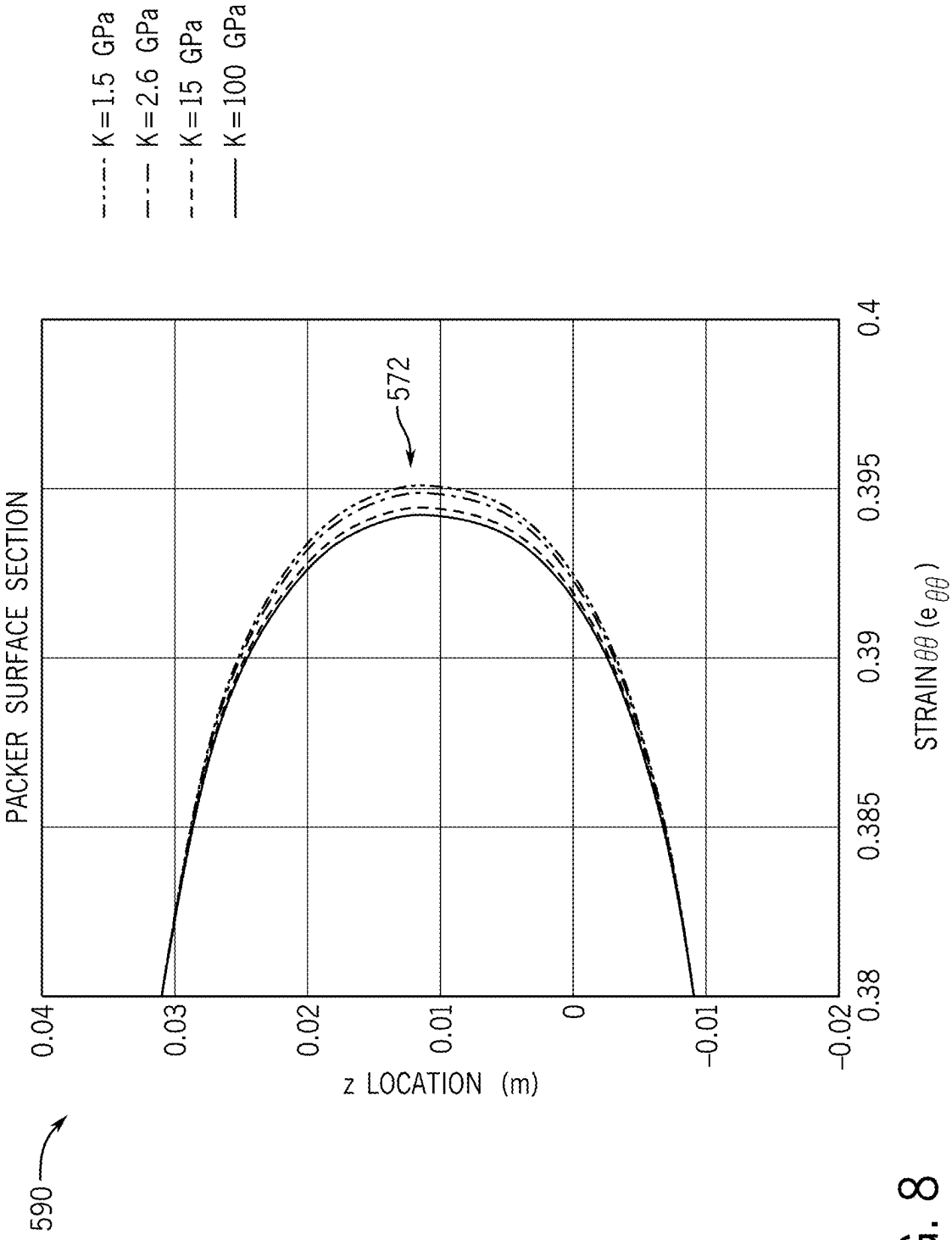
K=1.5 GPa
K=2.6 GPa
K=15 GPa
K=100 GPa
572
PACKER SURFACE SECTION
z LOCATION (m)
STRAIN θθ (e θθ)
0.04
0.03
0.02
0.01
0
−0.01
−0.02
0.4
0.395
0.39
0.385
0.38
590

FIG. 8

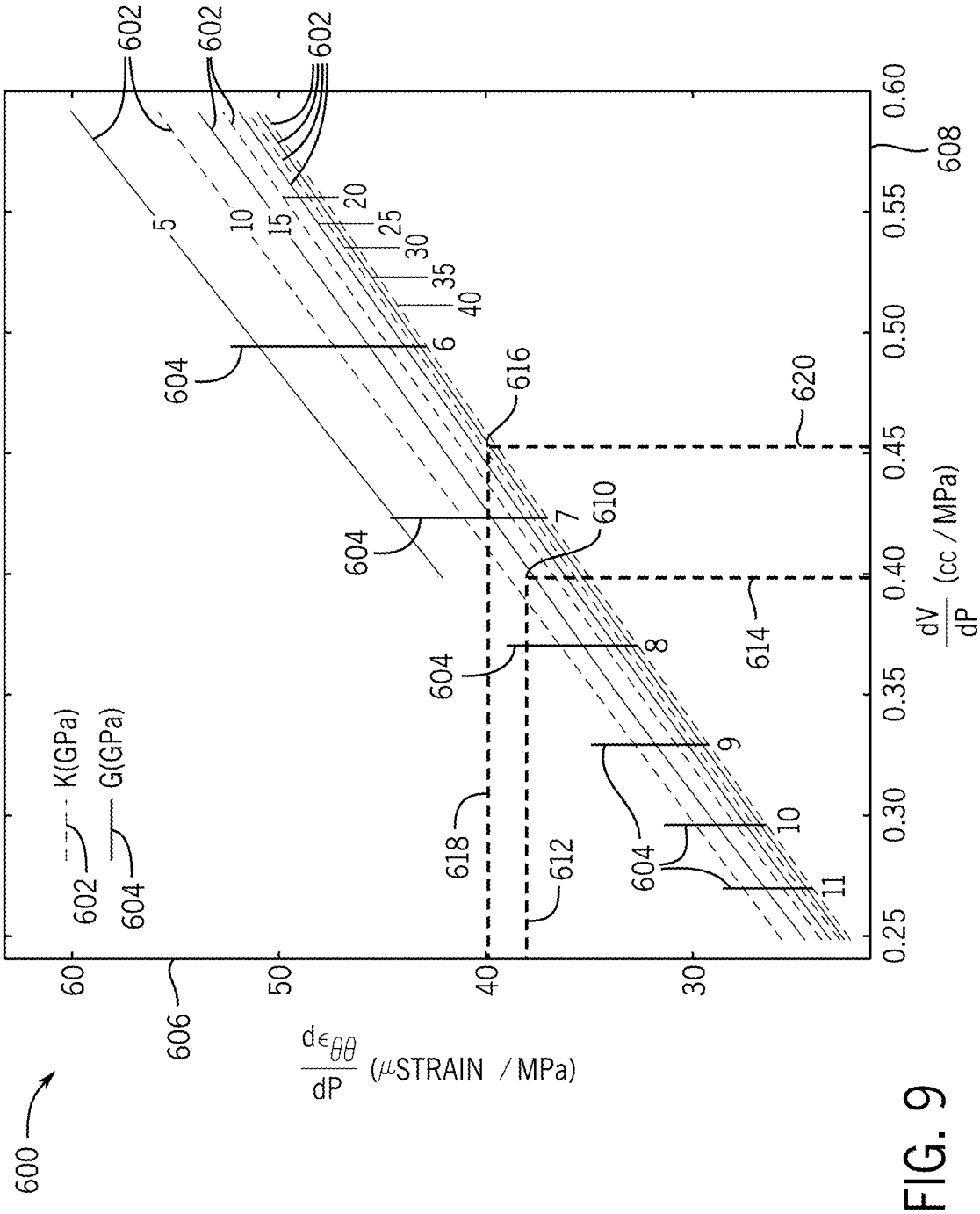
600
602
604
K(GPa)
G(GPa)
606
608
610
612
614
616
618
620
5
10
15
20
25
30
35
40
6
7
8
9
10
11
60
50
40
30
0.25
0.30
0.35
0.40
0.45
0.50
0.55
0.60
$\frac{d\epsilon_{\theta\theta}}{dP}$ (μSTRAIN / MPa)
$\frac{dV}{dP}$ (cc / MPa)

FIG. 9

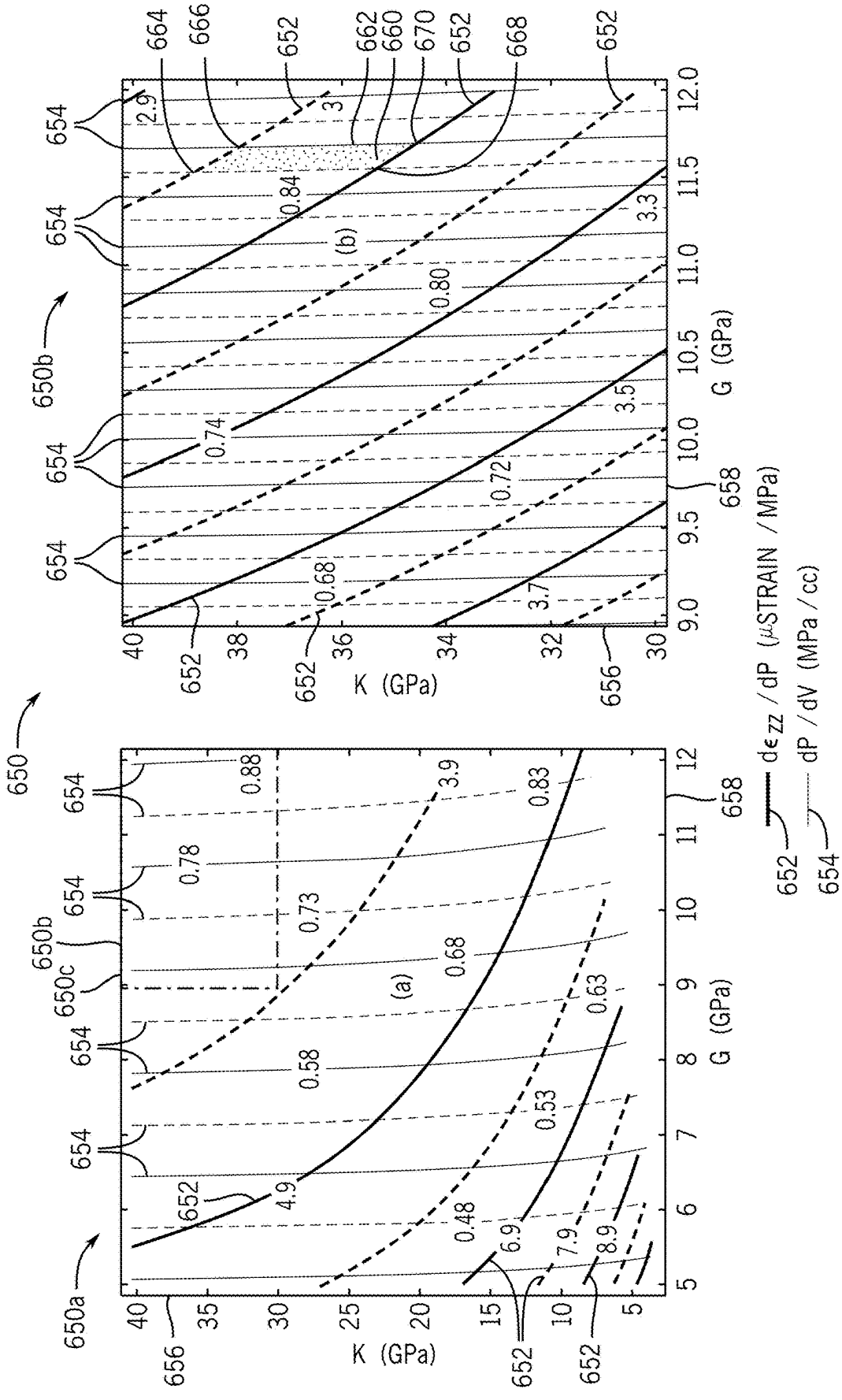
650
650a
650b
650c
654
656
658
652
664
666
652
662
660
670
652
668
652
2.9
3
0.84
0.74
0.80
3.3
0.72
3.5
0.68
3.7
(b)
(a)
0.88
3.9
0.83
0.78
0.73
0.68
0.58
0.63
0.53
0.48
4.9
6.9
7.9
8.9
K (GPa)
G (GPa)
dϵzz / dP (μSTRAIN / MPa)
dP / dV (MPa / cc)

FIG. 10

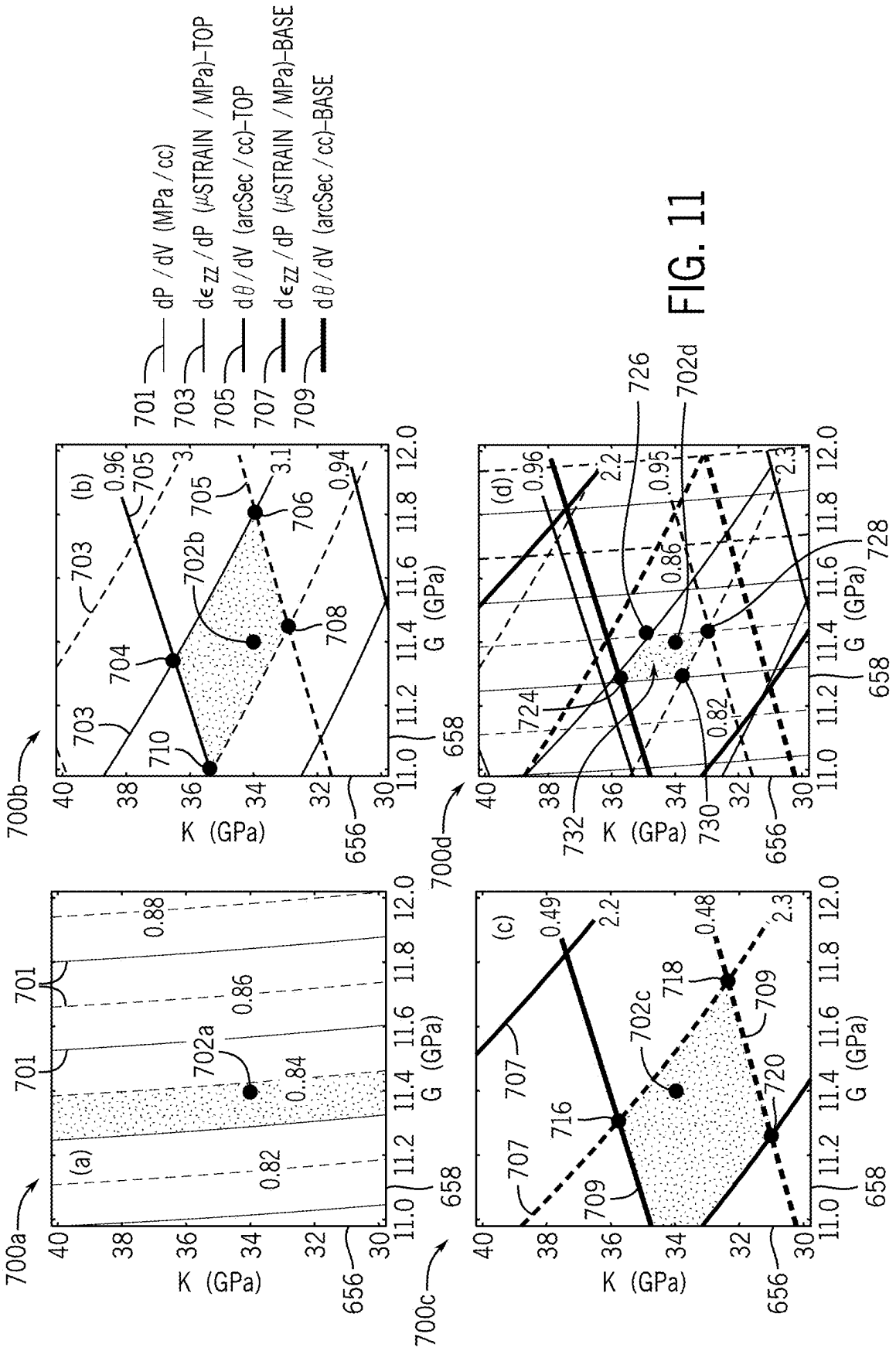
701 dP / dV (MPa / cc)
703 dε zz / dP (μSTRAIN / MPa)–TOP
705 dθ / dV (arcSec / cc)–TOP
707 dε zz / dP (μSTRAIN / MPa)–BASE
709 dθ / dV (arcSec / cc)–BASE
700a
700b
700c
700d
(a)
(b)
(c)
(d)
K (GPa)
G (GPa)
656
658
702a
702b
702c
702d
704
706
708
710
716
718
720
724
726
728
730
732

FIG. 11

ESTIMATION OF THE STATIC BULK MODULUS OF A ROCK FROM A PRESSUREMETER TEST

CROSS-REFERENCE TO RELATED APPLICATION

[0001] The present application is a U.S. Non-Provisional Patent application claiming benefit of U.S. Provisional Patent Application No. 63/553,754, entitled "STATIC BULK MODULUS ESTIMATION", filed Feb. 15, 2024, which is herein incorporated by reference in its entirety.

BACKGROUND

[0002] The present disclosure relates generally to systems and methods for static bulk modulus estimation.

[0003] The static bulk modulus of elasticity of a rock (K), is an important design parameter in geomechanics. It characterizes the ability of a rock to resist deformation when subjected to compressive stress. It appears, either directly or indirectly in equations governing wellbore stability, hydraulic fracture propagation, reservoir deformation, and sand production. Also appearing in these equations is its companion elastic property known as the static shear modulus of elasticity of a rock, G, which measures the capacity of a rock to resist shear stress. The parameter G can be measured in a borehole using a standard pressuremeter test.

[0004] Pressuremeter testing is a well-established technique for measuring soil mechanical properties and stresses with its earliest conceptions dating back to the 1930's. Although it was originally developed for soil or tunneling mechanics applications, there is increasing interest nowadays in using this technique to evaluate rocks in deep subsurface formations relevant to multiple applications such as resources extraction (O&G), fluid storage, CO2 sequestration. The pressuremeter test involves placing a cylindrical (or sometimes cone-shaped) membrane within a borehole, inflating it with a fluid (e.g., oil, water, gas) and recording the pressure-volume (P-V) response as the soil or rock formation is deformed by the tool. Various attributes of the formation are then inferred from this P-V curve. These have included the shear modulus, G, the drained and undrained shear strength, the total horizontal stress, and the coefficient of horizontal consolidation. The soil state parameter can also be measured from which friction and dilation angles could be derived via empirical correlations. The pre-bored pressuremeter device of interest in this application was originally patented by Menard (1960) and can be distinguished from self-boring or pushing-in pressuremeters on the basis that a borehole must be drilled independently before the pre-boring device can be deployed. Pre-bored pressuremeters are also referred to as flexible dilatometers, in contrast to borehole jacks which fall under the category of stiff dilatometers.

[0005] A key principle behind standard interpretation of cylindrical pressuremeter tests is that formation properties can be inferred by assuming that the pressuremeter induces uniform radial expansion of an infinitely long cylinder. This makes it possible to apply theories based on the plane-strain assumption, such as elastic cavity theory, to relate soil properties to the measured P-V response. Based on this assumption, the measured formation stiffness (i.e., slope of the pressure versus volume curve) in the elastic deformation regime depends on G and is independent of K. The finite length of pressuremeter devices is regarded to be a complication, which must be corrected for theoretically, or mitigated by using longer packers, as it introduces two-dimensional effects.

[0006] However, there is presently no established technique for measuring K in situ. In contrast, the dynamic bulk modulus and dynamic shear modulus are routinely obtained via sonic logging. Moreover, the standard method for measuring K is to extract cores and test them in a laboratory. This is usually time-consuming, expensive, and results may be compromised by damage incurred during coring or subsequent storage of the rock. Therefore, there is a need for a cost and time-saving method or system for measuring K in situ.

BRIEF DESCRIPTION

[0007] Certain embodiments commensurate in scope with the originally claimed invention are summarized below. These embodiments are not intended to limit the scope of the claimed invention, but rather these embodiments are intended only to provide a brief summary of possible forms of the invention. Indeed, the invention may encompass a variety of forms that may be similar to or different from the embodiments set forth below.

[0008] In certain embodiments, a method including obtaining measurements of one or more first parameters of a packer during an actuation of the packer in a borehole, obtaining measurements of one or more second parameters related to a geometrical change in the borehole caused by the actuation of the packer, and analyzing a plurality of first and second parameters, a plurality of derivatives of the first and second parameters, or a combination thereof to estimate at least a static bulk modulus (K) of a geological formation surrounding the borehole.

[0009] In certain embodiments, a tangible and non-transitory machine readable medium including instructions executable by one or more processors to perform operations including obtaining measurements of one or more first parameters of a packer during an actuation of the packer in a borehole, obtaining measurements of one or more second parameters indicative of a geometrical change in the borehole caused by the actuation of the packer, and analyzing a plurality of first and second parameters, derivatives based on the plurality of first and second parameters, or a combination thereof to estimate at least a static bulk modulus (K) of a geological formation surrounding the borehole.

[0010] In certain embodiments, a system including a test tool configured to deploy into a borehole. The test tool includes a packer, a plurality of sensors, and a controller having a processor, a memory, and instructions stored on the memory and executable by the processor. The controller performs operations including obtaining measurements of one or more first parameters of the packer during an actuation of the packer in the borehole via one or more first sensors of the plurality of sensors. The controller also performs operations including obtaining measurements of one or more second parameters indicative of a geometrical change in the borehole caused by the actuation of the packer via one or more second sensors of the plurality of sensors. The controller also performs operations including analyzing a plurality of derivatives associated with the first and second parameters to estimate at least a static bulk modulus (K) of a geological formation surrounding the borehole locally on the controller and/or remotely on a computer separate from the test tool.

DRAWINGS

[0011] These and other features, aspects, and advantages of the present disclosure will become better understood when the following detailed description is read with reference to the accompanying drawings in which like characters represent like parts throughout the drawings, wherein:

[0012] FIG. **1** is a schematic of an embodiment of a wireline formation tester (WFT) tool in a borehole, illustrating a packer of the WFT tool changing in shape in response to a hydraulic actuation between a deflated configuration and an expanded configuration;

[0013] FIG. **2** is schematic of an embodiment of the WFT tool of FIG. **1**, illustrating control of the hydraulic actuation of the packer;

[0014] FIG. **3** is a schematic of an embodiment of the WFT tool of FIGS. **1** and **2**, illustrating a top portion of the WFT tool having the packer in the expanded configuration and a strain and tilt sensor above the packer;

[0015] FIG. **4** is a flow chart of an embodiment of a process of determining the static shear modulus (G) and the static bulk modulus (K) using the WFT tool of FIGS. **1-3**;

[0016] FIG. **5** is a diagram portraying a finite element model of a pressuremeter test using the WFT tool of FIGS. **1-3**, in accordance with the present disclosure;

[0017] FIG. **6** are two graphs displaying sensitivity tests to determine the effect of (a) the formation shear modulus, G, and (b) the formation bulk modulus (K) on a pressure-volume curve measured during a pressuremeter test using the WFT tool of FIGS. **1-3**, in accordance with the present disclosure;

[0018] FIG. **7** are two graphs displaying sensitivity tests to determine the effect of the static bulk modulus (K) on a vertical profile of the packer of the WFT tool of FIGS. **1-3**. The position of the undisturbed borehole wall is shown for reference (dashed vertical line). The internal pressure in the packer was 30 MPa. (a) Full length packer (L/D ratio=3.4). (b) quarter-length packer (L/D ratio=0.86), in accordance with the present disclosure;

[0019] FIG. **8** is a graph displaying a sensitivity test to determine the effect of the static bulk modulus (K) on the circumferential strain of the outermost surface of a quarter-length packer (L/D ratio=0.86). The internal pressure in the packer was 30 MPa, in accordance with the present disclosure;

[0020] FIG. **9** is an embodiment of a contour plot of a plurality of contour lines of K and a plurality of contour lines of G as functions of $de_{\theta\theta}/dP$ and dV/dP, enabling a determination of K and G using measurements from the WFT tool of FIGS. **1-3**;

[0021] FIG. **10** is an embodiment of a contour plot of a plurality of contour lines of de_{zz}/dP and a plurality of contour lines of a dP/dV as a function of K and G, enabling a determination of K and G using measurements from the WFT tool of FIGS. **1-3**; and

[0022] FIG. **11** is a series of gradient plots illustrating inversion of K and G using the WFT tool of FIGS. **1-3**, wherein the plots may be stacked to more precisely estimate K and G, in accordance with the present disclosure.

DETAILED DESCRIPTION

[0023] One or more specific embodiments of the present disclosure will be described below. In an effort to provide a concise description of these embodiments, all features of an actual implementation may not be described in the specification. It should be appreciated that in the development of any such actual implementation, as in any engineering or design project, numerous implementation-specific decisions must be made to achieve the developers' specific goals, such as compliance with system-related and business-related constraints, which may vary from one implementation to another. Moreover, it should be appreciated that such a development effort might be complex and time consuming, but would nevertheless be a routine undertaking of design, fabrication, and manufacture for those of ordinary skill having the benefit of this disclosure.

[0024] When introducing elements of various embodiments of the present disclosure, the articles "a," "an," "the," and "said" are intended to mean that there are one or more of the elements. The terms "comprising," "including," and "having" are intended to be inclusive and mean that there may be additional elements other than the listed elements. Any examples of operating parameters and/or environmental conditions are not exclusive of other parameters/conditions of the disclosed embodiments.

[0025] As mentioned previously, a key principle behind standard interpretation of cylindrical pressuremeter tests is that formation properties can be inferred by assuming that the pressuremeter induces uniform radial expansion of an infinitely long cylinder. The resulting deformation depends only on the radial distance from the borehole centerline, so the problem is reduced to a single dimension (1D). However, in the present disclosure, effects associated with a packer of finite length are exploited to extract the static bulk modulus (K). Explicit recognition is given to the fact that short packers (with length to diameter ratios of less than 1) may be advantageous, because they can, under certain circumstances, increase the sensitivity of the measurement to K. It is shown that K can be inferred if at least one additional metric of deformation or stress besides the P-V curve is incorporated into the inversion scheme for elastic properties. Such metrics include internal or external radii, strain, tilt, or stress of the packer or borehole. The following discussion presents the principles and the process flow to estimate the static bulk modulus (K), of a rock.

[0026] FIG. **1** is a schematic of an embodiment of hydrocarbon extraction system or drilling system **100** having a wireline formation tester (WFT) tool **102** in a borehole **104**, illustrating a packer **106** (e.g., annular packer) of the WFT tool **102** changing in shape in response to a hydraulic actuation between a deflated state or configuration **100***a* and an expanded state or configuration **100***b*. For purposes of discussion, reference may be made to an axial direction or axis **108**, a radial direction or axis **110**, and a circumferential direction or axis **112** relative to a central axis **114** of the WFT tool **102**. The axial direction **108** may align with the central axis **114** of the WFT tool **102** such that the circumferential axis **112** aligns with the general geometry of the borehole **104**. The borehole **104** may be substantially cylindrical and formed from drilling a hole from the surface **116** through one or more geological materials (e.g., rock, clay, etc.) **118**. The K values of the geological materials **118** may be measured at a plurality of axial positions in the borehole **104**. Further, the borehole **104** may be wide enough to provide clearance **132** (e.g., radial clearance) between the WFT tool **102** and the borehole **104** for deployment to each of the plurality of axial positions prior to hydraulic actuation of the WFT tool **102**. The amount of clearance **132** may be based on the

amount the packer **106** may expand from the deflated configuration **100***a* to the expanded configuration **100***b*, the circumference of the borehole **104**, the circumference of the deflated packer **106**, and the like.

[0027] The WFT tool **102** may include a mandrel **120** (e.g., cylindrical mandrel), a sliding coupling **122** (e.g., annular coupling), and the packer **106**. The packer **106** may be made of expandable material, such that the packer **106** may expand and exert pressure or deformation stress on the geological material **118** (e.g., geological formation) surrounding the borehole **104**. For example, the packer **106** may include an annular wall or body made of an elastomeric material, which expands in response to a hydraulic pressure applied to an internal hydraulic chamber. The WFT tool **102** includes one or more sensors **124** (e.g., packer sensors, internal sensors) coupled to and/or integrated within the packer **106** to measure one or more parameters, such as pressure, deformation, stress, packer volume, strain or stress of the packer, internal radii, external radii, or a combination thereof. The sensors **124** may measure the one or more parameters at one or more points in the expansion process from the deflated configuration **100***a* to the expanded configuration **100***b*. In certain embodiments, the parameters may include tangential and/or circumferential strain (see), pressure (P), and volume (V) of the packer **106** during the expansion process. In certain embodiments, the WFT tool **102** may further include sensors **126** (e.g., external sensors) outside and/or separate from the packer **106**, but inside the borehole **104**, and configured to measure various parameters indicative of the geometry (e.g., radius, tilt angle, strain, etc.) of the borehole wall **138**. These sensors **126** are discussed in more detail in FIG. **3**. The sensors **124** and **126** may be disposed in a plurality of axial positions along the axial axis **108**, a plurality of radial positions along the radial axis **110**, and a plurality of circumferential positions about the circumferential axis **112** of the WFT tool **102**. Each of the illustrated sensors **124** and **126** may include any of the sensors described in detail herein.

[0028] In some embodiments, the WFT tool **102** includes the sensors **124** in one or more locations around the circumference of a leading edge **134** of the packer **106** during the expansion process from the deflated configuration **100***a* to the expanded configuration **100***b*. The leading edge **134** of the packer **106** may be defined as the position (e.g., axial position along the axial axis **108** and radial position along the radial direction **110**) about the circumference (e.g., in the circumferential direction **112**) of the packer **106** making first contact with the inner circumference of the borehole **104** during the expansion process as the packer **106** radially expands in the radial direction **110**. For example, for a symmetrical configuration of the packer **106**, the leading edge **134** may be located midway (e.g., axial center point) along an axial length of the packer **106**. In certain embodiments, the WFT tool **102** includes the sensors **124** at one or more axial positions along the axial axis **108** of the packer **106**. For example, the sensors **124** may be disposed at the axial position of the leading edge **134** and/or a plurality of axial positions (e.g., increments of 5, 10, 15, or 20 percent) along an axial length of the packer **106**. The acquisition of sensor data from sensors **124** at one or more axial positions along the axial axis **108** of the packer **106** may provide more data to assist the computer model further described below in the description of FIG. **4**.

[0029] As the packer **106** expands in the radial direction **110**, the clearance **132** between the packer **106** and the borehole **104** gradually decreases until the packer **106** contacts and applies a force to the inner circumference of the borehole **104**. The sensors **124** and **126** of the WFT tool **102** record data relating to the packer **106** and the geometry of the borehole wall **138** before, during, and/or after the expansion process as the packer **106**. The sensors **124** and **126** may directly contact the packer **106** and/or the geological material **118**, indirectly coupled with an inner circumference of the borehole **104** via structural portions of the WFT tool **102**, or a combination thereof. The expanded packer **106** may have a shorter expanded height **130** than the deflated height **140**. Further, the expanded packer **106** may have a wider expanded diameter **128** than the deflated packer **106**. As the packer **106** inflates, the sliding coupling **122** may slide over the mandrel **120**, so the opposing axial ends **136** of the packer **106** are closer to each other along the axial axis **108**. When deflated, the packer **106** may have a deflated length (e.g., height) **140** to deflated diameter **142** (L/D) ratio between 2.5 and 4. Conversely, when the packer **106** is fully expanded, the L/D ratio of the packer may be less than 1. However, the L/D ratio may vary in various embodiments of the WFT tool **102** and deployments in a borehole **104**. In some embodiments, the WFT tool **102** may exclude the sliding coupling **122**, position the sliding coupling **122** on the opposite axial end **136** of the packer **106**, and/or include other embodiments of the packer **106**. As discussed in detail below, the measurements by the sensors **124** and **126** may be used by the WFT tool **102** to determine various parameters of the geological material **118**, including the static bulk modulus (K) and the shear modulus (G).

[0030] FIG. **2** is a schematic of an embodiment of the WFT tool **102** on a line **200**. The WFT tool **102** and line **200** extend along the central axis **114**. In certain embodiments, the line **200** may include a conduit or a wireline. The WFT tool **102** may include the packer **106**, the one or more sensors **124**, the one or more sensors **126**, and the sliding coupling **122**, as discussed in the description of FIG. **1**. Further, the WFT tool **102** may include a plurality of tool sections **202**, including a cap section **202***a*, a controller section **202***b*, a pump section **202***c*, and a packer section **202***d*. Each of the tool sections **202** may include an annular body portion housing and/or supporting components of the WFT tool **102**. For example, the controller section **202***b* includes a controller **210**, the pump section **202***c* includes one or more pumps **204** and fluid sensors **206**, and the packer section **202***d* includes the packer **106**, the one or more sensors **124** and **126**, one or more valves **208**, and one or more fluid sensors **206**. In the illustrated embodiment, the WFT tool **102** includes a fluid circuit **212** (e.g., hydraulic fluid circuit) extending at least through the pump section **202***c* and the packer section **202***d* in fluid communication with the pump **204**, the fluid sensors **206**, the valves **208**, and the packer **106**. The controller **210** has a processor **214**, a memory **216**, and instructions **218** stored on the memory **216** and executable by the processor **214** to control various components of the WFT tool **102**. The controller **210** is configured to monitor sensor feedback from the sensors **124** and **126** and the fluid sensors **206** and control the pump **204** and the valves **208** to operate an expansion process of the packer **106**. Additionally, the controller **210**, a remote controller, and/or a remote computer system is configured to analyze the sensor feedback from the sensors **124** and **126** to

determine various parameters of the geological material **118**, including the static bulk modulus (K) and the shear modulus (G) as discussed in further detail below.

[0031] In the illustrated embodiment, the fluid circuit **212** includes fluid passages **220** and **222** for hydraulically actuating the packer **106**. The fluid passage **222** extends through the WFT tool **102** between fluid ports **224** and **226** in fluid communication with the borehole **104**. In some embodiments, the fluid passage **222** is coupled to a supply fluid passage **228** extending through the WFT tool **102** and/or the line **200** to a fluid supply, such as a fluid supply tank. However, in the illustrated embodiment, the controller **210** is configured to execute an expansion process of the packer **106** by closing the valve **208** adjacent the fluid port **226**, opening the valve **208** along the fluid passage **220**, and operating the pump **204** to pump a wellbore fluid (e.g., used as a hydraulic fluid) through the fluid passages **220**, **222** to the packer **106** to expand the packer **106** in the radial direction **110** as discussed above with reference to FIG. **1**. Upon complete expansion of the packer **106**, the controller **210** may close the valve **208** along the fluid passage **220** to retain fluid pressure in the packer **106** to hold the expanded configuration of the packer **106**. During the expansion process, the fluid sensors **206** may monitor various parameters of the fluid supplied to the packer **106**, including but not limited to a pressure, a temperature, a flowrate, or any combination thereof. Thus, the fluid sensors **206** may include pressure sensors, temperature sensors, flow rate sensors, or any combination thereof. Additionally, during the expansion process, the sensors **124** may monitor various parameters of the packer **106**, such as the tangential strain (Eee), axial strain (Ezz), pressure (P), and volume (V) of the packer **106** as discussed above with reference to FIG. **1**. The sensors **126** may further monitor parameters of the borehole **104** and/or the geological material **118** before, during, and/or after the expansion process, such as the radius or diameter, the tilt, the deformation, and/or any geometrical parameters of the borehole **104** adjacent the packer **106**. Similarly, the controller **210** is configured to execute a contraction process of the packer **106** by opening the valve **208** adjacent the fluid port **226** and opening the valve **208** along the fluid passage **220**, thereby enabling the fluid to vent into the borehole **104** via the fluid ports **224** and/or **226** and enabling the packer **106** to contract in the radial direction **110**. In some embodiments, the static bulk modulus (K) and the static shear modulus (G) may be determined based on the measurements by the sensors **124** and **126** before, during, and/or after the expansion process, the contraction process, or a combination thereof.

[0032] FIG. **3** is a schematic of an embodiment of the WFT tool **102** of FIGS. **1** and **2**, illustrating a top portion of the WFT tool **102** in the borehole **104** with the packer **106** in the expanded configuration and a plurality of sensors **126** separate from the packer **106**. The WFT tool **102** is substantially the same as discussed in detail above with reference to FIGS. **1** and **2**, and thus like element are shown with like numbers. Additionally, the illustrated sensors **126** are shown above the packer **106**, although embodiments of the WFT tool **102** may include the sensors **126** above and/or below the packer **106**. The sensors **126** may be disposed directly adjacent to the packer **106** within an axial distance suitable to obtain geometrical parameters of the borehole **104** directly adjacent to the packer **106**. In the illustrated embodiment, the sensors **126** include a tiltmeter **302**, and strain sensors **300** (e.g., strain gauges) embedded within an extensometer tool **310**. However, in some embodiments, the sensors **126** may include any one or more strain sensors **300**, tiltmeters, caliper tools, extensometer tools, piezo sensors, sonic and ultrasonic sensors, or any combination thereof, to measure changes in the geometry of the borehole **104** directly along and/or adjacent the packer **106**. Thus, this disclosure is not merely limited to those sensors **126**. Indeed, high-precision caliper tools, strain gauges attached to the borehole wall **138**, tiltmeters situated inside the packer **106**, multiple extensometer anchor points, and other stress, strain, or displacement measuring tools may be used as part of the WFT tool **102**.

[0033] As illustrated in FIG. **1**, the borehole **104** is formed as a hole in geological material **118**. In the illustrated embodiment, the borehole **104** is no longer a cylindrical geometry, but rather is sloped inside near the expanded packer **106** as a result of the packer's **106** expansion. As such, the use of a tiltmeter **302** to gauge the tilt of the borehole **104** above the packer **106** may be useful to determine more properties of the geological material **118**. Correspondingly, the extensometer **310** may measure the strain at two different axial positions along the axial axis **108** above the packer **106**, below the packer **106**, or both. The strain at varying axial distances from the packer **106** may indicate deformation of the geological material **118**, which may be indicative of the static bulk modulus (K) of the geological material **118**.

[0034] The extensometer **310** may include spring-loaded clamps **304** extending radially to anchor the tool to the borehole wall **138**. In some embodiments, the clamps **304** may be less than 10 centimeters apart. When the clamps **304** are close to the top of the packer **106**, the tiltmeter **302** and the extensometer **310** may more accurately detect displacements of the borehole wall **138**.

[0035] The tiltmeter **302** may be coupled to a rod **308** which connects the tiltmeter **302** to both clamps **304**. The tiltmeter **302** may measure the tilt of the meridian of the borehole wall **138** between the clamps **304**.

[0036] As the packer **106** is inflated to the expanded configuration, a depression is created in the borehole **104**, which persists for some distance above and below the packer **106**. The change in the angular orientation of the meridian of the borehole wall **138** is monitored by the tiltmeter **302**. The borehole wall **138** also stretches to accommodate the packer **106**. This axial strain is conveyed to strain sensors in the extensometer **310** by rods such as **308**. As such, the tiltmeter **302** and the strain sensors **300***a*, **300***b* are able to determine displacement of the borehole wall **138**, which may be indicative of one or more properties of the geological material **118**. As discussed in detail below, the measurements by the sensors **126** (e.g., strain sensors **300** and tiltmeter **302**) may be used by the WFT tool **102** to determine various parameters of the geological material **118**, including the static bulk modulus (K) and the shear modulus (G).

[0037] FIG. **4** is a flow chart of an embodiment of a method **400** of estimating the static bulk modulus (K). At block **402**, the system may deploy a wireline formation tester (WFT) tool **102** in a borehole **104** to test properties of a geological formation. The properties of a geological formation may be properties of the geological material **118**, such as composition, temperature, moisture content, and the like. The properties of a geological formation may also

include the structure of the formation, density of the formation, and any other information helpful to constructing a geomechanical model of the earth known as a mechanical earth model (MEM).

[0038] At block **404**, the system may expand a packer **106** at a location in the borehole **104** to cause a geometrical change in the borehole **104**. The packer **106** may expand in a substantially similar manner to that described in FIGS. **1-3**. Specifically, as the packer **106** expands in the radial direction **110**, an annular outer surface of the packer **106** may press into the geological material **118**, which may deform in different ways and to different degrees based on the geological properties of the geological material **118** and the borehole **104**.

[0039] Next, at block **406**, the system may measure one or more parameters of the packer **106** and one or more parameters associated with a geometrical change in the borehole **104** via a plurality of sensors **124** and/or **126**. In some embodiments, the system may measure both the parameters associated with the packer **106** and the parameters associated with a geometrical change with the sensors **124** alone. The sensors **124** may be substantially similar to those described in FIGS. **1** and **2**. As such, the sensors **124** may measure packer volume (V), packer pressure (P), tilt within the packer, tangential packer strain ($\varepsilon_{\theta\theta}$), and/or axial packer strain (ε_{zz}). In some embodiments, the sensors **124** may be located at the leading edge **134** of the packer **106**, a plurality of axial positions along the axial length of the packer **106**, and/or a plurality of circumferential positions about a circumference of the packer **106**. By increasing the number and/or varied positions of the sensors **124**, the method **400** may increase the accuracy of measurements and the determination of the K and G values.

[0040] In some embodiments, the system may measure the parameters associated with the packer **106** using the sensors **124** and the parameters associated with a geometrical change with the sensors **126**. While the composition, capabilities, and embodiments of the sensors **124** as described above applies in this embodiment as well, the system may also utilize sensors **126** to measure more geological and geometric properties of the borehole **104** as described with reference to FIGS. **2** and **3**. The sensors **126** may include a tiltmeter, a strain sensor, and extensometer, and any other high precision sensors capable of sensing the geometry of the borehole **104**. Thus, the sensors **126** may provide additional data for use along with the data from the sensors **124**, which may provide higher precision K and G values. Additionally, the sensors **126** may be disposed at a plurality of axial positions above and/or below the packer **106** and/or a plurality of circumferential positions about a circumference of the borehole **104**. By increasing the number and/or varied positions of the sensors **124**, the method **400** may increase the accuracy of measurements and the determination of the K and G values.

[0041] At block **408**, the system may perform a computer simulation of the geometrical change caused by expansion of the packer **106** based on one or more computer models, input values, and measurements from the sensors **124**, **126**. The computer simulation may utilize sensor parameters or data acquired from the sensors **124** and/or the sensors **126**. Further, the computer simulation may utilize a series of constant values based on the location of the borehole **104**, such as the temperature, soil moisture, borehole diameter, and the like. The user may also input a range of potential K and G values at the locations of the sensors. The ranges of K and G input into the computer simulation may be based on the location of the borehole and the potential K and G values of the geological material **118** in the borehole **104**. The computer simulation may further perform error analysis on its results to eliminate any faulty data from its calculations to more precisely and accurately provide results.

[0042] The computer simulation may include a semi-analytical scheme designed to approximate loading the packers by imposing a uniform axisymmetric pressure (P), over a depth interval (L_c) of a borehole wall. The semi-analytical scheme may utilize equations such as:

$$u = \left[\frac{3m-4}{m} f(x) - x f'(x) - g'(x)\right] \cos\beta\zeta \tag{1}$$

$$w = [x f(x) + g(x)]\beta \sin\beta\zeta \tag{2}$$

$$\frac{d}{4G}\sigma_{rr} = \left[\frac{3m-2}{m} f'(x) - \left(\beta^2 x + \frac{m-2}{mx}\right) f(x) + \frac{g'(x)}{x} - \beta^2 g(x)\right] \cos\beta\zeta \tag{3}$$

$$\frac{d}{4G}\tau_{rz} = \left[x f'(x) - \frac{m-2}{m} f(x) + g'(x)\right] \beta \sin\beta\zeta \tag{4}$$

where u and w are the radial and axial displacements, respectively, σ_{rr} and τ_{rz} are normal and shear stresses, respectively, m is the inverse of the static Poisson's ratio of the rock, G is the static shear modulus of the rock, x and ζ are normalized coordinates equal to 2r/d and 2z/d, respectively. Further, d is the borehole diameter, r is the radial coordinate, z is the axial coordinate, and β is the wavenumber in the z-direction.

[0043] Additionally, f(x) and g(x) may be computed using $f(x)=C_2K_1(\beta x)$ and $g(x)=D_2K_0(\beta x)$, respectively. In the foregoing equations, $K_0(\beta x)$ and $K_1(\beta x)$ are both modified Bessel functions. C_2 and D_2 may be constants determined by applying constant pressure and appropriate slip boundary conditions to the borehole wall via Equations 3 and 4 above. For example, no slip boundary conditions may be applied by assuming that $\tau_{rz}=0$. Furthermore, m may be expressed as

$$m = \frac{2(3K+G)}{3K-2G}.$$

Equations (1)-(4) above represent solutions for a single wavenumber β. General solutions are found by integrating Equations (1)-(4) over all real and positive values of β. This can be achieved most efficiently using discrete sine and cosine transforms.

[0044] Once the displacements u and w are determined, the deformed geometry of the borehole wall can be found and strains at any location on the borehole wall can be computed. The volume of the depression produced by loading can be used to estimate the change in the volume of the packer, ΔV, assuming minimal expansion of the packer in the axial direction. The inputs to the scheme are K, G, d, P, L_c, and the z-coordinates of sensors in contact with the borehole wall. The outputs are u and w at sensor locations, along with ΔV. The outputted values of u and w can be used to estimate strains and tilt angles at sensor locations on the borehole wall. When numerical or graphical inversion is performed (as will be discussed in relation to FIG. **4**),

strains, tilt angles, ΔV or derivatives contructed from these three quantities become the inputs and K and G become outputs.

[0045] At block **410**, the system may use the results of the computer simulation to output a plurality of contour plots. The contour plots may be functions based on the data accumulated by the sensors **124** and/or **126**. As such, the axes may be the derivative of the tangential strain with respect to the pressure ($d\varepsilon_{\theta\theta}/dP$) (μStrain/MPa) for the sensors above the packer **106**, on the surface of the packer **106**, and/or below the packer **106**, the derivative of the axial strain with respect to the pressure ($d\varepsilon_{zz}/dP$) (μStrain/MPa) for the sensors above the packer **106**, on the surface of the packer **106**, and/or below the packer **106**, the derivative of the tilt with respect to the volume ($d\theta/dV$) (arcSec/cc) for the sensors above the packer **106**, on the surface of the packer **106**, and/or below the packer **106**, the derivative of the volume with respect to the pressure (dV/dP) (cc/MPa), and the like. The plot may include contour lines of K and G, as illustrated further in FIG. **9**.

[0046] In some embodiments, the contour plots may be inverted. Specifically, the contour plots may be functions of K and G, in which K values are plotted on the Y axis and G values are plotted on the x axis. As such, the contour lines on the contour plot may be the derivative of tangential strain with respect to pressure ($d\varepsilon_{\theta\theta}/dP$) (μStrain/MPa) for the sensors above the packer **106**, on the surface of the packer **106**, and/or below the packer **106**, the derivative of axial strain with respect to the pressure ($d\varepsilon_{zz}/dP$) (μStrain/MPa) for the sensors above the packer **106**, on the surface of the packer **106**, and/or below the packer **106**, the derivative of tilt with respect to the volume ($d\theta/dV$) (arcSec/cc) for the sensors above the packer **106**, on the surface of the packer **106**, and/or below the packer **106**, the derivative of pressure with respect to the volume (dP/dV) (MPa/cc), and the like. The system may overlay one or more inverted contour plots to more precisely determine the K and G values for the geological material **118** in the borehole **104**. This process is described further in the description of FIG. **11**.

[0047] At block **412**, the system may use the contour plots from block **410** to determine K and G for the location in the borehole. The method of utilizing the contour plot may be based on contour plots with either measured data or inferred parameters on its axes and correspondingly, inferred parameters or measured data plotted as contours. For purposes of this discussion the former plot will be referred to as a "standard contour plot" whereas the latter shall be referred to as an "inverted contour plot". Using the standard contour plot, the system may select the point on the K and G contour lines that best aligns with the derivative of tangential strain with respect to the volume ($d\varepsilon_{\theta\theta}/dV$) (μStrain/MPa) and the derivative of volume with respect to the pressure (dV/dP) (cc/MPa) measured from the sensors at the designated location in the borehole **104**. In other embodiments, other measurements as described above may be used in place of the derivative of tangential strain with respect to the pressure ($d\varepsilon_{\theta\theta}/dP$) (μStrain/MPa) and the derivative of volume with respect to the pressure (dV/dP) (cc/MPa). These alternatives are further described below in the description of FIG. **10**.

[0048] In embodiments utilizing an inverse plot with values of K and G on its axes, the system may overlay one or more contour lines of the derivative of tangential strain with respect to the pressure ($d\varepsilon_{\theta\theta}/dP$) (μStrain/MPa) for the sensors above the packer **106** and/or below the packer **106**, the derivative of the axial strain with respect to the pressure ($d\varepsilon_{zz}/dP$) (μStrain/MPa) for the sensors above the packer **106** and/or below the packer **106**, the derivative of the tilt with respect to the volume ($d\theta/dV$) (arcSec/cc) for the sensors above the packer **106** and/or below the packer **106**, the derivative of the pressure with respect to the volume (dP/dV) (MPa/cc), and the like. Once the contour lines are overlaid, the system may use the contour lines to identify a region between the contour lines. The region may provide the system with K and G values, within a certain margin of error. For example, the contour lines may provide a region where the highest possible K value is 36 GPa and the lowest possible K value is 31 GPa. As such, the system may use this range as the range of possible K values based on the data obtained by the sensors **124** and sensors **126**. This process is further described below in the description of FIG. **11**.

[0049] At block **414**, the system may build a mechanical earth model (MEM) based on the K and G values. The MEM may be a repository of data representing the mechanical properties of geological material **118** (e.g., rocks) and fractures as well as the stresses, pressures, and temperatures existing in them at depth. Each data point in an MEM is referenced to its spatial coordinates (e.g., three-dimensional coordinates) and time. The measurements included in a MEM may include the magnitude of the vertical stress, the magnitude of the minimum horizontal stress, the magnitude of the maximum horizontal stress, the pore pressure, the K value, the G value, and the like. The MEM may include measurements accounting for the effects of reservoir fluids accumulated over geologic history, cumulative present-day hydrocarbon extraction, fluid injections to stimulate recovery, gravity, and the far-field tectonic stresses. The accuracy of the MEM may generally increase as more data measured by the sensors **124** and sensors **126** is acquired and used by the method **400**. The availability of K and G values through the disclosed method may provide faster methods of building a MEM model than traditional methods, as traditionally, the MEM model may have to wait days for a laboratory to test samples of geological material **118** from the borehole **104** to acquire values of K and G.

[0050] In some embodiments, the system may update a mechanical earth model (MEM) based on the K and G values. Indeed, if a MEM already exists for that location in the borehole, but new K and G values become available, the new K and G values may be used to update the MEM model. These updates may increase the efficiency and safety of drilling, as the most up-to-date MEM model may more accurately inform well operators of relevant changes in borehole conditions which may encourage adjustments in well operation.

[0051] At block **416**, the system may generate a report based on the K and G values. The report may be a notification the system may send to an electronic display of an electronic device (e.g., processor-based device or computer) to inform the operator of the estimated K and G values. Further, in some embodiments, the report may include one or more interactive plots from block **410** and block **412**. The user may view the contour plots, invert the contour plots, remove any overlays to individually view the contour plots, and the like. In some embodiments, the report may include one or more recommended adjustments to the drilling parameters based on the determined K and G values.

[0052] Additionally, the system may, at block **418**, adjust one or more drilling parameters of a drill system based on

the new or updated MEM. The drilling parameters may include adjustment of the mud weight based on the MEM, design a drilling job based on the MEM, and the like. The MEM may be used to increase drilling safety, prevent sanding, design a CO_2 injection system, design a hydraulic fracturing system, and the like. As the MEM is created or updated, operational parameters may adjust to fit the MEM. In other embodiments, the MEM may adjust other parameters based on the MEM and the needs of the system. For example, if the system is a CO_2 injection system instead of a drilling system, the system may adjust injection parameters. In some embodiments, the users may manually adjust the relevant parameters. In other embodiments, the system may automatically adjust the parameters based on the MEM and the system's target operation.

[0053] Finite-element simulations of the pressuremeter test in a vertical borehole were performed to evaluate the sensitivity of various measurements to the static bulk modulus (K). FIG. **5** shows a snapshot **500** of a vertical cross-section through the axisymmetric model. The packer **106**, which includes a rubber membrane **502** mounted on a steel mandrel **506**, has been expanded to contact the formation by applying an internal pressure of 30 MPa. No other pressures or stresses are applied to the model. In this example, the initial length to diameter ratio of the packer is 3.4. The bulk and shear moduli of the formation are 8.3 GPa and 9.1 GPa, respectively. The radial displacements induced in the geological formation **504** by contact with the packer are superimposed on the formation. Displacements of the order of 100 μm can be seen at the borehole wall. As illustrated, the displacement is the greatest at the leading edge **508** of the rubber membrane **502**.

[0054] FIG. **6** shows sensitivity tests **540***a*, **540***b* run using the finite-element model, to determine the influence of the shear and bulk moduli on the P-V curve (**542**, **546**). As illustrated, the slope dP/dV, is initially small and then increases dramatically as the packer **106** contacts the borehole wall. As shown in **540***a*, eventually the slope stabilizes when the volume lies beyond the vertical cutoff line **548**. This stabilized slope can be directly related to the elastic stiffness of the formation. The extraction of this slope is shown in sensitivity test **540***a*. It is evident that the final slope **544** is highly sensitive to G. In contrast, sensitivity test **540***b* demonstrates that the slope is highly insensitive to the bulk modulus of the formation (K).

[0055] This lack of sensitivity to K is again highlighted in graph **570***a* of FIG. **7**. In this case, G was set to 2 GPa and K was varied over 2 orders of magnitude. The packer displaces the formation by about 2 mm. The amount of displacement is almost unaffected by K. However, small differences in this displacement can be seen when the length of the packer **106** is reduced by a factor of 4 as shown in graph **570***b* of FIG. **7**. These differences span a range of about 0.1 mm at the leading edge **572** of the packer **106**. The corresponding circumferential strain, $e_{\theta\theta}$, on the outer surface of the quarter-length packer **106** is shown in graph **590** of FIG. **8**. As K changes from 1.5 GPa to 15 GPa, $e_{\theta\theta}$ varies over a range of about 0.1 millistrain at the leading edge **572** of the packer **106**. Much smaller changes in $e_{\theta\theta}$ occur as K is increased beyond 15 GPa.

[0056] The results shown in FIGS. **7** and **8** suggest that K could be inferred by making precise strain or displacement measurements at suitable locations on the packer **106**. For example, to determine the level of accuracy that might be appropriate for strain measurements, a large variety of cases of K and G were simulated for the quarter-length packer **106**. For each case, the stabilized slopes dV/dP and $de_{\theta\theta}/dP$ were extracted, where $e_{\theta\theta}$ was computed at the leading edge **572** of the packer **106**.

[0057] The results are summarized in the contour plot of FIG. **9**. FIG. **9** is an embodiment of a contour plot **600** (e.g., output on an electronic display of a computer system) of a plurality of contour lines **602** of the static bulk modulus (K) and a plurality of contour lines **604** of the static shear modulus (G) as a function of a first derivative ($de_{\theta\theta}/dP$) along a Y-axis **606** versus a second derivative (dV/dP) along an X-axis **608**. The contour plot **600** is generated based on a plurality of computer simulations using a computer model of the geological formation, the borehole, and the packer **106**. The computer model may receive inputs of G, K, pressure (P) in the packer **106**, volume (V) in the packer **106**, a borehole geometry (e.g., borehole diameter), and one or more additional inputs. As illustrated, each of the plurality of contour lines **602** represents a constant value of the static bulk modulus (K), and each of the plurality of contour lines **604** represents a constant value of the static shear modulus (G) for various values of the first and second derivatives and other inputs. Thus, once the computer simulation is complete for the various contour lines **602** and **604**, the values of the static bulk modulus (K) and the static shear modulus (G) can be determined with relatively good accuracy by reading the K and G values from the graph. This procedure is known as graphical inversion. Alternatively, the values of G and K can be calculated using a computer algorithm that searches for the values of G and K that best match measured data (dV/dP, $de_{\theta\theta}/dP$). This procedure is called numerical inversion. For example, as discussed below, the graphical inversion process may identify the static bulk modulus (K) and the static shear modulus (G) by graphically pinpointing a location **610** for the first and second derivatives **612** and **614** or a location **616** for the first and second derivatives **618** and **620**.

[0058] Thus, the embodiments disclosed herein may perform the inversion to identify the static bulk modulus (K) and the static shear modulus (G) with or without the contour plot **600**. In the illustrated embodiment, if dV/dP and $de_{\theta\theta}/dP$ are measured during the pressuremeter test, this plot may be used to estimate both K and G. The plot shows that contours of constant G are almost vertical implying that G may be determined from knowledge of dV/dP alone, as expected. However, the static bulk modulus (K) may be estimated if both dV/dP and $de_{\theta\theta}/dP$ are known. Moreover, the resolution of K depends on its magnitude. For example, if dV/dP=0.4 cc/MPa as illustrated by line **614** and $de_{\theta\theta}/dP$=38 μStrain/MPa as illustrated by line **612**, the corresponding values of K and G are approximately 15 GPa and 7.5 GPa respectively.

[0059] Most notably, the static bulk modulus (K) can be resolved to within about 3 GPa if $de_{\theta\theta}/dP$ is known to within about 0.5 μStrain/MPa. This implies that if the slope $de_{\theta\theta}/dP$ is evaluated over a pressure range of 10 MPa, the strain measurement needs to have an accuracy superior to 5 μStrain. Conversely, if dV/dP=0.455 cc/MPa as illustrated by line **620** and $de_{\theta\theta}/dP$=40 μStrain/MPa as illustrated by line **618**, the corresponding values of K and G are approximately 32.5 GPa and 6.6 GPa respectively. However, the static bulk modulus (K) may be anywhere between 25 GPa and 40 GPa, if the error in $de_{\theta\theta}/dP$ is ±0.5 μStrain/MPa.

Therefore, the resolution of K decreases as K increases. One strategy to maintain resolution at higher values of K is to reduce the error in $de_{\theta\theta}/dP$ by increasing the range of pressures over which $de_{\theta\theta}/dP$ is evaluated. Assuming that the error in the strain measurement is fixed (e.g. ±1 μStrain), the error in the gradient $de_{\theta\theta}/dP$ will be inversely proportional to the range of pressures over which $de_{\theta\theta}/dP$ is evaluated. In general, maintaining resolution at higher values of K involves either (a) higher accuracy measurements, (b) a larger number or variety of measurements (as discussed in relation to FIG. **11**), or (c) exposure of the formation to a larger range of pressures.

[0060] The presently described embodiments use high precision strain, stress, or displacement measurements to infer the static bulk modulus (K) of a soil or rock formation. In some embodiments, a relatively short pressuremeter (L/D ratio<1) may be advantageous for enhancing measurement sensitivity; however, a variety of L/D ratios may be used with the presently described embodiments. The presently described embodiments are not restricted in scope to the particular measurements shown in the example of FIG. **9**. Those of ordinary skill will recognize that the inference of K could be based on measurements made at other locations within the pressuremeter device besides its leading edge **134**. Measurements may also be made of the depression in the wellbore wall produced by contact with the packer **106** by for example, attaching a strain gauge to the borehole wall itself or using calipers or clamps, as discussed in relation to FIG. **3**. Gradients such as dV/dP and $de_{\theta\theta}/dP$ could be inverted, but so too could original curves (P versus V, see versus P, etc.). The inversion does not have to be based solely on data from regions where slopes have stabilized. Inversion techniques could be graphical, as in the example of FIG. **9**, but may also be numerical (deterministic or stochastic). The forward model used in the inversion may be based on a variety of constitutive models or numerical methods such as elastic, hyperelastic, viscoplastic, finite elements, finite differences, analytical or semi-analytical techniques. They may include sophisticated models of the packer **106** and its contact with the borehole wall **138**.

[0061] A variety of devices exist for performing high-precision strain and displacements measurements. For example, strain gauges, strain rings, strain sheets or fiber optic cables could be embedded in the packer **106**. Calipers or digital micro-optical cameras could be installed inside or outside the packer **106**. Alternatively, stresses within the packer **106** membrane could be computed instead of strains, thereby allowing for pressure or stress sensing elements to be embedded inside the packer. The sensors **124** and **126** may be used for the various measurements, as discussed in detail above.

[0062] FIG. **10** is an embodiment of a contour plot **650** (e.g., output on an electronic display of a computer system) of a plurality of contour lines **652** of a first derivative ($d\varepsilon_{zz}/dP$) and a plurality of contour lines **654** of a second derivative (dP/dV) as a function of the static bulk modulus (K) along a Y-axis **656** versus the static shear modulus (G) along an X-axis **658**. In the illustrated embodiment, the contour plot **650** includes a contour plot **650***a* over a larger range of K and G values along the Y-axis **656** and the X-axis **658**, whereas a contour plot **650***b* represents a zoomed in portion taken within a window **650***c* of the contour plot **650***a*. Thus, the contour lines **650***a* and **650***b* are discussed together as the contour plot **650**. The contour plot **650** is generated based on a plurality of computer simulations using a computer model of the geological formation, the borehole, and the packer **106**. The computer model may receive inputs of G, K, pressure (P) in the packer **106**, volume (V) in the packer **106**, a borehole geometry (e.g., borehole diameter), and one or more additional inputs. As illustrated, each of the plurality of contour lines **652** represents a constant value of the first derivative ($d\varepsilon_{zz}/dP$), and each of the plurality of contour lines **654** represents a constant value of the second derivative (dP/dV) for various values of the static bulk modulus (K), the static shear modulus (G), and other inputs.

[0063] Thus, once the computer simulation is complete for the various contour lines **652** and **654**, the values of the static bulk modulus (K) and the static shear modulus (G) can be determined with relatively good accuracy either by a graphical inversion process and/or a computer inversion process based on the current measurements of first and second derivatives. For example, the accuracy of the determinations of K and G depends on the proximity or spacing between the plurality of contour lines **652** and **654**, as indicated by an error window **660** in the contour plot **650***b*. In certain embodiments, the graphical inversion process may identify the static bulk modulus (K) and the static shear modulus (G) by graphically pinpointing a location of the first and second derivatives and graphically following the location to the Y-axis **656** to determine the K value and graphically following the location to the X-axis **658** to determine the G value. Similarly, the system may perform a numerical inversion whereby the values of G and K can be calculated using a computer algorithm that searches for the values of G and K that best match measured values of the two derivatives. Thus, the embodiments disclosed herein may perform the inversion to identify the static bulk modulus (K) and the static shear modulus (G) with or without the contour plot **650**.

[0064] The derivative of axial strain with respect to the pressure ($d\varepsilon_{zz}/dP$) (μStrain/MPa) for the sensors above the packer **106** and/or below the packer **106** and the derivative of the pressure with respect to the volume (dP/dV) (MPa/cc) are both graphed after being output from a computer simulation. Any of the other derivatives discussed previously may also be plotted. In order to assess the resolution with which K and G could be inferred, **650***b* shows a zoomed-in section of the contour plot of **650***a* with values of contours that represent resolutions typical of high precision sensors. The user or system may locate the applicable contour lines of $d\varepsilon_{zz}/dP$ and dP/dV for the relevant location in the borehole **104**. For example, in the illustrated embodiment, if the measured value of $d\varepsilon_{zz}/dP$ was 3.05 μStrain/MPa and the value of dP/dV was 0.855, the K value and G value would fall in a window **662**, which is defined by points **664**, **666**, **668**, and **670**. To determine the potential range of values for K, the user or system may look at the largest and smallest Y coordinate of the points **664**, **666**, **668**, and **670** along the Y-axis **656**. As such, in the illustrated embodiment, the user or system may utilize point **664** for the largest Y value and point **668** for the smallest Y value. As such, the Y values, and resulting K values, in the illustrated embodiment may range from 35 GPa to 39 GPa. Similarly, to determine the potential range of values for G, the user or system may look at the largest and smallest X coordinate of the points **664**, **666**, **668**, and **670** along the X-axis **658**. As such, the X values, and resulting G values, in the illustrated embodiment may range from approximately 11.6 GPa to 11.75 GPa.

[0065] FIG. **11** illustrates a series of inverted contour plots **700***a*, **700***b*, **700***c*, **700***d*, which may be stacked to more precisely estimate K and G. In the illustrated embodiment, K (GPa) is graphed on the Y-axis **656** and G (GPa) is graphed on the X-axis **658**. The contour plots **700***a*, **700***b*, **700***c*, **700***d* are generated based on a plurality of computer simulations using a computer model of the geological formation, the borehole, and the packer **106**. The computer model may receive inputs of G, K, pressure (P) in the packer **106**, volume (V) in the packer **106**, a borehole geometry (e.g., borehole diameter), and one or more additional inputs. As illustrated, each of the contour plots **700***a*, **700***b*, **700***c*, **700***d* includes a plurality of contour lines, each having a constant value of a particular derivative. Thus, once the computer simulation is complete for the various contour lines, the values of the static bulk modulus (K) and the static shear modulus (G) can be determined with relatively good accuracy by reading them from the graph as shown in the contour plots **700***a*, **700***b*, **700***c*, and **700***d*. Alternatively, the system may perform a numerical inversion of the measured derivatives. It should be noted that point **702***a*, point **702***b*, point **702***c*, and point **702***d* may represent the same point on different contour plots and overlays.

[0066] Plot **700***a* illustrates a contour plot having a plurality of contour lines **701** of the derivative of the pressure with respect to the volume (dP/dV) (MPa/cc). The point **702***a* represents the real values of K and G of a given geological formation while the shaded region shows the range of possible values of K and G that can be inferred from typical high-precision measurements of dP/dV. Plot **700***b* illustrates a contour plot having a plurality of contour lines **703** of the derivative of the axial strain with respect to the pressure ($d\varepsilon_{zz}$/dP) (μStrain/MPa) for the sensors above the packer **106** and a plurality of contour lines **705** of the derivative of the tilt with respect to the volume (de/dV) (arcSec/cc) for the sensors above the packer **106**. Points **704**, **706**, **708**, and **710** are vertices of the feasible region of K and G that may be inferred from typical high-precision sensors. This section is determined by point **702***b*, the coordinates of which are determined by the applicable derivatives $d\varepsilon_{zz}$/dP and de/dV for the location in the borehole **104**. In the illustrated embodiment, the K may lie between 33 GPa and 36.5 GPa.

[0067] Plot **700***c* illustrates a contour plot having a plurality of contour lines **707** of the derivative of the axial strain with respect to the pressure ($d\varepsilon_{zz}$/dP) (u Strain/MPa) for the sensors below the packer **106** and a plurality of contour lines **709** of the derivative of the tilt with respect to the volume (de/dV) (arcSec/cc) for the sensors below the packer **106**. The extensometer **310** may be deliberately offset a distance of 5 cm below the packer to supplement data obtained from the sensors at the top of the packer. Points **716**, **718**, and **720** are vertices of the feasible region of K and G that could be inferred from typical high-precision sensors. This section is determined by point **702***c*, the coordinates of which are determined by the applicable derivative $d\varepsilon_{zz}$/dP and dθ/dV for the location in the borehole **104**. In the illustrated embodiment, the K value may lie between 31 GPa and 36 GPa.

[0068] Plot **700***d* illustrates a contour plot having the plots **700***a*, **700***b*, and **700***c* stacked upon one another. In particular the plot **700***d* illustrates a contour plot having the plurality of contour lines **707** of the derivative of the axial strain with respect to the pressure ($d\varepsilon_{zz}$/dP) (μStrain/MPa) for the sensors below the packer **106**, the plurality of contour lines **703** of the derivative of the axial strain with respect to the pressure ($d\varepsilon_{zz}$/dP) (μStrain/MPa) for the sensors above the packer **106**, the plurality of contour lines **705** and **709** of the derivative of the tilt with respect to the volume (de/dV) (arcSec/cc) for the sensors above the packer **106** and below the packer **106**, and the plurality of contour lines **701** of the derivative of the pressure with respect to the volume (dP/dV) (MPa/cc). Points **724**, **726**, **728**, and **730** are vertices of the feasible region of G and K, accounting for the resolutions of all the measurements shown in Plots **700***a*, **700***b* and **700***c*. This section is determined by point **702***d*, the coordinates of which are determined by the applicable derivative $d\varepsilon_{zz}$/dP and de/dV for the location in the borehole **104**. In the illustrated embodiment, the K value for plot **700***d* may lie between 33 GPa and 36 GPa. Thus, joint inversion of data from multiple sensors above and below the packer **106** may improve the resolution of K. Adding additional measurements may increase the resolution of K values by further limiting the size of the region **732**.

[0069] Examples in the present disclosure may also be directed to a non-transitory computer-readable medium storing computer-executable instructions and executable by one or more processors of the computer via which the computer-readable medium is accessed. A computer-readable media may be any available media that may be accessed by a computer. By way of example, such computer-readable media may comprise RAM, ROM, EEPROM, CD-ROM or other optical disk storage, magnetic disk storage or other magnetic storage devices, or any other medium that may be used to carry or store desired program code in the form of instructions or data structures and that may be accessed by a computer. Disk and disc, as used herein, includes compact disc (CD), laser disc, optical disc, digital versatile disc (DVD), floppy disk and Blu-ray® disc where disks usually reproduce data magnetically, while discs reproduce data optically with lasers.

[0070] Note also that the software implemented aspects of the subject matter claimed below are usually encoded on some form of program storage medium or implemented over some type of transmission medium. The program storage medium is a non-transitory medium and may be magnetic (e.g., a floppy disk or a hard drive) or optical (e.g., a compact disk read only memory, or "CD ROM"), and may be read only or random access. Similarly, the transmission medium may be twisted wire pairs, coaxial cable, optical fiber, or some other suitable transmission medium known to the art. The claimed subject matter is not limited by these aspects of any given implementation.

[0071] Technical effects of the disclosed embodiments enable a determination of both the shear bulk modulus (G) and the static bulk modulus (K) via a plurality of computer simulations of various derivatives. Thus, the static bulk modulus (K) can be determined based on measurements acquired on-site at a wireline formation tester (WFT) tool in a borehole in a relatively short amount of time, rather than a delayed result obtained from rock samples taken offsite for determination of the static bulk modulus (K). Accordingly, the static bulk modulus (K) may be determined in real-time via numerical inversion and/or substantially in real-time via graphical inversion using user input associated with contour plots displayed on an electronic display. In either case, the disclosed embodiments enable relatively fast determination of the static bulk modulus (K) compared to conventional

techniques of rock sample analyses, thereby helping to improve the efficiency of oil and gas operations at a wellsite.

[0072] The subject matter described in detail above may be defined by one or more clauses, as set forth below.

[0073] A method for estimation of static bulk modulus, K of a rock using a pressuremeter test, wherein the pressuremeter test measures one or more parameters of packers or a borehole in addition to a standard pressure-volume response.

[0074] The method of the preceding clause, wherein the one or more parameters are selected from the group consisting of internal or external radii, strain, stress, or displacement.

[0075] The method of any preceding clause, wherein the packers include a length to diameter ratio of <1.

[0076] The method of any preceding clause, wherein the packers include one or more devices for performing measurements of the one of more parameters.

[0077] The method of any preceding clause, wherein the one or more devices are selected from the group consisting of strain gages, strain rings, strain sheets, fiber optic cables, or a combination thereof.

[0078] A system for autonomous restriction navigation comprising, the system including a processor, memory accessible to the processor, and processor-executable instructions stored in the memory and executable by the processor to instruct the system to estimate static bulk modulus, K of a rock using a pressuremeter test, wherein the pressuremeter test measures one or more parameters of packers or a borehole in addition to a standard pressure-volume response.

[0079] The system of the preceding clause, wherein the one or more parameters are selected from the group consisting of internal or external radii, strain, stress, or displacement.

[0080] The system of any preceding clause, wherein the packers include a length to diameter ratio of <1.

[0081] The system of any preceding clause, wherein the packers include one or more devices for performing measurements of the one of more parameters.

[0082] The system of any preceding clause, wherein the one or more devices are selected from the group consisting of strain gages, strain rings, strain sheets, fiber optic cables, or a combination thereof.

[0083] A method including obtaining measurements of one or more first parameters of a packer during an actuation of the packer in a borehole, obtaining measurements of one or more second parameters related to a geometrical change in the borehole caused by the actuation of the packer, and analyzing a plurality of first and second parameters, a plurality of derivatives of the first and second parameters, or a combination thereof to estimate at least a static bulk modulus (K) of a geological formation surrounding the borehole.

[0084] The method of the preceding clause, wherein the one or more first parameters include at least a pressure and a volume of the packer during the actuation of the packer.

[0085] The method of any preceding clause, wherein the one or more second parameters comprise at least one of a radius, a tilt angle, a stress, a strain, a displacement, or any combination thereof.

[0086] The method of any preceding clause, wherein the plurality of derivatives comprises a derivative of strain with respect to pressure, a derivative of tilt angle with respect to volume, or a combination thereof.

[0087] The method of any preceding clause, wherein the plurality of derivatives comprises a derivative of volume with respect to pressure.

[0088] The method of any preceding clause, including deploying a test tool into the borehole, wherein the test tool includes the packer and a plurality of sensors configured to measure the one or more first parameters and the one or more second parameters, controlling the actuation of the packer, and acquiring the measurements of the one or more first parameters and the one or more second parameters via the sensors.

[0089] The method of the preceding clause, wherein the plurality of sensors includes one or more first sensors and one or more second sensors, the one or more first sensors are coupled to the packer, and the one or more second sensors are coupled to the packer, separate from the packer, or a combination thereof.

[0090] The method of the preceding clause, wherein analyzing further includes analyzing the plurality of derivatives associated with the first and second parameters further to estimate a static shear modulus (G) of the geological formation surrounding the borehole.

[0091] The method of the preceding clause, including building or updating a mechanical earth model (MEM) based on the static bulk modulus (K) and the static shear modulus (G).

[0092] The method of any preceding clause, including controlling one or more parameters of a hydrocarbon extraction system based on the static bulk modulus (K), wherein analyzing the plurality of derivatives to estimate at least the static bulk modulus (K) is performed in real-time upon obtaining the measurements of the one or more first parameters and the one or more second parameters.

[0093] The method of any preceding clause, wherein analyzing the plurality of derivatives comprises comparing the plurality of derivatives against the plurality of derivatives output from a computer simulation of the actuation of the packer and the geometrical change in the borehole.

[0094] The method of any preceding clause, wherein analyzing the plurality of derivatives comprises comparing one or more pairs of derivatives to the plurality of derivatives output from the computer simulation.

[0095] The method of any preceding clause, wherein analyzing the plurality of derivatives comprises outputting one or more contour plots on an electronic display illustrating a relationship between the plurality of derivatives and at least the static bulk modulus (K) based on the computer simulation.

[0096] The method of any preceding clause, wherein the packer comprises a length to diameter ratio of less than 1.

[0097] A tangible and non-transitory machine readable medium including instructions executable by one or more processors to perform operations including obtaining measurements of one or more first parameters of a packer during an actuation of the packer in a borehole, obtaining measurements of one or more second parameters indicative of a geometrical change in the borehole caused by the actuation of the packer, and analyzing a plurality of first and second parameters, derivatives based on the plurality of first and second parameters, or a combination thereof to estimate at least a static bulk modulus (K) of a geological formation surrounding the borehole.

[0098] The medium of the preceding clause, wherein analyzing the plurality of derivatives comprises comparing the plurality of derivatives against the plurality of derivatives output by a computer simulation of the actuation of the packer and the geometrical change in the borehole, wherein the computer simulation provides a relationship between the plurality of derivatives and at least the static bulk modulus (K) and a static shear modulus (G).

[0099] The medium of the preceding clause, wherein analyzing the plurality of derivatives comprises outputting one or more contour plots on an electronic display illustrating the relationship between the plurality of derivatives and at least the static bulk modulus (K) and the static shear modulus (G) based on the computer simulation.

[0100] A system including a test tool configured to deploy into a borehole. The test tool includes a packer, a plurality of sensors, and a controller having a processor, a memory, and instructions stored on the memory and executable by the processor. The controller performs operations including obtaining measurements of one or more first parameters of the packer during an actuation of the packer in the borehole via one or more first sensors of the plurality of sensors. The controller also performs operations including obtaining measurements of one or more second parameters indicative of a geometrical change in the borehole caused by the actuation of the packer via one or more second sensors of the plurality of sensors. The controller also performs operations including analyzing a plurality of first and second parameters, derivatives based on the plurality of first and second parameters, or a combination thereof to estimate at least a static bulk modulus (K) of a geological formation surrounding the borehole locally on the controller and/or remotely on a computer separate from the test tool.

[0101] The system of the preceding clause, wherein the one or more first parameters include at least a pressure and a volume of the packer during the actuation of the packer, and the one or more second parameters comprise at least one of a radius, a tilt angle, a stress, a strain, a displacement, or any combination thereof.

[0102] The system of any preceding clause, wherein the one or more second sensors comprise one or more strain gauges, strain rings, strain sheets, piezo sensors, sonic and ultrasonic sensors, fiber optic cables, extensometers, tiltmeters, calipers, or a combination thereof.

[0103] While only certain features have been illustrated and described herein, many modifications and changes will occur to those skilled in the art. It is, therefore, to be understood that the appended claims are intended to cover all such modifications and changes as fall within the true spirit of the disclosure. The techniques presented and claimed herein are referenced and applied to material objects and concrete examples of a practical nature that demonstrably improve the present technical field and, as such, are not abstract, intangible or purely theoretical.

1. A method, comprising:

obtaining measurements of one or more first parameters of a packer during an actuation of the packer in a borehole;

obtaining measurements of one or more second parameters related to a geometrical change in the borehole caused by the actuation of the packer; and

analyzing a plurality of first and second parameters, a plurality of derivatives of the first and second parameters, or a combination thereof to estimate at least a static bulk modulus (K) of a geological formation surrounding the borehole.

2. The method of claim **1**, wherein the one or more first parameters comprises at least a pressure and a volume of the packer during the actuation of the packer.

3. The method of claim **2**, wherein the one or more second parameters comprise at least one of a radius, a tilt angle, a stress, a strain, a displacement, or any combination thereof.

4. The method of claim **3**, wherein the plurality of derivatives comprises a derivative of strain with respect to pressure, a derivative of tilt angle with respect to volume, or a combination thereof.

5. The method of claim **4**, wherein the plurality of derivatives comprises a derivative of volume with respect to pressure.

6. The method of claim **1**, comprising:

deploying a test tool into the borehole, wherein the test tool comprises the packer and a plurality of sensors configured to measure the one or more first parameters and the one or more second parameters;

controlling the actuation of the packer; and

acquiring the measurements of the one or more first parameters and the one or more second parameters via the sensors.

7. The method of claim **6**, wherein the plurality of sensors comprise one or more first sensors and one or more second sensors, the one or more first sensors are coupled to the packer, and the one or more second sensors are coupled to the packer, separate from the packer, or a combination thereof.

8. The method of claim **1**, wherein analyzing further comprises analyzing the plurality of derivatives associated with the first and second parameters further to estimate a static shear modulus (G) of the geological formation surrounding the borehole.

9. The method of claim **8**, comprising building or updating a mechanical earth model (MEM) based on the static bulk modulus (K) and the static shear modulus (G).

10. The method of claim **1**, comprising controlling one or more parameters of a hydrocarbon extraction system based on the static bulk modulus (K), wherein analyzing the plurality of derivatives to estimate at least the static bulk modulus (K) is performed in real-time upon obtaining the measurements of the one or more first parameters and the one or more second parameters.

11. The method of claim **1**, wherein analyzing the plurality of derivatives comprises comparing the plurality of derivatives against the plurality of derivatives output from a computer simulation of the actuation of the packer and the geometrical change in the borehole.

12. The method of claim **11**, wherein analyzing the plurality of derivatives comprises comparing one or more pairs of derivatives to the plurality of derivatives output from the computer simulation.

13. The method of claim **11**, wherein analyzing the plurality of derivatives comprises outputting one or more contour plots on an electronic display illustrating a relationship between the plurality of derivatives and at least the static bulk modulus (K) based on the computer simulation.

14. The method of claim **1**, wherein the packer comprises a length to diameter ratio of less than 1.

15. A tangible and non-transitory machine readable medium comprising instructions executable by one or more processors to perform operations comprising:

obtaining measurements of one or more first parameters of a packer during an actuation of the packer in a borehole;

obtaining measurements of one or more second parameters indicative of a geometrical change in the borehole caused by the actuation of the packer; and

analyzing a plurality of first and second parameters, derivatives based on the plurality of first and second parameters, or a combination thereof to estimate at least a static bulk modulus (K) of a geological formation surrounding the borehole.

16. The medium of claim **15**, wherein analyzing the plurality of derivatives comprises comparing the plurality of derivatives against the plurality of derivatives output by a computer simulation of the actuation of the packer and the geometrical change in the borehole, wherein the computer simulation provides a relationship between the plurality of derivatives and at least the static bulk modulus (K) and a static shear modulus (G).

17. The medium of claim **16**, wherein analyzing the plurality of derivatives comprises outputting one or more contour plots on an electronic display illustrating the relationship between the plurality of derivatives and at least the static bulk modulus (K) and the static shear modulus (G) based on the computer simulation.

18. A system, comprising:

a test tool configured to deploy into a borehole, wherein the test tool comprises:

a packer;

a plurality of sensors; and

a controller having a processor, a memory, and instructions stored on the memory and executable by the processor to perform operations comprising:

obtaining measurements of one or more first parameters of the packer during an actuation of the packer in the borehole via one or more first sensors of the plurality of sensors;

obtaining measurements of one or more second parameters indicative of a geometrical change in the borehole caused by the actuation of the packer via one or more second sensors of the plurality of sensors; and

analyzing a plurality of first and second parameters, derivatives based on the plurality of first and second parameters, or a combination thereof to estimate at least a static bulk modulus (K) of a geological formation surrounding the borehole locally on the controller and/or remotely on a computer separate from the test tool.

19. The system of claim **18**, wherein the one or more first parameters comprises at least a pressure and a volume of the packer during the actuation of the packer, and the one or more second parameters comprise at least one of a radius, a tilt angle, a stress, a strain, a displacement, or any combination thereof.

20. The system of claim **18**, wherein the one or more second sensors comprise one or more strain gauges, strain rings, strain sheets, piezo sensors, sonic and ultrasonic sensors, fiber optic cables, extensometers, tiltmeters, calipers, or a combination thereof.

* * * * *