US012390661B2

(12) **United States Patent**
Maguire et al.

(10) **Patent No.: US 12,390,661 B2**
(45) **Date of Patent: Aug. 19, 2025**

(54) **BLOOD-TISSUE SURFACE BASED RADIOSURGICAL RENAL TREATMENT PLANNING**

(71) Applicant: **Varian Medical Systems, Inc.**, Palo Alto, CA (US)

(72) Inventors: **Patrick Maguire**, Menlo Park, CA (US); **Edward Gardner**, San Jose, CA (US)

(73) Assignee: **Varian Medical Systems, Inc.**, Palo Alto, CA (US)

(*) Notice: Subject to any disclaimer, the term of this patent is extended or adjusted under 35 U.S.C. 154(b) by 0 days.

(21) Appl. No.: **18/507,495**

(22) Filed: **Nov. 13, 2023**

(65) **Prior Publication Data**

US 2024/0082601 A1 Mar. 14, 2024

Related U.S. Application Data

(63) Continuation of application No. 17/482,027, filed on Sep. 22, 2021, now Pat. No. 11,844,959, which is a (Continued)

(51) **Int. Cl.**
A61N 5/10 (2006.01)
A61B 5/20 (2006.01)
(Continued)

(52) **U.S. Cl.**
CPC ***A61N 5/103*** (2013.01); ***A61B 5/201*** (2013.01); ***A61B 90/37*** (2016.02); ***A61N 5/10*** (2013.01);
(Continued)

(58) **Field of Classification Search**
CPC A61N 5/10; A61N 5/103; A61N 5/1031; A61N 5/1042; A61N 5/1043;
(Continued)

(56) **References Cited**

U.S. PATENT DOCUMENTS

6,711,433 B1 3/2004 Geiger et al.
6,889,695 B2 5/2005 Pankratov et al.
(Continued)

FOREIGN PATENT DOCUMENTS

CN 101267858 9/2008
CN 102481457 5/2012
(Continued)

OTHER PUBLICATIONS

European search report and search opinion dated Aug. 16, 2016 for EP Application No. 13867516.
(Continued)

Primary Examiner — Allen C. Ho
(74) *Attorney, Agent, or Firm* — Duane Morris LLP

(57) **ABSTRACT**

Devices, systems, and methods for planning radiosurgical treatments for neuromodulating a portion of the renovascular system may be used to plan radiosurgical neuromodulation treatments for conditions or disease associated with elevated central sympathetic drive. The renal nerves may be located and targeted at the level of the ganglion and/or at postganglionic positions, as well as preganglionic positions. Target regions include the renal plexus, celiac ganglion, the superior mesenteric ganglion, the aorticorenal ganglion and the aortic plexus. Planning of radiosurgical treatments will optionally employ a graphical representation of a blood/tissue interface adjacent these targets.

20 Claims, 25 Drawing Sheets

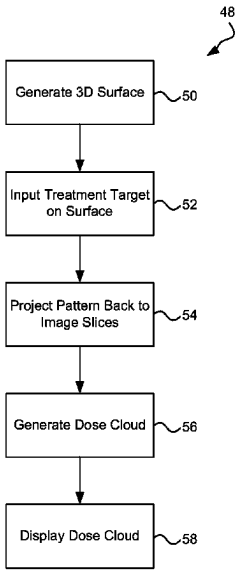

Related U.S. Application Data

continuation of application No. 16/273,932, filed on Feb. 12, 2019, now Pat. No. 11,154,725, which is a continuation of application No. 16/017,923, filed on Jun. 25, 2018, now abandoned, which is a continuation of application No. 14/752,442, filed on Jun. 26, 2015, now abandoned, which is a continuation of application No. PCT/US2013/077176, filed on Dec. 20, 2013.

(60) Provisional application No. 61/746,738, filed on Dec. 28, 2012.

(51) **Int. Cl.**
A61B 90/00 (2016.01)
A61B 18/00 (2006.01)

(52) **U.S. Cl.**
CPC ***A61N 5/1031*** (2013.01); ***A61N 5/1037*** (2013.01); ***A61N 5/1039*** (2013.01); ***A61N 5/1048*** (2013.01); ***A61N 5/1049*** (2013.01); ***A61N 5/1064*** (2013.01); ***A61N 5/1065*** (2013.01); ***A61N 5/1067*** (2013.01); ***A61N 5/1071*** (2013.01); ***A61N 5/1077*** (2013.01); ***A61N 5/1084*** (2013.01); *A61B 2018/00511* (2013.01); *A61B 2090/3735* (2016.02); *A61B 2090/374* (2016.02); *A61B 2090/3762* (2016.02); *A61B 2090/378* (2016.02); *A61N 2005/1055* (2013.01); *A61N 2005/1061* (2013.01); *A61N 2005/1062* (2013.01); *A61N 2005/1072* (2013.01); *A61N 2005/1074* (2013.01)

(58) **Field of Classification Search**
CPC .. A61N 5/1045; A61N 5/1047; A61N 5/1048; A61N 5/1049; A61N 5/1064; A61N 5/1065; A61N 5/1067; A61N 5/1071; A61N 2005/1074; A61N 5/1077; A61N 5/1081; A61N 5/1082; A61N 5/1084
USPC 378/65
See application file for complete search history.

(56) **References Cited**

U.S. PATENT DOCUMENTS

7,327,872	B2	2/2008	Vaillant et al.	
7,499,743	B2	3/2009	Vass et al.	
7,574,251	B2	8/2009	Lu et al.	
7,953,204	B2 *	5/2011	Sumanaweera	A61N 5/1049 378/65
8,157,742	B2	4/2012	Taylor	
8,249,815	B2	8/2012	Taylor	
8,295,912	B2	10/2012	Gertner	
8,315,812	B2	11/2012	Taylor	
8,515,527	B2	8/2013	Vaillant et al.	
8,548,778	B1	10/2013	Hart et al.	
8,554,490	B2	10/2013	Tang et al.	
8,784,290	B2 *	7/2014	Sumanaweera	A61N 5/1039 600/1
8,824,752	B1	9/2014	Fonte et al.	
9,042,613	B2	5/2015	Spilker et al.	
9,072,894	B2	7/2015	Chin et al.	
9,087,147	B1	7/2015	Fonte	
9,183,764	B2	11/2015	Sugimoto et al.	
9,205,279	B2	12/2015	Sumanaweera et al.	
9,424,395	B2	8/2016	Sankaran et al.	
9,471,989	B2	10/2016	O'Dell	
9,504,435	B2	11/2016	Bernhardt et al.	
9,504,853	B2	11/2016	Sumanaweera et al.	
9,585,623	B2	3/2017	Fonte et al.	
9,839,483	B2	12/2017	Sankaran et al.	
10,398,386	B2	9/2019	Grady et al.	
10,974,069	B2	4/2021	Maguire et al.	
11,097,127	B2	8/2021	Sumanaweera et al.	
11,109,830	B2	9/2021	De Backer	
11,154,725	B2	10/2021	Maguire et al.	
11,844,959	B2 *	12/2023	Maguire	A61N 5/1065
2011/0166407	A1	7/2011	Sumanaweera et al.	
2011/0166408	A1	7/2011	Sumanaweera et al.	
2012/0323233	A1	12/2012	Maguire et al.	
2015/0290472	A1	10/2015	Maguire et al.	

FOREIGN PATENT DOCUMENTS

CN	102510735	6/2012
WO	2014105743	7/2014

OTHER PUBLICATIONS

International Search Report and Written Opinion of PCT Application No. PCT/US13/77176, mailed Apr. 29, 2014. 16 pages.

Benedict et al., Sterotactic body radiation therapy: The report of AAPM Task Group 101, Med. Phys. 37(8), Aug. 2010, 0094-2405/2010/37(8)/4078/24, pp. 4078-4101 [online] [retrieved on Mar. 27, 2014]. Retrieved from the Internet: URL:http://www.aapm.org/pubs/reports/RPT_101.pdf.

* cited by examiner

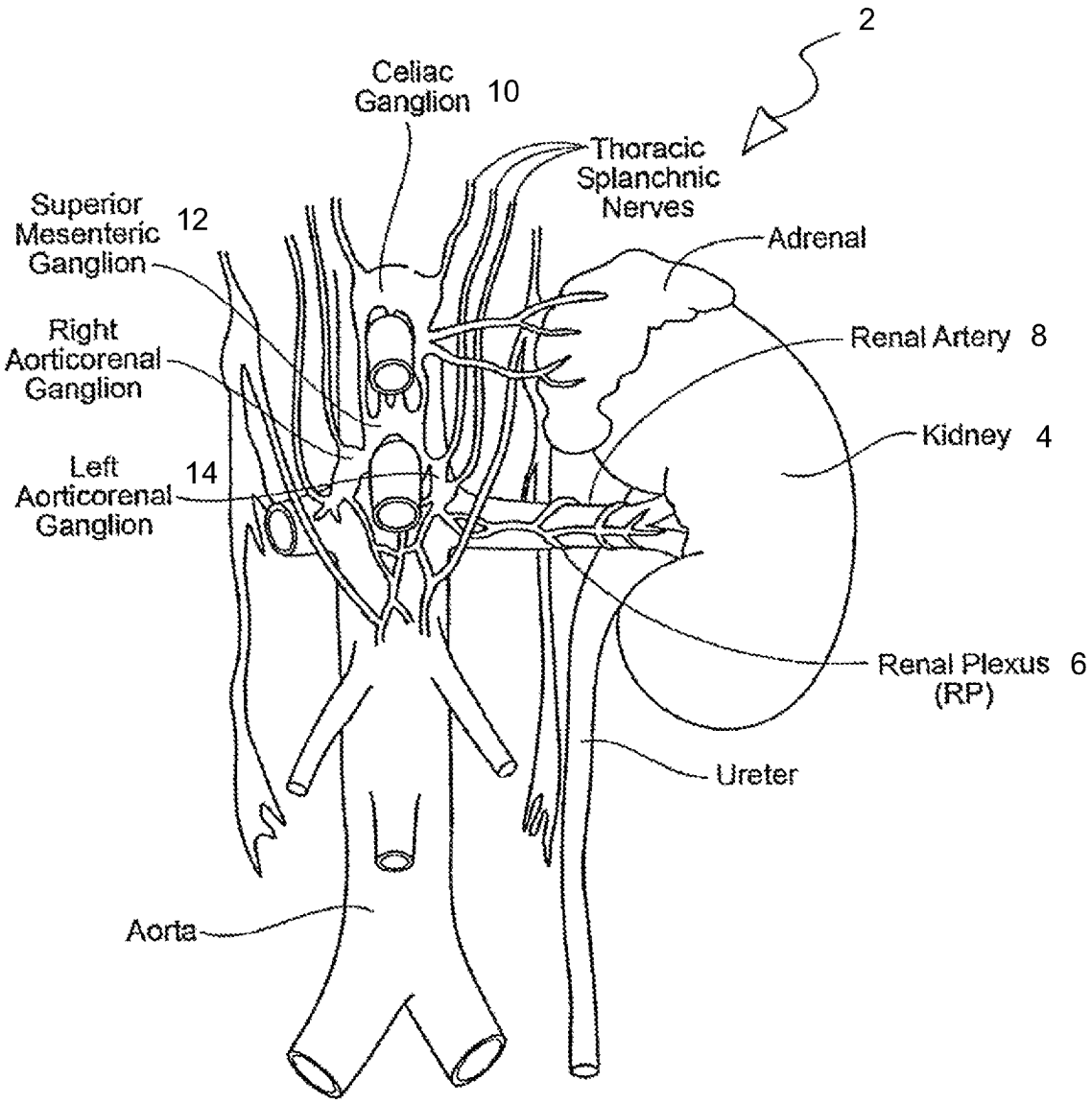
2
Celiac Ganglion 10
Thoracic Splanchnic Nerves
Superior Mesenteric Ganglion 12
Adrenal
Right Aorticorenal Ganglion
Renal Artery 8
Kidney 4
Left Aorticorenal Ganglion 14
Renal Plexus (RP) 6
Ureter
Aorta

FIG. 1A

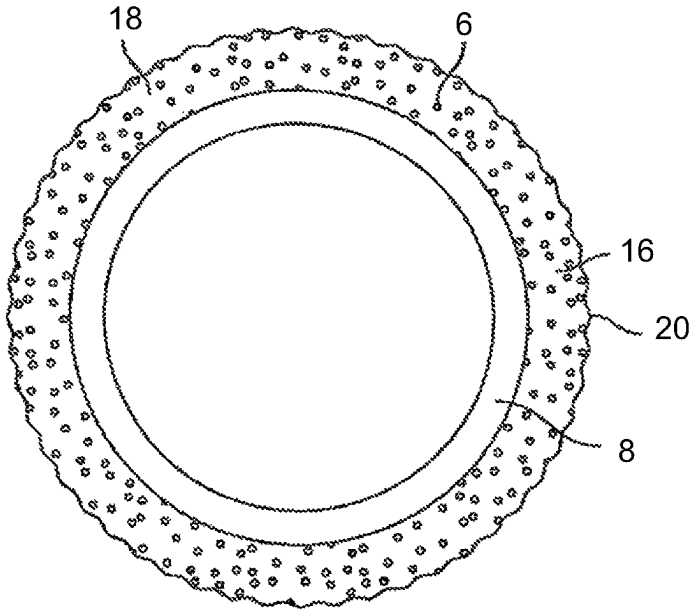

FIG. 1B

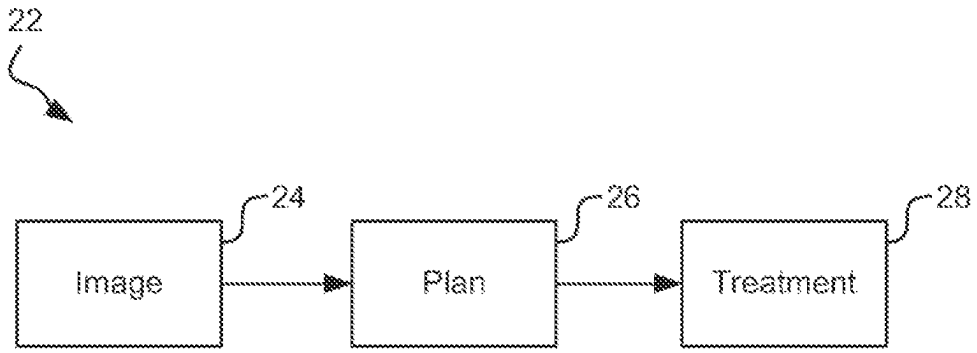
22
24
26
28
Image
Plan
Treatment

FIG. 2

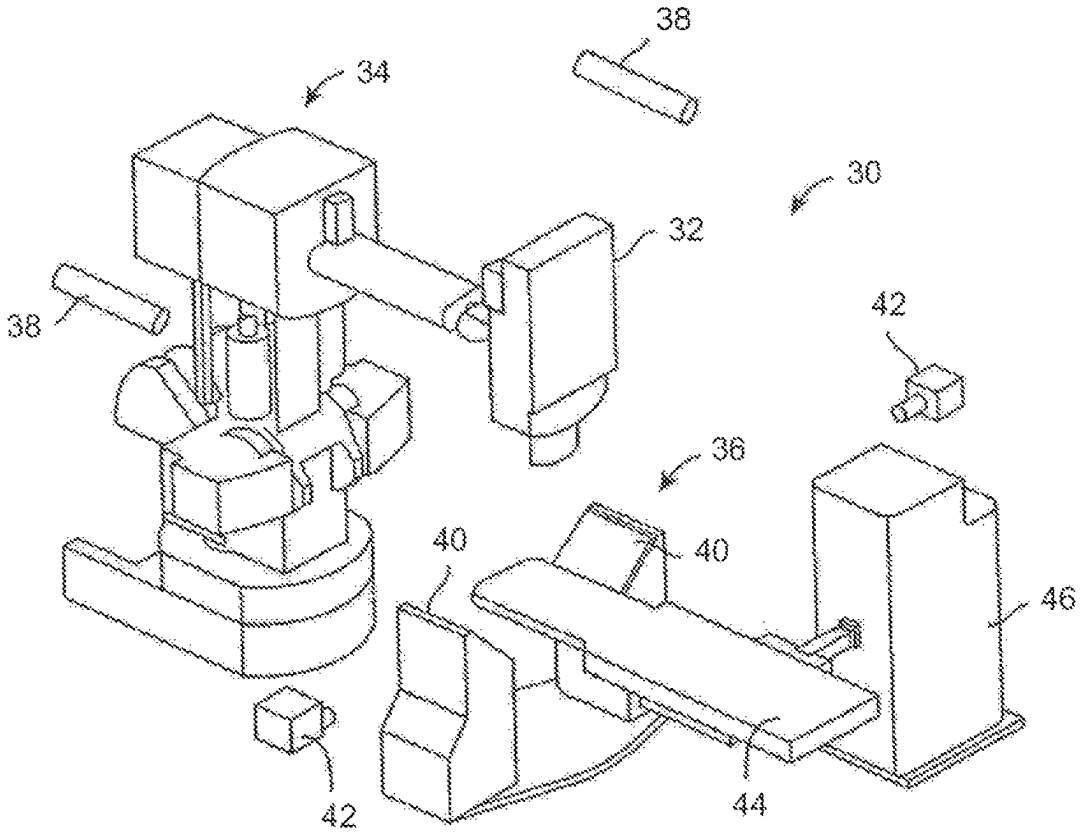
38
34
30
32
38
42
36
40
40
46
42
44

FIG. 3

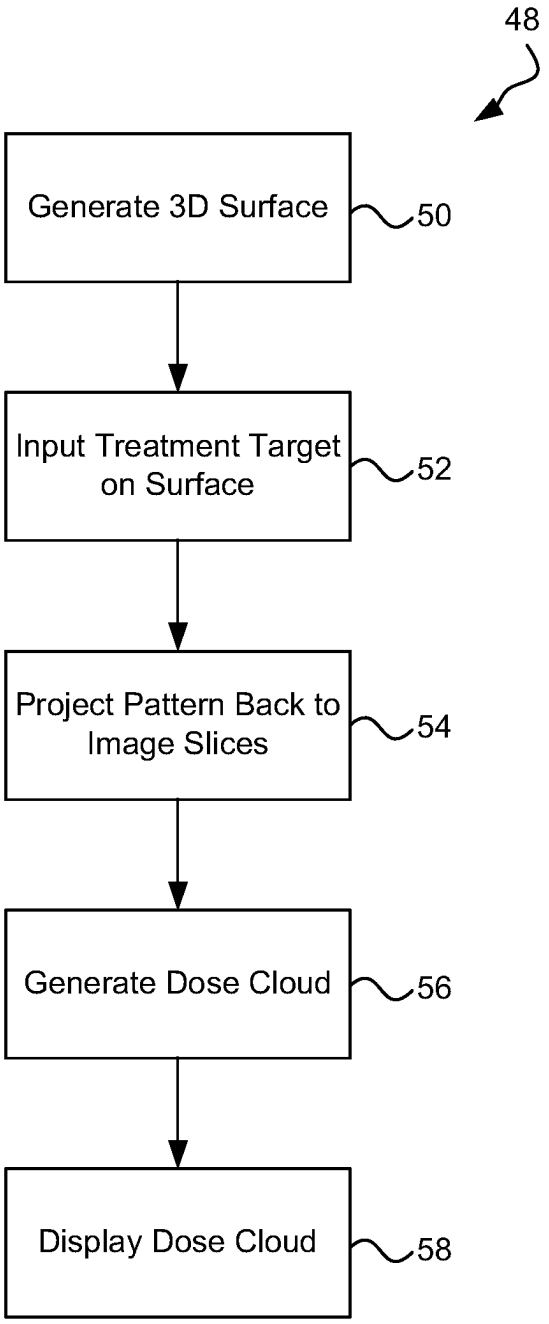
48
Generate 3D Surface
50
Input Treatment Target on Surface
52
Project Pattern Back to Image Slices
54
Generate Dose Cloud
56
Display Dose Cloud
58

FIG. 4

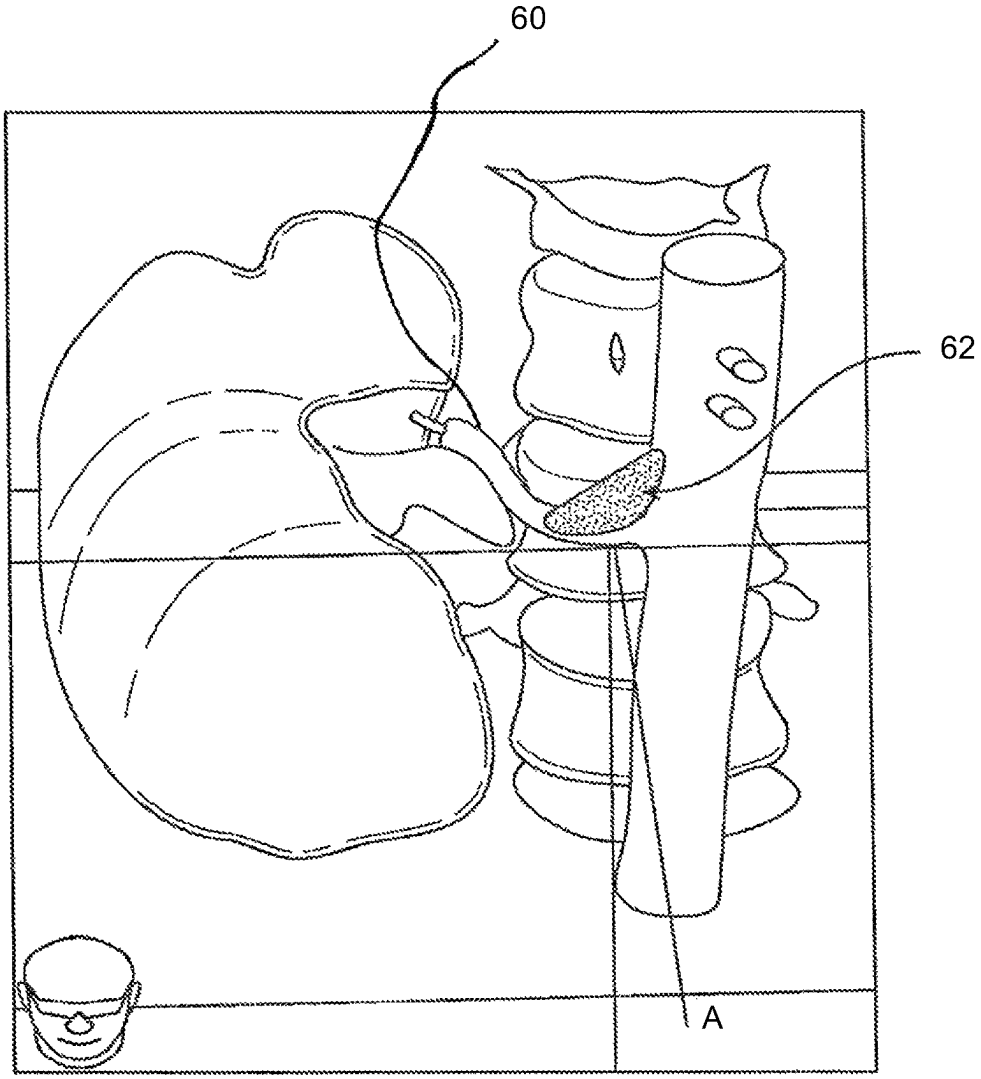

FIG. 5A

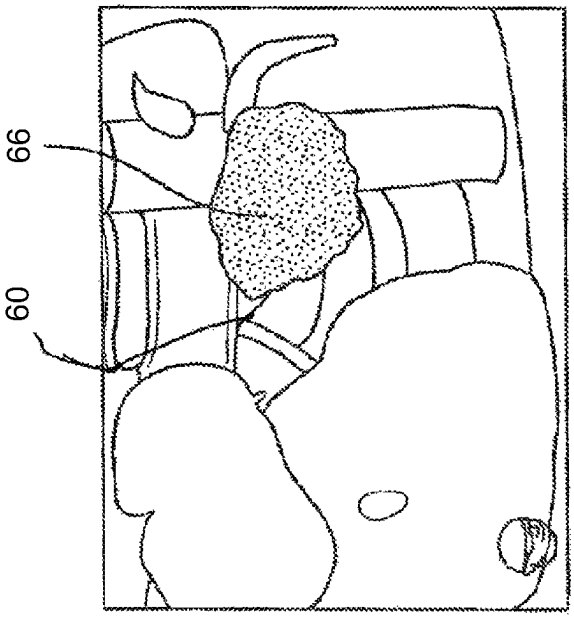

FIG. 5C

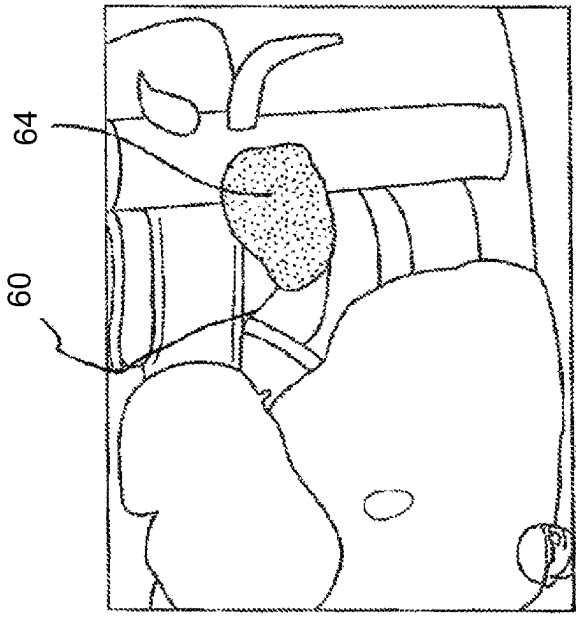

FIG. 5B

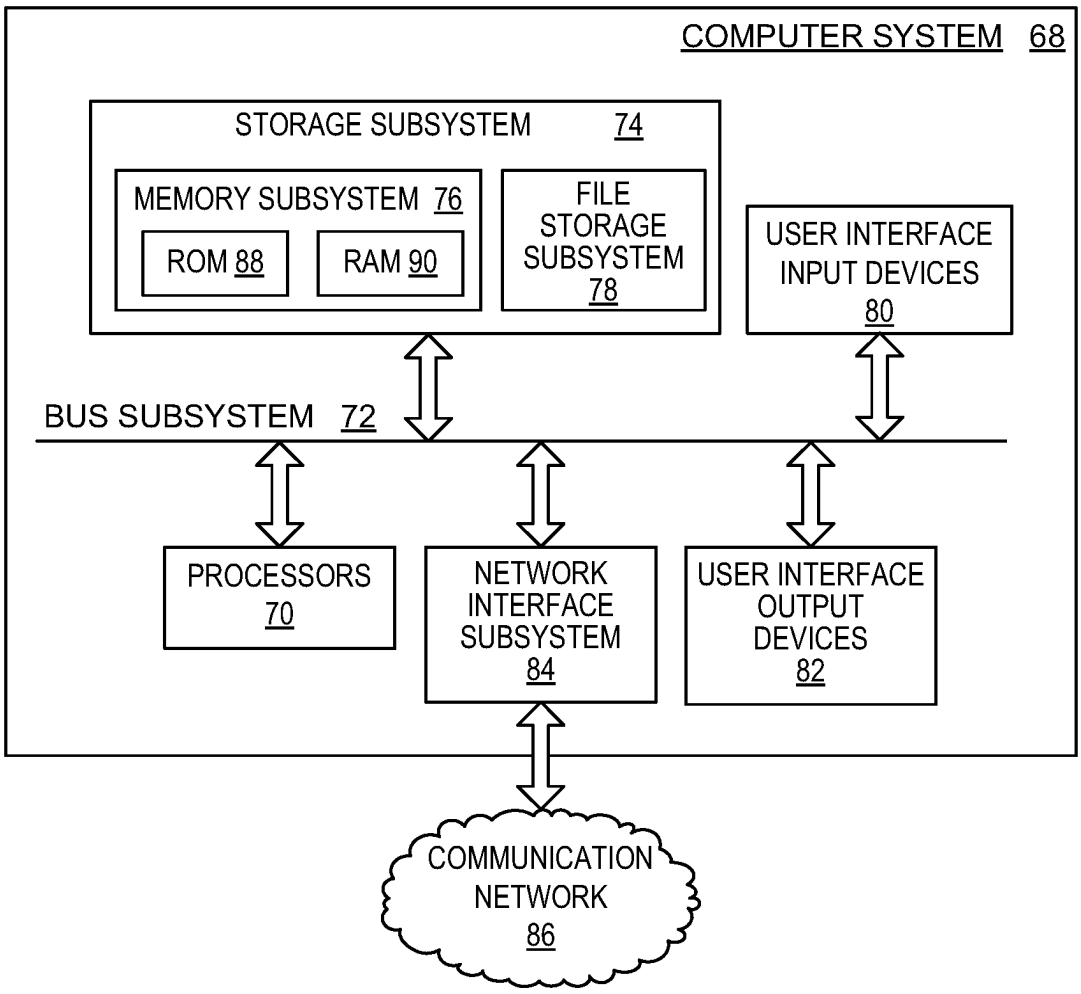
COMPUTER SYSTEM 68
STORAGE SUBSYSTEM 74
MEMORY SUBSYSTEM 76
ROM 88
RAM 90
FILE STORAGE SUBSYSTEM 78
USER INTERFACE INPUT DEVICES 80
BUS SUBSYSTEM 72
PROCESSORS 70
NETWORK INTERFACE SUBSYSTEM 84
USER INTERFACE OUTPUT DEVICES 82
COMMUNICATION NETWORK 86

FIG. 6

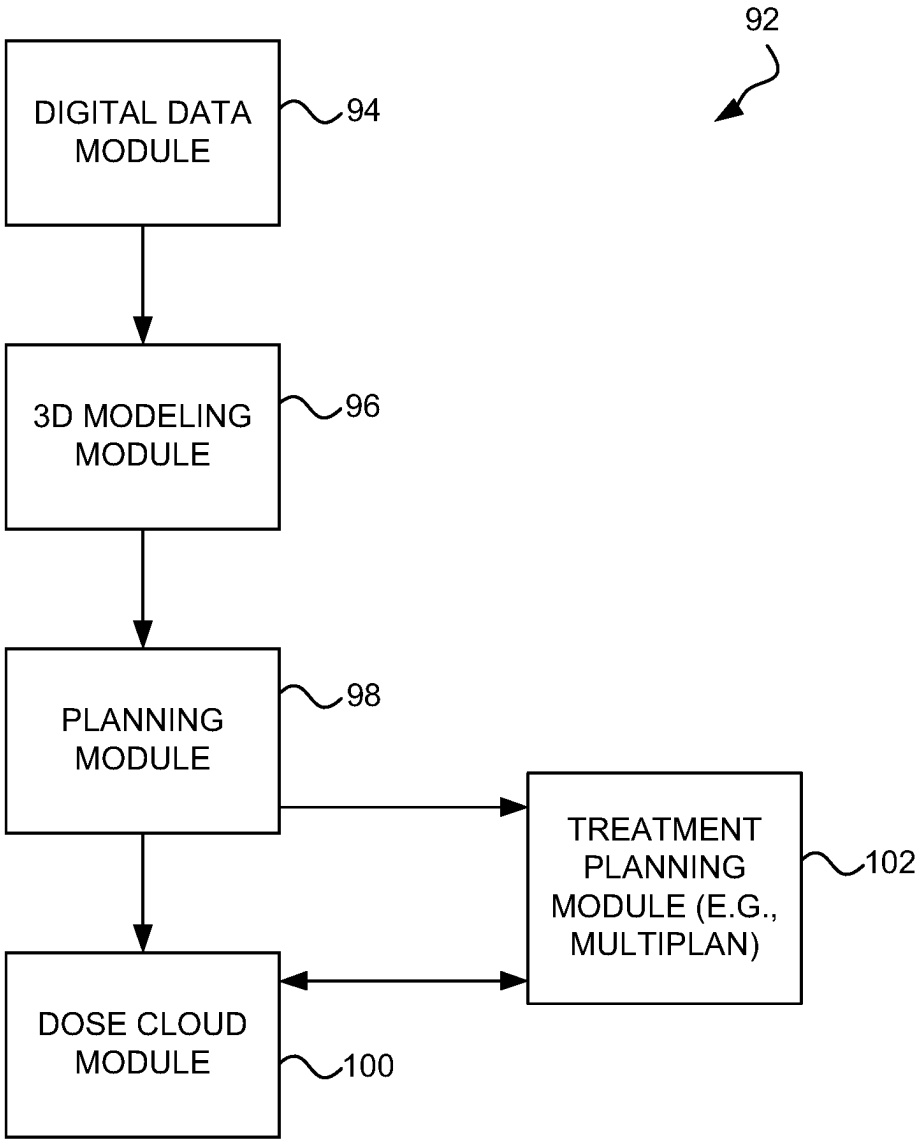
92
DIGITAL DATA MODULE
94
3D MODELING MODULE
96
PLANNING MODULE
98
TREATMENT PLANNING MODULE (E.G., MULTIPLAN)
102
DOSE CLOUD MODULE
100

FIG. 7

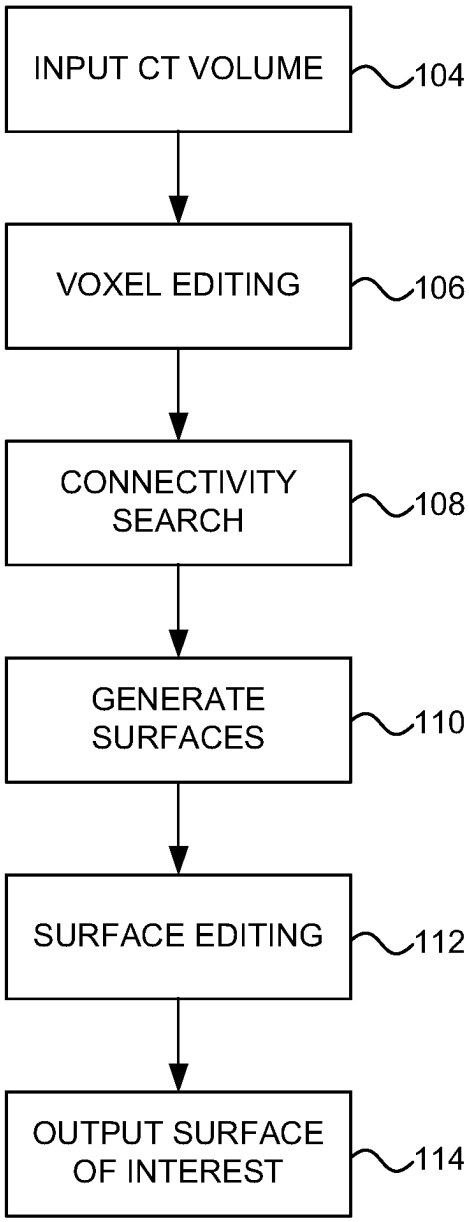
INPUT CT VOLUME
104
VOXEL EDITING
106
CONNECTIVITY SEARCH
108
GENERATE SURFACES
110
SURFACE EDITING
112
OUTPUT SURFACE OF INTEREST
114

FIG. 8

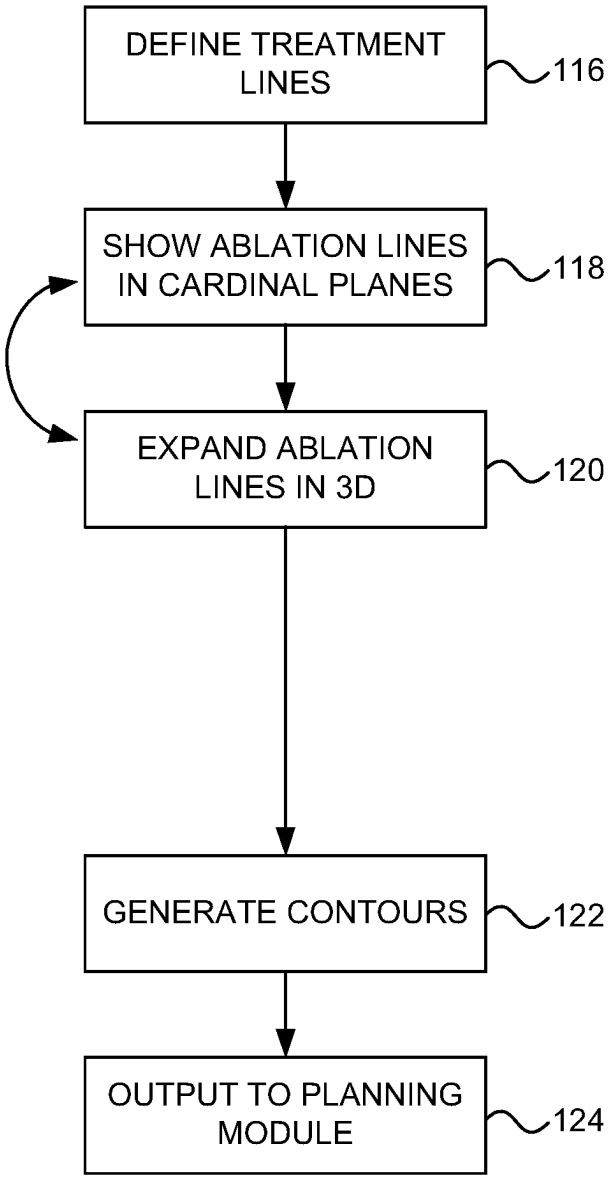
DEFINE TREATMENT LINES
116
SHOW ABLATION LINES IN CARDINAL PLANES
118
EXPAND ABLATION LINES IN 3D
120
GENERATE CONTOURS
122
OUTPUT TO PLANNING MODULE
124

FIG. 9

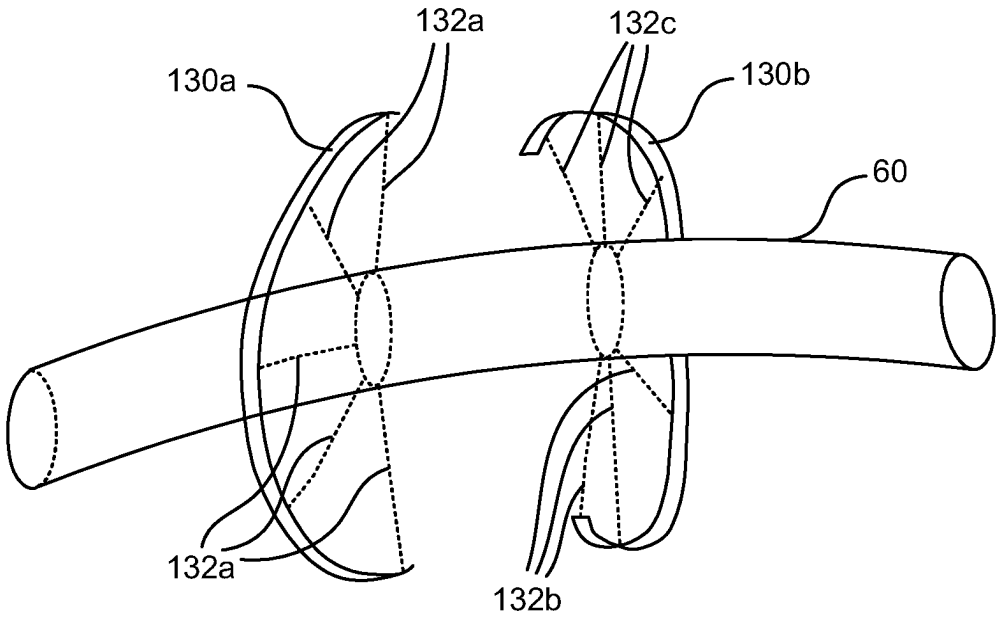

FIG. 10A

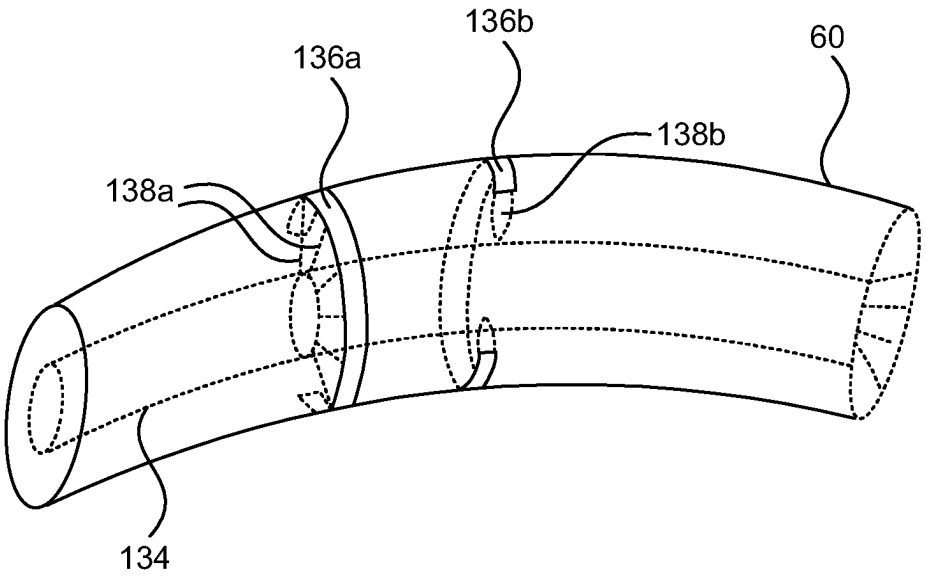

FIG. 10B

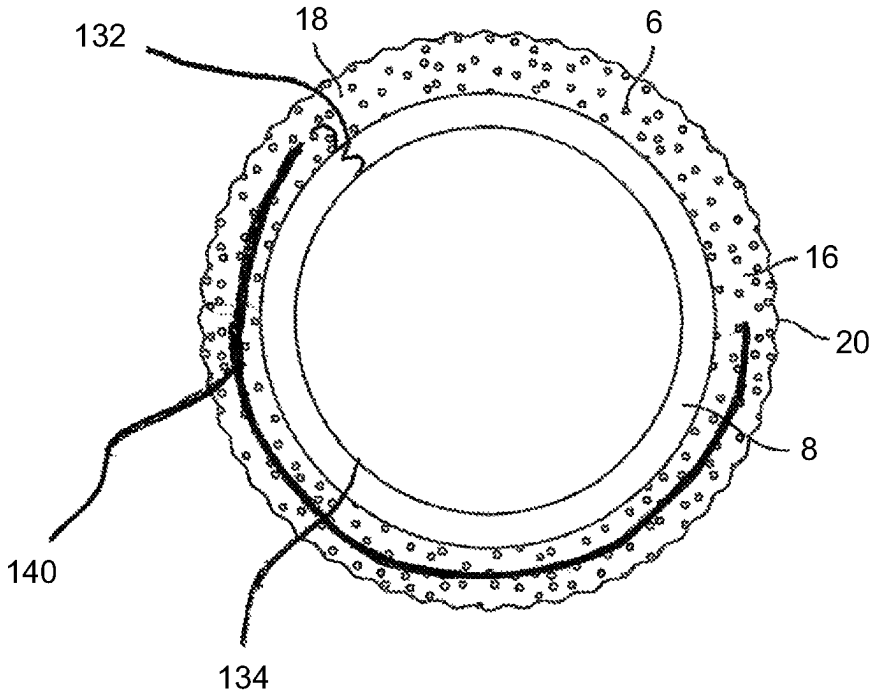

FIG. 11

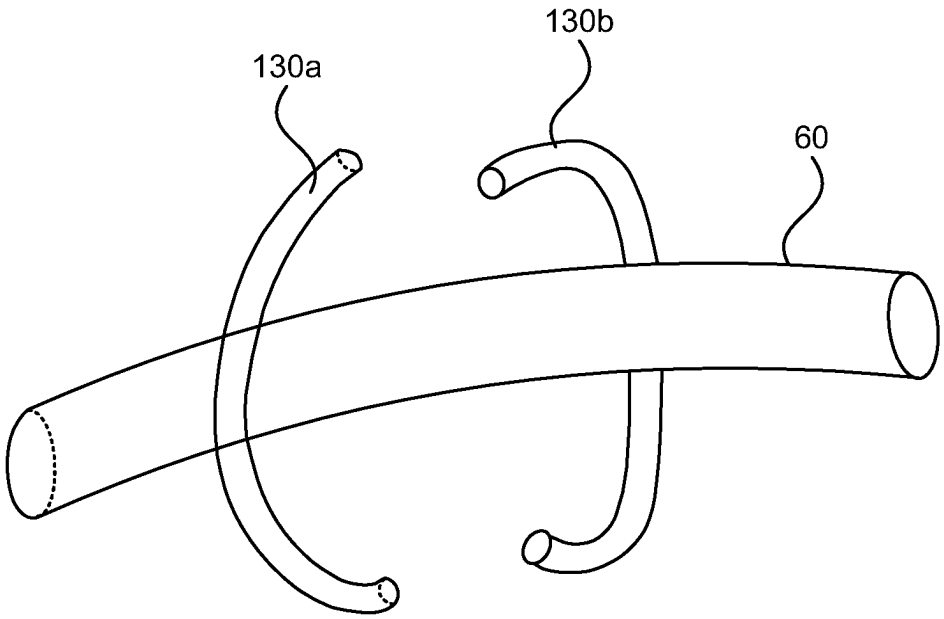

FIG. 12A

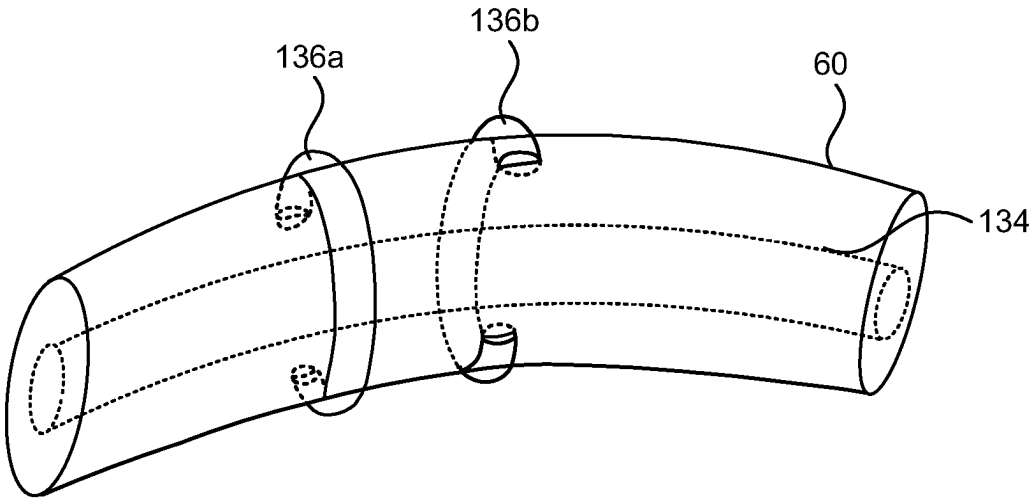

FIG. 12B

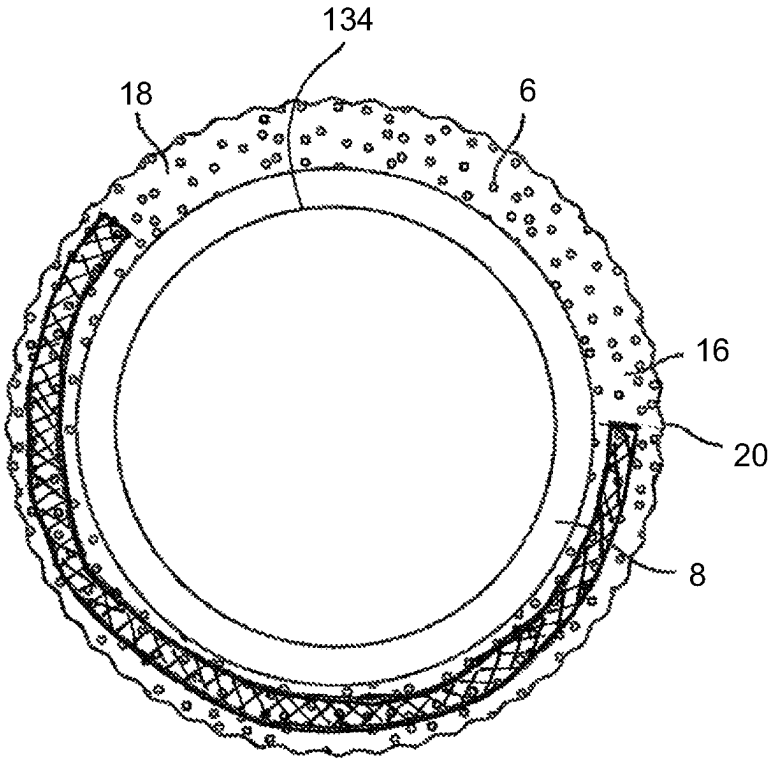

FIG. 13

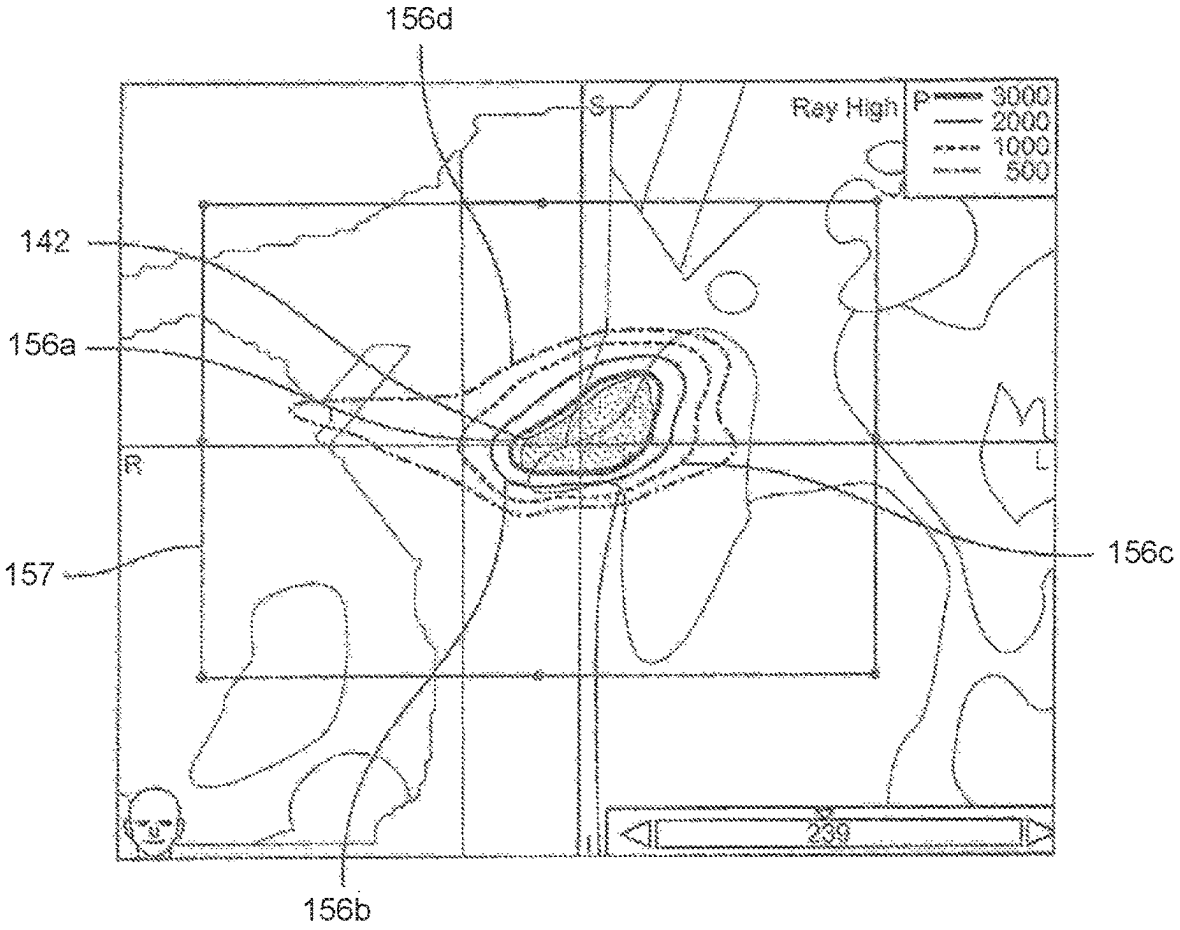
156d
S
Ray High
P
3000
2000
1000
500
142
156a
R
L
157
156c
230
156b

FIG. 14

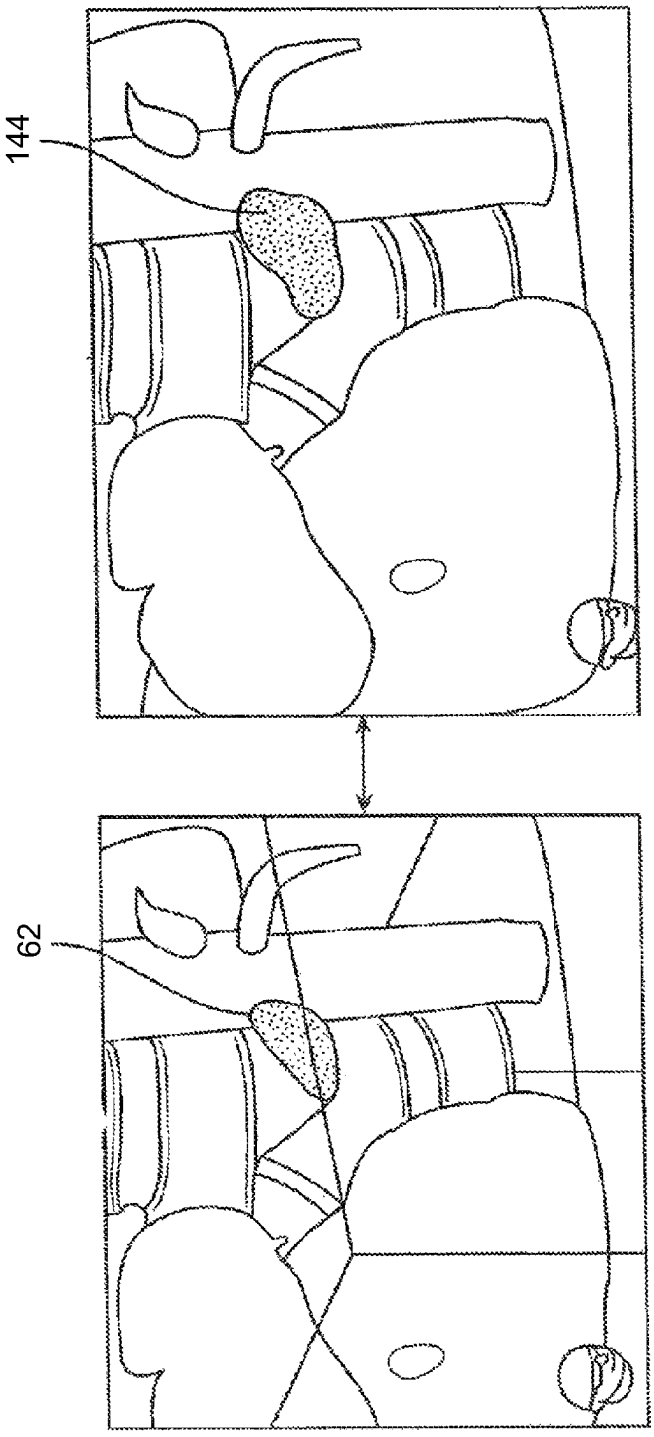

FIG. 15

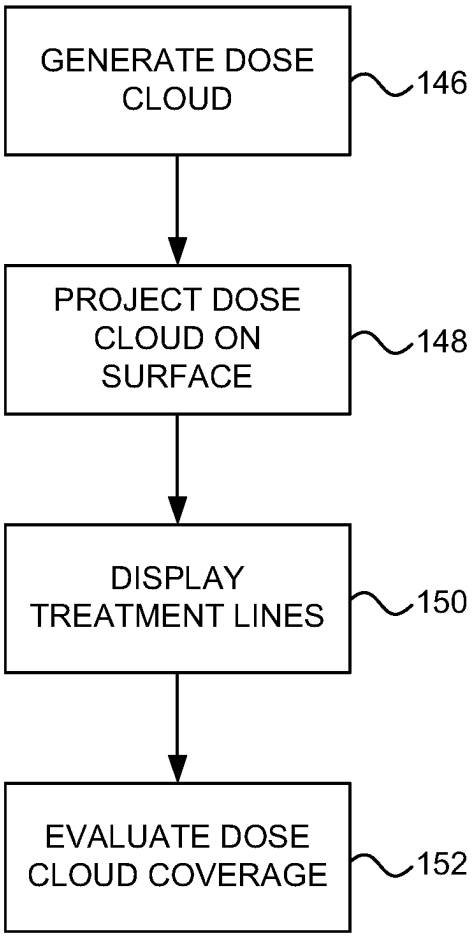
GENERATE DOSE CLOUD
146
PROJECT DOSE CLOUD ON SURFACE
148
DISPLAY TREATMENT LINES
150
EVALUATE DOSE CLOUD COVERAGE
152

FIG. 16

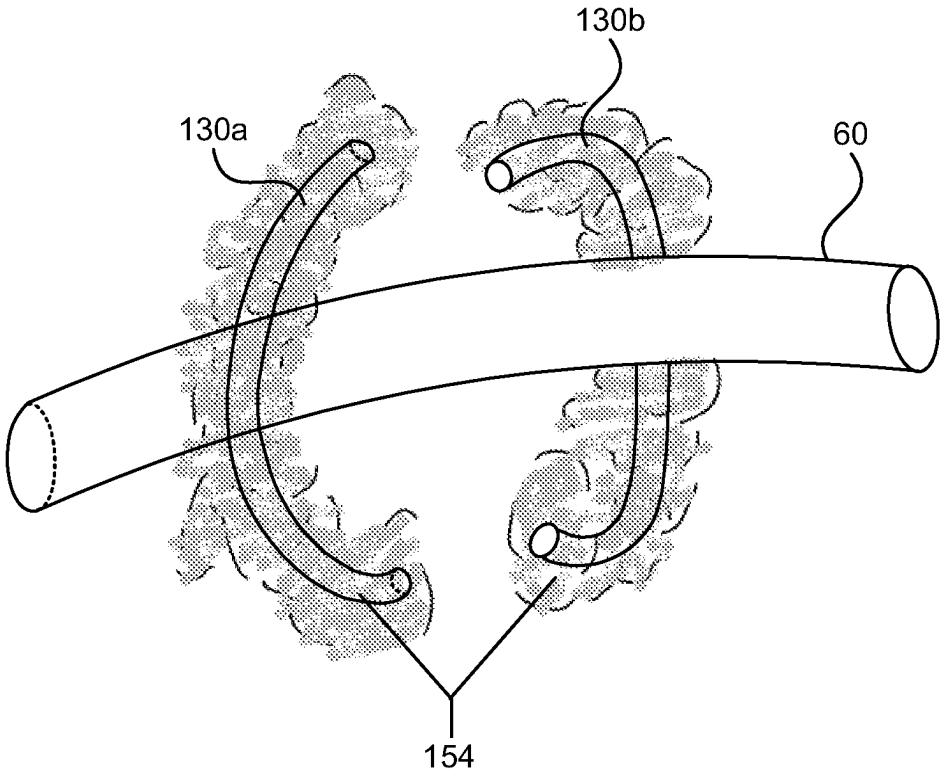

FIG. 17

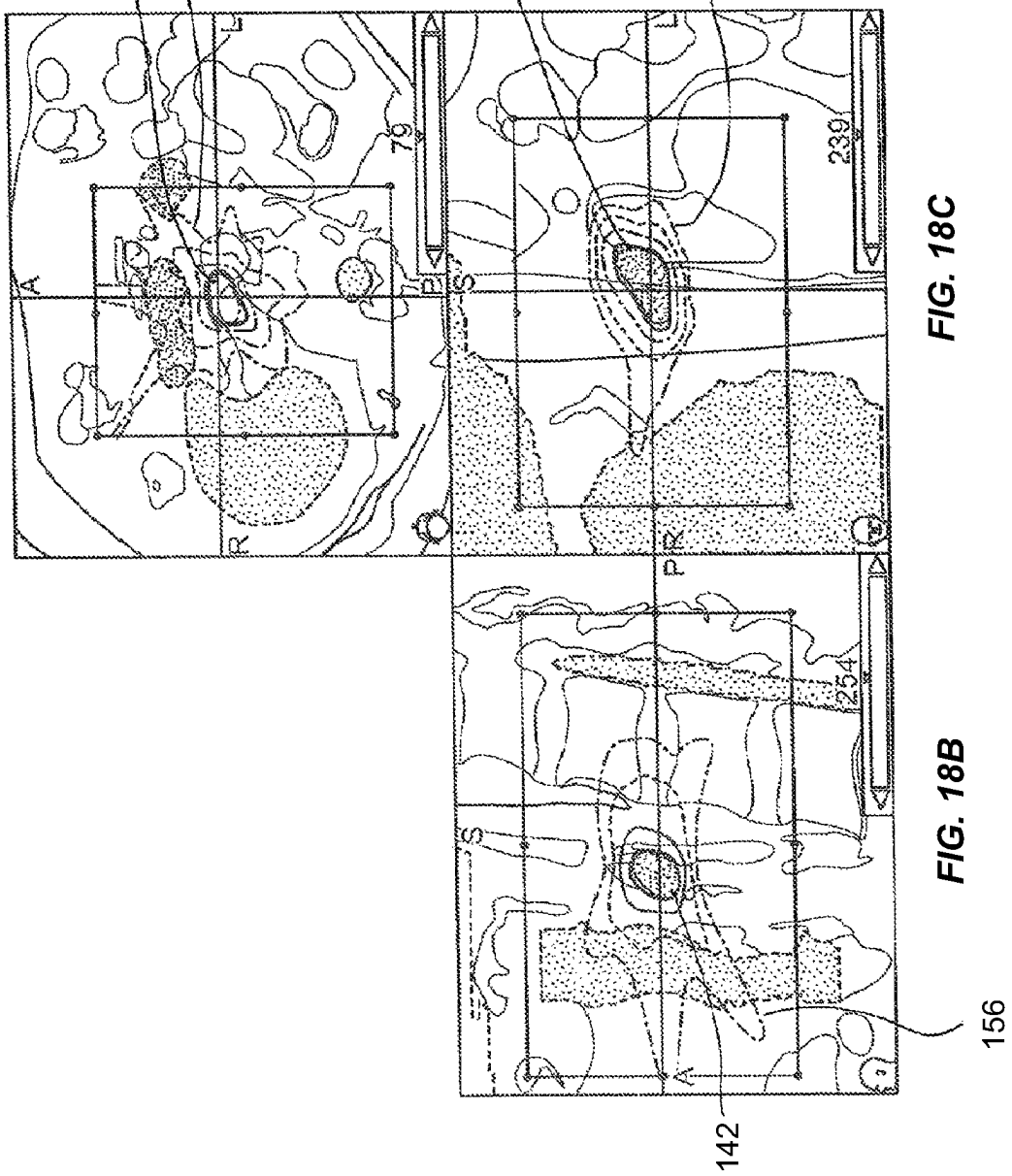

FIG. 18A

FIG. 18C

FIG. 18B

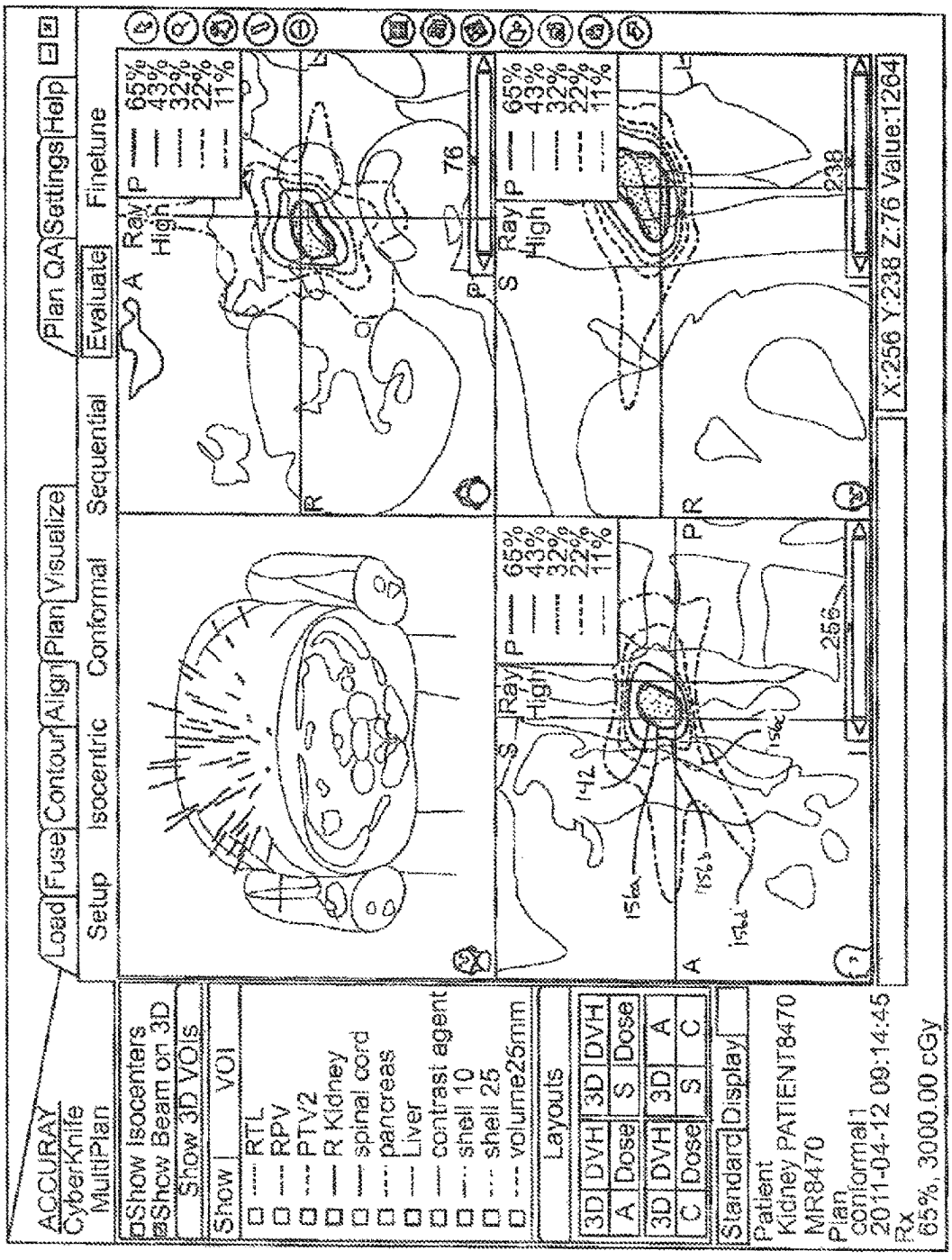
ACCURAY
CyberKnife
MultiPlan
Load
Fuse
Contour
Align
Plan
Visualize
Plan QA
Settings
Help
Setup
Isocentric
Conformal
Sequential
Evaluate
Finetune
Show Isocenters
Show Beam on 3D
Show 3D VOIs
Show
VOI
RTL
RPV
PTV2
R Kidney
spinal cord
pancreas
Liver
contrast agent
shell 10
shell 25
volume25mm
Layouts
3D
DVH
A
Dose
C
S
Standard
Display
Patient
Kidney PATIENT8470
MR8470
Plan
conformal 1
2011-04-12 09:14:45
Rx
65%, 3000.00 cGy
Ray
High
65%
43%
32%
22%
11%
X:256 Y:238 Z:76 Value:1264

FIG. 18D

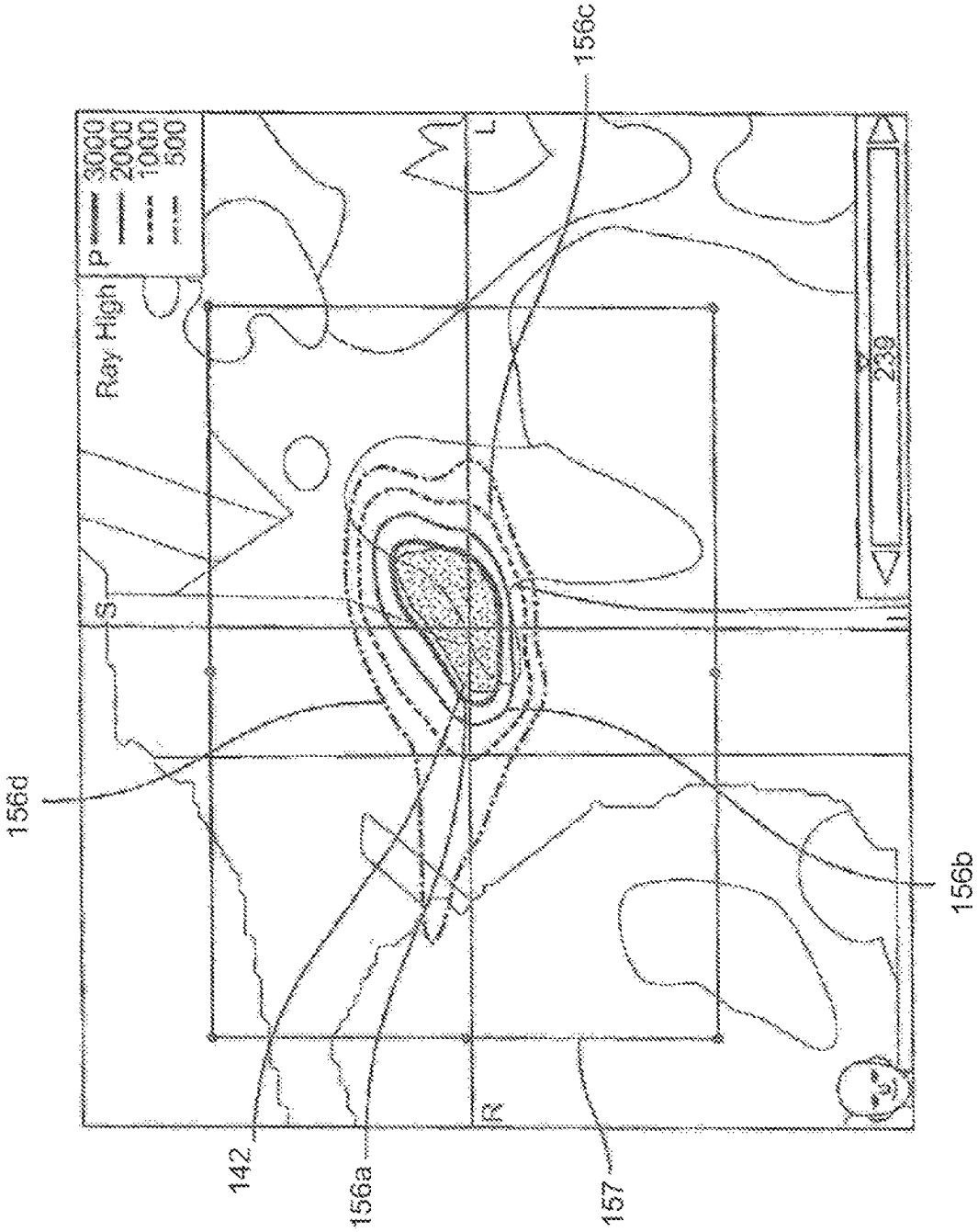
156c
P
3000
2000
1000
500
Ray High
L
S
R
239
156d
156b
142
156a
157

FIG. 18E

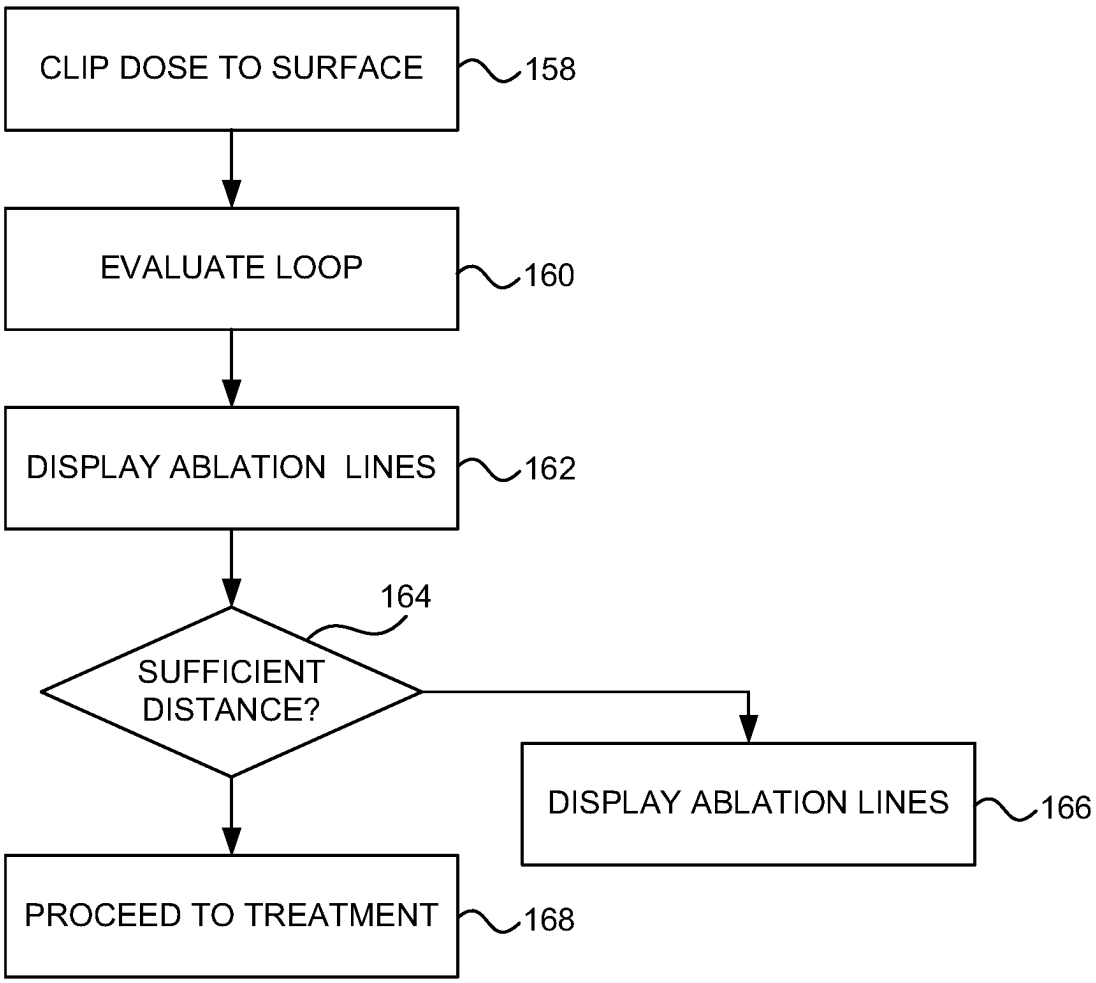
CLIP DOSE TO SURFACE
158
EVALUATE LOOP
160
DISPLAY ABLATION LINES
162
164
SUFFICIENT DISTANCE?
DISPLAY ABLATION LINES
166
PROCEED TO TREATMENT
168

FIG. 19

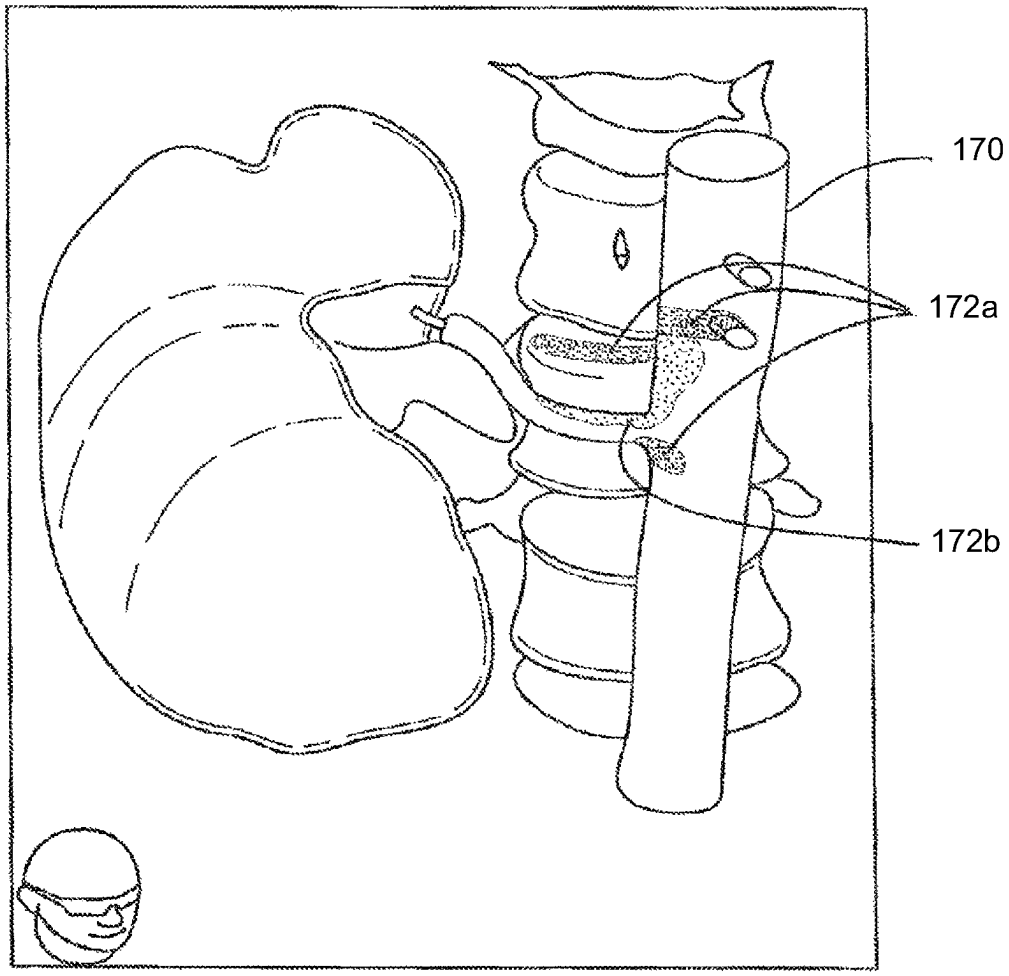

FIG. 20

BLOOD-TISSUE SURFACE BASED RADIOSURGICAL RENAL TREATMENT PLANNING

CROSS-REFERENCES TO RELATED APPLICATIONS

This application is a continuation application of U.S. application Ser. No. 17/482,027 filed on Sep. 22, 2021, now U.S. Pat. No. 11,844,959 issued on Dec. 19, 2023 entitled "BLOOD-TISSUE SURFACE BASED RADIOSURGICAL RENAL TREATMENT PLANNING" which is a continuation of U.S. application Ser. No. 16/273,932 filed on Feb. 12, 2019, now U.S. Pat. No. 11,154,725 issued on Oct. 26, 2021 entitled "BLOOD-TISSUE SURFACE BASED RADIOSURGICAL RENAL TREATMENT PLANNING", which is a continuation of U.S. application Ser. No. 16/017,923, filed on Jun. 25, 2018, entitled "BLOOD-TISSUE SURFACE BASED RADIOSURGICAL RENAL TREATMENT PLANNING", which application is a continuation of U.S. application Ser. No. 14/752,442, filed Jun. 26, 2015, entitled "BLOOD-TISSUE SURFACE BASED RADIOSURGICAL RENAL TREATMENT PLANNING". which application claims priority to and is a continuation of PCT/US2013/077176, filed Dec. 20, 2013, entitled "BLOODTISSUE SURFACE BASED RADIOSURGICAL RENAL TREATMENT PLANNING", which claims the benefit under 35 U.S.C. § 119 (e) of U.S. provisional application No. 61/746,738, filed Dec. 28, 2012, entitled "BLOOD-TISSUE SURFACE BASED RADIOSURGICAL RENAL TREATMENT PLANNING", the contents of which are incorporated herein by reference in their entireties.

BACKGROUND OF THE DISCLOSURE

Radiosurgery is a medical procedure that allows non-invasive treatment of tumors and other targets in the head, spine, abdomen, heart, and lungs. During radiosurgery, a series of beams of ionizing radiation are often directed from outside a patient so as to converge at a target region. The radiation beams often comprises MeV X-ray beams fired from different positions and orientations. The beam trajectories help limit radiation exposure to the intermediate and other collateral tissues, while the cumulative radiation dose at the target can alter or treat the tissue. The distribution of beams may be in three dimensions or two and further, the beams of ionizing radiation may be delivered to target tissue in a single procedure or multiple procedures. The CYBERKNIFE radiosurgical system (Accuray Inc.) and the TRILOGY radiosurgical system (Varian Medical Systems) are two known radiosurgical treatment systems.

Radiosurgical treatment of portions of a patient's renovascular system has been proposed as a treatment for hypertension. The link between hypertension and kidney function was uncovered when patients with end-stage renal disease underwent surgical removal of a kidney and thereafter showed a reduction in blood pressure and total systemic resistance. More specifically, it was discovered that hyperactivity of the nerves surrounding the renal arteries is linked to hypertension, the progression to chronic kidney disease, and heart failure. Since the discovery, renal denervation was proposed to reduce sympathetic outflow to the kidneys, increase urine output (naturiesis and diuresis) and thereby reduce rennin disease without adversely affecting other functions of the kidneys (e.g., glomerular filtration rate and/or renal blood flow).

Traditional treatments include ablation of the origin of the renal nerves in the sympathetic ganglia, pharmacological treatments, and device-based approaches. These approaches, however, each had various shortcomings. Ablating the origin of the renal nerves in the sympathetic ganglia has historically been considered very difficult. Pharmacologic assault on nerve functions is associated with systemic complications. Moreover, the sympathetic renal nerves arborize throughout the walls of the renal arteries and frustrate access thereto. As such, radiosurgical treatment has been proposed to deposit a sufficient ionizing radiation dose at a target of the renovascular system to ablate or modulate a portion of the renal nerves so as to reduce neural activity of the nerves, particularly the renal nerves located proximate to the renal arteries. The renovascular system may be located and targeted at the level of the ganglion and/or at postganglionic positions as well as at preganglionic positions.

Although there have been proposed advancements in radiosurgical renal denervation, it is still difficult and cumbersome to plan radiosurgical treatments for renal neuromodulation. In standard radiosurgical treatments of tumors and the like, computed tomography (CT) imaging provides a series of planar X-ray scans. For the X-rays adjacent a tumor, the planning physician draws a boundary of the target tissue, with the boundary being drawn on the scan traversing through the tumor and the boundary encompassing the tumor (and typically including some additional offset or margin of treated tissue for safety). As the tumor is typically contained within one organ (but may alternatively extend beyond the organ surface to an adjacent organ) the planned treatment boundary is fairy independent of tissue/tissue interface contours. Hence, the treatment plan is typically drawn up as a series of circles surrounding the tumor on each CT scan in which the tumor is visible.

It is difficult to draw an appropriate radiosurgical renovascular treatment plan for forming patterns on conventional planar CT scans using standard radiosurgical planning interfaces. A physician must evaluate the multiple CT scans, and draw appropriate lesion lines and/or circles representing a treatment plan at each planar slice of the target region of the renovascular system. The physician must be able to visualize desired treatment areas from each planar scan. While this appears to be a mere inconvenience, work in connection with the present invention indicates it is surprisingly difficult to efficiently establish an renovascular treatment plan using existing radiosurgical treatment planning tools in light of the location and size of potential targets in the renovascular system.

In light of the above, the present inventors have determined that it is desirable to provide improved devices, systems, and methods for planning a radiosurgical treatment for alleviating renovascular hypertension. It would be particularly beneficial if these improvements were compatible with (and could be implemented by modification of) existing radiosurgical systems, ideally without significantly increasing the exposure of patients to incidental imaging radiation, without increasing the system costs so much as to make these treatments unavailable to many patients, without unnecessarily degrading the accuracy of the treatments, and/or without causing unnecessary collateral damage to the healthy tissues of the patient, including to endothelial tissues of the vasculature adjacent a target tissue.

SUMMARY OF THE DISCLOSURE

The present invention generally provides improved devices, systems, and methods for planning radiosurgical

treatments for alleviating renovascular hypertension. Certain embodiments of the invention may provide a three-dimensional model of a renovascular target region which may help a physician better visualize the target region. A three-dimensional model of a blood/vessel boundary surface of a blood vessel adjacent to a renovascular nerve may be provided. Certain embodiments may receive input with reference to a radiation target which is offset from a three-dimensional model of blood/vessel boundary surface and/or may generate a three-dimensional model of an estimated target location by radially offsetting a distance from a blood/vessel boundary surface of a blood vessel adjacent to the renovascular target. Such embodiments may optionally receive input regarding a radiation target on an estimated target location surface. The input of the desired radiation target may be facilitated by snapping and extending an input target onto (or to a desired offset from) a three-dimensional model based on a user's input relative to a graphical representation of the three-dimensional model. Additional embodiments may receive an input target on a three-dimensional model of a blood/vessel boundary surface and may offset the input target a distance from the three-dimensional model of the blood/vessel boundary surface. Some embodiments provide a neural altering dose of radiation at an offset target site and a safe luminal dose of radiation at the blood/tissue boundary. Further some embodiments may allow a physician to better visualize the overall desired radiation target over the treatment area by displaying the inputted target relative to a surface model. Certain embodiments may display a dose cloud relative to the three-dimensional model to allow a physician to better visualize the radiation dose at portions of the target region according to the inputted treatment plan.

For example, in some exemplary embodiments a radiosurgical method for altering neural function of a patient body is provided. The method includes acquiring image data from a blood vessel adjacent to a nerve. A three dimensional model is generated from the image data by identifying a boundary surface between the blood vessel and blood flowing therein from the image data. An input identifying a radiation target, which is offset from the blood/vessel boundary surface, is received with reference to an image of the three-dimensional model. An irradiation treatment of the radiation target may then be planned so as to provide a neural function-altering dose of radiation at the target and a safe luminal dose of radiation at the blood/vessel boundary. Optionally, the nerve adjacent to the imaged blood vessel may be the renal plexus and the irradiation treatment may be configured to provide a decreasing dose gradient between the target and the blood/vessel boundary. The image data may be from an aorta or a renal artery. The radiation target may be offset from the blood/vessel boundary surface by an offset distance in a range from about 0.25 mm to about 6 mm. Additionally, the radiation target may vary longitudinally along the boundary surface and may vary within a range from about 0.5 mm to about 3.0 mm.

The method above may further include adjusting a pattern of beams of the radiation to compensate for movement of the blood vessel wall. The movement of the blood vessel wall may be due to a patient's respiration, a heartbeat or a bodily shift of the patient. The method may include outputting the ionizing radiation treatment pattern onto a plurality of slices of two-dimensional image data. In some embodiments input may be received on a display. The display may facilitate the input by snapping the input of the radiation target to a location relative the three-dimensional model. Further, embodiments may utilize a three dimensional model surface which is radially offset from the identified blood/vessel boundary surface and the display may facilitate the input by snapping the input of the radiation target onto the surface of the model.

In some embodiments the method may further include expanding a treatment pattern of intersecting radiation beams along a longitudinal axis of the blood/vessel boundary surface such that renal nerve activity is reduced so as to treat diseases and conditions related to hyperactivity of the sympathetic renal nerves, such as renal hypertension. The method may include generating an ionizing radiation treatment plan based on the treatment pattern and projecting a dose cloud to the three dimensional model based upon the treatment pattern so as to verify the dose of radiation along the blood/vessel boundary is sufficiently low to inhibit hyperplasia. The expected consequence of high doses of radiation on a large artery is thickening of the vessel wall and consequent stenosis of the vessel. The radiation target may include one or more annular circumferential segments. The nerve adjacent to the blood vessel may be one of a celiac ganglion, a superior mesenteric ganglion, an aorticorenal ganglion, nerves in the renal ostium region, and nerves in the renal artery branching region.

In other embodiments, a radiosurgical system for denervation of a patient body is provided. The system includes an image capture device for acquiring image data from a blood vessel adjacent to a nerve. A processor system can couple the image capture device to a display. The processor system can include a modeling module, an input module and a planning module. The modeling module may be configured for identifying a three dimensional boundary surface between the blood vessel and blood flowing therein from the image data. The modeling module can be configured for transmitting three dimensional model data to the display. The input module may receive user input data relative to the three dimensional model so as to identify a radiation target offset from the blood/vessel boundary surface. The planning module may be configured for planning a pattern of ionizing radiation treatment beams in response to the radiation target so as to reduce nerve activity within the nerve and to limit radiation along the blood/vessel boundary.

In some embodiments the image capture device may acquire image data from a blood vessel adjacent to the renal plexus. In certain embodiments, the planning module may be configured to plan the irradiation treatment so as to provide a decreasing dose between the target and the blood/vessel boundary. The image capture device may acquire image data from an aorta or a renal artery. The input module may receive user input data of a radiation target which is offset a distance within a range from about 0.25 mm to about 6 mm from the blood/vessel boundary surface. Further, the radiation target's offset distance may vary longitudinally along the boundary within a range from about 0.5 mm and 3.0 mm.

In further embodiments of the system, the planning module may be configured to output the ionizing radiation treatment plan for denervation of the adjacent nerve to a plurality of slices of two dimensional image data. A system may receive user input on the display and the display may facilitate the input by snapping the input of the ionizing radiation target relative to a location on the three dimensional model. The three dimensional model data may comprise a surface radially offset from the identified blood/vessel boundary surface and the display may facilitate the input by snapping the input of the radiation target onto the surface of the three dimensional model.

In certain embodiments of the system, the planning module is further configured to expand a treatment pattern of intersecting radiation beams along a longitudinal axis of the blood/vessel boundary surface such that renal nerve activity is reduced so as to treat hypertension. The planning module may be configured to generate an ionizing radiation treatment plan based upon the user input and may project a dose cloud to the three dimensional model based upon the treatment pattern so as to verify the dose of radiation along the blood/vessel boundary is sufficiently low to inhibit hyperplasia. The radiation target may include one or more annual circumferential segments. The image capture device may acquire image data from a blood vessel adjacent to one of a celiac ganglion, a superior mesenteric ganglion, an aorticorenal ganglion, nerves in the renal ostium region, and nerves in the renal artery branching region.

In some embodiments, a non-transitory computer readable medium with computer executable instruction stored thereon for developing a radiosurgical renal denervation treatment plan is provided. The computer readable medium may include instructions for acquiring image data from a blood vessel adjacent to a nerve. The computer readable medium instructions may generate a three dimensional model by identifying a boundary surface between the blood vessel and blood flowing therein from the image data. Input regarding a radiation target with reference to an image of the three dimensional model may be received. The received radiation target input may be offset from the blood/vessel boundary surface. An irradiation treatment of the radiation target may be planned so as to provide a neural function-altering dose of radiation at the target and a safe luminal dose of radiation at the blood/vessel boundary. A ionizing radiation treatment plan may optionally be generated based on the user input and a dose cloud may be projected on the three dimensional model based on the treatment plan if desired. In some embodiments, the surface may be a layer between the epithelial cell layer and the outer edge of the blood vessel adventitia. In certain embodiments, the dose cloud may be evaluated to ensure the safe luminal dose of radiation at the blood/vessel boundary.

BRIEF DESCRIPTION OF THE DRAWINGS

FIGS. **1**A-**1**B illustrate portions of the renovascular structure to which embodiments of the present invention may be applicable;

FIG. **2** is a flowchart representing a method of radiosurgical treatment according to the embodiments;

FIG. **3** illustrates an exemplary modified stereotactic radiosurgery system that may be utilized with embodiments;

FIG. **4** is a flowchart broadly describing treatment planning according to embodiments of the present invention;

FIGS. **5**A-**5**C depict exemplary target treatment regions with reference to anatomical structure according to an exemplary embodiment of the present invention;

FIG. **6** is a block diagram of a computer system that may be utilized with embodiments herein;

FIG. **7** schematically illustrates a plurality of modules that may carry out embodiments of the present invention;

FIG. **8** is a flow chart representing a method of generating a three dimensional model of a surface of interest in accordance with an embodiment;

FIG. **9** is a flow chart representing a method for preparing a treatment plan utilizing the model of the surface generating in FIG. **8** in accordance with an embodiment;

FIGS. **10**A-**10**B depict a representation of three-dimensional surfaces for receiving input. FIG. **10**A is a representation of a blood/vessel boundary surface and FIG. **10**B is an estimated target location surface in accordance with FIG. **8**;

FIG. **11** is a representation of a cardinal plane of the blood vessel adjacent to the target nerves for which the surface of FIGS. **10**A-**10**B has been generated, showing intersection points of the treatment lines of FIGS. **10**A-**10**B;

FIGS. **12**A-**12**B is a representation of the expansion of the treatment lines in FIGS. **10**A-**10**B into volumes in accordance with an embodiment;

FIG. **13** is a representation of a cardinal plane of the blood vessel adjacent to the target nerves for which the surface of FIGS. **10**A-**10**B has been generated, showing the intersection area of the volumes of FIGS. **12**A-**12**B;

FIG. **14** is an axial slice of a portion of the renovascular system with a planning target volume projected thereon in accordance with an embodiment;

FIG. **15** is a representation of a three dimensional model of a portion of the renovascular system, with a treatment plan added on a left view and a dose cloud added on a right view, in accordance with embodiments herein;

FIG. **16** is a flow chart representing a method of evaluating a dose cloud with respect to the blood/vessel boundary surface in accordance with an embodiment;

FIG. **17** shows a dose cloud projected relative to the generated surface along with the treatment lines in accordance with an embodiment;

FIGS. **18**A-**18**E is an axial slice of a generated surface of FIG. **15** with the dose cloud and the treatment lines shown thereon;

FIG. **19** is a flow chart representing a method of determining if a dose cloud is acceptable in accordance with an embodiment; and

FIG. **20** shows a surface patch indicating radiation dosage coverage on a generated tissue surface in accordance with an embodiment.

DETAILED DESCRIPTION OF THE INVENTION

The present invention generally provides improved devices, systems, and methods for planning radiosurgical treatments for neuromodulating a portion of the renovascular system. The embodiments herein may be used to plan radiosurgical neuromodulation treatments for conditions or disease associated with elevated central sympathetic drive, including renovascular hypertension, heart failure, chronic kidney disease, insulin resistance, diabetes, metabolic syndrome, sleep apnea, atrial fibrillation, and/or dyspnea. Additionally, embodiments of the present invention detailed herein and variations thereof may be used to plan radiosurgical renal neuromodulation of various target regions. The renal nerves may be located and targeted at the level of the ganglion and/or at postganglionic positions, as well as preganglionic positions. Target regions include the renal plexus, celiac ganglion, the superior mesenteric ganglion, the aorticorenal ganglion and the aortic plexus.

It should be understood that reference to the singular, as in a renal artery, renal nerves about a renal artery, kidney, etc., encompasses both the singular and plural, and vice versa. It is further to be understood that while embodiments may be described herein with reference to renal nerves, the teachings herein and variations thereof may also be applicable to the renal ganglia and/or the aortic renal ganglia in general. Indeed, the teachings herein and variations thereof are applicable to a wide variety of devices, systems and/or methods that utilize ionizing radiation to partially or completely block neurological communication between one or

both kidneys of a patient and a patient's central nervous system, thereby reducing hypertension or the like, including robotic radiosurgical systems, gantry-type radiosurgical systems, and the like. Thus, while preferred embodiments have been described, the details may be changed without departing from the invention, which is defined by the claims.

FIG. **1**A illustrates a portion of the renovascular structure **2**. As may be seen in FIG. **1**A, the kidney **4** is innervated by the renal plexus (RP) **6**, which is intimately associated with the renal artery **8**. The renal plexus **6** is an autonomic plexus that surrounds the renal artery **8** and is embedded within or adjacent to the adventitia of the renal artery **8**. The renal plexus **6** extends along the renal artery **8** until it arrives at the substance of the kidney **4**. Fibers contributing to the renal plexus **6** arise from the celiac ganglion **10**, the superior mesenteric ganglion **12**, the aorticorenal ganglion **14** and the aortic plexus. The renal plexus **6**, also referred to as the renal nerve or nerves, is predominantly comprised of sympathetic components. There is no (or at least very little) parasympathetic innervation of the kidney **4**. FIG. **1**B depicts a conceptual unscaled cross-sectional view of the renal artery **8** and renal nerves **6**. The renal nerves **6** are surrounded by membrane **16** located in periarterial space **18**. The boundary of membrane **20** is conceptually depicted. In an exemplary embodiment of the present invention, the ionizing radiation treatment plan at least provides radiation doses sufficient to reduce neural activity by partially enveloping renal nerves **6**.

FIG. **2** provides an exemplary flow chart **22** which represents a method used for radiosurgical treatment according to embodiments of the present invention. The target tissues are first imaged **24** by a medical imaging modality, and then a plan **26** can be prepared for treatment of the tissue at the target site. After completion of plan **26**, radiosurgical treatment **28** of the renal nerve may be initiated according to plan **26**.

The internal tissues are imaged **24** for planning purposes, typically using a remote imaging modality such as a computed tomography (CT), magnetic resonance imaging (MRI), ultrasound imaging, X-ray imaging, optical coherence tomography, a combination of these, or other imaging modalities. Note that the tissue structure which will actually be targeted for radiation remodeling need not necessarily be visible in the image, for example, when sufficiently contrasting surrogate structures are visible in the image data to identify the target tissue location. The imaging used in many embodiments will include a time sequence of three-dimensional tissue volumes, with the time sequence typically spanning one or more movement cycles (such as a cardiac or heartbeat cycle, a respiration or breathing cycle, and/or the like). In exemplary embodiments, the image data comprises a series of CT slices through a blood vessel adjacent to the target renal nerve so as to provide volumetric or three-dimensional image data. The time series of three-dimensional blood vessel images are preferably acquired at times that are distributed throughout the heartbeat cycle so that the image planning data effectively comprises a time series of three-dimensional image datasets providing information regarding the motion of the blood vessel tissues during the cardiac cycle.

Based on the imaging data obtained from imaging **24**, a plan **26** can be prepared for treatment of the tissue at the target site. Embodiments herein are directed to systems and methods that aid in development of plan **26** which may be used with existing or newly developed imaging **24** and treatment **28**. One advantage of the plan **26** defined herein is that it may be used with existing imaging, such as the CT imaging described above, and with conventional radiosurgical planning tools, such as the MULTIPLAN planning tool (Accuray, Inc.). Imaging, for example, may take the forms described above or other forms. In exemplary embodiments a conventional series of image slices (e.g. CT slices) through a blood vessel adjacent to the renal nerve is utilized so as to provide volumetric or three-dimensional image data. Treatment **28** may be conventional or modified, and one embodiment is described in concurrently filed U.S. Patent Application No. 61/483,962 entitled, "Renovascular Treatment Device, System, and Method for Radiosurgically Alleviating Hypertension", the full disclosure of which is incorporated herein by reference.

Treatment plan **26** typically comprises a target region and a series of radiation beams which intersect within the target region. The radiation dose within the target tissue should be at least sufficient to provide the desired lesions or renal neuromodulation. For example, the radiation dose may comprise ablative or sub-ablative doses of ionizing radiation. The dose will be sufficient to inhibit or reduce sympathetic activity of the renal nerve. Radiation dosages outside the target tissue will preferably decrease with a relatively steep gradient so as to inhibit excessive damage to collateral tissues, with radiation dosages in specified sensitive and/or critical tissue structures often being maintained below a desired maximum threshold to avoid deleterious side effects. For example, treatment plan **26** may be configured or adjusted to minimize radiation exposure at the endothelium. Further, radiation exposure at the blood vessel lumen may be minimized so as to minimize the chances of blood occlusion within the blood vessel adjacent to the target nerve.

Treatment **28** may utilize known radiation delivery systems to treat a patient according to plan **26**. As an example, an exemplary modified CYBERKNIFE stereotactic radiosurgery system **30** is illustrated in FIG. **3**. Radiosurgery system **30** includes a lightweight linear accelerator **32** mounted to a robotic arm **34**. An image guidance system **36** includes biplane diagnostic X-ray sources **38** and image detectors **40** so as to enhance registration between robot arm **34** and the target site. As the tissues in the target region may not present a high-contrast image, image guidance system **36** may use image processing techniques to identify the location of one or more surrogate structures, with the surrogates typically including a high-contrast natural tissue structure (such as a bone or the like) or an artificial implanted fiducial marker that moves in correlation with the target tissue. Target tracking may also make sure of one or more surface image cameras **42**, particularly for identifying pulsatile movement of blood vessels adjacent to renal nerves. Cameras **42** may monitor high-contrast fiducial markers placed relative to the target nerve. A patient support **44** is moveably supported by an alignment arm **46** so as to facilitate bringing the patient (and treatment site) into alignment with robot arm **34**.

Referring now to FIGS. **4** and **5**A, FIG. **4** describes an exemplary planning flowchart **48** and FIG. **5**A illustrates portions of the exemplary planning process. A modeling module generates **50** a three dimensional model of a surface **60**, generally from CT slices of a blood vessel adjacent to a target nerve, although other imaging data may be used. In the example shown in the drawings, the surface **60** is of a portion of the renovascular system. A user interface or input module allows the system user to input **52** a desired radiation treatment pattern **62** with reference to the model. The desired radiation treatment pattern **62** is at an offset distance from the blood/tissue boundary of a blood vessel adjacent to the radiation target. The offset distance allows a neural

function-altering dose of radiation at the radiation target and a safe luminal dose of radiation at the adjacent blood/vessel boundary.

At **54**, the series of boundaries generated by the desired radiation pattern **62** may be projected back onto the individual CT scan slices, which then may be transferred to a conventional radiosurgical planning tool. Thus, the input to the conventional radiosurgical tools is generally the same as the input in prior methods (i.e. boundaries defined on individual CT scan slices). However, as described in the background of this disclosure, prior methods required a surgeon to draw on each individual slice. In contrast, methods and systems herein generate the desired treatment pattern **62** relative to the three dimensional model of the surface **60**.

In some embodiments, as described below, a visualization of a dose cloud **64** and **66** (FIG. **5**B-**5**C) may be provided for displaying on the surface **60**. The dose cloud **64** in FIG. **5**B depicts, in a quasi-three dimensional manner, the outer boundaries of a 20 Gy dose cloud. Dose cloud **66** in FIG. **5**C illustrates the outer boundaries of a 10 Gy dose cloud. The dose cloud may be received **56** as an output treatment indication by a conventional radiosurgical tool and, in accordance with embodiments, may be displayed **58**, for example, as an isodose contour on the surface **60**. As with the desired treatment pattern **62**, the dose cloud **64** and **66** may be used in part of generating or approving the plan **26** (FIG. **2**).

To generate a surface **60** if the blood/vessel boundary surface of a blood vessel adjacent to a target nerve, a modeling module may be configured for identifying a three dimensional boundary surface between a blood vessel and blood flowing therein from the image data. An image contrast agent may be introduced during the image acquisition step **24** so that the inner surface of the blood vessel may be more easily identified from the image data. Thus, there is a clear demarcation between the tissue and the blood, allowing for a more precise definition of the blood/vessel boundary surface **60**.

For example, if the target nerves include the renal plexus, the modeling module may identify the boundary surface between the renal artery and the blood. A model of the blood/vessel boundary surface of the renal artery may then be used for planning a radiosurgical treatment of the renal plexus. Although the surface has been described as the blood/tissue interface of the renal artery adjacent to the renal plexus, it will be appreciated that this example is illustrative and variations and modifications are possible. For instance, surface **60** may be the blood/tissue interface of other blood vessels adjacent to other renovascular nerves. Alternative embodiments may employ a surface radially offset a distance from the identified blood/tissue boundary. The offset distance may correspond to an estimated location of the target nerve. For example, the renal nerves may be offset from the blood/tissue boundary of the renal artery at a range from about 0.25 mm to about 6 mm. An embodiment may provide a surface radially offset 2 mm from the blood/tissue boundary of the renal artery as an estimate of a renal nerve target location. Further, the offset distance from the identified blood/tissue boundary surface may vary longitudinally along the boundary. Other nerve targets may range at an offset distance from about 0.5 mm to about 3.0 mm.

Embodiments herein may utilize computer-implemented methods for generating the three dimensional surface **50**, indicating a desired treatment pattern **52**, providing the dose cloud **56**, and/or operate the methods or functions of the systems described herein. To this end, FIG. **6** is a simplified block diagram of an exemplary computer system **68** that may be utilized in embodiments described herein. The computer system **68** typically includes at least one processor **70** which communicates with a number of peripheral devices via a bus subsystem **72**. These peripheral devices may include a storage subsystem **74**, comprising a memory subsystem **76** and a file storage subsystem **78**, user interface input devices **80**, user interface output devices **82**, and a network interface subsystem **84**. Network interface subsystem **84** provides an interface to a communication network **86** for communication with other imaging devices, databases, or the like.

The processor **70** performs the operations of the computer system **68** using execution instructions stored in the memory subsystem **76** in conjunction with any data input from an operator. Such data can, for example, be input through user interface input devices **80**, such as the graphical user interface. Thus, processor **70** can include an execution area into which execution instructions are loaded from memory. These execution instructions will then cause processor **70** to send commands to the computer system **68**. Although described as a "processor" in this disclosure, the functions of the processor may be performed by multiple processors in one computer or distributed over several computers.

User interface input devices **80** may include a keyboard, pointing devices such as a mouse, trackball, touch pad, or graphics tablet, a scanner, foot pedals, a joy stick, a touchscreen incorporated into the display, audio input devices such as voice recognition systems, microphones, and other types of input devices. In general, use of the term "input device" is intended to include a variety of conventional and proprietary devices and ways to input information into the computer system **68**. Such input devices will often be used to download a computer executable code from a computer network or a tangible storage media embodying steps or programming instructions for any of the methods of the present invention.

User interface output devices **82** may include a display subsystem, a printer, a fax machine, or non-visual displays such as audio output devices. The display subsystem may be a cathode ray tube (CRT), a flat-panel device such as a liquid crystal display (LCD), a projection device, or the like. The display subsystem may also provide non-visual display such as via audio output devices. In general, use of the term "output device" is intended to include a variety of conventional and proprietary devices and ways to output information from the computer system to a user.

Storage subsystem **74** stores the basic programming and data constructs that provide the functionality of the various embodiments. For example, database and modules implement the functionality of embodiments described herein may be stored in storage subsystem **74**. These software modules are generally executed by processor **70**. In a distributed environment, the software modules may be stored in a memory or a plurality of computer systems and executed by processors of the plurality of computer systems and executed by processors of the plurality of computer systems. Storage subsystem **74** typically comprises memory subsystems **76** and file storage subsystem **78**.

Memory subsystems **76** typically includes a number of memories including a read only memory (ROM) **88** in which fixed instructions are stored and main random access memory (RAM) **90** for storage of instructions and data during program execution. File storage subsystem **78** provides persistent (non-volatile) storage for program and data files, and may include a hard disk drive, a floppy disk drive along with associated removable media, a Compact Digital

Read Only Memory (CD-ROM) drive, an optical drive, DVD, CD-R, CD-RW, or removable media cartridges or disks. One or more of the drives may be located at remote locations on other connected computers at other sites coupled to the computer system. The databases and modules implementing the functionality of the present invention may also be stored by file storage subsystem **78**.

Bus subsystem **72** provides a mechanism for letting the various components and subsystems of the computer system communicate with each other as intended. The various subsystems and components of the computer system need not be at the same physical location but may be distributed at various locations within a distributed network. Although bus subsystem **72** is shown schematically as a single bus, alternate embodiments of the bus subsystem may utilize multiple buses.

The computer system **68** itself can be of varying types include a personal computer, a portable computer, a workstation, a computer terminal, a network computer, a module in a display unit, a mainframe, or any other data processing system. Due to the ever-changing nature of computers and networks, the description of the computer system **68** depicted in FIG. **6** is intended only as a specific example for purposes of illustrating one embodiment of the present invention. Many other configurations of the computer system are possible having more or fewer components than the computer system **68** depicted in FIG. **6**.

FIG. **7** schematically illustrates a plurality of modules **92** that may carry out embodiments of the present invention. The modules **92** may be software modules, hardware modules or a combination thereof. If the modules **92** are software modules, the modules will be embodied on a computer readable medium and processed by processor **70**.

A digital data module **94** receives CT volume or other diagnostic images and, if not already digitized, creates a digital data file of the images. A 3-D modeling module **96** builds a finite element or solid model of the desired surface from the digital data file. Such 3-D modeling modules are known, and example implementation details are provided below, along with a description of FIG. **8**. However, briefly described, the 3-D modeling module **96** process the slices of the CT volume and creates a finite element or solid model of the surface of interest, projected as the surface **60** (FIGS. **5**A-**5**C) For ease of reference, as used from this point forward, the "surface **60**" refers to the 3-D model of the surface of interest. As set forth above, surface **60** may be in the blood/tissue boundary of a blood vessel adjacent to a renovascular nerve. Further, surface **60** may be a radially offset distance from the blood/tissue boundary so as to provide an estimated nerve target location.

The surface **60** may be shown, for example on a display for the computing device **68**, and may be manipulated by a user, for example via the user interface input device **80** so as to see a desired orientation, cross section, or other desired view. Panning and yaw and pitch movement may be provided as well.

A planning module **98** permits a user of the system to generate the treatment plan **62** (FIG. **5**A). The planning module **98** may also project the treatment plan back onto the CT slices.

A dose cloud module **100** may receive or generate the dose cloud **64** and **66**. An example implementation of the dose cloud module **100** is set forth below, for example with the discussions of FIGS. **16** and **19**.

The dose cloud module **100** and the 3-D modeling module **96** may be utilized with a standard treatment planning module **102**. An example of such a treatment planning module is the MULTIPLAN treatment module, although other treatment modules may be used.

FIG. **8** is a flowchart representing a method of generating a surface of interest, e.g., the surface **60**, in accordance with an embodiment. At **104**, the information regarding the CT volume is input, for example via the module **94**. This input may be, for example, a CT volume generated to accentuate the tissue-blood boundary information provided for each CT slice. In the examples described herein, the tissue-blood boundary is the boundary between the blood and the inner surface a blood vessel adjacent to a renovascular nerve and that boundary is accentuated by, for example, adding a contrasting agent to the blood. The boundary between the blood (including the added contrast) and the blood vessel tissue in each slice of the CT data can be segmented in one, some, or all of the volumetric data sets associated with the cardiac cycle phases. The segmented regions can be stacked or assembled together to form the surface **60**.

At **106** to **112**, examples are provided of smoothing techniques that may be applied between the boundaries of the slices so as to generate a 3-D surface, such as surface **60**. Other smoothing techniques may be used. Smoothing may be performed, for example, via the module **96**.

At **106**, Voxel editing occurs, in which the CT volume is converted to a grid of blocks in three dimensional space. At **108** (optional), connectivity occurs. At **110**, surface generation occurs, for example utilizing the Marching Cubes computer graphics algorithm, which proceeds through the voxels, taking eight neighbor locations at a time (thus forming an imaginary cube), then determining the polygon(s) needed to represent the part of the isosurface that passes through the cube. The individual polygons are then fused into the desired surface.

At **114**, the desired surface is output, for example as shown as the surface **60** in FIG. **10**A. For the example herein, the surface **60** represents a blood/tissue boundary of a blood vessel adjacent to a nerve of the renovascular system. The entire process in FIG. **8** may be automated using a segmentation scheme.

FIG. **9** is a flow chart representing a method for preparing a treatment plan utilizing the surface **60** generated in FIG. **8**. Beginning at **116**, desired treatment pattern **130***a* and **130***b* (FIG. **10**A) corresponding to a radiation target are received with reference to the surface **60**. For renal neuromodulation the radiation target comprises the nerves adjacent to the blood vessel. The nerves are offset a distance from the blood/tissue boundary of the blood vessel. Thus the radiation target and desired treatment pattern lines **130***a* and **130***b* are offset a distance **132** from surface **60** so as to provide a neural function altering dose of radiation at the nerves and a safe luminal dose of radiation at the blood/vessel boundary. As shown in FIG. **10**A, desired treatment pattern line **130***a* is offset distance fixed distance **132***a* from surface **60**. However, treatment pattern line **130***b* is offset a different distance **132***b* and **132***c* from surface **60**. Thus it should be understood that offset distance **132** may vary for desired treatment patterns **130** and may even vary for individual treatment patterns **130**, e.g. treatment pattern **130***b* is offset a distance which varies from offset distance **132***b* and **132***c*.

In the alternative embodiment shown in FIG. **10**B, the treatment plan may be prepared utilizing a surface **60** which is offset a distance **138** from blood/vessel boundary surface **134**. The offset distance **138** from the blood/vessel boundary may correspond to a location of the adjacent target nerves. Thus the offset surface **60** may correspond to an estimated location of the target nerves. The modeling module may identify the blood/vessel boundary surface **134** and surface

60 may be generated by offsetting a distance 138 from the blood/vessel boundary surface 134. Similar to above, the offset distance 138 may vary radially and longitudinally along the blood/vessel boundary 134. The desired treatment patterns 136*a* and 136*b* may then be received with reference to the surface 60. The treatment patterns 136 are similarly configured to provide a neural function altering dose of radiation at the adjacent nerve and a safe luminal dose of radiation at the blood/vessel boundary.

These desired treatment lines 130 may be snapped and extended at an offset distance 132 from the exterior of the surface 60. Alternatively, the desired treatment lines 136 may be snapped directly to and extended along the exterior of surface 60. For example a physician may utilize the user interface input device 80 to input a desired treatment pattern. In an example, a physician may click along the surface and the desired treatment pattern lines may extend as a straight line between clicks. In the embodiment in 10A, the desired treatment lines 130 extend at a desired offset distance from the surface. In the embodiment of 10B, the desired treatment lines 136 extend along the exterior of surface 60. Smoothing may be enabled. If desired, the surface 60 may be rotated, panned, and zoomed on the screen, or the pitch or yaw may be altered, so as to allow the physician to access a desired view of the surface to properly orient the treatment lines 130. Such manipulation features are known in existing 3-D modeling and display software.

Applying the treatment lines 130 and 136 via the user interface input device 80 allows the planning medical professional to input an appropriate treatment pattern as a series of lines or curves relative to the three dimensional model surface 60. The treatment lines 130 and 136 may be applied as a very thin line or as a thickness that is defined by the system or user. In accordance with an embodiment, the treatment lines are displayed at a width that is sufficient to reduce neural activity in across the treatment line. Using such a width provides intuitive visual feedback to a user of the system, so that the user may have a more realistic idea of the location and breadth of a lesion pattern.

If desired, at 118 the treatment lines may be shown in one or more cardinal planes. As an example, as is shown in FIG. 11, a cardinal plan of the renal artery 8 for which surface 60 was generated shows intersection line 140. The intersection line 140 represents the cross section of the treatment lines 130 and 136 at the given cardinal plane. As can be seen, the intersection line 140 is an offset distance 132 from the blood/vessel boundary surface 134. Further, the intersection line 140 is located within a region of the renal nerves 6. Other cardinal planes may be displayed either simultaneously on the display or by toggling between a view of the surface 60 and the cardinal plane. The cardinal planes may represent, for example, data from a single CT slice.

At 120, the desired treatment lines 130 and 136 are expanded to volumes so as to provide the desired therapeutic benefit at the adjacent nerves, and may be visualized on the display in three dimensions, FIGS. 12A-12B. 118 may occur after 120 and indeed, unless stated otherwise herein, the acts set forth in the flowcharts of this disclosure are not limited to the order in which they are presented. To visualize the volume in three dimensions, the treatment lines 130 and 136 may be given a three dimensional thickness by generating loops having a radius around the treatment pattern lines 130 and 136. Since the offset distance corresponds to a distance from the blood/vessel boundary surface, the radius should be less than the offset distance so as to provide a neural function altering dose of radiation at the target and a safe luminal dose of radiation at the blood/vessel boundary. The radius may be applied around the treatment pattern lines, or separate width and length radii may be used. In an example, volumes may be generated utilizing a radius of 0.5 mm, but other radii may be used. The expansion of intersection line 140 (FIG. 11) to a volume is depicted in the cardinal plane in FIG. 13. FIG. 13 shows the cardinal plane of the blood vessel adjacent to the target nerves. The expansion of intersection line 140 (FIG. 11) to a treatment volume creates an intersection area 141 indicative of the treatment volume intersection at this cardinal plane.

In an embodiment the volumes enclose a portion of the nerves adjacent to the blood vessel and define a planning target volume (PTV) for treatment planning purposes. The PTV represents the area of tissue of interest at which treatment is desirably to occur. In the example of the renal artery, the PTV is preferably a portion of the renal plexus, and may comprise one or more annular circumferential segments. The PTV should also be limited at the blood/vessel boundary surface 134 so as to provide a safe luminal dose of radiation at the blood/vessel boundary to inhibit hyperplasia.

At 122, the PTV is scan converted to generate contours in each of the cardinal planes. Existing radiosurgical radiation beam calculating modules may be used to determine the resulting radiation contour distribution. Existing radiosurgical planning approaches for identification of radiation sensitive structures may be implemented. The input to such existing calculating modules may require input via slices, such as conventional CT slices. Thus, if such calculating modules are used, the CT slices are utilized to generate the solid volume (FIG. 8), the plan is formed on the solid volume (FIG. 9), and then the plan at each slice is provided back to the calculating module to generate the contours. Thus, the output 124 may be an output relative to each of the original CT slices. An example of an axial slice of the contours 142 is shown in FIG. 14.

Alternatively, the treatment pattern lines 130 or 136 may be defined using a cardiac and/or respiratory gated 4DCT data set. Suppose there N (typically N=10) volumes of CT data acquired over time. A blood/vessel surface (e.g., the surface 60) will be constructed from each CT volume, resulting in N such surfaces. Using each surface, a set of treatment lines will be defined by the user, resulting in N such treatment lines. This time-varying treatment lines and the time-varying CT data will then be imported to a treatment planning station line treatment planning module, e.g., MULTIPLAN, for generating a treatment plan. Alternatively, one treatment pattern line set, whose volume will include the volumes from all individual treatment pattern lines, can be generated and used for planning.

In accordance with an embodiment, placement of the treatment pattern lines on a surface may be partially or fully automated. A template of possible treatment pattern lines may be provided to the user, and the user may then drag and drop the selected template at a proper location on the surface. The user may modify the treatment line locally by moving it around on the surface. The thickness may also be changed.

The contours 142 may be saved, for example, as DICOM RTSS (Radiation Therapy Structure Sets) files. The planner to which they are output may be, for example, MULTIPLAN. In an embodiment, evaluation is done using PTV. Optimizing the plan based on the PTV is preferred because focus is on the actual area in which treatment is desired.

In another embodiment, instead of transmitting the treatment pattern lines as 2D contours in cardinal planes or

oblique planes to a planning module, the treatment pattern lines may be transmitted as 3D shapes to the planning module.

Along with inputting a desired treatment pattern **62**, as schematically illustrated in FIG. **5**A, the planning module and user interface will preferably output an estimate of the actual radiation exposure relative to the blood/vessel surface, preferably in the form of an estimated tissue exposure **144** (FIG. **15**). Estimated exposure **144** may represent the portion of tissue relative to surface **60** which receives a radiation dose above a necrotic threshold, optionally based on radiation beams and radiation dose output from an existing radiosurgical treatment planner. Alternative patterns may represent an estimate of tissue which will receive a sufficient dose of radiation for therapeutic remodeling so as to reduce the sympathetic activity of the adjacent nerve. The user may interactively develop the plan based on iterative input into and output from the planning treatment module **102**.

Ideally, the dose cloud should correspond to the treatment lines. FIG. **16** is a flow chart representing a method of evaluating a dose cloud with respect to the generated surface **60** in accordance with an embodiment. At **146**, the dose cloud is generated and is overlaid relative to the surface **60** at **148**. If desired, the treatment lines **130** or **136** are displayed relative to the surface **60** at **150**.

As shown in FIG. **17**, displaying the treatment lines **130** and a dose cloud **154** relative to the surface **60** allows a visual inspection of whether the dose cloud is covering the target intended by the physician. To this end, at **152**, the physician may visually evaluate whether the dose cloud is covering the target. As can be seen in FIG. **17**, for at least the view shown in the drawing, the dose cloud **154** provides a safe radiation luminal dose of radiation at the blood/vessel boundary. Rotation, panning, or zooming of the surface, or adjustment of the pitch and/or yaw, may be required for a full inspection of dosage coverage.

The dose cloud **154** may represent, for example, all dose values that are greater than a particular threshold or, as an alternative, dose values lying in a range between a minimum and a maximum. If desired, as shown in FIG. **18**A-**18**E, an axial slice of each cardinal plane may be provided, with the isodose lines **156** and inner most contour **142** shown thereon. This representation permits a physician to look at each slice to ensure that the dose is covering (e.g., surrounding) the target adequately while the blood/vessel boundary receives a safe luminal dose of radiation. Starting in order from the innermost to the outermost isodose line, after the contours corresponding to target **142**, the points on the innermost isodose **156***a* correspond to an absorbed dose of 30 Gy of radiation, and the points inside of isodose **156***a* receive an absorbed dose of at least 30 Gy of radiation. The points on the next innermost isodose **156***b* correspond to an absorbed dose of 20 Gy of radiation, and the points inside of isodose **156***b* receive an absorbed dose of at least 20 Gy of radiation. The points on the next innermost isodose **156***c* correspond to an absorbed dose of 10 Gy of radiation, and the points inside of isodose **156***c* receive an absorbed dose of at least 10 Gy of radiation. The points on outer isodose **156***d* correspond to an absorbed dose of 5 Gy of radiation, and the points inside of isodose **156***d* receive an absorbed dose of at least 5 Gy of radiation. It is noted that points within box **157** receive less than 5 Gy of radiation. However, it is noted that there may be areas outside a given isodose/box **157** and/or inside a given isodose/box **157** where the predicted absorbed dose is different than specified. By way of example, there may be areas near the skin that experience a dose flare and/or areas inside the isodose lines that experience a dose deficiency. The size of the elements of these figures is scaled to the anatomy of an average male adult. Along these lines, it can be seen that embodiments of the present invention result in inhomogeneous radiation delivery that delivers more than about 15 Gy within 4 mm of the outer wall of the renal arteries. It is noted that while a unilateral treatment has been depicted with respect to FIGS. **18**A-**18**E, the data presented with respect to these figures is applicable to a bilateral treatment as well, and the opposite renovascular structure from that depicted in the FIGS. would substantially correspond to that depicted in the FIGS.

FIG. **19** is a flow chart representing a method of determining if a dose is sufficient in accordance with an alternate embodiment. The method in FIG. **19** involves clipping a dose cloud relative to a surface **170** (FIG. **20**), and may be used in addition to, or instead of the visual inspection described above, where the dose cloud is represented more as a contour. At **158**, the region corresponding to the acceptable dose value is clipped relative to a surface **170**. The dose values may be represented in isodose fashion, with different doses being displayed in different ways, for example as different colors. Alternatively, as in the previous embodiment, all doses exceeding a value or falling in a range may be displayed.

By clipping the dose value relative to a surface, the dose is presented as a curved surface patches **172***a* and **172***b* (FIG. **20**) on the surface **170**. A physician may visually evaluate the surface patch **172***a* with respect to the target tissue to determine whether the target tissue receives a neural function altering dose of radiation while the adjacent tissue is exposed to acceptable doses of radiation **172***b*. For example, the surface patch **172***a* may be evaluated to determine whether it is wide enough to reduce neural activity in the tissues being treated.

In addition, the physician may evaluate the surface patch **172***a* to determine whether the surface patch **172***a* provides a safe luminal dose of radiation at the blood/vessel boundary surface at **160**. If there are any radiation doses at the blood/tissue boundary surface which could prompt hyperplasia or within the blood vessel walls which could occlude the blood in the blood vessel, a reduction in hypertension may not be provided by the radiological treatment. To this end, at **162**, the physician evaluates whether the surface patch **172***a* is offset a sufficient distance from the blood/tissue boundary surface, such that hyperplasia and blood occlusion may be inhibited. If not, an error may be generated at **164** either by software or a recognition by the user, causing the physician to construct a new plan or causing the computer system **68** to generate an error message, or to be handled in another manner. If the surface patch **172***a* is a sufficient offset distance from the blood/tissue boundary surface, then the physician may proceed to treatment at **168**.

The physician and/or the computer system **68** may rotate and otherwise manipulate the surface **170** so that the physician may fully inspect the surface patch **172***a*. In an alternate embodiment, software may walk across the surface patch **172***a* to confirm that the surface patch remains a certain offset distance from the blood/tissue boundary surface. This same software or visual inspection may be used to determine whether the surface patch **172***a* is sufficiently wide to reduce neural activity in the adjacent nerves. For example, the software may crawl around the surface **172***a* and evaluate a pixel width of the surface patch **172***a*. If the pixel width falls below a threshold, an error may be generated.

Any effects of possible misalignment errors (x, y, z translation and roll, pitch, yaw, rotation errors) during treatment may be evaluated with this system. The surface **170** or the CT data set may be translated and rotated in relation to the dose cloud to understand the effect of any misalignment on the necessary offset distance between the radiation dose and the blood/vessel boundary surface. Alternatively the dose cloud may be translated or rotated in relation to the surface or the CT data set.

After the contours are approved, the plan **26** is complete, and may be implemented. Radiosurgical treatment of the nerves may be initiated, for example, by positioning the patient on patient support **44**, bringing the patient into alignment with robot arm **34**, and directing the planned series of radiation beams from the linear accelerator **32** to the target region of the renovascular system.

Other variations are within the spirit of the present invention. Thus, while the invention is susceptible to various modifications and alternative constructions, certain illustrated embodiments thereof are shown in the drawings and have been described above in detail. It should be understood, however, that there is no intention to limit the invention to the specific form or forms disclosed, but on the contrary, the intention is to cover all modifications, alternative constructions, and equivalents falling within the spirit and scope of the invention, as defined in the appended claims.

The use of the terms "a" and "an" and "the" and similar referents in the context of describing the invention (especially in the context of the following claims) are to be construed to cover both the singular and the plural, unless otherwise indicated herein or clearly contradicted by context. The terms "comprising," "having," "including," and "containing" are to be construed as open-ended terms (i.e., meaning "including, but not limited to,") unless otherwise noted. The term "connected" is to be construed as partly or wholly contained within, attached to, or joined together, even if there is something intervening. Recitation of ranges of values herein are merely intended to serve as a shorthand method of referring individually to each separate value falling within the range, unless otherwise indicated herein, and each separate value is incorporated into the specification as if it were individually recited herein. All methods described herein can be performed in any suitable order unless otherwise indicated herein or otherwise clearly contradicted by context. The use of any and all examples, or exemplary language (e.g., "such as") provided herein, is intended merely to better illuminate embodiments of the invention and does not pose a limitation on the scope of the invention unless otherwise claimed. No language in the specification should be construed as indicating any non-claimed element as essential to the practice of the invention.

Preferred embodiments of this invention are described herein, including the best mode known to the inventors for carrying out the invention. Variations of those preferred embodiments may become apparent to those of ordinary skill in the art upon reading the foregoing description. The inventors expect skilled artisans to employ such variations as appropriate, and the inventors intend for the invention to be practiced otherwise than as specifically described herein. Accordingly, this invention includes all modifications and equivalents of the subject matter recited in the claims appended hereto as permitted by applicable law. Moreover, any combination of the above-described elements in all possible variations thereof is encompassed by the invention unless otherwise indicated herein or otherwise clearly contradicted by context.

We claim:

1. A radiosurgical planning method comprising:

displaying an image in a user interface of a radiation target positioned offset from a blood/tissue boundary of a blood vessel;

receiving an input via the user interface regarding a treatment pattern for delivering a radiosurgical treatment to the radiation target; and

displaying a dose cloud based on the input regarding the treatment pattern, the dose cloud comprising an estimate of an actual radiation exposure to the radiation target.

2. The radiosurgical planning method of claim **1**, wherein the input regarding the treatment pattern comprises one or more treatment lines applied through a user interface input device.

3. The radiosurgical planning method of claim **1**, wherein the input regarding the treatment pattern comprises one or more treatment lines that are expanded to volumes and displayed in a three-dimensional model.

4. The radiosurgical planning method of claim **1**, wherein the offset between the radiation target and the blood/tissue boundary corresponds to a location of target nerves.

5. The radiosurgical planning method of claim **1**, wherein the input regarding the treatment pattern comprises one or more treatment lines applied by a user using a selected treatment pattern template.

6. The radiosurgical planning method of claim **1**, further comprising evaluating the dose cloud and revising the treatment pattern if the dose cloud does not cover the radiation target.

7. The radiosurgical planning method of claim **1**, wherein the dose cloud comprises isodose lines corresponding to a predetermined dose of radiation.

8. The radiosurgical planning method of claim **1**, further comprising generating an error message if the dose cloud is less than a predetermined distance from the blood/tissue boundary of the blood vessel.

9. A radiosurgical system for altering a neural function of a patient body, the radiosurgical system comprising:

a computing device that includes at least one processor and a storage subsystem,

the computing device configured to:

display an image in a user interface of a radiation target positioned offset from a blood/tissue boundary of a blood vessel;

receive an input via the user interface regarding a treatment pattern for delivering a radiosurgical treatment to the radiation target; and

display a dose cloud based on the input regarding the treatment pattern, the dose cloud comprising an estimate of an actual radiation exposure to the radiation target.

10. The radiosurgical system of claim **9**, wherein the computing device further includes a user interface input device configured to receive the input regarding the treatment plan that comprises one or more treatment lines.

11. The radiosurgical system of claim **9**, wherein the input regarding the treatment pattern comprises one or more treatment lines that are expanded to volumes by the computing device and displayed in a three-dimensional model.

12. The radiosurgical system of claim **9**, wherein the offset between the radiation target and the blood/tissue boundary corresponds to a location of target nerves.

13. The radiosurgical system of claim **9**, wherein the input received by the computing device regarding the treatment

pattern comprises one or more treatment lines applied by a user using a treatment pattern template that is selected by the user.

14. The radiosurgical system of claim **9**, wherein the computing device is further configured to evaluate the dose cloud and revise the treatment pattern if the dose cloud does not cover the radiation target.

15. The radiosurgical system of claim **9**, wherein the dose cloud comprises isodose lines corresponding to a predetermined dose of radiation.

16. The radiosurgical system of claim **9**, wherein the computing device is further configured to generate an error message if the dose cloud is less than a predetermined distance from the blood/tissue boundary of the blood vessel.

17. A non-transitory computer-readable medium with computer-executable instructions stored thereon that, when executed by a processor, cause the processor to:

display an image in a user interface of a radiation target positioned offset from a blood/tissue boundary of a blood vessel;

receive an input via the user interface regarding a treatment pattern for delivering a radiosurgical treatment to the radiation target; and

display a dose cloud based on the input regarding the treatment pattern, the dose cloud comprising an estimate of an actual radiation exposure to the radiation target.

18. The non-transitory computer-readable medium of claim **17**, wherein the input regarding the treatment pattern comprises one or more treatment lines applied through a user interface input device.

19. The non-transitory computer-readable medium of claim **17**, wherein the input regarding the treatment pattern comprises one or more treatment lines that are expanded to volumes and displayed in a three-dimensional model.

20. The non-transitory computer-readable medium of claim **17**, wherein the offset between the radiation target and the blood/tissue boundary corresponds to a location of target nerves.

* * * * *