US 20250262439A1

(19) **United States**

(12) **Patent Application Publication** (10) **Pub. No.: US 2025/0262439 A1**

**Zhang et al.** (43) **Pub. Date: Aug. 21, 2025**

(54) **STIMULATION CONFIGURATION VARIATION TO CONTROL EVOKED TEMPORAL PATTERNS**

(71) Applicant: **Boston Scientific Neuromodulation Corporation**, Valencia, CA (US)

(72) Inventors: **Tianhe Zhang**, Studio City, CA (US); **Rosana Esteller**, Santa Clarita, CA (US)

(21) Appl. No.: **19/201,648**

(22) Filed: **May 7, 2025**

**Related U.S. Application Data**

(63) Continuation of application No. 18/171,613, filed on Feb. 20, 2023, now Pat. No. 12,318,615, which is a continuation of application No. 16/741,228, filed on Jan. 13, 2020, now Pat. No. 11,612,751, which is a continuation-in-part of application No. 16/100,904, filed on Aug. 10, 2018, now Pat. No. 10,576,282, said application No. 16/741,228 is a continuation-in-part of application No. 16/460,655, filed on Jul. 2, 2019, now Pat. No. 11,338,127.

(60) Provisional application No. 62/803,003, filed on Feb. 8, 2019, provisional application No. 62/544,656, filed on Aug. 11, 2017.

**Publication Classification**

(51) **Int. Cl.**

| | |
|---|---|
| ***A61N 1/36*** | (2006.01) |
| ***A61B 5/24*** | (2021.01) |
| ***A61N 1/02*** | (2006.01) |
| ***A61N 1/05*** | (2006.01) |

(52) **U.S. Cl.**

CPC ..... ***A61N 1/36175*** (2013.01); ***A61N 1/025*** (2013.01); ***A61N 1/0551*** (2013.01); ***A61N 1/36062*** (2017.08); ***A61N 1/36071*** (2013.01); ***A61N 1/36132*** (2013.01); ***A61N 1/36135*** (2013.01); ***A61N 1/36182*** (2013.01); *A61B 5/24* (2021.01)

(57) **ABSTRACT**

Methods and systems for programming stimulation parameters for an implantable medical device for neuromodulation, such as spinal cord stimulation (SCS) are disclosed. The stimulation parameters define user-configured waveforms having at least a first phase having a first polarity and a second phase having a second polarity, wherein the first and second phases are separated by an interphase interval (IPI). By delivering user-configured waveforms with different IPIs, stimulation geometry, and other waveform settings, therapeutic asynchronous activation of dorsal column fibers can be obtained.

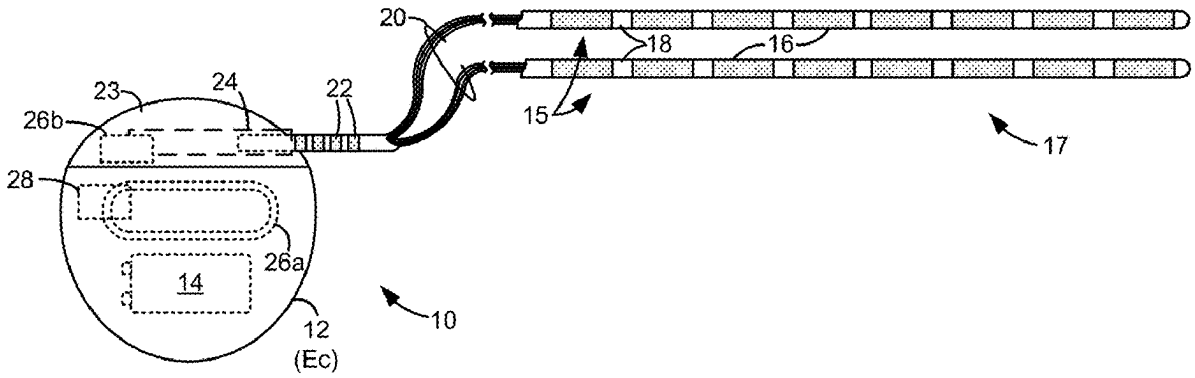

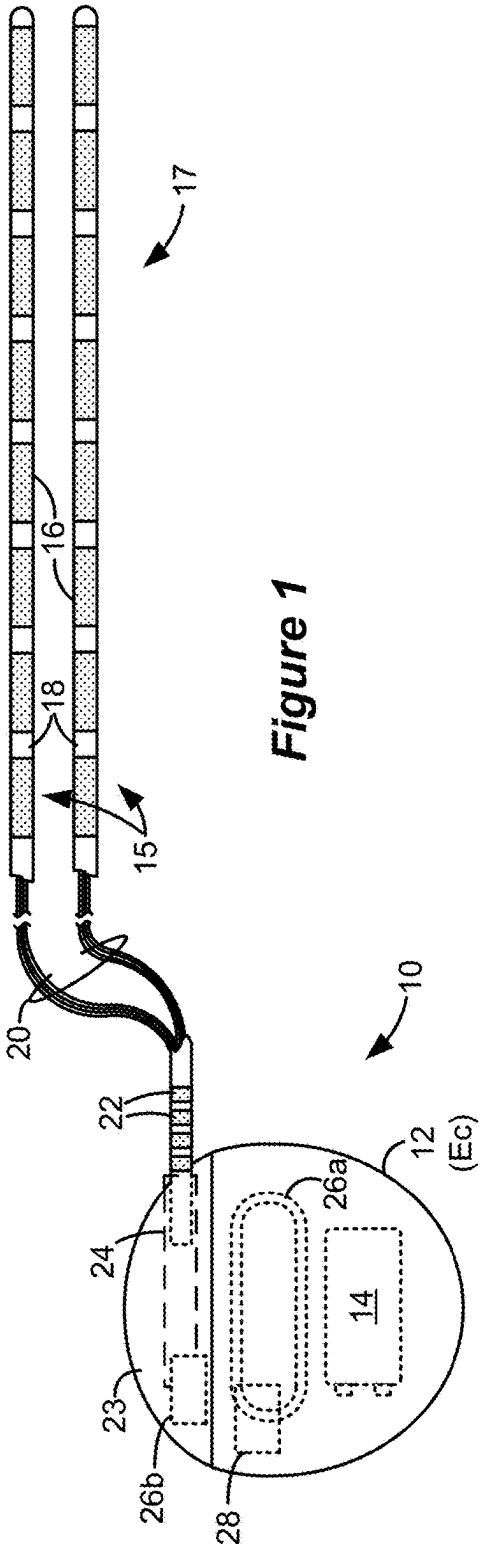


Figure 1

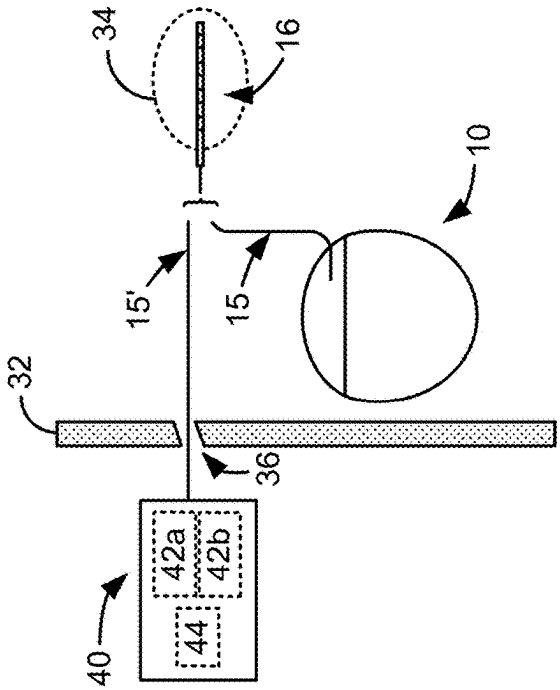


Figure 3

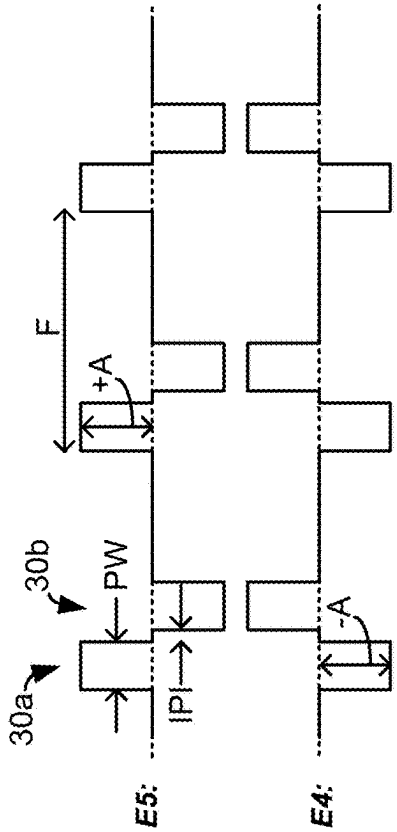


Figure 2

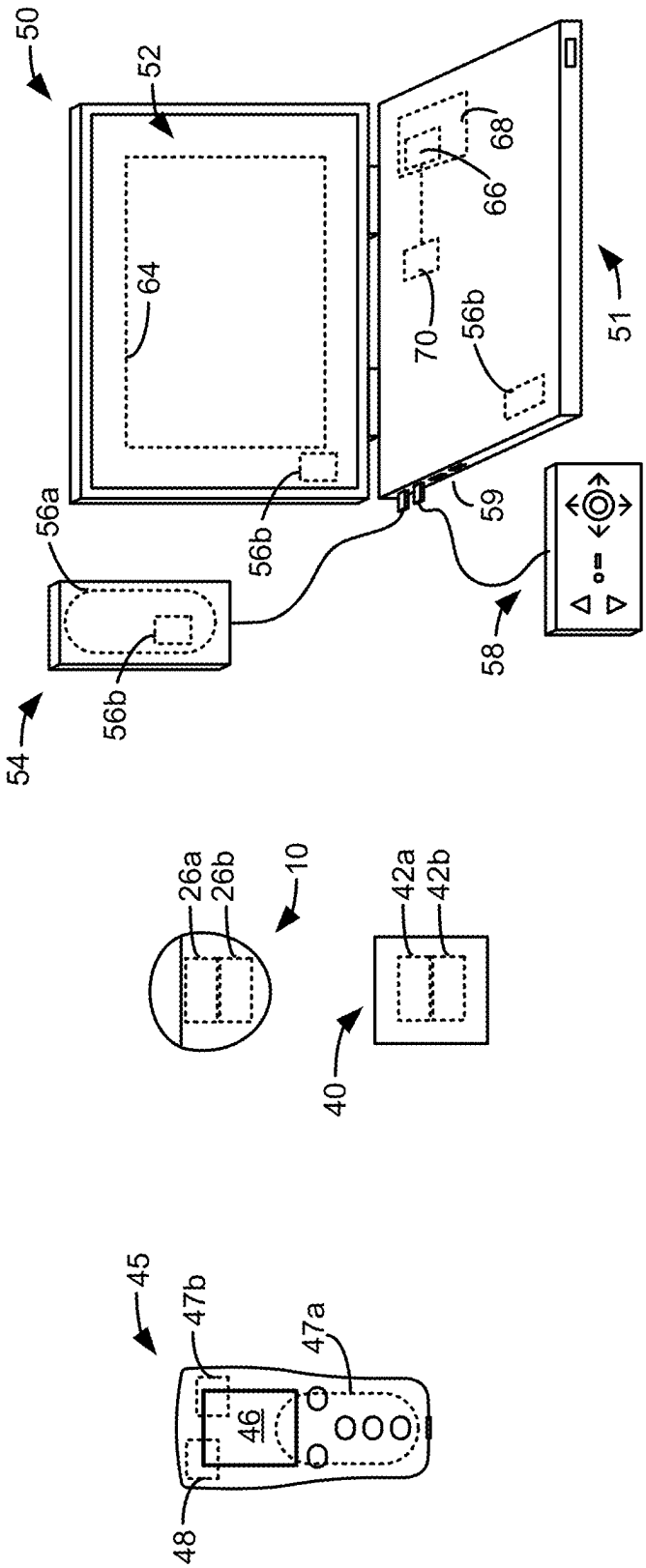
50
52
64
68
66
70
56b
51
56a
56b
59
58
54
56b
26a
26b
10
42a
42b
40
45
47b
47a
46
48

Figure 4

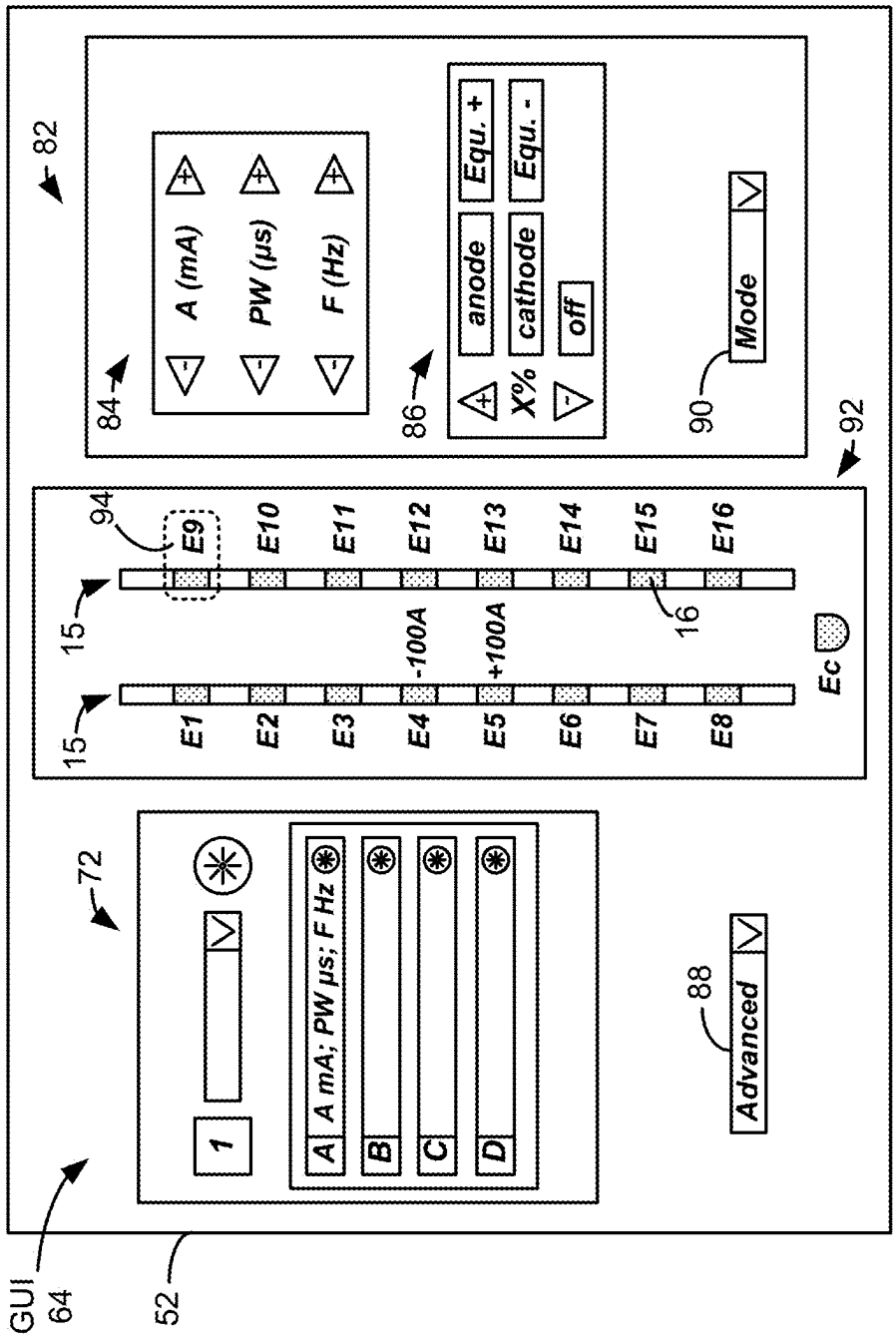
GUI
64
52
72
1
A mA; PW µs; F Hz
A
B
C
D
88
Advanced
82
84
A (mA)
PW (µs)
F (Hz)
86
anode
cathode
off
X%
Equ. +
Equ. -
90
Mode
92
94
15
E1
E2
E3
E4
E5
E6
E7
E8
E9
E10
E11
E12
E13
E14
E15
E16
-100A
+100A
16
Ec

Figure 5

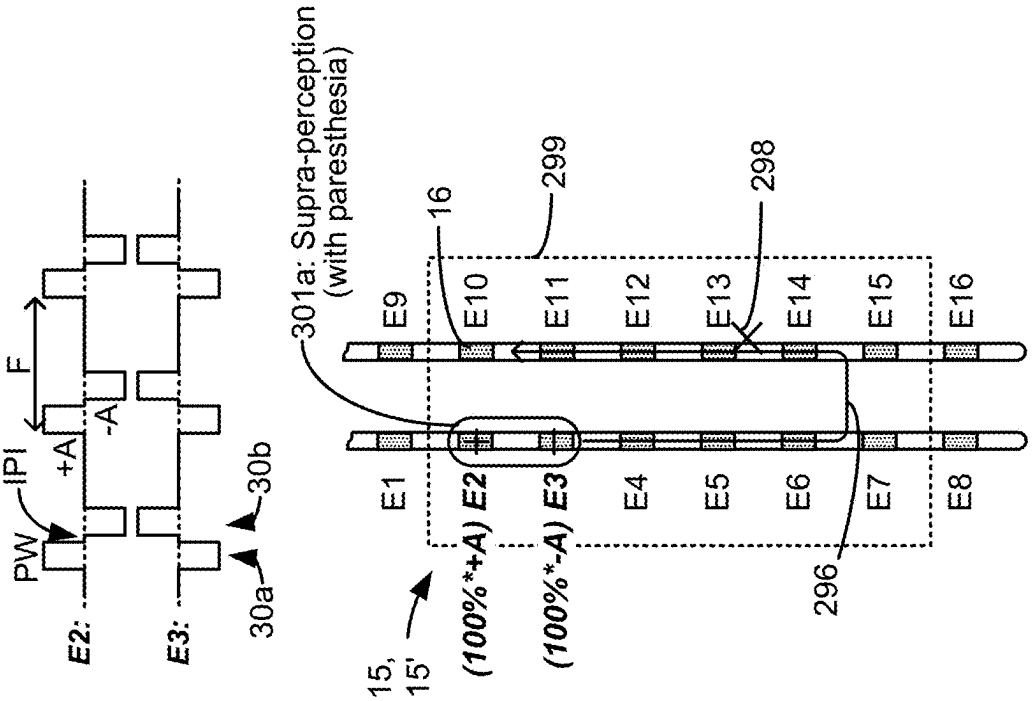
PW
IPI
+A
-A
F
E2:
E3:
30a
30b
301a: Supra-perception
(with paresthesia)
16
299
298
E9
E10
E11
E12
E13
E14
E15
E16
E1
E2
E3
E4
E5
E6
E7
E8
(100%*+A)
(100%*-A)
15,
15'
296

*Figure 6A*

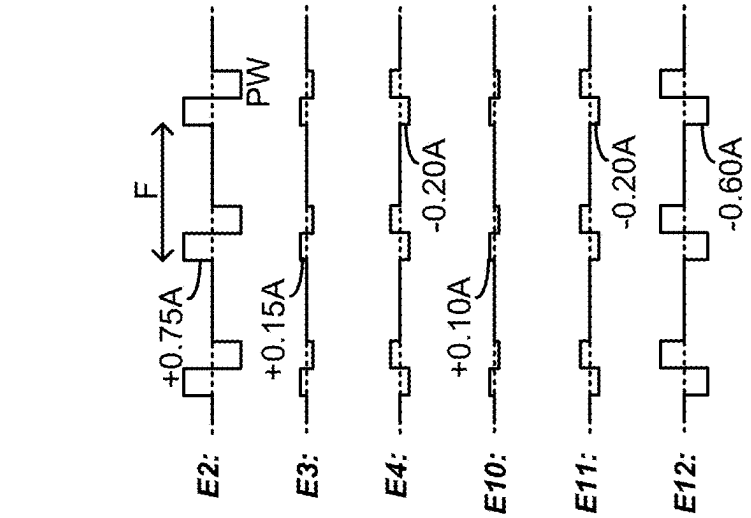
E2:
E3:
E4:
E10:
E11:
E12:
F
PW
+0.75A
+0.15A
-0.20A
+0.10A
-0.20A
-0.60A

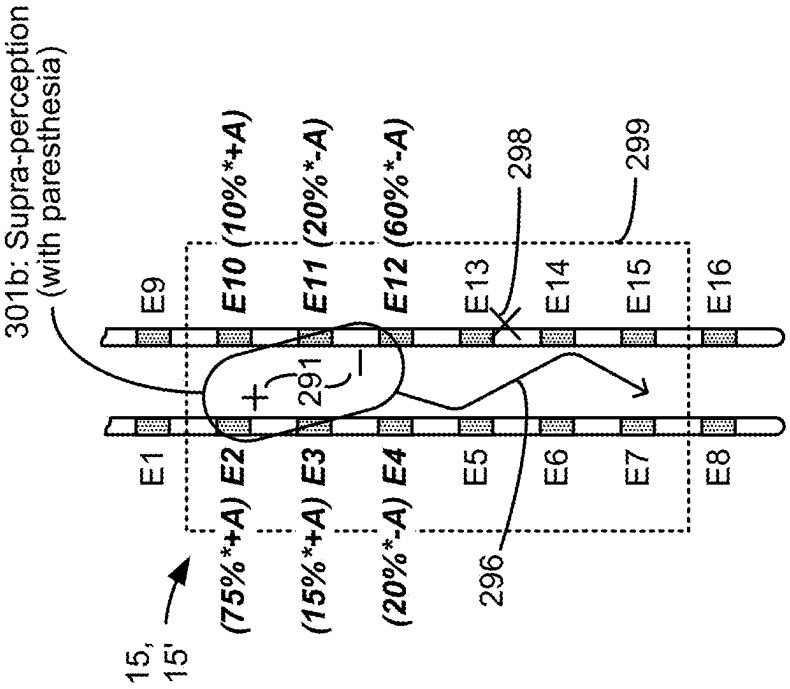
301b: Supra-perception
(with paresthesia)
15,
15'
E1
E2
E3
E4
E5
E6
E7
E8
E9
E10
E11
E12
E13
E14
E15
E16
(75%*+A)
(15%*+A)
(20%*-A)
(10%*+A)
(20%*-A)
(60%*-A)
291
296
298
299
+
-

Figure 6B

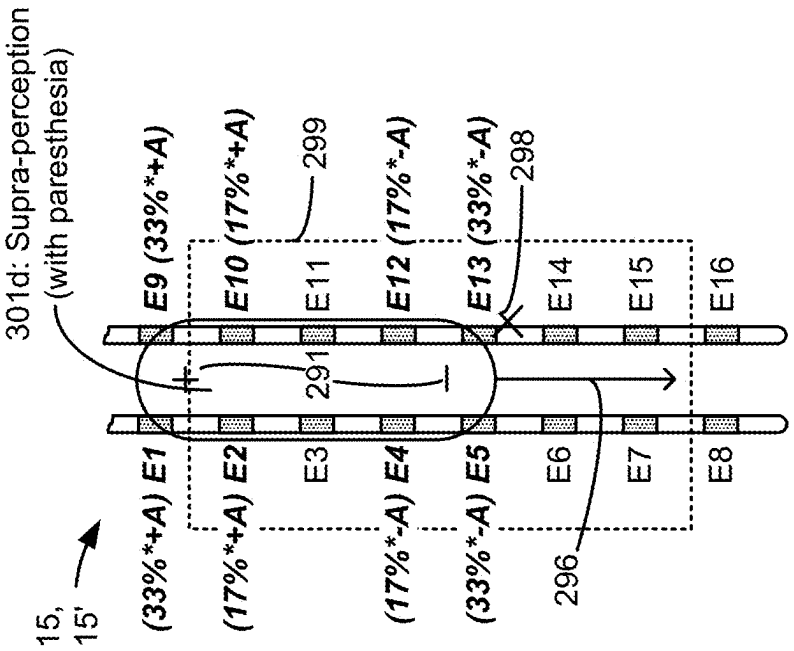


Figure 6D

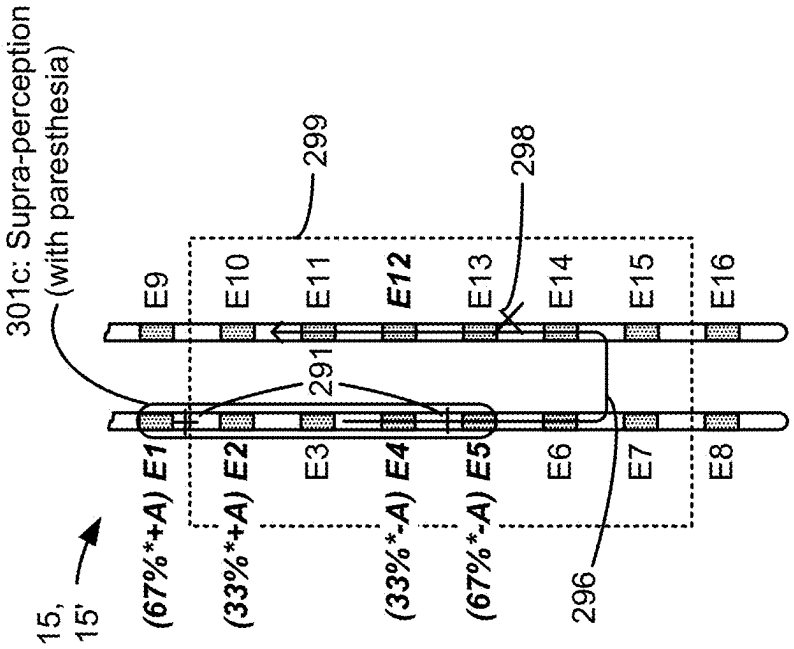


Figure 6C

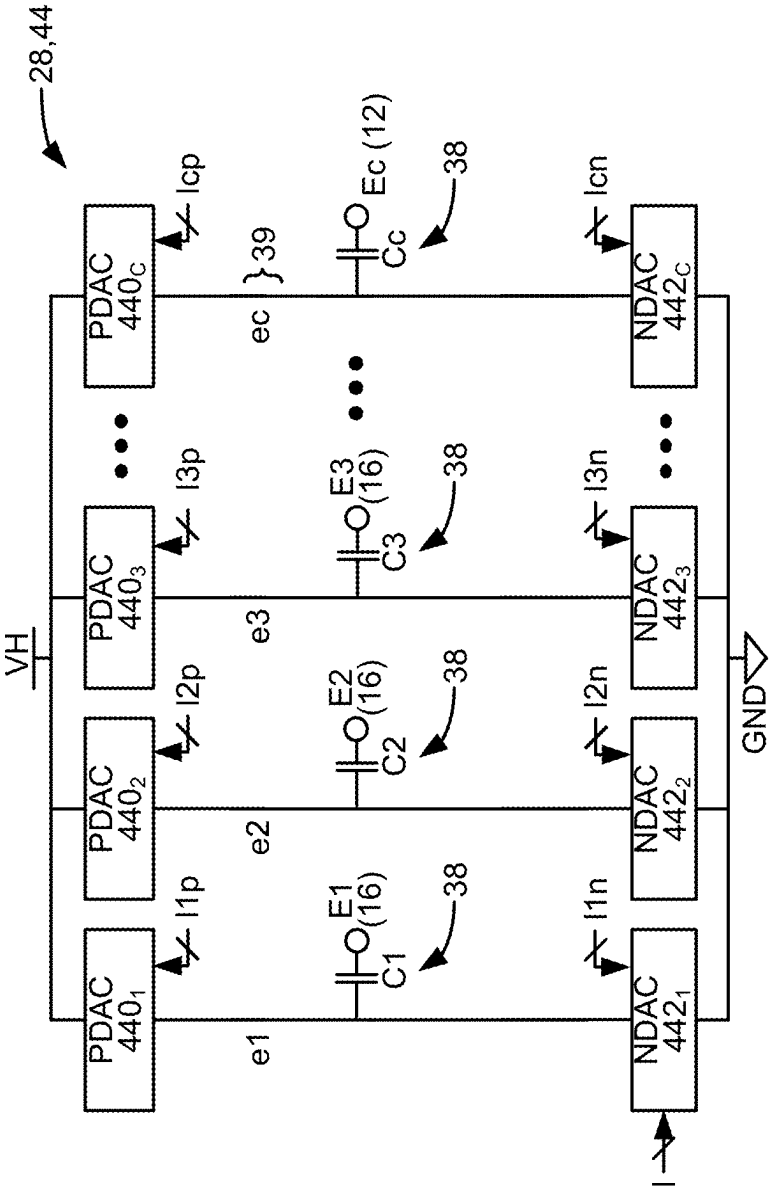
28,44
VH
GND
PDAC 440C
PDAC 4403
PDAC 4402
PDAC 4401
NDAC 442C
NDAC 4423
NDAC 4422
NDAC 4421
Icp
I3p
I2p
I1p
Icn
I3n
I2n
I1n
I
ec
e3
e2
e1
39
Ec (12)
E3 (16)
E2 (16)
E1 (16)
Cc
C3
C2
C1
38

*Figure 7A*

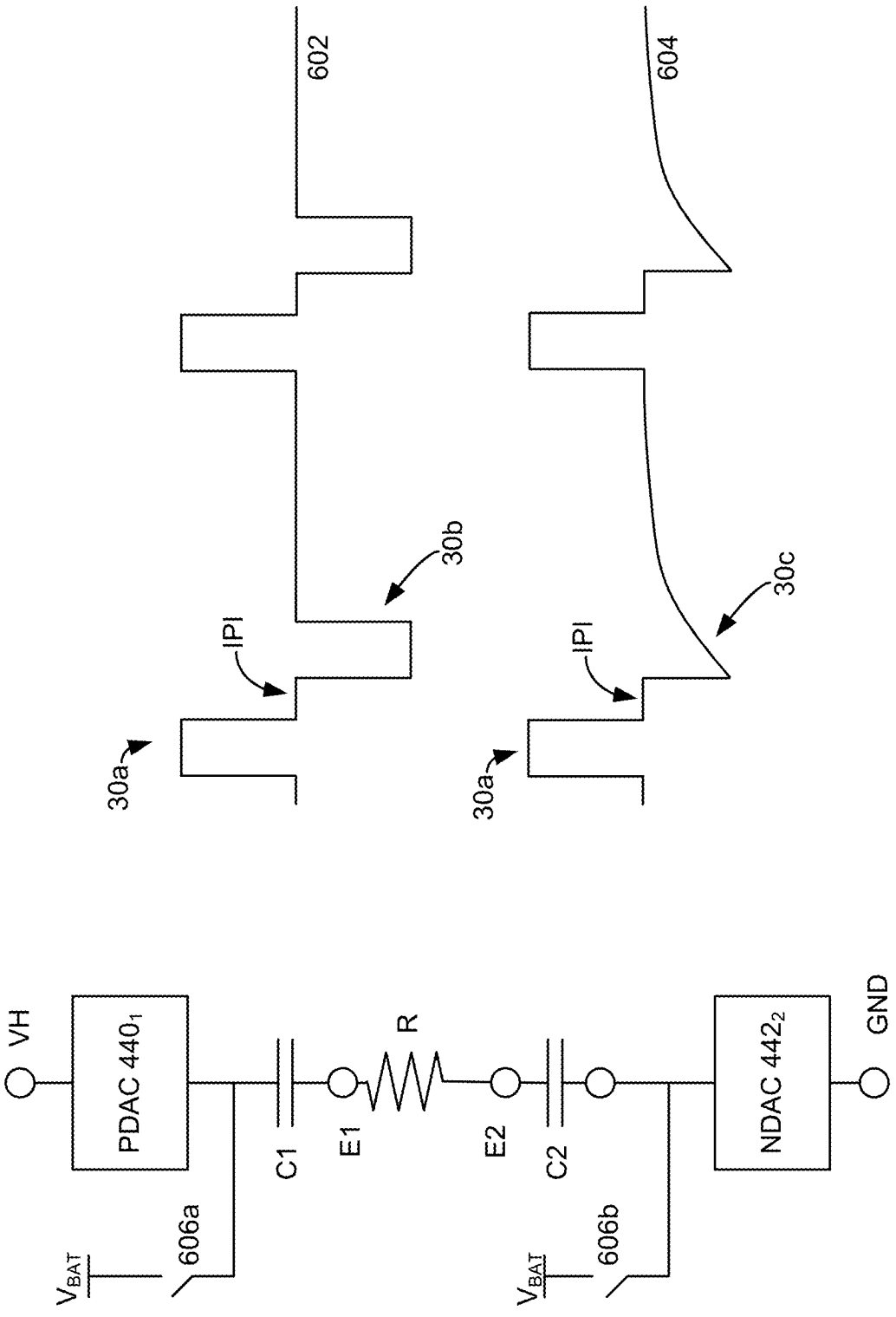
602
604
30a
IPI
30b
30c
VH
PDAC 440$_1$
NDAC 442$_2$
GND
R
C1
C2
E1
E2
$V_{BAT}$
606a
606b

*Figure 7B*

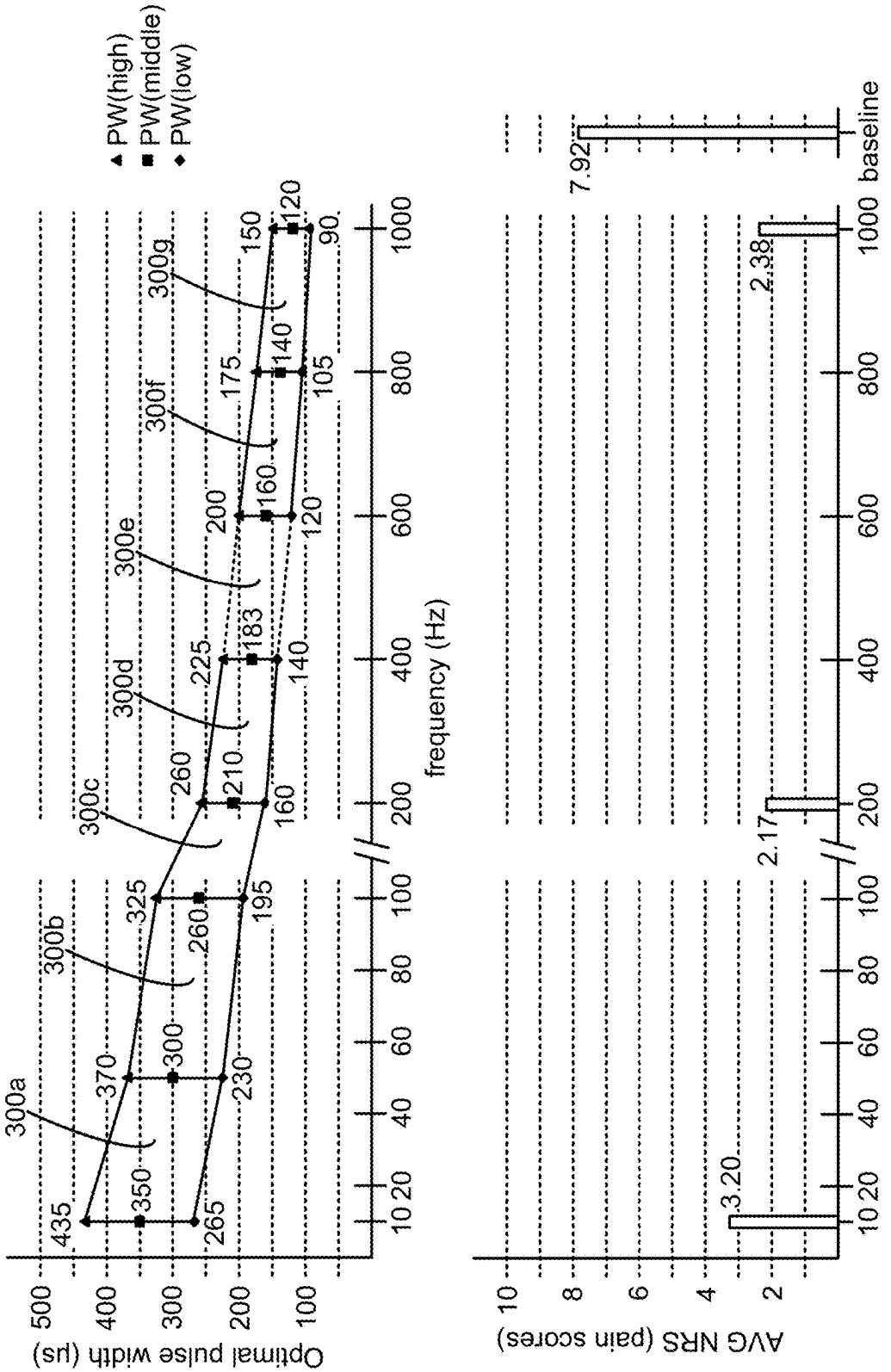
PW(high)
PW(middle)
PW(low)
Optimal pulse width (μs)
frequency (Hz)
300a
300b
300c
300d
300e
300f
300g
435
350
265
370
300
230
325
260
195
260
210
160
225
183
140
200
160
120
175
140
105
150
120
90
AVG NRS (pain scores)
frequency F (Hz)
3.20
2.17
7.92
2.38
baseline

*Figure 8*

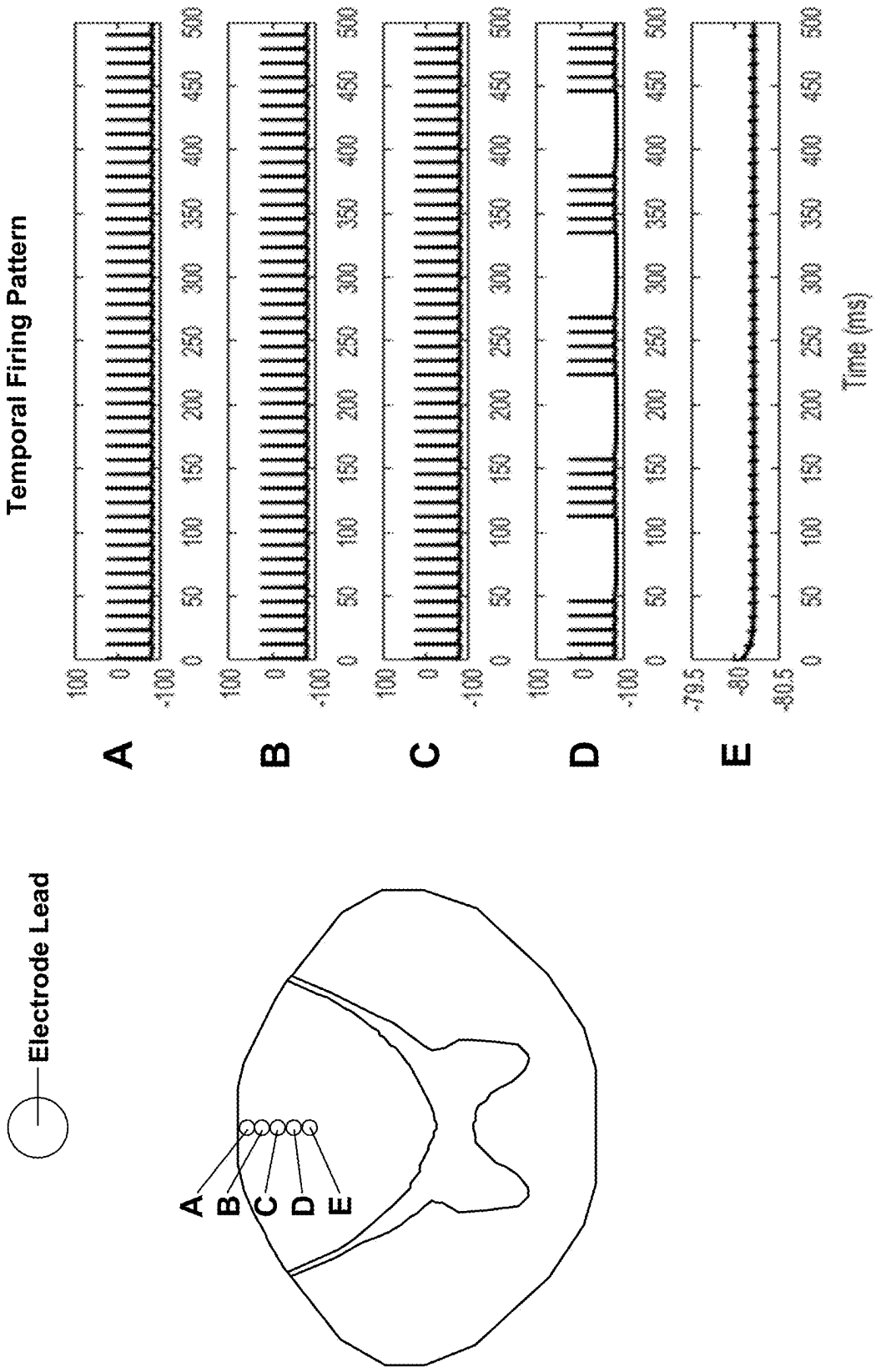
Temporal Firing Pattern
A
B
C
D
E
100
0
-100
-79.5
-80
-80.5
0
50
100
150
200
250
300
350
400
450
500
Time (ms)
Electrode Lead
A
B
C
D
E

*Figure 9A*

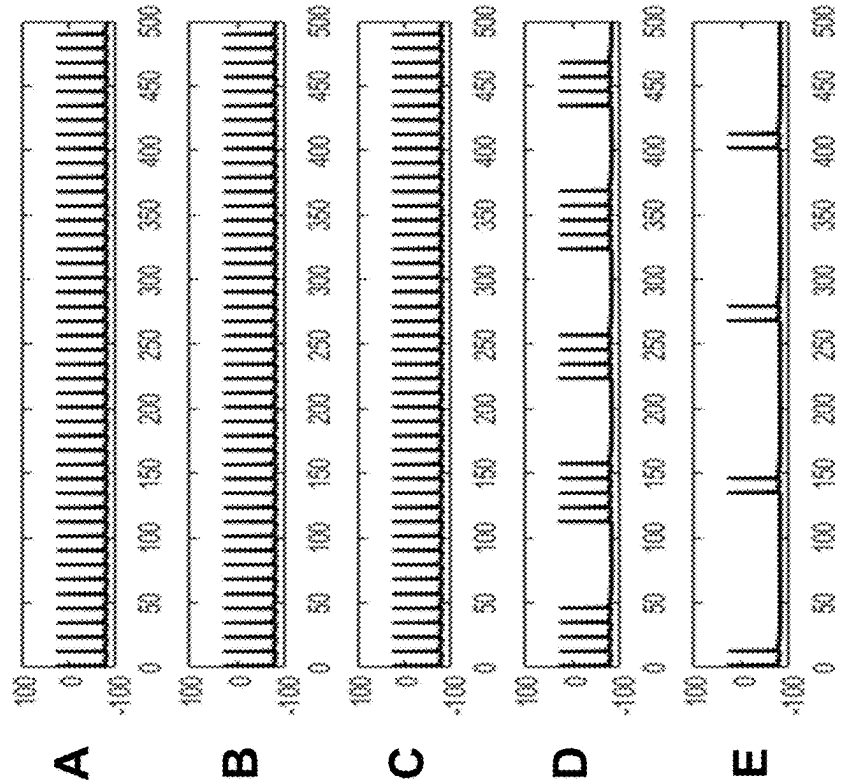


Figure 9C

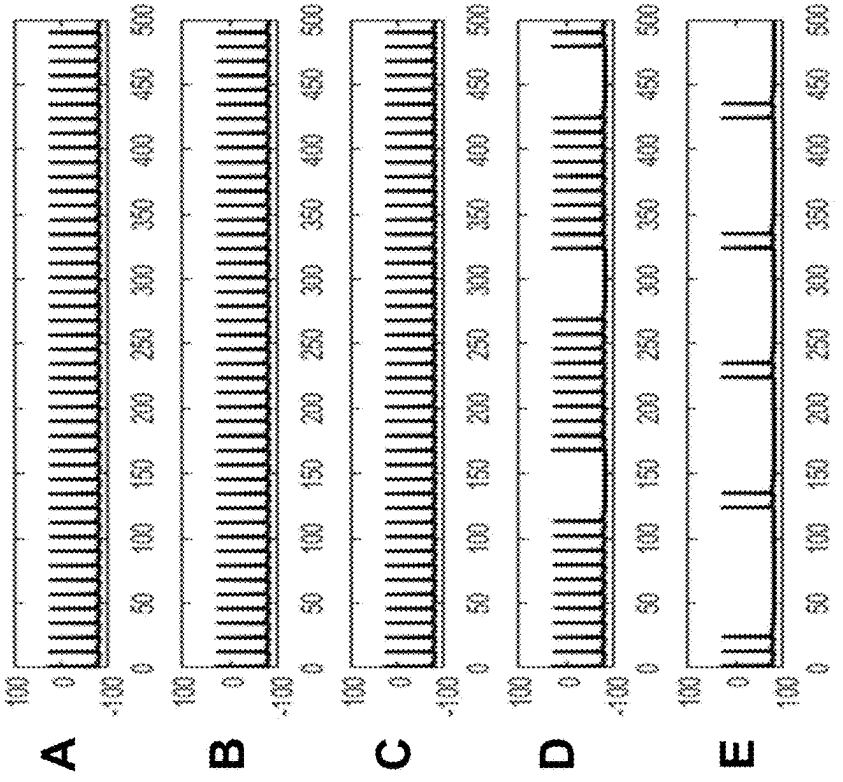


Figure 9B

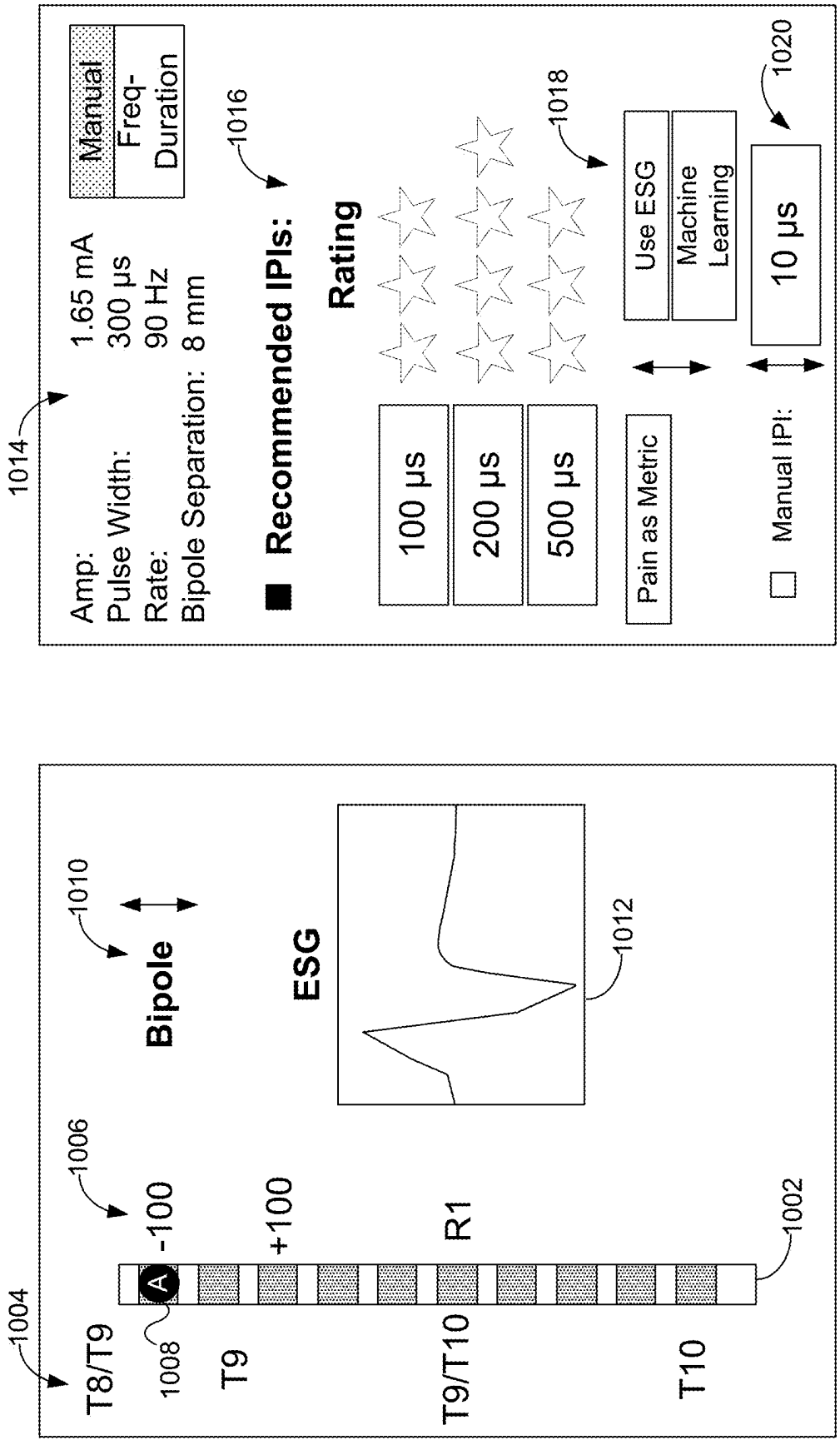
1004
T8/T9
1008
T9
T9/T10
T10
A
-100
+100
R1
1002
1006
Bipole
1010
ESG
1012
1014
Amp:
Pulse Width:
Rate:
Bipole Separation:
1.65 mA
300 µs
90 Hz
8 mm
Manual
Freq-Duration
Recommended IPIs:
1016
Rating
100 µs
200 µs
500 µs
1018
Pain as Metric
Use ESG
Machine Learning
Manual IPI:
10 µs
1020

*Figure 10*

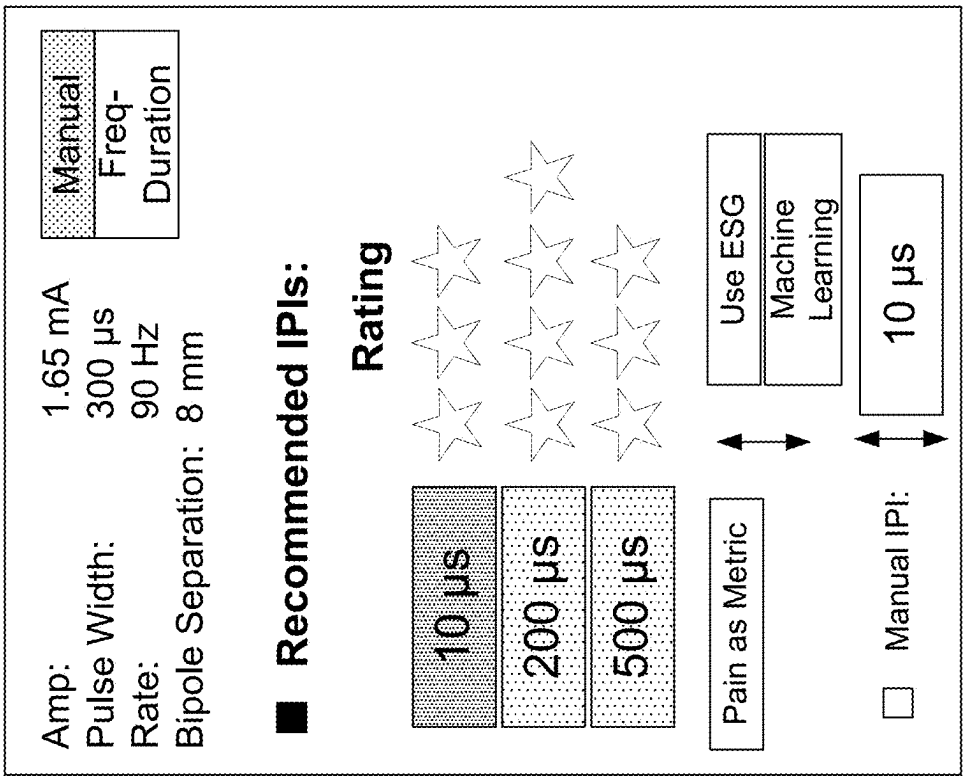


| IPI | Predicted Effect |
|---|---|
| 10 µs | Suppression |
| 50 µs | Suppression |
| 200 µs | Patterning |
| 500 µs | Patterning |

*Figure 11*

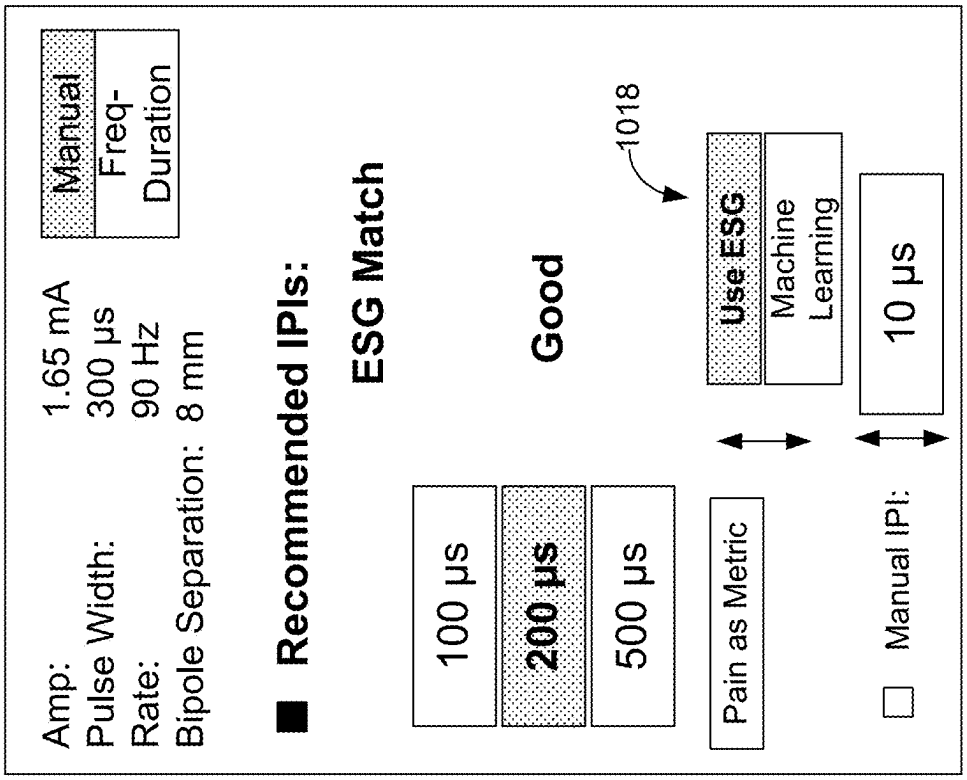
Manual
Freq-Duration
Amp: 1.65 mA
Pulse Width: 300 µs
Rate: 90 Hz
Bipole Separation: 8 mm
Recommended IPIs:
ESG Match
100 µs
200 µs
500 µs
Good
1018
Use ESG
Machine Learning
Pain as Metric
Manual IPI:
10 µs

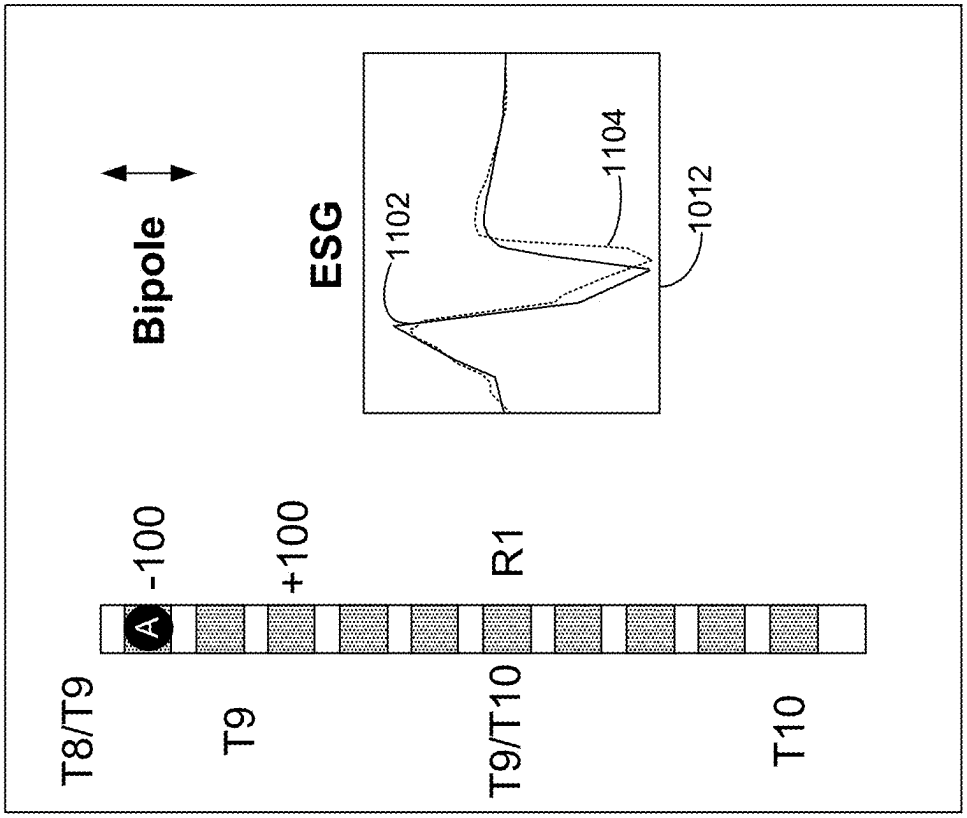
T8/T9
T9
T9/T10
T10
-100
+100
R1
A
Bipole
ESG
1102
1104
1012

*Figure 12A*

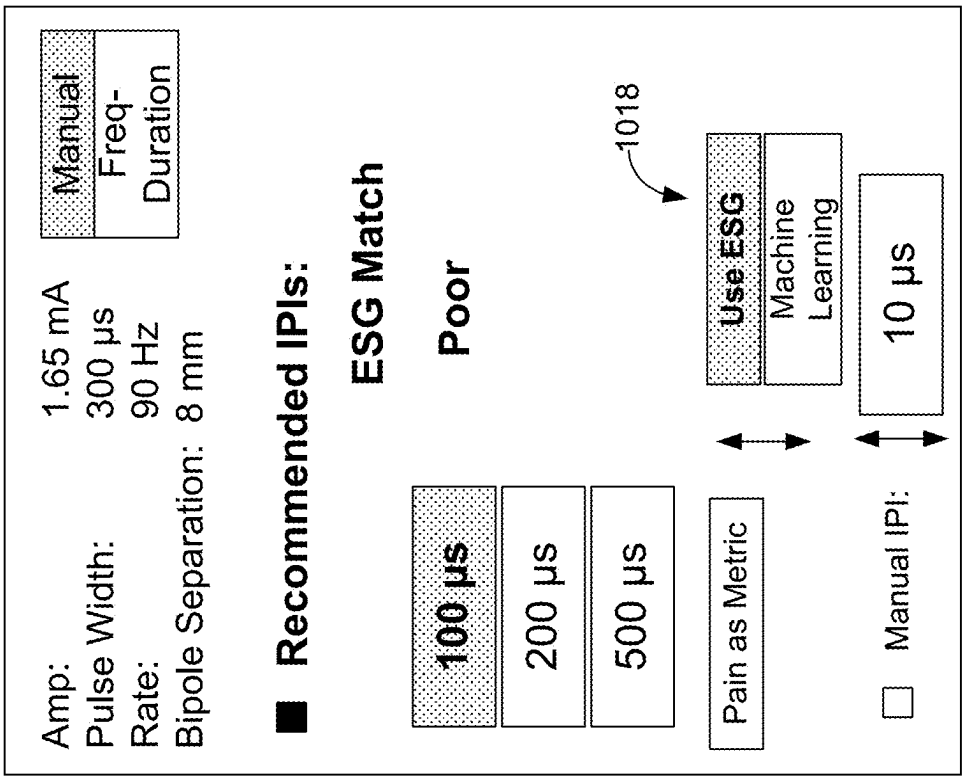
Manual
Freq-Duration
Amp: 1.65 mA
Pulse Width: 300 µs
Rate: 90 Hz
Bipole Separation: 8 mm
Recommended IPIs:
ESG Match
Poor
100 µs
200 µs
500 µs
1018
Use ESG
Machine Learning
Pain as Metric
Manual IPI:
10 µs

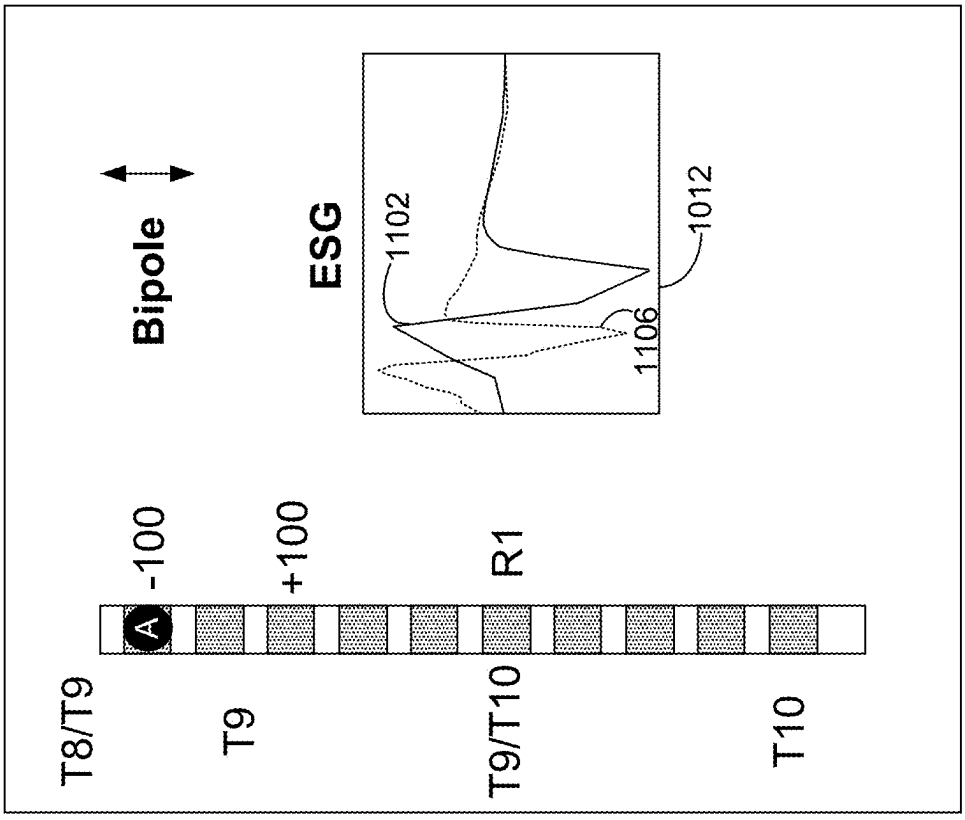
T8/T9
T9
T9/T10
T10
A
-100
+100
R1
Bipole
ESG
1102
1106
1012

*Figure 12B*

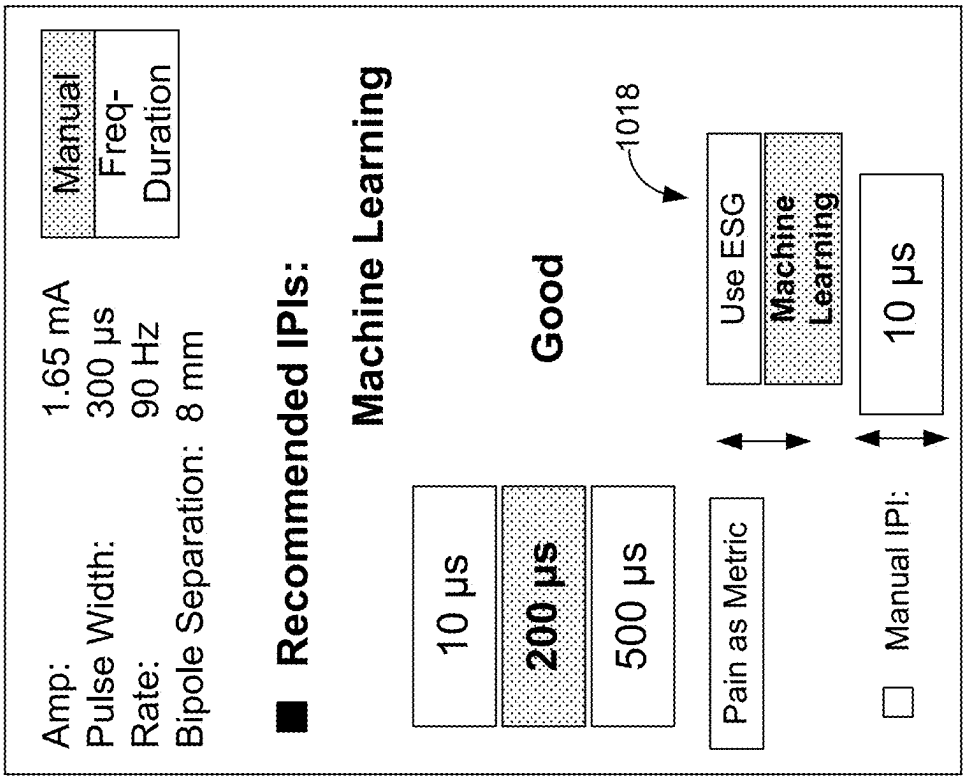
Manual
Freq-Duration
Amp: 1.65 mA
Pulse Width: 300 µs
Rate: 90 Hz
Bipole Separation: 8 mm
Recommended IPIs:
Machine Learning
10 µs
200 µs
500 µs
Good
1018
Use ESG
Machine Learning
Pain as Metric
Manual IPI:
10 µs

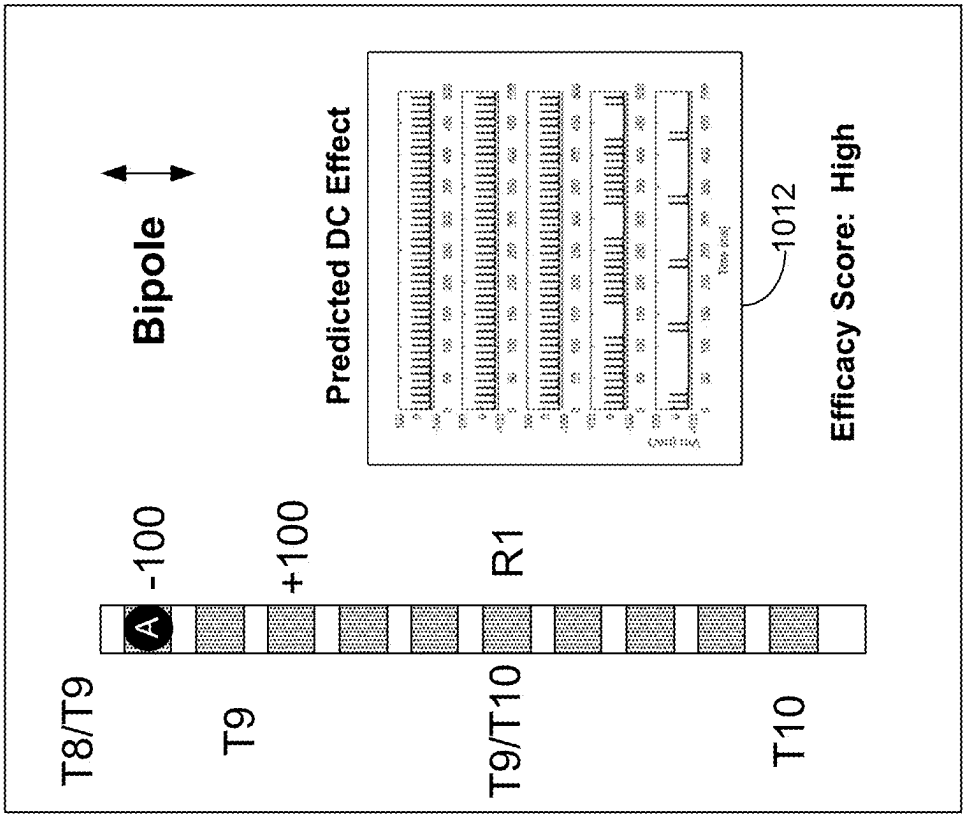
Bipole
Predicted DC Effect
1012
Efficacy Score: High
T8/T9
T9
T9/T10
T10
-100
+100
R1
A

*Figure 13A*

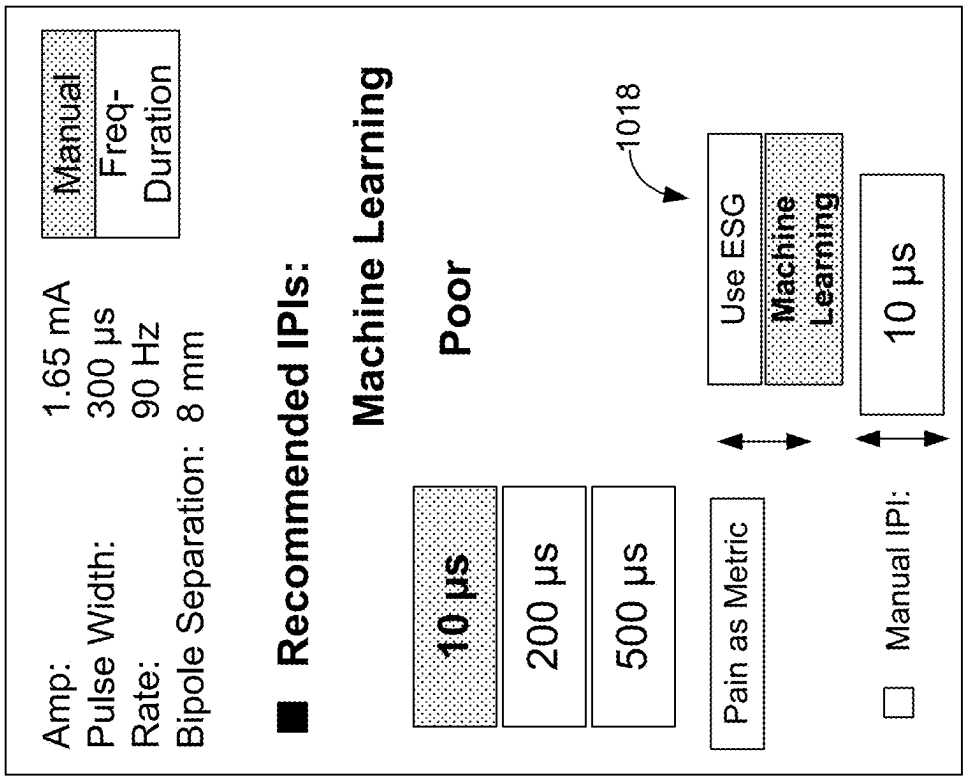
Amp: 1.65 mA
Pulse Width: 300 µs
Rate: 90 Hz
Bipole Separation: 8 mm
Manual
Freq-Duration
Recommended IPIs:
Machine Learning
Poor
10 µs
200 µs
500 µs
1018
Use ESG
Machine Learning
Pain as Metric
10 µs
Manual IPI:

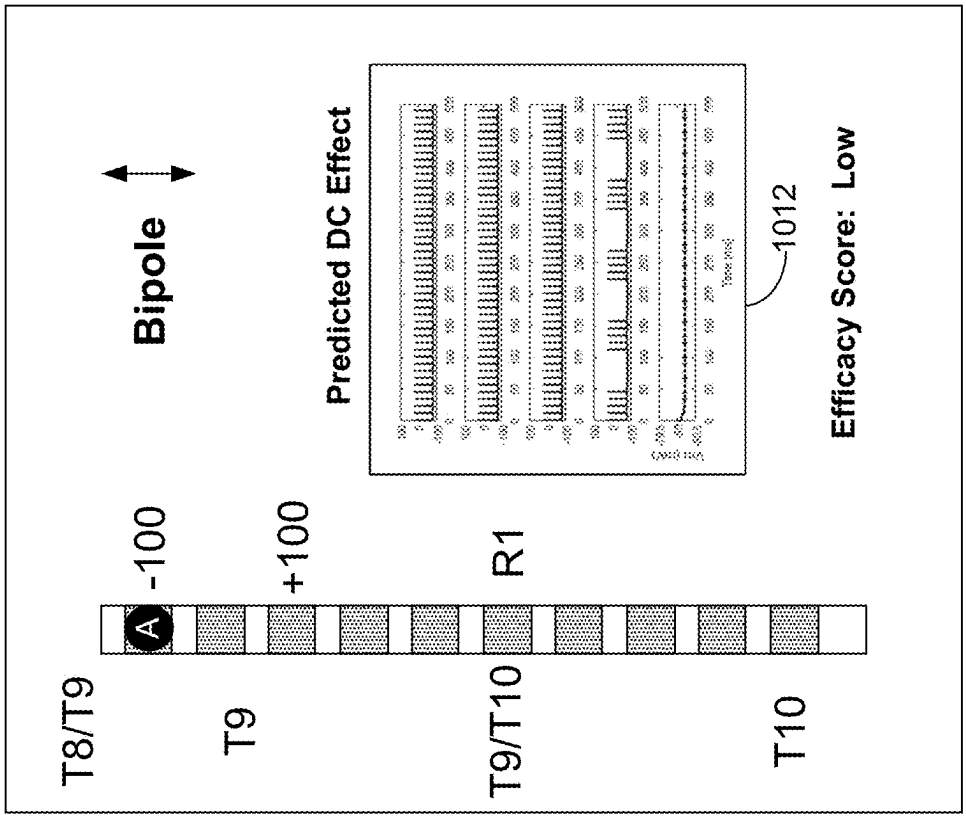
Bipole
Predicted DC Effect
1012
Efficacy Score: Low
-100
+100
R1
T8/T9
T9
T9/T10
T10

*Figure 13B*

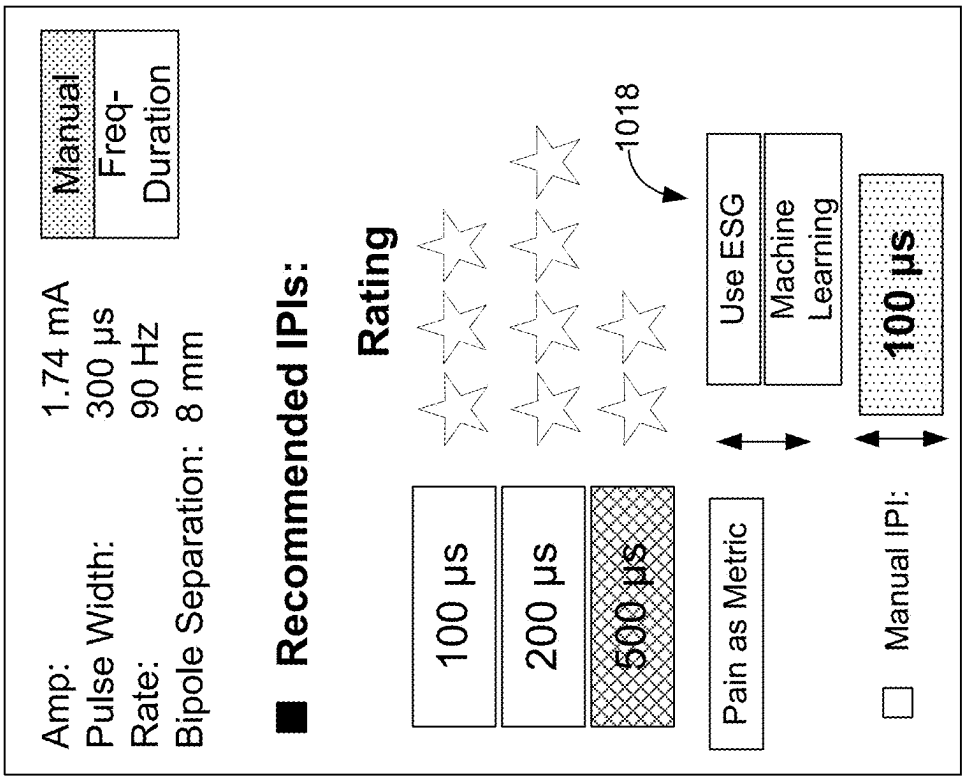
Manual
Freq-Duration
Amp: 1.74 mA
Pulse Width: 300 µs
Rate: 90 Hz
Bipole Separation: 8 mm
Recommended IPIs:
Rating
100 µs
200 µs
500 µs
1018
Use ESG
Machine Learning
Pain as Metric
Manual IPI:
100 µs

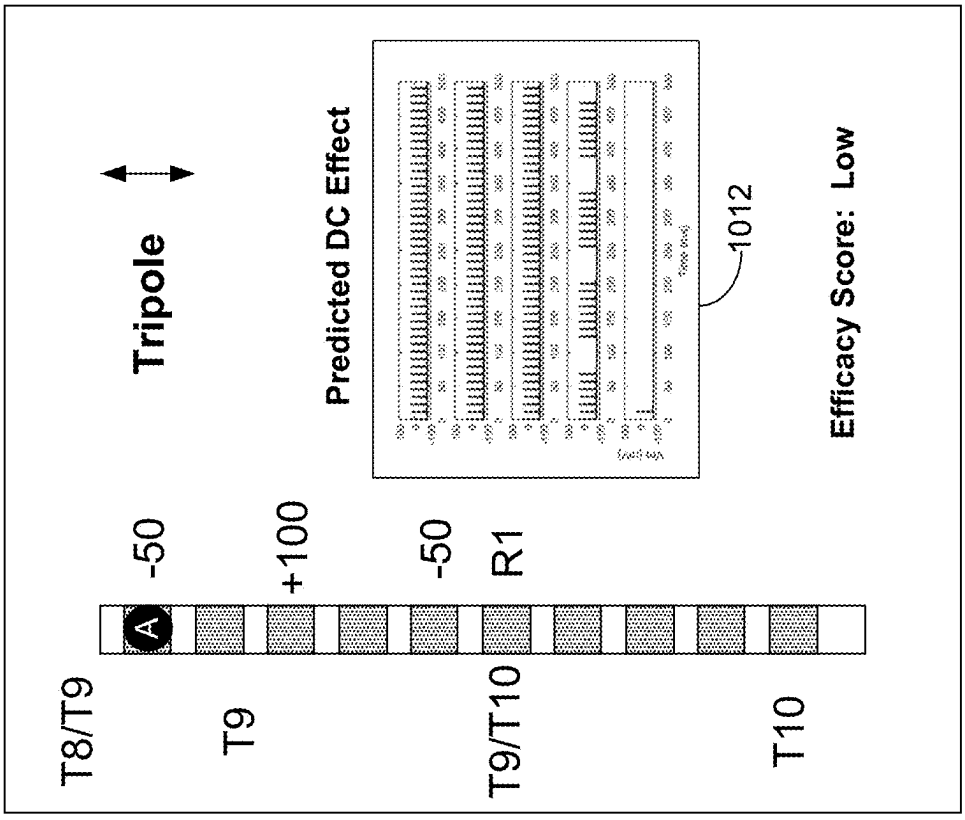
Tripole
Predicted DC Effect
1012
Efficacy Score: Low
T8/T9
T9
T9/T10
T10
-50
+100
-50
R1
A

*Figure 14*

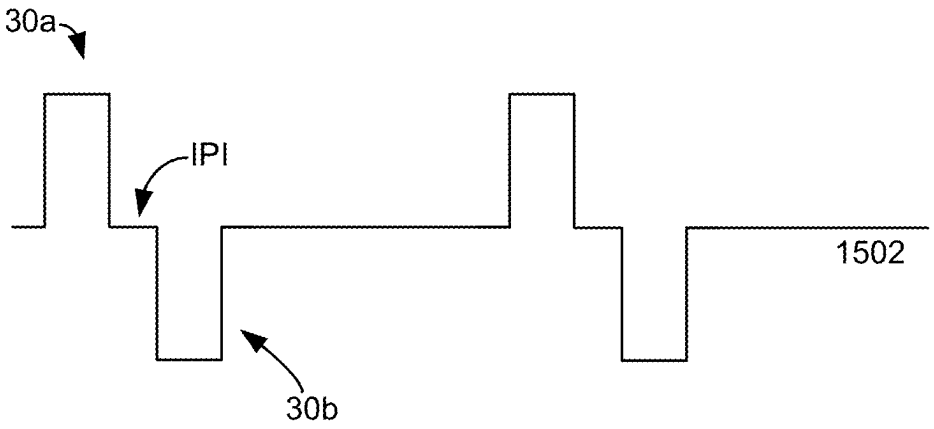


*Figure 15A*

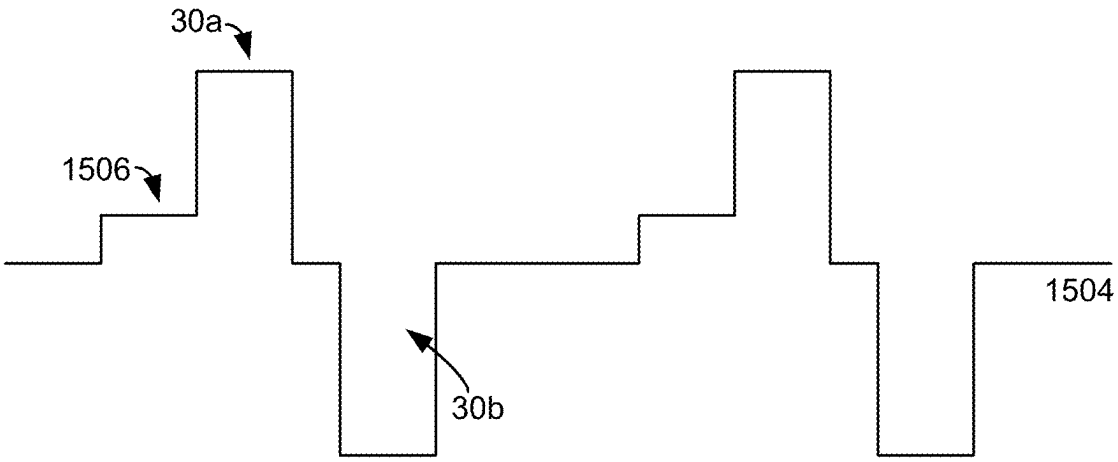


*Figure 15B*

# STIMULATION CONFIGURATION VARIATION TO CONTROL EVOKED TEMPORAL PATTERNS

## CROSS REFERENCE TO RELATED APPLICATIONS

**[0001]** This is a continuation application of U.S. patent application Ser. No. 18/171,613, filed Feb. 20, 2023, which is a continuation application of U.S. patent application Ser. No. 16/741,228, filed Jan. 13, 2020, which is a non-provisional application of U.S. Provisional Patent Application Ser. No. 62/803,003, filed Feb. 8, 2019.

**[0002]** U.S. patent application Ser. No. 16/741,228 is also a continuation-in-part of U.S. patent application Ser. No. 16/100,904, filed Aug. 10, 2018, which is a non-provisional application of U.S. Provisional Patent Application Ser. No. 62/544,656, filed Aug. 11, 2017.

**[0003]** U.S. patent application Ser. No. 16/741,228 is also a continuation-in-part of U.S. patent application Ser. No. 16/460,655, filed Jul. 2, 2019.

**[0004]** Priority is claimed to these above-referenced applications, and all are incorporated by reference in their entireties.

## FIELD OF THE INVENTION

**[0005]** This application relates to Implantable Medical Devices (IMDs), generally, Spinal Cord Stimulators, more specifically, and to methods of controlling such devices to deliver user-configured stimulation.

## INTRODUCTION

**[0006]** Implantable neurostimulator devices are devices that generate and deliver electrical stimuli to body nerves and tissues for the therapy of various biological disorders, such as pacemakers to treat cardiac arrhythmia, defibrillators to treat cardiac fibrillation, cochlear stimulators to treat deafness, retinal stimulators to treat blindness, muscle stimulators to produce coordinated limb movement, spinal cord stimulators to treat chronic pain, cortical and deep brain stimulators to treat motor and psychological disorders, and other neural stimulators to treat urinary incontinence, sleep apnea, shoulder subluxation, etc. The description that follows will generally focus on the use of the invention within a Spinal Cord Stimulation (SCS) system, such as that disclosed in U.S. Pat. No. 6,516,227. However, the present invention may find applicability with any implantable neurostimulator device system.

## SUMMARY

**[0007]** Methods and systems for programming an implantable medical device are disclosed. One embodiment disclosed herein is a method for programming an implantable medical device (IMD) having a plurality of electrodes implantable in a patient. According to some embodiments the method comprises selecting a stimulation program defining a plurality of sequential pulses, wherein each pulse comprises a first phase having a first polarity and a second phase having a second polarity opposite of the first polarity, wherein the first and second phases are separated by an inter-phase interval (IPI). According to some embodiments, the method comprises applying the stimulation program using a plurality of differing IPIs, based on a determination of effectiveness of the stimulation program using the plurality of differing IPIs, determining a best IPI, and using the best IPI in programming the IMD. According to some embodiments, the determination of effectiveness of the stimulation program using the plurality of differing IPIs is based on patient feedback. According to some embodiments, the patient feedback comprises rankings of the stimulation program using the plurality of differing IPIs. According to some embodiments, the determination of effectiveness of the stimulation program using the plurality of differing IPIs is based on an electrospinogram (ESG) trace. According to some embodiments, the ESG trace is measured using one or more electrodes of the plurality of electrodes. According to some embodiments, the determination of effectiveness of the stimulation program using the plurality of differing IPIs based on an ESG trace comprises comparing ESG traces obtained using the stimulation program with each of the differing IPIs to a target ESG trace. According to some embodiments, the target ESG trace corresponds to stimulation settings that provide effective paresthesia coverage of the patient's pain. According to some embodiments, the target ESG trace corresponds to settings that provide effective pain relief without paresthesia. According to some embodiments, the target ESG trace is derived based on neural modeling predictions and/or one or more templates generated from previously recorded data. According to some embodiments, the method further comprises obtaining a target ESG using supra-perception stimulation and wherein the determination of the effectiveness of the stimulation program using the one or more differing IPIs comprises using sub-perception stimulation. According to some embodiments, the target ESG trace corresponds to stimulation that provides an effective temporal firing pattern of neural elements. According to some embodiments, the method further comprises determining the plurality of differing IPIs. According to some embodiments, determining the plurality of differing IPIs comprises predicting, based on neural modeling, temporal firing patterns of neural elements evoked by the differing IPIs. According to some embodiments, applying the stimulation program using the plurality of differing IPIs comprises using a graphical user interface (GUI) to select the plurality of differing IPIs. According to some embodiments, the GUI is configured to provide a ranking of the effectiveness of the stimulation program using each of the plurality of differing IPIs. According to some embodiments, the GUI is configured to provide an indication of an expected physiological and/or clinical effect associated with the stimulation program using the plurality of differing IPIs. According to some embodiments, the second phase is actively driven. According to some embodiments, the second phase is passively driven. According to some embodiments, the plurality differing IPIs are from 10 microseconds to 500 microseconds. According to some embodiments, the method further comprises determining a best stimulation geometry to produce a desired physiological effect. According to some embodiments, the best IPI is determined based on the determined best stimulation geometry. According to some embodiments, the plurality differing IPIs are from 0.5 μs to 2.5 μs.

**[0008]** A further embodiment disclosed herein is a method for programming an implantable medical device (IMD) having a plurality of electrodes implantable in a patient, wherein the method comprises selecting a stimulation program defining a plurality of sequential pulses, wherein each pulse comprises a first phase having a first polarity and a

second phase having a second polarity opposite of the first polarity, wherein the first and second phases are separated by an inter-phase interval (IPI); selecting an IPI, wherein the selected IPI is predicted by neural modeling to produce a desired physiological and/or clinical effect; and using the selected IPI in programming the IMD. According to some embodiments, the neural modeling predicts temporal firing patterns of neural elements evoked by the effective IPI. According to some embodiments, the neural modeling predicts the effective IPI based on one or more parameters selected from the group consisting of stimulation geometry, pulse width, frequency, and amplitude. According to some embodiments, the method further comprises using a graphical user interface (GUI) to select the IPI. According to some embodiments, the GUI provides an indication of a predicted physiological and/or clinical effect for the effective IPI. According to some embodiments, the GUI provides a recommended range of IPIs.

**[0009]** Also disclosed herein is a neuromodulation system comprising: an external device for programming an implantable medical device (IMD), wherein the IMD comprises a plurality of electrodes implantable in a patient's tissue, and wherein the external device comprises a non-transitory computer readable medium comprising instructions, which when executed by the external device configures the external device to: select a stimulation program defining a plurality of sequential pulses, wherein each pulse comprises a first phase having a first polarity and a second phase having a second polarity opposite of the first polarity, wherein the first and second phases are separated by an inter-phase interval (IPI); enable the IMD to apply the stimulation program using a plurality of differing IPIs; based on a determination of effectiveness of the stimulation program using the differing IPIs, determine a best IPI; and use the best IPI in programming the IMD. According to some embodiments, the determination of effectiveness of the stimulation program using the plurality of differing IPIs is based on patient feedback. According to some embodiments, the patient feedback comprises rankings of the stimulation program using the plurality of differing IPIs. According to some embodiments, the determination of effectiveness of the stimulation program using the plurality of differing IPIs is based on an electrospinogram (ESG) trace. According to some embodiments, the ESG trace is measured using one or more electrodes of the plurality of electrodes. According to some embodiments, the determination of effectiveness of the stimulation program using the plurality of differing IPIs based on an ESG trace comprises comparing ESG traces obtained using the stimulation program with each of the differing IPIs to a target ESG trace. According to some embodiments, the target ESG trace corresponds to stimulation settings that provide effective paresthesia coverage of the patient's pain. According to some embodiments, the target ESG trace corresponds to settings that provide effective pain relief without paresthesia. According to some embodiments, the target ESG trace is derived based on neural modeling predictions and/or one or more templates generated from previously recorded data. According to some embodiments, the instructions further configure the external device to obtain a target ESG using supra-perception stimulation and wherein the determination of the effectiveness of the stimulation program using the one or more differing IPIs comprises using sub-perception stimulation. According to some embodiments, the target ESG trace corresponds to stimulation that provides an effective temporal firing pattern of neural elements. According to some embodiments, the instructions further configure the external device to determine the plurality of differing IPIs. According to some embodiments, determining the plurality of differing IPIs comprises predicting, based on neural modeling, temporal firing patterns of neural elements evoked by the differing IPIs. According to some embodiments, applying the stimulation program using the plurality of differing IPIs comprises using a graphical user interface (GUI) to select the plurality of differing IPIs. According to some embodiments, the GUI is configured to provide a ranking of the effectiveness of the stimulation program using each of the plurality of differing IPIs. According to some embodiments, the GUI is configured to provide an indication of an expected physiological and/or clinical effect associated with the stimulation program using the plurality of differing IPIs. According to some embodiments, the second phase is actively driven. According to some embodiments, the second phase is passively driven. According to some embodiments, the plurality differing IPIs are from 10 microseconds to 500 microseconds. According to some embodiments, the instructions further cause the external device to determine a best stimulation geometry to produce a desired physiological effect. According to some embodiments, the best IPI is determined based on the determined best stimulation geometry. According to some embodiments, the plurality differing IPIs are from 0.5 μs to 2.5 μs.

**[0010]** Also disclosed herein is a neuromodulation system comprising: an external device for programming an implantable medical device (IMD), wherein the IMD comprises a plurality of electrodes implantable in a patient's tissue, and wherein the external device comprises a non-transitory computer readable medium comprising instructions, which when executed by the external device configures the external device to: select a stimulation program defining a plurality of sequential pulses, wherein each pulse comprises a first phase having a first polarity and a second phase having a second polarity opposite of the first polarity, wherein the first and second phases are separated by an inter-phase interval (IPI); select an IPI, wherein the selected IPI is predicted by neural modeling to produce a desired physiological and/or clinical effect; and use the selected IPI in programming the IMD. According to some embodiments, the neural modeling predicts temporal firing patterns of neural elements evoked by the effective IPI. According to some embodiments, the neural modeling predicts the effective IPI based on one or more parameters selected from the group consisting of stimulation geometry, pulse width, frequency, and amplitude. According to some embodiments, the instructions further configure the external device to display a graphical user interface (GUI) for selecting the IPI. According to some embodiments, the GUI provides an indication of a predicted physiological and/or clinical effect for the effective IPI. According to some embodiments, the GUI provides a recommended range of IPIs.

**[0011]** Also disclosed herein is a non-transitory computer readable media comprising instructions executable on an external device for programming an implantable medical device (IMD), wherein the implantable medical device comprises a plurality of electrodes implantable in a patient's tissue, and wherein the computer readable media comprises instructions, which when executed, cause the external device to: select a stimulation program defining a plurality of

sequential pulses, wherein each pulse comprises a first phase having a first polarity and a second phase having a second polarity opposite of the first polarity, wherein the first and second phases are separated by an inter-phase interval (IPI), enable the IMD to apply the stimulation program using a plurality of differing IPIs, based on a determination of effectiveness of the stimulation program using the differing IPIs, determine a best IPI; and use the best IPI in programming the IMD. According to some embodiments, the determination of effectiveness of the stimulation program using the plurality of differing IPIs is based on patient feedback. According to some embodiments, the patient feedback comprises rankings of the stimulation program using the plurality of differing IPIs. According to some embodiments, the determination of effectiveness of the stimulation program using the plurality of differing IPIs is based on an electrospinogram (ESG) trace. According to some embodiments, the ESG trace is measured using one or more electrodes of the plurality of electrodes. According to some embodiments, the determination of effectiveness of the stimulation program using the plurality of differing IPIs based on an ESG trace comprises comparing ESG traces obtained using the stimulation program with each of the differing IPIs to a target ESG trace. According to some embodiments, the target ESG trace corresponds to stimulation settings that provide effective paresthesia coverage of the patient's pain. According to some embodiments, the target ESG trace corresponds to settings that provide effective pain relief without paresthesia. According to some embodiments, the target ESG trace is derived based on neural modeling predictions and/or one or more templates generated from previously recorded data. According to some embodiments, the instructions further cause the external device to obtain a target ESG using supra-perception stimulation and wherein the determination of the effectiveness of the stimulation program using the one or more differing IPIs comprises using sub-perception stimulation. According to some embodiments, the target ESG trace corresponds to stimulation that provides an effective temporal firing pattern of neural elements. According to some embodiments, the instructions further cause the external device to determine the plurality of differing IPIs. According to some embodiments, determining the plurality of differing IPIs comprises predicting, based on neural modeling, temporal firing patterns of neural elements evoked by the differing IPIs. According to some embodiments, applying the stimulation program using the plurality of differing IPIs comprises using the graphical user interface (GUI) to select the plurality of differing IPIs. According to some embodiments, the GUI is configured to provide a ranking of the effectiveness of the stimulation program using each of the plurality of differing IPIs. According to some embodiments, the GUI is configured to provide an indication of an expected physiological and/or clinical effect associated with the stimulation program using the plurality of differing IPIs. According to some embodiments, the second phase is actively driven. According to some embodiments, the second phase is passively driven. According to some embodiments, the plurality differing IPIs are from 10 microseconds to 500 microseconds. According to some embodiments, the instructions further cause the external device to determine a best stimulation geometry to produce a desired physiological effect. According to some embodiments, the best IPI is determined based on the determined best stimulation geometry. According to some embodiments, the plurality differing IPIs are from 0.5 μs to 2.5 μs.

**[0012]** Also disclosed herein is a non-transitory computer readable media comprising instructions executable on an external device for programming an implantable medical device (IMD), wherein the implantable medical device comprises a plurality of electrodes implantable in a patient's tissue, and wherein the computer readable media comprises instructions, which when executed, cause the external device to: select a stimulation program defining a plurality of sequential pulses, wherein each pulse comprises a first phase having a first polarity and a second phase having a second polarity opposite of the first polarity, wherein the first and second phases are separated by an inter-phase interval (IPI); select an IPI, wherein the selected IPI is predicted by neural modeling to produce a desired physiological and/or clinical effect; and use the selected IPI in programming the IMD. According to some embodiments, the neural modeling predicts temporal firing patterns of neural elements evoked by the effective IPI. According to some embodiments, the neural modeling predicts the effective IPI based on one or more parameters selected from the group consisting of stimulation geometry, pulse width, frequency, and amplitude. According to some embodiments, the instructions further configure the external device to display a graphical user interface (GUI) for selecting the IPI. According to some embodiments, the GUI provides an indication of a predicted physiological and/or clinical effect for the effective IPI. According to some embodiments, the GUI provides a recommended range of IPIs.

## BRIEF DESCRIPTION OF THE DRAWINGS

**[0013]** FIG. **1** shows an Implantable Pulse Generator (IPG) useable for Spinal Cord Stimulation (SCS).

**[0014]** FIG. **2** shows an example of stimulation pulses producible by the IPG.

**[0015]** FIG. **3** shows use of an External Trial Stimulator (ETS) useable to provide stimulation before implantation of an IPG.

**[0016]** FIG. **4** shows various external devices capable of communicating with and programming stimulation in an IPG and ETS.

**[0017]** FIG. **5** shows a Graphical User Interface (GUI) of a clinician programmer external device for setting or adjusting stimulation parameters.

**[0018]** FIGS. **6**A-**6**D shows sweet spot searching to determine effective electrodes for a patient. FIGS. **7**A-**7**B show aspects of stimulation circuitry useable in the IPG or ETS.

**[0019]** FIG. **8** shows results of patients tested with sub-perception therapy at frequencies at or below 1 kHz, and shows optimal pulse width ranges determined at tested frequencies, and optimal pulse width v. frequency regions for sub-perception therapy.

**[0020]** FIGS. **9**A-**9**C show temporal firing patterns of neural elements using differing stimulation parameters.

**[0021]** FIG. **10** shows an embodiment of a GUI for optimizing interphase intervals (IPIs) of stimulation waveforms.

**[0022]** FIG. **11** shows an embodiment of a GUI for optimizing interphase intervals (IPIs) of stimulation waveforms based on expected neural effects.

**[0023]** FIGS. **12**A and **12**B show an embodiment of a GUI for optimizing interphase intervals (IPIs) of stimulation waveforms based on electrospinogram (ESG) measurements.

**[0024]** FIG. **13**A and **13**B show an embodiment of a GUI for optimizing interphase intervals (IPIs) of stimulation waveforms based on temporal firing patterns of neural elements.

**[0025]** FIG. **14** shows an embodiment of a GUI for optimizing interphase intervals (IPIs) of stimulation waveforms based utilizing tripolar stimulation.

**[0026]** FIGS. **15**A and **15**B show examples of waveforms.

## DETAILED DESCRIPTION

**[0027]** An SCS system typically includes an implantable medical device (IMD), more specifically, an Implantable Pulse Generator (IPG) **10** shown in FIG. **1**. The IPG **10** includes a biocompatible device case **12** that holds the circuitry and battery **14** necessary for the IPG to function. The IPG **10** is coupled to electrodes **16** via one or more electrode leads **15** that form an electrode array **17**. The electrodes **16** are configured to contact a patient's tissue and are carried on a flexible body **18**, which also houses the individual lead wires **20** coupled to each electrode **16**. The lead wires **20** are also coupled to proximal contacts **22**, which are insertable into lead connectors **24** fixed in a header **23** on the IPG **10**, which header can comprise an epoxy for example. Once inserted, the proximal contacts **22** connect to header contacts within the lead connectors **24**, which are in turn coupled by feedthrough pins through a case feedthrough to circuitry within the case **12**, although these details aren't shown.

**[0028]** In the illustrated IPG **10**, there are sixteen lead electrodes (E**1**-E**16**) split between two leads **15**, with the header **23** containing a 2×1 array of lead connectors **24**. However, the number of leads and electrodes in an IPG is application specific and therefore can vary. The conductive case **12** can also comprise an electrode (Ec). In a SCS application, the electrode leads **15** are typically implanted proximate to the dura in a patient's spinal column on the right and left sides of the spinal cord midline. The proximal electrodes **22** are tunneled through the patient's tissue to a distant location such as the buttocks where the IPG case **12** is implanted, at which point they are coupled to the lead connectors **24**. In other IPG examples designed for implantation directly at a site requiring stimulation, the IPG can be lead-less, having electrodes **16** instead appearing on the body of the IPG for contacting the patient's tissue. The IPG leads **15** can be integrated with and permanently connected the case **12** in other IPG solutions. The goal of SCS therapy is to provide electrical stimulation from the electrodes **16** to alleviate a patient's symptoms, most notably chronic back pain.

**[0029]** IPG **10** can include an antenna **26***a* allowing it to communicate bi-directionally with a number of external devices, as shown in FIG. **4**. The antenna **26***a* as depicted in FIG. **1** is shown as a conductive coil within the case **12**, although the coil antenna **26***a* can also appear in the header **23**. When antenna **26***a* is configured as a coil, communication with external devices preferably occurs using near-field magnetic induction. IPG may also include a Radio-Frequency (RF) antenna **26***b*. In FIG. **1**, RF antenna **26***b* is shown within the header **23**, but it may also be within the case **12**. RF antenna **26***b* may comprise a patch, slot, or wire, and may operate as a monopole or dipole. RF antenna **26***b* preferably communicates using far-field electromagnetic waves. RF antenna **26***b* may operate in accordance with any number of known RF communication standards, such as Bluetooth, Zigbee, WiFi, MICS, and the like.

**[0030]** Stimulation in IPG **10** is typically provided by pulses, as shown in FIG. **2**. Stimulation parameters typically include the amplitude of the pulses (A; whether current or voltage); the frequency (F) and pulse width (PW) of the pulses; the electrodes **16** (E) activated to provide such stimulation; and the polarity (P) of such active electrodes, i.e., whether active electrodes are to act as anodes (that source current to the tissue) or cathodes (that sink current from the tissue). These stimulation parameters taken together comprise a stimulation program that the IPG **10** can execute to provide therapeutic stimulation to a patient.

**[0031]** In the example of FIG. **2**, electrode E**5** has been selected as an anode, and thus provides pulses which source a positive current of amplitude +A to the tissue. Electrode E**4** has been selected as a cathode, and thus provides pulses which sink a corresponding negative current of amplitude −A from the tissue. This is an example of bipolar stimulation, in which only two lead-based electrodes are used to provide stimulation to the tissue (one anode, one cathode). However, more than one electrode may act as an anode at a given time, and more than one electrode may act as a cathode at a given time (e.g., tripole stimulation, quadripole stimulation, etc.).

**[0032]** The pulses as shown in FIG. **2** are biphasic, comprising a first phase **30***a*, followed quickly thereafter by a second phase **30***b* of opposite polarity. As is known, use of a biphasic pulse is useful in active charge recovery. For example, each electrodes' current path to the tissue may include a serially-connected DC-blocking capacitor, see, e.g., U.S. Patent Application Publication 2016/0144183, which will charge during the first phase **30***a* and discharged (be recovered) during the second phase **30***b*. In the example shown, the first and second phases **30***a* and **30***b* have the same duration and amplitude (although opposite polarities), which ensures the same amount of charge during both phases. However, the second phase **30***b* may also be charged balance with the first phase **30***a* if the integral of the amplitude and durations of the two phases are equal in magnitude, as is well known. The width of each pulse, PW, is defined here as the duration of first pulse phase **30***a*, although pulse width could also refer to the total duration of the first and second pulse phases **30***a* and **30***b* as well. Note that an interphase period (IPI) during which no stimulation is provided may be provided between the two phases **30***a* and **30***b*.

**[0033]** IPG **10** includes stimulation circuitry **28** that can be programmed to produce the stimulation pulses at the electrodes as defined by the stimulation program. Stimulation circuitry **28** can for example comprise the circuitry described in U.S. Patent Application Publication Nos. 2018/0071513 and 2018/048909, or described in U.S. Pat. Nos. 8,606,362 and 8,620,436. These references are incorporated herein by reference.

**[0034]** FIG. **3** shows an external trial stimulation environment that may precede implantation of an IPG **10** in a patient. During external trial stimulation, stimulation can be tried on a prospective implant patient without going so far as to implant the IPG **10**. Instead, one or more trial leads **15'** are implanted in the patient's tissue **32** at a target location **34**,

such as within the spinal column as explained earlier. The proximal ends of the trial lead(s) **15'** exit an incision **36** and are connected to an External Trial Stimulator (ETS) **40**. The ETS **40** generally mimics operation of the IPG **10**, and thus can provide stimulation pulses to the patient's tissue as explained above. See, e.g., 9,259,574, disclosing a design for an ETS. The ETS **40** is generally worn externally by the patient for a short while (e.g., two weeks), which allows the patient and his clinician to experiment with different stimulation parameters to try and find a stimulation program that alleviates the patient's symptoms (e.g., pain). If external trial stimulation proves successful, trial lead(s) **15'** are explanted, and a full IPG **10** and lead(s) **15** are implanted as described above; if unsuccessful, the trial lead(s) **15'** are simply explanted.

**[0035]** Like the IPG **10**, the ETS **40** can include one or more antennas to enable bi-directional communications with external devices, explained further with respect to FIG. **4**. Such antennas can include a near-field magnetic-induction coil antenna **42***a*, and/or a far-field RF antenna **42***b*, as described earlier. ETS **40** may also include stimulation circuitry **44** able to form the stimulation pulses in accordance with a stimulation program, which circuitry may be similar to or comprise the same stimulation circuitry **28** present in the IPG **10**. ETS **40** may also include a battery (not shown) for operational power.

**[0036]** FIG. **4** shows various external devices that can wirelessly communicate data with the IPG **10** and the ETS **40**, including a patient, hand-held external controller **45**, and a clinician programmer **50**. Both of devices **45** and **50** can be used to send a stimulation program to the IPG **10** or ETS **40**—that is, to program their stimulation circuitries **28** and **44** to produce pulses with a desired shape and timing described earlier. Both devices **45** and **50** may also be used to adjust one or more stimulation parameters of a stimulation program that the IPG **10** or ETS **40** is currently executing. Devices **45** and **50** may also receive information from the IPG **10** or ETS **40**, such as various status information, etc.

**[0037]** External controller **45** can be as described in U.S. Patent Application Publication 2015/0080982 for example, and may comprise either a dedicated controller configured to work with the IPG **10**. External controller **45** may also comprise a general purpose mobile electronics device such as a mobile phone which has been programmed with a Medical Device Application (MDA) allowing it to work as a wireless controller for the IPG **10** or ETS **40**, as described in U.S. Patent Application Publication 2015/0231402. External controller **45** includes a user interface, including means for entering commands (e.g., buttons or icons) and a display **46**. The external controller **45**'s user interface enables a patient to adjust stimulation parameters, although it may have limited functionality when compared to the more-powerful clinician programmer **50**, described shortly.

**[0038]** The external controller **45** can have one or more antennas capable of communicating with the IPG **10** and ETS **40**. For example, the external controller **45** can have a near-field magnetic-induction coil antenna **47***a* capable of wirelessly communicating with the coil antenna **26***a* or **42***a* in the IPG **10** or ETS **40**. The external controller **45** can also have a far-field RF antenna **47***b* capable of wirelessly communicating with the RF antenna **26***b* or **42***b* in the IPG **10** or ETS **40**.

**[0039]** The external controller **45** can also have control circuitry **48** such as a microprocessor, microcomputer, an FPGA, other digital logic structures, etc., which is capable of executing instructions an electronic device. Control circuitry **48** can for example receive patient adjustments to stimulation parameters and create a stimulation program to be wirelessly transmitted to the IPG **10** or ETS **40**.

**[0040]** Clinician programmer **50** is described further in U.S. Patent Application Publication 2015/0360038, and is only briefly explained here. The clinician programmer **50** can comprise a computing device **51**, such as a desktop, laptop, or notebook computer, a tablet, a mobile smart phone, a Personal Data Assistant (PDA)-type mobile computing device, etc. In FIG. **4**, computing device **51** is shown as a laptop computer that includes typical computer user interface means such as a screen **52**, a mouse, a keyboard, speakers, a stylus, a printer, etc., not all of which are shown for convenience. Also shown in FIG. **4** are accessory devices for the clinician programmer **50** that are usually specific to its operation as a stimulation controller, such as a communication "wand" **54**, and a joystick **58**, which are couplable to suitable ports on the computing device **51**, such as USB ports **59** for example.

**[0041]** The antenna used in the clinician programmer **50** to communicate with the IPG **10** or ETS **40** can depend on the type of antennas included in those devices. If the patient's IPG **10** or ETS **40** includes a coil antenna **26***a* or **42***a*, wand **54** can likewise include a coil antenna **56***a* to establish near-filed magnetic-induction communications at small distances. In this instance, the wand **54** may be affixed in close proximity to the patient, such as by placing the wand **54** in a belt or holster wearable by the patient and proximate to the patient's IPG **10** or ETS **40**.

**[0042]** If the IPG **10** or ETS **40** includes an RF antenna **26***b* or **42***b*, the wand **54**, the computing device **51**, or both, can likewise include an RF antenna **56***b* to establish communication with the IPG **10** or ETS **40** at larger distances. (Wand **54** may not be necessary in this circumstance). The clinician programmer **50** can also establish communication with other devices and networks, such as the Internet, either wirelessly or via a wired link provided at an Ethernet or network port.

**[0043]** To program stimulation programs or parameters for the IPG **10** or ETS **40**, the clinician interfaces with a clinician programmer graphical user interface (GUI) **64** provided on the display **52** of the computing device **51**. As one skilled in the art understands, the GUI **64** can be rendered by execution of clinician programmer software **66** on the computing device **51**, which software may be stored in the device's non-volatile memory **68**. One skilled in the art will additionally recognize that execution of the clinician programmer software **66** in the computing device **51** can be facilitated by control circuitry **70** such as a microprocessor, microcomputer, an FPGA, other digital logic structures, etc., which is capable of executing programs in a computing device. Such control circuitry **70**, in addition to executing the clinician programmer software **66** and rendering the GUI **64**, can also enable communications via antennas **56***a* or **56***b* to communicate stimulation parameters chosen through the GUI **64** to the patient's IPG **10**.

**[0044]** A portion of the GUI **64** is shown in one example in FIG. **5**. One skilled in the art will understand that the particulars of the GUI **64** will depend on where clinician programmer software **66** is in its execution, which will depend on the GUI selections the clinician has made. FIG. **5** shows the GUI **64** at a point allowing for the setting of

stimulation parameters for the patient and for their storage as a stimulation program. To the left a program interface **72** is shown, which as explained further in the '038 Publication allows for naming, loading and saving of stimulation programs for the patient. Shown to the right is a stimulation parameters interface **82**, in which specific stimulation parameters (A, D, F, E, P) can be defined for a stimulation program. Values for stimulation parameters relating to the shape of the waveform (A; in this example, current), pulse width (PW), and frequency (F) are shown in a waveform parameter interface **84**, including buttons the clinician can use to increase or decrease these values.

**[0045]** Stimulation parameters relating to the electrodes **16** (the electrodes E activated and their polarities P), are made adjustable in an electrode parameter interface **86**. Electrode stimulation parameters are also visible and can be manipulated in a leads interface **92** that displays the leads **15** (or **15'**) in generally their proper position with respect to each other, for example, on the left and right sides of the spinal column. A cursor **94** (or other selection means such as a mouse pointer) can be used to select a particular electrode in the leads interface **92**. Buttons in the electrode parameter interface **86** allow the selected electrode (including the case electrode, Ec) to be designated as an anode, a cathode, or off. The electrode parameter interface **86** further allows the relative strength of anodic or cathodic current of the selected electrode to be specified in terms of a percentage, X. This is particularly useful if more than one electrode is to act as an anode or cathode at a given time, as explained in the '038 Publication. In accordance with the example waveforms shown in FIG. **2**, as shown in the leads interface **92**, electrode E**5** has been selected as the only anode to source current, and this electrode receives X=100% of the specified anodic current, +A. Likewise, electrode E**4** has been selected as the only cathode to sink current, and this electrode receives X=100% of that cathodic current, −A.

**[0046]** The GUI **64** as shown specifies only a pulse width PW of the first pulse phase **30***a*. The clinician programmer software **66** that runs and receives input from the GUI **64** will nonetheless ensure that the IPG **10** and ETS **40** are programmed to render the stimulation program as biphasic pulses if biphasic pulses are to be used. For example, the clinician programming software **66** can automatically determine durations and amplitudes for both of the pulse phases **30***a* and **30***b* (e.g., each having a duration of PW, and with opposite polarities +A and −A). An advanced menu **88** can also be used (among other things) to define the relative durations and amplitudes of the pulse phases **30***a* and **30***b*, and to allow for other more advance modifications, such as setting of a duty cycle (on/off time) for the stimulation pulses, and a ramp-up time over which stimulation reaches its programmed amplitude (A), etc. A mode menu **90** allows the clinician to choose different modes for determining stimulation parameters. For example, as described in the '038 Publication, mode menu **90** can be used to enable electronic trolling, which comprises an automated programming mode that performs current steering along the electrode array by moving the cathode in a bipolar fashion. While GUI **64** is shown as operating in the clinician programmer **50**, the user interface of the external controller **45** may provide similar functionality.

**[0047]** While Spinal Cord Stimulation (SCS) therapy can be an effective means of alleviating a patient's pain, such stimulation can also cause paresthesia. Paresthesia—sometimes referred to a "supra-perception" therapy—is a sensation such as tingling, prickling, heat, cold, etc. that can accompany SCS therapy. Generally, the effects of paresthesia are mild, or at least are not overly concerning to a patient. Moreover, paresthesia is generally a reasonable tradeoff for a patient whose chronic pain has now been brought under control by SCS therapy. Some patients even find paresthesia comfortable and soothing.

**[0048]** Nonetheless, at least for some patients, SCS therapy would ideally provide complete pain relief without paresthesia-what is often referred to as "sub-perception" or sub-threshold therapy that a patient cannot feel. Effective sub-perception therapy may provide pain relief without paresthesia by issuing stimulation pulses at higher frequencies. Unfortunately, such higher-frequency stimulation may require more power, which tends to drain the battery **14** of the IPG **10**. See, e.g., U.S. Patent Application Publication 2016/0367822. If an IPG's battery **14** is a primary cell and not rechargeable, high-frequency stimulation means that the IPG **10** will need to be replaced more quickly. Alternatively, if an IPG battery **14** is rechargeable, the IPG **10** will need to be charged more frequently, or for longer periods of time. Either way, the patient is inconvenienced.

**[0049]** In an SCS application, it is desirable to determine a stimulation program that will be effective for each patient. A significant part of determining an effective stimulation program is to determine a "sweet spot" for stimulation in each patient, i.e., to select which electrodes should be active (E) and with what polarities (P) and relative amplitudes (X%) to recruit and thus treat a neural site at which pain originates in a patient. Selecting electrodes proximate to this neural site of pain can be difficult to determine, and experimentation is typically undertaken to select the best combination of electrodes to provide a patient's therapy.

**[0050]** As described in U.S. Patent Application Publication Nos. 2019/0366104 and 2019/0046800, both of which are hereby expressly incorporated by reference, selecting electrodes for a given patient can be even more difficult when sub-perception therapy is used, because the patient does not feel the stimulation, and therefore it can be difficult for the patient to feel whether the stimulation is "covering" his pain and therefore whether selected electrodes are effective. Further, sub-perception stimulation therapy may require a "wash in" period before it can become effective. A wash in period can take up to a day or more, and therefore sub-perception stimulation may not be immediately effective, making electrode selection more difficult.

**[0051]** The referenced '539 and '904 Applications disclose techniques for a sweet spot search which can be used with sub-perception therapy. In particular, the '904 Application describes techniques which use supra-perception stimulation during the sweet spot search to select active electrodes for the patient. Use of supra-perception stimulation during the sweet spot search greatly accelerates determination of effective electrodes for the patient compared to the use of sub-perception stimulation, which requires a wash in period at each set of electrodes tested. After determining electrodes for use with the patient using supra-perception therapy, therapy may be titrated to sub-perception levels keeping the same electrodes determined for the patient during the sweet spot search. Because the selected electrodes are known to be recruiting the neural site of the patient's pain, the application of sub-perception therapy to those electrodes is more likely to have immediate effect, reducing

or potentially eliminating the need to wash in the sub-perception therapy that follows. In short, effective sub-perception therapy can be achieved more quickly for the patient when supra-perception sweet spot searching is utilized. According to some embodiments, supra-perception sweet spot searching occurs using symmetric biphasic pulses occurring at low frequencies—such as between 40 and 200 Hz in one example.

**[0052]** This is shown in FIG. **6**A, where the movable bipole **301***a* provides supra-perception stimulation that can be felt by the patient. Providing bipole **301***a* as supra-perception stimulation can merely involve increasing its amplitude (e.g., current A), although other stimulation parameters might be adjusted as well, such as by providing longer pulse widths. FIGS. **6**B-**6**D show other supra-perception bipoles **301***b*-**301***d* that may be used, and in particular show how the virtual bipoles may be formed using virtual poles by activating three or more of the electrodes **16**. Virtual poles are discussed further in U.S. Patent Application Publication 2019/0175915, which is incorporated herein by reference in its entirety, and thus virtual poles are only briefly explained here. Forming virtual poles is assisted if the stimulation circuitry **28** or **44** used in the IPG or ETS is capable of independently setting the current at any of the electrodes-what is sometimes known as a Multiple Independent Current Control (MICC), which is explained further below with reference to FIG. **7**.

**[0053]** When a virtual bipole is used, the GUI **64** (FIG. **5**) of the clinician programmer **50** (FIG. **4**) can be used to define an anode pole (+) and a cathode pole (−) at positions **291** (FIG. **6**B) that may not necessarily correspond to the position of the physical electrodes **16**. The control circuitry **70** in the clinician programmer **50** can compute from these positions **291** and from other tissue modeling information which physical electrodes **16** will need to be selected and with what amplitudes to form the virtual anode and virtual cathode at the designated positions **291**. As described earlier, amplitudes at selected electrodes may be expressed as a percentage X% of the total current amplitude A specified at the GUI **64** of the clinician programmer **50**.

**[0054]** For example, in FIG. **6**B, the virtual anode pole is located at a position **291** between electrodes E**2**, E**3** and E**10**. The clinician programmer **50** may then calculate based on this position that each of these electrodes (during first pulse phase **30***a*) will receive an appropriate share (X ) of the total anodic current +A to locate the virtual anode at this position. Since the virtual anode's position is closest to electrode E**2**, this electrode E**2** may receive the largest share of the specified anodic current +A (e.g., 75%*+A). Electrodes E**3** and E**10** which are proximate to the virtual anode pole's position but farther away receive lesser shares of the anodic current (e.g., 15%*+A and 10%*+A respectively). Likewise, it can be seen that from the designated position **291** of the virtual cathode pole, which is proximate to electrodes E**4**, E**11**, and E**12**, that these electrodes will receive an appropriate share of the specified cathodic current −A (e.g., 20%*−A, 20%*−A, and 60%*−A respectively, again during the first pulse phase **30***a*). These polarities would then be flipped during the second phases **30***b* of the pulses, as shown in the waveforms of FIG. **6**B. In any event, the use of virtual poles in the formation of bipole **301***b* allows the field in the tissue to be shaped, and many different combinations of electrodes can be tried during the sweet spot search. In this regard, it is not strictly necessary that the (virtual) bipole be moved along an orderly path **296** with respect to the electrodes, and the path may be randomized, perhaps as guided by feedback from the patient.

**[0055]** FIG. **6**C shows a useful virtual bipole **301***c* configuration that can be used during the sweet spot search. This virtual bipole **301***c* again defines a target anode and cathode whose positions do not correspond to the position of the physical electrodes. The virtual bipole **301***c* is formed along a lead-essentially spanning the length of four electrodes from E**1** to E**5**. This creates a larger field in the tissue better able to recruit the patient's pain site **298**. This bipole configuration **301***c* may need to be moved to a smaller number of locations than would a smaller bipole configuration compared **301***a* of FIG. **6**A) as it moves along path **296**, thus accelerating pain site **298** detection. FIG. **6**D expands upon the bipole configuration of FIG. **6**C to create a virtual bipole **301***d* using electrodes formed on both leads, e.g., from electrodes E**1** to E**5** and from electrodes E**9** to E**13**. This bipole **301***d* configuration need only be moved along a single path **296** that is parallel to the leads, as its field is large enough to recruit neural tissue proximate to both leads. This can further accelerate pain site detection.

**[0056]** As mentioned above, forming virtual poles is assisted if the stimulation circuitry **28** or **44** used in the IPG or ETS is capable of independently setting the current at any of the electrodes—what is sometimes known as a Multiple Independent Current Control (MICC). Multiple Independent Current Control (MICC) is explained in one example with reference to FIG. **7**A, which shows the stimulation circuitry **28** (FIG. **1**) or **44** (FIG. **3**) in the IPG or ETS used to form prescribed stimulation at a patient's tissue. The stimulation circuitry **28** or **44** can control the current or charge at each electrode independently, and using GUI **64** (FIG. **5**) allows the current or charge to be steered to different electrodes, which is useful for example when moving the bipole **301***i* along path **296** during the sweet spot search (FIG. **6**A-**6**D). The stimulation circuitry **28** or **44** includes one or more current sources $\mathbf{440}_i$ and one or more current sinks $\mathbf{442}_i$. The sources and sinks $\mathbf{440}_i$ and $\mathbf{442}_i$ can comprise Digital-to-Analog converters (DACs), and may be referred to as PDACs $\mathbf{440}_i$ and NDACs $\mathbf{442}_i$ in accordance with the Positive (sourced, anodic) and Negative (sunk, cathodic) currents they respectively issue. In the example shown, a NDAC/PDAC **440**;/**442**; pair is dedicated (hardwired) to a particular electrode node ei **39**. Each electrode node ei **39** is preferably connected to an electrode Ei **16** via a DC-blocking capacitor Ci **38**, which act as a safety measure to prevent DC current injection into the patient, as could occur for example if there is a circuit fault in the stimulation circuitry **28** or **44**. PDACs $\mathbf{440}_i$ and NDACs $\mathbf{442}_i$ can also comprise voltage sources.

**[0057]** Proper control of the PDACs $\mathbf{440}_i$ and NDACs $\mathbf{442}_i$ via GUI **64** allows any of the electrodes **16** and the case electrode Ec **12** to act as anodes or cathodes to create a current through a patient's tissue. Such control preferably comes in the form of digital signals Iip and Iin that set the anodic and cathodic current at each electrode Ei. If for example it is desired to set electrode E**1** as an anode with a current of +3 mA, and to set electrodes E**2** and E**3** as cathodes with a current of −1.5 mA each, control signal Ilp would be set to the digital equivalent of 3 mA to cause PDAC **4401** to produce +3 mA, and control signals I**2***n* and I**3***n* would be set to the digital equivalent of 1.5 mA to cause NDACs **4422** and **4423** to each produce −1.5 mA. Note that

definition of these control signals can also occur using the programmed amplitude A and percentage X% set in the GUI **64**. For example, A may be set to 3 mA, with E**1** designated as an anode with X=100%, and with E**2** and E**3** designated at cathodes with X=50%. Alternatively, the control signals may not be set with a percentage, and instead the GUI **64** can simply prescribe the current that will appear at each electrode at any point in time.

**[0058]** In short, the GUI **64** may be used to independently set the current at each electrode, or to steer the current between different electrodes. This is particularly useful in forming virtual bipoles, which as explained earlier involve activation of more than two electrodes. MICC also allows more sophisticated electric fields to be formed in the patient's tissue.

**[0059]** Other stimulation circuitries **28** can also be used to implement MICC. In an example not shown, a switching matrix can intervene between the one or more PDACs $\mathbf{440}_i$ and the electrode nodes ei **39**, and between the one or more NDACs $\mathbf{442}_i$ and the electrode nodes. Switching matrices allows one or more of the PDACs or one or more of the NDACs to be connected to one or more electrode nodes at a given time. Various examples of stimulation circuitries can be found in U.S. Pat. Nos. 6,181,969, 8,606,362, 8,620,436, U.S. Patent Application Publication Nos. 2018/0071513, 2018/0071520, and 2019/0083796.

**[0060]** Much of the stimulation circuitry **28** or **44**, including the PDACs $\mathbf{440}_i$ and NDACs $\mathbf{442}_i$, the switch matrices (if present), and the electrode nodes ei **39** can be integrated on one or more Application Specific Integrated Circuits (ASICs), as described in U.S. Patent Application Publications 2012/0095529, 2012/0092031, and 2012/0095519. As explained in these references, ASIC(s) may also contain other circuitry useful in the IPG **10**, such as telemetry circuitry (for interfacing off chip with the IPG's or ETS's telemetry antennas), circuitry for generating the compliance voltage VH that powers the stimulation circuitry, various measurement circuits, etc.

**[0061]** FIG. **7**B illustrates the use of the stimulation circuitry **28** or **44** for making biphasic pulses. In the illustration, electrodes E**1** and E**2** and their corresponding PDACs and NDACs are active. The current passed via the electrodes complete a circuit through the tissue (represented by resistance R). Biphasic waveform **602** comprising a first phase **30***a*, followed quickly thereafter by a second phase **30***b* of opposite polarity and having an interphase interval (IPI). As mentioned above, use of a biphasic pulse is useful in charge recovery. The waveform **602** is an example of active charge recovery, meaning that both the first phase **30***a* and second phase **30***b* are actively driven. However, it should be noted that passive charge recovery can also be used. Waveform **604** is an example of passive charge recovery. In the waveform **604**, the first phase **30***a* is actively driven. The second phase **30***c* is passively driven by closing switches **606***a* and **606***b*, which effectively shorts the capacitors C**1** and C**2** to the battery voltage $V_{BAT}$. Thus, embodiments of the disclosure discussed below deal with waveforms (i.e., sequences of pulses) comprising pulses, wherein the pulses have a first phase of a first polarity and a second phase of a second polarity opposite the first polarity. The second phases may be either actively or passively driven.

**[0062]** The '904 Application also discloses that statistically significant correlations exists between pulse width (PW) and frequency (F) where an SCS patient will experience a reduction in pain without paresthesia (sub-perception). For example, FIG. **8** shows the relationship between frequency and pulse width at which effective sub-perception therapy was reported by patients for frequencies of 1 kHz and below. As can be seen, at each frequency tested, the optimal pulse width again fell within a range. For example, at 800 Hz, patients reported good results when the pulse width fell within a range of 105-175 microseconds. The upper end of the pulse width range at each frequency is denoted PW(high), while the lower end of the pulse width range at each frequency is denoted PW(low). PW(middle) denotes the middle (e.g., average) of the PW(high) and PW(low) at each frequency. At each of the tested frequencies the amplitude of the current provided (A) was titrated down to sub-perception levels, such that the patient could not feel paresthesia. Typically, the current was titrated to 80% of the threshold at which paresthesia could be sensed. Because each patient's anatomy is unique, the sub-perception amplitude A could vary from patient to patient. The pulse width data depicted comprises the pulse width of only the first phase of the stimulation pulses. The data may be broken down to define different regions **300***i* at which effective sub-perception therapy is realized below 1 kHz. For example, regions of effective sub-perception therapy may be linearly bounded between various frequencies and the high and low pulse widths that define effectiveness. For example, at 10 Hz, PW (low)=265 microseconds and PW (high)=435 microseconds. At 50 Hz, PW (low)=230 microseconds and PW (high)=370microseconds. Therefore, a region **300***a* that provides good sub-perception therapy is defined by the linearly bounded region of points (10 Hz, 265 μs), (10 Hz, 435 μs), (50 Hz, 370 μs), and (50Hz, 230 μs). Also shown in FIG. **8** are average patient pain scores (NRS scores) reported by patients when optimal pulse widths are used for different frequencies at 1 kHz or below. Prior to receiving SCS therapy, patients initially reported pain scores with an average of 7.92. After SCS implantation, and using the sub-perception stimulation at optimal pulse widths with the ranges shown at each frequency, the patients' average pain scores dropped significantly. At 1 KHz, 200 Hz, and 10 Hz, patients reported average pain scores of 2.38, 2.17, and 3.20 respectively. Thus, clinical significance with respect to pain relief is shown when the optimal pulse widths are used at or below 1 kHz with sub-perception therapy.

**[0063]** Use of this information can be helpful in deciding what pulse width is likely optimal for a given SCS patient based on a particular frequency, and in deciding what frequency is likely optimal for a given SCS patient based on a particular pulse width. Beneficially, this information suggests that paresthesia-free sub-perception SCS stimulation can occur at frequencies of 10 kHz and below, as well as 1 kHz and below. Use of such low frequencies allows sub-perception therapy to be used with much lower power consumption in the patient's IPG or ETS.

**[0064]** The inventors have discovered that stimulation geometry and waveform properties such as the interphase interval (IPI), pulse width, and duty cycle may interact with frequency and stimulation amplitude to produce physiological effects. Thus, aspects of the present disclosure provide methods and systems to control such parameters.

**[0065]** FIGS. **9**A-**9**C illustrate how changes in stimulation geometry and waveform properties such as IPI affect the temporal firing patterns of dorsal column fibers. FIG. **9**A shows computational modeling assuming a dorsal cerebral

spinal fluid thickness (dCSF) of 3.2 mm, 90 Hz bipolar stimulation with a pulse width of 300 μs (300 μs for each phase), with a bipole distance of 8 mm (meaning that the anode and cathode contacts are separated by 8 mm), and an IPI of 50 μs. Temporal firing patterns of dorsal column (DC) fibers at depths A-E were modeled. As shown, firing of fibers at depths A-C are essentially synchronous with the stimulation frequency, that is, they fire each time a stimulus pulse is applied. However, fibers at depth D fire in a pattern that is asynchronous with respect to the stimulation frequency, i.e., they do not fire each time a stimulation pulse is applied. Fibers at depth E are not activated under the stimulation conditions.

**[0066]** FIG. **9**B illustrates the temporal firing patterns of fibers at depths A-E when the IPI is changed to 200 μs. Again, fibers at depths A-C fire essentially synchronous with the stimulation frequency. But notice that the firing pattern of the depth D fibers is changed compared to the pattern of the depth D fibers of FIG. **9**A. Moreover, stimulation the waveform with an IPI of 200 μs (FIG. **9**B) activates the fibers at depth E, whereas the waveform with an IPI of 50 μs does not (FIG. **9**A). FIG. **9**C illustrates the temporal firing patterns of fibers at depths A-E using a 12 mm bipole (as opposed to the 8 mm bipole used in FIGS. **9**A and **9**B). Again, the temporal firing pattern of the fibers at depths D and E are affected.

**[0067]** The data illustrated in FIGS. **9**A-**9**C show that stimulation parameters such as IPI, frequency, pulse width, and amplitude, as well as stimulation geometry parameters such as pole configuration (i.e., bipole, tripole, length of pole configuration, etc.) and electrode configuration, may interact with each other to influence temporal fiber activation. Those differences can also affect therapy and side effects.

**[0068]** Thus, aspects of the disclosure provide methods and systems for delivering user-configured waveforms with different IPIs, stimulation geometry, and other waveform settings (e.g., pulse width, frequency, amplitude) and pain etiology to induce therapeutic asynchronous activation of the neural tissues. Aspects of the disclosure allow a clinician to select and evaluate IPIs based on stimulation settings such as stimulation geometry and other waveform parameters. Stimulation geometry, polarity, IPI and other settings can be selected to induce or maintain temporal firing patterns that are known or calculated to correspond to desirable therapeutic outcomes. Parameter selection can be based on patient feedback and/or expected effects. For example, according to some embodiments described below, stimulation programs using stimulation parameters and stimulation geometries are evaluated using different IPIs to determine optimal/desired temporal neural activation to correlate with desired physiological and/or clinical effects. Other embodiments utilize neural modeling to predict the interaction of different IPIs with stimulation parameters and/or stimulation geometries to predict optimal/desired temporal neural activation, which may be correlated with desired physiological and/or clinical effects. Examples of modeling neural fiber activation are described, for example, in U.S. Patent Application Publication No. 2018/0064943; "Computational Analysis of Kilohertz Frequency Spinal Cord stimulation for Chronic Pain Management," S. Lempka, et al., Anesthesiology, 122, 6, 2015, 1362-76; and Spinal Sensory Projection Neuron Responses to Spinal Cord Stimulation are Mediated by Circuits Beyond Gate Control," T. Zhang, et. al., J. Neurophysiol. 114, 1, 2015, 284-300, and the references cited therein.

**[0069]** FIG. **10** shows embodiments of a graphical user interface (GUI) for selecting stimulation parameters. The illustrated GUI presents a representation of an implanted electrode lead **1002** and may provide an anatomical reference **1004** indicating the anatomical location of the lead. For example, the anatomical reference **1004** in the illustrated embodiment shows that the electrodes of the implanted lead span the region between the T8/T9 intervertebral space to the T10 vertebrae. The GUI also displays an electrode assignment bar **1006**, which indicates the function assigned to each of the electrodes on the displayed lead. In the illustrated GUI, the lead is configured for bipolar stimulation with the top electrode operating as a cathode for 100% of the delivered current and the third electrode operating as an anode for 100% of the delivered current. The sixth electrode is designated R1 (for recording), indicating that the electrode is configured for recording electrical signals, such as electrospinogram (ESG) signals, as explained in more detail below. The GUI includes an indicator **1008** indicating the center point of stimulation (CPS). The GUI includes a stimulation adjustment **1010**, allowing the stimulation geometry (i.e., bipole, tripole size and location) to be adjusted. It should be noted that while a single electrode lead is displayed in the illustrated GUI, the GUI may be configured to display multiple implanted electrodes, paddle leads, case electrodes, and other electrode configurations. Likewise, while bipolar stimulation is illustrated, other pole configurations may be used, such as tripolar and monopolar. Moreover, the IPG case or another internal or external electrode may be used as a return.

**[0070]** The illustrated GUI also includes a sub-display **1012**, which can display an indication of the temporal firing patterns of the neural fibers in response to the stimulation. In the illustrated embodiment, the sub-display **1012** displays an ESG trace recorded at the recording electrode. The sub-display **1012** may display additional or other data. For example, the sub-display may display temporal firing patterns of neural sub-populations (based on modelling or measured data), such as illustrated in FIGS. **9**A-**9**C.

**[0071]** A second window of the GUI includes a parameter selection **1014** where stimulation parameters can be entered/displayed. In the illustrated GUI the parameter selection is set for a manual mode such that stimulation parameters may be manual entered/selected. Other embodiments may operate according to more automated modes whereby one or more of the stimulation parameter are automatically loaded. For example, one automated mode may be a frequency-duration mode (illustrated as "Freq-Duration") which may auto-populate a pulse width that is predicted to be effective for a given selected frequency, for example. Such automated modes may be informed based on the frequency-pulse width relationships described in the above incorporated '904 Application, for example.

**[0072]** During programming and/or during initial operating room implantation of the electrodes, the patient may be tested with several candidate waveforms at a desired frequency, pulse width, IPI, stimulation geometry, and amplitude. The candidate waveforms may be evaluated based on one or more metrics to determine the waveform(s) having the highest efficacy. The waveforms may be selected based on patient feedback, perception threshold and/or ESGs

recorded using the recording electrode (R**1** in the illustration). For example, each waveform with a distinct IPI can be rated based on patient sensation and comfort and the ratings may be displayed to the programmer in a rating display **1016** of the GUI in the form of a "star rating," where the number of stars indicate highest satisfaction. Thus, waveforms may be selected based on metrics such as sensation, pain relief, power consumption, and the like. Other metrics may relate to how well the recorded ESG trace corresponds to a desired ESG trace. The GUI may include one or more metric selections **1018** allowing the programmer to select which metric to use to optimize the waveform shape, including the IPI. The IPI may be selected based on a composite, sum, or average of a plurality of selection metrics. Machine learning (e.g., clustering and/or regression algorithms) can be used to derive waveform shapes based on multiple dimensions of selection metrics. The GUI may also include a manual IPI input **1020**, whereby a user can manually enter an IPI value. Thus, embodiments of the disclosure provide methods and systems for determining optimal stimulation parameters, including determining a best IPI to use for stimulation. Generally, the IPI may be any time value. Example IPIs are typically in the microsecond to millisecond range. For example, the IPI may be configurable from 10 microseconds to 500 microseconds. As another example, the IPI may be 0.5 ms to 2.5 ms.

**[0073]** Correlations can be determined between waveform parameters, such as IPI, and physiological effects. For example, some IPIs may result in suppression of side effects (like unpleasant paresthesia) whereas other IPIs result in beneficial asynchronous temporal firing patterns that correlate to pain relief. For example, referring to FIG. **9**A, the applied waveform can be said to "suppress" the activity of fibers at depth E. Thus, "suppression" may denote suppression of neural responses, as well as suppression of a physiological effect. Correlations between the IPIs may be determined based on patient feedback and ratings. Alternatively (or in addition), such correlations may be determined based on modeling of the patient's neural tissues. Temporal patterns predicted by modeling and/or known to occur during specific waveform settings may be pre-loaded into the external clinician's programmer. If the efficacy of temporal patterns is known (e.g., by implementing a dorsal horn model or from experimental data), then patterns may be selected based on predicted physiological effects. According to some embodiments, the GUI may reflect such correlations by denoting (for example, by color coding) the effect that an IPI would be expected to generate. Referring to FIG. **11**, assume that through patient ratings or through modeling it is determined that IPIs of 10 μs and 50 μs provide suppression of side effects and that IPIs of 200 μs and 500 μs provide asynchronous temporal firing patterns associated with pain relief. The GUI is color coded to reflect such observed or expected results. For example, the user may select such color coding as the patient provides feedback and rating information. Alternatively, the correlations between the IPIs and the expected results may be stored within the system, in look-up tables, for example.

**[0074]** FIG. **12**A illustrates an embodiment wherein the ESG trace is used as a metric to determine an IPI that is expected to provide effective therapy. Notice that the "Use ESG" button is selected in the bank of metric selections **1018**. The sub-display **1012** shows an ESG trace **1102** in solid line. Assume ESG trace **1102** corresponds to a stimulation parameter set that is determined or predicted to have a beneficial outcome for the patient. For example, during calibration at high stimulation amplitudes (i.e., supra-perception amplitudes), ESG trace **1102** may correspond to signals recorded at the R1 electrode when stimulation parameters are used that result in adequate paresthesia coverage of the patient's pain areas. Now the clinician is attempting to find sub-perception stimulation parameters (i.e., lower amplitude stimulation) that results in a similar ESG trace. As reflected in the GUI, stimulation using an IPI of 200 μs results in a (normalized) ESG trace **1104** (dotted line) that substantially overlaps with the target ESG **1102**. Contrast the GUI windows illustrated in FIG. **11**A with those shown in FIG. **11**B, wherein an IPI of **100** μs is used. As shown in FIG. **11**B, an IPI of **100** μs results in an ESG trace **1106** that poorly overlaps with the target ESG trace **1102**. As mentioned here, the target ESG traces may be determined using a calibration/fitting procedure or they may be based on patient feedback/rating. Alternatively, target ESG traces may be preloaded based on modeling predictions and/or a template generated (e.g., averaged) from previously recorded data.

**[0075]** FIGS. **13**A and **13**B illustrate embodiments wherein predicted or machine learning-generated temporal firing patterns corresponding to specific waveform settings are used to select stimulation waveforms. In FIG. **13**A notice that "Machine Learning" is selected in the bank of metric selections **1018**. When 200 μs is selected as the IPI, the sub-display **1012** displays a predicted temporal firing pattern corresponding to the IPI. An efficacy score associated with the temporal firing pattern may be displayed. The efficacy associated with the temporal firing pattern may be based on modeling, for example, or may be based on experimental data. In the embodiment illustrated in FIG. **13**A, the temporal firing pattern is known to be associated with high efficacy, and thus, an efficacy shore or "High" is displayed. By contrast, in FIG. **13**B, the temporal firing pattern corresponding to an IPI of 10 μs is known to be associated with low efficacy. Thus, an efficacy score of "Low" is displayed.

**[0076]** As mentioned above, stimulation geometries other than bipoles are available. The stimulation geometry may be used to vary the temporal firing patterns evoked by the stimulation. The stimulation geometry may be chosen based on what works best for the paresthesia search and specific amplitudes, pulse widths, IPIs, and anticipated temporal firing patterns may be paired with each stimulation geometry. FIG. **14** illustrates an embodiment wherein the GUI is used to configure a stimulation geometry that is a tripole. In the illustrated embodiment, the third electrode operates as an anode for 100% of the current and the first and fifth electrodes each operate as cathodes for 50% of the current. According to some embodiments, it may be known that certain IPI's do not work well for certain stimulation parameters, such as with certain stimulation geometries. Thus, embodiments of the GUI may remove the choice to select certain IPIs. Notice in FIG. **14** that the button to select an IPI of 500 μs is grayed out, indicating that 500 μs is an IPI known to give rise to problems, such as side effects, when used with the other selected stimulation parameters. The decision to "withhold" or "lock-out" some possible IPIs may be based on modeling of the temporal firing patterns that would be evoked using the IPIs in conjunction with the other stimulation parameters. The decision may alternatively (or additionally) based on patient feedback and/or on pre-loaded

data from other patients, the cloud, etc. Relationships between IPIs and other stimulation parameters (such as IPI/parameter combinations that are not suitable) may be stored in look-up tables, for example. Moreover, some combinations of stimulation parameters might preclude certain IPIs simply because they are not possible. For example, for a given pulse width and frequency, it might simply be impossible to use certain IPIs because there is not enough time during the period of the waveform to use some IPIs. The system may include internal logic that withholds such physically impossible waveforms. Moreover, some waveform configurations, such as those involving a short pulse width or a monophasic pulse, may not be compatible with IPI variation. Thus, the IPI configuration may be locked out for those parameter sets. However, according to some embodiments, the user may still select a manual IPI feature to configure IPIs.

**[0077]** It should be noted here that aspects of the disclosure concern stimulation programs (which prescribe waveforms) that define a plurality of sequential pulses, wherein each pulse comprises a first phase having a first polarity and a second phase having a second polarity opposite of the first polarity. An example of a waveform **1502** having a first phase having a first polarity and a second phase having a second polarity opposite of the first polarity is illustrated in FIG. **15**A. In FIG. **15**A, the first phase **30***a* and the second phase **30***b* are separated by an IPI. However, it should be noted that more complicated waveforms are possible and within the scope of this disclosure. For example, waveforms may have multiple sequential phases of the same polarity preceding an interphase interval (IPI) and/or multiple sequential phases following the IPI. FIG. **15**B illustrates a waveform **1504** having a pre-pulse **1506** of low amplitude preceding the "first phase" **30***a*. In the waveform **1504**, phase **30***a* is still considered the first phase having a first polarity and phase **30***b* is considered a second phase having a second polarity, as those terms are used herein. In other words, as used herein, the term "first phase having a first polarity" refers to a phase having the highest absolute amplitude preceding an IPI and the term "second phase having a second polarity" refers to a phase having the highest absolute amplitude following an IPI wherein the polarity is opposite that of the first phase.

**[0078]** Various aspects of the disclosed techniques, including processes implementable in the IPG or ETS, or in external devices such as the clinician programmer or external controller to render and operate the GUI, can be formulated and stored as instructions in a computer-readable media associated with such devices, such as in a magnetic, optical, or solid-state memory. The computer-readable media with such stored instructions may also comprise a device readable by the clinician programmer or external controller, such as in a memory stick or a removable disk, and may reside elsewhere. For example, the computer-readable media may be associated with a server or any other computer device, thus allowing instructions to be downloaded to the clinician programmer system or external controller or to the IPG or ETS, via the Internet for example.

**[0079]** Note that some of the applications to which this present disclosure claims priority, which are incorporated by reference above, are directed to concepts (e.g., selecting optimal stimulation parameters, and in particular stimulation parameters that cause sub-perception at lower frequencies) that are relevant to what is disclosed. Techniques in the present disclosure can also be used in the context of these priority applications. For example, aspects of the stimulation parameters can be chosen in accordance to the methods described in the incorporated references.

**[0080]** Although particular embodiments of the present invention have been shown and described, it should be understood that the above discussion is not intended to limit the present invention to these embodiments. It will be obvious to those skilled in the art that various changes and modifications may be made without departing from the spirit and scope of the present invention. Thus, the present invention is intended to cover alternatives, modifications, and equivalents that may fall within the spirit and scope of the present invention as defined by the claims.

What is claimed is:

**1**. A method for programming an implantable medical device (IMD) having a plurality of electrodes implantable in a patient's spinal column, the method comprising:

causing the IMD to apply a plurality of candidate waveforms to the patient's spinal cord, wherein each waveform comprises a plurality of sequential pulses, wherein each pulse comprises a first phase having a first polarity and a second phase having a second polarity opposite of the first polarity, wherein the first and second phases are separated by an inter-phase interval, IPI, wherein each of the candidate waveforms has a different IPI;

selecting one of the candidate waveforms for treating the patient based on a determination of effectiveness of each of the candidate waveforms; and

programming the IMD with the selected candidate waveform.

**2**. The method of claim **1**, wherein the determination of effectiveness is based on one or more of patient feedback and an electrospinogram (ESG).

**3**. The method of claim **2**, wherein the patient feedback comprises rankings of each of the candidate waveforms.

**4**. The method of claim **2**, wherein the ESG trace is measured using one or more electrodes of the plurality of electrodes.

**5**. The method of claim **2**, wherein the determination of effectiveness comprises comparing ESG traces obtained using each of the candidate waveforms.

**6**. The method of **2**, wherein the determination of effectiveness comprises comparing ESG traces obtained using each of the candidate waveforms to a target ESG trace.

**7**. The method of **6**, wherein the target ESG trace corresponds to stimulation settings that provide effective paresthesia coverage of the patient's pain.

**8**. The method of **6**, wherein the target ESG trace corresponds to settings that provide effective pain relief without paresthesia.

**9**. The method of claim **6**, wherein the target ESG trace is derived based on neural modeling predictions and/or one or more templates generated from previously recorded data.

**10**. The method of claim **1**, further comprising obtaining a target ESG using supra-perception stimulation and wherein the determination of the effectiveness of the candidate waveforms comprises using sub-perception stimulation.

**11**. The method of claim **1**, wherein the further comprising determining the plurality of candidate waveforms.

**12**. The method of claim **11**, wherein determining the plurality of candidate waveforms comprises predicting,

based on neural modeling, temporal firing patterns of neural elements evoked by the candidate waveforms.

**13**. The method of claim **1**, wherein applying the candidate waveforms comprises using a graphical user interface, GUI to select the candidate waveforms.

**14**. The method of claim **13**, wherein the GUI is configured to provide a ranking of the effectiveness of the candidate waveforms.

**15**. The method claim **13**, wherein the GUI is configured to provide an indication of an expected physiological and/or clinical effect associated with the stimulation program using the candidate waveforms.

**16**. The method of claim **1**, wherein the second phase is actively driven.

**17**. The method of claim **1**, wherein the second phase is passively driven.

**18**. A neuromodulation system comprising:

an external device for programming an implantable medical device, IMD, wherein the IMD comprises a plurality of electrodes implantable in a patient's spinal column,

and wherein the external device comprises a non-transitory computer readable medium comprising instructions, which when executed by the external device configure the external device to:

cause the IMD to apply a plurality of candidate waveforms to the patient's spinal cord, wherein each waveform comprises a plurality of sequential pulses, wherein each pulse comprises a first phase having a first polarity and a second phase having a second polarity opposite of the first polarity, wherein the first and second phases are separated by an inter-phase interval, IPI, wherein each of the candidate waveforms has a different IPI;

select one of the candidate waveforms for treating the patient based on a determination of effectiveness of each of the candidate waveforms; and

program the IMD with the selected candidate waveform.

**19**. The system of claim **1**, wherein the determination of effectiveness is based on one or more of patient feedback and an electrospinogram (ESG).

**20**. The system of claim **19**, wherein the instructions further configure the external device to determine the plurality of candidate waveforms by predicting, based on neural modeling, temporal firing patterns of neural elements evoked by the candidate waveforms.

* * * * *