US 20250257734A1

(19) United States
(12) Patent Application Publication
XIE et al.
(10) Pub. No.: US 2025/0257734 A1
(43) Pub. Date: Aug. 14, 2025

(54) NECK FAN

(71) Applicants: **Xiangfu LI**, SHENZHEN (CN); **Guanzheng ZHENG**, SHENZHEN (CN); **Jiahang XIE**, SHENZHEN (CN); **SHENZHEN JISU TECHNOLOGY CO., LTD**, SHENZHEN (CN)

(72) Inventors: **Jiahang XIE**, SHENZHEN (CN); **Guanzheng ZHENG**, SHENZHEN (CN); **Xiangfu LI**, Shenzhen (CN)

(21) Appl. No.: **19/195,761**

(22) Filed: **May 1, 2025**

Related U.S. Application Data

(63) Continuation-in-part of application No. 18/244,334, filed on Sep. 11, 2023, which is a continuation of application No. 17/739,081, filed on May 7, 2022, now Pat. No. 11,754,080, which is a continuation-in-part of application No. 17/471,178, filed on Sep. 10, 2021, now Pat. No. 11,661,947, which is a continuation of application No. PCT/CN2020/128564, filed on Nov. 13, 2020.

(30) **Foreign Application Priority Data**

Oct. 25, 2019 (CN) 201921815938.3
Sep. 30, 2020 (CN) 202022210032.8

Publication Classification

(51) **Int. Cl.**

F04D 25/16	(2006.01)
A61F 7/00	(2006.01)
F04D 25/06	(2006.01)
F04D 29/00	(2006.01)
F04D 29/42	(2006.01)

(52) **U.S. Cl.**

CPC ***F04D 25/166*** (2013.01); ***F04D 29/4213*** (2013.01); ***F04D 29/424*** (2013.01); ***F04D 29/4246*** (2013.01); *A61F 2007/0011* (2013.01); *A61F 2007/0067* (2013.01); *F04D 25/0673* (2013.01); *F04D 29/005* (2013.01)

(57) **ABSTRACT**

A neck fan includes: a shell, defining an air inlet, a receiving space, an air duct, and an air outlet, that are communicated with each other; and fan assemblies, received in the receiving space. The fan assemblies are configured to intake air from an outside of the neck fan through the air inlet and to drive the air to flow along the receiving space and the air duct to reach the air outlet; each fan assembly includes a fan and a motor configured to drive the fan to rotate. The air inlet has an air inlet plane perpendicular to an air inlet direction in which the air at an outside of the neck fan is intaken into the neck fan; an angle is formed the air inlet plane and a direction in which the neck fan is worn to the neck and is between 0 degrees and 90 degrees.

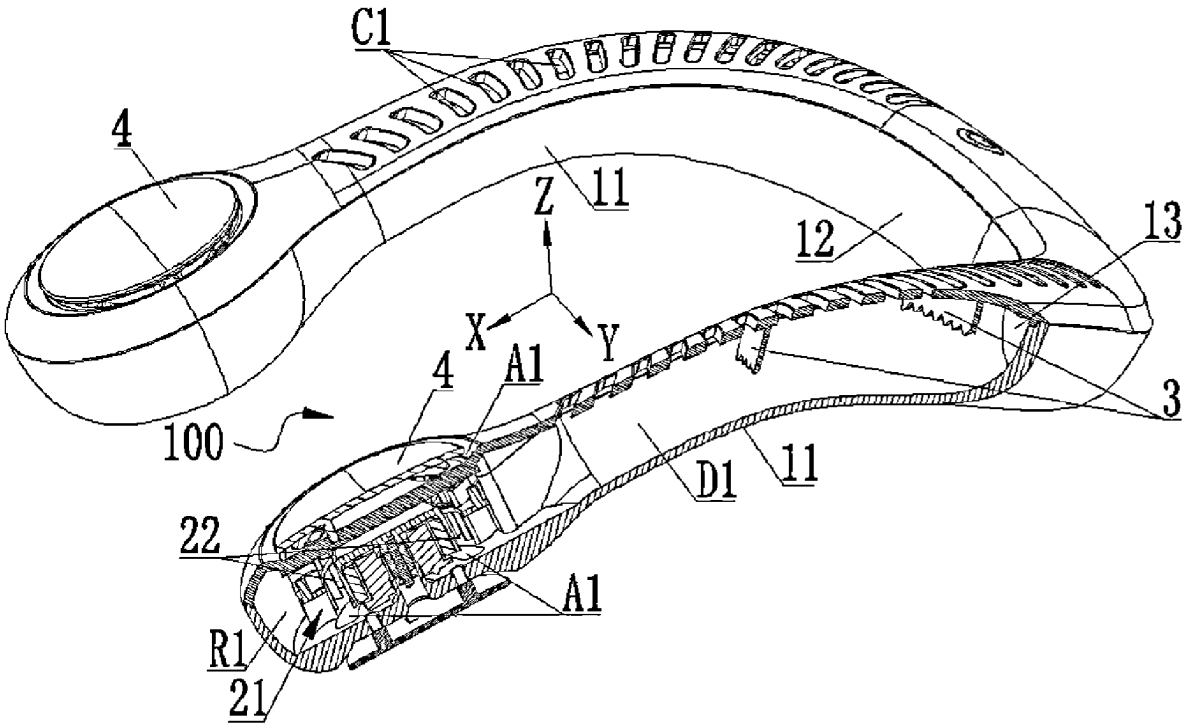

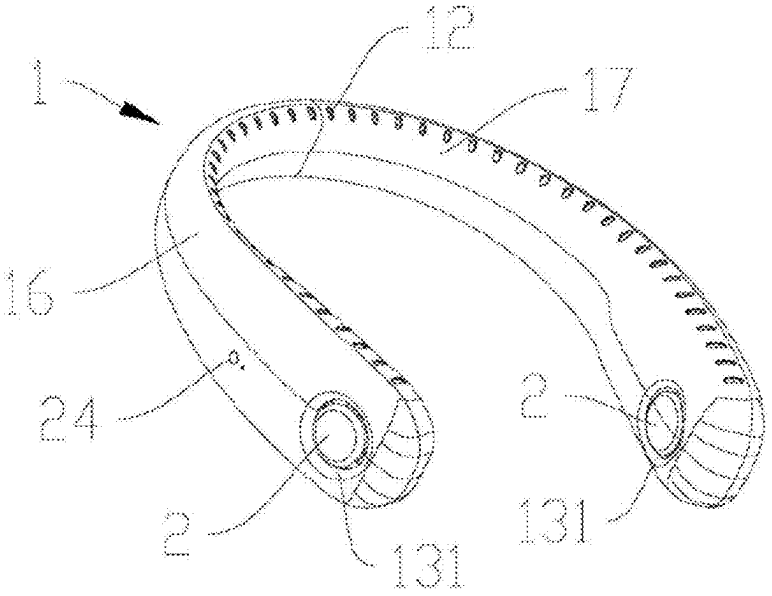
12
1
17
16
24
2
2
131
131

FIG. 1

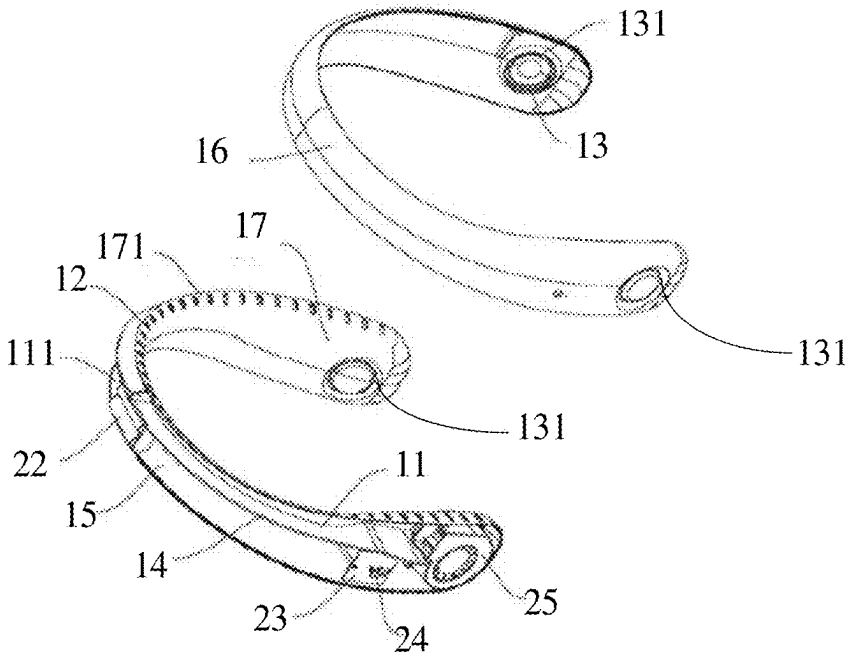
131
16
13
17
171
12
111
131
131
22
11
15
14
25
23
24

FIG. 2

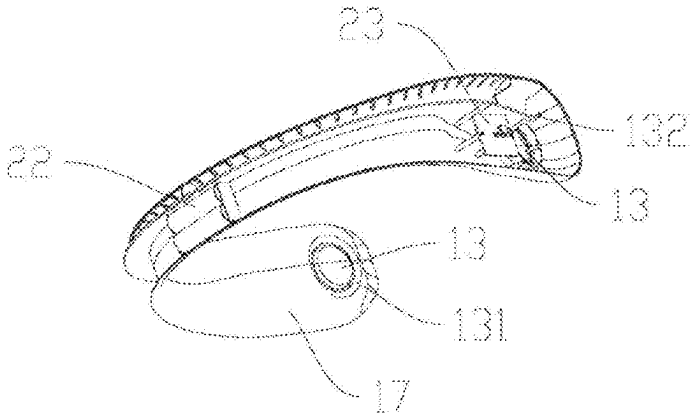
23
132
22
13
13
131
17

FIG. 3

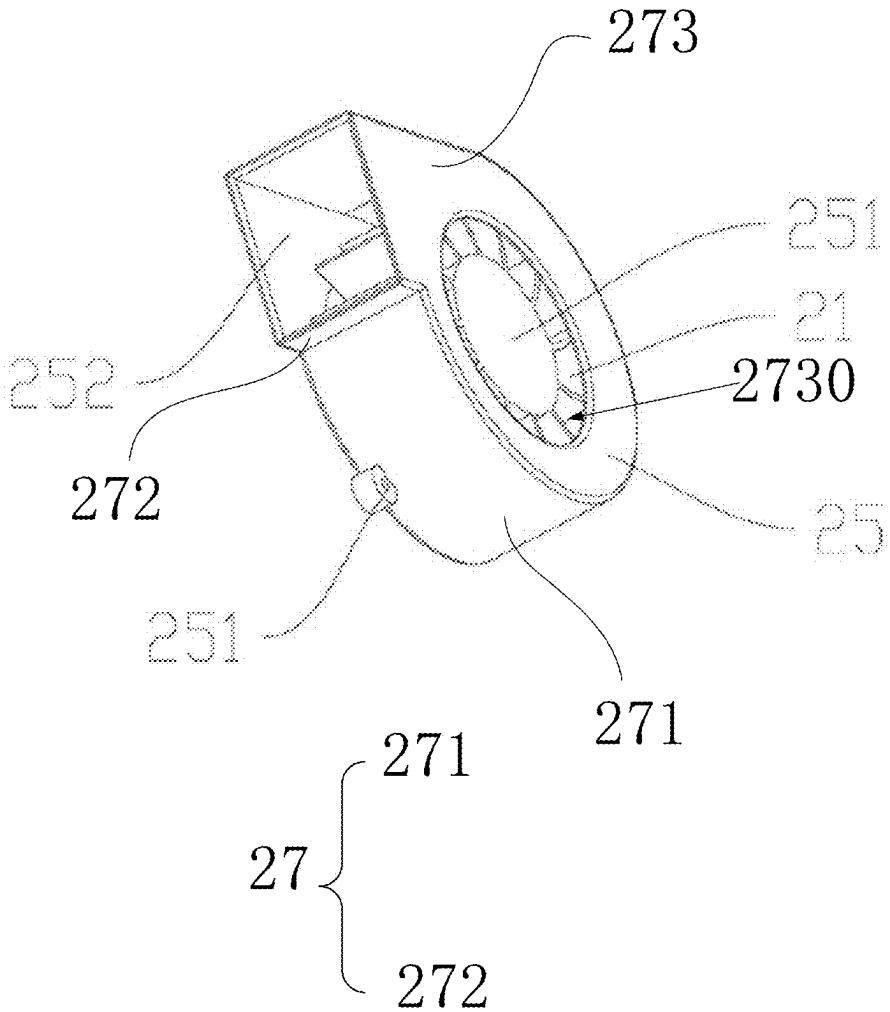
273
251
21
252
2730
272
25
251
271
271
27
272

FIG. 4

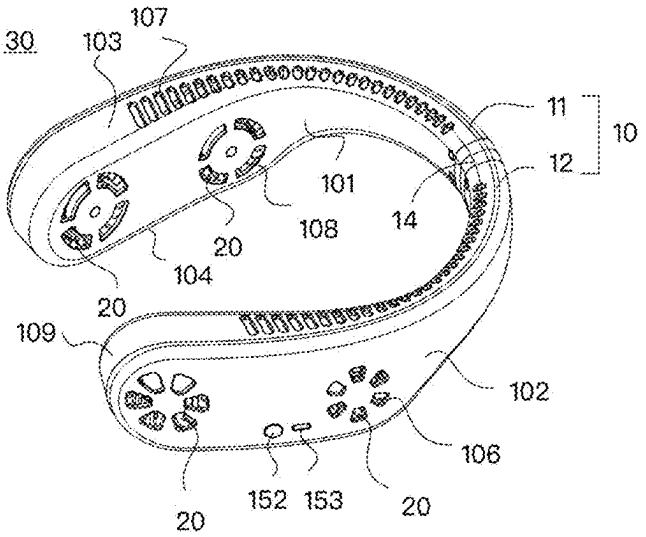
30
103
107
11
10
12
101
14
108
20
104
20
109
102
106
20
152
153
20

FIG. 5

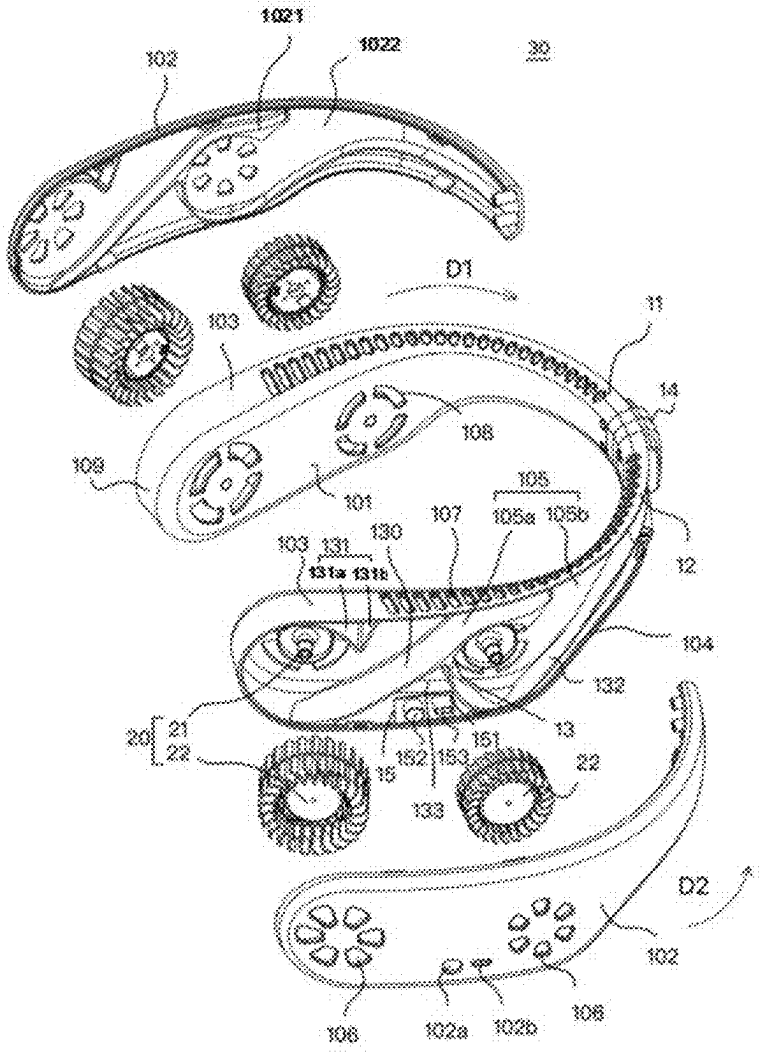
1021
1022
30
102
D1
103
11
14
108
109
101
105
105a
105b
107
130
103
131
131a
131b
12
104
132
13
20
21
22
15
152
153
151
22
133
D2
102
108
102a
102b
108

FIG. 6

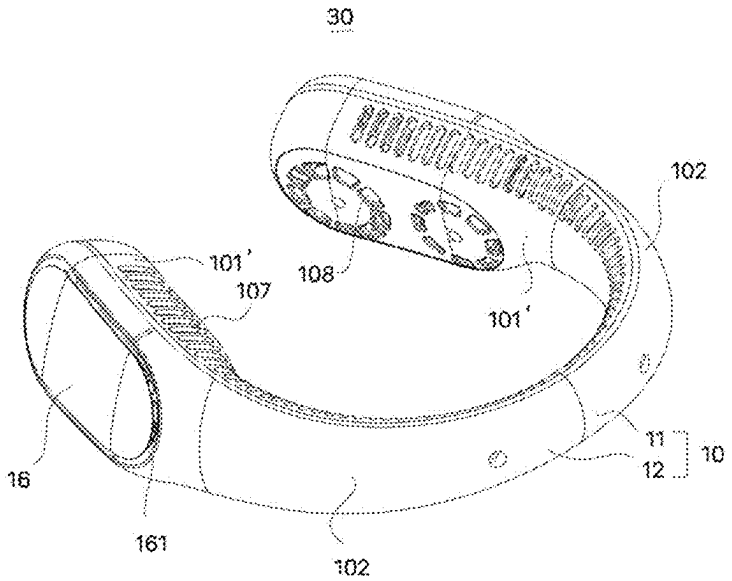
30
102
101'
107
108
101'
11
12
10
16
161
102

FIG. 7

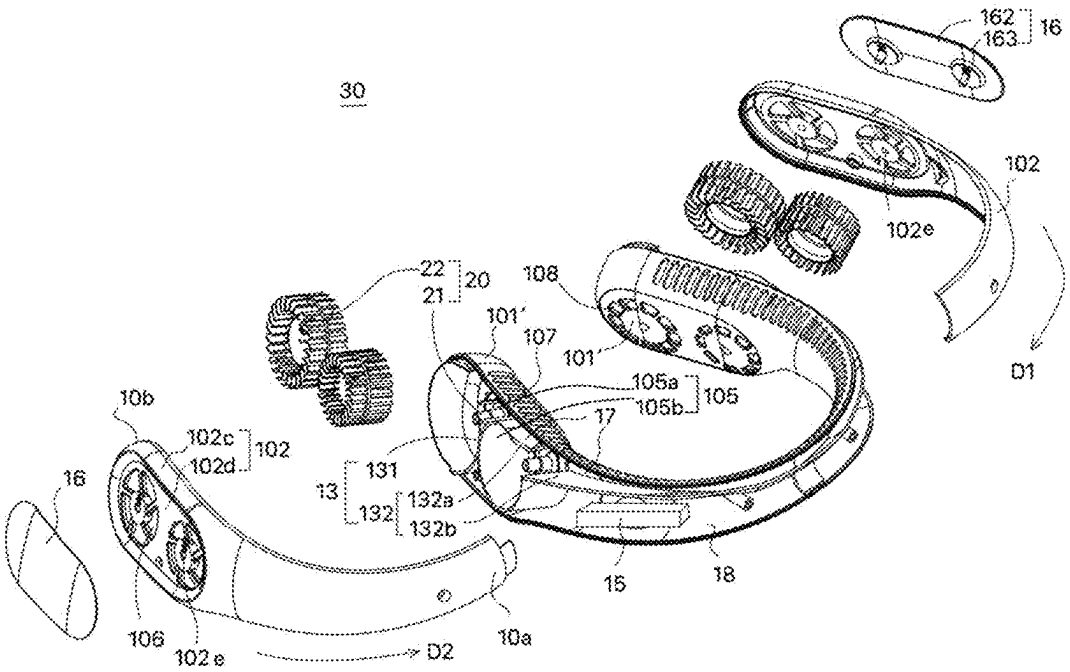
162
163
16
30
102
102e
22
21
20
108
101'
107
101'
105a
105b
105
D1
10b
102c
102d
102
17
16
131
13
132
132a
132b
15
18
106
102 e
D2
10a

FIG. 8

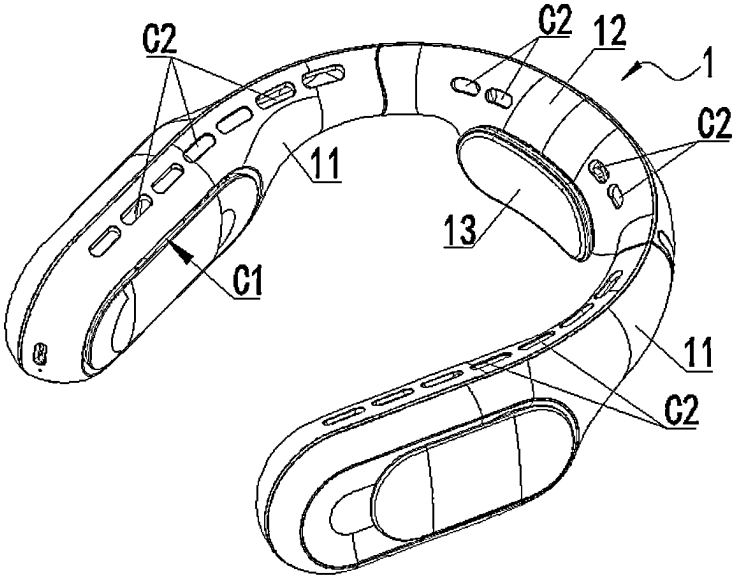

FIG. 9

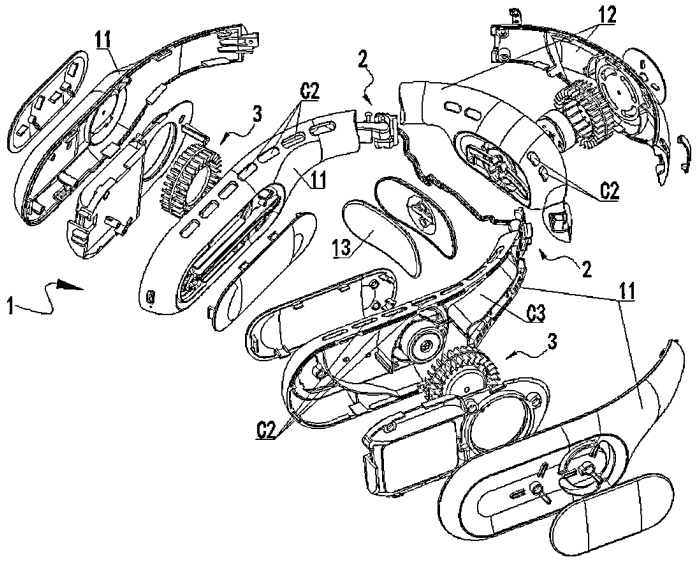

FIG. 10

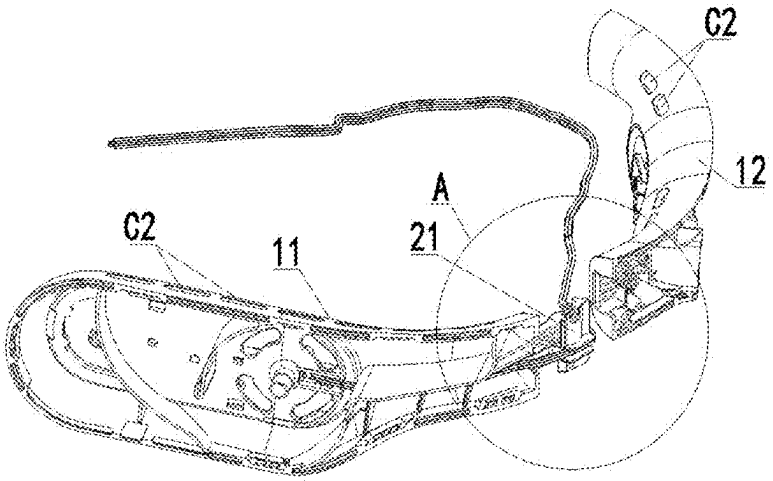

FIG. 11

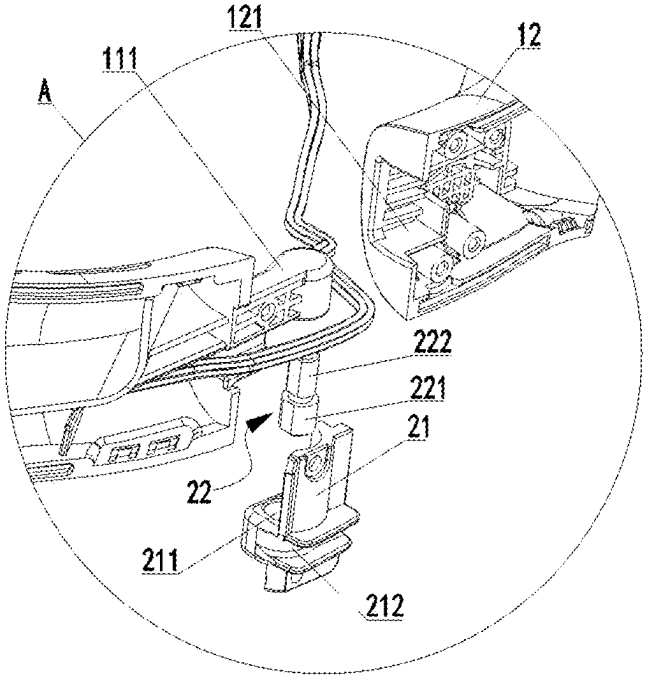

FIG. 12

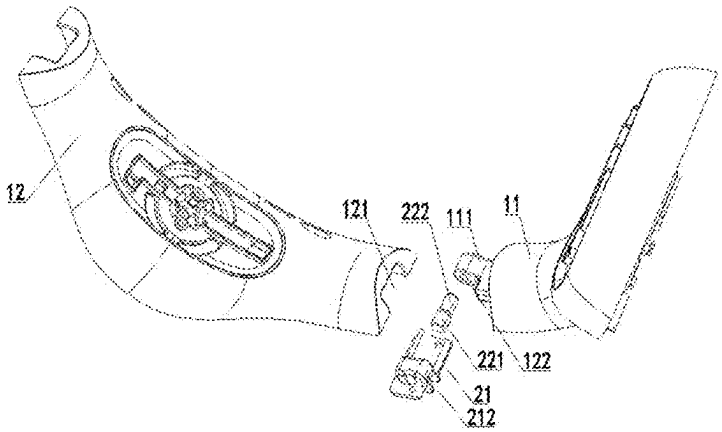

FIG. 13

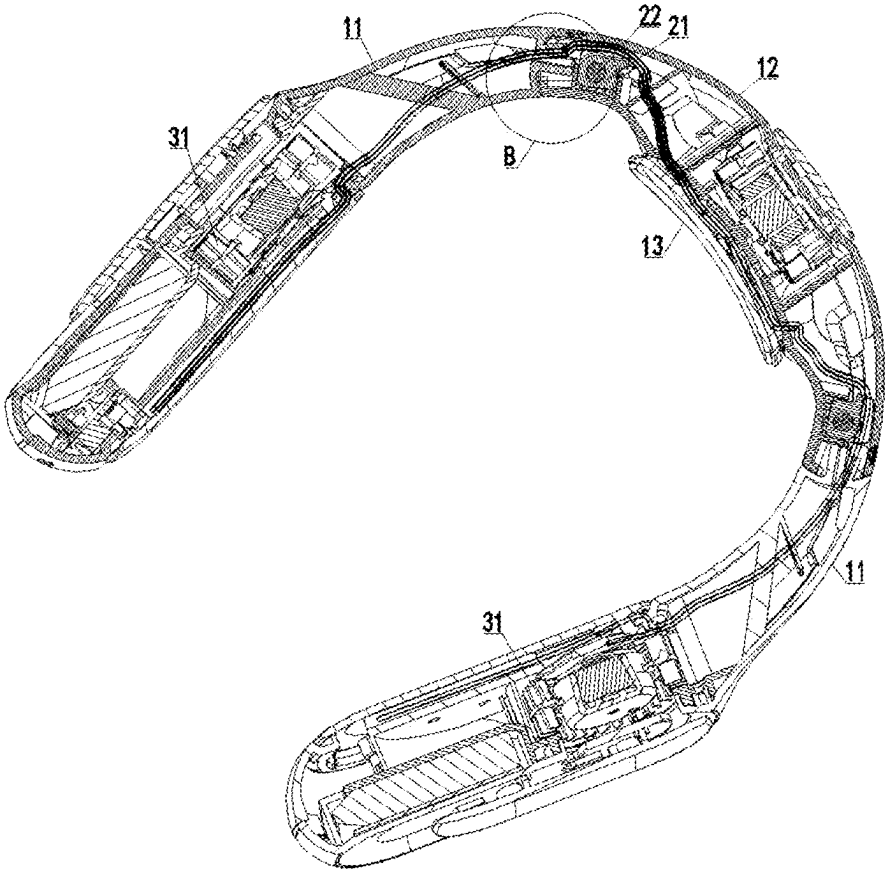

FIG. 14

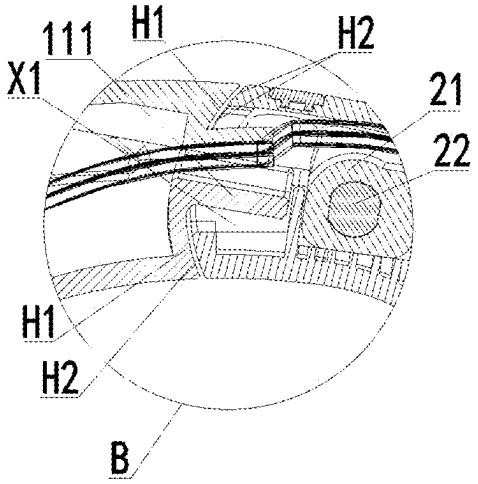

FIG. 15

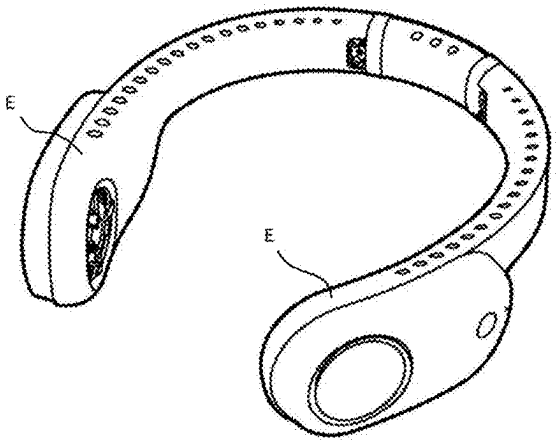

FIG. 16

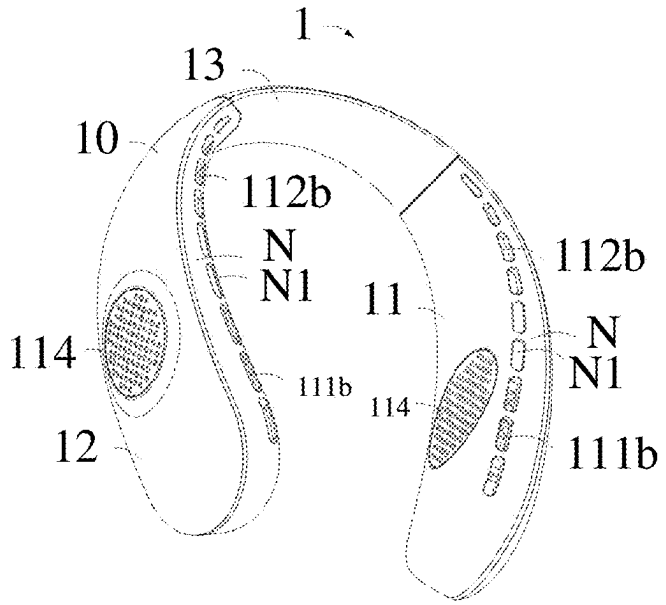
1
13
10
112b
N
N1
11
112b
N
N1
114
111b
114
12
111b

FIG. 17

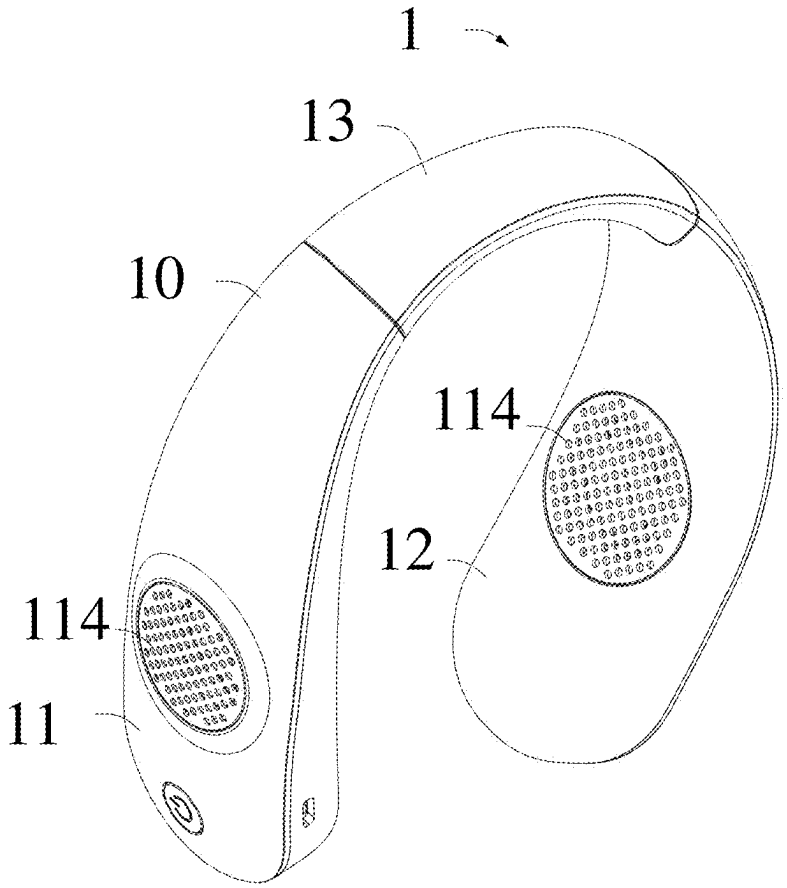
1
13
10
114
12
114
11

FIG. 18

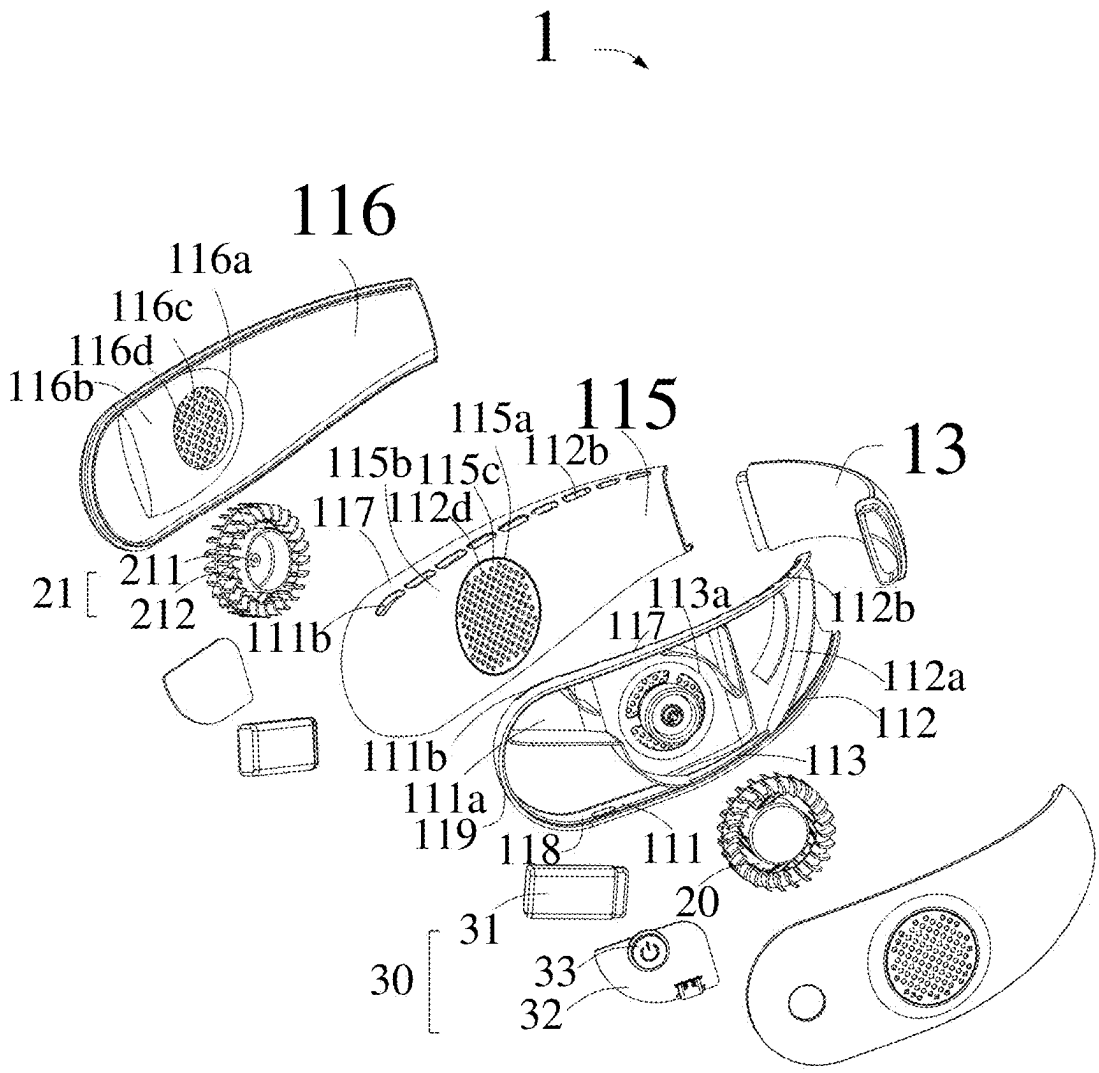
1
116
116a
116c
116d
116b
115
115a
112b
13
115b
115c
117
112d
211
21
212
111b
113a
117
112b
112a
112
111b
113
111a
119
118
111
20
31
30
33
32

FIG. 19

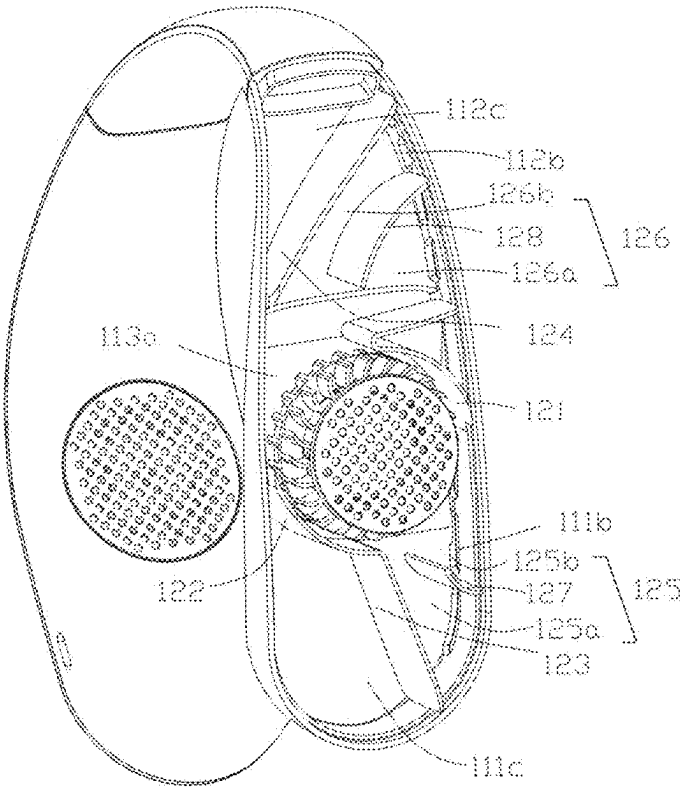
112c
112b
126b
128
126
126a
124
113a
121
111b
125b
127
125
125a
123
122
111c

FIG. 20

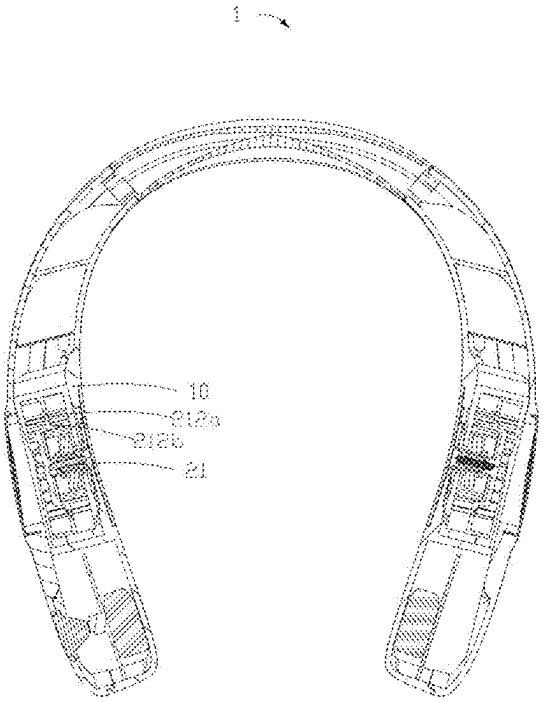
1
10
212a
212b
21

FIG. 21

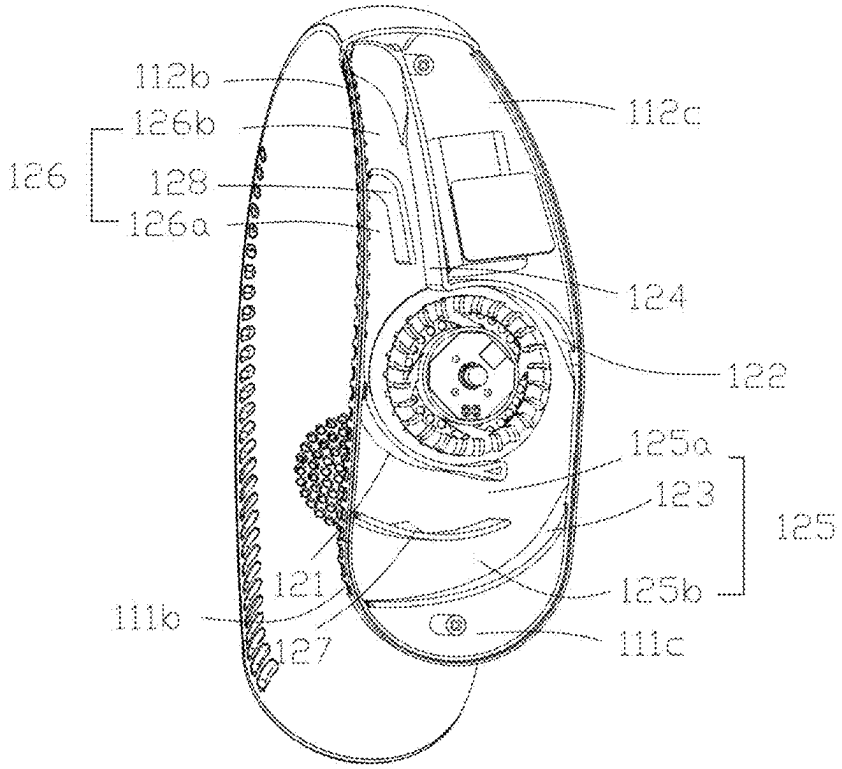
112b
126b
126
128
126a
112c
124
122
125a
123
125
121
125b
111b
127
111c

FIG. 22

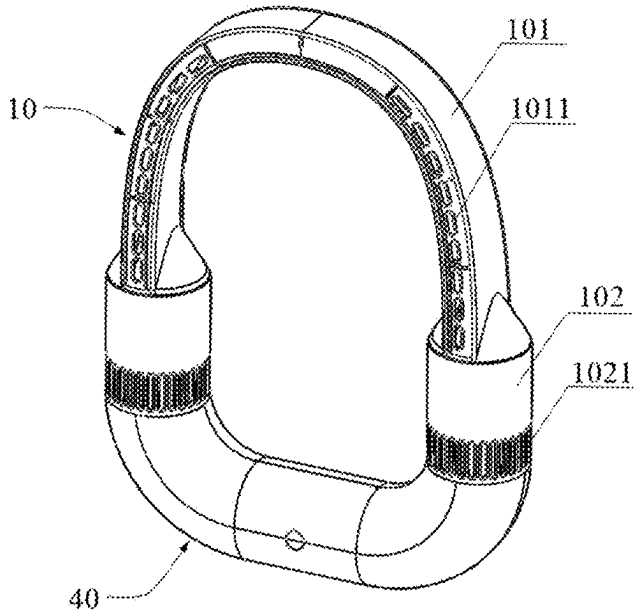
101
10
1011
102
1021
40

FIG. 23

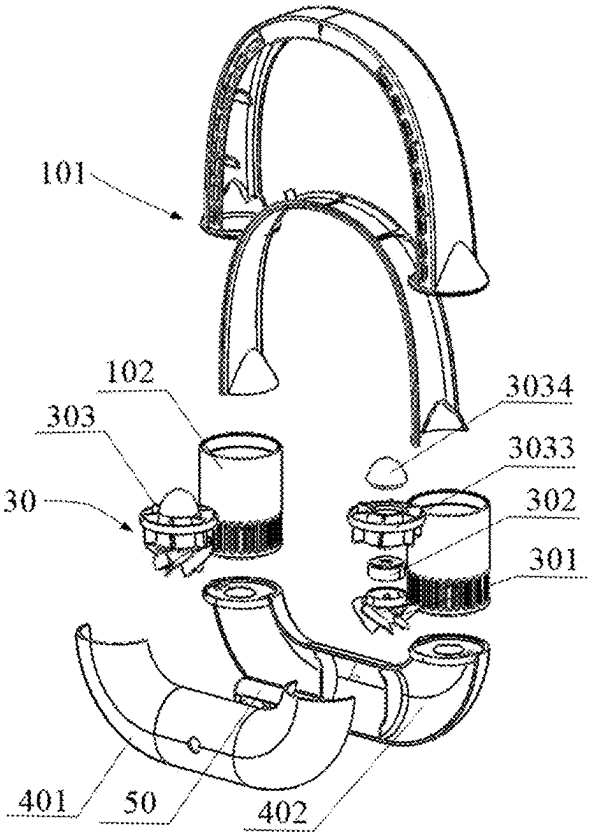
101
102
303
30
3034
3033
302
301
401
50
402

FIG. 24

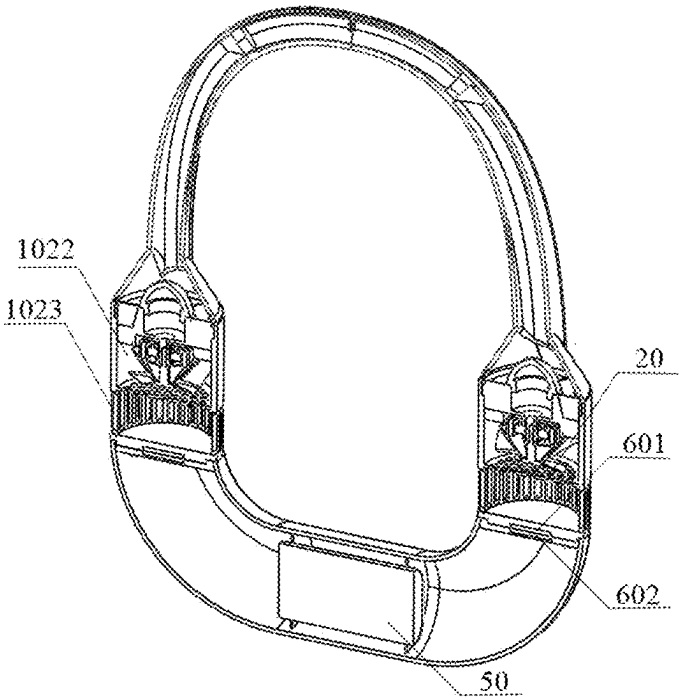
1022
1023
20
601
602
50

FIG. 25

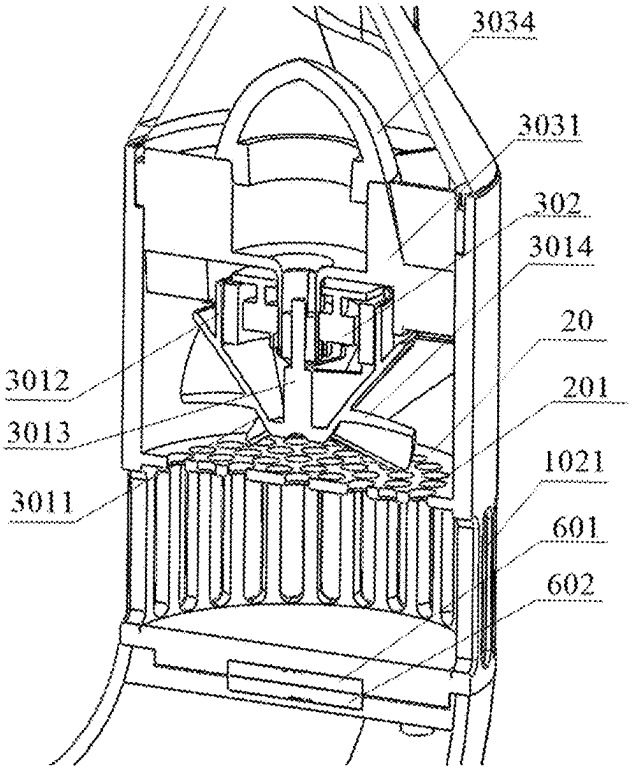
3034
3031
302
3014
20
201
1021
601
602
3012
3013
3011

FIG. 26

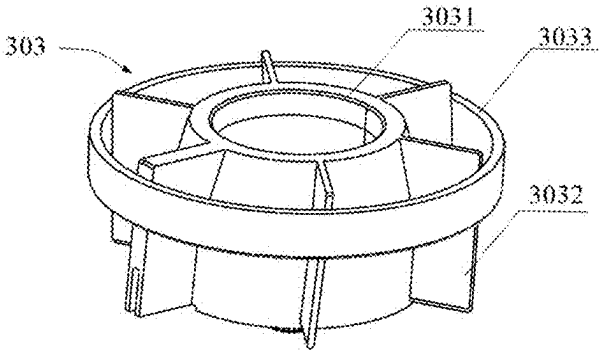
303
3031
3033
3032

FIG. 27

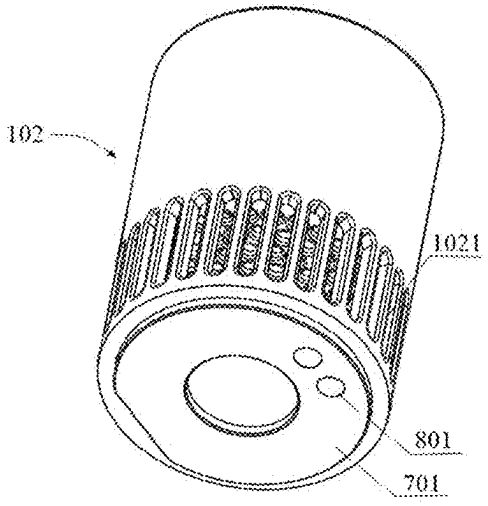

FIG. 28

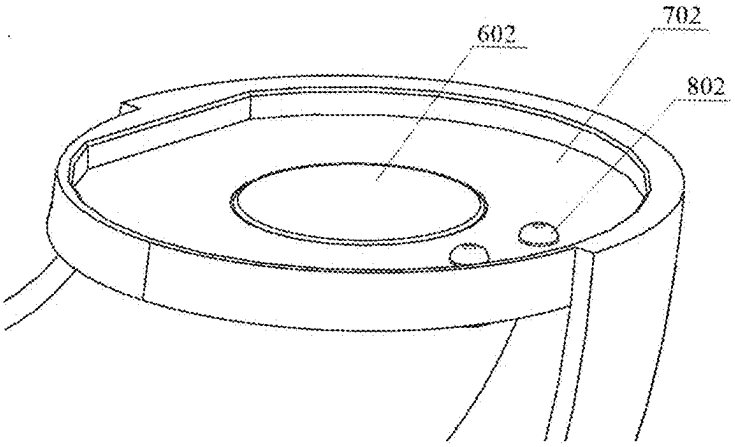

FIG. 29

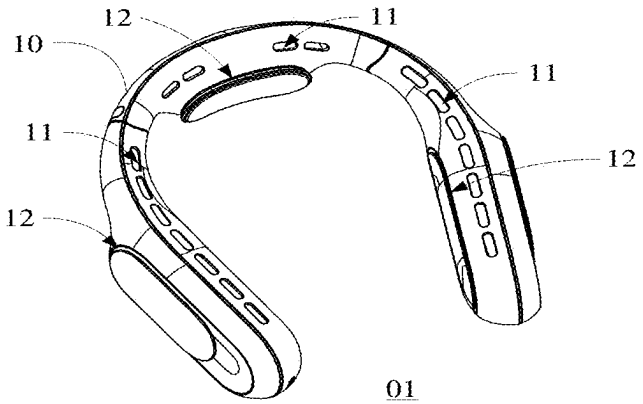

FIG. 30

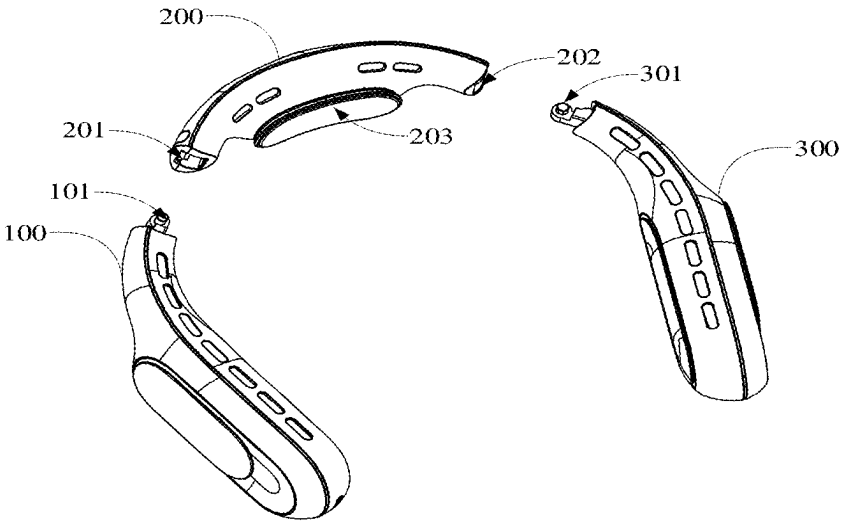

FIG. 31

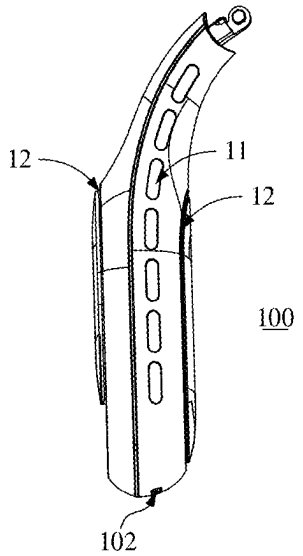

FIG. 32

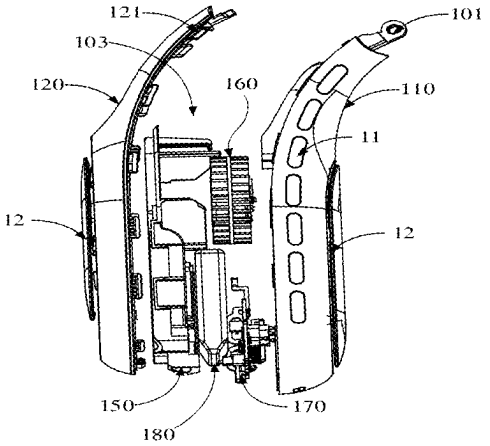

FIG. 33

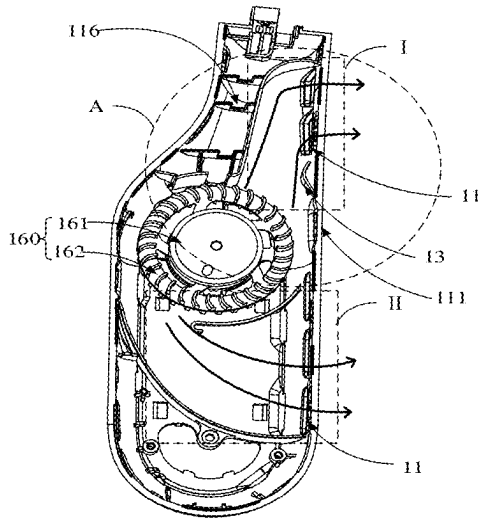
116
I
A
11
160
161
162
13
111
II
11

FIG. 34

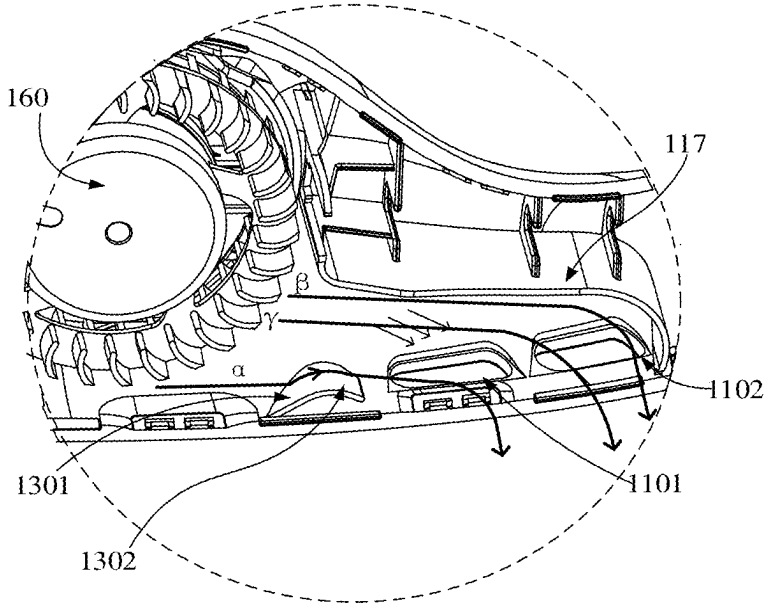
160
117
β
γ
α
1102
1301
1101
1302

FIG. 35

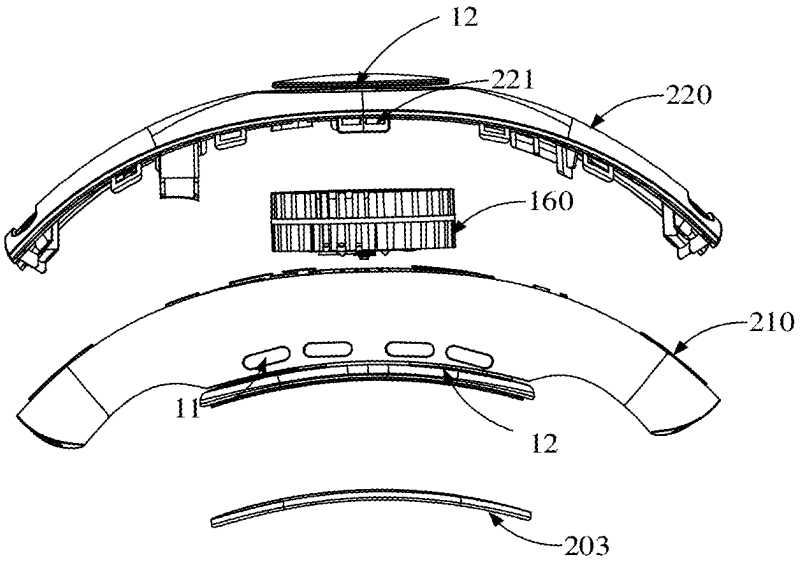

FIG. 36

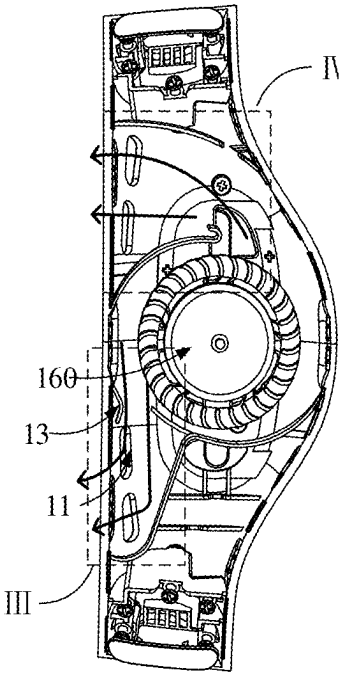

FIG. 37

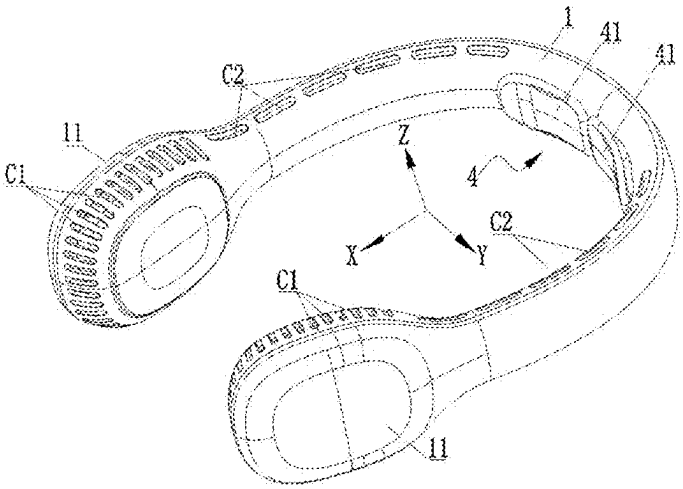

FIG. 38

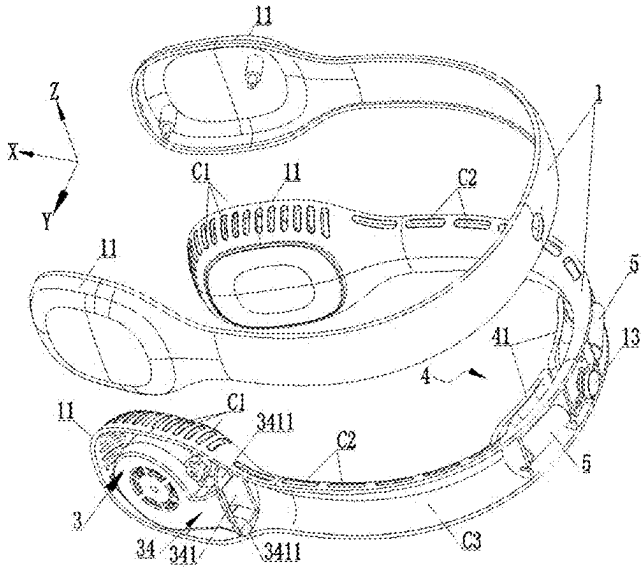

FIG. 39

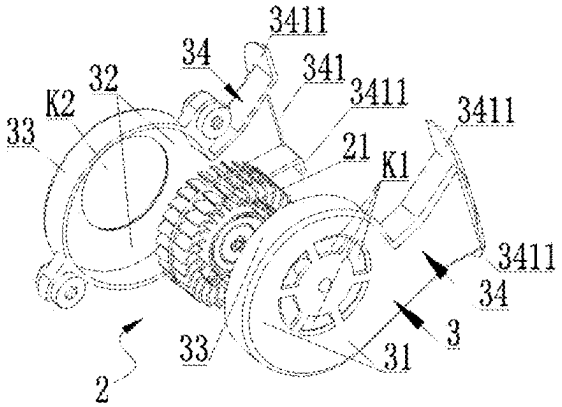

FIG. 40

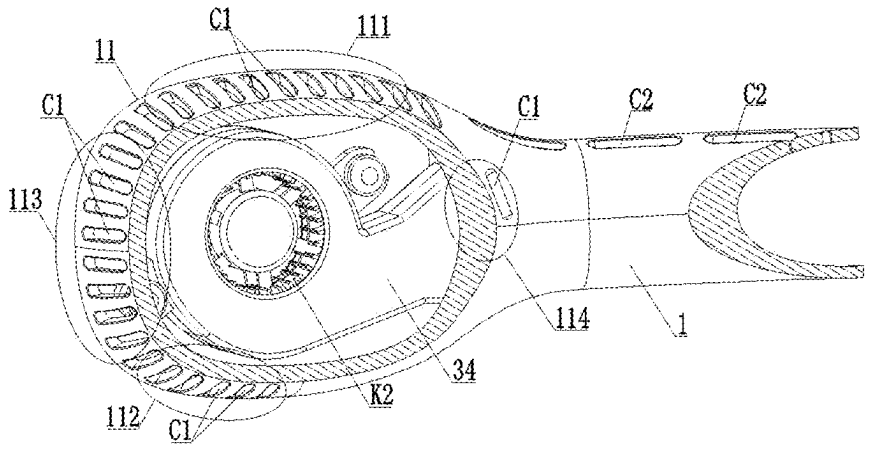

FIG. 41

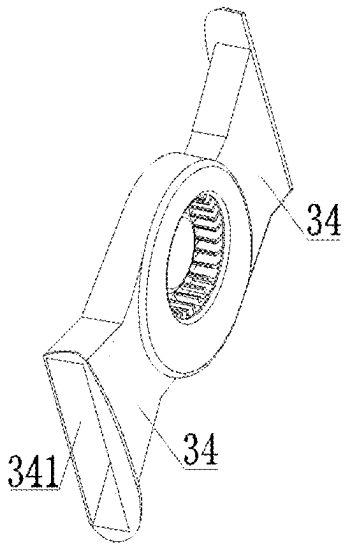

FIG. 42

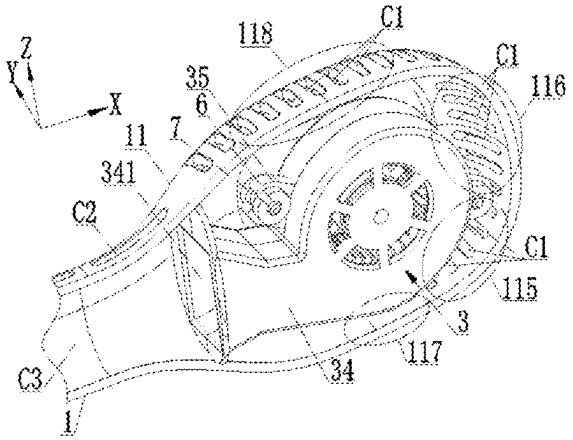

FIG. 43

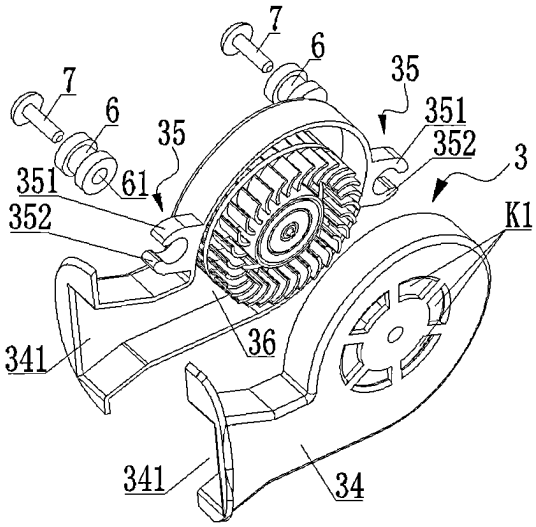
7
6
7
6
35
35
351
352
3
351
61
352
K1
36
341
341
34

FIG. 44

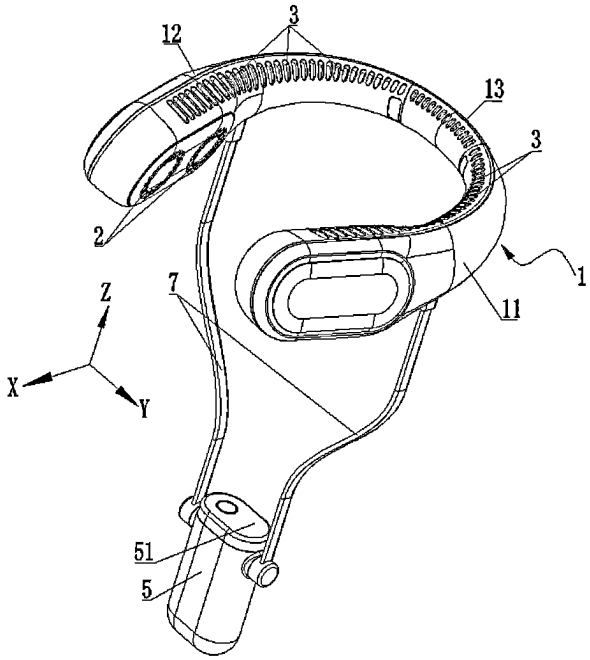
3
12
13
3
2
1
7
11
Z
X
Y
51
5

FIG. 45

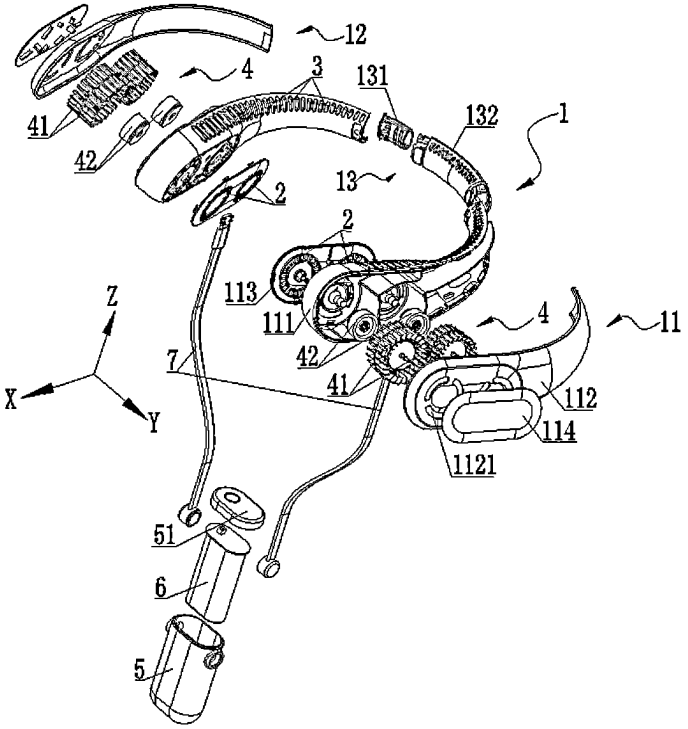
12
4
3
131
132
1
41
42
2
13
2
113
111
4
11
Z
42
7
41
112
X
Y
114
1121
51
6
5

FIG. 46

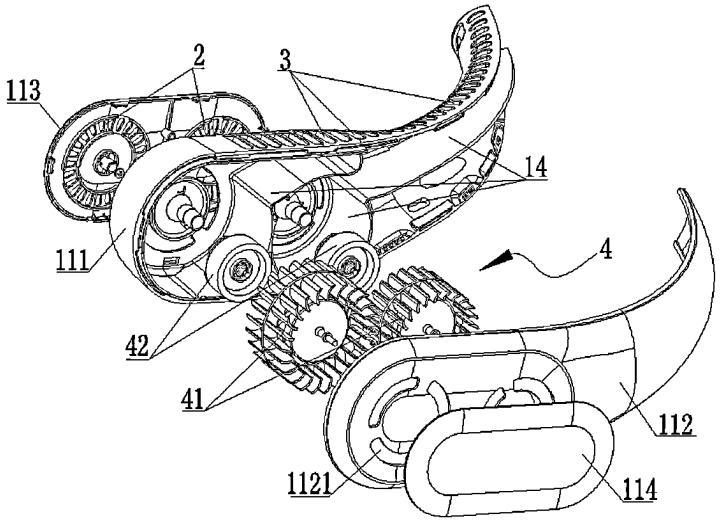
2
3
113
14
111
4
42
41
112
1121
114

FIG. 47

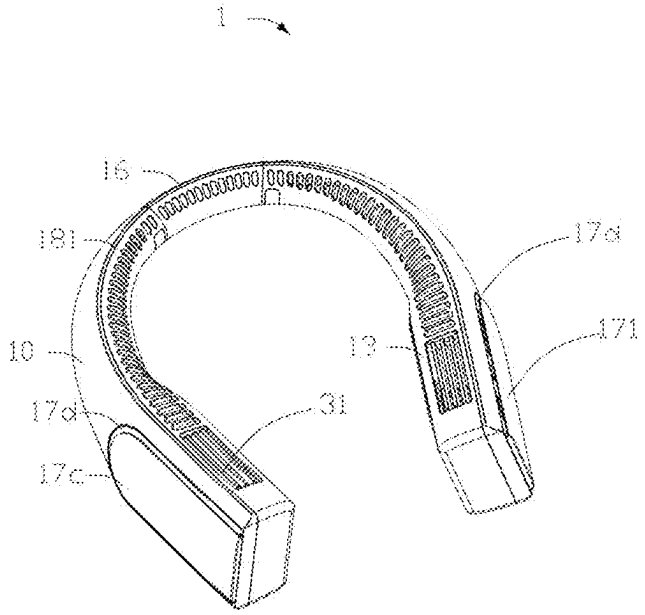

FIG. 48

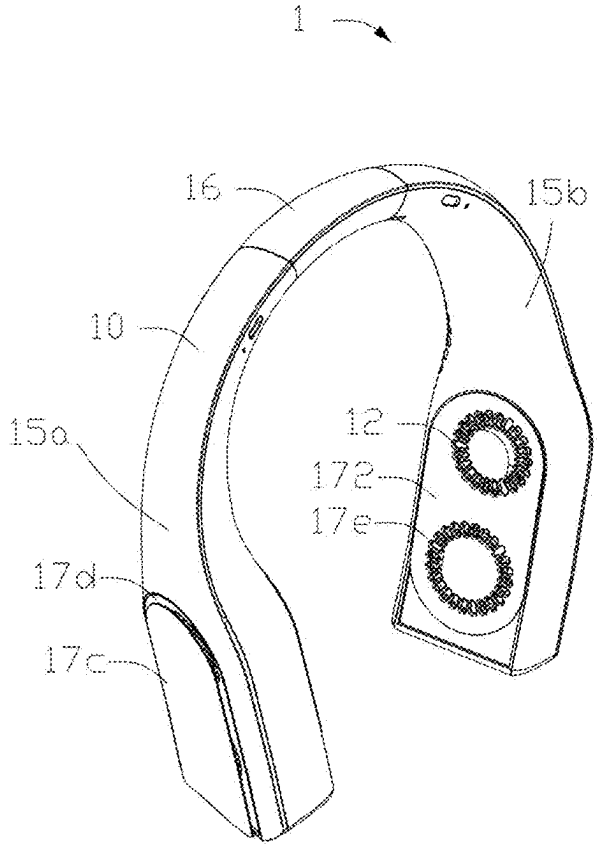

FIG. 49

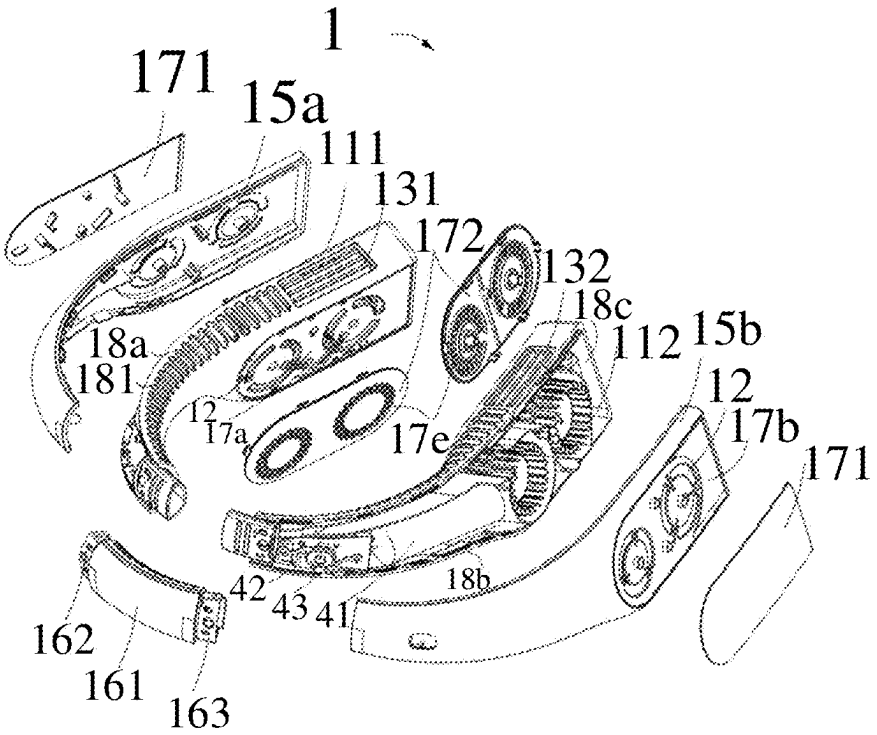
1
171
15a
111
131
172
132
18c
112
15b
12
17b
171
18a
181
12
17a
17e
18b
42
43
41
162
161
163

FIG. 50

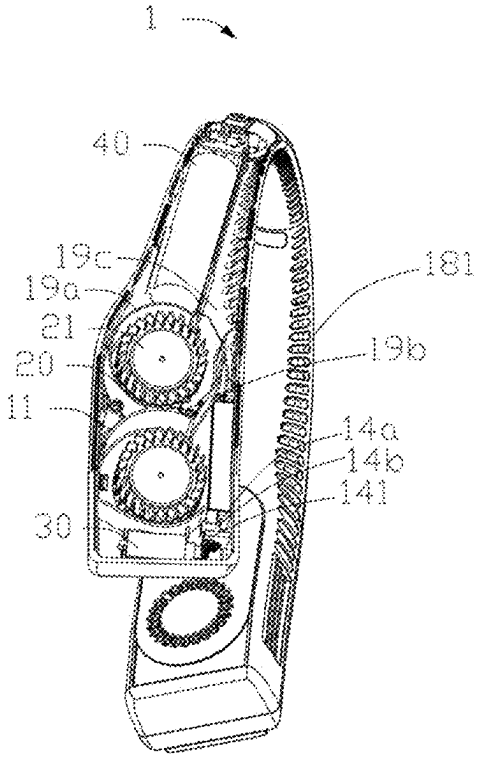
1
40
19c
19a
21
20
11
30
181
19b
14a
14b
141

FIG. 51

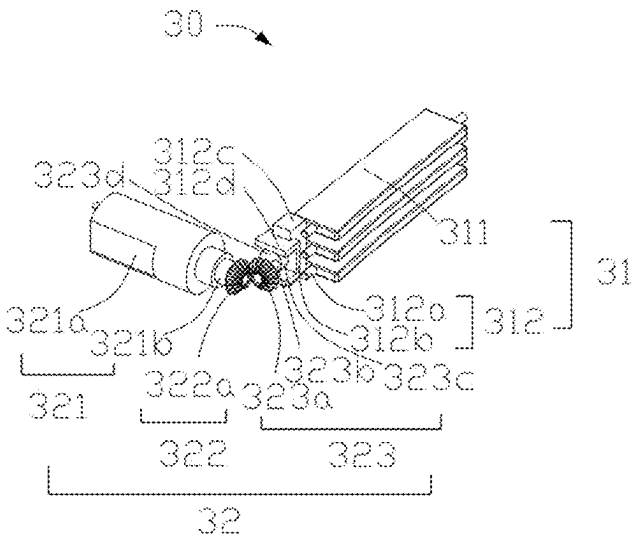
30
312c
323d
312d
311
31
321a
321b
312a
312
312b
323b
323c
321
322a
323a
322
323
32

FIG. 52

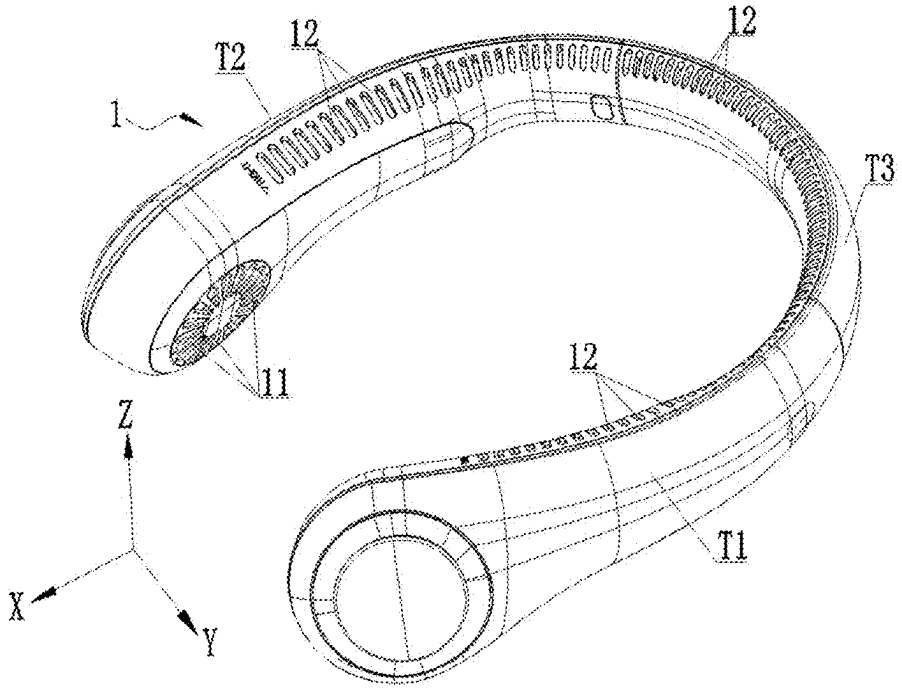
12
12
T2
1
T3
11
12
Z
T1
X
Y

FIG. 53

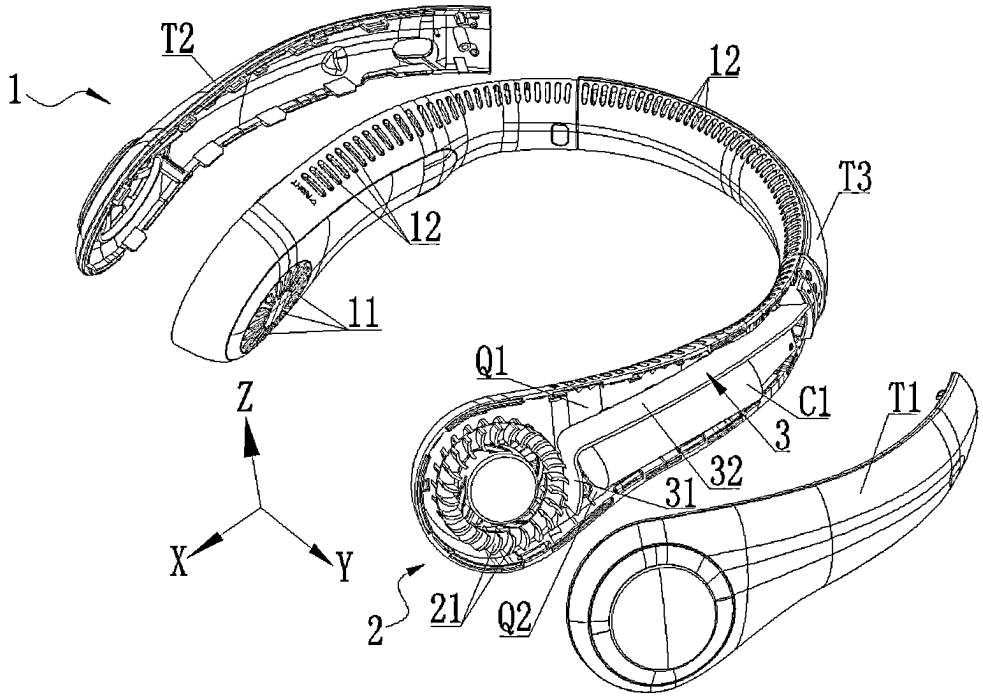
T2
1
12
T3
12
11
Q1
C1
T1
Z
3
32
31
X
Y
2
21
Q2

FIG. 54

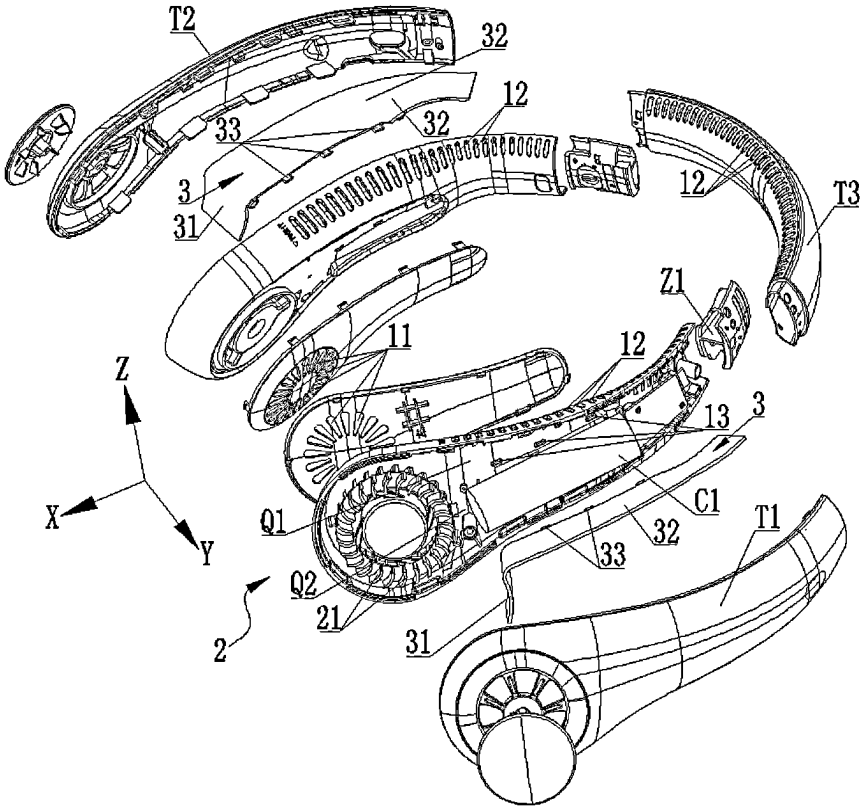
T2
32
12
33
32
3
31
12
T3
Z1
11
12
Z
13
3
X
Y
Q1
C1
32
T1
33
Q2
21
2
31

FIG. 55

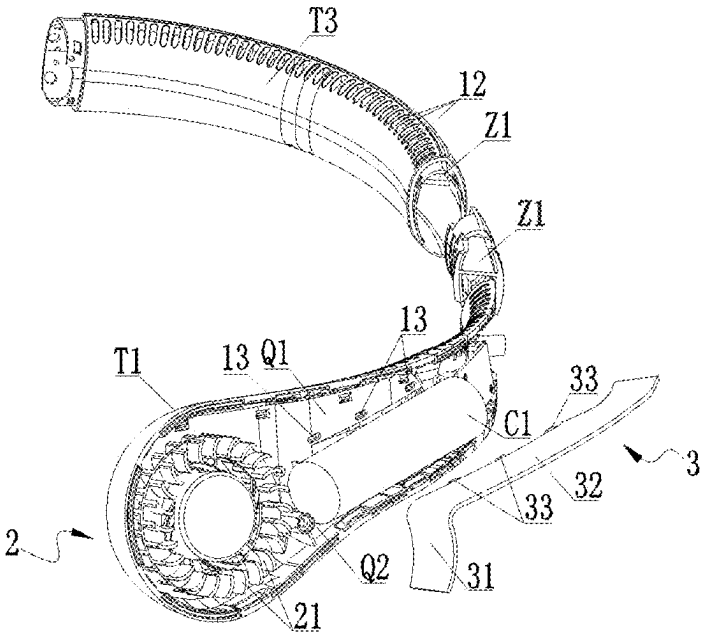
T3
12
Z1
Z1
13
T1
13
Q1
33
C1
3
32
33
2
Q2
31
21

FIG. 56

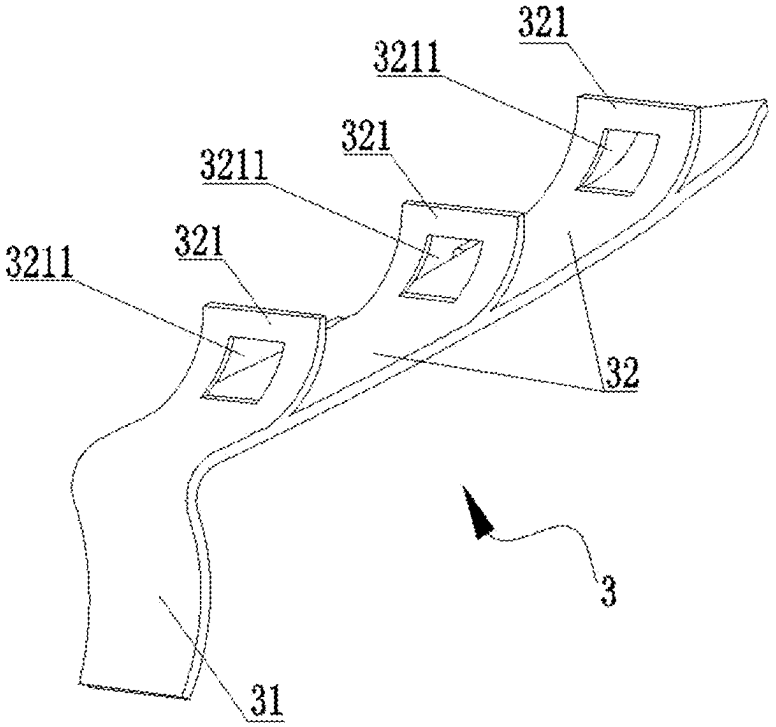
321
3211
321
3211
321
3211
32
3
31

FIG. 57

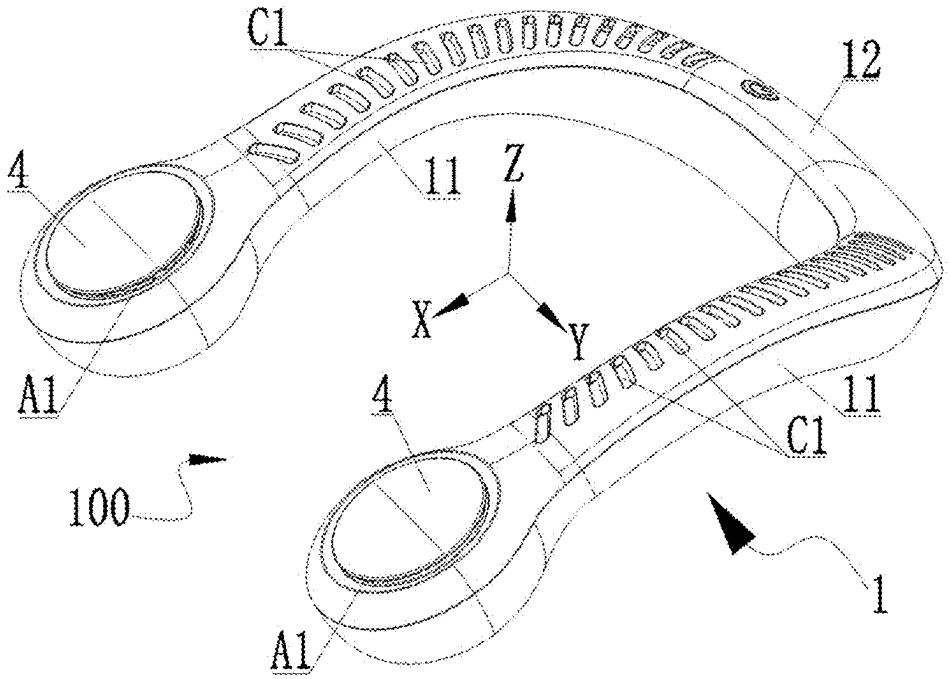
C1
12
4
11
Z
X
Y
A1
4
11
C1
100
1
A1

FIG. 58

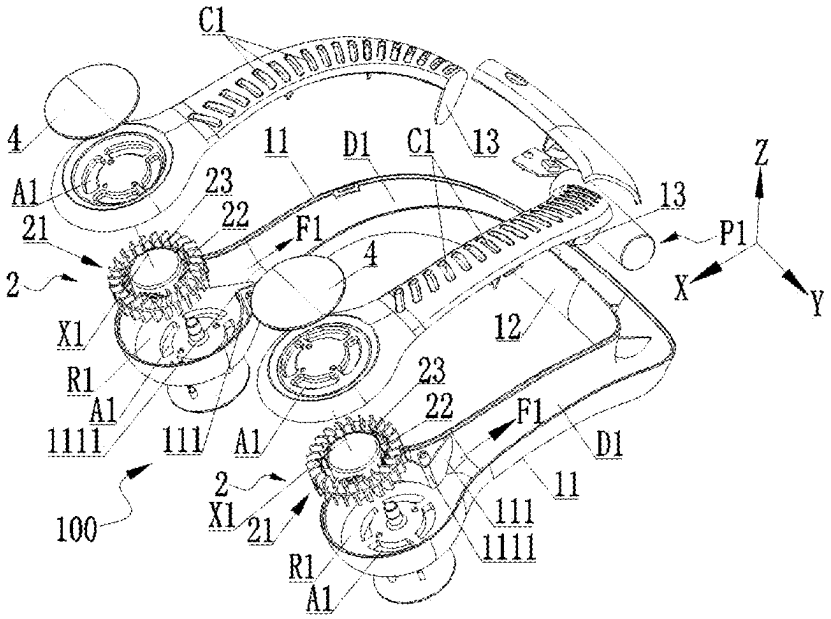
C1
4
11
D1
C1
13
Z
A1
23
22
13
21
F1
P1
2
4
X
Y
X1
12
R1
23
A1
22
F1
1111
111
A1
D1
2
11
100
X1
21
111
1111
R1
A1

FIG. 59

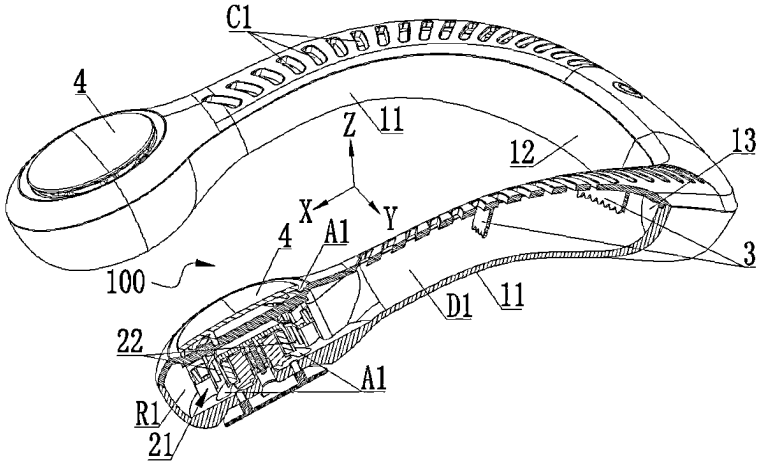

FIG. 60

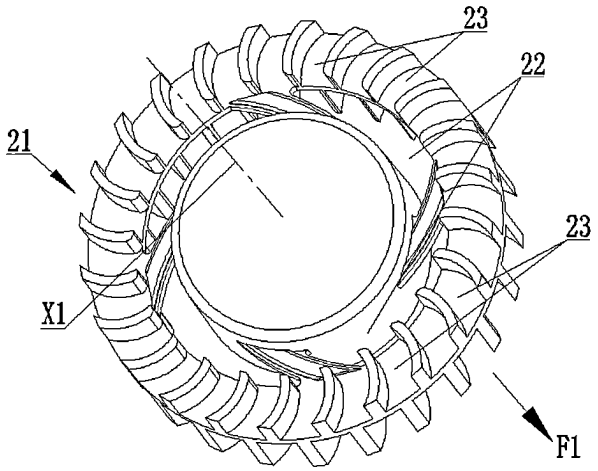

FIG. 61

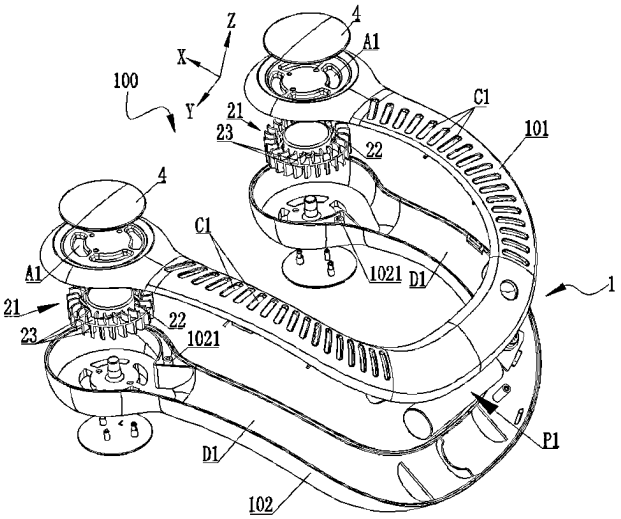

FIG. 62

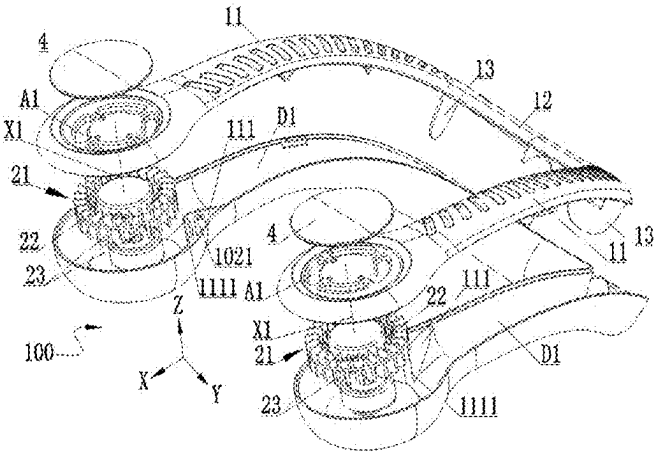

FIG. 63

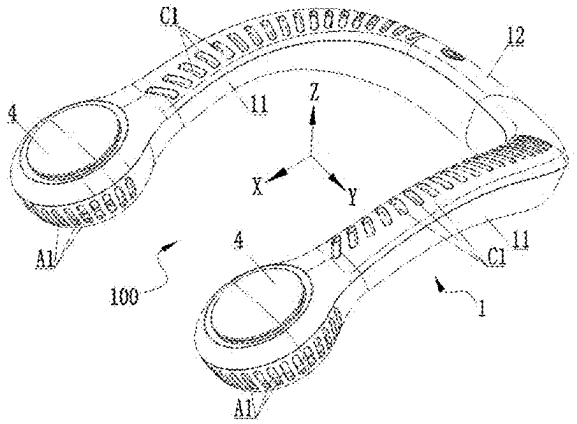

FIG. 64

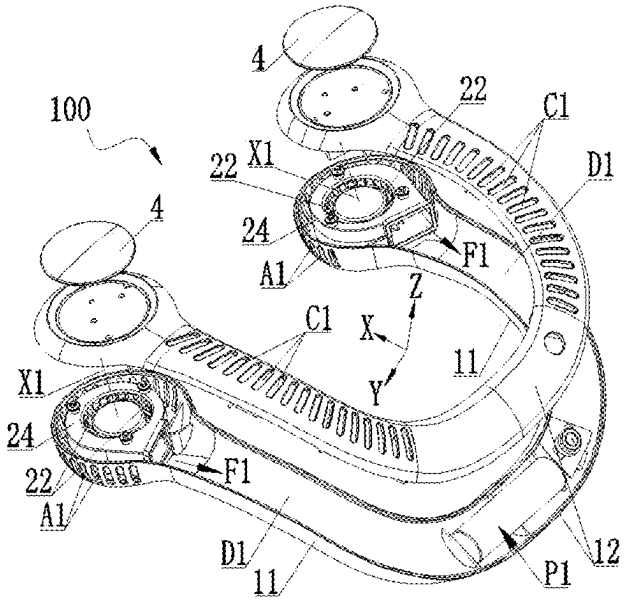

FIG. 65

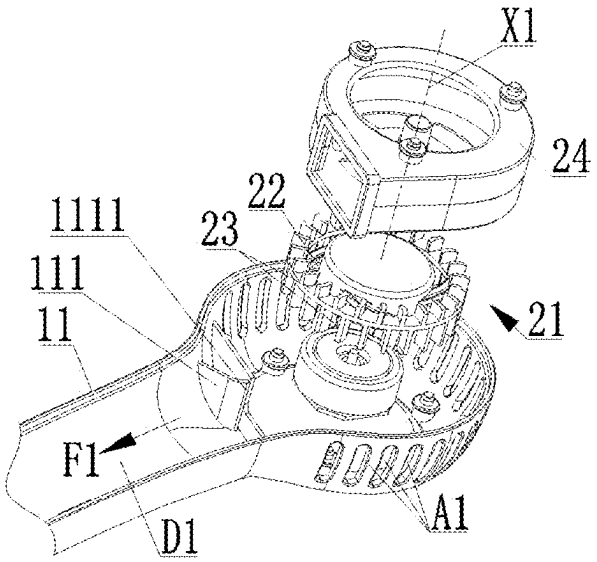
X1
24
22
1111
23
111
11
21
F1
D1
A1

FIG. 66

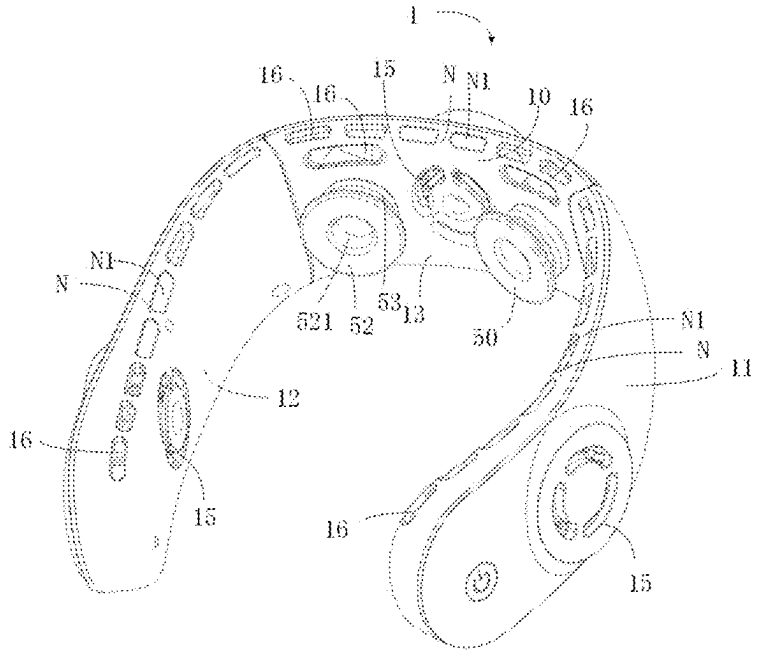
1
16
16
15
N
N1
10
16
N1
N
521
52
53
13
50
N1
N
11
12
16
15
16
15

FIG. 67

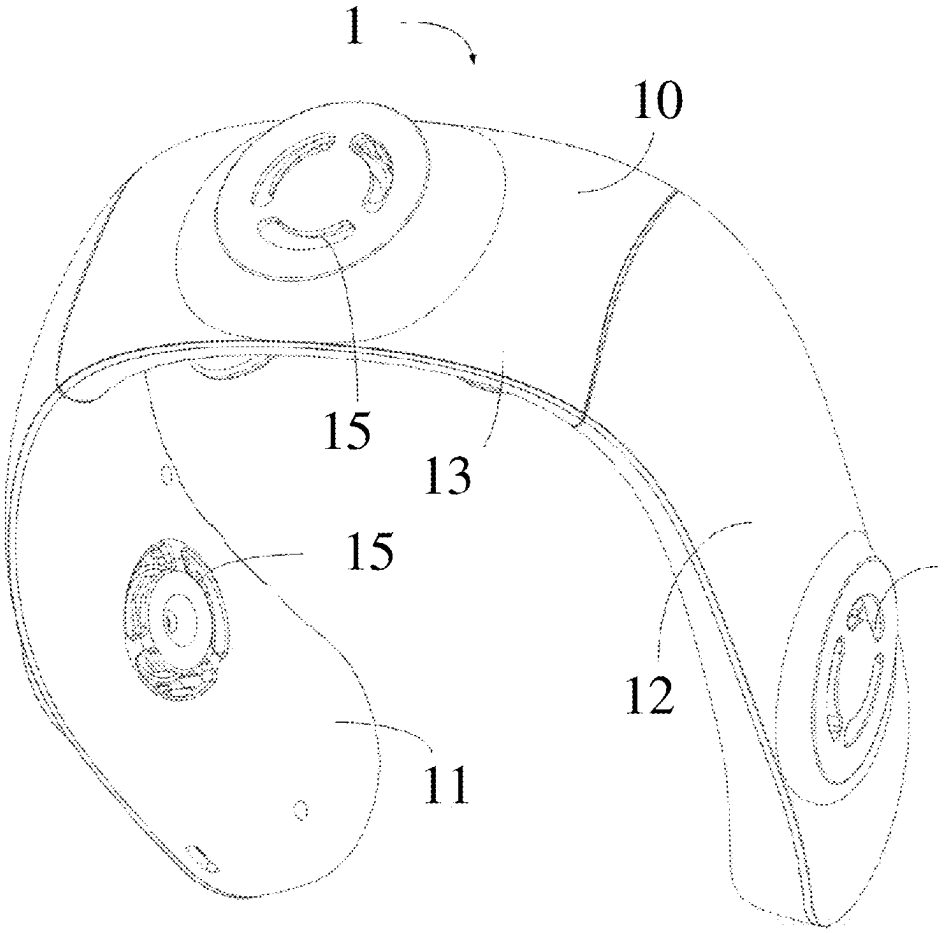

FIG. 68

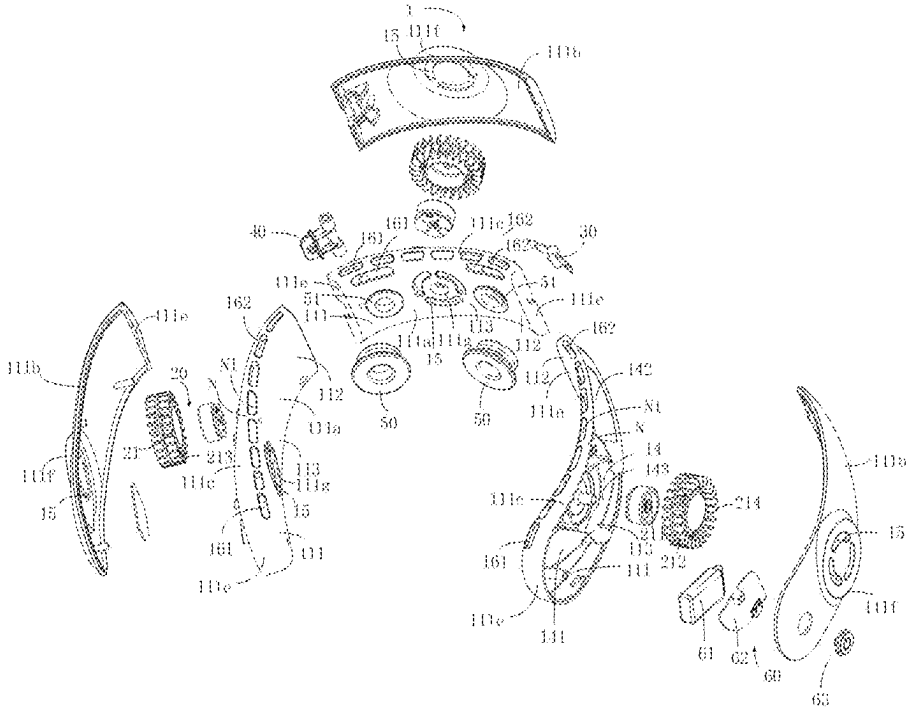

FIG. 69

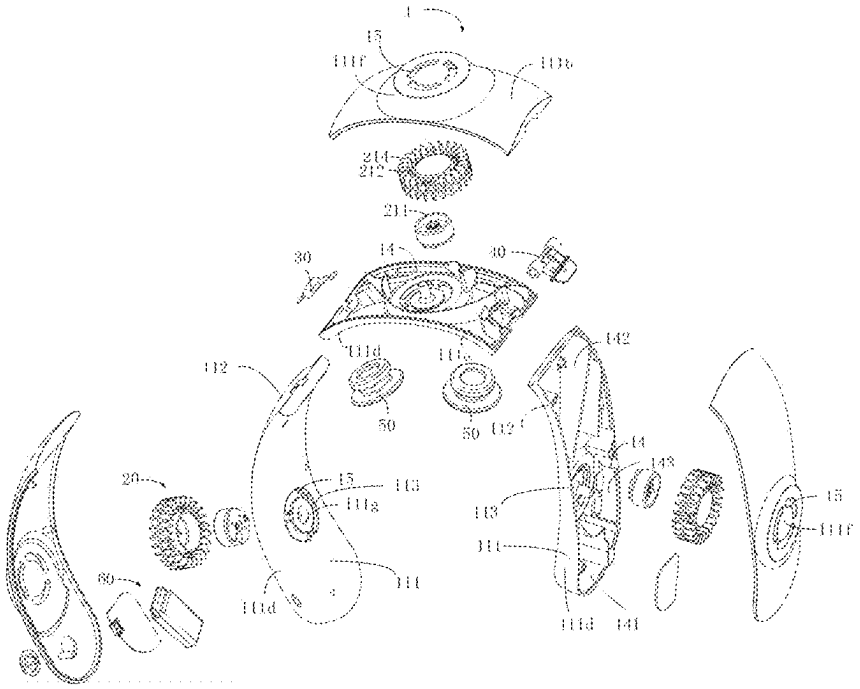

FIG. 70

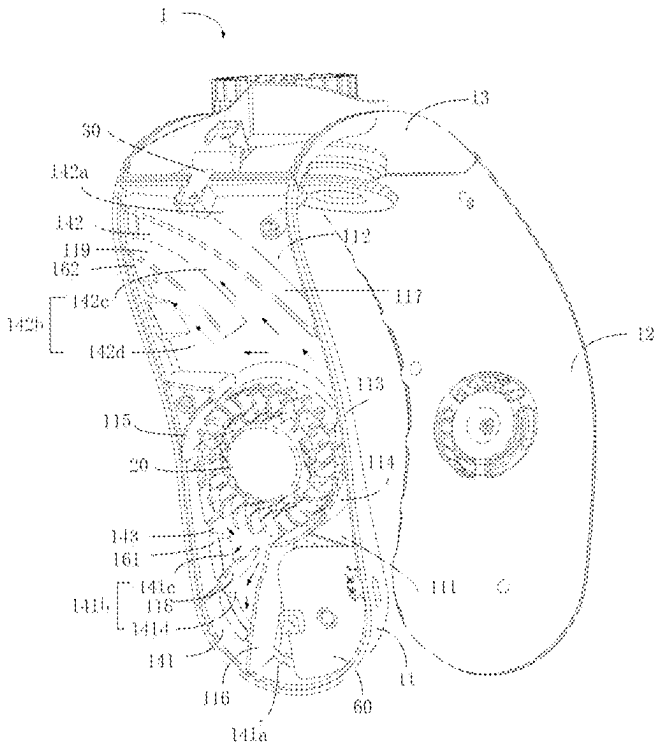
1
13
50
142a
142
119
162
142c
142b
142d
112
117
12
113
115
20
114
143
161
141c
141b
116
141d
141
11
116
60
141a
111

FIG. 71

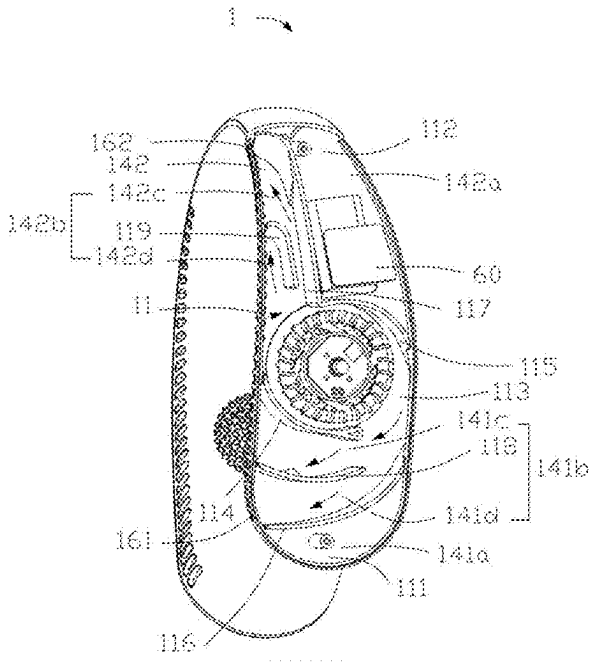
1
162
142
142c
142b
119
142d
112
142a
60
117
11
115
113
141c
118
141b
114
141d
161
141a
111
116

FIG. 72

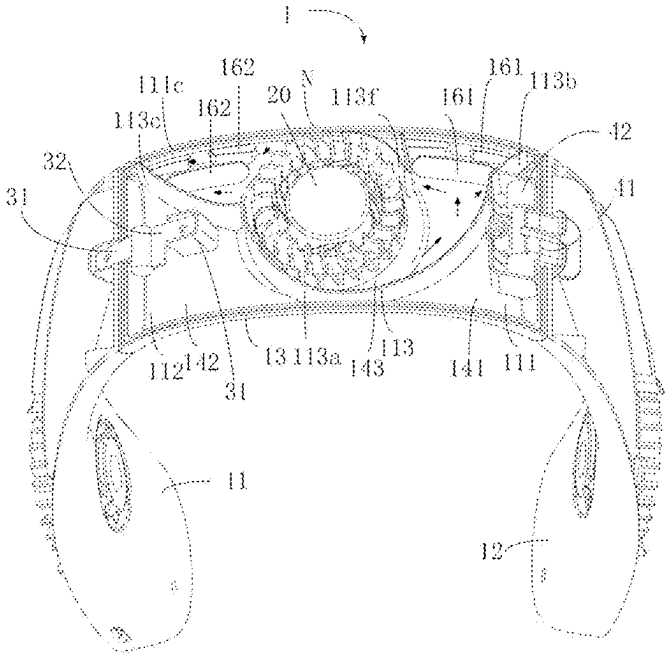

FIG. 73

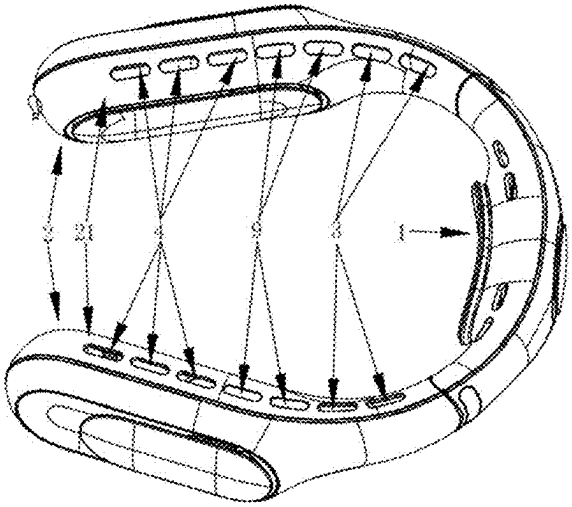

FIG. 74

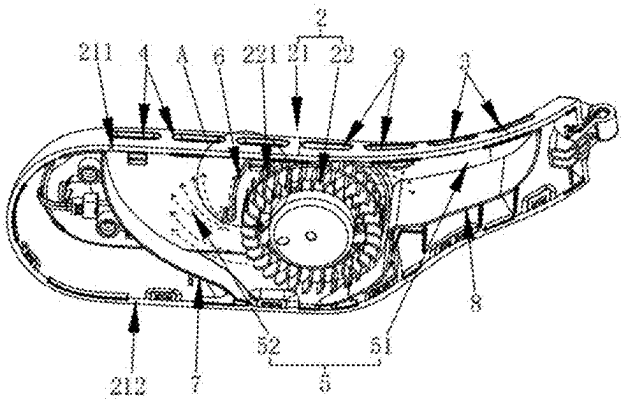

FIG. 75

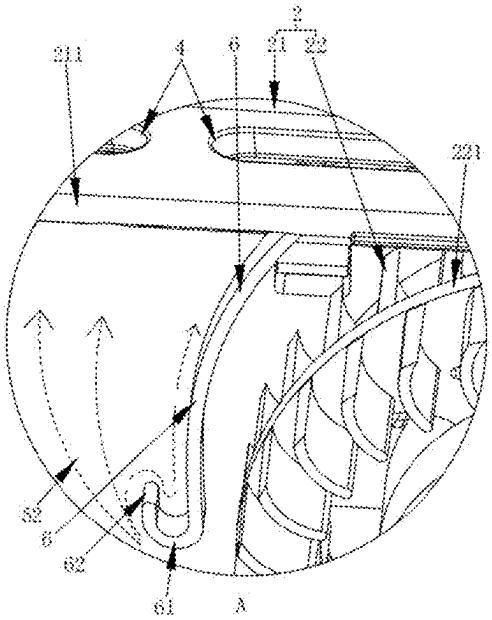
2
211
4
6
21
22
221
62
6
62
61
A

FIG. 76

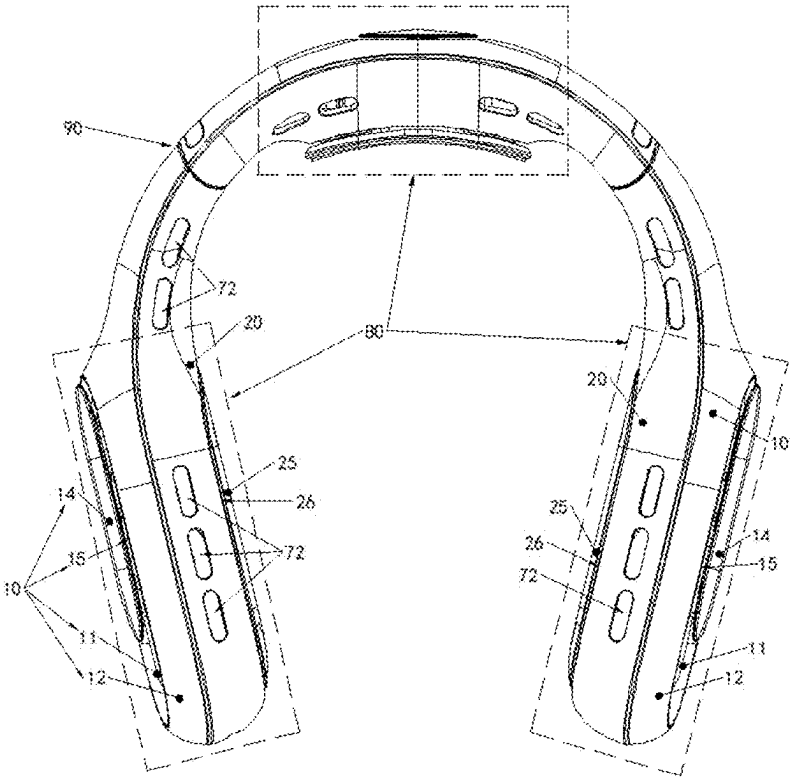
90
72
20
80
20
10
25
26
14
15
10
11
12
25
26
72
14
15
11
12

FIG. 77

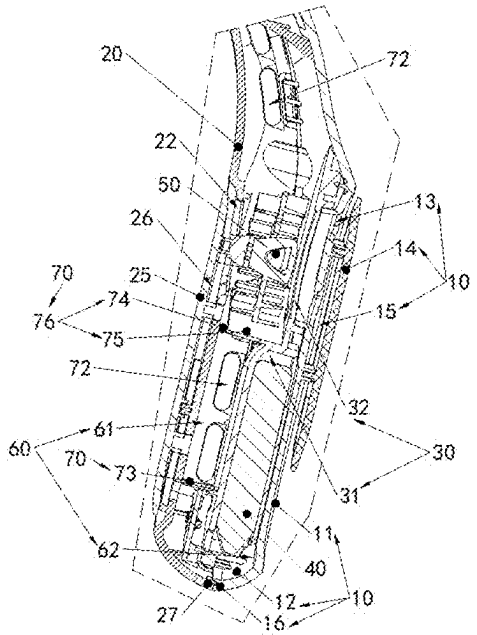
20
72
22
50
13
26
14
10
70
25
74
15
76
75
72
32
61
60
70
73
30
31
11
62
40
12
10
27
16

FIG. 78

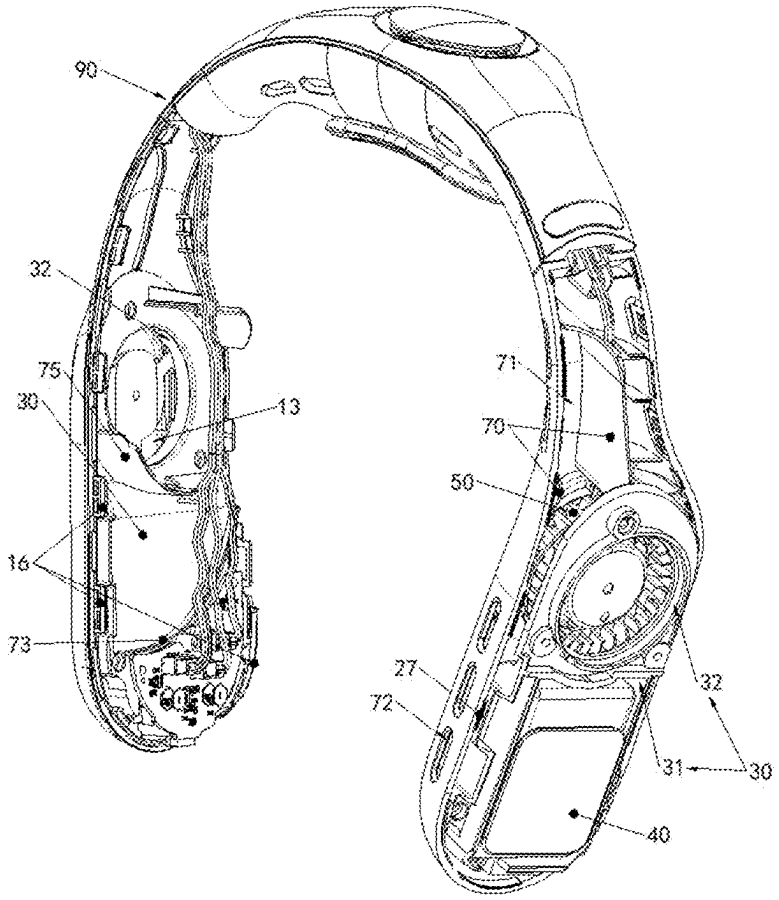
90
32
75
30
13
71
70
50
16
73
27
72
32
31
30
40

FIG. 79

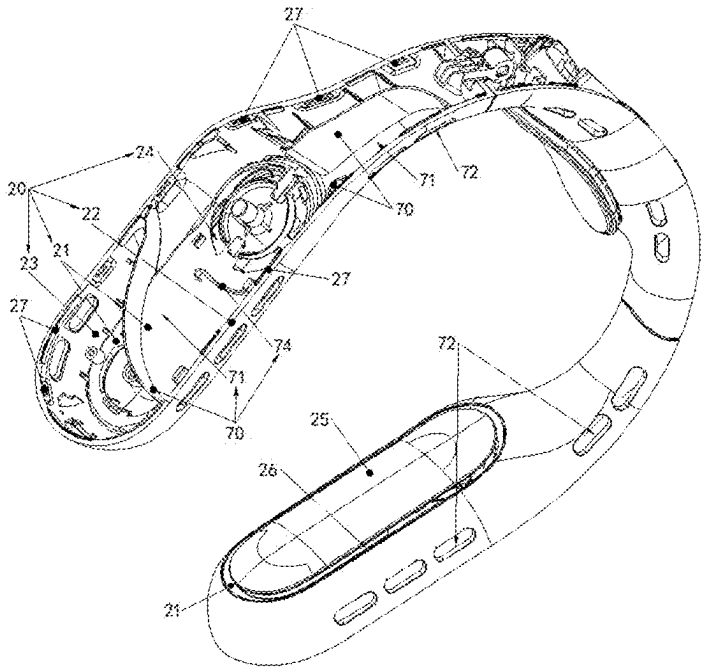
27
24
20
22
23
21
27
71
72
70
27
74
71
70
72
25
26
21

FIG. 80

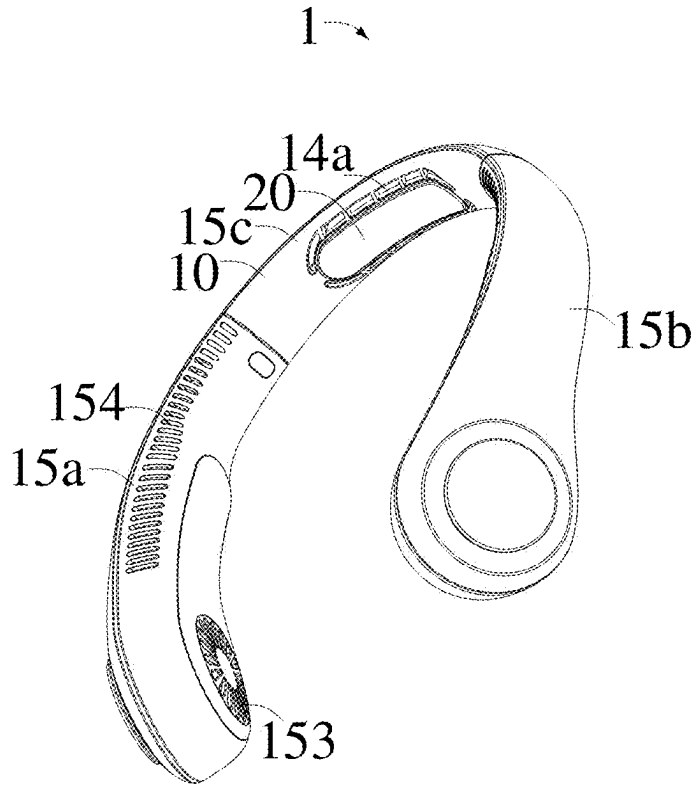
1
14a
20
15c
10
15b
154
15a
153

FIG. 81

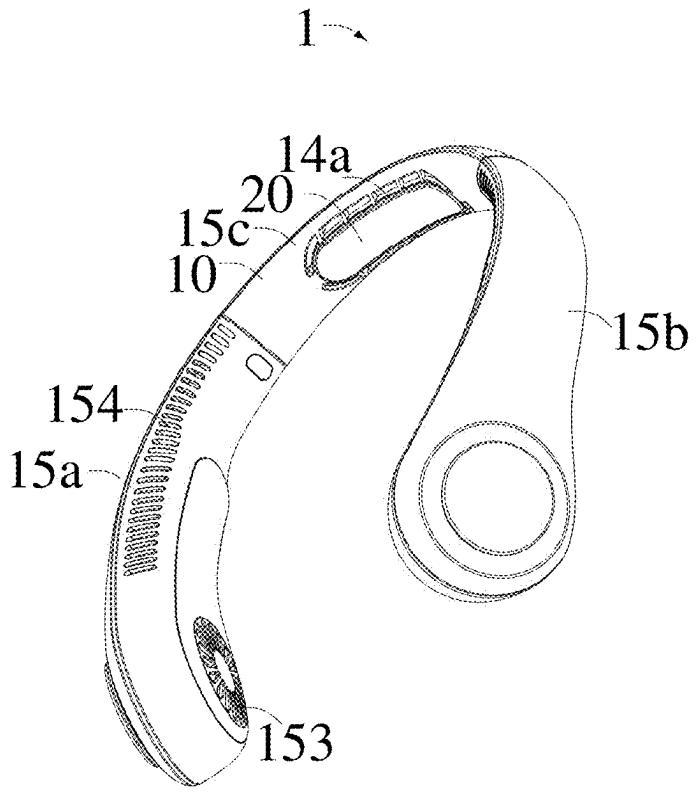
1
14a
20
15c
10
15b
154
15a
153

FIG. 82

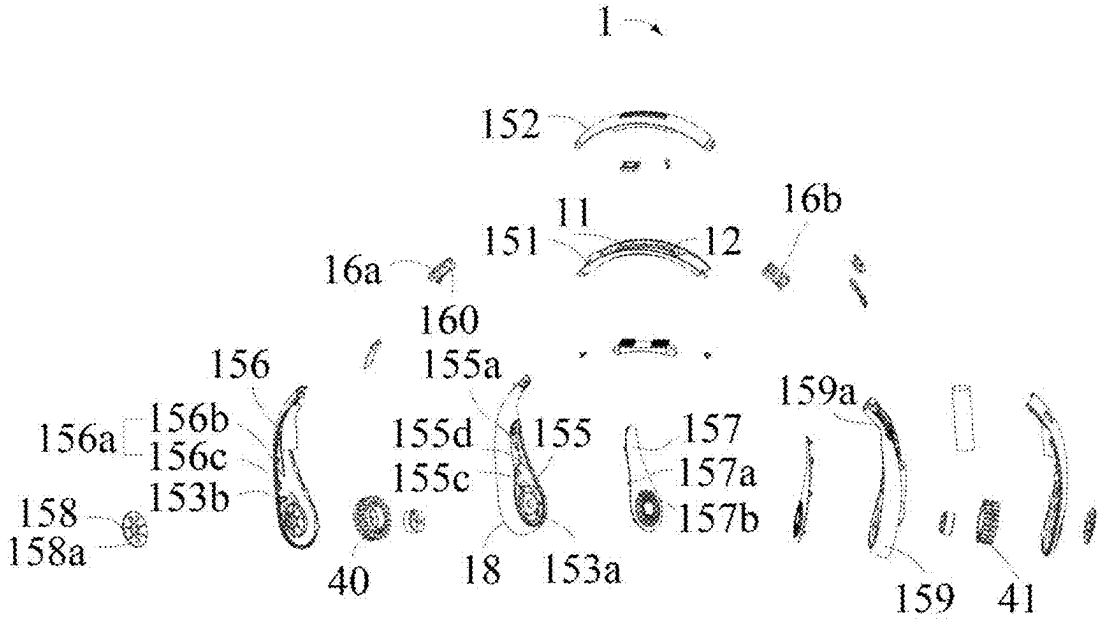
1
152
11
16b
151
12
16a
160
156
155a
159a
156a
156b
156c
155d
155
157
157a
155c
153b
158
157b
158a
40
18
153a
159
41

FIG. 83

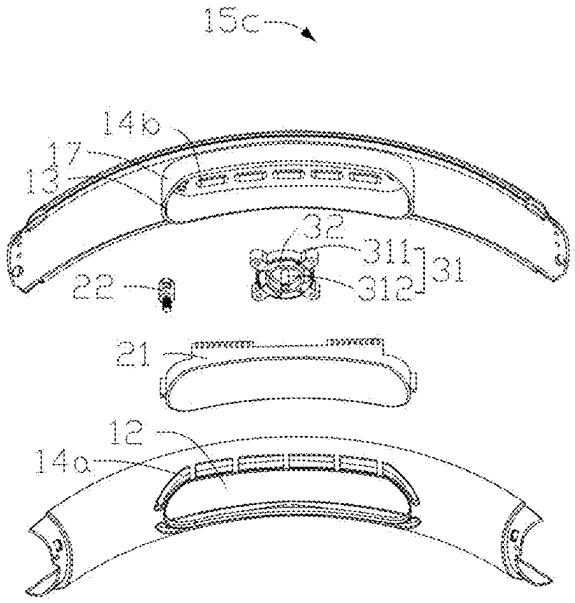
15c
14b
17
13
32
311
31
312
22
21
12
14a

FIG. 84

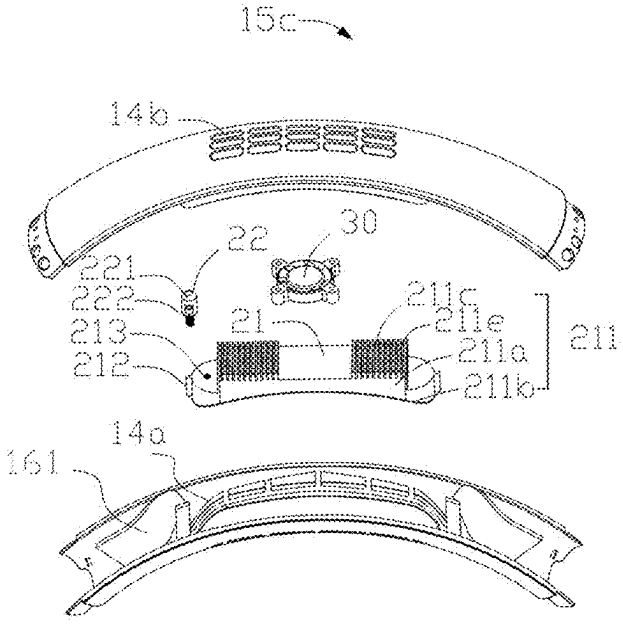
15c
14b
30
22
221
222
213
212
21
211c
211e
211a
211b
211
14a
161

FIG. 85

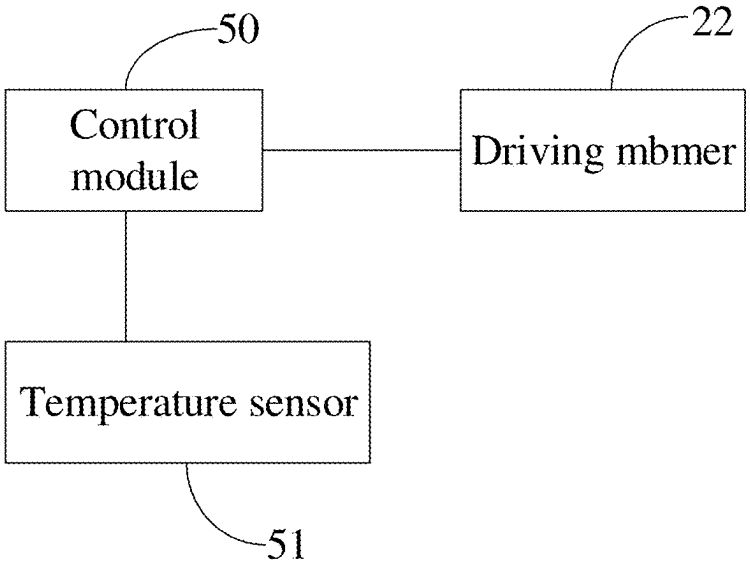
50
22
Control module
Driving mbmer
Temperature sensor
51

FIG. 86

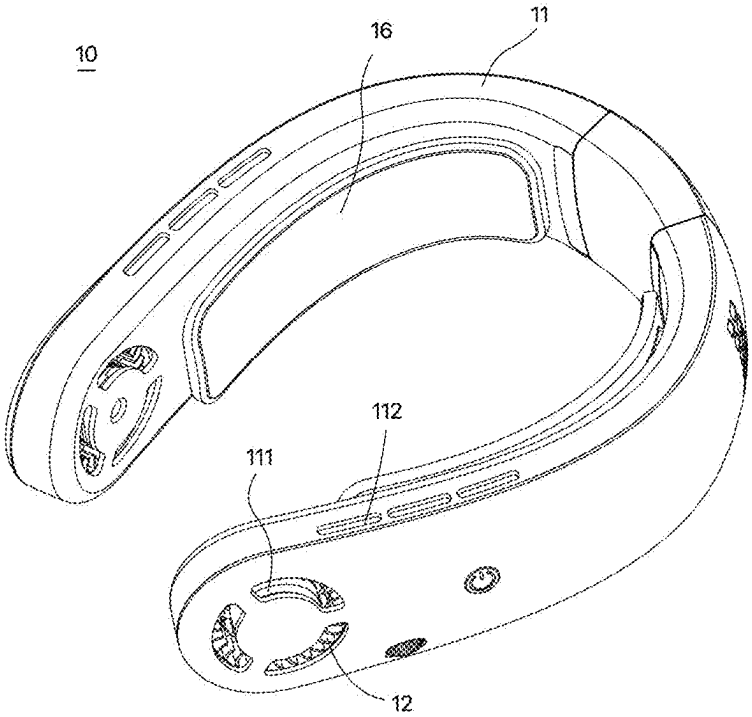
10
16
11
112
111
12

FIG. 87

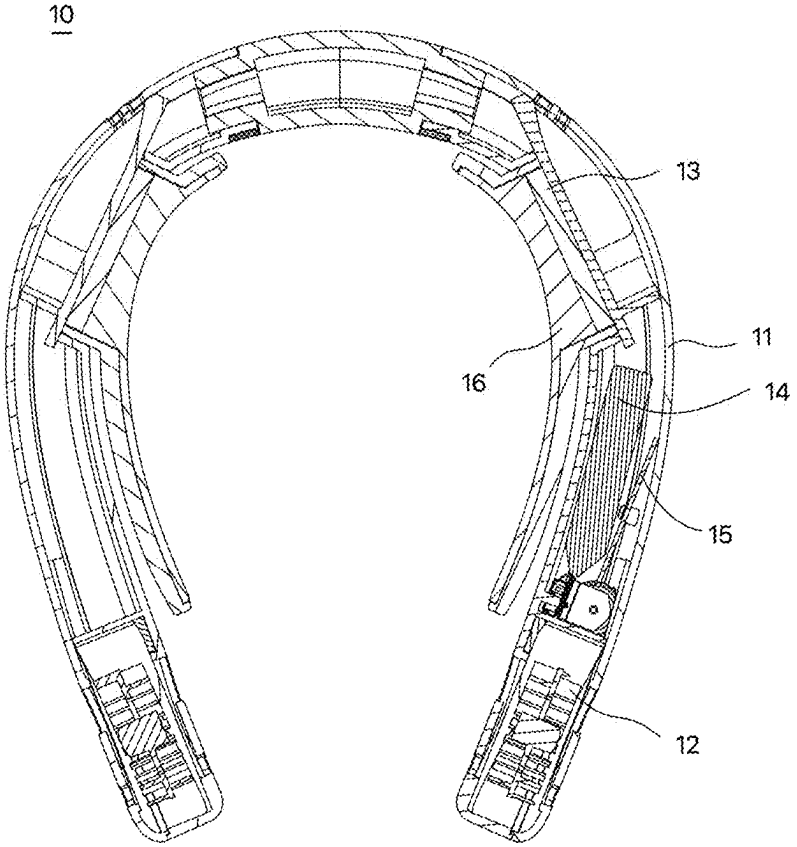
10
13
11
16
14
15
12

FIG. 88

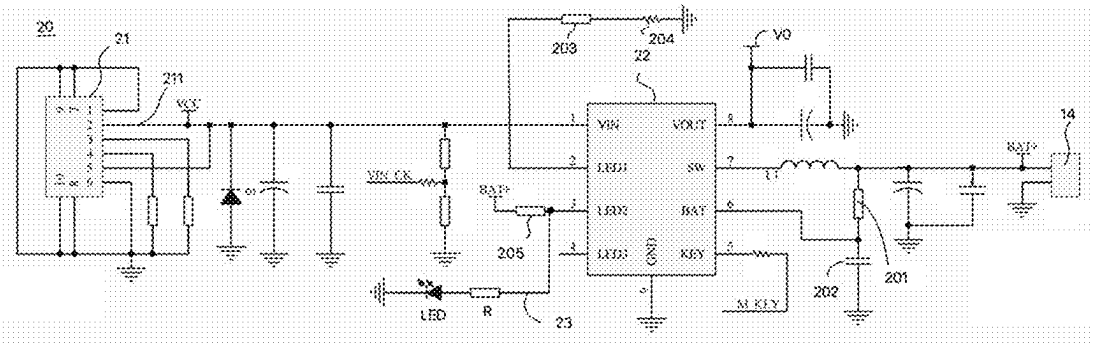
20
21
211
VOUT
203
204
22
VO
VIN
VOUT
LEDI
SW
LEDO
BAT
LEDI
KEY
VIN_CK
BAT
205
LED
R
23
N_KEY
202
201
14
BAT

FIG. 89

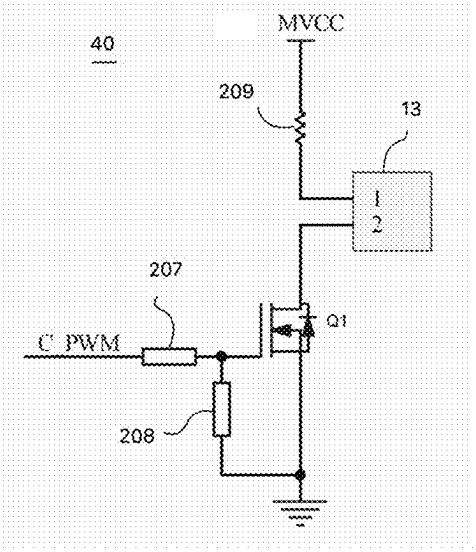
MVCC
40
209
13
1
2
207
Q1
C_PWM
208

FIG. 90

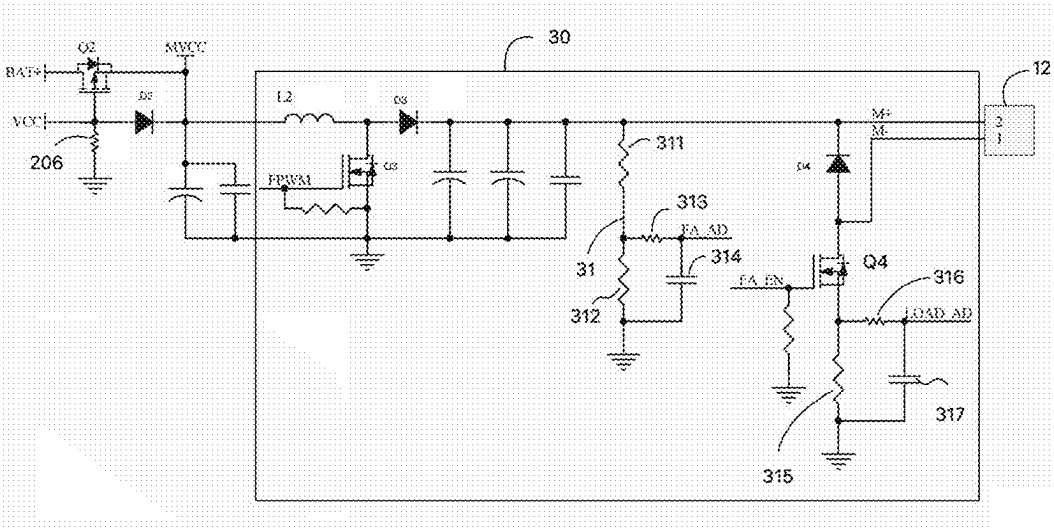
30
12
Q2
MVCC
BAT+
VCC
206
D5
L2
D3
FPWM
Q3
311
313
FA_AD
314
31
312
D4
M+
M-
Q4
FA_EN
316
LOAD_AD
317
315

FIG. 91

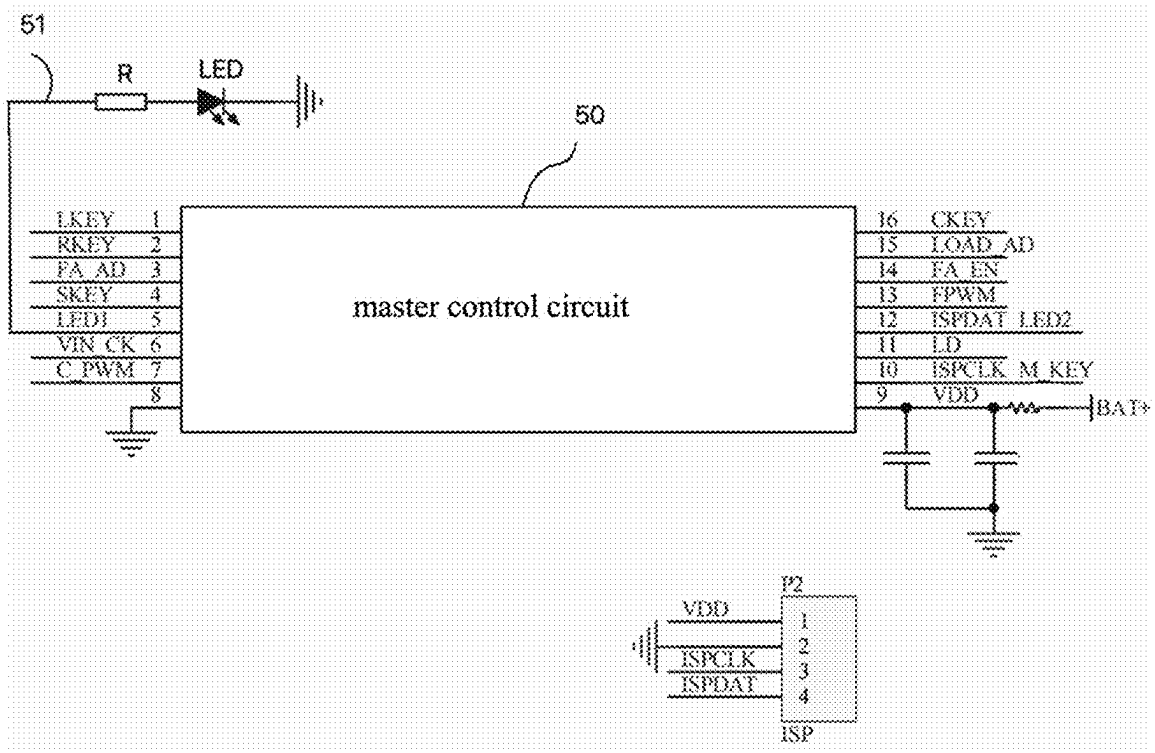
51
R
LED
50
master control circuit
LKEY 1
RKEY 2
FA_AD 3
SKEY 4
LED1 5
VIN_CK 6
C_PWM 7
8
16 CKEY
15 LOAD_AD
14 FA_EN
13 FPWM
12 ISPDAT_LED2
11 LD
10 ISPCLK_M_KEY
9 VDD
BAT+
P2
VDD
ISPCLK
ISPDAT
1
2
3
4
ISP

FIG. 92

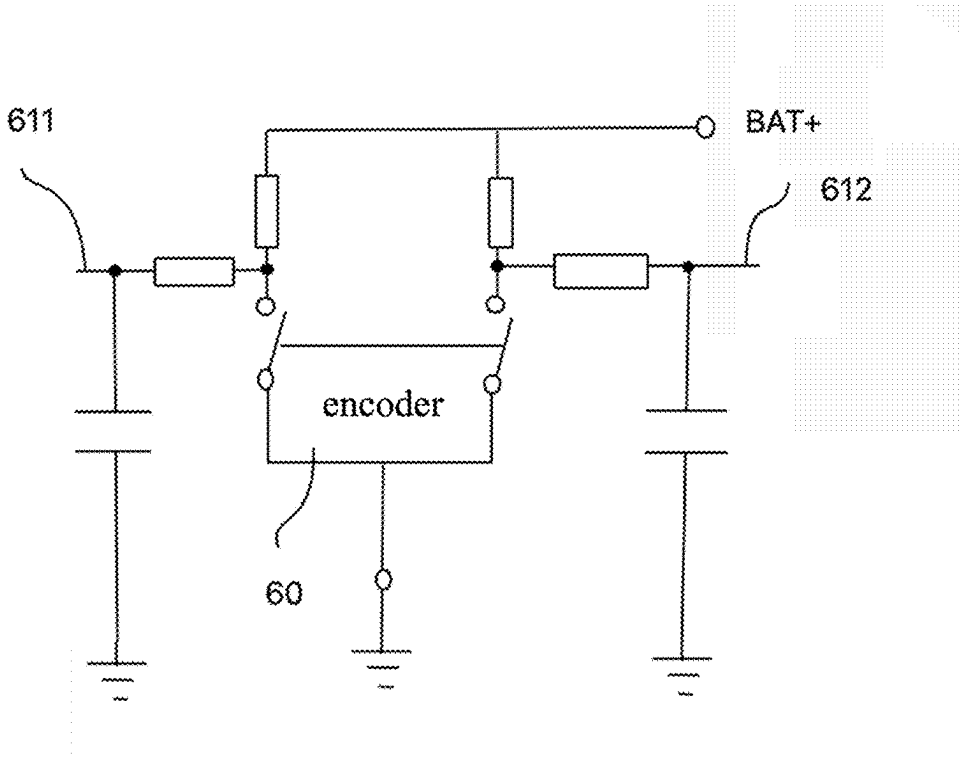
611
BAT+
612
encoder
60

FIG. 93

NECK FAN

CROSS-REFERENCE TO RELATED APPLICATIONS

[0001] The present application is a continuation-in-part of the U.S. patent application Ser. No. 18/244,334, filed on Sep. 11, 2023. The U.S. patent application Ser. No. 18/244,334 is a continuation application of U.S. patent application Ser. No. 17/739,081. The U.S. patent application Ser. No. 17/739,081 is a continuation-in-part of U.S. patent Applicant Ser. No. 17/471,178, filed on Sep. 10, 2021, which claims priorities of Chinese patent application No. 202022210032.8 filed on Sep. 30, 2020, and the Chinese patent application No. 201921815938.3, filed on Oct. 25, 2019. Contents of the applications are incorporated herein by reference in their entireties.

TECHNICAL FIELD

[0002] The subject matter herein generally relates to fans, and particularly relates to a neck fan.

BACKGROUND

[0003] Fans in the art may include fixed and portable fans. Fixed fans, such as floor fans, desktop fans and wall-mounted fans, are fixed in a certain place, and people may be cooled if staying within an air supply area. However, the fans cannot be carried around. Portable fans are available in the art but tend to have a single structure and a fixed shape. The user may be uncomfortable when wearing the fix-shaped portable fan, and have a poor experience when wearing the fix-shaped portable fan for a long period of time.

SUMMARY OF THE INVENTION

[0004] In a first aspect, a neck fan is configured to be worn around a neck of a user and includes: a shell, defining an air inlet, a receiving space, an air duct, and an air outlet, that are communicated with each other; a plurality of fan assemblies, received in the receiving space. The plurality of fan assemblies is configured to intake air from an outside of the neck fan to an inside of the neck fan through the air inlet and to drive the air to flow along the receiving space and the air duct sequentially to reach and to be output out of the neck fan through the air outlet; each of the plurality of fan assemblies comprises a fan and a motor configured to drive the fan to rotate around a rotation shaft. The air inlet has an air inlet plane perpendicular to an air inlet direction in which the air at an outside of the neck fan is intaken into the neck fan; an angle is formed the air inlet plane and a direction in which the neck fan is worn to the neck of the user and is greater than 0 degrees and less than 90 degrees.

[0005] In a second aspect, a neck fan is configured to be worn around a neck of a user and includes: a shell, defining an air inlet, a receiving space, and an air outlet, that are communicated with each other; a plurality of fan assemblies, received in the receiving space. Each of the plurality of an assemblies comprises a fan, the fan comprises a fan hub and a plurality of fan blades arranged and protruding out of the fan hub; the fan hub comprises a sealed end surface; the sealed end surface faces towards an outer side of the shell away from the neck, so as to intake air located at the outer side of the shell away from the neck into the fan assembly.

BRIEF DESCRIPTION OF THE DRAWINGS

[0006] Implementations of the present disclosure will now be described, by way of embodiment, with reference to the attached figures. It should be understood, the drawings are shown for illustrative purpose only, for ordinary person skilled in the art, other drawings obtained from these drawings without paying creative labor by an ordinary person skilled in the art should be within scope of the present disclosure.

[0007] FIG. **1** is a schematic view of a neck fan according to an embodiment of the present application.

[0008] FIG. **2** is an explosive view of a neck fan according to an embodiment of the present application.

[0009] FIG. **3** is a schematic view of an inner shell of a neck fan according to an embodiment of the present application.

[0010] FIG. **4** is a schematic view of a turbo fan of a neck fan according to an embodiment of the present application.

[0011] FIG. **5** is a schematic view of a neck fan in according to a first embodiment of the present disclosure.

[0012] FIG. **6** is an exploded view of the neck fan of FIG. **5**.

[0013] FIG. **7** is a schematic view of a neck fan in according to a second embodiment of the present disclosure.

[0014] FIG. **8** is an exploded view of the neck fan of FIG. **7**.

[0015] FIG. **9** is a schematic view of a neck fan according to an embodiment of the present disclosure.

[0016] FIG. **10** is an exploded view of the embodiment shown in FIG. **9**.

[0017] FIG. **11** is a schematic view showing connection among an air guiding portion, a neck wearing portion and an adjustment member of a neck fan according to the embodiment of the present disclosure.

[0018] FIG. **12** is an enlarged view of a portion A shown in FIG. **11**.

[0019] FIG. **13** is a schematic view showing connection among an air guiding portion, a neck wearing portion, a limitation member, and a rotation shaft of a neck fan according to the embodiment of the present disclosure.

[0020] FIG. **14** is a cross section view of a neck fan according to the embodiment of the present disclosure.

[0021] FIG. **15** is an enlarged view of a portion B shown in FIG. **13**.

[0022] FIG. **16** is a schematic view of a neck fan in the art.

[0023] FIG. **17** is a schematic view of a neck fan according to an embodiment of the present disclosure.

[0024] FIG. **18** is a schematic view of the neck fan shown in FIG. **17** from another view angle.

[0025] FIG. **19** is an enlarged view of the neck fan shown in FIG. **17**.

[0026] FIG. **20** is a schematic view of a portion of the neck fan shown in FIG. **17**.

[0027] FIG. **21** is a cross section view of the neck fan shown in FIG. **17**.

[0028] FIG. **22** is a cross section view of a neck fan shown according to another embodiment of the present disclosure.

[0029] FIG. **23** is a structural schematic view of a neck fan according to an embodiment of the present disclosure.

[0030] FIG. **24** is an exploded view of a neck fan according to an embodiment of the present disclosure.

[0031] FIG. **25** is a cross section view of a neck fan according to an embodiment of the present disclosure.

[0032] FIG. **26** is a cross section view of a diagonal fan of a neck fan according to an embodiment of the present disclosure.

[0033] FIG. **27** is a structural schematic view of a wind guide portion of a neck fan according to an embodiment of the present disclosure.

[0034] FIG. **28** is a structural schematic view of an air inlet section of a neck fan according to an embodiment of the present disclosure.

[0035] FIG. **29** is a structural schematic view of an end of an external shell of a neck fan according to an embodiment of the present disclosure.

[0036] FIG. **30** is a structural schematic view of a neck fan according to an embodiment of the present disclosure.

[0037] FIG. **31** is an exploded view of the neck fan shown in FIG. **30**.

[0038] FIG. **32** is a structural schematic view of a first bracket of a neck fan according to an embodiment of the present disclosure.

[0039] FIG. **33** is an exploded view of the first bracket and a wind turbine of the embodiment shown in FIG. **32**.

[0040] FIG. **34** illustrates an interior of the first bracket and the wind turbine of the embodiment shown in FIG. **33**.

[0041] FIG. **35** is an enlarged view of a portion A of the embodiment shown in FIG. **34**.

[0042] FIG. **36** is an exploded view of a second bracket and a wind turbine of a neck fan according to an embodiment of the present disclosure.

[0043] FIG. **37** illustrates an interior of a third shell of the embodiment shown in FIG. **36**.

[0044] FIG. **38** is a schematic view of a neck fan according to an embodiment of the present disclosure.

[0045] FIG. **39** is an exploded view of the neck fan shown in FIG. **38**.

[0046] FIG. **40** is an exploded view of connection between an inner shell and a fan assembly of a neck fan according to another embodiment of the present disclosure.

[0047] FIG. **41** is a cross section view of an end portion of an outer shell of a neck fan according to another embodiment of the present disclosure.

[0048] FIG. **42** is a schematic view of an inner shell of a neck fan according to another embodiment of the present disclosure.

[0049] FIG. **43** illustrate an interior of an outer shell of a neck fan according to another embodiment of the present disclosure.

[0050] FIG. **44** is an exploded view of connection among an inner shell, a fan assembly, and a shaking absorption member of a neck fan according to another embodiment of the present disclosure.

[0051] FIG. **45** is a schematic view of a neck fan according to an embodiment of the present disclosure.

[0052] FIG. **46** is an exploded view of the neck fan shown in FIG. **45**.

[0053] FIG. **47** is an exploded view of a left head portion of a neck fan according to another embodiment of the present disclosure.

[0054] FIG. **48** is a schematic view of a neck fan according to an embodiment of the present disclosure.

[0055] FIG. **49** is a schematic view of the neck fan shown in FIG. **48** from another view angle.

[0056] FIG. **50** is an exploded view of the neck fan shown in FIG. **48**.

[0057] FIG. **51** is a schematic view of a portion of the neck fan shown in FIG. **48**.

[0058] FIG. **52** is a schematic view of an outlet adjustment assembly of the neck fan shown in FIG. **48**.

[0059] FIG. **53** is a schematic view of a neck fan according to an embodiment of the present disclosure.

[0060] FIG. **54** is an exploded view of the neck fan shown in FIG. **53**.

[0061] FIG. **55** is an exploded view of the neck fan shown in FIG. **53**.

[0062] FIG. **56** is an exploded view of connection between a middle connection portion and a first end head portion of a neck fan according to an embodiment of the present disclosure.

[0063] FIG. **57** is a schematic view of a wind guide member of a neck fan according to an embodiment of the present disclosure.

[0064] FIG. **58** is a schematic view of a neck fan according to a first embodiment of the present disclosure.

[0065] FIG. **59** is an exploded view of the neck fan according to the first embodiment of the present disclosure.

[0066] FIG. **60** is a cross section view of the neck fan according to the first embodiment of the present disclosure.

[0067] FIG. **61** is a schematic view of a fan of the neck fan according to the first embodiment of the present disclosure.

[0068] FIG. **62** is an exploded view of the neck fan according to the first embodiment of the present disclosure from another view angle.

[0069] FIG. **63** is an exploded view of a neck fan according to a second embodiment of the present disclosure from another view angle.

[0070] FIG. **64** is a schematic view of a neck fan according to a third embodiment of the present disclosure from another view angle.

[0071] FIG. **65** is an exploded view of the neck fan according to the third embodiment of the present disclosure from another view angle.

[0072] FIG. **66** is an exploded view of a portion of the neck fan according to the third embodiment of the present disclosure from another view angle.

[0073] FIG. **67** is a schematic view of a neck fan according to an embodiment of the present disclosure.

[0074] FIG. **68** is a schematic view of the neck fan shown in FIG. **67** from another view angle.

[0075] FIG. **69** is an exploded view of the neck fan shown in FIG. **67**.

[0076] FIG. **70** is an exploded view of the neck fan shown in FIG. **68**.

[0077] FIG. **71** illustrates an inside of a first portion of the neck fan shown in FIG. **67**.

[0078] FIG. **72** illustrates an inside of a first portion of a neck fan according to another embodiment of the present disclosure.

[0079] FIG. **73** illustrates an inside of a third portion of the neck fan shown in FIG. **67**.

[0080] FIG. **74** is a schematic view of a neck fan according to an embodiment of the present disclosure.

[0081] FIG. **75** is a schematic view of a fan assembly of a neck fan according to an embodiment of the present disclosure.

[0082] FIG. **76** is an enlarged view of a portion A shown in FIG. **75**.

[0083] FIG. **77** is a schematic view of a neck fan according to an embodiment of the present disclosure.

[0084] FIG. **78** is a cross section view of a portion of the neck fan shown in FIG. **77**.

[0085] FIG. **79** is a first exploded view of the neck fan shown in FIG. **77**.

[0086] FIG. **80** is a second exploded view of the neck fan shown in FIG. **77**.

[0087] FIG. **81** is a schematic view of a temperature adjustment apparatus that hang around a user's neck according to an embodiment of the present disclosure.

[0088] FIG. **82** is another schematic view of the temperature adjustment apparatus shown in FIG. **81**.

[0089] FIG. **83** is an exploded view of the temperature adjustment apparatus shown in FIG. **81**.

[0090] FIG. **84** is an exploded view of a middle portion of the temperature adjustment apparatus shown in FIG. **81**.

[0091] FIG. **85** is another exploded view of a middle portion of the temperature adjustment apparatus shown in FIG. **81**.

[0092] FIG. **86** is a diagram of a circuit of the temperature adjustment apparatus shown in FIG. **81**.

[0093] FIG. **87** is a structural schematic view of a neck fan according to embodiments of the present disclosure.

[0094] FIG. **88** is a cross-sectional view of the neck fan shown in FIG. **87**.

[0095] FIG. **89** is a circuit diagram of a charging and power supply circuit of a control circuit of the neck fan shown in FIG. **87**.

[0096] FIG. **90** is a circuit diagram of a refrigeration control circuit of the control circuit of the neck fan shown in FIG. **87**.

[0097] FIG. **91** is a circuit diagram of a fan drive circuit of the control circuit of the neck fan shown in FIG. **87**.

[0098] FIG. **92** is a circuit diagram of a master control circuit of the control circuit of the neck fan shown in FIG. **87**.

[0099] FIG. **93** is a circuit diagram of an encoder circuit of the control circuit of the neck fan shown in FIG. **87**.

DETAILED DESCRIPTION

[0100] It will be appreciated that for simplicity and clarity of illustration, where appropriate, reference numerals have been repeated among the different figures to indicate corresponding or analogous elements. In addition, numerous specific details are set forth in order to provide a thorough understanding of the exemplary embodiments described herein. However, it will be understood by those of ordinary skill in the art that the exemplary embodiments described herein may be practiced without these specific details. In other instances, methods, procedures, and components have not been described in detail so as not to obscure the related relevant feature being described. Also, the description is not to be considered as limiting the scope of the exemplary embodiments described herein. The drawings are not necessarily to scale and the proportions of certain parts may be exaggerated to better illustrate details and features of the present disclosure.

[0101] The term "comprising" when utilized, means "including, but not necessarily limited to"; it specifically indicates open-ended inclusion or membership in the so-described combination, group, series, and the like. The disclosure is illustrated by way of example and not by way of limitation in the figures of the accompanying drawings in which like references indicate similar elements. It should be noted that references to "an" or "one" embodiment in this disclosure are not necessarily to the same embodiment, and such references can mean "at least one". In addition, the terms "first" and "second" are used for descriptive purposes only and cannot be understood as indicating or implying relative importance or implying the number of indicated technical features. Thus, the features defined as "first" and "second" may explicitly or implicitly include one or more of the said features. In the description of embodiments of the invention, "a plurality of" means two or more, unless otherwise specifically defined.

[0102] In an embodiment, as shown in FIGS. **1** and **2**, the present disclosure provides a neck fan including a body portion **1** and a fan assembly **2**. The body portion **1** may be worn around a neck of a user. The body portion **1** defines an air duct **11**. The body portion **1** defines a plurality of air outlets **12** communicating with the an outside of the neck fan and the air duct **11**. In this way, air in the air duct **11** may flow to the outside through the air outlets **12**. The fan assembly **2** is mounted on the body portion **1** and is configured to drive the air from the outside into the air duct **11** and blow the air to the outside through the air outlets **12**. The air driven into the air duct **11** through fan assembly **2** has a certain speed. Therefore, a wind pressure difference is present between an inside and the outside of air outlets **12**, i.e., between the air duct and the outside. In this case, while the air is being blown to the outside through the air outlets **12**, due to the wind pressure difference, some of the air in the air duct **11** may flow out of the air duct **11** through air outlets **12** to reach the neck to cool the user. In an embodiment, the plurality of air outlets **12** are evenly distributed and spaced apart from each other. Therefore, when being worn, the body portion **1** surrounds a front, a side and a back of the neck, and the air blown out from the air outlets **12** may be directed to the front, the side and the back of the neck. In this way, a range that the air may reach is expanded, and the user may be cooled from various directions. The neck fan is highly applicable and may be used conveniently.

[0103] As shown in FIG. **1**, the body portion **1** may be bent and tubular and may be made of an elastic material that can be extended and retracted. When putting on the body portion, two ends of the body portion **1** may be pulled apart from each other to form a gap, and a size of the gap may be greater than a size (such as a diameter) of the neck. After the neck fan is worn to the neck, the body portion may be reset, i.e., the two ends may be reset to original positions, and the gap between the two ends of the body portion may be reduced. In some embodiments, when the two ends are at the original positions, the two ends may be spaced apart from each other, and a size of the gap therebetween may be less than the size of the neck. In some embodiments, when the two ends of the body portion are at the original positions, the two ends may be connected to each other, such that the body portion is ring-shaped (such as forming an enclosed circle). The body portion **1** may be made of plastic. The user may carry the body portion easily and may feel comfortable when wearing the body portion. The air outlets **12** are oriented towards an inside and/or a top of the bent and tubular body portion. Therefore, while being worn, the neck does not cover the air outlets **12**, allowing the air to be blown out the air outlets **12** to the neck smoothly. In detail, some of the air outlets **12** defined in the body portion **1** are oriented towards the inside of the tubular body portion, and some of the air

outlets **12** are oriented towards the top of the tubular body portion **1**, increasing a range covered by the air supplied from the air outlets **12**.

[0104] As shown in FIGS. **1** to **3**, each of two ends of the body portion **1** defines a mounting cavity **13**. The fan assembly **2** is received in the mounting cavity **13** to be mounted with the body portion **1**. A portion of the body portion **1** corresponding to the mounting cavity **13** defines an air inlet **131**. The fan assembly **2** is fixedly received in the mounting cavity **13**. When the fan assembly **2** is operating, the fan assembly **2** draws in the outside air through the air inlet **131**, and is configured to accelerate the air to drive the air to flow into the air duct **11**. In the present embodiment, two ends of the body portion **1** define two mounting cavities **13**, and two fan assemblies **2** may be received in the two mounting cavities **13**, respectively. Each of the two fan assemblies **2** may operate independently. A plate **111** may be arranged in a middle of the air duct **11** to divide the air duct **11** into two sections. One of the two sections of the air duct **11** corresponds to one of the two fan assemblies **2**. By arranging the plate **111**, a length of the air duct **11** may be reduced effectively, ensuring an air velocity at an air outlet **12**, which is further away from the fan assembly **2**.

[0105] As shown in FIGS. **2** and **4**, the fan assembly **2** includes a fan blade **21**, a motor (not shown in the figures) which drives the fan blade **21** to rotate to generate an air flow, a battery **22** which provides power to the motor, a main control circuit board **23** which controls a rotation speed of the motor, and a gear switch **24** electrically connected to the main control circuit board **23**. When the neck fan needs to be initiated, the gear switch **24** may be pressed, and the main control circuit board **23** may receive a signal from the gear switch **24**. After receiving the signal, the main control circuit board **23** controls the motor to rotate to drive the fan blade **21** to rotate. Rotation of the fan blade **21** may lead the air at the outside to flow into the fan assembly **2** under the wind pressure, and the air may be guided by the fan assembly **2** to flow into the air duct **11**. When the wind speed of the air flowing out of the air outlets **12** needs to be adjusted, the gear switch **24** may be pressed to generate various gear signals. The main control circuit board **23** may receive the gear signals and control the rotation speed of the motor to further control the rotation speed of the fan blade **21** connected to the motor. Accordingly, a speed of the air driven by the fan assembly **2** to flow into the air duct **11** and a speed of the air flowing out through the air outlets **12** may change. A partition **14** may be arranged inside the body portion **1**. The partition **14** separates an inner space of the body portion **1** into a shaped cavity **15** and the air duct **11**. The battery **22** and the circuit board both are received in the shaped cavity **15**. The battery **22** may be disposed in a middle of the inner space of the body portion **1**. In this way, the fan assemblies **2** are arranged at the two ends of body portion **1**, whereas the battery **22** is arranged at the middle of the body portion **1**, the two ends of the body portion **1** may not be too heavy, and weights of the two ends of the body portion **1** may be balanced, preventing a weight center of the body portion **1** from being shifted towards one side.

[0106] As shown in FIG. **2**, a cross-sectional area of the air duct **11** gradually decreases from the two ends to the middle of the body portion **1**. The air flowing from the two ends to the middle of the body portion **1** may generate a frictional force. At the same time, the cross-sectional area of the air duct **11** decreases from the two ends to the middle of the body portion **1**, i.e., the cross-sectional area that the air passes through while flowing in the air duct **11** decreases. In this way, an effect of the frictional force on slowing down the speed of the air flow in the air duct **11** may be partially or completely eliminated. The speed of the air flowing out of the air outlets **12** may be controlled within a certain range, solving a problem of a large difference between the speed of the air flowing out of an air outlet **12** at or near the two ends of the air duct **11** and the speed of the air flowing out of an air outlet **12** in the middle of the air duct **11**.

[0107] As shown in FIG. **2**, the body portion **1** includes an outer shell **16** and an inner shell **17**. Compared to the body portion **1** configured as a one-piece structure, the body portion **1** of the present embodiment is assembled from the outer shell **16** and the inner shell **17**, allowing the fan assemblies to be processed and assembled more simply, and allowing later maintenance to be performed more easily. The partition **14** is arranged on the inner shell **17** and extends towards the outer shell **16**. The air duct **11** is defined cooperatively by the inner shell **17**, the outer shell **16** and the partition **14**. When the outer shell **16** is connected to the inner shell **17**, the partition **14** tightly abuts against an inner side of the outer shell **16**, preventing the air in the air duct **11** from entering the shaped cavity **15**. The air outlets **12** are defined in the inner shell **17**. A portion of the inner shell **17** that contacts the neck of the user extending upwardly to form a curved surface **171**. The curved surface **171** may be inclined at a certain angle relative to the portion that contacts the neck of the user, and the air outlets **12** are defined in the curved surface **171**, such that the air outlets **12** are oriented towards the inner side of the tubular body portion.

[0108] As shown in FIGS. **2** and **4**, the fan assembly **2** includes a turbine fan **25**. The turbine fan **25** defines two inlet windows **251**, increasing a circulation area and an efficiency of the turbine fan **25** communicating with the external air. A cavity wall of the mounting cavity **13** defines two air inlets **131** corresponding to the two inlet windows **251** of the turbine fan **25**. When the turbine fan **25** is rotating, the external air may enter the inlet windows **251** through the air inlets **131**. A guide post **132** is arranged on the cavity wall of the mounting cavity **13** and extends towards the turbine fan **25**. The turbine fan **25** defines a guide hole **253** corresponding to the guide post **132**. When the turbine fan **25** is received in the mounting cavity **13**, the guide post **132** extends into the guide hole **253**, thereby securing the turbine fan **25** in the mounting cavity **13**.

[0109] As shown in FIG. **4**, the turbine fan **25** defines an air outlet port **252**, which is corresponding to and communicating with the air duct **11**. An air flow generated by the turbine fan **25** enters the air duct **11** through the air outlet port **252**. A portion of a wall of the air outlet port **252** is received in the air duct **11**. The portion of the wall of the air outlet port **252** tightly abuts against a wall of the air duct **11**, reducing a loss of the air flow generated by the turbine fan **25** while the air is being guided into the air duct **11**.

[0110] In an embodiment, as shown in FIG. **4**, a centrifugal fan is arranged in the neck fan of the present disclosure and serves as the turbine blade assembly. The centrifugal fan includes a motor, a plurality of blades **21**, and a vortex tongue structure **27**. The blades **21** may be driven by the motor to rotate to intake air from an outside of the centrifugal fan to generate wind. The vortex tongue structure **27** includes a pressurizing plate **271** and a wind guiding plate **272** connected to the pressurizing plate **271**. The pressuriz-

ing plate **271** covers at least some of the blades **21**. The wind guiding plate **272** has an air channel configured to outlet wind generated by the blades **21**. The wind guiding plate **272** protrudes from the pressurizing plate **271** and is extending away from the blades **21**.

[0111] In detail, the pressurizing plate **271** is a curved wall arranged around ends of the some of the plurality of blades **21**. The centrifugal fan includes two side walls **273** connected to two opposite edges of the curved wall. The curved wall and the two side walls **273** cooperatively define a receiving space. The blades **21** are received in the receiving space. The curved wall surrounds ends of the some blades away from the motor. The two side walls **273** cover two sides of each of all blades. The two sides of the blade refer to sides disposed near the air inlets. Each of the two side walls **273** defines an air inlet hole **2730** corresponds to the air inlet window **251** of the blades **21**. The blades **21** are configured to rotate to intake air from the air inlet window **251** of each of the two side walls **273**.

[0112] In another embodiment, the centrifugal fan includes a first wind guiding sub-plate, a second wind guiding sub-plate opposite to the wind guiding sub-plate, a third wind guiding sub-plate connected between the first wind guiding sub-plate and the second wind guiding sub-plate, and a fourth wind guiding sub-plate connected between the first wind guiding sub-plate and the second wind guiding sub-plate and opposite to the third wind guiding sub-plate. The first wind guiding sub-plate, the second wind guiding sub-plate, the third wind guiding sub-plate, and the fourth wind guiding sub-plate cooperatively define the air channel communicating with the receiving space. The blades are configured to generate wind from the air intaken from the air inlet window, the pressurizing plate **271** is configured to guide the generated wind to flow to the air channel from the rest of the plurality of blades uncovered by the pressurizing plate. A direction to which an opening of the air channel faces is perpendicular to a direction along which the air is intaken into the receiving space through the air inlet windows. Further, ends of the rest of the plurality of blades away from the motor are exposed from the opening of the air channel.

[0113] The first wind guiding sub-plate acts as the wind guiding plate **272** and may be connected to an end of the curved wall of the pressurizing plate **271** and extending away from the two side walls **273**. The second wind guiding sub-plate may be connected to the other end of the curved wall and extending parallel to the first wind guiding sub-plate. The third wind guiding sub-plate may be connected to one of the two side walls **273**, and the fourth wind guiding sub-plate may be connected to the other one of the two side walls **273**.

[0114] In an embodiment, the first wind guiding sub-plate may be extending inclined relative to the end portion of the curved wall near the first wind guiding sub-plate. The second wind guiding sub-plate may be extending from the other end portion of the curved wall disposed near the second wind guiding sub-plate. The second wind guiding sub-plate and the other end portion of the curved wall disposed near the second wind guiding sub-plate may be extending on a same plane or may be inclined relative to each other. The present disclosure does not limit an angle between the second wind guiding sub-plate and the other end portion of the curved wall disposed near the second wind guiding sub-plate.

[0115] By connecting the pressurizing plate **271** with the wind guiding plate **272**, the air channel may be communicating with the receiving space. A direction to which an opening of the air channel faces is substantially perpendicular to a direction along which the air is intaken into the receiving space through the air inlet windows. The wind guiding plate **272** may be connected to the pressurizing plate **271** by a connecting member, such as screws, snaps, or adhesives; alternatively, the wind guiding plate **272** and the pressurizing plate **271** may be configured as a one-piece and integral structure.

[0116] In the present embodiment, the blades may generate wind based on the air intaken from the air inlet windows **251**. Since at least some of the blades are surrounded by the curved wall of the pressurizing plate **271**, the generated wind cannot flow out of the blades from the at least some of the blades but may flow out of (leave) of the blades from those blades that are not surrounded or blocked by the curved wall. In this way, the wind generated by the blades are pressurized, i.e., the wind may flow out of the blades **21** at a higher speed.

[0117] The opening of the air channel of the centrifugal fan may be communicated with the air duct **11**. Therefore, the air duct **11**, the air channel, and the receiving space are communicated with each other. Specifically, at least a part of the wind guiding plate **272** is connected to the partition **14**, such that wind, that is generated by the blades and flow out of the blades, may flow into the air duct. In some embodiments, as shown in FIG. **4**, a gap may be defined between the end of the partition **14** near the centrifugal fan and the wind guiding plate **272**. Therefore, some of the wind may flow into the shaped cavity **15** through the gap to dissipate heat generated by the battery and other components received in the shaped cavity **15**.

[0118] In some embodiments, a vortex shell assembly is provided and includes a pressurizing portion and an air guiding portion. The pressurizing portion includes a pressurizing plate and two side walls connected to two opposite sides of the pressurizing plate. The pressurizing plate may surround ends of some of a plurality of blades. The plurality of blades are configured to intake air from the two opposite sides of the pressurizing plate and generate wind from the intaken air. The pressurizing portion is configured to pressurize the wind generated by the blades and to guide the pressurized wind to flow to an air outlet.

[0119] The air guiding portion is connected to the pressurizing portion and protruding from and extending away from an outer surface of the pressurizing portion. The air guiding portion defines an air channel communicating with the air outlet of the pressurizing portion.

[0120] In an embodiment, as shown in FIGS. **5** and **6**, FIG. **5** is a schematic view of a neck fan according to an embodiment of the present disclosure, and FIG. **6** is an explosive view of the neck fan of FIG. **5**. The neck fan **30** includes an arc-shaped shell **10** and at least four fan assemblies **20**. The at least four fan assemblies **20** may be arranged inside the arc-shaped shell **10**. It shall be understood that, for illustration purposes only, in the following embodiment, the neck fan **30** including the at least four fan assemblies **20** will be taken as an example for illustration.

[0121] The arc-shaped shell **10** may be worn to surround the neck of the user. The arc-shaped shell **10** includes a first portion **11** and a second portion **12**. The first portion **11** and the second portion **12** are arranged around two sides of the

neck, such as a left side and a right side. Each of the first portion **11** and the second portion **12** includes an inner wall **101** configured to be close to the neck, an outer wall **102** opposite to the inner wall **101**, a top wall **103** close to a head of the user and connecting between the inner wall **101** and the outer wall **102**, and a bottom wall **104** opposite to the top wall **103** and connecting between the inner wall **101** and the outer wall **102**.

[0122] The inner wall **101**, the outer wall **102**, the top wall **103**, and the bottom wall **104** cooperatively define a receiving space **105**. Each of the first portion **11** and the second portion **102** defines air inlets **106** and air outlets **107** communicating with the receiving space **105**. In detail, in the present embodiment, the inner wall **101**, the bottom wall **104**, and the top wall **103** may be connected into an integrated structure (such as, a one-piece structure) to serve as a first side wall. The outer wall **102** may serve as a second side wall opposite to the first side wall. The first side wall and the second side wall cooperatively define the receiving space **105**.

[0123] At least one partition **13** is received inside the receiving space **105** to divide the receiving space **105** into at least two receiving sub-spaces **105***a* and **150***b*. The at least two receiving sub-spaces **105***a* and **150***b* are arranged successively along an extension direction of the arc-shaped shell **10**. Each of the at least two receiving sub-spaces correspond to and communicate with some of the air inlets **106** and some of the air outlets **107**. Each of the fan assemblies is received in one corresponding receiving sub-space. Each of the fan assemblies is configured to guide the air, which flows into the corresponding receiving sub-space through corresponding air inlets **106**, to flow to air outlets **107** corresponding to the receiving sub-space, allowing the air to be blown out through the corresponding air outlets **107**. The number of the air outlets **107** may be more than one. The more than one air outlets may be distributed along the extension direction of the arc-shaped shell **10**. Sizes, shapes of the air outlets **107** and/or distances between every two adjacent air outlets **107** vary gradually along the extension direction of the arc-shaped shell **10**.

[0124] Compared to the neck fan in the art, in the neck fan **30** illustrated in the above-mentioned embodiments, the arc-shaped shell **10** includes the first portion **11** and the second portion **12**. The first portion **11** and the second portion **12** are configured to be around two opposite sides of the neck. Each of the first portion **11** and the second portion **12** defines the receiving space **105**, the air inlets **106**, and the air outlets **107**. The air inlets **106** and the air outlets **107** communicate with the receiving space **105**. Each receiving space **105** is divided into at least two receiving sub-spaces by the partition **13**. Each of the fan assemblies **20** is arranged in one of the receiving sub-spaces and configured to guide the air at the air inlets **106** to flow to the air outlets **107** to be blown out. Since the fan assemblies **20** are received in the receiving space **105**, foreign matters, such as hair, may not be absorbed into the fan assemblies easily, allowing the neck fan to be used safely and conveniently. In the present embodiment, four receiving sub-spaces **105***a* and **105***b* are defined along the extension direction of the arc-shaped shell **10**, and four fan assemblies **20** may be arranged and received in four receiving sub-spaces respectively. Since a plurality of the receiving sub-spaces **105***a* and **105***b* are defined, a length of the air duct in each of the receiving sub-spaces may be relatively short. When the air is flowing in each of the receiving sub-spaces, a concentration of the air being output may be reduced, the user may be comfortable about the air output, wind noise may be reduced, and an air volume loss may be reduced. The applicant of the present disclosure finds that, the longer the air duct, the longer period of time that the air flows along the receiving sub-space, increasing the wind noise and the air volume loss. By dividing the receiving space **105** into the plurality of receiving sub-spaces **105***a* and **105***b*, the wind noise and the air volume loss may be reduced significantly. In addition, by determining an extension direction, sizes, shapes of the air outlets **107** and distances between two adjacent air outlets **107**, the user may be more comfortable about the air output from the neck fan **30**, the air may be output from the neck fan **30** more softly, improving the user's experiences.

[0125] Further, each fan assembly **20** includes a driving shaft **21** and a fan blade assembly **22** mounted on the driving shaft **21**. The driving shaft **21** extends from the inner wall **101** towards the outer wall **102**. In this way, a thickness of the arc-shaped shell **10** along a direction from the inner wall **101** to the outer wall **102** may be reduced, such that the user may be comfortable when wearing the neck fan.

[0126] Further, the air inlets **106** are defined in the outer wall **102**, and the air outlets **107** are defined in the top wall **103**. It shall be understood that, the air inlets **106** are defined in the outer wall **102**, and the outer wall **102** faces outwardly (i.e., opposite to the neck of the user), and therefore, the air may enter the shell easily and smoothly. In addition, the air outlets **107** are defined in the top wall **103**, and the driving shaft **21** extends from the inner wall **101** to the outer wall **102**. In this way, the fan blade assemblies **20** may direct the air from the air inlets **106** to the air outlets **107** to achieve a high air guiding efficiency. Moreover, the air outlets **107** are defined in the top wall **103**, such that the air may be output towards a face and the head of the user, such that the user may be cooled rapidly.

[0127] Further, an end of the driving shaft **21** is fixedly arranged on the inner wall **101**. It shall be understood that, such arrangement together with the air inlets **106** defined in the outer wall **102** allows the air inlets **106** to be unblocked, achieving a better air inlet effect.

[0128] Further, each fan assembly **20** corresponds to a plurality of air inlets **106**. It shall be understood that, air is guided into the fan assembly **20** through the plurality of fan inlets **106**, allowing the neck fan to have a better appearance, preventing foreign matters from entering the fan assembly **20** easily, increasing usage safety.

[0129] Further, the number of the air inlets **106** corresponding to each fan assembly **20** may be the same. The air inlets **106** corresponding to each fan assembly **20** are distributed in a circular shape. It shall be understood that, such arrangement allows the neck fan to have a better appearance, and prevents foreign matters from entering the fan assembly **20** easily. A better air inlet effect may be achieved due to such arrangement and shapes of the fan assemblies **20**.

[0130] Further, a plurality of air inlets **108** are defined in the inner wall **101** corresponding to each fan assembly **20**. The fan assembly **20** can guide the air from the air inlets **108** to the air outlets **107**. Each of the plurality of air inlets **108** is arc shaped. The plurality of air inlets **108** corresponding to each fan assembly **20** are distributed in a circular shape. It shall be understood that, such arrangement allows the neck fan to have a better appearance, and prevents foreign matters

from entering the fan assembly **20** easily. A better air inlet effect may be achieved due to such arrangement and shapes of the fan assemblies **20**.

[0131] Further, the fan blade assembly **22** is a turbine fan blade assembly. It shall be understood that the turbine fan blade assembly may reduce the wind noise and improves the usage safety.

[0132] Further, the neck fan **30** further includes a connecting portion **14** connected between the first portion **11** and the second portion **12**. The connecting portion **14** is configured to join the first portion **11** and the second portion **12** into an integrated structure. In the present embodiment, the connecting portion **14** may be configured as an individual element. In some embodiments, the connecting portion **14** may be integrally formed with one of the first portion **11** and the second portion **12**, and then assembled with the other of the first portion **11** and the second portion **12**. A structure of the connecting portion **14** may be various, and shall not be limited by the present disclosure.

[0133] The first portion **11** further includes an end plate **109** disposed at an end of the first portion **11** away from the connecting portion **14**. The second portion **12** further includes an end plate **109** disposed at an end of the second portion **12** away from the connecting portion **14**. Each end plate **109** is connected to the top wall **103**, the bottom wall **104**, the inner wall **101** and the outer wall **102**. Sizes of the air inlets **106** corresponding to the fan assembly **20** arranged near the connecting portion **14** are less than those of the air inlets **106** corresponding to the fan assembly **20** arranged near the end plate **109**. An outer diameter of the fan assembly **20** arranged near the connecting portion **14** is less that that of the fan assembly **20** arranged near the end plate **109**. In other words, an end of the first portion **11** at which the end plate **109** is disposed may serve as a free end, and an end of the second portion **12** at which the end plate **109** is disposed may serve as another free end. An end of the first portion **11** near the connecting portion **14** may serve as a connecting end, and an end of the second portion **12** near the connecting portion **14** may serve as another connecting end. In the present embodiment, the sizes of the air inlets **106** corresponding to the fan assembly **20** arranged near the connecting end are less than those of the air inlets **106** corresponding to the fan assembly **20** arranged near the free end. The outer diameter of the fan assembly **20** arranged near the connecting end is less than that of the fan assembly **20** arranged near the free end. It shall be understood that, by determining various sizes of the air inlets **106** and various outer diameters of the fan blade assemblies **20**, a size of the arc-shaped shell **10** may be gradually reduced along a direction from the end plate **109** to the connecting portion **14**, such that the shell **10** is more suitable to a curve of the neck, allowing the user to be comfortable. In the present embodiment, the end plate **109** may be arc shaped, providing a better appearance. The shape of the end plate **109** may further be suitable to shapes of the receiving sub-spaces **105***a* and shapes of the fan assemblies **20** to achieve a better air inlet and outlet effect.

[0134] It shall be understood that, for each of the first portion **11** or the second portion **12**, the inner wall **101**, the top wall **103**, the bottom wall **104**, the end plate **109**, and the partition **13** may be formed as a one-piece structure. The outer wall **102** may be buckled with the top wall **103**, the bottom wall **104**, and the end plate **109** through a buckle. There may be various types of buckles and various means to connect the above structure integrally, which will not be limited by the present disclosure.

[0135] Further, the number of the air outlets **107** may be more than one. The more than one air outlets **107** are distributed along the extension direction of the arc-shaped shell **10** and extends to a position near the connecting portion **14**. Sizes of the more than one air outlets **107** gradually decrease along a direction from the end plate **109** to the connecting portion **14**. It shall be understood that, the more than one air outlets **107** may improve the usage safety. Sizes of the more than one air outlets **107** gradually decrease along the direction from the end plate **109** to the connecting portion **14**, allowing the air to be output in a more concentrated manner, improving air outlet intensity. In addition, sizes of the receiving sub-spaces **105***a* and **105***b* gradually decrease along the extension direction of the air duct. Therefore, the air output from the overall neck fan may be more uniform, and the user may feel comfortable. In detail, the extension direction of the arc-shaped shell **10** includes a first extension direction and a second extension direction. A direction extending from the first portion **11** to the second portion **12** may be referred to as a first extension direction D**1**. The sizes of the more than one air outlets **107** defined in the first portion **11** are gradually reduced along the first extension direction D**1**. A direction extending from the second portion **12** to the first portion **11** is referred to as a second extension direction D**2**. The sizes of the more than one air outlets **107** defined in the second portion **12** are gradually reduced along the second extension direction D**2**. Furthermore, each of the air outlets **107** is a strip-shaped air outlet. An extension direction of the strip-shaped air outlet may be inclined in a preset angle relative to the extension direction of the arc-shaped shell **10**. The preset angle may be 90 degrees. It shall be understood that, by defining the air outlets **107** in the above extension direction, the air outlet of the neck fan **30** may be softer, and the user may be more comfortable, improving the user's experience. In particular, when the preset angle is 90 degrees, the air outlet efficiency of the air outlets **107** is improved. In addition, a cross-sectional area of the air duct of the first portion is gradually decreased along a direction from the first portion to the second portion; and/or a cross-sectional area of the air duct of the second portion is gradually decreased along a direction from the second portion to the first portion.

[0136] Further, the partition **13** is connected to a surface of the inner wall **101** facing the outer wall **102** and extends towards the outer wall **102**. The partition **13** includes a partition body **130**, a first guiding portion **131**, and a second guiding portion **132**. One end of the partition body **130** is connected to an end of the bottom wall **104** near the end plate **109**. The other end of the partition body **130** extends towards a middle of the top wall **103** to be close to a middle of the top wall **103**. The first guiding portion **131** includes a first sub-portion **131***a* and a second sub-portion **131***b*. The first sub-portion **131***a* surrounds a periphery of the fan assembly **20** arranged near the end plate **109**. The second portion **131***b* is connected between the first portion **131***a* and the top wall **103**. The second guiding portion **132** is connected to the partition body **130** and surrounds a periphery of the fan assembly **20** near the connecting portion **14**. It shall be understood that, the partition body **130** is configured to divide the receiving space **105** into the two receiving sub-spaces **105***a* and **105***b*. The first guiding portion **131** and the second guiding portion **132** are configured to match

shapes of the fan blade assemblies **22** so as to guide the air and achieve a better air outlet effect.

[0137] In particular, to the extent understandable to those in the centrifugal fan technical field, as shown in FIG. **6**, the first guiding portion **131** serves as the vortex tongue structure **27** shown in FIG. **4**, the first sub-portion **131***a* serves as the pressurizing plate **271** shown in FIG. **4** and the second sub-portion **131***b* serves as the wind guiding plate **272** shown in FIG. **4**.

[0138] Further, an end of the second guiding portion **132** away from the partition body **130** extends to reach the connecting portion **14**. Along a direction from the end plate **109** to the connecting portion **14**, a distance between the second guiding portion **132** and the bottom wall **103** is gradually reduced until the second guiding portion **132** is tangent to the bottom wall **103**, and then the distance between the second guiding portion **132** and the bottom wall **103** is gradually increased to a predetermined value and remains at the predetermined value. The predetermined value may be determined according to actual demands, for example, in some embodiments, the predetermined value may be a half of a distance between the top wall **103** and the bottom wall **104**. Such arrangement of the second guiding portion **132** allows the air duct to extend to reach the connecting portion **14**. In addition, some of the air outlets **107** are defined near the connecting portion **14**. In this way, a range of the air output from the neck fan **30** is larger, improving the cooling effect.

[0139] Further, the neck fan **30** further includes an electronic control assembly **15**. The electronic control assembly **15** includes a battery and a printed circuit board **151**. The second guiding portion **132** and the partition body **130** cooperatively define a receiving chamber **133** to receive at least part of the electronic control assembly **15**. It shall be understood, the electronic control assembly **15** are received in the receiving chamber **133**, preventing heat generated by the electronic control assembly **15** from entering the receiving sub-spaces **105***a* and **150***b*, and therefore, the cooling effect may not be affected. In addition, such arrangement allows individual arrangement of heat dissipation and wiring of the electronic control assembly **15**, thereby improving the usage safety.

[0140] Further, the electronic control assembly **15** further includes a switch button **152** and a data port **153**. The outer wall **102** of the second portion **12** defines a first opening **102***a* corresponding to the switch button **152** and a second opening **102***b* corresponding to the data port **153**. The switch button **152** is mounted corresponding to the first opening **102***a* and connected to the printed circuit board **151**. The data port **153** is mounted corresponding to the second opening **102***b* and connected to the printed circuit board **151**. Such arrangement allows the user to operate the neck fan easily, improving user's experience. Furthermore, it shall be understood, in addition to the electronic control assembly **15**, structures and elements of the first portion **11** and the second portion **12** are symmetrically arranged to increase wearing comfort.

[0141] Further, the outer wall **102** includes a main plate **1021** and an auxiliary plate **1022**. A shape and a position of the auxiliary plate **1022** correspond to those of the partition **13**. The auxiliary plate **1021** is connected between the main plate **1021** and the partition **13**. It shall be understood that the auxiliary plate **1022** and the partition **13** cooperatively define the air duct of the fan assembly **20**, so as to achieve a better air guiding effect.

[0142] In another embodiment, as shown in FIGS. **7** and **8**, FIG. **7** is a schematic view of a neck fan **30** according to an embodiment of the present disclosure, and FIG. **8** is an explosive view of the neck fan **30** of FIG. **7**. The neck fan **30** includes an arc-shaped shell **10** and at least four fan assemblies **20**. The at least four fan assemblies **20** are arranged inside the arc-shaped shell **10**. It shall be understood that, in the present embodiment, a neck fan having four fan assemblies **20** may be taken as an example for illustration.

[0143] The arc-shaped shell **10** may be hung around the neck of the user. The arc-shaped shell **10** includes a first portion **11** and a second portion **12**. The first portion **11** and the second portion **12** are arranged around two sides of the neck, such as a left side and a right side. Each of the first portion **11** and the second portion **12** includes a side wall that defines a receiving space **105**. Each of the first portion **11** and the second portion **12** defines air inlets **106** and air outlets **107** communicating with the receiving space **105**.

[0144] At least one partition **13** is received in the receiving space **105** to divide the receiving space **105** into at least two receiving sub-spaces **105***a* and **150***b*. The at least two receiving sub-spaces **105***a* and **150***b* are arranged successively along an extension direction of the arc-shaped shell **10**. Each of the at least two receiving sub-spaces correspond to and communicate with some of the air inlets **106** and some of the air outlets **107**. Each of the fan assemblies **20** is received in one corresponding receiving sub-space. Each of the fan assemblies is configured to guide the air, which flows into the corresponding receiving sub-space through corresponding air inlets **106**, to flow to air outlets **107** corresponding to the receiving sub-space, allowing the air to be blown out through the corresponding air outlets **107**. The number of the air outlets **107** may be more than one. The more than one air outlets **107** may be distributed along the extension direction of the arc-shaped shell **10**. Sizes, shapes of the air outlets **107** and/or distances between every two adjacent air outlets **107** vary gradually along the extension direction of the arc-shaped shell **10**.

[0145] Compared to the neck fan in the art, in the neck fan **30** illustrated in the above-mentioned embodiments, the arc-shaped shell **10** includes the first portion **11** and the second portion **12**. The first portion **11** and the second portion **12** are configured to be around two opposite sides of the neck. Each of the first portion **11** and the second portion **12** defines the receiving space **105**, the air inlets **106**, and the air outlets **107**. The air inlets **106** and the air outlets **107** communicate with the receiving space **105**. Each receiving space **105** is divided into at least two receiving sub-spaces **105***a* and **105***b* by the partition **13**. Each of the fan assemblies **20** is arranged in one of the receiving sub-spaces and configured to guide the air at the air inlets **106** to flow to the air outlets **107** to be blown out. Since the fan assemblies **20** are received in the receiving space **105**, foreign matters, such as hair, may not be absorbed into the fan assemblies easily, allowing the neck fan to be used safely and conveniently. In the present embodiment, four receiving sub-spaces **105***a* and **105***b* are defined along the extension direction of the arc-shaped shell **10**, and four fan assemblies **20** may be arranged and received in four receiving sub-spaces respectively. Since a plurality of the receiving sub-

spaces **105***a* and **105***b* are defined, a length of the air duct in each of the receiving sub-spaces may be relatively short. When the air is flowing in each of the receiving sub-spaces, a concentration of the air being output may be reduced, the user may be comfortable about the air output, wind noise may be reduced, and an air volume loss may be reduced. The applicant of the present disclosure finds that, the longer the air duct, the longer period of time that the air flows along the receiving sub-space, increasing the wind noise and the air volume loss. By dividing the receiving space **105** into the plurality of receiving sub-spaces **105***a* and **105***b*, the wind noise and the air volume loss may be reduced significantly.

[0146] In detail, the side wall includes a first side wall **101'** configured to be close to the neck of the user and a second side wall **102** opposite to the first side wall **101'**. The air inlets **106** are defined in the second side wall **102**, and the air outlets **107** are defined in a region of the first side wall **101'** adjacent to the second side wall **102** or defined in a region of the second side wall **102** adjacent to the first side wall **101'**. In the present embodiment, the air outlets **107** are defined in the region of the first side wall **101'** adjacent to the second side wall **102** and are close to the user's head and face.

[0147] Further, in detail, a direction extending from the first portion **11** to the second portion **12** may be referred to as a first extension direction D**1**. The sizes of the more than one air outlets **107** defined in the first portion **11** are gradually reduced along the first extension direction D**1**. A direction extending from the second portion **12** to the first portion **11** is referred to as a second extension direction D**2**. The sizes of the more than one air outlets **107** defined in the second portion **12** are gradually reduced along the second extension direction D**2**. Furthermore, each of the air outlets **107** is a strip-shaped air outlet. An extension direction of the strip-shaped air inlet may be inclined in a preset angle relative to the extension direction of the arc-shaped shell **10**. The preset angle may be 90 degrees. It shall be understood that, by defining the air outlets **107** in the above extension direction, the air outlet of the neck fan **30** may be softer, and the user may be more comfortable, improving the user's experience. In particular, when the preset angle is 90 degrees, the air outlet efficiency of the air outlets **107** is improved. In some embodiments, the air outlets **107** may be at least one of petal-shaped and heart-shaped. It shall be understood that, both the petal-shaped air outlets **107** and the heart-shaped air outlets **107** may output the air uniformly and provides better appearance for the neck fan.

[0148] Further, each fan assembly **20** includes a driving shaft **21** and a fan blade assembly **22** mounted on the driving shaft **21**. The driving shaft **21** extends from the first side wall **101'** towards the second side wall **102**. In this way, a thickness of the arc-shaped shell **10** along a direction from the first side wall **101'** to the second side wall **102** may be reduced, such that the user may be comfortable when wearing the neck fan.

[0149] It shall be understood, the air inlets **106** are defined in the second side wall **102**, and the second side wall **102** faces outwardly (i.e., away from the user's neck) allowing the air to flow into the air inlets **106** easily, allowing the air to flow in smoothly. Such arrangement together with the driving shaft **21** extending along the direction from the first side wall **101'** to the second side wall **102** enables the fan blade assembly **22** to direct the air from the air inlets **106** to the air outlets **107**, thereby achieving a relatively high air guiding efficiency. Moreover, the air outlets **107** are defined at the first side wall **101'** close to the user's head and face, such that the air may be directed out towards the user's head and face, thereby achieving better cooling effect.

[0150] The first side wall **101'** defines a plurality of air inlets **108** corresponding to each fan assembly **20**. The fan assembly **20** can guide the air at the air inlets **108** to the air outlets **107**. Each of the plurality of air inlets **108** is arc shaped. The plurality of air inlets **108** corresponding to each fan assembly are arranged in a circular shape. It shall be understood, such arrangement provides a better appearance of the neck fan **30**, and prevents the foreign matters from entering the fan assembly **20**. Such arrangement together with shapes of the fan assemblies **20** achieves a better air guiding effect.

[0151] In an embodiment, the first side wall defines the plurality of air inlets **108**, and the second side wall defines the plurality of air inlets **106**. The first side wall faces the neck of the user, and the second side wall is connected to the first side wall and faces away from the neck. Further, at least one of a region of the first side wall close to the second side wall and a region of the second side wall close to the first side wall defines the plurality of air outlets **107**. In addition, the plurality of air outlets **107** are located between the plurality of air inlets **108** of the first side wall and the plurality of air inlets **106** of the second side wall along an extension direction of the driving shaft **21**.

[0152] Further, the first portion **11** has a connecting end **10***a* connected to the second portion **12** and a free end **10***b* away from the connecting end **10***a*; and the second portion **12** also has a connecting end **10***a* connected to the first portion **11** and a free end **10***b* away from the connecting end **10***a*. Sizes of the air outlets **107** corresponding to the fan assembly **20** adjacent to the connecting end **10***a* are less than those of the air outlets **107** corresponding to the fan assembly **20** adjacent to the free end **10***b*. An outer diameter of the fan blade assembly **22** adjacent to the connecting end **10***a* is less than that of the fan blade assembly **22** adjacent to the free end **10***b*. It shall be understood, the sizes of the air inlets **106** and the diameter of the fan blade assembly **22** enables a size of the arc-shaped shell **10** to be reduced gradually along a direction from the free end **10***b* to the connecting end **10***a*, such that the shape of the neck fan may fit a curve of the neck more appropriately, increasing wearing comfort.

[0153] In the present embodiment, each of the first portion **11** and the second portion **12** includes a cover **16**. The cover **16** is disposed on a side of the second side wall **102** away from the first side wall **101'** and corresponds to (such as covers) the air inlets **106**. A gap **161** communicated with the air inlets **106** is defined between an edge of the cover **16** and the second side wall **102** to allow air to flow into the air inlets **106**.

[0154] Further, the second side wall **102** includes a main body **102***c* and defines a recess **102***d*. A wall of the recess **102***d* is connected to the main body **102***c*. In other words, the side of the second side wall **102** away from the first side wall **101'** is recessed inwardly towards the first side wall **101'** to define the recess **102***d*. The air inlets **106** are defined at the recess **102***d*, such as defined in the bottom wall of the recess **102***d*. The cover **16** covers the recess **102***d*. The cover **16** is partially connected to the main body **102***c* connected to wall of the recess **102***d* to define the gap **161**. It shall be understood, the cover **16** covers the air inlets **106**, and air enters through the gap **161** and the air inlets **106**. In this way,

a better appearance is provided, and the foreign matters may be prevented from entering the fan assembly **20**, increasing the usage safety. Defining the recess **102***d* further reduces an overall size of the neck fan **30** and provides the appearance aesthetics.

[0155] Further, the cover **16** includes a cover body **162** and a first mounting portion **163** arranged at a side of the cover body **162** adjacent to the second side wall **102**. A side of the second side wall **102** close to the cover **16** is arranged with a second mounting portion **102***e*. In detail, the second mounting portion **102***e* may be arranged on the wall of the recess **102***d* and is located between the plurality of air inlets **106**. Further, the cover **16** further includes the cover body **162** and the first mounting portion **163** arranged on the cover body **162**. The second mounting portion **102***e* is arranged on the second side wall **102** and is engaged with the first mounting portion **163**. Engagement between the second mounting portion **102***e* and the first mounting portion **163** enables the cover **16** to be mounted (such as detachably or movably mounted) on the side of the second side wall **102** away from the first side wall **101'**. It shall be understood, engagement between the first mounting portion **163** and the second mounting portion **102***e* enables the cover **16** to be detachably or movably mounted onto the second side wall **102**, allowing the neck fan to be used or disassembled easily.

[0156] Further, the first mounting portion **163** and the second mounting portion **102***e* may be engaged in a first mounting state or in a second mounting state. In the first mounting state, the gap **161** is defined between the edge of the cover **16** and the second side wall **102**. In the second mounting state, the edge of the cover **16** abuts against the second side wall **102** so as to cover the air inlets **106**. It shall be understood, the first mounting portion **163** and the second mounting portion **102***e* may be engaged in the first mounting state or in the second mounting state. Therefore, in the first mounting state, the air can enter the fan assembly through the gap **161** and the air inlets **106**; and in the second mounting state, the gap **161** and the air inlets **106** are covered, and dust may be prevented from entering the arc-shaped shell through the air inlets **106** when the neck fan **30** is not in use, achieving the dustproof effect.

[0157] It shall be understood, the first mounting state and the second mounting state may be switched from one to the other. In some embodiments, elastic fasteners may be configured, serving as the first mounting portion and the second mounting portion. In this way, the first mounting state and the second mounting state may be switched by pressing the cover **16** along a direction facing the second side wall **102**. For example, a first press is made to switch from the first mounting state to the second mounting state, and a next press is made to switch from the second mounting state to the first mounting state. There are various structures for implementing the above-mentioned press switch control, which will not be described specifically hereinafter.

[0158] In the present embodiment, the first mounting portion **163** may be a mounting shaft connected to the cover body **162**, and the second mounting portion **102***e* may be a mounting hole corresponding to the mounting shaft. In other embodiments, the first mounting portion **163** may be a mounting hole defined in the cover body **162**, and the second mounting portion **102***e* may be a mounting shaft corresponding to the mounting hole. It shall be understood, the mounting shaft may be received in the mounting hole to engage the cover **16** to the second side wall **102**, achieving an easy mounting operation.

[0159] In the present embodiment, the partition **13** includes a partition body **131** and a guiding portion **132**. A shape of the partition body **131** at least partially fits to a shape of the fan assembly **20**, and the partition body **131** surrounds a periphery of the fan assembly **20**. The guiding portion **132** is connected to the partition body **131**. The guiding portion **132** and the side wall cooperatively define the air duct communicated to the air outlets **107**. It shall be understood that by adapting the partition part **131** to the shape of the fan assembly **20** and by configuring the guiding portion **132** and the side wall to cooperatively define the air duct **17** communicated to the air outlets **107**, a better air guiding effect may be achieved, and an air inlet and outlet efficiency may be improved.

[0160] Further, for each of the first portion **11** and the second portion **12**, the guiding portion **132** includes a first guiding sub-portion **132***a* located between two fan assemblies **20** and a second guiding sub-portion **132***b* arranged at a side of one of the two fan assemblies **20** away from the other of the two fan assemblies. The second guiding sub-part **132***b* extends from one of the first portion **11** and the second portion **12** to the other of the first portion **11** and the second portion **12**. A side of the second guiding sub-portion **132***b* and the side wall cooperatively define an accommodating space **18**. The neck fan **30** further includes an electronic control assembly **15**. The electronic control assembly **15** includes a battery and a printed circuit board. The accommodating space **18** is defined to receive at least one of the battery and the printed circuit board. It shall be understood, by receiving the electronic control assembly **15** in the accommodating space **18**, configuration of the neck fan **30** may be effectively balanced, providing wearing comfort for the user. In addition, the fan blade assembly **20** may be a turbine fan blade assembly. It shall be understood that the turbine fan blade assembly may achieve lower noise and higher safety.

[0161] In an embodiment, as shown in FIG. **4**, the present disclosure provides a turbine blade assembly **22** for a neck fan. The turbine blade assembly **22** has a first side and a second side opposite to the first side. The turbine blade assembly **22** includes a first side blade disposed at the first side, a second side blade disposed at the second side, and a separation plate disposed between the first side and the second side. The first side defines a first inlet window, and the second side defines a second inlet window. The first inlet window and the second inlet window are defined to allow air to flow in from an outside of the neck fan. A bottom wall of the first inlet window is recessed from a plane where the first side blade is disposed. A bottom wall of the second inlet window is recessed from a plane where the second side blade is disposed.

[0162] As shown in FIGS. **10-11**, FIG. **10** is a perspective view of a neck fan according to another embodiment of the present disclosure, and FIG. **11** is a perspective view of the neck fan shown in FIG. **10** from another view angle. The neck fan **1** includes a curved shell **10** and a fan assembly **20**. The neck fan **1** can be worn around the neck.

[0163] As shown in FIGS. **12-14**, FIG. **12** is an exploded view of the neck fan shown in FIG. **10**, FIG. **13** is a perspective view of a portion of the neck fan shown in FIG. **10**, and FIG. **14** is a cross sectional view of the neck fan

shown in FIG. **10**. The shell **10** includes a first shell **11** and a second shell **12**. The first shell **11** and the second shell **12** are opposite to each other, and are disposed on opposite sides of the neck when the neck fan **1** is worn on the user. At least one of the first shell **11** and the second shell **12** includes a first part **111**, a second part **112** and a third part **113**. The third part **113** is connected between the first part **111** the second part **111**. The first part **111** defines a first storage cavity **111***a* and a first air outlet **111***b* communicating with the first storage cavity **111***a*. The second part **112** defines a second storage cavity **112***a* and a second air outlet **112***b* communicating with the second storage cavity **112***a*. The third part **113** defines a third storage cavity **113***a* between the first storage cavity **111***a* and the second storage cavity **112***a*, and the third storage cavity **113***a* is communicating with the first storage cavity **111***a* and the second storage cavity **112***a*. At least one of the first shell **11** and the second shell **12** defines an air inlet **114** communicating with at least one of the first storage cavity **111***a*, the second storage cavity **112***a* and the third storage cavity **113***a*. The fan assembly **20** is at least partially received in the third storage cavity **113***a* and is configured to guide the air from the air inlet **114** to the first air outlet **111***b* and the second air outlet **112***b*.

[0164] As shown in FIG. **9**, FIG. **10**, FIG. **11** and FIG. **12**, the neck fan includes a shell **1**, an adjustment assembly **2** and a fan assembly **3**. The shell **1** is configured to hang around the user's neck. The shell **1** defines an air inlet C**1**, an air outlet C**2** and an air duct C**3**, and the air inlet C**1**, the air outlet C**2** and the air duct C**3** communicate with each other. The adjustment assembly **2** is arranged on the shell **1** to adjust a bending angle of the shell **1**. The fan assembly **3** is received inside the shell **1** and is configured to guide the air entering from the air inlet C**1** to flow along the air duct C**3** to reach the air outlet C**2**, such that the air further flows to an outside of the neck fan through the air outlet C**2**. The adjustment assembly **2** is configured to adjust the bending angle of the shell **1**, such that the shell **1** can matched with various neck sizes of various users. In this way, the neck fan can be portable and highly adaptable, allowing various users to have better usage experience.

[0165] In an embodiment, the shell includes a first shell, a second shell and a third shell. The third shell is connected between the first shell and the second shell. Each of two opposite ends of the third shell is configured with one adjustment assembly. An end of the third shell is connected to the first shell through a corresponding adjustment assembly, and the other end of the third shell is connected to the second shell through another corresponding adjustment assembly. Each of the first shell and the second shell is rotatable relative to the third shell through shell adjustment assembly.

[0166] In an embodiment, each of the first shell and the second shell may serve as an air guide portion **11**. The third shell may serve as a neck wearing portion **12**. That is, in the present embodiment, the shell **1** includes the air guide portion **11** and the neck wearing portion **12**. The air guide portion **11** is disposed at each of two free ends of the neck wearing portion **12**. The air guide portion **11** is connected to the neck wearing portion **12** through the adjustment assembly **2**. The adjustment assembly **2** may be configured with the air guide portion **11** to connect to the neck wearing portion **12**. Alternatively, the adjustment assembly **2** may be configured with the neck wearing portion **12** to connect to the air guide portion **11**. The air duct C**3** extends from the fan assembly **3** towards the neck wearing portion **12**.

[0167] In another embodiment, the adjustment assembly **2** includes a position limitation member **21** and a shaft structure **22**. The shaft structure **22** can rotate and hover by itself. The shaft structure **22** includes a first shaft portion **221** and a second shaft portion **222**. The first shaft portion **221** and the second shaft portion **222** can rotate relative to each other. The position limitation member **21** is disposed at an end portion of the neck wearing portion **12**. The position limitation member **21** is connected to the first shaft portion **221**. The second shaft portion **222** is connected to the air guide portion **11**. The shaft structure **22** and the position limitation member **21** are configured to enable the shaft structure **22** to connect to both the air guide portion **11** and the neck wearing portion **12**. In this way, so that the air guide portion **11** and the neck wearing portion **12** can rotate relative to each other. While the user is wearing the fan, the air guide portion **11** and the neck wearing portion **12** may be rotated to reach a position suitable for the wearer's neck. The shaft structure **22** can hover by its own, and therefore, rotation can be stopped when the suitable position is reached, preventing the shaft structure **22** from further rotating while the user is wearing the fan. In this way, while the user is wearing the fan, the fan can stably attach to the user's neck.

[0168] It shall be understood that, while the user is wearing the fan, an opening angle of the neck fan is selectable. The opening angle can be adjusted to blow the air to various regions of the head. In this way, the shaft structure allows the user to rotate the shells to blow the air to desired places on purpose.

[0169] In another embodiment, the shaft structure **22** is received inside the neck wearing portion **12**, and an outer periphery of the shaft structure **22** is not provided with any damping element. In this way, the shaft structure **22** can be well protected from erosion caused by external water or dust. It shall be understood that the shaft structure **22** is received inside the neck wearing portion **12**. Compared to the shaft structure **22**, the end portion of the neck wearing portion **12** is closer to the air guide portion **11**. The shaft structure **22** is located at a position having a certain distance from the end portion of the neck wearing portion **12**. The neck wearing portion **12** includes an upper shell and a lower shell. The shaft structure **22** is arranged on the lower shell of the neck wearing portion **12**, and specifically, the shaft structure **22** is disposed on a side near the upper shell. The end portion of the neck wearing portion **12** wraps around the shaft structure **22**. In this way, the shaft structure **22** is wrapped and hidden, enhancing aesthetic appearance and integrity of the neck fan, and allowing an internal space of the neck section **12** to used optimally.

[0170] The damping element may include an elastic pad, a silicone pad, a metal pad, and so on. Generally, the pad may be worn out and become smooth after being used for a long time, resulting in a lower friction, which in turn affects the hovering effect.

[0171] In another embodiment, as shown in FIG. **13**, the position limitation member **21** defines a first recess **211** for receiving the first shaft portion **221**. An end of the air guide portion **11** near the neck wearing portion **12** defines a second recess **122** for receiving the second shaft portion **222**. A size of the first shaft portion **221** is larger than a size of the first recess **211**. A size of the second shaft portion **222** is larger than a size of the second recess. The "size" may refer to a

diameter in the present embodiment. In this way, an interference fit is achieved between the shaft structure **22** and the first recess **211**, and between the shaft structure **22** and the second recess **122**. In addition, such configuration may extend a service life of the shaft structure. After the shaft structure **22** is rotated for a large number of times and is used for a long time, the shaft structure **22** may not be worn out, a relatively high friction may be maintained, ensuring the hovering effect, and a slipping phenomenon may be avoided.

[0172] The above-mentioned configuration allows the shaft structure **22** to be wrapped by a wall of the first recess **211** and a wall of the second recess **122**. On one hand, rotation of the shaft structure **22** may not be affected, and on the other hand, the shaft structure may be well protected, extending the service life of the shaft structure **22**.

[0173] In another embodiment, a surface of the shaft structure has knurling. In detail, an outer surface of the shaft structure is arranged with the knurling. The knurling allows the shaft structure **22** to be in the interference fit with the first recess **211** and the second recess. A contact area between the shaft structure and the wall of the first recess **211** and a contact area between the shaft structure and the wall of the second recess are increased, ensuring the frictional force to be sufficient for the hovering effect, and the service life of the neck fan, which can adjust the bending angle, may be increased.

[0174] In another embodiment, the position limitation member **21** defines a wire slot **212** for receiving and collecting wires. The wire slot **212** allows the wires to be gathered well, preventing the wires from occupying too much space of the neck fan, facilitating subsequent maintenance of the neck fan, and facilitating replacement of components of the neck fan.

[0175] In another embodiment, the position limitation member **21** is an independent structure. Alternatively, the position limitation member **21** may be integrally formed with the air guide portion **11**. Alternatively, the position limitation member **21** may be integrally formed with the neck wearing portion **12**.

[0176] In another embodiment, one of the air guide portion **11** and neck wearing portion **12** is configured with a plurality curved bumps, and the other one of the air guide portion **11** and neck wearing portion **12** defines a plurality of curved grooves. The curved bumps may be adapted to and engaged with the curved grooves. The bending angle of the shell **1** may be adjusted by engaging the curved bumps with the curved grooves at various positions. In this way, the neck fan may be adapted to various neck sizes of various users.

[0177] In another embodiment, the adjustment assembly **2** includes a plurality of protrusions and a plurality of recesses. The plurality of protrusions are arranged on one of the air guide portion **11** and the neck wearing portion **12**, and the plurality of recesses are defined in the other one of the air guide portion **11** and the neck wearing portion **12**. The bending angle of the shell **1** may be adjusted by engaging the protrusions with the recesses at various positions. In this way, the neck fan may be adapted to various neck sizes of various users.

[0178] In another embodiment, the adjustment assembly **2** includes a slide block and a slide rail. The slide block is arranged one of the air guide portion **11** and the neck wearing portion **12**, and the slide rail is arranged on the other one of the air guide portion **11** and the neck wearing portion **12**. The slide block is slidable on the slide rail. The bending angle of the shell **1** may be adjusted by sliding the slide block to reach various positions on the slide rail. In this way, the neck fan may be adapted to various neck sizes of various users.

[0179] In another embodiment, an inner side (a side near the user's neck) of the neck wearing portion **12** is arranged with an attachment portion **13**. The attachment portion **13** is configured to attach to the user's neck, allowing the user to feel more comfortable while wearing the fan. The attachment portion **13** may be curved inwardly. The attachment portion **13** may be made of soft material, allowing the attachment portion to attach to the user's neck more easily, protecting the user's skin from being rubbed.

[0180] In another embodiment, the fan assembly **3** includes a fan **31** and a motor driving the fan to rotate.

[0181] As shown in FIG. **14** and FIG. **15**, the position limitation member **21** the first recess **211** for receiving the first shaft portion **221**. An insertion portion is extended from the end of the air guide portion **11**. The insertion portion **111** defines the second recess **122** for receiving the second shaft portion **222**. The end of the neck wearing portion **12** defines a receiving recess **121** for receiving the insertion portion **111** of the end of the air guide portion **11**. In this way, the air guide portion **11** and the neck wearing portion **12** are connected. In addition, stability of the connection between the air guide portion **11** and the neck wearing portion **12** may be improved.

[0182] The insertion portion **111** may be rod shaped, and an end of the insertion portion **111** may be cylindrical. An end surface of the end of the insertion portion **111** may be recessed along a central axis of the cylindrical end to define the second recess **122**.

[0183] In another embodiment, an edge of the air guide portion near the insertion portion **111** may be a recessed-curved portion H**1**. An edge of a wall of the receiving recess **121** near the neck wearing portion **12** may be a protruded-curved portion H**2**. The recessed-curved portion H**1** may fit with the protruded-curved portion H**2**. In this way, while the insertion portion **111** is inserted into the receiving recess **121**, an edge of the air guide portion **11** and an edge of the neck wearing portion **12** may be connected tightly, preventing the external water and dust from an inside of the neck fan through a gap between the air guide portion **11** and the neck wearing portion **12**, such that the neck fan may be protected from erosion.

[0184] In another embodiment, when the insertion portion **111** is inserted into the receiving recess **121**, a rotation gap X**1** may be defined between the insertion portion **111** and the wall of the receiving recess **121**. When the user is adjusting relative positions between the air guide portion **11** and the neck wearing portion **12**, i.e., when the shaft structure **22** is rotating, the insertion portion **11** may be rotating in the receiving recess **121**. Defining the rotation gap X**1** provides a space margin for rotating the insertion portion **111** in the receiving recess **121**, facilitating the user to adjust the neck fan based on the size of the user's neck.

[0185] According to the present disclosure, the neck fan includes the shell, the adjustment assembly and the fan assembly. The shell is configured to hang around the user's neck. The shell defines the air inlet, the air outlet, and the air duct, and the air inlet, the air outlet, and the air duct communicate with each other. The adjustment assembly is arranged on the shell and is configured to adjust the bending angle of the shell. The fan assembly is received inside the

shell and is configured to guide the air from the air inlet to flow through the air duct to reach the air outlet, such that the air further flows to the outside through the air outlet. The neck fan is portable, and the bending angle of the neck fan is adjustable, such that the neck fan may be suitable for various neck sizes of various users.

[0186] FIGS. **16-22** show a neck fan according to another embodiment of the present disclosure.

[0187] FIG. **17** is a schematic view of a neck fan according to an embodiment of the present disclosure. FIG. **18** is a schematic view of the neck fan shown in FIG. **17** from another view angle. The neck fan **1** includes an arc-shaped shell **10** and a fan assembly **20**. The neck fan may be worn around the user's neck to free the user's hands.

[0188] FIG. **19** is an enlarged view of the neck fan shown in FIG. **17**, FIG. **20** is a schematic view of a portion of the neck fan shown in FIG. **17**, and FIG. **21** a cross section view of the neck fan shown in FIG. **17**. The shell **10** includes a first shell **1** and a second shell **12** opposite to the first shell **11**. The first shell **11** and the second shell **12** may be configured at two opposite sides of the user's neck. At least one of the first shell **11** and the second shell **12** includes a first portion **111**, a second portion **112** and a third portion **113**. The third portion **113** is connected between the first portion **111** and the second portion **112**. The first portion **111** defines a first receiving cavity **111***a* and a first air outlet **111***b* communicating with the first receiving cavity **111***a*. The second portion **112** defines a second receiving cavity **112***a* and a second air outlet **112***b* communicating with the second receiving cavity **112***a*. The third portion **113** defines a third receiving cavity **113***a*. The third receiving cavity **113***a* is between the first receiving cavity **111***a* and the second receiving cavity **112***a*, and is communicating with the first receiving cavity **111***a* and the second receiving cavity **112***a*. At least one of the first shell **11** and the second shell **12** defines an air inlet **114**, communicating with at least one of the first receiving cavity **111***a*, the second receiving cavity **112***a*, and the third receiving cavity **113***a*. At least a portion of the fan assembly **20** is received in the third receiving cavity **113***a*, and is configured to guide the air from the air inlet **114** to the first air outlet **111***b* and the second air outlet **112***b*.

[0189] In the present embodiment, at least a portion of the fan assembly **20** is received in the third receiving cavity **113***a*, and the air is guided from the air inlet **114** to both the first air outlet **111***b* and the second air outlet **112***b*. Since the air flows to the outside of the fan through the first air outlet **111***b* and the second air outlet **112***b*, the amount of flowing air at the air outlets may be increased, and an air flowing efficiency may be increased, such that the user may be cooled rapidly. In addition, at least a portion of the fan assembly **20** is received in the third receiving cavity **113***a*, and wind generated from the fan assembly **20** is guided to both the first air outlet **111***b* and the second air outlet **112***b*. In this way, the wind generated from the fan assembly **20** may be utilized optimally, and a reduced wind efficiency caused by a large amount of wind flowing to an end of the shell may be avoided. In this way, noise of the neck fan may be reduced, and a loss in the amount of wind may be reduced, such that the air flowing efficiency may be increased. Further, the user's hair and other foreign matters may not be caught into the fan assembly **20** easily, such that the neck fan may be used safely and conveniently. Further, the fan assembly **20** is disposed between the first air outlet **111***b* and the second air outlet **112***b*. In this way, a reduced cooling effect of a neck fan in the art, which is caused by a free end of the neck fan being a wind-free zone E, may be solved. In the present embodiment, an end of the first portion **111** away from the third portion **113** defines the first air outlet **111***b*, enabling the air/wind to flow out of the fan through the first air outlet **111***b* to cover the user's face. Therefore, the user's mouth, nose, and so on may be cooled.

[0190] In some embodiments, the third portion **113** includes a wind-free region N. The wind-free region N locates between the first air outlet **111***b* and the second air outlet **112***b* and locates at a position corresponding to the fan assembly **20**. The wind-free region N may not define any air outlet or define a blind-hole (such as a recess) that does not allow any air to flow out. Since the wind-free region N corresponds to the fan assembly **20**, the wind generated by the fan assembly **20** may be distributed to the first air outlet **111***b* and the second air outlet **112***b*, which are defined at two sides of the fan assembly **20**. In this way, the air flowing efficiency is increased, and the wind may be flowing gently. In addition, the wind-free region N prevents the wind from blowing towards the user's face directly. The wind-free region N separates the first air outlet **111***b* and the second air outlet **112***b*, such that the wind may be scattered to two sides, preventing an excessively large amount of wind from flowing towards the user's face hardly (which may be caused by the wind flowing through a single air outlet), such that facial paralysis may be avoided. Further, in the present embodiment, a position where the wind-free region N is arranged corresponds to the user's ear, such that the wind may not flow towards the user's ear directly, reducing wind noise and protecting the user's hearing.

[0191] Further, in the present embodiment, each of the first shell **11** and the second shell **12** includes the first portion **111**, the second portion **112**, and the third portion **113**. Two fan assemblies **20** may be arranged. One of the two fan assemblies **20** may be received in the third receiving cavity **113***a* of the first shell **11** and may be configured to guide the air from the air inlet **114** of the first shell **11** to flow to the first air out let **111***b* and the second air outlet **112***b* of the first shell **11**. The other one of the two fan assemblies **20** may be received in the third receiving cavity **113***a* of the second shell **12**, and may be configured to guide the air from the air inlet **114** of the second shell **12** to flow to the first air out let **111***b* and the second air outlet **112***b* of the second shell **12**. It shall be understood that the first shell **11** and the second shell **12**, which may be arranged at two opposite sides of the user's neck, may be structurally symmetric with each other. That is, each of the first shell **11** and the second shell **12** is arranged with the first portion **111**, the second portion **112**, and the third portion **113**. One fan assembly **20** is received in each of the third portion **113** of the first shell **11** and the third portion **113** of the second shell **12**. While the neck fan **1** is working, the two fan assemblies **20**, which are arranged at two opposite sides of the user's neck, may guide the air from the air inlet **114** of the first shell **11** to flow to the first air out let **111***b* and the second air outlet **112***b* of the first shell **11** and guide the air from the air inlet **114** of the second shell **12** to flow to the first air out let **111***b* and the second air outlet **112***b* of the second shell **12**. Since each of the first shell **11** and the second shell **12** includes the first portion **111**, the second portion **112**, and the third portion **113**, and the fan assembly **20** is received in each of the third portion **113** of the first shell **11** and the third portion **113** of the second shell

12, air flowing from the air inlet **114** of the first shell **11** to the first air out let **111***b* and the second air outlet **112***b* of the first shell **11** and air flowing from the air inlet **114** of the second shell **12** to the first air out let **111***b* and the second air outlet **112***b* of the second shell **12** may occur simultaneously. In this way, the amount of air flowing to the inside of the neck fan and the amount of air flowing out of the neck fan may be increased, such that the user may be cooled rapidly. Further, the wind may be blown to two sides of the user's neck, improving the user's experience.

[0192] In more detail, the fan assembly **20** includes a turbine fan **21**. The turbine fan **21** includes a fan shaft **211** and a plurality of turbine blades **212** surrounding the fan shaft **211**. An air flowing direction of the turbine fan **21** is perpendicular to an extending direction of the fan shaft **211**. In this way, a large amount of wind may be generated by occupying a relatively small space, such that the air flowing efficiency of the neck fan **1** may be increased. By configuring the turbine fan **21** for the fan assembly **20**, noise generated while the neck fan is being in use may be reduced effectively, and at the same time, the air flowing efficiency of the neck fan **1** may be increased.

[0193] In detail, the plurality of turbine blades **212** may include a first end face **212***a* and a second end face **212***b*, and the first end face **212***a* and the second end face **212***b* are disposed along the extending direction of the fan shaft **211**. A distance from the first end face **212***a* to the shell **10** may be in a range of 1 mm to 6 mm, and/or a distance from the second end face **212***b* to the shell **10** may be in a range of 1 mm to 6 mm. A diameter of the turbine fan **21** may be in a range of 35 mm to 45 mm. A thickness of the turbine fan **21** along the extending direction of the fan shaft **211** may be in a range of 10 mm to 25 mm. In some embodiments, the distance from the first end face **212***a* to the shell **10** may be 1 mm, and/or the distance from the second end face **212***b* to the shell **10** may be 1 mm. The air flowing efficiency of the fan assembly **20** may be increased by setting three parameters for the neck fan. The three parameters may include: the distance from the first end face **212***a* to the shell **10** being in a range of 1 mm to 6 mm and/or the distance from the second end face **212***b* to the shell **10** being in a range of 1 mm to 6 mm; the diameter of the turbine fan **21** being in a range of 35 mm to 45 mm; and the thickness of the turbine fan **21** along the extending direction of the fan shaft **211** being in a range of 10 mm to 25 mm. In some embodiments, the distance from the first end face **212***a* to the shell **10** may be 1 mm, and/or the distance from the second end face **212***b* to the shell **10** may be 1 mm, and in this way, the air flowing efficiency of the neck fan **1** may be increased.

[0194] Further, each of the first portion **111**, the second portion **112**, and the third portion **113** may include a first inner plate **115**, a first outer plate **116**, a first connection plate **117**, and a second connection plate **118**. The first inner plate **115** may be disposed near the user's neck. The first outer plate **116** may be opposite to the first inner plate **115**. The first connection plate **117** may be connected between the first inner plate **115** and the first outer plate **116**, and may be disposed near the user's head. The second connection plate **118** may be opposite to the first connection plate **117**. The first portion **111** may further include a first end plate **119** disposed between the first inner plate **115**, the first outer plate **116**, the first connection plate **117**, and the second connection plate **118**. The air inlet **114** may be defined in at least one of the first inner plate **115** and the first outer plate **116** of the third portion **113**. The first air outlet **111***b* may be defined in the first inner plate **115** of the first portion **111**. The second air outlet **112***b* in the first inner plate **115** of the second portion **112**. The first end face **212***a* may correspond to the first inner plate **115** of the third portion **113**. The second end face **212***b* may correspond to the first outer plate **116** of the third portion **113**. The fan shaft **211** may extend along a direction from the first inner plate **115** to the fists outer plate **116**. In the present embodiment, the air inlet **114** is defined in at least one of the first inner plate **115** of the third portion **113** and the first outer plate **116** of the third portion **113**, the first air outlet **111***b* may be defined in the first inner plate **115** of the first portion **111**, and the second air outlet **112***b* in the first inner plate **115** of the second portion **112**. In this way, the fan assembly **20** is disposed between the first air outlet **111***b* and the second air outlet **112***b*. The fan assembly **20** may drive the air/wind to flow from the air inlet **114** to the first air outlet **111***b* and the second air outlet **112***b*, which are defined at two opposite sides of the fan assembly **20**. Air flowing through the first air outlet **111***b* does not interfere air flowing through the second air outlet **112***b*. In this way, the loss in the air flowing may be reduced, improving the air flowing efficiency of the neck fan **1**.

[0195] Further, the air inlet **114** may be defined each of the first inner plate **115** and the first outer plate **116** of the third portion **113**. In this way, wind stifling caused by only one of the first inner plate **115** and the first outer plate **116** defining the air inlet **114** may be avoided, allowing the air to fluently flow through any air duct between any air inlet and any air outlet, such that the wind may flow more fluently, and wind noise may be reduced. The first inner plate **115** of the third portion **113** may include a first body portion **115***b* and a first cover plate **115***c*. The first body portion **115***b* defines a first opening **115***a*. The first cover plate **115***c* is mounted at the first opening **115***a*. The air inlet **114** may include a plurality of first air inlets **115***d* defined in the first cover plate **115***c*. Each of the first opening **115***a* and the first cover plate **115***c* may be circular. The plurality of first air inlets **115***d* may be evenly distributed in the first cover plate **115***c*. The first outer plate **116** of the third portion **113** may include a second body portion **116***b* and a second cover plate **116***c*. The second body portion **116***b* defines a second opening **116***a*. The second cover plate **116***c* is mounted at the second opening **116***a*. The air inlet **114** may include a plurality of second air inlets **116***d* defined in the second cover plate **116***c*. Each of the second opening **116***a* and the second cover plate **116***c* may be circular. The plurality of second air inlets **116***d* may be evenly distributed in the second cover plate **116***c*. It shall be understood that, in the present embodiment, the fan assembly **20** includes the turbine fan **21**, air flowing in/out of the turbine fan **21** may be in a toroidal turbine manner. Therefore, the first opening **115***a*, the first cover plate **115***c*, the second opening **116***a*, and the second cover plate **116***c* may be configured be circular, such that the openings and the cover plates may be optimally adapted with the air flowing of the turbine fan **21**, reducing the loss in the air flowing. Furthermore, the plurality of first air inlets **115***d* are evenly distributed in the first cover plate **115***c*, and the plurality of second air inlets **116***d* are evenly distributed in the second cover plate **116***c*, such that air out of the turbine fan **21** may flow more fluently and evenly, and the air flowing efficiency of the neck fan **1** may be improved.

[0196] Further, the neck fan **1** may further include a first partition portion **121**, a second partition portion **122**, a first wind guide portion **123**, and a second wind guide portion **124**. The first partition portion **121** is at least partially received in the third receiving cavity **113***a* and covers a side of the fan assembly **20** near the user's face and the second portion **112**. The second partition portion **122** covers an outer periphery of the fan assembly **20** and is opposite to the first partition portion **121**. The first wind guide portion **123** is connected to the second partition portion **122** and is received in the first receiving cavity **111***a*. The second wind guide portion **124** is received in the second receiving cavity **112***a*. The first wind guide portion **123** divides the first receiving cavity **111***a* into a first sub-cavity **111***c* and a first air duct **125** communicating with the first air outlet **111***b* of the first portion **111**. The second wind guide portion **124** divides the second receiving cavity **112***a* into a second sub-cavity **112***c* and a second air duct **126** communicating with the second air outlet **112***b* of the second portion **112**. It shall be understood that the first partition plate **121** and the second partition plate **122** are disposed at two opposite sides of the fan assembly **20**, the wind generated from the fan assembly **20** may be guided by the first partition plate **121** and the second partition plate **122** to flow to the first wind guide portion **123** and the second wind guide portion **124**, and subsequently, the wind may be guided by the first wind guide portion **123** and the second wind guide portion **124** to flow to the first air duct **125** and the second air duct **126** to reach the first air outlet **111***b* and the second air outlet **112***b* respectively. By arranging the first partition portion **121**, the second partition portion **122**, the first wind guide portion **123**, and the second wind guide portion **124**, the first receiving cavity **111***a* is divided, the first air duct **125** is defined to communicate with the first air outlet **111***b* of the first portion **111**, the second receiving cavity **112***a* is divided, and the second air duct **126** is defined to communicate with the second air outlet **112***b* of the second portion **112**. The first air duct **125** and the second air duct **126** may be defined to guide the wind generated from the fan assembly **20** to the first air outlet **111***b* and the second air outlet **112***b* respectively, reducing the loss in the air flowing, allowing the air to flow to various positions of the user accurately, and increasing the air flowing efficiency.

[0197] Further, the neck fan **1** may include a first auxiliary guide plate **127** and a second auxiliary guide plate **128**. The first auxiliary guide plate **127** is configured to divide the first air duct **125** into a first sub-duct **125***a* and a second sub-duct **125***b*. More than one first air outlets **111***b* may be defined, and more than one second air outlets **112***b* may be defined. The first sub-duct **125***a* may communicate with a portion of the more than one first air outlets **111***b* of the first portion **111**, and the second sub-duct **125***b* may communicate with another portion of the more than one first air outlets **111***b* of the first portion **111**. The second auxiliary guide plate **128** is configured to divide the second air duct **126** into a third sub-duct **126***a* and a fourth sub-duct **126***b*. The third sub-duct **126***a* may communicate with a portion of the more than one second air outlets **112***b* of the second portion **112**, and the fourth sub-duct **26***b* may communicate with another portion of the more than one second air outlets **112***b* of the second portion **112**. By arranging the first auxiliary guide plate **127**, the first air duct **125** is divided into the first sub-duct **125***a* and the second sub-duct **125***b*. By arranging the second auxiliary guide plate **128**, the second air duct **126** is divided into the third sub-duct **126***a* and the fourth sub-duct **126***b*. In this way, the wind may be evenly distributed to the first air outlets **111***b* and the second air outlets **112***b*, reducing the loss in the air flowing, allowing the air to flow to various positions of the user accurately, and increasing the air flowing efficiency.

[0198] Further, an end portion of the first auxiliary guide plate **127** near the air outlets **111***b* and **112***b* and an end portion of the second auxiliary guide plate **128** near the air outlets **111***b* and **112***b* may be substantially perpendicular to a wall of the shell defining the air outlets **111***b* and **112***b*. In this way, after the wind is guided by the first auxiliary guide plate **127** and the second auxiliary guide plate **128**, the wind may be blown out of the neck fan along a direction substantially perpendicular a plane where the first connection plate **117** is arranged. In this way, the wind may be blown to the user's face straightly. In the art, the wind may be blown to the user's face non-straightly, and the wind from various air outlets may interfere with each other. Therefore, in the present embodiment, a force of the wind may not be reduced.

[0199] Further, the neck fan **1** may further include an electronic control assembly **30**. The electronic control assembly **30** may include at least one of a battery **31**, a circuit board **32**, and a control switch **33**. At least a portion of the electronic control assembly **30** is received in the first sub-cavity **111***c* or the second sub-cavity **112***c*. The electronic control assembly **30** is configured to supply power for the neck fan **1**, allowing the neck fan **1** to be portably used. In addition, by receiving at least a portion of the electronic control assembly **30** in the first sub-cavity **111***c* and the second sub-cavity **112***c*, the neck fan **1** may be used safely.

[0200] Further, the shell **10** may further include a connection member **13**. The connection member **13** may be connected between the first shell **11** and the second shell **12**. The connection member **13** may be a flexible connection member that can be bent manually. By arranging the connection member **13** to be connected between the first shell **11** and the second shell **12**, and by allowing the flexible connection member **13** to be bent manually and fixed at a certain bending angle, the user may wear the neck fan **1** more comfortably, since the user may adjust the bending portion of the neck fan based on the size of the user's neck. To be noted that, in some embodiments, the connection member **13** may be omitted. That is, the first shell **11** may be connected to the second shell **12** directly; alternatively, the first shell **11** and the second shell **12** may be integrally formed as one piece, the first inner plate **115** and the first outer plate **116** may be uncoverable, and the neck fan **1** may be assembled and used through the uncoverable first inner plate **115** and the uncoverable first outer plate **116**; alternatively, the first inner plate **115** of the first shell **11** and the first inner plate **115** of the second shell **12** may be integrally formed as one piece, and the first outer plate **116** may be uncoverable; alternatively, the first outer plate **116** of the first shell **11** and the first outer plate **116** of the second shell **12** may be integrally formed as one piece, and the first inner plate **115** may be uncoverable.

[0201] To be noted that, in the present embodiment, the electronic control assembly **30** is received in the first sub-cavity **111***c*. While using the neck fan **1**, the end portion of the first portion **111** may be suspended. Therefore, heat

generated by the electronic control assembly **30** may be prevented from transferring to the user, improving the user experience.

[0202] As shown in FIG. **22**, in the present embodiment, the first partition plate **121** is at least partially received in the third receiving cavity **113***a* and covers the side of the fan assembly near the user's face and the first portion **111**. The second partition portion **122** covers the outer periphery of the fan assembly **20** and is opposite to the first partition portion **121**. The first wind guide portion **123** is received in the first receiving cavity **111***a*. The second wind guide portion **124** is received in the second receiving cavity **112***a* and is connected to the second partition portion **122**. The first wind guide portion **123** divides the first receiving cavity **111***a* into the first sub-cavity **111***c* and the first air duct **125** communicating to the first air outlet **111***b* of the first portion. The second wind guide portion **124** divides the second receiving cavity **112***a* into the second sub-cavity **112***c* and the second air duct **126** communicating to the second air outlet **112***b* of the second portion.

[0203] In particular, to the extent understandable to those in the centrifugal fan technical field, as shown in FIG. **22**, the second partition portion **122** serves as the pressurizing plate **271** shown in FIG. **4**, the second wind guide portion **124** serves as the wind guiding plate **272** shown in FIG. **4**, and the second partition portion **122** and the second wind guide portion **124** cooperatively form the vortex tongue structure **27** shown in FIG. **4**.

[0204] The first auxiliary guide plate **127** is configured to divide the first air duct **125** into the first sub-duct **125***a* and the second sub-duct **125***b*. The first sub-duct **125***a* communicates with a portion of the more than one air outlets **111***b* of the first portion **111**. The second sub-duct **125***b* communicates with another portion of the more than one air outlets **111***b* of the first portion **111**. The second auxiliary guide plate **128** is configured to divide the second air duct **126** into the third sub-duct **126***a* and the fourth sub-duct **126***b*. The third sub-duct **126***a* communicates with a portion of the more than one air outlets **112***b* of the second portion **112**. The fourth sub-duct **126***b* communicates with another portion of the more than one air outlets **112***b* of the second portion **112**. By arranging the first auxiliary guide plate **127**, the first air duct **125** is divided into the first sub-duct **125***a* and the second sub-duct **125***b*. By arranging the second auxiliary guide plate **128**, the second air duct **126** is divided into the third sub-duct **126***a* and the fourth sub-duct **126***b*. In this way, the wind may be evenly distributed to the first air outlets **111***b* and the second air outlets **112***b*, reducing the loss in the air flowing, allowing the air to flow to various positions of the user accurately, and increasing the air flowing efficiency.

[0205] In the present embodiment, as shown in the cross section of FIG. **22**, the fan assembly **20** may rotate clockwise. The wind may flow out of the fan assembly **20** from a position near the second connection plate **118** along a tangent direction. Subsequently, the wind may be driven to the second air duct **126** due to rotational inertia. Further, the wind may flow along the second wind guide portion **124** and the second auxiliary guide plate **128**, and the curved second auxiliary guide plate **128** may further accelerate a speed of the wind. At last, the wind may flow out of the neck fan through the first air outlet **111***b* away from the second connection plate **118**. In this way, the wind flowing out of the first air outlet **111***b* may be different from the wind flowing out of the second air outlet **112***b*, where the wind is compressed to flow out of the second air outlet **112***b*. In this way, a speed and a force of the wind flowing out of the air outlets may be improved.

[0206] In some embodiments, the neck fan may include the fan assembly **20** and a shell portion **11** or **12**. The shell portion **11** or **12** may include the first portion **111**, the second portion **112**, and the third portion **113**. The third portion **113** is connected between the first portion **111** and the second portion **112**. The first portion **111** defines the first receiving cavity **111** and the first air outlet **111***b* communicating with the first receiving cavity **111***a*. The second portion **112** defines the second receiving cavity **112***a* and the second air outlet **112***b* communicating with the second receiving cavity **112***a*. The third portion **113** defines the third receiving cavity **113***a*. The third receiving cavity **113***a* is between the first receiving cavity **111***a* and the second receiving cavity **112***a*, and communicates with the first receiving cavity **111***a* and the second receiving cavity **112***a*. The shell portion **11** or **12** defines the air inlet **114** communicating with at least one of the first receiving cavity **111***a*, the second receiving cavity **112***a*, and the third receiving cavity **113***a*. The fan assembly **20** is at least partially received in the third receiving cavity **113***a* and is configured to guide the air from the air inlet **114** to flow to the first air outlet **111***b* and the second air outlet **112***b*.

[0207] In the present embodiment, the fan assembly **20** is at least partially received in the third receiving cavity **113***a* and is configured to guide the air from the air inlet **114** to flow to the first air outlet **111***b* of the first portion **111** and the second air outlet **112***b* of the second portion **112** respectively. Since the air is flowing out of the first air outlet **111***b* and the second air outlet **112***b*, the amount of air flow is increased, the air flowing efficiency is increased, and the user may be cooled rapidly. Further, the wind generated from the fan assembly **20** is flowing to two opposite sides of the fan assembly to the first air outlet **111***b* and the second air outlet **112***b* respectively, avoiding a reduced air flowing efficiency caused by a large amount of air flowing to the end portion of the shell, such that the wind noise may be reduced, the wind loss may be reduced, and the air flowing efficiency may be increased. In addition, the user's hair may not be caught by the fan assembly **20** easily, enabling the user to use the neck fan safely. Further, the fan assembly **20** is disposed between the first air outlet **111***b* and the second air outlet **112***b*. A reduced cooling effect of a neck fan in the art, which is caused by a free end of the neck fan being a wind-free zone E, may be solved. In the present embodiment, the end of the first portion **111** away from the third portion **113** defines the first air outlet **111***b*, enabling the air/wind to flow out of the fan through the first air outlet **111***b* to cover the user's face completely. Therefore, the user's mouth, nose, and so on may be cooled.

[0208] As shown in FIGS. **23-25**, the neck fan includes an arc-shaped shell **10** and a diagonal fan assembly **30**. The shell **10** includes an air inlet portion shell **102** and an air outlet portion shell **101** connected to the air inlet portion shell **102**. In the present embodiment, the air outlet portion shell **101** may be adapted to and worn to the user's neck. The air inlet portion shell **102** is connected to each of two ends of the air outlet portion shell **101**. The air inlet portion shell **102** defines a receiving space. The air outlet portion shell **101** defines an air outlet **1011**. A partition plate **20** is received inside the air inlet portion shell **102**. The partition plate **20**

defines a plurality of through holes **201**. A side wall of the air inlet portion shell **102** is disposed between the partition plate **20** and an end face of the air inlet portion shell **102** away from the air outlet portion shell **101**. The side wall defines an air inlet **1021**. The diagonal fan assembly **30** is received in the air inlet portion shell **102** and is configured to guide the external air to flow through the through holes **201** to the air outlet **1011**.

[0209] The air may enter the diagonal fan assembly **30** along a direction inclined to an axis of the diagonal fan assembly. The diagonal fan assembly **30** may drive the air, which flows along the direction inclined to the axis of the diagonal fan assembly **30**, to flow along a radial direction. In this way, the loss of air flowing may be reduced, and the amount of air flowing may be improved. Further, a wind pressure and a wind speed at the air outlet **1011** may be uniform, improving the user's experience. The external air may enter the neck fan through the through holes **201** of the partition plate **20**, such that the air may flow into the neck fan uniformly, reducing the wind noise.

[0210] As shown in FIGS. **23-25**, the air outlet portion shell **101** and the air inlet portion shell **102** may be detachably connected, through a buckle or magnetics. Detachable connection allows the diagonal fan assembly **30** in the air inlet portion shell **102** to be maintained easily.

[0211] As shown in FIGS. **23-25**, the partition plate **20** may be disposed at a middle portion of the air inlet portion shell **102**, dividing the air inlet portion shell **102** into a placement portion **1022** and an air inlet portion **1023**. A side wall of the air inlet portion **1023** defines the air inlet **1021**. Defining the air inlet **1021** in the side wall may reduce the wind noise.

[0212] The diagonal fan assembly **30** may guide the air from the air inlet **1021** to flow through the through holes **201** to the air outlet **1011**. The partition plate **20** allows the air to flow from the air inlet **1021** through the through holes, enabling the air to uniformly enter the neck fan, reducing the wind noise.

[0213] The placement portion **1022** and the air inlet portion **1023** may be integrally formed as one piece.

[0214] In some embodiments, the placement portion **1022** and the air inlet portion **1023** may be detachably connected. The partition plate **20** is disposed on an end face of the air inlet portion **1023** near the placement portion **1022** or disposed on an end face of the placement portion **1022** near the air inlet portion **1023**.

[0215] In some embodiments, the diagonal fan assembly **30** is at least partially arranged in the placement portion **1022** and is configured to guide the air from the air inlet **1021** to flow through the through holes **201** to the air outlet **1011**. The diagonal fan assembly **30** may include an impeller **301** and a motor **302** driving the impeller **301** to rotate. The impeller **301** may include a first wind guide cone **3011** and diagonal blades **3014** arranged on the first wind guide cone **3011**. The first wind guide cone **3011** is configured to guide the air.

[0216] In some embodiments, as shown in FIGS. **25-27**, an inner wall of the first wind guide cone **3011** facing the motor **302** may extend along a loop to form a placement column **3012**. A rotation shaft **3013** is arranged inside the first wind guide cone **3011**. A diameter of the placement column **3012** is less than a diameter of a sleeve **3031**. The placement column **3012** is at least partially received in the sleeve **3031** and surrounds an outer periphery of the motor **302**.

[0217] As shown in FIGS. **24-26**, the diagonal fan assembly **30** may further include a wind guide member **303**. The wind guide member **303** may include the sleeve **3031**, stator blades **3032**, a wind guide ring **3033**, and a second wind guide cone **3034**. The stator blades **3032** are arranged on an outer wall of the sleeve **3031**. The wind guide ring **3033** is connected to the stator blades **3032** along a circumferential direction. The second wind guide cone **3034** is arranged at an end face of the sleeve **3031** and faces the air outlet portion shell **101**. The motor **302** may be received in the sleeve **3031**.

[0218] The second wind guide cone **3034** may collect the air, which has entered the neck fan, and guide the air to flow into the air outlet portion shell **101**. In this way, the air may flow into the air outlet portion shell **101** uniformly, reducing the wind noise. After receiving the motor **302** into the sleeve **3031**, the sleeve **3031** may be sealed, improving air tightness of the neck fan. In this way, the motor **302** may be protected, and the motor may be safe while the neck fan is being used.

[0219] In some embodiments, the diagonal fan assembly **30** may be completely received in the air inlet portion shell **102**.

[0220] In some embodiments, a portion of the diagonal fan assembly **30** may be received in the air inlet portion shell **102**, and another portion of the diagonal fan assembly **30** may extend to be received in the air outlet portion shell **101**. For example, the impeller **301** and the motor **302** may be received in the air inlet portion shell **102**, and the wind guide member **303** may extend to be received in the air outlet portion shell **101**.

[0221] In some embodiments, when the second wind guide cone **3034** of the wind guide member **303** extends to be received in the air outlet portion shell **101**, the end face of the air outlet portion shell **101** near the air inlet portion shell **102** defines an expansion opening, such that the air outlet portion shell **101** may be adaptively connected to the air inlet portion shell **102** and receive the second wind guide cone **3034**.

[0222] As shown in FIGS. **23-25**, the neck fan may further include an external shell **40** detachably connected to the air inlet shell portion **102**. A power assembly **50** may be received in the external shell **40** and/or the air outlet portion shell **101**. The power assembly **50** may be electrically connected to the diagonal fan assembly **30**. The power assembly **50** may be a USB port and/or a rechargeable battery.

[0223] In some embodiments, a control plate may be received in the external shell **40** and/or the air outlet portion shell **101**. The battery may be connected to the control plate. The control plate may b connected to the diagonal fan assembly **30**. In this way, the control plate and the battery may be received inside the arc-shaped shell **10**.

[0224] The rechargeable battery may be received in the external shell **40**. A rechargeable battery having a relatively large capacity may be arranged, based on actual demands. In this way, the neck fan may operate for a relatively long period of time. While manufacturing, the battery may be received in the arc-shaped shell **10** only or in the external shell **40** only; alternatively, one battery may be received in both the arc-shaped shell **10**, and another battery may be received in the external shell **40**. In this way, when the

battery in the arc-shaped shell **10** is out of power, the battery in the external shell **40** may supply the power, such that the neck fan may operate for a relatively long period of time.

[0225] In some embodiments, the external shell **40** may be arc shaped. The external shell **40** may include a first shell **401** and a second shell **402** fastened with the first shell **401**. The power assembly **50** and/or the control plate may be disposed between the first shell **401** and the second shell **402**.

[0226] Since the external shell **40** is detachably connected to the air inlet portion shell **102**, the power assembly **50** in the external shell **40** may be maintained or recharged easily. When the rechargeable battery is received in the arc-shaped shell **10**, the rechargeable battery in the external shell **40** may serve as a backup battery, such that the neck fan may operate for a relatively long period of time.

[0227] The external shell **40** may be detachably connected to the air inlet portion shell **102** through a buckle or the like.

[0228] In some embodiments, as shown in FIGS. **28** and **29**, the air inlet portion **1023** may include two end walls away from two placement portions **1022**. A first magnetic member **601** may be arranged on each of the two end walls, and a second magnetic member **602** may be arranged on each of two end faces of the external shell **40**. The first magnetic member **601** may be align to and attracted to the second magnetic member **602**.

[0229] Each of the first magnetic member **601** and the second magnetic member **602** may be a magnet. Alternatively, one of the first magnetic member **601** and the second magnetic member **602** may be the magnet, and the other one of the first magnetic member **601** and the second magnetic member **602** may be a metal (such as iron, iron alloy, and the like) that can be attracted by the magnet.

[0230] Magnetic attraction between the first magnetic member **601** and the second magnetic member **602** allows the external shell **40** to be detachably connected to the air inlet portion shell **102**, such that the external shell **40** may be connected quickly, and may be detached easily.

[0231] As shown in FIGS. **26**, **28** and **29**, an end wall of the placement portion **1022** may extend downwardly to form a tab **701**. An upper end of the external shell **40** may be recessed inwardly to define a slot **702** for adaptively receiving the tab **701**. Receiving the tab **701** into the slot **702** allows the external shell **40** to be stably connected to the air inlet portion shell **102**.

[0232] As shown in FIGS. **28** and **29**, the external shell **40** is detachably connected to the air inlet portion shell **102**. In the present embodiment, one of the end wall of the placement portion **1022** and the end face of the external shell **40** may be arranged with a probe **801**, and the other one of the end wall of the placement portion **1022** and the end face of the external shell **40** may be arranged with a contact **802**. When the external shell **40** is attractively connected to the air inlet portion shell **102**, the contact **802** contacts the probe **801** for conducting. In this way, the rechargeable battery in the external shell **40** is electrically connected to the motor **302** of the diagonal fan assembly **30**.

[0233] According to the present embodiment, the diagonal fan assembly **30** may guide the air, which enters the neck fan along the direction inclined to the axis of the fan assembly **30**, to flow along the radial direction, such that the loss in the air flowing may be reduced, and the amount of air flowing may be increased. The wind pressure and the wind speed at the air outlet may be uniform. In addition, the battery may be received in at least one of the air outlet portion shell and the external shell **40**, such that operation duration of the neck fan may be improved significantly.

[0234] FIGS. **30-37** show a neck fan according to another embodiment of the present disclosure.

[0235] FIG. **30** is a structural schematic view of a neck fan according to an embodiment of the present disclosure. In the present embodiment, a neck fan **01** includes a bracket assembly **10** and a wind turbine positioned arranged inside the bracket assembly **10**. The bracket assembly **10** defines an air outlet **11** and an air inlet **12**. The wind turbine drives external air to flow to an inside of the bracket assembly **10** through the air inlet **12**, and to further flow to the air outlet **11**, such that the air may flow to an outside of the neck fan through the air outlet **11**.

[0236] In some embodiments, a plurality of air outlets **11** may be defined. Defining the plurality of air outlets **11** may increase a coverage area of air flowing of the neck fan **01**. A plurality of air inlets **12** may be defined. Defining the plurality of air inlets **12** may increase an air intake rate of the neck fan **01**.

[0237] The bracket assembly **10** is configured to hang the neck fan **01** around the user's neck. For example, in the present embodiment, the bracket assembly **10** is circular shaped, such that the bracket assembly **10** may well hang around the user's neck, and the air outlets **11** may face the user's cheek or neck. In this way, while the user is wearing the neck fan **01**, the air out of the air outlets **11** may flow towards the user's cheek or neck.

[0238] As shown in FIGS. **30** and **23**, FIG. **30** is a structural schematic view of a neck fan according to an embodiment of the present disclosure, and FIG. **31** is an exploded view of the neck fan shown in FIG. **30**.

[0239] The bracket assembly **10** may include a first bracket **100**, a second bracket **200** and a third bracket **300**. The second bracket **200** may be connected to the first bracket **100** and the third bracket **300**. Each of the first bracket **100**, the second bracket **200** and the third bracket **300** may be a curved bracket. When the first bracket **100**, the second bracket **200** and the third bracket **300** are connected, the three curved brackets may cooperatively form a ring-shaped body, such that the neck fan **01** may hang around the user's neck. The second bracket **200** may be disposed between the first bracket **100** and the third bracket **300**, and may face a back of the user's neck. The first bracket **100** and the third bracket **300** are connected to two opposite ends of the second bracket **200** and face two opposite sides of user's neck. An opening may be defined between the first bracket **100** and the third bracket **300**, allowing the bracket assembly **10** to sleeve the user's neck.

[0240] In some embodiments, the second bracket **200** may be arranged with a cooling sheet **203**. While the user is wearing the neck fan **01**, the cooling sheet **203** may attach to the back of the neck, such that the back of the neck may be cooled, providing a better user experience.

[0241] In some embodiments, two ends of the second bracket **200** may define a first slot **201** and a second slot **202**, respectively. An end of the first bracket **100** is arranged with a first buckle **101**, and an end of the third bracket **300** is arranged with a second buckle **301**. When the second bracket **200** is connected to the first bracket **100** and the third bracket **300**, the first buckle **201** may be fastened to the first slot **101**, and the second buckle **301** is fastened to the second slot **202**. In addition, at least one of the first buckle **101** and

the second buckle **301** may be arranged with a rotation shaft, and at least one of a wall of the first slot **201** and a wall of the second slot **202** may define a corresponding shaft hole. In this way, the first bracket **100** is rotatably connected to the second bracket **200**, and the third bracket **300** is rotatably connected to the second bracket **200**. In this way, a distance between the first bracket **100** and the third bracket **300** bracket may be adjustable to accommodate various neck sizes of various users.

[0242] In the present embodiment, the neck fan **01** may include at least three wind turbines. Each of the first bracket **100**, the second bracket **200**, and the third bracket **300** bracket define an air duct, the air outlets **11** and the air inlets **12**. One wind turbine is received in each of the air duct of the first bracket **100**, the air duct of the second bracket **200**, and the air duct of the third bracket **300**. The wind turbine generates an air flow for each air duct.

[0243] In some embodiments, the first bracket **100**, the second bracket **200** and the third bracket **300** may be made of metal or plastics.

[0244] In other embodiments, the bracket assembly **10** may include a fourth bracket or more brackets, and each bracket defines a respective air duct and receives a respective wind turbine. The present disclosure does not limit the number of the brackets.

[0245] As shown in FIGS. **32** and **33**, FIG. **32** is a structural schematic view of a first bracket of a neck fan according to an embodiment of the present disclosure, and FIG. **33** is an exploded view of the first bracket and a wind turbine of the embodiment shown in FIG. **32**.

[0246] An outer circumference of the first bracket **100** defines the plurality of air outlets **11**. while the neck fan is being worn to the user, the plurality of air outlets **11** may face the user's face. The air inlets **12** are defined in two sides of the first bracket **100** and communicate with the air outlets **11**. In some embodiments, the first bracket **100** may be arranged with a power supply interface **102**. The power supply interface **102** may be configured to connect to a power source for charging the neck fan.

[0247] In detail, the first bracket **100** may include a first shell **110** and a second shell **120**. The first shell **110** and the second shell **120** may be connected to cooperatively define a receiving slot **103**. The wind turbine **160** may be received in receiving slot **103**. That is, each of the first shell **110** and the second shell **120** is a shell having an opening. When connecting the two shells, the opening of the first shell **110** may align to and communicate with the opening of the second shell **120**, such that the receiving slot **103** may be formed.

[0248] In some embodiments, a portion of the second shell **120** near the opening is arranged with a plurality of third buckles **121**. The plurality of third buckles **121** may be arranged around a circumference of the opening of the second shell **120**. A portion of the first shell **110** near the opening defines a plurality of third slots corresponding to the third buckles **121**. When the first shell **110** and the second shell **120** are fastened, the plurality of third buckles **121** may be fastened with the plurality of third slots. In other embodiments, the first shell **110** may be connected to the second shell **120** by bonding, screwing, and the like.

[0249] In the present embodiment, each of the first shell **110** and the second shell **120** may be a curved shell. When the first shell **110** and the second shell **120** are fastened to each other, the first bracket may be well adapted to the user's neck. In other embodiments, the first shell **110** and the second shell **120** may be in other shapes, which will not be limited by the present disclosure.

[0250] Further, the neck fan may further include a battery **180** and a circuit board **170**. The circuit board **170** may be electrically connected to the battery **180** and the wind turbine **160**. The battery **180** may be a rechargeable battery. The battery **180** may be configured to store electrical energy and supply power to the wind turbine **160**. The circuit board **170** may be configured to control a power of the wind turbine **160** and may further be arranged with a charging circuit for the battery **180**.

[0251] In some embodiments, the first bracket **100** may further include a support frame **150**. The support frame **150** may be fixedly arranged inside the first shell **110** or the second shell **120**, and may be received in the receiving slot **103**. The battery **180** and the circuit board **170** may be arranged inside the support frame **150**.

[0252] The air inlets **12** may communicate with the receiving slot **103** and may be configured to allow the external air to be driven by the wind turbine **160** to flow into the receiving slot **103**.

[0253] Each of the air inlets **12** may be a groove defined in the first shell **110** or the second shell **120**. Alternatively, each of the air inlets **12** may be a through hole defined in the first shell **110** or the second shell **120**.

[0254] As shown in FIGS. **33** and **34**, FIG. **34** illustrates an interior of the first bracket and the wind turbine of the embodiment shown in FIG. **33**. In the present embodiment, arranging the air turbine **160** inside the first shell **110** and defining the air duct in the first shell **110** will be taken as an example to illustrate the neck fan. In other embodiments, the air turbine **160** and the air duct may also be arranged in the second shell **120**. Arrows in the drawing indicate directions of the air flowing in the air duct.

[0255] In the present embodiment, the wind turbine **160** may include a bearing portion **161** and a fan portion **162** arranged around the bearing portion **161**. The bearing portion **161** is fixedly arranged inside the first shell **110**. The bearing portion **161** drives the fan portion **162** to rotate, generating the wind to flow to circumference of the fan portion **162**. An electric motor may be arranged inside the bearing portion **161**. The wind turbine **160** may drive the fan portion **162** to generate the wind by means of motor driving. The wind turbine **160** may rotate counterclockwise or clockwise.

[0256] In some embodiments, the first shell **110** may further define a wire slot **116** for receiving wires, such that circuit boards or wind turbines in other shells may be electrically connected.

[0257] In the present embodiment, the first shell **110** defines two air ducts, an air duct I and an air duct II. The air duct I and the air duct II locate on two opposite sides of the wind turbine **160**. Since the fan portion **162** of the wind turbine **160** is able to generate the wind towards the circumference of the wind turbine **160**, the wind turbine **160** is able to provide air flowing in various directions to the air duct I and the air duct II. In some embodiments, the first shell **110** may define three or more ducts therein.

[0258] A plurality of air outlets **11** may be defined. Each of the air duct I and the air duct II may communicate with a corresponding air outlet **11** to guide the air flowing in the air duct to the corresponding air outlet **11**. In the present embodiment, an air flowing direction in the air duct I will be

taken as an example to illustrate the present embodiment. Air flowing directions in other air ducts in the first bracket or air flowing directions in air ducts in other brackets may be referred to the following embodiment.

[0259] In the present embodiment, the air outlet **11** is defined in a first side wall **111** of the first shell **110**. The first side wall **111** may be any of side walls of the first shell **110** configured to define the air duct I.

[0260] The wind turbine **160** is disposed adjacent to the first side wall **111**. The wind turbine **160** provides air flowing to the air duct I. Further, an air flowing direction of the air, which is provided by the wind turbine **160**, flowing in the air duct I is parallel to the first side wall **111**. The plurality of air outlets **11** are distributed in the first side wall **111** and are spaced apart from each other along an extending direction of the first side wall **111**. That is, the plurality of air outlets **11** are arranged on the first side wall **111** along the flowing direction of the air generated by the wind turbine **160**.

[0261] In the art, the air generated by the wind turbine to the air duct may flow towards the extending direction of the first side wall. When the air flows past an air outlet near the wind turbine, the air may continue flowing, maintaining its original flowing direction, and this is because the air does not flow towards the air outlet. When the air flows to reach an end of the air duct, most of the air in the air duct may gather at the end, and an air pressure at the end of the air duct may increase. In this case, the air outlet at the end of the air duct may be impacted by the air significantly, and the air may generate resonance, producing the wind noise.

[0262] To solve the above technical problem, in the present disclosure, a wind guide member **13** may be arranged inside the first bracket **110**. For example, the first bracket **110** defines the air duct, and the wind guide member **13** may be received in the air duct. When the air flows along the wind guide member **13**, the Coanda Effect may be caused, and the original flowing direction of the air may be changed. In this way, the air may flow along a surface of the wind guide member **13**, flowing towards the air outlet **11**. For example, the wind guide member **13** may be disposed on a wall of the shell near the air outlet **11** or received in the air outlet **11**. In this way, an air flowing intensity of the air outlet **11** may be increased, and an air flowing intensity of other outlets **11**, which may be excessively large, may be reduced. In this way, the wind noise at the air outlet **11** which has the excessively large air flowing intensity may be reduced.

[0263] As shown in FIGS. **34** and **35**, FIG. **35** is an enlarged view of a portion A of the embodiment shown in FIG. **34**.

[0264] In the present embodiment, the air duct I may be communicated with at least two air outlets **11**. The at least two air outlets **11** may include a first air outlet **1101** and a second air outlet **1102**. The first bracket **100** may further include a wind guide plate **117**, serving as another wind guide member. The wind guide plate **117** may be spaced apart from the wind guide member **13**. For example, the wind guide plate **117** and the wind guide member **13** may be disposed at two sides of the air duct I. The wind guide plate **117** may be configured to direct the air generated by the wind turbine **160** to the first air outlet **1101** and the second air outlet **1102**.

[0265] In some embodiments, the wind guide plate **117** may be a curved plate. An end of the wind guide plate **117** is connected to a shell wall that defines the first air outlet **1101**. An end of the wind guide plate **13** is connected to a shell wall that defines the second air outlet **1102**. When the air generated by the wind turbine **160** is flowing towards the wind guide plate **117**, the air flowing direction may be affected by the wind guide plate **117**, such that the air may flow towards the first air outlet **1101** and the second air outlet **1102**.

[0266] In the present embodiment, the air flowing in the air duct I may include a first air flow α, a second air flow β and a third air flow γ. Curves and arrows in FIG. **35** indicate air flowing directions in the air duct. The first air flow α, the second air flow β and the third air flow γ are labeled for understanding the air flowing in various regions of the air duct. Actual air flows in the air duct I shall not be limited to the first air flow α, the second air flow β and the third air flow γ.

[0267] The first air flow α, the second air flow β and the third airflow γ may be parallel to each other.

[0268] The first air flow α is flowing near the wind guide member **13**, and the second air flow β is flowing near the wind guide plate **117**. The third air flow γ is flowing between the first air flow α and the second air flow β.

[0269] Since the second air flow β is flowing closest to the air guide **117**, the second air flow β is easily affected by the wind guide plate **117**, such that the second air flow β may flow out of the neck fan through the second air outlet **1102**. When the wind guide member **13** is not arranged, the flowing direction of the first air flow α and the flowing direction of the third air flow γ do not change when passing the first air outlet **1101**, but instead, the first air flow α and the third air flow γ continue flowing straightly towards the wind guide plate **117**. This is because the first air flow α and the third air flow γ are distant from the wind guide plate **117**. Only when the first air flow α and the third air flow γ encounter the wind guide plate **117**, the flowing directions thereof may change, and the first air flow α and the third air flow γ may flow towards the second air outlet **1102**. In this way, air flows in the second air outlet **1102** may include an air flow obtained by pressurizing the first air flow α, the second air flow β and the third air flow γ. The air flowing intensity in the second air outlet **1102** may be excessively large. An air flow that has an excessively large intensity may impact the second air outlet **1102**, generating the wind noise and affecting the user experience.

[0270] In the present embodiment, the wind guide member **13** may be received in the air duct I. The wind guide member **13** may be disposed near the first air outlet **1101** and disposed on the first side wall **111**. After flowing past the wind guide member **13**, first air flow α may be affected by the wind guide member **13** to flow out of the neck fan through the first air outlet **1101**. That is, the first air flow α does not flow out of the neck fan through the second air outlet **1102**. In this way, the amount of air flowing through the second air outlet **1102** may be reduced, reducing the wind noise at the second air outlet **1102**.

[0271] In detail, the wind guide member **13** may be a protrusion arranged on the first side wall **111** and protrudes towards the air duct I. The wind guide member **13** protruding from the first side wall **111** towards the air duct I allows the Coanda Effect to be caused while the first air flow α flowing past the protrusion. The wind guide member **13** may include a wind-ward portion **1301** and wind-guide portion **1302**. The wind-ward portion **1301** may be connected to the wind-guide portion **1302**. The wind-ward portion **1301** and the wind-guide portion **1302** may be fixedly arranged inside the

first shell **110**. The wind guide member **13** and the first shell **110** may be integrally arranged as one piece. Alternatively, the wind guide member **13** may be connected to the shell **110** by fastening or bonding.

[0272] The wind-ward portion **1301** may be opposite to the wind turbine **160**. The first air flow α may flow directly towards the wind-ward portion **1301**. The wind-guide portion **1302** is connected to the wind-ward portion **1301** to form a projection protruding towards the air duct I. That is, a certain angle is between the wind-guide portion **1302** and the wind-ward portion **1301**. A face of a connected portion between the wind-guide portion **1302** and the wind-ward portion **1301** may be a convex face that has a certain curvature.

[0273] In some embodiments, the convex face of connected portion between the wind-guide portion **1302** and the wind-ward portion **1301** may be a curved face, a spherical face, or a cylindrical face.

[0274] When the first air flow α flows directly towards the wind-ward portion **1301**, a surface friction may be generated between the first air flow α and the wind-ward portion **1301**, an original flowing direction of the first air flow α may change, and the first air flow α may flow along surfaces of the wind-ward portion **1301** and the wind-guide portion **1302**. The wind-guide portion **1302** is connected the wall of the shell that defines the first air outlet **1101**. In this way, the first air flow α flows along the wind-guide portion **1302** to the first air outlet **1101**, reducing the amount of the air flowing through the second air outlet **1102**.

[0275] Since the first air flow α flows through the first air outlet **1101**, an air pressure of a gap between the first air outlet **1101** and the second air flow β may be reduced. Therefore, the third air flow γ may flow towards the first air flow α to fill a space where the first air flow α originally flows. The third air flow Y may be affected by the wind-guide portion **1302** and may be appropriately shifted towards the first air flow α.

[0276] Similarly, the second air flow β may also be affected by the wind-guide portion **1302** and shifted towards the first air flow α. A portion of the second air flow β or the third air flow γ may be affected by the first air flow α shifting to shift towards the first air flow α, and may flow out of the neck fan through the second air outlet **1102**. Another portion of the second air flow β or third air flow γ may be affected by the wind guide plate **117**, the air flowing directions thereof may change, and the another portion of the second air flow β or third air flow γ may flow out of the neck fan through the second air outlet **1102**. Therefore, the second air flow β and the third air flow γ in the present embodiment do not completely rush to the wind guide plate **117**, changing flowing directions only after encountering the wind guide plate **117**, but may shift towards the first side wall **111** since the first air flow α shifts. Compared to the neck fan in the art, noise generated by the air flow hitting the wind guide plate **117** may be reduced in the present embodiment.

[0277] Therefore, in the present embodiment, the wind guide member **13** may reduce the wind noise generated by the air flowing through the second air outlet **1102** by reducing the air flowing intensity near the second air outlet **1102**. Further, the wind guide member **13** allows the air flowing direction at the second air outlet **1102** to be changed, such that the air may flow towards the second air outlet **1102** directly, instead of flowing out of the second air outlet **1102** only after rushing at and being cut by the second air outlet **1102**.

[0278] Further, in the present embodiment, the wind guide member **13** reduces the wind noise generated by the neck fan, and further increases the amount of air flowing through the air outlet **11**, which is an air outlet for a weak air flow. In this way, the amount of air flowing through each of the plurality of air outlets may be uniform.

[0279] When the wind guide member **13** is not arranged, the first air outlet **1101** is defined in the first side wall **111**. The first side wall **111** is relatively parallel to the first air flow α. In this way, the first air flow α would not flow out through the first air outlet **1101** when passing the first air outlet **1101**. Therefore, the air flowing intensity at the first air outlet **1101** may be weaker, and the air flowing intensity at other air outlets **11** may be excessively strong.

[0280] In the present embodiment, the first side wall **111** is arranged with the wind guide portion **13**. The wind guide portion **13** may be closer to the wind turbine **160** compared to the first air outlet **1101**. When the first air flow α flowing against the wind-ward portion **1301** of the wind guide member **13**, the surface friction may be generated between the first air flow α and the wind-ward portion **1301**, the air flowing direction of the first air flow α may change accordingly, and the first air flow α may flow along the surface of the wind-ward portion **1301** and the wind-guide portion **1302**. The wind-guide portion **1302** is connected to the shell wall that defines the first air outlet **1101**. At last, the first air flow α may flow along the wind-guide portion **1302** towards the first air outlet **110**, increasing the amount of the air flowing at the first air outlet **1101**.

[0281] In some embodiments, the air guide member **13** may further be arranged at the shell wall that defines other air outlets **11** to increase the air flowing intensities at corresponding air outlets **11**.

[0282] According to the present embodiment, the wind guide member **13** may be arranged inside the first bracket **100** to change the flowing directions of the air in the air duct, and may be configured to direct air flows to corresponding air outlets **11**. In this way, a problem of various air flowing efficiencies at various air outlets **11** may be solved, the wind noise at the air outlet **11** may be reduced, and the air flowing through each of the plurality of air outlets **11** may be uniform. User's experience may be improved, and a structure of the neck fan may be simple, such that the neck fan may be easily prepared.

[0283] As shown in FIG. **36**, FIG. **36** is an exploded view of a second bracket and a wind turbine of a neck fan according to an embodiment of the present disclosure.

[0284] The second bracket may include a third shell **210**, a fourth shell **220**, a wind turbine **160**, and a cooling sheet **203**. The third shell **210** may be fastened to the fourth shell **220**. The air duct may be defined in the third shell **210** and the fourth shell **220**. The wind turbine **160** may be received in the third shell **210** and the fourth shell **220**. The cooling sheet **203** may be connected to the third shell **210** and configured to contact the back of the user's neck.

[0285] Each of two ends of the third shell **210** and two ends of the fourth shell **220** may define the air inlet **12**. The third shell **210** may define the plurality of air outlets **11** communicating with the air duct. An inner side of the third shell **210** and the fourth shell **220** may further define the air inlet **12** communicating with the air duct. The wind turbine

160 may provide the air flowing to the air duct, and the air may further flow out of the fan through the air outlets **11**. The air outlets **11** may be defined in the fourth shell **220**.

[0286] Arrangement of the third shell **210**, the fourth shell **220**, and the wind turbine **160** may be referred to the arrangement for the first bracket as illustrated in the above, and will not be repeatedly described herein.

[0287] As shown in FIGS. **36** and **37**, FIG. **37** illustrates an interior of a third shell of the embodiment shown in FIG. **36**. Curves and arrows in FIG. **37** indicate air flowing directions in the air duct.

[0288] In the present embodiment, the air duct may be defined in the third shell **210**, and the wind tuberin **160** may be arranged inside the third shell **210**. The air duct in the third shell **210** may include an air duct III and a fourth air duct IV. The third air duct III and the fourth air duct IV may be defined at two opposite sides of the wind turbine **160**. The air flows provided by the wind turbine to the air duct III and the air duct IV may flow along different directions. The air duct III and the air duct IV may communicate to corresponding air outlets **11**.

[0289] In the present embodiment, the wind guide member **13** is arranged near the air outlet **11** that communicates with the air duct III. The wind flowing in the air duct III may be affected by the wind guide member **13** when flowing past the wind guide member **13**, causing the Coanda Effect, such that the air may flow out of the fan through the air outlet **11**, an air flowing intensity at the air outlet **11** may be increased, and an air flowing intensity and wind noise at other air outlets may be reduced.

[0290] Structures of the air duct and the wind guide member **13** in the third shell **210** may be similar to those of the first bracket, and may be referred to the above embodiments.

[0291] Therefore, in the present embodiment, the wind guide member **13** may be arranged inside the third shell **210**, a problem of various air outlets having various air flowing efficiencies may be solved, and the wind noise at the air outlets may be reduced.

[0292] A structure of the third bracket may be similar to that of the first bracket, i.e., the wind guide member may be arranged in the third bracket. Therefore, the structure of the third bracket will not be repeatedly described herein.

[0293] According to the present embodiment, the wind guide member may be received in the air duct for guiding the air to flow to corresponding air outlets. The air flowing direction may be changed and may be directed to various air outlets. The wind noise caused by air rushing may be reduced. The air outlet, which has an excessively low air pressure in the art, may now have an increased air pressure, and the air outlet, which has an excessively high air pressure in the art, may now have a reduced air pressure. The problem of various air outlets having various air flowing efficiencies may be solved.

[0294] FIGS. **38-44** shows a neck fan according to another embodiment of the present disclosure.

[0295] An arrow X in the figures indicate a front-rear direction, i.e., a radial direction. An arrow Y in the figures indicate a horizontal direction, i.e., a left-right direction. An arrow Z in the figures indicate a vertical direction, i.e., an up-down direction.

[0296] As shown in FIGS. **38-40**, the neck fan **1** may include a shell **1**, a fan assembly **2**, and an inner shell **3**. The shell **1** may be configured to hang around the user's neck. The shell **1** may define an air inlet C**1**, an air outlet C**2**, and an air duct C**3** between the air inlet C**1** and the air outlet C**2**. The fan assembly **2** may be configured to guide the external air into the neck fan through the air inlet C**1**, and guide the air to flow through the air duct C**3** to reach the air outlet C**2**. The inner shell **3** may be arranged inside the shell **1**. The fan assembly **2** may be received in an inner space of the inner shell **3**. The inner space of the inner shell **3** may communicate with the air inlet C**1** and the air duct C**3**. The inner shell **3** may protect the fan assembly **2**, preventing the fan assembly **2** from being damaged caused by being crushed by external forces. Further, the inner shell **3** may prevent the user's hair from entering the air inlet C**1** to reach the fan assembly **2**. In this way, the inner shell **3** prevents the hair from winding turning blades of the fan assembly, protecting the user.

[0297] In some embodiments, the fan assembly **2** may be a turbine fan. Two opposite sides of the turbine fan may be arranged with a first air inlet window **21** and a second air inlet window respectively. The two air windows are independent from each other, allowing the fan assembly to intake the air/wind from two opposite sides, such that the amount of air intaking may be increased, a wind stifling effect may not be caused, and the wind nose may be reduced. A position of the inner shell **3** corresponding to the first air inlet window **21** may be define a first inner air inlet K**1**, and a position of the inner shell **3** corresponding to the second air inlet window may be define a second inner air inlet K**2**. In this way, after the air enters the first inner air inlet K**1** and the second inner air inlet K**2**, the air may quickly enter the first air inlet window **21** and the second air inlet window respectively. Further, fan blades of the turbine fan may drive the air to flow to air duct to reach the air outlet C**2**, such that the air may flow out of the neck fan. In this way, a contact speed between the air and the turbine fan may be increased, increasing the air flowing efficiency, ensuring the amount of air entering the fan, and increasing an efficiency of taking the air in the inner shell **3** to flow through. Further, a distance that the air flows to reach the fan assembly **2** may be reduced, noise generated by air flowing may be reduced effectively, that is, the wind noise may be reduced.

[0298] In some embodiments, the shell **1** may define a receiving chamber **11** for receiving the inner shell **3**. In detail, the receiving chamber **11** may be defined in an end portion of the shell **1**. A side wall of the receiving chamber **11** may include at least one air inlet region. The air inlet C**1** is defined in the air inlet region. The air inlet C**1** may communicate with the first inner air inlet K**1** and the second inner air inlet K**2**. In this way, the air in the shell **1** may flow into the first inner air inlet K**1** and the second inner air inlet K**2**.

[0299] In some embodiments, the inner shell **3** may include a first axial shell portion **31**, a second axial shell portion **32**, a radial shell portion **33**. The first air inlet window **21** is arranged with the first axial shell portion **31**. The second air inlet window is arranged with the second axial shell portion **32**. The radial shell portion **33** is arranged along a radial direction of a rotation shaft of a fan of the turbine fan. The at least one air inlet region may be spaced apart from the radial shell portion **33**. Further, the at least one air inlet region may be disposed away from the first inner air inlet K**1** and the second inner air inlet K**2**. In this way, the hair may be prevented from entering the air inlet C**1** to further reach an inside of the inner shell **3**, such that the

hair may be prevented from winding the fan assembly **2**. Therefore, in the present embodiment, hair stranding caused by the hair reaching the inside of the inner shell may be avoided, protecting the user. In addition, in the present embodiment, the air that enters the neck fan through the air inlet C**1** may not be completely compressed into the first inner air inlet K**1** and the second inner air inlet K**2**. Since at least one air inlet region is away from the first inner air inlet K**1** and the second inner air inlet K**2**, the air may be separated to the first inner air inlet K**1** and the second inner air inlet K**2** respectively, preventing air compression. Therefore, the wind may not be squeezed, and the wind noise may be reduced.

[0300] In some embodiments, as shown in FIG. **41**, the shell **1** is configured to hang around the user's neck. The at least one air inlet region may include an upper air inlet region **111**, a lower air inlet region **112**, and/or an end air inlet region **113**. The upper air inlet region **111** may operate cooperatively with the lower air inlet region **112** or the end air inlet region **113** to increase the amount of air inlet. Arranging the lower air inlet region **112** and the end air inlet region **113** allows the air inlets to be defined away from the user, such that the wind noise may propagate away from the user, reducing the wind noise. Further, positions where the lower air inlet region **112** and the end air inlet region **113** are arranged prevents the user's hair from entering the fan assembly **2** and winding the fan blades while the neck fan is worn to the user, ensuring the user's safety. In some embodiments, only the lower air inlet region **112** may be arranged. Since the air inlet defined in the lower air inlet region facing downwards, preventing the hair or other foreign matters from entering the air inlet due to the gravity. In some embodiments, only the end air inlet region **113** may be arranged. Since the air inlet defined in the end air inlet region **113** faces away from the user, noise of a fan motor or noise generated by the wind hitting a wall of the air duct may propagate through the air inlet of the end air inlet region **113**, propagating away from the user, reducing the wind noise significantly. In some embodiments, only the lower air inlet region **112** and the end air inlet region **113** are arranged, ensuring the amount of air intaking to be adaptive to any fan in any power. A sufficient number of air ducts are defined, and a sufficient amount of air is intaken. Any combination of the upper air inlet region **111**, the lower air inlet region **112**, and the end air inlet region **113** may be arranged, as long as an application scenario can be satisfied.

[0301] In some embodiments, the external air may flow through the air inlet C**1** of the air inlet region along a first air inlet direction. After the air reaches the receiving chamber **11** by flowing through the air inlet C**1**, the air may flow through the first inner air inlet K**1** or the second inner air inlet K**2** along a second air inlet direction. An angle between the first air inlet direction and the second air inlet direction may be in a range of 0° to 90°. In some embodiments, the angle between the first air inlet direction and the second air inlet direction may be in a range of 85°-90°. In some embodiments, the angle between the first air inlet direction and the second air inlet direction may be 90°. In this way, the fan assembly **2** intaking the external air and driving the air to flow from the air inlets to the air outlets may generate two different air inlet directions. The two air inlet directions may be perpendicular to each other. In this way, even if the hair enters the shell **1** along the first air inlet direction, the hair may not be able to enter the inner shell **3** along the second air inlet direction. Therefore, the hair may not wind the fan assembly **2**, preventing hair stranding. Further, the first air inlet direction may be substantially perpendicular to the second air inlet direction, allowing fan blades of the fan assembly **2** to be blocked, such that the external dust or water may not enter the fan assembly **2**, protecting the fan assembly **2**.

[0302] In some embodiments, as shown in FIGS. **40** and **41**, the inner shell **3** may further include a wind guide portion **34**. The wind guide portion **32** may define a wind guide opening **341**. The wind guide opening **341** may communicate with the first inner air inlet K**1** and the second inner air inlet K**2**. In the present embodiment, the air inlet C**1** is defined closely near the wind guide portion **34** and away from the fan assembly **2**. As shown in FIG. **41**, a rear air inlet region **114** is arranged, and the above mentioned air inlet C**1** is defined in the rear air inlet region **114**. In the present embodiment, the air inlet C**1** may increase the amount of air inlet and increase an air intaking area, allowing the air that enters the shell **1** may be distributed inside the shell **1** more evenly, preventing the wind from being squeezed, and reducing the wind noise.

[0303] In some embodiments, as shown in FIGS. **38-42**, an edge of the wind guide opening **341** may be bent outwardly and abut against an inner wall of the shell **1**, such that a gap between the edge of the wind guide opening **341** and the inner wall of the shell **1** may be sealed. In this way, the air flowing out of the wind guide opening **341** may be prevented from flowing to the gap between the edge of the wind guide opening **341** and the inner wall of the shell **1**. It shall be understood that, when the air flowing to the gap, the air may no flow along the air duct C**3**. By sealing the gap, the wind noise generated by disordered air circulation may be reduced, and the air flowing out of the wind guide opening **341** may be completely flow along the air duct C**3**, ensuring the total amount of air flowing for generating the wind, and improving an air flowing efficiency.

[0304] In some embodiments, a diameter of the wind guide opening **341** may gradually increase along a direction facing the air duct C**3**. Increasing the diameter allows the air to be separated, preventing the wind from being squeezed, and reducing the wind noise. Further, the air flowing diameter is increased, increasing the amount of air reaching the air duct C**3**, and increasing the amount of wind flowing out of the neck fan, improving the user's experience.

[0305] In some embodiments, at least three sets of the inner shell **3** and the fan assembly **2** may be arranged. One set of the inner shell **3** and the fan assembly **2** may be arranged at each of a first end portion of the shell **1**, a second end portion of the shell **1**, and a connection portion between the first end portion and the second end portion. The connection portion may be disposed at a middle of the shell **1**. Arranging a plurality of fan assemblies **2** and the inner shells **3** may increase an area covered by the wind flowing out of the neck fan, improving the user's experience.

[0306] In some embodiments, as shown in FIG. **42**, two wind guide portions **34** may be arranged. The two wind guide portions **34** may guide the air to flow towards two opposite directions. In detail, a wind guide direction of the wind guide opening **341** of one of the two wind guide portions **34** may be opposite to a wind guide direction of the wind guide opening **341** of the other one of the two wind guide portions **34**. For example, in the embodiment where two wind guide portions **34** are arranged, the fan assembly

2 may be arranged on the connection portion between the first end portion and the second end portion. In this way, arranging one fan assembly **2** may guide air towards the first end portion and the second end portion at the same time. In some embodiments, the fan assembly **2** may be arranged on one of the first end portion and the second end portion. The fan assembly may be arranged at a middle of the first end portion and guide the air to flow towards two ends of the first end portion.

[0307] In some embodiments, an inner middle portion of the first shell **1** may be arranged with an attaching portion **4** for attaching the user's neck. Arranging the attaching portion **4** allows the shell **1** to attach to the user's neck optimally. On one hand, the user may have a better hanging feeling. On the other hand, the shell **1** may be tightly attached to the user's neck, such that the neck fan may not fall off easily.

[0308] In some embodiments, the attaching portion **4** may include two attaching pads **41**. Each of the two attaching pads **41** may be curved to fit with a curved shape of the user's neck. In this way, the curved shape of the pads may attach to the user's neck better, allowing the neck fan to hang to the neck more fixedly and stably.

[0309] In some embodiments, each of the two attaching pads **41** may be connected to the shell **1** through an elastic movable member. The elastic movable member may adjust the attaching pad **41** adaptively when the user is moving or when the user's neck is turning, such that the two attaching pads may attach to the user's neck at all times, allowing the neck fan to tightly attach to the user's neck, preventing the neck fan from falling off when the user is moving. In addition, when the user is moving, the elastic movable member prevents the attaching portion **4** from rubbing the user's neck, protecting the user's neck.

[0310] In some embodiments, the elastic movable member may be a spring and/or an elastic roller. The spring may provide a cushioning effect, allowing the attaching pads **41** to follow the user's neck in a movable manner. The elastic rolling may provide a rolling and sliding effect, allowing the attaching pads **41** to slide for a relatively short distance, such that the user's neck may not be rubbed easily. Further, the elastic rolling may be elastic, and therefore, the attaching pads **41** may follow the user's neck in the movable manner and may elastically slide for a tiny distance. In this way, the neck fan may be prevented from falling off from the user's neck, ensuring tight attachment between the neck fan and the user's neck. Further, the attaching pads **41** may not rub the user's neck, improving the user's experience.

[0311] In some embodiments, the attaching pads **41** may be made of soft and/or elastic material, preventing from rubbing the user's neck, and a relative moving between the user's neck and the attaching pads **41** may be buffered.

[0312] In some embodiments, the fan assembly **2** may include fan blades and a motor for driving the fan blades to rotate. Adjusting a rotating speed of the motor may control a rotating speed of the fan blades. In this way, an air flowing intensity and an amount of air flowing may be adjusted.

[0313] In some embodiments, the shell **1** may be curved and tubular and may be adapted to a shape of the user's neck. Electronic elements may be arranged in the shell **1**, such as a circuit board, a battery, various modules, and the like.

[0314] In some embodiments, the air outlet C**2** may be defined in an inner side and/or an upper face of the shell **1**. In some embodiments, when the neck fan hangs around the user's neck, the inner side of the shell **1** faces the user's neck. Defining the air outlet C**2** in the inner side allows the air to flow towards the neck directly, improving the user's experience optimally. The upper face of the shell **1** may face an upper portion of the neck, the user's face, and the user's head. Therefore, defining the air outlet C**2** in the upper face allows the air to flow towards the above-mentioned portions of the user, and the air may flow to cover a large area of the user, improving the user's experience.

[0315] In some embodiments, at least one inner shell **3** is arranged at the end portion of the shell **1**. Arranging the inner shell **3** at the end portion of the shell **1** may increase a weight of the end portion of the shell **1**. In this way, when wearing the neck fan, a larger weight of the end portion of the shell **1** allows a gravitational center of the neck fan to be in a front portion of the neck fan. That is, the neck fan may be pendant to a front of the user, preventing the neck fan from fall off from a back of the user's neck. Therefore, arranging the inner shell **3** at the end portion of the shell **1** allows the neck fan to be stably worn to the user's neck.

[0316] In some embodiments, a battery **5** is arranged at an inner middle of the shell **1**. The shell **1** is further arranged with a switch **13**. The battery may supply power for the fan assembly **2**, and the switch **13** may control the fan assembly to operate or stop operating.

[0317] As shown in FIGS. **43** and **44**, in some embodiments, the neck fan may include the shell **1**, the fan assembly **2**, the inner shell **3** and a shaking absorption member **6**. The shell **1** may hang around the user's neck. The shell **1** may define the air inlet C**1**, the air outlet C**2**, and an air duct C**3** between the air inlet C**1** and the air outlet C**2**. The air duct C**3** may be configured for allowing air flowing. The fan assembly **2** may be configured to guide the external air into the neck fan through the air inlet C**1**, and guide the air to flow through the air duct C**3** to reach the air outlet C**2**. The inner shell **3** may be arranged inside the shell **1**. The fan assembly **2** may be received in the inner space of the inner shell **3**. The inner space of the inner shell **3** may communicate with the air inlet C**1** and the air duct C**3**. The shaking absorption member **6** may be arranged inside the shell **1** and configured to connect the inner shell **3** to the shell **1** for reducing shaking. In the present embodiment, arranging the shaking absorption member **6** prevents a direct contact between the inner shell **3** and the shell **1**. That is, vibration may not be transmitted to the user's body, improving the user's experience. Further, since the inner shell and the shell do not directly contact each other, wear and tear between the inner shell and the shell may be eliminated, extending a service life of the shell **1** and the inner shell **3**.

[0318] A clamping portion **35** may be arranged on the inner shell **3** for clamping the shaking absorption member **6**. The shaking absorption member **6** may be connected to the shell **1** through a connection member **7**. The clamping portion **35** may fix the shaking absorption member **6** and clamp the shaking absorption member **6**. Therefore, the clamping portion **35** and the shaking absorption member **6** may be detachably connected, instead of being integrally formed as one piece. In this way, the shaking absorption member **6** may be replaced easily when being worn out or damaged.

[0319] In some embodiments, the shaking absorption member **6** may define a connection hole **61** for receiving the connection member **7**. An end of the connection member **7**

may be connected to the inner wall of the shell **1**, ensuring the connection member **7** to fix the shaking absorption member **6**.

[0320] In some embodiments, the shaking absorption member **6** may be a cylindrical elastic member, such that, the shaking absorption member **6** may be stably clamped by the clamping portion **35**. The connection member **7** may be rod-shaped, such that the connection member **7** may easily inserted into the shaking absorption member **6**.

[0321] In some embodiments, the shaking absorption member **6** may be made of silicon. Rigidity and softness of the shaking absorption member **6** may be appropriate for reducing shaking, such that shaking absorption may be achieved.

[0322] In some embodiments, the clamping portion **35** may include a first clamping arm **351** and a second clamping arm **352**, and the first clamping arm **351** and the second clamping arm **352** may extend to gradually approach to each other. The first clamping arm **351** and the second clamping arm **352** may be arranged on a surface of the inner shell **3**. The first clamping arm **351** and the second clamping arm **352** gradually approaching to each other may allow a clamping force to increase gradually, ensuring the clamping portion **35** to fixedly clamp the shaking absorption member **6**, preventing the shaking absorption member **6** from falling off from the clamping portion **35**.

[0323] In some embodiments, the end portion of the shell **1** may define the receiving chamber **11** for receiving the inner shell **3**. The receiving chamber **11** may be ellipsoid. A plurality of air inlets C**1** may be defined in a radial face of the receiving chamber **11**. Defining the plurality of air inlets C**1** in the radial face of the receiving chamber **11** may prevent the first inner air inlet K**1** to from corresponding to the second inner air inlet K**2**. In this way, when the hair enters the air inlet C**1**, the hair may be prevented from entering the first inner air inlet K**1** and the second inner air inlet K**2** to further contact the fan assembly **2**, preventing hair stranding. Therefore, user's safety may be ensured.

[0324] In some embodiments, the radial face of the receiving chamber **11** has an air inlet region. The air inlet C**1** is defined in the air inlet region. The air inlet region includes a first air inlet region **115**, a second air inlet region **116**, a third air inlet region **117** and a fourth air inlet region **118**. The first air inlet region **115** is located below a front side of the receiving chamber **11**. The second air inlet region **116** is located at the front side of the receiving chamber **11**. The third air inlet region **117** is located at a lower side of the receiving chamber **11**. The fourth air inlet region **118** is located at an upper side of the receiving chamber **11**. The above-mentioned plurality of air inlet regions cooperate with each other to increase the amount of air intaking, increase the amount of air flowing, and improving the user's experience. Arranging the first air inlet region **115** and the second air inlet region **116** as described in the above allows the air inlets to be far away from the user, allowing generated noise to propagate away from the user, reducing the wind noise. Positions at which the first air inlet region **115**, the second air inlet region **116** and the third air inlet region **117** are arranged prevents the hair from being sucked into the fan blades of the fan assembly **2**, such that hair stranding may be prevented, ensuring the user's safety.

[0325] In some embodiments, the inner shell **3** may include a receiving portion **36** and the wind guide portion **34** connected to the receiving portion **36**. The receiving portion **36** is configured to receive the fan assembly **2**. The receiving portion **36** defines an air inlet window for intaking the air. A structure of the air inlet window of the receiving portion **36** is similar to that of the first inner air inlet K**1** and the second inner air inlet K**2** as described above and will not be repeated here. The wind guide portion **34** may define the wind guide opening **341**. The wind guide opening **341** extends and faces towards the air duct C**3**. The receiving portion **36** protects the fan assembly **2** from being affected by the external rain or dust. Further, if the hair enters from the air inlet C**1**, the receiving portion **36** prevents the entered hair from further entering the inner shell **3** to be stranded by the fan assembly **2**, ensuring the user's safety.

[0326] In some embodiments, the edge of the wind guide opening **341** may be turned outwardly to abut against the inner wall of the shell **1** to seal the gap between the edge of the wind guide opening **341** and the inner wall of the shell **1**. Details may be referred to the above embodiments, and will not be repeatedly described herein.

[0327] According to the present embodiment, the neck fan may include a shell, a fan assembly and an inner shell. The shell is configured to hang around the user's neck. The shell defines the air inlet, the air outlet and the air duct between the air inlet and the air outlet. The fan assembly is configured to drive the external air to flow through the air inlet and to guide the air to flow to the air outlet through the air duct. The inner shell is arranged inside the shell, and the fan assembly is arranged inside the inner shell. An inner space of the inner shell is communicated to the air inlet and the air duct. The neck fan is able to intake the air from a large area and blow out the air to a large area. Further, hair stranding caused by the hair entering the shell may be prevented, ensuring the user's safety.

[0328] FIGS. **45-47** show a neck fan according to another embodiment of the present disclosure.

[0329] An arrow X in the figures indicate a front-rear direction. An arrow Y in the figures indicate a horizontal direction, i.e., a left-right direction. An arrow Z in the figures indicate a vertical direction, i.e., an up-down direction.

[0330] As shown in FIGS. **45** and **46**, the neck fan may include following components.

[0331] The shell **1** is configured to hand around the user's neck. The shell **1** defines an air inlet **2** and an air outlet **3**. The air inlet **2** is defined to allow the external air to flow into the neck fan. The air outlet **3** is defined to allowing the air to flow out of the neck fan.

[0332] A fan assembly **4** is arranged to drive the external air to enter the neck fan through the air inlet **2** and to drive the air to flow out of the neck fan through the air outlet **3**. The fan assembly **4** is arranged inside the shell **1**. The shell **1** may protect the fan assembly **4**.

[0333] A battery receiver **5** is configured to receive a battery **6**. The battery receiver **5** is disposed outside the shell **1** and is independently of the shell **1**. In this way, the battery **6** may be disposed out of the shell, and the battery **6** may not be placed inside the shell **1**, such that the battery **6** may be prevented from being blown by the air constantly. Constantly blowing the battery **6** may generate moisture for the battery **6**, which may seriously affect the service life of the battery **6**. Further, the weight applied to the neck caused by the battery may be reduced, relieving a pressure on the neck. Further, the battery receiver **5** protects the battery **6** from the external dust or rain, and the battery **6** may be replaced more

easily, i.e., the battery **6** may be replaced by opening a cover **51** of the battery receiver **5**, a replacement operation may be simple.

[0334] In some embodiments, the shell **1** may be curved to fit a shape of the user's neck, such that the shell may fit firmly with the user's neck, preventing the fan from shaking while being worn, such that the air flowing may be not affected. The fan assembly **4** is arranged in each of two end portions of the shell **1**. In this way, weights of the two ends of the shell **1** may be increased. A certain downward traction for the neck fan may be generated at a front of the user when the neck fan is being worn, allowing the neck fan to fit firmly on the neck.

[0335] In some embodiments, as shown in FIGS. **46** and **47**, the shell **1** may include a left head portion **11**, a right head portion **12** and a connection portion **13**. Two ends of the connection portion **13** may be connected to the left head portion **11** and the right head portion **12** respectively. In this way, the shell **1** may be easily assembled and disassembled.

[0336] In some embodiments, the connection portion **13** is a tubular structure having a plurality of tubes sleeving each other. That is, the connection portion **13** comprises a first connection portion **131** and a second connection portion **132**. The first connection portion **131** is partially embedded in the second connection portion **132**. An overall length of the connection portion **13** may be adjusted (extended or retracted) by adjusting a length of the first connection portion **131** embedded into the second connection portion **132**. In this way, the connection part **13** connects to the left head portion **11** and the right head portion **12**. The length of the connection portion **13** is adjusted based on a size of the neck, such that an overall length of the shell **1** is adjusted to suit various neck sizes of various users.

[0337] In some embodiments, the left head portion **11**, the right head portion **12** and the connection portion **13** may be made of soft material. In this way, a size of the shell **1** may be adjusted based on the size of the user's neck, and the shell **1** may be adapted to various neck sizes.

[0338] In some embodiments, an upper face of the left head **11** portion and/or the right head portion **12** that defines the air outlet **3** is inclined at a predetermined angle towards an inner side, which is curved and arced, such that an area of the user that can be covered by the air flowing out of the neck fan may be increased.

[0339] In some embodiments, the predetermined angle may be in a range of 5° to 30° with respect to the vertical direction.

[0340] In some embodiments, the predetermined angle may be 10°, 15°, 20° or 25°. In detail, when the predetermined angle is 10°, an area covered by the air flowing out of a side of the neck fan may be maximum, but a wind force may be minimum. When the predetermined angle is 15°, the area covered by the air flowing out of the side of the neck fan may be a second maximum, and the wind force may be a second minimum. When the predetermined angle is 20°, the area covered by the air flowing out of the side of the neck fan may be relatively small, and the wind force may be relatively large. When the predetermined angle is 25°, the area may be straightforwardly covered by the air flowing out of the side of the neck fan, and the wind force may be maximum. The predetermined angle may be adjusted to generate various wind blowing experiences, situations that require various amounts of air flowing and cooling effects may be adapted.

[0341] In some embodiments, the left head portion **11** and the right head portion **12** may be structurally symmetrical. In the present embodiment, only the left head portion **11** may be described. The left head portion **11** may include an inner side shell **111** and an outer side shell **112** engaged with the inner side shell **111**. The fan assembly **4** may be disposed between an end portion of the inner side shell **111** and an end portion of the outer side shell **112**. An inner side cover **113** may be arranged on an inner face of the inner side shell **111**. The air inlet **2** may be defined in the inner side cover **113**. The air inlet **2** may be circular. An outer side cover **114** may be arranged on an outer face of the outer side shell **112**. The inner side cover **113** and the outer side cover **114** may be arranged for protection. Further, a through hole may be defined in each of the inner side cover **113** and the outer side cover **114** for dissipating heat, increasing air circulation, and ensuring heat generated when the fan assembly **4** is operating to be dissipated out of the neck fan.

[0342] In some embodiments, at least two turbine fans may be arranged in the left head portion **11** and/or the right head portion **12**. Each of the at least two turbine fans may intake the air from two opposite sides of the fan. Further, each of the two opposite side of each turbine fan in the shell **1** for intaking the air may correspond to a corresponding air inlet, such that the amount of air intake may be increased.

[0343] In some embodiments, a position of the outer side shell **112** corresponding to the fan assembly **4** may define an auxiliary air inlet **1121**. On one hand, the auxiliary air inlet **1121** may correspond to the air inlet **2** in the inner side cover **113**, allowing the air to enter the neck fan from two opposite sides, preventing wind stifling and wind noise generated by intaking the air from only one side, and ensuring the fan assembly to intake a sufficient amount of the air. On the other hand, the heat generated by the fan assembly **4** may be dissipated from the auxiliary air inlet **1121**, and a weight of the entire structure may be reduced.

[0344] In some embodiments, the air inlet **2** may be defined in two end portions of the shell **1** and may correspond to the fan assembly **4**. In one case, when the neck fan is hanging around the user's neck, the end portions of the shell **1** may not attach the user's skin or clothes. More specifically, an inner face of the end portions and an outer face of the end portions do not attach to the user's skin. A middle portion or portions near the middle portion of the shell **1** may attach to the user's skin or clothes. Therefore, defining the air inlet **2** in the end portions of the shell **1** allows the air to enter the shell **1** fluently. A case where the air inlet **2** is blocked by the user's skin or clothes, preventing the air from flowing through the air inlet **2**, may be prevented. Further, a position of the air inlet **2** corresponding to a position of the fan assembly **4** minimizes a distance that the air flows from the air inlet **2** to the fan assembly **4**, such that the fan assembly **4** may generate the wind in real time. The air outlet **3** may be defined in an inner face or an upper face of the shell **1**. In one case, when the neck fan is hanging around the user's neck, the inner face of the shell **1** may attach to the user's skin to allow the skin to be covered by the wind optimally. Therefore, the air outlet **3** is defined in the inner face of the shell **1**. Defining the air outlet **3** in the upper face of the shell **1** allows the air out of the neck fan may flow along the user's neck to reach the user's head, due to the air flowing, areas of the user's neck and the user's head covered by the wind may be maximized.

[0345] In some embodiments, the fan assembly **4** may include a fan impeller, a motor for driving the fan impeller to rotate, and a control board for controlling a rotating speed of the motor. The control board may be connected to the motor. The amount of the air flowing out of the neck fan can by adjusted by adjusting the rotating speed of the motor.

[0346] In some embodiments, the fan impeller may include fan blades **41** and a rotating wheel **42**. The fan blades **41** may be arranged around a wheel face of the rotating wheel **42**. A gap may be defined between the fan blades **41** and the inner wall of the shell **1**. The gap may be in a range of 2 mm to 5 mm. Defining the gap may reduce a distance between the fan blades **41** and the inner wall of the shell **1**, such that wind stifling may be prevented, and the wind noise may be reduced. Further, the gap may not be excessively small, such that when the neck fan is shaken, friction may be prevented between the fan blades **41** and the inner wall of the shell **1**, and a structural damage may be prevented.

[0347] In some embodiments, as shown in FIGS. **46** and **47**, the inner wall of the shell **1** may extend to form a wind guide plate **14**. The wind guide plate **14** may extend along an outer circumference surface of the fan blades towards an inner middle of the shell **1**. The wind guide plate **14** separates the fan assembly **4** and the air duct from the control board. The air duct refers to a gap between components inside the shell **1** for the air to flow through. In this way, the air and/or the water flowing in the air duct may not erode the control board. The wind guide plate **14** may guide the wind generated by the fan assembly **4** and guide the air to flow from the end portion of the shell **1** to the middle of the shell **1**, allowing the entire space inside the shell **1** to be covered by the wind. In this way, the air may flow out through various air outlets **3**, allowing the space covered by the air flowing out of the neck fan to be maximized.

[0348] In some embodiments, the plurality of air outlets **3** may be spaced apart from each other and arranged along the extending direction of the wind guide plate **14**. In this way, the air outlets **3** may optimally cover a route along which the wind guide plate **14** extends, such that the wind may be blown out of the shell **1** uniformly from various air outlets, and an air blowing effect may be increased.

[0349] In some embodiments, as shown in FIGS. **46** and **47**, two fan impellers may be arranged at each of two end portions of the shell **1**. One of the two impellers near the end portion of the shell **1** may be surrounded by the wind guide plate **14**, and the wind guide portion **14** extends upwardly to reach the inner wall of the shell **1**, such that a first air duct may be defined. The other one of the two impellers away from the end portion of the shell **1** may be partially surrounded by the wind guide portion **14**, and the wind guide plate **14** extends towards the middle portion of the shell **1**, such that a second air duct may be defined. The first air duct does not communicate with the second air duct. In this way, wind generated by one of the two impellers and wind generated by the other one of the two impellers may not compressed with each other, such that wind stifling may be prevented, and the wind noise may be prevented. In detail, the air in the first air duct may flow out of the shell **1** from the air outlet **3** in the end portion of the shell **1**, and the air in the second air duct may flow out of the shell **1** from the air outlets **3** in other portions of the shell **1**. In this way, the air in the first air and the air in the second air duct may not be communicated or compressed with each other, such that the wind noise may be reduced.

[0350] In some embodiments, the battery receiver **5** may be connected a first end of a wire **7**. A second end of the wire **7** may be inserted into the shell **1** and connected to the control board. That is, the battery receiver **5** and the shell **1** may be detachably connected with each other via the wire **7**, such that the neck fan may be more portable.

[0351] In some embodiments, a position of the second end of the wire **7** that connects the shell **1** may be near the end portion of the shell **1**. In this way, a traction force generated by the battery receiver **5** is applied to the end portion of the shell **1**. When the neck fan is worn to the user's neck, the gravitational center of the neck fan may be moved to a front of the neck fan, allowing the shell **1** to attach to the user's neck more properly. When the user is moving, the neck fan may not move backwards, such that the shell **1** may not depart away from the user's neck. That is, the neck fan may be attached to the user's neck more stably.

[0352] In some embodiments, an end of the wire **7** may be rotatably connected to the battery receiver **5**. That is, a position at which the battery receiver **5** is disposed may be adjusted by rotating. A fixing portion may be arranged on a side of the battery receiver **5** to fixedly clamp the battery receiver **5**. In detail, the fixing portion may be an adhesive layer arranged on a surface of the battery receiver **5**, enabling the battery receiver **5** to b adhesively fixed to clothes of the user. The fixing portion may alternatively be a clamping plate arranged on the surface of the battery receiver **5**, enabling the battery receiver **5** to clamp the clothes of the user, such that the battery receiver **5** may be fixed.

[0353] According to the present embodiment, the neck fan may include a shell, a fan assembly, and a battery receiver. The shell may define the air inlet and the air outlet. The fan assembly may be configured to drive the external air to enter the neck fan through the air inlet, and drive the air to flow out of the neck fan through the air outlet. The fan assembly may be arranged inside the shell. The battery receiver may be configured to receive the battery. The battery receiver may be disposed out of the shell, and may be independent from the shell **1**. In this way, the neck fan may blow the wind towards the user's neck, and the battery of the neck fan may not be affected by the wind.

[0354] FIGS. **48-52** show a neck fan according to another embodiment of the present disclosure.

[0355] FIG. **48** is a schematic view of a neck fan according to an embodiment of the present disclosure, and FIG. **49** is a schematic view of the neck fan shown in FIG. **48** from another view angle. The neck fan **1** may include a shell **10**, a fan assembly **20** and an outlet adjustment assembly **30**.

[0356] FIG. **50** is an exploded view of the neck fan shown in FIG. **48**, FIG. **51** is a schematic view of a portion of the neck fan shown in FIG. **48**, and FIG. **52** is a schematic view of an outlet adjustment assembly of the neck fan shown in FIG. **48**. The shell **10** may extend along a predetermined direction and define a receiving chamber **11**, an air inlet **12**, an air outlet **13**. The receiving chamber **11** extends along a predetermined direction. The air inlet **12** may communicate with the receiving chamber **11**. The air outlet **13** may communicate with the receiving chamber **11**. The fan assembly **20** may be received in the receiving chamber **11**, and configured to guide the air from the air inlet **12** to flow to the air outlet **13**. The outlet adjustment assembly **30** may include an outlet adjustment plate **31** and a driving assembly **32**. The outlet adjustment plate **31** may be disposed near the air

outlet **13** and may be movably connected to the shell **10**. The driving assembly **32** may be received in the receiving chamber **11** and may be connected to the outlet adjustment plate **31**. When the user is wearing the neck fan **1**, and when the user needs to adjust an air outlet angle of the neck fan **1**, a remote control, a switch, and the like may be taken to control the driving assembly **32** to operate, and the driving assembly **32** may drive the outlet adjustment plate **31** to move relative to the shell **10** to change an angle between the outlet adjustment plate **31** and the shell **10**. In this way, the air outlet angle out of the air outlet **13** may be adjusted, and the amount of air out of the air outlet **13** may be adjusted.

[0357] In the neck fan **1** of the present embodiment, the outlet adjustment plate **31** near the air outlet **13** and movably connected to the shell **10** may be driven by the control assembly **32** to move relative to the shell **10** to adjust the air flowing out of the air outlet **13**. In this way, while using the neck fan, the air flowing out of the fan may be adjusted, meeting various requirements of the user. Further, the driving assembly **32** is taken to adjust the outlet adjustment plate **31**, and therefore, the air outlet may be adjusted accurately without manual operations. The neck fan may be used conveniently, improving the user's experience. In addition, the fan assembly **20** may be received in the receiving chamber **11**, and the air at the air inlet **12** may be guided to the air outlet **13**. In this way, the hair and other foreign matter may not wind around the fan assembly **20**, the neck fan may be used safely and conveniently. Further, the wind noise may be reduced, the loss in the air flowing may be reduced, and the air flowing efficiency of the neck fan **1** may be improved.

[0358] Further, the outlet adjustment plate **31** may include at least two plate portions **311** spaced apart from each other and a connection portion connected to the at least two plate portions. The at least two plate portions **311** may be received in the air outlet **13** to divide the air outlet **13** into at least two sub-outlets. The number of the plate portions **311** may be determined appropriately based on a size of air outlet **13**. In the present embodiment, three plate portions **311** may be arranged. The connection portion **312** may include a first connection portion **312***a* and a second connection portion **312***b*. The shell **10** may include a third connection portion **14***a* near the air outlet **13**. The third connection portion **14***a* may be movably connected to the first connection portion **312***a*. the second connection portion **312***b* may be connected to the driving assembly **32**. Arranging at least two plate portions **311** spaced apart from each other and disposing the at least two plate portions **311** in the air outlet **13** to divide the air outlet **13** into the at least two sub-outlets, allows the air to flow out of the neck fan **1** more uniformly, and enables an air out flowing direction from the air outlet **13** to be adjusted. In addition, the third connection portion **14***a* of the shell **10** may be movably connected to the first connection portion **312***a* of the outlet adjustment plate **31**. The second connection portion **312***b* of the outlet adjustment plate **31** may be connected to the driving assembly **32**. In this way, the driving assembly **32** may drive the plate portions **311** through the second connection portion **312***b*, such that the air out flowing direction of the air outlet **13** may be adjusted. Further, the movable connection between the third connection portion **14***a* and the first connection portion **312***a* allows the outlet adjustment plate **31** to be stably connected to the shell **10**, ensuring the neck fan **1** to be stable and safe while the air out flowing direction is being adjusted.

[0359] In detail, the third connection portion may be rotatably connected to the first connection portion **312***a*. One of the third connection portion **14***a* and the first connection portion **312***a* may include a pivot, and the other one of the third connection portion **14***a* and the first connection portion **312** may define a pivot hole. In the present embodiment, the first connection portion **312***a* includes the pivot, and the third connection portion **14***a* defines the pivot hole. The pivot is at least partially received in the pivot hole to achieve rotation connection between the third connection portion **14***a* and the first connection portion **312***a*. Since one of the third connection portion **14***a* and the first connection portion **312***a* includes the pivot, and the other one of the third connection portion **14***a* and the first connection portion **312** defines the pivot hole, the pivot is at least partially received in the pivot hole to achieve rotation connection between the third connection portion **14***a* and the first connection portion **312***a*, the structural connection may be simple, and the connection may be reliable.

[0360] Further, the driving assembly **32** may include a driving member **321**, a first transition member **322**, and a second transition member **323**. The first transition member **322** may be connected to the driving member **321**. The second transition member **323** may be connected between the first transition member **322** and the second connection portion **312***b*. The driving member **321** may include a driving body **321***a* and a driving shaft **321***b* connected to the first driving body **321***a*. The first transition member **322** may include a first cone gear **322***a*. The first cone gear **322***a* may sleeve on the driving shaft **321***b*. The second transition member **323** may include a second cone gear **323***a* engaged with the first cone gear **322***a*, a transition shaft **323***b* connected to the second cone gear **323***a*, and a transition portion **323***c* connected between the transition shaft **323***b* and the second connection portion **312***b*. The driving body **321***a* drives the driving shaft **321***b* to rotate, such that the first cone gear **322***a* rotates. Further, the engagement drives the second cone gear **323***a* that engages with the cone gear **322***a* to rotate, such that the outlet adjustment plate **31** may be driven to rotate to adjust the air out flowing direction, the structure may be simple and reliable.

[0361] In detail, an extending direction of the driving shaft **321***b* may be perpendicular to an extending direction of the transition shaft **323***b*. the transition portion **323***c* may include a circular plate **323***d*. the transition shaft **323***b* may be eccentrically connected to a plate surface of the circular plate **323***d* away from the second connection portion **312***b*. When the driving body **321***a* drives the driving shaft **321***b* to rotate to drive the transition shaft **323** *b* to rotate, since the transition shaft **323***b* is eccentrically connected to the circular plate **323***d*, the second transition member **323** may drive the outlet adjustment plate **31** to rotate around the pivot shaft while the outlet adjustment plate **31** is swinging to the left and to the right. In this way, an adjustment range of the air out flowing direction may be increased. The second connection portion **312***b* may include a first portion **312***c* connected to the plate portions **311** and a second portion **312***d* connected to the first portion **312***c*. A cross section of the second portion **312***d* may be U shaped, and the second portion **312***d* may define a receiving space. That is, the second portion **312***d* defines a U-shaped receiving space. The opening of the receiving space of the second portion **312***d* may face the transition portion **323***c*. The transition portion **323***c* may be received in the U-shaped receiving

space. The shell **10** may further include a fourth connection portion **14***b*. The fourth connection portion **14***b* may be connected to a body of the shell **10** and may be disposed between the third connection portion **14***a* and the second cone gear **323***a*. The fourth connection portion **14***b* may define a guide hole **141**. The transition shaft **323***b* may extend through the guide hole **141** and may be movable in the guide hole. The guide hole **141** may be a strip-shaped hole and may communicate with an external of the neck fan. Arranging the transition shaft **323***b* to be eccentrically connected to the plate face of the circular plate **323***d* away from the second connection portion **312***b* increases the adjustment range of the air out flowing direction. Further, the transition portion **323***c* is received in the U-shaped receiving space, such that the transition portion **323***c* may be stably connected to the second connection portion **312***b* while rotating, and the transition portion **323***c* may not be detached easily. In addition, arranging the fourth connection portion **14***b*, defining the guide hole **141** in the fourth connection portion **14***b*, and defining the guide hole **141** to be strip-shaped and communicating with the external, allows the second transition member **323** to be assembled easily, and a position of the second transition member **323** may be limited and supported stably.

[0362] Further, the shell **10** may include a first shell **15***a* arranged near a side of the user's neck and a second shell **15***b* arranged near another side of the user's neck. The receiving chamber **11** may include a first sub-chamber **111** defined in the first shell **15***a* and a second sub-chamber **112** defined in the second shell **15***b*. The air inlet **12** may include a first air inlet **12** defined in the first shell **15***a* and a second air inlet **12** defined in the second shell **15***b*. The air outlet **13** may include a first air outlet **131** defined in the first shell **15***a* and a second air outlet **132** defined in the second shell **15***b*. Two fan assemblies **20** may be arranged, and two outlet adjustment assemblies **30** may be arranged. One of the two fan assemblies **20** may be received in the first sub-chamber **111**, and configured to guide the air from the first air inlet **12** to flow to the first air outlet **131**. The other one of the two fan assemblies **20** may be received in the second sub-chamber **112**, and configured to guide the air from the second air inlet **12** to flow to the second air outlet **132**. One of the two outlet adjustment assemblies **30** may be received in the first sub-chamber **111** and configured to adjust the air flowing out through the first air outlet **131**. The other one of the two outlet adjustment assemblies **30** may be received in the second sub-chamber **112** and configured to adjust the air flowing out through the second air outlet **132**. In the present embodiment, the two fan assemblies **20** may be received in the first sub-chamber **111** of the first shell **15***a* and the second sub-chamber **112** of the second shell **15***b* respectively. In this way, the air may flow out of the neck fan from two opposite sides of the user's neck at the same time, cooling the user quickly. Since the first shell **15***a* and the second shell **15***b* are arranged, and each of the first shell **15***a* and the second shell **15***b* corresponds to one fan assembly **20**, an air flowing efficiency out of the neck fan **1** may be increased. Further, the two fan assemblies **20** are received in the first sub-chamber **111** and the second sub-chamber **112** respectively, the air flowing caused by the two fan assemblies may not interfere each other, the air flowing efficiency out of the neck fan **1** may further be increased.

[0363] Further, the shell **10** may further include a connection assembly **16** connected between the first shell **15***a* and the second shell **15***b*. The connection assembly **16** may include a connection shell **161**, a first connection member **162** and a second connection member **163**. The connection shell **161** may be a curved hollow tube. An end of the first connection member **162** may be connected to and arranged inside an end of the connection shell **161**, and the other end of the first connection member **162** may be connected to and arranged inside an end of the first shell **15***a*. An end of the second connection member **163** may be connected to and arranged in the other end of the connection shell **161**, and the other end of the second connection member **163** may be connected to and arranged inside the other end of the second shell **15***b*. In the present embodiment, the connection assembly **16** is configured to connect the first shell **15***a* to the second shell **15***b*, such that the neck fan **1** may hang around the user's neck, the structure of the neck fan may be simple, the neck fan may be easily manufactured, and may be easily assembled.

[0364] Further, the fan assembly **20** may include turbine blades **21**. The fan assembly **20** in each of the first sub-chamber **111** and the second sub-chamber **112** may include at least two turbine blades. The at least two turbine blades **21** may be arranged along a predetermined direction. An air flowing direction generated by the turbine fans may be perpendicular to an extending direction of the rotation shaft of the fan. In this way, an increased air volume may be generated while a reduced space may be occupied, such that the amount of air flowing out of the neck fan **1** may be increased, the user may be cooled quickly. The neck fan **1** may further include an electric control assembly **40**, received in one of the first sub-chamber **111** and the second sub-chamber **112**. The electric control assembly **40** may include a battery **41**, a circuit board **42**, and a control switch **43**. The circuit board **42** may be electrically connected to the battery **41** and the control switch **43**. The neck fan **1** may be supplied with power by the battery **41**. The user may carry and user the neck fan at anytime and anywhere. In the present embodiment, the fan assembly **20** includes the turbine blades **21**, the fan assembly **20** in each of the first sub-chamber **111** and the second sub-chamber **112** includes at least two turbine blades, and the at least two turbine blades **21** are arranged along the predetermined direction, such that the air flowing efficiency of the neck fan **1** may be improved effectively.

[0365] Further, the shell **10** may include an inner plate **17** near the user's neck, an outer plate **17***b* opposite to the inner plate **17***a*, a first connection plate **18***a*, a second connection plate **18***b*, and an end plate **18***c*. The first connection plate **18***a* may be connected to a side of the inner plate **17***a* and a side of the outer plate **17***b*, and may be arranged near the user's face. The second connection plate **18***b* may be connected to another side of the inner plate **17***a* and another side of the outer plate **17***b*. The end plate **18***c* may be connected to the inner plate **17***a*, the outer plate **17***b*, the first connection plate **18***a* and the second connection plate **18***b*. The air inlet **12** may be defined in at least one of the inner plate **17***a* and the outer plate **17***b*. The air outlet **13** may be defined in the first connection plate **18***a*. The first connection plate **18***a* may define a plurality of air outlets **18***a* communicating with the receiving chamber **11**. Sizes of the plurality of air outlets **181** may be gradually decreased along a direction away from the air outlet **13**. In the present embodiment, each of the inner plate **17***a* and the outer plate **17***b* defines the air inlet **12**, such that the amount of air flowing into the neck fan **1**

may be increased, an air intaking efficiency of the neck fan **1** may be increased. The plurality of air outlets **181**, which are defined in the first connection plate **18***a* and communicating with the receiving chamber **11**, may be arranged around an outer periphery of the user's neck. In this way, the plurality of air outlets **181** and the air outlet **13** may cooperatively allow the air to flow out of the neck fan, enabling the user to feel comfortable. The driving assembly **32** is disposed between the end plate **18***c* and the fan assembly **20**. The shell **10** may further include a first partition plate **19***a* and a second partition plate **19***b*. The first partition plate **19***a* is arranged to surround an outer side of the fan assembly **20**. The second partition plate **19***b* may be connected to the first partition plate **19***a* and extend towards a side away from the end plate **18***c*. The second partition plate **19***b* and the first connection plate **18***a* may define an air duct **19***c* communicating with the air outlets **181**, such that the fan assembly **20** may drive the air from the air inlet **12** to flow along the air duct **19***c* to the air outlets **181**. In the present embodiment, the air inlet is defined in at least one of the inner plate **17***a* and the outer plate **17***b*, and the air outlet **13** is defined in the first connection plate **18***a*. In this way, the air inlet and the air outlet may not be communicated and interfere with each other. The plurality of air outlets **181** are defined in the first connection plate **18***a* and communicating with the receiving chamber **11**, such that the amount of air flowing out of the neck fan **1** may be increased, increasing the air flowing efficiency out of the neck fan. The second partition plate **19***b* and the first connection plate **18***a* define the air duct **19***c* communicating with the air outlets **181**, such that the fan assembly **20** may drive the air from the air inlet **12** to flow along the air duct **19***c* to the air outlets **181**. In this way, the loss of the wind of the fan assembly **20** while flowing in the receiving chamber **11** may be reduced, further increasing the air flowing efficiency out of the neck fan.

[0366] Further, the shell **10** may further include an air inlet cover **17***c*. A position at which the air inlet cover **17***c* is arranged may correspond to the air inlet **12**. Further, an inlet gap **17***d* may be defined between the air inlet cover **17***c* and an outer surface of the shell **10** and may communicate with the air inlet **12**. In this way, the air out of the neck fan **1** may enter the receiving chamber **11** by flowing through the inlet gap **17***d* and the air inlet **12**. Each of the inner plate **17***a* and the outer plate **17***b* may define the air inlet **12**. The air inlet cover **17***c* may include a first inlet cover **171** and a second inlet cover **172**. The first inlet cover **171** may be arranged on a side of the outer plate **17***b* away from the inner plate **17***a*. The second inlet cover **172** may be arranged on a side of the inner plate **17***a* away from the outer plate **17***b*. The inlet gap **17***d* may be defined between the first inlet cover **171** and the outer surface of the outer plate **17***b*, and may communicate with air inlet **12** of the outer plate **17***b*. In this way, the air out of the neck fan **1** may enter the receiving chamber **11** through the inlet gap **17***d* and the air inlet **12** of the outer plate **17***b*. The second inlet cover **172** may define a plurality of air inlets **17***e* corresponding to the air inlet **12** of the inner plate **17***a*, such that the air out of the neck fan **1** may enter the receiving chamber **11** through the air inlets **17***e* and the air inlet **12** of the inner plate **17***a*. It shall be understood that, the inlet gap **17***d* may compress the air flowing into the neck fan and allow an air pressure near the air inlet **12** to be greater than an air pressure in the receiving chamber **11**. In this way, a negative pressure is generated to push the air out of the neck fan **1** towards the air inlet **12**, increasing an air flowing speed, maximizing an air intaking efficiency of the neck fan **1**. Further, the efficiency of the air flowing out of the neck fan **1** may be increased, and the user may be cooled quickly. By arranging the air inlet cover **17***c*, the hair or the foreign matters may not wind to the fan assembly easily, allowing the neck fan to be used safely and conveniently, and reducing the wind noise.

[0367] FIGS. **53-57** show a neck fan according to an embodiment of the present disclosure.

[0368] An arrow X in the figures indicate a front-rear direction, i.e., a front side-rear side direction. An arrow Y in the figures indicate a horizontal direction, i.e., a left-right direction. An arrow Z in the figures indicate a vertical direction, i.e., an up-down direction.

[0369] As shown in FIGS. **53-55**, the neck fan may include a shell **1**, a fan assembly **2**, and a wind guide member **3**. The shell **1** may be configured to hang around the user's neck. The shell **1** may define an air inlet **11**, an air outlet **12**, and an air duct defined in the shell **1**. The air duct may communicate with the air inlet **11** and the air outlet **12**. The fan assembly **2** may be arranged inside the shell **1** and configured to guide the external into the neck fan through the air inlet **11**, and drive the air to flow along the air duct to the air outlet **12**. The wind guide member **3** may be detachably received in the air duct and configured to guide and separate the air flowing in the air duct. The wind guide member **3** may extend from the fan assembly **2** towards the air duct. The wind guide member **3** may divide the air duct, such that the air may flow along predetermined tracks, and the air may be collectively transported to the divided air duct. In this way, the air may flow to approach the air outlet **12**, allowing the air flowing out of the neck fan more uniformly. Further, the speed of the air flowing out of the neck fan may be increased, improving the user's experience. Further, the wind guide member **3** is detachably received in the air duct, the wind guide member may be assembled and detached quickly, and may be easily replaced in the future.

[0370] In some embodiments, the wind guide member **3** may be a curved wind separation plate. A first end **31** of the wind separation plate may be curved and bent and may be disposed near the fan assembly **2**. A plate face **32** of the wind separation plate may correspond to the air outlet **12**. The plate face **32** of the wind separation plate may separate the air duct to define a first air chamber Q**1** and a second air chamber Q**2**. The first air chamber Q**1** may communicate with the air outlet **12**. In detail, the first air chamber Q**1** is defined above the wind separation plate, and the second air chamber Q**2** is defined below the wind separation plate. That is, the first air chamber Q**1** may be above the second air chamber Q**2**. The first air chamber Q**1** is defined to allow the air to flow along, enabling the air to flow to the air outlet **12**. The second air chamber Q**2** is defined to receive an electronic element, such as a battery C**1**, a circuit board of the neck fan, and so on.

[0371] In some embodiments, a cross section area of the first air chamber Q**1** may be gradually decreased along a direction away from the fan assembly **2**. In this way, a cross section area of the air duct away from the fan assembly **2** may be decreased gradually, compressing the air in the air duct, such that an air flowing speed may be increased, and an amount of air flowing out of the neck fan may be increased. In this way, the amount of air flowing out of the neck fan at a position away from the fan assembly **2** may be the same as the amount of air flowing out of the neck fan at

a position near the fan assembly **2**. The user may feel that the amount of air flowing out of the neck fan through various air outlets are uniform, improving the user's experience.

[0372] In some embodiments, a curved and bent contour of the first end **31** of the wind separation plate may fit with a contour of an outer circumference of the fan assembly **2**. In this way, the wind generated from the fan assembly **2** may flow by touching the plate face **32** of the wind separation plate, reducing a resistance against the air flowing, optimally maintaining the air flowing speed.

[0373] In some embodiments, as shown in FIGS. **56** and **57**, at least one wind equalizing plate **321** may extend out from the plate face **32** of the wind separation plate and may face the air outlet **12**. The wind equalizing plate **321** may define a through hole **3211** to allow the air to flow through. The wind equalizing plate **321** allows the air in the first air chamber Q**1** to flow out of the air outlet **12** uniformly. In some embodiments, after the wind is generated by the fan blades **21** of the fan assembly, most of the air may flow along the wind separation plate towards the air duct, but may not saturate to flow upwardly towards the air outlet **12**. Arranging the wind equalizing plate **321** may facilitate the air flowing directions to be changed, such that the air flowing through each air outlet **12** may be uniform, and each air outlet **12** may be saturated by the air. Further, the rest of the air that does not flow out through the air outlet **12** may continue flowing along the wind separation plate deeply to the air duct.

[0374] In some embodiments, the wind equalizing plate **321** may be curved. A tangent of a curved face of the wind equalizing plate **321** may be obtained. An angle between the tangent and the plate face of the wind separation plate may be in a range of 30° to 90°. In this way, when the air contacts the wind equalizing plate **321**, the resistance against the air flowing along the wind equalizing plate **321** to the air outlet **12** may be relatively small. Therefore, the air flowing speed may be maintained optimally, and the resistance against the wind may be reduced.

[0375] In some embodiments, the shell **1** may include a first end head portion T**1**, a second end head portion T**2**, and a middle connection portion T**3**. The middle connection portion T**3** may be connected between the first end head portion T**1** and the second end head portion T**2**. At least one fan assembly **2** may be arranged inside at least one of the first end head portion T**1** and/or the second end head portion T**2**. An auxiliary wind separation plate Z**1** may be arranged inside the middle connection portion T**3**. An end portion of the auxiliary wind separation plate Z**1** may align to an end portion of the wind separation plate in the first end head portion T**1** and/or the second end head portion T**2**. In this way, the air duct in each of the first end head portion T**1**, the second end head portion T**2**, and the middle connection portion T**3** is divided. Further, when the air in the first air chamber Q**1** of the first end head portion T**1** and/or the second end head portion T**2** flows to the middle connection portion T**3**, the air may also flow along the auxiliary wind separation plate Z**1** to further reach the middle portion of the shell **1**. Therefore, in the present embodiment, the air in the entire may flow through the air ducts defined in the entire shell **1** to reach the air outlet **12** to exit the neck fan, further enabling the air flowing out of various outlets to be uniform, improving the user's experience.

[0376] In some embodiments, the fan assembly **2** may include fan blades **21** and a motor driving the fan blades **21** to rotate. The air inlet **11** may be defined a side face of the first end head portion T**1** and the second end head portion T**2**. A position in which the air inlet **11** is defined may correspond to a position at which the fan assembly **2** is arranged. The air outlet **12** is defined in an inner surface and/or an upper surface of the shell **1**, such that the wind may be blown towards the user's neck. When the air outlet **12** is defined in the upper surface of the shell **1**, the air may be blown out of the neck fan straightforwardly, and the air may flow upwards along the user's neck, such that the user's face, rear of the user's ears, and the user's head may be blown by the air. An area covered by the air may be increased, improving the user's experience.

[0377] In some embodiments, the wind guide member **3** may be inserted or embedded into the inner wall of the shell **1**, such that the wind guide member **3** may be assembled and detached easily.

[0378] In some embodiments, the wind guide member may be arranged in a protrusion **33** protruding side-ward. The inner wall of the shell **1** may define a slot **13** for receiving the side-ward protrusion **33**.

[0379] According to the present embodiment, the neck fan may include the shell, the fan assembly, and the wind guide member. The shell may be configured to hang around the user's neck. The shell may define the air inlet, the air outlet, and the air duct defined in the shell. The air duct may communicate with the air inlet and the air outlet. The fan assembly may be arranged inside the shell and configured to drive the external air to flow through the air inlet, and drive the air to flow along the air duct to reach the air outlet. The wind guide member may be detachably received in the air duct and configured to separate and guide the air in the air duct. The wind guide member may extend from the fan assembly towards the air duct. The neck fan of the present embodiment may divide the air duct, allowing the air to uniformly flow out of various air outlets. Further, the wind guide member may be easily assembled and detached.

[0380] FIGS. **58-66** show a neck fan according to some embodiments of the present disclosure.

[0381] An arrow X in the figures indicate a front-rear direction. An arrow Y in the figures indicate a left-right direction. An arrow Z in the figures indicate an up-down direction.

[0382] As shown in FIGS. **58-60**, the neck fan **100**, according to a first embodiment of the present disclosure, may include a shell **1**. The shell **1** may include two first portions **11** and a second portion **12** connected to the two first portions **11**. The two first portions **11** may be symmetrically disposed at two opposite sides of the second portion **12**. The shell **1** (in other words, one of the two first portions **11**) may be arranged with a first air inlet portion A**1** and a first air outlet portion C**1** and may define a receiving chamber R**1** and an air duct D**1**. The neck fan **100** may further include a fan assembly **2**. The fan assembly **2** may be received in the receiving chamber R**1**. The fan assembly **2** may be configured to drive the external air to flow through the first air inlet portion A**1**, further flow along the receiving chamber R**1** and the air duct D**1**, and to flow out of the neck fan through the first air outlet portion C**1**. The fan assembly **2** may include a fan **21** and a motor driving the fan **21** to rotate. The motor may drive the fan **21** to rotate around a rotation shaft. A central axis of the rotation shaft X**1** may be perpendicular to an orthographic projection of the first air inlet portion A**1**. When the neck fan **100** is worn to the user,

the second portion **12** may correspond to the back the user's neck. The two first portions **11** may correspond to a left neck and a right neck respectively and correspond to a front of the user's chest. The two first portions **11** may extend from the second portion **12**, extending upwardly and front-wardly, and further extending downwardly towards the user's chest. Along extending directions of the two first portions **11**, the two first portions **11** may partially correspond to the user's shoulders. Further, along a gravitational direction, a wider face of the first portion **11** and a wide face of the second portion **12** contact the user. In this way, neck fan **100** may lay on the user's shoulders, which may be ergonomically friendly, allowing the user to be more comfortable when wearing the neck fan. It shall be understood that, shapes of the first portion **11** and the second portion **12** may not be limited by the above embodiments, as long as the neck fan **100** may be worn to around the user's neck. In other embodiments, one first portion **11** may be used independently. One first portion **11** may serve as a hand-held fan, a clamping fan, a fan worn to other portions of the user (such as a wrist).

[0383] As shown in FIGS. **59-61**, the fan **21** may have a second air inlet portion **22** and a second air outlet portion **23**. The air may flow past the first air inlet portion A**1**, the second air inlet portion **22**, the second air outlet portion **23**, and the air duct D**1**, and the air may flow out of the neck fan through the first air outlet portion C**1**. At least a portion of the second air inlet portion **22** may extend through the fan **21**. The central axis X**1** of the rotation shaft may be perpendicular to the orthographic projection of the second air inlet portion **22**. The air may flow to leave the second air outlet portion **23** along a first direction F**1** (indicated by the arrow shown in FIG. **63**). The first direction F**1** may be perpendicular to the central axis X**1** of the rotation shaft. In other words, the motor drives the fan to rotate, generating a rotation plane. The first portion **11** may include a first wall defining the air outlet and a second wall defining the air inlet. The first wall and the second wall may be arranged on a same side of the rotation plane.

[0384] In the present embodiment, the fan **21** may be a turbine fan. The turbine fan may occupy a relatively small space but generate a proper amount of air. Therefore, a space utilization rate may be high. Further, for the turbine fan, the air is taken in along an axial direction, and the air is output along a radial direction. The fan **21** may lay on the shoulders, and the central axis of the rotation shaft is perpendicular to the orthographic projection of the first air inlet portion A**1**. The shell **1** is arranged with two first air inlet portions A**1** on two opposite sides of the fan **21**. The fan **21** may define the air inlets in an upper side and a lower side of the fan **21**. That is, the air may be taken in from the upper side and the lower side at the same time. In this way, an air inlet demand of the fan **21** may be satisfied. Further, intaking the air from the upper side and the lower side at the same time may not intake the hair at left and right sides of the fan, ensuring the user's safety. In other embodiments, the fan **21** may not be limited to the turbine fan, but may be a fan in other types, as long as the fan can be driven by the motor to generate the wind.

[0385] As shown in FIGS. **59** and **60**, the receiving chamber R**1** is defined in an end of the first portion **11** away from the second portion **12**. That is, the fan assembly **2** is arranged at the end away from the second portion **12**, such that a relatively large range of regions may be available to correspondingly arrange the first air inlet portion A**1**. The second portion **12** is configured to receive an electronic control assembly P**1**. The electronic control assembly P**1** may include a battery, a circuit board and a switch, and the like. A partition **13** may be arranged inside the shell **1** to separate the first portion **11** from the second portion **12**. The air duct D**1** is defined between the receiving cavity R**1** and the partition plate **13**. The partition plate **13** prevents the flowing air from affecting operation of the electronic control assembly P**1**, ensuring the safety of using the neck fan **100**. In addition, the air duct D**1** is defined only in the first portion **11**, such that the generated wind may not be consumed in an excessively long air duct D**1**, allowing the air flowing out of the first air outlet portion C**1** to be more stable and comfortable. It shall be understood that wires may be arranged between the electronic control assembly P**1** and the motor, such that the electronic control assembly P**1** may supply power to the motor, and such the structure may be available in the art and will not be described in detail herein.

[0386] In some embodiments, the shell **1** may not be arranged with the partition plate **13**. The electronic control assembly P**1** may be arranged out of the shell **1**. The air duct D**1** may further extend to the second portion **12**. Arranging the electronic control assembly P**1** out of the shell **1** allows the neck fan **100** to be more slim. Similarly, the receiving chamber R**1** may be defined in other components of the shell **1**, such as in the second portion **12**. Only one fan assembly **2** may be arranged. The present disclosure does not limit the number of the fan assemblies **2**, as long as the fan assembly **2** can drive the external air into the shell **1**, transfer the air into a wind, and drive the wind to flow out of the neck fan from the first air outlet C**1**.

[0387] As shown in FIGS. **58-60**, the central axis of the rotation shaft is perpendicular to the orthographic projection of the first air outlet portion C**1**. In detail, the first air outlet portion C**1** extends through the first portion **11** and extends diagonally upwards. When the neck fan **100** is worn, the first air outlet portion C**1** corresponds to a side of the neck and blows the air in an upward direction. In this way, the air from the first air outlet portion C**1** does not flow directly towards the neck, improving the user's experience. The position of the first air outlet portion C**1** is not limited by the present disclosure. The central axis of the rotation shaft may alternatively be parallel to the orthographic projection of the first air outlet portion C**1**. For example, the first air outlet portion C**1** may be arranged on a side of the first portion **11** near the user's neck. Alternatively, an angle may be formed between the central axis of the rotation shaft and the orthographic projection of the first air outlet portion C**1**.

[0388] As shown in FIG. **60**, in the air duct D**1**, the wind guide member **3** extends from the inner wall of the first portion **11** where the first air outlet portion C**1** is arranged in a direction away from the first air outlet portion C**1**. In this way, the air guide **3** may guide a portion of the air to flow out of the neck fan from the first air outlet portion C**1** at a front side of the neck fan, and at the same time, the air guide **3** may guide the remaining air to flow out of the neck fan from the first air outlet portion C**1** at a rear of the neck fan. In the present embodiment, two wind guide portions **3**, which are spaced apart from each other, may be received in the air duct D**1** in a direction of extending from the receiving chamber R**1** and the second portion **12**. A slope difference and a height difference may be present between the two wind guide portions **3**. In this way, the air flowing out of the first

air outlet portion C**1**, which is divided by the two wind guide portions **3**, may be uniform, improving the user's experience. The number of wind guide portions **3** is not limited by the present disclosure, as long as the air is evenly flowing through each part of the first air outlet portion C**1**, which is divided by the wind guide portions **3**. An edge of a free end of the wind guide portion **3** may be wavy or serrated to reduce the wind noise, and the shape of the edge shall not be limited by the present disclosure.

[0389] As shown in FIGS. **58-59** and **62**, the shell **1** includes a first shell **101** and a second shell **102** that can be engaged with each other. A first engaging portion may be arranged inside the first shell **101**, and a second engaging portion **1021** may be arranged inside the second shell **102**. The first engaging portion and the second engaging portion **1021** may be snapped or embedded or bolted or magnetically connected to each other, based on the actual situation. A connection manner between the first engaging portion and the second engaging portion **1021** is not limited by the present disclosure. A fan partition plate **111** extends from the inner wall of the first portion **11** and surrounds a part of the fan **21**. A space cooperatively defined between the fan partition plate **111** and the shell **1** may be suitable to receive the second engaging portion **1021**. Further, the fan partition plate **111** extends towards a width direction of the receiving chamber R**1** to form a corner **1111**, and the corner **1111** may serve as a turning tongue of a turbine fan. The corner **11111** formed from the fan partition plate **111** reduces a width of the air outlet, resulting in a more effective air flowing.

[0390] As shown in FIGS. **58-60**, an air inlet cover **4** is arranged on an outer side of the first air inlet portion A**1**, prevent the rain or external dust from entering the shell **1** and affecting operation of the fan assembly **2**. A gap is defined between the air inlet cover **4** and the first air inlet portion A**1** facilitating the air to enter the shell **1**. The air inlet cover **4** further prevents the hair from being sucked when the neck fan is operating, ensuring the user's safety.

[0391] As shown in FIG. **63**, a second embodiment of the neck fan **100** of the present disclosure is provided. In the present embodiment, the shell **1** is arranged with one first air inlet portion A**1** corresponding to only one of two opposite sides of the fan **21**. In detail, the shell **1** is arranged with one first air inlet portion A**1** corresponding to an upper side of the fan **21**. In this way, the amount of air intaking may be reduced, but the amount of air flowing out of the neck fan may be more suitable for people who have a low requirement about the amount of air flowing but require the air flowing to be comfortable. Alternatively, the shell **1** may be arranged with one first air inlet portion A**1** corresponding to a lower side of the fan **21** only. Other structure and properties of the present embodiment may be referred to the above first embodiment and will not be repeated here.

[0392] As shown in FIGS. **64-66**, a third embodiment of the neck fan is shown. In the present embodiment, the shell **1** is arranged with the first air inlet portion A**1** corresponding to a radial outer side of the fan **21**. The central axis X**1** of the rotation shaft is parallel to the orthographic projection of the first air inlet portion A**1**. The fan **21** is arranged at the end of the first portion **11** away from the second portion **12**. The first air inlet portion A**1** may be arranged on a large half circle of the end of the first portion **11**. In this way, a relatively large area may be available to arrange the first air inlet portion A**1**, increasing the air intaking volume and a range for intaking the air. At the same time, since the fan **21** is the turbine fan, the fan may intake the air along the axial direction and outputs the wind along the radial direction. In order to avoid the air coming out of the second air outlet portion **23** of the fan **21** from colliding with the air entering the neck fan from the first air inlet portion A**1** (which corresponds to radial outside of the fan), a fan shell **24** is arranged on the outside of the fan **21** to guide the air inlet and the air outlet of the fan **22**. In this way, the air inlet and the air outlet may be achieved smoother. Other structures and properties of the present embodiment may be the same as those of the first embodiment and will not be repeated here.

[0393] In other embodiments, a first angle is present between the central axis X**1** of the rotation shaft and the orthographic projection of the first air inlet portion A**1**. The first air inlet portion A**1** and the first air outlet portion C**1** may be arranged at other positions, as long as the first angle can be generated between the central axis X**1** of the rotation shaft and the first air inlet portion A**1**, a second angle can be generated between the central axis X**1** of the rotation shaft and the first air outlet portion C**1**, and each of the first angle and the second angle is in a range of 0-90 degrees (including the 0 degree and the 90 degrees). When the air inlet of the first air inlet portion A**1** conflicts with the air outlet of the second air outlet portion **23** of the fan **22**, the fan shell **24** may be arranged at the outside of the fan **22** to guide the air inlet and the air outlet of the fan **22**. Compared to the art, positions of the neck fan **100** in the present embodiment available for arranging the first air inlet portion A**1** and the second air outlet portion C**1** may be increased.

[0394] FIGS. **67-73** show a neck fan according to another embodiment of the present disclosure.

[0395] As shown in FIGS. **67** and **68**, FIG. **67** is a schematic view of a neck fan according to an embodiment of the present disclosure, and FIG. **68** is a schematic view of the neck fan shown in FIG. **67** from another view angle. The neck fan **1** includes a shell **10**, serving as a neck piece that hangs around the user's neck. When the neck fan is worn at the neck, the user's hands may be released and may perform other operations while using the neck fan. It shall be understood that, in the present embodiment, in order to allow the neck fan **1** to be worn more closely to the neck, the shell **10** may be curved.

[0396] As shown in FIGS. **69** and **70**, FIG. **69** is an exploded view of the neck fan shown in FIG. **67**, and FIG. **70** is an exploded view of the neck fan shown in FIG. **68**. In the present embodiment, the neck fan **1** may further include at least three fan assemblies **20** arranged inside the shell **10**. The shell **10** includes a first shell **11**, a second shell **12** and a third shell **13**. The first shell **11** and said second shell **12** may be configured to hang near two opposite sides of the user's neck respectively. The third shell **13** may be connected to the first shell **11** and the second shell **12** and disposed between the first shell **11** and the second shell **12**. Each of the first shell **11**, the second shell **12** and the third shell **13** defines a receiving cavity **14**, an air inlet **15** communicated with the receiving cavity **14** and an air outlet **16** communicated with the receiving cavity **14**. One fan assembly **20** may be received in each of the receiving cavity **14** of the first shell **11**, the receiving cavity **14** of the second shell **12** and the receiving cavity **14** of the third shell **13**, and may be configured to guide the air to flow from the air inlet **15** to the air outlet **16** respectively. It shall be understood that the first shell **11**, the second shell **12** and the third shell **13**

of the neck fan **1** may be connected to form an arc, such that the neck fan may fit curvature of the user's neck and may be easily worn. Further, the first shell **11** and the second shell **12** are disposed at two opposite sides of the user's neck, weights of the two sides of the neck fan may be balanced, the neck fan may be worn stably and not easily fall off from the user's neck. In addition, receiving one fan assembly **20** in the receiving cavity **14** of the third shell **13** allows the neck fan **1** to blow out the wind towards the back of the neck, and airflows may surround the user's neck and may flow uniformly, such that the user's neck may be cooled quickly, improving the user's experience.

[0397] According to the neck fan **1** in the above embodiment, the arc-shaped shell **10** allows the neck fan **1** to hang around the neck, the neck fan may blow the wind directly towards the neck and face, the user may be cooled quickly, improving the user's experience. In addition, arranging three fan assemblies **20** may increase the air out-flowing efficiency and increase the air output volume, such that a large area can be covered by the air out of the neck fan, further enabling the user to be cooled quickly, improving the user's experience. The three fan assemblies **20** are received in receiving cavities **14**, and therefore, the hair or foreign matters may not be caught in the fan assemblies **20**, ensuring the user's safety while using the neck fan **1**.

[0398] As shown in FIGS. **67-70**, at least one of the first shell **11**, the second shell **12** and the third shell **13** includes a first portion **111**, a second portion **112** and a third portion **113**. The third portion **113** is connected to the first portion **111** and the second portion **112** and is disposed between the first portion **111** and the second portion **112**. The receiving cavity **14** extends from the first portion **111** through the third portion **113** to the second portion **112**. The receiving cavity **14** includes a first sub-cavity **141** in the first portion **111**, a second sub-cavity **142** in the second portion **112** and a third sub-cavity **143** in the third portion **113**. The first sub-cavity **141**, the second sub-cavity **142** and the third sub-cavity **143** are communicated with each other. The fan assembly **20** is received in the third sub-cavity **143** of the third portion **113** and is configured to guide the air from the air inlet **15** to the air outlet **16**.

[0399] It shall be understood that, in the neck fan **1** of the present embodiment, the first shell **11** and the second shell **12**, which are disposed at two opposite sides of the user's neck, may be structurally symmetrical. Each of the first shell **11**, the second shell **12** and the third shell **13** may include the first portion **111**, the second portion **112**, and the third portion **113**. One fan assembly **20** is arranged inside each of the third portion **113** of the first shell **11** and the third portion **113** of the second shell **12**. While the neck fan **1** is operating, the fan assemblies **20** arranged at the two opposite sides of the user's neck may respectively guide the air from the air inlet **15** of the first shell **11** to flow to the air outlet **16** of the first shell **11** and guide the air from the air inlet **15** of the second shell **12** to flow to the air outlet **16** of the second shell **12**. In addition, one fan assembly **20** is arranged in the third portion **113** of the third shell **13** and is configured to guide the air from the air inlet **15** of the third shell **13** to flow to the air outlet **16** of the third shell **13**. Since the receiving cavity **14** is defined in each of the first shell **11**, the second shell **12**, and the third shell **13**, and the fan assembly **20** is received in the third sub-cavity **143** of the third cavity **14** of each of the first shell **11**, the second shell **12**, and the third shell **13**, the air flowing out of the first shell **11**, the air flowing out of the second shell **12**, and the air flowing out of the third shell **13** may be spaced apart from each other and may not interfere with each other. Therefore, the loss in the air out flowing may be reduced, and the efficiency of air flowing out of the neck fan **1** may be improved.

[0400] As shown in FIGS. **67** and **69**, the air outlet **16** includes a first air outlet **161** defined in the first portion **111** and communicated with the first sub-cavity **141** and a second air outlet **162** defined in the second portion **112** and communicated with the second sub-cavity **142**. The third portion **113** includes a wind-free region N. The wind-free region N is disposed between the first air outlet **161** and the second air outlet **162** and corresponds to a position where the fan assembly **20** is arranged. It shall be understood that, in the present embodiment, the wind-free region N does not define any air outlet, but defines a blind hole N**1**, which does not allow any air to flow through. Further, the wind-free region N corresponds to the fan assembly **20**, such that the wind generated by the fan assembly **20** may flow towards the first air outlet **161** and the second air outlet **162**, which locate at two opposite sides of the fan assembly **20**. In this way, the air flowing efficiency may be increased, the air may flow out of the neck fan more softly and more comfortably. In some embodiments, the wind-free region N may be a region without any hole. Alternatively, the wind-free region N may define openings, and a blocking plate may be arranged to block the openings, preventing the air from flowing through the openings, such that the wind-free region N is formed. According to the present embodiment, the wind-free region N separates the first air outlet **161** and the second air outlet **162**, such that the air may be distributed to two sides, the air may not be concentrated towards air outlets on one side, and therefore, the air volume may not be excessively high on one side, and an air blowing time may be not be excessively long on one side, the user may be comfortable, and the user's safety while using the neck fan **1** may be improved.

[0401] As shown in FIGS. **69** and **70**, each of the first portion **111**, the second portion **112** and the third portion **113** includes an inner plate **111***a*, an outer plate **111***b*, a first connection plate **111***c*, and a second connection plate **111***d*. The inner plate **111***a* is disposed near the neck. The outer plate **111***b* is disposed opposite to the inner plate **111***a*. The first connection plate **111***c* is connected to the inner plate **111***a* and the outer plate **111***b* and is disposed near the head. The second connection plate **111***d* is disposed opposite to the first connection plate **111***c*. The air inlet **15** is defined in at least one of the inner plate **111***a* of the third portion **113** and the outer plate **111***b* of the third portion **113**. The first air outlet **161** is defined in the first connection plate **111***c* of the first portion **111**. The second air outlet **162** is defined in the first connection plate **111***c* of the second portion **112**. The wind-free region Nis disposed on the first connection plate **111***c* of the third portion **113**. Furthermore, the wind-free region N of the present embodiment may correspond to the user's ears and a middle of the neck, preventing the wind noise generated when the wind blows directly to the ears, and preventing the neck from being uncomfortable when the wind blows directly to the neck. Further, hearing of the user may be protected, improving the user's experience. In the present embodiment, in order to allow the fan assembly **20** to blow the air towards the user's head to cool the user quickly and to improve the user's experience, the first air outlet **161** may be defined in the first connection plate **111***c* of the first portion **111**, and the second air outlet **162** may be

defined in the first connection plate **111***c* of the second portion **112**. For the third shell, the first air outlet **161** may be defined in the inner plate **111***a* of the first portion **111**, and the second air outlet **162** may be defined in the inner plate **111***a* of the second portion **112**.

[0402] In some embodiments, in order to further increase the air flowing volume and an area covered by the air flowing out of the neck fan, in addition to defining the first air outlet **161** in the first connection plate **111***c* of the first portion **111** and defining the second air outlet **162** in the first connection plate **111***c* of the second the **112**, the first air outlet **161** may further be defined in at least one of the inner plate **111***a* and the second connection plate **111***d* of the first portion **111**, and the second air outlet **162** may further be defined in at least one of the inner plate **111***a* and the second connection plate **111***d* of the second portion **112**. According to the present embodiment, the first air outlet **161** is defined in the first connection plate **111***c* of the first portion **111**, and the second air outlet **162** is defined in the first connection plate **111***c* of the second portion **112**. In this way, the fan assembly **20** is disposed located between the first air outlet **161** and the second air outlet **162**. The fan assembly **20** may drive the air from the air inlet **15** to flow along to opposite sides of the fan assembly **20** to reach the first air outlet **161** and the second air outlet **162**. The air flowing out of the first air outlet **161** and the second air outlet **162** do not interfere each other, reducing the loss of the air while outputting the air out of the neck fan. In addition, the air inlet **15** is defined in the inner plate **111***a* of the third portion **113** and the outer plate **111***b* of the third portion **113**. In this way, the air intaking through the air inlet **15** does not interfere the air flowing out of the neck fan through the first air outlet **161** and the second air outlet **162**. Further, circulation of intaking the air and outputting the air may be achieved, the efficiency of the air flowing out of the neck fan **1** may be improved.

[0403] As shown in FIGS. **67-70**, the air inlet **15** is defined in the inner plate **111***a* of the third portion **113** and in the outer plate **111***b* of the third portion **113**. The outer plate **111***b* of the third portion **113** includes a first protrusion **111***f* protruding from the outer plate **111***b* away from the user's neck. The first projection **111***f* defines a plurality of air inlets **151**, and the plurality of air inlets **151** may be arranged as a circle. The inner plate **111***a* of the third portion **113** includes a second protrusion **111***g* protruding away from the user's neck. A plurality of air inlets **152** are defined and arranged as circle at a periphery of the second protrusion **111***g*. In some embodiments, the air inlets **15** may be defined in at least one of the inner plate **111***a* of the first portion **111**, the outer plate **111***b* of the first portion **111**, the inner plate **111***a* of the second portion **112**, and the outer plate **111***b* of the second portion **112**. In the present embodiment, the air inlets **15** are defined in the inner plate **111***a* of the third portion **113** and the outer plate **111***b* of the third portion **113**. In this way, the air inlets **15** may correspond to the fan assembly **20**, preventing the wind stifling effect caused when the air inlet **15** is defined only in the inner plate **111***a* or only in the outer plate **111***b*. The air may fluently flow all the way through the air inlet **15**, the air outlet **16** and the air duct communicating with the air inlet **15** and the air outlet **16**. In this way, the air may flow fluently, and the wind noise may be reduced. In the present embodiment, the air inlet **15** is defined in the inner plate **111***a* of the third portion **113** and the outer plate **111***b* of the third portion **113**, such that the amount of the air intaken from the fan assembly **20** may be increased, and the efficiency of the air flowing out of the neck fan **1** may be improved.

[0404] As shown in FIG. **71**, FIG. **71** illustrates an inside of a first portion of the neck fan shown in FIG. **67**. In order to reduce the air flowing loss and increase the air out flowing efficiency, in some embodiments, at least one of the first shell **11**, the second shell **12** further includes a first partition portion **114**, a second partition portion **115**, a first air guide portion **116**, and a second air guide portion **117**. The first partition portion **114** is at least partially received in said first sub-cavity **141** and covers a side of the fan assembly **20** near the user's face and the first portion **111**. The second partition portion **115** covers a periphery of the fan assembly **20** and is opposite to the first partition portion **114**. The first air guide portion **116** is connected to the first partition portion **114** and is received in the first sub-cavity **141**. The second air guide portion **117** is received in the second sub-cavity **142**. The first air guide portion **116** divides the first sub-cavity **141** into a first receiving space **141***a* and a first air duct **141***b* communicated with the first outlet **161** of the first portion **111**. The second air guide portion **117** divides the second sub-cavity **142** into a second receiving space **142***a* and a second air duct **142***b* communicated with the second outlet **162** of the second portion **112**. It shall be understood that the wind generated by the fan assembly **20** is directed to two opposite sides of the fan assembly **20** and guided by the first partition portion **114** and the second partition portion **115** respectively to flow to the first air guide portion **116** and the second air guide portion **117**. Further, the air is guided by the first air guide portion **116** to flow into the first air duct **141***b* to be blown out through the first air outlet **161**, and guided by the second air guide portion **117** to flow into the second air duct **142***b* to be blown out through the second air outlet **162**, respectively, as indicated by arrows in FIG. **71**. According to the present embodiment, the first partition portion **114** and the first air guide portion **116** are arranged, such that the first sub-cavity **141** is divided into a first receiving space **141***a* and a first air duct **141***b* communicated with the first outlet **161** of the first portion **111**. The second partition portion **115** and the second air guide portion **117** are arranged, such that the second sub-cavity **142** is divided into a second receiving space **142***a* and a first air duct **142***b* communicated with the second outlet **162** of the second portion **112**. The first air duct **141***b*, the second air duct **142***b* may direct the wind generated by the fan assembly **20** to flow to the first outlet **161** and the second outlet **162** respectively. In this way, loss of the airflows while blowing out the air is reduced, positions towards which the air is blown may be controlled accurately, and the efficiency of the air flowing out of the neck fan may be increased.

[0405] As shown in FIG. **72**, FIG. **72** illustrates an inside of a first portion of a neck fan according to another embodiment of the present disclosure. In order to reduce the air loss of the neck fan **1** and increase the air out-flowing efficiency, in some embodiments, at least one of the first shell **11** and the second shell **12** further includes the first partition portion **114**, the second partition portion **115**, a first air guide portion **116**, and a second air guide portion **117**. The first partition portion **114** is at least partially received in the third sub-cavity **143** and covers the side of the fan assembly **20** near the user's face and the first portion **111**. The second partition portion **115** covers the periphery of the fan assembly **20** and is opposite to said first the first partition section **114**. The first air guide portion **116** is disposed in the first sub-cavity **141**.

The second air guide portion **117** is disposed in said second sub-cavity **142** and connected to the second partition portion **115**. The first air guide portion **116** divides the first sub-cavity **141** into a first receiving space **141***a* and a first air duct **141***b* communicated with the first outlet **161** of the first portion **111**. The second air guide **117** divides the second sub-cavity **142** into a second receiving space **142***a* and a second air duct **142***b* communicated with the second outlet **162** of the second portion **112**. It shall be understood that the wind generated by the fan assembly **20** is directed two opposite sides of the fan assembly **20** and is guided by the first partition portion **114** and the second partition portion **115** to the first air guide portion **116** and the second air guide portion **117**, respectively. Further, the wind is guided by said first air guide portion **116** to flow into the first air duct **141***a* to further be blown out of the neck fan through the first air outlet **161**, and at the same time, the wind is guided by said second air guide portion **117** to flow into the second air duct **141***b* to further be blown out of the neck fan through the second air outlet **162**, as indicated by arrows in the FIG. **72**. According to the present embodiment, the first partition portion **114** and the first air guide portion **116** are arranged to divide the first sub-cavity **141** into the first receiving space **141***a* and the first air duct **141***b* communicated with the first outlet **161** of the first portion **111**. The second partition portion **115** and the second air guide portion **117** are arranged to divide the second sub-cavity **142** into the second receiving space **142***a* and the second air duct **142***b* communicated with the second outlet **162** of the second portion **112**. The first air duct **141***b* and the second air duct **142***b* direct the wind generated by the fan assembly **20** to flow to the first outlet **161** and the second outlet **162** respectively. In this way, the loss in the air out flowing may be reduced, positions towards which the air is blown may be controlled accurately, and the efficiency of the air flowing out of the neck fan may be increased.

[0406] In some embodiments, the first air guide portion **116** received in the first sub-cavity **141** is connected to the first partition portion **114**, and the second air guide portion **117** is connected to the second partition portion **115**.

[0407] Further, as shown in FIGS. **71** and **72**, the neck fan **1** includes a first auxiliary air guide plate **118** and a second auxiliary air guide plate **119**. The first auxiliary air guide plate **118** is configured to divide the first air duct **141***b* into a first sub-duct **141***c* and a second sub-duct **141***d*. The first air duct **141***b* is communicated with a portion of a plurality of air outlets **16** of the first portion **111**. The second sub-duct **141***d* is communicated with another portion of the air outlets **16** of the first portion **111**. The second auxiliary air guide plate **119** is configured to divide the second air duct **142***b* into a third sub-duct **142***c* and a fourth sub-duct **142***d*. The third sub-duct **142***c* is communicated with a portion of a plurality of air outlets **16** of the second portion **112**. The fourth sub-duct **142***d* is communicated with another portion of the air outlets **16** of the second portion **112**. In the present embodiment, an end portion of the first auxiliary air guide plate **118** near the first air outlet **161** may be substantially perpendicular to a wall of the shell that defines the first air outlet **161**, and an end portion of the second auxiliary air guide plate **119** near the second air outlet **162** may be substantially perpendicular to a wall of the shell that defines the second air outlet **162**. In this way, the air is guided by the first auxiliary air guide plate **118** and the second auxiliary air guide plate **119**, such that the air is blown out of the neck fan along a direction substantially perpendicular to a plane where the first connection plate **111***c* is arranged. In this way, the wind is blown to the user straightforwardly. A problem of interference between inclined air flowing may be solved, and the wind force may be maintained. According to the present embodiment, the first auxiliary air guide plate **118** divides the first air duct **141***b* into the first sub-duct **141***c* and the second sub-duct **141***d*. The second auxiliary air guide plate **119** is arranged to divide the second air duct **142***b* into the third sub-duct **142***c* and the fourth sub-duct **142***d*. In this way, the air may uniformly flow out through the first air outlet **161** and the second air outlet **162**, the loss in the air out flowing may be reduced, positions towards which the air is blown may be controlled accurately, and the efficiency of the air flowing out of the neck fan may be increased.

[0408] As shown in FIGS. **69-72**, the neck fan **1** further includes an electronic control assembly **60**. The electronic control assembly **60** includes at least one of a battery **61**, a circuit board **62** and a control button **63**. At least part of the electronic control assembly **60** is received in the first receiving space **141***a* or the second receiving space **142***a*. The electronic control assembly **60** allows the user to manipulate the neck fan **1** easily. The battery **61** may further supply power to the neck fan **1** when an external power source is unavailable, such that the neck fan **1** may be portable and may be used more conveniently, and the neck fan **1** may be applied in various application scenarios. In addition, the first air guide portion **116** is connected to the first partition portion **114**, and at least part of the electronic control assembly **60** is received in the first receiving space **141***a*. Alternatively, the second air guide portion **117** is connected to the second partition section **115**, and at least part of the electronic control assembly **60** is received in the second receiving space **141***b*. Alternatively, the first air guide portion **116** is connected to the first partition portion **114**, the second air guide portion **117** is connected to the second partition section **115**, and at least part of the electronic control assembly **60** is received in the first receiving space **141***a* or the second receiving space **141***b*. Receiving at least part of the electronic control assembly **60** in the first receiving space **141***a* or the second receiving space **141***b* ensures air tightness of the first receiving space **141***a* or the second receiving space **142***a* that receives the electronic control assembly **60**. In this way, external moisture, dust, and the like may be prevented from entering the neck fan through the air inlet, improving the safety of the neck fan **1**.

[0409] As shown in FIG. **73**, FIG. **73** illustrates an inside of a third portion of the neck fan shown in FIG. **67**. The third shell **13** includes a third partition plate **113***a*, a first extension portion **113***b*, a second extension portion **113***c*, and a third air guide portion **113***f*. The third partition plate **113***a* covers a side of the fan assembly **20** away from the first connection plate **111***c*. The first extension portion **113***b* is connected to an end of the third partition portion **113***a* near the first portion **111** and the first connection plate **111***c*. The second extension portion **113***c* is connected to an end of the third partition plate **113***a* near the second portion **112** and the first connection plate **111***c*. The third air guide portion **113***f* covers a side of the fan assembly **20** away from the third partition plate **113***a* and is connected to the wind-free region N. The third partition portion **113***a* extends along a curved direction. The fan assembly **20** is arranged eccentrically relative to the third partition plate **113***a*. The fan assembly **20** drives the air from the air inlet **15** to flow through the third

partition portion **113***a*, the first extension portion **113***b* and the third air guide portion **113***f* to reach the first air outlet **161**. The fan assembly **20** drives the air from the air inlet **15** to flow through the second extension **113***c* to reach the second air outlet **162**. It shall be understood that, in the present embodiment, the air out of the fan assembly **20** is directed by the third partition portion **113***a*, the first extension portion **113***b*, and the second extension portion **113***c*, and further guided by the third air guide portion **113***f*, reaching and flowing out of the neck fan through the first air outlet **161** and the second air outlet **162**, as indicated by arrows shown in FIG. **73**. In this way, an air blowing effect may be ensured, and an air blowing force may be ensured. Arranging the third partition portion **113***a*, the first extension portion **113***b*, the second extension portion **113***c* and the third air guide portion **113***f* allows the air to uniformly flow out of the first air outlet **161** and the second air outlet **162** of the third shell **13**. A loss in the air flowing may be reduced, positions towards which the air is blown may be controlled accurately, and the efficiency of the air flowing out of the neck fan may be increased.

[0410] Further, as shown in FIGS. **69-71**, each of the first shell **11** and the second shell **12** is rotatably connected to the third shell **13**. The shell **10** further includes a first connection member **30**. The first connection member **30** is connected to the first shell **11** and the third shell **13** and disposed between the first shell **11** and the third shell **13**. The shell **10** further includes a second connection member **40**. The second connection member **40** is connected to the second shell **12** and the third shell **13** and disposed between the second shell **12** and the third shell **13**. The first connection member **30** includes two first connection portions **31** and a second connection portion **32**. The two first connection portions **31** are arranged inside the first shell **11** and the third shell **13** respectively, and the second connection portion **32** is connected to the two first connection portions **31**. The second connection portion **32** extends through the third shell **13** and the first shell **11** and is rotatable. In this way, the first shell **11** is rotatably connected to the third shell **13**. The second connection member **40** includes two third connection portions **41** and a fourth connection portion **42**. The two third connection portions **41** are arranged inside the second shell **12** and the third shell **13**, respectively. The fourth connection portion **42** is connected to the two third connection portions **41**. The fourth connection portion **42** extends through the third shell **13** and the second shell **12** and is rotatable. In this way, the second shell **12** is rotatably connected to the third shell **13**. It shall be understood that when the user is wearing the neck fan **1**, the user may turn the first connection member **30** and the second connection member **40** to increase a gap between the first shell **11** and the second shell **12**. The first shell **11** and the second shell **12** may be reset when relaxed. In this way, the user may easily wear the neck fan **1** around the neck.

[0411] In some embodiments, as shown in FIGS. **69** and **70**, the fan assembly **20** includes a turbine fan **21**. The turbine fan **21** includes a fan shaft **211** and a plurality of turbine blades **212** arranged to surround the fan shaft **211**. An air flowing direction of the turbine fan **21** is perpendicular to an extending direction of the fan shaft **211**. In this way, the fan may output a large air volume but occupy a small space, increasing an air out-flowing rate of the neck fan **1**. Since the fan assembly **20** includes the turbine fan **21**, operation noise of the neck fan **1** may be effectively reduced, and the efficiency of the air flowing out of the neck fan **1** may be improved. The plurality of turbine blades **212** include a first end face **213** and a second end face **214** arranged in the extending direction of the fan shaft **211**. The first end face **213** corresponds to the inner plate **111***a* of the third portion **113**, and the second end face **214** corresponds to the outer plate **111***b* of the third portion **113**. The fan shaft **211** extends in a direction from the inner plate **111***a* to the outer plate **111***b*. A diameter of the turbine fan **21** is in the range of 35 mm to 45 mm. A thickness of the turbine fan **21** in the extending direction of the fan shaft **211** is in the range of 10 mm to 25 mm. A distance between the first end face **213** and the corresponding inner plate **111***a* is in a range of 1 mm to 6 mm; and/or a distance between the second end face **214** and the corresponding outer plate **111***b* is in a range of 1 mm to 6 mm. In some embodiments, the distance between the first end face **213** and the inner plate **111***a* may be 1 mm; and/or the distance between the second end face **214** and the outer plate **111***b* may be 1 mm. According to the present disclosure, the distance between the first end face **213** and the corresponding inner plate **111***a* is in the range of 1 mm to 6 mm, and/or the distance between the second end face **214** and the corresponding outer plate **111***b* is in the range of 1 mm to 6 mm; the diameter of the turbine fan **21** is in the range of 35 mm to 45 mm; and the thickness of the turbine fan **21** in the extending direction of the fan shaft **211** is in the range of 10 mm to 25 mm, the efficiency of the air flowing out of the fan assembly **20** may be improved. In some embodiments, when the distance between the first end face **213** and the inner plate **111***a* is 1 mm, and/or the distance between the second end face **214** and the outer plate **111***b* is 1 mm, the efficiency of the air flowing out of the fan assembly **20** may be optimal.

[0412] As shown in FIGS. **69** and **70**, the neck fan **1** further includes a support member **50**. A side of the third shell **13** near the user's neck is arranged with a mounting portion **51**. The support member **50** is mounted on the mounting portion **51**. In the present embodiment, two mounting portions **51** and two support members **50** are arranged, but the number shall not be limited by the present disclosure. The two mounting portions **51** are disposed at end of the third shell **13** near the first shell **11** and at end of the third shell **13** near the second shell **12**, respectively. A recessed region is disposed between the two support members **50**, and the air outlet **16** is defined in the recessed region. In the present embodiment, when the user is using the neck fan **1**, the support members **50** may abut against two sides of the back neck to support the neck fan **1**, allowing the neck fan **1** to leave a certain distance away from the user's neck. In addition, the recessed region is disposed between the two support members **50**, such that each of the end of the third shell **13** near the first shell **11** and the end of the third shell **13** near the second shell **12** defines an air inlet **16**. In this way, the air may flow out of the air outlet **16** and may be blown directly towards the back neck at the recessed region. The recessed region between the two support members **50** may define an air inlet **15**, allowing the fan assembly **20** in the third shell **13** to intake the air. In the present embodiment, the support member **50** is arranged to support the neck fan **1** on the neck, and a gap is defined between the neck fan **1** and the neck, allowing the air to be intaken or flow out in the recessed region fluently, improving the user's experience.

[0413] As shown in FIGS. **67-69**, the support member **50** includes a first support portion **53** mounted on the mounting portion **51** and a second support portion **52** connected to an end of the first support portion **53** away from the mounting portion **51**. A side of the second support portion **52** near the user's neck is arranged with a recessed portion **521**. The support member **50** has a support direction towards the user's neck. A diameter of the second support portion **52** perpendicular to the support direction is greater than a diameter of the first support portion **53** perpendicular to the support direction. It shall be understood that, the recessed portion **521** prevents the neck fan **1** from contacting the skin without a gap, such that the user may be comfortable when wearing the neck fan. A larger diameter of the second support portion **52** increases a contact area between the second support portion **52** and the neck, such that a certain space for movement may be provided at an outer edge, reducing a support pressure, such that the user may be comfortable.

[0414] FIGS. **74-76** show a neck fan according to an embodiment of the present disclosure.

[0415] FIG. **74** illustrates a fan assembly and a neck fan. The neck fan includes at least two fan bodies **2** and a neck body **1** connected between the two fan bodies **2**. Each of the two fan bodies **2** includes an air outlet assembly to blow out air. The two fan bodies **2** and the neck body **1** cooperatively define a neck cavity. The neck fan is worn around the neck via the neck cavity, such that the user may use the neck fan.

[0416] As shown in FIGS. **74** and **75**, in an embodiment, the air outlet assembly includes a shell **21**, a wind guide tongue **6** and a fan assembly **22**. The shell **21** defines a receiving cavity **5**. The fan assembly **22** is received in the receiving cavity **5**. The wind guide tongue **6** is received in the receiving cavity **5** and surrounds the fan assembly **22**. A gap is defined between the wind guide tongue **6** and the fan assembly **22**. In the present embodiment, the fan assembly **22** is a centrifugal fan. The centrifugal fan intakes an airflow axially and out puts an air flow in a circumferential direction by taking a centrifugal force.

[0417] The shell **21** includes a top wall **211** and a bottom wall **212** that cooperatively define the receiving cavity **5**. When the neck fan is worn, the top wall **211** is located above the bottom wall **212**, the top wall **211** is located above the fan assembly **22**, and the bottom wall **212** is located below the fan assembly **22**. The top wall **211** defines an air outlet **3** and an air outlet **4**. The air outlet **3** and an air outlet **4** communicate with the receiving cavity **5**. The air outlet **3** and the fan assembly **22** are located on a first side of the wind guide tongue **6**, and the air outlet **4** is located on a second side of the wind guide tongue **6**, opposite to the first side. That is, the air outlet **4** is located on a side of the wind guide tongue **6** away from the fan assembly **22**. The wind guide tongue **6** is disposed between the air outlet **4** and the fan assembly **22**. The wind guide tongue **6** is configured to guide an air flowing direction. The airflow generated by the fan assembly **22** is guided by the wind guide tongue **6** to flow to the air outlet **3** and the air outlet **4** respectively, such that the air flows out of the neck fan from both the air outlet **3** and the air outlet **4**, increasing the area covered by the air flowing out of the neck fan. The wind guide tongue **6** is further configured to control the air flowing direction. The wind guide tongue **6** controls the airflow generated by the fan assembly **22** to flow the air outlet **3** and the air outlet **4** respectively. In this way, the air may uniformly flow out of the neck fan through the air outlet **3** and the air outlet **4**.

[0418] As shown in FIGS. **75** and **76**, the wind guide tongue **6** is a curved plate. The curved plate surrounds the fan assembly **22**. The curved plate guides the air flowing out of the fan assembly **22**. The airflow guided by the curved plate flows near and along the curved plate to reach the air outlet **3** and the air outlet **4**. In addition, the airflow may be guided by the wind guide tongue **6** flowing towards the air outlet **4**, based on the Coanda effect, when the airflow reaches an end of the wind guide tongue **6**, and when a speed of the airflow is large enough, the airflow may generate the centrifugal force. A part of the airflow may be released from the Coanda effect of the wind guide tongue **6**, and another part of the airflow continues to flow along a wall of the wind guide tongue due to the Coanda effect, and the air may further flow away from the wind guide tongue **6** to reach the air outlet **4**. The curved plate further controls the air flowing direction. The curved plate controls the air flowing out of the fan assembly **22** to flow to the air outlet **3** and air outlet **4** respectively. In this way, the air may uniformly flow out of the air outlet **3** and air outlet **4**.

[0419] In detail, the fan assembly **22** includes a circumference wall **221**. A distance between the circumference wall **221** of the fan assembly **22** and the curved plate is 1 mm to 6 mm, preferably 2.5 mm to 4 mm. The fan assembly **22** is cylindrical. A diameter (curvature) of the curved plate is adapted with a diameter of the fan assembly **22**. The diameter of the curved plate is preferably greater than or equal to the diameter of the fan assembly **22**. A centre of the curved plate is located on a side of the fan assembly **22**, i.e. on a first side of the curved plate.

[0420] More specifically, in an embodiment, the diameter of the curved plate is in a range from 40 mm to 60 mm, preferably 45 mm to 55 mm.

[0421] In some embodiments, the wind guide tongue **6** includes a first end and a second end opposite the first end. The first end is away from the top wall **211** of the shell **21** and is bent and extending towards the top wall **211**. The first end is bent and extends away from the fan assembly **22**. In more detail, the first end is bent and extending to form a semicircular shape in the direction away from the fan assembly **22**. That is, the first end includes a bent portion **61** connected to the curved plate and a free end **62** disposed at an end of the bent portion. The bent portion **61** is bent, shown as a semicircle. The free end **62** is disposed at the end of the bent portion **61**. The free end **62** extends towards the top wall **211**. In some embodiments, the first end may be bent and extending away from the fan assembly **22** to form other suitable shapes. A radius of the bent portion **61** is in a range of 0.5 mm to 5 mm, preferably 1 mm to 4 mm. A distance from a circular center of the bent portion **61** to the top wall **211** is in a range of 6 mm to 25 mm, preferably from 15 mm to 22 mm. An extending length of the free end **62** is in a range of 0.1 mm to 1.5 mm. A gap is defined between an end of the free end **62** and the top wall **211** of the shell **21**. The air flowing out of the fan assembly **22** is guided by the wind guide tongue **6** to flow from the first side and the second side of the wind guide tongue **6** to reach the air outlet **3** and the air outlet **4** respectively. The airflow directed to the second side via the first end of the wind guide tongue **6** may flow near and along the wind guide tongue **6** according to the Coanda effect. That is, the airflow follows the first end of the wind guide tongue **6** towards a region where the semicir-

cular portion is formed and extending away from the fan assembly **22**, and the air further flows to reach the air outlet **4**. The second end of the wind guide tongue **6** is fixedly connected to top wall **211** of the shell **21**. The second end of the wind guide tongue **6**, compared to the first end, is further away from the fan assembly, and that is, along a direction from the second end to the first end, the first end is closer to the fan assembly **22**.

[0422] In some embodiments, the second end of the wind guide tongue **6** may not be fixedly connected to the top wall **211**, and a gap may be defined between the second end and the top wall **211** of the shell **21**.

[0423] It shall be understood that, in some embodiments, the wind guide tongue **6** may be a curved plate or a plurality of curved plates spliced together. A gap may be defined between two adjacent curved plates, or two adjacent curved plates may be connected.

[0424] In some embodiments, the air outlet **3** and the air outlet **4** are both defined in the top wall **211** of the shell **21**. The wind guide tongue **6** is disposed between the air outlet **3** and the air outlet **4**. That is, the second end of the wind guide tongue **6** is disposed between the air outlet **3** and the air outlet **4**. The wind guide tongue **6** divides the receiving cavity **5** into a first air duct **51** and a second air duct **52**. The first air duct **51** is communicated with the air outlet **3**, and the second air duct **52** is communicated with the air outlet **4**.

[0425] The air outlet **3** and the air outlet **4** are spaced apart from each other. A blind hole **9** is defined between the air outlet **3** and the air outlet **4**. The air outlet **3** includes two sub-outlets, and a gap is defined between the two sub-outlets. The air outlet **4** includes three sub-outlets, the three sub-outlets are spaced apart from each other, and a gap is defined between every two adjacent sub-outlets.

[0426] The receiving cavity **5** is defined to further receive an air guide plate **7** and a partition plate **8**. Two ends of the air guide plate **7** are connected to the top wall **211** and the bottom wall **212** of the shell **21** respectively, and two ends of the partition plate **8** are connected to the top wall **211** and the bottom wall **212** of the shell **21** respectively. The air guide plate **7** and the partition plate **8** are disposed on two opposite sides of the fan assembly **22**. A connection position between the air guide plate **7** and the top wall **211** of the shell **21** is disposed at a relative outer side of the air outlet **4** away from the air outlet **3**. A connection position between the partition plate **8** and the top wall **211** of the shell **21** is disposed at a relative outer side of the air outlet **3** away from the air outlet **4**. When the neck fan is worn, a connection position between the air guide plate **7** and the bottom wall **212** of the shell **21** and a connection position between the partition plate **8** and the bottom wall **212** of the shell **21** are disposed below the fan assembly **22**. A gap is defined between the connection position between the air guide plate **7** and the bottom wall **212** of the shell **21** and the connection position between the partition plate **8** and the bottom wall **212** of the shell **21**. The air guide plate **7** and the partition plate **8** are arranged inclined with respect to each other, such that the air guide plate **7** and the partition plate **8** can guide the airflow. The air guide plate **7** and the top wall **211** cooperatively define a second air duct **52**, and the wind guide tongue **6** is received in the second air duct **52**. More specifically, the air guide plate **7**, the top wall **211**, and the wind guide tongue **6** cooperatively define the second air duct **52**. The partition plate **8** and the top wall **211** cooperatively define a first air duct **51**. The fan assembly **22** is received in the first air duct **51**. More specifically, the fan assembly **22**, the partition plate **8**, and the top wall **211** cooperatively define the first air duct **51**. In other words, the wind guide tongue **6**, the bottom wall **212**, the partition plate **8**, and the top wall **211** cooperatively define the first air duct **51**.

[0427] According to the present embodiment, the receiving cavity **5** is defined to receive the wind guide tongue **6**. The wind guide tongue **6** divides the v cavity **5** into the first air duct **51** and the second air duct **52**. The first air duct **51** communicates with the air outlet **3**, and the second air duct **52** communicates with the air outlet **4**. The fan assembly **22** is received in the first air duct **51**. The air flowing out of the fan assembly **22** flows through the wind guide tongue **6** to the first air duct **51** and the second air duct **52** respectively, such that the air may flow out of the shell **21** from the air outlet **3** and the air outlet **4**. The wind guide tongue **6** is configured to guide the air flowing directions. The air flowing out of the fan assembly **22** is directed to the air outlet **3** and air outlet **4** respectively after being guided by the wind guide tongue **6**, such that the air may flow out of the neck fan from both the air outlet **3** and the air outlet **4**, increasing the area covered by the air flowing out of the shell **21**, and the structure of the neck fan may be more appropriate. Further, the wind guide tongue **6** is configured to control the air flowing direction. The wind guide tongue **6** controls the air flowing out of the fan assembly **22** to flow to the air outlet **3** and the air outlet **4** respectively, such that the air may uniformly flow through the air outlet **3** and the air outlet **4**, enabling the air flowing intensity at the air outlet **3** and that at the air outlet **4** to be of equal, improving the user's experience.

[0428] FIGS. **77-80** show a neck fan according to another embodiment of the present disclosure.

[0429] As shown in FIGS. **77-80**, an air outlet assembly **80** includes: a first engaging cover **10**, a second engaging cover **20**, a battery holder **30**, a battery **40** and a fan assembly **50**. The second engaging cover **20** is connected to the first engaging cover **10** by embedding, and the second engaging cover **20** and the first engaging cover **10** cooperatively define a first receiving cavity **60**. The battery holder **30** is received in the first receiving cavity **60**. A second receiving cavity **61** is defined by the battery holder **30** and the second engaging cover **20**. A side of the battery holder **30** facing the first engaging cover **10** defines a first receiving slot **31**. The battery **40** is received in the first receiving slot **31**. The fan assembly **50** is received in the first receiving cavity **60**. The fan assembly **50** is connected to the second receiving cavity **61**, and the fan assembly **50** and the second receiving cavity **61** are disposed on a same side of the battery holder **30**.

[0430] In air outlet assembly **80** of the present embodiment, the side of the battery holder **30** facing the first engaging cover **10** defines the first receiving slot **31**, such that the battery **40** is fixed. The fan assembly **50** is received in the first receiving cavity **60**, and is connected to the second receiving cavity **61**, such that the battery **40** and the fan assembly **50** are fixed at two separated layers, allowing the battery holder **30** to restrict and fix the battery **40** and to facilitate the air out of the fan assembly **50** to flow to the second receiving cavity **61**. The fan assembly **50** extends through the battery holder **30**, or the fan assembly **50** is located on a same side of the battery holder **30**. In this way, the airflow of fan assembly **50** may be guided to flow between the battery holder **30** and the second engaging cover **20**, optimally utilizing the space where the fan assem-

bly **50** and the battery holder **30** are arranged, and reducing an impact in an air guiding area of the fan assembly **50** caused by the battery holder **30**.

[0431] As shown in FIGS. **78-80**, in an embodiment, the battery holder **30** further includes a through hole **32**. A third receiving cavity **62** is defined between the battery holder **30** and the first engaging cover **10**. The second receiving cavity **61** is communicated with the third receiving cavity **62** through the through hole **32**.

[0432] In detail, since the second receiving cavity **61** is communicated to the third receiving cavity **62** through the through hole **32**, the air guiding area of the fan assembly **50** may be increased, reducing the impact in the air guiding area of the fan assembly **50** caused by the battery holder **30**. Further, the battery **40** in the first receiving slot **31** may be cooled, ensuring the battery **40** to be used safely.

[0433] As shown in FIGS. **78-80**, in an embodiment, the fan assembly **50** is received in the through hole **32**. The fan assembly **50** is connected to the second receiving cavity **61** and the third receiving cavity **62** through the through hole **32**. An axis of the fan assembly **50** coincides with an axis of the through hole **32**.

[0434] In detail, the axis of the fan assembly **50** coincides with the axis of the through bore **32**, such that the air guiding area occupied by the fan assembly **50** may be reduced.

[0435] As shown in FIGS. **77-80**, in an embodiment, the first engaging cover **10** includes a top wall **11** and a third side wall **12**. The third side wall **12** extends around and is fixed on the top wall **11**. The top wall **11** defines a first air inlet **13**. The first air inlet hole **13** is covered by a first stopper **14**. A first gap **15** is defined between the first stopper **14** and the top wall **11**. The first gap **15** intersects with an axis of the first air inlet **13**. The first receiving cavity **60** is communicated with the first gap **15** through the first air inlet **13**. The bottom wall **21** defines a second air inlet **24**. The second air inlet **24** is covered by a second stopper **25**. A second gap **26** is defined between the second stopper **25** and the bottom wall **21**. The second gap **26** intersects an axis of the second air inlet **24**. The second receiving cavity **61** is communicated to the second gap **26** through the second air inlet **24**.

[0436] In detail, defining the first air inlet **13** and the first gap **15** allows the third receiving cavity **62** to receive the external air, and defining the second air inlet **24** and the second gap **26** allows the second receiving cavity **61** to receive external air, such that the fan assembly **50** is able to intake the external air. Further, the first stopper **14** covers the first air inlet **13**, the first gap **15** is defined between the first stopper **14** and the top wall **11**, and the first gap **15** intersects with the axis of the first air inlet **13**, such that the user's hair or foreign matter may be prevented from being sucked directly into the first receiving cavity **60**, preventing the user's hair or the foreign matters from winding the fan assembly **50**, ensuring the fan assembly **50** to operate normally.

[0437] As shown in FIG. **78**, the axis of the first inlet **13**, the axis of the through hole **32** and the axis of the second inlet **24** coincide with each other, allowing the fan assembly **50** in the through hole **32** to intake the external air from the first inlet **13** and the second inlet **24**.

[0438] Further, the second inlet **24** may also serve as an air outlet, increasing the area covered by the air flowing out of the air outlet assembly **80**.

[0439] As shown in FIGS. **78-80**, in an embodiment, the second receiving cavity **61** receives a plurality of air guide members **70**. The air guide members **70** abut against the battery holder **30**, such that the air guide members **70** and the battery holder **30** cooperatively define an air guide channel **71**. The second engaging cover **20** defines a plurality of air flowing holes **72** communicating with the air guide channel **71**. Defining the air guide channel **71** and the plurality of air flowing holes **72** allows the fan assembly **50** to be communicated with the external air, such that the air flowing out of the fan assembly **50** flows to the external through the air guide channel **71** and the air flowing holes **72**.

[0440] In detail, as shown in FIGS. **78-80**, in an embodiment, the air guide member **70** is arranged with a first air guide plate **73** and a second air guide plate **74**. A bottom of the first air guide plate **73** and a bottom of the second air guide plate **74** are fixed to the second engaging cover **20**. A top of the first air guide plate **73** abuts against the battery holder **30**. A third air guide plate **75** is arranged on and protruding from a bottom of the battery holder **30**. The second air guide plate **74** and the third air guide plate **75** abut against each other and cooperatively define a fourth air guide plate **76**. A gap is defined between the first air guide plate **73** and the fourth air guide plate **76**. The second engaging cover **20**, the first air guide plate **73**, the fourth air guide plate **76** and the battery holder **30** cooperatively define the air guide channel **71**. The fan assembly **50** is communicated with the air flowing holes **72** through the air guide channel **71**.

[0441] The second engaging cover **20**, the first air guide plate **73**, the fourth air guide plate **76** and the battery holder **30** cooperatively define the air guide channel **71**, such that the fan assembly **50** is communicated with the air flowing holes **72**. Further, the second air guide plate **74** abuts against the third air guide plate **75**, and the second air guide plate **74** and the third air guide plate **75** are spliced to serve as the fourth air guide plate **76**, ensuring the air guide channel **71** to be used normally. In addition, connection the battery holder **30** and the second engaging cover **20** may be more fixed.

[0442] Further, in an embodiment, the second air guide plate **74** is arranged a protrusion, and the third air guide plate **75** defines a recess. The protrusion is inserted to the recess for connection. In this way, the second air guide plate **74** and the third air guide plate **75** are spliced together to serves as the fourth air guide plate **76**.

[0443] In detail, as shown in FIG. **80**, in some embodiments, the second engaging cover **20** includes a bottom wall **21** and a first side wall **22** and a second side wall **23**. The first side wall **22** and the second side wall **23** extend out of the bottom wall **21** and are opposite to each other. The fourth air guide plate **76** surrounds the fan assembly **50**. Each of the first air guide plate **73** and the second air guide plate **74** extends to be fixed to the bottom wall **21**. An end of the second air guide plate **74** is connected to the first side wall **22**, and a gap is defined between the other end of the second air guide plate **74** and the second side wall **23**. Two ends of the first air guide plate **73** is connected to the first side wall **22** and the second side wall **23** respectively.

[0444] In the present embodiment, the end of the second air guide plate **74** is connected to the first side wall **22**, and the gap is defined between the other end of the second air guide plate **74** and the second side wall **23**. Further, the second air guide plate **74** abuts against the third air guide plate **75**, and the second air guide plate **74** and the third air guide plate **75** are spliced together to serves as the fourth air

guide plate **76**. In this way, the air guide channel **71** may be used normally. Further, the fourth air guide plate **76** surrounds the fan assembly **50**, preventing the fan assembly **50** form communicating with the air flowing holes **72** in a linear straight direction. Therefore, foreign matters are prevented from entering through the air flowing holes **72**, and that is, the fan assembly **50** may be prevented from being wound by the foreign matters, ensuring the fan assembly **50** to operate normally.

[0445] In some embodiments, the plurality of air flowing holes **72** are distributed on a same side of the fan assembly **50**, such that only one air guide member **70** is arranged.

[0446] As shown in FIGS. **77**, and **79-80**, in an embodiment, the plurality of air flowing holes **72** are divided into two groups, and the two groups are distributed on two sides of the fan assembly **50**, respectively. Each of two sides of the fan assembly **50** is arranged with one air guide member **70**. Further, two corresponding the air guide channels **71** are defined.

[0447] In detail, two air guides members **70** on the two sides of the fan assembly **50** have a same structure. Each of the two air guide members **70** is formed by the first air guide plate **73** and the fourth air guide plate **76**. Alternatively, one of the two air guide members **70** is formed by the first air guide plate **73** and the fourth air guide plate **76**, and the other one of the two air guide members **70** is formed by two first air guide plates **73**. A side of the fan assembly **50** is indirectly connected to a first group of the air flowing holes **72** through the fourth air guide plate **76**. The other side of the fan assembly **50** is connected to the second group of air flowing holes **72** through the first air guide plate **73**. In this way, the fan assembly **50** may be prevented from being wound by the foreign matters, ensuring the fan assembly **50** to operate safely.

[0448] In addition to the above embodiment, each of the first side wall **22** and the second side wall **23** is arranged with a first embedding member **27**. The third side wall **12** is arranged with a second embedding member **16**. The first embedding member **27** may be connected to the second embedding member **16** by embedding. In this way, the first engaging cover **10** and the second engaging cover **20** are connected by embedding.

[0449] According to the air outlet assembly **80** in the present disclosure, the battery **40** is received in the first receiving slot **31**, preventing the battery **40** from shaking in the first receiving cavity **60**. The fan assembly **50** is received in the first receiving cavity **60**, and the fan assembly **50** and the second receiving cavity **61** are connected, such that the battery **40** and the fan assembly **50** are fixed in separated layers. In this way, the battery holder **30** may limit and fix the battery **40** and facilitate the air flowing out of the fan assembly **50** to flow to the second receiving cavity **61**. The fan assembly **50** extends through the battery holder **30** or is disposed on a same side of the battery holder **30**, allowing the air out of the fan assembly to flow between the battery holder **30** and the second engaging cover **20**. In this way, spaces for arranging the fan assembly **50**, the battery holder **30**, and the like, may be utilized optimally, reducing the impact in the air guiding area of the fan assembly caused by the battery holder **30**.

[0450] As shown in FIGS. **77-80**, the neck fan further includes a suspension member **90** and at least one of the above-mentioned air outlet assembly **80**. The air outlet assembly **80** is arranged on the suspension member **90**.

[0451] In detail, the battery holder **30** is arranged in the air outlet assembly **80**, such that the battery **40** and the air guide channel **71** are arranged in separated layers. In this way, the battery **40** is limited and fixed, and spaces for arranging the fan assembly **50**, the battery holder **30**, and the battery **40**, may be utilized optimally, reducing the impact in the air guiding area of the fan assembly **50**. The battery **40** may be fixedly arranged, and the fan assembly **50** may be assisted to guide the air flowing.

[0452] As shown in FIGS. **77-80**, in some embodiments, the neck fan of the present disclosure includes two air outlet assemblies **80**. The two air outlet assemblies **80** are arranged at two ends of the suspension member **90**. In another embodiment, the neck fan of the present disclosure includes three air outlet assemblies **80**. The three air outlet assemblies **80** are arranged at each of two ends of the suspension member **90** and at a middle of the suspension member **90**, respectively. In this case, the suspension member **90** may be arch-shaped. The air guiding area of the neck fan is increased.

[0453] As shown in FIGS. **81-86**, FIG. **81** is a schematic view of a neck fan **1** according to another embodiment of the present disclosure. The neck fan **1** may serve as a temperature adjustment apparatus **1** that hangs around a user's neck, FIG. **82** is another schematic view of the temperature adjustment apparatus **1** shown in FIG. **81**, FIG. **83** is an exploded view of the temperature adjustment apparatus **1** shown in FIG. **81**, FIG. **84** is an exploded view of a middle portion **15***c* of the temperature adjustment apparatus **1** shown in FIG. **81**, and FIG. **85** is another exploded view of the middle portion **15***c* of the temperature adjustment apparatus **1** shown in FIG. **81**. The temperature adjustment apparatus **1**, which can be worn by a user to hang around the user's neck, includes an arc-shaped shell **10** and a movable temperature adjustment assembly **20**. FIG. **86** is a diagram of a circuit of the temperature adjustment apparatus **1** shown in FIG. **81**.

[0454] The arc-shaped shell **10** is wearable around the neck. The arc-shaped shell **10** has a first receiving cavity **11** and a first opening **12** communicated with the first receiving cavity **11** and oriented towards the neck. The movable temperature adjustment assembly **20** includes a temperature adjustment member **21** and a driving member **22**. The temperature adjustment member **21** is mounted corresponding to the first opening **12**. The driving member **22** is connected to the arc-shaped shell **10** and the temperature adjustment member **21**. The temperature adjustment member **21** is configured to absorb heat emitted from the neck, such that the temperature adjustment member **21** may cool the neck. In some embodiments, the temperature adjustment member **21** may be configured to release heat to warm the neck. The driving member **22** is configured to drive the temperature adjustment member **21** to move, such that the temperature adjustment member **21** may be switched between an extended state and a retracted state. In the extended state, the temperature adjustment member **21** extends out of the first opening **12**, further extending towards the neck. In the retracted state, at least part of the temperature adjustment member **21** is retracted through the first opening, such that the temperature adjustment member **21** is received in the receiving cavity **11**, and the temperature adjustment member **21** is separated from the neck. It shall be understood that, the user may free the user's hands by wearing the arc-shaped shell **10** around the neck, such that

the temperature adjustment apparatus **1** hangs around the neck. In this way, the user's neck may be cooled down and/or warmed up by the temperature adjustment apparatus **1** while the user is performing other activities, such that the temperature is adjusted, and at the same time, the user's experience is improved.

[0455] According to the present embodiment, for the temperature adjustment apparatus **1**, the arc-shaped shell **10** has the first receiving cavity **11** and the first opening **12** communicated to the first receiving cavity **11**. The first opening **12** faces towards the user's neck. The temperature adjustment member **21** of the movable temperature adjustment assembly **20** may extend out of the shell through the first opening **12** and face towards the neck to absorb heat from the neck to cool the neck and/or to release heat to warm the neck. In this way, the user may be cooled rapidly at higher temperatures and may be warmed at lower temperatures. Therefore, the temperature adjustment apparatus **1** may be applied to various application scenarios, and the user's experience may be improved. In addition, the shell **10** of the temperature adjustment apparatus **1** is arc-shaped, the temperature adjustment apparatus **1** may be attached to the neck appropriately, enabling the user to feel comfortable, and allowing the user to be cooled and warmed quickly (i.e., an efficiency of increasing or decreasing the temperature may be improved). In addition, the temperature adjustment member **21** is driven by the driving member **22**, such that the temperature adjustment member **21** may be switched between the extended state and the retracted state. In the extended state, the temperature adjustment member **21** extends out of the first opening **12**, further extending towards the neck. In the retracted state, at least part of the temperature adjustment member **21** is retracted through the first opening, such that the temperature adjustment member **21** is received in the receiving cavity **11**, and the temperature adjustment member **21** is separated from the neck. In this way, the temperature adjustment member **21** may be received in the first receiving cavity **11** when not in use, improving the user's experience. More specifically, when the temperature adjustment member **21** contacts the neck for a certain period of time, a temperature of the temperature adjustment member **21** gradually tends to be the same as a temperature of the neck, such that the user may be gradually insensitive, reducing the user's experience. However, the driving member **22** may control the temperature adjustment member **21** to be extended or retracted, the temperature adjustment member **21** may be controlled to touch the neck at time intervals. For example, when the user does not feel about the temperature adjustment apparatus, the temperature adjustment member **21** may be controlled to be in the retracted state for a period of time. When the temperature of the temperature adjustment member **21** is different from the temperature of the neck, then the temperature adjustment member **21** may be controlled to be extended to contact the neck. In this way, the user may feel an obvious temperature difference, improving the user's experience.

[0456] Further, as shown in FIG. **86**, the temperature adjustment apparatus **1** may further include a control module **50**. The control module **50** is electrically connected to the driving member **22**. The control module **50** is configured to control the driving member **22** to drive the temperature adjustment member **21** to move. The temperature adjustment apparatus **1** may further include a temperature sensor **51**. The temperature sensor **51** may be arranged on the temperature adjustment member **21** to detect the temperature of the temperature adjustment member **21** and output a temperature detection signal. The control module **50** is configured to receive the temperature detection signal and control the driving member **22** to drive the temperature adjustment member **21** to move based on the temperature detection signal. The control module **50** is configured to determine whether the temperature of the temperature adjustment member **21** is greater than or equal to a predetermined temperature based on the temperature detection signal. When the temperature of the temperature adjustment member **21** is greater than or equal to the predetermined temperature, the control module **50** controls the driving member **22** to drive the temperature adjustment member **21** to enter and stay in the retracted state. When the temperature of the temperature adjustment member **21** is less than or equal to the predetermined temperature, the control module **50** controls the driving member **22** to drive the temperature adjustment member **21** to enter and stay in the extended state. It shall be understood that the control module **50** may control the driving member **22** to drive the temperature adjustment member **21** to move, such as controlling the temperature adjustment member **21** to extend or retract periodically. Alternatively, the driving member may drive the temperature adjustment member **21** to extend or retract based on the user's instructions or preferences (such as a button pressed by the user, a voice instruction, a gesture instruction, and so on). In this way, demands of various users may be satisfied, improving the user's experience. Further, the temperature sensor **51** detects the temperature of the temperature adjustment member **21** and controls the temperature adjustment member **21** to be extended or retracted based on the temperature of the temperature adjustment member **21**. In this way, the temperature adjustment member **21** may be controlled in a more intelligent manner, improving the user's experience.

[0457] Further, the temperature adjustment member **21** includes a semiconductor cooler **211**. The semiconductor cooler **211** includes a semiconductor cooling structure **211***a*, a thermal conductor **211***b*, and a heat dissipator **211***c*. The thermal conductor **211***b* is connected to a cool end of the semiconductor cooling structure **211***a* and is configured to contact the user's neck. The heat dissipator **211***c* is connected to a warm end of the semiconductor cooling structure **211***a*. The thermal conductor **211***b* includes a metal thermal conductor **211***b*. The heat dissipator **211***c* includes a plurality of heat dissipating fins **211***e*. The temperature adjustment member **21** further includes a first sliding structure **212** arranged on the semiconductor cooler **211**. For example, in the present embodiment, at least two first sliding structures **212** may be arranged. The arc-shaped shell is arranged with a second sliding structures **13** corresponding to the first sliding structure **212**. For example, in the present embodiment, at least two second sliding structures **212** may be arranged. The driving member **22** is configured to drive the temperature adjustment member **21**, such that the first sliding structure **212** slides relative to the second sliding structure **13**, and therefore, the temperature adjustment member **21** is switched between the extended state and the retracted state. One of the first sliding structure **212** and the second sliding structure **13** includes a slide groove, and the other one of the first sliding structure **212** and the second sliding structure **13** includes a slide block. The slide block may be received in the slide groove and slidable along the slide

groove. The number of first sliding structures **212** may be two, and the number of second sliding structures **13** may be two. The two first sliding structures **212** may be opposite to each other. In the present embodiment, the second sliding structure **13** defines a slide groove. The first sliding structure **212** includes a slide block. The slide block may be received in the slide groove and slidable along the slide groove. When the temperature is low, and the user needs to be warmed, the first sliding structure **212** slides out of the second sliding structure **13**, such that the temperature adjustment member **21** is in the extended state and near the neck, and the neck is warmed by the thermal conductor **211***b*. When the temperature is high, and the user needs to be cooled, the first sliding structure **212** slides out of the second sliding structure **13**, such that the temperature adjustment member **21** is in the extended state and close to the neck, the warm may be cooled by the heat dissipator **211***c*. When the neck temperature adjustment apparatus **1** is not in use, the first sliding structure **212** slides into the second sliding structure **13**, such that the temperature adjustment member **21** is in the retracted state, and the temperature adjustment apparatus may be easily stored and carried. According to the present embodiment, the thermal conductor **211***b* includes the metal thermal conductor **211***b*. The heat dissipator **211***c* includes the plurality of heat dissipating fins **211***e*, a heat conducting efficiency and a heat dissipating efficiency may be increased, such that the user may be cooled or warmed quickly. In addition, since two first sliding structures **212** are arranged oppositely, and two second sliding structures **13** are arranged oppositely, the temperature adjustment member **21** may be stable while being lifted and lowered. One of the first sliding structure **212** and the second sliding structure **13** includes the slide groove, and the other of the first sliding structure **212** and the second sliding structure **13** includes the slide block. The slide block may be received in the slide groove and slidable along the slide groove. The slide block sliding in the slide groove allows the first sliding structure **212** to slide stably in the second sliding structure **13**.

[0458] Further, the driving member **22** includes a motor **221** and a motor shaft **222** connected to the motor **221**. The motor **221** is fixed to the arc-shaped shell **10**. The motor shaft **222** has an external thread. The temperature adjustment member **21** defines a thread hole **213**. The external thread of the motor shaft **222** engages with an internal thread arranged on a wall of the thread hole **213**. In this way, when the motor **221** drives the motor shaft **222** to rotate, the temperature adjustment member **21** moves along the motor shaft **222**, such that the temperature adjustment member is switched between the extended state and the retracted state. The motor **221** may be a stepper motor **221**. In the present embodiment, the driving member **22** includes the motor **221** and the motor shaft **222** connected to the motor **221**. The motor **221** is fixed to the arc-shaped shell **10**. The motor shaft **222** has the external thread. The temperature adjustment member **21** defines the thread hole **213**. The external thread of the motor shaft **222** engages with the internal thread arranged on the wall of the thread hole **213**. In this way, the driving member **22**, the temperature adjustment member **21**, and the arc-shaped shell **10** are fixedly connected with each other. In addition, the thread of the motor shaft **222** engages with the inner thread of the thread hole **213**, such that the motor **221** controls the temperature adjustment member **21** to be extended and retracted. The structure of the temperature adjustment apparatus may be simplified and may be manipulated stably.

[0459] Further, the arc-shaped shell further defines a plurality of first through holes **14***a*. The plurality of first through holes **14***a* are distributed surrounding an outer periphery of the first opening **12**. The arc-shaped shell further defines a plurality of second through holes **14***b* located on a side of the movable temperature adjustment assembly **20** away from the neck. The temperature adjustment apparatus **1** further includes a first fan assembly **30**. The first fan assembly **30** is received in the first receiving cavity **11** and is disposed on the side of the movable temperature adjustment assembly **20** away from the neck. The first fan assembly **30** is configured to blow air towards the first through holes **14***a* and/or the second through holes **14***b*. The first fan assembly **30** is disposed corresponding to a middle region of the movable temperature adjustment assembly **20**. The first fan assembly **30** includes a first mounting member **31** and a first blade assembly **32**. The first mounting member **31** has a first mounting body **311** and a first mounting shaft **312**. The first mounting body **311** is connected to the arc-shaped shell **10**. The first mounting shaft **312** is connected to a side of the first mounting body **311** near the movable temperature adjustment assembly **20**. The blade assembly is mounted on the first mounting shaft **312**. When the temperatures is high, and when the user needs to be cooled, the first fan assembly **30** blows out wind through the second through holes **14***b* to dissipate heat generated from the heat dissipator **211***c*, allowing the heat dissipator **211***c* to be cooled quickly. When the temperature is low, and when the user needs to be warmed, the fan assembly **30** blows out hot air through the through holes **14***a*, allowing the thermal conductor **211***b* to conduct heat to the user. According to the present embodiment, the fan assembly **30** is arranged to operate together with the temperature adjustment member **21**. When the user needs to be cooled, the wind is blown to the second through holes **14***b*, increasing a heat dissipating efficiency. When the user needs to be warmed, the hot air is blown to the first through holes **14***a*, increasing a thermal conducting efficiency. In this way, the user may feel comfortable in various temperature.

[0460] Further, the arc-shaped shell includes a first portion **15***a*, a second portion **15***b* and a middle portion **15***c* connected between the first portion **15***a* and the second portion **15***b*. The middle portion **15***c* defines the first receiving cavity **11** and the first opening **12**. The first portion **15***a* and the second portion **15***b* are configured to be located on two opposite sides of the neck. The middle portion **15***c* extends in an arc direction and includes a first arc member **151** and a second arc member **152**. The first arc member may be near the neck when the shell is worn to the user. The second arc member **152** may be away from the neck when the shell is worn to the user. A cross section of the first arc member **151** taken by a plane perpendicular to the arc direction may be arc shaped, protruding towards the user's neck. A cross section of the second arc member **152** taken by the plane perpendicular to the arc direction may be arc shaped, protruding away from the user's neck. A space between the first arc member **151** and the second arc member **152** may be the first receiving cavity **11**. The first opening **12** extends through the first arc member **151** and communicates with the first receiving cavity **11**. Since the cross section of the first arc member **151** taken by the plane perpendicular to the arc

direction may be arc shaped, protruding towards the user's neck, and the cross section of the second arc member **152** taken by the plane perpendicular to the arc direction may be arc shaped, protruding away from the user's neck, the user may feel comfortable when wearing the temperature adjustment apparatus **1** around the neck.

[0461] Further, the middle portion **15***c* further includes a ring-shaped extending plate **17**. The extending plate **17** is connected to a side of the second arc member **152** near the first arc member **151**. The extending plate **17** may be disposed to surround an outer periphery of the movable temperature adjustment apparatus. The arc-shaped shell **10** may further include a first connection member **16***a* and a second connection member **16***b*. The first connection member **16***a* may be connected between the first portion **15***a* and the middle portion **15***c*. The second connection member **16***b* may be connected between the second portion **15***b* and the middle portion **15***c*. According to the present embodiment, the middle portion **15***c* further includes the ring-shaped extending plate **17**. The extending plate **17** is connected to the side of the second arc member **152** near the first arc member **151**. The extending plate **17** may be disposed to surround the outer periphery of the movable temperature adjustment assembly **20**. In this way, a position of the movable temperature adjustment assembly **20** may be restricted, ensuring the temperature adjustment assembly **20** to be stability and accurately switched between the extended state and the retracted state.

[0462] Further, each of the first portion **15***a* and the second portion **15***b* defines a second receiving cavity **18**. Each of the first portion **15***a* and the second portion **15***b* defines an air inlet **153** and an air outlet **154**. The air inlet **153** and the air outlet **154** may be communicated with the second receiving cavity **18**. The temperature adjustment apparatus **1** may further include at least two fan assemblies **40**. Each of the second receiving cavity **18** of the first portion **15***a* and the second receiving cavity **18** of the second portion **15***b* receives one of the at least two fan assemblies **40**. Each fan assembly **40** is configured to drive the air from the air inlet **153** to flow to the corresponding air outlet **154**. Since the fan assembly **40** drives the air from the air inlet **153** to flow to the corresponding air outlet **154**, the user may be cooled quickly, increasing the efficiency of reducing the temperature.

[0463] Further, each of the first connection member **16***a* and the second connection member **16***b* includes a through hole **160**, extending through the first connection member **16***a* and the second connection member **16***b*, respectively. The through hole **160** of the first connection member **16***a* is communicated between the second receiving cavity **18** of the first portion **15***a* and the first receiving cavity **11**. The through hole **160** of the second connection member **16***b* is communicated between the second receiving cavity **18** of the second portion **15***b* and the first receiving cavity **11**. Each of the fan assembly **40** in the first portion **15***a* and the fan assembly **40** in the second portion **15***b* is further configured to drive the air from the air inlet **153** to flow through the corresponding second receiving cavity **18**, the corresponding through hole **160**, the first receiving cavity **11**, to reach the first through holes **14***a*. It shall be understood that, defining the through hole **160** allows the air in the first portion **15***a* and the second portion **15***b* to flow through the through hole **160** to reach the first receiving cavity **11**. Subsequently, the air is further blown out of the shell through the first through holes **14***a* of the middle portion **15***c*. In this way, the neck may be cooled effectively. In addition, a wind guide plate **161** may be received in the first receiving cavity **11** of the middle portion **15***c*. The wind guide plate **161** is further configured to guide the air from the through hole **160** to flow to the first through hole **14***a*, allowing the air to be blown out, increasing the air out flowing efficiency.

[0464] Further, the second fan assembly **40** includes turbine blades **41** rotating in a predetermined direction. The air inlet **153** may include a first air inlet **153***a* and a second air inlet **153***b*. The first air inlet **153***a* and the second air inlet **153***b* are arranged along the predetermined direction, and are disposed between two opposite sides of the second fan assembly **40**. Each of the first portion **15***a* and the second portion **15***b* includes an inner wall **155**, an outer wall **156**, and a connection wall **159**. The inner wall **155**, the outer wall **156**, and the connection wall **159** cooperatively define the second receiving cavity **18**. The outer wall **156** is opposite to the inner wall **155**. The connection wall **159** is connected between the inner wall **155** and the outer wall **156**. The first air inlet **153***a* is defined in the inner wall **155**. The second air inlet **153***b* is defined in the outer wall **156**. The connection wall **159** includes a top wall **159***a* facing towards the user's head. The air outlet **154** is defined in the top wall **159***a*. In the present embodiment, a plurality of air outlets **154** are defined. A first portion of the plurality of air outlets **154** are distributed near the middle portion **15***c*, and a second portion of the plurality of air outlets **154** are distributed away from the middle portion **15***c*. A size of the first portion of the plurality of air outlets **154** is less than a size of the second portion of the plurality of air outlets **154**. Turbine blades **41** of two second fan assemblies **40** may intake air from the first air inlets **153***a* and the second air inlets **153***b* at the same time, and drive the air to flow along an air duct in the first portion **15***a* and an air duct in the second portion **15***b* respectively, reaching the air outlets **154**. The air may be blown out of the air outlets **154** to directly flow towards the user's head, enabling the user to be cooled efficiently. According to the present embodiment, the first air inlet **153***a* and the second air inlet **153***b* are defined to increase an amount of the air to be intaken, such that an air out flowing efficiency of the second fan assembly **40** may be increased. In the present embodiment, the plurality of air outlets **154** are defined. The size of the first portion of the air outlets **154** near the middle portion **15***c* is less than a size of the second portion of the air outlets **154** away from the middle portion **15***c*. In this way, the air out flowing efficiency is increased, the hair and other foreign matters may not be easily caught by the second fan assembly **40**, increasing the user's safety.

[0465] Further, each of the first portion **15***a* and the second portion **15***b* includes a first cover **157**. A surface of the inner wall **155** facing the user's neck has a first mounting portion **155***a*. The first cover **157** and the first mounting portion **155***a* are mounted fixedly. The first cover **157** covers the first air inlet **153***a*. The first cover **157** defines a plurality of air inlets **157***a*. The plurality of air inlets **157***a* correspond to the plurality of first air inlets **153***a* and are distributed in a ring shape. Each of the first portion **15***a* and the second portion **15***b* includes a second cover **158**. A surface of the outer wall **156** away from the neck has a second mounting portion **156***a*. The second cover **158** and the second mounting portion **156***a* are mounted fixedly. The second cover **158** covers the second air inlet **153***b*. An air inlet **155***b* is defined

between an edge of the second cover **158** and the first portion **15***a* and between the edge of the second cover **158** and the second portion **15***b*. In this way, the air at an outer side of the temperature adjustment apparatus **1** flows through the air inlet **155***b* to reach the second air inlet **153***b*. Since the air inlet **155***b* is defined between the edge of the second cover **158** and the first portion **15***a* and between the edge of the second cover **158** and the second portion **15***b*, the air that is to be blown out of the shell may be compressed optimally, an air pressure near the second air inlet **153***b* may be greater than an air pressure inside the second receiving cavity **18**, such that a negative pressure is generated to push the air out of the second air inlet **153***b* to the second air inlet **153***b*, increasing an air intaking rate. Since the air inlet **155***b* is defined between the edge of the second cover **158** and the first portion **15***a* and between the edge of the second cover **158** and the second portion **15***b*, the air intaking rate is increased, and the hair and other foreign matters may not be easily caught by the second fan assembly **40**, improving the user's safety.

[0466] Further, the first mounting portion **155***a* includes a first slot portion **155***c* and a first fastening portion **155***d*. The first air inlet **153***a* is defined in a bottom wall of the first slot portion **155***c*. The first fastening portion **155***d* is arranged on the first slot portion **155***c*. The first cover **157** is arranged with a second fastening portion **157***d*, fastening with the first fastening portion **155***d*. The second mounting portion **156***a* includes a second slot portion **156***b* and a third fastening portion **156***c*. The second air inlet **153***b* is defined in a bottom wall of the second slot portion **156***b*. The third fastening portion **156***c* is arranged on the second slot portion **156***b*. The second cover **158** is arranged with a fourth fastening portion **158***a*, fastening with the third fastening portion **156***c*. The arc-shaped shell may include a wind guide plate arranged inside the first portion **15***a* and another wind guide plate arranged inside the second portion **15***b*. The wind guide plate and a wall of the first portion **15***a* cooperatively defines an air duct, and the another wind guide plate and a wall of the second portion **15***b* cooperatively defines another air duct. In this way, the second fan assembly **40** may drive the air from the air inlet **153** to flow through the air duct to reach the air outlet **154**. In the present embodiment, the first fastening portion **155***d*, the second fastening portion **157***b*, the third fastening portion **156***c*, and the fourth fastening portion **158***a* are arranged to allow the first mounting portion **155***a* to be fastened with the first cover **157** and to allow the second mounting portion **156***a* to be fastened with the second cover **158**. The shell may be assembled easily, and the connection may be stable. Further, wind guide plates are arranged to define the air duct in each of the first portion **15***a* and the second portion **15***b*. The air duct may guide the wind generated by the fan assembly **40**, increasing the air out flowing efficiency of the second fan assembly **40**.

[0467] The above description is only specific implementation of the present disclosure, but the scope of the present disclosure is not limited thereto. Variations or substitutions that is raised by any ordinary skilled person in the art shall be included in the scope disclosed of the present disclosure. Therefore, the scope of the present disclosure shall be subject to the scope of the appended claims.

[0468] As shown in FIGS. **87-93**, a neck fan **10** is provided and includes a housing **11**, a fan **12**, a refrigeration member **13**, a battery **14**, and a control module **15**. The housing **11** defines an air inlet **111** and an air outlet **112**. The fan **12**, the battery **14**, and the control module **15** are all arranged in the housing **11**. The fan **12** is configured to direct air at the air inlet **111** to flow to reach the air outlet **112** to be blown out the housing. The refrigeration member **13** is arranged on the housing **11**. The neck fan **10** may further include a temperature conducting member **16**. A side of the temperature conducting member is configured to be disposed close to a neck of a user, and the other side of the temperature conducting member contacts the refrigeration member **13**.

[0469] The control module **15** includes a control circuit, the control circuit may be arranged on a circuit board. Specifically, as shown in FIGS. **88** to **93**, the control circuit may include a charging and power supply circuit **20**, a fan drive circuit **30**, a refrigeration control circuit **40** and a master control circuit **50**.

[0470] The charging and power supply circuit **20** is configured to be electrically connected to an external power source and a battery **14** to receive an external voltage VCC to charge the battery **14** and to output a power supply voltage VO. The fan drive circuit **30** is electrically connected to the charging and power supply circuit **20** and the fan **12** to drive the fan **12** to rotate.

[0471] The refrigeration control circuit **40** is electrically connected to the refrigeration member **13** and the charging and power supply circuit **20** to drive the refrigeration member **13** generate coldness.

[0472] The refrigeration control circuit **40** includes a first control switch Q**1**. A first conductive end of the first control switch Q**1** is configured to receive, via the refrigeration member **13**, an output voltage from the battery **14** or receive the power supply voltage (the present embodiment is illustrated based on receiving the output voltage from the battery **14**). A second conductive end of the first control switch Q**1** is grounded.

[0473] The master control circuit **50** is electrically connected to the charging and power supply circuit **20**, the fan drive circuit **30** and a control end of the first control switch Q**1**. The master control circuit **50** is configured to output a first pulse width control signal to control the first control switch Q**1** to be conducted or disconnected, such that the refrigeration member **13** is controlled to be switched on and switched off intermittently. Specifically, a first pulse width signal output end C_PWM of the master control circuit **50** may be electrically connected to the control end of the first control switch Q**1** to output the first pulse width control signal.

[0474] Compared to the art, in the control circuit of the neck fan of the present disclosure, the refrigeration control circuit **40** having the first control switch Q**1** receives the first pulse width control signal output by the master control circuit **50** to control the refrigeration member **13** to be switched on and switched off intermittently. In this way, discomfort to the user, caused by an excessively low temperature when the fan being operating for a long period of time, can be avoided. The usage experience is improved. In addition, the refrigeration control circuit **40** has a simple structure, can be achieved easily, and is highly reliable.

[0475] In this embodiment, as shown in FIGS. **88**, the charging and power supply circuit **20** includes a charging port **21** and a charging management chip **22**. A power end **211** of the charging port **21** receives the external voltage VCC and is electrically connected to a charging input pin VIN of the charging management chip **22**. A power end **211**

of the charging port **21** is electrically connected to a negative electrode of a voltage stabilizing transistor D**1**, and a positive electrode of the voltage stabilizing transistor D**1** is grounded. A switch pin SW of the charging management chip **22** is electrically connected to the positive electrode BAT+ of the battery **14** via a first inductor L**1**. A boost output pin VOUT of the charging management chip **22** is configured to output the power supply voltage VO. A boost input pin of the charging management chip **22** is connected to a node between the battery **14** and the first inductor L**1** via a first connection resistor **201** and is further grounded via a first grounding capacitor **202**. By arranging the charging management chip **22**, the voltage stabilizing transistor D**1** and the first inductor L**1**, the charging port and charging and discharging of the battery can be effectively managed, and the power supply voltage required by other circuits can be output. A simple circuit structure is provided and can be easily achieved to and highly safe.

[0476] A keypad input end KEY of the charging management chip **22** is electrically connected to the master control circuit **50**. A first LED drive pin LED**1** of the charging management chip **22** is grounded via sequentially a first grounding resistor **203** and a second grounding resistor **204**. A second LED drive pin LED**2** of the charging management chip **22** is connected to the positive electrode of the battery **14** via a second connection resistor **205**. A first indicator light pin LED**1** of the master control circuit **50** is grounded via a first indicator branch **51**. A second indicator branch **23** is grounded via a second indicator light branch **23**. Each of the first indicator branch **51** and the second indicator branch **23** includes a current-limiting resistor R and an indicator LED that are in series connected to each other. It is understood that the keypad input end SW of the charging management chip **22** is electrically connected to the master control circuit **50**, such that the master control circuit **50** can control the charging management chip **22** to ensure reliability of the control circuit. The first indicator branch **51** and the second indicator branch **23** indicate a charging state of the charging and power supply circuit **20** to improve the user experience. The master control circuit **50** may be an MCU.

[0477] As shown in FIGS. **90**, in the refrigeration control circuit **40**, the control end of the first control switch Q**1** is electrically connected to the first pulse width signal output end C_PWM of the master control circuit **50** via a third connection resistor **207**. A node between the control end of the first control switch Q**1** and the third connection resistor **207** is grounded via a fourth connection resistor **208**. The first control switch Q**1** is a N-Metal-Oxide-Semiconductor (NMOS). The refrigeration member **13** further receives the output voltage of the battery **14** or the power supply voltage via a fifth connection resistor **209**. It is understood that stability and safety of the control circuit can be improved by arranging the third connection resistor **207** and the fourth connection resistor **208**. The first control switch Q**1** is the NMOS, which has a low cost and a simple structure and can be controlled easily. The refrigeration member **13** directly receives the output voltage MVCC of the battery **14**, such that a more direct and stable power supply is received, and therefore, stability of the control circuit is improved.

[0478] As shown in FIG. **89** and FIGS. **91**, the control circuit further includes a second control switch Q**2**, a first conductive end of the second control switch Q**2** is electrically connected to the positive end BAT+ of the battery **14** to receive the output voltage from the battery **14**. A second conductive end of the second control switch Q**2** is electrically connected to a positive electrode of the refrigeration member **13**. A control end of the second control switch Q**2** is configured to receive the external voltage VCC and grounded and is electrically connected to the second conductive end of the second control switch Q**2** and connected to the fan drive circuit **30**. The second control switch Q**2** is disconnected when receiving the external voltage VCC and is conducted when receiving no external voltage VCC. When the second control switch Q**2** is conducted, the fan drive circuit **30** is powered by the battery **14**. By arranging the second control switch Q**2**, when the external voltage VCC is connected, the external voltage VCC can directly supply power to the fan drive circuit **30**, the fan drive circuit **30** is prevented from consuming the output voltage of the battery **14**. In this way, the battery **14** can be charged faster, and the service life of the battery **14** may not be affected by charging and discharging at the same time.

[0479] As shown in FIGS. **89**, the control end of the control switch Q**2** may be grounded via a third grounding resistor **206** and is electrically connected to the second conductive end of the control switch Q**2** and the fan drive circuit **30** via a first diode D**2**. The second control switch is a P-Metal-Oxide-Semiconductor (PMOS) field effect transistor. It is understood that stability and safety of the control circuit can be enhanced by the third grounding resistor **206** and the first diode D**2**, and the control switch Q**2** is the PMOS field effect transistor, which is low-cost, simple in structure, and can be controlled easily.

[0480] As shown in FIGS. **91**, the fan drive circuit **30** includes a second inductor L**2**, a third control switch Q**3**, a second diode D**3**, and a boost feedback branch **31**. An end of the second inductor L**2** is electrically connected to the charging and power supply circuit **20** to receive the external voltage VCC or receive the output voltage MVCC of the battery **14**. The other end of the second inductor L**2** is connected to the fan assembly **12** via a second diode D**3**. A first conductive end of the third control switch Q**3** is connected to a node between the second inductor L**2** and the second diode D**3**. A second conductive end of the third control switch Q**3** is grounded. A control end of the third control switch Q**3** is electrically connected to a second pulse width signal output end FPWM of the master control circuit **50** to receive a second pulse width control signal output of from the master control circuit **50**. An end of the boost feedback branch **31** is connected to the node between the second diode D**3** and the fan assembly **12**, the other end of the boost feedback branch **31** is grounded. The boost feedback branch **31** includes a first voltage divider resistor **311** and a second voltage divider resistor **312** that is connected in series to the first voltage divider resistor **311**. A node between the first voltage divider resistor **311** and the second voltage divider resistor **312** is connected to a boost feedback end FAAD of the master control circuit **50** via a third voltage divider resistor **313**. A node between the third voltage divider **313** and the master control circuit **50** is grounded via a second grounding capacitor **314**. It is understood that, in the fan drive circuit **30** of the above-described embodiment, the second inductor L**2** can be charged and discharged by controlling the third control switch Q**3** to be turned on and off, such that a voltage on a right side of the second inductor L**2** can be increased to supply power to the fan assembly **12**. The boost feedback circuit **31** samples a boosted voltage and feeds the boosted voltage back to the master control circuit

50, such that the master control circuit **50** can adjust the second pulse width control signal output to the third control switch Q**3**. In this way, the fan assembly **12** receives a substantially constant voltage. Furthermore, by adjusting the second pulse width control signal output to the third control switch Q**3**, the voltage supplied to the fan assembly **12** can be increased or decreased, such that the fan assembly **12** can rotate to reach various rotation speeds.

[0481] Further, the fan drive circuit **30** further includes a fourth control switch Q**4**, a third diode D**4**, a first feedback resistor **315**, a second feedback resistor **316**. A negative electrode of the third diode D**4** is connected to the positive electrode of the fan assembly **12**. The negative electrode of the fan assembly **12** is connected to a positive electrode of the third diode D**4** and a first conductive end of the fourth control switch Q**4**. A control end of the fourth control switch Q**4** is electrically connected to a fan enabling end FA EN of the master control circuit **50**. A second conductive end of the fourth control switch Q**4** is grounded via the first feedback resistor **315**. A node between the second conductive end of the fourth control switch Q**4** and the first feedback resistor **315** is electrically connected to a load feedback end LOAD AD of the master control circuit **50** via the second feedback resistor **316**. A node between the second feedback resistor **316** and the master control circuit **50** is grounded via a third grounding capacitor **317**. The fourth control switch Q**4** enables the voltage boosted by the second inductor L**2** and the third control switch Q**3** to form a circuit by the fan assembly **12** being grounded, thereby driving the fan assembly **12** to rotate. Since the first feedback resistor **315** samples signals from the node between the second conductive end of the fourth control switch Q**4** and the first feedback resistor **315** and feeds the sampled signals back to the master control circuit **50**, the master control circuit **50** is enabled to detect whether the fan assembly **12** is blocked from rotating or short-circuited.

[0482] As shown in FIGS. **93**, the control circuit further comprises an encoder **60**, the encoder **60** is connected to the positive electrode BAT+ of the battery **14** and is grounded. Two output ends **611** and **612** of the encoder **60** are connected to the master control circuit **50**. The encoder **60** has an infinite adjustment knob to be operated by the user. The user may operate the infinite adjustment knob to enable the two output ends **611** and **612** to output a plurality of digital signals. The master control circuit **50** is configured to control, based on the digital signals, the first control switch Q**1** to control a refrigeration intensity of the refrigeration member **13** or to control, based on the digital signals, the fan drive circuit **30** to control a rotation speed of the fan **12**. It is understood that, by arranging the encoder **60**, the user may operate the infinite adjustment knob to generate the plurality of digital signals to control, based on the plurality of digital signals, the refrigeration intensity of the refrigeration member **13** or the rotation speed of the fan **12**, such that the usage experience is improved.

What is claimed is:

1. A neck fan, configured to be worn around a neck of a user, comprising:

a shell, defining an air inlet, a receiving space, an air duct, and an air outlet, that are communicated with each other;

a plurality of fan assemblies, received in the receiving space; wherein the plurality of fan assemblies is configured to intake air from an outside of the neck fan to an inside of the neck fan through the air inlet and to drive the air to flow along the receiving space and the air duct sequentially to reach and to be output out of the neck fan through the air outlet; each of the plurality of fan assemblies comprises a fan and a motor configured to drive the fan to rotate around a rotation shaft; the air inlet has an air inlet plane perpendicular to an air inlet direction in which the air at an outside of the neck fan is intaken into the neck fan; an angle is formed the air inlet plane and a direction in which the neck fan is worn to the neck of the user and is greater than 0 degrees and less than 90 degrees.

2. The neck fan according to claim **1**, wherein the neck fan comprises two first portions and a second portion disposed and connected between the two first portions; each of the two first portions defines the receiving space and the air duct.

3. The neck fan according to claim **2**, wherein a plurality of air guiding portions are arranged inside the air duct in each of the two first portions and are disposed between the receiving space and the second portion.

4. The neck fan according to claim **3**, wherein the shell comprises a first shell and a second shell connected to the first shell; the first shell defines the air outlet; and the plurality of air guiding portions are spaced apart from each other and are arranged on the first shell protruding towards the air duct.

5. The neck fan according to claim **4**, wherein the air outlet comprises a plurality of air outlet openings; a portion of the plurality of air outlet openings are located between one of the plurality of air guiding portions and a respective one of the plurality of fan assemblies; and another portion of the plurality of air outlet openings are located between the one of the plurality of air guiding portions and another one of the plurality of air guiding portions.

6. The neck fan according to claim **4**, wherein the plurality of air guiding portions are inclined with respect to the first shell; an inclination angle between one of the plurality of air guiding portions and the first shell is different from an inclination angle between another one of the plurality of air guiding portions and the first shell.

7. The neck fan according to claim **4**, wherein the plurality of air guiding portions have different heights.

8. The neck fan according to claim **4**, wherein each of the plurality of air guiding portions has a free edge away from the first shell and is received in the air duct, the free edge is wavy or toothed.

9. The neck fan according to claim **1**, wherein a center axis of the rotation shaft is perpendicular to the air inlet plane.

10. The neck fan according to claim **1**, wherein a center axis of the rotation shaft is unparallel to the direction in which the neck fan is worn to the neck of the user.

11. The neck fan according to claim **2**, wherein the air outlet comprises a first air outlet portion located between the plurality of fan assemblies and the second portion; the first air outlet portion has an air outlet plane perpendicular to an air outlet direction in which an airflow generated by the plurality of fan assemblies are flowing out of the neck fan through the first air outlet portion; an angle is formed between the air outlet plane and direction in which the neck fan is worn to the neck of the user and is greater than 0 degrees and less than 90 degrees.

12. The neck fan according to claim **11**, wherein a center axis of the rotation shaft is inclined to the air outlet plane.

13. The neck fan according to claim **11**, wherein the air inlet plane is unparallel to the air outlet plane.

14. The neck fan according to claim **1**, further comprising a refrigeration member and a control circuit for driving the plurality of fan assemblies; wherein the refrigeration member is connected to a first control switch; and the control circuit comprises:

a charging and power supply circuit, configured to be electrically connected to an external power source and a battery and receive an external voltage to charge the battery and to output a power supply voltage;

a fan drive circuit, electrically connected to the charging and power supply circuit and the plurality of fan assemblies to drive the fan of each of the plurality of fan assemblies to rotate; and

a master control circuit, electrically connected to the charging and power supply circuit, the fan drive circuit, and a control end of the first control switch; wherein the master control circuit is configured to output a first pulse width control signal to control the first control switch to be conducted or disconnected, so as to further control the refrigeration member to be switched on and switched off intermittently.

15. A neck fan, configured to be worn around a neck of a user, comprising:

a shell, defining an air inlet, a receiving space, and an air outlet, that are communicated with each other;

a plurality of fan assemblies, received in the receiving space;

wherein each of the plurality of an assemblies comprises a fan, the fan comprises a fan hub and a plurality of fan blades arranged and protruding out of the fan hub; the fan hub comprises a sealed end surface; the sealed end surface faces towards an outer side of the shell away from the neck, so as to intake air located at the outer side of the shell away from the neck into the fan assembly.

16. The neck fan according to claim **15**, wherein each of the plurality of fan assemblies further comprises a fan shell receiving the fan hub and the plurality of fan blades therein; the fan shell has an air inlet opening and an air output opening.

17. The neck fan according to claim **16**, wherein the fan hub and a portion of the plurality of fan blades are exposed from the air inlet opening and are in communication with the air inlet defined in the shell.

18. The neck fan according to claim **17**, further comprising a partition plate arranged inside the neck fan, wherein the partition plate divides the receiving space into an air duct and an accommodating cavity.

19. The neck fan according to claim **18**, wherein the air output opening of the fan shell is communicated with the air duct and configured to output an airflow generated by the fan.

20. The neck fan according to claim **18**, further comprising a battery, received in the accommodating cavity.

* * * * *