US 20250263909A1

(19) **United States**

(12) **Patent Application Publication** (10) **Pub. No.: US 2025/0263909 A1**

ITOU et al. (43) **Pub. Date: Aug. 21, 2025**

(54) **WORK MACHINE**

(71) Applicant: **Hitachi Construction Machinery Co., Ltd.**, Taito-ku, Tokyo (JP)

(72) Inventors: **Ryousuke ITOU**, Tsuchiura-shi (JP); **Hiroaki AMANO**, Tsukuba-shi (JP); **Kento KUMAGAI**, Inashiki-gun, Ami-machi (JP); **Shinji NISHIKAWA**, Kasumigaura-shi (JP); **Akihiro NARAZAKI**, Tsukuba-shi (JP)

(21) Appl. No.: **18/845,017**

(22) PCT Filed: **Mar. 10, 2023**

(86) PCT No.: **PCT/JP2023/009422**

§ 371 (c)(1),
(2) Date: **Sep. 9, 2024**

(30) **Foreign Application Priority Data**

Mar. 22, 2022 (JP) 2022-045731

Publication Classification

(51) **Int. Cl.**
E02F 9/22 (2006.01)
F15B 11/04 (2006.01)

(52) **U.S. Cl.**
CPC ***E02F 9/2235*** (2013.01); ***E02F 9/2285*** (2013.01); ***E02F 9/2296*** (2013.01); ***F15B 11/04*** (2013.01); *F15B 2211/20546* (2013.01); *F15B 2211/6306* (2013.01); *F15B 2211/6654* (2013.01)

(57) **ABSTRACT**

The present invention aims to provide a working machine capable of improving the responsiveness of the driving speed to the target speed of the hydraulic actuator. For this purpose, the controller calculates the target speed of the boom according to the input amount of the operation lever, calculates the actuator target flow rate based on the target speed, calculates the pump target flow rate based on the actuator target flow rate, and based on the input amount of the operation lever, the output value of the inertia measuring device, and the meter-out pressure of the actuator, calculates the target meter-in pressure, which is the target value of the actuator's meter-in pressure, calculates the difference between the driving speed of the boom and the target speed as a speed error, calculates the difference between the meter-in pressure and the target meter-in pressure as a pressure error, and corrects the pump target flow rate according to the speed error and the pressure error.

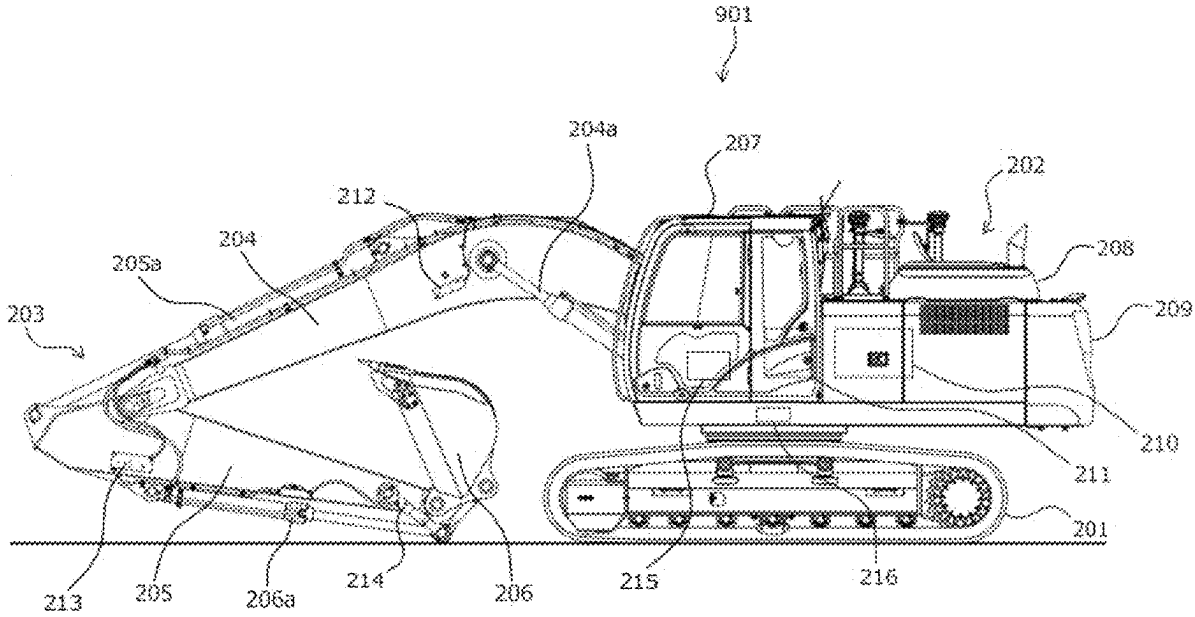

FIG. 1

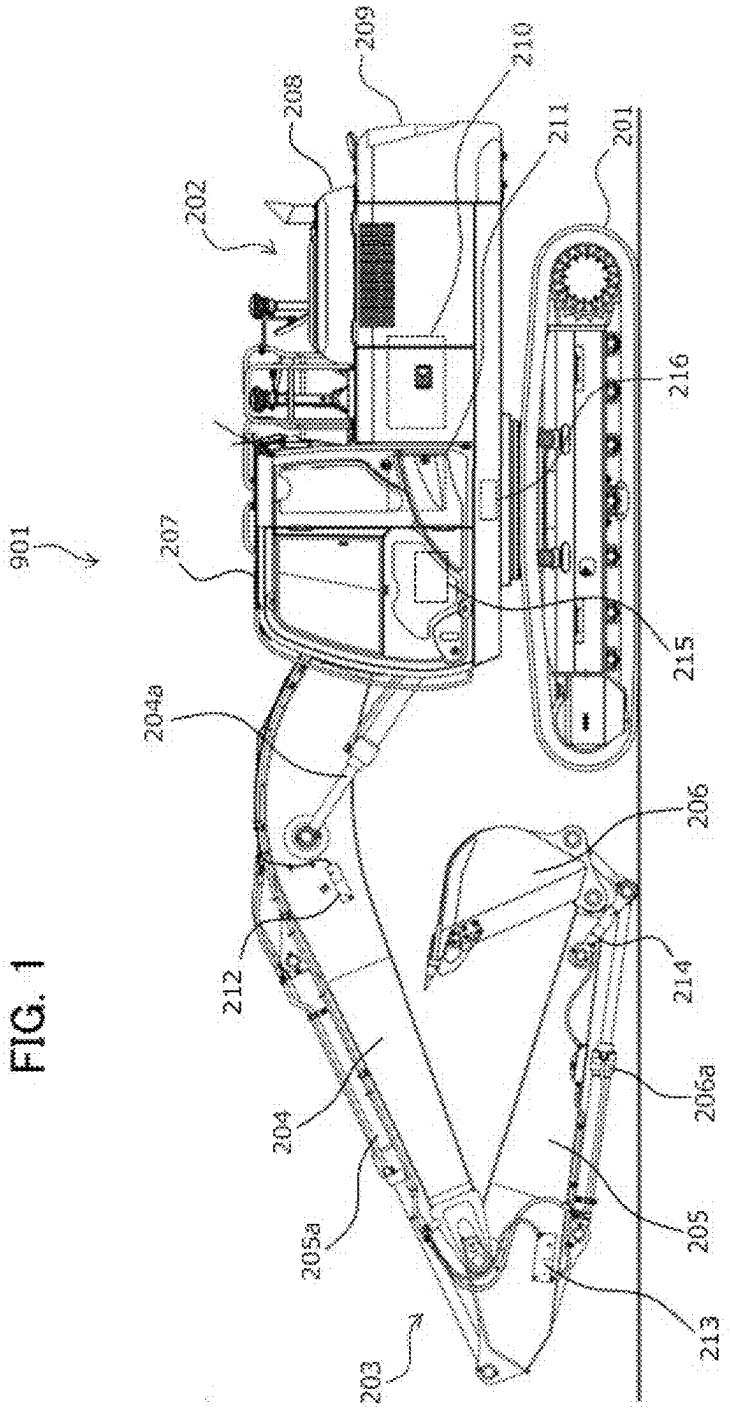
901
202
208
209
210
211
201
216
207
215
204a
206
212
214
204
206a
205a
205
213
203

FIG. 2A

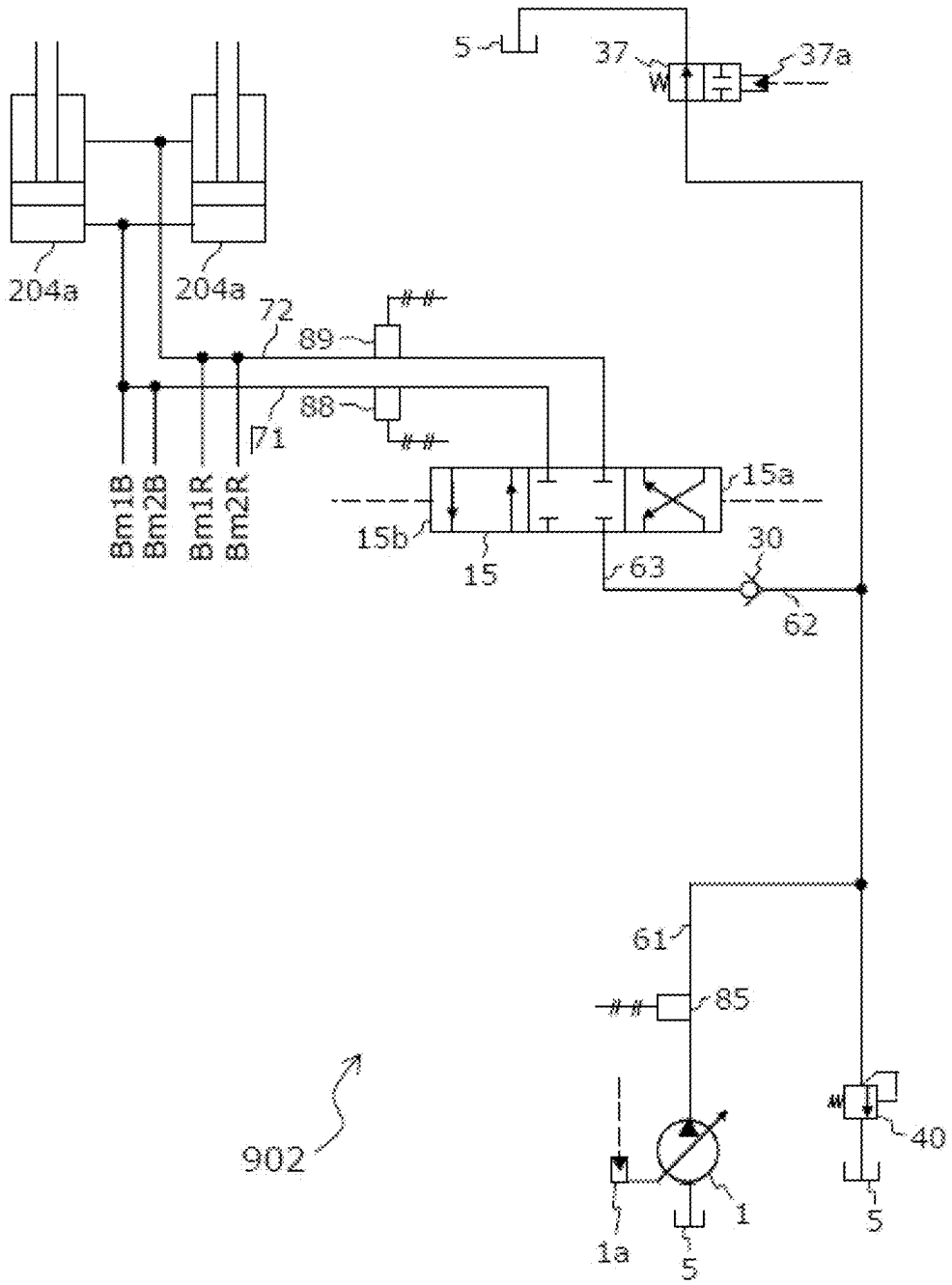
5
37
37a
204a
204a
72
89
88
71
Bm1B
Bm2B
Bm1R
Bm2R
15a
15b
15
63
30
62
61
85
902
40
1
1a
5
5

FIG. 2B

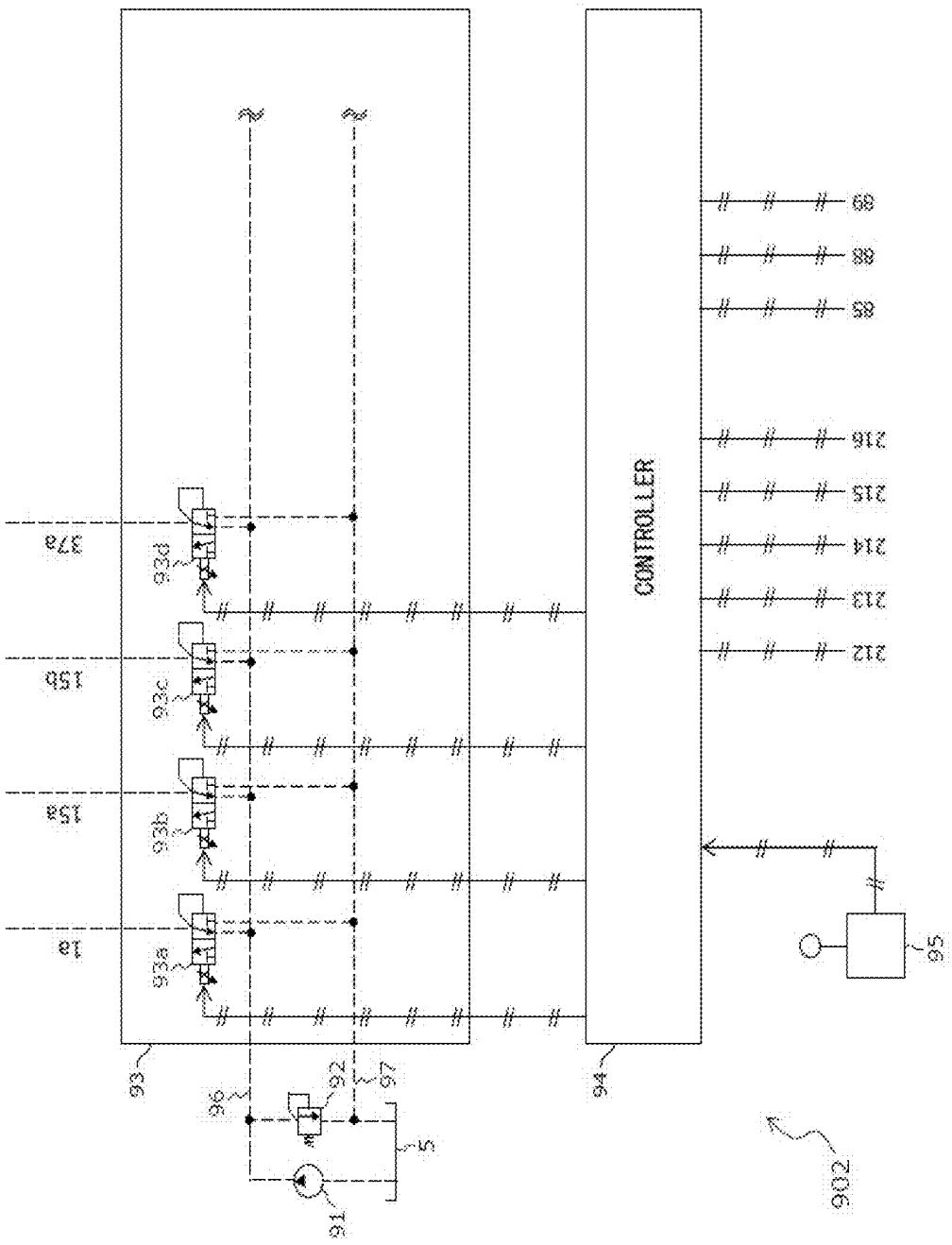
CONTROLLER
1a
15a
15b
37a
93a
93b
93c
93d
93
94
95
96
97
91
92
5
89
88
85
216
215
214
213
212
902

FIG. 3

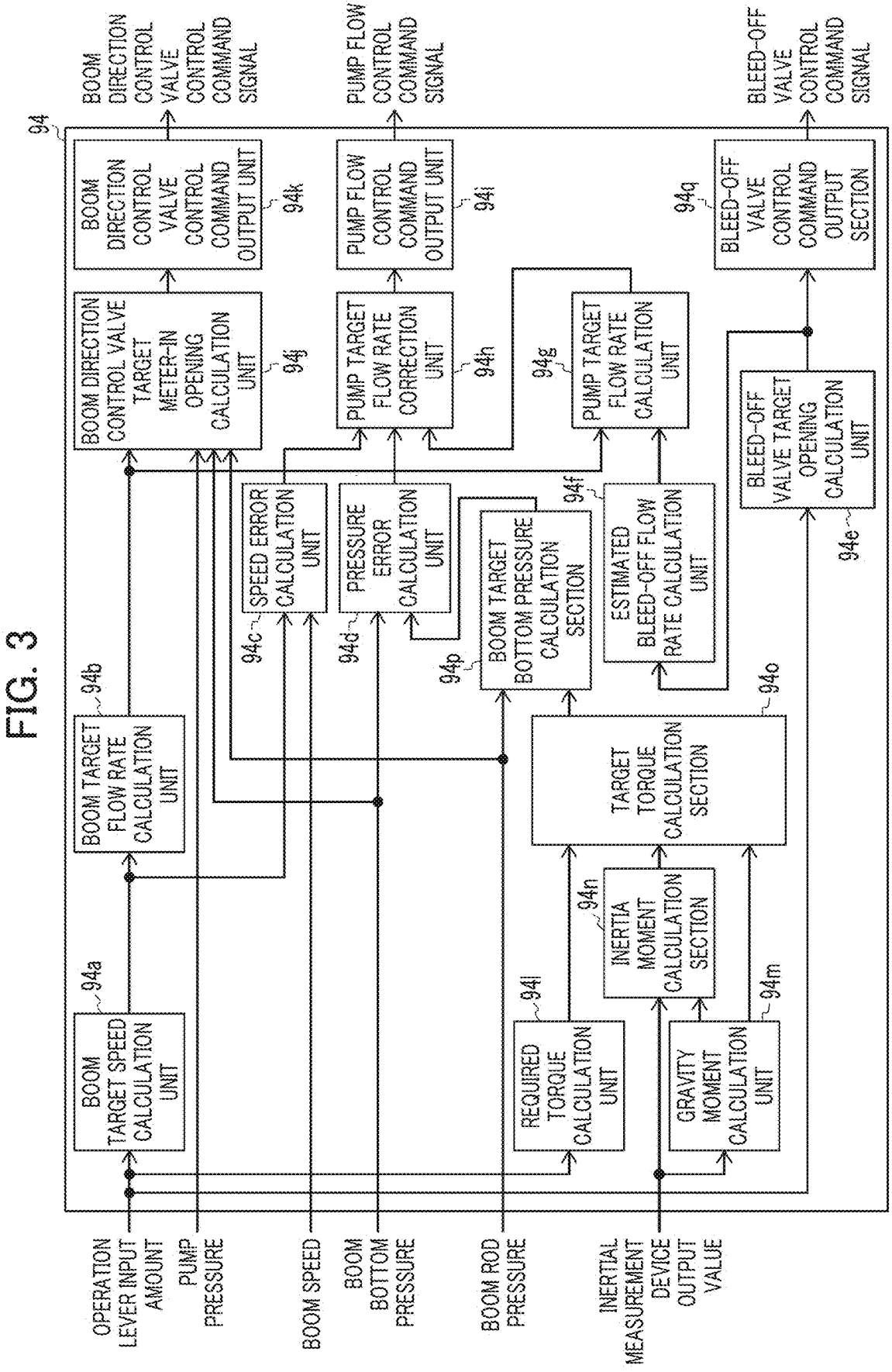
94
BOOM DIRECTION CONTROL VALVE CONTROL COMMAND SIGNAL
PUMP FLOW CONTROL COMMAND SIGNAL
BLEED-OFF VALVE CONTROL COMMAND SIGNAL
BOOM DIRECTION CONTROL VALVE CONTROL COMMAND OUTPUT UNIT
94k
PUMP FLOW CONTROL COMMAND OUTPUT UNIT
94i
94q
BLEED-OFF VALVE CONTROL COMMAND OUTPUT SECTION
BOOM DIRECTION CONTROL VALVE TARGET METER-IN OPENING CALCULATION UNIT
94j
PUMP TARGET FLOW RATE CORRECTION UNIT
94h
94g
PUMP TARGET FLOW RATE CALCULATION UNIT
BLEED-OFF VALVE TARGET OPENING CALCULATION UNIT
94e
SPEED ERROR CALCULATION UNIT
94c
PRESSURE ERROR CALCULATION UNIT
94d
94p
BOOM TARGET BOTTOM PRESSURE CALCULATION SECTION
94f
ESTIMATED BLEED-OFF FLOW RATE CALCULATION UNIT
BOOM TARGET FLOW RATE CALCULATION UNIT
94b
94o
TARGET TORQUE CALCULATION SECTION
BOOM TARGET SPEED CALCULATION UNIT
94a
94n
INERTIA MOMENT CALCULATION SECTION
94l
REQUIRED TORQUE CALCULATION UNIT
94m
GRAVITY MOMENT CALCULATION UNIT
OPERATION LEVER INPUT AMOUNT
PUMP PRESSURE
BOOM SPEED
BOOM BOTTOM PRESSURE
BOOM ROD PRESSURE
INERTIAL MEASUREMENT DEVICE OUTPUT VALUE

FIG. 4

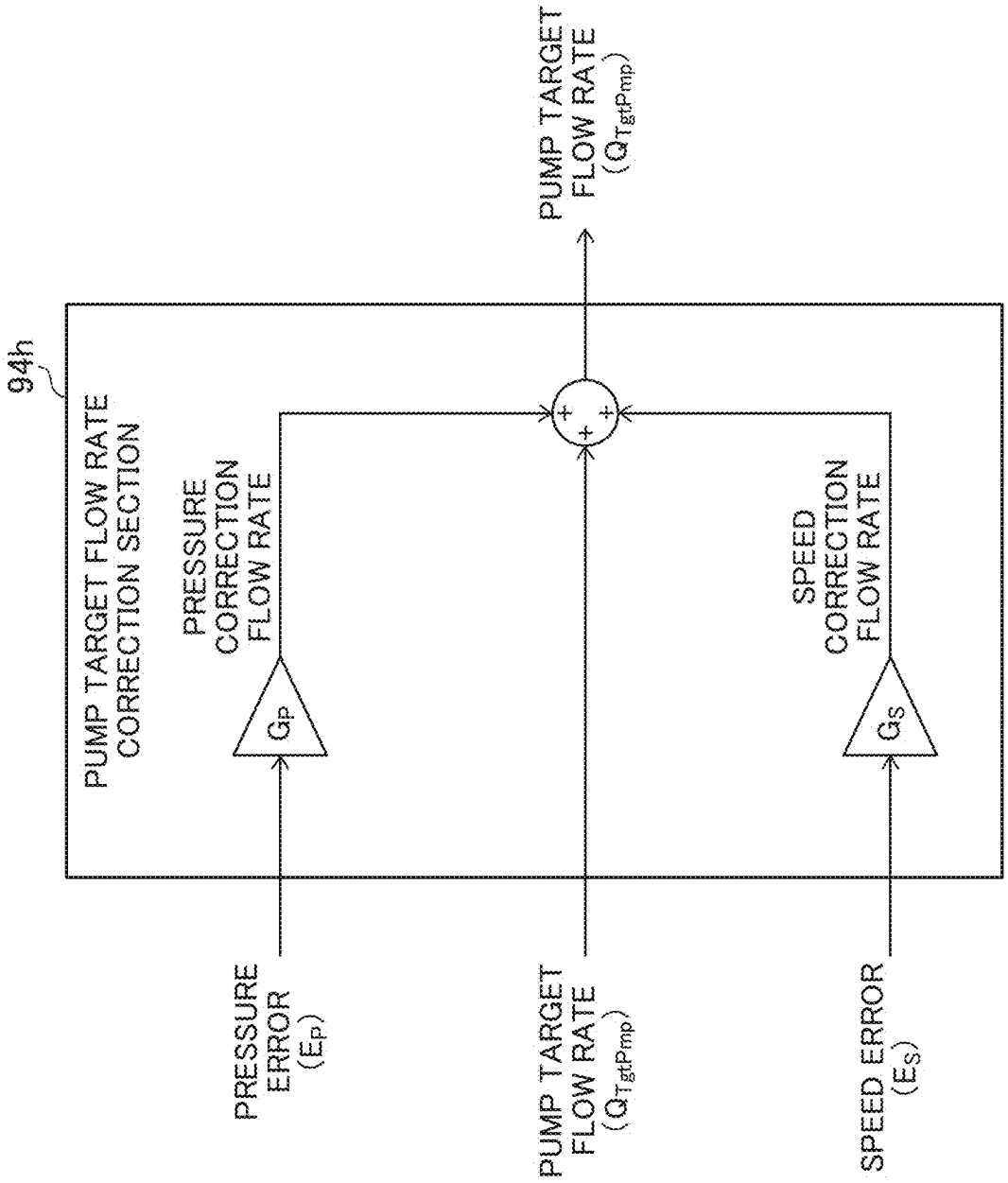
94h
PUMP TARGET FLOW RATE CORRECTION SECTION
PRESSURE CORRECTION FLOW RATE
SPEED CORRECTION FLOW RATE
G_P
G_S
+
+
+
PUMP TARGET FLOW RATE (Q_{TgtPmp})
PRESSURE ERROR (E_P)
PUMP TARGET FLOW RATE (Q_{TgtPmp})
SPEED ERROR (E_S)

FIG. 5

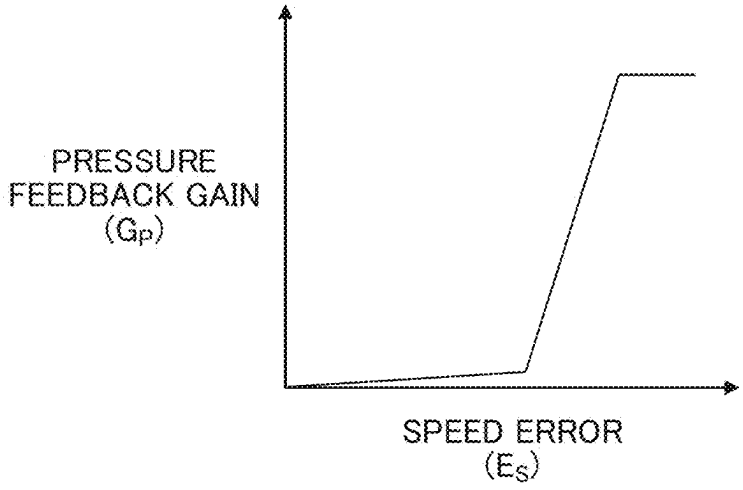

FIG. 6

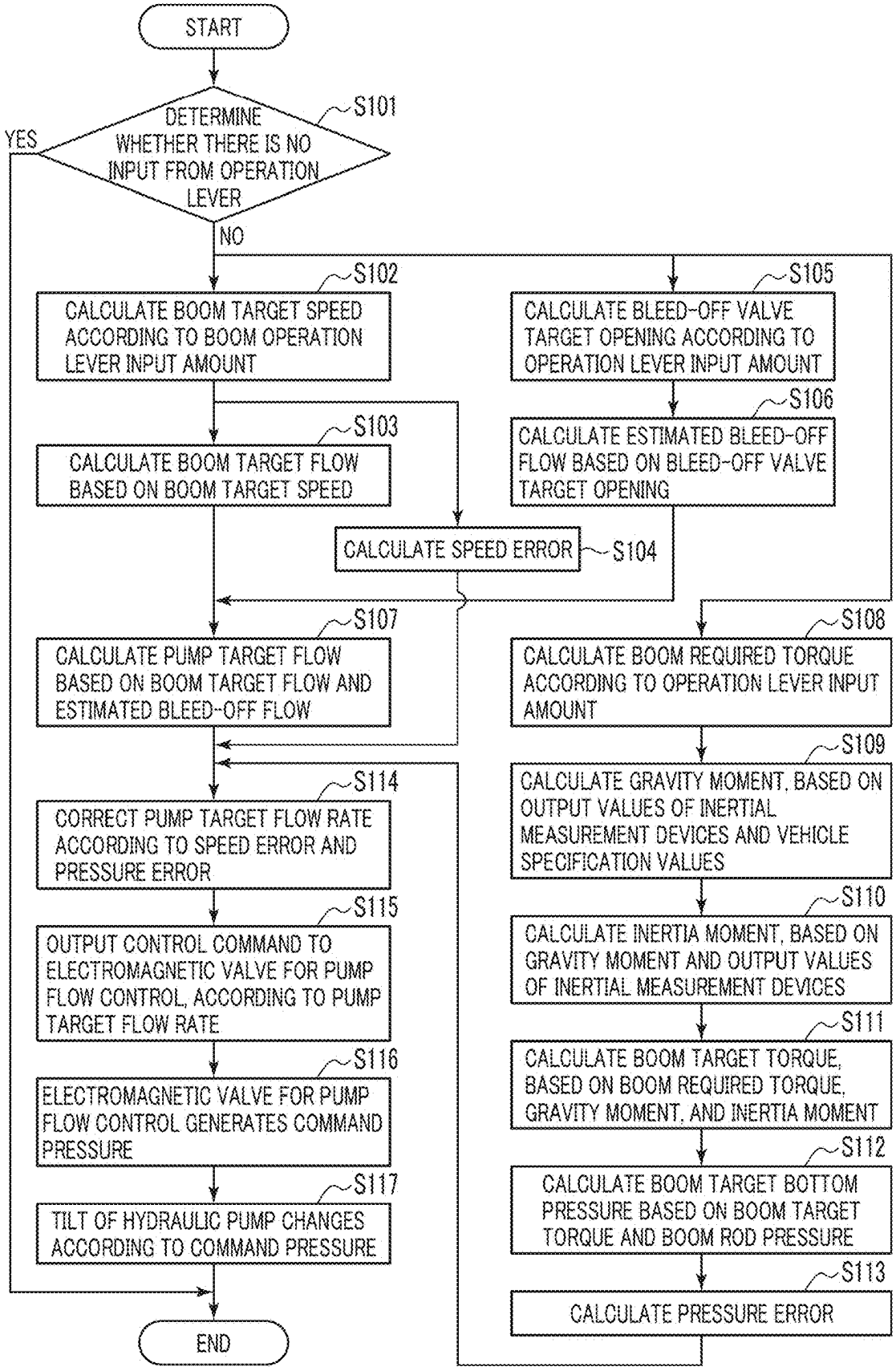
START
S101
DETERMINE WHETHER THERE IS NO INPUT FROM OPERATION LEVER
YES
NO
S102
CALCULATE BOOM TARGET SPEED ACCORDING TO BOOM OPERATION LEVER INPUT AMOUNT
S103
CALCULATE BOOM TARGET FLOW BASED ON BOOM TARGET SPEED
S105
CALCULATE BLEED-OFF VALVE TARGET OPENING ACCORDING TO OPERATION LEVER INPUT AMOUNT
S106
CALCULATE ESTIMATED BLEED-OFF FLOW BASED ON BLEED-OFF VALVE TARGET OPENING
CALCULATE SPEED ERROR
S104
S107
CALCULATE PUMP TARGET FLOW BASED ON BOOM TARGET FLOW AND ESTIMATED BLEED-OFF FLOW
S108
CALCULATE BOOM REQUIRED TORQUE ACCORDING TO OPERATION LEVER INPUT AMOUNT
S109
CALCULATE GRAVITY MOMENT, BASED ON OUTPUT VALUES OF INERTIAL MEASUREMENT DEVICES AND VEHICLE SPECIFICATION VALUES
S110
CALCULATE INERTIA MOMENT, BASED ON GRAVITY MOMENT AND OUTPUT VALUES OF INERTIAL MEASUREMENT DEVICES
S111
CALCULATE BOOM TARGET TORQUE, BASED ON BOOM REQUIRED TORQUE, GRAVITY MOMENT, AND INERTIA MOMENT
S112
CALCULATE BOOM TARGET BOTTOM PRESSURE BASED ON BOOM TARGET TORQUE AND BOOM ROD PRESSURE
S113
CALCULATE PRESSURE ERROR
S114
CORRECT PUMP TARGET FLOW RATE ACCORDING TO SPEED ERROR AND PRESSURE ERROR
S115
OUTPUT CONTROL COMMAND TO ELECTROMAGNETIC VALVE FOR PUMP FLOW CONTROL, ACCORDING TO PUMP TARGET FLOW RATE
S116
ELECTROMAGNETIC VALVE FOR PUMP FLOW CONTROL GENERATES COMMAND PRESSURE
S117
TILT OF HYDRAULIC PUMP CHANGES ACCORDING TO COMMAND PRESSURE
END

FIG. 7

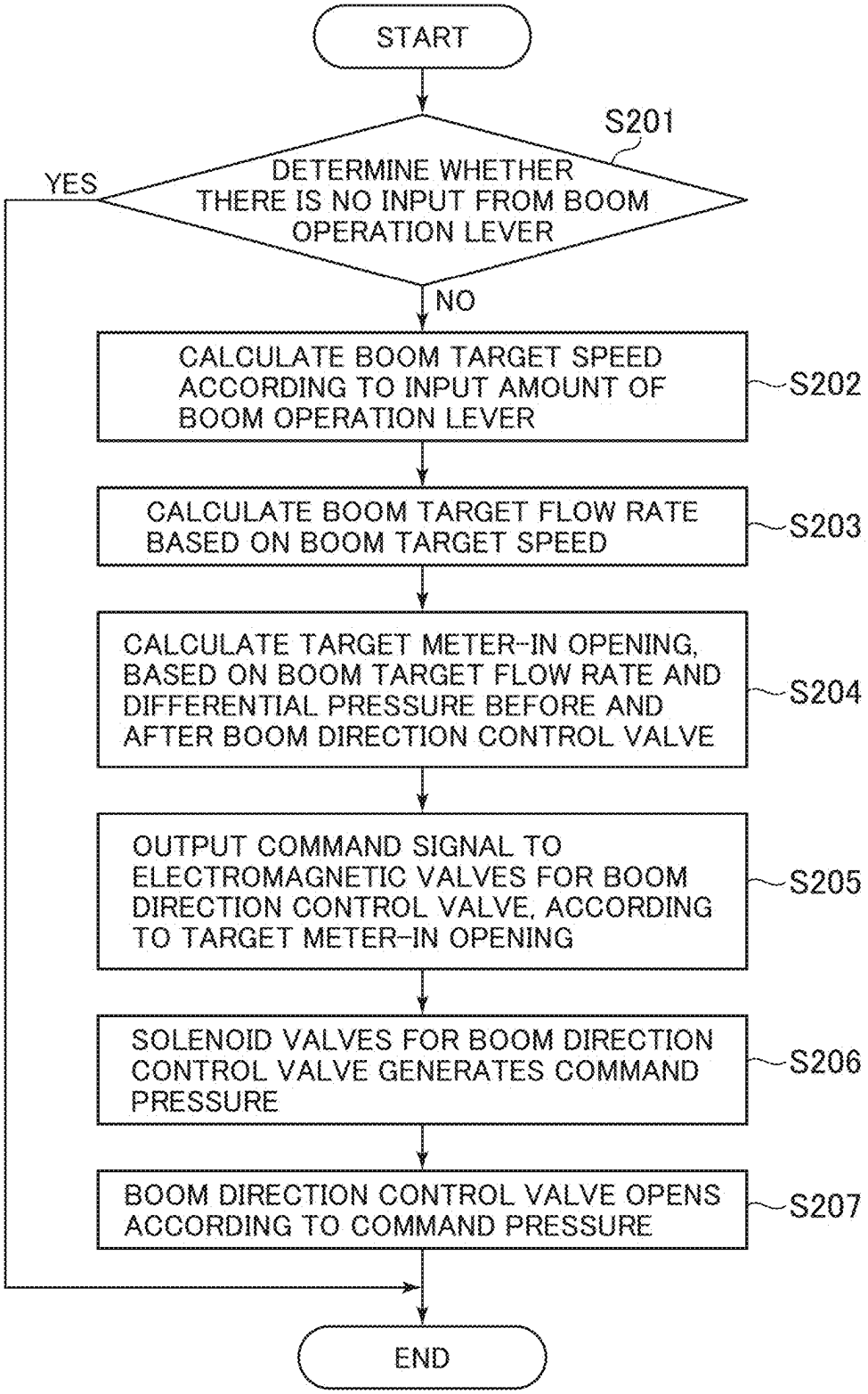
START
S201
DETERMINE WHETHER THERE IS NO INPUT FROM BOOM OPERATION LEVER
YES
NO
CALCULATE BOOM TARGET SPEED ACCORDING TO INPUT AMOUNT OF BOOM OPERATION LEVER
S202
CALCULATE BOOM TARGET FLOW RATE BASED ON BOOM TARGET SPEED
S203
CALCULATE TARGET METER-IN OPENING, BASED ON BOOM TARGET FLOW RATE AND DIFFERENTIAL PRESSURE BEFORE AND AFTER BOOM DIRECTION CONTROL VALVE
S204
OUTPUT COMMAND SIGNAL TO ELECTROMAGNETIC VALVES FOR BOOM DIRECTION CONTROL VALVE, ACCORDING TO TARGET METER-IN OPENING
S205
SOLENOID VALVES FOR BOOM DIRECTION CONTROL VALVE GENERATES COMMAND PRESSURE
S206
BOOM DIRECTION CONTROL VALVE OPENS ACCORDING TO COMMAND PRESSURE
S207
END

FIG. 8

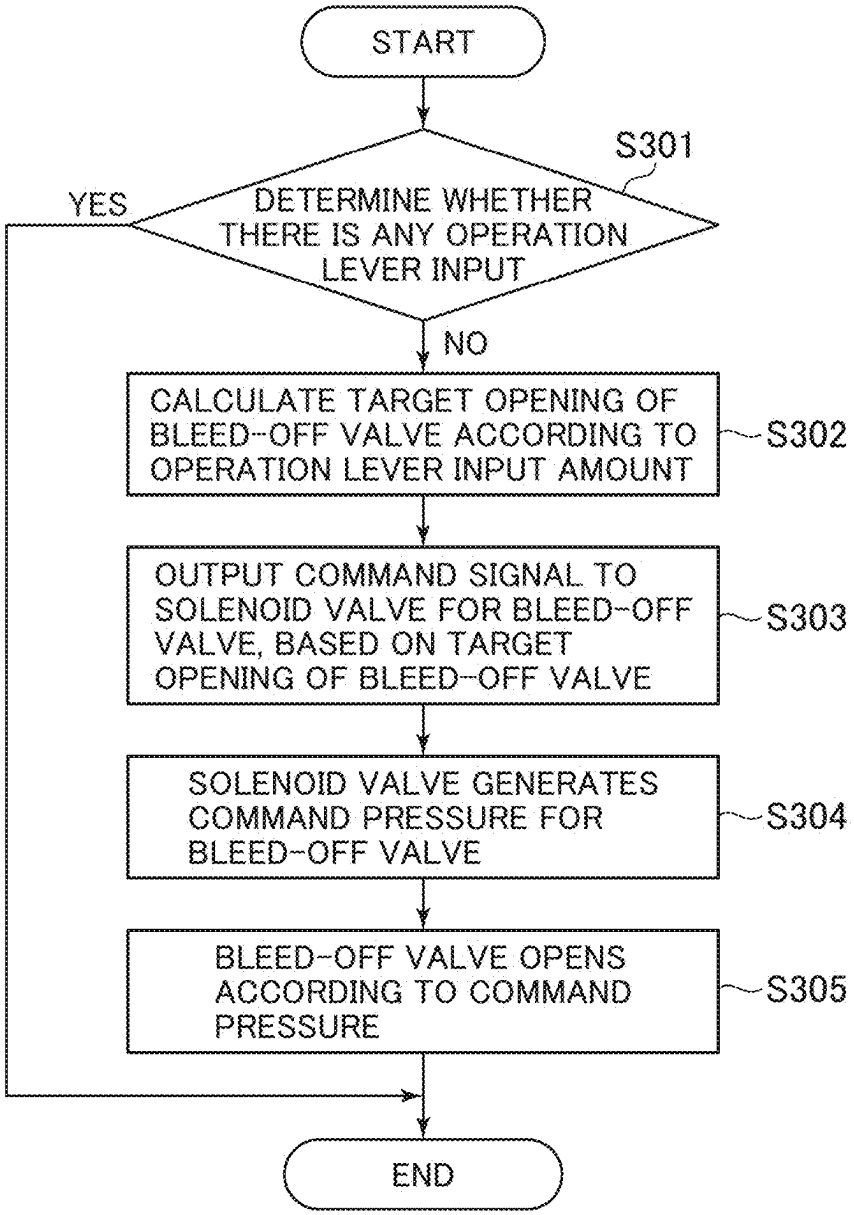
START
S301
DETERMINE WHETHER THERE IS ANY OPERATION LEVER INPUT
YES
NO
CALCULATE TARGET OPENING OF BLEED-OFF VALVE ACCORDING TO OPERATION LEVER INPUT AMOUNT
S302
OUTPUT COMMAND SIGNAL TO SOLENOID VALVE FOR BLEED-OFF VALVE, BASED ON TARGET OPENING OF BLEED-OFF VALVE
S303
SOLENOID VALVE GENERATES COMMAND PRESSURE FOR BLEED-OFF VALVE
S304
BLEED-OFF VALVE OPENS ACCORDING TO COMMAND PRESSURE
S305
END

FIG. 9

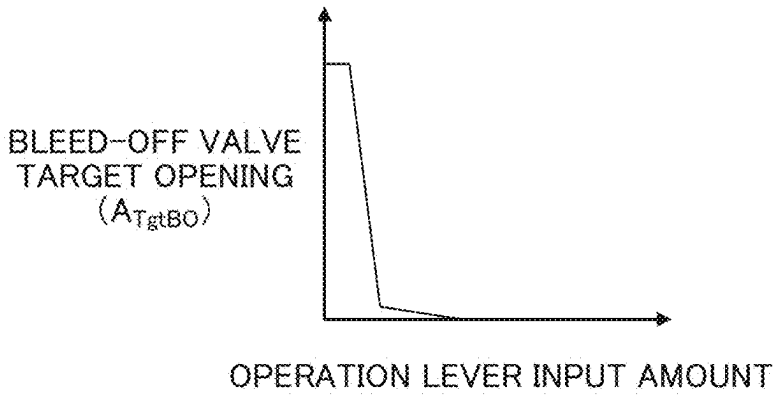
BLEED-OFF VALVE
TARGET OPENING
(A_{TgtBO})
OPERATION LEVER INPUT AMOUNT

FIG. 10

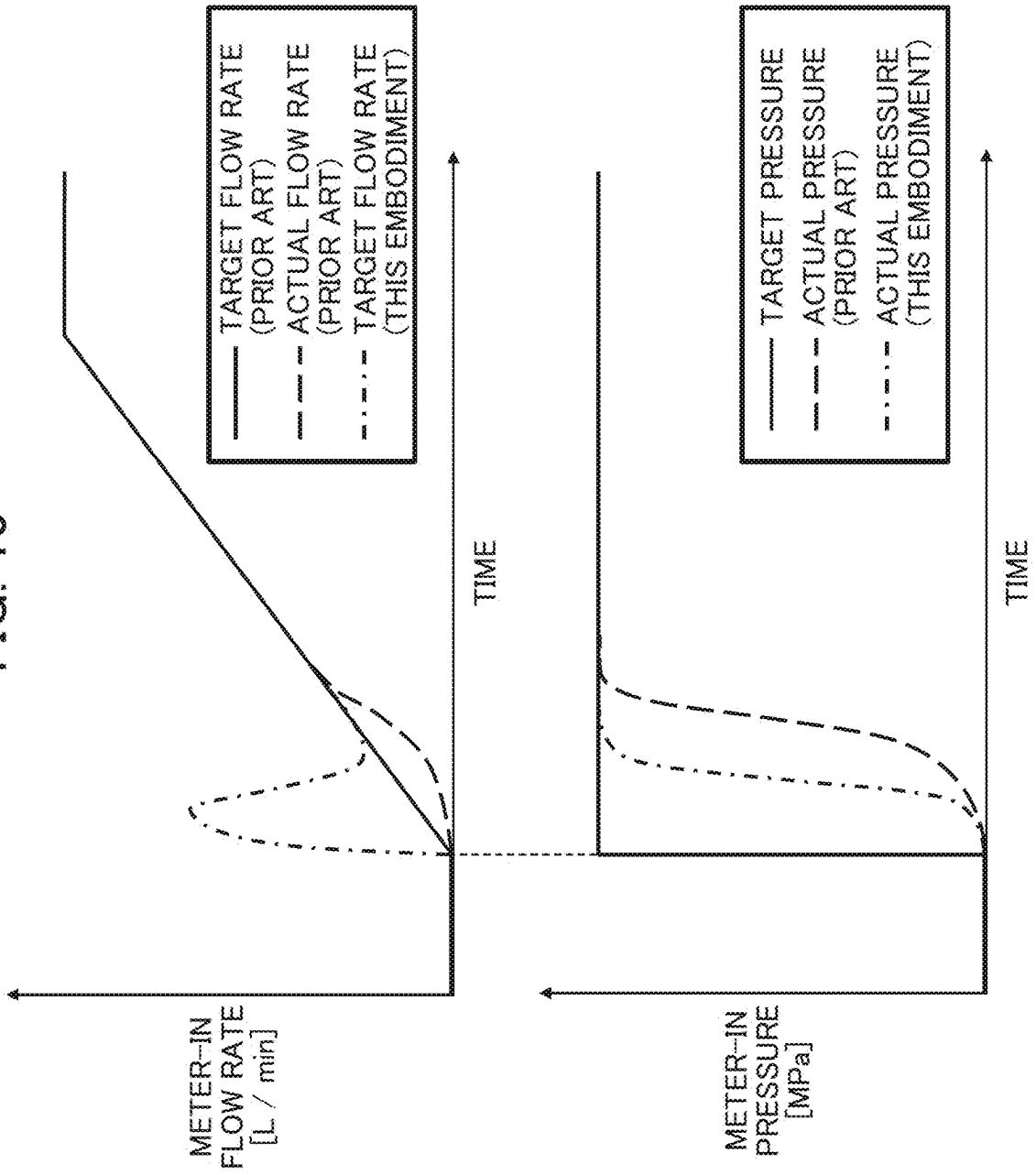
TARGET FLOW RATE (PRIOR ART)
ACTUAL FLOW RATE (PRIOR ART)
TARGET FLOW RATE (THIS EMBODIMENT)
METER-IN FLOW RATE [L / min]
TIME
TARGET PRESSURE
ACTUAL PRESSURE (PRIOR ART)
ACTUAL PRESSURE (THIS EMBODIMENT)
METER-IN PRESSURE [MPa]
TIME

WORK MACHINE

TECHNICAL FIELD

[0001] The present invention relates to work machines such as hydraulic excavators.

BACKGROUND ART

[0002] In work machines such as hydraulic excavators, a front working device consisting of a boom, arm, and bucket is rotationally driven by hydraulic actuators such as hydraulic cylinders. The driving speed of the hydraulic actuator is controlled to match the target speed set according to the input amount of the operation lever. Generally, from the perspective of operability of the front working device and trajectory control of the bucket, it is desirable for the driving speed to follow the target speed of the front working device without delay. However, the driving speed may vary due to the influence of disturbances such as load on the hydraulic actuator, resulting in a deviation from the target speed. Therefore, a target speed feedback control is Known. the speed feedback control that reduces the variation in driving speed due to disturbances such as load on the hydraulic actuator by adjusting the pump flow so that the driving speed of the hydraulic actuator matches the target speed. (for example, Patent Document 1).

PRIOR ART DOCUMENTS

Patent Literature

[0003] Patent Document 1: International Publication No. 2015/025818

SUMMARY OF THE INVENTION

Problem to be Solved by the Invention

[0004] However, in the speed feedback control described in Patent Document 1, there is a delay due to filtering processes, etc., when obtaining the driving speed of the hydraulic actuator from the posture sensor. Furthermore, due to the compressibility of the hydraulic fluid, the hydraulic actuator does not start moving until the pump's discharge oil flows into it and the pressure rises, but this pressure response delay cannot be eliminated by speed feedback control. Therefore, there is a limit to improving the followability of the driving speed to the target speed of the hydraulic actuator with only the speed feedback control described in Patent Document 1.

[0005] The present invention has been made in view of the above problems, and its purpose is to provide a work machine capable of improving the followability of the driving speed to the target speed of the hydraulic actuator.

Means for Solving the Problem

[0006] To achieve the above objectives, the present invention provides a work machine equipped with a vehicle body, a working device mounted on the vehicle body, an actuator that drives the working device, a hydraulic pump, a directional control valve that controls the flow of pressurized oil supplied from the hydraulic pump to the actuator, an operation lever to instruct the operation of the actuator, and a controller that controls the directional control valve according to the input amount of the operation lever. The work machine includes an inertial measurement unit that detects the posture and operating state of the working device, and a pressure sensor that detects the meter-in pressure and meter-out pressure of the actuator. The controller calculates the target speed of the working device according to the input amount of the operation lever, calculates the target flow rate for the actuator, which is the target value of the flow supplied to the actuator based on the target speed, calculates the target discharge flow rate of the hydraulic pump, which is the pump target flow rate based on the actuator target flow rate, calculates the target meter-in pressure, which is the target value of the meter-in pressure based on the input amount of the operation lever, the output value of the inertial measurement unit, and the meter-out pressure, calculates the speed error as the difference between the speed of the working device obtained by the inertial measurement unit and the target speed, calculates the pressure error as the difference between the meter-in pressure and the target meter-in pressure, and corrects the pump target flow rate according to the speed error and the pressure error.

[0007] According to the present invention configured as above, the pump target flow rate is corrected so that the difference (speed error) between the driving speed of the working device and the target speed is minimized, and the meter-in pressure of the actuator according to the input amount of the operation lever is obtained, thereby improving the responsiveness of the driving speed to the target speed of the working device.

Advantages of the Invention

[0008] According to the work machine of the present invention, it is possible to improve the responsiveness of the driving speed to the target speed of the hydraulic actuator.

BRIEF DESCRIPTION OF THE DRAWINGS

[0009] FIG. **1** is a side view of a hydraulic excavator according to an embodiment of the present invention.

[0010] FIG. **2**A is a circuit diagram (1/2) of the hydraulic drive device mounted on the hydraulic excavator shown in FIG. **1**.

[0011] FIG. **2**B is a circuit diagram (2/2) of the hydraulic drive device mounted on the hydraulic excavator shown in FIG. **1**.

[0012] FIG. **3** is a functional block diagram of the controller shown in FIG. **2**B.

[0013] FIG. **4** is a calculation block diagram of the pump target flow rate correction unit shown in FIG. **3**.

[0014] FIG. **5** is a diagram showing the characteristics of the pressure feedback gain shown in FIG. **4**.

[0015] FIG. **6** is a flowchart showing the process related to pump flow control of the controller shown in FIG. **2**B.

[0016] FIG. **7** is a flowchart showing the process related to boom directional control valve opening control of the controller shown in FIG. **2**B.

[0017] FIG. **8** is a flowchart showing the process related to bleed-off valve opening control of the controller shown in FIG. **2**B.

[0018] FIG. **9** is a diagram showing the target opening characteristics of the bleed-off valve shown in FIG. **2**A.

[0019] FIG. **10** is a diagram showing the time series changes in the flow and meter-in pressure of the boom cylinder when the boom operation lever is operated.

MODES FOR CARRYING OUT THE INVENTION

[0020] FIG. **1** is a side view of a hydraulic excavator according to the present embodiment. The hydraulic excavator **901** includes a traveling body **201**, a revolving frame **202** that is rotatably arranged on the traveling body **201** and constitutes the vehicle body, and a working device **203** that is attached to the revolving frame **202** so as to be able to rotate in the vertical direction and performs excavation work of soil and sand, among other tasks. The revolving frame **202** is driven by a revolving motor **211**, which is an actuator.

[0021] The work device **203** includes a boom **204** that is attached to the swivel body **202** so as to be rotatable in the vertical direction, an arm **205** that is attached to the tip of the boom **204** so as to be rotatable in the vertical direction, a bucket **206** that is attached to the tip of the arm **205** so as to be rotatable in the vertical direction, a boom cylinder **204***a* which is an actuator that drives the boom **204**, an arm cylinder **205***a* which is an actuator that drives the arm **205**, and a bucket cylinder **206***a* which is an actuator that drives the bucket **206**. In the work device **203**, inertial measurement devices **212**, **213**, **214** are installed to detect the posture and operational state of the boom **204**, arm **205**, and bucket **206**. In the swivel body **202**, inertial measurement devices **215**, **216** are installed to detect the posture of the hydraulic excavator **901** and the rotational speed of the swivel body **202**. The inertial measurement devices **212** to **216** are composed of, for example, IMUs.

[0022] At the front position on the swivel body **202**, a cab **207** is provided, and at the rear position, a counterweight **209** is attached to ensure the weight balance of the vehicle body. Between the cab **207** and the counterweight **209**, a machine room **208** is provided. The machine room **208** houses an engine (not shown), hydraulic pump **1** (shown in FIG. **2**A), swivel motor **211**, control valve **210**, etc. The control valve **210** controls the flow of pressurized oil supplied from the hydraulic pump **1** to the actuators **204***a*, **205***a*, **206***a*, **211**.

[0023] FIGS. **2**A and **2**B are circuit diagrams of the hydraulic drive device mounted on the hydraulic excavator **901**. For simplification, FIGS. **2**A and **2**B only show the configuration related to the driving of the boom cylinder **204***a*, omitting the configurations related to the driving of other actuators.

(Configuration)

[0024] The hydraulic drive device **902** includes a hydraulic pump **1** consisting of a variable displacement hydraulic pump, a pilot pump **91**, and a hydraulic oil tank **5** that supplies oil to the hydraulic pump **1** and pilot pump **91**. The hydraulic pump **1** and pilot pump **91** are driven by an engine (not shown). The tilt angle of the hydraulic pump **1** is controlled by a regulator attached to the hydraulic pump **1**. The regulator of the hydraulic pump **1** has a flow control command pressure port **1***a* and is driven by the command pressure acting on the flow control command pressure port **1***a*.

[0025] In the pump passage **61** supplied with the discharge oil from the hydraulic pump **1**, a boom direction control valve **15** and several other direction control valves not shown are connected in parallel via meter-in passages **62**, **63**, and several other meter-in passages not shown. The boom direction control valve **15** is driven by the command pressure acting on pilot ports **15***a*, **15***b*, and controls the flow of pressurized oil supplied from the hydraulic pump **1** to the boom cylinder **204***a*.

[0026] Check valves **30** are placed in the meter-in passages **62**, **63** to prevent backflow from the boom cylinder **204***a* to the pump passage **61**. The pump passage **61** is connected to the hydraulic oil tank **5** via a main relief valve **40** to protect the circuit from excessive pressure rise. The pump passage **61** is connected to the hydraulic oil tank **5** via a bleed-off valve **37** to allow the discharge of excess oil from the hydraulic pump **1**.

[0027] In the pump passage **61**, a pressure sensor **85** is provided to detect the discharge pressure (pump pressure) of the hydraulic pump **1**. In the passage **71** connecting the boom direction control valve **15** and the bottom side of the boom cylinder **204***a*, a pressure sensor **88** is provided to detect the boom bottom pressure. In the passage **72** connecting the boom direction control valve **15** and the rod side of the boom cylinder **204***a*, a pressure sensor **89** is provided to detect the boom rod pressure.

[0028] The discharge port of the pilot pump **91** is connected to the hydraulic oil tank **5** via a pilot relief valve **92** for generating pilot primary pressure, and through passage **96**, to one input port of the solenoid valves **93***a* to **93***d* built into the solenoid valve unit **93**. The other input ports of solenoid valves **93***a* to **93***d* are connected to the hydraulic oil tank **5** through passage **97**. Each of the solenoid valves **93***a* to **93***d* reduces the pilot primary pressure in accordance with command signals from the controller **94** and outputs it as command pressure.

[0029] The output port of solenoid valve **93***a* is connected to the flow control command pressure port **1***a* of the regulator of hydraulic pump **1**. The output ports of solenoid valves **93***b*, **93***c* are connected to the pilot ports **15***a*, **15***b* of the boom direction control valve **15**. The output port of solenoid valve **93***d* is connected to the command pressure port **37***a* of the bleed-off valve **37**.

[0030] The hydraulic drive device **902** includes a controller **94** and an operation lever **95** capable of switching the boom direction control valve **15**. The controller **94** outputs command signals to the solenoid valves **93***a* to **93***d* based on the input amount of the operation lever **95**, the output values of the inertial measurement devices **212** to **216**, and the output values of the pressure sensors **85**, **88**, **89**.

[0031] FIG. **3** is a functional block diagram of the controller **94**. The controller **94** has a boom target speed calculation unit **94***a*, a boom target flow rate calculation unit **94***b*, a speed error calculation unit **94***c*, a pressure error calculation unit **94***d*, a bleed-off valve target opening calculation unit **94***e*, an estimated bleed-off flow rate calculation unit **94***f*, a pump target flow rate calculation unit **94***g*, a pump target flow rate correction unit **94***h*, a pump flow control command output unit **94***i*, a boom direction control valve target meter-in opening calculation unit **94***j*, a boom direction control valve control command output unit **94***k*, a required torque calculation unit **94***l*, a gravity moment calculation unit **94***m*, an inertia moment calculation unit **94***n*, a target torque calculation unit **940**, a boom target bottom pressure calculation unit **94***p*, and a bleed-off valve control command output unit **94***q*.

[0032] The boom target speed calculation unit **94***a* calculates the boom target speed VTgtBm according to the input amount of the operation lever, following the predetermined boom target speed characteristics relative to the operation

lever input amount. The boom target flow rate calculation unit **94***b* calculates the target value of the flow rate (boom target flow rate QTgtBm) to be supplied to the boom cylinder **204***a*, based on the boom target speed VTgtBm calculated by the boom target speed calculation unit **94***a*. The boom direction control valve target meter-in opening calculation unit **94***j* calculates the target value of the meter-in opening (boom direction control valve target meter-in opening ATgtBm) of the boom direction control valve **15**, based on the boom target flow rate QTgtBm calculated by the boom target flow rate calculation unit **94***b* and the differential pressure ΔP before and after the boom direction control valve **15** obtained by the pressure sensors **85**, **88**, **89**. The boom direction control valve control command output section **94***k* outputs a command signal (boom direction control valve control command signal) to solenoid valves **93***b*, **93***c* according to the solenoid valve command signal characteristics for the preset boom **6** direction control valve target metering opening ATgtBm, based on the target metering opening ATgtBm.

[0033] The speed error calculation section **94***c* calculates the speed error as the difference between the boom target speed VTgtBm calculated by the boom target speed calculation section **94***a* and the driving speed of boom **204** obtained by the inertial measurement devices **212** to **216**. The requested torque calculation section **94***l* calculates the boom requested torque TReqBm according to the boom requested torque characteristics for a preset operation lever input amount, based on the operation lever input amount. The gravity moment calculation section **94***m* calculates the gravity component of the boom moment as the gravity moment TGravity, based on the output values of the inertial measurement devices **212** to **216** and the vehicle specification values. The inertia moment calculation section **94***n* calculates the inertia component of the boom moment as the inertia moment TInertia, based on the gravity moment TGravity calculated by the gravity moment calculation section **94***m* and the output values of the inertial measurement devices **212** to **216**. The target torque calculation section **940** calculates the target torque TTgtBm for boom **204** based on the requested torque calculated by the requested torque calculation section **94***l*, the gravity moment TGravity calculated by the gravity moment calculation section **94***m*, and the inertia moment TInertia calculated by the inertia moment calculation section **94***n*. The pressure error calculation section **94***d* calculates the pressure error EP as the difference between the boom target bottom pressure calculated by the boom target bottom pressure calculation section **94***p* and the boom bottom pressure obtained by the pressure sensor **88**.

[0034] The bleed-off valve target opening calculation section **94***e* calculates the target opening of the bleed-off valve according to the bleed-off valve target opening characteristics for a preset operation lever input amount, based on the operation lever input amount. The estimated bleed-off flow rate calculation section **94***f* calculates the estimated bleed-off flow rate QEstBO based on the target opening of the bleed-off valve calculated by the bleed-off valve target opening calculation section **94***e*. The pump target flow rate calculation section **94***g* calculates the pump target flow rate QTgtPmp based on the boom target flow rate QTgtBm calculated by the boom target flow rate calculation section **94***b* and the estimated bleed-off flow rate QEstBO calculated by the estimated bleed-off flow rate calculation section **94***f*. The pump target flow rate correction section **974***h* corrects the pump target flow rate QTgtPmp calculated by the pump target flow rate calculation section **94***g* according to the speed error ES calculated by the speed error calculation section **94***c* and the pressure error EP calculated by the pressure error calculation section **94***d*. The pump flow control command output section **94***i* outputs a command signal (pump flow control command signal) to solenoid valve **93***a* according to the solenoid valve command signal characteristics for the preset pump target flow rate QTgtPmp, based on the pump target flow rate corrected by the pump target flow rate correction section **94***h*.

[0035] The bleed-off valve control command output section **94***q* outputs a command signal (bleed-off valve control command signal) to solenoid valve **93***d* according to the solenoid valve command signal characteristics for the preset bleed-off valve target opening, based on the target opening of the bleed-off valve calculated by the bleed-off valve target opening calculation section **94***e*.

[0036] FIG. **4** is an operational block diagram of the pump target flow rate correction section **94***h*. The pump target flow rate correction unit **94***h* corrects the pump target flow rate QTgtPmp calculated by the pump target flow rate calculation unit **94***g* by adding the value obtained by multiplying the pressure error EP by the pressure feedback gain GP (pressure correction flow rate) and the value obtained by multiplying the speed error ES by the speed feedback gain GS (speed correction flow rate). In this embodiment, while the speed feedback gain GS is a constant value, the pressure feedback gain GP changes according to the speed error ES.

[0037] FIG. **5** is a diagram showing the characteristics of the pressure feedback gain GP. When the speed error ES is small, it is possible to ensure the pump flow rate followability with only speed feedback control. On the other hand, when the speed error ES is large, it is not possible to ensure the pump flow rate followability with only speed feedback control. Therefore, in this embodiment, the pressure feedback gain GP is set to increase according to the speed error ES. As a result, as the speed error ES increases, the sensitivity of the pressure feedback control to the pump flow rate increases, making it possible to ensure the pump flow rate followability regardless of the magnitude of the speed error ES.

[0038] FIG. **6** is a flowchart showing the process related to pump flow control of controller **94**.

[0039] First, controller **94** determines whether there is no input from the operation lever (step **S101**). If it is determined that there is no operation lever input (YES) at step **S101**, the flow is terminated.

[0040] If it is determined that there is an operation lever input (NO) at step **S101**, the boom target speed calculation unit **94***a* calculates the boom target speed VTgtBm according to the boom operation lever input amount, following the predetermined boom target speed characteristics for the operation lever input amount (step **S102**).

[0041] Following step **S102**, the boom target flow calculation unit **94***b* calculates the boom target flow QTgtBm based on the boom target speed VIgtBm calculated by the boom target speed calculation unit **94***a* (step **S103**). In parallel with step **S103**, the speed error calculation unit **94***c* calculates the speed error ES as the difference between the boom target speed VTgtBm calculated by the boom target

speed calculation unit **94***a* and the driving speed of boom **204** obtained by the inertial measurement devices **212** to **216** (step S**104**).

[0042] In parallel with step S**102**, the bleed-off valve target opening calculation unit **94***e* calculates the bleed-off valve target opening ATgtBO according to the operation lever input amount (step S**105**).

[0043] Following step S**105**, the estimated bleed-off flow calculation unit **94***f* calculates the estimated bleed-off flow QEstBO based on the bleed-off valve target opening ATgtBO (step S**106**).

[0044] Following steps S**103** and S**106**, the pump target flow calculation unit **94***g* calculates the pump target flow QTgtPmp based on the boom target flow QTgtBm calculated by the boom target flow calculation unit **94***b* and the estimated bleed-off flow QEstBO calculated by the estimated bleed-off flow calculation unit **94***f* (step S**107**).

[0045] In parallel with step S**102**, the required torque calculation unit **94***l* calculates the boom required torque TReqBm according to the operation lever input amount, following the predetermined boom required torque characteristics for the operation lever input amount (step S**108**).

[0046] Following step S**108**, the gravity moment calculation unit **94***m* calculates the gravity component of the boom moment as the gravity moment MGravity, based on the output values of the inertial measurement devices **212** to **216** and the vehicle specification values (mainly dimensions of the structure) (step S**109**).

[0047] Following step S**109**, the inertia moment calculation unit **94***n* calculates the inertia component of the boom moment as the inertia moment MInertia, based on the gravity moment MGravity calculated by the gravity moment calculation unit **94***m* and the output values of the inertial measurement devices **212** to **216** (step S**110**).

[0048] Following step S**110**, the target torque calculation unit **940** calculates the boom target torque TTgtBm using formula [1], based on the boom required torque TReqBm calculated by the required torque calculation unit **94***l*, the gravity moment MGravity calculated by the gravity moment calculation unit **94***m*, and the inertia moment MInertia calculated by the inertia moment calculation unit **94***n* (step S**111**). Here, the torque in the same rotation direction as the boom required torque TReqBm is considered positive.

$$T_{TgtBm} = T_{ReqBm} - M_{Gravity} - M_{Inertia} \quad \text{[Formula 1]}$$

[0049] Following step S**111**, the boom target bottom pressure calculation unit **94***p* calculates the boom target bottom pressure based on the boom target torque TTgtBm calculated by the target torque calculation unit **940** and the boom rod pressure obtained by the pressure sensor **89** (step S**112**).

[0050] Following step S**112**, the pressure error calculation unit **94***d* calculates the pressure error EP as the difference between the boom target bottom pressure calculated by the boom target bottom pressure calculation unit **94***p* and the boom bottom pressure obtained by the pressure sensor **88** (step S**113**).

[0051] Following steps S**104**, S**107**, S**113**, the pump target flow rate correction unit **94***h* corrects the pump target flow rate QTgtPmp according to the speed error ES calculated by the speed error calculation unit **94***c* and the pressure error EP calculated by the pressure error calculation unit **94***d* (step S**114**).

[0052] Following step S**114**, the pump flow control command output unit **94***i* outputs a control command (pump flow control command) to the electromagnetic valve **93***a* for pump flow control, according to the pump target flow rate QTgtPmp calculated by the pump target flow rate correction unit **94***h*, following the preset electromagnetic valve command signal characteristics for the pump target flow rate QTgtPmp (step S**115**).

[0053] Following step S**115**, the electromagnetic valve **93***a* for pump flow control generates a command pressure (step S**116**), changes the tilt of the hydraulic pump **1** according to the command pressure (step S**117**), and then ends the flow.

[0054] FIG. **7** is a flowchart showing the process related to the boom direction control valve opening control of the controller **94**.

[0055] First, the controller **94** determines whether there is no input from the boom operation lever (step S**201**). If it is determined that there is no input from the boom operation lever at step S**201** (YES), the flow ends.

[0056] If it is determined that there is input from the boom operation lever at step S**201** (NO), the boom target speed calculation unit **94***a* calculates the boom target speed VTgtBm according to the input amount of the boom operation lever, following the preset boom target speed characteristics for the input amount of the boom operation lever (step S**202**).

[0057] Following step S**202**, the boom target flow rate calculation unit **94***b* calculates the boom target flow rate QTgtBm based on the boom target speed VTgtBm calculated by the boom target speed calculation unit **94***a* (step S**203**).

[0058] Following step S**203**, the boom direction control valve target meter-in opening calculation unit **94***j* calculates the target meter-in opening ATgtBm of the boom direction control valve **15** using formula [2], based on the boom target flow rate QTgtBm calculated by the boom target flow rate calculation unit **94***b* and the differential pressure ΔP before and after the boom direction control valve **15** obtained from the output values of pressure sensors **85**, **88**, **89** (step S**204**).

$$A_{TgtBm} = Q_{TgtBm} / \left(Cd \times \sqrt{\left(2 \times \Delta P / \rho \right)} \right) \quad \text{[Formula 2]}$$

Here, Cd is the flow coefficient, and p is the density of the hydraulic oil.

[0059] Following step S**204**, the boom direction control valve control command output unit **94***k* outputs a command signal (boom direction control valve control command signal) to the electromagnetic valves **93***b*, **93***c* for the boom direction control valve **15**, according to the target meter-in opening ATgtBm calculated by the boom direction control valve target meter-in opening calculation unit **94***j*, following the preset electromagnetic valve command signal characteristics for the target meter-in opening of the boom direction control valve **15** (step S**205**).

[0060] Following step S**205**, solenoid valves **93***b*, **93***c* for the boom direction control valve **15** generate a command

pressure (step S**206**), open the boom direction control valve **15** according to the command pressure (step S**207**), and then end the flow.

[0061] FIG. **8** is a flowchart showing the process related to bleed-off valve opening control by controller **94**.

[0062] First, controller **94** determines whether there is any operation lever input (step S**301**). The operation lever input mentioned here corresponds to any of the multiple actuators (boom cylinder **204***a* and other actuators not shown) connected to the pump passage **61** of hydraulic pump **1**. If it is determined that there is no operation lever input (YES) at step S**301**, the flow ends.

[0063] If it is determined that there is an operation lever input (NO) at step S**301**, the bleed-off valve target opening calculation unit **94***e* calculates the target opening ATgtBO of bleed-off valve **37** according to the operation lever input amount, following the bleed-off valve target opening characteristics shown in FIG. **9** (step S**302**). In FIG. **9**, the target opening of the bleed-off valve is at its maximum when the operation lever input amount is near zero, and it decreases sharply to zero once the input amount exceeds a certain value. Here, the operation lever input amount refers to the maximum value of the operation lever inputs corresponding to the multiple actuators (boom cylinder **204***a* and other actuators not shown) connected to the pump passage **61** to which bleed-off valve **37** is connected.

[0064] Returning to FIG. **8**, following step S**302**, the bleed-off valve control command output unit **94***q* outputs a command signal (bleed-off valve control command signal) to the solenoid valve **93***d* for bleed-off valve **37**, according to the predetermined electromagnetic valve command signal characteristics for the target opening of bleed-off valve **37**, based on the target opening ATgtBO of bleed-off valve **37** (step S**303**).

[0065] Following step S**303**, solenoid valve **93***d* generates a command pressure for bleed-off valve **37** (step S**304**), opens bleed-off valve **37** according to the command pressure (step S**305**), and then ends the flow.

(Operation)

[0066] As an example of the operation of hydraulic drive device **902**, the operation of hydraulic pump **1**, boom direction control valve **15**, and bleed-off valve **37** when boom operation lever **95** is operated is described.

'Hydraulic Pump'

[0067] Controller **94** calculates the boom target speed VTgtBm based on the input amount of boom operation lever **95**, calculates the pump target flow rate QTgtPmp based on the boom target speed VTgtBm and the estimated bleed-off flow rate QEstBO, corrects the pump target flow rate QTgtPmp according to the speed error ES and pressure error EP, and outputs a command signal (pump flow control command signal) to solenoid valve **93***a* according to the corrected pump target flow rate QTgtPmp. Solenoid valve **93***a* generates a command pressure according to the pump flow control command signal and controls the discharge flow rate of hydraulic pump **1**.

'Boom Direction Control Valve'

[0068] Controller **94** calculates the boom target speed VTgtBm based on the input amount of the boom operation lever **95**, calculates the boom target flow rate QTgtBm based on the boom target speed VTgtBm, calculates the target meter-in opening ATgtBm based on the boom target flow rate QTgtBm and the differential pressure ΔP before and after the boom direction control valve **15**, and outputs a command signal (boom direction control valve control command signal) corresponding to the target meter-in opening ATgtBm to solenoid valves **93***b*, **93***c*. Solenoid valves **93***b*, **93***c* generate a command pressure according to the boom direction control valve control command signal and control the meter-in opening of the boom direction control valve **15**.

'Bleed-Off Valve'

[0069] Controller **94** calculates the target opening ATgtBO of the bleed-off valve **37** based on the input amount of the boom operation lever **95**, and outputs a command signal (bleed-off valve control command signal) corresponding to the target opening ATgtBO to solenoid valve **93***d*. Solenoid valve **93***d* generates a command pressure according to the bleed-off valve control command signal and controls the opening of the bleed-off valve **37**.

[0070] FIG. **10** is a diagram showing the time series changes in the meter-in flow rate and meter-in pressure of the boom cylinder **204***a* when the boom operation lever **95** is operated.

[0071] In the prior art, when the operation of the boom cylinder **204***a* begins, as shown by the solid line in the figure, the target value of the meter-in flow rate (target flow rate) increases according to the input amount of the operation lever, and the target value of the meter-in pressure (target pressure) becomes a value according to the rate of increase in the operation lever input amount. In the prior art, because the flow rate supplied to the hydraulic actuator is controlled as the target flow rate, as shown by the dashed line in the figure, if the rise in the meter-in pressure of the hydraulic actuator at the start of movement is slow due to the effect of inertia, the flow rate (actual flow rate) supplied to the hydraulic actuator cannot follow the target flow rate.

[0072] In contrast, in this embodiment, in addition to speed feedback control, pressure feedback control is executed to make the meter-in pressure (boom bottom pressure) of the boom cylinder **204***a* follow the target meter-in pressure (boom target bottom pressure). Therefore, at the start of movement of the boom **204**, when the difference between the meter-in pressure of the boom cylinder **204***a* and the target meter-in pressure increases, the target flow rate is significantly corrected to the increase side as shown by the dotted line in the figure, and the rise in the meter-in pressure (actual pressure) of the boom cylinder **204***a* is accelerated. As a result, the flow rate (actual flow rate) supplied to the boom cylinder **204***a* accurately follows the target flow rate, and the difference between the target speed and the driving speed of the boom **204** becomes smaller. It should be noted that although the case where the boom cylinder **204***a* is driven has been described as an example, the same applies when other hydraulic actuators are driven.

(Summary)

[0073] In this embodiment, a vehicle body **202**, a working device **203** attached to the vehicle body **202**, an actuator **204***a* that drives the working device **203** (boom **204**), a hydraulic pump **1**, a directional control valve **15** that controls the flow of pressurized oil supplied from the hydraulic

pump **1** to the actuator **204***a*, an operation lever **95** for instructing the operation of the actuator **204***a*, and a controller **94** that controls the directional control valve **15** according to the input amount of the operation lever **95** are provided in the work machine **901**, which includes an inertial measurement device **212-216** for detecting the posture and operating state of the working device **203** (boom **204**), and pressure sensors **88**, **89** for detecting the meter-in pressure and meter-out pressure of the actuator **204***a*, the controller **94** calculates the target speed VTgtBm of the working device **203** (boom **204**) according to the input amount of the operation lever **95**, calculates the target flow rate QTgtBm of the actuator, which is the target value of the flow rate supplied to the actuator **204***a* based on the target speed VTgtBm, calculates the target discharge flow rate QTgtPmp of the hydraulic pump **1** based on the actuator target flow rate QTgtBm, calculates the target meter-in pressure (boom target bottom pressure), which is the target value of the meter-in pressure (boom bottom pressure), based on the input amount of the operation lever **95**, the output value of the inertial measurement device **212-216**, and the meter-out pressure (boom rod pressure), calculates the speed error ES as the difference between the driving speed of the working device **203** (boom **204**) obtained by the inertial measurement device **212-216** and the target speed VTgtBm, calculates the pressure error EP as the difference between the meter-in pressure (boom bottom pressure) obtained by the pressure sensor **88** and the target meter-in pressure (boom target bottom pressure), and corrects the pump target flow rate QTgtPmp according to the speed error ES and the pressure error EP.

[0074] According to the embodiment configured as described above, the pump target flow rate QTgtPmp is corrected so that the difference (speed error) between the driving speed of the working device **203** (boom **204**) and the target speed VTgtBm is minimized, and the meter-in pressure of the actuator **204***a* according to the input amount of the operation lever **95** is obtained, thereby improving the followability of the driving speed to the target speed VTgtBm of the working device **203** (boom **204**). As a result, the construction accuracy of the work machine **901** is improved.

[0075] In this embodiment, the controller **94** calculates the speed correction flow rate by multiplying the speed error ES by the speed feedback gain GS, calculates the pressure correction flow rate by multiplying the pressure error EP by the pressure feedback gain GP, and corrects the pump target flow rate QTgtPmp by adding the speed correction flow rate and the pressure correction flow rate to the pump target flow rate QTgtPmp. This allows the sensitivity of speed feedback control and pressure feedback control to the pump flow rate to be adjusted by the speed feedback gain GS and the pressure feedback gain GP.

[0076] In this embodiment, the pressure feedback gain GP is set to increase as the speed error ES increases. This ensures that as the speed error ES increases, the sensitivity of pressure feedback control to the pump flow rate becomes higher, making it possible to ensure the followability of the pump flow rate regardless of the magnitude of the speed error ES.

[0077] Thus, the embodiments of the present invention have been described in detail, but the present invention is not limited to the described embodiments and includes various modifications. For example, the described embodiments have been explained in detail to make the invention easier to understand, and are not necessarily limited to having all the configurations described.

DESCRIPTION OF REFERENCE CHARACTERS

[0078] **1**: Hydraulic pump
[0079] **1***a*: Flow control command pressure port
[0080] **5**: Hydraulic oil tank
[0081] **15**: Boom direction control valve
[0082] **15***a*, **15***b*: Pilot ports
[0083] **30**: Check valve
[0084] **37**: Bleed-off valve
[0085] **37***a*: Command pressure port
[0086] **40**: Main relief valve
[0087] **61**: Pump passage
[0088] **62**, **63**: Meter-in passage
[0089] **71**, **72**: Passage
[0090] **85**, **88**, **89**: Pressure sensors
[0091] **91**: Pilot pump
[0092] **92**: Pilot relief valve
[0093] **93**: Solenoid valve unit
[0094] **93***a* to **93***d*: Solenoid valves
[0095] **94**: Controller
[0096] **94***a*: Boom target speed calculation unit
[0097] **94***b*: Boom target flow rate calculation unit
[0098] **94***c*: Speed error calculation unit
[0099] **94***d*: Pressure error calculation unit
[0100] **94***e*: Bleed-off valve target opening calculation unit
[0101] **94***f*: Estimated bleed-off flow rate calculation unit
[0102] **94***g*: Pump target flow rate calculation unit
[0103] **94***h*: Pump target flow rate correction unit
[0104] **94***i*: Pump flow control command output unit
[0105] **94***j*: Boom direction control valve target meter-in opening
[0106] calculation unit
[0107] **94***k*: Boom direction control valve control command output unit
[0108] **94***l*: Requested torque calculation unit
[0109] **94***m*: Gravity moment calculation unit
[0110] **94***n*: Inertia moment calculation unit
[0111] **940**: Target torque calculation unit
[0112] **94***p*: Boom target bottom pressure calculation unit
[0113] **94***q*: Bleed-off valve control command output unit
[0114] **95**: Boom operation lever
[0115] **96**, **97**: Passage
[0116] **201**: Traveling body
[0117] **202**: Swiveling body (vehicle body)
[0118] **203**: Working device
[0119] **204**: Boom
[0120] **204***a*: Boom cylinder (actuator)
[0121] **205**: Arm
[0122] **205***a*: Arm cylinder (actuator)
[0123] **206**: Bucket
[0124] **206***a*: Bucket cylinder (actuator)
[0125] **207**: Cabin
[0126] **208**: Engine room
[0127] **209**: Counterweight
[0128] **210**: Control valve
[0129] **211**: Swivel motor (actuator)
[0130] **212** to **216**: Inertial measurement device
[0131] **901**: Hydraulic excavator (working machine)
[0132] **902**: Hydraulic drive device.

1. A work machine comprising:

a vehicle body,

a working device attached to the vehicle body,

an actuator for driving the working device,

a hydraulic pump,

a direction control valve for controlling a flow of pressurized oil supplied from the hydraulic pump to the actuator,

an operation lever for instructing the operation of the actuator, and

a controller that controls the direction control valve according to an input amount of the operation lever, wherein

the work machine comprises:

an inertial measurement device that detects the posture and operating state of the working device, and

pressure sensors that detect a meter-in pressure and a meter-out pressure of the actuator, and

the controller is configured to

calculate a target speed of the working device according to the input amount of the operation lever,

calculate a actuator target flow rate that is a target value of the flow rate supplied to the actuator based on the target speed,

calculate a pump target flow rate that is a target value of a discharge flow rate of the hydraulic pump, based on the actuator target flow rate,

calculate the target meter-in pressure that is a target value of the meter-in pressure, based on the input amount of the operation lever, the output value of the inertia measuring device, and the meter-out pressure,

calculate a difference between the speed of the working device obtained by the inertia measuring device and the target speed as a speed error,

calculate a difference between the meter-in pressure and the target meter-in pressure as a pressure error,

correct the pump target flow rate according to the speed error and the pressure error.

2. The work machine according to claim **1**, wherein

the controller is configured to

calculate a speed correction flow rate by multiplying a speed feedback gain to the speed error,

calculate a pressure correction flow rate by multiplying a pressure feedback gain to the pressure error, and

correct the pump target flow rate by adding the speed correction flow rate and the pressure correction flow rate to the pump target flow rate.

3. The work machine according to claim **2**, wherein

the pressure feedback gain is set to increase as the speed error increases.

* * * * *