US 20250263221A1

(19) United States
(12) Patent Application Publication
Wood
(10) Pub. No.: US 2025/0263221 A1
(43) Pub. Date: Aug. 21, 2025

(54) **AN INSULATING TRANSPORT AND STORAGE CONTAINER**

(71) Applicant: **Softbox Systems Limited**, Long Crendon (GB)

(72) Inventor: **Richard Darren Wood**, Long Crendon (GB)

(21) Appl. No.: **18/845,003**

(22) PCT Filed: **Mar. 9, 2023**

(86) PCT No.: **PCT/EP2023/056092**

§ 371 (c)(1),
(2) Date: **Sep. 9, 2024**

(30) **Foreign Application Priority Data**

Mar. 9, 2022 (GB) ..... 2203312.0

**Publication Classification**

(51) **Int. Cl.**
***B65D 81/38*** (2006.01)
***B65D 19/06*** (2006.01)
***F25D 3/12*** (2006.01)

(52) **U.S. Cl.**
CPC ..... ***B65D 81/3823*** (2013.01); ***B65D 19/06*** (2013.01); ***F25D 3/125*** (2013.01); *B65D 2519/00069* (2013.01); *B65D 2519/00079* (2013.01); *B65D 2519/00174* (2013.01); *B65D 2519/00184* (2013.01); *B65D 2519/00208* (2013.01); *B65D 2519/00218* (2013.01); *B65D 2519/00273* (2013.01); *B65D 2519/00562* (2013.01); *B65D 2571/00111* (2013.01)

(57) **ABSTRACT**

A transport container formed of insulated board such as corrugated or laminated plastics and treated paper and treated card that can provide a high degree of thermal insulation. A pallet shipper storage container that can operate at ultra-low temperatures akin to those at which solids such as carbon dioxide sublimate and method of use of such shippers and containers.

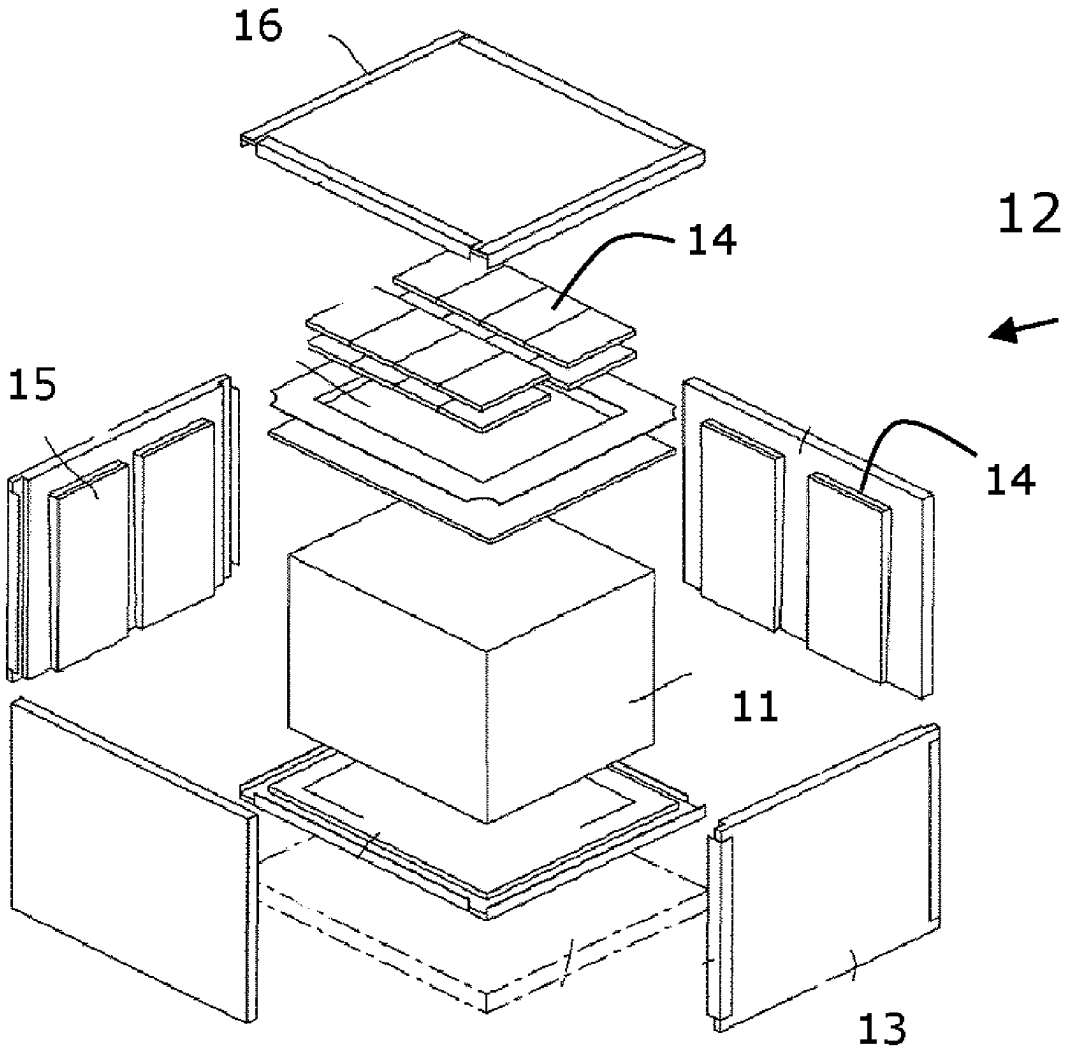

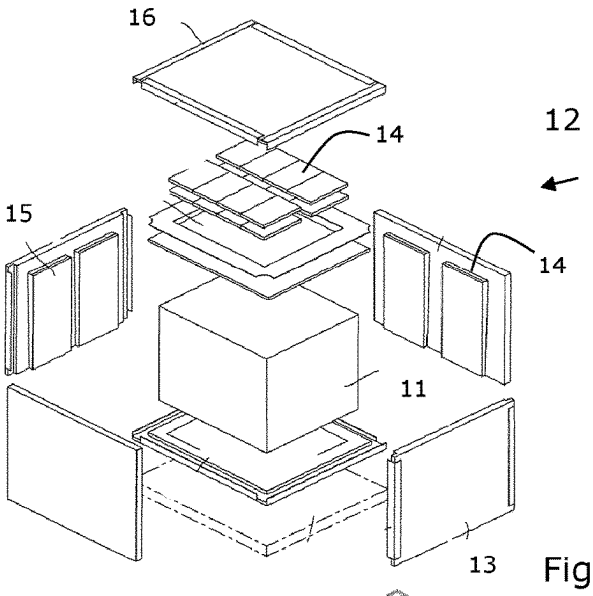


Figure 1a

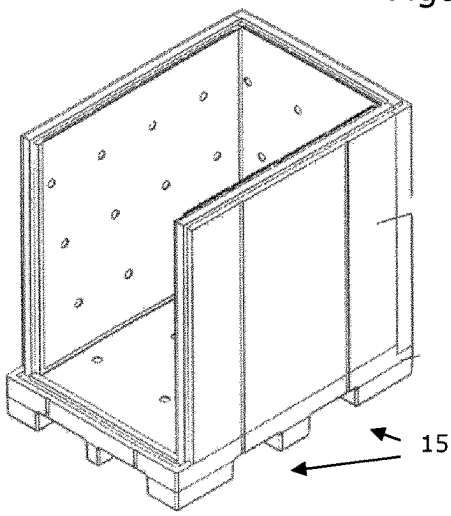


Figure 1b

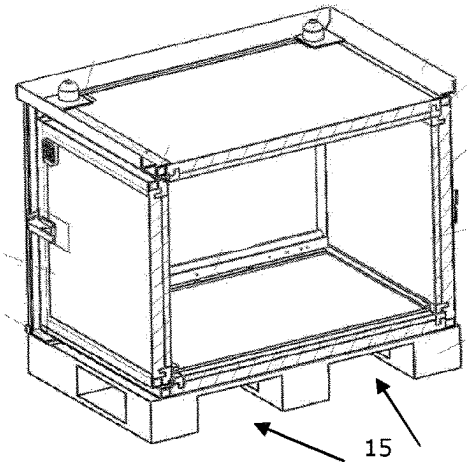


Figure 1c

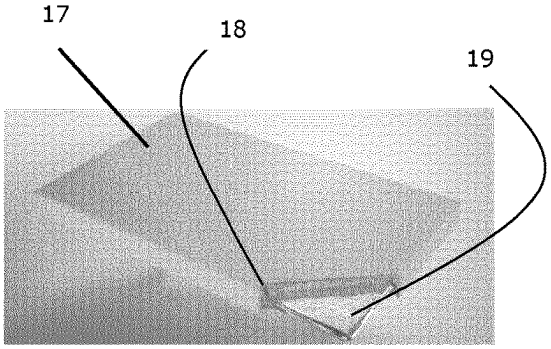


Figure 2f

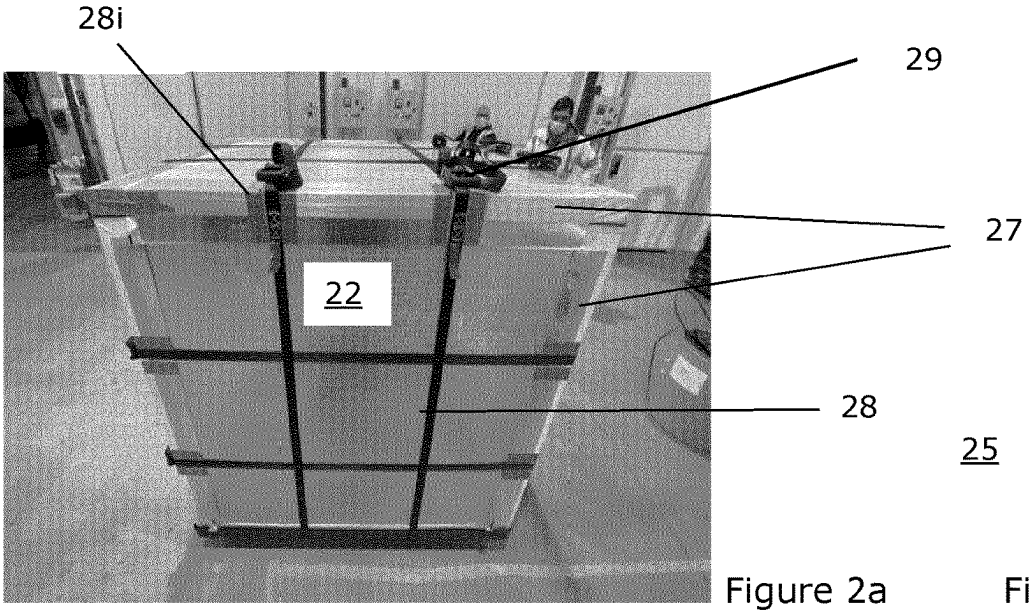


Figure 2a

Figure 2c

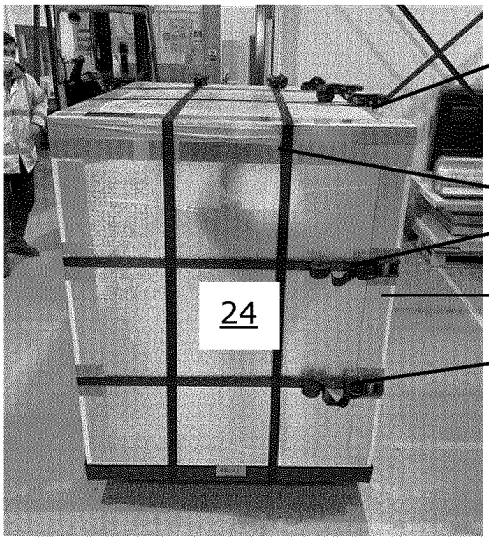


Figure 2b

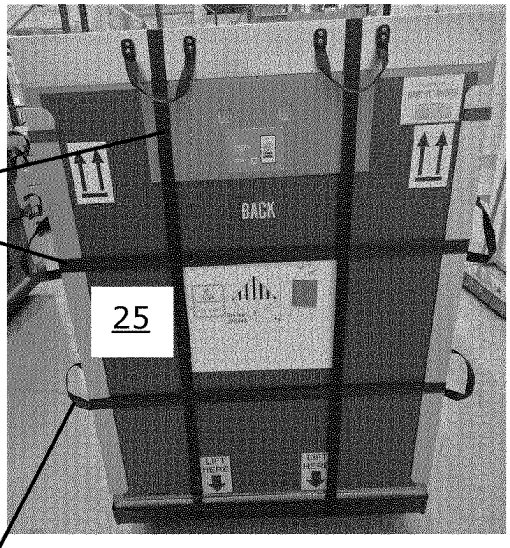


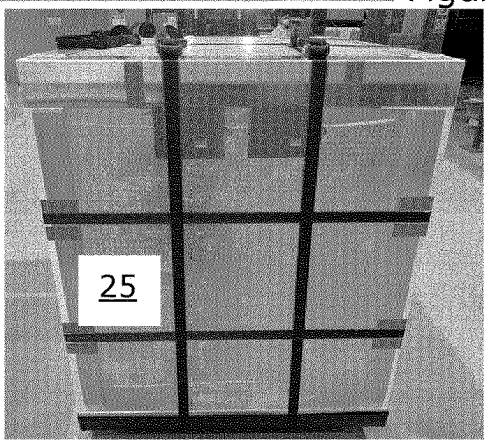


Figure 2d

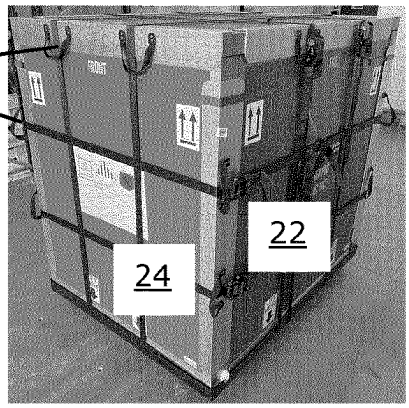


Figure 2e

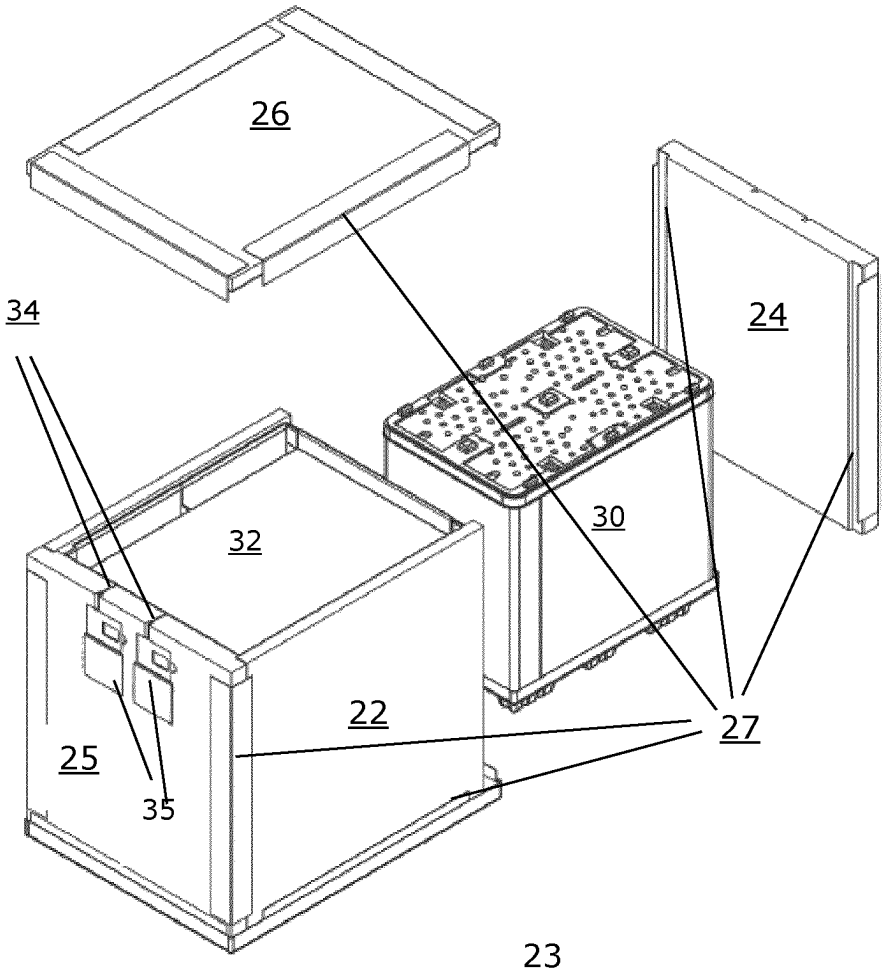


Figure 3

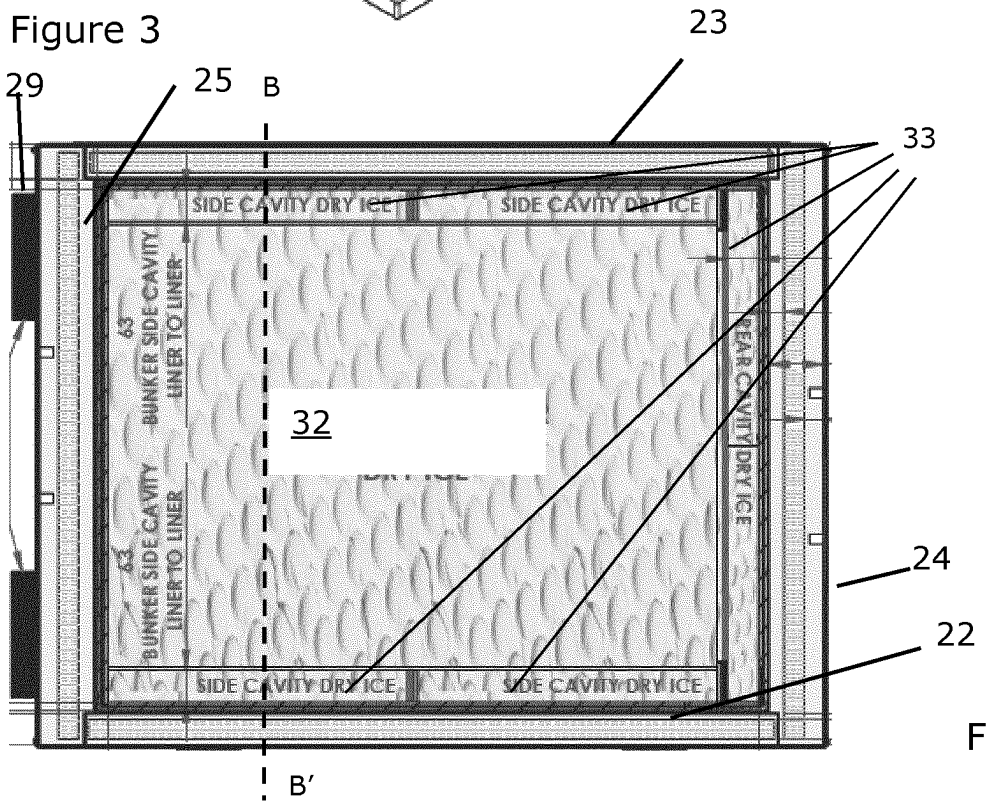


Figure 4a

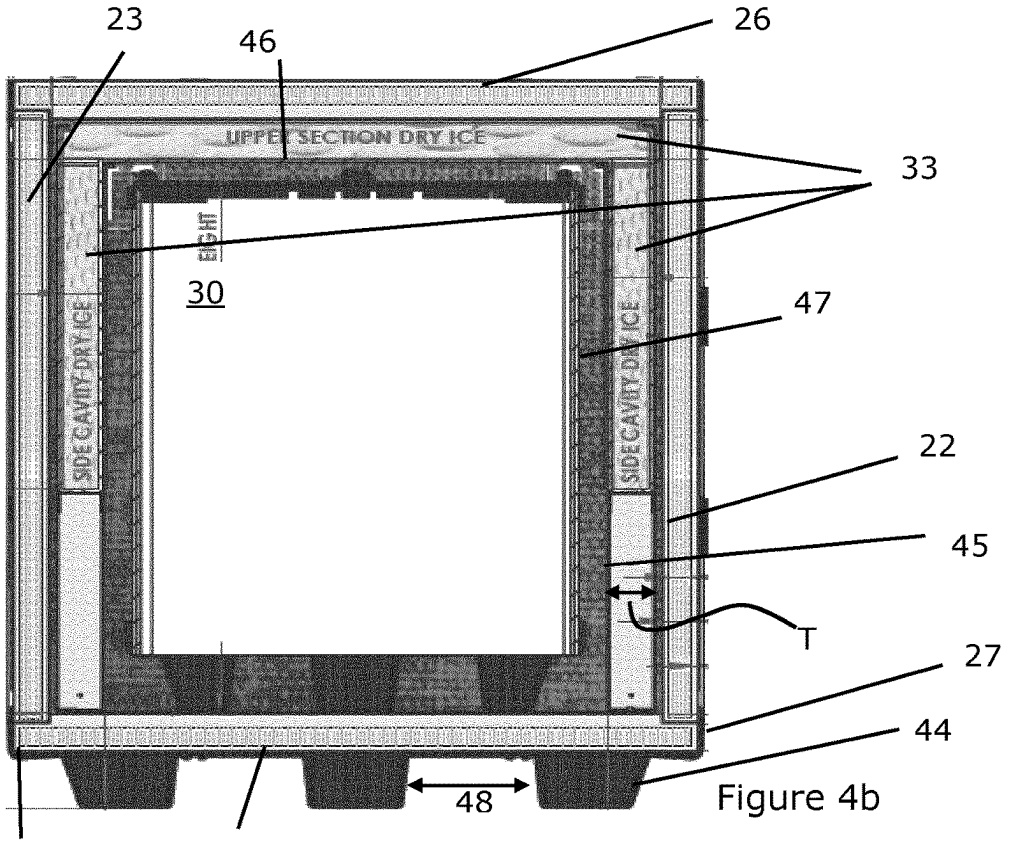


Figure 4b

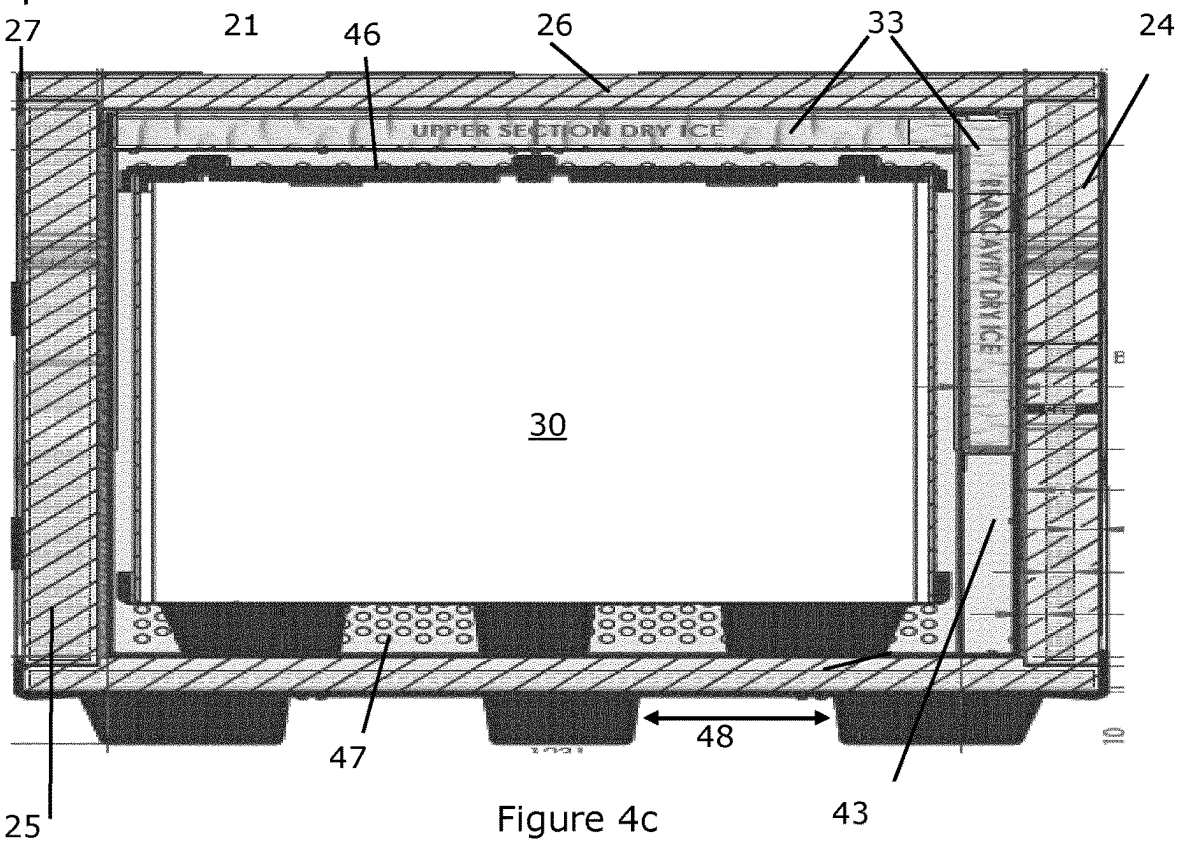


Figure 4c

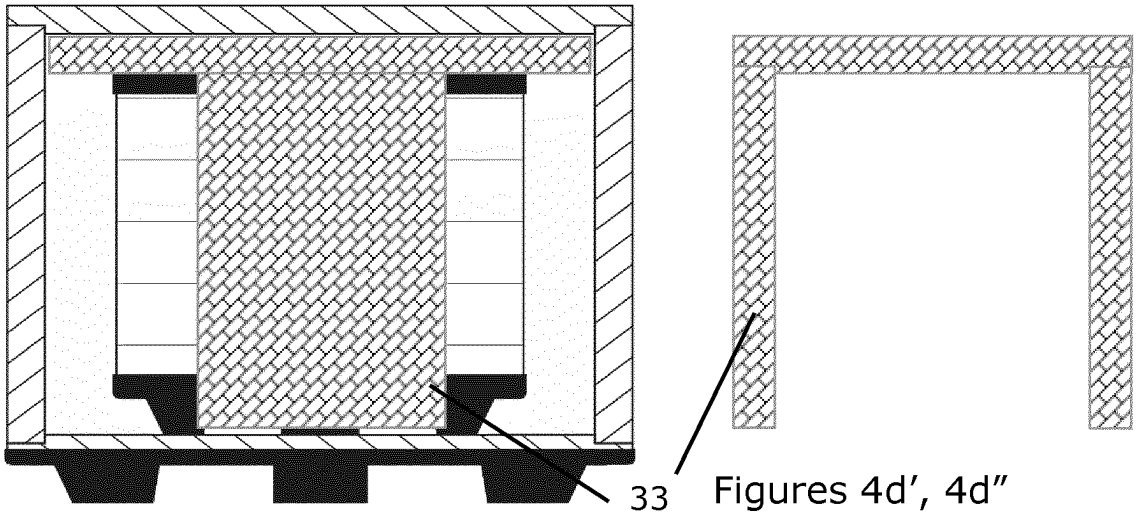


Figures 4d′, 4d″

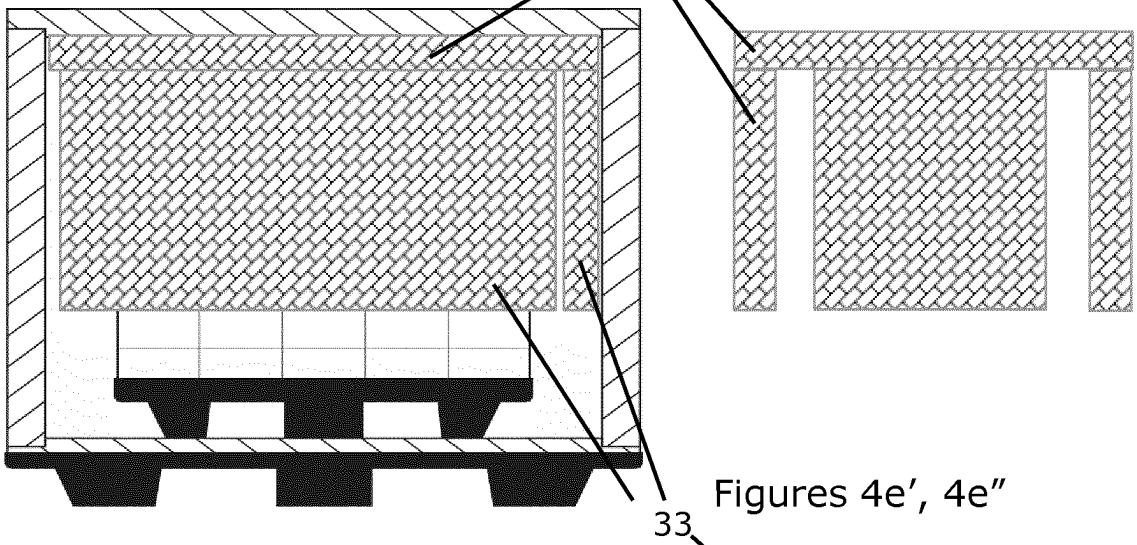


Figures 4e′, 4e″

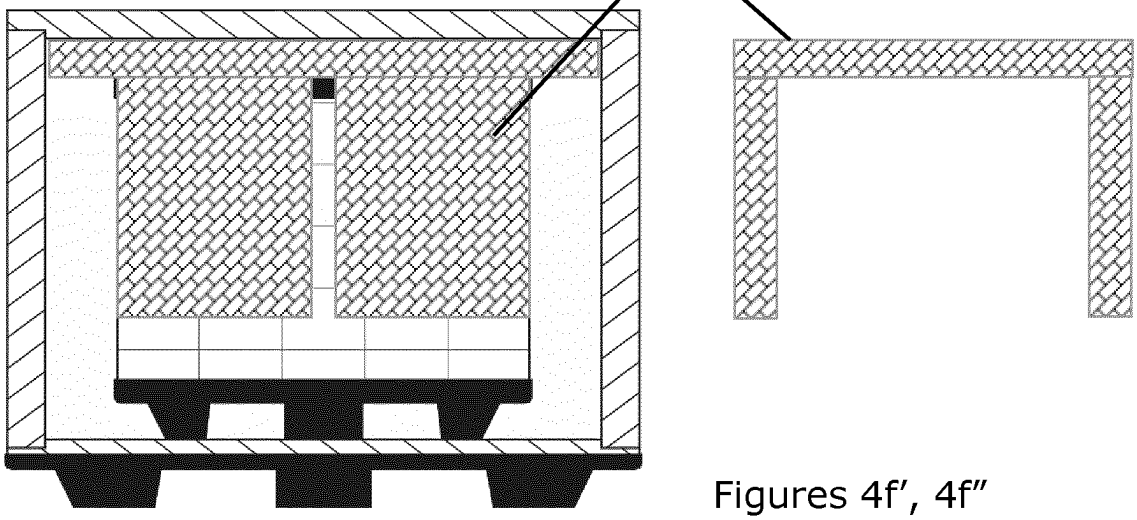

Figures 4f′, 4f″

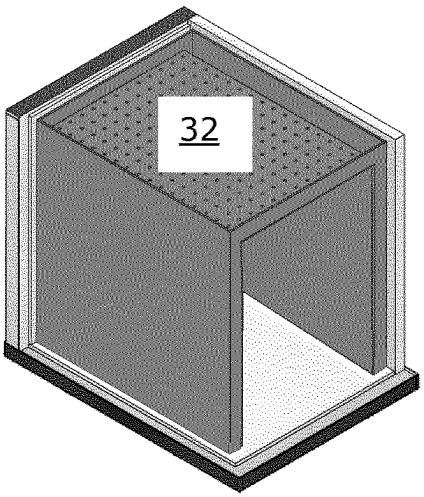


Figure 5a

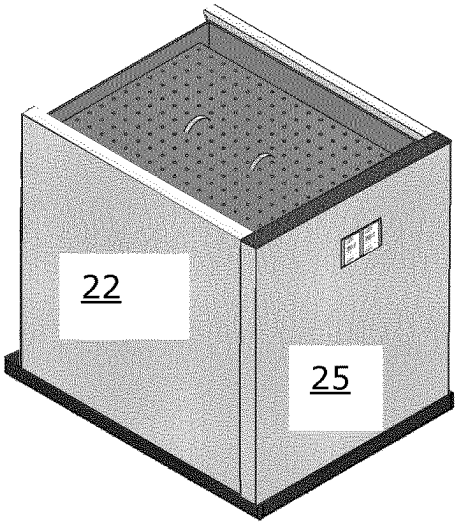


Figure 5b

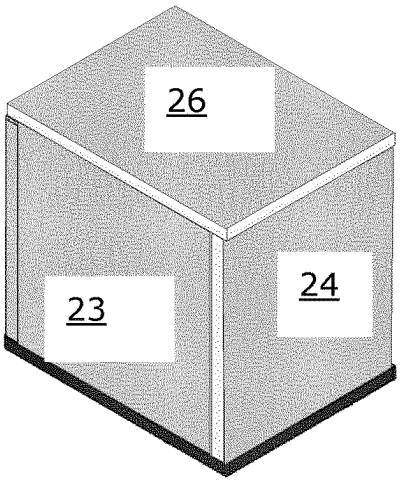


Figure 5c

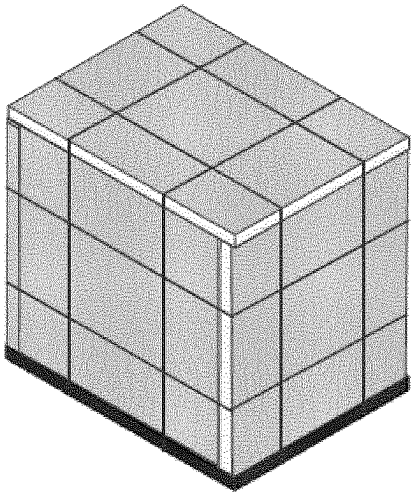

Figure 5d

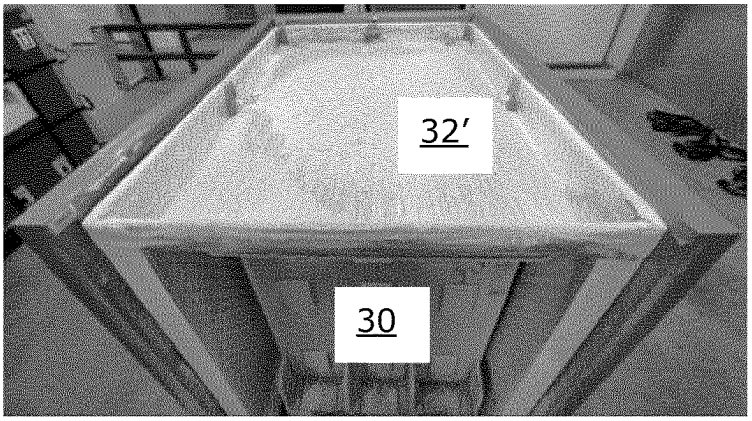


Figure 5e

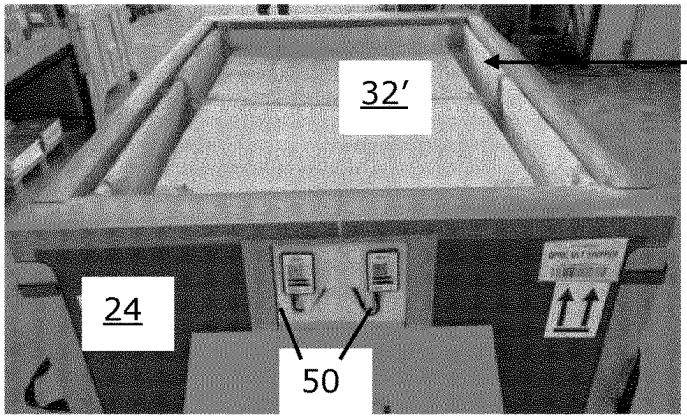


Figure 5f

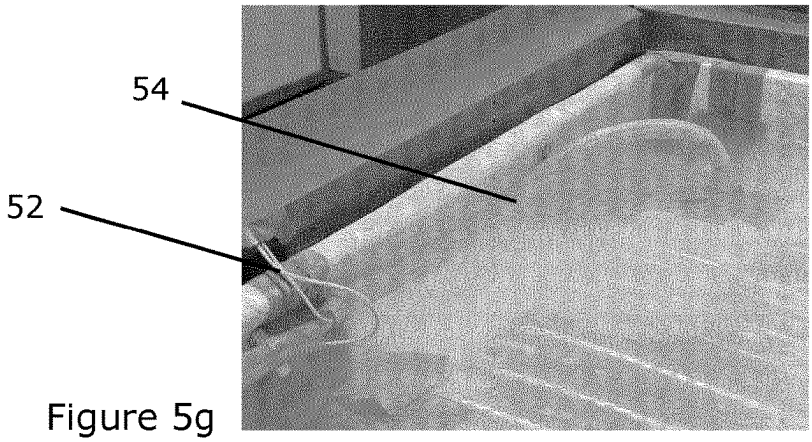


Figure 5g

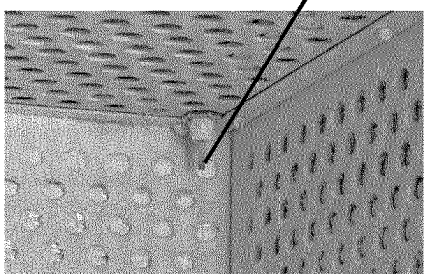


Figure 5h

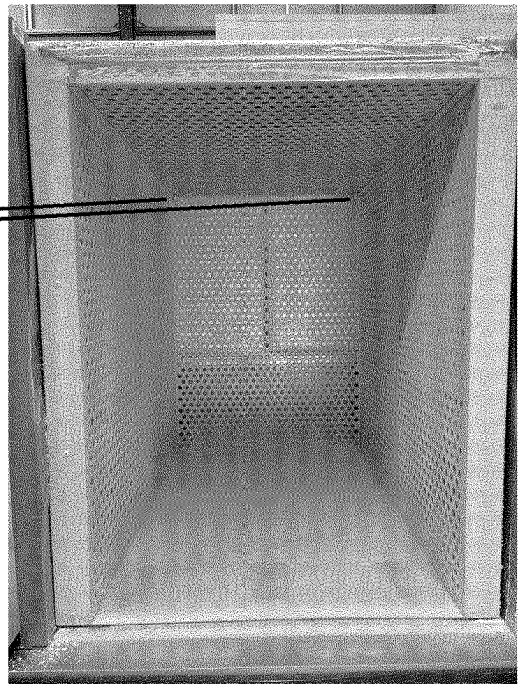

Figure 5i

Figure 6a

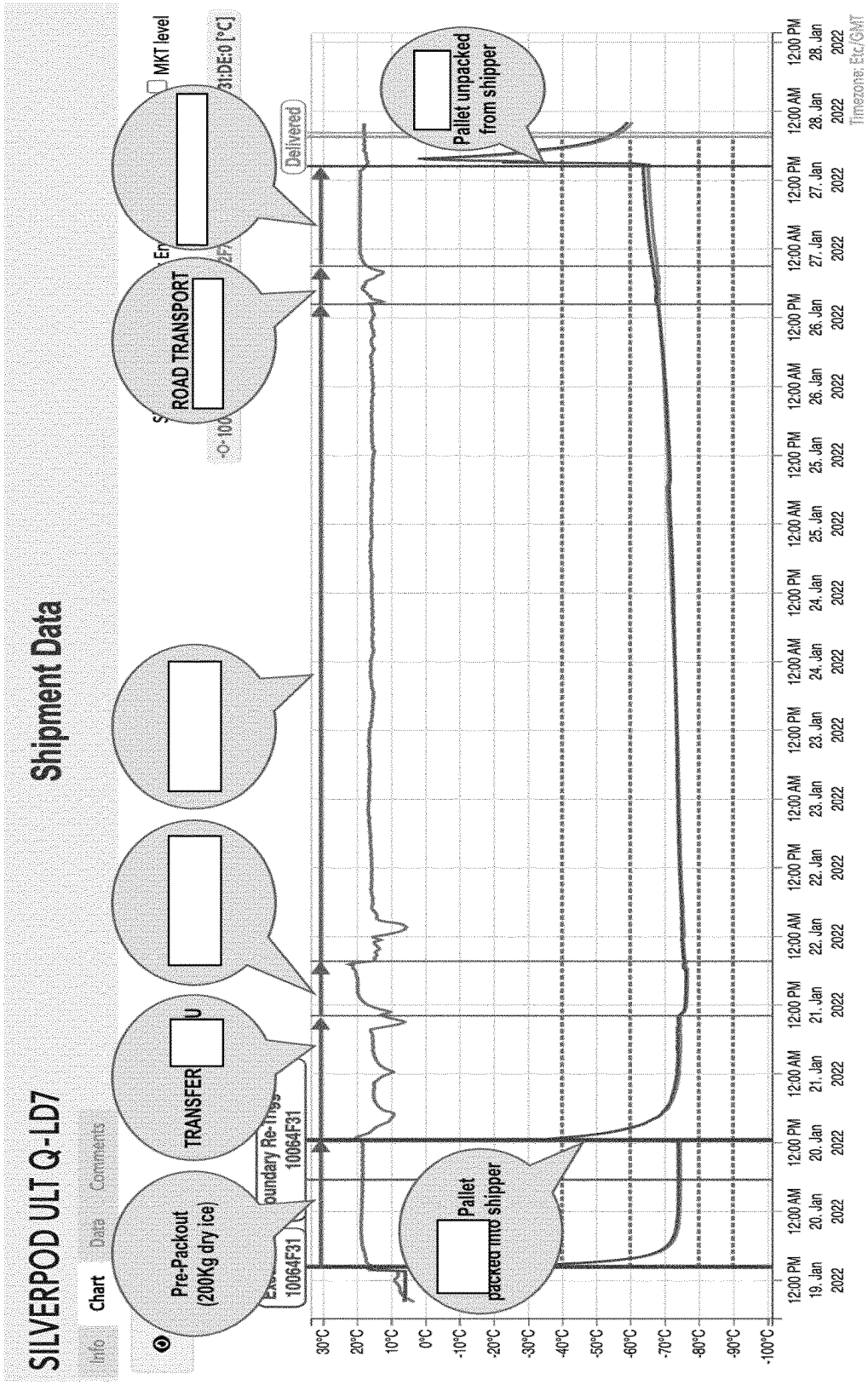
Test Shipment
Summary
Total Transit Time: 170 hh:mm (7 Days, 2 Hours)
Shipper maintained -80°C to -60°C
Zero Excursions in transit
SILVERPOD ULT Q-LD7
Shipment Data
Info
Chart
Data
Comments
Pre-Packout (200Kg dry ice)
TRANSFER
ROAD TRANSPORT
MKT level
Delivered
Pallet packed into shipper
Pallet unpacked from shipper
30°C
20°C
10°C
0°C
-10°C
-20°C
-30°C
-40°C
-50°C
-60°C
-70°C
-80°C
-90°C
-100°C
12:00 PM 19. Jan 2022
12:00 AM 20. Jan 2022
12:00 PM 20. Jan 2022
12:00 AM 21. Jan 2022
12:00 PM 21. Jan 2022
12:00 AM 22. Jan 2022
12:00 PM 22. Jan 2022
12:00 AM 23. Jan 2022
12:00 PM 23. Jan 2022
12:00 AM 24. Jan 2022
12:00 PM 24. Jan 2022
12:00 AM 25. Jan 2022
12:00 PM 25. Jan 2022
12:00 AM 26. Jan 2022
12:00 PM 26. Jan 2022
12:00 AM 27. Jan 2022
12:00 PM 27. Jan 2022
12:00 AM 28. Jan 2022
12:00 PM 28. Jan 2022
Timezone: Etc/GMT

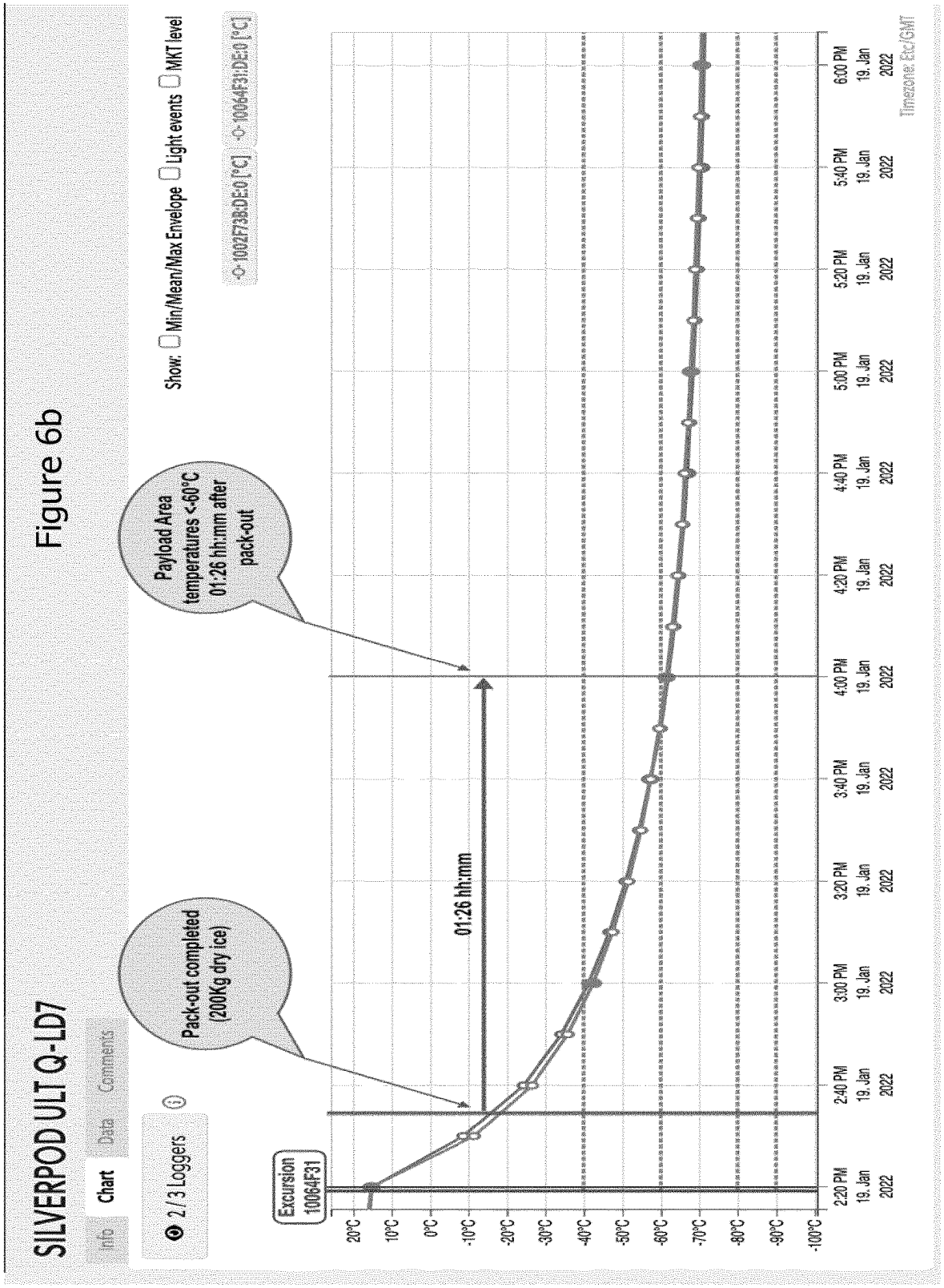
SILVERPOD ULT Q-LD7
Info
Chart
Data
Comments
2 / 3 Loggers
Pack-out completed (200Kg dry ice)
Payload Area temperatures <-60°C 01:26 hh:mm after pack-out
Excursion 10064F31
01:26 hh:mm
Show: Min/Mean/Max Envelope Light events MKT level
1002F73B:DE:0 [°C]
10064F31:DE:0 [°C]
20°C
10°C
0°C
-10°C
-20°C
-30°C
-40°C
-50°C
-60°C
-70°C
-80°C
-90°C
-100°C
2:20 PM 19. Jan 2022
2:40 PM 19. Jan 2022
3:00 PM 19. Jan 2022
3:20 PM 19. Jan 2022
3:40 PM 19. Jan 2022
4:00 PM 19. Jan 2022
4:20 PM 19. Jan 2022
4:40 PM 19. Jan 2022
5:00 PM 19. Jan 2022
5:20 PM 19. Jan 2022
5:40 PM 19. Jan 2022
6:00 PM 19. Jan 2022
Timezone: Etc/GMT

Figure 6b

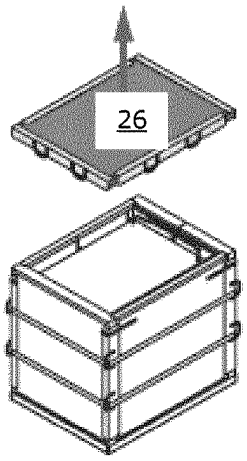


Figure 7a

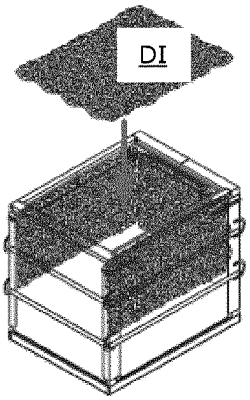


Figure 7b

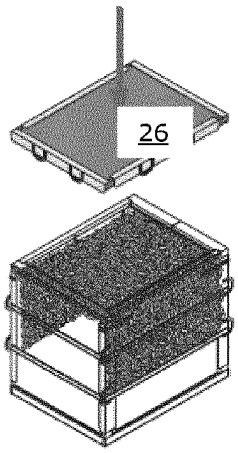


Figure 7c

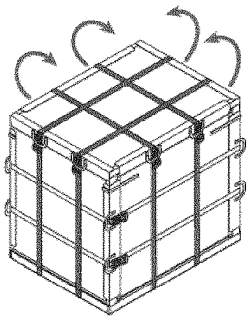

Figure 7d

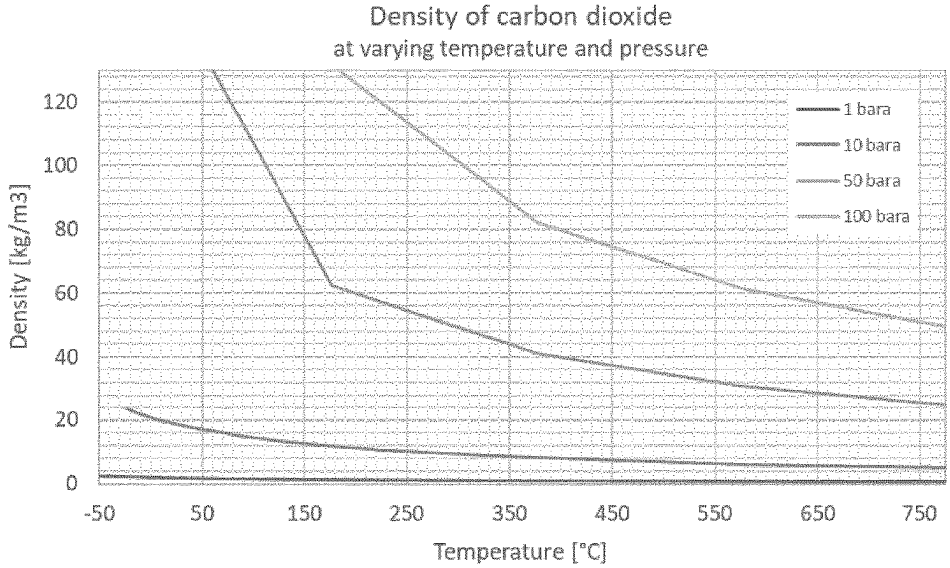


Figure 7e

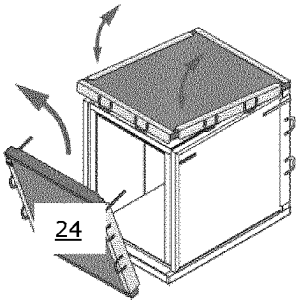


Figure 8a

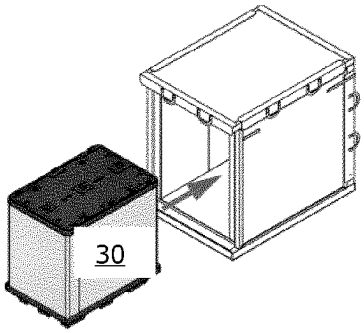


Figure 8b

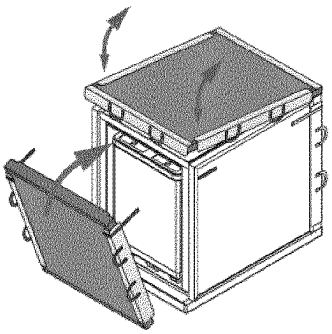

Figure 8c

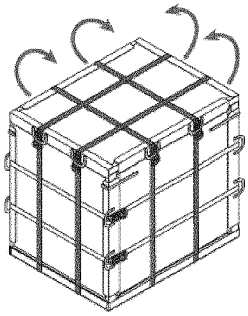

Figure 8d

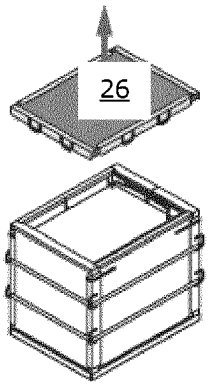


Figure 8e

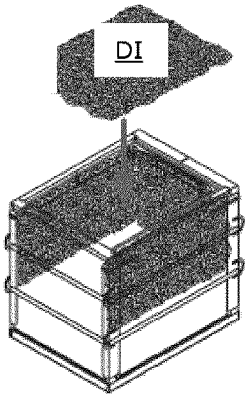


Figure 8f

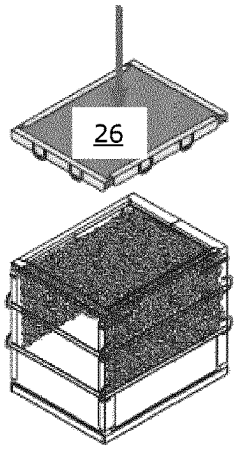


Figure 8g

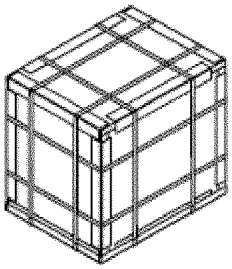

Figure 9a

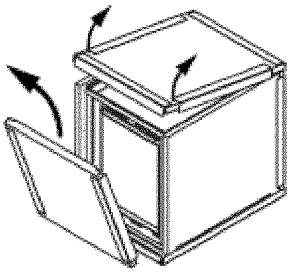

Figure 9b

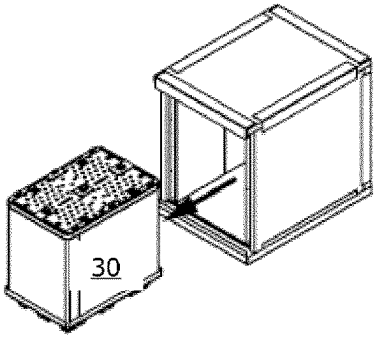


Figure 9c

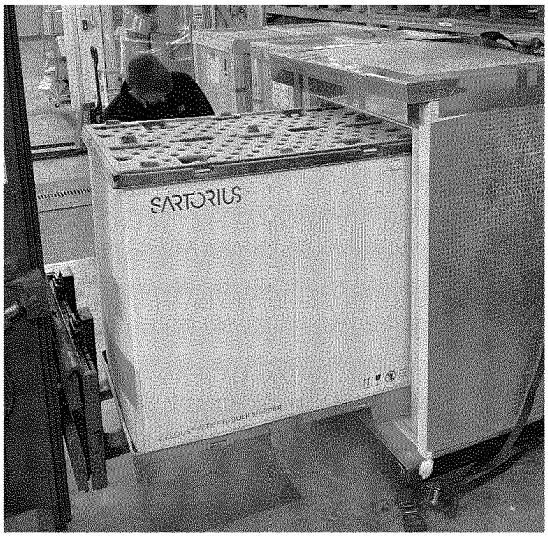


Figure 9d

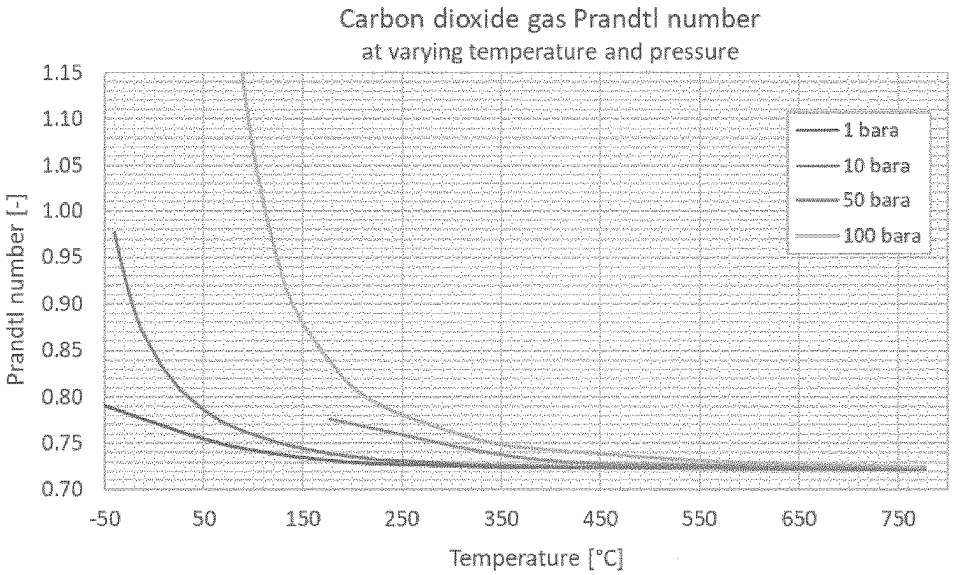
Carbon dioxide gas Prandtl number
at varying temperature and pressure
Prandtl number [-]
1.15
1.10
1.05
1.00
0.95
0.90
0.85
0.80
0.75
0.70
-50
50
150
250
350
450
550
650
750
Temperature [°C]
1 bara
10 bara
50 bara
100 bara

Figure 10

# AN INSULATING TRANSPORT AND STORAGE CONTAINER

## FIELD OF INVENTION

**[0001]** The present invention relates to the field of the transportation and storage of goods and, in particular, to a transport container formed of insulated board such as corrugated or laminated plastics and treated paper and treated card that can provide a high degree of thermal insulation. More particularly, the present invention relates to storage containers that can accept palletized goods and can operate at ultra-low temperatures, notably at temperatures akin to those at which solids such as carbon dioxide sublimate, such as pallet shippers and pallet-in pallet shippers.

## BACKGROUND TO THE INVENTION

**[0002]** In the field of logistics, that is the field of movement and supply of produce and materials, there is a widespread requirement to protect a thermally sensitive load to ensure that certain types of produce and materials do not extend beyond certain temperature thresholds. It is well known that, for example, vegetables when subject to extremes of temperature, especially over extended periods of time, that they become flaccid, as the cell structure is broken down through the formation of icicles or through dehydration. In the pharmaceutical industry, product often needs to be maintained within a temperature range: manufactured product may be packed in relatively small containers, which containers are relatively fragile—although this is not necessarily discernible, especially if product has been packaged and labelled. Accordingly insulation must provide both physical and thermal stability. Nonetheless, the containment temperature range for pharmaceutical products generally corresponds with that for the transport of most fresh food products, namely between +2° C. and +8° C.

**[0003]** There will, however, be variations in the specific temperature ranges, with regard to particular requirements. The vaccine supply chain, or the immunization supply chain is another aspect of the cold chain which has been under scrutiny with the era of C-19. The vaccine supply chain consists of a series of links that are designed to keep vaccines within World Health Organization (WHO) recommended temperature ranges, from the point of manufacture to the point of administration. In such a supply chain, the passage of vaccines from manufacturer to health-care facilities is supplemented by data collection, recording, review and analysis, and feedback ensures that cold chain performance is properly monitored and that the necessary information is gathered for vaccine forecasting. Vaccines are sensitive biological products. Some vaccines are sensitive to freezing, some to heat and others to light. Vaccine potency, meaning its ability to adequately protect the vaccinated patient, can diminish when the vaccine is exposed to inappropriate temperatures. Once lost, vaccine potency cannot be regained. To maintain quality, vaccines must be protected from temperature extremes. Vaccine quality is maintained using a cold chain that meets specific temperature requirements. As an example, the following "common" vaccines for Cholera, Hepatitis B (Hep B), Hib (liquid), Human papillomavirus (HPV), Inactivated poliovirus (IPV) are all sensitive to freezing. In contrast, certain active pharmaceutical compounds (raw drug substances and pre-cursor compounds therefor) and certain vaccines are sometimes required to be transported at ultra-low temperatures, where the coolant is dry ice (solid carbon dioxide) which sublimates at approximately 193K. However, the sublimation temperature of dry ice is sometimes far too low for certain goods. The production of vaccines, especially since the C-19 pandemic, has become a globally distributed arrangement and there has arisen a need for low temperature and ultra-low temperature containers for palletized goods. The international nature of the supply chain means that the external dimensions of the low temperature and ultra-low temperature containers are frequently determined by the dimensions of Unit Load Devices (ULDs). Equally, the payload is placed within such a low temperature and ultra-low temperature container by means of a pallet trolley or forklift given that a container is initially cooled down to the required temperature and subsequently loaded within a cold room in as short a time-frame as possible, to maintain the low temperature atmosphere within the container.

**[0004]** Pallets generally comprise a flat transport structure, which supports goods in a stable fashion while being lifted by a forklift, a pallet trolley etc. typically through apertures defined adjacent the base of the pallet for the tines of such lifting devices. A pallet is the structural foundation of a unit load, which allows handling and storage efficiencies. Goods in shipping containers are often placed on a pallet secured with strapping, stretch wrap or shrink wrap and shipped. Since its invention in the twentieth century, its use has dramatically supplanted older forms of crating like the wooden box and the wooden barrel, as it works well with modern packaging like corrugated boxes and intermodal containers commonly used for bulk shipping. Though some major standards exist, there are no universally accepted standards for pallet dimensions, although a few different sizes are widely used. The standard 48×40 North American pallet has stringers of 48 inches and deckboards of 40 inches, and was standardized by the Grocery Manufacturers Association (GMA), which accounts for 30% of all new wood pallets produced in the United States. The ISO also recognizes the GMA pallet footprint as one of its six standard sizes. European pallets have their measurements determined in millimetres as opposed to inches and the most common European Pallet, the EuroPallet EUR 1, is 1,800 mm×1,200 mm×144 mm, which fits within the foot print of the GMA pallet.

**[0005]** Whether or not any temperature excursion realizes any physical or visual indication, reliance upon data loggers is made and a temperature excursion may mean that a whole container—whether it be a 48 litre carton or a single or double pallet system (also known as pallet shippers), a finite duration outside a pre-determined temperature range can mean that the pharmaceutical goods must be disposed of, resulting in the waste of several thousands—if not millions—of dollars' worth of product. It is worth remarking that it is an extremely hazardous material: in one sense it can be simply defined as being approximately five times colder than water ice, dry ice can result in serious frostbite injuries and therefore, personnel involved in the processing of dry ice must wear hand and eye protection. Temperature control of thermally sensitive goods is particularly challenging when the thermally sensitive goods must be maintained within a narrow temperature range and/or at an extreme temperature.

**[0006]** In any transport container with a thermally sensitive load, the rate at which heat passes through the packag-

ing material of the transport container must not extend beyond a permitted temperature range for the product. Refrigeration units as used on certain trucks and containers require a source of electrical power or a fuel for a gas-powered air-conditioning/freezer unit and are commonly required as active refrigeration systems. Such systems also require an atmosphere with which to exchange heat. Such refrigeration units not only occupy a volume, they cannot be used for small containers and individual boxes. Typical means for shipping temperature sensitive materials involves the use of an insulated box, with the necessary shipping and warning labels, along with some cooling agent. These cooling/heating agents have typically been, for example, a frozen gel, dry ice, or water-based ice—which transfer heat energy with product and are commonly referred to as passive refrigeration systems. Further the cooling/heating agent, placed within an insulator packing agent, such as cotton or, latterly, plastics materials such as expanded polystyrene foam, wherein heat is transferred with respect to such cooling agents. Typically, the need is for refrigeration rather than keeping products above atmospheric temperatures.

**[0007]** Low-cost temperature control systems in the transport industry often rely upon a number of layers of plastics foam to retain an inside temperature subject to the thermal path to a transported product from an outside to the outside to maintain ideal operating temperature, as disclosed in WO02085749 in the name of the present applicant. WO02085749 teaches of a transport container which comprises of a substantially rigid liner, with flexible plastics foam surrounding the liner, and two substantially rigid plugs insertable at either end inside the liner to retain the liner in a non-collapsed configuration whereby to hold transportable contents therein. Multilayer insulation (MLI) is, accordingly, a common passive thermal control element used in transport. MLI seeks to prevent both heat losses to the environment and excessive heating from the environment. Low-cost temperature control in the transport industry relies upon MLI to retain an inside temperature subject to the thermal path to a transported product from an outside the outside to maintain ideal operating temperature. MLI can simply comprise layers of plastics foam.

**[0008]** EP3359889 (Cold Chain Technologies, LLC) teaches of a thermally insulated shipping system for use in transporting a pallet-sized payload. In one embodiment, the system includes a plurality of thermally insulating walls arranged to define an interior volume suitable for receiving a pallet-sized payload. The thermally insulating inside walls are provided with at least two slots facing towards the interior volume. The system also includes a plurality of inner cassettes disposed in at least some of the inner slots and a plurality of outer cassettes disposed in at least some of the outer slots. The inner and outer cassettes include phase-change materials which operate in the range of −20° C. to +5° C. Thus the system is restricted to operating in the normal range of cold chain transport. U.S. Pat. No. 8,763,423 (in the name of Applicant) discloses a temperature control system for a transport container having a base and at least one side wall and a cover, the temperature control system comprising a foldable sleeve having first and second major planes, which in an unfolded state retain a thermal pack which is attached to a side of the container operable to retain temperature control (thermal packs) within, the sleeve conveniently having a spacer means to maintain a temperature within a closed container by virtue of heat transfer with the thermal pack, yet prevents contact with product. The thermal packs include phase-change materials which operate in the range of −20° C. to +15° C. U.S. Pat. No. 9,688,455 (Delta T Gesellshaft für Medizintechnik MBH) provides a modular insulated container for storing goods at constant temperatures. The container has, in an outwardly insulating manner, at least one base, at least one cover and at least four side walls of insulating material, which enclose an inner chamber provided for accommodating the goods in a thermally insulating manner. At least one of the mounted, outwardly insulating side walls has temperature control elements, which face the inner chamber and contain thermal storage fluids, such as C10-C18, water, which are separated from the inner chamber by heat insulating panels and this container is adapted for the distribution of drugs to be maintained at a temperature between 2° C. to 25° C. or 15° C. to 25° C. or 2 to 8° C.

**[0009]** US20180362243 (Solee Wuhan Science and Technology Co Ltd.) provides an insulating container comprising a container body and a container cover connected to the container body. The container both and the container cover each comprises a frame and a plate arranged on the frame. The plate comprises, from inside out, an external high strength sheet, an extruded polystyrene sheet, phase-change insulating sheets made of phase-change material, and an internal sheet. A phase-change process of the phase-change insulating sheets cooperates with a refrigeration system of the transportation device to precisely control the temperature of the insulating container and a refrigerator truck to be near a phase-change temperature. The operating temperatures correspond with known clod chain systems, and temperature ranges of 2° C. to 8° C. are discussed.

**[0010]** It is notable that there are few thermally insulating cargo containers that are arranged to provide satisfactory systems to transport goods at supercooled temperatures, particularly at temperatures of yet to be sublimed solid carbon dioxide. In particular, there are no pallet based systems providing the same, especially containers that are easily and simply transported that once assembled can provide ultra-low temperatures (defined as −70° C. or below within the cold chain industry) for periods in excess of 120 hours. It will also be appreciated that containers that are capable of providing atmospheres at ultra-low temperatures have extremely good insulation, which is beneficial for transporting goods at lower temperatures, noting that many pharmaceuticals are transported at or around −20° C. i.e. an ultra-low temperature container can be used at elevated temperatures and provide a greater degree of resiliency, noting a potential value that can be provided to life as well as in financial terms.

## OBJECT OF THE INVENTION

**[0011]** The present invention seeks to provide a solution to the problems addressed above. The present invention seeks to provide a transport container which can be manufactured at low cost and can readily and easily be constructed and perform at ultra-low temperatures. The present invention additionally seeks to provide a transport container that can be flat packed—at least in part and which can be erected at point of use. Furthermore, the present invention seeks to provide a container that when completed can maintain goods within a narrow temperature range and/or extreme temperature range. The present invention further seeks to provide a transport container which is compatible with standard Unit

Load Device specifications. The present invention also seeks to provide an ultra-low temperature-controlled transport/storage assembly for palletized goods containers, cartons supported by pallets, palletised boxes or otherwise, whereby the thermal conductivity permits goods retained therein to be simply maintained within an atmosphere having a predefined temperature range varying from approximately 193K to 213K, typically 193K to 258K. The present invention also seeks to provide a low temperature-controlled transport/storage assembly employing pelletized dry ice.

## STATEMENT OF INVENTION

**[0012]** In accordance with a general aspect of the invention, there is provided a container for the transport of thermally labile goods which is capable of providing ultra-low temperature stability for extended periods.

**[0013]** In accordance with another general aspect of the invention, there is provided a thermally insulating transport container comprising: a cuboid body comprising six insulating panels operable to provide temperature controlled storage to palletized goods; and a coolant support member; wherein the coolant comprises a solid that sublimates; wherein the cuboid panels comprise a base panel, first and second end-wall panels and first and second sidewall panels and a cover panel; wherein the insulation panels are fastened such that they provide a substantially gas-tight seal along mutually orthogonal edges; wherein the coolant support member comprises at least a support tray spaced, in use, from an inside face of the cover panel, the support tray being provided with upstanding support members; wherein a payload volume is defined below the coolant support tray; wherein, in use, once assembled and provided with coolant, the coolant gases emanating from the coolant are operable to cool the payload volume by sublimation; and wherein a gas valve mechanism is provided to control pressure within the cuboid volume. Conveniently, the insulating panels are formed from multilayer insulating boards selected from one or more of vacuum insulation panels (VIPS), polyurethane foam, plastics foam, plastics insulation, cardboard, paperboard, cellulose board, corrugate board, metalized board and glass fibre—but this is not to be construed as a limiting list of insulating sheet material, as will be appreciated by those skilled in theart.

**[0014]** In common with much of cold chain transport systems, it has been found convenient to provide the container with a pallet-style base. Further, it is beneficial to have the pallet style base is affixed to the base insulation panel. Conveniently, the panels are retained together in place by compression restraints —preferably provided by webbing provided with ratchet straps, arranged vertically with respect to the end panels and mutual side panels. Ideally the ratchet straps have a low profile, since they are arranged externally with respect to the outer insulation panels. Conveniently, in use, the vertical straps are arranged such that the ratchet mechanisms are positioned on the cover surface, whereby they do not interfere with adjacent bodies, containers and structures. With respect to the horizontally arrange webbing, it has been found convenient to have inserts within one or more end panel sections, whereby the panels with ratchet systems provide flush so as not to protrude beyond the surface.

**[0015]** It will be noted that data logging equipment relating to internal temperatures and pressures need to be associated with the product. It has been found convenient to have extra thickness foam in one or more panels, conveniently in an end panel not being an opening panel, where the data logger can be arranged in a fashion so as not to disturb the settings—i.e. a container has been filled with a coolant—conveniently dry ice—it is best practice not to disturb any sensor arrangement, lest the responses from the sensors lack correlation.

**[0016]** Conveniently, adjacent panels are provided with resilient tapes—ideally of a closed cell form or other high grade seal along at least one mating face thereof to ensure gas-tight resilience between the panels. A gas valve is provided to control pressure within the cuboid volume. The gas valve could be an electromechanically operated valve under the control of a system associated with a data logger. The valve might be a mechanical valve designed to operate in accordance with a pressure control setting. The valve could be defined by means of a slit provided within the seal to control pressure within the cuboid volume.

**[0017]** It has been found effective to arrange mutually perpendicular panels with a rebate, conveniently defined by the use of an "L" section member attached to an exterior surface. It has been found, for a panel having an "L" section along one edge, spaced from an edge of the insulation panel, of a dimension corresponding to the thickness of a mutually orthogonally arranged adjacent panel then the adjacent panel can be resiliently placed therein. In accordance with the invention, it is preferable that all mutually abutting edges are associated in this way (although, it would be possible to have more permanent fastenings, this would not help the ability of the present invention to be collapsed into a flat-pack arrangement, at least for the insulation panels). The "L" section members also provide a benefit in that when webbing and the like is applied, rather than permitting the straps to "dig-in" along the areas of contact and pressure, the "L" section members spread the forces to enable a uniform closing of the edges of each pane with respect to their orthogonally arrange mating panel.

**[0018]** The coolant support member is one of a metallic structure or a plastics structure. Preferably, the coolant support member is a metallic structure formed from sheet of one of an aluminium alloy or a stainless steel, conveniently apertured, whereby to provide a high degree of thermal conduction with a reduced thermal capacity. It is also preferred to provide a liner to provide a support for the dry ice, which is conveniently provided in a pelletized form. The liner can comprise a multi-laminate reflective foil, conveniently provided with closed gas-filled cells. The liner is laid upon the coolant support member and provides a thermal barrier to create a temperature gradient, which can be employed to control a temperature of the payload above the sublimation temperature of the coolant or the temperature of the coolant, as the case may be.

**[0019]** The coolant support member can conveniently be adapted so that the support member is separable from the upstanding members, whereby the assembly can be flat-packed.

**[0020]** In further aspects of the present invention, there are provided methods of operating a low temperature transport container, comprising the steps of erecting—or completing the construction of a container in accordance with the invention, filling the coolant receptacles with coolant, enabling a low temperature to be established in a payload volume—that is insulated from the coolant re-fill volume of the container and then opening the load aperture of by

removal of a door and placing a palletized container within and closing the door, and applying bandstrapping or other securement means about eth sides and over the top panel noting that coolant that operate by sublimation increase a gas pressure within the container. In accordance with another aspect of the invention there is provided the steps of opening the cover, and of filling the container and replenishing any dry ice or other coolant. The temperature of the payload volume is not restricted to the temperature of sublimation of the coolant and techniques are taught to enable the payload volume temperature to be distinct to such sublimation temperature.

## BRIEF DESCRIPTION OF THE FIGURES

**[0021]** For a better understanding of the present invention, reference will now be made, by way of example only, to the Figures as shown in the accompanying drawing sheets, wherein:

**[0022]** FIG. **1***a* illustrates an exploded perspective view of an embodiment of the teaching to U.S. Pat. No. 8,763,423B2;

**[0023]** FIG. **1***b* illustrates a perspective view of an embodiment of the teaching to U.S. Pat. No. 9,688,455B2, with a cover and one end panel removed;

**[0024]** FIG. **1***c* illustrates an exploded perspective view of an embodiment of the teaching to US20180362243;

**[0025]** FIGS. **2***a*, **2***b* & **2***c* comprise side and first and second end views of an embodiment of the invention;

**[0026]** FIG. **2***d* shows a representation of a vacuum insulation panel;

**[0027]** FIG. **3** shows a container made in accordance with the invention with a lid in a spaced apart fashion from top edges of the side panels defining the container, with an end panel separated in a laterally spaced apart fashion from the container body;

**[0028]** FIG. **4***a* shows a plan view of an embodiment of the invention prior to the top cover element being placed upon the container;

**[0029]** FIG. **4***b* shows a cross-sectional view through the longer length sides of an embodiment of the container pe FIG. **4***a;*

**[0030]** FIG. **4***c* shows a cross-sectional view through the short length sides of an embodiment of the container pe FIG. **4***a;*

**[0031]** FIGS. **5***a*-**5***d* detail certain aspects of an embodiment of the invention;

**[0032]** FIGS. **5***e*-**5***h* disclose features of the coolant support and temperature monitoring elements of the present invention;

**[0033]** FIG. **6***a* comprises a temperature plot over time in respect of a test shipment;

**[0034]** FIG. **6***b* details the period of time for the components defining a payload volume of an embodiment of the invention to show a further design of insulating sheet spacer having round apertures as used in fourth and fifth embodiments of the invention;

**[0035]** FIGS. **7***a*-**7***d* indicate four steps associated with an initial temperature conditioning of an container in accordance with an embodiment of the invention;

**[0036]** FIG. **7***e* shows a graphical representation of the density of carbon dioxide with respect to various temperatures and pressures;

**[0037]** FIGS. **8***a*-**8***d* show the steps associated with the loading of a payload;

**[0038]** an initial temperature conditioning of an container in accordance with an embodiment of the invention;

**[0039]** FIGS. **8***e*-**8***g* show the steps associated with the provision of extra dry ice to permit an extension in the period of operation of the container in use;

**[0040]** FIGS. **9***a*-**9***c* show the steps associated with a removal of a payload in accordance with an embodiment of the invention;

**[0041]** FIG. **9***d* shows how a payload is transferred with respect to a container in accordance with the invention; and

**[0042]** FIG. **10** shows a graphical representation of carbon dioxide Prandtl number at varying temperatures and pressures;

## DETAILED DESCRIPTION OF THE PREFERRED EMBODIMENTS

**[0043]** There will now be described, by way of example only, the best mode contemplated by the inventor for carrying out the present invention. In the following description, numerous specific details are set out in order to provide a complete understanding to the present invention. It will be apparent to those skilled in the art, that the present invention may be put into practice with variations of the specific.

**[0044]** FIG. **1***a* shows an example of an expanded spaced apart arrangement of a pallet shipper as is in common use in the field of cold chain logistics. Payload **11** is placed upon a pallet assembly **12** and surrounded by a base, side and uppermost insulation-structural panels **13**, the panels being arranged to couple together in a resilient, draught free fashion. The panels are preferably further retained by straps (not shown). The payload **11** is maintained in a sealed environment with coolant items **14** associated with the inside wall panels and an intermediate spacer-insulator panels **15**. Payload **11** is conveniently supported upon a pallet base (not shown). Whilst a base panel is not shown in any detail, outwardly extending the L-section corner sections **16** (to be referred to as L-members hereinafter) are used to assist in mutual securement of adjacent panels. FIG. **1***b* shows a partially completed container arrangement in accordance with U.S. Pat. No. 9,688,455B2, with a cover and one end panel removed. FIG. **1***c* illustrates an perspective view of an embodiment of the teaching to US20180362243, part cut-away to show the interior. In FIGS. **1***b* and **1***c*, respectively, there are apertures **18** at the base to enable the tines of a forklift or similar lifting device to enable the whole container **15** to be simply and conveniently moved, from a loading area to an aircraft or other transport vehicle or storage place for transport and/or storage.

**[0045]** Referring now to FIGS. **2***a*-**2***c*, there are shown three different aspects of the present invention in a completed container with product retained therewithin, showing an assembled shipper, respectively: view of left; view of front; and view of rear. With reference to FIG. **3**, which shows a container in a substantially complete state—except the cover element is raised and the access "door" panel is presented in a laterally spaced apart fashion with an intermediate container assembly **30** shown, as would typically be carried within, noting that in transferring goods from a shipper at a transport facility goods-unloading area the temperature will not be ultra-low and the product will need to be transferred to a controlled temperature refrigerated area for onward transport and distribution or further pro-

cessing. The shipper comprises multi-layer panels **21-26** as shall be discussed below, each with a rugged, optionally reflective finish, with "L" section edge corner elements **27** along the twelve corners between mutually orthogonal intersections of adjacent panels, to make a provide an airtight fastening between adjacent abutting edges of the orthogonal panels **21-26**. The "L" section elements **27** are placed along the mating portions of respective edges, with sufficient allowance to prevent overlap of orthogonal members at adjacent corners.

**[0046]** It is believed that the "L" section members enable strapping forces to be spread along edges, to enable the edges to be effectively gas-tight, to prevent loss/exchange of heat with any exchange of gases. Equally, the "L" section members provide rigidity when handling elements and provide durability wen providing corner protection. The "L" section elements are conveniently formed from aluminium sheet of the order of 1-4 mm in thickness for lightness—especially if formed from the readily available **600** grades although, for example, they could also be formed from stainless steel such as **304**, **316**, as indeed they could be formed from other metals. Such metals when in the form of a sheet can be pressed into a general "L" shape, as widely recognized. However, it will be appreciated that aluminium sections can also be extruded as, indeed, can many plastics, such as or ABS and UPVC. In any event, once formed, the "L" sections are attached to one panel and in conjunction with the edge (as determined by a "Z" or orthogonal axis to the planar panel) form a general "U" shaped channel into which a "Z" axis edge of a correspondingly placed orthogonal adjacent panel may be received. There may be a rebate associated with the edge and or channel. Additional sealing may be provided by a separate resilient member such as a closed cell rubber foam, providing a gas-tight resilient seal.

**[0047]** The multilayer panels have been developed to provide a very low thermal conductivity. Such multilayer panels are commonly used in thermally-controlled packaging, comprising two main components: a fiberglass core vacuum insulation panel (VIP) made with a metallized film envelope, and a polyurethane encapsulation layer for protection. Multilayer panels are available from a number of sources; Applicant tests have been performed with products from Avery Dennison; their panels have maximum dimensions—for 60 mm (2.36") thickness—of 1.8 by 3.8 m, conveniently providing suitably large sheets for the manufacture of pallet shippers, noting that many pallet shippers measure: 1.2 m×0.8 m×0.71 m with larger models being 1.2 m×1 m×1.55 m, with pallet in pallet shippers having a larger footprint such as 1.88 m×1.25 m×1.1 m. The thermal conductivity is extremely low and typically of the order of 0.0042 W/mK for such PU-VIP panels, with corresponding R-values of ≥8 $m^2K/W$. It is noted that a 35 mm thick panel of vacuum insulation is considered to be equivalent to 180 mm of glass fibre/170 mm of mineral wool (such as Rockwool®)/160 mm of expanded polystyrene/or 145 mm of polyurethane in terms of thermal transmission/insulation—meaning less material is required for insulation, enabling more payload volume or reduced package dimensions. FIG. **2***d* shows a representation of a VIP panel **17** comprising a rigid encapsulation layer **18**, a barrier envelope formed from vacuum metalized PET-based laminate **19**; the core comprises a vacuum—although a getter/desiccant (not shown) may be conveniently be employed to reduce any trace elements.

**[0048]** In the assembly or fabrication of a container in accordance with the invention, it has been found convenient to provide the base panel with four upstanding channels as determined by the placement of four "L" shaped members, with the top panel provided with a similar arrangement, but downwardly facing channels. It will readily be appreciated that the four upstanding wall panels can be arranged such that their lowermost edges engage within the upstanding "U" channels. It has been found that it is preferred to have the narrower upstanding side panels to be provided with two "L" section members whereby, subsequent to placement of the wider upstanding side panels, the narrower end panels can have their lowermost edge parts inserted into their respective base panel upstanding channels, whereupon upon pivoting within the base channel, the upper edge portions of the wider edge panels are brought into contact with the corresponding "U" shaped channels upstanding either side of the end panels.

**[0049]** Per FIGS. **2***a*, **2***b* & **2***c*, for each of the three axis there are provided webbing **28** fastened by strapping mechanisms **29** such as ratchet web trapping mechanisms as are well known, to retain the panels together. The straps shown comprise re-useable strapping mechanisms. Single use strapping can be employed, with the ends of each strap being fastened to each other, conveniently using an elongate crimp fastener, as is known. Whilst a number of different widths of webbing such as woven polyester webbing can be used, it has been found that 50 mm (2") webbing has been sufficient to ensure that forces are uniformly applied to ensure that the components are properly sealed, noting that if unequal forces are applied, gaps between adjacent panels could arise, which would compromise the integrity of the seals between adjacent panels of the container and thus permit temperatures to be at variance with design. It has been found to be helpful to have marked distinct areas, as determined by plastics sticky-tape or otherwise to indicate the general positioning of the webbing. If using a thinner strap, it may be useful to have more straps, for example nine or sixteen as opposed to six; equally it may be appropriate to have more straps along the panels of greater length. Ideally the webbing is of a "non-rip" configuration.

**[0050]** Turning now to FIG. **4***a*, it can be seen that in an area above the payload—occupied by a receptacle/container **33** (noting that this figure shows the container **33** and opening wall panel or door panel **25** transposed laterally from a closed position) there is a tray **32** for receiving a coolant such as dry ice; this tray can be supplemented by further pockets **33** depending from or otherwise separately existing to provide additional cavities for the placement of dry ice or other coolant. The tray may be moveable or may be fixed. The dry ice may be loose or be supplied in shaped containers (cassette—style), to facilitate placement; however the containers may provide difficulties in assessing an amount of dry ice present, noting that, for air transport, the International Air Travel Association (IATA) limits the amount of dry ice that can be carried in a single transport unit or container to 200 Kg. Notwithstanding the above, it has been found that loose pellets of dry ice can be conveniently added noting that personnel must be protected from direct skin contact with dry ice. The amount of dry ice visible upon the surface may indicate whether or not a further amount of dry ice is required if the shipper in accordance with the invention is subject to checks in the event that partial loads are removed from the payload

receptacle **30** during a delivery transit. The payload space can accommodate either hand or pallet loaded payloads, the latter of which facilitates expedited pack out process times to ensure temperature sensitive materials are not exposed to excessive "time out of environment" events. It will be appreciated that if the container is not to be transported by aircraft, then the amount of dry ice can be increased, increasing the period of transport and/or storage or period until the next replenishment.

**[0051]** FIG. **4***b* represents a cross-sectional view through line B-B' of FIG. **4***a*. It can be seen that there is a frame **45** of thickness T spanning from an inside face of panel **22** to provide an inside surface for the payload. This frame has been conveniently been formed from aluminium of 3/16" thickness and support the lower portions of the dry ice cavities **33**; an upper section **46** supports the upper tray, noting that the tray and side elements (panniers or so-called "saddle-bag" containers) are lined with a thermal barrier material that can control the temperature of the payload volume by providing a thermal drop TD in relation to its thickness. Accordingly dry ice, for example, at −78.5° C. using a thermal liner presenting a temperature gradient of 4° C. presents a cooling temperature within the payload volume of approximately −75° C., suitable for maintaining one intended product "lipid Nano-Particles (LNP)" at an appropriate temperature, noting that the payload carton **30** is required to be kept within a temperature range of −80° C. and −60° C.

**[0052]** Returning to the tray **32** for receiving a coolant such as dry ice Applicants have employed a plastics bubble foil insulation, sometimes referred to as an aluminized plastics "bubble-sheet". Applicants have employed their own bubble foil insulation, which is available under the SilverSkin® brand. Two thicknesses of bubble sheeting are readily available, being of 3 mm and 7 mm in thickness, which comprise single layer bubble sheet and double layer bubble sheet—but can be used in multiple layers, to predetermine a specific change in temperature ΔT ° C. The aluminized bubble-sheet can provide by way of thermal reflectance and thermal conduction a considerable temperature drop. Accordingly, by the use of a suitable number of sheets of thermal insulation and reflectance together with the use of dry ice, a payload temperature can be maintained, for example, in ranges of −10° C. to −20° C., −15° C. to −25° C., whereby specialty chemicals can be transported in such temperature ranges with regard to the reflectivity of 97% and a weight of insulation of 306 gsm/226 gsm for insulator sheet thicknesses of 7 mm/3 mm respectively. Reference numeral **47** indicates a surface of the liner to the frame which is conveniently apertured to enable movement of gaseous particles within the payload volume. The frame **45** is simply formed from aluminium to maintain lightness of the system. The apertures mean that the payload gas circulation volume is improved by the extra volume provided by region **43**. It will be appreciated by using one or more insulating sheets, a temperature drop across the insulating sheets can determine the temperature within the payload volume.

**[0053]** FIG. **4***c* shows the container in cross section through its longer length it will be noted that the first and second end sections are provided with thicker degrees of insulation, whereby recesses may be provided for thermal monitoring systems and recesses can be provided for the ratchet straps, whereby to reduce chances of disturbing strap tension though mis-handling or otherwise of the containers in use, especially during handling by fork-lift trucks, noting that gaps **48** under the container permit simple handling at ports, airports and when required to be placed upon other types of vehicles.

**[0054]** FIG. **5***a* shows the frame **45** in greater detail, since panels **22**, **24** and **26** are not present. Panel **25** shows data-logging devices **35**, which are connected by wires **34** to probes not shown, but fitted to an inside part of the framework **45** to enable temperature sensors to be placed and maintained in the same position. Whilst apertures are provided on the upper sheet **32**, the inside walls of the payload volume are not so apertured. The container in FIG. **5***b* is arranged 180° relative to the container present in FIG. **5***a*, with both side panels **22** and **23** present. Dry ice support tray **32** is also shown. The container in FIG. **5***c* is shown complete but without the straps, present in FIG. **5***d*, noting that, for simplicity, the "L" section elements **27** are not shown. It will be appreciated that other sensors can be provided and with regard to the interior pressures, monitoring to ensure satisfactory heat transfer characteristics within the payload volume are maintained. FIG. **5***e* is an example of a container with entry panel **24** and top panel **26** not in place, indicating load **30**, with the dry ice tray being provided with a thermal barrier sheet **32'**.

**[0055]** FIG. **5***f* shows temperature monitors **50** which reach out into the dry ice receptacle and barrier layer **32**, **32'**. Reference numeral **34** indicates depending panniers or "saddle bags" which extend from the dry ice tray **32**—although they could be distinct containers, noting that the side cavities of the container are also indicated in FIGS. **4***a* and **4***b*. Referring now to FIG. **5***g*, temperature sensor lead wires **52** pass from the data loggers/temperature indicators **50** to temperature sensors **56** situated in upper corners of the container. For redundancy purposes at least two temperature sensors are provided. It will be noted, per FIG. **5***g*, that the temperature sensor leads **52** are enclosed in a mechanical protective conduit, to protect the wires from damage during replenishment of the dry ice, noting that in view of the ultra-low temperatures experienced in use, the wires will tend to become brittle as a glass temperature of the wires is approached. FIGS. **5***h* and **5***i* show, respectively a close up and general view of the placement of temperature sensors **56** within a payload volume of a container in accordance with the present invention.

**[0056]** FIG. **6***a* shows the results of an early test which indicates that a pallet shipper was transported over a period of 170 hours duration. FIG. **6***b* shows a transition time for a container in accordance with the invention to be filled with dry ice and a conditioning time of 1 hour 26 minutes was indicated.

**[0057]** In order to enable the shipper to be deployed at it is desired temperature range, the shipper must first be conditioned—that is to say the product must be assembled and brough to a selected operational temperature—without placing any payload therein, but filling the dry ice receptacle member or members with a quantity of dry ice. The steps associated with conditioning are made with reference to FIGS. **7***a*-**7***d*. With regard to FIG. **7***a*, the lid **26** of the container is removed, conveniently using handles—a task which benefits from having at least two personnel present. Dry ice is poured—in the requisite amount (noting the commercial aircraft limit of 200 Kg if air travel anticipated) and the dry ice receptacles (downwardly extending pockets

associated with two side wall, optionally three—noting that a downwardly extending pocket does not extend on the inside of the "door" member **24**, since this is removed to enable placement of payload within the container and subsequent removal therefrom. FIG. **7***b* represents the placement of the desired quantity of dry ice, noting that if the shipper is going to be airborne during part of its journey, then there is a limit of 200 Kg of dry ice that may be present in the shipper. It will be appreciated that by releasing the straps extending over the top panel **26** and by removing the panel **26**, the addition/replenishment of dry ice enable the placement of dry ice about the whole area of the support surface and enables the dry ice to be placed simply and conveniently into the depending side cavities, to ensure that the desired temperature of the payload volume is maintained, which would not be possible with small apertures as known in the art. In placing the dry ice in the pockets and top surface, personnel should take care to fill side cavities and finishing by levelling the dry ice (conveniently provided in the form of pellets) to enable uniform cooling effect and to permit the lid to be replaced per FIG. **7***c* is

**[0058]** In view of a particular desired operating temperature—noting that it is primarily designed for use with dry ice which sublimes at 78.5° C.—then thermal gradient sheets may need to be placed to between the dry ice and the payload volume, whereby to separate the lower temperature payload volume—from the atmosphere above the dry ice—taking into account that the higher the temperature of carbon dioxide (as a gas) it will rise. The thermal gradient sheets may also be referred to as thermal barrier layers. In one test, the thermal liner created a temperature gradient of approximately 4° C., thus ensuring the payload area is maintained at approximately −75° C. and therefore keeping a sample product safely within a design temperature range of −80° C. to −60° C. temperature range during transportation. Referring now to FIG. **7***e*, there is shown the density of carbon dioxide at varying temperature and pressure. Once the required amount of dry ice has been placed within the container, the lid **26** is returned to the top of the container—per FIG. **7***d* and the inside temperature is allowed to settle to a quiescent state (for a given volume of dry ice such that the internal temperature is correct).

**[0059]** Whilst the speed of temperature drop can result in temperature equalization within two hours, given that extremely valuable goods can be carried, conditioning periods of five hours are recommended, noting that during tests, periods of the inside temperatures remaining within a required range for periods in respect of fifteen, exercising caution with regard to the value of the product will not compromise any expected "normal" expected transit time, noting that it will always be possible to provide additional dry ice to the dry ice receptacle and downwardly extending panniers, whereby to extend the duration of the container operating at prescribed temperature—subject to a continuing availability of dry ice. This procedure is commonly referred to as "Re-icing" in the cold chain industry and with regard to the present invention, with the lid removed the dry ice receiving volumes can be replenished with pellet dry ice, thus ensuring the temperature-sensitive payloads can be protected for extended durations should there be delays in the transport lane. Referring, once again, to the receptacle for the dry ice it was noted that the receptacle frame was formed from aluminium, notwithstanding that it would be logical to replace the metal with a lighter plastics material. Indeed, it has counterintuitively been determined that by the use of the thermally conductive metal, the period for conditioning is reduced and that the temperature within the payload volume is particularly uniform. It is believed that the uniformity is due in part to the receptable for the dry ice being formed from the highly thermally conductive—namely aluminium (although other metals such as stainless steel would provide similar results), together with the apertures present therein which enable a flow of the gaseous atmosphere, whilst reducing the thermal capacity of the support (i.e. reducing thermal mass/thermal inertia). The apertures do not need to be of any particular shape, but are conveniently circular, noting that this is a common shape employed in pressed sheet metals and known techniques can be employed in the manufacture thereof.

**[0060]** The present invention provides a simplified method for rapid payload loading and unloading, especially, for example, a pallet based or pallet-style container. The shipping system utilises a novel method of containing the dry ice within the container, in an area separate to the payload volume. A metallic framework—conveniently aluminium—supports a dry ice loading area/refill area that allows the system to be pre-cooled with dry ice pellets; after a period of approximately five hours the front wall of the shipper can be removed to facilitate pallet loading. The framework is conveniently easily dismantled; nonetheless it is also becoming preferable for complete products to be transported as a whole unit, ready assembled, to ensure that issues with damage to single panels or missing parts does not occur. The dry ice support structure remains intact with the front wall removed and ensures a quick and efficient process for loading the pallet into the shipper, thus ensuring the temperature sensitive materials within the pallet do not experience prolonged periods of "time out of environment" events.

**[0061]** Referring now to FIG. **8***a*, once the temperatures within the container have reached an equilibrium state, the lid member is raised to a degree in order to enable the panel **24** to be removed, whereby to enable a sub-container **30** of a low temperature payload—per FIG. **8***b*—which payload is typically removed from a refrigeration system by means of a fork-lift truck or pallet trolley (not shown). In order to close the opening front panel **24**, the lid needs to be removed. In a further development, the "L" shaped member is hingedly attached to the upper surface of the top cover **26**, whereby to enable the panel **24** to be pivoted about its lowest edge with respect to the base channel as provided by base insulator member **21**. Once the panel has been within the channel defined by the upper "L" shaped member (whether hinged or not), the straps are secured as indicated by FIG. **8***d*. It has been found preferable to attend to the vertical straps about the narrow sides initially, to be followed by the horizontal straps and then the vertical straps about the wider side panels. It may also be prudent to repeat the process, since the will be a degree of resilience; once the forces are applied evenly, each angle board associate with a certain panel will be uniformly positioned against their respective adjacent panels. FIGS. **8***e*-**8***g* indicate the procedures required to replenish a coolant during a journey or period of storage; as can be seen from FIG. **8***e*, the lid **26** can be raised—once the straps extending over the top have been removed—this has the benefit that full access is provided to the area where dry ice is required, yet the door to the enclosed payload volume is not disturbed, so that there is no distinct change of atmosphere within the payload volume.

Moreover the replenishment of dry ice of other coolant can be performed in a matter of tens of seconds and certainly within a period of time short enough not to cause a temperature excursion within the payload volume. The skilled man will appreciate the benefit of being able to relation a coolant without disturbing the payload a volume of coolant media immediately surrounding in the payload volume.

**[0062]** It will be appreciated that removal of a payload **30** from a container as indicated in FIG. **9***a* is accomplished by removal (or at least reducing the tension to permit the door panel **24** to be removed and the upper panel **26** to be raised—at least to enable the door panel **24** to be initially hingedly opened and then removed from the load bay, to permit removal of payload container from the container, per simplified drawing **9***c* and with the aid of a fork-lift truck per FIG. **9***d*.

**[0063]** The present invention also provides several benefits that it is believed have not been truly realized before in a cold chain system and provides a controlled egress of carbon dioxide through a valve mechanism. As has been disclosed above, the six panels—as employed for a convenient industry-standard regular rectangular shaped box—has adjacent edge panels mating within generally "U" shaped channels. With respect to each set of mating components along all twelve edges of the rectangular box, at least one face of the "U" channel or edge member received within the "U" channel associated with each edge is provided with a seal. The seal is conveniently provided by means of a closed cell foam. Such foams can be formed from polyolefin crosslinked foams and engineering polymers, as are known from Zotefoams, available under their AZOTE® brand, which comprises sealed, nitrogen filled foam which are consistent in size and structure, preventing egress of carbon dioxide across such edges. Closed cell foam is defined as a cell totally enclosed by its walls and hence not interconnecting with other cells. Closed cell foam is usually made by subjecting a rubber compound to a gas, such as nitrogen, under high pressure. Closed cell foam offers a wide variety of material and density options. EPDM, neoprene, EPDM/CR/SBR, and PVC/NBR are a few common types of closed cell foams, which can range in densities from 6 lb/ft3 (soft) to 19 lb/ft3 (hard). Presently, the density employed is classed as medium—being a trade-off between durability and the provision of an effective seal between panel components which are in themselves relatively rigid, noting that, as discussed above include relatively fragile vacuum insulation panels incorporated within a polyurethane foam encapsulation, ideally faced by a glass-fibre to provide a good degree of resilience to maintain integrity as containers are manoeuvred using fork-lift trucks, often operating in enclosed spaces with little room for error.

**[0064]** As is known to those skilled in the cold chain industry, the Prandtl Number is an important indicator of heat transfer performance. The Prandtl Number—Pr—is a dimensionless number approximating the ratio of momentum diffusivity (kinematic viscosity) to thermal diffusivity—and is often used in heat transfer and free and forced convection calculations.

**[0065]** The Prandtl number can be expressed as:

$$Pr = \mu Cp/k$$

**[0066]** where

**[0067]** μ=absolute or dynamic viscosity (kg/m s, Ibm/(ft h))

**[0068]** Cp=specific heat (J/kg K, Btu/(lbmoF))

**[0069]** k=thermal conductivity (W/m K, Btu/(h ft2oF/ft))

**[0070]** With reference to FIG. **10**, a graph of Prandtl number versus temperature is shown for various pressures: 1 bar, 10 bar, 50 bar and 100 bar. Separately calculated, at −55° C. and 100 bar, the Prandtl number is 2.8; at −55° C. and 50 bar, the Prandtl number is 2.78; and at −55° C. and 10 bar, the Prandtl number is 2.77. Given that the higher the Prandtl number, the better momentum diffusivity dominates and provides an improved degree of heat transfer, it is believed to be important to raise the internal pressure within the container, to improve heat transfer therein. Accordingly, Applicants have attempted to control the internal pressure with a couple of types of valves with relatively high blow-off pressures of several atmospheres. Notwithstanding the relatively complex situation, a simple valve has been defined by having one or more slits defined in the closed-cell edge sealant members and this provides a completed shipper with a predefined "controlled leak path" for CO2 gas to vent through. The passage of gas can be controlled by determination of the weight of a side panel acting upon the seal or by means of strapping the surrounding band straps to a particular tension. Nonetheless, a separate gas valve could be provided, conveniently one that can have a release pressure capable of being varied. In view of the above calculations, internal pressures of 10 bar are believed to be provide a safe transport container with good thermal control results; whilst a slight bowing of the side panels has been noted with systems under test, but the rugged system has demonstrated a resilient and rugged cold chain container system.

**[0071]** Small values of the Prandtl number, Pr<<1, means the thermal diffusivity dominates. Whereas with large values, Pr>>1, the momentum diffusivity dominates the behaviour. For example, the Prandtl value for liquid mercury indicates that the heat conduction is more significant compared to convection, so thermal diffusivity is dominant. However, for engine oil, convection is very effective in transferring energy from an area in comparison to pure conduction, so momentum diffusivity is dominant.

**[0072]** Whilst the invention has been developed for use with vacuum insulation panels encapsulated in PU foam, it will be appreciated that user requirements may specify that recyclable materials should be employed in the construction of a container. Applicant Company is developing paper-based board that has good thermal conductivity values and these could be employed in place of VIP-PU panels. Single face corrugated sheet comprises a sheet of facing or liner material joined to corrugated medium, by the use of, typically—for wood-based sheet material—water based glue on the crests of flutes, the liner is brought into contact and can be heated to "set" the glue. Corrugated paper boxes are cheap to manufacture and have desirable qualities of recyclability and low thermal conductivity, but are typically moisture absorbent but can be treated to make them substantially waterproof.

**[0073]** Pharmaceuticals, proteins, biological samples and other temperature sensitive products, including food items, are regularly shipped in containers throughout the year and are subjected to a wide range of temperatures. Though they

are shipped in insulated containers and/or climate-controlled environments, the temperature stability of the shipping containers can be significantly improved by employing the panel structures of the present invention, whereby to provide a simple solution to the maintenance of temperature profiles for the transport and storage of temperature sensitive products.

**1**. A thermally insulating transport container comprising:
a cuboid body comprising six insulating panels;
and a coolant support member;
wherein the coolant comprises a solid that sublimates;
wherein the cuboid panels comprise a base panel, first and second end-wall panels and first and second sidewall panels and a cover panel;
wherein the insulation panels are fastened such that they provide a substantially gas-tight seal along mutually orthogonal edges;
wherein the coolant support member comprises at least a support tray spaced, in use, from an inside face of the cover panel, the support tray being provided with upstanding support members;
wherein a payload volume is defined below the coolant support tray, which payload volume provides sufficient space for a palletized good;
wherein, in use, once assembled and provided with coolant, the coolant gases emanating from the coolant are operable to cool the payload volume by sublimation; and
wherein a gas valve is provided to enable gaseous pressure control within the cuboid volume due to the sublimation gases arising from the coolant.

**2**. The container according to claim **1**, wherein the insulating panels are formed from multilayer insulating boards selected from one or more of vacuum insulation panels (VIPS), polyurethane foam, plastics foam, cardboard, paperboard, corrugate board, metalized board and glass fibre.

**3**. The container according to claim **1**, the container is provided with a pallet-style base.

**4**. The container according to claim **3**, wherein the pallet style base is affixed to the base panel.

**5**. The container according to claim **4**, wherein the panels are retained together in place by compression restraints.

**6**. The container according to claim **5**, the compression restraints comprise webbing provided with ratchet straps.

**7**. The container according to claim **1**, wherein adjacent panels are provided with resilient tapes along at least one mating face thereof to ensure gas-tight resilience between the panels.

**8**. The container according to claim **1**, wherein the upper lid is removable in use, to permit replenishment of coolant upon sublimation of an initial or subsequent amount of coolant; and provided with coolant, the coolant gases emanating from the coolant are operable to cool the payload volume by sublimation; and wherein a gas valve is provided to enable gaseous pressure within the cuboid volume due to the sublimation gases arising from the coolant.

**9**. The container according to claim **1**, wherein the gas valve is defined by means of a slit provided within the seal to control pressure within the cuboid volume.

**10**. The container according to claim **9**, wherein the gas valve is compressed by a weight of a panel or by compression forces acting by means of a strapping arrangement whereby to control pressure within the cuboid volume.

**11**. The container according to claim **1**, wherein the coolant support member is one of a metallic structure or a plastics structure.

**12**. The container according to claim **11**, wherein the coolant support member is a metallic structure formed from sheet of one of an aluminium alloy or a stainless steel, conveniently apertured whereby to provide a high degree of thermal conduction with a reduced thermal capacity.

**13**. The container according to claim **1**, wherein the coolant support member is provided with a thermal barrier (liner) to create a temperature gradient to enable the payload area to be maintained at a temperature above the sublimation temperature of the coolant.

**14**. The container according to claim **1**, wherein the side and end panels are provided by way of a "U"-section single panel, to provide a more resilient structure.

**15**. The method of assembling a transport container per claim **1**, comprising the steps of:
assembling the container;
filling the coolant volume with a required amount of coolant for an anticipated journey and/or storage period after opening a cover or prior to closing the cover;
closing the cover;
permitting stabilization of temperature within the container to the required degree;
loading the container with a temperature sensitive payload;
closing a payload aperture;
securing the panels together;
maintaining the payload at the desired temperature; and
removing the payload when desired at the appropriate time after removing panel secure men means and opening the door.

**16**. The method according to claim **15**, further comprising the steps of:
opening the cover after removing additional panel securement means;
filling the coolant volume with a required amount of additional coolant for an additional period of time;
closing the cover; and
maintaining the payload at the desired temperature for an additional period of time.

* * * * *