US 20250259377A1

(19) United States

(12) Patent Application Publication

Wyman et al.

(10) Pub. No.: US 2025/0259377 A1

(43) Pub. Date: Aug. 14, 2025

(54) **USING IMPORTANCE RESAMPLING TO REDUCE THE MEMORY INCOHERENCE OF LIGHT SAMPLING**

(71) Applicant: **NVIDIA Corporation**, Santa Clara, CA (US)

(72) Inventors: **Christopher Ryan Wyman**, Redmond, WA (US); **Robert Anthony Alfieri**, Chapel Hill, NC (US); **William Parsons Newhall, JR.**, Woodside, CA (US); **Peter Schuyler Shirley**, Salt Lake City, UT (US)

(21) Appl. No.: **19/196,417**

(22) Filed: **May 1, 2025**

Related U.S. Application Data

(63) Continuation of application No. 18/142,868, filed on May 3, 2023, which is a continuation of application No. 17/184,401, filed on Feb. 24, 2021, now Pat. No. 11,663,773.

(60) Provisional application No. 63/068,906, filed on Aug. 21, 2020.

Publication Classification

(51) **Int. Cl.**

G06T 15/50 (2011.01)

G06T 1/60 (2006.01)

(52) **U.S. Cl.**

CPC *G06T 15/50* (2013.01); *G06T 1/60* (2013.01)

(57) **ABSTRACT**

Devices, systems, and techniques to incorporate lighting effects into computer-generated graphics. In at least one embodiment, a virtual scene comprising a plurality of lights is rendered by randomly sampling a set of lights from among the plurality of lights prior to rendering a frame of graphics. A subset of the set of lights is selected and used to render pixels within one or more portions of the frame.

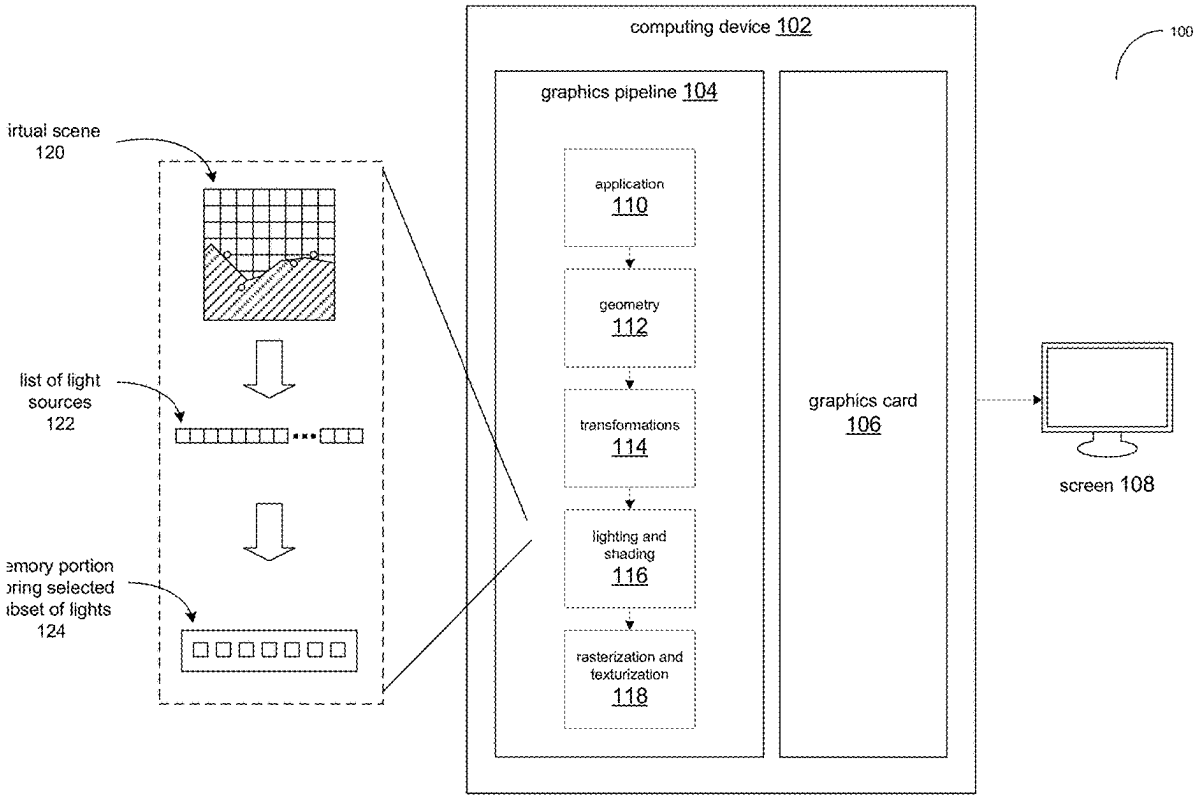

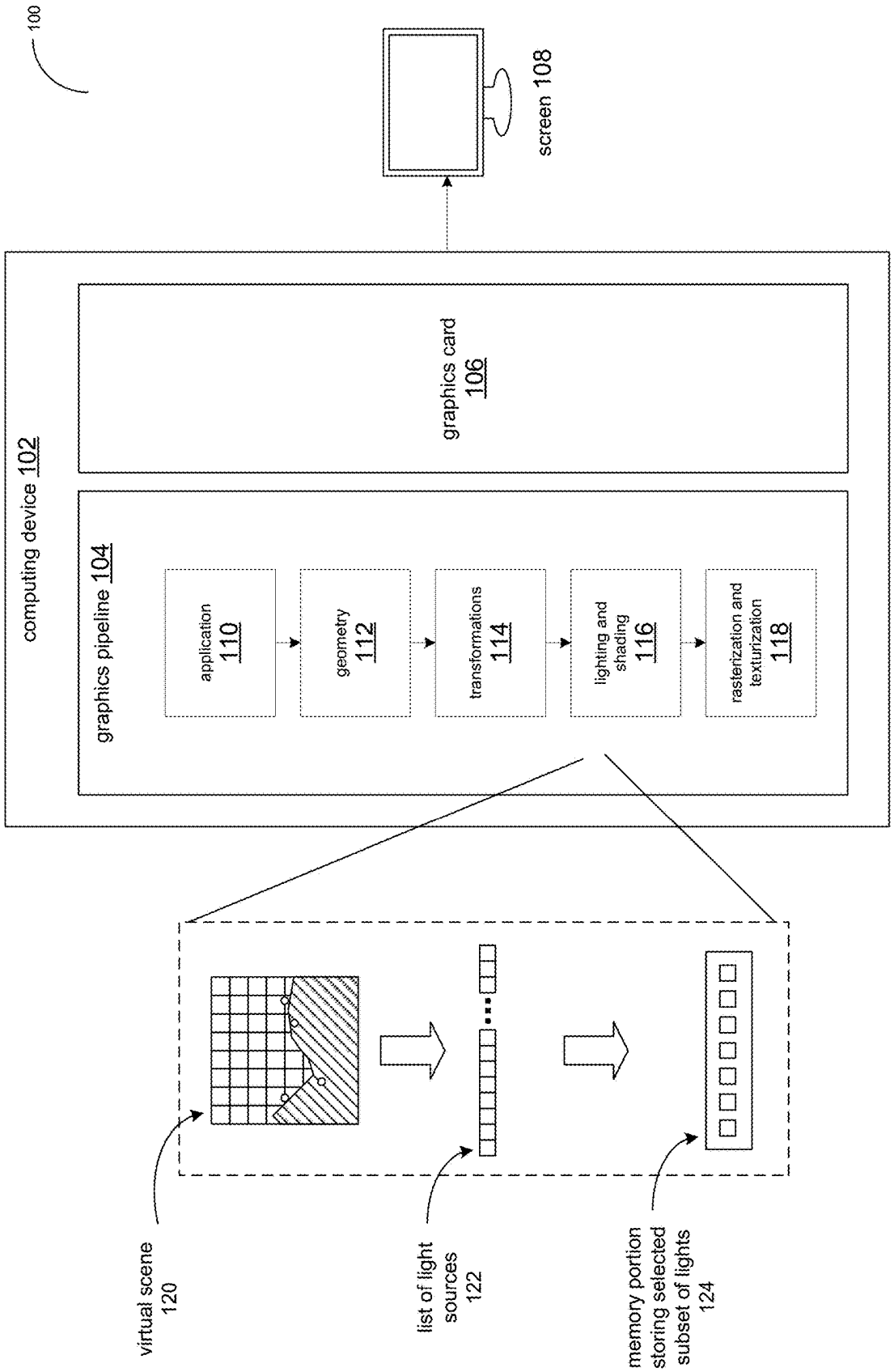
100
computing device 102
graphics pipeline 104
application 110
geometry 112
transformations 114
lighting and shading 116
rasterization and texturization 118
graphics card 106
screen 108
virtual scene 120
list of light sources 122
memory portion storing selected subset of lights 124

FIG. 1

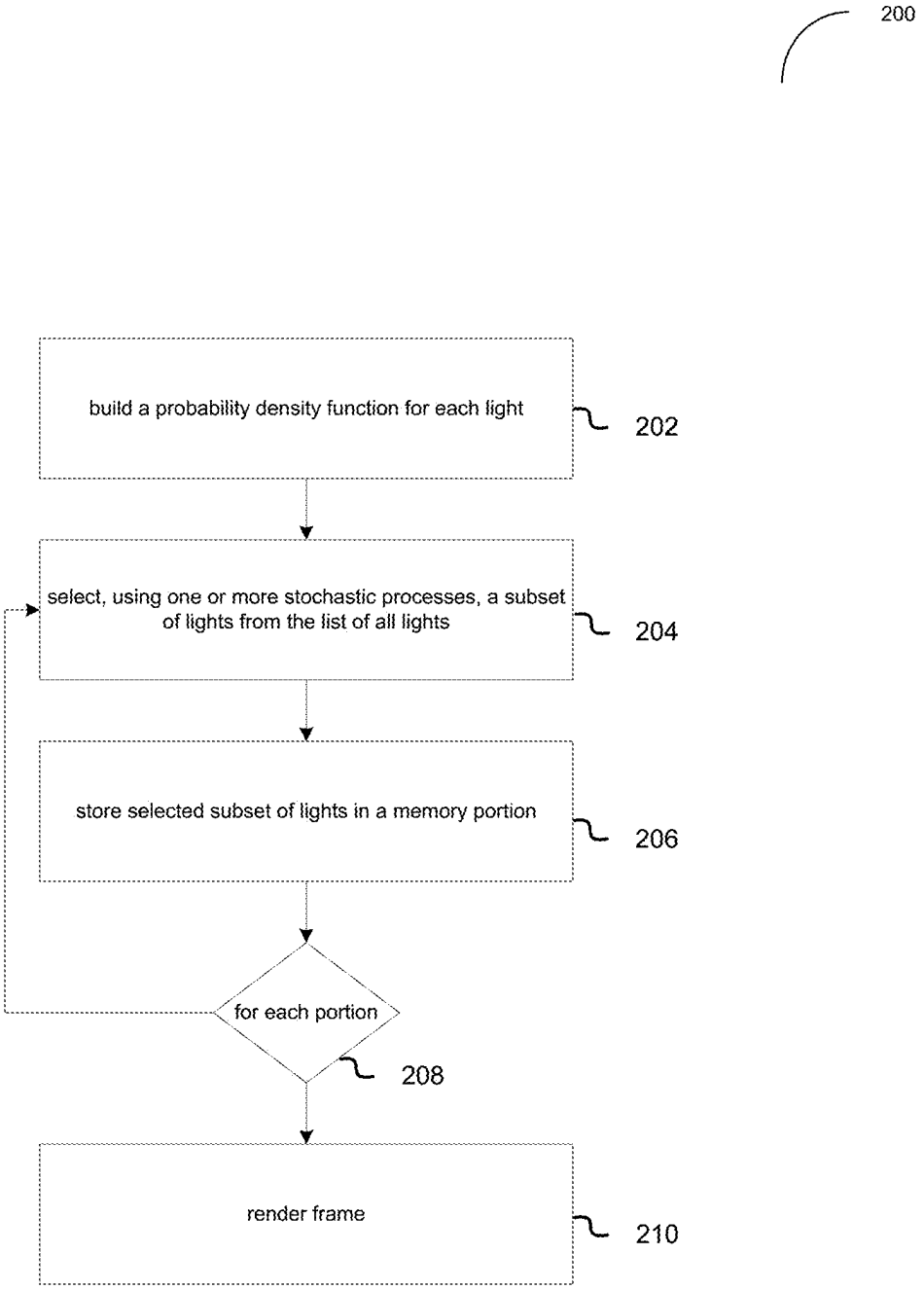
200
build a probability density function for each light
202
select, using one or more stochastic processes, a subset of lights from the list of all lights
204
store selected subset of lights in a memory portion
206
for each portion
208
render frame
210

FIG. 2

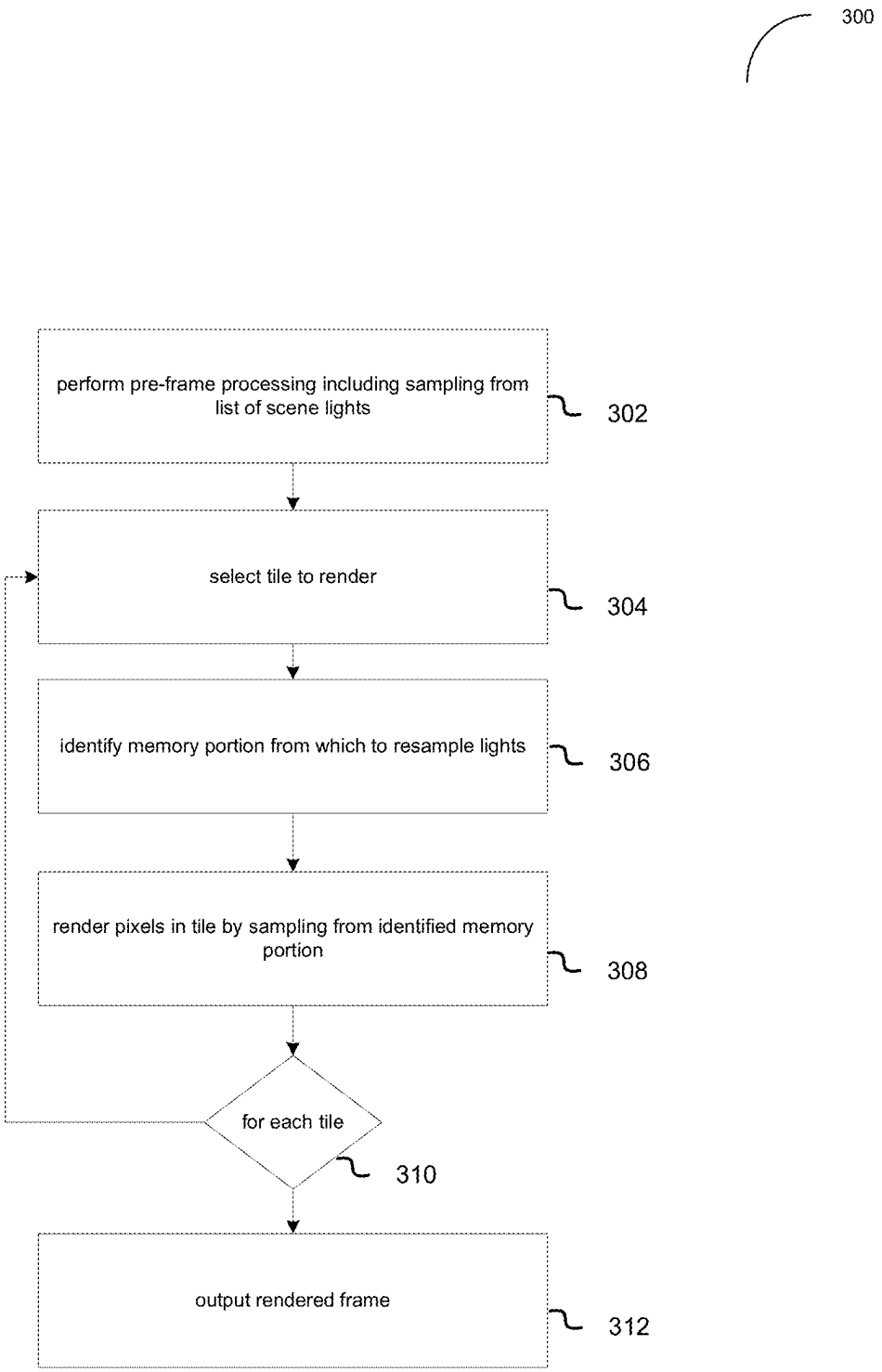
300
perform pre-frame processing including sampling from list of scene lights
302
select tile to render
304
identify memory portion from which to resample lights
306
render pixels in tile by sampling from identified memory portion
308
for each tile
310
output rendered frame
312

FIG. 3

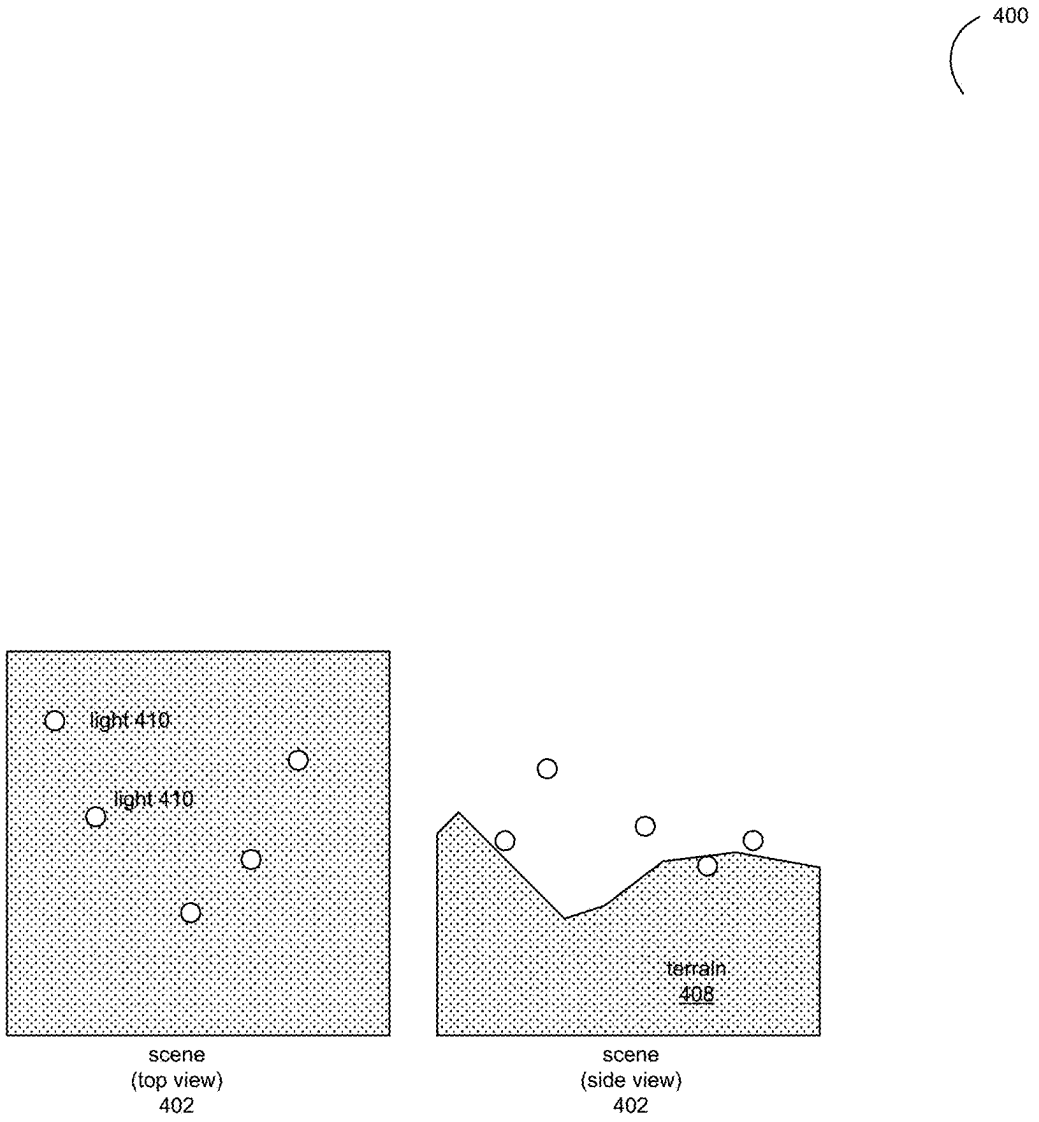
400
light 410
light 410
scene
(top view)
402
terrain
408
scene
(side view)
402

FIG. 4

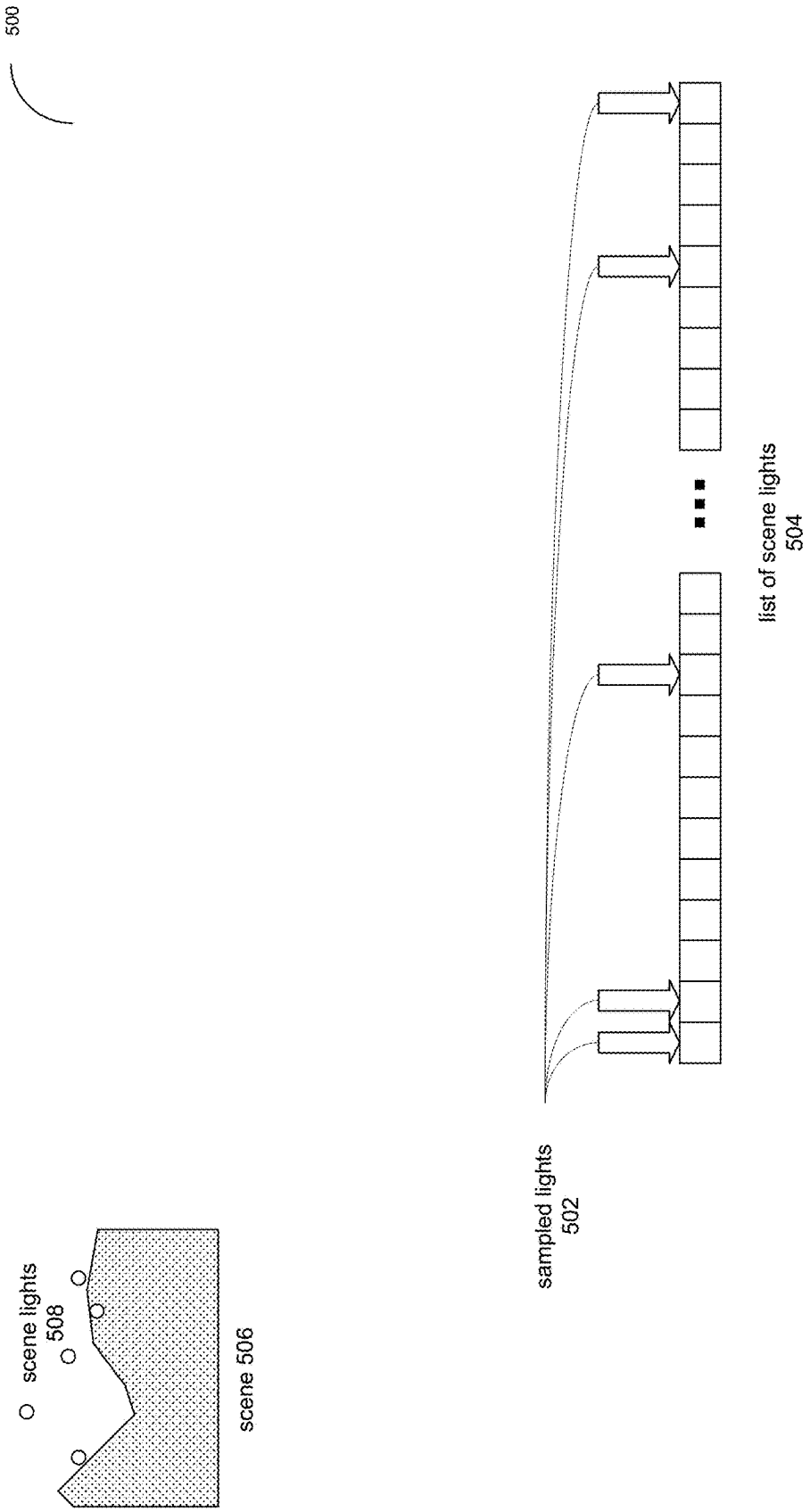
500
scene lights
508
scene 506
sampled lights
502
list of scene lights
504

FIG. 5

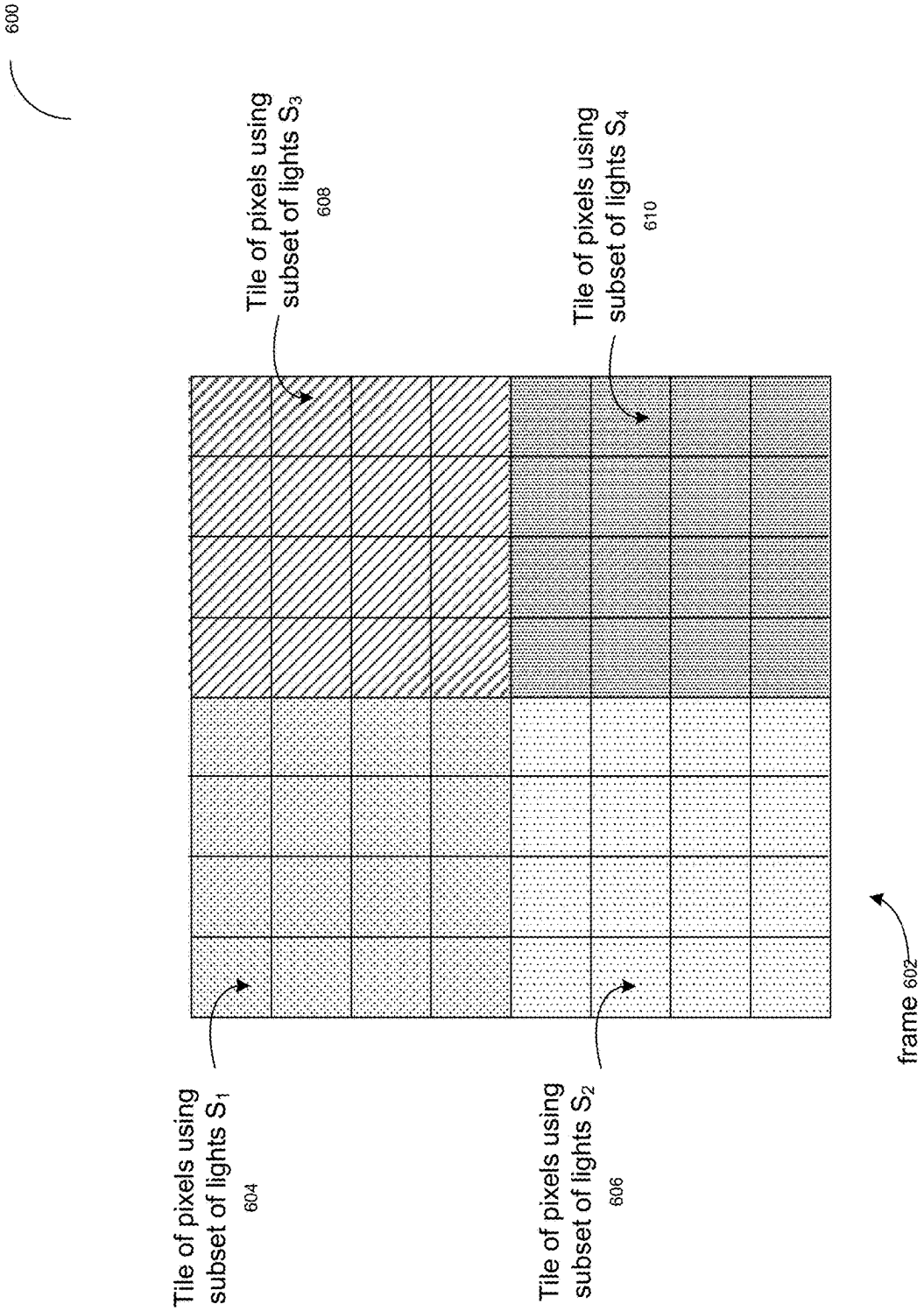
600
Tile of pixels using subset of lights S_3
608
Tile of pixels using subset of lights S_4
610
Tile of pixels using subset of lights S_1
604
Tile of pixels using subset of lights S_2
606
frame 602

FIG. 6

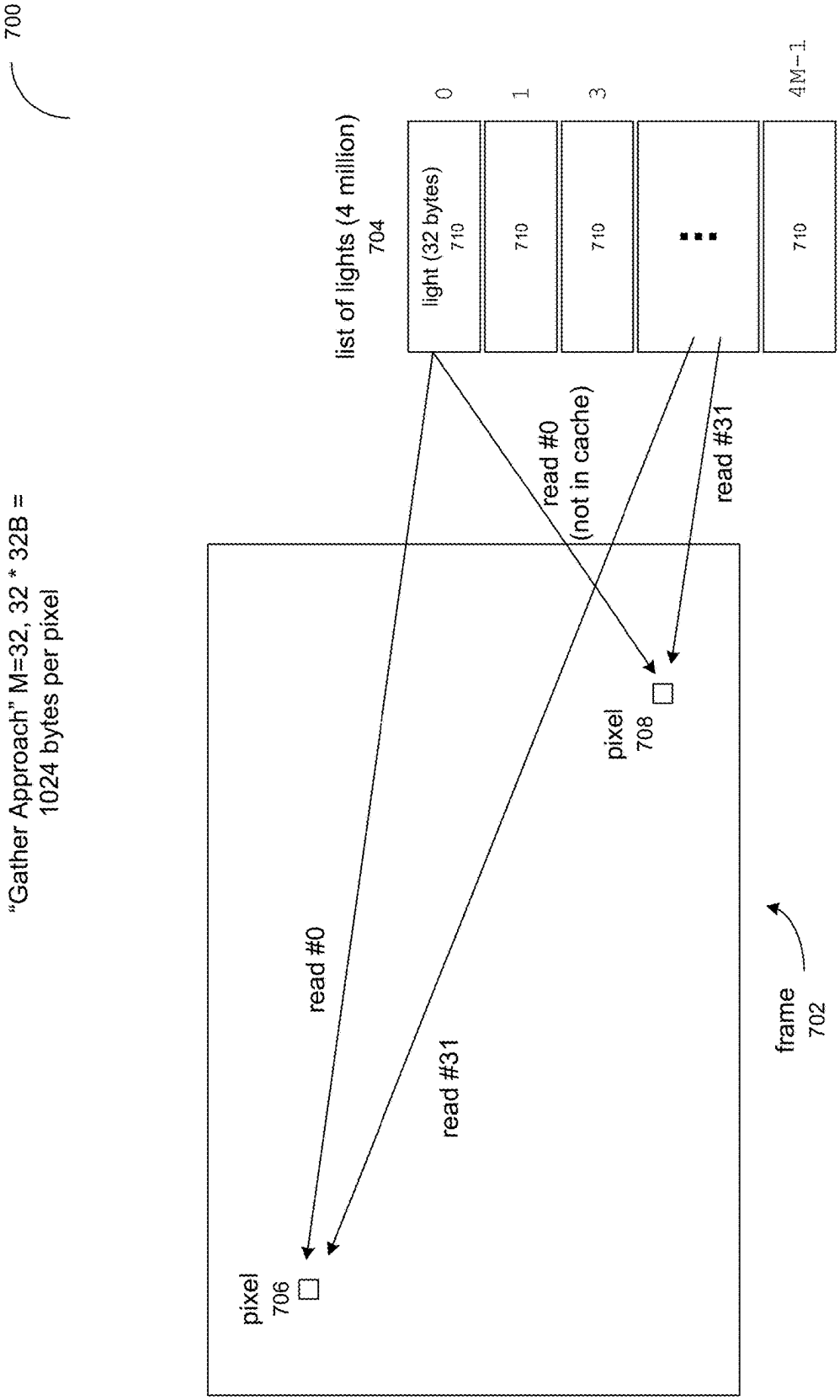
700
"Gather Approach" M=32, 32 * 32B =
1024 bytes per pixel
list of lights (4 million)
704
light (32 bytes)
710
710
710
710
0
1
3
4M-1
read #0
(not in cache)
read #31
pixel
708
read #0
read #31
pixel
706
frame
702

FIG. 7

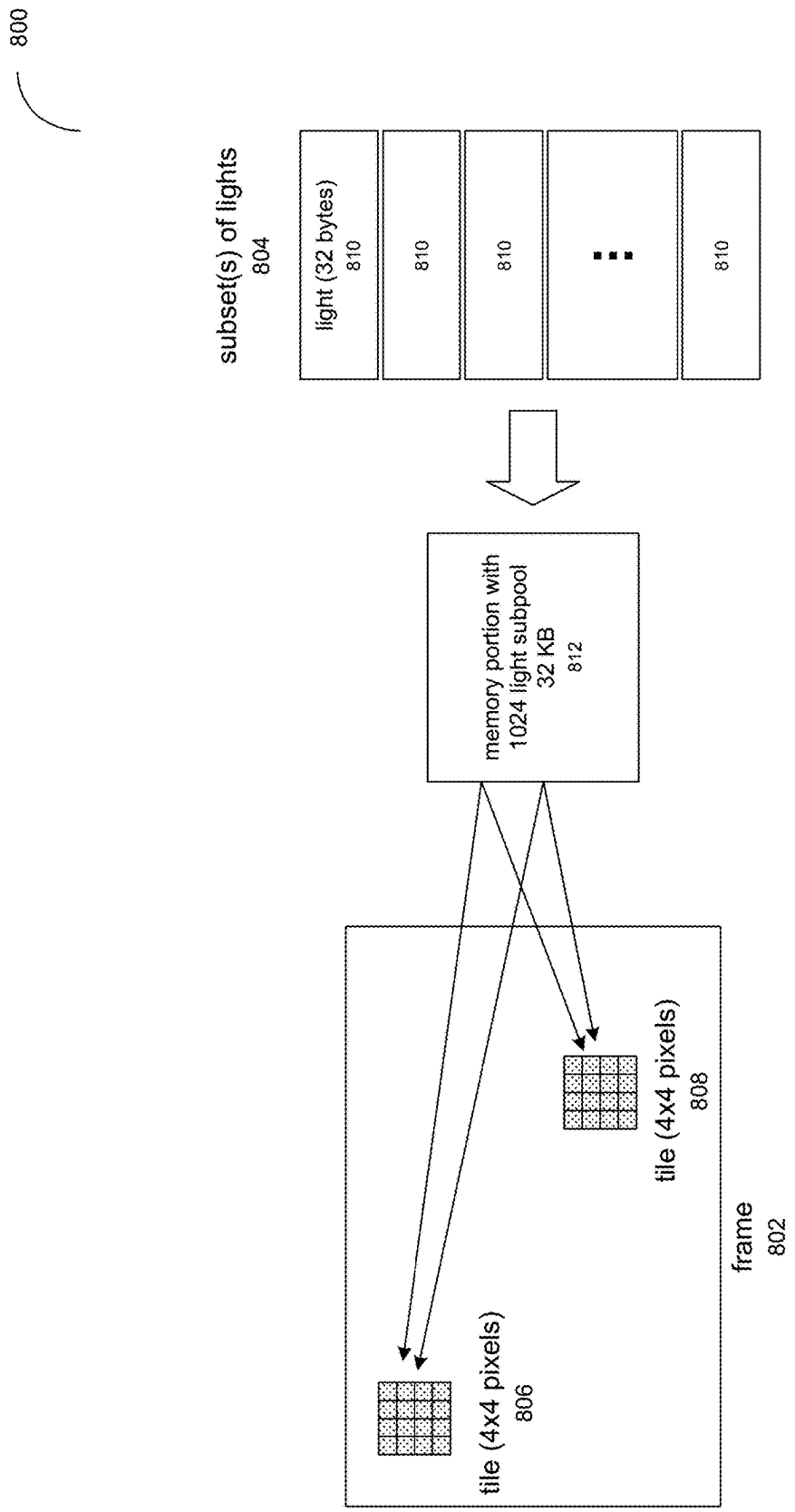
800
subset(s) of lights
804
light (32 bytes)
810
810
810
...
810
memory portion with
1024 light subpool
32 KB
812
tile (4x4 pixels)
808
tile (4x4 pixels)
806
frame
802

FIG. 8

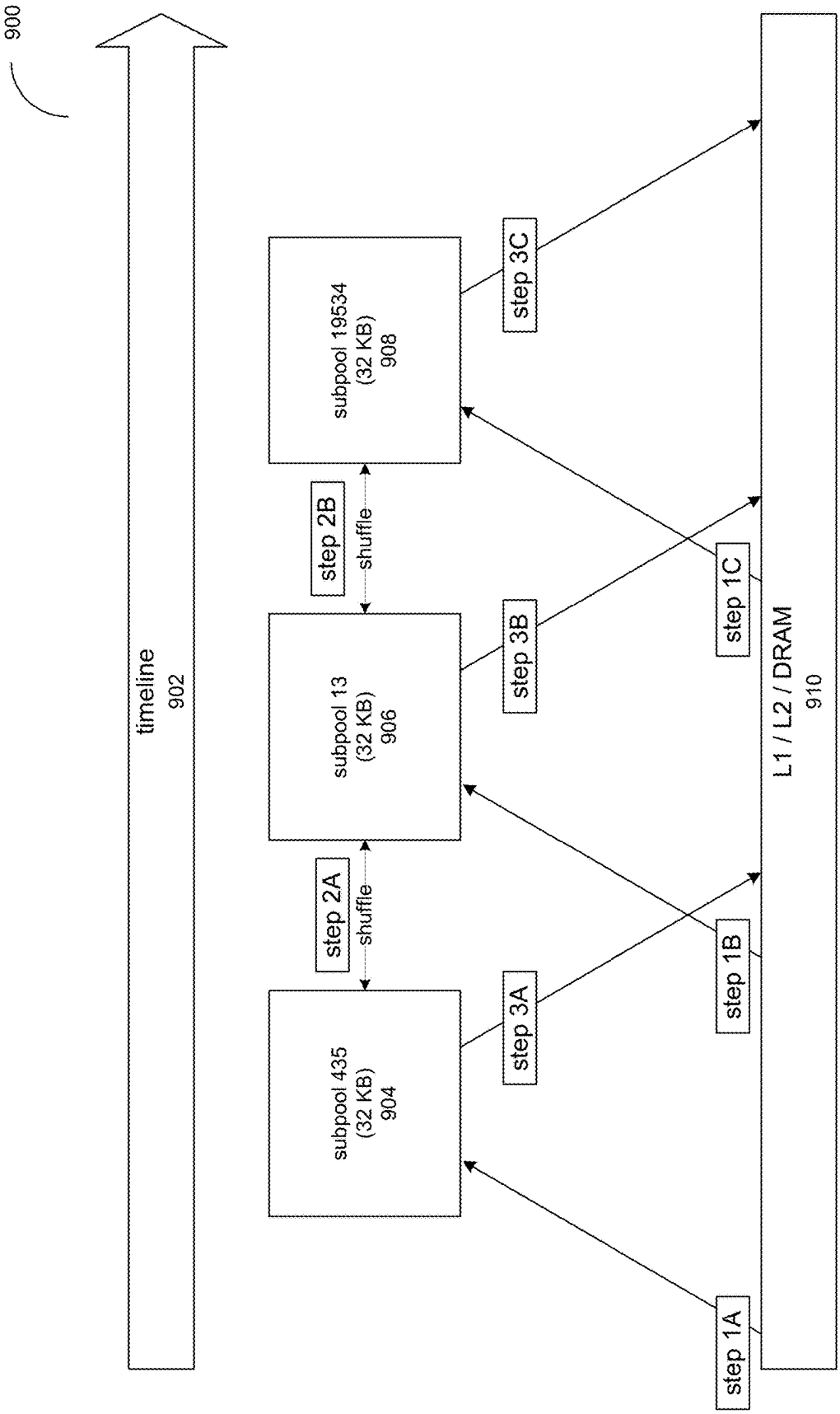
900
timeline
902
subpool 435
(32 KB)
904
step 2A
shuffle
subpool 13
(32 KB)
906
step 2B
shuffle
subpool 19534
(32 KB)
908
step 1A
step 1B
step 1C
L1 / L2 / DRAM
910
step 3A
step 3B
step 3C

FIG. 9

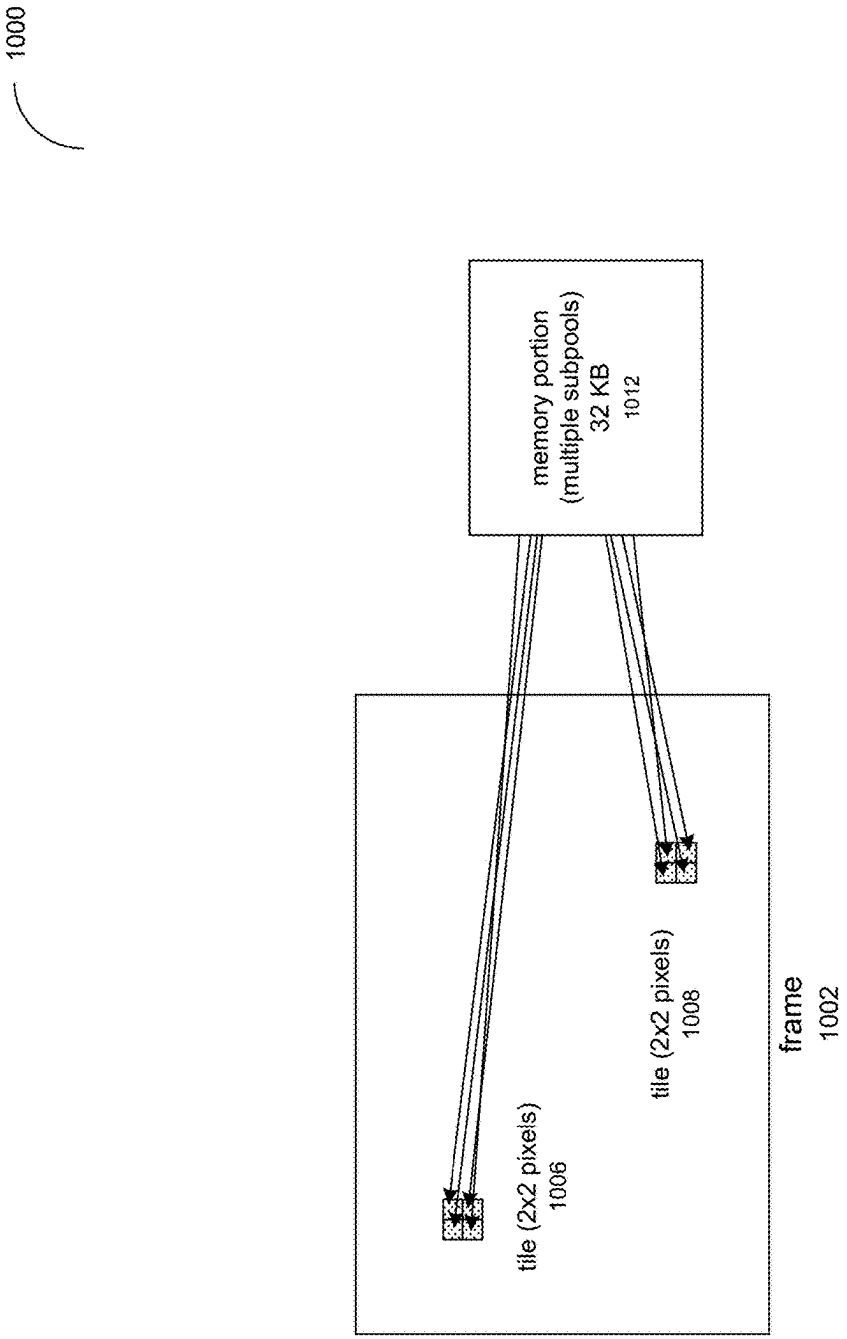
1000
memory portion
(multiple subpools)
32 KB
1012
tile (2x2 pixels)
1006
tile (2x2 pixels)
1008
frame
1002

FIG. 10

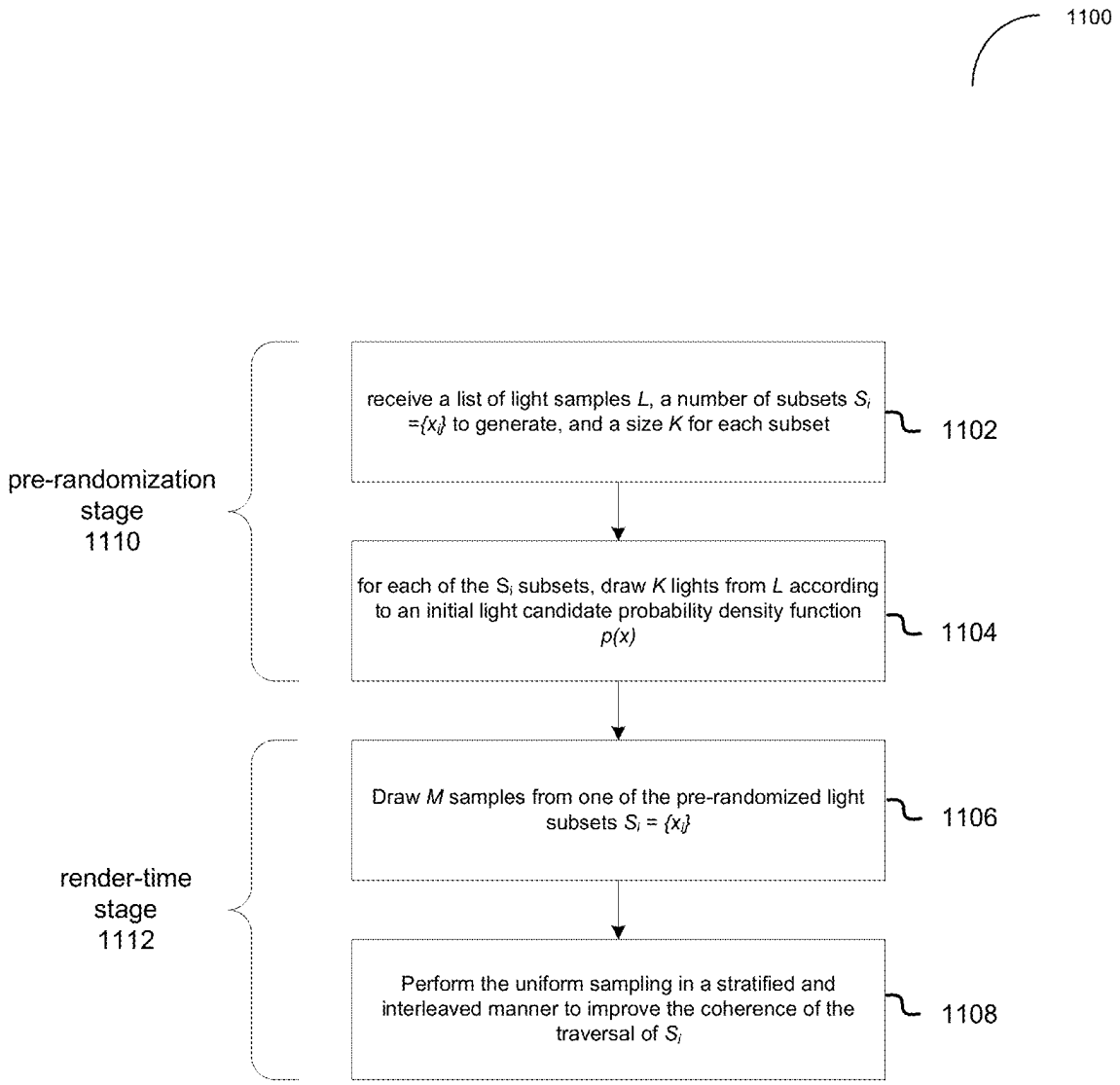
1100
pre-randomization stage 1110
receive a list of light samples L, a number of subsets S_i ={x_i} to generate, and a size K for each subset
1102
for each of the S_i subsets, draw K lights from L according to an initial light candidate probability density function p(x)
1104
render-time stage 1112
Draw M samples from one of the pre-randomized light subsets S_i = {x_i}
1106
Perform the uniform sampling in a stratified and interleaved manner to improve the coherence of the traversal of S_i
1108

FIG. 11

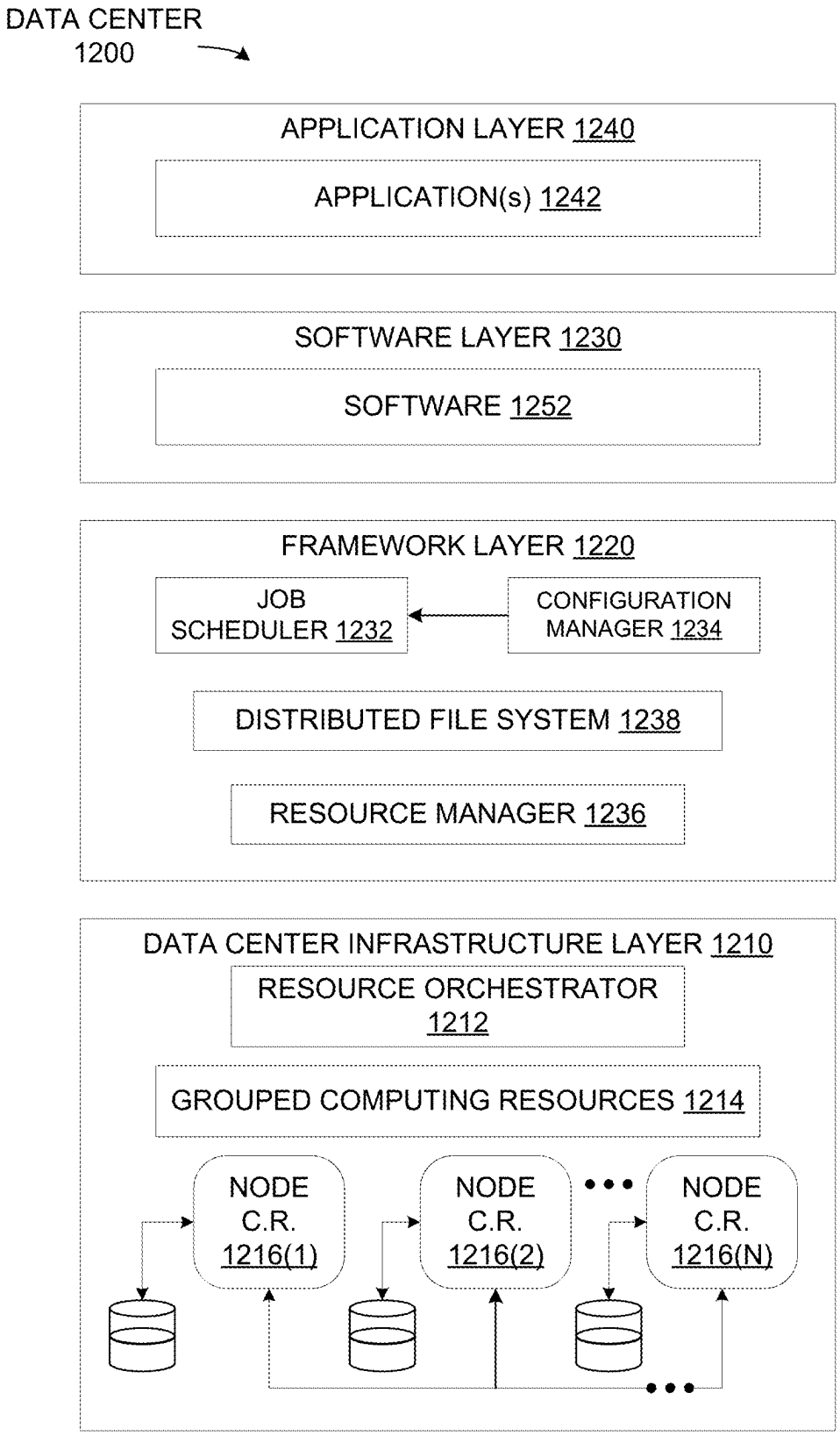
DATA CENTER
1200
APPLICATION LAYER 1240
APPLICATION(s) 1242
SOFTWARE LAYER 1230
SOFTWARE 1252
FRAMEWORK LAYER 1220
JOB SCHEDULER 1232
CONFIGURATION MANAGER 1234
DISTRIBUTED FILE SYSTEM 1238
RESOURCE MANAGER 1236
DATA CENTER INFRASTRUCTURE LAYER 1210
RESOURCE ORCHESTRATOR 1212
GROUPED COMPUTING RESOURCES 1214
NODE C.R. 1216(1)
NODE C.R. 1216(2)
NODE C.R. 1216(N)

FIG. 12

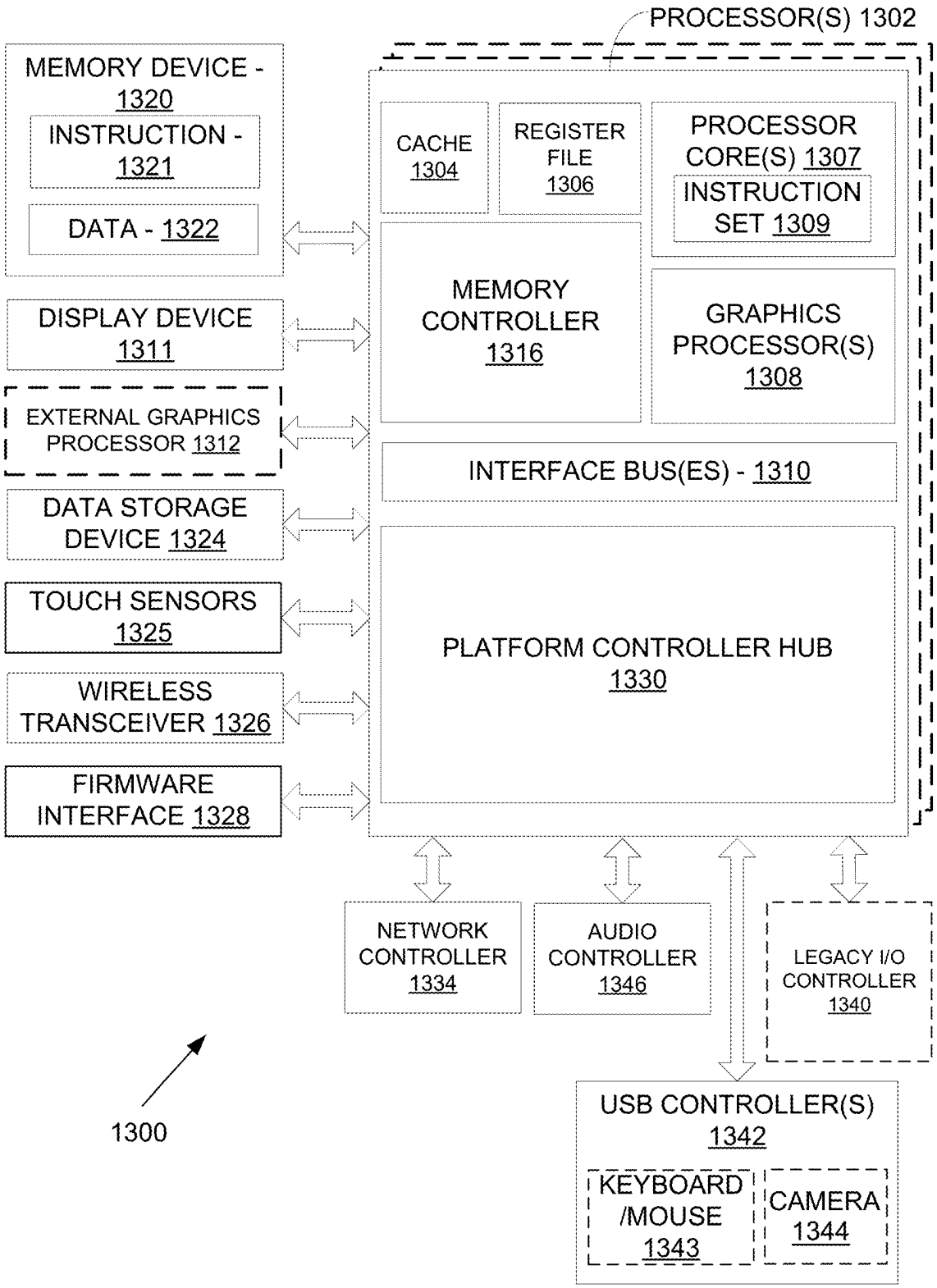
PROCESSOR(S) 1302
MEMORY DEVICE - 1320
INSTRUCTION - 1321
DATA - 1322
CACHE 1304
REGISTER FILE 1306
PROCESSOR CORE(S) 1307
INSTRUCTION SET 1309
MEMORY CONTROLLER 1316
GRAPHICS PROCESSOR(S) 1308
DISPLAY DEVICE 1311
EXTERNAL GRAPHICS PROCESSOR 1312
INTERFACE BUS(ES) - 1310
DATA STORAGE DEVICE 1324
TOUCH SENSORS 1325
PLATFORM CONTROLLER HUB 1330
WIRELESS TRANSCEIVER 1326
FIRMWARE INTERFACE 1328
NETWORK CONTROLLER 1334
AUDIO CONTROLLER 1346
LEGACY I/O CONTROLLER 1340
1300
USB CONTROLLER(S) 1342
KEYBOARD /MOUSE 1343
CAMERA 1344

FIG. 13

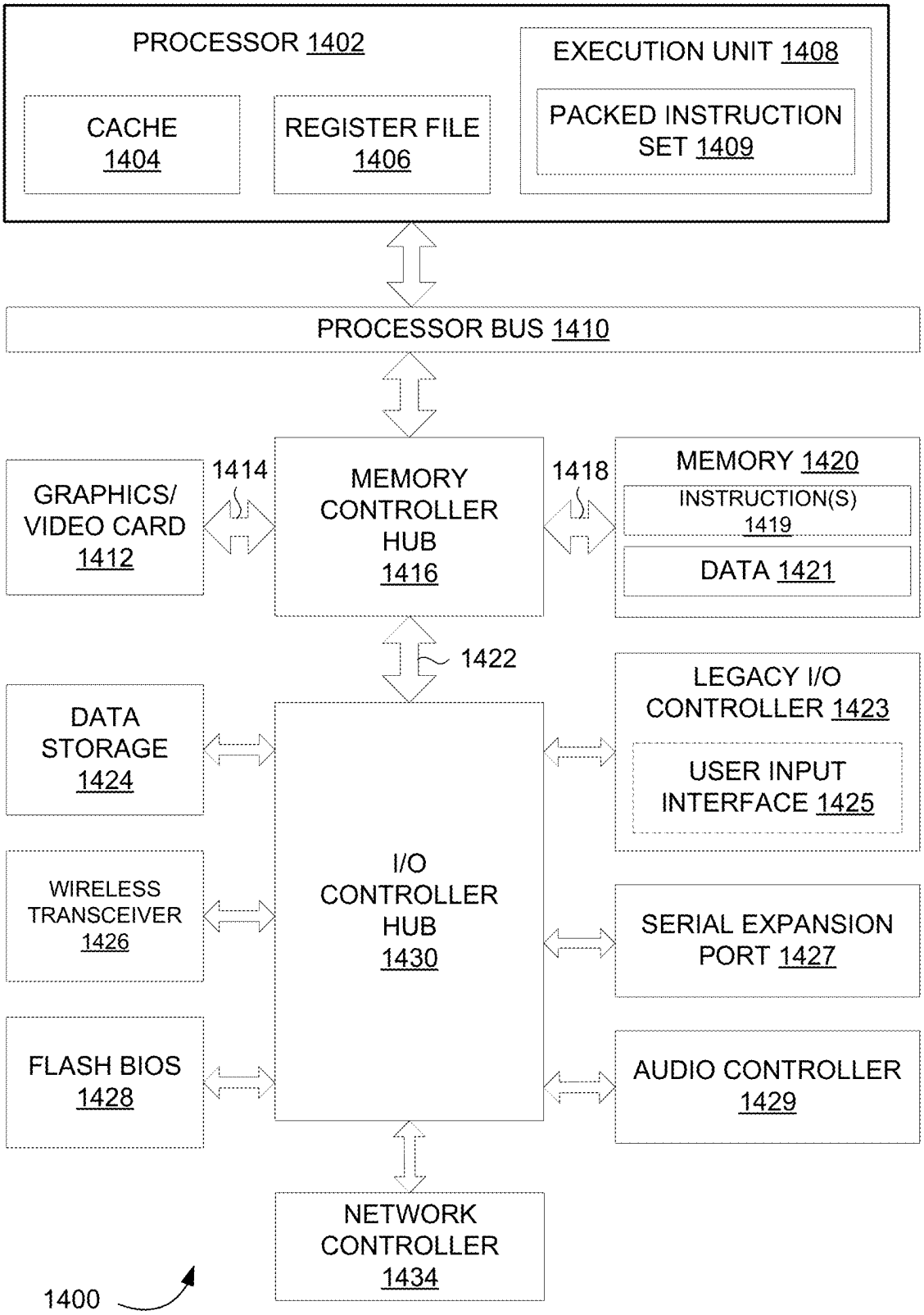
PROCESSOR 1402
CACHE 1404
REGISTER FILE 1406
EXECUTION UNIT 1408
PACKED INSTRUCTION SET 1409
PROCESSOR BUS 1410
GRAPHICS/ VIDEO CARD 1412
1414
MEMORY CONTROLLER HUB 1416
1418
MEMORY 1420
INSTRUCTION(S) 1419
DATA 1421
1422
DATA STORAGE 1424
LEGACY I/O CONTROLLER 1423
USER INPUT INTERFACE 1425
WIRELESS TRANSCEIVER 1426
I/O CONTROLLER HUB 1430
SERIAL EXPANSION PORT 1427
FLASH BIOS 1428
AUDIO CONTROLLER 1429
NETWORK CONTROLLER 1434
1400

FIG. 14

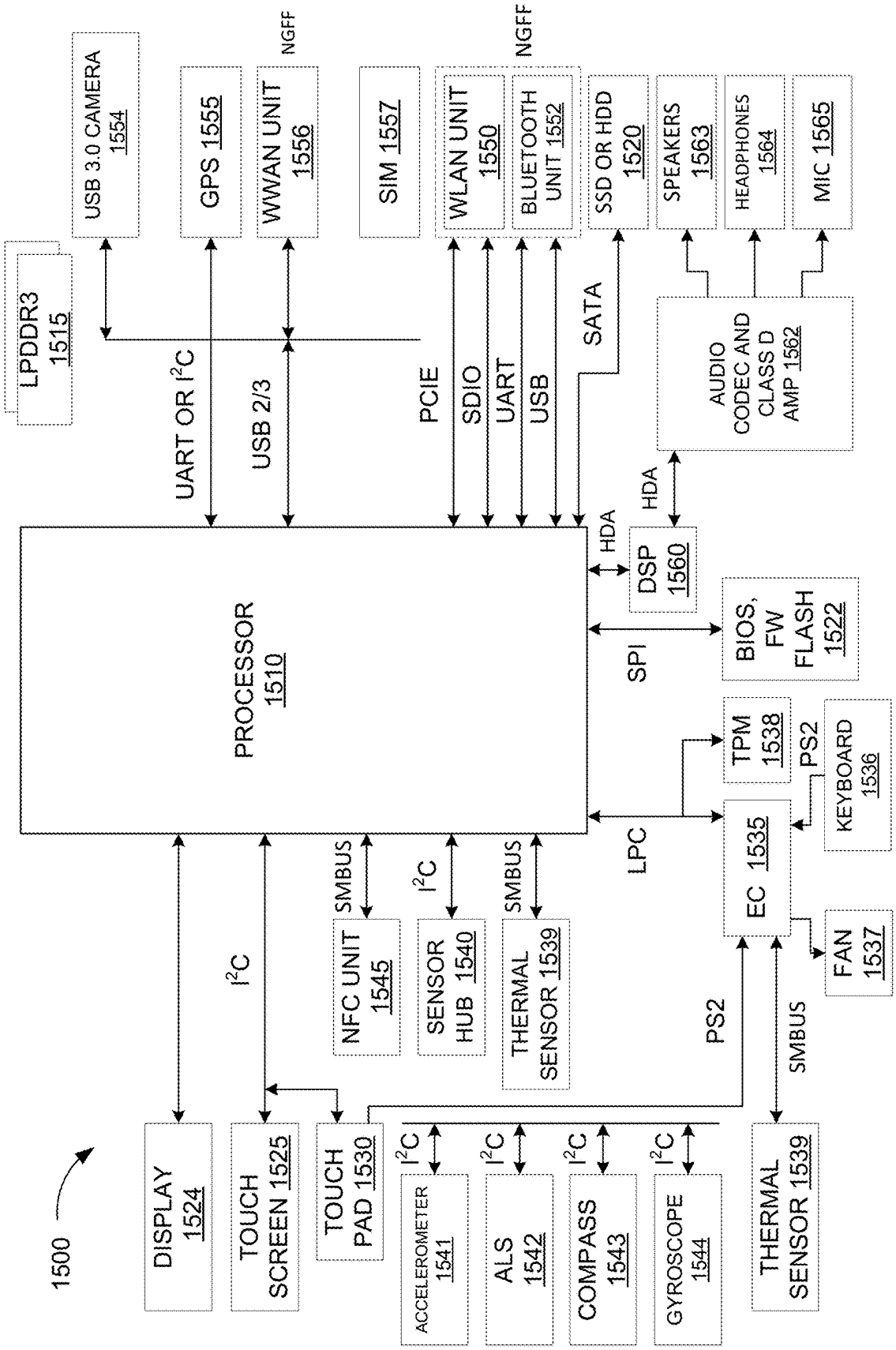
1500
PROCESSOR 1510
LPDDR3 1515
USB 3.0 CAMERA 1554
GPS 1555
WWAN UNIT 1556
NGFF
SIM 1557
WLAN UNIT 1550
BLUETOOTH UNIT 1552
NGFF
SSD OR HDD 1520
SPEAKERS 1563
HEADPHONES 1564
MIC 1565
UART OR I2C
USB 2/3
PCIE
SDIO
UART
USB
SATA
AUDIO CODEC AND CLASS D AMP 1562
HDA
HDA
DSP 1560
SPI
BIOS, FW FLASH 1522
TPM 1538
PS2
KEYBOARD 1536
LPC
EC 1535
FAN 1537
SMBUS
I2C
SMBUS
NFC UNIT 1545
SENSOR HUB 1540
THERMAL SENSOR 1539
I2C
PS2
SMBUS
DISPLAY 1524
TOUCH SCREEN 1525
TOUCH PAD 1530
I2C
I2C
I2C
I2C
ACCELEROMETER 1541
ALS 1542
COMPASS 1543
GYROSCOPE 1544
THERMAL SENSOR 1539

FIG. 15

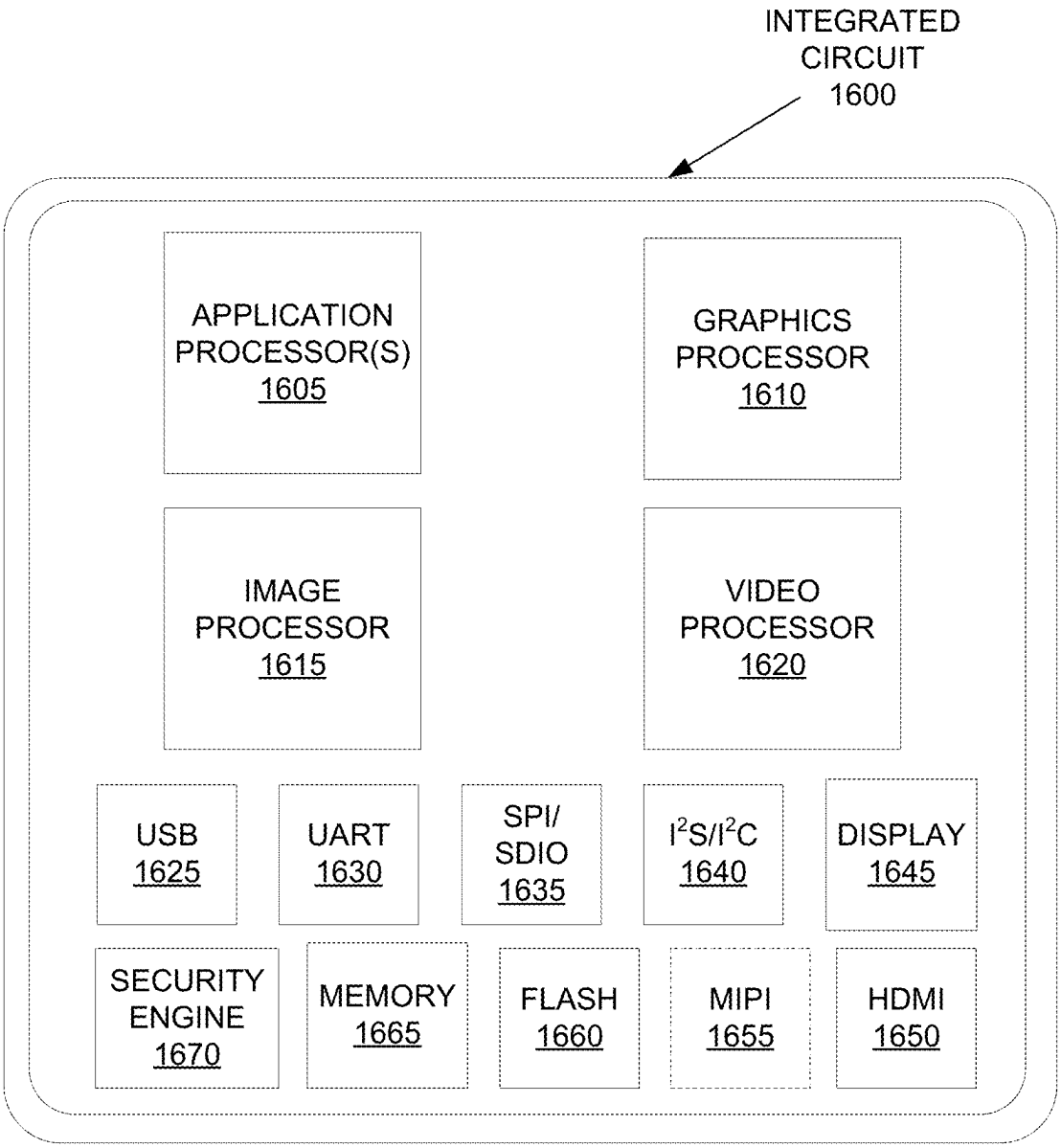
INTEGRATED CIRCUIT 1600
APPLICATION PROCESSOR(S) 1605
GRAPHICS PROCESSOR 1610
IMAGE PROCESSOR 1615
VIDEO PROCESSOR 1620
USB 1625
UART 1630
SPI/ SDIO 1635
I2S/I2C 1640
DISPLAY 1645
SECURITY ENGINE 1670
MEMORY 1665
FLASH 1660
MIPI 1655
HDMI 1650

FIG. 16

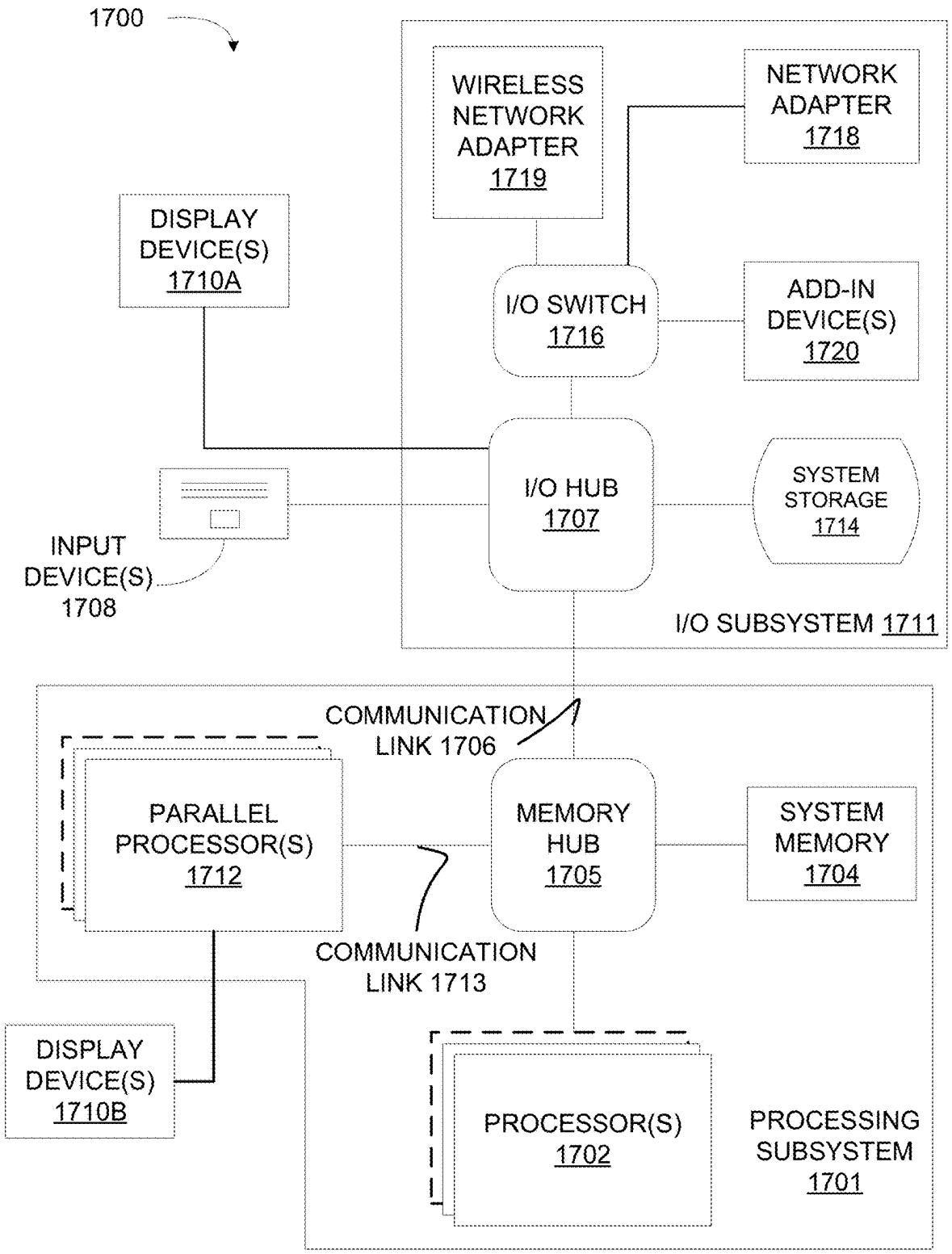
1700
WIRELESS NETWORK ADAPTER 1719
NETWORK ADAPTER 1718
DISPLAY DEVICE(S) 1710A
I/O SWITCH 1716
ADD-IN DEVICE(S) 1720
I/O HUB 1707
SYSTEM STORAGE 1714
INPUT DEVICE(S) 1708
I/O SUBSYSTEM 1711
COMMUNICATION LINK 1706
PARALLEL PROCESSOR(S) 1712
MEMORY HUB 1705
SYSTEM MEMORY 1704
COMMUNICATION LINK 1713
DISPLAY DEVICE(S) 1710B
PROCESSOR(S) 1702
PROCESSING SUBSYSTEM 1701

FIG. 17

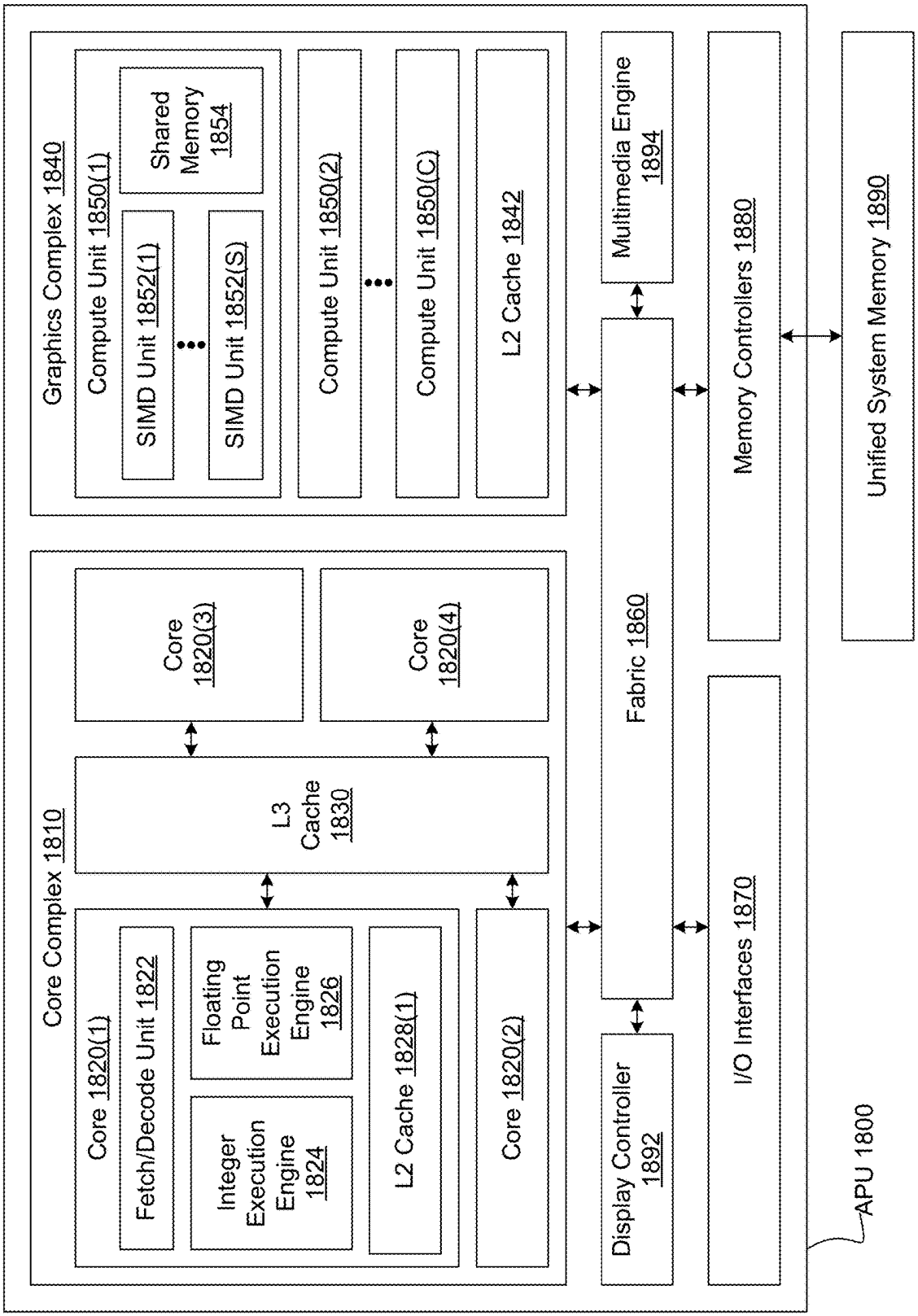
Graphics Complex 1840
Compute Unit 1850(1)
SIMD Unit 1852(1)
SIMD Unit 1852(S)
Shared Memory 1854
Compute Unit 1850(2)
Compute Unit 1850(C)
L2 Cache 1842
Core Complex 1810
Core 1820(1)
Fetch/Decode Unit 1822
Integer Execution Engine 1824
Floating Point Execution Engine 1826
L2 Cache 1828(1)
Core 1820(2)
Core 1820(3)
Core 1820(4)
L3 Cache 1830
Fabric 1860
Multimedia Engine 1894
Display Controller 1892
Memory Controllers 1880
I/O Interfaces 1870
Unified System Memory 1890
APU 1800

FIG. 18

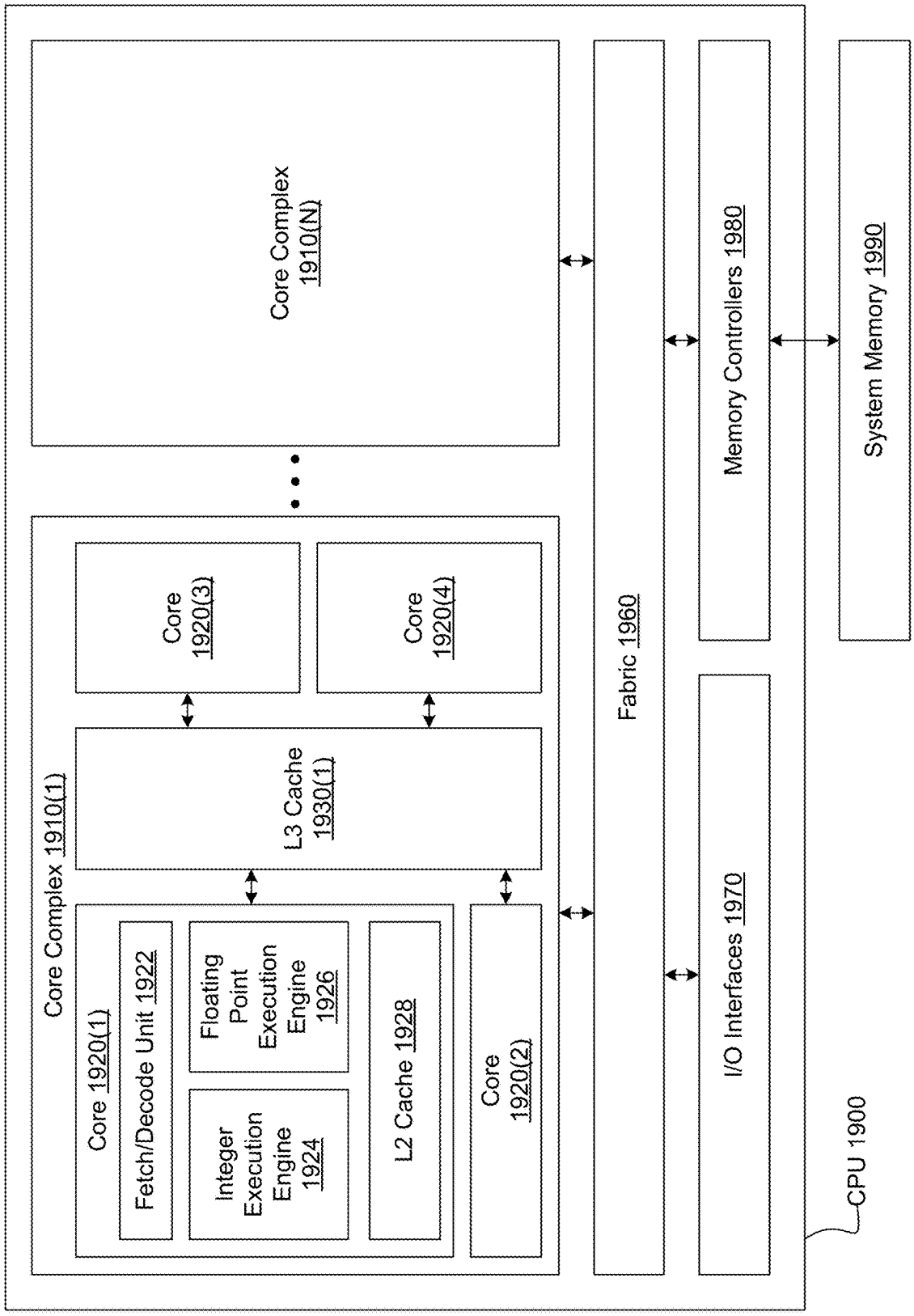
Core Complex 1910(N)
Core Complex 1910(1)
Core 1920(3)
Core 1920(4)
L3 Cache 1930(1)
Core 1920(1)
Fetch/Decode Unit 1922
Integer Execution Engine 1924
Floating Point Execution Engine 1926
L2 Cache 1928
Core 1920(2)
Fabric 1960
Memory Controllers 1980
I/O Interfaces 1970
System Memory 1990
CPU 1900

FIG. 19

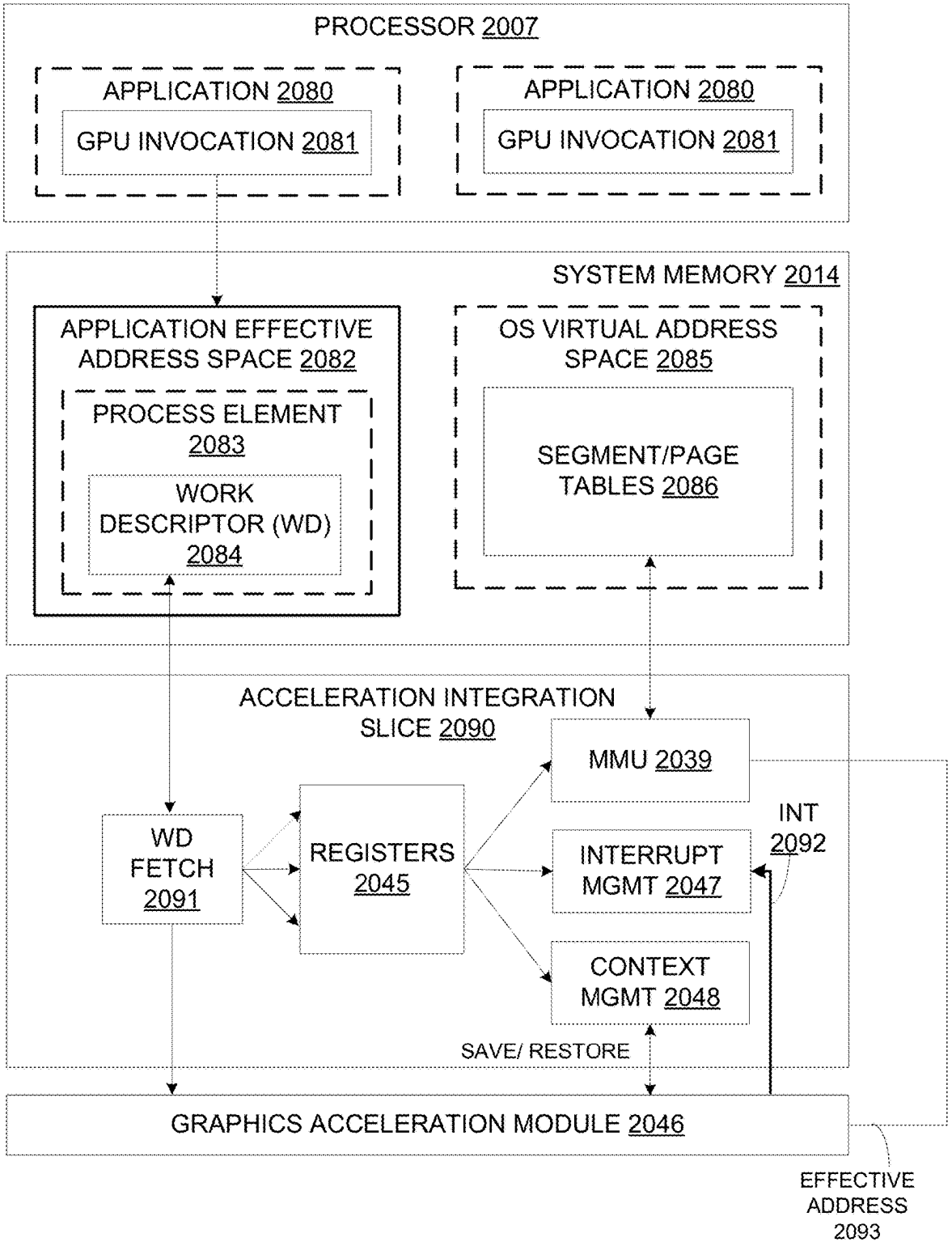
PROCESSOR 2007
APPLICATION 2080
GPU INVOCATION 2081
APPLICATION 2080
GPU INVOCATION 2081
SYSTEM MEMORY 2014
APPLICATION EFFECTIVE ADDRESS SPACE 2082
PROCESS ELEMENT 2083
WORK DESCRIPTOR (WD) 2084
OS VIRTUAL ADDRESS SPACE 2085
SEGMENT/PAGE TABLES 2086
ACCELERATION INTEGRATION SLICE 2090
MMU 2039
WD FETCH 2091
REGISTERS 2045
INTERRUPT MGMT 2047
INT 2092
CONTEXT MGMT 2048
SAVE/ RESTORE
GRAPHICS ACCELERATION MODULE 2046
EFFECTIVE ADDRESS 2093

FIG. 20

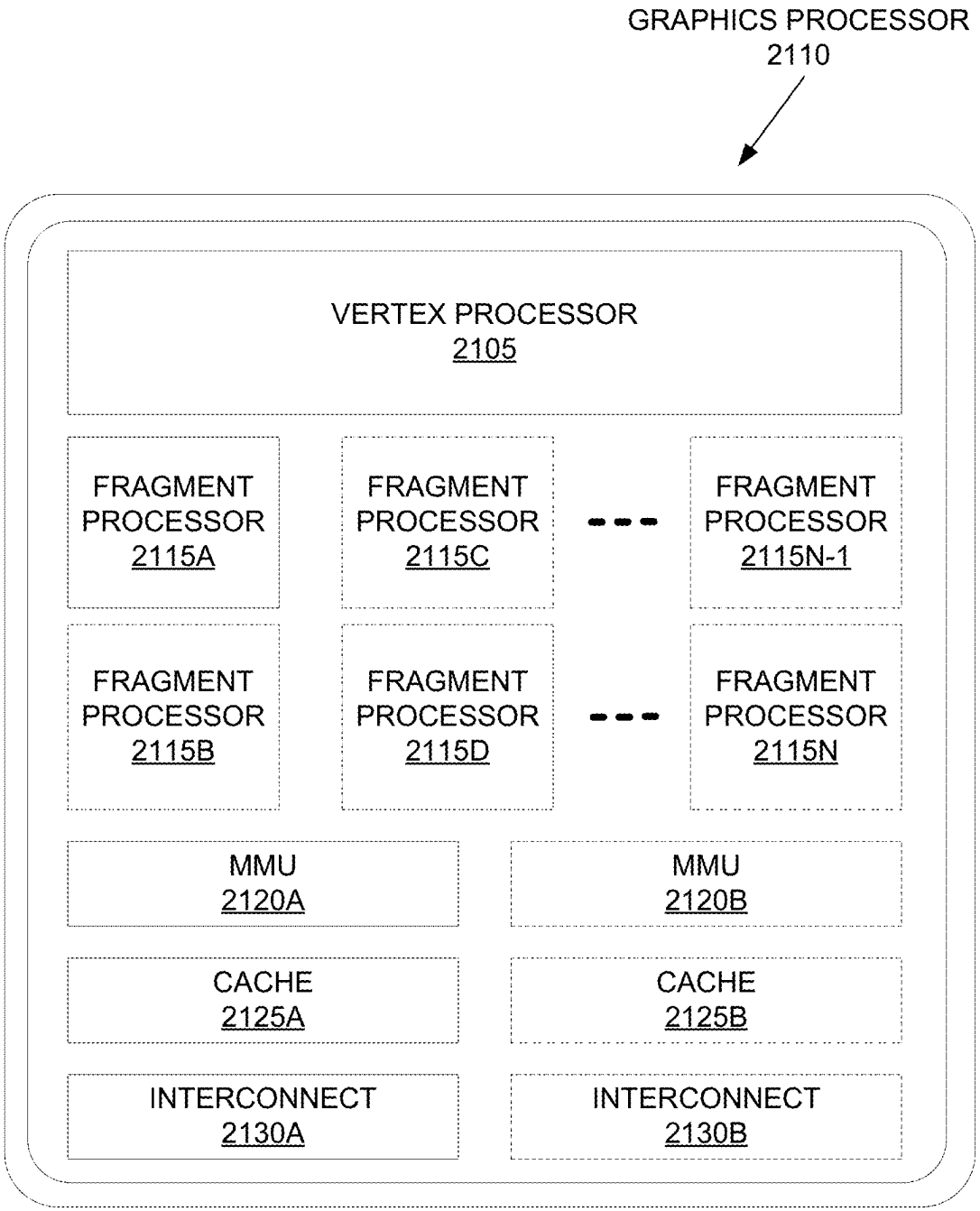
GRAPHICS PROCESSOR
2110
VERTEX PROCESSOR
2105
FRAGMENT PROCESSOR
2115A
FRAGMENT PROCESSOR
2115C
FRAGMENT PROCESSOR
2115N-1
FRAGMENT PROCESSOR
2115B
FRAGMENT PROCESSOR
2115D
FRAGMENT PROCESSOR
2115N
MMU
2120A
MMU
2120B
CACHE
2125A
CACHE
2125B
INTERCONNECT
2130A
INTERCONNECT
2130B

FIG. 21A

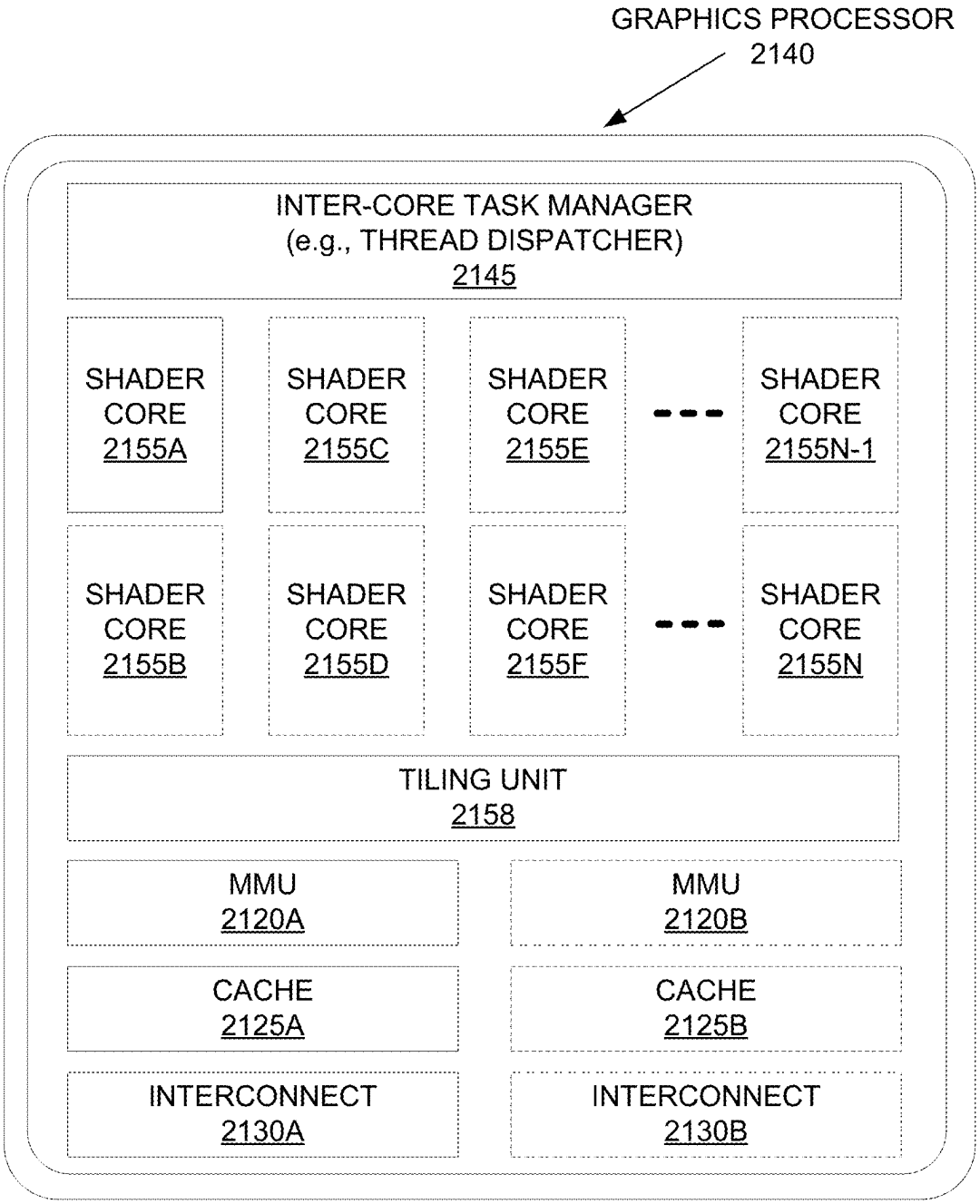
GRAPHICS PROCESSOR
2140
INTER-CORE TASK MANAGER
(e.g., THREAD DISPATCHER)
2145
SHADER CORE 2155A
SHADER CORE 2155C
SHADER CORE 2155E
SHADER CORE 2155N-1
SHADER CORE 2155B
SHADER CORE 2155D
SHADER CORE 2155F
SHADER CORE 2155N
TILING UNIT
2158
MMU
2120A
MMU
2120B
CACHE
2125A
CACHE
2125B
INTERCONNECT
2130A
INTERCONNECT
2130B

FIG. 21B

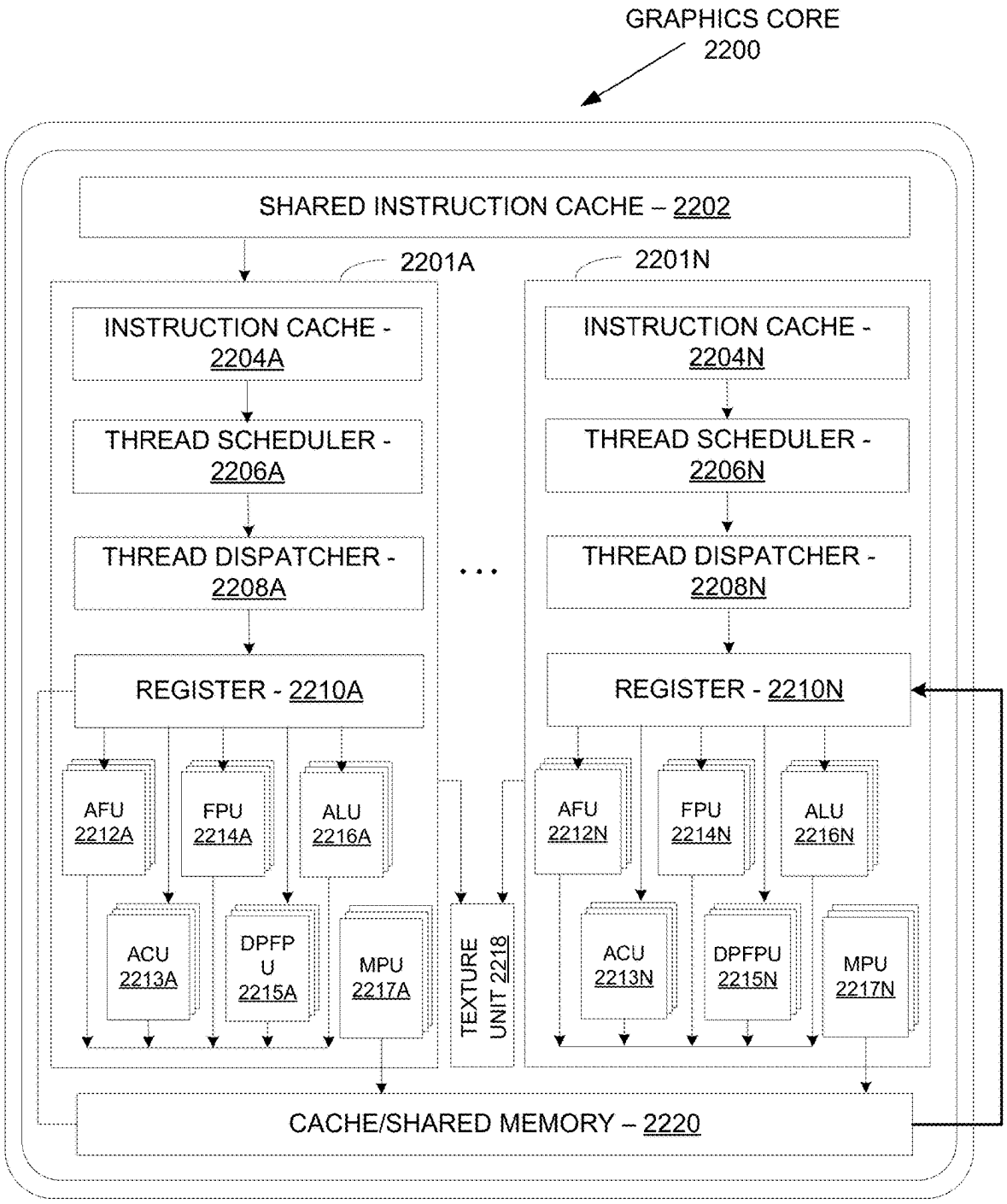
GRAPHICS CORE
2200
SHARED INSTRUCTION CACHE – 2202
2201A
2201N
INSTRUCTION CACHE - 2204A
INSTRUCTION CACHE - 2204N
THREAD SCHEDULER - 2206A
THREAD SCHEDULER - 2206N
THREAD DISPATCHER - 2208A
THREAD DISPATCHER - 2208N
REGISTER - 2210A
REGISTER - 2210N
AFU 2212A
FPU 2214A
ALU 2216A
AFU 2212N
FPU 2214N
ALU 2216N
ACU 2213A
DPFPU 2215A
MPU 2217A
TEXTURE UNIT 2218
ACU 2213N
DPFPU 2215N
MPU 2217N
CACHE/SHARED MEMORY – 2220

FIG. 22A

GENERAL-PURPOSE GRAPHICS PROCESSING UNIT 2230
MEMORY CONTROLLER 2242B
MEMOR Y 2244B
HOST INTERFACE 2232
GLOBAL SCHEDULER 2234
COMPUTE CLUSTER 2236D
COMPUTE CLUSTER 2236C
COMPUTE CLUSTER 2236B
COMPUTE CLUSTER 2236A
CACHE MEMORY 2238
COMPUTE CLUSTER 2236H
COMPUTE CLUSTER 2236G
COMPUTE CLUSTER 2236F
COMPUTE CLUSTER 2236E
I/O HUB 2239
GPU LINK 2240
MEMORY CONTROLLER 2242A
MEMORY 2244A

FIG. 22B

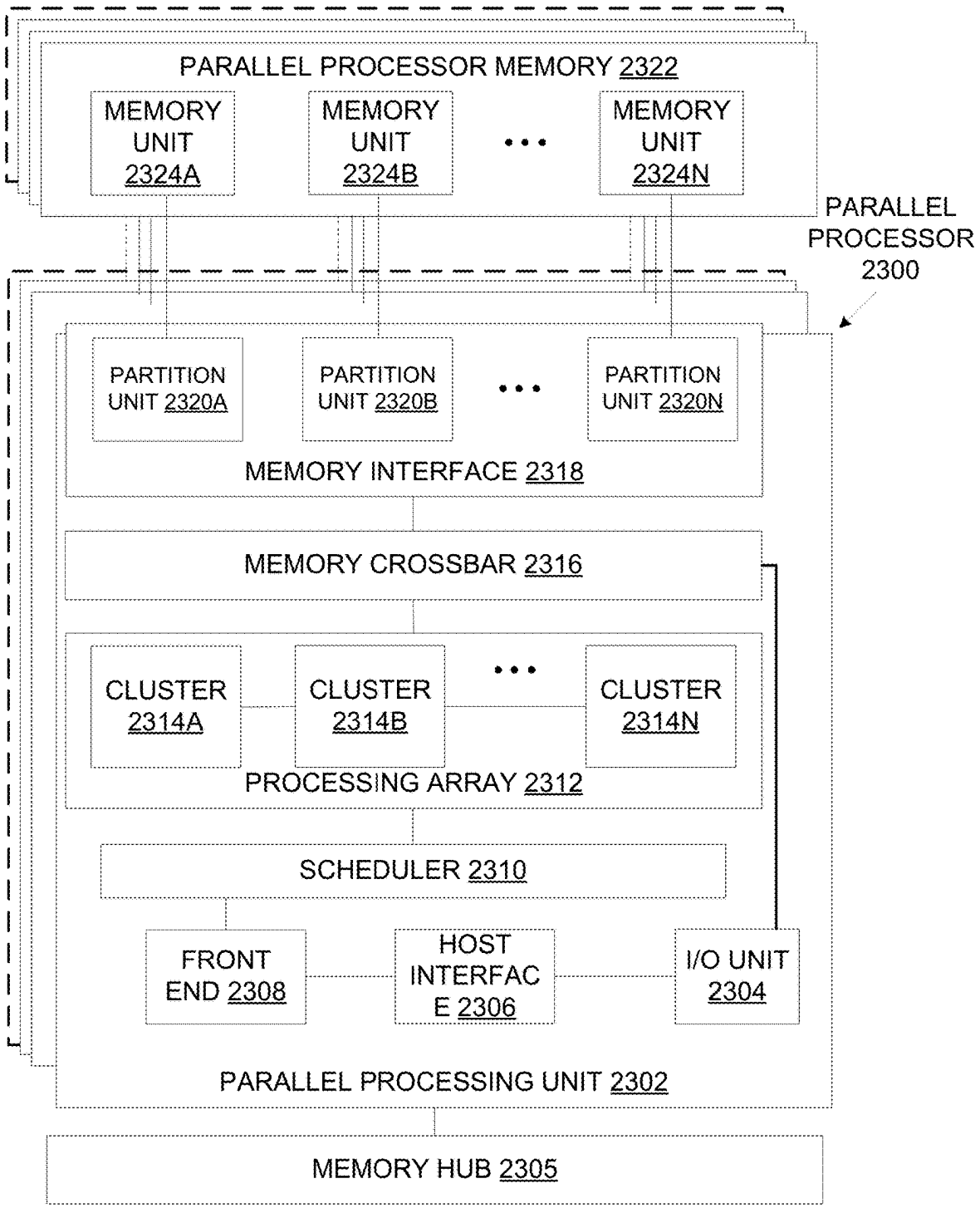
PARALLEL PROCESSOR MEMORY 2322
MEMORY UNIT 2324A
MEMORY UNIT 2324B
MEMORY UNIT 2324N
PARALLEL PROCESSOR 2300
PARTITION UNIT 2320A
PARTITION UNIT 2320B
PARTITION UNIT 2320N
MEMORY INTERFACE 2318
MEMORY CROSSBAR 2316
CLUSTER 2314A
CLUSTER 2314B
CLUSTER 2314N
PROCESSING ARRAY 2312
SCHEDULER 2310
FRONT END 2308
HOST INTERFACE 2306
I/O UNIT 2304
PARALLEL PROCESSING UNIT 2302
MEMORY HUB 2305

FIG. 23A

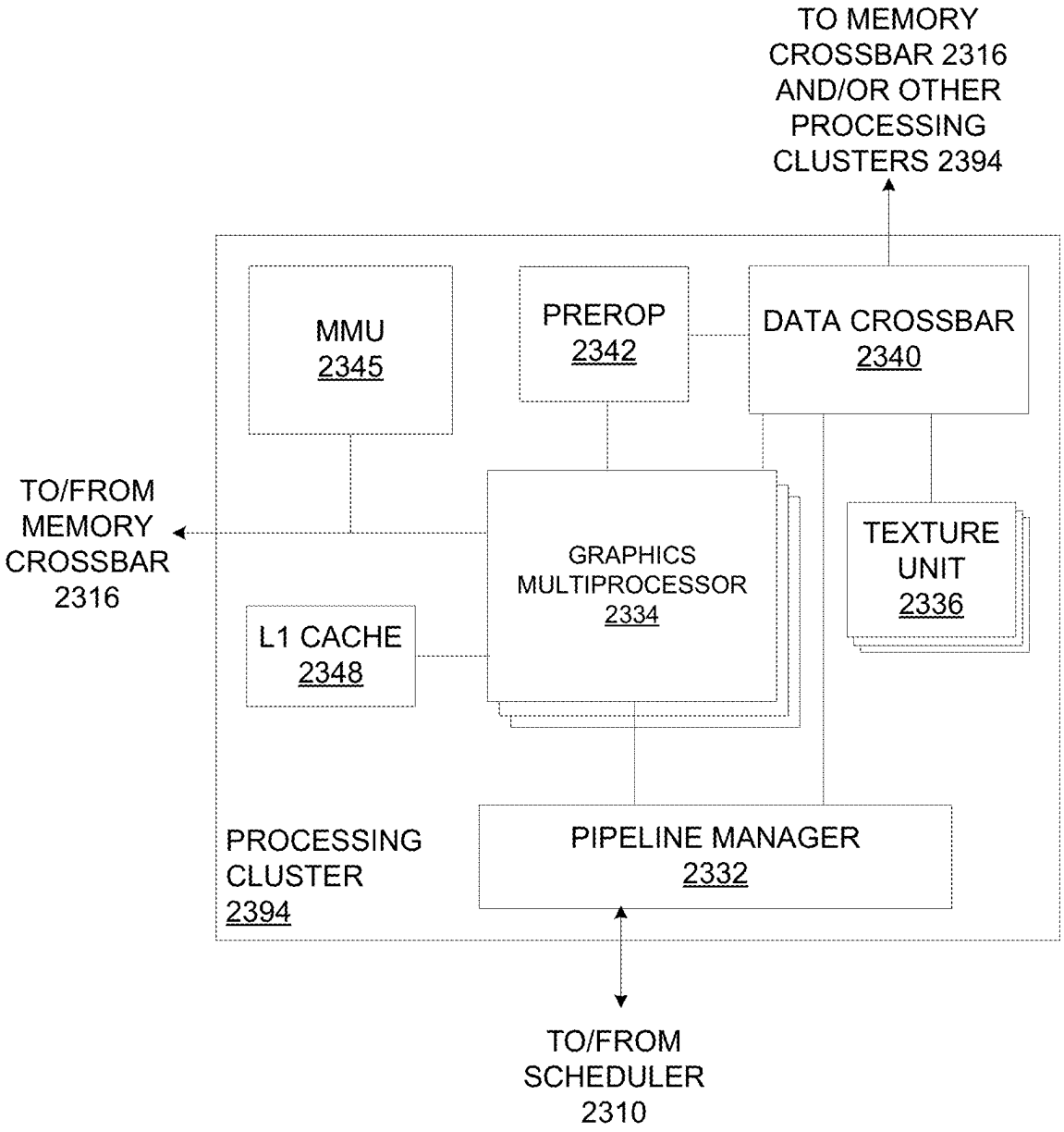
TO MEMORY CROSSBAR 2316 AND/OR OTHER PROCESSING CLUSTERS 2394
MMU 2345
PREROP 2342
DATA CROSSBAR 2340
TO/FROM MEMORY CROSSBAR 2316
GRAPHICS MULTIPROCESSOR 2334
TEXTURE UNIT 2336
L1 CACHE 2348
PROCESSING CLUSTER 2394
PIPELINE MANAGER 2332
TO/FROM SCHEDULER 2310

FIG. 23B

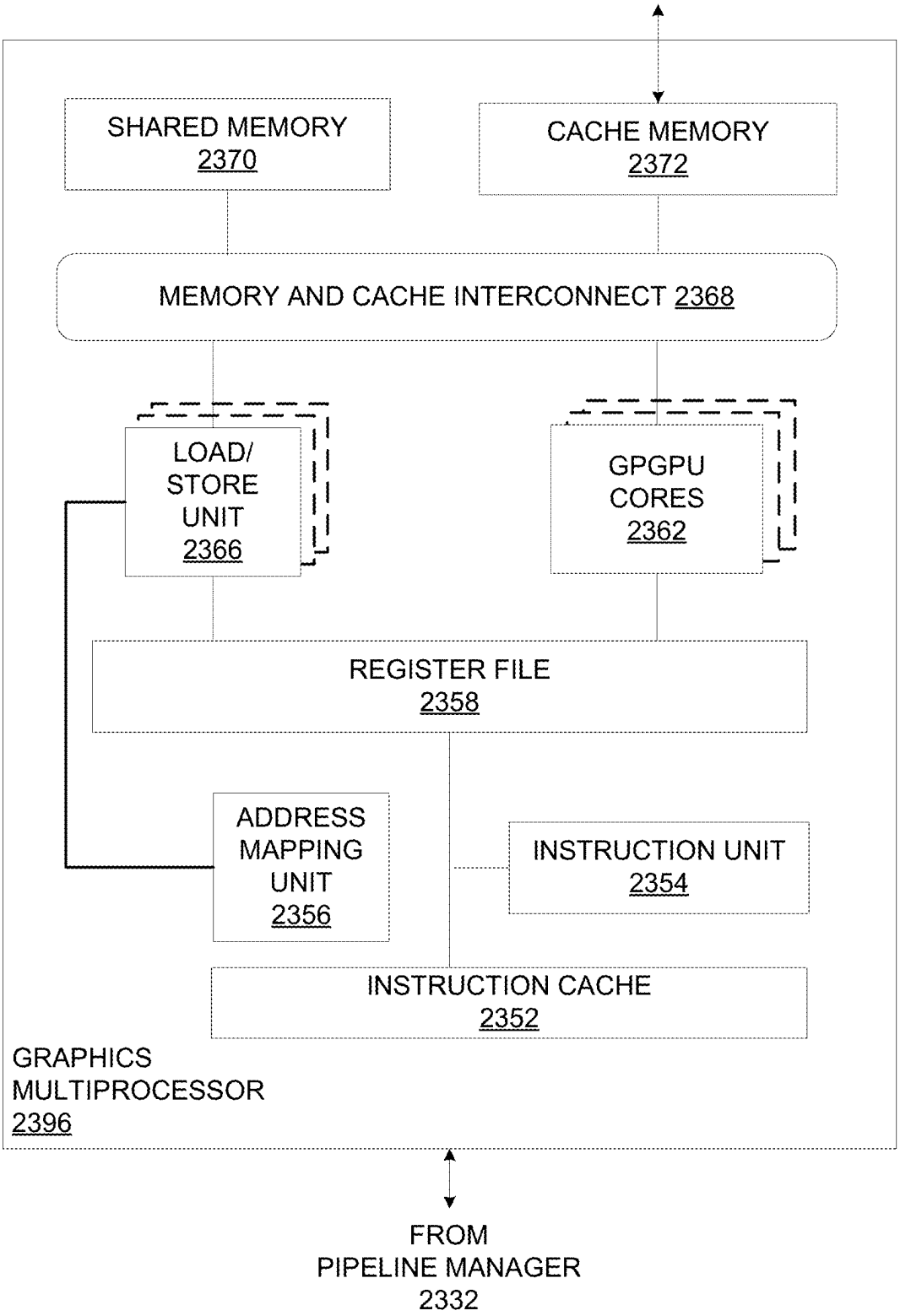
SHARED MEMORY
2370
CACHE MEMORY
2372
MEMORY AND CACHE INTERCONNECT 2368
LOAD/
STORE
UNIT
2366
GPGPU
CORES
2362
REGISTER FILE
2358
ADDRESS
MAPPING
UNIT
2356
INSTRUCTION UNIT
2354
INSTRUCTION CACHE
2352
GRAPHICS
MULTIPROCESSOR
2396
FROM
PIPELINE MANAGER
2332

FIG. 23C

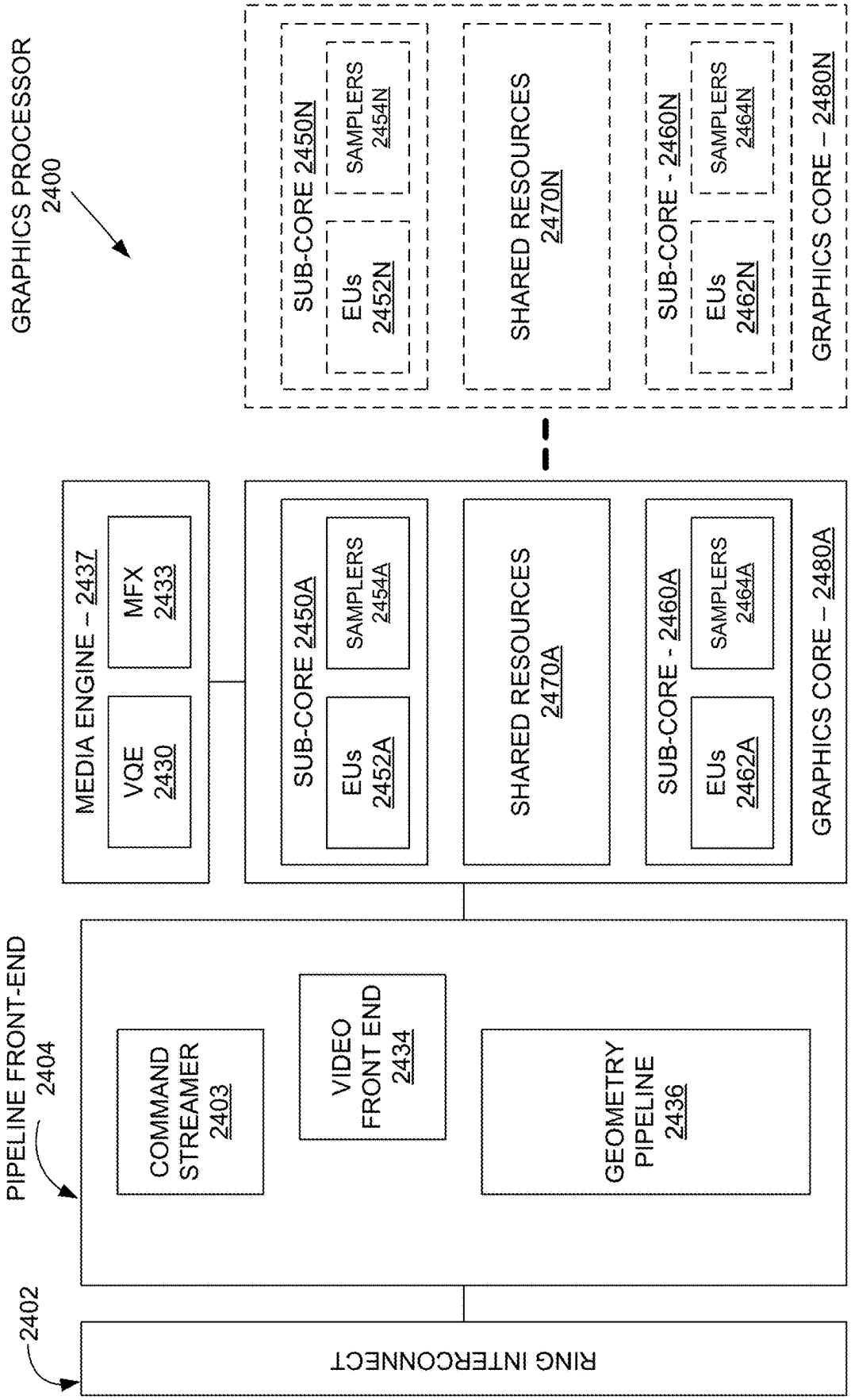
GRAPHICS PROCESSOR
2400
SUB-CORE 2450N
EUs
2452N
SAMPLERS
2454N
SHARED RESOURCES
2470N
SUB-CORE - 2460N
EUs
2462N
SAMPLERS
2464N
GRAPHICS CORE – 2480N
MEDIA ENGINE – 2437
VQE
2430
MFX
2433
SUB-CORE 2450A
EUs
2452A
SAMPLERS
2454A
SHARED RESOURCES
2470A
SUB-CORE - 2460A
EUs
2462A
SAMPLERS
2464A
GRAPHICS CORE – 2480A
PIPELINE FRONT-END
2404
COMMAND
STREAMER
2403
VIDEO
FRONT END
2434
GEOMETRY
PIPELINE
2436
2402
RING INTERCONNECT

FIG. 24

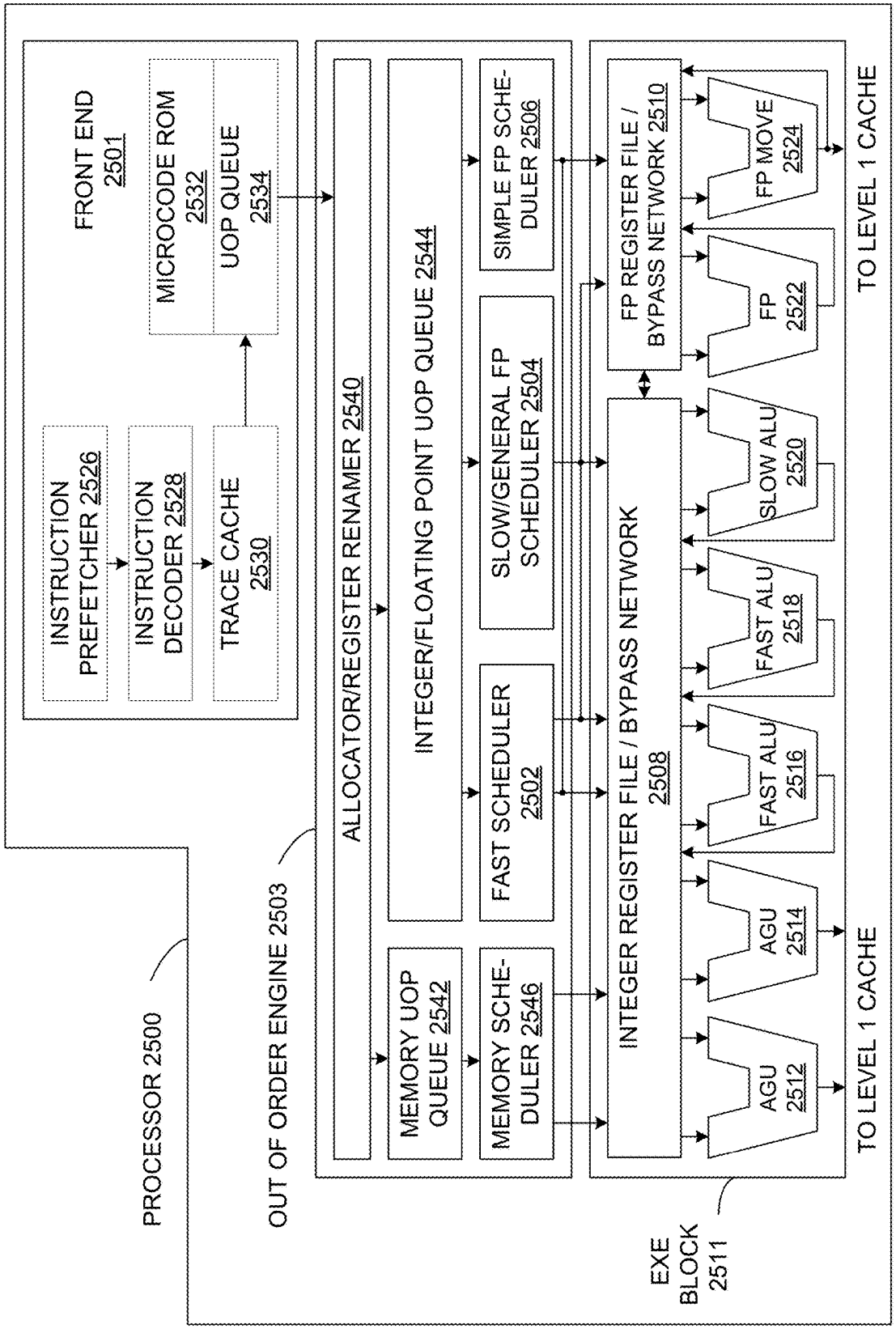
PROCESSOR 2500
FRONT END 2501
INSTRUCTION PREFETCHER 2526
INSTRUCTION DECODER 2528
TRACE CACHE 2530
MICROCODE ROM 2532
UOP QUEUE 2534
OUT OF ORDER ENGINE 2503
ALLOCATOR/REGISTER RENAMER 2540
INTEGER/FLOATING POINT UOP QUEUE 2544
MEMORY UOP QUEUE 2542
MEMORY SCHE-DULER 2546
FAST SCHEDULER 2502
SLOW/GENERAL FP SCHEDULER 2504
SIMPLE FP SCHE-DULER 2506
INTEGER REGISTER FILE / BYPASS NETWORK 2508
FP REGISTER FILE / BYPASS NETWORK 2510
AGU 2512
AGU 2514
FAST ALU 2516
FAST ALU 2518
SLOW ALU 2520
FP 2522
FP MOVE 2524
TO LEVEL 1 CACHE
TO LEVEL 1 CACHE
EXE BLOCK 2511

FIG. 25

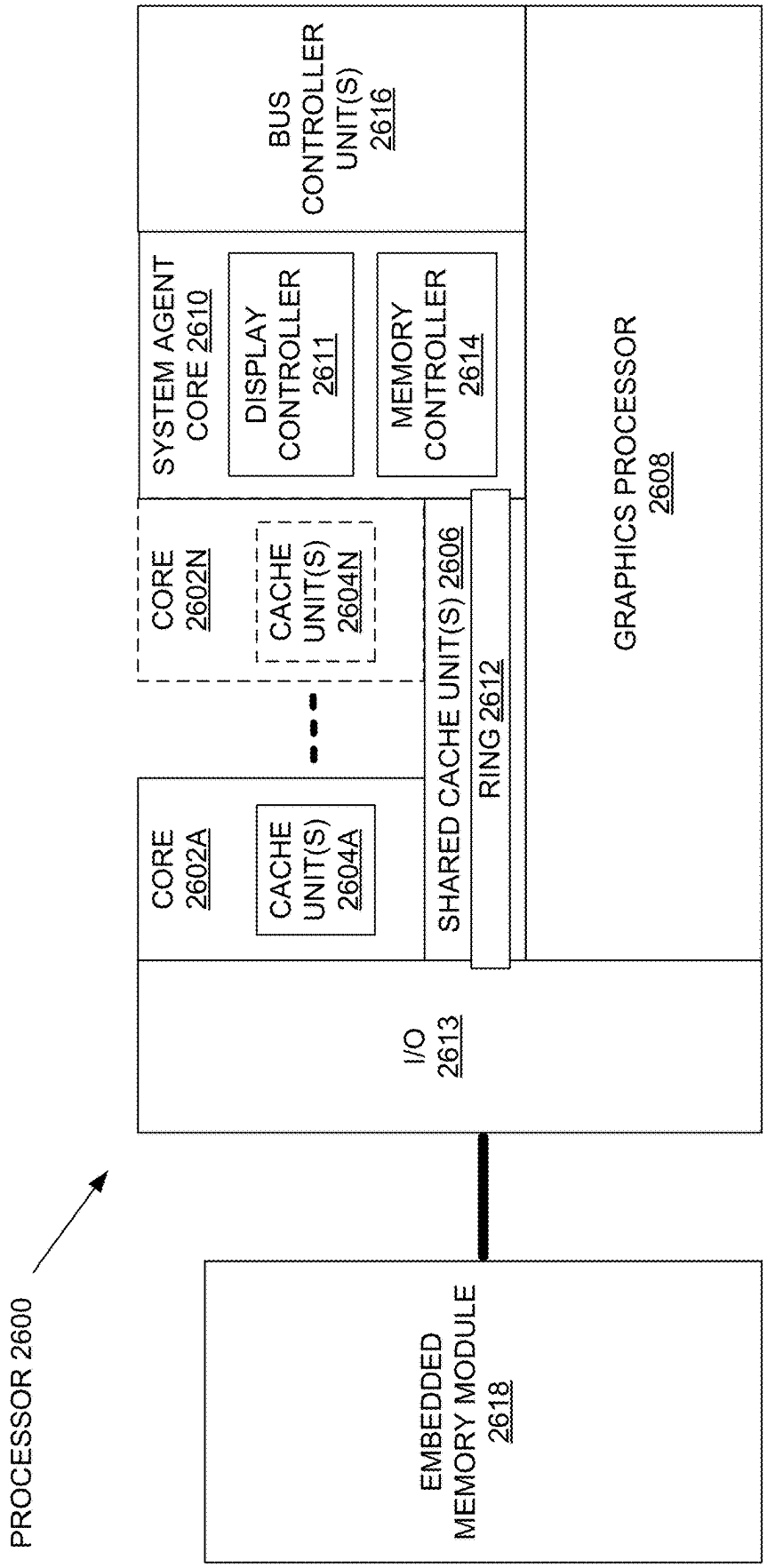
PROCESSOR 2600
BUS CONTROLLER UNIT(S) 2616
SYSTEM AGENT CORE 2610
DISPLAY CONTROLLER 2611
MEMORY CONTROLLER 2614
CORE 2602N
CACHE UNIT(S) 2604N
CORE 2602A
CACHE UNIT(S) 2604A
SHARED CACHE UNIT(S) 2606
RING 2612
GRAPHICS PROCESSOR 2608
I/O 2613
EMBEDDED MEMORY MODULE 2618

FIG. 26

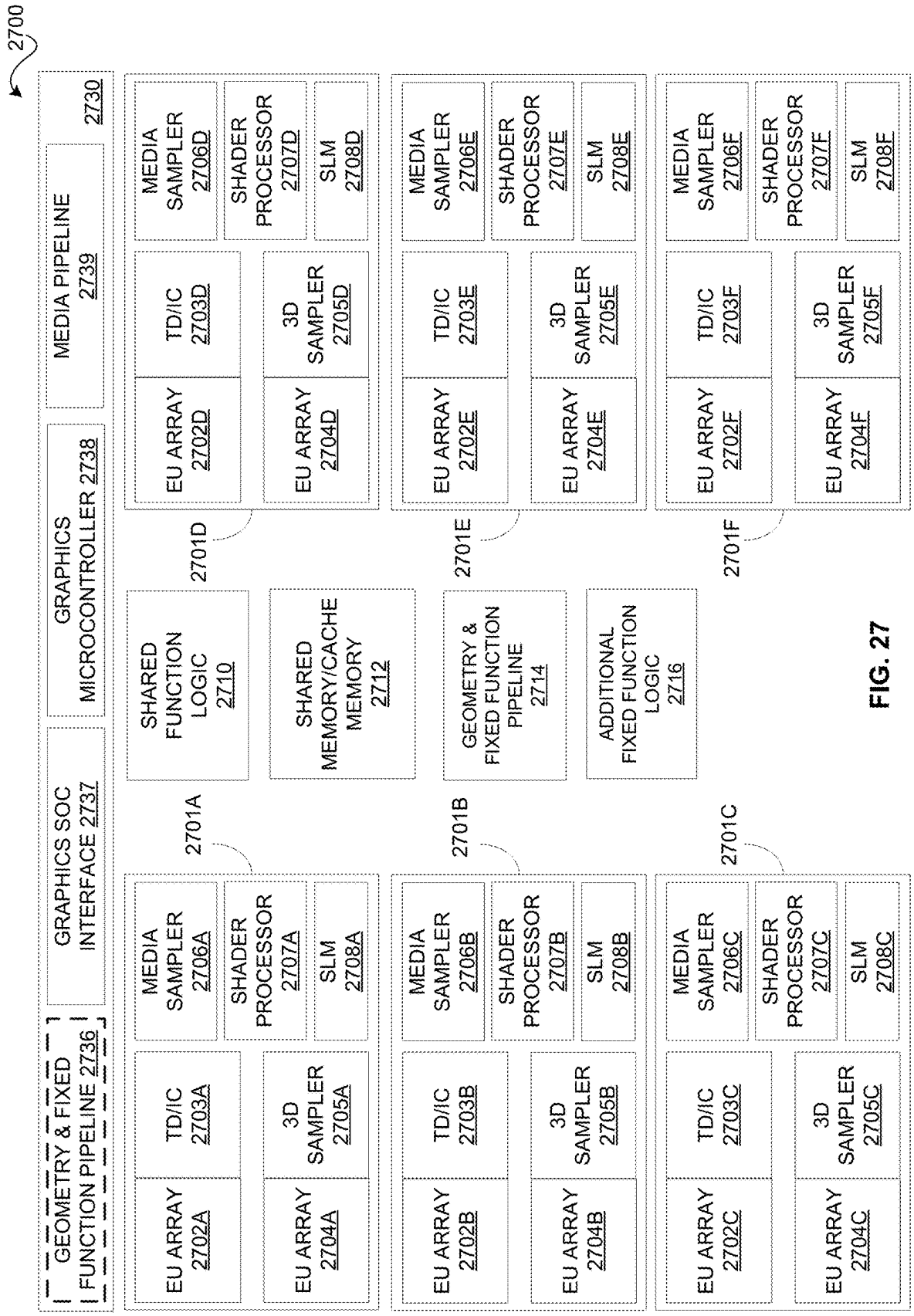
2700
GEOMETRY & FIXED FUNCTION PIPELINE 2736
GRAPHICS SOC INTERFACE 2737
GRAPHICS MICROCONTROLLER 2738
MEDIA PIPELINE 2739
2730
EU ARRAY 2702A
TD/IC 2703A
MEDIA SAMPLER 2706A
SHADER PROCESSOR 2707A
SLM 2708A
EU ARRAY 2704A
3D SAMPLER 2705A
2701A
EU ARRAY 2702B
TD/IC 2703B
MEDIA SAMPLER 2706B
SHADER PROCESSOR 2707B
SLM 2708B
EU ARRAY 2704B
3D SAMPLER 2705B
2701B
EU ARRAY 2702C
TD/IC 2703C
MEDIA SAMPLER 2706C
SHADER PROCESSOR 2707C
SLM 2708C
EU ARRAY 2704C
3D SAMPLER 2705C
2701C
SHARED FUNCTION LOGIC 2710
SHARED MEMORY/CACHE MEMORY 2712
GEOMETRY & FIXED FUNCTION PIPELINE 2714
ADDITIONAL FIXED FUNCTION LOGIC 2716
EU ARRAY 2702D
TD/IC 2703D
MEDIA SAMPLER 2706D
SHADER PROCESSOR 2707D
SLM 2708D
EU ARRAY 2704D
3D SAMPLER 2705D
2701D
EU ARRAY 2702E
TD/IC 2703E
MEDIA SAMPLER 2706E
SHADER PROCESSOR 2707E
SLM 2708E
EU ARRAY 2704E
3D SAMPLER 2705E
2701E
EU ARRAY 2702F
TD/IC 2703F
MEDIA SAMPLER 2706F
SHADER PROCESSOR 2707F
SLM 2708F
EU ARRAY 2704F
3D SAMPLER 2705F
2701F

FIG. 27

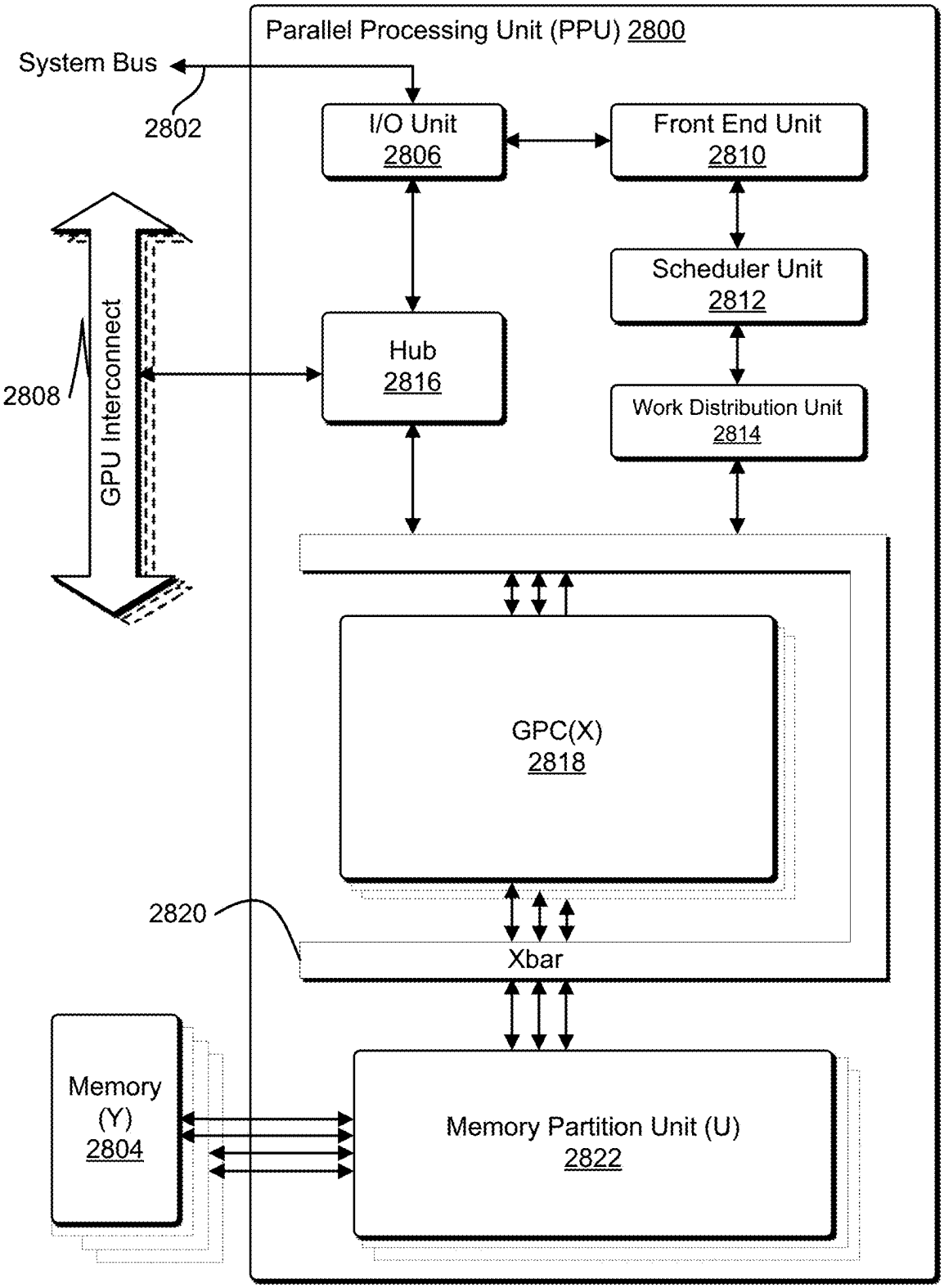
Parallel Processing Unit (PPU) 2800
System Bus
2802
I/O Unit
2806
Front End Unit
2810
Scheduler Unit
2812
Hub
2816
Work Distribution Unit
2814
2808
GPU Interconnect
GPC(X)
2818
2820
Xbar
Memory
(Y)
2804
Memory Partition Unit (U)
2822

FIG. 28

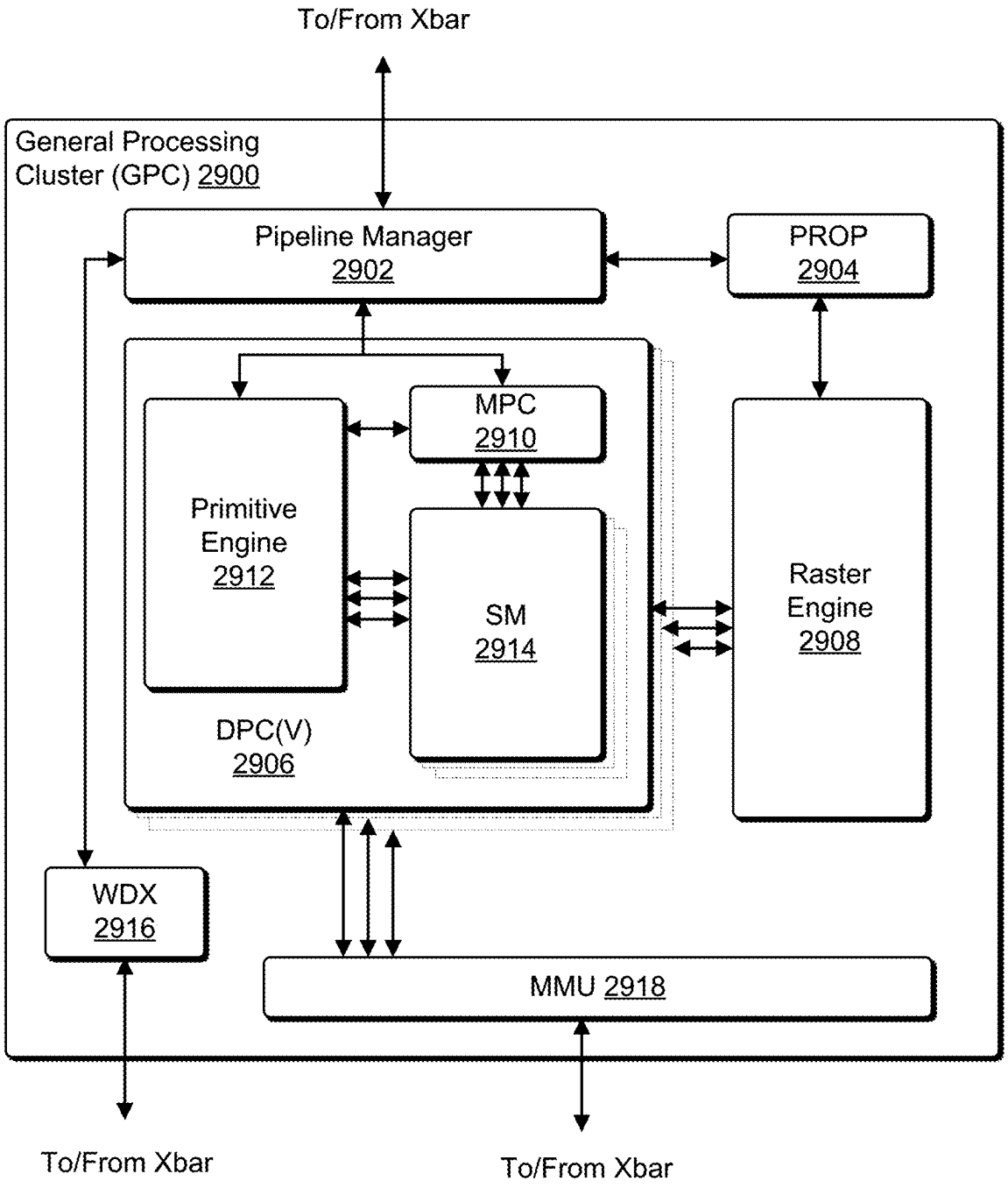
To/From Xbar
General Processing Cluster (GPC) 2900
Pipeline Manager 2902
PROP 2904
MPC 2910
Primitive Engine 2912
SM 2914
Raster Engine 2908
DPC(V) 2906
WDX 2916
MMU 2918
To/From Xbar
To/From Xbar

FIG. 29

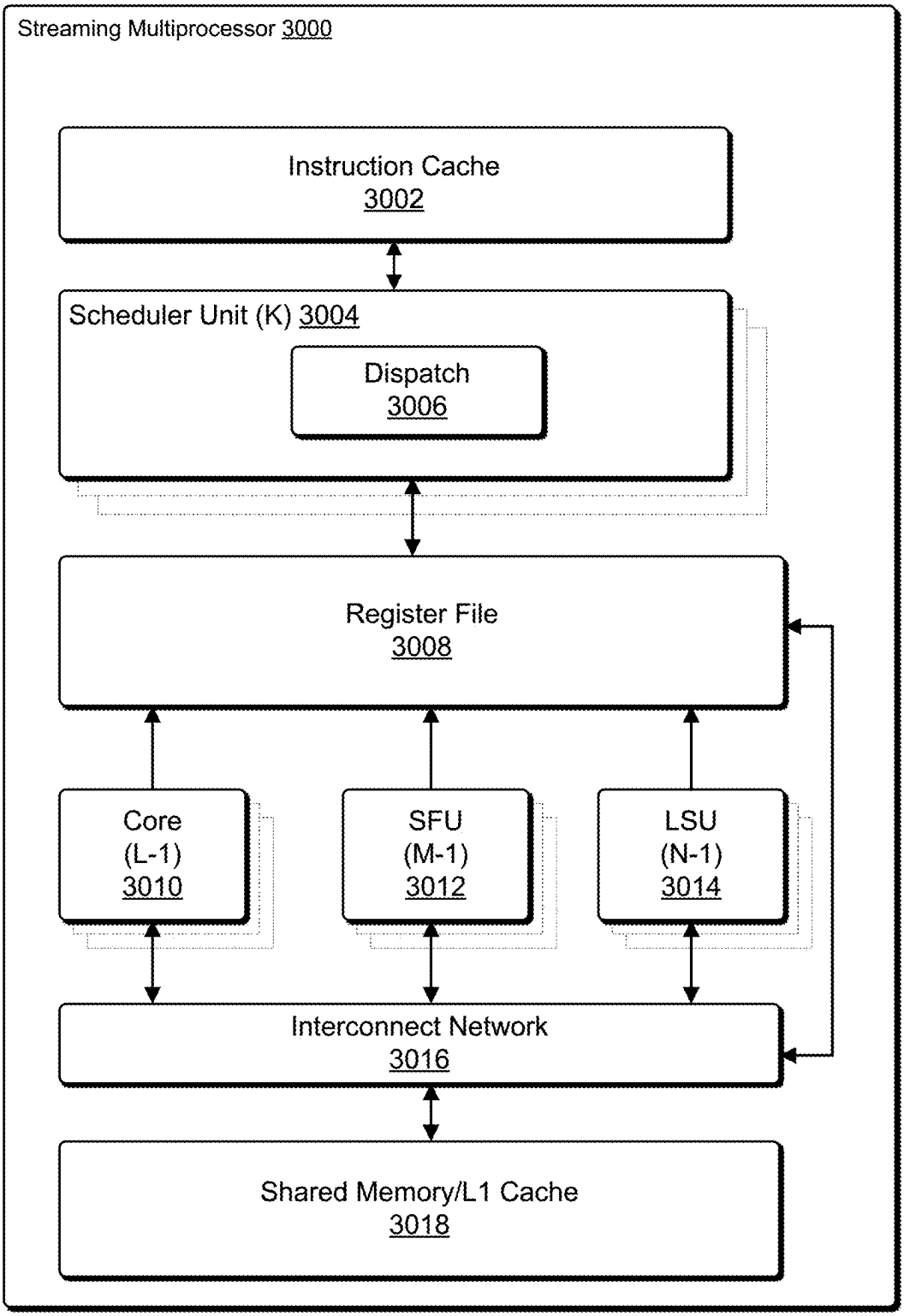
Streaming Multiprocessor 3000
Instruction Cache
3002
Scheduler Unit (K) 3004
Dispatch
3006
Register File
3008
Core
(L-1)
3010
SFU
(M-1)
3012
LSU
(N-1)
3014
Interconnect Network
3016
Shared Memory/L1 Cache
3018

FIG. 30

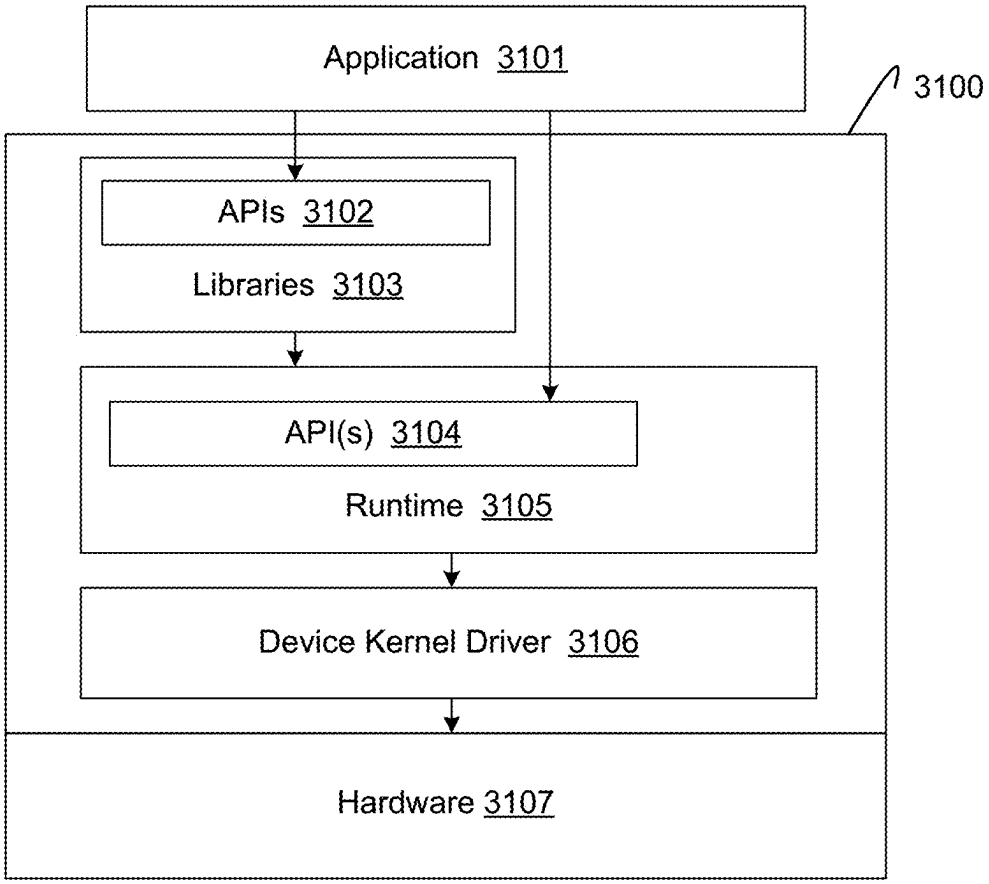
Application 3101
3100
APIs 3102
Libraries 3103
API(s) 3104
Runtime 3105
Device Kernel Driver 3106
Hardware 3107

FIG. 31

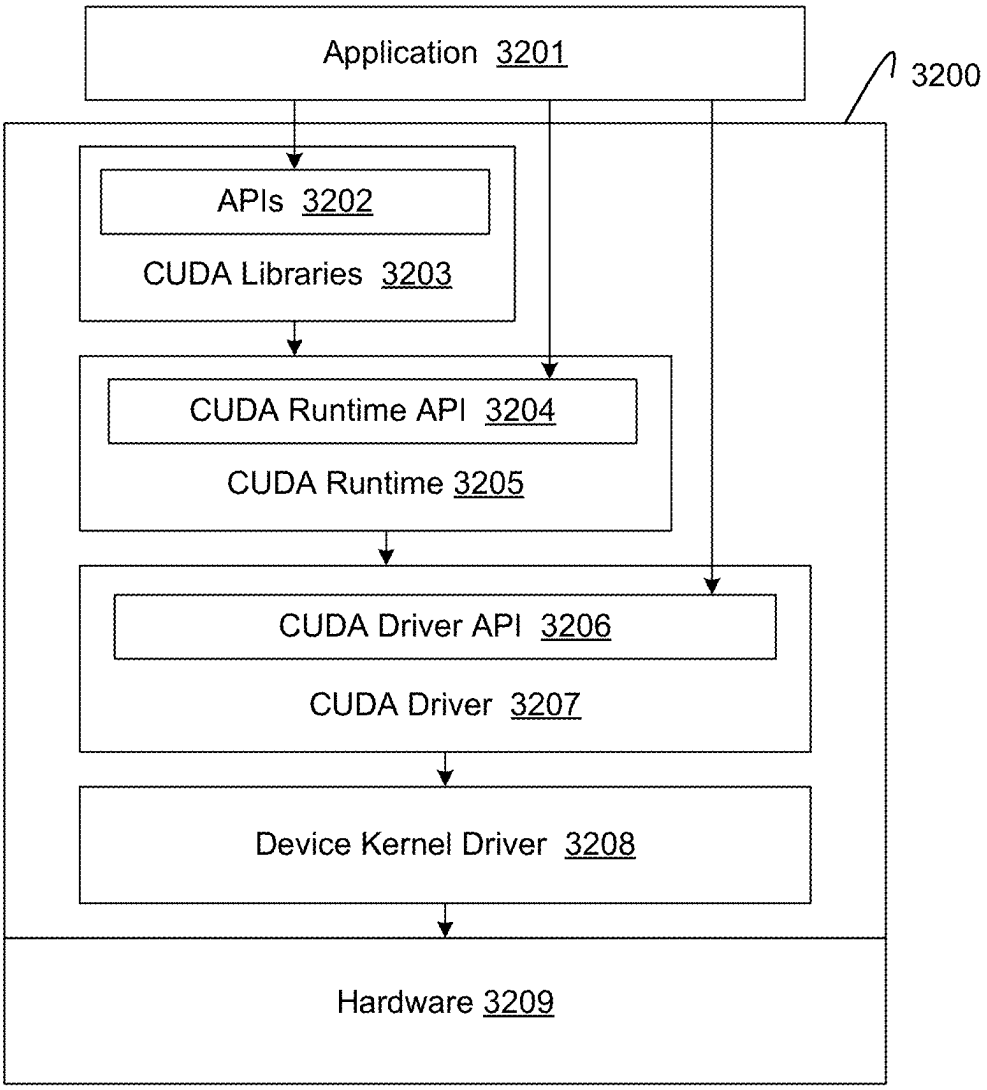
Application 3201
3200
APIs 3202
CUDA Libraries 3203
CUDA Runtime API 3204
CUDA Runtime 3205
CUDA Driver API 3206
CUDA Driver 3207
Device Kernel Driver 3208
Hardware 3209

FIG. 32

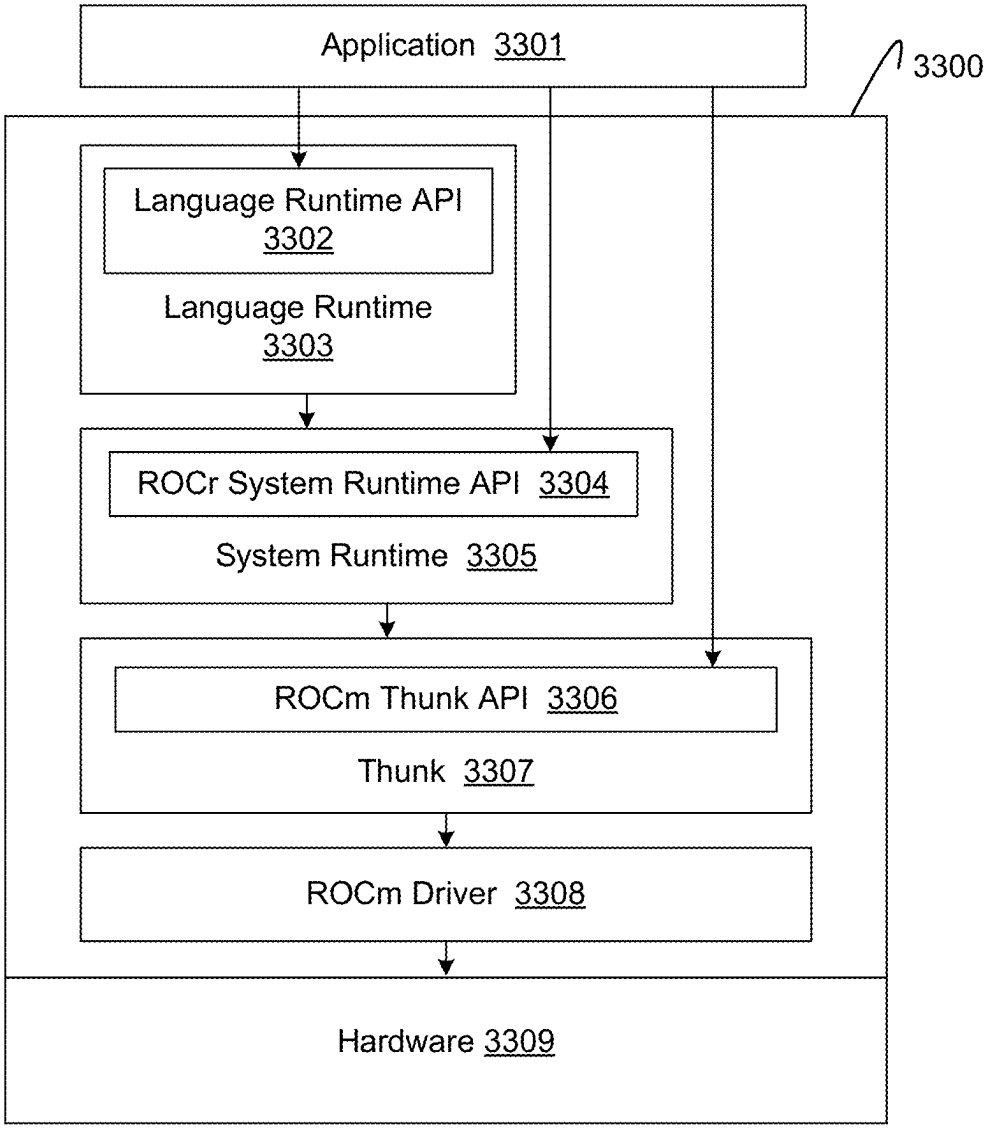
Application 3301
3300
Language Runtime API 3302
Language Runtime 3303
ROCr System Runtime API 3304
System Runtime 3305
ROCm Thunk API 3306
Thunk 3307
ROCm Driver 3308
Hardware 3309

FIG. 33

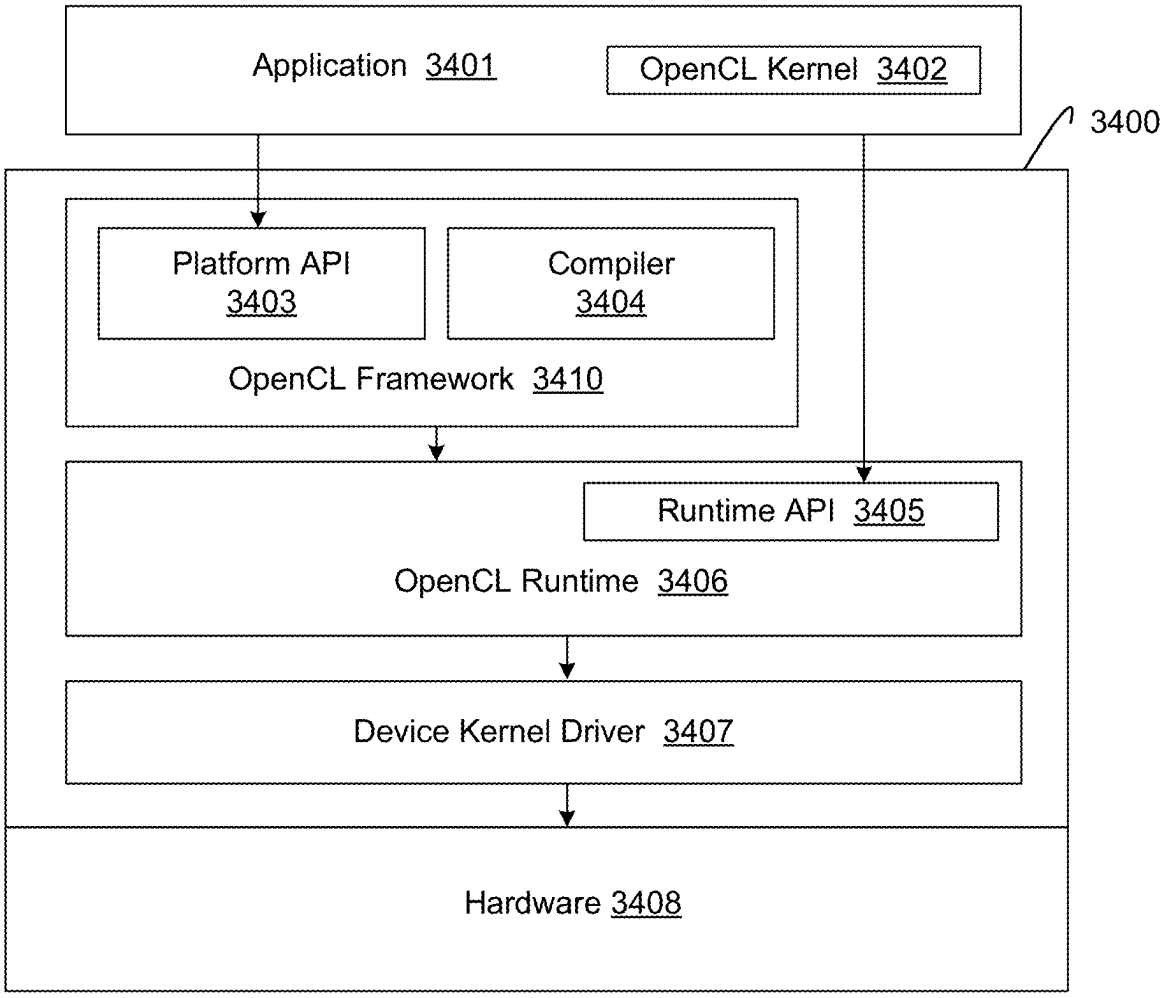
Application 3401
OpenCL Kernel 3402
3400
Platform API 3403
Compiler 3404
OpenCL Framework 3410
Runtime API 3405
OpenCL Runtime 3406
Device Kernel Driver 3407
Hardware 3408

FIG. 34

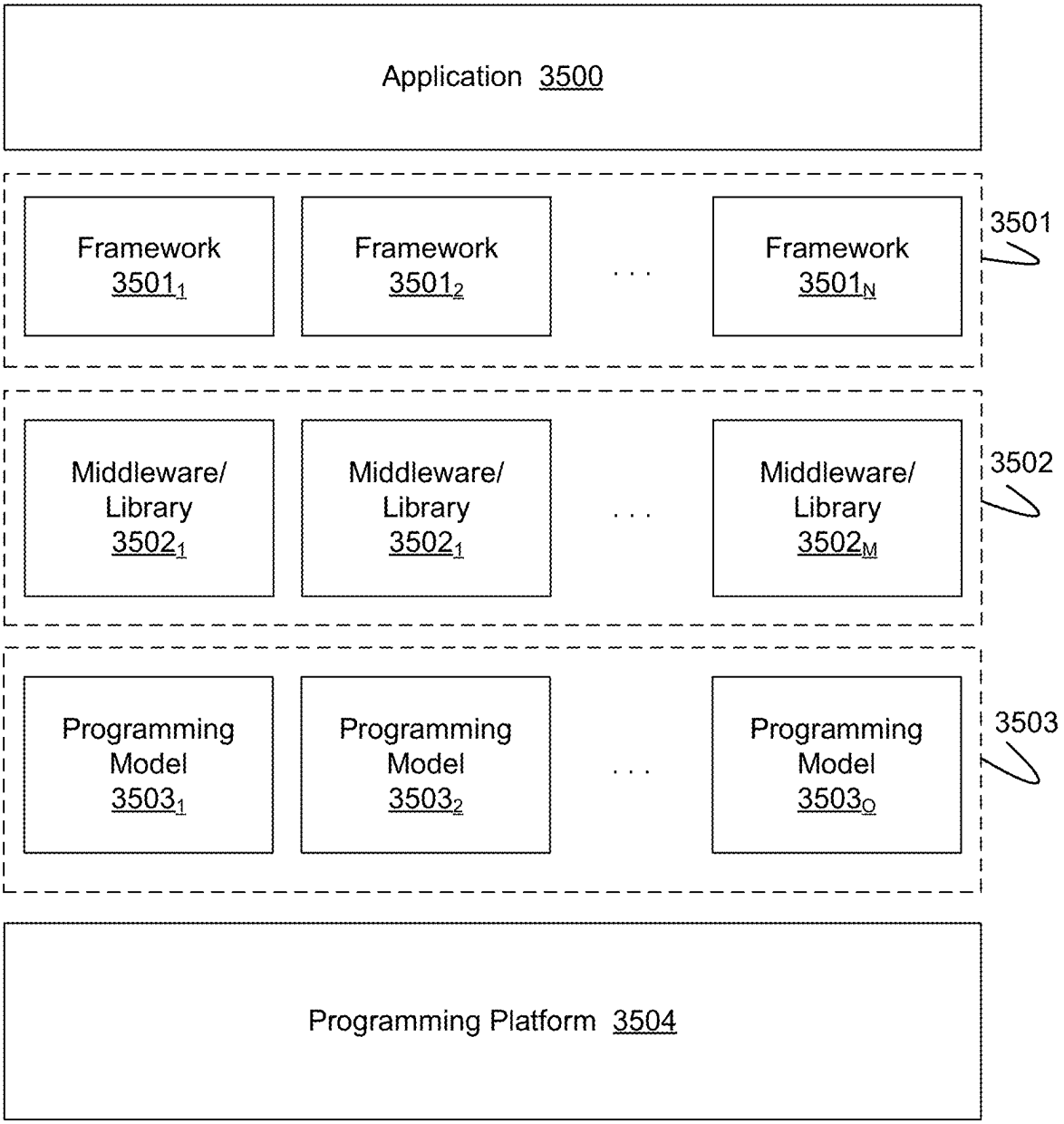
Application 3500
Framework 3501$_1$
Framework 3501$_2$
. . .
Framework 3501$_N$
3501
Middleware/ Library 3502$_1$
Middleware/ Library 3502$_1$
. . .
Middleware/ Library 3502$_M$
3502
Programming Model 3503$_1$
Programming Model 3503$_2$
. . .
Programming Model 3503$_O$
3503
Programming Platform 3504

FIG. 35

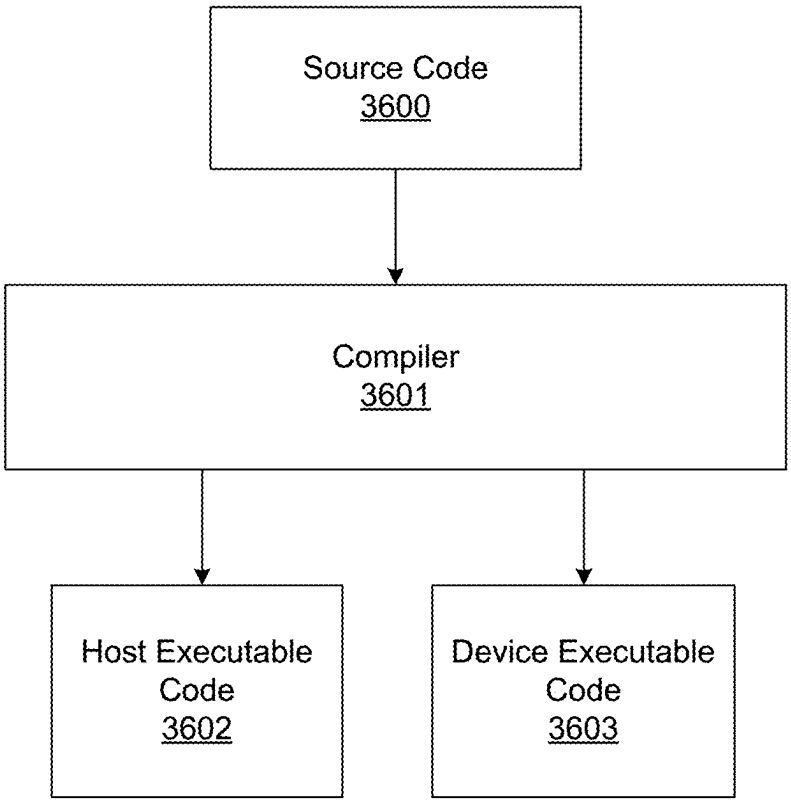
Source Code
3600
Compiler
3601
Host Executable Code
3602
Device Executable Code
3603

FIG. 36

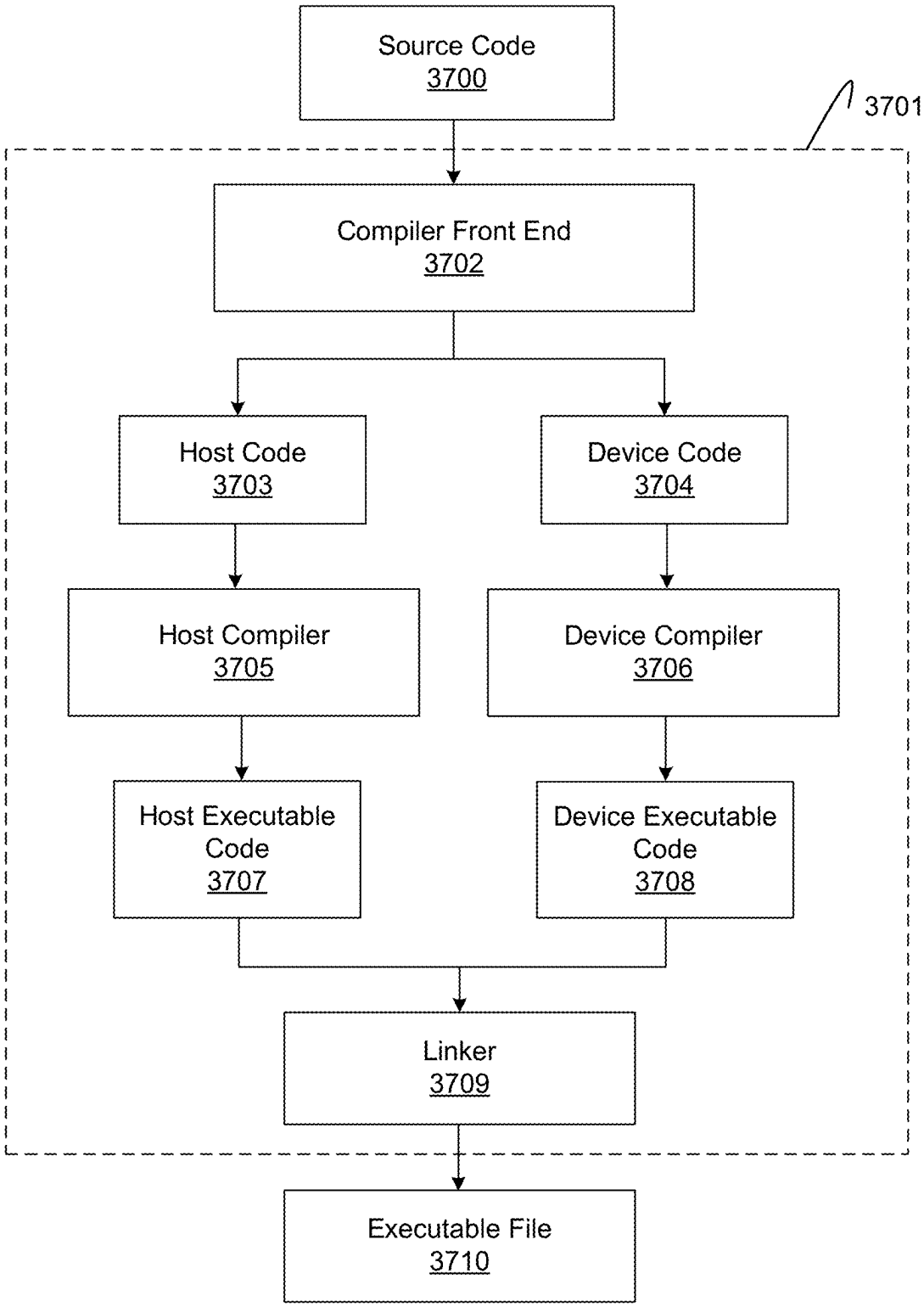
Source Code
3700
3701
Compiler Front End
3702
Host Code
3703
Device Code
3704
Host Compiler
3705
Device Compiler
3706
Host Executable Code
3707
Device Executable Code
3708
Linker
3709
Executable File
3710

FIG. 37

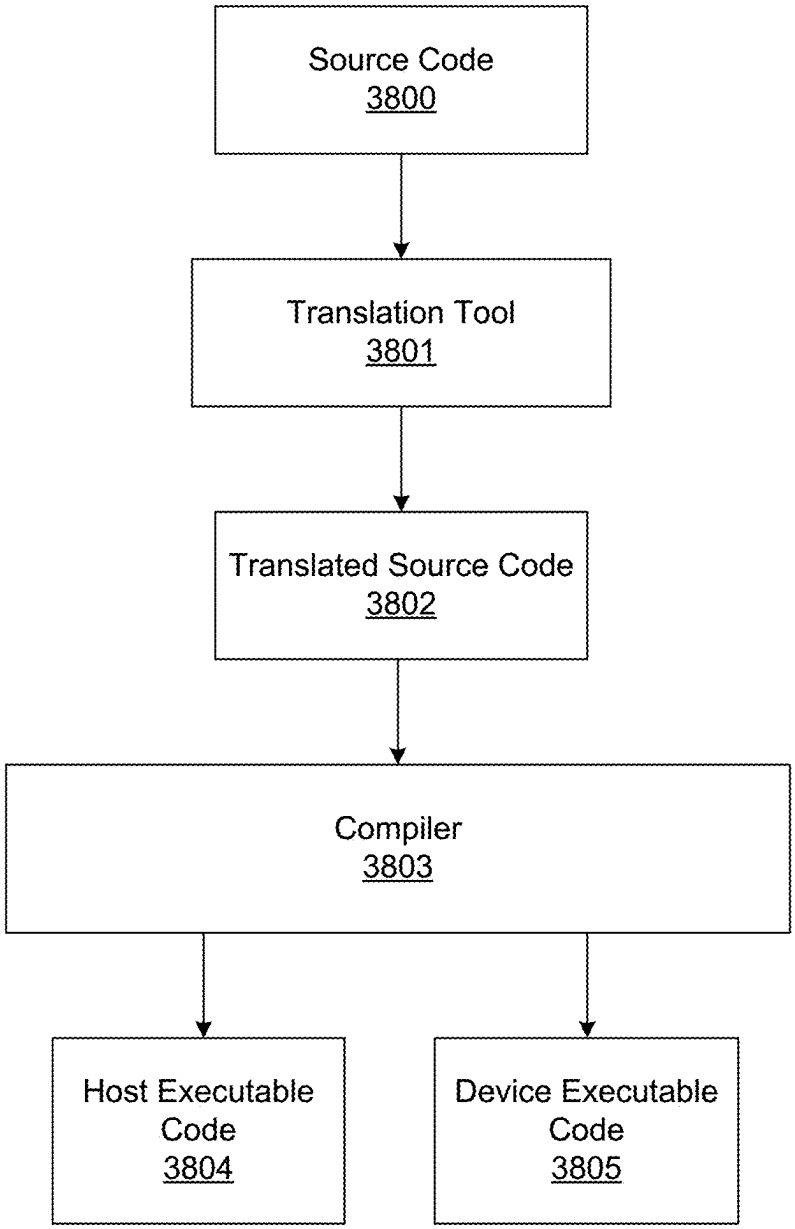
Source Code
3800
Translation Tool
3801
Translated Source Code
3802
Compiler
3803
Host Executable Code
3804
Device Executable Code
3805

FIG. 38

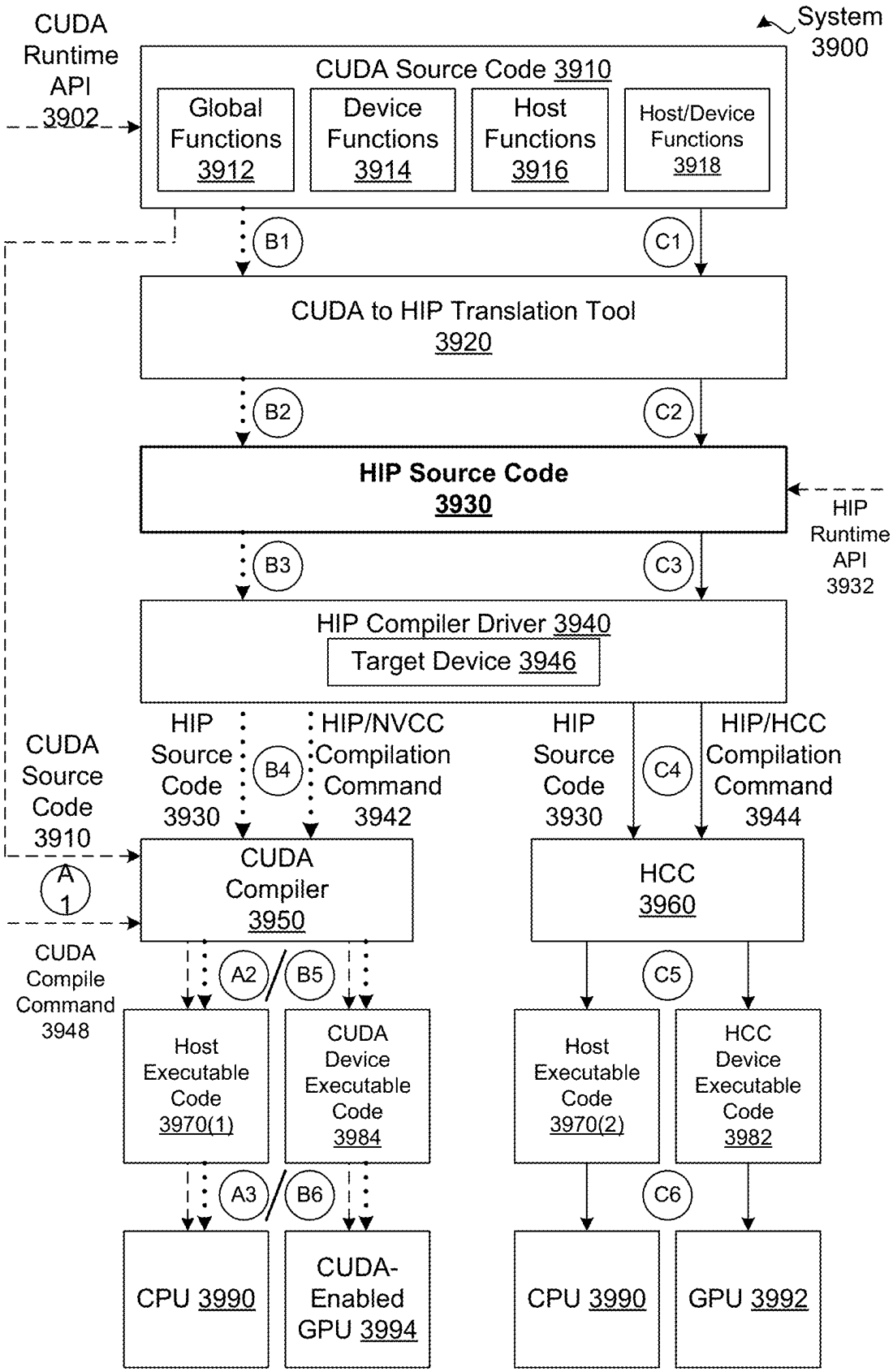
System 3900
CUDA Runtime API 3902
CUDA Source Code 3910
Global Functions 3912
Device Functions 3914
Host Functions 3916
Host/Device Functions 3918
B1
C1
CUDA to HIP Translation Tool 3920
B2
C2
HIP Source Code 3930
HIP Runtime API 3932
B3
C3
HIP Compiler Driver 3940
Target Device 3946
CUDA Source Code 3910
HIP Source Code 3930
B4
HIP/NVCC Compilation Command 3942
HIP Source Code 3930
C4
HIP/HCC Compilation Command 3944
A 1
CUDA Compiler 3950
HCC 3960
CUDA Compile Command 3948
A2
B5
C5
Host Executable Code 3970(1)
CUDA Device Executable Code 3984
Host Executable Code 3970(2)
HCC Device Executable Code 3982
A3
B6
C6
CPU 3990
CUDA-Enabled GPU 3994
CPU 3990
GPU 3992

FIG. 39A

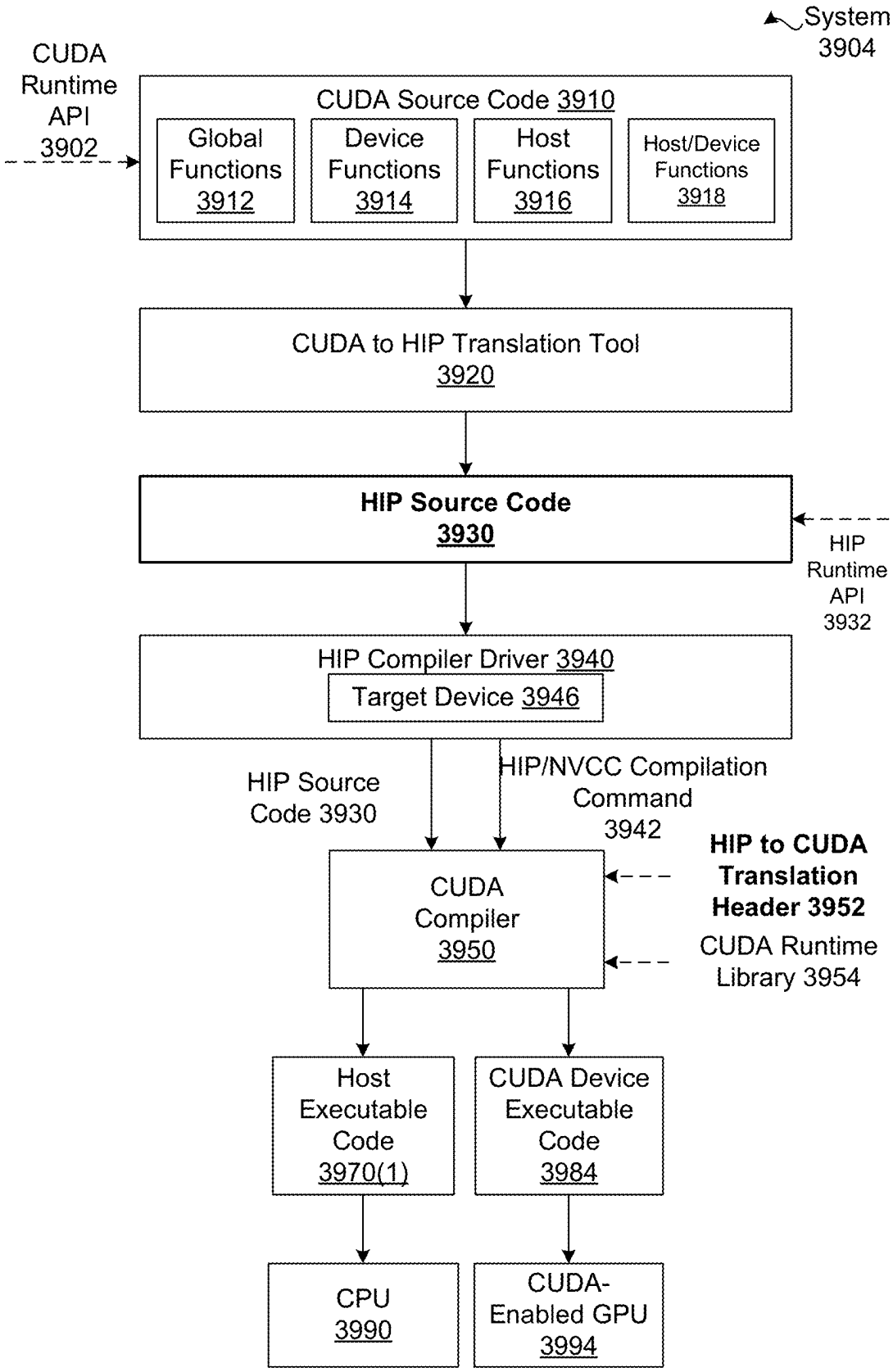
System
3904
CUDA
Runtime
API
3902
CUDA Source Code 3910
Global
Functions
3912
Device
Functions
3914
Host
Functions
3916
Host/Device
Functions
3918
CUDA to HIP Translation Tool
3920
HIP Source Code
3930
HIP
Runtime
API
3932
HIP Compiler Driver 3940
Target Device 3946
HIP Source
Code 3930
HIP/NVCC Compilation
Command
3942
HIP to CUDA
Translation
Header 3952
CUDA
Compiler
3950
CUDA Runtime
Library 3954
Host
Executable
Code
3970(1)
CUDA Device
Executable
Code
3984
CPU
3990
CUDA-
Enabled GPU
3994

FIG. 39B

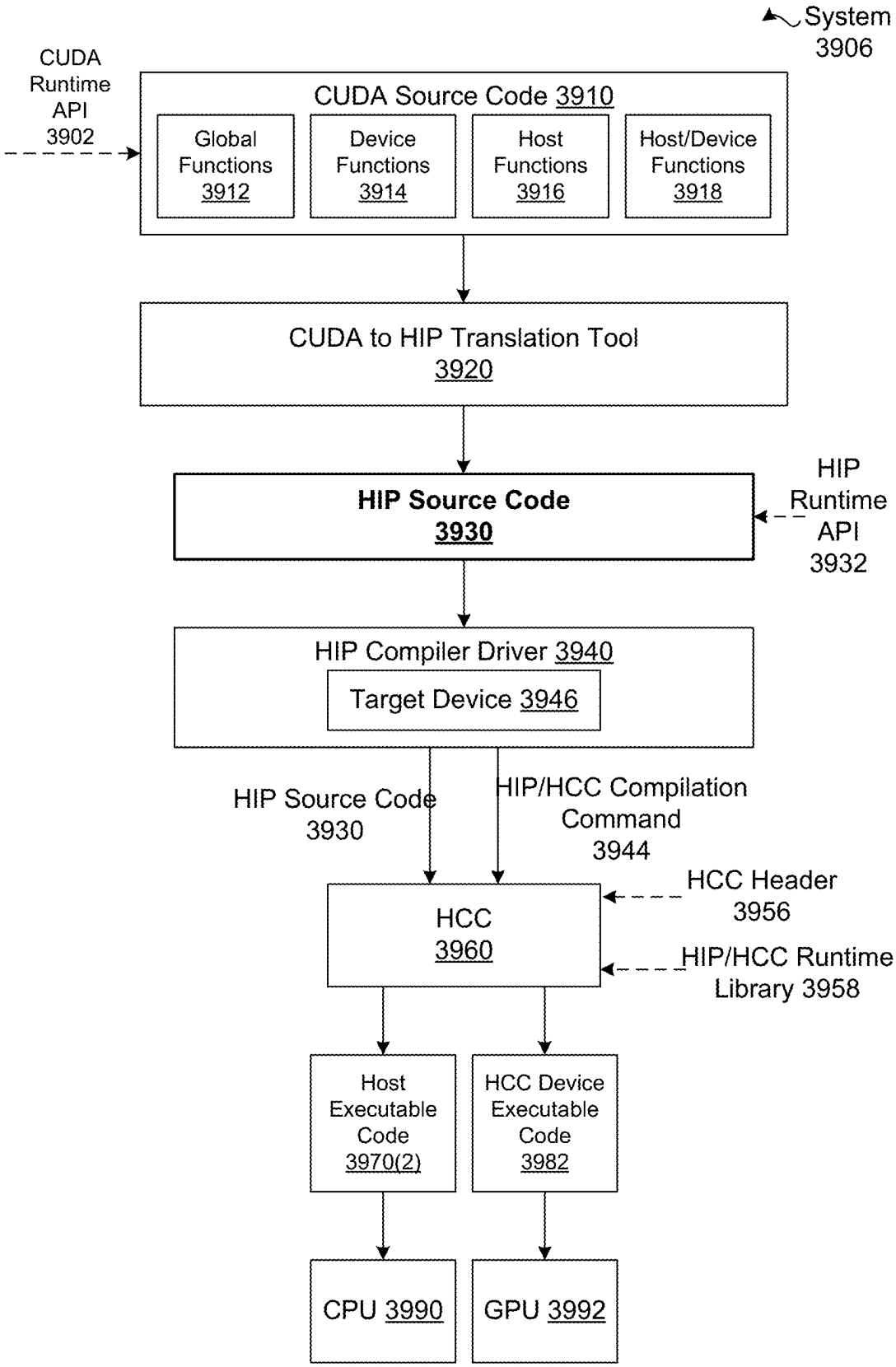
System
3906
CUDA
Runtime
API
3902
CUDA Source Code 3910
Global
Functions
3912
Device
Functions
3914
Host
Functions
3916
Host/Device
Functions
3918
CUDA to HIP Translation Tool
3920
HIP Source Code
3930
HIP
Runtime
API
3932
HIP Compiler Driver 3940
Target Device 3946
HIP Source Code
3930
HIP/HCC Compilation
Command
3944
HCC
3960
HCC Header
3956
HIP/HCC Runtime
Library 3958
Host
Executable
Code
3970(2)
HCC Device
Executable
Code
3982
CPU 3990
GPU 3992

FIG. 39C

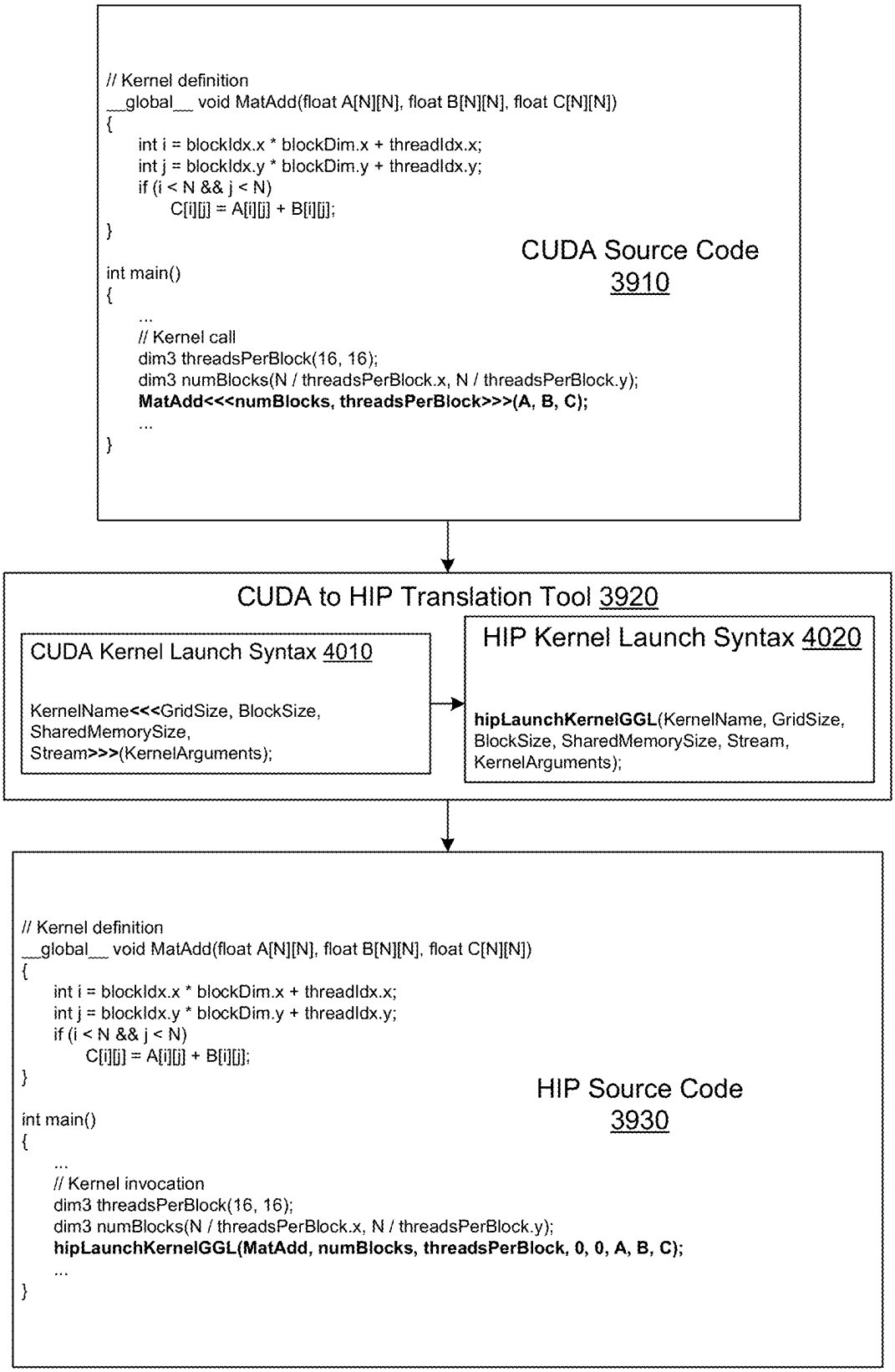
// Kernel definition
__global__ void MatAdd(float A[N][N], float B[N][N], float C[N][N])
{
int i = blockIdx.x * blockDim.x + threadIdx.x;
int j = blockIdx.y * blockDim.y + threadIdx.y;
if (i < N && j < N)
C[i][j] = A[i][j] + B[i][j];
}
int main()
{
...
// Kernel call
dim3 threadsPerBlock(16, 16);
dim3 numBlocks(N / threadsPerBlock.x, N / threadsPerBlock.y);
MatAdd<<<numBlocks, threadsPerBlock>>>(A, B, C);
...
}
CUDA Source Code
3910
CUDA to HIP Translation Tool 3920
CUDA Kernel Launch Syntax 4010
KernelName<<<GridSize, BlockSize, SharedMemorySize, Stream>>>(KernelArguments);
HIP Kernel Launch Syntax 4020
hipLaunchKernelGGL(KernelName, GridSize, BlockSize, SharedMemorySize, Stream, KernelArguments);
// Kernel definition
__global__ void MatAdd(float A[N][N], float B[N][N], float C[N][N])
{
int i = blockIdx.x * blockDim.x + threadIdx.x;
int j = blockIdx.y * blockDim.y + threadIdx.y;
if (i < N && j < N)
C[i][j] = A[i][j] + B[i][j];
}
int main()
{
...
// Kernel invocation
dim3 threadsPerBlock(16, 16);
dim3 numBlocks(N / threadsPerBlock.x, N / threadsPerBlock.y);
hipLaunchKernelGGL(MatAdd, numBlocks, threadsPerBlock, 0, 0, A, B, C);
...
}
HIP Source Code
3930

FIG. 40

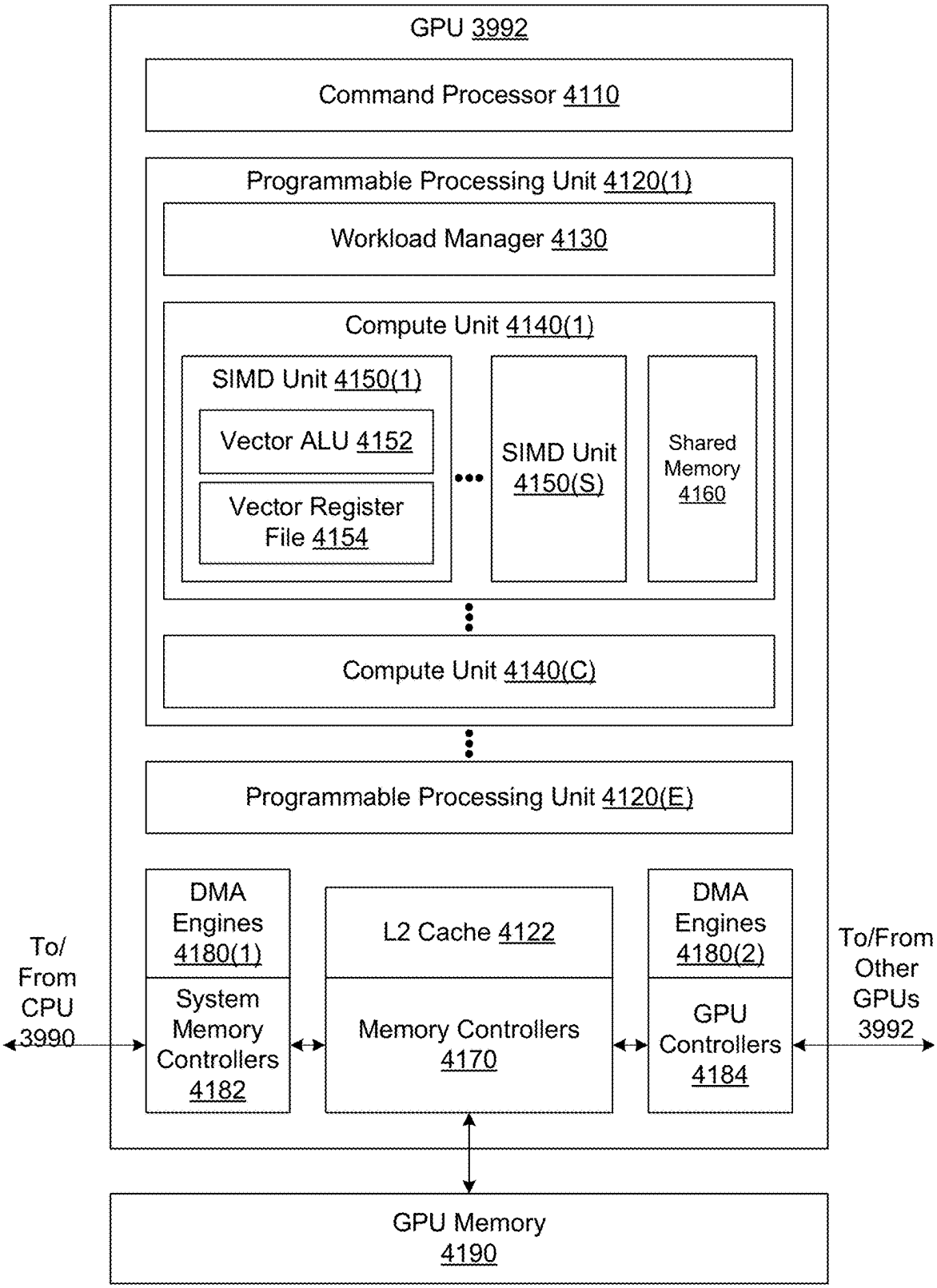
GPU 3992
Command Processor 4110
Programmable Processing Unit 4120(1)
Workload Manager 4130
Compute Unit 4140(1)
SIMD Unit 4150(1)
Vector ALU 4152
Vector Register File 4154
SIMD Unit 4150(S)
Shared Memory 4160
Compute Unit 4140(C)
Programmable Processing Unit 4120(E)
DMA Engines 4180(1)
System Memory Controllers 4182
L2 Cache 4122
Memory Controllers 4170
DMA Engines 4180(2)
GPU Controllers 4184
To/ From CPU 3990
To/From Other GPUs 3992
GPU Memory 4190

FIG. 41

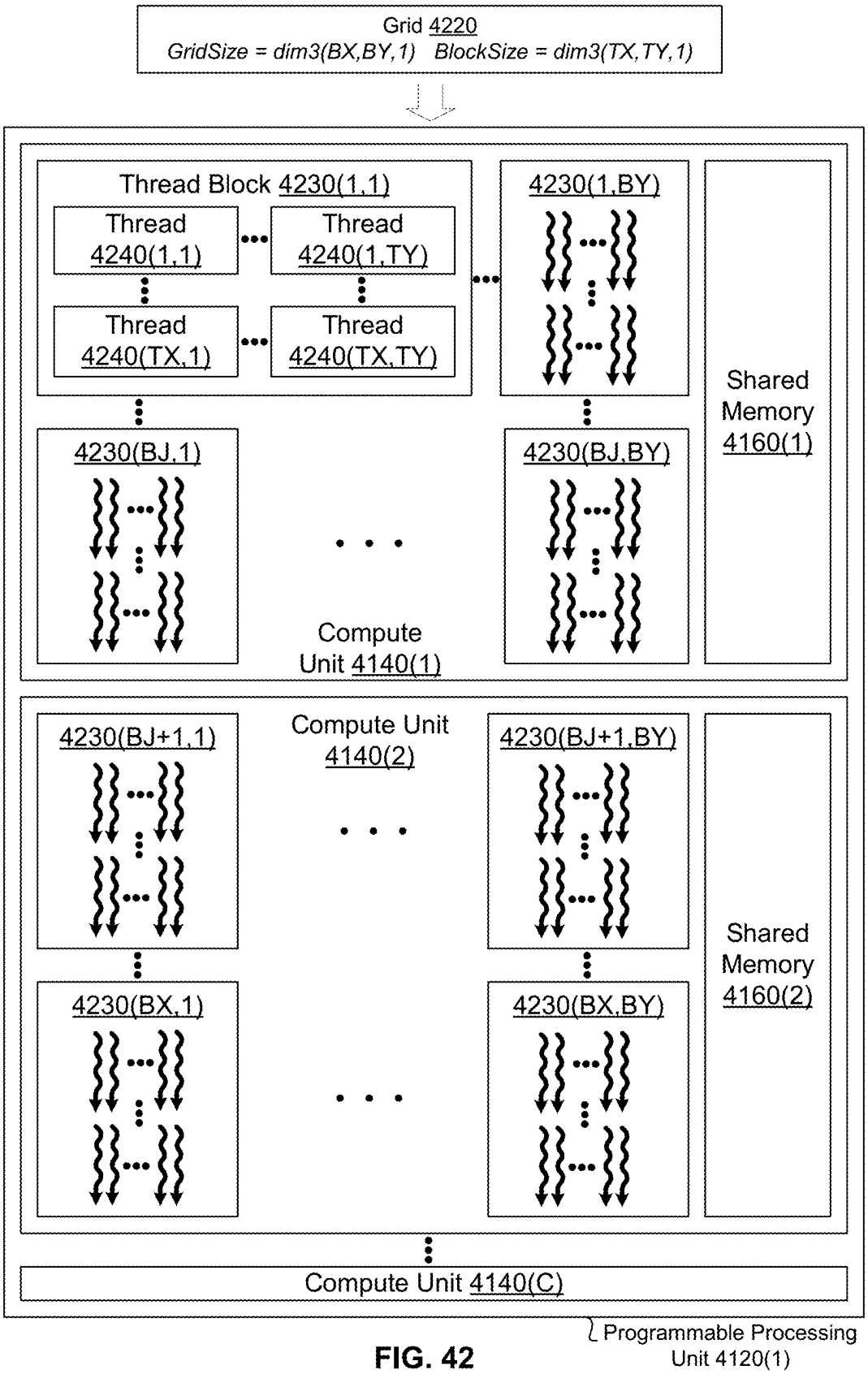
Grid 4220
GridSize = dim3(BX,BY,1) BlockSize = dim3(TX,TY,1)
Thread Block 4230(1,1)
Thread 4240(1,1)
Thread 4240(1,TY)
Thread 4240(TX,1)
Thread 4240(TX,TY)
4230(1,BY)
Shared Memory 4160(1)
4230(BJ,1)
4230(BJ,BY)
Compute Unit 4140(1)
4230(BJ+1,1)
Compute Unit 4140(2)
4230(BJ+1,BY)
Shared Memory 4160(2)
4230(BX,1)
4230(BX,BY)
Compute Unit 4140(C)
Programmable Processing Unit 4120(1)

FIG. 42

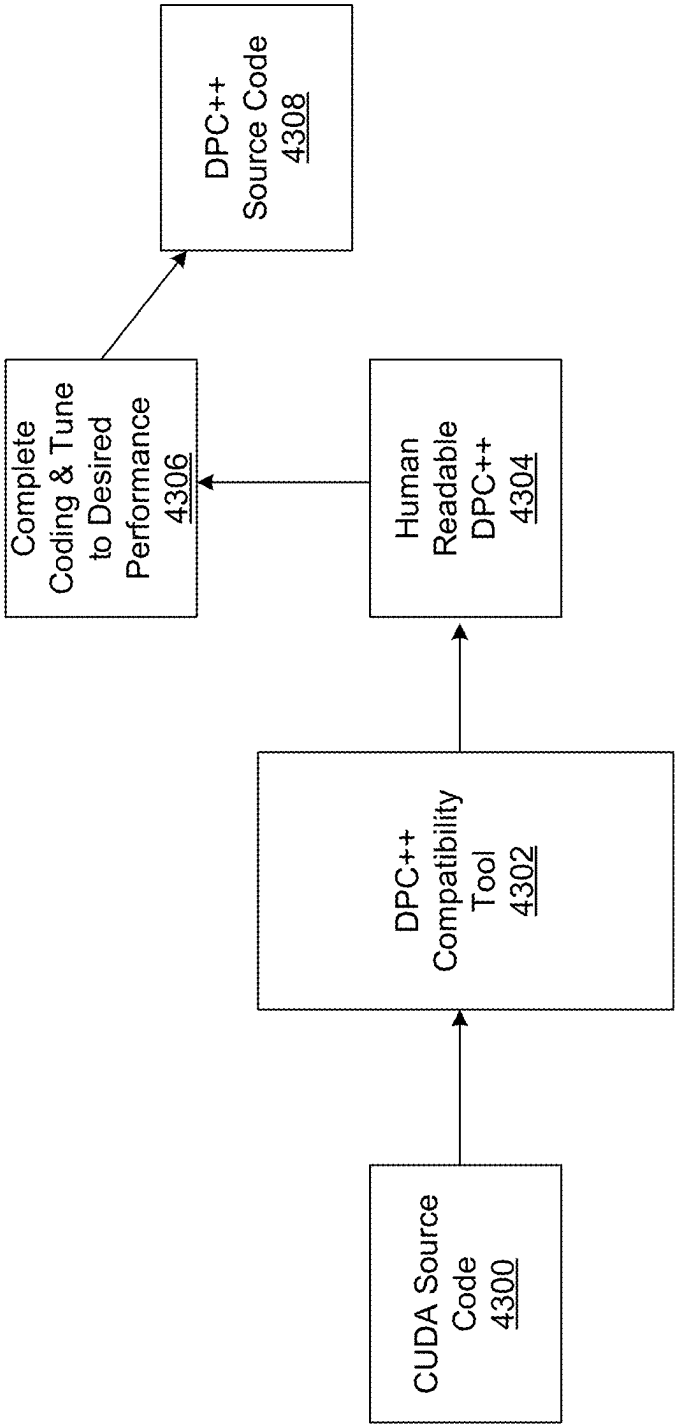
CUDA Source Code 4300
DPC++ Compatibility Tool 4302
Human Readable DPC++ 4304
Complete Coding & Tune to Desired Performance 4306
DPC++ Source Code 4308

FIG. 43

USING IMPORTANCE RESAMPLING TO REDUCE THE MEMORY INCOHERENCE OF LIGHT SAMPLING

CLAIM OF PRIORITY

[0001] This application is a continuation of U.S. patent application Ser. No. 18/142,868, filed May 3, 2023, entitled "USING IMPORTANCE RESAMPLING TO REDUCE THE MEMORY INCOHERENCE OF LIGHT SAMPLING," which is a continuation of U.S. application Ser. No. 17/184,401, filed Feb. 24, 2021, entitled "USING IMPORTANCE RESAMPLING TO REDUCE THE MEMORY INCOHERENCE OF LIGHT SAMPLING," which claims the benefit of U.S. Provisional Application No. 63/068,906, filed Aug. 21, 2020, titled "RESAMPLING TECHNIQUE FOR RESERVOIR-BASED LIGHTING," wherein the entire contents of each of these applications are incorporated herein by reference.

FIELD

[0002] At least one embodiment pertains to computer graphics. For example, at least one embodiment pertains to processors or computing systems used to render graphical images using various novel techniques described herein.

BACKGROUND

[0003] The handling of lights in computer graphics can consume significant amounts of time, memory, processing power, and other computing resources. This is particularly true for techniques, which may include but are not limited ray tracing, that are intended to produce good visual quality, and for cases where many lights are included in a scene that is to be rendered. Techniques for handling lights in computer graphics may therefore be improved.

BRIEF DESCRIPTION OF THE DRAWINGS

[0004] FIG. **1** illustrates an example of a system employing light resampling to render a virtual scene, in accordance with at least one embodiment;

[0005] FIG. **2** illustrates an example of a process of rendering a frame of a virtual scene by at least sampling from a list of scene lights and resampling from memory portions, in accordance with at least one embodiment;

[0006] FIG. **3** illustrates an example of a process for rendering a frame of a virtual scene by resampling from a memory portion, in accordance with at least one embodiment;

[0007] FIG. **4** illustrates an example of lights in a virtual are, in accordance with at least one embodiment;

[0008] FIG. **5** depicts an example of random selection of lights from a list of scene lights, in accordance with at least one embodiment;

[0009] FIG. **6** depicts an example of rendering tiles based on a selection of one or more pre-sampled subsets of lights, in accordance with at least one embodiment;

[0010] FIG. **7** is an illustration of reservoir-based spatiotemporal importance resampling ("ReSTIR") candidate selection using a gather approach, in accordance with at least one embodiment;

[0011] FIG. **8** is an illustration of ReSTIR candidate selection using a scatter approach, in accordance with at least one embodiment;

[0012] FIG. **9** is an illustration of subpool reshuffling, in accordance with at least one embodiment;

[0013] FIG. **10** is an illustration of rendering a frame using multiple open tiles, in accordance with at least one embodiment;

[0014] FIG. **11** is an illustration of an example process comprising pre-randomization and render-time stages, in accordance with at least one embodiment;

[0015] FIG. **12** illustrates an exemplary data center, in accordance with at least one embodiment;

[0016] FIG. **13** illustrates a processing system, in accordance with at least one embodiment;

[0017] FIG. **14** illustrates a computer system, in accordance with at least one embodiment;

[0018] FIG. **15** illustrates a system, in accordance with at least one embodiment;

[0019] FIG. **16** illustrates an exemplary integrated circuit, in accordance with at least one embodiment;

[0020] FIG. **17** illustrates a computing system, according to at least one embodiment;

[0021] FIG. **18** illustrates an APU, in accordance with at least one embodiment;

[0022] FIG. **19** illustrates a CPU, in accordance with at least one embodiment;

[0023] FIG. **20** illustrates an exemplary accelerator integration slice, in accordance with at least one embodiment;

[0024] FIGS. **21**A and **21**B illustrate exemplary graphics processors, in accordance with at least one embodiment;

[0025] FIG. **22**A illustrates a graphics core, in accordance with at least one embodiment;

[0026] FIG. **22**B illustrates a GPGPU, in accordance with at least one embodiment;

[0027] FIG. **23**A illustrates a parallel processor, in accordance with at least one embodiment;

[0028] FIG. **23**B illustrates a processing cluster, in accordance with at least one embodiment;

[0029] FIG. **23**C illustrates a graphics multiprocessor, in accordance with at least one embodiment;

[0030] FIG. **24** illustrates a graphics processor, in accordance with at least one embodiment;

[0031] FIG. **25** illustrates a processor, in accordance with at least one embodiment;

[0032] FIG. **26** illustrates a processor, in accordance with at least one embodiment;

[0033] FIG. **27** illustrates a graphics processor core, in accordance with at least one embodiment;

[0034] FIG. **28** illustrates a PPU, in accordance with at least one embodiment;

[0035] FIG. **29** illustrates a GPC, in accordance with at least one embodiment;

[0036] FIG. **30** illustrates a streaming multiprocessor, in accordance with at least one embodiment;

[0037] FIG. **31** illustrates a software stack of a programming platform, in accordance with at least one embodiment;

[0038] FIG. **32** illustrates a CUDA implementation of a software stack of FIG. **31**, in accordance with at least one embodiment;

[0039] FIG. **33** illustrates a ROCm implementation of a software stack of FIG. **31**, in accordance with at least one embodiment;

[0040] FIG. **34** illustrates an OpenCL implementation of a software stack of FIG. **31**, in accordance with at least one embodiment;

[0041] FIG. **35** illustrates software that is supported by a programming platform, in accordance with at least one embodiment;

[0042] FIG. **36** illustrates compiling code to execute on programming platforms of FIGS. **31-34**, in accordance with at least one embodiment;

[0043] FIG. **37** illustrates in greater detail compiling code to execute on programming platforms of FIGS. **31-34**, in accordance with at least one embodiment;

[0044] FIG. **38** illustrates translating source code prior to compiling source code, in accordance with at least one embodiment;

[0045] FIG. **39**A illustrates a system configured to compile and execute CUDA source code using different types of processing units, in accordance with at least one embodiment;

[0046] FIG. **39**B illustrates a system configured to compile and execute CUDA source code of FIG. **39**A using a CPU and a CUDA-enabled GPU, in accordance with at least one embodiment;

[0047] FIG. **39**C illustrates a system configured to compile and execute CUDA source code of FIG. **39**A using a CPU and a non-CUDA-enabled GPU, in accordance with at least one embodiment;

[0048] FIG. **40** illustrates an exemplary kernel translated by CUDA-to-HIP translation tool of FIG. **39**C, in accordance with at least one embodiment;

[0049] FIG. **41** illustrates non-CUDA-enabled GPU of FIG. **39**C in greater detail, in accordance with at least one embodiment;

[0050] FIG. **42** illustrates how threads of an exemplary CUDA grid are mapped to different compute units of FIG. **41**, in accordance with at least one embodiment; and

[0051] FIG. **43** illustrates how to migrate existing CUDA code to Data Parallel C++ code, in accordance with at least one embodiment.

DETAILED DESCRIPTION

[0052] In the following description, numerous specific details are set forth to provide a more thorough understanding of at least one embodiment. However, it will be apparent to one skilled in the art that the inventive concepts may be practiced without one or more of these specific details.

[0053] In at least one embodiment, an embodiment of a method for rendering computing graphics, incorporating reservoir-based lighting techniques such as reservoir-based spatiotemporal importance resampling (ReSTIR), comprises adaptations which optimize usage of computer hardware and memory, including issues such as memory access latency, cache coherence, cache utilization, thrashing, and so forth.

[0054] Embodiments disclosed herein may be used in a variety of applications, devices, and circumstances, including those described herein. Techniques described herein may be utilized to render complex graphical scenes, such as those that may be generated in videogames, special effects, computer animation, computer-aided design, and so forth.

[0055] In various embodiments, techniques described herein are used to render graphical scenes in cases where high rendering speed is desired. For example, some of the operations and techniques described herein are capable of being performed prior to rendering a frame of computer graphics, or with periodicity that is less than per-frame, to improve the per-frame efficiency of rendering.

[0056] In various embodiments, techniques described herein are useful to non-graphical applications and problem spaces that share characteristics similar to rendering or ray-tracing. For example, embodiments described herein may be adapted for use in simulating effects of acoustic or electromagnetic transmissions involving many emitters.

[0057] FIG. **1** illustrates an example of a system employing light resampling to render a virtual scene, in accordance with at least one embodiment. In the example **100** of FIG. **1**, a computing device **102** generates graphical output to drive a display on screen **108**.

[0058] In at least one embodiment, computing device **102** generates graphical output using a graphics pipeline **104** and a graphics card **106**. In at least one embodiment, a graphics card **106** comprises one or more processors, such as graphics processing units. In at least one embodiment, graphics pipeline **104** comprises software, hardware, or combinations of software and hardware to generate graphical output. A graphics pipeline **104** may generate graphical output according to a multi-stage process, such as a process comprising the stages **110-118** depicted within graphics pipeline **104** in FIG. **1**. Although the stages **110-118** are depicted in FIG. **1** as a sequence, embodiments may omit some of the depicted stages **110-118**, perform some of the operations **110-118** in an order other than what is depicted, such as in parallel, or include stages in addition to those depicted in FIG. **1**. Accordingly, the order depicted in FIG. **1** should not be construed in a manner which would limit potential embodiments to only those that conform to the depicted order.

[0059] In at least one embodiment, a graphics pipeline **104** comprises software, hardware, or a combination of hardware and software to implement a multiple-stage process for converting application data to graphical data suitable (with or without certain post-pipeline steps) for display by screen **108**. For example, graphics pipeline **104** may generate a frame of video data that can then be converted to a signal to drive the display of the frame on screen **108**. In at least one embodiment, these stages may include an application stage **110**, geometry stage **112**, transformation stage **114**, lighting and shading stage **116**, and rasterization and texturization stage **118**.

[0060] In at least one embodiment, one or more of the stages **110-118** utilize a light sampling algorithm, including but not necessarily limited to ReSTIR, to incorporate lighting effects into the rendering of a virtual scene.

[0061] In at least one embodiment, a virtual scene **120** comprises a simulated or computer-generated environment, such as a landscape, building, playing field, or other area. A virtual scene **120** may sometimes be referred to, or comprise, a virtual environment. A virtual environment may be associated with data structures, graphical assets, and other data that define the contents and structure of the virtual environment. For example, in at least one embodiment, a virtual scene is based on a virtual environment which comprises a wireframe model of a landscape, various textures and objects residing within the scene, and so forth. The virtual environment may further comprise lights placed at various positions within the scene.

[0062] In some cases, a large number of such lights may be present, which can present a number of challenges when rendering depictions of the virtual scene **120**. Handling many lights is a difficult problem in computer graphics, particularly for algorithms that are based on ray tracing. For example, one approach to rendering a virtual scene would be

to evaluate all light sources in the scene for each shaded point. However, increasing the light count may also increases the number and complexity of rays that are to be traced, and thereby may also increase the time, computing resources, and complexity of the rendering process.

[0063] In at least one embodiment, a subset of lights is selected from a list **122** of all of the lights in the virtual scene **120**. The subset is selected based on an at least partially random process, and the selected subset is stored in a portion of memory **124**. In at least one embodiment, the selected subset is stored in a record of a data structure that corresponds to a subdivision, or cell, of a virtual scene. In other embodiments, the selected subset is not tied to or associated with any particular region of the virtual scene. In other embodiments, lights are stochastically selected according to a probability that is proportional to the lights intensity or overall importance to the scene. In other embodiments, lights are stochastically selected according to a probability that is proportional to the importance of a given light's contribution to a subdivision of the virtual scene. Stochastic techniques or processes, which may sometimes be referred to as random techniques or processes, generally refer to techniques which include factors that are random, pseudo-random, or quasi-random. Examples of stochastic factors, or random, factors, may include, but are not necessarily limited to, pseudo-random number generators, Monte Carlo sequences, and deterministic hashing.

[0064] Once stored in the portion of memory **124**, the selected subset of lights may be used to render pixels in a depiction of the virtual scene. However, the process of selecting lights from the list of lights **122** may cause various impediments to efficient rendering. As noted, the light selection process is at least partially random, and as such access to the list of lights **122** may also be at least partially random, and involve access to widely separated regions of memory. The list **122** may also be very large, potentially include thousands, tens of thousands, or even millions of lights. Accordingly, accessing the selected lights within the list can cause various inefficiencies, such as those that involve memory access latency, cache coherence, cache utilization, thrashing, and so forth.

[0065] In at least one embodiment, a light refers to a virtual source of illumination. In at least one embodiment, this may include sources which emit or reflect light. A light may be associated with properties including a position of the light within a virtual scene and an intensity value. For example, a light may be associated with an x, y, z value indicating the light's position within the virtual scene, and a value indicating how bright the light is. A light may also be associated with additional properties, such as parameters that describe intensity, color, diffusion pattern, and so forth. As used herein, the term light generally refers to data which describes the light, such as those representing properties and parameters such as these.

[0066] In at least one embodiment, stages **110-118** of graphics pipeline **104** utilize lights stored in the memory portion **124** to render portions of the virtual scene. In at least one embodiment, the computing device **102** renders a frame of graphics by first randomly selecting a subset of lights from the list of lights **122** and storing the subset in the memory portion **124**. This is done, in at least one embodiment, prior to rendering a frame. During rendering of the frame, the computing device **102** renders a pixel by randomly selecting one or more lights from the memory portion **124**. Note that the randomly sampling of lights refers to using one or more stochastic processes to select lights from a pool of lights. A stochastic process includes, in at least one embodiment, any technique for selecting a light from a pool that incorporates at least some element of randomness, pseudo-randomness, or quasi-randomness. In at least one embodiment, a stochastic process selects a light based on probabilities that are proportional to the intensity of the light, such that brighter lights are more likely to be selected than dimmer lights. A pool of lights refers to lights that are candidates for selection.

[0067] FIG. **2** illustrates an example of a process of rendering a frame of a virtual scene by sampling from a list of scene lights and resampling from memory portions, in accordance with at least one embodiment.

[0068] Although the example process **200** is depicted as a sequence of operations, it will be appreciated that, in embodiments, the depicted operations may be altered in various ways, and that some operations may be omitted, reordered, or performed in parallel with other operations, except where an order is explicitly stated or logically implied, such as when the input from one operation depends upon the output of another operation.

[0069] The operations depicted by FIG. **2** may be performed by a system, such as the system **100** depicted in FIG. **1**, comprising at least one processor and a memory with stored instructions that, in response to being executed by the at least one processor, cause the system to perform the depicted operations. In at least one embodiment, the operations are performed by a combination of hardware and software, where said hardware includes one or more APUs, CPUs, GPUs, PPUs, GPGPUs, parallel processors, processing clusters, graphics processors, multiprocessors, and so forth as depicted by the various FIGS. herein. In at least one embodiment, said software comprises libraries such as any of CUDA, OpenGL, OpenLC, ROCm, and may also include operating system software.

[0070] At **202**, in at least one embodiment, the system builds a probability density function for one or more lights in the list of lights **122**. In at least one embodiment, the probability density function indicates a likelihood of selecting a given light. In at least one embodiment, the probability density function incorporates the effects of various parameters, such as light intensity, color, distance from a point to be rendered, and so forth, so that some lights (e.g., those most likely to significantly contribute to lighting) are more likely to be selected than others.

[0071] In at least one embodiment, an alternative to a probability density function is used. In at least one embodiment, lights are selected randomly, with equal odds of selecting a given light. In at least one embodiment, a random number may, for such cases, be used to generate an index into the list of lights. Various structures, such as trees or arrays, may be used to store the list, and may be used to facilitate selection of a light in conjunction with one or more stochastic processes, which may in some embodiments include the use of a random number generator.

[0072] At **204**, in at least one embodiment, the system selects a subset of lights from the list of lights. The lights, in at least one embodiment, are selected using one or more stochastic processes, such as those just described in relation to a probability density function. The number of lights selected for the subset may vary, between embodiments, based on factors such as the size of the portions to be

rendered, the size of memory structures such as processor cache, and so forth. In at least one embodiment, sets of lights, and subsets of those lights, are chosen so that lighting information may be stored in one or more levels of processor caches.

[0073] At **206**, in at least one embodiment, the system stores the subset of lights in a memory portion. The memory portion may be a portion of computer memory, such as a region of memory implemented by a random access memory ("RAM") device, or a region of virtual computer memory. In at least one embodiment, the memory portion is a contiguous region of physical or virtual computer memory. In at least one embodiment, the memory portion is memory within a processor cache. In at least one embodiment, reading or writing light information using a high-level data structure, such as an array or linked list defined in a programming language, will cause the subset of lights to be stored in a memory portion. For example, reading light information from a portion of RAM may cause the light information to also be stored in a cache memory portion.

[0074] At **208**, in at least one embodiment, the system selects and stores additional subsets of lights. The number of subsets selected and loaded may vary between embodiments. In at least one embodiment, subsets are selected and loaded into memory portions such that, during rendering of a given frame, the subset can remain efficiently accessible (e.g., in-cache) for as long as it is needed. A suitable number of subsets may generally be found through experimentation, or by consideration of the memory characteristics of the particular system on which the rendering is performed, and may further depend on variations of the algorithm used to render pixels within the frame. For example, multiprocessor systems with a plurality of caches may load a sufficient number of subsets such that each cache includes a memory portion with a subset of lights.

[0075] At **210**, in at least one embodiment, a frame of graphics is rendered based on lights resampled from the lights stored in the memory portion. In at least one embodiment, the frame is subdivided into tiles, and each tile is rendered using one or more lights sampled from the memory portion. In at least one embodiment, after these tiles are rendered, a different subset, loaded into a separate memory portion, is used to render other tiles. This process may then repeat until the entire frame is rendered.

[0076] FIG. **3** illustrates an example of a process for rendering a frame of a virtual scene by resampling from a memory portion, in accordance with at least one embodiment. Although the example process **300** is depicted as a sequence of operations, it will be appreciated that, in embodiments, the depicted operations may be altered in various ways, and that some operations may be omitted, reordered, or performed in parallel with other operations, except where an order is explicitly stated or logically implied, such as when the input from one operation depends upon the output of another operation.

[0077] The operations depicted by FIG. **3** may be performed by a system, such as the system **100** depicted in FIG. **1**, comprising at least one processor and a memory with stored instructions that, in response to being executed by the at least one processor, cause the system to perform the depicted operations. In at least one embodiment, the operations are performed by a combination of hardware and software, where said hardware includes one or more APUs, CPUs, GPUs, PPUs, GPGPUs, parallel processors, processing clusters, graphics processors, multiprocessors, and so forth as depicted by the various FIGS. herein. In at least one embodiment, said software comprises libraries such as any of CUDA, OpenGL, OpenLC, ROCm, and may also include operating system software.

[0078] At **302**, in at least one embodiment, the system performs pre-frame processing, including sampling lights from among the list of all scene lights, and storing sampled lights in one or more memory portions. In at least one embodiment, the sampling is done from among less than all scene lights, but from some pool comprising a large number of lights, such that sampling from it results in performance issues due to issues such as inefficient usage of available processor cache memory. For example, in at least one embodiment, the pool might be small enough to fit in L3 cache, but too big to fit in more efficient L2 cache.

[0079] Pre-frame processing, in at least one embodiment, refers to processing done prior to rendering an individual frame of a computer generated scene depiction. As used herein, frame generally refers to one of a series of frames generated to produce an animated sequence, but may also be used, in certain embodiments, to refer to single instances of a computer-generated image.

[0080] At **304**, in at least one embodiment, the system selects a tile to render. In at least one embodiment, a frame is subdivided into tiles, each of which represents a portion of the frame. In at least one embodiment, the size or number of tiles is based, at least in part, on factors which may include the number of samples drawn from the list of lights, the number of memory portions in which those samples are stored, the number of processors, GPUs, and so forth that are available for rendering, the number of threads available, and so on.

[0081] At **306**, in at least one embodiment, the system selects a memory portion from which it will resample lights. In at least one embodiment, this is done by assigning a processor or thread of execution for rendering a tile, configured such that the processor or thread draws samples from the selected memory portion.

[0082] At **308**, in at least one embodiment, the system renders pixels that fall within the tile by sampling from the identified memory portion. As described in more detail herein, a pixel within a tile may be rendered, in at least one embodiment, by randomly resampling one or more lights from the samples stored in the memory portion, and using the light information stored in the memory portion to determine how to render the pixel. For example, the resampled lights may be used, in at least one embodiment, to perform ray tracing.

[0083] At **310**, in at least one embodiment, the system determines whether any additional tiles need to be rendered. If so, the operations described in relation to elements **304** to **308** may be performed again. In at least one embodiment, a new memory portion is used for each tile rendered. In at least one embodiment, a given memory portion is reused among a first set of tiles, a new memory portion is selected for use with a second set, and so on. In at least one embodiment, multiple sets of tiles are rendered in parallel, and each may use, in at least one embodiment, a different memory portion.

[0084] At **312**, in at least one embodiment, the system outputs the rendered frame. In at least one embodiment, this comprises providing data for the completed frame to another component within the system, such as a component that drives a display.

[0085] In at least one embodiment, rendering pixels near edges of a tile is adjusted by using additional stochastic factors, including random, pseudo-random, quasi-random factors, and/or determinative factors, to reduce or prevent artifacts in the rendered image. For example, a dithering process may be used in conjunction with element **308** above, so that for a pixel near a tile border, the set of memory portions from which lights are selected is made to vary based on some randomized element or noise.

[0086] FIG. **4** illustrates an example of lights in a virtual area, in accordance with at least one embodiment. In the example **400** of FIG. **4**, a virtual area **402** is a three-dimensional area depicted from a top view and a side view. A terrain **408** is included in the depicted example of a virtual area **402**, but a virtual area **402** can include or omit a variety of features, such as the depicted terrain **408**, as well as other features not depicted in the FIG., such as characters, obstacles, walls, and other objects.

[0087] In at least one embodiment, lights **410** are also included in the virtual area **502**, at various positions within the area **402**. These lights **410** emit illumination which may be factored into the rendering of a computer-generated image based on the virtual area **402**. There may be many such lights **410**, potentially numbering in the hundreds, thousands, or millions. Handling lights in these quantities may be challenging or impractical with some approaches.

[0088] The FIG. **5** depicts an example of random selection of lights from a list of scene lights, in accordance with at least one embodiment. In the example **500**, a scene **506** comprises a number of scene lights **508**. There may be a very large number of scene lights **508**, such as hundreds, thousands, or millions of lights. These lights may be stored in memory or storage as a list of scene lights **504**.

[0089] In at least one embodiment, a list of scene lights **504** comprises one or more arrays of memory in which information describing the scene lights **508** is stored. For descriptive purposes, information describing a scene light may be referred to herein as light information, light data, or as a light. In at least one embodiment, a list of scene lights comprises a data structure such as array, linked list, tree, B-Tree, and so forth. A list of scene lights **504** may be stored in random access memory ("RAM"), on long-term storage such as a solid-state or mechanical disk drive, or in some other structure. It will be appreciated that these examples are intended to be illustrative, and as such should not be construed in a manner which would limit potential embodiments to only those that incorporate the specific examples provided.

[0090] In at least one embodiment, sampled lights **502** are identified from the list of scene lights **504** based on one or more processes that are at least partially stochastic, which may include various random, quasi-random or pseudo-random factors. For example, in at least one embodiment, the list of scene lights **504** has N lights stored in an array A with N storage locations. A stochastic process, in this example embodiment, may generate a random number between 0 and N−1 and obtain access to the light stored at A[N]. As depicted in the example **500**, each access may be to a different portion of the list of scene lights **504**. As depicted in the example **500**, each access to the list **504** may be in a different, random location. It will be appreciated that these examples are intended to be illustrative, and as such should not be construed in a manner which would limit potential embodiments to only those that incorporate the specific examples provided.

[0091] In at least one embodiment, a ReSTIR algorithm relies on randomization to generate images in which there are many lights, but in some cases this randomization may lead to poor performance. However, as described herein, the use of pre-randomization of samples may address these performance issues. For example, a techniques described herein uses a per-frame preprocessing technique to permute or perturb samples sufficiently to maintain (unbiased) image convergence. These pre-randomized samples, in at least one embodiment, are stored in a data structure that can be accessed in a manner which avoids inefficient usage of cache memory. For example, by appropriate sizing, an array or other structure can be stored within a processor cache. Pre-randomizing samples can provide efficiency gains by moving incoherent memory accesses to a pre-processing stage, rather than causing incoherent memory accesses during per-pixel rendering. Additional performance can be gained if this pre-processing stage is shorter or uses less memory than other per-pixel candidate generation technique.

[0092] A rendering technique such as ReSTIR may use iterative applications of resampled importance resampling (RIS) to decouple compute frequencies:

$$\int f_0(x)f_1(x)f_2(x)dx \approx \frac{1}{N_0}\sum\left[f_0(x_i)\frac{1}{N_1}\sum\left[f_1(x_j)\frac{1}{N_2}\sum\frac{f_2(x_k)}{p(x_k)}\right]\right]$$

[0093] This pulls apart the integral f $f_0(x)f_1(x)f_2(x)$ dx into a sum over terms evaluated at different frequencies. Some implementations of this may cause incoherence issues and poor performance. For example, in embodiments that employ techniques such as ReSTIR, incoherence issues may result from the samples x_k being distributed sparsely over a list that may potentially be very long. However, in at least one embodiment, resampled importance sampling ("RIS") may be applied again, prior to selecting the set of samples $\{x_k\}$, to reduce incoherence.

[0094] The techniques described herein may be further understood by examining two degenerate forms of RIS. Assume a standard RIS estimator:

$$\int f(x)dx \approx \frac{1}{N}\sum\left[\frac{f(x_i)}{\hat{p}(x_i)}\frac{1}{M}\sum\frac{\hat{p}(x_j)}{q(x_j)}\right]$$

[0095] And then examine the two degenerate cases, (i.e., $\hat{p}(x)=f(x)$, and $p(x)=\hat{p}(x)$):

$$\int f(x)dx \approx \frac{1}{N}\sum\left[\frac{f(x_i)}{f(x_i)}\frac{1}{M}\sum\frac{f(x_j)}{p(x_j)}\right] = \frac{1}{N}\sum\left[\frac{1}{M}\sum\frac{f(x_j)}{p(x_j)}\right]$$

$$\int f(x)dx \approx \frac{1}{N}\sum\left[\frac{f(x_i)}{\hat{p}(x_i)}\frac{1}{M}\sum\frac{\hat{p}(x_j)}{\hat{p}(x_j)}\right] = \frac{1}{N}\sum\left[\frac{f(x_i)}{\hat{p}(x_i)}\frac{1}{M}\sum 1\right]$$

[0096] The first appears to be like a stratified sampling, over random strata. In the second, RIS is still being applied, by first choosing M samples, then selecting a subset N of

them. However, it gives the same estimator as if sampling the N items directly. Note that the element

$$\frac{1}{M}\sum 1$$

could be crossed out.

[0097] Again, a technique such as ReSTIR may take something like the following form:

$$\int f_0(x)f_1(x)f_2(x)dx \approx \frac{1}{N_0}\sum\left[f_0(x_i)\frac{1}{N_1}\sum\left[f_1(x_j)\frac{1}{N_2}\sum\frac{f_2(x_k)}{p(x_k)}\right]\right]$$

[0098] This uses an incoherent list of lights {L}, and samples it first into a smaller subset $\{x_k\}$ of size N_2, then subsamples this set into an (even) smaller subset $\{x_j\}$ of size N_1, then subsamples this into a subset $\{x_j\}$ of size N_0.

[0099] In at least one embodiment, pre-randomization may still use samples distributed according to p(x), but from a smaller and more coherent set in memory:

$$\int f_0(x)f_1(x)f_2(x)dx \approx \frac{1}{N_0}\sum\left[f_0(x_i)\frac{1}{N_1}\sum\left[f_1(x_j)\frac{1}{N_2}\sum\left[\frac{f_2(x_k)}{p(x_k)}\frac{1}{N_3}\sum\frac{p(x_1)}{p(x_1)}\right]\right]\right]$$

[0100] This subsamples {L} into four subsets: $\{L\}\rightarrow\{x_l\}\rightarrow\{x_k\}\rightarrow\{x_j\}\rightarrow\{x_j\}$. The inner sum is degenerate:

$$\frac{1}{N_3}\sum\frac{p(x_1)}{p(x_1)} \equiv 1$$

[0101] In at least one embodiment, this numerical estimate:

$$\int f_0(x)f_1(x)f_2(x)dx \approx \frac{1}{N_0}\sum\left[f_0(x_i)\frac{1}{N_1}\sum\left[f_1(x_j)\frac{1}{N_2}\sum\left[\frac{f_2(x_k)}{p(x_k)}\frac{1}{N_3}\sum\frac{p(x_l)}{p(x_l)}\right]\right]\right]$$

may be computed by taking the domain {L}, where in at least one embodiment {L} is a set of emissive triangles corresponding to the scene lights. In at least one embodiment, N_3 samples are then drawn from {L}, according to the distribution p(x), to get $\{x_l\}$. Since insertion into $\{x_l\}$ is according to p(x), samples in $\{x_j\}$ are already distributed according to p(x). This means N_2 samples are drawn uniformly from $\{x_l\}$ to get $\{x_k\}$. Then, embodiments continue to sample $\{x_j\}$ and $\{x_l\}$ from this set of samples $\{x_k\}$.

[0102] Forms of resampling may be classified as stratified and unstratified. The form with nested sums, as described above, is a stratified approach:

$$\int f(x)dx \approx \frac{1}{N}\sum_{i=1}^{N}\left(\frac{f(x_i)}{\hat{p}(x_i)}\left(\frac{1}{M}\sum_{j=1}^{M}\frac{\hat{p}(x_{ij})}{p(x_{ij})}\right)\right)$$

[0103] This uses M*N candidates x_{ij}.

[0104] The unstratified form can be formulated as:

$$\int f(x)dx \approx \left(\frac{1}{N}\sum_{i=1}^{N}\frac{f(x_i)}{\hat{p}(x_i)}\right)\left(\frac{1}{M}\sum_{j=1}^{M}\frac{\hat{p}(x_j)}{p(x_j)}\right)$$

This may only require M candidates x, and can reuse these candidates to draw all N samples. In this pre-randomized form of RIS:

$$\int f_0(x)f_1(x)f_2(x)dx \approx \frac{1}{N_0}\sum\left[f_0(x_i)\frac{1}{N_1}\sum\left[f_1(x_j)\frac{1}{N_2}\sum\left[\frac{f_2(x_k)}{p(x_k)}\frac{1}{N_3}\sum\frac{p(x_1)}{p(x_1)}\right]\right]\right],$$

the pre-randomized set can actually be pulled out of the sum, if it is acceptable to give up some degree of stratification:

$$\int f_0(x)f_1(x)f_2(x)dx \approx \left(\frac{1}{N_0}\sum\left[f_0(x_i)\frac{1}{N_1}\sum\left[f_1(x_j)\frac{1}{N_2}\sum\frac{f_2(x_k)}{p(x_k)}\right]\right]\right)\left(\frac{1}{N_3}\sum\frac{p(x_1)}{p(x_1)}\right).$$

[0105] Since this was stratification that wouldn't be the case without the extra set of N_3 samples $\{x_l\}$, this may not be a significant factor in some embodiments.

[0106] In at least one embodiment, there can also be partial stratification, using multiple sets {x1} yet using fewer than the number necessary for full stratification (in this case, that would be $N_0N_1N_2$ different sets $\{x_j\}$). And the degenerate term

$$\frac{1}{N_3}\sum\frac{p(x_l)}{p(x_l)}$$

cancels away, no matter where it is put, indicating flexibility. Various embodiments may be based on how this "partial stratification" occurs in various pre-randomization algorithms, as described herein.

[0107] In an example embodiment, a pre-randomization stage and a render-time stage is performed. An example illustration of such an algorithm is depicted in FIG. **11**.

[0108] A pre-randomization stage may comprise 1) Input a list of light samples L, a number of subsets S_i={x1} to generate, and a size K for each subset; and 2) For each of the S_i subsets, draw K lights from L according the "initial light candidate" probability density function p(x). For example, $p(x)\propto L_e(x)$, i.e., each light's emitted power.

[0109] At a render-time stage, for each pixel, Instead of drawing M samples from the total list of light samples {L} using distribution p(x), M samples are drawn uniformly from one of the pre-randomized light subsets S_i={x1}. This

uniform sampling can be done in a stratified and interleaved manner to ensure traversal of S_i is maximally coherent.

[0110] FIG. **6** depicts an example of rendering tiles based on a selection of one or more pre-sampled subsets of lights, in accordance with at least one embodiment. As depicted by the example **600**, a frame **602** may be subdivided into tiles, and each tile may be rendered separately. In at least one embodiment, a plurality of subsets of lights are generated during pre-frame processing. In at least one embodiment, each subset is stored in a separate data structure or memory portion. An embodiment of a rendering algorithm may incorporate a step in which a subset of lights is selected for use in rendering a tile. During rendering, each pixel resamples from some subset S_i of the original light list {L}. To ensure warp coherence, active threads sharing processor cache or other memory resources should resample from the same subset S_i.

[0111] All pixels in some image tile may sample from the same S_i. For example, in the example **600**, all pixels from a first tile **604** are rendered based on pixels resampled from the subset S_1, pixels from a second tile **606** are rendered using pixels resampled from S_2, pixels from a third tile **608** are rendered using pixels resampled from S_3, and pixels from a fourth tile **610** are rendered using pixels resampled from S_4.

[0112] In at least one embodiment, target tile size is configured based on hardware configuration. Experiments have shown that, in some embodiments, 8×8 and 16×16 tiles may result in good performance. In these embodiments, larger tiles introduced artifacts, while using 4×4 image tiles increased incoherence and thereby reduced performance.

[0113] FIG. **7** is an illustration of a possible approach to candidate selection for a sampling technique such as ReSTIR. In the example **700**, a gather approach is used. As depicted in the example **700**, a frame **702** consists of various pixels **706**, **708** that are each rendered based on a subset of lights drawn randomly from a list of lights **402**. In this example, it is assumed that the subset is identified prior to rendering the frame, and re-used for various pixels within the frame **702**. To render a pixel **706**, thirty two reads, from #**1** to #**32**, are performed from the list **704**, to obtain information from lights **710** in the identified subset, but stored in the list of lights **704** comprising all scene lights (in this example, four million scene lights). Subsequently, when another pixel **708** is rendered, using the same subset of lights, the system may again perform reads #**1** to #**32** to access the same subset of lights from the list of lights **704**. However, because other pixels may have been rendered using different lights (e.g., lights from another subset), the lights from the original subset are no longer in cache. As such, this approach that may have problematic performance characteristics.

[0114] FIG. **8** is an illustration of ReSTIR candidate selection using a scatter approach, in accordance with at least one embodiment. As described herein, lights can be pre-randomized into "subpools" S_i, as visualized in the example **800**. In addition, the example **800** also shows that embodiments may vary how subpools get distributed over the screen. In at least one embodiment, a screen tile may grab from one subpool or from multiple subpools. In at least one embodiment, this is defined by reuse parameters. For example, in at least one embodiment, each light in a subpool is reused some predetermined number of times, as indicated by a reuse parameter. In at least one embodiment, tile size varies dynamically based on the indicated reuse parameters.

[0115] In at least one embodiment, one or more subsets of lights **804** is generated from a list of all scene lights. The list of all scene lights may be very large, such as, in one example, four million lights. The number and size of the one or more subsets of lights **804** may vary depending on configuration. In one example, the one or more subsets of lights comprises multiple subpools each including 1024 lights.

[0116] In at least one embodiment, the one or more subsets of lights **804** are generated by sampling or shuffling lights from among all scene lights. In at least one embodiment, one or more stochastic processes, such as random number generation, are used in the sampling or shuffling.

[0117] In at least one embodiment, some or all of the one or more subsets are stored in a memory portion **812**. For example, in at least one embodiment, a subpool comprising 1024 lights is stored, as depicted in FIG. **8**, in a memory portion **812**. This subpool may then be used to render pixels within various tiles **806**, **808** of frame **802**, by drawing pre-randomized samples from the subpool in the memory portion **812**.

[0118] In at least one embodiment, this pre-randomization approach provides various advantages. For example, if care is taken to promote consistent statistical distribution of light samples in subpools S_i . . . , there can be flexibility regarding how the subpools are created. The subpools may, for example, be created in cheaper ways such as shuffling between light subpools, as depicted in FIG. **9**. This avoids incoherent memory reads into the global light list {L} (in this example, 4 million entries long).

[0119] FIG. **9** is an illustration of subpool reshuffling, in accordance with at least one embodiment. In at least one embodiment, multiple subpools **904**-**908** are loaded into one or more memory portions, such as one or more portions of L1/L2/DRAM **910**. These subpools may be read, at steps **1**A, **1**B, and **1**C, and used to render tiles of a frame. At steps **2**A and **2**B, lights in the subpools **904**, **906**, **908** are shuffled. For example, in at least one embodiment, some of the lights in a subpool **904** are swapped, based on one or more stochastic processes, with some of the lights in another subpool **906**. As depicted in the example **900**, the shuffling may occur over time. In at least one embodiment, reads and write-back operations to L1/L2/DRAM **910** may overlap, as depicted by the overlapping of read steps **1**A, **1**B, **1**C and write steps **3**A, **3**B, **3**C, along a timeline **902**.

[0120] FIG. **10** is an illustration of rendering a frame using multiple opened tiles, in accordance with at least one embodiment. An opened tile may refer to tiles for which at least one subset of lights has been sampled from among a larger number of scene lights. This subset is made available for use in rendering by having been loaded into a memory portion separate from the memory or storage in which the scene lights are kept. When multiple tiles are open, they may share a single subpool or, alternatively, rely on multiple subpools that have been loaded into a memory portion.

[0121] In at least one embodiment, multiple tiles are opened at once and there is cycling between multiple subpools. For example, as depicted in FIG. **10**, a frame **1002** may be divided into T=16 tiles, of 2×2 pixel per tile, using four samples per pixel. A current subpool might then be used for one sample from each of the T=16 tiles. In this example, it would take 16 subpools loaded into memory portion **1012** to finish all 16 tiles, because each tile uses 2×2×4=16 samples. In at least one embodiment, each subpool services

two samples per pixel, thereby using 32 subpools. In at least one embodiment, the number of tiles is increased to T=32, also using 32 subpools. It will be appreciated that these examples are intended to be illustrative, and as such should not be construed in a manner which would limit the scope of potential embodiments to only those that incorporate the specific examples provided. These parameters may be adjusted, in various embodiments, to values that best utilize available hardware. In general, suitable values may be determined through experimentation and consideration of hardware characteristics, potentially including the sizes of processor caches, such as L1, L2, and L3 processor caches.

[0122] In at least one embodiment, the pre-randomization techniques described herein provide various additional advantages. Sampling lights can be an expensive operation, especially with a heterogeneous set of light types, such as emissive triangles, spheres, meshes, planes, cylinders, and so forth. Control flow divergence on SIMD processors can also be a significant cause or performance slowdown. By pre-randomization, this expensive divergence is moved outside the performance-sensitive inner rendering loop. Instead it occurs before rendering, many fewer times per frame. Different light types may be split into different light pools S_i, or lights may be sampled using a coherent SIMD control flows, then randomized into subpools as a second step.

[0123] In at least one embodiment, the pre-randomization techniques described herein increase efficiency in handling dynamic lights. When lights move around the scene and change intensity, there may be a need to update the current positions of the lights, update the intensity of the lights, and potentially update the sampling distribution used to select the lights. By pre-randomizing lights, these updates can be done over a fewer number of lights. For example, in at least one embodiment, only those inside lights that are in the frame's selected subpools S_i are fully updated.

[0124] In at least one embodiment, the pre-randomization techniques described herein increase allow greater flexibility. For example, the use of tiles allows flexibly changing the shape and domain of the light sampling.

[0125] FIG. **11** is an illustration of an example process comprising pre-randomization and render-time stages, in accordance with at least one embodiment. Although the example process **1100** is depicted as a sequence of operations, it will be appreciated that, in embodiments, the depicted operations may be altered in various ways, and that some operations may be omitted, reordered, or performed in parallel with other operations, except where an order is explicitly stated or logically implied, such as when the input from one operation depends upon the output of another operation.

[0126] The operations depicted by FIG. **11** may be performed by a system, such as the system **100** depicted in FIG. **1**, comprising at least one processor and a memory with stored instructions that, in response to being executed by the at least one processor, cause the system to perform the depicted operations. In at least one embodiment, the operations are performed by a combination of hardware and software, where said hardware includes one or more APUs, CPUs, GPUs, PPUs, GPGPUs, parallel processors, processing clusters, graphics processors, multiprocessors, and so forth as depicted by the various FIGS. herein. In at least one embodiment, said software comprises libraries such as any of CUDA, OpenGL, OpenLC, ROCm, and may also include operating system software.

[0127] At **1102**, in at least one embodiment, the system receives a list of light samples L, a number of subsets $S_i=\{x_j\}$ to be generated, and a size K for each subset.

[0128] At **1104**, in at least one embodiment, the system draws, for each of the S_i subsets, K lights from L according to an initial light candidate probability function p(x).

[0129] In at least one embodiment, the preceding operations **1102**, **1104** are performed during a pre-randomization stage **1110** in which the subsets S_i are drawn from the list of lights L. During second render-time stage **1112** comprising operations **1106** and **1108**, the subsets are used to render a frame of graphics.

[0130] At **1106**, in at least one embodiment, the system draws M samples uniformly from one of the pre-randomized light subsets $S_i=\{x_j\}$. As illustrated in **1108**, the system may perform the uniform sampling in a stratified and interleaved manner to improve cache coherence during the traversal of S_i. FIG. **9** depicts an example of sampling performed in a stratified and interleaved manner.

[0131] Light subpools may be associated with specific groups of pixels, texels, or voxels. Light subpools may be used to select even smaller subpools. This may correspond to a hierarchical reduction in incoherence, essentially building a stochastic data structure from random, pseudo-random, or quasi-random selection of lights. In at least one embodiment, this stochastic data structure comprises hierarchical levels of samples, with each level comprising samples selected, by processes that are at least partially random, from the level below it. Light subpools may be resized dynamically for performance and quality tradeoffs, if using subpools and screen tiles leads to banding artifacts in certain cases. The number and size of subpools may be varied across user devices to control performance, memory usage, and quality over a variety of hardware types of varying capability.

Data Center

[0132] FIG. **12** illustrates an exemplary data center **1200**, in accordance with at least one embodiment. In at least one embodiment, data center **1200** includes, without limitation, a data center infrastructure layer **1210**, a framework layer **1220**, a software layer **1230** and an application layer **1240**.

[0133] In at least one embodiment, as shown in FIG. **12**, data center infrastructure layer **1210** may include a resource orchestrator **1212**, grouped computing resources **1214**, and node computing resources ("node C.R.s") **1216(1)-1216**(N), where "N" represents any whole, positive integer. In at least one embodiment, node C.R.s **1216(1)-1216**(N) may include, but are not limited to, any number of central processing units ("CPUs") or other processors (including accelerators, field programmable gate arrays ("FPGAs"), graphics processors, etc.), memory devices (e.g., dynamic read-only memory), storage devices (e.g., solid state or disk drives), network input/output ("NW I/O") devices, network switches, virtual machines ("VMs"), power modules, and cooling modules, etc. In at least one embodiment, one or more node C.R.s from among node C.R.s **1216(1)-1216**(N) may be a server having one or more of above-mentioned computing resources.

[0134] In at least one embodiment, grouped computing resources **1214** may include separate groupings of node C.R.s housed within one or more racks (not shown), or many racks housed in data centers at various geographical locations (also not shown). Separate groupings of node C.R.s

within grouped computing resources **1214** may include grouped compute, network, memory or storage resources that may be configured or allocated to support one or more workloads. In at least one embodiment, several node C.R.s including CPUs or processors may grouped within one or more racks to provide compute resources to support one or more workloads. In at least one embodiment, one or more racks may also include any number of power modules, cooling modules, and network switches, in any combination.

[0135] In at least one embodiment, resource orchestrator **1212** may configure or otherwise control one or more node C.R.s **1216(1)-1216**(N) and/or grouped computing resources **1214**. In at least one embodiment, resource orchestrator **1212** may include a software design infrastructure ("SDI") management entity for data center **1200**. In at least one embodiment, resource orchestrator **1212** may include hardware, software or some combination thereof.

[0136] In at least one embodiment, as shown in FIG. **12**, framework layer **1220** includes, without limitation, a job scheduler **1232**, a configuration manager **1234**, a resource manager **1236** and a distributed file system **1238**. In at least one embodiment, framework layer **1220** may include a framework to support software **1252** of software layer **1230** and/or one or more application(s) **1242** of application layer **1240**. In at least one embodiment, software **1252** or application(s) **1242** may respectively include web-based service software or applications, such as those provided by Amazon Web Services, Google Cloud and Microsoft Azure. In at least one embodiment, framework layer **1220** may be, but is not limited to, a type of free and open-source software web application framework such as Apache Spark™ (hereinafter "Spark") that may utilize distributed file system **1238** for large-scale data processing (e.g., "big data"). In at least one embodiment, job scheduler **1232** may include a Spark driver to facilitate scheduling of workloads supported by various layers of data center **1200**. In at least one embodiment, configuration manager **1234** may be capable of configuring different layers such as software layer **1230** and framework layer **1220**, including Spark and distributed file system **1238** for supporting large-scale data processing. In at least one embodiment, resource manager **1236** may be capable of managing clustered or grouped computing resources mapped to or allocated for support of distributed file system **1238** and job scheduler **1232**. In at least one embodiment, clustered or grouped computing resources may include grouped computing resource **1214** at data center infrastructure layer **1210**. In at least one embodiment, resource manager **1236** may coordinate with resource orchestrator **1212** to manage these mapped or allocated computing resources.

[0137] In at least one embodiment, software **1252** included in software layer **1230** may include software used by at least portions of node C.R.s **1216(1)-1216**(N), grouped computing resources **1214**, and/or distributed file system **1238** of framework layer **1220**. One or more types of software may include, but are not limited to, Internet web page search software, e-mail virus scan software, database software, and streaming video content software.

[0138] In at least one embodiment, application(s) **1242** included in application layer **1240** may include one or more types of applications used by at least portions of node C.R.s **1216(1)-1216**(N), grouped computing resources **1214**, and/or distributed file system **1238** of framework layer **1220**. In at least one or more types of applications may include, without limitation, CUDA applications.

[0139] In at least one embodiment, any of configuration manager **1234**, resource manager **1236**, and resource orchestrator **1212** may implement any number and type of self-modifying actions based on any amount and type of data acquired in any technically feasible fashion. In at least one embodiment, self-modifying actions may relieve a data center operator of data center **1200** from making possibly bad configuration decisions and possibly avoiding underutilized and/or poor performing portions of a data center.

Computer-Based Systems

[0140] The following FIGS. set forth, without limitation, exemplary computer-based systems that can be used to implement at least one embodiment.

[0141] FIG. **13** illustrates a processing system **1300**, in accordance with at least one embodiment. In at least one embodiment, processing system **1300** includes one or more processors **1302** and one or more graphics processors **1308**, and may be a single processor desktop system, a multiprocessor workstation system, or a server system having a large number of processors **1302** or processor cores **1307**. In at least one embodiment, processing system **1300** is a processing platform incorporated within a system-on-a-chip ("SoC") integrated circuit for use in mobile, handheld, or embedded devices.

[0142] In at least one embodiment, processing system **1300** can include, or be incorporated within a server-based gaming platform, a game console, a media console, a mobile gaming console, a handheld game console, or an online game console. In at least one embodiment, processing system **1300** is a mobile phone, smart phone, tablet computing device or mobile Internet device. In at least one embodiment, processing system **1300** can also include, couple with, or be integrated within a wearable device, such as a smart watch wearable device, smart eyewear device, augmented reality device, or virtual reality device. In at least one embodiment, processing system **1300** is a television or set top box device having one or more processors **1302** and a graphical interface generated by one or more graphics processors **1308**.

[0143] In at least one embodiment, one or more processors **1302** each include one or more processor cores **1307** to process instructions which, when executed, perform operations for system and user software. In at least one embodiment, each of one or more processor cores **1307** is configured to process a specific instruction set **1309**. In at least one embodiment, instruction set **1309** may facilitate Complex Instruction Set Computing ("CISC"), Reduced Instruction Set Computing ("RISC"), or computing via a Very Long Instruction Word ("VLIW"). In at least one embodiment, processor cores **1307** may each process a different instruction set **1309**, which may include instructions to facilitate emulation of other instruction sets. In at least one embodiment, processor core **1307** may also include other processing devices, such as a digital signal processor ("DSP").

[0144] In at least one embodiment, processor **1302** includes cache memory ('cache") **1304**. In at least one embodiment, processor **1302** can have a single internal cache or multiple levels of internal cache. In at least one embodiment, cache memory is shared among various components of processor **1302**. In at least one embodiment, processor **1302** also uses an external cache (e.g., a Level 3

("L3") cache or Last Level Cache ("LLC")) (not shown), which may be shared among processor cores **1307** using known cache coherency techniques. In at least one embodiment, register file **1306** is additionally included in processor **1302** which may include different types of registers for storing different types of data (e.g., integer registers, floating point registers, status registers, and an instruction pointer register). In at least one embodiment, register file **1306** may include general-purpose registers or other registers.

[0145] In at least one embodiment, one or more processor (s) **1302** are coupled with one or more interface bus(es) **1310** to transmit communication signals such as address, data, or control signals between processor **1302** and other components in processing system **1300**. In at least one embodiment interface bus **1310**, in one embodiment, can be a processor bus, such as a version of a Direct Media Interface ("DMI") bus. In at least one embodiment, interface bus **1310** is not limited to a DMI bus, and may include one or more Peripheral Component Interconnect buses (e.g., "PCI," PCI Express ("PCIe")), memory buses, or other types of interface buses. In at least one embodiment processor(s) **1302** include an integrated memory controller **1316** and a platform controller hub **1330**. In at least one embodiment, memory controller **1316** facilitates communication between a memory device and other components of processing system **1300**, while platform controller hub ("PCH") **1330** provides connections to Input/Output ("I/O") devices via a local I/O bus.

[0146] In at least one embodiment, memory device **1320** can be a dynamic random access memory ("DRAM") device, a static random access memory ("SRAM") device, flash memory device, phase-change memory device, or some other memory device having suitable performance to serve as processor memory. In at least one embodiment memory device **1320** can operate as system memory for processing system **1300**, to store data **1322** and instructions **1321** for use when one or more processors **1302** executes an application or process. In at least one embodiment, memory controller **1316** also couples with an optional external graphics processor **1312**, which may communicate with one or more graphics processors **1308** in processors **1302** to perform graphics and media operations. In at least one embodiment, a display device **1311** can connect to processor(s) **1302**. In at least one embodiment display device **1311** can include one or more of an internal display device, as in a mobile electronic device or a laptop device or an external display device attached via a display interface (e.g., DisplayPort, etc.). In at least one embodiment, display device **1311** can include a head mounted display ("HMD") such as a stereoscopic display device for use in virtual reality ("VR") applications or augmented reality ("AR") applications.

[0147] In at least one embodiment, platform controller hub **1330** enables peripherals to connect to memory device **1320** and processor **1302** via a high-speed I/O bus. In at least one embodiment, I/O peripherals include, but are not limited to, an audio controller **1346**, a network controller **1334**, a firmware interface **1328**, a wireless transceiver **1326**, touch sensors **1325**, a data storage device **1324** (e.g., hard disk drive, flash memory, etc.). In at least one embodiment, data storage device **1324** can connect via a storage interface (e.g., SATA) or via a peripheral bus, such as PCI, or PCIe. In at least one embodiment, touch sensors **1325** can include touch screen sensors, pressure sensors, or fingerprint sensors. In at least one embodiment, wireless transceiver **1326** can be a Wi-Fi transceiver, a Bluetooth transceiver, or a mobile network transceiver such as a 3G, 4G, or Long Term Evolution ("LTE") transceiver. In at least one embodiment, firmware interface **1328** enables communication with system firmware, and can be, for example, a unified extensible firmware interface ("UEFI"). In at least one embodiment, network controller **1334** can enable a network connection to a wired network. In at least one embodiment, a high-performance network controller (not shown) couples with interface bus **1310**. In at least one embodiment, audio controller **1346** is a multi-channel high definition audio controller. In at least one embodiment, processing system **1300** includes an optional legacy I/O controller **1340** for coupling legacy (e.g., Personal System 2 ("PS/2")) devices to processing system **1300**. In at least one embodiment, platform controller hub **1330** can also connect to one or more Universal Serial Bus ("USB") controllers **1342** connect input devices, such as keyboard and mouse **1343** combinations, a camera **1344**, or other USB input devices.

[0148] In at least one embodiment, an instance of memory controller **1316** and platform controller hub **1330** may be integrated into a discreet external graphics processor, such as external graphics processor **1312**. In at least one embodiment, platform controller hub **1330** and/or memory controller **1316** may be external to one or more processor(s) **1302**. For example, in at least one embodiment, processing system **1300** can include an external memory controller **1316** and platform controller hub **1330**, which may be configured as a memory controller hub and peripheral controller hub within a system chipset that is in communication with processor(s) **1302**.

[0149] FIG. **14** illustrates a computer system **1400**, in accordance with at least one embodiment. In at least one embodiment, computer system **1400** may be a system with interconnected devices and components, an SOC, or some combination. In at least on embodiment, computer system **1400** is formed with a processor **1402** that may include execution units to execute an instruction. In at least one embodiment, computer system **1400** may include, without limitation, a component, such as processor **1402** to employ execution units including logic to perform algorithms for processing data. In at least one embodiment, computer system **1400** may include processors, such as PENTIUM® Processor family, Xcon™, Itanium®, XScale™ and/or StrongARM™, Intel® Core™, or Intel® Nervana™ microprocessors available from Intel Corporation of Santa Clara, California, although other systems (including PCs having other microprocessors, engineering workstations, set-top boxes and like) may also be used. In at least one embodiment, computer system **1400** may execute a version of WINDOWS' operating system available from Microsoft Corporation of Redmond, Wash., although other operating systems (UNIX and Linux for example), embedded software, and/or graphical user interfaces, may also be used.

[0150] In at least one embodiment, computer system **1400** may be used in other devices such as handheld devices and embedded applications. Some examples of handheld devices include cellular phones, Internet Protocol devices, digital cameras, personal digital assistants ("PDAs"), and handheld PCs. In at least one embodiment, embedded applications may include a microcontroller, a digital signal processor (DSP), an SoC, network computers ("NetPCs"), set-top

boxes, network hubs, wide area network ("WAN") switches, or any other system that may perform one or more instructions.

[0151] In at least one embodiment, computer system **1400** may include, without limitation, processor **1402** that may include, without limitation, one or more execution units **1408** that may be configured to execute a Compute Unified Device Architecture ("CUDA") (CUDA® is developed by NVIDIA Corporation of Santa Clara, CA) program. In at least one embodiment, a CUDA program is at least a portion of a software application written in a CUDA programming language. In at least one embodiment, computer system **1400** is a single processor desktop or server system. In at least one embodiment, computer system **1400** may be a multiprocessor system. In at least one embodiment, processor **1402** may include, without limitation, a CISC microprocessor, a RISC microprocessor, a VLIW microprocessor, a processor implementing a combination of instruction sets, or any other processor device, such as a digital signal processor, for example. In at least one embodiment, processor **1402** may be coupled to a processor bus **1410** that may transmit data signals between processor **1402** and other components in computer system **1400**.

[0152] In at least one embodiment, processor **1402** may include, without limitation, a Level 1 ("L1") internal cache memory ("cache") **1404**. In at least one embodiment, processor **1402** may have a single internal cache or multiple levels of internal cache. In at least one embodiment, cache memory may reside external to processor **1402**. In at least one embodiment, processor **1402** may also include a combination of both internal and external caches. In at least one embodiment, a register file **1406** may store different types of data in various registers including, without limitation, integer registers, floating point registers, status registers, and instruction pointer register.

[0153] In at least one embodiment, execution unit **1408**, including, without limitation, logic to perform integer and floating point operations, also resides in processor **1402**. Processor **1402** may also include a microcode ("ucode") read only memory ("ROM") that stores microcode for certain macro instructions. In at least one embodiment, execution unit **1408** may include logic to handle a packed instruction set **1409**. In at least one embodiment, by including packed instruction set **1409** in an instruction set of a general-purpose processor **1402**, along with associated circuitry to execute instructions, operations used by many multimedia applications may be performed using packed data in a general-purpose processor **1402**. In at least one embodiment, many multimedia applications may be accelerated and executed more efficiently by using full width of a processor's data bus for performing operations on packed data, which may eliminate a need to transfer smaller units of data across a processor's data bus to perform one or more operations one data element at a time.

[0154] In at least one embodiment, execution unit **1408** may also be used in microcontrollers, embedded processors, graphics devices, DSPs, and other types of logic circuits. In at least one embodiment, computer system **1400** may include, without limitation, a memory **1420**. In at least one embodiment, memory **1420** may be implemented as a DRAM device, an SRAM device, flash memory device, or other memory device. Memory **1420** may store instruction (s) **1419** and/or data **1421** represented by data signals that may be executed by processor **1402**.

[0155] In at least one embodiment, a system logic chip may be coupled to processor bus **1410** and memory **1420**. In at least one embodiment, the system logic chip may include, without limitation, a memory controller hub ("MCH") **1416**, and processor **1402** may communicate with MCH **1416** via processor bus **1410**. In at least one embodiment, MCH **1416** may provide a high bandwidth memory path **1418** to memory **1420** for instruction and data storage and for storage of graphics commands, data and textures. In at least one embodiment, MCH **1416** may direct data signals between processor **1402**, memory **1420**, and other components in computer system **1400** and to bridge data signals between processor bus **1410**, memory **1420**, and a system I/O **1422**. In at least one embodiment, system logic chip may provide a graphics port for coupling to a graphics controller. In at least one embodiment, MCH **1416** may be coupled to memory **1420** through high bandwidth memory path **1418** and graphics/video card **1412** may be coupled to MCH **1416** through an Accelerated Graphics Port ("AGP") interconnect **1414**.

[0156] In at least one embodiment, computer system **1400** may use system I/O **1422** that is a proprietary hub interface bus to couple MCH **1416** to I/O controller hub ("ICH") **1430**. In at least one embodiment, ICH **1430** may provide direct connections to some I/O devices via a local I/O bus. In at least one embodiment, local I/O bus may include, without limitation, a high-speed I/O bus for connecting peripherals to memory **1420**, a chipset, and processor **1402**. Examples may include, without limitation, an audio controller **1429**, a firmware hub ("flash BIOS") **1428**, a wireless transceiver **1426**, a data storage **1424**, a legacy I/O controller **1423** containing a user input interface **1425** and a keyboard interface, a serial expansion port **1427**, such as a USB, and a network controller **1434**. Data storage **1424** may comprise a hard disk drive, a floppy disk drive, a CD-ROM device, a flash memory device, or other mass storage device.

[0157] In at least one embodiment, FIG. **14** illustrates a system, which includes interconnected hardware devices or "chips." In at least one embodiment, FIG. **14** may illustrate an exemplary SoC. In at least one embodiment, devices illustrated in FIG. **14** may be interconnected with proprietary interconnects, standardized interconnects (e.g., PCIe), or some combination thereof. In at least one embodiment, one or more components of system **1400** are interconnected using compute express link ("CXL") interconnects.

[0158] FIG. **15** illustrates a system **1500**, in accordance with at least one embodiment. In at least one embodiment, system **1500** is an electronic device that utilizes a processor **1510**. In at least one embodiment, system **1500** may be, for example and without limitation, a notebook, a tower server, a rack server, a blade server, a laptop, a desktop, a tablet, a mobile device, a phone, an embedded computer, or any other suitable electronic device.

[0159] In at least one embodiment, system **1500** may include, without limitation, processor **1510** communicatively coupled to any suitable number or kind of components, peripherals, modules, or devices. In at least one embodiment, processor **1510** is coupled using a bus or interface, such as an I2C bus, a System Management Bus ("SMBus"), a Low Pin Count ("LPC") bus, a Serial Peripheral Interface ("SPI"), a High Definition Audio ("HDA") bus, a Serial Advance Technology Attachment ("SATA") bus, a USB (versions 1, 2, 3), or a Universal Asynchronous Receiver/Transmitter ("UART") bus. In at least one embodi-

ment, FIG. **15** illustrates a system which includes interconnected hardware devices or "chips." In at least one embodiment, FIG. **15** may illustrate an exemplary SoC. In at least one embodiment, devices illustrated in FIG. **15** may be interconnected with proprietary interconnects, standardized interconnects (e.g., PCIe) or some combination thereof. In at least one embodiment, one or more components of FIG. **15** are interconnected using CXL interconnects.

[0160] In at least one embodiment, FIG. **15** may include a display **1524**, a touch screen **1525**, a touch pad **1530**, a Near Field Communications unit ("NFC") **1545**, a sensor hub **1540**, a thermal sensor **1546**, an Express Chipset ("EC") **1535**, a Trusted Platform Module ("TPM") **1538**, BIOS/firmware/flash memory ("BIOS, FW Flash") **1522**, a DSP **1560**, a Solid State Disk ("SSD") or Hard Disk Drive ("HDD") **1520**, a wireless local area network unit ("WLAN") **1550**, a Bluetooth unit **1552**, a Wireless Wide Area Network unit ("WWAN") **1556**, a Global Positioning System ("GPS") **1555**, a camera ("USB 3.0 camera") **1554** such as a USB 3.0 camera, or a Low Power Double Data Rate ("LPDDR") memory unit ("LPDDR3") **1515** implemented in, for example, LPDDR3 standard. These components may each be implemented in any suitable manner.

[0161] In at least one embodiment, other components may be communicatively coupled to processor **1510** through components discussed above. In at least one embodiment, an accelerometer **1541**, an Ambient Light Sensor ("ALS") **1542**, a compass **1543**, and a gyroscope **1544** may be communicatively coupled to sensor hub **1540**. In at least one embodiment, a thermal sensor **1539**, a fan **1537**, a keyboard **1536**, and a touch pad **1530** may be communicatively coupled to EC **1535**. In at least one embodiment, a speaker **1563**, a headphones **1564**, and a microphone ("mic") **1565** may be communicatively coupled to an audio unit ("audio codec and class d amp") **1562**, which may in turn be communicatively coupled to DSP **1560**. In at least one embodiment, audio unit **1562** may include, for example and without limitation, an audio coder/decoder ("codec") and a class D amplifier. In at least one embodiment, a SIM card ("SIM") **1557** may be communicatively coupled to WWAN unit **1556**. In at least one embodiment, components such as WLAN unit **1550** and Bluetooth unit **1552**, as well as WWAN unit **1556** may be implemented in a Next Generation Form Factor ("NGFF").

[0162] FIG. **16** illustrates an exemplary integrated circuit **1600**, in accordance with at least one embodiment. In at least one embodiment, exemplary integrated circuit **1600** is an SoC that may be fabricated using one or more IP cores. In at least one embodiment, integrated circuit **1600** includes one or more application processor(s) **1605** (e.g., CPUs), at least one graphics processor **1610**, and may additionally include an image processor **1615** and/or a video processor **1620**, any of which may be a modular IP core. In at least one embodiment, integrated circuit **1600** includes peripheral or bus logic including a USB controller **1625**, a UART controller **1630**, an SPI/SDIO controller **1635**, and an I^2S/I^2C controller **1640**. In at least one embodiment, integrated circuit **1600** can include a display device **1645** coupled to one or more of a high-definition multimedia interface ("HDMI") controller **1650** and a mobile industry processor interface ("MIPI") display interface **1655**. In at least one embodiment, storage may be provided by a flash memory subsystem **1660** including flash memory and a flash memory controller. In at least one embodiment, a memory interface may be provided via a memory controller **1665** for access to SDRAM or SRAM memory devices. In at least one embodiment, some integrated circuits additionally include an embedded security engine **1670**.

[0163] FIG. **17** illustrates a computing system **1700**, according to at least one embodiment; In at least one embodiment, computing system **1700** includes a processing subsystem **1701** having one or more processor(s) **1702** and a system memory **1704** communicating via an interconnection path that may include a memory hub **1705**. In at least one embodiment, memory hub **1705** may be a separate component within a chipset component or may be integrated within one or more processor(s) **1702**. In at least one embodiment, memory hub **1705** couples with an I/O subsystem **1711** via a communication link **1706**. In at least one embodiment, I/O subsystem **1711** includes an I/O hub **1707** that can enable computing system **1700** to receive input from one or more input device(s) **1708**. In at least one embodiment, I/O hub **1707** can enable a display controller, which may be included in one or more processor(s) **1702**, to provide outputs to one or more display device(s) **1710**A. In at least one embodiment, one or more display device(s) **1710**A coupled with I/O hub **1707** can include a local, internal, or embedded display device.

[0164] In at least one embodiment, processing subsystem **1701** includes one or more parallel processor(s) **1712** coupled to memory hub **1705** via a bus or other communication link **1713**. In at least one embodiment, communication link **1713** may be one of any number of standards based communication link technologies or protocols, such as, but not limited to PCIe, or may be a vendor specific communications interface or communications fabric. In at least one embodiment, one or more parallel processor(s) **1712** form a computationally focused parallel or vector processing system that can include a large number of processing cores and/or processing clusters, such as a many integrated core processor. In at least one embodiment, one or more parallel processor(s) **1712** form a graphics processing subsystem that can output pixels to one of one or more display device(s) **1710**A coupled via I/O Hub **1707**. In at least one embodiment, one or more parallel processor(s) **1712** can also include a display controller and display interface (not shown) to enable a direct connection to one or more display device(s) **1710**B.

[0165] In at least one embodiment, a system storage unit **1714** can connect to I/O hub **1707** to provide a storage mechanism for computing system **1700**. In at least one embodiment, an I/O switch **1716** can be used to provide an interface mechanism to enable connections between I/O hub **1707** and other components, such as a network adapter **1718** and/or wireless network adapter **1719** that may be integrated into a platform, and various other devices that can be added via one or more add-in device(s) **1720**. In at least one embodiment, network adapter **1718** can be an Ethernet adapter or another wired network adapter. In at least one embodiment, wireless network adapter **1719** can include one or more of a Wi-Fi, Bluetooth, NFC, or other network device that includes one or more wireless radios.

[0166] In at least one embodiment, computing system **1700** can include other components not explicitly shown, including USB or other port connections, optical storage drives, video capture devices, and the like, that may also be connected to I/O hub **1707**. In at least one embodiment, communication paths interconnecting various components

in FIG. **17** may be implemented using any suitable protocols, such as PCI based protocols (e.g., PCIe), or other bus or point-to-point communication interfaces and/or protocol (s), such as NVLink high-speed interconnect, or interconnect protocols.

[0167] In at least one embodiment, one or more parallel processor(s) **1712** incorporate circuitry optimized for graphics and video processing, including, for example, video output circuitry, and constitutes a graphics processing unit ("GPU"). In at least one embodiment, one or more parallel processor(s) **1712** incorporate circuitry optimized for general purpose processing. In at least embodiment, components of computing system **1700** may be integrated with one or more other system elements on a single integrated circuit. For example, in at least one embodiment, one or more parallel processor(s) **1712**, memory hub **1705**, processor(s) **1702**, and I/O hub **1707** can be integrated into an SoC integrated circuit. In at least one embodiment, components of computing system **1700** can be integrated into a single package to form a system in package ("SIP") configuration. In at least one embodiment, at least a portion of the components of computing system **1700** can be integrated into a multi-chip module ("MCM"), which can be interconnected with other multi-chip modules into a modular computing system. In at least one embodiment, I/O subsystem **1711** and display devices **1710**B are omitted from computing system **1700**.

Processing Systems

[0168] The following FIGS. set forth, without limitation, exemplary processing systems that can be used to implement at least one embodiment.

[0169] FIG. **18** illustrates an accelerated processing unit ("APU") **1800**, in accordance with at least one embodiment. In at least one embodiment, APU **1800** is developed by AMD Corporation of Santa Clara, CA. In at least one embodiment, APU **1800** can be configured to execute an application program, such as a CUDA program. In at least one embodiment, APU **1800** includes, without limitation, a core complex **1810**, a graphics complex **1840**, fabric **1860**, I/O interfaces **1870**, memory controllers **1880**, a display controller **1892**, and a multimedia engine **1894**. In at least one embodiment, APU **1800** may include, without limitation, any number of core complexes **1810**, any number of graphics complexes **1850**, any number of display controllers **1892**, and any number of multimedia engines **1894** in any combination. For explanatory purposes, multiple instances of like objects are denoted herein with reference numbers identifying the object and parenthetical numbers identifying the instance where needed.

[0170] In at least one embodiment, core complex **1810** is a CPU, graphics complex **1840** is a GPU, and APU **1800** is a processing unit that integrates, without limitation, **1810** and **1840** onto a single chip. In at least one embodiment, some tasks may be assigned to core complex **1810** and other tasks may be assigned to graphics complex **1840**. In at least one embodiment, core complex **1810** is configured to execute main control software associated with APU **1800**, such as an operating system. In at least one embodiment, core complex **1810** is the master processor of APU **1800**, controlling and coordinating operations of other processors. In at least one embodiment, core complex **1810** issues commands that control the operation of graphics complex **1840**. In at least one embodiment, core complex **1810** can be configured to execute host executable code derived from CUDA source code, and graphics complex **1840** can be configured to execute device executable code derived from CUDA source code.

[0171] In at least one embodiment, core complex **1810** includes, without limitation, cores **1820**(**1**)-**1820**(**4**) and an L3 cache **1830**. In at least one embodiment, core complex **1810** may include, without limitation, any number of cores **1820** and any number and type of caches in any combination. In at least one embodiment, cores **1820** are configured to execute instructions of a particular instruction set architecture ("ISA"). In at least one embodiment, each core **1820** is a CPU core.

[0172] In at least one embodiment, each core **1820** includes, without limitation, a fetch/decode unit **1822**, an integer execution engine **1824**, a floating point execution engine **1826**, and an L2 cache **1828**. In at least one embodiment, fetch/decode unit **1822** fetches instructions, decodes such instructions, generates micro-operations, and dispatches separate micro-instructions to integer execution engine **1824** and floating point execution engine **1826**. In at least one embodiment, fetch/decode unit **1822** can concurrently dispatch one micro-instruction to integer execution engine **1824** and another micro-instruction to floating point execution engine **1826**. In at least one embodiment, integer execution engine **1824** executes, without limitation, integer and memory operations. In at least one embodiment, floating point engine **1826** executes, without limitation, floating point and vector operations. In at least one embodiment, fetch-decode unit **1822** dispatches micro-instructions to a single execution engine that replaces both integer execution engine **1824** and floating point execution engine **1826**.

[0173] In at least one embodiment, each core **1820**(*i*), where i is an integer representing a particular instance of core **1820**, may access L2 cache **1828** (*i*) included in core **1820**(*i*). In at least one embodiment, each core **1820** included in core complex **1810** (*j*), where j is an integer representing a particular instance of core complex **1810**, is connected to other cores **1820** included in core complex **1810** (*j*) via L3 cache **1830** (*j*) included in core complex **1810** (*j*). In at least one embodiment, cores **1820** included in core complex **1810** (*j*), where j is an integer representing a particular instance of core complex **1810**, can access all of L3 cache **1830** (*j*) included in core complex **1810** (*j*). In at least one embodiment, L3 cache **1830** may include, without limitation, any number of slices.

[0174] In at least one embodiment, graphics complex **1840** can be configured to perform compute operations in a highly-parallel fashion. In at least one embodiment, graphics complex **1840** is configured to execute graphics pipeline operations such as draw commands, pixel operations, geometric computations, and other operations associated with rendering an image to a display. In at least one embodiment, graphics complex **1840** is configured to execute operations unrelated to graphics. In at least one embodiment, graphics complex **1840** is configured to execute both operations related to graphics and operations unrelated to graphics.

[0175] In at least one embodiment, graphics complex **1840** includes, without limitation, any number of compute units **1850** and an L2 cache **1842**. In at least one embodiment, compute units **1850** share L2 cache **1842**. In at least one embodiment, L2 cache **1842** is partitioned. In at least one embodiment, graphics complex **1840** includes, without limitation, any number of compute units **1850** and any number

(including zero) and type of caches. In at least one embodiment, graphics complex **1840** includes, without limitation, any amount of dedicated graphics hardware.

[0176] In at least one embodiment, each compute unit **1850** includes, without limitation, any number of SIMD units **1852** and a shared memory **1854**. In at least one embodiment, each SIMD unit **1852** implements a SIMD architecture and is configured to perform operations in parallel. In at least one embodiment, each compute unit **1850** may execute any number of thread blocks, but each thread block executes on a single compute unit **1850**. In at least one embodiment, a thread block includes, without limitation, any number of threads of execution. In at least one embodiment, a workgroup is a thread block. In at least one embodiment, each SIMD unit **1852** executes a different warp. In at least one embodiment, a warp is a group of threads (e.g., **16** threads), where each thread in the warp belongs to a single thread block and is configured to process a different set of data based on a single set of instructions. In at least one embodiment, predication can be used to disable one or more threads in a warp. In at least one embodiment, a lane is a thread. In at least one embodiment, a work item is a thread. In at least one embodiment, a wavefront is a warp. In at least one embodiment, different wavefronts in a thread block may synchronize together and communicate via shared memory **1854**.

[0177] In at least one embodiment, fabric **1860** is a system interconnect that facilitates data and control transmissions across core complex **1810**, graphics complex **1840**, I/O interfaces **1870**, memory controllers **1880**, display controller **1892**, and multimedia engine **1894**. In at least one embodiment, APU **1800** may include, without limitation, any amount and type of system interconnect in addition to or instead of fabric **1860** that facilitates data and control transmissions across any number and type of directly or indirectly linked components that may be internal or external to APU **1800**. In at least one embodiment, I/O interfaces **1870** are representative of any number and type of I/O interfaces (e.g., PCI, PCI-Extended ("PCI-X"), PCIe, gigabit Ethernet ("GBE"), USB, etc.). In at least one embodiment, various types of peripheral devices are coupled to I/O interfaces **1870** In at least one embodiment, peripheral devices that are coupled to I/O interfaces **1870** may include, without limitation, keyboards, mice, printers, scanners, joysticks or other types of game controllers, media recording devices, external storage devices, network interface cards, and so forth.

[0178] In at least one embodiment, display controller AMD92 displays images on one or more display device(s), such as a liquid crystal display ("LCD") device. In at least one embodiment, multimedia engine **240** includes, without limitation, any amount and type of circuitry that is related to multimedia, such as a video decoder, a video encoder, an image signal processor, etc. In at least one embodiment, memory controllers **1880** facilitate data transfers between APU **1800** and a unified system memory **1890**. In at least one embodiment, core complex **1810** and graphics complex **1840** share unified system memory **1890**.

[0179] In at least one embodiment, APU **1800** implements a memory subsystem that includes, without limitation, any amount and type of memory controllers **1880** and memory devices (e.g., shared memory **1854**) that may be dedicated to one component or shared among multiple components. In at least one embodiment, APU **1800** implements a cache subsystem that includes, without limitation, one or more cache memories (e.g., L2 caches **1928**, L3 cache **1830**, and L2 cache **1842**) that may each be private to or shared between any number of components (e.g., cores **1820**, core complex **1810**, SIMD units **1852**, compute units **1850**, and graphics complex **1840**).

[0180] FIG. **19** illustrates a CPU **1900**, in accordance with at least one embodiment. In at least one embodiment, CPU **1900** is developed by AMD Corporation of Santa Clara, CA. In at least one embodiment, CPU **1900** can be configured to execute an application program. In at least one embodiment, CPU **1900** is configured to execute main control software, such as an operating system. In at least one embodiment, CPU **1900** issues commands that control the operation of an external GPU (not shown). In at least one embodiment, CPU **1900** can be configured to execute host executable code derived from CUDA source code, and an external GPU can be configured to execute device executable code derived from such CUDA source code. In at least one embodiment, CPU **1900** includes, without limitation, any number of core complexes **1910**, fabric **1960**, I/O interfaces **1970**, and memory controllers **1980**.

[0181] In at least one embodiment, core complex **1910** includes, without limitation, cores **1920(1)-1920(4)** and an L3 cache **1930**. In at least one embodiment, core complex **1910** may include, without limitation, any number of cores **1920** and any number and type of caches in any combination. In at least one embodiment, cores **1920** are configured to execute instructions of a particular ISA. In at least one embodiment, each core **1920** is a CPU core.

[0182] In at least one embodiment, each core **1920** includes, without limitation, a fetch/decode unit **1922**, an integer execution engine **1924**, a floating point execution engine **1926**, and an L2 cache **1928**. In at least one embodiment, fetch/decode unit **1922** fetches instructions, decodes such instructions, generates micro-operations, and dispatches separate micro-instructions to integer execution engine **1924** and floating point execution engine **1926**. In at least one embodiment, fetch/decode unit **1922** can concurrently dispatch one micro-instruction to integer execution engine **1924** and another micro-instruction to floating point execution engine **1926**. In at least one embodiment, integer execution engine **1924** executes, without limitation, integer and memory operations. In at least one embodiment, floating point engine **1926** executes, without limitation, floating point and vector operations. In at least one embodiment, fetch-decode unit **1922** dispatches micro-instructions to a single execution engine that replaces both integer execution engine **1924** and floating point execution engine **1926**.

[0183] In at least one embodiment, each core **1920**(*i*), where i is an integer representing a particular instance of core **1920**, may access L2 cache **1928**(*i*) included in core **1920**(*i*). In at least one embodiment, each core **1920** included in core complex **1910**(*j*), where j is an integer representing a particular instance of core complex **1910**, is connected to other cores **1920** in core complex **1910**(*j*) via L3 cache **1930**(*j*) included in core complex **1910**(*j*). In at least one embodiment, cores **1920** included in core complex **1910**(*j*), where j is an integer representing a particular instance of core complex **1910**, can access all of L3 cache **1930**(*j*) included in core complex **1910**(*j*). In at least one embodiment, L3 cache **1930** may include, without limitation, any number of slices.

[0184] In at least one embodiment, fabric **1960** is a system interconnect that facilitates data and control transmissions across core complexes **1910(1)-1910**(N) (where N is an integer greater than zero), I/O interfaces **1970**, and memory controllers **1980**. In at least one embodiment, CPU **1900** may include, without limitation, any amount and type of system interconnect in addition to or instead of fabric **1960** that facilitates data and control transmissions across any number and type of directly or indirectly linked components that may be internal or external to CPU **1900**. In at least one embodiment, I/O interfaces **1970** are representative of any number and type of I/O interfaces (e.g., PCI, PCI-X, PCIe, GBE, USB, etc.). In at least one embodiment, various types of peripheral devices are coupled to I/O interfaces **1970** In at least one embodiment, peripheral devices that are coupled to I/O interfaces **1970** may include, without limitation, displays, keyboards, mice, printers, scanners, joysticks or other types of game controllers, media recording devices, external storage devices, network interface cards, and so forth.

[0185] In at least one embodiment, memory controllers **1980** facilitate data transfers between CPU **1900** and a system memory **1990**. In at least one embodiment, core complex **1910** and graphics complex **1940** share system memory **1990**. In at least one embodiment, CPU **1900** implements a memory subsystem that includes, without limitation, any amount and type of memory controllers **1980** and memory devices that may be dedicated to one component or shared among multiple components. In at least one embodiment, CPU **1900** implements a cache subsystem that includes, without limitation, one or more cache memories (e.g., L2 caches **1928** and L3 caches **1930**) that may each be private to or shared between any number of components (e.g., cores **1920** and core complexes **1910**).

[0186] FIG. **20** illustrates an exemplary accelerator integration slice **2090**, in accordance with at least one embodiment. As used herein, a "slice" comprises a specified portion of processing resources of an accelerator integration circuit. In at least one embodiment, the accelerator integration circuit provides cache management, memory access, context management, and interrupt management services on behalf of multiple graphics processing engines included in a graphics acceleration module. The graphics processing engines may each comprise a separate GPU. Alternatively, the graphics processing engines may comprise different types of graphics processing engines within a GPU such as graphics execution units, media processing engines (e.g., video encoders/decoders), samplers, and blit engines. In at least one embodiment, the graphics acceleration module may be a GPU with multiple graphics processing engines. In at least one embodiment, the graphics processing engines may be individual GPUs integrated on a common package, line card, or chip.

[0187] An application effective address space **2082** within system memory **2014** stores process elements **2083**. In one embodiment, process elements **2083** are stored in response to GPU invocations **2081** from applications **2080** executed on processor **2007**. A process element **2083** contains process state for corresponding application **2080**. A work descriptor ("WD") **2084** contained in process element **2083** can be a single job requested by an application or may contain a pointer to a queue of jobs. In at least one embodiment, WD **2084** is a pointer to a job request queue in application effective address space **2082**.

[0188] Graphics acceleration module **2046** and/or individual graphics processing engines can be shared by all or a subset of processes in a system. In at least one embodiment, an infrastructure for setting up process state and sending WD **2084** to graphics acceleration module **2046** to start a job in a virtualized environment may be included.

[0189] In at least one embodiment, a dedicated-process programming model is implementation-specific. In this model, a single process owns graphics acceleration module **2046** or an individual graphics processing engine. Because graphics acceleration module **2046** is owned by a single process, a hypervisor initializes an accelerator integration circuit for an owning partition and an operating system initializes accelerator integration circuit for an owning process when graphics acceleration module **2046** is assigned.

[0190] In operation, a WD fetch unit **2091** in accelerator integration slice **2090** fetches next WD **2084** which includes an indication of work to be done by one or more graphics processing engines of graphics acceleration module **2046**. Data from WD **2084** may be stored in registers **2045** and used by a memory management unit ("MMU") **2039**, interrupt management circuit **2047** and/or context management circuit **2048** as illustrated. For example, one embodiment of MMU **2039** includes segment/page walk circuitry for accessing segment/page tables **2086** within OS virtual address space **2085**. Interrupt management circuit **2047** may process interrupt events ("INT") **2092** received from graphics acceleration module **2046**. When performing graphics operations, an effective address **2093** generated by a graphics processing engine is translated to a real address by MMU **2039**.

[0191] In one embodiment, a same set of registers **2045** are duplicated for each graphics processing engine and/or graphics acceleration module **2046** and may be initialized by a hypervisor or operating system. Each of these duplicated registers may be included in accelerator integration slice **2090**. Exemplary registers that may be initialized by a hypervisor are shown in Table 1.

TABLE 1

Hypervisor Initialized Registers	
1	Slice Control Register
2	Real Address (RA) Scheduled Processes Area Pointer
3	Authority Mask Override Register
4	Interrupt Vector Table Entry Offset
5	Interrupt Vector Table Entry Limit
6	State Register
7	Logical Partition ID
8	Real address (RA) Hypervisor Accelerator Utilization Record Pointer
9	Storage Description Register

[0192] Exemplary registers that may be initialized by an operating system are shown in Table 2.

TABLE 2

Operating System Initialized Registers	
1	Process and Thread Identification
2	Effective Address (EA) Context Save/Restore Pointer
3	Virtual Address (VA) Accelerator Utilization Record Pointer
4	Virtual Address (VA) Storage Segment Table Pointer
5	Authority Mask
6	Work descriptor

[0193] In one embodiment, each WD **2084** is specific to a particular graphics acceleration module **2046** and/or a particular graphics processing engine. It contains all information required by a graphics processing engine to do work or it can be a pointer to a memory location where an application has set up a command queue of work to be completed.

[0194] FIGS. **21**A and **21**B illustrate exemplary graphics processors, in accordance with at least one embodiment. In at least one embodiment, any of the exemplary graphics processors may be fabricated using one or more IP cores. In addition to what is illustrated, other logic and circuits may be included in at least one embodiment, including additional graphics processors/cores, peripheral interface controllers, or general-purpose processor cores. In at least one embodiment, the exemplary graphics processors are for use within an SoC.

[0195] FIG. **21**A illustrates an exemplary graphics processor **2110** of an SoC integrated circuit that may be fabricated using one or more IP cores, in accordance with at least one embodiment. FIG. **21**B illustrates an additional exemplary graphics processor **2140** of an SoC integrated circuit that may be fabricated using one or more IP cores, in accordance with at least one embodiment. In at least one embodiment, graphics processor **2110** of FIG. **21**A is a low power graphics processor core. In at least one embodiment, graphics processor **2140** of FIG. **21**B is a higher performance graphics processor core. In at least one embodiment, each of graphics processors **2110**, **2140** can be variants of graphics processor **1610** of FIG. **16**.

[0196] In at least one embodiment, graphics processor **2110** includes a vertex processor **2105** and one or more fragment processor(s) **2115**A-**2115**N (e.g., **2115**A, **2115**B, **2115**C, **2115**D, through **2115**N-**1**, and **2115**N). In at least one embodiment, graphics processor **2110** can execute different shader programs via separate logic, such that vertex processor **2105** is optimized to execute operations for vertex shader programs, while one or more fragment processor(s) **2115**A-**2115**N execute fragment (e.g., pixel) shading operations for fragment or pixel shader programs. In at least one embodiment, vertex processor **2105** performs a vertex processing stage of a 3D graphics pipeline and generates primitives and vertex data. In at least one embodiment, fragment processor (s) **2115**A-**2115**N use primitive and vertex data generated by vertex processor **2105** to produce a framebuffer that is displayed on a display device. In at least one embodiment, fragment processor(s) **2115**A-**2115**N are optimized to execute fragment shader programs as provided for in an OpenGL API, which may be used to perform similar operations as a pixel shader program as provided for in a Direct 3D API.

[0197] In at least one embodiment, graphics processor **2110** additionally includes one or more MMU(s) **2120**A-**2120**B, cache(s) **2125**A-**2125**B, and circuit interconnect(s) **2130**A-**2130**B. In at least one embodiment, one or more MMU(s) **2120**A-**2120**B provide for virtual to physical address mapping for graphics processor **2110**, including for vertex processor **2105** and/or fragment processor(s) **2115**A-**2115**N, which may reference vertex or image/texture data stored in memory, in addition to vertex or image/texture data stored in one or more cache(s) **2125**A-**2125**B. In at least one embodiment, one or more MMU(s) **2120**A-**2120**B may be synchronized with other MMUs within a system, including one or more MMUs associated with one or more application processor(s) **1605**, image processors **1615**, and/or video processors **1620** of FIG. **16**, such that each processor **1605**-**1620** can participate in a shared or unified virtual memory system. In at least one embodiment, one or more circuit interconnect(s) **2130**A-**2130**B enable graphics processor **2110** to interface with other IP cores within an SoC, either via an internal bus of the SoC or via a direct connection.

[0198] In at least one embodiment, graphics processor **2140** includes one or more MMU(s) **2120**A-**2120**B, caches **2125**A-**2125**B, and circuit interconnects **2130**A-**2130**B of graphics processor **2110** of FIG. **21**A. In at least one embodiment, graphics processor **2140** includes one or more shader core(s) **2155**A-**2155**N (e.g., **2155**A, **2155**B, **2155**C, **2155**D, **2155**E, **2155**F, through **2155**N-**1**, and **2155**N), which provides for a unified shader core architecture in which a single core or type or core can execute all types of programmable shader code, including shader program code to implement vertex shaders, fragment shaders, and/or compute shaders. In at least one embodiment, a number of shader cores can vary. In at least one embodiment, graphics processor **2140** includes an inter-core task manager **2145**, which acts as a thread dispatcher to dispatch execution threads to one or more shader cores **2155**A-**2155**N and a tiling unit **2158** to accelerate tiling operations for tile-based rendering, in which rendering operations for a scene are subdivided in image space, for example to exploit local spatial coherence within a scene or to optimize use of internal caches.

[0199] FIG. **22**A illustrates a graphics core **2200**, in accordance with at least one embodiment. In at least one embodiment, graphics core **2200** may be included within graphics processor **1610** of FIG. **16**. In at least one embodiment, graphics core **2200** may be a unified shader core **2155**A-**2155**N as in FIG. **21**B. In at least one embodiment, graphics core **2200** includes a shared instruction cache **2202**, a texture unit **2218**, and a cache/shared memory **2220** that are common to execution resources within graphics core **2200**. In at least one embodiment, graphics core **2200** can include multiple slices **2201**A-**2201**N or partition for each core, and a graphics processor can include multiple instances of graphics core **2200**. Slices **2201**A-**2201**N can include support logic including a local instruction cache **2204**A-**2204**N, a thread scheduler **2206**A-**2206**N, a thread dispatcher **2208**A-**2208**N, and a set of registers **2210**A-**2210**N. In at least one embodiment, slices **2201**A-**2201**N can include a set of additional function units ("AFUs") **2212**A-**2212**N, floating-point units ("FPUs") **2214**A-**2214**N, integer arithmetic logic units ("ALUs") **2216**-**2216**N, address computational units ("ACUs") **2213**A-**2213**N, double-precision floating-point units ("DPFPUs") **2215**A-**2215**N, and matrix processing units ("MPUs") **2217**A-**2217**N.

[0200] In at least one embodiment, FPUs **2214**A-**2214**N can perform single-precision (32-bit) and half-precision (16-bit) floating point operations, while DPFPUs **2215**A-**2215**N perform double precision (64-bit) floating point operations. In at least one embodiment, ALUs **2216**A-**2216**N can perform variable precision integer operations at 8-bit, 16-bit, and 32-bit precision, and can be configured for mixed precision operations. In at least one embodiment, MPUs **2217**A-**2217**N can also be configured for mixed precision matrix operations, including half-precision floating point and 8-bit integer operations. In at least one embodiment, MPUs **2217**-**2217**N can perform a variety of matrix operations to accelerate CUDA programs, including enabling support for accelerated general matrix to matrix multiplication ("GEMM"). In at least one embodiment,

AFUs **2212**A-**2212**N can perform additional logic operations not supported by floating-point or integer units, including trigonometric operations (e.g., Sine, Cosine, etc.).

[0201] FIG. **22**B illustrates a general-purpose graphics processing unit ("GPGPU") **2230**, in accordance with at least one embodiment. In at least one embodiment, GPGPU **2230** is highly-parallel and suitable for deployment on a multi-chip module. In at least one embodiment, GPGPU **2230** can be configured to enable highly-parallel compute operations to be performed by an array of GPUs. In at least one embodiment, GPGPU **2230** can be linked directly to other instances of GPGPU **2230** to create a multi-GPU cluster to improve execution time for CUDA programs. In at least one embodiment, GPGPU **2230** includes a host interface **2232** to enable a connection with a host processor. In at least one embodiment, host interface **2232** is a PCIe interface. In at least one embodiment, host interface **2232** can be a vendor specific communications interface or communications fabric. In at least one embodiment, GPGPU **2230** receives commands from a host processor and uses a global scheduler **2234** to distribute execution threads associated with those commands to a set of compute clusters **2236**A-**2236**H. In at least one embodiment, compute clusters **2236**A-**2236**H share a cache memory **2238**. In at least one embodiment, cache memory **2238** can serve as a higher-level cache for cache memories within compute clusters **2236**A-**2236**H.

[0202] In at least one embodiment, GPGPU **2230** includes memory **2244**A-**2244**B coupled with compute clusters **2236**A-**2236**H via a set of memory controllers **2242**A-**2242**B. In at least one embodiment, memory **2244**A-**2244**B can include various types of memory devices including DRAM or graphics random access memory, such as synchronous graphics random access memory ("SGRAM"), including graphics double data rate ("GDDR") memory.

[0203] In at least one embodiment, compute clusters **2236**A-**2236**H each include a set of graphics cores, such as graphics core **2200** of FIG. **22**A, which can include multiple types of integer and floating point logic units that can perform computational operations at a range of precisions including suited for computations associated with CUDA programs. For example, in at least one embodiment, at least a subset of floating point units in each of compute clusters **2236**A-**2236**H can be configured to perform 16-bit or 32-bit floating point operations, while a different subset of floating point units can be configured to perform 64-bit floating point operations.

[0204] In at least one embodiment, multiple instances of GPGPU **2230** can be configured to operate as a compute cluster. Compute clusters **2236**A-**2236**H may implement any technically feasible communication techniques for synchronization and data exchange. In at least one embodiment, multiple instances of GPGPU **2230** communicate over host interface **2232**. In at least one embodiment, GPGPU **2230** includes an I/O hub **2239** that couples GPGPU **2230** with a GPU link **2240** that enables a direct connection to other instances of GPGPU **2230**. In at least one embodiment, GPU link **2240** is coupled to a dedicated GPU-to-GPU bridge that enables communication and synchronization between multiple instances of GPGPU **2230**. In at least one embodiment GPU link **2240** couples with a high speed interconnect to transmit and receive data to other GPGPUs **2230** or parallel processors. In at least one embodiment, multiple instances of GPGPU **2230** are located in separate data processing systems and communicate via a network device that is accessible via host interface **2232**. In at least one embodiment GPU link **2240** can be configured to enable a connection to a host processor in addition to or as an alternative to host interface **2232**. In at least one embodiment, GPGPU **2230** can be configured to execute a CUDA program.

[0205] FIG. **23**A illustrates a parallel processor **2300**, in accordance with at least one embodiment. In at least one embodiment, various components of parallel processor **2300** may be implemented using one or more integrated circuit devices, such as programmable processors, application specific integrated circuits ("ASICs"), or FPGAs.

[0206] In at least one embodiment, parallel processor **2300** includes a parallel processing unit **2302**. In at least one embodiment, parallel processing unit **2302** includes an I/O unit **2304** that enables communication with other devices, including other instances of parallel processing unit **2302**. In at least one embodiment, I/O unit **2304** may be directly connected to other devices. In at least one embodiment, I/O unit **2304** connects with other devices via use of a hub or switch interface, such as memory hub **2305**. In at least one embodiment, connections between memory hub **2305** and I/O unit **2304** form a communication link. In at least one embodiment, I/O unit **2304** connects with a host interface **2306** and a memory crossbar **2316**, where host interface **2306** receives commands directed to performing processing operations and memory crossbar **2316** receives commands directed to performing memory operations.

[0207] In at least one embodiment, when host interface **2306** receives a command buffer via I/O unit **2304**, host interface **2306** can direct work operations to perform those commands to a front end **2308**. In at least one embodiment, front end **2308** couples with a scheduler **2310**, which is configured to distribute commands or other work items to a processing array **2312**. In at least one embodiment, scheduler **2310** ensures that processing array **2312** is properly configured and in a valid state before tasks are distributed to processing array **2312**. In at least one embodiment, scheduler **2310** is implemented via firmware logic executing on a microcontroller. In at least one embodiment, microcontroller implemented scheduler **2310** is configurable to perform complex scheduling and work distribution operations at coarse and fine granularity, enabling rapid preemption and context switching of threads executing on processing array **2312**. In at least one embodiment, host software can prove workloads for scheduling on processing array **2312** via one of multiple graphics processing doorbells. In at least one embodiment, workloads can then be automatically distributed across processing array **2312** by scheduler **2310** logic within a microcontroller including scheduler **2310**.

[0208] In at least one embodiment, processing array **2312** can include up to "N" clusters (e.g., cluster **2314**A, cluster **2314**B, through cluster **2314**N). In at least one embodiment, each cluster **2314**A-**2314**N of processing array **2312** can execute a large number of concurrent threads. In at least one embodiment, scheduler **2310** can allocate work to clusters **2314**A-**2314**N of processing array **2312** using various scheduling and/or work distribution algorithms, which may vary depending on the workload arising for each type of program or computation. In at least one embodiment, scheduling can be handled dynamically by scheduler **2310**, or can be assisted in part by compiler logic during compilation of program logic configured for execution by processing array **2312**. In at least one embodiment, different clusters **2314**A-

2314N of processing array **2312** can be allocated for processing different types of programs or for performing different types of computations.

[0209] In at least one embodiment, processing array **2312** can be configured to perform various types of parallel processing operations. In at least one embodiment, processing array **2312** is configured to perform general-purpose parallel compute operations. For example, in at least one embodiment, processing array **2312** can include logic to execute processing tasks including filtering of video and/or audio data, performing modeling operations, including physics operations, and performing data transformations.

[0210] In at least one embodiment, processing array **2312** is configured to perform parallel graphics processing operations. In at least one embodiment, processing array **2312** can include additional logic to support execution of such graphics processing operations, including, but not limited to texture sampling logic to perform texture operations, as well as tessellation logic and other vertex processing logic. In at least one embodiment, processing array **2312** can be configured to execute graphics processing related shader programs such as, but not limited to vertex shaders, tessellation shaders, geometry shaders, and pixel shaders. In at least one embodiment, parallel processing unit **2302** can transfer data from system memory via I/O unit **2304** for processing. In at least one embodiment, during processing, transferred data can be stored to on-chip memory (e.g., a parallel processor memory **2322**) during processing, then written back to system memory.

[0211] In at least one embodiment, when parallel processing unit **2302** is used to perform graphics processing, scheduler **2310** can be configured to divide a processing workload into approximately equal sized tasks, to better enable distribution of graphics processing operations to multiple clusters **2314**A-**2314**N of processing array **2312**. In at least one embodiment, portions of processing array **2312** can be configured to perform different types of processing. For example, in at least one embodiment, a first portion may be configured to perform vertex shading and topology generation, a second portion may be configured to perform tessellation and geometry shading, and a third portion may be configured to perform pixel shading or other screen space operations, to produce a rendered image for display. In at least one embodiment, intermediate data produced by one or more of clusters **2314**A-**2314**N may be stored in buffers to allow intermediate data to be transmitted between clusters **2314**A-**2314**N for further processing.

[0212] In at least one embodiment, processing array **2312** can receive processing tasks to be executed via scheduler **2310**, which receives commands defining processing tasks from front end **2308**. In at least one embodiment, processing tasks can include indices of data to be processed, e.g., surface (patch) data, primitive data, vertex data, and/or pixel data, as well as state parameters and commands defining how data is to be processed (e.g., what program is to be executed). In at least one embodiment, scheduler **2310** may be configured to fetch indices corresponding to tasks or may receive indices from front end **2308**. In at least one embodiment, front end **2308** can be configured to ensure processing array **2312** is configured to a valid state before a workload specified by incoming command buffers (e.g., batch-buffers, push buffers, etc.) is initiated.

[0213] In at least one embodiment, each of one or more instances of parallel processing unit **2302** can couple with parallel processor memory **2322**. In at least one embodiment, parallel processor memory **2322** can be accessed via memory crossbar **2316**, which can receive memory requests from processing array **2312** as well as I/O unit **2304**. In at least one embodiment, memory crossbar **2316** can access parallel processor memory **2322** via a memory interface **2318**. In at least one embodiment, memory interface **2318** can include multiple partition units (e.g., a partition unit **2320**A, partition unit **2320**B, through partition unit **2320**N) that can each couple to a portion (e.g., memory unit) of parallel processor memory **2322**. In at least one embodiment, a number of partition units **2320**A-**2320**N is configured to be equal to a number of memory units, such that a first partition unit **2320**A has a corresponding first memory unit **2324**A, a second partition unit **2320**B has a corresponding memory unit **2324**B, and an Nth partition unit **2320**N has a corresponding Nth memory unit **2324**N. In at least one embodiment, a number of partition units **2320**A-**2320**N may not be equal to a number of memory devices.

[0214] In at least one embodiment, memory units **2324**A-**2324**N can include various types of memory devices, including DRAM or graphics random access memory, such as SGRAM, including GDDR memory. In at least one embodiment, memory units **2324**A-**2324**N may also include 3D stacked memory, including but not limited to high bandwidth memory ("HBM"). In at least one embodiment, render targets, such as frame buffers or texture maps may be stored across memory units **2324**A-**2324**N, allowing partition units **2320**A-**2320**N to write portions of each render target in parallel to efficiently use available bandwidth of parallel processor memory **2322**. In at least one embodiment, a local instance of parallel processor memory **2322** may be excluded in favor of a unified memory design that utilizes system memory in conjunction with local cache memory.

[0215] In at least one embodiment, any one of clusters **2314**A-**2314**N of processing array **2312** can process data that will be written to any of memory units **2324**A-**2324**N within parallel processor memory **2322**. In at least one embodiment, memory crossbar **2316** can be configured to transfer an output of each cluster **2314**A-**2314**N to any partition unit **2320**A-**2320**N or to another cluster **2314**A-**2314**N, which can perform additional processing operations on an output. In at least one embodiment, each cluster **2314**A-**2314**N can communicate with memory interface **2318** through memory crossbar **2316** to read from or write to various external memory devices. In at least one embodiment, memory crossbar **2316** has a connection to memory interface **2318** to communicate with I/O unit **2304**, as well as a connection to a local instance of parallel processor memory **2322**, enabling processing units within different clusters **2314**A-**2314**N to communicate with system memory or other memory that is not local to parallel processing unit **2302**. In at least one embodiment, memory crossbar **2316** can use virtual channels to separate traffic streams between clusters **2314**A-**2314**N and partition units **2320**A-**2320**N.

[0216] In at least one embodiment, multiple instances of parallel processing unit **2302** can be provided on a single add-in card, or multiple add-in cards can be interconnected. In at least one embodiment, different instances of parallel processing unit **2302** can be configured to interoperate even if different instances have different numbers of processing cores, different amounts of local parallel processor memory, and/or other configuration differences. For example, in at

least one embodiment, some instances of parallel processing unit **2302** can include higher precision floating point units relative to other instances. In at least one embodiment, systems incorporating one or more instances of parallel processing unit **2302** or parallel processor **2300** can be implemented in a variety of configurations and form factors, including but not limited to desktop, laptop, or handheld personal computers, servers, workstations, game consoles, and/or embedded systems.

[0217] FIG. **23**B illustrates a processing cluster **2394**, in accordance with at least one embodiment. In at least one embodiment, processing cluster **2394** is included within a parallel processing unit. In at least one embodiment, processing cluster **2394** is one of processing clusters **2314**A-**2314**N of FIG. **23**. In at least one embodiment, processing cluster **2394** can be configured to execute many threads in parallel, where the term "thread" refers to an instance of a particular program executing on a particular set of input data. In at least one embodiment, single instruction, multiple data ("SIMD") instruction issue techniques are used to support parallel execution of a large number of threads without providing multiple independent instruction units. In at least one embodiment, single instruction, multiple thread ("SIMT") techniques are used to support parallel execution of a large number of generally synchronized threads, using a common instruction unit configured to issue instructions to a set of processing engines within each processing cluster **2394**.

[0218] In at least one embodiment, operation of processing cluster **2394** can be controlled via a pipeline manager **2332** that distributes processing tasks to SIMT parallel processors. In at least one embodiment, pipeline manager **2332** receives instructions from scheduler **2310** of FIG. **23** and manages execution of those instructions via a graphics multiprocessor **2334** and/or a texture unit **2336**. In at least one embodiment, graphics multiprocessor **2334** is an exemplary instance of a SIMT parallel processor. However, in at least one embodiment, various types of SIMT parallel processors of differing architectures may be included within processing cluster **2394**. In at least one embodiment, one or more instances of graphics multiprocessor **2334** can be included within processing cluster **2394**. In at least one embodiment, graphics multiprocessor **2334** can process data and a data crossbar **2340** can be used to distribute processed data to one of multiple possible destinations, including other shader units. In at least one embodiment, pipeline manager **2332** can facilitate distribution of processed data by specifying destinations for processed data to be distributed via data crossbar **2340**.

[0219] In at least one embodiment, each graphics multiprocessor **2334** within processing cluster **2394** can include an identical set of functional execution logic (e.g., arithmetic logic units, load/store units ("LSUs"), etc.). In at least one embodiment, functional execution logic can be configured in a pipelined manner in which new instructions can be issued before previous instructions are complete. In at least one embodiment, functional execution logic supports a variety of operations including integer and floating point arithmetic, comparison operations, Boolean operations, bit-shifting, and computation of various algebraic functions. In at least one embodiment, same functional-unit hardware can be leveraged to perform different operations and any combination of functional units may be present.

[0220] In at least one embodiment, instructions transmitted to processing cluster **2394** constitute a thread. In at least one embodiment, a set of threads executing across a set of parallel processing engines is a thread group. In at least one embodiment, a thread group executes a program on different input data. In at least one embodiment, each thread within a thread group can be assigned to a different processing engine within graphics multiprocessor **2334**. In at least one embodiment, a thread group may include fewer threads than a number of processing engines within graphics multiprocessor **2334**. In at least one embodiment, when a thread group includes fewer threads than a number of processing engines, one or more of the processing engines may be idle during cycles in which that thread group is being processed. In at least one embodiment, a thread group may also include more threads than a number of processing engines within graphics multiprocessor **2334**. In at least one embodiment, when a thread group includes more threads than the number of processing engines within graphics multiprocessor **2334**, processing can be performed over consecutive clock cycles. In at least one embodiment, multiple thread groups can be executed concurrently on graphics multiprocessor **2334**.

[0221] In at least one embodiment, graphics multiprocessor **2334** includes an internal cache memory to perform load and store operations. In at least one embodiment, graphics multiprocessor **2334** can forego an internal cache and use a cache memory (e.g., L1 cache **2348**) within processing cluster **2394**. In at least one embodiment, each graphics multiprocessor **2334** also has access to Level 2 ("L2") caches within partition units (e.g., partition units **2320**A-**2320**N of FIG. **23**A) that are shared among all processing clusters **2394** and may be used to transfer data between threads. In at least one embodiment, graphics multiprocessor **2334** may also access off-chip global memory, which can include one or more of local parallel processor memory and/or system memory. In at least one embodiment, any memory external to parallel processing unit **2302** may be used as global memory. In at least one embodiment, processing cluster **2394** includes multiple instances of graphics multiprocessor **2334** that can share common instructions and data, which may be stored in L1 cache **2348**.

[0222] In at least one embodiment, each processing cluster **2394** may include an MMU **2345** that is configured to map virtual addresses into physical addresses. In at least one embodiment, one or more instances of MMU **2345** may reside within memory interface **2318** of FIG. **23**. In at least one embodiment, MMU **2345** includes a set of page table entries ("PTEs") used to map a virtual address to a physical address of a tile and optionally a cache line index. In at least one embodiment, MMU **2345** may include address translation lookaside buffers ("TLBs") or caches that may reside within graphics multiprocessor **2334** or L1 cache **2348** or processing cluster **2394**. In at least one embodiment, a physical address is processed to distribute surface data access locality to allow efficient request interleaving among partition units. In at least one embodiment, a cache line index may be used to determine whether a request for a cache line is a hit or miss.

[0223] In at least one embodiment, processing cluster **2394** may be configured such that each graphics multiprocessor **2334** is coupled to a texture unit **2336** for performing texture mapping operations, e.g., determining texture sample positions, reading texture data, and filtering texture data. In at least one embodiment, texture data is read from

an internal texture L1 cache (not shown) or from an L1 cache within graphics multiprocessor **2334** and is fetched from an L2 cache, local parallel processor memory, or system memory, as needed. In at least one embodiment, each graphics multiprocessor **2334** outputs a processed task to data crossbar **2340** to provide the processed task to another processing cluster **2394** for further processing or to store the processed task in an L2 cache, a local parallel processor memory, or a system memory via memory crossbar **2316**. In at least one embodiment, a pre-raster operations unit ("preROP") **2342** is configured to receive data from graphics multiprocessor **2334**, direct data to ROP units, which may be located with partition units as described herein (e.g., partition units **2320**A-**2320**N of FIG. **23**). In at least one embodiment, PreROP **2342** can perform optimizations for color blending, organize pixel color data, and perform address translations.

[0224] FIG. **23**C illustrates a graphics multiprocessor **2396**, in accordance with at least one embodiment. In at least one embodiment, graphics multiprocessor **2396** is graphics multiprocessor **2334** of FIG. **23**B. In at least one embodiment, graphics multiprocessor **2396** couples with pipeline manager **2332** of processing cluster **2394**. In at least one embodiment, graphics multiprocessor **2396** has an execution pipeline including but not limited to an instruction cache **2352**, an instruction unit **2354**, an address mapping unit **2356**, a register file **2358**, one or more GPGPU cores **2362**, and one or more LSUs **2366**. GPGPU cores **2362** and LSUs **2366** are coupled with cache memory **2372** and shared memory **2370** via a memory and cache interconnect **2368**.

[0225] In at least one embodiment, instruction cache **2352** receives a stream of instructions to execute from pipeline manager **2332**. In at least one embodiment, instructions are cached in instruction cache **2352** and dispatched for execution by instruction unit **2354**. In at least one embodiment, instruction unit **2354** can dispatch instructions as thread groups (e.g., warps), with each thread of a thread group assigned to a different execution unit within GPGPU core **2362**. In at least one embodiment, an instruction can access any of a local, shared, or global address space by specifying an address within a unified address space. In at least one embodiment, address mapping unit **2356** can be used to translate addresses in a unified address space into a distinct memory address that can be accessed by LSUs **2366**.

[0226] In at least one embodiment, register file **2358** provides a set of registers for functional units of graphics multiprocessor **2396**. In at least one embodiment, register file **2358** provides temporary storage for operands connected to data paths of functional units (e.g., GPGPU cores **2362**, LSUs **2366**) of graphics multiprocessor **2396**. In at least one embodiment, register file **2358** is divided between each of functional units such that each functional unit is allocated a dedicated portion of register file **2358**. In at least one embodiment, register file **2358** is divided between different thread groups being executed by graphics multiprocessor **2396**.

[0227] In at least one embodiment, GPGPU cores **2362** can each include FPUs and/or integer ALUs that are used to execute instructions of graphics multiprocessor **2396**. GPGPU cores **2362** can be similar in architecture or can differ in architecture. In at least one embodiment, a first portion of GPGPU cores **2362** include a single precision FPU and an integer ALU while a second portion of GPGPU cores **2362** include a double precision FPU. In at least one embodiment, FPUs can implement IEEE 754-2008 standard for floating point arithmetic or enable variable precision floating point arithmetic. In at least one embodiment, graphics multiprocessor **2396** can additionally include one or more fixed function or special function units to perform specific functions such as copy rectangle or pixel blending operations. In at least one embodiment one or more of GPGPU cores **2362** can also include fixed or special function logic.

[0228] In at least one embodiment, GPGPU cores **2362** include SIMD logic capable of performing a single instruction on multiple sets of data. In at least one embodiment GPGPU cores **2362** can physically execute SIMD4, SIMD8, and SIMD16 instructions and logically execute SIMD1, SIMD2, and SIMD32 instructions. In at least one embodiment, SIMD instructions for GPGPU cores **2362** can be generated at compile time by a shader compiler or automatically generated when executing programs written and compiled for single program multiple data ("SPMD") or SIMT architectures. In at least one embodiment, multiple threads of a program configured for an SIMT execution model can executed via a single SIMD instruction. For example, in at least one embodiment, eight SIMT threads that perform the same or similar operations can be executed in parallel via a single SIMD8 logic unit.

[0229] In at least one embodiment, memory and cache interconnect **2368** is an interconnect network that connects each functional unit of graphics multiprocessor **2396** to register file **2358** and to shared memory **2370**. In at least one embodiment, memory and cache interconnect **2368** is a crossbar interconnect that allows LSU **2366** to implement load and store operations between shared memory **2370** and register file **2358**. In at least one embodiment, register file **2358** can operate at a same frequency as GPGPU cores **2362**, thus data transfer between GPGPU cores **2362** and register file **2358** is very low latency. In at least one embodiment, shared memory **2370** can be used to enable communication between threads that execute on functional units within graphics multiprocessor **2396**. In at least one embodiment, cache memory **2372** can be used as a data cache for example, to cache texture data communicated between functional units and texture unit **2336**. In at least one embodiment, shared memory **2370** can also be used as a program managed cached. In at least one embodiment, threads executing on GPGPU cores **2362** can programmatically store data within shared memory in addition to automatically cached data that is stored within cache memory **2372**.

[0230] In at least one embodiment, a parallel processor or GPGPU as described herein is communicatively coupled to host/processor cores to accelerate graphics operations, machine-learning operations, pattern analysis operations, and various general purpose GPU (GPGPU) functions. In at least one embodiment, a GPU may be communicatively coupled to host processor/cores over a bus or other interconnect (e.g., a high speed interconnect such as PCIe or NVLink). In at least one embodiment, a GPU may be integrated on the same package or chip as cores and communicatively coupled to cores over a processor bus/interconnect that is internal to a package or a chip. In at least one embodiment, regardless of the manner in which a GPU is connected, processor cores may allocate work to the GPU in the form of sequences of commands/instructions contained

in a WD. In at least one embodiment, the GPU then uses dedicated circuitry/logic for efficiently processing these commands/instructions.

[0231] FIG. **24** illustrates a graphics processor **2400**, in accordance with at least one embodiment. In at least one embodiment, graphics processor **2400** includes a ring interconnect **2402**, a pipeline front-end **2404**, a media engine **2437**, and graphics cores **2480**A-**2480**N. In at least one embodiment, ring interconnect **2402** couples graphics processor **2400** to other processing units, including other graphics processors or one or more general-purpose processor cores. In at least one embodiment, graphics processor **2400** is one of many processors integrated within a multi-core processing system.

[0232] In at least one embodiment, graphics processor **2400** receives batches of commands via ring interconnect **2402**. In at least one embodiment, incoming commands are interpreted by a command streamer **2403** in pipeline front-end **2404**. In at least one embodiment, graphics processor **2400** includes scalable execution logic to perform 3D geometry processing and media processing via graphics core(s) **2480**A-**2480**N. In at least one embodiment, for 3D geometry processing commands, command streamer **2403** supplies commands to geometry pipeline **2436**. In at least one embodiment, for at least some media processing commands, command streamer **2403** supplies commands to a video front end **2434**, which couples with a media engine **2437**. In at least one embodiment, media engine **2437** includes a Video Quality Engine ("VQE") **2430** for video and image post-processing and a multi-format encode/decode ("MFX") engine **2433** to provide hardware-accelerated media data encode and decode. In at least one embodiment, geometry pipeline **2436** and media engine **2437** each generate execution threads for thread execution resources provided by at least one graphics core **2480**A.

[0233] In at least one embodiment, graphics processor **2400** includes scalable thread execution resources featuring modular graphics cores **2480**A-**2480**N (sometimes referred to as core slices), each having multiple sub-cores **2450**A-**550**N, **2460**A-**2460**N (sometimes referred to as core sub-slices). In at least one embodiment, graphics processor **2400** can have any number of graphics cores **2480**A through **2480**N. In at least one embodiment, graphics processor **2400** includes a graphics core **2480**A having at least a first sub-core **2450**A and a second sub-core **2460**A. In at least one embodiment, graphics processor **2400** is a low power processor with a single sub-core (e.g., sub-core **2450**A). In at least one embodiment, graphics processor **2400** includes multiple graphics cores **2480**A-**2480**N, each including a set of first sub-cores **2450**A-**2450**N and a set of second sub-cores **2460**A-**2460**N. In at least one embodiment, each sub-core in first sub-cores **2450**A-**2450**N includes at least a first set of execution units ("EUs") **2452**A-**2452**N and media/texture samplers **2454**A-**2454**N. In at least one embodiment, each sub-core in second sub-cores **2460**A-**2460**N includes at least a second set of execution units **2462**A-**2462**N and samplers **2464**A-**2464**N. In at least one embodiment, each sub-core **2450**A-**2450**N, **2460**A-**2460**N shares a set of shared resources **2470**A-**2470**N. In at least one embodiment, shared resources **2470** include shared cache memory and pixel operation logic.

[0234] FIG. **25** illustrates a processor **2500**, in accordance with at least one embodiment. In at least one embodiment, processor **2500** may include, without limitation, logic circuits to perform instructions. In at least one embodiment, processor **2500** may perform instructions, including x86 instructions, ARM instructions, specialized instructions for ASICs, etc. In at least one embodiment, processor **2510** may include registers to store packed data, such as 64-bit wide MMX™ registers in microprocessors enabled with MMX technology from Intel Corporation of Santa Clara, Calif. In at least one embodiment, MMX registers, available in both integer and floating point forms, may operate with packed data elements that accompany SIMD and streaming SIMD extensions ("SSE") instructions. In at least one embodiment, 128-bit wide XMM registers relating to SSE2, SSE3, SSE4, AVX, or beyond (referred to generically as "SSEx") technology may hold such packed data operands. In at least one embodiment, processors **2510** may perform instructions to accelerate CUDA programs.

[0235] In at least one embodiment, processor **2500** includes an in-order front end ("front end") **2501** to fetch instructions to be executed and prepare instructions to be used later in processor pipeline. In at least one embodiment, front end **2501** may include several units. In at least one embodiment, an instruction prefetcher **2526** fetches instructions from memory and feeds instructions to an instruction decoder **2528** which in turn decodes or interprets instructions. For example, in at least one embodiment, instruction decoder **2528** decodes a received instruction into one or more operations called "micro-instructions" or "micro-operations" (also called "micro ops" or "uops") for execution. In at least one embodiment, instruction decoder **2528** parses instruction into an opcode and corresponding data and control fields that may be used by micro-architecture to perform operations. In at least one embodiment, a trace cache **2530** may assemble decoded uops into program ordered sequences or traces in a uop queue **2534** for execution. In at least one embodiment, when trace cache **2530** encounters a complex instruction, a microcode ROM **2532** provides uops needed to complete an operation.

[0236] In at least one embodiment, some instructions may be converted into a single micro-op, whereas others need several micro-ops to complete full operation. In at least one embodiment, if more than four micro-ops are needed to complete an instruction, instruction decoder **2528** may access microcode ROM **2532** to perform instruction. In at least one embodiment, an instruction may be decoded into a small number of micro-ops for processing at instruction decoder **2528**. In at least one embodiment, an instruction may be stored within microcode ROM **2532** should a number of micro-ops be needed to accomplish operation. In at least one embodiment, trace cache **2530** refers to an entry point programmable logic array ("PLA") to determine a correct micro-instruction pointer for reading microcode sequences to complete one or more instructions from microcode ROM **2532**. In at least one embodiment, after microcode ROM **2532** finishes sequencing micro-ops for an instruction, front end **2501** of machine may resume fetching micro-ops from trace cache **2530**.

[0237] In at least one embodiment, out-of-order execution engine ("out of order engine") **2503** may prepare instructions for execution. In at least one embodiment, out-of-order execution logic has a number of buffers to smooth out and re-order the flow of instructions to optimize performance as they go down a pipeline and get scheduled for execution. Out-of-order execution engine **2503** includes, without limitation, an allocator/register renamer **2540**, a memory uop

queue **2542**, an integer/floating point uop queue **2544**, a memory scheduler **2546**, a fast scheduler **2502**, a slow/general floating point scheduler ("slow/general FP scheduler") **2504**, and a simple floating point scheduler ("simple FP scheduler") **2506**. In at least one embodiment, fast schedule **2502**, slow/general floating point scheduler **2504**, and simple floating point scheduler **2506** are also collectively referred to herein as "uop schedulers **2502**, **2504**, **2506**." Allocator/register renamer **2540** allocates machine buffers and resources that each uop needs in order to execute. In at least one embodiment, allocator/register renamer **2540** renames logic registers onto entries in a register file. In at least one embodiment, allocator/register renamer **2540** also allocates an entry for each uop in one of two uop queues, memory uop queue **2542** for memory operations and integer/floating point uop queue **2544** for non-memory operations, in front of memory scheduler **2546** and uop schedulers **2502**, **2504**, **2506**. In at least one embodiment, uop schedulers **2502**, **2504**, **2506**, determine when a uop is ready to execute based on readiness of their dependent input register operand sources and availability of execution resources uops need to complete their operation. In at least one embodiment, fast scheduler **2502** of at least one embodiment may schedule on each half of main clock cycle while slow/general floating point scheduler **2504** and simple floating point scheduler **2506** may schedule once per main processor clock cycle. In at least one embodiment, uop schedulers **2502**, **2504**, **2506** arbitrate for dispatch ports to schedule uops for execution.

[0238] In at least one embodiment, execution block **2511** includes, without limitation, an integer register file/bypass network **2508**, a floating point register file/bypass network ("FP register file/bypass network") **2510**, address generation units ("AGUs") **2512** and **2514**, fast ALUs **2516** and **2518**, a slow ALU **2520**, a floating point ALU ("FP") **2522**, and a floating point move unit ("FP move") **2524**. In at least one embodiment, integer register file/bypass network **2508** and floating point register file/bypass network **2510** are also referred to herein as "register files **2508**, **2510**." In at least one embodiment, AGUSs **2512** and **2514**, fast ALUs **2516** and **2518**, slow ALU **2520**, floating point ALU **2522**, and floating point move unit **2524** are also referred to herein as "execution units **2512**, **2514**, **2516**, **2518**, **2520**, **2522**, and **2524**." In at least one embodiment, an execution block may include, without limitation, any number (including zero) and type of register files, bypass networks, address generation units, and execution units, in any combination.

[0239] In at least one embodiment, register files **2508**, **2510** may be arranged between uop schedulers **2502**, **2504**, **2506**, and execution units **2512**, **2514**, **2516**, **2518**, **2520**, **2522**, and **2524**. In at least one embodiment, integer register file/bypass network **2508** performs integer operations. In at least one embodiment, floating point register file/bypass network **2510** performs floating point operations. In at least one embodiment, each of register files **2508**, **2510** may include, without limitation, a bypass network that may bypass or forward just completed results that have not yet been written into register file to new dependent uops. In at least one embodiment, register files **2508**, **2510** may communicate data with each other. In at least one embodiment, integer register file/bypass network **2508** may include, without limitation, two separate register files, one register file for low-order thirty-two bits of data and a second register file for high order thirty-two bits of data. In at least one embodiment, floating point register file/bypass network **2510** may include, without limitation, 128-bit wide entries because floating point instructions typically have operands from 64 to 128 bits in width.

[0240] In at least one embodiment, execution units **2512**, **2514**, **2516**, **2518**, **2520**, **2522**, **2524** may execute instructions. In at least one embodiment, register files **2508**, **2510** store integer and floating point data operand values that micro-instructions need to execute. In at least one embodiment, processor **2500** may include, without limitation, any number and combination of execution units **2512**, **2514**, **2516**, **2518**, **2520**, **2522**, **2524**. In at least one embodiment, floating point ALU **2522** and floating point move unit **2524** may execute floating point, MMX, SIMD, AVX and SSE, or other operations. In at least one embodiment, floating point ALU **2522** may include, without limitation, a 64-bit by 64-bit floating point divider to execute divide, square root, and remainder micro ops. In at least one embodiment, instructions involving a floating point value may be handled with floating point hardware. In at least one embodiment, ALU operations may be passed to fast ALUs **2516**, **2518**. In at least one embodiment, fast ALUS **2516**, **2518** may execute fast operations with an effective latency of half a clock cycle. In at least one embodiment, most complex integer operations go to slow ALU **2520** as slow ALU **2520** may include, without limitation, integer execution hardware for long-latency type of operations, such as a multiplier, shifts, flag logic, and branch processing. In at least one embodiment, memory load/store operations may be executed by AGUs **2512**, **2514**. In at least one embodiment, fast ALU **2516**, fast ALU **2518**, and slow ALU **2520** may perform integer operations on 64-bit data operands. In at least one embodiment, fast ALU **2516**, fast ALU **2518**, and slow ALU **2520** may be implemented to support a variety of data bit sizes including sixteen, thirty-two, 128, 256, etc. In at least one embodiment, floating point ALU **2522** and floating point move unit **2524** may be implemented to support a range of operands having bits of various widths. In at least one embodiment, floating point ALU **2522** and floating point move unit **2524** may operate on 128-bit wide packed data operands in conjunction with SIMD and multimedia instructions.

[0241] In at least one embodiment, uop schedulers **2502**, **2504**, **2506** dispatch dependent operations before parent load has finished executing. In at least one embodiment, as uops may be speculatively scheduled and executed in processor **2500**, processor **2500** may also include logic to handle memory misses. In at least one embodiment, if a data load misses in a data cache, there may be dependent operations in flight in pipeline that have left a scheduler with temporarily incorrect data. In at least one embodiment, a replay mechanism tracks and re-executes instructions that use incorrect data. In at least one embodiment, dependent operations might need to be replayed and independent ones may be allowed to complete. In at least one embodiment, schedulers and replay mechanisms of at least one embodiment of a processor may also be designed to catch instruction sequences for text string comparison operations.

[0242] In at least one embodiment, the term "registers" may refer to on-board processor storage locations that may be used as part of instructions to identify operands. In at least one embodiment, registers may be those that may be usable from outside of a processor (from a programmer's perspective). In at least one embodiment, registers might not be

limited to a particular type of circuit. Rather, in at least one embodiment, a register may store data, provide data, and perform functions described herein. In at least one embodiment, registers described herein may be implemented by circuitry within a processor using any number of different techniques, such as dedicated physical registers, dynamically allocated physical registers using register renaming, combinations of dedicated and dynamically allocated physical registers, etc. In at least one embodiment, integer registers store 32-bit integer data. A register file of at least one embodiment also contains eight multimedia SIMD registers for packed data.

[0243] FIG. **26** illustrates a processor **2600**, in accordance with at least one embodiment. In at least one embodiment, processor **2600** includes, without limitation, one or more processor cores ("cores") **2602**A-**2602**N, an integrated memory controller **2614**, and an integrated graphics processor **2608**. In at least one embodiment, processor **2600** can include additional cores up to and including additional processor core **2602**N represented by dashed lined boxes. In at least one embodiment, each of processor cores **2602**A-**2602**N includes one or more internal cache units **2604**A-**2604**N. In at least one embodiment, each processor core also has access to one or more shared cached units **2606**.

[0244] In at least one embodiment, internal cache units **2604**A-**2604**N and shared cache units **2606** represent a cache memory hierarchy within processor **2600**. In at least one embodiment, cache memory units **2604**A-**2604**N may include at least one level of instruction and data cache within each processor core and one or more levels of shared mid-level cache, such as an L2, L3, Level 4 ("L4"), or other levels of cache, where a highest level of cache before external memory is classified as an LLC. In at least one embodiment, cache coherency logic maintains coherency between various cache units **2606** and **2604**A-**2604**N.

[0245] In at least one embodiment, processor **2600** may also include a set of one or more bus controller units **2616** and a system agent core **2610**. In at least one embodiment, one or more bus controller units **2616** manage a set of peripheral buses, such as one or more PCI or PCI express buses. In at least one embodiment, system agent core **2610** provides management functionality for various processor components. In at least one embodiment, system agent core **2610** includes one or more integrated memory controllers **2614** to manage access to various external memory devices (not shown).

[0246] In at least one embodiment, one or more of processor cores **2602**A-**2602**N include support for simultaneous multi-threading. In at least one embodiment, system agent core **2610** includes components for coordinating and operating processor cores **2602**A-**2602**N during multi-threaded processing. In at least one embodiment, system agent core **2610** may additionally include a power control unit ("PCU"), which includes logic and components to regulate one or more power states of processor cores **2602**A-**2602**N and graphics processor **2608**.

[0247] In at least one embodiment, processor **2600** additionally includes graphics processor **2608** to execute graphics processing operations. In at least one embodiment, graphics processor **2608** couples with shared cache units **2606**, and system agent core **2610**, including one or more integrated memory controllers **2614**. In at least one embodiment, system agent core **2610** also includes a display controller **2611** to drive graphics processor output to one or more coupled displays. In at least one embodiment, display controller **2611** may also be a separate module coupled with graphics processor **2608** via at least one interconnect, or may be integrated within graphics processor **2608**.

[0248] In at least one embodiment, a ring based interconnect unit **2612** is used to couple internal components of processor **2600**. In at least one embodiment, an alternative interconnect unit may be used, such as a point-to-point interconnect, a switched interconnect, or other techniques. In at least one embodiment, graphics processor **2608** couples with ring interconnect **2612** via an I/O link **2613**.

[0249] In at least one embodiment, I/O link **2613** represents at least one of multiple varieties of I/O interconnects, including an on package I/O interconnect which facilitates communication between various processor components and a high-performance embedded memory module **2618**, such as an eDRAM module. In at least one embodiment, each of processor cores **2602**A-**2602**N and graphics processor **2608** use embedded memory modules **2618** as a shared LLC.

[0250] In at least one embodiment, processor cores **2602**A-**2602**N are homogeneous cores executing a common instruction set architecture. In at least one embodiment, processor cores **2602**A-**2602**N are heterogeneous in terms of ISA, where one or more of processor cores **2602**A-**2602**N execute a common instruction set, while one or more other cores of processor cores **2602**A-**26-02**N executes a subset of a common instruction set or a different instruction set. In at least one embodiment, processor cores **2602**A-**2602**N are heterogeneous in terms of microarchitecture, where one or more cores having a relatively higher power consumption couple with one or more cores having a lower power consumption. In at least one embodiment, processor **2600** can be implemented on one or more chips or as an SoC integrated circuit.

[0251] FIG. **27** illustrates a graphics processor core **2700**, in accordance with at least one embodiment described. In at least one embodiment, graphics processor core **2700** is included within a graphics core array. In at least one embodiment, graphics processor core **2700**, sometimes referred to as a core slice, can be one or multiple graphics cores within a modular graphics processor. In at least one embodiment, graphics processor core **2700** is exemplary of one graphics core slice, and a graphics processor as described herein may include multiple graphics core slices based on target power and performance envelopes. In at least one embodiment, each graphics core **2700** can include a fixed function block **2730** coupled with multiple sub-cores **2701**A-**2701**F, also referred to as sub-slices, that include modular blocks of general-purpose and fixed function logic.

[0252] In at least one embodiment, fixed function block **2730** includes a geometry/fixed function pipeline **2736** that can be shared by all sub-cores in graphics processor **2700**, for example, in lower performance and/or lower power graphics processor implementations. In at least one embodiment, geometry/fixed function pipeline **2736** includes a 3D fixed function pipeline, a video front-end unit, a thread spawner and thread dispatcher, and a unified return buffer manager, which manages unified return buffers.

[0253] In at least one embodiment, fixed function block **2730** also includes a graphics SoC interface **2737**, a graphics microcontroller **2738**, and a media pipeline **2739**. Graphics SoC interface **2737** provides an interface between graphics core **2700** and other processor cores within an SoC integrated circuit. In at least one embodiment, graphics micro-

controller **2738** is a programmable sub-processor that is configurable to manage various functions of graphics processor **2700**, including thread dispatch, scheduling, and pre-emption. In at least one embodiment, media pipeline **2739** includes logic to facilitate decoding, encoding, pre-processing, and/or post-processing of multimedia data, including image and video data. In at least one embodiment, media pipeline **2739** implements media operations via requests to compute or sampling logic within sub-cores **2701**-**2701**F.

[0254] In at least one embodiment, SoC interface **2737** enables graphics core **2700** to communicate with general-purpose application processor cores (e.g., CPUs) and/or other components within an SoC, including memory hierarchy elements such as a shared LLC memory, system RAM, and/or embedded on-chip or on-package DRAM. In at least one embodiment, SoC interface **2737** can also enable communication with fixed function devices within an SoC, such as camera imaging pipelines, and enables use of and/or implements global memory atomics that may be shared between graphics core **2700** and CPUs within an SoC. In at least one embodiment, SoC interface **2737** can also implement power management controls for graphics core **2700** and enable an interface between a clock domain of graphic core **2700** and other clock domains within an SoC. In at least one embodiment, SoC interface **2737** enables receipt of command buffers from a command streamer and global thread dispatcher that are configured to provide commands and instructions to each of one or more graphics cores within a graphics processor. In at least one embodiment, commands and instructions can be dispatched to media pipeline **2739**, when media operations are to be performed, or a geometry and fixed function pipeline (e.g., geometry and fixed function pipeline **2736**, geometry and fixed function pipeline **2714**) when graphics processing operations are to be performed.

[0255] In at least one embodiment, graphics microcontroller **2738** can be configured to perform various scheduling and management tasks for graphics core **2700**. In at least one embodiment, graphics microcontroller **2738** can perform graphics and/or compute workload scheduling on various graphics parallel engines within execution unit (EU) arrays **2702**A-**2702**F, **2704**A-**2704**F within sub-cores **2701**A-**2701**F. In at least one embodiment, host software executing on a CPU core of an SoC including graphics core **2700** can submit workloads one of multiple graphic processor doorbells, which invokes a scheduling operation on an appropriate graphics engine. In at least one embodiment, scheduling operations include determining which workload to run next, submitting a workload to a command streamer, pre-empting existing workloads running on an engine, monitoring progress of a workload, and notifying host software when a workload is complete. In at least one embodiment, graphics microcontroller **2738** can also facilitate low-power or idle states for graphics core **2700**, providing graphics core **2700** with an ability to save and restore registers within graphics core **2700** across low-power state transitions independently from an operating system and/or graphics driver software on a system.

[0256] In at least one embodiment, graphics core **2700** may have greater than or fewer than illustrated sub-cores **2701**A-**2701**F, up to N modular sub-cores. For each set of N sub-cores, in at least one embodiment, graphics core **2700** can also include shared function logic **2710**, shared and/or cache memory **2712**, a geometry/fixed function pipeline **2714**, as well as additional fixed function logic **2716** to accelerate various graphics and compute processing operations. In at least one embodiment, shared function logic **2710** can include logic units (e.g., sampler, math, and/or inter-thread communication logic) that can be shared by each N sub-cores within graphics core **2700**. Shared and/or cache memory **2712** can be an LLC for N sub-cores **2701**A-**2701**F within graphics core **2700** and can also serve as shared memory that is accessible by multiple sub-cores. In at least one embodiment, geometry/fixed function pipeline **2714** can be included instead of geometry/fixed function pipeline **2736** within fixed function block **2730** and can include same or similar logic units.

[0257] In at least one embodiment, graphics core **2700** includes additional fixed function logic **2716** that can include various fixed function acceleration logic for use by graphics core **2700**. In at least one embodiment, additional fixed function logic **2716** includes an additional geometry pipeline for use in position only shading. In position-only shading, at least two geometry pipelines exist, whereas in a full geometry pipeline within geometry/fixed function pipeline **2716**, **2736**, and a cull pipeline, which is an additional geometry pipeline which may be included within additional fixed function logic **2716**. In at least one embodiment, cull pipeline is a trimmed down version of a full geometry pipeline. In at least one embodiment, a full pipeline and a cull pipeline can execute different instances of an application, each instance having a separate context. In at least one embodiment, position only shading can hide long cull runs of discarded triangles, enabling shading to be completed earlier in some instances. For example, in at least one embodiment, cull pipeline logic within additional fixed function logic **2716** can execute position shaders in parallel with a main application and generally generates critical results faster than a full pipeline, as a cull pipeline fetches and shades position attribute of vertices, without performing rasterization and rendering of pixels to a frame buffer. In at least one embodiment, a cull pipeline can use generated critical results to compute visibility information for all triangles without regard to whether those triangles are culled. In at least one embodiment, a full pipeline (which in this instance may be referred to as a replay pipeline) can consume visibility information to skip culled triangles to shade only visible triangles that are finally passed to a rasterization phase.

[0258] In at least one embodiment, additional fixed function logic **2716** can also include general purpose processing acceleration logic, such as fixed function matrix multiplication logic, for accelerating CUDA programs.

[0259] In at least one embodiment, each graphics sub-core **2701**A-**2701**F includes a set of execution resources that may be used to perform graphics, media, and compute operations in response to requests by graphics pipeline, media pipeline, or shader programs. In at least one embodiment, graphics sub-cores **2701**A-**2701**F include multiple EU arrays **2702**A-**2702**F, **2704**A-**2704**F, thread dispatch and inter-thread communication ("TD/IC") logic **2703**A-**2703**F, a 3D (e.g., texture) sampler **2705**A-**2705**F, a media sampler **2706**A-**2706**F, a shader processor **2707**A-**2707**F, and shared local memory ("SLM") **2708**A-**2708**F. EU arrays **2702**A-**2702**F, **2704**A-**2704**F each include multiple execution units, which are GPGPUs capable of performing floating-point and integer/fixed-point logic operations in service of a graphics, media,

or compute operation, including graphics, media, or compute shader programs. In at least one embodiment, TD/IC logic **2703**A-**2703**F performs local thread dispatch and thread control operations for execution units within a sub-core and facilitate communication between threads executing on execution units of a sub-core. In at least one embodiment, 3D sampler **2705**A-**2705**F can read texture or other 3D graphics related data into memory. In at least one embodiment, 3D sampler can read texture data differently based on a configured sample state and texture format associated with a given texture. In at least one embodiment, media sampler **2706**A-**2706**F can perform similar read operations based on a type and format associated with media data. In at least one embodiment, each graphics sub-core **2701**A-**2701**F can alternately include a unified 3D and media sampler. In at least one embodiment, threads executing on execution units within each of sub-cores **2701**A-**2701**F can make use of shared local memory **2708**A-**2708**F within each sub-core, to enable threads executing within a thread group to execute using a common pool of on-chip memory.

[0260] FIG. **28** illustrates a parallel processing unit ("PPU") **2800**, in accordance with at least one embodiment. In at least one embodiment, PPU **2800** is configured with machine-readable code that, if executed by PPU **2800**, causes PPU **2800** to perform some or all of processes and techniques described herein. In at least one embodiment, PPU **2800** is a multi-threaded processor that is implemented on one or more integrated circuit devices and that utilizes multithreading as a latency-hiding technique designed to process computer-readable instructions (also referred to as machine-readable instructions or simply instructions) on multiple threads in parallel. In at least one embodiment, a thread refers to a thread of execution and is an instantiation of a set of instructions configured to be executed by PPU **2800**. In at least one embodiment, PPU **2800** is a GPU configured to implement a graphics rendering pipeline for processing three-dimensional ("3D") graphics data in order to generate two-dimensional ("2D") image data for display on a display device such as an LCD device. In at least one embodiment, PPU **2800** is utilized to perform computations such as linear algebra operations and machine-learning operations. FIG. **28** illustrates an example parallel processor for illustrative purposes only and should be construed as a non-limiting example of a processor architecture that may be implemented in at least one embodiment.

[0261] In at least one embodiment, one or more PPUs **2800** are configured to accelerate High Performance Computing ("HPC"), data center, and machine learning applications. In at least one embodiment, one or more PPUs **2800** are configured to accelerate CUDA programs. In at least one embodiment, PPU **2800** includes, without limitation, an I/O unit **2806**, a front-end unit **2810**, a scheduler unit **2812**, a work distribution unit **2814**, a hub **2816**, a crossbar ("Xbar") **2820**, one or more general processing clusters ("GPCs") **2818**, and one or more partition units ("memory partition units") **2822**. In at least one embodiment, PPU **2800** is connected to a host processor or other PPUs **2800** via one or more high-speed GPU interconnects ("GPU interconnects") **2808**. In at least one embodiment, PPU **2800** is connected to a host processor or other peripheral devices via a system bus or interconnect **2802**. In at least one embodiment, PPU **2800** is connected to a local memory comprising one or more memory devices ("memory") **2804**. In at least one embodiment, memory devices **2804** include, without limitation, one or more dynamic random access memory (DRAM) devices. In at least one embodiment, one or more DRAM devices are configured and/or configurable as high-bandwidth memory ("HBM") subsystems, with multiple DRAM dies stacked within each device.

[0262] In at least one embodiment, high-speed GPU interconnect **2808** may refer to a wire-based multi-lane communications link that is used by systems to scale and include one or more PPUs **2800** combined with one or more CPUs, supports cache coherence between PPUs **2800** and CPUs, and CPU mastering. In at least one embodiment, data and/or commands are transmitted by high-speed GPU interconnect **2808** through hub **2816** to/from other units of PPU **2800** such as one or more copy engines, video encoders, video decoders, power management units, and other components which may not be explicitly illustrated in FIG. **28**.

[0263] In at least one embodiment, I/O unit **2806** is configured to transmit and receive communications (e.g., commands, data) from a host processor (not illustrated in FIG. **28**) over system bus **2802**. In at least one embodiment, I/O unit **2806** communicates with host processor directly via system bus **2802** or through one or more intermediate devices such as a memory bridge. In at least one embodiment, I/O unit **2806** may communicate with one or more other processors, such as one or more of PPUs **2800** via system bus **2802**. In at least one embodiment, I/O unit **2806** implements a PCIe interface for communications over a PCIe bus. In at least one embodiment, I/O unit **2806** implements interfaces for communicating with external devices.

[0264] In at least one embodiment, I/O unit **2806** decodes packets received via system bus **2802**. In at least one embodiment, at least some packets represent commands configured to cause PPU **2800** to perform various operations. In at least one embodiment, I/O unit **2806** transmits decoded commands to various other units of PPU **2800** as specified by commands. In at least one embodiment, commands are transmitted to front-end unit **2810** and/or transmitted to hub **2816** or other units of PPU **2800** such as one or more copy engines, a video encoder, a video decoder, a power management unit, etc. (not explicitly illustrated in FIG. **28**). In at least one embodiment, I/O unit **2806** is configured to route communications between and among various logical units of PPU **2800**.

[0265] In at least one embodiment, a program executed by host processor encodes a command stream in a buffer that provides workloads to PPU **2800** for processing. In at least one embodiment, a workload comprises instructions and data to be processed by those instructions. In at least one embodiment, buffer is a region in a memory that is accessible (e.g., read/write) by both a host processor and PPU **2800**—a host interface unit may be configured to access buffer in a system memory connected to system bus **2802** via memory requests transmitted over system bus **2802** by I/O unit **2806**. In at least one embodiment, a host processor writes a command stream to a buffer and then transmits a pointer to the start of the command stream to PPU **2800** such that front-end unit **2810** receives pointers to one or more command streams and manages one or more command streams, reading commands from command streams and forwarding commands to various units of PPU **2800**.

[0266] In at least one embodiment, front-end unit **2810** is coupled to scheduler unit **2812** that configures various GPCs **2818** to process tasks defined by one or more command

streams. In at least one embodiment, scheduler unit **2812** is configured to track state information related to various tasks managed by scheduler unit **2812** where state information may indicate which of GPCs **2818** a task is assigned to, whether task is active or inactive, a priority level associated with task, and so forth. In at least one embodiment, scheduler unit **2812** manages execution of a plurality of tasks on one or more of GPCs **2818**.

[0267] In at least one embodiment, scheduler unit **2812** is coupled to work distribution unit **2814** that is configured to dispatch tasks for execution on GPCs **2818**. In at least one embodiment, work distribution unit **2814** tracks a number of scheduled tasks received from scheduler unit **2812** and work distribution unit **2814** manages a pending task pool and an active task pool for each of GPCs **2818**. In at least one embodiment, pending task pool comprises a number of slots (e.g., 32 slots) that contain tasks assigned to be processed by a particular GPC **2818**; active task pool may comprise a number of slots (e.g., 4 slots) for tasks that are actively being processed by GPCs **2818** such that as one of GPCs **2818** completes execution of a task, that task is evicted from active task pool for GPC **2818** and one of other tasks from pending task pool is selected and scheduled for execution on GPC **2818**. In at least one embodiment, if an active task is idle on GPC **2818**, such as while waiting for a data dependency to be resolved, then the active task is evicted from GPC **2818** and returned to a pending task pool while another task in the pending task pool is selected and scheduled for execution on GPC **2818**.

[0268] In at least one embodiment, work distribution unit **2814** communicates with one or more GPCs **2818** via XBar **2820**. In at least one embodiment, XBar **2820** is an interconnect network that couples many units of PPU **2800** to other units of PPU **2800** and can be configured to couple work distribution unit **2814** to a particular GPC **2818**. In at least one embodiment, one or more other units of PPU **2800** may also be connected to XBar **2820** via hub **2816**.

[0269] In at least one embodiment, tasks are managed by scheduler unit **2812** and dispatched to one of GPCs **2818** by work distribution unit **2814**. GPC **2818** is configured to process task and generate results. In at least one embodiment, results may be consumed by other tasks within GPC **2818**, routed to a different GPC **2818** via XBar **2820**, or stored in memory **2804**. In at least one embodiment, results can be written to memory **2804** via partition units **2822**, which implement a memory interface for reading and writing data to/from memory **2804**. In at least one embodiment, results can be transmitted to another PPU **2804** or CPU via high-speed GPU interconnect **2808**. In at least one embodiment, PPU **2800** includes, without limitation, a number U of partition units **2822** that is equal to number of separate and distinct memory devices **2804** coupled to PPU **2800**.

[0270] In at least one embodiment, a host processor executes a driver kernel that implements an application programming interface ("API") that enables one or more applications executing on host processor to schedule operations for execution on PPU **2800**. In at least one embodiment, multiple compute applications are simultaneously executed by PPU **2800** and PPU **2800** provides isolation, quality of service ("QoS"), and independent address spaces for multiple compute applications. In at least one embodiment, an application generates instructions (e.g., in the form of API calls) that cause a driver kernel to generate one or more tasks for execution by PPU **2800** and the driver kernel outputs tasks to one or more streams being processed by PPU **2800**. In at least one embodiment, each task comprises one or more groups of related threads, which may be referred to as a warp. In at least one embodiment, a warp comprises a plurality of related threads (e.g., 32 threads) that can be executed in parallel. In at least one embodiment, cooperating threads can refer to a plurality of threads including instructions to perform a task and that exchange data through shared memory.

[0271] FIG. **29** illustrates a GPC **2900**, in accordance with at least one embodiment. In at least one embodiment, GPC **2900** is GPC **2818** of FIG. **28**. In at least one embodiment, each GPC **2900** includes, without limitation, a number of hardware units for processing tasks and each GPC **2900** includes, without limitation, a pipeline manager **2902**, a pre-raster operations unit ("PROP") **2904**, a raster engine **2908**, a work distribution crossbar ("WDX") **2916**, an MMU **2918**, one or more Data Processing Clusters ("DPCs") **2906**, and any suitable combination of parts.

[0272] In at least one embodiment, operation of GPC **2900** is controlled by pipeline manager **2902**. In at least one embodiment, pipeline manager **2902** manages configuration of one or more DPCs **2906** for processing tasks allocated to GPC **2900**. In at least one embodiment, pipeline manager **2902** configures at least one of one or more DPCs **2906** to implement at least a portion of a graphics rendering pipeline. In at least one embodiment, DPC **2906** is configured to execute a vertex shader program on a programmable streaming multiprocessor ("SM") **2914**. In at least one embodiment, pipeline manager **2902** is configured to route packets received from a work distribution unit to appropriate logical units within GPC **2900** and, in at least one embodiment, some packets may be routed to fixed function hardware units in PROP **2904** and/or raster engine **2908** while other packets may be routed to DPCs **2906** for processing by a primitive engine **2912** or SM **2914**. In at least one embodiment, pipeline manager **2902** configures at least one of DPCs **2906** to implement a computing pipeline. In at least one embodiment, pipeline manager **2902** configures at least one of DPCs **2906** to execute at least a portion of a CUDA program.

[0273] In at least one embodiment, PROP unit **2904** is configured to route data generated by raster engine **2908** and DPCs **2906** to a Raster Operations ("ROP") unit in a partition unit, such as memory partition unit **2822** described in more detail above in conjunction with FIG. **28**. In at least one embodiment, PROP unit **2904** is configured to perform optimizations for color blending, organize pixel data, perform address translations, and more. In at least one embodiment, raster engine **2908** includes, without limitation, a number of fixed function hardware units configured to perform various raster operations and, in at least one embodiment, raster engine **2908** includes, without limitation, a setup engine, a coarse raster engine, a culling engine, a clipping engine, a fine raster engine, a tile coalescing engine, and any suitable combination thereof. In at least one embodiment, a setup engine receives transformed vertices and generates plane equations associated with geometric primitive defined by vertices; plane equations are transmitted to a coarse raster engine to generate coverage information (e.g., an x, y coverage mask for a tile) for a primitive; the output of the coarse raster engine is transmitted to a culling engine where fragments associated with a primitive that fail a z-test are culled, and transmitted to a clipping engine where fragments lying outside a viewing frustum are

clipped. In at least one embodiment, fragments that survive clipping and culling are passed to a fine raster engine to generate attributes for pixel fragments based on plane equations generated by a setup engine. In at least one embodiment, the output of raster engine **2908** comprises fragments to be processed by any suitable entity such as by a fragment shader implemented within DPC **2906**.

[0274] In at least one embodiment, each DPC **2906** included in GPC **2900** comprise, without limitation, an M-Pipe Controller ("MPC") **2910**; primitive engine **2912**; one or more SMs **2914**; and any suitable combination thereof. In at least one embodiment, MPC **2910** controls operation of DPC **2906**, routing packets received from pipeline manager **2902** to appropriate units in DPC **2906**. In at least one embodiment, packets associated with a vertex are routed to primitive engine **2912**, which is configured to fetch vertex attributes associated with vertex from memory; in contrast, packets associated with a shader program may be transmitted to SM **2914**.

[0275] In at least one embodiment, SM **2914** comprises, without limitation, a programmable streaming processor that is configured to process tasks represented by a number of threads. In at least one embodiment, SM **2914** is multi-threaded and configured to execute a plurality of threads (e.g., 32 threads) from a particular group of threads concurrently and implements a SIMD architecture where each thread in a group of threads (e.g., a warp) is configured to process a different set of data based on same set of instructions. In at least one embodiment, all threads in group of threads execute same instructions. In at least one embodiment, SM **2914** implements a SIMT architecture wherein each thread in a group of threads is configured to process a different set of data based on same set of instructions, but where individual threads in group of threads are allowed to diverge during execution. In at least one embodiment, a program counter, a call stack, and an execution state is maintained for each warp, enabling concurrency between warps and serial execution within warps when threads within a warp diverge. In another embodiment, a program counter, a call stack, and an execution state is maintained for each individual thread, enabling equal concurrency between all threads, within and between warps. In at least one embodiment, an execution state is maintained for each individual thread and threads executing the same instructions may be converged and executed in parallel for better efficiency. At least one embodiment of SM **2914** is described in more detail in conjunction with FIG. **30**.

[0276] In at least one embodiment, MMU **2918** provides an interface between GPC **2900** and a memory partition unit (e.g., partition unit **2822** of FIG. **28**) and MMU **2918** provides translation of virtual addresses into physical addresses, memory protection, and arbitration of memory requests. In at least one embodiment, MMU **2918** provides one or more translation lookaside buffers (TLBs) for performing translation of virtual addresses into physical addresses in memory.

[0277] FIG. **30** illustrates a streaming multiprocessor ("SM") **3000**, in accordance with at least one embodiment. In at least one embodiment, SM **3000** is SM **2914** of FIG. **29**. In at least one embodiment, SM **3000** includes, without limitation, an instruction cache **3002**; one or more scheduler units **3004**; a register file **3008**; one or more processing cores ("cores") **3010**; one or more special function units ("SFUs") **3012**; one or more LSUs **3014**; an interconnect network **3016**; a shared memory/L1 cache **3018**; and any suitable combination thereof. In at least one embodiment, a work distribution unit dispatches tasks for execution on GPCs of parallel processing units (PPUs) and each task is allocated to a particular Data Processing Cluster (DPC) within a GPC and, if a task is associated with a shader program, then the task is allocated to one of SMs **3000**. In at least one embodiment, scheduler unit **3004** receives tasks from a work distribution unit and manages instruction scheduling for one or more thread blocks assigned to SM **3000**. In at least one embodiment, scheduler unit **3004** schedules thread blocks for execution as warps of parallel threads, wherein each thread block is allocated at least one warp. In at least one embodiment, each warp executes threads. In at least one embodiment, scheduler unit **3004** manages a plurality of different thread blocks, allocating warps to different thread blocks and then dispatching instructions from a plurality of different cooperative groups to various functional units (e.g., processing cores **3010**, SFUs **3012**, and LSUs **3014**) during each clock cycle.

[0278] In at least one embodiment, "cooperative groups" may refer to a programming model for organizing groups of communicating threads that allows developers to express granularity at which threads are communicating, enabling expression of richer, more efficient parallel decompositions. In at least one embodiment, cooperative launch APIs support synchronization amongst thread blocks for execution of parallel algorithms. In at least one embodiment, APIs of conventional programming models provide a single, simple construct for synchronizing cooperating threads: a barrier across all threads of a thread block (e.g., syncthreads ( ) function). However, in at least one embodiment, programmers may define groups of threads at smaller than thread block granularities and synchronize within defined groups to enable greater performance, design flexibility, and software reuse in the form of collective group-wide function interfaces. In at least one embodiment, cooperative groups enable programmers to define groups of threads explicitly at sub-block and multi-block granularities, and to perform collective operations such as synchronization on threads in a cooperative group. In at least one embodiment, a sub-block granularity is as small as a single thread. In at least one embodiment, a programming model supports clean composition across software boundaries, so that libraries and utility functions can synchronize safely within their local context without having to make assumptions about convergence. In at least one embodiment, cooperative group primitives enable new patterns of cooperative parallelism, including, without limitation, producer-consumer parallelism, opportunistic parallelism, and global synchronization across an entire grid of thread blocks.

[0279] In at least one embodiment, a dispatch unit **3006** is configured to transmit instructions to one or more of functional units and scheduler unit **3004** includes, without limitation, two dispatch units **3006** that enable two different instructions from same warp to be dispatched during each clock cycle. In at least one embodiment, each scheduler unit **3004** includes a single dispatch unit **3006** or additional dispatch units **3006**.

[0280] In at least one embodiment, each SM **3000**, in at least one embodiment, includes, without limitation, register file **3008** that provides a set of registers for functional units of SM **3000**. In at least one embodiment, register file **3008** is divided between each of the functional units such that

each functional unit is allocated a dedicated portion of register file **3008**. In at least one embodiment, register file **3008** is divided between different warps being executed by SM **3000** and register file **3008** provides temporary storage for operands connected to data paths of functional units. In at least one embodiment, each SM **3000** comprises, without limitation, a plurality of L processing cores **3010**. In at least one embodiment, SM **3000** includes, without limitation, a large number (e.g., 128 or more) of distinct processing cores **3010**. In at least one embodiment, each processing core **3010** includes, without limitation, a fully-pipelined, single-precision, double-precision, and/or mixed precision processing unit that includes, without limitation, a floating point arithmetic logic unit and an integer arithmetic logic unit. In at least one embodiment, floating point arithmetic logic units implement IEEE 754-2008 standard for floating point arithmetic. In at least one embodiment, processing cores **3010** include, without limitation, 64 single-precision (32-bit) floating point cores, 64 integer cores, 32 double-precision (64-bit) floating point cores, and 8 tensor cores.

[0281] In at least one embodiment, tensor cores are configured to perform matrix operations. In at least one embodiment, one or more tensor cores are included in processing cores **3010**. In at least one embodiment, tensor cores are configured to perform deep learning matrix arithmetic, such as convolution operations for neural network training and inferencing. In at least one embodiment, each tensor core operates on a 4×4 matrix and performs a matrix multiply and accumulate operation D=A×B+C, where A, B, C, and D are 4×4 matrices.

[0282] In at least one embodiment, matrix multiply inputs A and B are 16-bit floating point matrices and accumulation matrices C and D are 16-bit floating point or 32-bit floating point matrices. In at least one embodiment, tensor cores operate on 16-bit floating point input data with 32-bit floating point accumulation. In at least one embodiment, 16-bit floating point multiply uses 64 operations and results in a full precision product that is then accumulated using 32-bit floating point addition with other intermediate products for a 4×4×4 matrix multiply. Tensor cores are used to perform much larger two-dimensional or higher dimensional matrix operations, built up from these smaller elements, in at least one embodiment. In at least one embodiment, an API, such as a CUDA-C++ API, exposes specialized matrix load, matrix multiply and accumulate, and matrix store operations to efficiently use tensor cores from a CUDA-C++ program. In at least one embodiment, at the CUDA level, a warp-level interface assumes 16×16 size matrices spanning all 32 threads of a warp.

[0283] In at least one embodiment, each SM **3000** comprises, without limitation, M SFUs **3012** that perform special functions (e.g., attribute evaluation, reciprocal square root, and like). In at least one embodiment, SFUs **3012** include, without limitation, a tree traversal unit configured to traverse a hierarchical tree data structure. In at least one embodiment, SFUs **3012** include, without limitation, a texture unit configured to perform texture map filtering operations. In at least one embodiment, texture units are configured to load texture maps (e.g., a 2D array of texels) from memory and sample texture maps to produce sampled texture values for use in shader programs executed by SM **3000**. In at least one embodiment, texture maps are stored in shared memory/L1 cache **3018**. In at least one embodiment, texture units implement texture operations such as filtering operations using mip-maps (e.g., texture maps of varying levels of detail). In at least one embodiment, each SM **3000** includes, without limitation, two texture units.

[0284] In at least one embodiment, each SM **3000** comprises, without limitation, N LSUs **3014** that implement load and store operations between shared memory/L1 cache **3018** and register file **3008**. In at least one embodiment, each SM **3000** includes, without limitation, interconnect network **3016** that connects each of the functional units to register file **3008** and LSU **3014** to register file **3008** and shared memory/L1 cache **3018**. In at least one embodiment, interconnect network **3016** is a crossbar that can be configured to connect any of the functional units to any of the registers in register file **3008** and connect LSUs **3014** to register file **3008** and memory locations in shared memory/L1 cache **3018**.

[0285] In at least one embodiment, shared memory/L1 cache **3018** is an array of on-chip memory that allows for data storage and communication between SM **3000** and a primitive engine and between threads in SM **3000**. In at least one embodiment, shared memory/L1 cache **3018** comprises, without limitation, 128 KB of storage capacity and is in a path from SM **3000** to a partition unit. In at least one embodiment, shared memory/L1 cache **3018** is used to cache reads and writes. In at least one embodiment, one or more of shared memory/L1 cache **3018**, L2 cache, and memory are backing stores.

[0286] In at least one embodiment, combining data cache and shared memory functionality into a single memory block provides improved performance for both types of memory accesses. In at least one embodiment, capacity is used or is usable as a cache by programs that do not use shared memory, such as if shared memory is configured to use half of capacity, texture and load/store operations can use remaining capacity. In at least one embodiment, integration within shared memory/L1 cache **3018** enables shared memory/L1 cache **3018** to function as a high-throughput conduit for streaming data while simultaneously providing high-bandwidth and low-latency access to frequently reused data. In at least one embodiment, when configured for general purpose parallel computation, a simpler configuration can be used compared with graphics processing. In at least one embodiment, fixed function GPUs are bypassed, creating a much simpler programming model. In at least one embodiment and in a general purpose parallel computation configuration, a work distribution unit assigns and distributes blocks of threads directly to DPCs. In at least one embodiment, threads in a block execute the same program, using a unique thread ID in a calculation to ensure each thread generates unique results, using SM **3000** to execute a program and perform calculations, shared memory/L1 cache **3018** to communicate between threads, and LSU **3014** to read and write global memory through shared memory/L1 cache **3018** and a memory partition unit. In at least one embodiment, when configured for general purpose parallel computation, SM **3000** writes commands that scheduler unit **3004** can use to launch new work on DPCs.

[0287] In at least one embodiment, PPU is included in or coupled to a desktop computer, a laptop computer, a tablet computer, servers, supercomputers, a smart-phone (e.g., a wireless, hand-held device), a PDA, a digital camera, a vehicle, a head mounted display, a hand-held electronic device, and more. In at least one embodiment, PPU is embodied on a single semiconductor substrate. In at least

one embodiment, PPU is included in an SoC along with one or more other devices such as additional PPUs, memory, a RISC CPU, an MMU, a digital-to-analog converter ("DAC"), and like.

[0288] In at least one embodiment, PPU may be included on a graphics card that includes one or more memory devices. In at least one embodiment, a graphics card may be configured to interface with a PCIe slot on a motherboard of a desktop computer. In at least one embodiment, PPU may be an integrated GPU ("iGPU") included in chipset of motherboard.

Software Constructions for General-Purpose Computing

[0289] The following FIGS. set forth, without limitation, exemplary software constructs for implementing at least one embodiment.

[0290] FIG. **31** illustrates a software stack of a programming platform, in accordance with at least one embodiment. In at least one embodiment, a programming platform is a platform for leveraging hardware on a computing system to accelerate computational tasks. A programming platform may be accessible to software developers through libraries, compiler directives, and/or extensions to programming languages, in at least one embodiment. In at least one embodiment, a programming platform may be, but is not limited to, CUDA, Radeon Open Compute Platform ("ROCm"), OpenCL (OpenCL™ is developed by Khronos group), SYCL, or Intel One API.

[0291] In at least one embodiment, a software stack **3100** of a programming platform provides an execution environment for an application **3101**. In at least one embodiment, application **3101** may include any computer software capable of being launched on software stack **3100**. In at least one embodiment, application **3101** may include, but is not limited to, an artificial intelligence ("AI")/machine learning ("ML") application, a high performance computing ("HPC") application, a virtual desktop infrastructure ("VDI"), or a data center workload.

[0292] In at least one embodiment, application **3101** and software stack **3100** run on hardware **3107**. Hardware **3107** may include one or more GPUs, CPUs, FPGAs, AI engines, and/or other types of compute devices that support a programming platform, in at least one embodiment. In at least one embodiment, such as with CUDA, software stack **3100** may be vendor specific and compatible with only devices from particular vendor(s). In at least one embodiment, such as in with OpenCL, software stack **3100** may be used with devices from different vendors. In at least one embodiment, hardware **3107** includes a host connected to one more devices that can be accessed to perform computational tasks via application programming interface ("API") calls. A device within hardware **3107** may include, but is not limited to, a GPU, FPGA, AI engine, or other compute device (but may also include a CPU) and its memory, as opposed to a host within hardware **3107** that may include, but is not limited to, a CPU (but may also include a compute device) and its memory, in at least one embodiment.

[0293] In at least one embodiment, software stack **3100** of a programming platform includes, without limitation, a number of libraries **3103**, a runtime **3105**, and a device kernel driver **3106**. Each of libraries **3103** may include data and programming code that can be used by computer programs and leveraged during software development, in at least one embodiment. In at least one embodiment, libraries **3103** may include, but are not limited to, pre-written code and subroutines, classes, values, type specifications, configuration data, documentation, help data, and/or message templates. In at least one embodiment, libraries **3103** include functions that are optimized for execution on one or more types of devices. In at least one embodiment, libraries **3103** may include, but are not limited to, functions for performing mathematical, deep learning, and/or other types of operations on devices. In at least one embodiment, libraries **3103** are associated with corresponding APIs **3102**, which may include one or more APIs, that expose functions implemented in libraries **3103**.

[0294] In at least one embodiment, application **3101** is written as source code that is compiled into executable code, as discussed in greater detail below in conjunction with FIGS. **36-38**. Executable code of application **3101** may run, at least in part, on an execution environment provided by software stack **3100**, in at least one embodiment. In at least one embodiment, during execution of application **3101**, code may be reached that needs to run on a device, as opposed to a host. In such a case, runtime **3105** may be called to load and launch requisite code on the device, in at least one embodiment. In at least one embodiment, runtime **3105** may include any technically feasible runtime system that is able to support execution of application S01.

[0295] In at least one embodiment, runtime **3105** is implemented as one or more runtime libraries associated with corresponding APIs, which are shown as API(s) **3104**. One or more of such runtime libraries may include, without limitation, functions for memory management, execution control, device management, error handling, and/or synchronization, among other things, in at least one embodiment. In at least one embodiment, memory management functions may include, but are not limited to, functions to allocate, deallocate, and copy device memory, as well as transfer data between host memory and device memory. In at least one embodiment, execution control functions may include, but are not limited to, functions to launch a function (sometimes referred to as a "kernel" when a function is a global function callable from a host) on a device and set attribute values in a buffer maintained by a runtime library for a given function to be executed on a device.

[0296] Runtime libraries and corresponding API(s) **3104** may be implemented in any technically feasible manner, in at least one embodiment. In at least one embodiment, one (or any number of) API may expose a low-level set of functions for fine-grained control of a device, while another (or any number of) API may expose a higher-level set of such functions. In at least one embodiment, a high-level runtime API may be built on top of a low-level API. In at least one embodiment, one or more of runtime APIs may be language-specific APIs that are layered on top of a language-independent runtime API.

[0297] In at least one embodiment, device kernel driver **3106** is configured to facilitate communication with an underlying device. In at least one embodiment, device kernel driver **3106** may provide low-level functionalities upon which APIs, such as API(s) **3104**, and/or other software relies. In at least one embodiment, device kernel driver **3106** may be configured to compile intermediate representation ("IR") code into binary code at runtime. For CUDA, device kernel driver **3106** may compile Parallel Thread Execution ("PTX") IR code that is not hardware specific into binary code for a specific target device at runtime (with caching of

compiled binary code), which is also sometimes referred to as "finalizing" code, in at least one embodiment. Doing so may permit finalized code to run on a target device, which may not have existed when source code was originally compiled into PTX code, in at least one embodiment. Alternatively, in at least one embodiment, device source code may be compiled into binary code offline, without requiring device kernel driver **3106** to compile IR code at runtime.

[0298] FIG. **32** illustrates a CUDA implementation of software stack **3100** of FIG. **31**, in accordance with at least one embodiment. In at least one embodiment, a CUDA software stack **3200**, on which an application **3201** may be launched, includes CUDA libraries **3203**, a CUDA runtime **3205**, a CUDA driver **3207**, and a device kernel driver **3208**. In at least one embodiment, CUDA software stack **3200** executes on hardware **3209**, which may include a GPU that supports CUDA and is developed by NVIDIA Corporation of Santa Clara, CA.

[0299] In at least one embodiment, application **3201**, CUDA runtime **3205**, and device kernel driver **3208** may perform similar functionalities as application **3101**, runtime **3105**, and device kernel driver **3106**, respectively, which are described above in conjunction with FIG. **31**. In at least one embodiment, CUDA driver **3207** includes a library (libcuda.so) that implements a CUDA driver API **3206**. Similar to a CUDA runtime API **3204** implemented by a CUDA runtime library (cudart), CUDA driver API **3206** may, without limitation, expose functions for memory management, execution control, device management, error handling, synchronization, and/or graphics interoperability, among other things, in at least one embodiment. In at least one embodiment, CUDA driver API **3206** differs from CUDA runtime API **3204** in that CUDA runtime API **3204** simplifies device code management by providing implicit initialization, context (analogous to a process) management, and module (analogous to dynamically loaded libraries) management. In contrast to high-level CUDA runtime API **3204**, CUDA driver API **3206** is a low-level API providing more fine-grained control of the device, particularly with respect to contexts and module loading, in at least one embodiment. In at least one embodiment, CUDA driver API **3206** may expose functions for context management that are not exposed by CUDA runtime API **3204**. In at least one embodiment, CUDA driver API **3206** is also language-independent and supports, e.g., OpenCL in addition to CUDA runtime API **3204**. Further, in at least one embodiment, development libraries, including CUDA runtime **3205**, may be considered as separate from driver components, including user-mode CUDA driver **3207** and kernel-mode device driver **3208** (also sometimes referred to as a "display" driver).

[0300] In at least one embodiment, CUDA libraries **3203** may include, but are not limited to, mathematical libraries, deep learning libraries, parallel algorithm libraries, and/or signal/image/video processing libraries, which parallel computing applications such as application **3201** may utilize. In at least one embodiment, CUDA libraries **3203** may include mathematical libraries such as a cuBLAS library that is an implementation of Basic Linear Algebra Subprograms ("BLAS") for performing linear algebra operations, a cuFFT library for computing fast Fourier transforms ("FFTs"), and a cuRAND library for generating random numbers, among others. In at least one embodiment, CUDA libraries **3203** may include deep learning libraries such as a cuDNN library of primitives for deep neural networks and a TensorRT platform for high-performance deep learning inference, among others.

[0301] FIG. **33** illustrates a ROCm implementation of software stack **3100** of FIG. **31**, in accordance with at least one embodiment. In at least one embodiment, a ROCm software stack **3300**, on which an application **3301** may be launched, includes a language runtime **3303**, a system runtime **3305**, a thunk **3307**, and a ROCm kernel driver **3308**. In at least one embodiment, ROCm software stack **3300** executes on hardware **3309**, which may include a GPU that supports ROCm and is developed by AMD Corporation of Santa Clara, CA.

[0302] In at least one embodiment, application **3301** may perform similar functionalities as application **3101** discussed above in conjunction with FIG. **31**. In addition, language runtime **3303** and system runtime **3305** may perform similar functionalities as runtime **3105** discussed above in conjunction with FIG. **31**, in at least one embodiment. In at least one embodiment, language runtime **3303** and system runtime **3305** differ in that system runtime **3305** is a language-independent runtime that implements a ROCr system runtime API **3304** and makes use of a Heterogeneous System Architecture ("HSA") Runtime API. HSA runtime API is a thin, user-mode API that exposes interfaces to access and interact with an AMD GPU, including functions for memory management, execution control via architected dispatch of kernels, error handling, system and agent information, and runtime initialization and shutdown, among other things, in at least one embodiment. In contrast to system runtime **3305**, language runtime **3303** is an implementation of a language-specific runtime API **3302** layered on top of ROCr system runtime API **3304**, in at least one embodiment. In at least one embodiment, language runtime API may include, but is not limited to, a Heterogeneous compute Interface for Portability ("HIP") language runtime API, a Heterogeneous Compute Compiler ("HCC") language runtime API, or an OpenCL API, among others. HIP language in particular is an extension of C++ programming language with functionally similar versions of CUDA mechanisms, and, in at least one embodiment, a HIP language runtime API includes functions that are similar to those of CUDA runtime API **3204** discussed above in conjunction with FIG. **32**, such as functions for memory management, execution control, device management, error handling, and synchronization, among other things.

[0303] In at least one embodiment, thunk (ROCt) **3307** is an interface **3306** that can be used to interact with underlying ROCm driver **3308**. In at least one embodiment, ROCm driver **3308** is a ROCK driver, which is a combination of an AMDGPU driver and a HSA kernel driver (amdkfd). In at least one embodiment, AMDGPU driver is a device kernel driver for GPUs developed by AMD that performs similar functionalities as device kernel driver **3106** discussed above in conjunction with FIG. **31**. In at least one embodiment, HSA kernel driver is a driver permitting different types of processors to share system resources more effectively via hardware features.

[0304] In at least one embodiment, various libraries (not shown) may be included in ROCm software stack **3300** above language runtime **3303** and provide functionality similarity to CUDA libraries **3203**, discussed above in conjunction with FIG. **32**. In at least one embodiment, various libraries may include, but are not limited to, math-

ematical, deep learning, and/or other libraries such as a hipBLAS library that implements functions similar to those of CUDA cuBLAS, a rocFFT library for computing FFTs that is similar to CUDA cuFFT, among others.

[0305] FIG. **34** illustrates an OpenCL implementation of software stack **3100** of FIG. **31**, in accordance with at least one embodiment. In at least one embodiment, an OpenCL software stack **3400**, on which an application **3401** may be launched, includes an OpenCL framework **3410**, an OpenCL runtime **3406**, and a driver **3407**. In at least one embodiment, OpenCL software stack **3400** executes on hardware **3209** that is not vendor-specific. As OpenCL is supported by devices developed by different vendors, specific OpenCL drivers may be required to interoperate with hardware from such vendors, in at least one embodiment.

[0306] In at least one embodiment, application **3401**, OpenCL runtime **3406**, device kernel driver **3407**, and hardware **3408** may perform similar functionalities as application **3101**, runtime **3105**, device kernel driver **3106**, and hardware **3107**, respectively, that are discussed above in conjunction with FIG. **31**. In at least one embodiment, application **3401** further includes an OpenCL kernel **3402** with code that is to be executed on a device.

[0307] In at least one embodiment, OpenCL defines a "platform" that allows a host to control devices connected to the host. In at least one embodiment, an OpenCL framework provides a platform layer API and a runtime API, shown as platform API **3403** and runtime API **3405**. In at least one embodiment, runtime API **3405** uses contexts to manage execution of kernels on devices. In at least one embodiment, each identified device may be associated with a respective context, which runtime API **3405** may use to manage command queues, program objects, and kernel objects, share memory objects, among other things, for that device. In at least one embodiment, platform API **3403** exposes functions that permit device contexts to be used to select and initialize devices, submit work to devices via command queues, and enable data transfer to and from devices, among other things. In addition, OpenCL framework provides various built-in functions (not shown), including math functions, relational functions, and image processing functions, among others, in at least one embodiment.

[0308] In at least one embodiment, a compiler **3404** is also included in OpenCL framework **3410**. Source code may be compiled offline prior to executing an application or online during execution of an application, in at least one embodiment. In contrast to CUDA and ROCm, OpenCL applications in at least one embodiment may be compiled online by compiler **3404**, which is included to be representative of any number of compilers that may be used to compile source code and/or IR code, such as Standard Portable Intermediate Representation ("SPIR-V") code, into binary code. Alternatively, in at least one embodiment, OpenCL ap-plications may be compiled offline, prior to execution of such applications.

[0309] FIG. **35** illustrates software that is supported by a programming platform, in accordance with at least one embodiment. In at least one embodiment, a programming platform **3504** is configured to support various programming models **3503**, middlewares and/or libraries **3502**, and frameworks **3501** that an application **3500** may rely upon. In at least one embodiment, application **3500** may be an AI/ML application implemented using, for example, a deep learning framework such as MXNet, PyTorch, or TensorFlow, which may rely on libraries such as cuDNN, NVIDIA Collective Communications Library ("NCCL"), and/or NVIDA Developer Data Loading Library ("DALI") CUDA libraries to provide accelerated computing on underlying hardware.

[0310] In at least one embodiment, programming platform **3504** may be one of a CUDA, ROCm, or OpenCL platform described above in conjunction with FIG. **32**, FIG. **33**, and FIG. **34**, respectively. In at least one embodiment, programming platform **3504** supports multiple programming models **3503**, which are abstractions of an underlying computing system permitting expressions of algorithms and data structures. Programming models **3503** may expose features of underlying hardware in order to improve performance, in at least one embodiment. In at least one embodiment, programming models **3503** may include, but are not limited to, CUDA, HIP, OpenCL, C++ Accelerated Massive Parallelism ("C++ AMP"), Open Multi-Processing ("OpenMP"), Open Accelerators ("OpenACC"), and/or Vulcan Compute.

[0311] In at least one embodiment, libraries and/or middlewares **3502** provide implementations of abstractions of programming models **3504**. In at least one embodiment, such libraries include data and programming code that may be used by computer programs and leveraged during software development. In at least one embodiment, such middlewares include software that provides services to applications beyond those available from programming platform **3504**. In at least one embodiment, libraries and/or middlewares **3502** may include, but are not limited to, cuBLAS, cuFFT, cuRAND, and other CUDA libraries, or rocBLAS, rocFFT, rocRAND, and other ROCm libraries. In addition, in at least one embodiment, libraries and/or middlewares **3502** may include NCCL and ROCm Communication Collectives Library ("RCCL") libraries providing communication routines for GPUs, a MIOpen library for deep learning acceleration, and/or an Eigen library for linear algebra, matrix and vector operations, geometrical transformations, numerical solvers, and related algorithms.

[0312] In at least one embodiment, application frameworks **3501** depend on libraries and/or middlewares **3502**. In at least one embodiment, each of application frameworks **3501** is a software framework used to implement a standard structure of application software. Returning to the AI/ML example discussed above, an AI/ML application may be implemented using a framework such as Caffe, Caffe2, TensorFlow, Keras, PyTorch, or MxNet deep learning frameworks, in at least one embodiment.

[0313] FIG. **36** illustrates compiling code to execute on one of programming platforms of FIGS. **31-34**, in accordance with at least one embodiment. In at least one embodiment, a compiler **3601** receives source code **3600** that includes both host code as well as device code. In at least one embodiment, complier **3601** is configured to convert source code **3600** into host executable code **3602** for execution on a host and device executable code **3603** for execution on a device. In at least one embodiment, source code **3600** may either be compiled offline prior to execution of an application, or online during execution of an application.

[0314] In at least one embodiment, source code **3600** may include code in any programming language supported by compiler **3601**, such as C++, C, Fortran, etc. In at least one embodiment, source code **3600** may be included in a single-source file having a mixture of host code and device code, with locations of device code being indicated therein. In at least one embodiment, a single-source file may be a .cu file

that includes CUDA code or a .hip.cpp file that includes HIP code. Alternatively, in at least one embodiment, source code **3600** may include multiple source code files, rather than a single-source file, into which host code and device code are separated.

[0315] In at least one embodiment, compiler **3601** is configured to compile source code **3600** into host executable code **3602** for execution on a host and device executable code **3603** for execution on a device. In at least one embodiment, compiler **3601** performs operations including parsing source code **3600** into an abstract system tree (AST), performing optimizations, and generating executable code. In at least one embodiment in which source code **3600** includes a single-source file, compiler **3601** may separate device code from host code in such a single-source file, compile device code and host code into device executable code **3603** and host executable code **3602**, respectively, and link device executable code **3603** and host executable code **3602** together in a single file, as discussed in greater detail below with respect to FIG. **37**.

[0316] In at least one embodiment, host executable code **3602** and device executable code **3603** may be in any suitable format, such as binary code and/or IR code. In the case of CUDA, host executable code **3602** may include native object code and device executable code **3603** may include code in PTX intermediate representation, in at least one embodiment. In the case of ROCm, both host executable code **3602** and device executable code **3603** may include target binary code, in at least one embodiment.

[0317] FIG. **37** is a more detailed illustration of compiling code to execute on one of programming platforms of FIGS. **31-34**, in accordance with at least one embodiment. In at least one embodiment, a compiler **3701** is configured to receive source code **3700**, compile source code **3700**, and output an executable file **3710**. In at least one embodiment, source code **3700** is a single-source file, such as a .cu file, a .hip.cpp file, or a file in another format, that includes both host and device code. In at least one embodiment, compiler **3701** may be, but is not limited to, an NVIDIA CUDA compiler ("NVCC") for compiling CUDA code in .cu files, or a HCC compiler for compiling HIP code in .hip.cpp files.

[0318] In at least one embodiment, compiler **3701** includes a compiler front end **3702**, a host compiler **3705**, a device compiler **3706**, and a linker **3709**. In at least one embodiment, compiler front end **3702** is configured to separate device code **3704** from host code **3703** in source code **3700**. Device code **3704** is compiled by device compiler **3706** into device executable code **3708**, which as described may include binary code or IR code, in at least one embodiment. Separately, host code **3703** is compiled by host compiler **3705** into host executable code **3707**, in at least one embodiment. For NVCC, host compiler **3705** may be, but is not limited to, a general purpose C/C++ compiler that outputs native object code, while device compiler **3706** may be, but is not limited to, a Low Level Virtual Machine ("LLVM")-based compiler that forks a LLVM compiler infrastructure and outputs PTX code or binary code, in at least one embodiment. For HCC, both host compiler **3705** and device compiler **3706** may be, but are not limited to, LLVM-based compilers that output target binary code, in at least one embodiment.

[0319] Subsequent to compiling source code **3700** into host executable code **3707** and device executable code **3708**, linker **3709** links host and device executable code **3707** and **3708** together in executable file **3710**, in at least one embodiment. In at least one embodiment, native object code for a host and PTX or binary code for a device may be linked together in an Executable and Linkable Format ("ELF") file, which is a container format used to store object code.

[0320] FIG. **38** illustrates translating source code prior to compiling source code, in accordance with at least one embodiment. In at least one embodiment, source code **3800** is passed through a translation tool **3801**, which translates source code **3800** into translated source code **3802**. In at least one embodiment, a compiler **3803** is used to compile translated source code **3802** into host executable code **3804** and device executable code **3805** in a process that is similar to compilation of source code **3600** by compiler **3601** into host executable code **3602** and device executable **3603**, as discussed above in conjunction with FIG. **36**.

[0321] In at least one embodiment, a translation performed by translation tool **3801** is used to port source **3800** for execution in a different environment than that in which it was originally intended to run. In at least one embodiment, translation tool **3801** may include, but is not limited to, a HIP translator that is used to "hipify" CUDA code intended for a CUDA platform into HIP code that can be compiled and executed on a ROCm platform. In at least one embodiment, translation of source code **3800** may include parsing source code **3800** and converting calls to API(s) provided by one programming model (e.g., CUDA) into corresponding calls to API(s) provided by another programming model (e.g., HIP), as discussed in greater detail below in conjunction with FIGS. **39A-40**. Returning to the example of hipifying CUDA code, calls to CUDA runtime API, CUDA driver API, and/or CUDA libraries may be converted to corresponding HIP API calls, in at least one embodiment. In at least one embodiment, automated translations performed by translation tool **3801** may sometimes be incomplete, requiring additional, manual effort to fully port source code **3800**.

Configuring GPUs for General-Purpose Computing

[0322] The following FIGS. set forth, without limitation, exemplary architectures for compiling and executing compute source code, in accordance with at least one embodiment.

[0323] FIG. **39**A illustrates a system **3900** configured to compile and execute CUDA source code **3910** using different types of processing units, in accordance with at least one embodiment. In at least one embodiment, system **3900** includes, without limitation, CUDA source code **3910**, a CUDA compiler **3950**, host executable code **3970(1)**, host executable code **3970(2)**, CUDA device executable code **3984**, a CPU **3990**, a CUDA-enabled GPU **3994**, a GPU **3992**, a CUDA to HIP translation tool **3920**, HIP source code **3930**, a HIP compiler driver **3940**, an HCC **3960**, and HCC device executable code **3982**.

[0324] In at least one embodiment, CUDA source code **3910** is a collection of human-readable code in a CUDA programming language. In at least one embodiment, CUDA code is human-readable code in a CUDA programming language. In at least one embodiment, a CUDA programming language is an extension of the C++ programming language that includes, without limitation, mechanisms to define device code and distinguish between device code and host code. In at least one embodiment, device code is source code that, after compilation, is executable in parallel on a

device. In at least one embodiment, a device may be a processor that is optimized for parallel instruction processing, such as CUDA-enabled GPU **3990**, GPU **39192**, or another GPGPU, etc. In at least one embodiment, host code is source code that, after compilation, is executable on a host. In at least one embodiment, a host is a processor that is optimized for sequential instruction processing, such as CPU **3990**.

[0325] In at least one embodiment, CUDA source code **3910** includes, without limitation, any number (including zero) of global functions **3912**, any number (including zero) of device functions **3914**, any number (including zero) of host functions **3916**, and any number (including zero) of host/device functions **3918**. In at least one embodiment, global functions **3912**, device functions **3914**, host functions **3916**, and host/device functions **3918** may be mixed in CUDA source code **3910**. In at least one embodiment, each of global functions **3912** is executable on a device and callable from a host. In at least one embodiment, one or more of global functions **3912** may therefore act as entry points to a device. In at least one embodiment, each of global functions **3912** is a kernel. In at least one embodiment and in a technique known as dynamic parallelism, one or more of global functions **3912** defines a kernel that is executable on a device and callable from such a device. In at least one embodiment, a kernel is executed N (where N is any positive integer) times in parallel by N different threads on a device during execution.

[0326] In at least one embodiment, each of device functions **3914** is executed on a device and callable from such a device only. In at least one embodiment, each of host functions **3916** is executed on a host and callable from such a host only. In at least one embodiment, each of host/device functions **3916** defines both a host version of a function that is executable on a host and callable from such a host only and a device version of the function that is executable on a device and callable from such a device only.

[0327] In at least one embodiment, CUDA source code **3910** may also include, without limitation, any number of calls to any number of functions that are defined via a CUDA runtime API **3902**. In at least one embodiment, CUDA runtime API **3902** may include, without limitation, any number of functions that execute on a host to allocate and deallocate device memory, transfer data between host memory and device memory, manage systems with multiple devices, etc. In at least one embodiment, CUDA source code **3910** may also include any number of calls to any number of functions that are specified in any number of other CUDA APIs. In at least one embodiment, a CUDA API may be any API that is designed for use by CUDA code. In at least one embodiment, CUDA APIs include, without limitation, CUDA runtime API **3902**, a CUDA driver API, APIs for any number of CUDA libraries, etc. In at least one embodiment and relative to CUDA runtime API **3902**, a CUDA driver API is a lower-level API but provides finer-grained control of a device. In at least one embodiment, examples of CUDA libraries include, without limitation, cuBLAS, cuFFT, cuRAND, cuDNN, etc.

[0328] In at least one embodiment, CUDA compiler **3950** compiles input CUDA code (e.g., CUDA source code **3910**) to generate host executable code **3970(1)** and CUDA device executable code **3984**. In at least one embodiment, CUDA compiler **3950** is NVCC. In at least one embodiment, host executable code **3970(1)** is a compiled version of host code included in input source code that is executable on CPU **3990**. In at least one embodiment, CPU **3990** may be any processor that is optimized for sequential instruction processing.

[0329] In at least one embodiment, CUDA device executable code **3984** is a compiled version of device code included in input source code that is executable on CUDA-enabled GPU **3994**. In at least one embodiment, CUDA device executable code **3984** includes, without limitation, binary code. In at least one embodiment, CUDA device executable code **3984** includes, without limitation, IR code, such as PTX code, that is further compiled at runtime into binary code for a specific target device (e.g., CUDA-enabled GPU **3994**) by a device driver. In at least one embodiment, CUDA-enabled GPU **3994** may be any processor that is optimized for parallel instruction processing and that supports CUDA. In at least one embodiment, CUDA-enabled GPU **3994** is developed by NVIDIA Corporation of Santa Clara, CA.

[0330] In at least one embodiment, CUDA to HIP translation tool **3920** is configured to translate CUDA source code **3910** to functionally similar HIP source code **3930**. In a least one embodiment, HIP source code **3930** is a collection of human-readable code in a HIP programming language. In at least one embodiment, HIP code is human-readable code in a HIP programming language. In at least one embodiment, a HIP programming language is an extension of the C++ programming language that includes, without limitation, functionally similar versions of CUDA mechanisms to define device code and distinguish between device code and host code. In at least one embodiment, a HIP programming language may include a subset of functionality of a CUDA programming language. In at least one embodiment, for example, a HIP programming language includes, without limitation, mechanism(s) to define global functions **3912**, but such a HIP programming language may lack support for dynamic parallelism and therefore global functions **3912** defined in HIP code may be callable from a host only.

[0331] In at least one embodiment, HIP source code **3930** includes, without limitation, any number (including zero) of global functions **3912**, any number (including zero) of device functions **3914**, any number (including zero) of host functions **3916**, and any number (including zero) of host/device functions **3918**. In at least one embodiment, HIP source code **3930** may also include any number of calls to any number of functions that are specified in a HIP runtime API **3932**. In at least one embodiment, HIP runtime API **3932** includes, without limitation, functionally similar versions of a subset of functions included in CUDA runtime API **3902**. In at least one embodiment, HIP source code **3930** may also include any number of calls to any number of functions that are specified in any number of other HIP APIs. In at least one embodiment, a HIP API may be any API that is designed for use by HIP code and/or ROCm. In at least one embodiment, HIP APIs include, without limitation, HIP runtime API **3932**, a HIP driver API, APIs for any number of HIP libraries, APIs for any number of ROCm libraries, etc.

[0332] In at least one embodiment, CUDA to HIP translation tool **3920** converts each kernel call in CUDA code from a CUDA syntax to a HIP syntax and converts any number of other CUDA calls in CUDA code to any number of other functionally similar HIP calls. In at least one

embodiment, a CUDA call is a call to a function specified in a CUDA API, and a HIP call is a call to a function specified in a HIP API. In at least one embodiment, CUDA to HIP translation tool **3920** converts any number of calls to functions specified in CUDA runtime API **3902** to any number of calls to functions specified in HIP runtime API **3932**.

[0333] In at least one embodiment, CUDA to HIP translation tool **3920** is a tool known as hipify-perl that executes a text-based translation process. In at least one embodiment, CUDA to HIP translation tool **3920** is a tool known as hipify-clang that, relative to hipify-perl, executes a more complex and more robust translation process that involves parsing CUDA code using clang (a compiler front-end) and then translating resulting symbols. In at least one embodiment, properly converting CUDA code to HIP code may require modifications (e.g., manual edits) in addition to those performed by CUDA to HIP translation tool **3920**.

[0334] In at least one embodiment, HIP compiler driver **3940** is a front end that determines a target device **3946** and then configures a compiler that is compatible with target device **3946** to compile HIP source code **3930**. In at least one embodiment, target device **3946** is a processor that is optimized for parallel instruction processing. In at least one embodiment, HIP compiler driver **3940** may determine target device **3946** in any technically feasible fashion.

[0335] In at least one embodiment, if target device **3946** is compatible with CUDA (e.g., CUDA-enabled GPU **3994**), then HIP compiler driver **3940** generates a HIP/NVCC compilation command **3942**. In at least one embodiment and as described in greater detail in conjunction with FIG. **39**B, HIP/NVCC compilation command **3942** configures CUDA compiler **3950** to compile HIP source code **3930** using, without limitation, a HIP to CUDA translation header and a CUDA runtime library. In at least one embodiment and in response to HIP/NVCC compilation command **3942**, CUDA compiler **3950** generates host executable code **3970**(**1**) and CUDA device executable code **3984**.

[0336] In at least one embodiment, if target device **3946** is not compatible with CUDA, then HIP compiler driver **3940** generates a HIP/HCC compilation command **3944**. In at least one embodiment and as described in greater detail in conjunction with FIG. **39**C, HIP/HCC compilation command **3944** configures HCC **3960** to compile HIP source code **3930** using, without limitation, an HCC header and a HIP/HCC runtime library. In at least one embodiment and in response to HIP/HCC compilation command **3944**, HCC **3960** generates host executable code **3970**(**2**) and HCC device executable code **3982**. In at least one embodiment, HCC device executable code **3982** is a compiled version of device code included in HIP source code **3930** that is executable on GPU **3992**. In at least one embodiment, GPU **3992** may be any processor that is optimized for parallel instruction processing, is not compatible with CUDA, and is compatible with HCC. In at least one embodiment, GPU **3992** is developed by AMD Corporation of Santa Clara, CA. In at least one embodiment GPU, **3992** is a non-CUDA-enabled GPU **3992**.

[0337] For explanatory purposes only, three different flows that may be implemented in at least one embodiment to compile CUDA source code **3910** for execution on CPU **3990** and different devices are depicted in FIG. **39**A. In at least one embodiment, a direct CUDA flow compiles CUDA source code **3910** for execution on CPU **3990** and CUDA-enabled GPU **3994** without translating CUDA source code **3910** to HIP source code **3930**. In at least one embodiment, an indirect CUDA flow translates CUDA source code **3910** to HIP source code **3930** and then compiles HIP source code **3930** for execution on CPU **3990** and CUDA-enabled GPU **3994**. In at least one embodiment, a CUDA/HCC flow translates CUDA source code **3910** to HIP source code **3930** and then compiles HIP source code **3930** for execution on CPU **3990** and GPU **3992**.

[0338] A direct CUDA flow that may be implemented in at least one embodiment is depicted via dashed lines and a series of bubbles annotated A1-A3. In at least one embodiment and as depicted with bubble annotated A1, CUDA compiler **3950** receives CUDA source code **3910** and a CUDA compile command **3948** that configures CUDA compiler **3950** to compile CUDA source code **3910**. In at least one embodiment, CUDA source code **3910** used in a direct CUDA flow is written in a CUDA programming language that is based on a programming language other than C++ (e.g., C, Fortran, Python, Java, etc.). In at least one embodiment and in response to CUDA compile command **3948**, CUDA compiler **3950** generates host executable code **3970**(**1**) and CUDA device executable code **3984** (depicted with bubble annotated A2). In at least one embodiment and as depicted with bubble annotated A3, host executable code **3970**(**1**) and CUDA device executable code **3984** may be executed on, respectively, CPU **3990** and CUDA-enabled GPU **3994**. In at least one embodiment, CUDA device executable code **3984** includes, without limitation, binary code. In at least one embodiment, CUDA device executable code **3984** includes, without limitation, PTX code and is further compiled into binary code for a specific target device at runtime.

[0339] An indirect CUDA flow that may be implemented in at least one embodiment is depicted via dotted lines and a series of bubbles annotated B1-B6. In at least one embodiment and as depicted with bubble annotated B1, CUDA to HIP translation tool **3920** receives CUDA source code **3910**. In at least one embodiment and as depicted with bubble annotated B2, CUDA to HIP translation tool **3920** translates CUDA source code **3910** to HIP source code **3930**. In at least one embodiment and as depicted with bubble annotated B3, HIP compiler driver **3940** receives HIP source code **3930** and determines that target device **3946** is CUDA-enabled.

[0340] In at least one embodiment and as depicted with bubble annotated B4, HIP compiler driver **3940** generates HIP/NVCC compilation command **3942** and transmits both HIP/NVCC compilation command **3942** and HIP source code **3930** to CUDA compiler **3950**. In at least one embodiment and as described in greater detail in conjunction with FIG. **39**B, HIP/NVCC compilation command **3942** configures CUDA compiler **3950** to compile HIP source code **3930** using, without limitation, a HIP to CUDA translation header and a CUDA runtime library. In at least one embodiment and in response to HIP/NVCC compilation command **3942**, CUDA compiler **3950** generates host executable code **3970** (**1**) and CUDA device executable code **3984** (depicted with bubble annotated B5). In at least one embodiment and as depicted with bubble annotated B6, host executable code **3970**(**1**) and CUDA device executable code **3984** may be executed on, respectively, CPU **3990** and CUDA-enabled GPU **3994**. In at least one embodiment, CUDA device executable code **3984** includes, without limitation, binary code. In at least one embodiment, CUDA device executable

code **3984** includes, without limitation, PTX code and is further compiled into binary code for a specific target device at runtime.

[0341] A CUDA/HCC flow that may be implemented in at least one embodiment is depicted via solid lines and a series of bubbles annotated C1-C6. In at least one embodiment and as depicted with bubble annotated C1, CUDA to HIP translation tool **3920** receives CUDA source code **3910**. In at least one embodiment and as depicted with bubble annotated C2, CUDA to HIP translation tool **3920** translates CUDA source code **3910** to HIP source code **3930**. In at least one embodiment and as depicted with bubble annotated C3, HIP compiler driver **3940** receives HIP source code **3930** and determines that target device **3946** is not CUDA-enabled.

[0342] In at least one embodiment, HIP compiler driver **3940** generates HIP/HCC compilation command **3944** and transmits both HIP/HCC compilation command **3944** and HIP source code **3930** to HCC **3960** (depicted with bubble annotated C4). In at least one embodiment and as described in greater detail in conjunction with FIG. **39**C, HIP/HCC compilation command **3944** configures HCC **3960** to compile HIP source code **3930** using, without limitation, an HCC header and a HIP/HCC runtime library. In at least one embodiment and in response to HIP/HCC compilation command **3944**, HCC **3960** generates host executable code **3970**(**2**) and HCC device executable code **3982** (depicted with bubble annotated C5). In at least one embodiment and as depicted with bubble annotated C6, host executable code **3970**(**2**) and HCC device executable code **3982** may be executed on, respectively, CPU **3990** and GPU **3992**.

[0343] In at least one embodiment, after CUDA source code **3910** is translated to HIP source code **3930**, HIP compiler driver **3940** may subsequently be used to generate executable code for either CUDA-enabled GPU **3994** or GPU **3992** without re-executing CUDA to HIP translation tool **3920**. In at least one embodiment, CUDA to HIP translation tool **3920** translates CUDA source code **3910** to HIP source code **3930** that is then stored in memory. In at least one embodiment, HIP compiler driver **3940** then configures HCC **3960** to generate host executable code **3970**(**2**) and HCC device executable code **3982** based on HIP source code **3930**. In at least one embodiment, HIP compiler driver **3940** subsequently configures CUDA compiler **3950** to generate host executable code **3970**(**1**) and CUDA device executable code **3984** based on stored HIP source code **3930**.

[0344] FIG. **39**B illustrates a system **3904** configured to compile and execute CUDA source code **3910** of FIG. **39**A using CPU **3990** and CUDA-enabled GPU **3994**, in accordance with at least one embodiment. In at least one embodiment, system **3904** includes, without limitation, CUDA source code **3910**, CUDA to HIP translation tool **3920**, HIP source code **3930**, HIP compiler driver **3940**, CUDA compiler **3950**, host executable code **3970**(**1**), CUDA device executable code **3984**, CPU **3990**, and CUDA-enabled GPU **3994**.

[0345] In at least one embodiment and as described previously herein in conjunction with FIG. **39**A, CUDA source code **3910** includes, without limitation, any number (including zero) of global functions **3912**, any number (including zero) of device functions **3914**, any number (including zero) of host functions **3916**, and any number (including zero) of host/device functions **3918**. In at least one embodiment, CUDA source code **3910** also includes, without limitation, any number of calls to any number of functions that are specified in any number of CUDA APIs.

[0346] In at least one embodiment, CUDA to HIP translation tool **3920** translates CUDA source code **3910** to HIP source code **3930**. In at least one embodiment, CUDA to HIP translation tool **3920** converts each kernel call in CUDA source code **3910** from a CUDA syntax to a HIP syntax and converts any number of other CUDA calls in CUDA source code **3910** to any number of other functionally similar HIP calls.

[0347] In at least one embodiment, HIP compiler driver **3940** determines that target device **3946** is CUDA-enabled and generates HIP/NVCC compilation command **3942**. In at least one embodiment, HIP compiler driver **3940** then configures CUDA compiler **3950** via HIP/NVCC compilation command **3942** to compile HIP source code **3930**. In at least one embodiment, HIP compiler driver **3940** provides access to a HIP to CUDA translation header **3952** as part of configuring CUDA compiler **3950**. In at least one embodiment, HIP to CUDA translation header **3952** translates any number of mechanisms (e.g., functions) specified in any number of HIP APIs to any number of mechanisms specified in any number of CUDA APIs. In at least one embodiment, CUDA compiler **3950** uses HIP to CUDA translation header **3952** in conjunction with a CUDA runtime library **3954** corresponding to CUDA runtime API **3902** to generate host executable code **3970**(**1**) and CUDA device executable code **3984**. In at least one embodiment, host executable code **3970**(**1**) and CUDA device executable code **3984** may then be executed on, respectively, CPU **3990** and CUDA-enabled GPU **3994**. In at least one embodiment, CUDA device executable code **3984** includes, without limitation, binary code. In at least one embodiment, CUDA device executable code **3984** includes, without limitation, PTX code and is further compiled into binary code for a specific target device at runtime.

[0348] FIG. **39**C illustrates a system **3906** configured to compile and execute CUDA source code **3910** of FIG. **39**A using CPU **3990** and non-CUDA-enabled GPU **3992**, in accordance with at least one embodiment. In at least one embodiment, system **3906** includes, without limitation, CUDA source code **3910**, CUDA to HIP translation tool **3920**, HIP source code **3930**, HIP compiler driver **3940**, HCC **3960**, host executable code **3970**(**2**), HCC device executable code **3982**, CPU **3990**, and GPU **3992**.

[0349] In at least one embodiment and as described previously herein in conjunction with FIG. **39**A, CUDA source code **3910** includes, without limitation, any number (including zero) of global functions **3912**, any number (including zero) of device functions **3914**, any number (including zero) of host functions **3916**, and any number (including zero) of host/device functions **3918**. In at least one embodiment, CUDA source code **3910** also includes, without limitation, any number of calls to any number of functions that are specified in any number of CUDA APIs.

[0350] In at least one embodiment, CUDA to HIP translation tool **3920** translates CUDA source code **3910** to HIP source code **3930**. In at least one embodiment, CUDA to HIP translation tool **3920** converts each kernel call in CUDA source code **3910** from a CUDA syntax to a HIP syntax and converts any number of other CUDA calls in source code **3910** to any number of other functionally similar HIP calls.

[0351] In at least one embodiment, HIP compiler driver **3940** subsequently determines that target device **3946** is not

CUDA-enabled and generates HIP/HCC compilation command **3944**. In at least one embodiment, HIP compiler driver **3940** then configures HCC **3960** to execute HIP/HCC compilation command **3944** to compile HIP source code **3930**. In at least one embodiment, HIP/HCC compilation command **3944** configures HCC **3960** to use, without limitation, a HIP/HCC runtime library **3958** and an HCC header **3956** to generate host executable code **3970**(**2**) and HCC device executable code **3982**. In at least one embodiment, HIP/HCC runtime library **3958** corresponds to HIP runtime API **3932**. In at least one embodiment, HCC header **3956** includes, without limitation, any number and type of interoperability mechanisms for HIP and HCC. In at least one embodiment, host executable code **3970**(**2**) and HCC device executable code **3982** may be executed on, respectively, CPU **3990** and GPU **3992**.

[0352] FIG. **40** illustrates an exemplary kernel translated by CUDA-to-HIP translation tool **3920** of FIG. **39**C, in accordance with at least one embodiment. In at least one embodiment, CUDA source code **3910** partitions an overall problem that a given kernel is designed to solve into relatively coarse sub-problems that can independently be solved using thread blocks. In at least one embodiment, each thread block includes, without limitation, any number of threads. In at least one embodiment, each sub-problem is partitioned into relatively fine pieces that can be solved cooperatively in parallel by threads within a thread block. In at least one embodiment, threads within a thread block can cooperate by sharing data through shared memory and by synchronizing execution to coordinate memory accesses.

[0353] In at least one embodiment, CUDA source code **3910** organizes thread blocks associated with a given kernel into a one-dimensional, a two-dimensional, or a three-dimensional grid of thread blocks. In at least one embodiment, each thread block includes, without limitation, any number of threads, and a grid includes, without limitation, any number of thread blocks.

[0354] In at least one embodiment, a kernel is a function in device code that is defined using a "global" declaration specifier. In at least one embodiment, the dimension of a grid that executes a kernel for a given kernel call and associated streams are specified using a CUDA kernel launch syntax **4010**. In at least one embodiment, CUDA kernel launch syntax **4010** is specified as "KernelName<<<GridSize, BlockSize, SharedMemorySize, Stream>>> (KernelArguments);". In at least one embodiment, an execution configuration syntax is a "<<< . . . >>" construct that is inserted between a kernel name ("Kernel Name") and a parenthesized list of kernel arguments ("KernelArguments"). In at least one embodiment, CUDA kernel launch syntax **4010** includes, without limitation, a CUDA launch function syntax instead of an execution configuration syntax.

[0355] In at least one embodiment, "GridSize" is of a type dim3 and specifies the dimension and size of a grid. In at least one embodiment, type dim3 is a CUDA-defined structure that includes, without limitation, unsigned integers x, y, and z. In at least one embodiment, if z is not specified, then z defaults to one. In at least one embodiment, if y is not specified, then y defaults to one. In at least one embodiment, the number of thread blocks in a grid is equal to the product of GridSize.x, GridSize.y, and GridSize.z. In at least one embodiment, "BlockSize" is of type dim3 and specifies the dimension and size of each thread block. In at least one embodiment, the number of threads per thread block is equal to the product of BlockSize.x, BlockSize.y, and BlockSize.z. In at least one embodiment, each thread that executes a kernel is given a unique thread ID that is accessible within the kernel through a built-in variable (e.g., "threadIdx").

[0356] In at least one embodiment and with respect to CUDA kernel launch syntax **4010**, "SharedMemorySize" is an optional argument that specifies a number of bytes in a shared memory that is dynamically allocated per thread block for a given kernel call in addition to statically allocated memory. In at least one embodiment and with respect to CUDA kernel launch syntax **4010**, SharedMemorySize defaults to zero. In at least one embodiment and with respect to CUDA kernel launch syntax **4010**, "Stream" is an optional argument that specifies an associated stream and defaults to zero to specify a default stream. In at least one embodiment, a stream is a sequence of commands (possibly issued by different host threads) that execute in order. In at least one embodiment, different streams may execute commands out of order with respect to one another or concurrently.

[0357] In at least one embodiment, CUDA source code **3910** includes, without limitation, a kernel definition for an exemplary kernel "MatAdd" and a main function. In at least one embodiment, main function is host code that executes on a host and includes, without limitation, a kernel call that causes kernel MatAdd to execute on a device. In at least one embodiment and as shown, kernel MatAdd adds two matrices A and B of size N×N, where N is a positive integer, and stores the result in a matrix C. In at least one embodiment, main function defines a threadsPerBlock variable as 16 by 16 and a numBlocks variable as N/16 by N/16. In at least one embodiment, main function then specifies kernel call "MatAdd<<<numBlocks, threadsPerBlock>>>(A, B, C);". In at least one embodiment and as per CUDA kernel launch syntax **4010**, kernel MatAdd is executed using a grid of thread blocks having a dimension N/16 by N/16, where each thread block has a dimension of 16 by 16. In at least one embodiment, each thread block includes 256 threads, a grid is created with enough blocks to have one thread per matrix element, and each thread in such a grid executes kernel MatAdd to perform one pair-wise addition.

[0358] In at least one embodiment, while translating CUDA source code **3910** to HIP source code **3930**, CUDA to HIP translation tool **3920** translates each kernel call in CUDA source code **3910** from CUDA kernel launch syntax **4010** to a HIP kernel launch syntax **4020** and converts any number of other CUDA calls in source code **3910** to any number of other functionally similar HIP calls. In at least one embodiment, HIP kernel launch syntax **4020** is specified as "hipLaunchKernelGGL (KernelName, GridSize, BlockSize, SharedMemorySize, Stream, KernelArguments);". In at least one embodiment, each of KernelName, GridSize, BlockSize, ShareMemorySize, Stream, and KernelArguments has the same meaning in HIP kernel launch syntax **4020** as in CUDA kernel launch syntax **4010** (described previously herein). In at least one embodiment, arguments SharedMemorySize and Stream are required in HIP kernel launch syntax **4020** and are optional in CUDA kernel launch syntax **4010**.

[0359] In at least one embodiment, a portion of HIP source code **3930** depicted in FIG. **40** is identical to a portion of CUDA source code **3910** depicted in FIG. **40** except for a kernel call that causes kernel MatAdd to execute on a device. In at least one embodiment, kernel MatAdd is defined in HIP source code **3930** with the same "global"

declaration specifier with which kernel MatAdd is defined in CUDA source code **3910**. In at least one embodiment, a kernel call in HIP source code **3930** is "hipLaunchKernelGGL (MatAdd, numBlocks, threadsPerBlock, 0, 0, A, B, C);", while a corresponding kernel call in CUDA source code **3910** is "MatAdd<<<numBlocks, threadsPerBlock>>>(A, B, C);".

[0360] FIG. **41** illustrates non-CUDA-enabled GPU **3992** of FIG. **39**C in greater detail, in accordance with at least one embodiment. In at least one embodiment, GPU **3992** is developed by AMD corporation of Santa Clara. In at least one embodiment, GPU **3992** can be configured to perform compute operations in a highly-parallel fashion. In at least one embodiment, GPU **3992** is configured to execute graphics pipeline operations such as draw commands, pixel operations, geometric computations, and other operations associated with rendering an image to a display. In at least one embodiment, GPU **3992** is configured to execute operations unrelated to graphics. In at least one embodiment, GPU **3992** is configured to execute both operations related to graphics and operations unrelated to graphics. In at least one embodiment, GPU **3992** can be configured to execute device code included in HIP source code **3930**.

[0361] In at least one embodiment, GPU **3992** includes, without limitation, any number of programmable processing units **4120**, a command processor **4110**, an L2 cache **4122**, memory controllers **4170**, DMA engines **4180**(**1**), system memory controllers **4182**, DMA engines **4180**(**2**), and GPU controllers **4184**. In at least one embodiment, each programmable processing unit **4120** includes, without limitation, a workload manager **4130** and any number of compute units **4140**. In at least one embodiment, command processor **4110** reads commands from one or more command queues (not shown) and distributes commands to workload managers **4130**. In at least one embodiment, for each programmable processing unit **4120**, associated workload manager **4130** distributes work to compute units **4140** included in programmable processing unit **4120**. In at least one embodiment, each compute unit **4140** may execute any number of thread blocks, but each thread block executes on a single compute unit **4140**. In at least one embodiment, a workgroup is a thread block.

[0362] In at least one embodiment, each compute unit **4140** includes, without limitation, any number of SIMD units **4150** and a shared memory **4160**. In at least one embodiment, each SIMD unit **4150** implements a SIMD architecture and is configured to perform operations in parallel. In at least one embodiment, each SIMD unit **4150** includes, without limitation, a vector ALU **4152** and a vector register file **4154**. In at least one embodiment, each SIMD unit **4150** executes a different warp. In at least one embodiment, a warp is a group of threads (e.g., 16 threads), where each thread in the warp belongs to a single thread block and is configured to process a different set of data based on a single set of instructions. In at least one embodiment, predication can be used to disable one or more threads in a warp. In at least one embodiment, a lane is a thread. In at least one embodiment, a work item is a thread. In at least one embodiment, a wavefront is a warp. In at least one embodiment, different wavefronts in a thread block may synchronize together and communicate via shared memory **4160**.

[0363] In at least one embodiment, programmable processing units **4120** are referred to as "shader engines." In at least one embodiment, each programmable processing unit **4120** includes, without limitation, any amount of dedicated graphics hardware in addition to compute units **4140**. In at least one embodiment, each programmable processing unit **4120** includes, without limitation, any number (including zero) of geometry processors, any number (including zero) of rasterizers, any number (including zero) of render back ends, workload manager **4130**, and any number of compute units **4140**.

[0364] In at least one embodiment, compute units **4140** share L2 cache **4122**. In at least one embodiment, L2 cache **4122** is partitioned. In at least one embodiment, a GPU memory **4190** is accessible by all compute units **4140** in GPU **3992**. In at least one embodiment, memory controllers **4170** and system memory controllers **4182** facilitate data transfers between GPU **3992** and a host, and DMA engines **4180**(**1**) enable asynchronous memory transfers between GPU **3992** and such a host. In at least one embodiment, memory controllers **4170** and GPU controllers **4184** facilitate data transfers between GPU **3992** and other GPUs **3992**, and DMA engines **4180**(**2**) enable asynchronous memory transfers between GPU **3992** and other GPUs **3992**.

[0365] In at least one embodiment, GPU **3992** includes, without limitation, any amount and type of system interconnect that facilitates data and control transmissions across any number and type of directly or indirectly linked components that may be internal or external to GPU **3992**. In at least one embodiment, GPU **3992** includes, without limitation, any number and type of I/O interfaces (e.g., PCIe) that are coupled to any number and type of peripheral devices. In at least one embodiment, GPU **3992** may include, without limitation, any number (including zero) of display engines and any number (including zero) of multimedia engines. In at least one embodiment, GPU **3992** implements a memory subsystem that includes, without limitation, any amount and type of memory controllers (e.g., memory controllers **4170** and system memory controllers **4182**) and memory devices (e.g., shared memories **4160**) that may be dedicated to one component or shared among multiple components. In at least one embodiment, GPU **3992** implements a cache subsystem that includes, without limitation, one or more cache memories (e.g., L2 cache **4122**) that may each be private to or shared between any number of components (e.g., SIMD units **4150**, compute units **4140**, and programmable processing units **4120**).

[0366] FIG. **42** illustrates how threads of an exemplary CUDA grid **4220** are mapped to different compute units **4140** of FIG. **41**, in accordance with at least one embodiment. In at least one embodiment and for explanatory purposes only, grid **4220** has a GridSize of BX by BY by 1 and a BlockSize of TX by TY by 1. In at least one embodiment, grid **4220** therefore includes, without limitation, (BX*BY) thread blocks **4230** and each thread block **4230** includes, without limitation, (TX*TY) threads **4240**. Threads **4240** are depicted in FIG. **42** as squiggly arrows.

[0367] In at least one embodiment, grid **4220** is mapped to programmable processing unit **4120**(**1**) that includes, without limitation, compute units **4140**(**1**)-**4140**(C). In at least one embodiment and as shown, (BJ*BY) thread blocks **4230** are mapped to compute unit **4140**(**1**), and the remaining thread blocks **4230** are mapped to compute unit **4140**(**2**). In at least one embodiment, each thread block **4230** may include, without limitation, any number of warps, and each warp is mapped to a different SIMD unit **4150** of FIG. **41**.

[0368] In at least one embodiment, warps in a given thread block **4230** may synchronize together and communicate through shared memory **4160** included in associated compute unit **4140**. For example and in at least one embodiment, warps in thread block **4230** (BJ, 1) can synchronize together and communicate through shared memory **4160**(**1**). For example and in at least one embodiment, warps in thread block **4230** (BJ+1,1) can synchronize together and communicate through shared memory **4160**(**2**).

[0369] FIG. **43** illustrates how to migrate existing CUDA code to Data Parallel C++ code, in accordance with at least one embodiment. Data Parallel C++ (DPC++) may refer to an open, standards-based alternative to single-architecture proprietary languages that allows developers to reuse code across hardware targets (CPUs and accelerators such as GPUs and FPGAs) and also perform custom tuning for a specific accelerator. DPC++ use similar and/or identical C and C++ constructs in accordance with ISO C++ which developers may be familiar with. DPC++ incorporates standard SYCL from The Khronos Group to support data parallelism and heterogeneous programming. SYCL refers to a cross-platform abstraction layer that builds on underlying concepts, portability and efficiency of OpenCL that enables code for heterogeneous processors to be written in a "single-source" style using standard C++. SYCL may enable single source development where C++ template functions can contain both host and device code to construct complex algorithms that use OpenCL acceleration, and then re-use them throughout their source code on different types of data.

[0370] In at least one embodiment, a DPC++ compiler is used to compile DPC++ source code which can be deployed across diverse hardware targets. In at least one embodiment, a DPC++ compiler is used to generate DPC++ applications that can be deployed across diverse hardware targets and a DPC++ compatibility tool can be used to migrate CUDA applications to a multiplatform program in DPC++. In at least one embodiment, a DPC++ base tool kit includes a DPC++ compiler to deploy applications across diverse hardware targets; a DPC++ library to increase productivity and performance across CPUs, GPUs, and FPGAs; a DPC++ compatibility tool to migrate CUDA applications to multiplatform applications; and any suitable combination thereof.

[0371] In at least one embodiment, a DPC++ programming model is utilized to simply one or more aspects relating to programming CPUs and accelerators by using modern C++ features to express parallelism with a programming language called Data Parallel C++. DPC++ programming language may be utilized to code reuse for hosts (e.g., a CPU) and accelerators (e.g., a GPU or FPGA) using a single source language, with execution and memory dependencies being clearly communicated. Mappings within DPC++ code can be used to transition an application to run on a hardware or set of hardware devices that best accelerates a workload. A host may be available to simplify development and debugging of device code, even on platforms that do not have an accelerator available.

[0372] In at least one embodiment, CUDA source code **4300** is provided as an input to a DPC++ compatibility tool **4302** to generate human readable DPC++ **4304**. In at least one embodiment, human readable DPC++ **4304** includes inline comments generated by DPC++ compatibility tool **4302** that guides a developer on how and/or where to modify DPC++ code to complete coding and tuning to desired performance **4306**, thereby generating DPC++ source code **4308**.

[0373] In at least one embodiment, CUDA source code **4300** is or includes a collection of human-readable source code in a CUDA programming language. In at least one embodiment, CUDA source code **4300** is human-readable source code in a CUDA programming language. In at least one embodiment, a CUDA programming language is an extension of the C++ programming language that includes, without limitation, mechanisms to define device code and distinguish between device code and host code. In at least one embodiment, device code is source code that, after compilation, is executable on a device (e.g., GPU or FPGA) and may include or more parallelizable workflows that can be executed on one or more processor cores of a device. In at least one embodiment, a device may be a processor that is optimized for parallel instruction processing, such as CUDA-enabled GPU, GPU, or another GPGPU, etc. In at least one embodiment, host code is source code that, after compilation, is executable on a host. In least one embodiment, some or all of host code and device code can be executed in parallel across a CPU and GPU/FPGA. In at least one embodiment, a host is a processor that is optimized for sequential instruction processing, such as CPU. CUDA source code **4300** described in connection with FIG. **43** may be in accordance with those discussed elsewhere in this document.

[0374] In at least one embodiment, DPC++ compatibility tool **4302** refers to an executable tool, program, application, or any other suitable type of tool that is used to facilitate migration of CUDA source code **4300** to DPC++ source code **4308**. In at least one embodiment, DPC++ compatibility tool **4302** is a command-line-based code migration tool available as part of a DPC++ tool kit that is used to port existing CUDA sources to DPC++. In at least one embodiment, DPC++ compatibility tool **4302** converts some or all source code of a CUDA application from CUDA to DPC++ and generates a resulting file that is written at least partially in DPC++, referred to as human readable DPC++ **4304**. In at least one embodiment, human readable DPC++ **4304** includes comments that are generated by DPC++ compatibility tool **4302** to indicate where user intervention may be necessary. In at least one embodiment, user intervention is necessary when CUDA source code **4300** calls a CUDA API that has no analogous DPC++ API; other examples where user intervention is required are discussed later in greater detail.

[0375] In at least one embodiment, a workflow for migrating CUDA source code **4300** (e.g., application or portion thereof) includes creating one or more compilation database files; migrating CUDA to DPC++ using a DPC++ compatibility tool **4302**; completing migration and verifying correctness, thereby generating DPC++ source code **4308**; and compiling DPC++ source code **4308** with a DPC++ compiler to generate a DPC++ application. In at least one embodiment, a compatibility tool provides a utility that intercepts commands used when Makefile executes and stores them in a compilation database file. In at least one embodiment, a file is stored in JSON format. In at least one embodiment, an intercept-built command converts Makefile command to a DPC compatibility command.

[0376] In at least one embodiment, intercept-build is a utility script that intercepts a build process to capture

compilation options, macro defs, and include paths, and writes this data to a compilation database file. In at least one embodiment, a compilation database file is a JSON file. In at least one embodiment, DPC++ compatibility tool **4302** parses a compilation database and applies options when migrating input sources. In at least one embodiment, use of intercept-build is optional, but highly recommended for Make or CMake based environments. In at least one embodiment, a migration database includes commands, directories, and files: command may include necessary compilation flags; directory may include paths to header files; file may include paths to CUDA files.

[0377] In at least one embodiment, DPC++ compatibility tool **4302** migrates CUDA code (e.g., applications) written in CUDA to DPC++ by generating DPC++ wherever possible. In at least one embodiment, DPC++ compatibility tool **4302** is available as part of a tool kit. In at least one embodiment, a DPC++ tool kit includes an intercept-build tool. In at least one embodiment, an intercept-built tool creates a compilation database that captures compilation commands to migrate CUDA files. In at least one embodiment, a compilation database generated by an intercept-built tool is used by DPC++ compatibility tool **4302** to migrate CUDA code to DPC++. In at least one embodiment, non-CUDA C++ code and files are migrated as is. In at least one embodiment, DPC++ compatibility tool **4302** generates human readable DPC++ **4304** which may be DPC++ code that, as generated by DPC++ compatibility tool **4302**, cannot be compiled by DPC++ compiler and requires additional plumbing for verifying portions of code that were not migrated correctly, and may involve manual intervention, such as by a developer. In at least one embodiment, DPC++ compatibility tool **4302** provides hints or tools embedded in code to help developers manually migrate additional code that could not be migrated automatically. In at least one embodiment, migration is a one-time activity for a source file, project, or application.

[0378] In at least one embodiment, DPC++ compatibility tool **43002** is able to successfully migrate all portions of CUDA code to DPC++ and there may simply be an optional step for manually verifying and tuning performance of DPC++ source code that was generated. In at least one embodiment, DPC++ compatibility tool **4302** directly generates DPC++ source code **4308** which is compiled by a DPC++ compiler without requiring or utilizing human intervention to modify DPC++ code generated by DPC++ compatibility tool **4302**. In at least one embodiment, DPC++ compatibility tool generates compile-able DPC++ code which can be optionally tuned by a developer for performance, readability, maintainability, other various considerations; or any combination thereof.

[0379] In at least one embodiment, one or more CUDA source files are migrated to DPC++ source files at least partially using DPC++ compatibility tool **4302**. In at least one embodiment, CUDA source code includes one or more header files which may include CUDA header files. In at least one embodiment, a CUDA source file includes a <cuda.h> header file and a <stdio.h> header file which can be used to print text. In at least one embodiment, a portion of a vector addition kernel CUDA source file may be written as or related to:

```
#include <cuda.h>
#include <stdio.h>
#define VECTOR_SIZE 256
[ ] global__void VectorAddKernel(float* A, float* B, float* C)
{
   A[threadIdx.x] = threadIdx.x + 1.0f;
   B[threadIdx.x] = threadIdx.x + 1.0f;
   C[threadIdx.x] = A[threadIdx.x] + B[threadIdx.x];
}
int main( )
{
   float *d_A, *d_B, *d_C;
   cudaMalloc(&d_A, VECTOR_SIZE*sizeof(float));
   cudaMalloc(&d_B, VECTOR_SIZE*sizeof(float));
   cudaMalloc(&d_C, VECTOR_SIZE*sizeof(float));
   VectorAddKernel<<<1, VECTOR_SIZE>>>(d_A, d_B, d_C);
   float Result[VECTOR_SIZE] = { };
   cudaMemcpy(Result, d_C, VECTOR_SIZE*sizeof(float),
   cudaMemcpyDeviceToHost);
   cudaFree(d_A);
   cudaFree(d_B);
   cudaFree(d_C);
   for (int i=0; i<VECTOR_SIZE; i++ {
      if (i % 16 == 0) {
         printf("\n");
      }
      printf("%f ", Result[i]);
   }
   return 0;
}
```

[0380] In at least one embodiment and in connection with CUDA source file presented above, DPC++ compatibility tool **4302** parses a CUDA source code and replaces header files with appropriate DPC++ and SYCL header files. In at least one embodiment, DPC++ header files includes helper declarations. In CUDA, there is a concept of a thread ID and correspondingly, in DPC++ or SYCL, for each element there is a local identifier.

[0381] In at least one embodiment and in connection with CUDA source file presented above, there are two vectors A and B which are initialized and a vector addition result is put into vector C as part of VectorAddKernel( ) In at least one embodiment, DPC++ compatibility tool **4302** converts CUDA thread IDs used to index work elements to SYCL standard addressing for work elements via a local ID as part of migrating CUDA code to DPC++ code. In at least one embodiment, DPC++ code generated by DPC++ compatibility tool **4302** can be optimized—for example, by reducing dimensionality of an nd_item, thereby increasing memory and/or processor utilization.

[0382] In at least one embodiment and in connection with CUDA source file presented above, memory allocation is migrated. In at least one embodiment, cudaMalloc( ) is migrated to a unified shared memory SYCL call malloc_device( ) to which a device and context is passed, relying on SYCL concepts such as platform, device, context, and queue. In at least one embodiment, a SYCL platform can have multiple devices (e.g., host and GPU devices); a device may have multiple queues to which jobs can be submitted; each device may have a context; and a context may have multiple devices and manage shared memory objects.

[0383] In at least one embodiment and in connection with CUDA source file presented above, a main( ) function invokes or calls VectorAddKernel( ) to add two vectors A and B together and store result in vector C. In at least one embodiment, CUDA code to invoke VectorAddKernel( ) is replaced by DPC++ code to submit a kernel to a command queue for execution. In at least one embodiment, a command

group handler cgh passes data, synchronization, and computation that is submitted to the queue, parallel_for is called for a number of global elements and a number of work items in that work group where VectorAddKernel( ) is called.

[0384] In at least one embodiment and in connection with CUDA source file presented above, CUDA calls to copy device memory and then free memory for vectors A, B, and C are migrated to corresponding DPC++ calls. In at least one embodiment, C++ code (e.g., standard ISO C++ code for printing a vector of floating point variables) is migrated as is, without being modified by DPC++ compatibility tool **4302**. In at least one embodiment, DPC++ compatibility tool **4302** modify CUDA APIs for memory setup and/or host calls to execute kernel on the acceleration device. In at least one embodiment and in connection with CUDA source file presented above, a corresponding human readable DPC++ **4304** (e.g., which can be compiled) is written as or related to:

```
#include <CL/sycl.hpp>
#include <dpct/dpct.hpp>
#define VECTOR_SIZE 256
void VectorAddKernel(float* A, float* B, float* C,
            sycl::nd_item<3>item_ct1)
{
  A[item_ct1.get_local_id(2)] = item_ct1.get_local_id(2) + 1.0f;
  B[item_ct1.get_local_id(2)] = item_ct1.get_local_id(2) + 1.0f;
  C[item_ct1.get_local_id(2)] =
      A[item_ct1.get_local_id(2)] + B[item_ct1.get_local_id(2)];
}
int main( )
{
  float *d_A, *d_B, *d_C;
  d_A = (float *)sycl::malloc_device(VECTOR_SIZE * sizeof(float),
              dpct::get_current_device( ),
              dpct::get_default_context( ));
  d_B = (float *)sycl::malloc_device(VECTOR_SIZE * sizeof(float),
              dpct::get_current_device( ),
              dpct::get_default_context( ));
  d_C = (float *)sycl::malloc_device(VECTOR_SIZE * sizeof(float),
              dpct::get_current_device( ),
              dpct::get_default_context( ));
  dpct::get_default_queue_wait( ).submit([&](sycl::handler &cgh) {
    cgh.parallel_for(
      sycl::nd_range<3>(sycl::range<3>(1, 1, 1) *
              sycl::range<3>(1, 1, VECTOR_SIZE) *
              sycl::range<3>(1, 1, VECTOR_SIZE)),
      [=](sycl::nd_items<3>item_ct1) {
        VectorAddKernel(d_A, d_B, d_C, item_ct1);
      });
  });
  float Result[VECTOR_SIZE] = { };
  dpct::get_default_queue_wait( )
    .memcpy(Result, d_C, VECTOR_SIZE * sizeof(float))
    .wait( );
  sycl::free(d_A, dpct::get_default_context( ));
  sycl::free(d_B, dpct::get_default_context( ));
  sycl::free(d_C, dpct::get_default_context( ));
  for (int i=0; i<VECTOR_SIZE; i++ {
    if (i % 16 == 0) {
        printf("\n");
    }
    printf("%f ", Result[i]);
  }
  return 0;
}
```

[0385] In at least one embodiment, human readable DPC++ **4304** refers to output generated by DPC++ compatibility tool **4302** and may be optimized in one manner or another. In at least one embodiment, human readable DPC++ **4304** generated by DPC++ compatibility tool **4302** can be manually edited by a developer after migration to make it more maintainable, performance, or other considerations. In at least one embodiment, DPC++ code generated by DPC++ compatibility tool **43002** such as DPC++ disclosed can be optimized by removing repeat calls to get_current_device( ) and/or get_default_context( ) for each malloc_device( ) call. In at least one embodiment, DPC++ code generated above uses a 3 dimensional nd_range which can be refactored to use only a single dimension, thereby reducing memory usage. In at least one embodiment, a developer can manually edit DPC++ code generated by DPC++ compatibility tool **4302** replace uses of unified shared memory with accessors. In at least one embodiment, DPC++ compatibility tool **4302** has an option to change how it migrates CUDA code to DPC++ code. In at least one embodiment, DPC++ compatibility tool **4302** is verbose because it is using a general template to migrate CUDA code to DPC++ code that works for a large number of cases.

[0386] In at least one embodiment, a CUDA to DPC++ migration workflow includes steps to: prepare for migration using intercept-build script; perform migration of CUDA projects to DPC++ using DPC++ compatibility tool **4302**; review and edit migrated source files manually for completion and correctness; and compile final DPC++ code to generate a DPC++ application. In at least one embodiment, manual review of DPC++ source code may be required in one or more scenarios including but not limited to: migrated API does not return error code (CUDA code can return an error code which can then be consumed by the application but SYCL uses exceptions to report errors, and therefore does not use error codes to surface errors); CUDA compute capability dependent logic is not supported by DPC++; statement could not be removed. In at least one embodiment, scenarios in which DPC++ code requires manual intervention may include, without limitation: error code logic replaced with (*,0) code or commented out; equivalent DPC++ API not available; CUDA compute capability-dependent logic; hardware-dependent API (clock( )); missing features unsupported API; execution time measurement logic; handling built-in vector type conflicts; migration of cuBLAS API; and more.

[0387] Other variations are within spirit of present disclosure. Thus, while disclosed techniques are susceptible to various modifications and alternative constructions, certain illustrated embodiments thereof are shown in drawings and have been described above in detail. It should be understood, however, that there is no intention to limit disclosure to specific form or forms disclosed, but on contrary, intention is to cover all modifications, alternative constructions, and equivalents falling within spirit and scope of disclosure, as defined in appended claims.

[0388] Use of terms "a" and "an" and "the" and similar referents in context of describing disclosed embodiments (especially in context of following claims) are to be construed to cover both singular and plural, unless otherwise indicated herein or clearly contradicted by context, and not as a definition of a term. Terms "comprising," "having," "including," and "containing" are to be construed as open-ended terms (meaning "including, but not limited to,") unless otherwise noted. term "connected," when unmodified and referring to physical connections, is to be construed as partly or wholly contained within, attached to, or joined together, even if there is something intervening. Recitation of ranges of values herein are merely intended to serve as a

shorthand method of referring individually to each separate value falling within range, unless otherwise indicated herein and each separate value is incorporated into specification as if it were individually recited herein. Use of term "set" (e.g., "a set of items") or "subset" unless otherwise noted or contradicted by context, is to be construed as a nonempty collection comprising one or more members. Further, unless otherwise noted or contradicted by context, term "subset" of a corresponding set does not necessarily denote a proper subset of corresponding set, but subset and corresponding set may be equal.

[0389] Conjunctive language, such as phrases of form "at least one of A, B, and C," or "at least one of A, B and C," unless specifically stated otherwise or otherwise clearly contradicted by context, is otherwise understood with context as used in general to present that an item, term, etc., may be either A or B or C, or any nonempty subset of set of A and B and C. For instance, in illustrative example of a set having three members, conjunctive phrases "at least one of A, B, and C" and "at least one of A, B and C" refer to any of following sets: {A}, {B}, {C}, {A, B}, {A, C}, {B, C}, {A, B, C}. Thus, such conjunctive language is not generally intended to imply that certain embodiments require at least one of A, at least one of B and at least one of C each to be present. In addition, unless otherwise noted or contradicted by context, term "plurality" indicates a state of being plural (e.g., "a plurality of items" indicates multiple items). Number of items in a plurality is at least two, but can be more when so indicated either explicitly or by context. Further, unless stated otherwise or otherwise clear from context, phrase "based on" means "based at least in part on" and not "based solely on."

[0390] Operations of processes described herein can be performed in any suitable order unless otherwise indicated herein or otherwise clearly contradicted by context. In at least one embodiment, a process such as those processes described herein (or variations and/or combinations thereof) is performed under control of one or more computer systems configured with executable instructions and is implemented as code (e.g., executable instructions, one or more computer programs or one or more applications) executing collectively on one or more processors, by hardware or combinations thereof. In at least one embodiment, code is stored on a computer-readable storage medium, for example, in form of a computer program comprising a plurality of instructions executable by one or more processors. In at least one embodiment, a computer-readable storage medium is a non-transitory computer-readable storage medium that excludes transitory signals (e.g., a propagating transient electric or electromagnetic transmission) but includes non-transitory data storage circuitry (e.g., buffers, cache, and queues) within transceivers of transitory signals. In at least one embodiment, code (e.g., executable code or source code) is stored on a set of one or more non-transitory computer-readable storage media having stored thereon executable instructions (or other memory to store executable instructions) that, when executed (i.e., as a result of being executed) by one or more processors of a computer system, cause computer system to perform operations described herein. Set of non-transitory computer-readable storage media, in at least one embodiment, comprises multiple non-transitory computer-readable storage media and one or more of individual non-transitory storage media of multiple non-transitory computer-readable storage media lack all of code while multiple non-transitory computer-readable storage media collectively store all of code. In at least one embodiment, executable instructions are executed such that different instructions are executed by different processors—for example, a non-transitory computer-readable storage medium store instructions and a main central processing unit ("CPU") executes some of instructions while a graphics processing unit ("GPU") executes other instructions. In at least one embodiment, different components of a computer system have separate processors and different processors execute different subsets of instructions.

[0391] Accordingly, in at least one embodiment, computer systems are configured to implement one or more services that singly or collectively perform operations of processes described herein and such computer systems are configured with applicable hardware and/or software that enable performance of operations. Further, a computer system that implements at least one embodiment of present disclosure is a single device and, in another embodiment, is a distributed computer system comprising multiple devices that operate differently such that distributed computer system performs operations described herein and such that a single device does not perform all operations.

[0392] At least one embodiment of the disclosure can be described in view of the following clauses:

[0393] 1. A system, comprising:

[0394] at least one processor;

[0395] at least one memory comprising instructions that, in response to execution by the at least one processor, cause the system to at least:

[0396] select a set of lights from among a plurality of lights associated with a virtual scene, the set of lights selected based, at least in part, on a first one or more random factors;

[0397] select, based at least in part on a second one or more random factors, a subset of lights from the set of lights, the subset of lights to be used to generate a frame of graphics, wherein the subset of lights is selected so that data indicative of the subset has a total size less than memory predicted to be available in a processor cache; and

[0398] render a pixel of the frame of graphics based, at least in part, on the subset of lights.

[0399] 2. The system of clause 1, the at least one memory comprising further instructions that, in response to execution by the at least one processor, cause the system to at least:

[0400] select an additional set of lights to use to generate an additional frame of graphics, the additional set of lights selected from among the plurality of lights associated with the virtual scene.

[0401] 3. The system of clauses 1 or 2, the at least one memory comprising further instructions that, in response to execution by the at least one processor, cause the system to at least:

[0402] render a second pixel of the frame of graphics using a second subset of lights selected from the set of lights.

[0403] 4. The system of any of clauses 1-3, wherein the pixel is one of a plurality of pixels in a first tile of the frame of graphics, and wherein pixels in a second tile are rendered using a different subset of lights.

[0404] 5. The system of any of clauses 1-4, the at least one memory comprising further instructions that, in

response to execution by the at least one processor, cause the system to at least:

[0405] render a plurality of tiles of the frame of graphics using the subset of lights, the plurality of tiles non-contiguous in the frame of graphics, the plurality of tiles rendered consecutively to preserve residency of the subset of lights in the processor cache.

[0406] 6. The system of any of clauses 1-5, the at least one memory comprising further instructions that, in response to execution by the at least one processor, cause the system to at least:

[0407] shuffle one or more lights from the subset of lights into an additional subset of lights; and

[0408] use the additional subset of lights to render an additional pixel of the frame of graphics.

[0409] 7. The system of any of clauses 1-6, wherein the subset of lights is selected to have a total size that is less than an amount of processor cache memory available during rendering of the frame of graphics.

[0410] 8. The system of any of clauses 1-7, wherein the first one or more random factors are weighted to favor selection of lights based, at least in part, on intensity of a selected light.

[0411] 9. A method, comprising:

[0412] selecting, based at least in part on a first one or more random factors, a set of lights from a plurality of lights associated with a virtual scene;

[0413] generating a frame of graphics using lights from the set of lights, by at least:

[0414] selecting, based at least in part on a second one or more random factors, a subset of lights from the set of lights; and

[0415] rendering a pixel of the frame of graphics based, at least in part, on the subset of lights.

[0416] 10. The method of clause 9, further comprising:

[0417] generating an additional frame of graphics using an additional set of lights, the additional set of lights selected from among the plurality of lights associated with the virtual scene.

[0418] 11. The method of clauses 9 or 10, further comprising:

[0419] rendering a second pixel of the frame of graphics using a second subset of lights selected from the set of lights.

[0420] 12. The method of any of clauses 9-11, further comprising:

[0421] rendering pixels in different tiles of the frame of graphics using a different subset of lights.

[0422] 13. The method of any of clauses 9-12, further comprising:

[0423] rendering a plurality of tiles of the frame of graphics using the subset of lights, the plurality of tiles non-contiguous in the frame of graphics and rendered consecutively.

[0424] 14. The method of any of clauses 9-13, further comprising:

[0425] selecting the subset of lights to have a size less than a processor cache size.

[0426] 15. The method of any of clauses 9-14, further comprising:

[0427] generating an additional subset of lights based, at least in part, on randomly selecting at least a portion of the subset of lights for inclusion in the additional subset of lights; and

[0428] generating an additional tile of the frame of graphics using the additional subset of lights.

[0429] 16. The method of any of clauses 9-15, further comprising:

[0430] generating an additional subset of lights by at least replacing a portion of the subset of lights with one or more additional lights selected from the set of lights.

[0431] 17. A non-transitory computer-readable storage medium comprising instructions that, in response to execution by at least one processor of a computing device, cause the computing device to at least:

[0432] select a set of lights from among lights associated with a virtual scene, the set of lights selected at least partially at random, wherein a frame of graphics is to be rendered based, at least in part, on the set of lights; and

[0433] generate a portion of the frame of graphics using a subset of lights from the set of lights, the subset of lights selected at least partially at random from the set of lights, wherein a pixel of the portion of the frame of graphics is rendered based at least in part on the subset of lights.

[0434] 18. The non-transitory computer-readable storage medium of clause 17, comprising further instructions that, in response to execution by at least one processor of the computing device, cause the computing device to at least:

[0435] generate an additional frame of graphics using an additional set of lights, the additional set of lights selected from among the lights associated with the virtual scene.

[0436] 19. The non-transitory computer-readable storage medium of clauses 17 or 18, comprising further instructions that, in response to execution by at least one processor of the computing device, cause the computing device to at least:

[0437] render pixels in different portions of the frame of graphics using a different subset of lights.

[0438] 20. The non-transitory computer-readable storage medium of any of clauses 17-19, comprising further instructions that, in response to execution by at least one processor of the computing device, cause the computing device to at least:

[0439] render a plurality of portions of the frame of graphics using the subset of lights, the plurality of portions rendered consecutively.

[0440] 21. The non-transitory computer-readable storage medium of any of clauses 17-20, comprising further instructions that, in response to execution by at least one processor of the computing device, cause the computing device to at least:

[0441] generate an additional subset of lights based, at least in part, on selecting one or more lights from the subset of lights.

[0442] 22. The non-transitory computer-readable storage medium of any of clauses 17-21, wherein a majority of lights in the subset of lights remain resident in a processor cache during rendering of one or more portions of the frame of graphics.

[0443] 23. The non-transitory computer-readable storage medium of any of clauses 17-22, wherein the set of lights and subset of lights are selected based, at least in part, on at least one of intensity of a selected light or distance to the selected light.

[0444] Use of any and all examples, or exemplary language (e.g., "such as") provided herein, is intended merely to better illuminate embodiments of disclosure and does not pose a limitation on scope of disclosure unless otherwise claimed. No language in specification should be construed as indicating any non-claimed element as essential to practice of disclosure.

[0445] All references, including publications, patent applications, and patents, cited herein are hereby incorporated by reference to same extent as if each reference were individually and specifically indicated to be incorporated by reference and were set forth in its entirety herein.

[0446] In description and claims, terms "coupled" and "connected," along with their derivatives, may be used. It should be understood that these terms may be not intended as synonyms for each other. Rather, in particular examples, "connected" or "coupled" may be used to indicate that two or more elements are in direct or indirect physical or electrical contact with each other. "Coupled" may also mean that two or more elements are not in direct contact with each other, but yet still co-operate or interact with each other.

[0447] Unless specifically stated otherwise, it may be appreciated that throughout specification terms such as "processing," "computing," "calculating," "determining," or like, refer to action and/or processes of a computer or computing system, or similar electronic computing device, that manipulate and/or transform data represented as physical, such as electronic, quantities within computing system's registers and/or memories into other data similarly represented as physical quantities within computing system's memories, registers or other such information storage, transmission or display devices.

[0448] In a similar manner, term "processor" may refer to any device or portion of a device that processes electronic data from registers and/or memory and transform that electronic data into other electronic data that may be stored in registers and/or memory. As non-limiting examples, "processor" may be a CPU or a GPU. A "computing platform" may comprise one or more processors. As used herein, "software" processes may include, for example, software and/or hardware entities that perform work over time, such as tasks, threads, and intelligent agents. Also, each process may refer to multiple processes, for carrying out instructions in sequence or in parallel, continuously or intermittently. Terms "system" and "method" are used herein interchangeably insofar as system may embody one or more methods and methods may be considered a system.

[0449] In present document, references may be made to obtaining, acquiring, receiving, or inputting analog or digital data into a subsystem, computer system, or computer-implemented machine. Process of obtaining, acquiring, receiving, or inputting analog and digital data can be accomplished in a variety of ways such as by receiving data as a parameter of a function call or a call to an application programming interface. In some implementations, process of obtaining, acquiring, receiving, or inputting analog or digital data can be accomplished by transferring data via a serial or parallel interface. In another implementation, process of obtaining, acquiring, receiving, or inputting analog or digital data can be accomplished by transferring data via a computer network from providing entity to acquiring entity. References may also be made to providing, outputting, transmitting, sending, or presenting analog or digital data. In various examples, process of providing, outputting, transmitting, sending, or presenting analog or digital data can be accomplished by transferring data as an input or output parameter of a function call, a parameter of an application programming interface or interprocess communication mechanism.

[0450] Although discussion above sets forth example implementations of described techniques, other architectures may be used to implement described functionality, and are intended to be within scope of this disclosure. Furthermore, although specific distributions of responsibilities are defined above for purposes of discussion, various functions and responsibilities might be distributed and divided in different ways, depending on circumstances.

[0451] Furthermore, although subject matter has been described in language specific to structural features and/or methodological acts, it is to be understood that subject matter claimed in appended claims is not necessarily limited to specific features or acts described. Rather, specific features and acts are disclosed as exemplary forms of implementing the claims.

What is claimed is:

1. A system, comprising:

at least one processor; and

at least one memory comprising instructions that, in response to execution by the at least one processor, cause the system to at least:

identify a plurality of lights in a scene;

sample a first subset of lights from the plurality of lights;

store the first subset of lights in a memory;

sample, from the memory, a second subset of lights from the first subset of lights; and

render an image based, at least in part, on the second subset of lights.

2. The system of claim **1**, wherein the instructions, in response to execution by the at least one processor, further cause the system to at least:

sample the first subset of lights, the second subset of lights, or both, using a process comprising random selection, pseudo-random selection, quasi-random selection, stochastic selection, or a combination thereof.

3. The system of claim **1**, wherein the instructions, in response to execution by the at least one processor, further cause the system to at least:

use a data structure to identify one or more locations in the memory to store the first subset of lights.

4. The system of claim **1**, wherein the at least one processor comprises a parallel processor, a graphics processor, or a combination thereof.

5. The system of claim **1**, wherein the instructions, in response to execution by the at least one processor, further cause the system to at least:

store the second subset of lights in a data structure that includes records that correspond to at least a portion of the scene.

6. The system of claim **1**, wherein the instructions, in response to execution by the at least one processor, further cause the system to at least:

sample the second subset of lights from the first subset of lights based at least on brightness.

7. The system of claim **1**, wherein the instructions, in response to execution by the at least one processor, further cause the system to at least:

select one or more lights in the second subset of lights based at least on a level of importance of a contribution from the one or more lights to a subdivision of a virtual scene.

8. A method, comprising:

identifying a plurality of lights in a scene;

sampling a first subset of lights from the plurality of lights;

storing the first subset of lights in a memory;

sampling, from the memory, a second subset of lights from the first subset of lights; and

rendering an image based, at least in part, on the second subset of lights.

9. The method of claim **8**, wherein the sampling the second subset of lights from the first subset of lights comprises selecting one or more lights from the first subset of lights using random selection, pseudo-random selection, quasi-random selection, stochastic selection, or a combination thereof.

10. The method of claim **8**, wherein the sampling the second subset of lights from the first subset of lights comprises selecting one or more lights based at least on brightness.

11. The method of claim **8**, wherein the sampling of the second subset of lights from the first subset of lights comprises selecting one or more lights based at least on a probability distribution that indicates a likelihood of selecting the one or more lights from the first subset of lights.

12. The method of claim **8**, further comprising:

using a data structure to identify one or more locations in the memory to store the first subset of lights.

13. The method of claim **8**, wherein the sampling the second subset of lights from the first subset of lights is based at least on a size of a cache associated with a processor used to sample the second subset of lights.

14. A processor, comprising:

one or more circuits to:

identify a plurality of lights in a scene;

sample a first subset of lights from the plurality of lights;

store the first subset of lights in a memory;

sample from the memory, a second subset of lights from the first subset of lights; and

render an image based, at least in part, on the second subset of lights.

15. The processor of claim **14**, wherein the one or more circuits are to sample the second subset of lights from the first subset of lights based at least on a size of a cache associated with the processor.

16. The processor of claim **15**, wherein the processor comprises:

a parallel processor to perform threads that share the cache and render the image.

17. The processor of claim **14**, wherein the one or more circuits are to store the second subset of lights in a data structure that includes records that correspond to at least a portion of the scene.

18. The processor of claim **14**, wherein the one or more circuits are to use a data structure to identity one or more locations in the memory to store the first subset of lights.

19. The processor of claim **14**, wherein the one or more circuits are to sample the second subset of lights from the first subset of lights by selecting one or more lights based at least on a probability distribution that indicates a likelihood of selecting the one or more lights from the first subset of lights.

20. The processor of claim **14**, wherein the one or more circuits are to sample the first subset of lights, the second subset of lights, or both, using a process comprising random selection, pseudo-random selection, quasi-random selection, stochastic selection, or a combination thereof.

* * * * *