US 20250255460A1

(19) **United States**

(12) **Patent Application Publication** (10) **Pub. No.: US 2025/0255460 A1**

GOTO (43) **Pub. Date: Aug. 14, 2025**

(54) **MEDICAL SUPPORT DEVICE, ENDOSCOPE, MEDICAL SUPPORT METHOD, AND PROGRAM**

(71) Applicant: **FUJIFILM Corporation**, Tokyo (JP)

(72) Inventor: **Misaki GOTO**, Kanagawa (JP)

(73) Assignee: **FUJIFILM Corporation**, Tokyo (JP)

(21) Appl. No.: **19/195,805**

(22) Filed: **May 1, 2025**

Related U.S. Application Data

(63) Continuation of application No. PCT/JP2023/039521, filed on Nov. 1, 2023.

(30) **Foreign Application Priority Data**

Nov. 4, 2022 (JP) 2022-177609

Publication Classification

(51) **Int. Cl.**

A61B 1/00	(2006.01)
G06T 7/00	(2017.01)
G06T 15/00	(2011.01)

(52) **U.S. Cl.**

CPC ***A61B 1/000094*** (2022.02); ***A61B 1/00045*** (2013.01); ***G06T 7/0012*** (2013.01); ***G06T 15/005*** (2013.01); *G06T 2207/10068* (2013.01); *G06T 2207/30028* (2013.01); *G06T 2215/16* (2013.01)

(57) **ABSTRACT**

A medical support device includes a processor. The processor is configured to acquire first reference part information capable of three-dimensionally specifying a reference part included in a duodenum based on a captured image obtained by imaging an intestinal wall of the duodenum with an endoscope scope; acquire second reference part information related to the reference part and direction information related to a running direction of a duct leading to the duodenum from volume data; generate a three-dimensional running direction image in which the running direction is imaged in accordance with the captured image based on the direction information adjusted by matching the first reference part information with the second reference part information; display the captured image on a screen; and display the three-dimensional running direction image in the captured image.

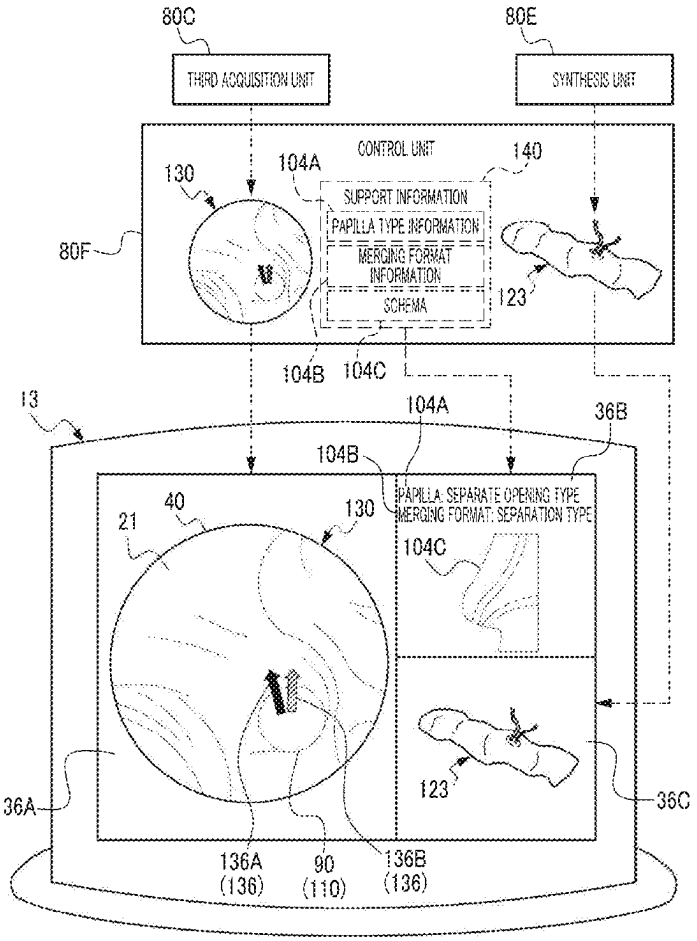

FIG. 1

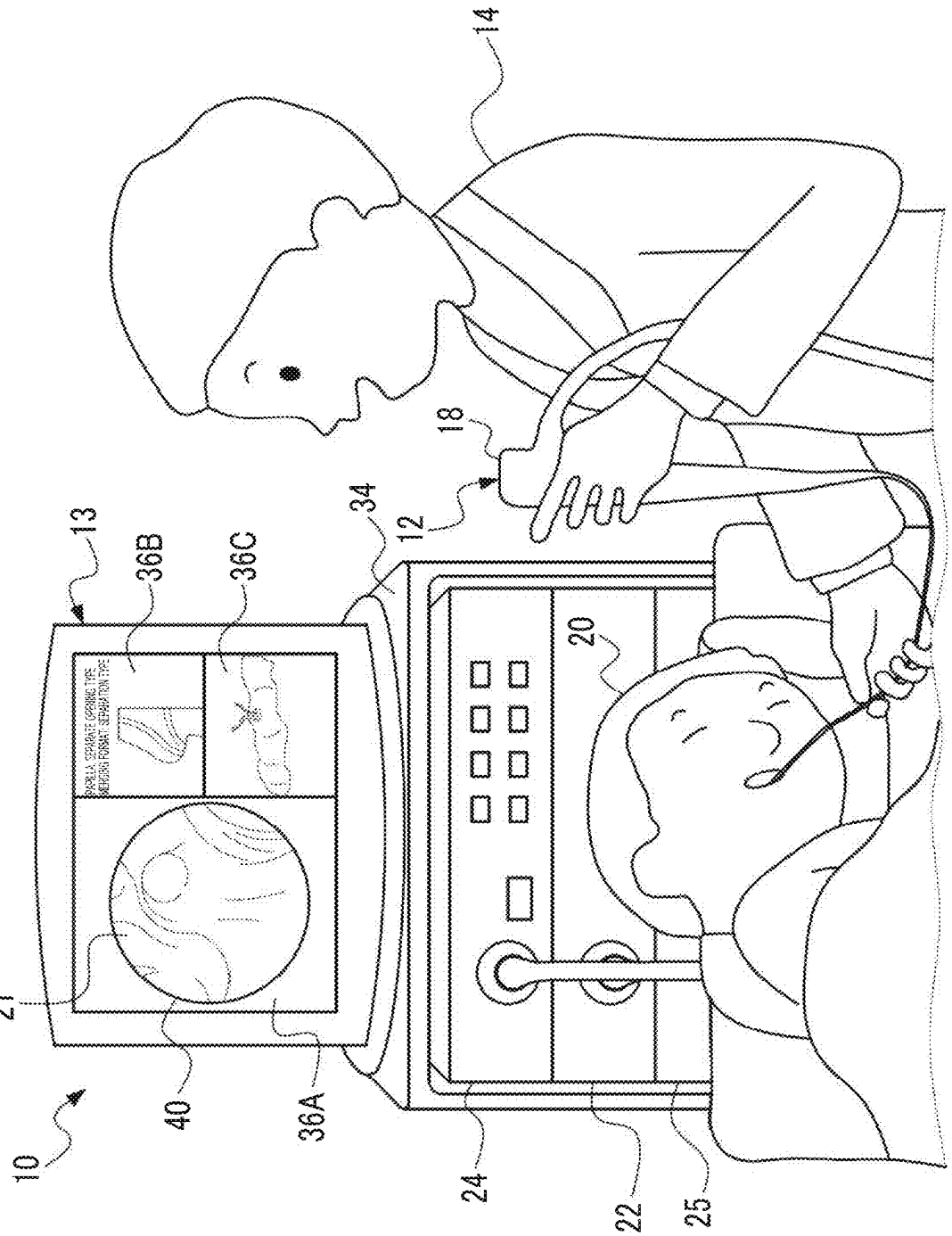

FIG. 2

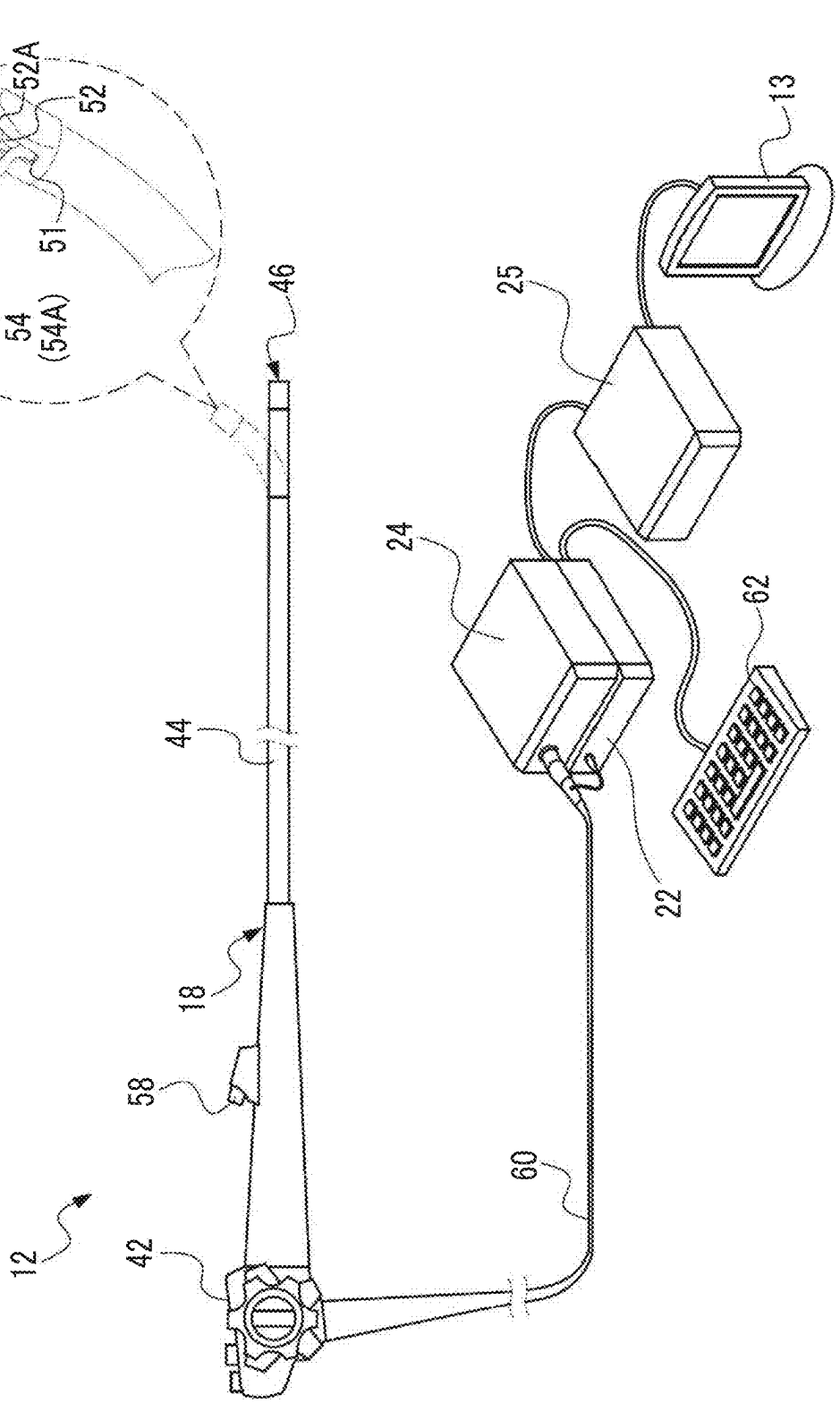

FIG. 3

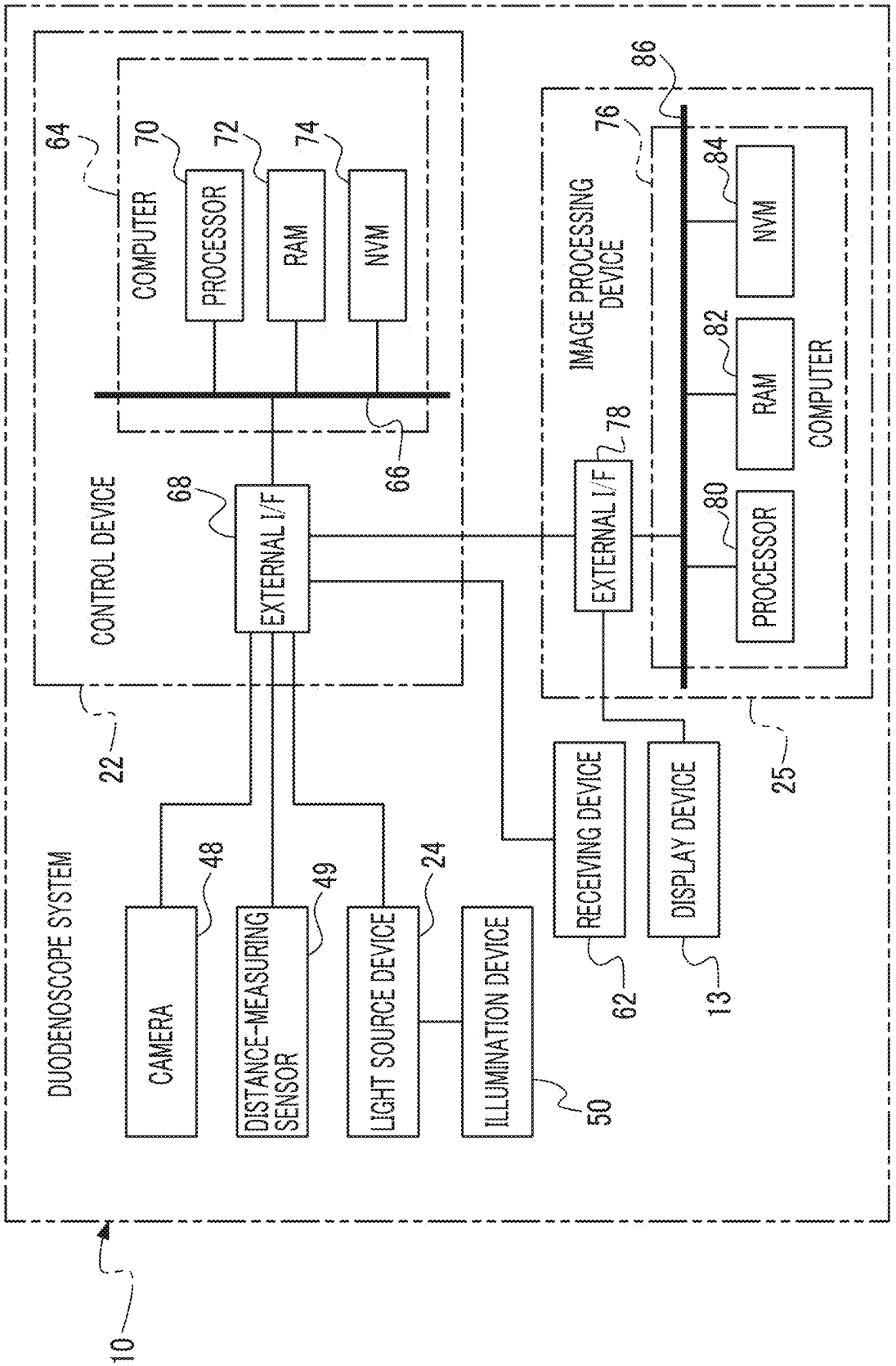
DUODENOSCOPE SYSTEM
10
CONTROL DEVICE
22
64
COMPUTER
70
PROCESSOR
72
RAM
74
NVM
66
68
EXTERNAL I/F
CAMERA
48
DISTANCE-MEASURING SENSOR
49
LIGHT SOURCE DEVICE
24
ILLUMINATION DEVICE
50
RECEIVING DEVICE
62
DISPLAY DEVICE
13
25
IMAGE PROCESSING DEVICE
76
86
EXTERNAL I/F
78
PROCESSOR
80
RAM
82
NVM
84
COMPUTER

FIG. 4

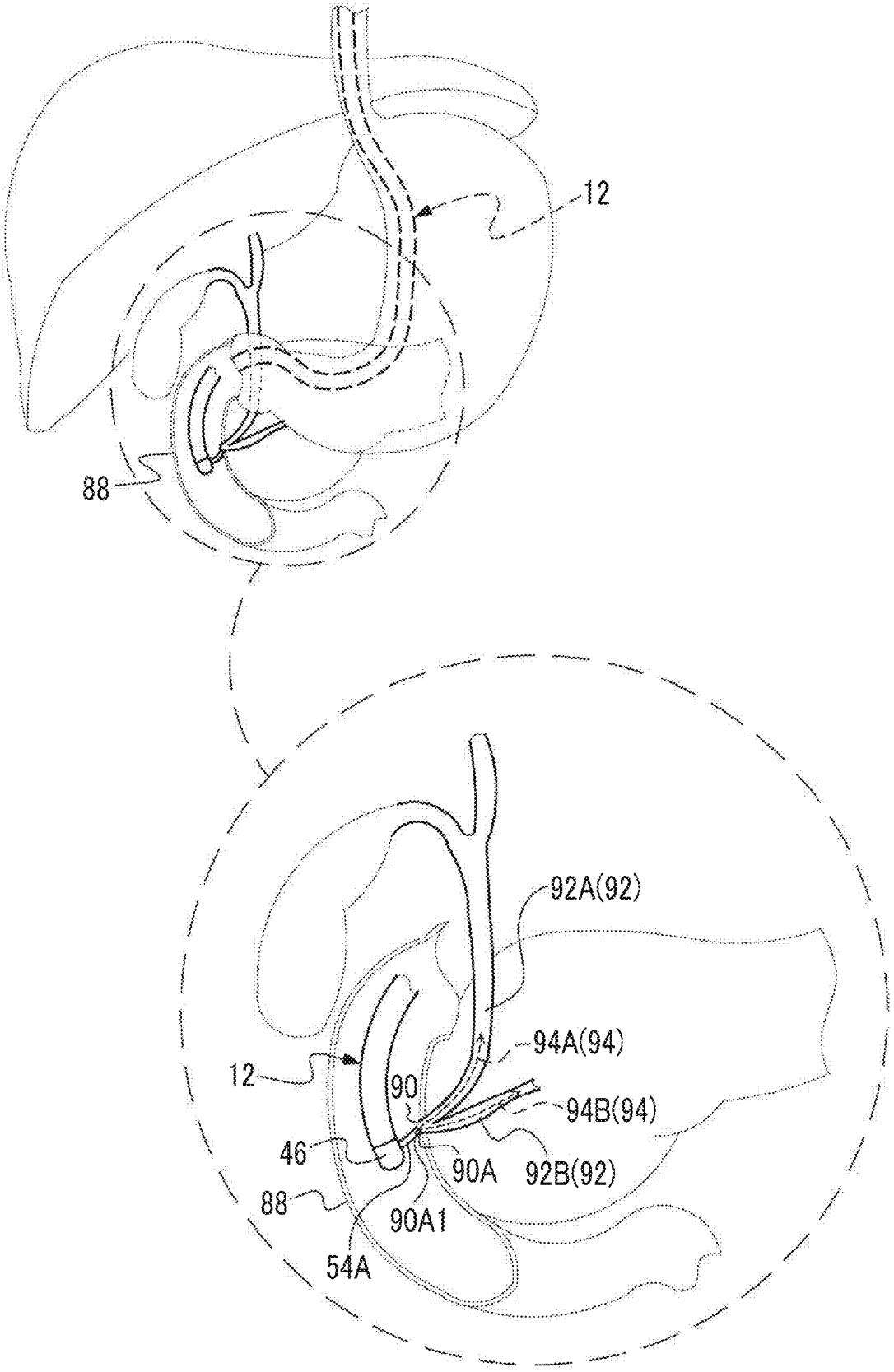

FIG. 5

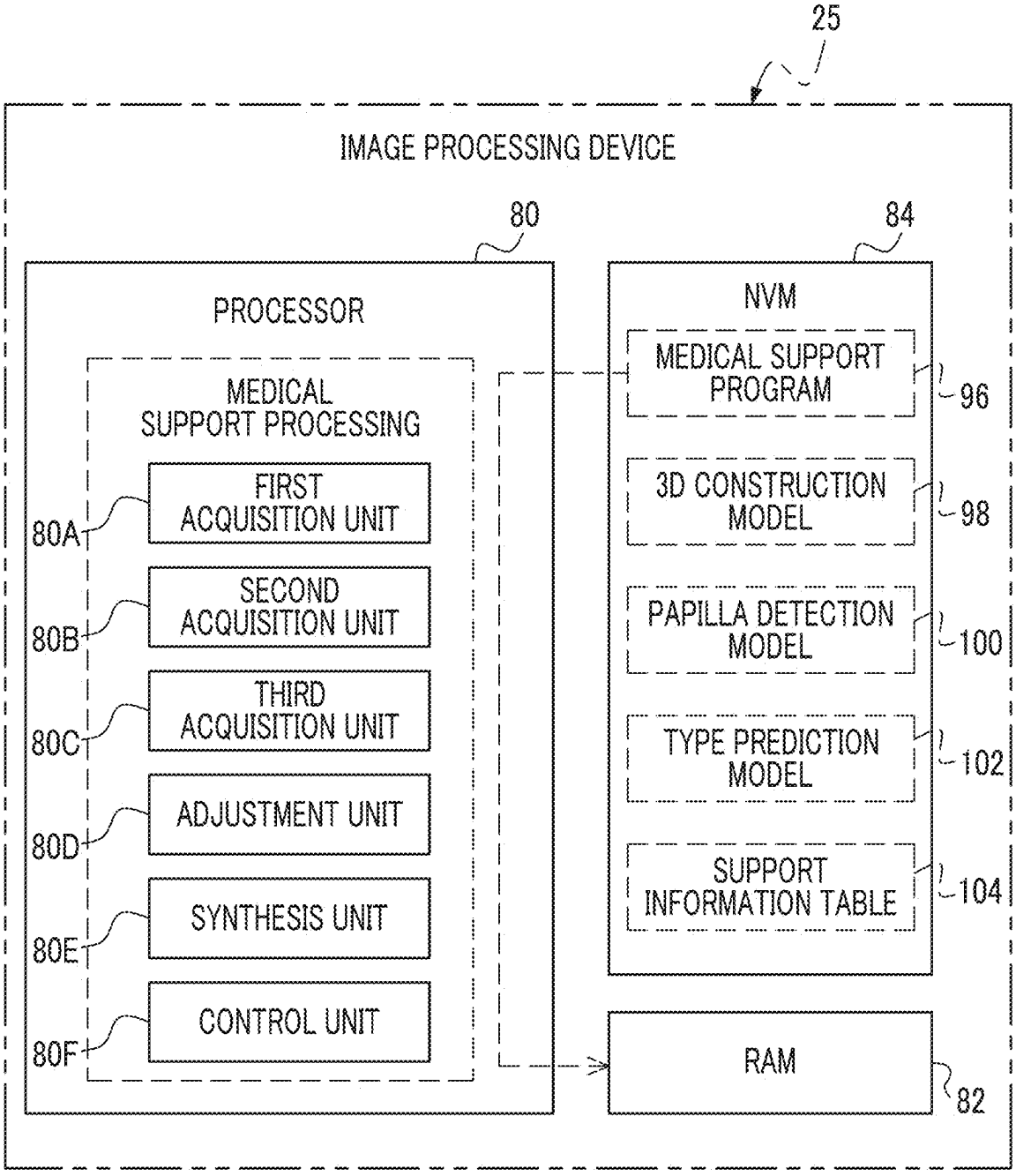
25
IMAGE PROCESSING DEVICE
80
PROCESSOR
MEDICAL SUPPORT PROCESSING
FIRST ACQUISITION UNIT
80A
SECOND ACQUISITION UNIT
80B
THIRD ACQUISITION UNIT
80C
ADJUSTMENT UNIT
80D
SYNTHESIS UNIT
80E
CONTROL UNIT
80F
84
NVM
MEDICAL SUPPORT PROGRAM
96
3D CONSTRUCTION MODEL
98
PAPILLA DETECTION MODEL
100
TYPE PREDICTION MODEL
102
SUPPORT INFORMATION TABLE
104
RAM
82

FIG. 6

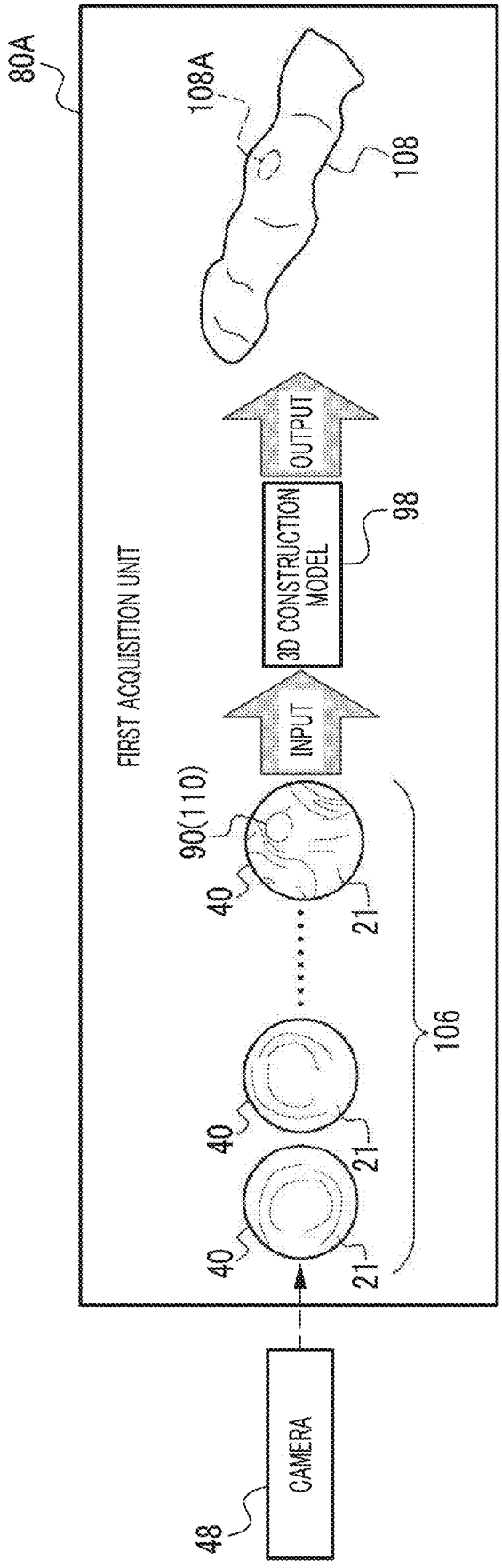
80A
108A
108
FIRST ACQUISITION UNIT
3D CONSTRUCTION MODEL
98
OUTPUT
INPUT
90(110)
40
21
106
CAMERA
48

FIG. 7

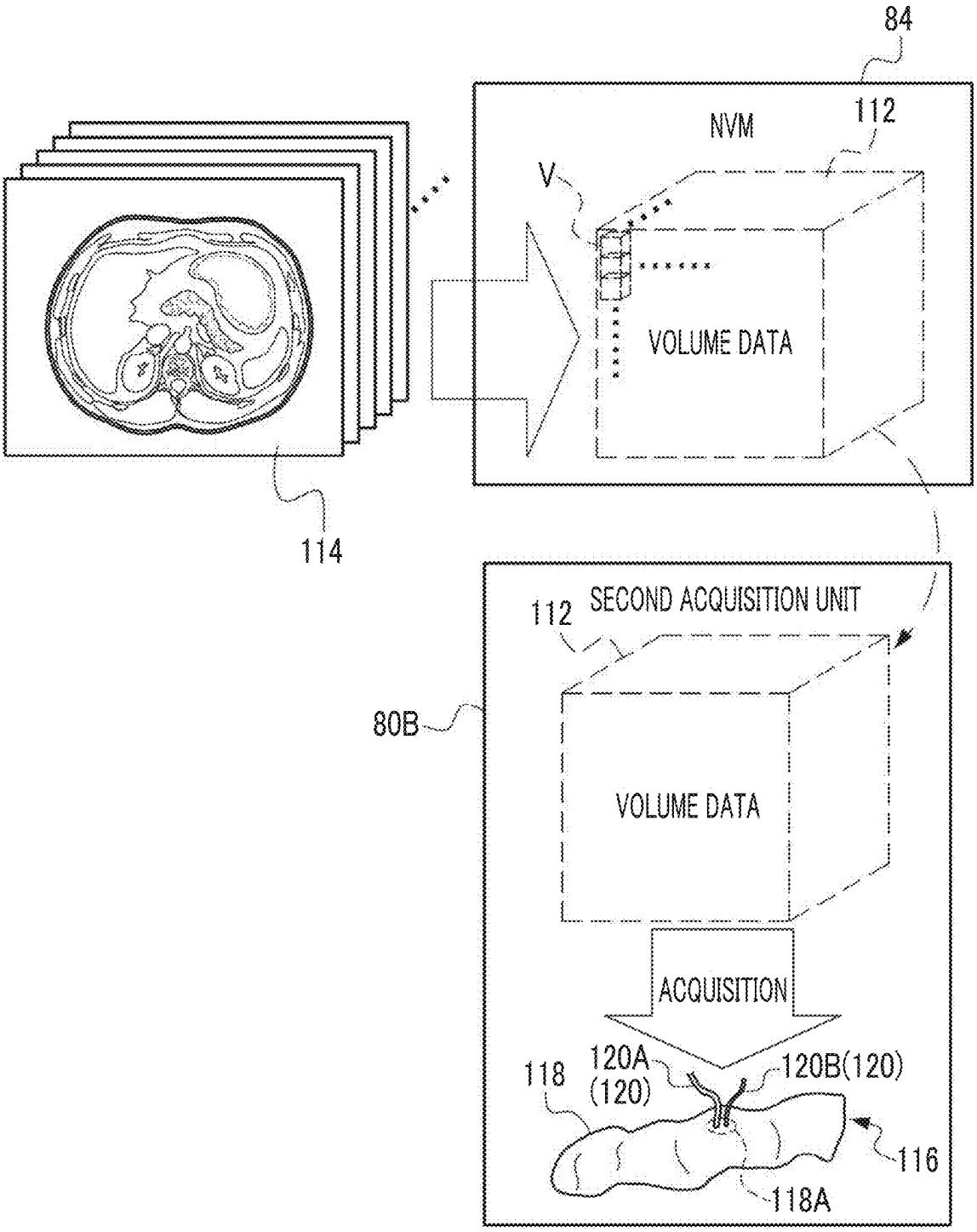
84
NVM
112
V
VOLUME DATA
114
112
SECOND ACQUISITION UNIT
80B
VOLUME DATA
ACQUISITION
118
120A
(120)
120B(120)
116
118A

FIG. 8

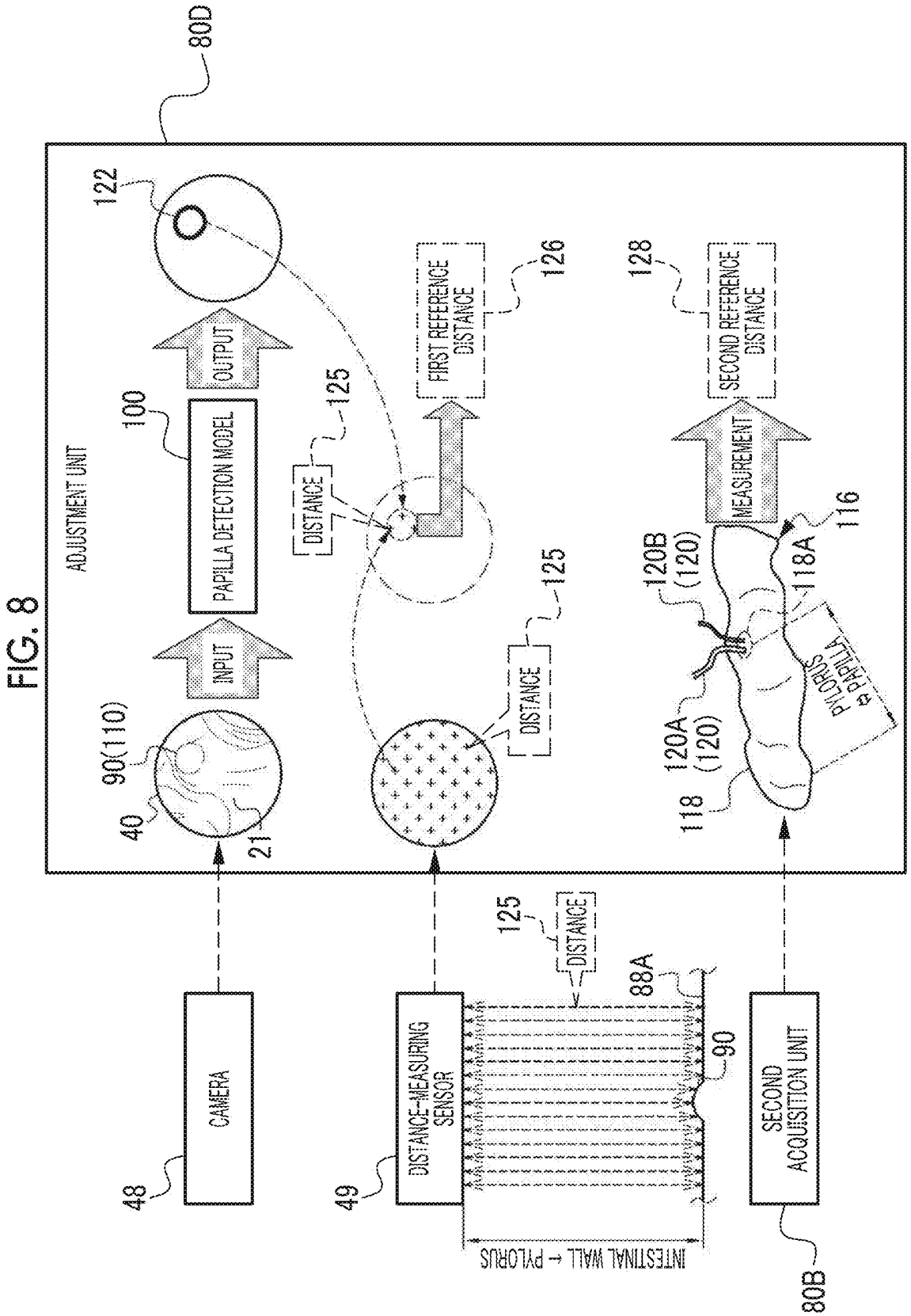
80D
ADJUSTMENT UNIT
122
OUTPUT
100
PAPILLA DETECTION MODEL
INPUT
90(110)
40
21
125
DISTANCE
FIRST REFERENCE DISTANCE
126
125
DISTANCE
128
SECOND REFERENCE DISTANCE
MEASUREMENT
120B (120)
118A
116
120A (120)
118
PYLORUS & PAPILLA
48
CAMERA
49
DISTANCE-MEASURING SENSOR
125
DISTANCE
88A
90
INTESTINAL WALL → PYLORUS
SECOND ACQUISITION UNIT
80B

FIG. 9

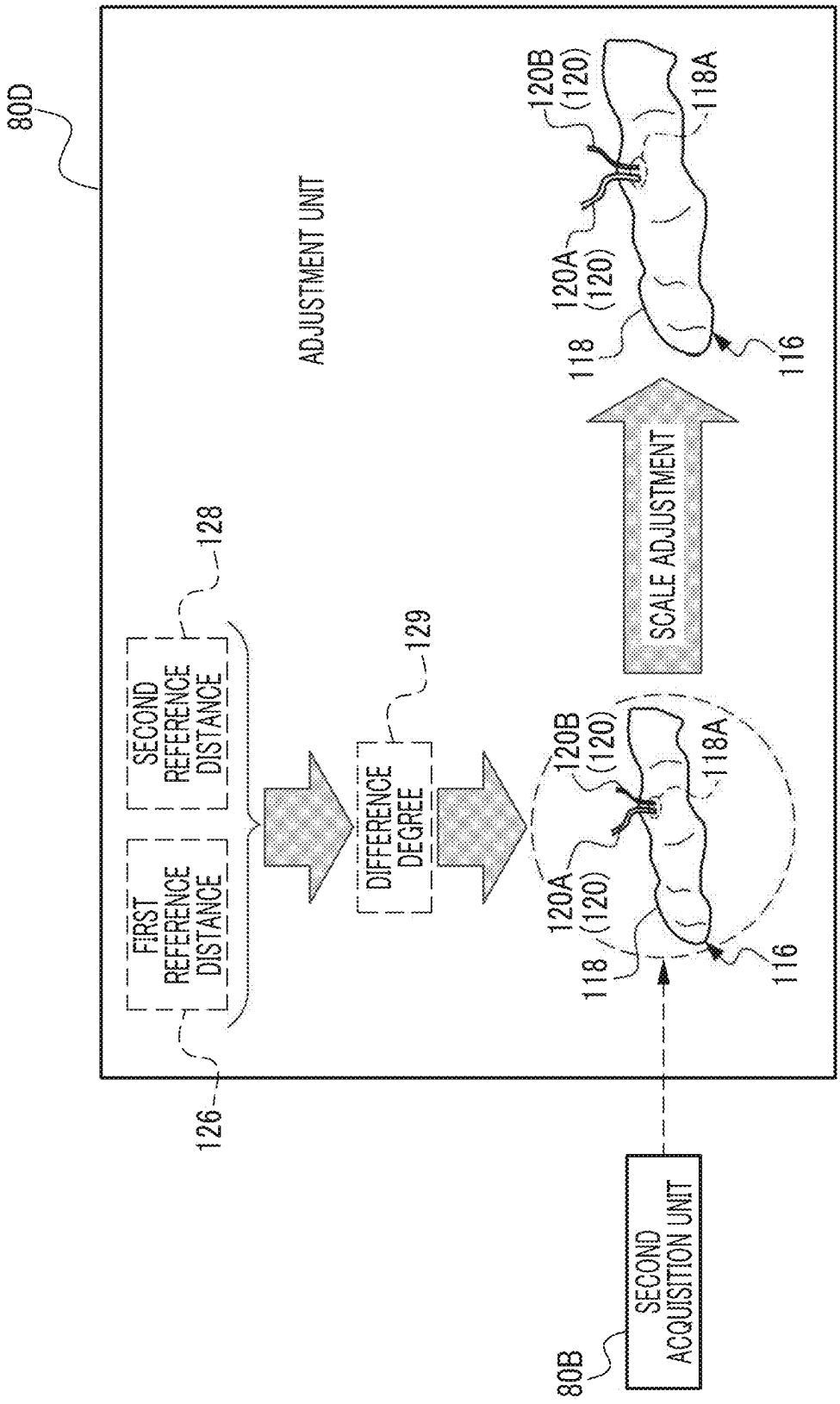
80D
ADJUSTMENT UNIT
FIRST REFERENCE DISTANCE
SECOND REFERENCE DISTANCE
128
126
DIFFERENCE DEGREE
129
SCALE ADJUSTMENT
120B (120)
118A
120A (120)
118
116
80B
SECOND ACQUISITION UNIT

FIG. 10

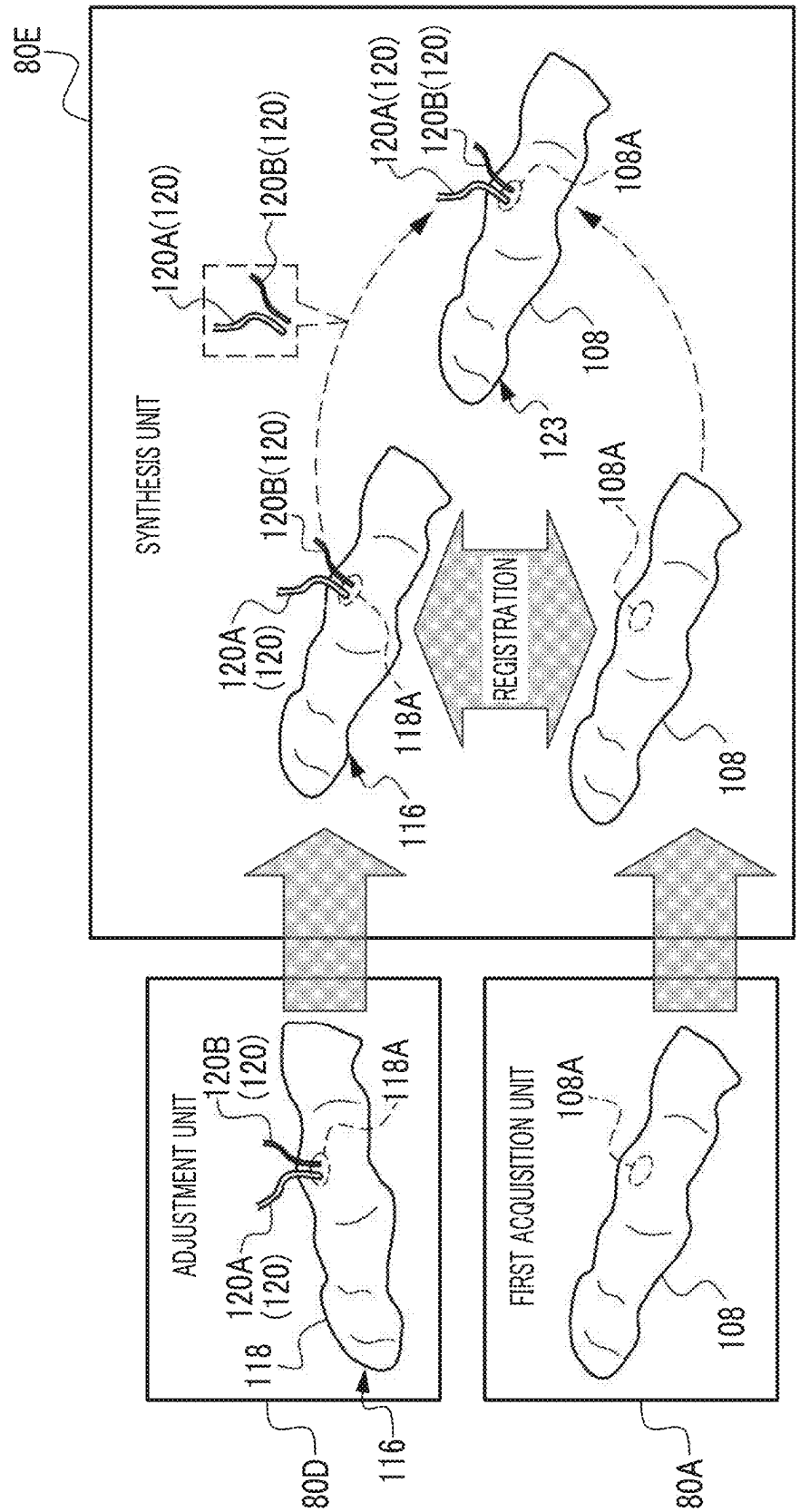
80E
SYNTHESIS UNIT
120A(120)
120B(120)
120A(120)
120B(120)
108A
108
123
120B(120)
120A
(120)
118A
116
REGISTRATION
108A
108
ADJUSTMENT UNIT
120B
(120)
118A
120A
(120)
118
116
80D
FIRST ACQUISITION UNIT
108A
108
80A

FIG. 11

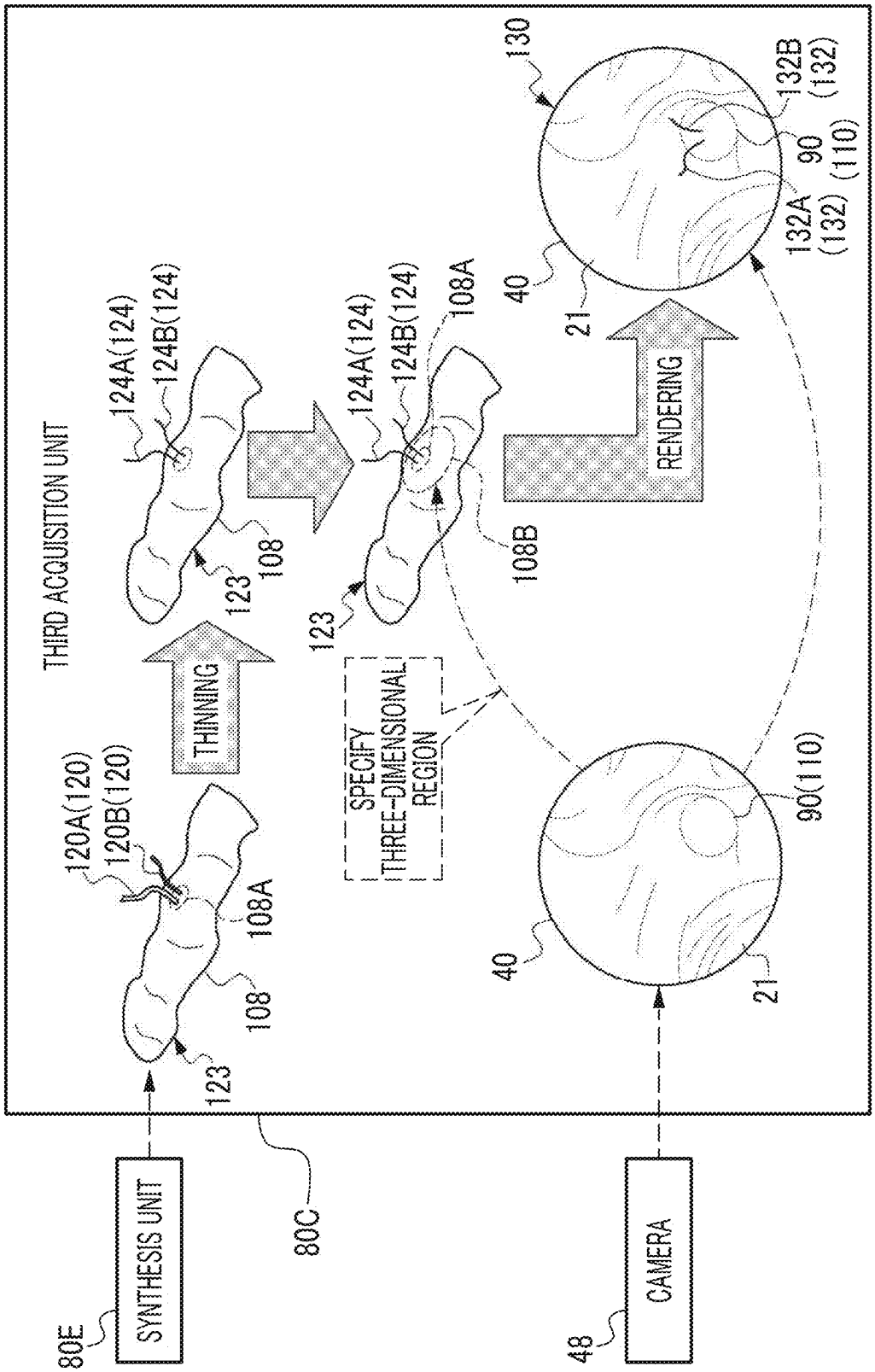
THIRD ACQUISITION UNIT
120A(120)
120B(120)
108A
108
123
THINNING
124A(124)
124B(124)
108
123
124A(124)
124B(124)
108A
123
108B
SPECIFY THREE-DIMENSIONAL REGION
RENDERING
130
132B (132)
90 (110)
132A (132)
40
21
90(110)
40
21
80E
SYNTHESIS UNIT
80C
48
CAMERA

FIG. 12

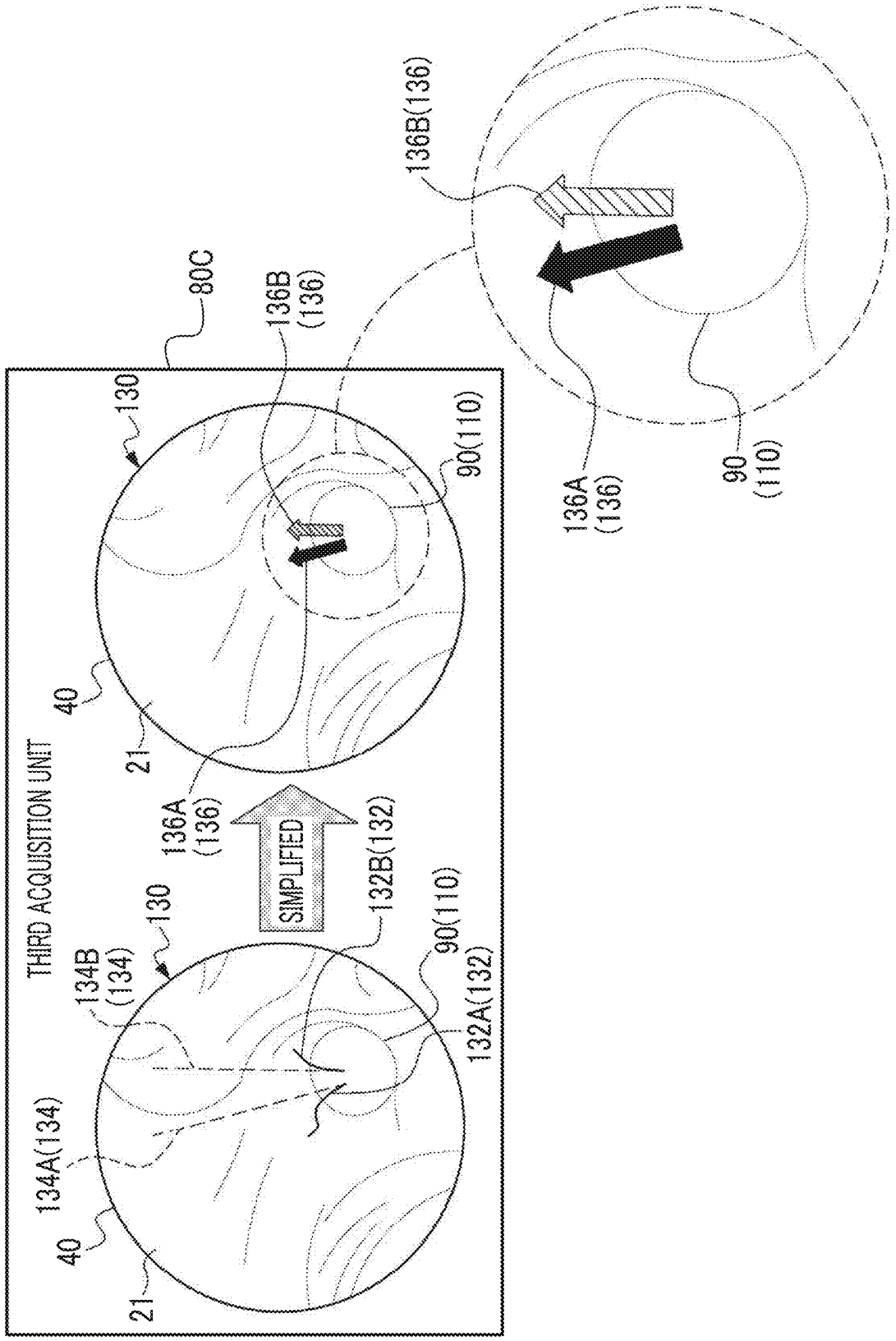
THIRD ACQUISITION UNIT
80C
130
136B
(136)
90(110)
40
21
136A
(136)
SIMPLIFIED
132B(132)
134B
(134)
134A(134)
132A(132)
136B(136)
136A
(136)
90
(110)

FIG. 13

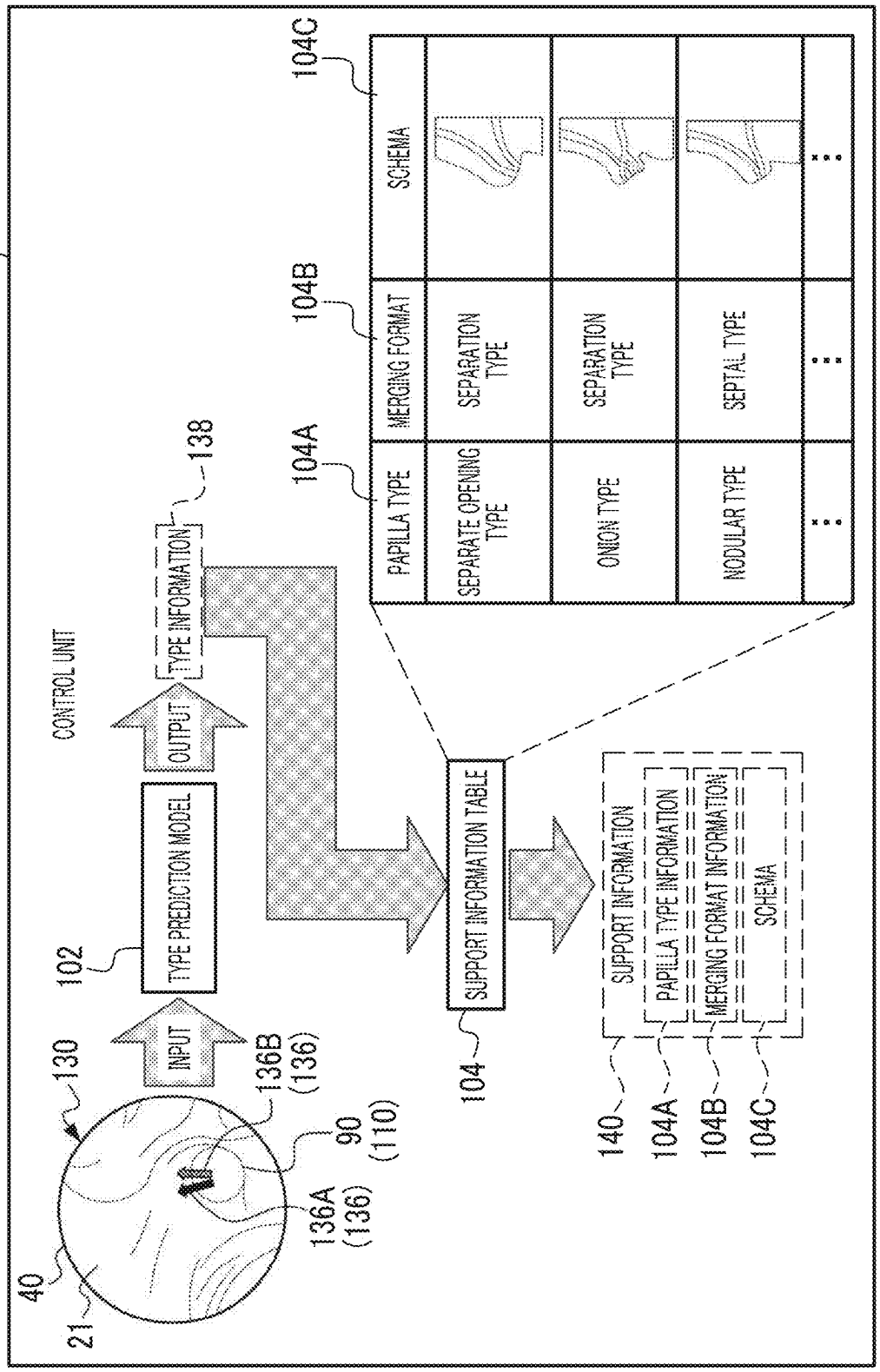
80F
CONTROL UNIT
102
TYPE PREDICTION MODEL
INPUT
OUTPUT
TYPE INFORMATION
138
104A
104B
104C
PAPILLA TYPE
MERGING FORMAT
SCHEMA
SEPARATE OPENING TYPE
SEPARATION TYPE
ONION TYPE
SEPARATION TYPE
NODULAR TYPE
SEPTAL TYPE
SUPPORT INFORMATION TABLE
104
SUPPORT INFORMATION
PAPILLA TYPE INFORMATION
MERGING FORMAT INFORMATION
SCHEMA
140
104A
104B
104C
130
136B (136)
90 (110)
136A (136)
40
21

FIG. 14

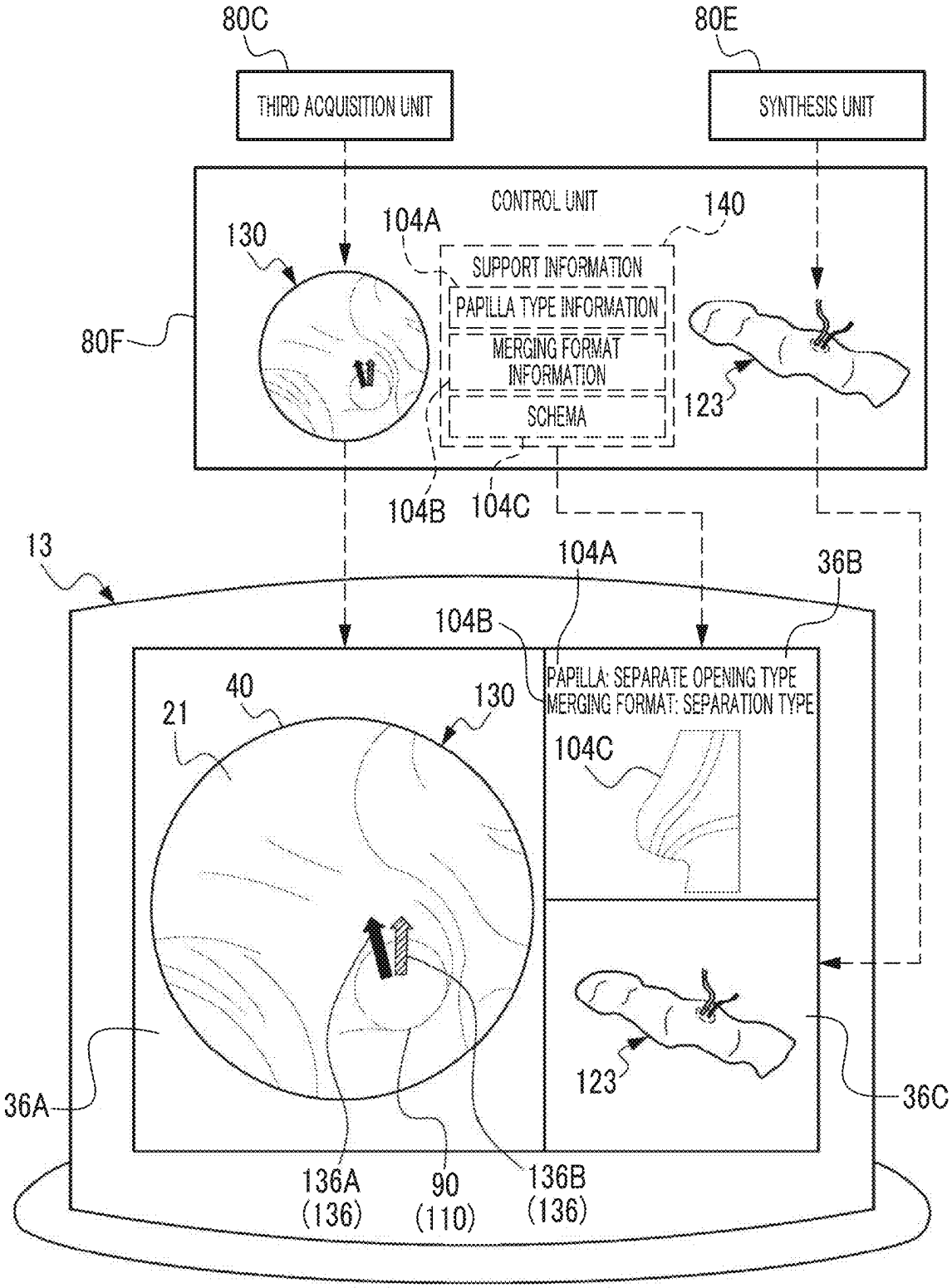
80C
THIRD ACQUISITION UNIT
80E
SYNTHESIS UNIT
CONTROL UNIT
140
104A
130
SUPPORT INFORMATION
PAPILLA TYPE INFORMATION
MERGING FORMAT INFORMATION
SCHEMA
80F
123
104B
104C
13
104A
36B
104B
PAPILLA: SEPARATE OPENING TYPE
MERGING FORMAT: SEPARATION TYPE
40
130
21
104C
123
36A
36C
136A
(136)
90
(110)
136B
(136)

FIG. 15A

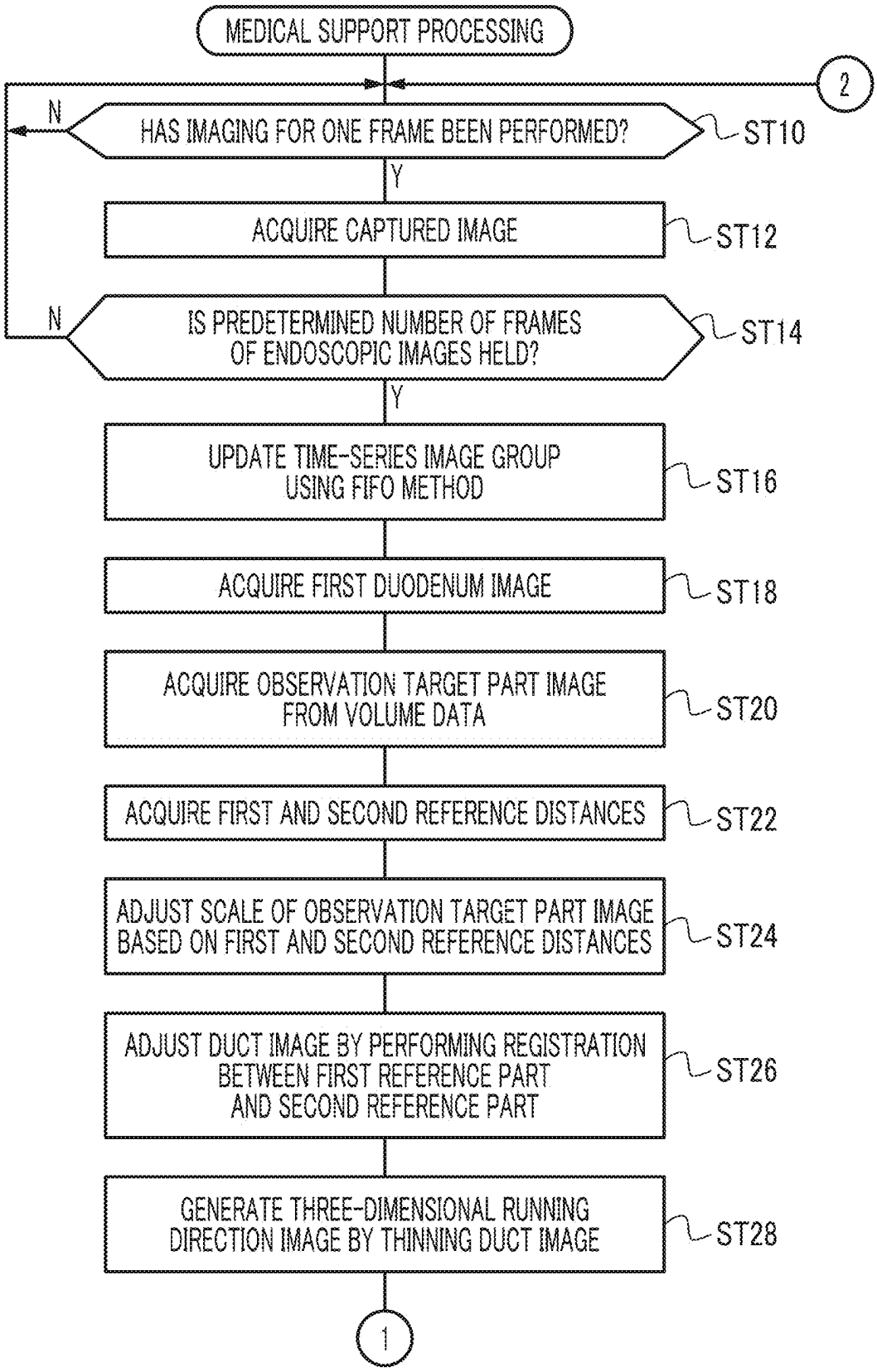
MEDICAL SUPPORT PROCESSING
2
N
HAS IMAGING FOR ONE FRAME BEEN PERFORMED?
ST10
Y
ACQUIRE CAPTURED IMAGE
ST12
N
IS PREDETERMINED NUMBER OF FRAMES OF ENDOSCOPIC IMAGES HELD?
ST14
Y
UPDATE TIME-SERIES IMAGE GROUP USING FIFO METHOD
ST16
ACQUIRE FIRST DUODENUM IMAGE
ST18
ACQUIRE OBSERVATION TARGET PART IMAGE FROM VOLUME DATA
ST20
ACQUIRE FIRST AND SECOND REFERENCE DISTANCES
ST22
ADJUST SCALE OF OBSERVATION TARGET PART IMAGE BASED ON FIRST AND SECOND REFERENCE DISTANCES
ST24
ADJUST DUCT IMAGE BY PERFORMING REGISTRATION BETWEEN FIRST REFERENCE PART AND SECOND REFERENCE PART
ST26
GENERATE THREE-DIMENSIONAL RUNNING DIRECTION IMAGE BY THINNING DUCT IMAGE
ST28
1

FIG. 15B

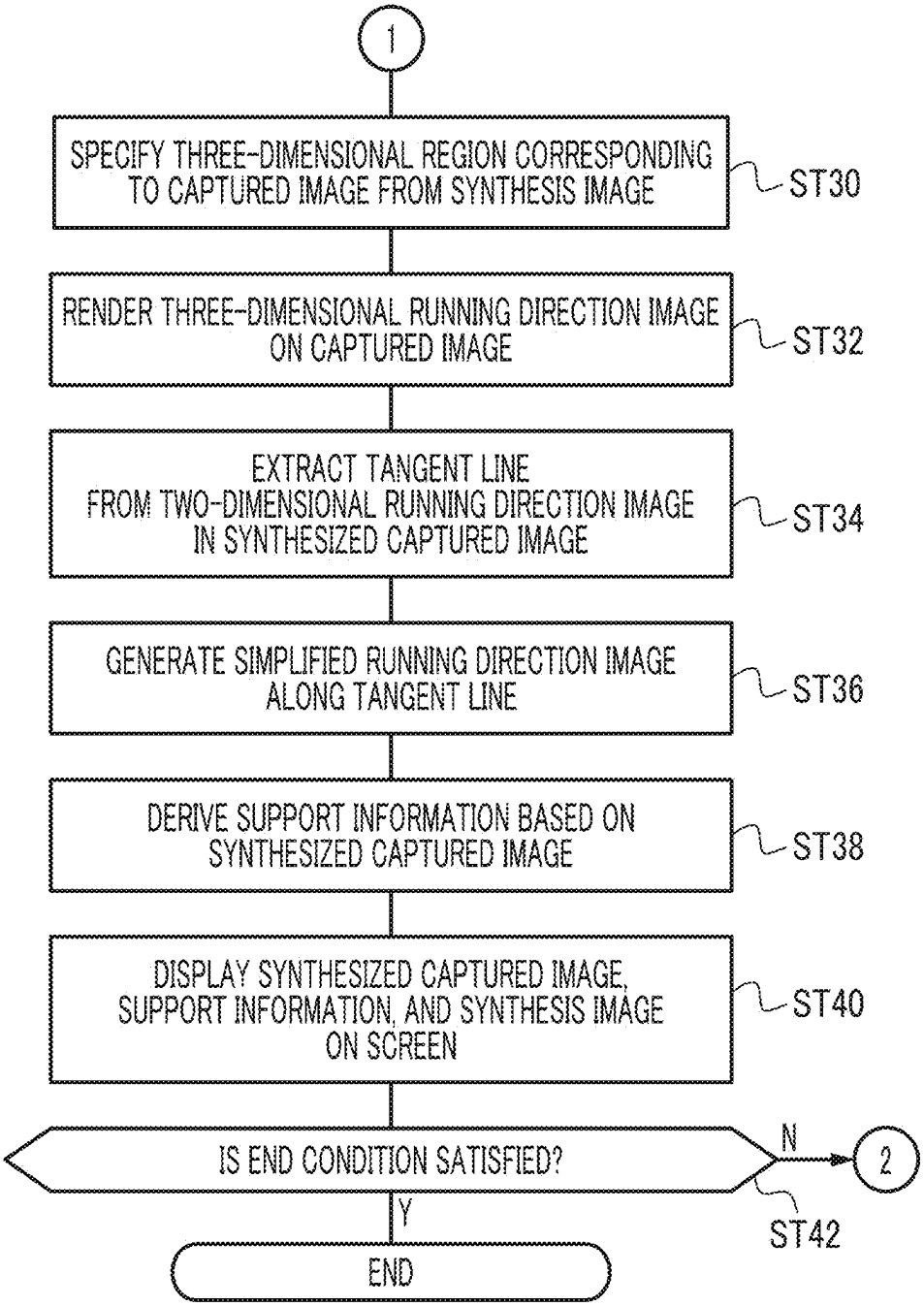
1
SPECIFY THREE-DIMENSIONAL REGION CORRESPONDING TO CAPTURED IMAGE FROM SYNTHESIS IMAGE
ST30
RENDER THREE-DIMENSIONAL RUNNING DIRECTION IMAGE ON CAPTURED IMAGE
ST32
EXTRACT TANGENT LINE FROM TWO-DIMENSIONAL RUNNING DIRECTION IMAGE IN SYNTHESIZED CAPTURED IMAGE
ST34
GENERATE SIMPLIFIED RUNNING DIRECTION IMAGE ALONG TANGENT LINE
ST36
DERIVE SUPPORT INFORMATION BASED ON SYNTHESIZED CAPTURED IMAGE
ST38
DISPLAY SYNTHESIZED CAPTURED IMAGE, SUPPORT INFORMATION, AND SYNTHESIS IMAGE ON SCREEN
ST40
IS END CONDITION SATISFIED?
N
2
ST42
Y
END

FIG. 16

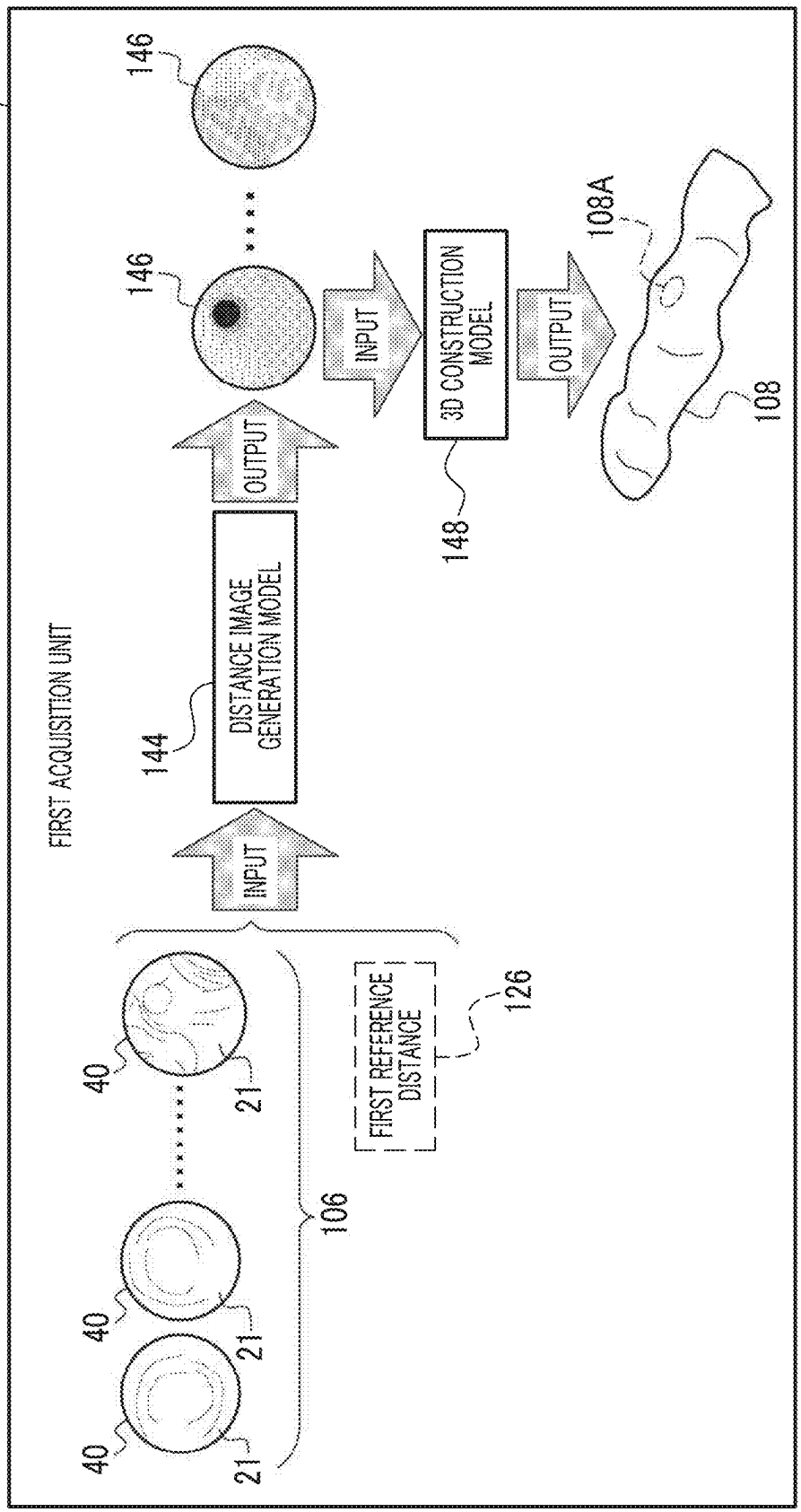
80A
FIRST ACQUISITION UNIT
40
21
40
21
40
21
106
FIRST REFERENCE DISTANCE
126
INPUT
144
DISTANCE IMAGE GENERATION MODEL
OUTPUT
146
146
INPUT
3D CONSTRUCTION MODEL
148
OUTPUT
108A
108

FIG. 17

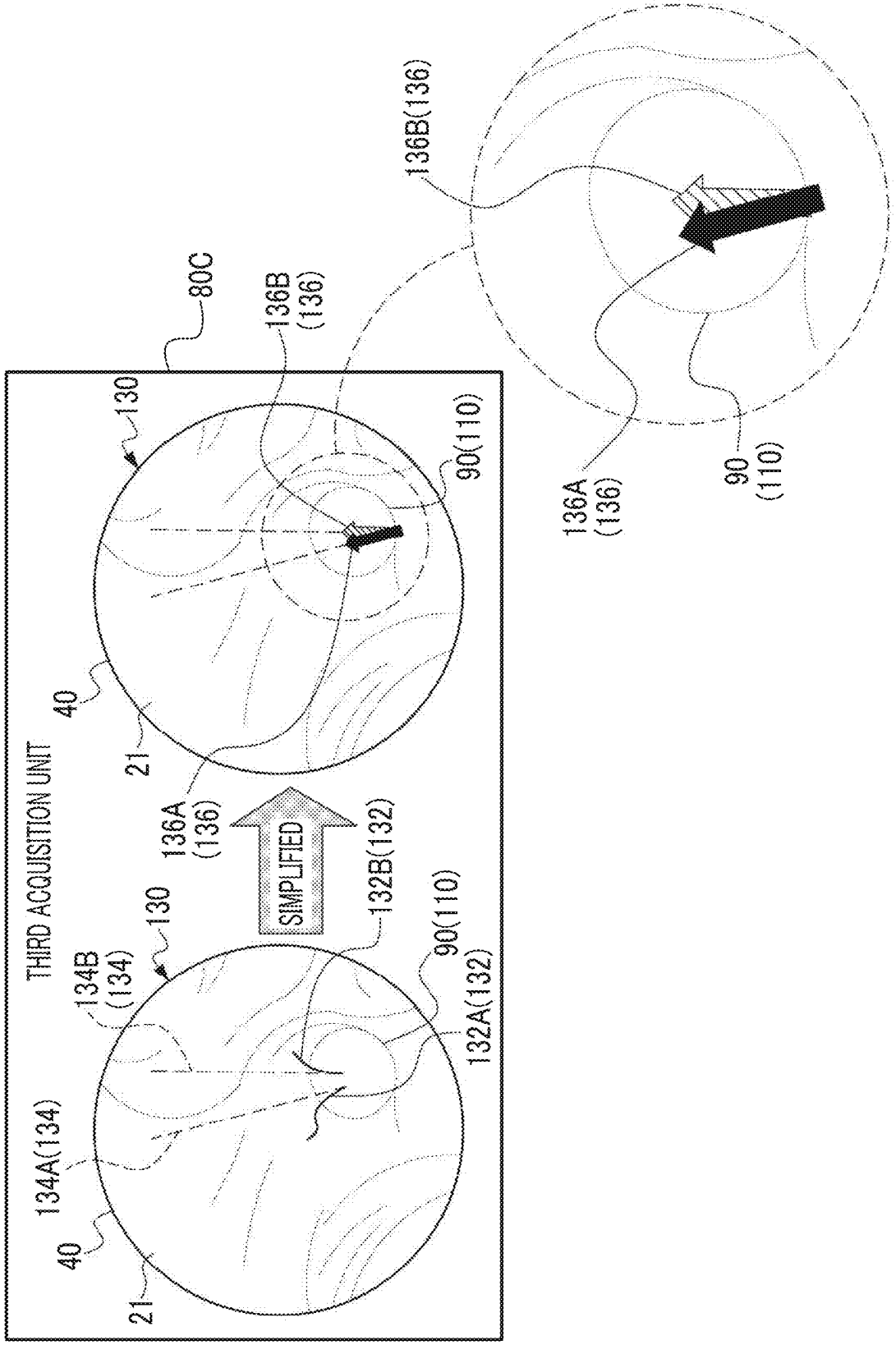
THIRD ACQUISITION UNIT
80C
130
136B (136)
90(110)
40
21
136A (136)
SIMPLIFIED
132B(132)
134B (134)
134A(134)
132A(132)
136B(136)
136A (136)
90 (110)

FIG. 18

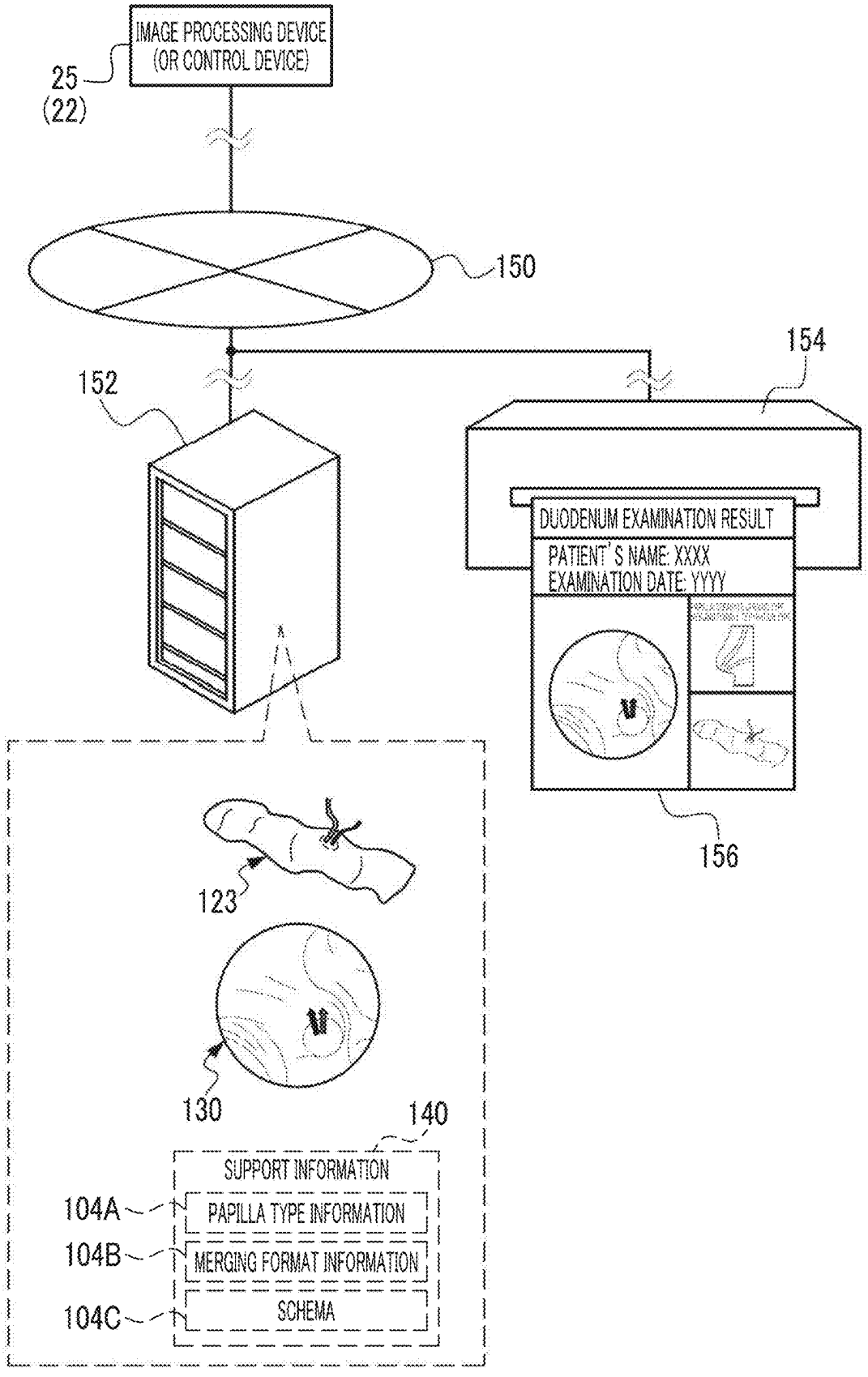
IMAGE PROCESSING DEVICE
(OR CONTROL DEVICE)
25
(22)
150
154
152
DUODENUM EXAMINATION RESULT
PATIENT'S NAME: XXXX
EXAMINATION DATE: YYYY
156
123
130
140
SUPPORT INFORMATION
104A
PAPILLA TYPE INFORMATION
104B
MERGING FORMAT INFORMATION
104C
SCHEMA

MEDICAL SUPPORT DEVICE, ENDOSCOPE, MEDICAL SUPPORT METHOD, AND PROGRAM

CROSS-REFERENCE TO RELATED APPLICATIONS

[0001] This application is a continuation application of International Application No. PCT/JP2023/039521, filed Nov. 1, 2023, the disclosure of which is incorporated herein by reference in its entirety. Further, this application claims priority from Japanese Patent Application No. 2022-177609, filed Nov. 4, 2022, the disclosure of which is incorporated herein by reference in its entirety.

BACKGROUND

1. Technical Field

[0002] The technology of the present disclosure relates to a medical support device, an endoscope, a medical support method, and a program.

2. Related Art

[0003] JP2022-105685A discloses an endoscope processor comprising an endoscopic image acquisition unit, a virtual endoscopic image acquisition unit, a virtual endoscopic image reconstruction unit, and a diagnosis support information output unit.

[0004] In the endoscope processor described in JP2022-105685A, the endoscopic image acquisition unit acquires an endoscopic image of a patient from an endoscope. The virtual endoscopic image acquisition unit acquires a virtual endoscopic image reconstructed based on a three-dimensional medical image of the patient captured in advance. The virtual endoscopic image reconstruction unit reconstructs a corrected virtual endoscopic image that most matches an endoscopic image based on a rate of match between a virtual endoscopic image acquired by the virtual endoscopic image acquisition unit and the endoscopic image acquired by the endoscopic image acquisition unit. The diagnosis support information output unit associates each pixel of the endoscopic image acquired by the endoscopic image acquisition unit with a distance image obtained from the corrected virtual endoscopic image reconstructed by the virtual endoscopic image reconstruction unit, and outputs diagnosis support information based on a feature parameter corrected accordingly.

SUMMARY

[0005] One embodiment according to the technology of the present disclosure provides a medical support device, an endoscope, a medical support method, and a program, which enable a user who observes a captured image to visually recognize a running direction of a duct leading to a duodenum through the captured image.

[0006] A first aspect according to the technology of the present disclosure is a medical support device comprising a processor, in which the processor is configured to acquire first reference part information capable of three-dimensionally specifying a reference part included in a duodenum based on a captured image obtained by imaging an intestinal wall of the duodenum with an endoscope scope; acquire second reference part information related to the reference part and direction information related to a running direction of a duct leading to the duodenum from volume data; generate a running direction image in which the running direction is imaged in accordance with the captured image based on the direction information adjusted by matching the first reference part information with the second reference part information; display the captured image on a screen; and display the running direction image in the captured image.

[0007] A second aspect according to the technology of the present disclosure is the medical support device according to the first aspect, in which the first reference part information is a first image region in which the reference part is represented as a three-dimensional image, the second reference part information is a second image region in which the reference part is represented as a three-dimensional image, and the processor is configured to generate the running direction image based on the direction information adjusted by performing registration between the first image region and the second image region.

[0008] A third aspect according to the technology of the present disclosure is the medical support device according to the first aspect or the second aspect, in which the processor is configured to generate a duodenum image in which the duodenum is represented as a three-dimensional image based on the captured image; and acquire the first reference part information from the duodenum image.

[0009] A fourth aspect according to the technology of the present disclosure is the medical support device according to the third aspect, in which the duodenum image is a three-dimensional image generated based on a plurality of distance images.

[0010] A fifth aspect according to the technology of the present disclosure is the medical support device according to the fourth aspect, in which, each time the captured image is updated in units of a designated number of frames, the processor is configured to generate the duodenum image based on the updated captured image; generate the running direction image based on the direction information each time the duodenum image is generated; display the updated captured image on the screen; and display the generated running direction image in the captured image each time the running direction image is generated.

[0011] A sixth aspect according to the technology of the present disclosure is the medical support device according to any one of the first to fifth aspects, in which the direction information is a three-dimensional direction image in which the running direction is represented as a three-dimensional image, and the running direction image is an image based on a two-dimensional image obtained by projecting the three-dimensional direction image onto the captured image.

[0012] A seventh aspect according to the technology of the present disclosure is the medical support device according to any one of the first to sixth aspects, in which the captured image includes a papilla image showing a duodenal papilla, and the running direction image is displayed in association with the papilla image.

[0013] An eighth aspect according to the technology of the present disclosure is the medical support device according to the seventh aspect, in which the duct leads to an opening in the duodenal papilla, and the running direction image is an image showing a first direction along the duct with the opening as a base point.

[0014] A ninth aspect according to the technology of the present disclosure is the medical support device according to

the eighth aspect, in which the first direction is a direction corresponding to an insertion direction of a medical instrument to be inserted into the duct.

[0015] A tenth aspect according to the technology of the present disclosure is the medical support device according to any one of the first to ninth aspects, in which the reference part is a duodenal papilla, a medical marker, and/or a fold.

[0016] An eleventh aspect according to the technology of the present disclosure is the medical support device according to any one of the first to tenth aspects, in which the processor is configured to adjust a scale of the direction information based on a distance from the endoscope scope to the intestinal wall and on the volume data.

[0017] A twelfth aspect according to the technology of the present disclosure is the medical support device according to any one of the first to tenth aspects, in which the duct is a bile duct and/or a pancreatic duct.

[0018] A thirteenth aspect according to the technology of the present disclosure is the medical support device according to any one of the first to twelfth aspects, in which the running direction image displayed in the captured image is updated in real time.

[0019] A fourteenth aspect of the technology of the present disclosure is an endoscope comprising the medical support device according to any one of the first to thirteenth aspects; and the endoscope scope.

[0020] A fifteenth aspect according to the technology of the present disclosure is a medical support method comprising acquiring first reference part information capable of three-dimensionally specifying a reference part included in a duodenum based on a captured image obtained by imaging an intestinal wall of the duodenum with an endoscope scope; acquiring second reference part information related to the reference part and direction information related to a running direction of a duct leading to the duodenum from volume data; generating a running direction image in which the running direction is imaged in accordance with the captured image based on the direction information adjusted by matching the first reference part information with the second reference part information; displaying the captured image on a screen; and displaying the running direction image in the captured image.

[0021] A sixteenth aspect according to the technology of the present disclosure is a program causing a computer to execute processing comprising acquiring first reference part information capable of three-dimensionally specifying a reference part included in a duodenum based on a captured image obtained by imaging an intestinal wall of the duodenum with an endoscope scope; acquiring second reference part information related to the reference part and direction information related to a running direction of a duct leading to the duodenum from volume data; generating a running direction image in which the running direction is imaged in accordance with the captured image based on the direction information adjusted by matching the first reference part information with the second reference part information; displaying the captured image on a screen; and displaying the running direction image in the captured image.

BRIEF DESCRIPTION OF THE DRAWINGS

[0022] Exemplary embodiments according to the technique of the present disclosure will be described in detail based on the following figures, wherein:

[0023] FIG. **1** is a conceptual diagram showing an example of an aspect in which a duodenoscope system is used;

[0024] FIG. **2** is a conceptual diagram showing an example of an overall configuration of the duodenoscope system;

[0025] FIG. **3** is a block diagram showing an example of a hardware configuration of an electrical system of the duodenoscope system;

[0026] FIG. **4** is a conceptual diagram showing an example of aspects of a duodenum, a bile duct, and a pancreatic duct;

[0027] FIG. **5** is a block diagram showing an example of functions of main units of a processor included in an endoscope and an example of information stored in an NVM;

[0028] FIG. **6** is a conceptual diagram showing an example of a processing content of a first acquisition unit;

[0029] FIG. **7** is a conceptual diagram showing an example of a processing content of a second acquisition unit;

[0030] FIG. **8** is a conceptual diagram showing an example of a first processing content of an adjustment unit;

[0031] FIG. **9** is a conceptual diagram showing an example of a second processing content of the adjustment unit;

[0032] FIG. **10** is a conceptual diagram showing an example of a processing content of a synthesis unit;

[0033] FIG. **11** is a conceptual diagram showing an example of a first processing content of a third acquisition unit;

[0034] FIG. **12** is a conceptual diagram showing an example of a second processing content of the third acquisition unit;

[0035] FIG. **13** is a conceptual diagram showing an example of a first processing content of a control unit;

[0036] FIG. **14** is a conceptual diagram showing an example of a second processing content of the control unit;

[0037] FIG. **15**A is a flowchart showing an example of a flow of medical support processing;

[0038] FIG. **15**B is a continuation of the flowchart shown in FIG. **15**A;

[0039] FIG. **16** is a conceptual diagram showing a modification example of the processing content of the first acquisition unit;

[0040] FIG. **17** is a conceptual diagram showing a modification example of the processing content of the third acquisition unit; and

[0041] FIG. **18** is a conceptual diagram showing an example of an aspect in which information is output to a server and/or a printer from an image processing device or a control device via a network.

DETAILED DESCRIPTION

[0042] Hereinafter, examples of embodiments of a medical support device, an endoscope, a medical support method, and a program according to the technology of the present disclosure will be described with reference to the accompanying drawings.

[0043] First, terms used in the following description will be described.

[0044] CPU is an abbreviation for "central processing unit". GPU is an abbreviation for "graphics processing unit". RAM is an abbreviation for "random-access memory". NVM is an abbreviation for "non-volatile memory".

EEPROM is an abbreviation for "electrically erasable programmable read-only memory". ASIC is an abbreviation for "application-specific integrated circuit". PLD is an abbreviation for "programmable logic device". FPGA is an abbreviation for "field-programmable gate array". SoC is an abbreviation for "system-on-a-chip". SSD is an abbreviation for "solid-state drive". USB is an abbreviation for "Universal Serial Bus". HDD is an abbreviation for "hard disk drive". EL is an abbreviation for "electro-luminescence". CMOS is an abbreviation for "complementary metal-oxide-semiconductor". CCD is an abbreviation for "charge-coupled device". AI is an abbreviation for "artificial intelligence". BLI is an abbreviation for "blue light imaging". LCI is an abbreviation for "linked color imaging". I/F is an abbreviation for "interface". FIFO is an abbreviation for "first in, first out". ToF is an abbreviation for "time of flight". RNN-SLAM is an abbreviation for "recurrent neural network-simultaneous localization and mapping". VAE is an abbreviation for "variational auto-encoder". GAN is an abbreviation for "generative adversarial network". CT is an abbreviation for "computed tomography". MRI is an abbreviation for "magnetic resonance imaging". 3D is an abbreviation for "three dimensions".

[0045] For example, as shown in FIG. **1**, a duodenoscope system **10** comprises a duodenoscope **12** and a display device **13**. The duodenoscope **12** is used by a doctor **14** in endoscopy. The duodenoscope **12** is an example of the "endoscope" according to the technology of the present disclosure.

[0046] The duodenoscope **12** is communicably connected to a communication device (not shown), and information obtained by the duodenoscope **12** is transmitted to the communication device. The communication device receives the information transmitted from the duodenoscope **12** and performs processing using the received information (for example, the processing of recording the information on an electronic medical record or the like).

[0047] The duodenoscope **12** comprises a duodenoscope body **18** (in other words, an endoscope scope). The duodenoscope **12** is a device for performing medical care on an observation target **21** (for example, a duodenum) included in a body of a subject **20** (for example, a patient) by using the duodenoscope body **18**. The observation target **21** is a target observed by the doctor **14**.

[0048] The duodenoscope body **18** is inserted into the body of the subject **20**. The duodenoscope **12** images the observation target **21** in the body of the subject **20** with respect to the duodenoscope body **18** inserted into the body of the subject **20**, and performs various medical treatments on the observation target **21** as necessary.

[0049] The duodenoscope **12** images the inside of the body of the subject **20** to acquire an image showing an aspect of the inside of the body and outputs the image. In the present embodiment, the duodenoscope **12** is an endoscope having an optical imaging function of irradiating the inside of the body with light to image the light reflected by the observation target **21**.

[0050] The duodenoscope **12** comprises a control device **22**, a light source device **24**, and an image processing device **25**. The control device **22**, the light source device **24**, and the image processing device **25** are installed in a wagon **34**. A plurality of tables are provided in the wagon **34** in a vertical direction, and the image processing device **25**, the control device **22**, and the light source device **24** are installed from a lower table to an upper table. In addition, the display device **13** is installed on the uppermost table in the wagon **34**.

[0051] The control device **22** controls the entire duodenoscope **12**. The image processing device **25** performs various types of image processing on the image obtained by imaging the observation target **21** with the duodenoscope body **18** under the control of the control device **22**.

[0052] The display device **13** displays various types of information including images. An example of the display device **13** is a liquid-crystal display or an EL display. In addition, a tablet terminal with a display may be used instead of the display device **13** or together with the display device **13**.

[0053] A plurality of screens are displayed side by side on the display device **13**. In the example shown in FIG. **1**, screens **36**A to **36**C are shown as an example of a plurality of screens.

[0054] A captured image **40** obtained by the duodenoscope **12** is displayed on the screen **36**A. The observation target **21** is captured in the captured image **40**. The captured image **40** is an image obtained by imaging the observation target **21** with the duodenoscope body **18** in the body of the subject **20**. An example of the observation target **21** includes an intestinal wall of a duodenum. In the following, for convenience of explanation, an intestinal wall image is given as an example of the captured image **40**. The intestinal wall image refers to an image obtained by imaging the intestinal wall of the duodenum as the observation target **21**. In addition, the duodenum is merely an example, and any region that can be imaged by the duodenoscope **12** may be used. For example, an esophagus or a stomach is given as an example of the region that can be imaged by the duodenoscope **12**. The captured image **40** is an example of the "captured image" according to the technology of the present disclosure.

[0055] A moving image configured to include a plurality of frames of the captured images **40** in time series is displayed on the screen **36**A. That is, the plurality of frames of captured images **40** are displayed in time series on the screen **36**A at a predetermined frame rate (for example, several tens of frames/sec). The screen **36**A is an example of the "screen" according to the technology of the present disclosure.

[0056] The screen **36**A is a main screen, while the screen **36**B and the screen **36**C are sub-screens, and various types of information for supporting the procedure using the duodenoscope **12** by the doctor **14** are displayed on the screen **36**B and the screen **36**C.

[0057] For example, as shown in FIG. **2**, the duodenoscope body **18** comprises an operation part **42** and an insertion part **44**. The insertion part **44** is partially bent by operating the operation part **42**. The insertion part **44** is inserted while being bent according to the shape of the observation target **21** (for example, the shape of the stomach) in response to the operation of the operation part **42** by the doctor **14**.

[0058] A camera **48**, a distance-measuring sensor **49**, an illumination device **50**, a treatment opening **51**, and an elevating mechanism **52** are provided at a distal end part **46** of the insertion part **44**. The camera **48** and the illumination device **50** are provided on a side surface of the distal end part **46**. That is, the duodenoscope **12** is configured as a side-viewing scope and enables a user to easily observe the intestinal wall of the duodenum.

[0059] The camera **48** is a device that acquires the captured image **40** as a medical image by imaging the inside of the body of the subject **20**. An example of the camera **48** includes a CMOS camera. However, this is merely an example, and the camera **48** may be other types of cameras such as CCD cameras. The camera **48** is an example of the "endoscope scope" according to the technology of the present disclosure.

[0060] The distance-measuring sensor **49** is an optical distance-measuring sensor. For example, the distance-measuring sensor **49** performs distance measurement (that is, measurement of distance) in synchronization with the imaging timing of the camera **48**. An example of the distance-measuring sensor **49** includes a device including a ToF camera. The ToF camera is a camera that measures three-dimensional information by a ToF method. Here, although the camera **48** and the distance-measuring sensor **49** are separate from each other, the camera **48** may be equipped with the function of the ToF camera. In this case, the camera **48** can also obtain depth information at the same time as the captured image **40**.

[0061] The illumination device **50** has an illumination window **50**A. The illumination device **50** emits light through the illumination window **50**A. Examples of the type of the light emitted from the illumination device **50** include visible light (for example, white light) and invisible light (for example, near-infrared light). In addition, the illumination device **50** emits special light through the illumination window **50**A. Examples of the special light include light for BLI and/or light for LCI. The camera **48** images the inside of the body of the subject **20** using an optical method in a state in which the inside of the body of the subject **20** is irradiated with light by the illumination device **50**.

[0062] The treatment opening **51** is used as a treatment tool protruding port through which a treatment tool **54** protrudes from the distal end part **46**, a suction port for suctioning blood, internal excrement, and the like, and a delivery port for delivering a fluid.

[0063] The treatment tool **54** protrudes from the treatment opening **51** in response to the operation of the doctor **14**. The treatment tool **54** is inserted into the insertion part **44** from a treatment tool insertion port **58**. The treatment tool **54** passes through the inside of the insertion part **44** through the treatment tool insertion port **58** and protrudes from the treatment opening **51** into the body of the subject **20**. In the example shown in FIG. **2**, a cannula **54**A protrudes from the treatment opening **51** as the treatment tool **54**. The cannula **54**A is merely an example of the treatment tool **54**, and other examples of the treatment tool **54** include a catheter, a guide wire, a papillotomy knife, and a snare. The treatment tool **54** is an example of the "medical instrument" according to the technology of the present disclosure.

[0064] The elevating mechanism **52** changes a protruding direction of the treatment tool **54** protruding from the treatment opening **51**. The elevating mechanism **52** comprises a guide **52**A, and the guide **52**A rises with respect to the protruding direction of the treatment tool **54**, so that the protruding direction of the treatment tool **54** is changed along the guide **52**A. Accordingly, it is easy to cause the treatment tool **54** to protrude toward the intestinal wall. In the example shown in FIG. **2**, the protruding direction of the treatment tool **54** is changed to a direction perpendicular to a traveling direction of the distal end part **46** by the elevating mechanism **52**. The elevating mechanism **52** is operated by the doctor **14** using the operation part **42**. Accordingly, the degree of change in the protruding direction of the treatment tool **54** is adjusted.

[0065] The duodenoscope body **18** is connected to the control device **22** and the light source device **24** via a universal cord **60**. A receiving device **62** is connected to the control device **22**. In addition, an image processing device **25** is connected to the control device **22**. In addition, the display device **13** is connected to the image processing device **25**. That is, the control device **22** is connected to the display device **13** via the image processing device **25**.

[0066] In addition, here, the image processing device **25** is given as an example of an external device for expanding the functions of the control device **22**. Therefore, the form example in which the control device **22** and the display device **13** are indirectly connected to each other via the image processing device **25** is given. However, this is merely an example. For example, the display device **13** may be directly connected to the control device **22**. In this case, for example, the functions of the image processing device **25** may be provided in the control device **22**, or the control device **22** may be provided with a function of directing a server (not shown) to perform the same process as the process (for example, medical support processing which will be described below) performed by the image processing device **25**, receiving a processing result of the server, and using the processing result.

[0067] The receiving device **62** receives an instruction from a user (for example, the doctor **14**) and outputs the received instruction to the control device **22** as an electric signal. Examples of the receiving device **62** include a keyboard, a mouse, a touch panel, a foot switch, and a microphone.

[0068] The control device **22** controls the light source device **24**, transmits and receives various signals with the camera **48**, or transmits and receives various signals with the image processing device **25**.

[0069] The light source device **24** emits light under the control of the control device **22** and supplies the light to the illumination device **50**. A light guide is provided in the illumination device **50**, and the light supplied from the light source device **24** is emitted from the illumination window **50**A via the light guide. The control device **22** causes the camera **48** to execute the imaging, acquires the captured image **40** (see FIG. **1**) from the camera **48**, and outputs the captured image **40** to a predetermined output destination (for example, the image processing device **25**).

[0070] The image processing device **25** performs various types of image processing on the captured image **40** input from the control device **22**. The image processing device **25** outputs the captured image **40** subjected to various types of image processing to a predetermined output destination (for example, the display device **13**).

[0071] In addition, here, although the form example in which the captured image **40** output from the control device **22** is output to the display device **13** via the image processing device **25** has been described, this is merely an example. The control device **22** and the display device **13** may be connected to each other, and the captured image **40** subjected to the image processing by the image processing device **25** may be displayed on the display device **13** via the control device **22**.

[0072] As shown in FIG. **3** as an example, the control device **22** comprises a computer **64**, a bus **66**, and an

external I/F **68**. The computer **64** comprises a processor **70**, a RAM **72**, and an NVM **74**. The processor **70**, the RAM **72**, the NVM **74**, and the external I/F **68** are connected to the bus **66**.

[0073] For example, the processor **70** includes a CPU and a GPU and controls the entire control device **22**. The GPU operates under the control of the CPU and is in charge of, for example, executing various processing operations of a graphics system and performing calculation using a neural network. In addition, the processor **70** may be one or more CPUs with which the functions of the GPU have been integrated or may be one or more CPUs with which the functions of the GPU have not been integrated.

[0074] The RAM **72** is a memory that temporarily stores information and is used as a work memory by the processor **70**. The NVM **74** is a non-volatile storage device that stores, for example, various programs and various parameters. An example of the NVM **74** includes a flash memory (for example, an EEPROM and/or an SSD). In addition, the flash memory is merely an example and may be other non-volatile storage devices, such as HDDs, or a combination of two or more types of non-volatile storage devices.

[0075] The external I/F **68** controls the transmission and the reception of various types of information between one or more devices (hereinafter also referred to as "first external devices") present outside the control device **22** and the processor **70**. An example of the external I/F **68** is a USB interface.

[0076] The camera **48** is connected to the external I/F **68** as one of the first external devices, and the external I/F **68** controls the transmission and the reception of various types of information between the camera **48** and the processor **70**. The processor **70** controls the camera **48** via the external I/F **68**. In addition, the processor **70** acquires, via the external I/F **68**, the captured image **40** (see FIG. **1**) obtained by imaging the inside of the body of the subject **20** via the camera **48**.

[0077] The distance-measuring sensor **49** is connected to the external I/F **68** as one of the first external devices, and the external I/F **68** controls the transmission and the reception of various types of information between the distance-measuring sensor **49** and the processor **70**. The processor **70** controls the distance-measuring sensor **49** and acquires a result (for example, a distance or three-dimensional information measured by the distance-measuring sensor **49**) of distance measurement performed by the distance-measuring sensor **49**.

[0078] The light source device **24** is connected to the external I/F **68** as one of the first external devices, and the external I/F **68** controls the transmission and the reception of various types of information between the light source device **24** and the processor **70**. The light source device **24** supplies light to the illumination device **50** under the control of the processor **70**. The illumination device **50** performs irradiation with the light supplied from the light source device **24**.

[0079] The receiving device **62** is connected to the external I/F **68** as one of the first external devices, and the processor **70** acquires the instruction received by the receiving device **62** via the external I/F **68** and executes processing in response to the acquired instruction.

[0080] The image processing device **25** comprises a computer **76** and an external I/F **78**. The computer **76** comprises a processor **80**, a RAM **82**, and an NVM **84**. The processor **80**, the RAM **82**, the NVM **84**, and the external I/F **78** are connected to a bus **86**. Here, the image processing device **25** is an example of the "medical support device" according to the technology of the present disclosure, the computer **76** is an example of the "computer" according to the technology of the present disclosure, and the processor **80** is an example of the "processor" according to the technology of the present disclosure.

[0081] In addition, since a hardware configuration (that is, the processor **80**, the RAM **82**, and the NVM **84**) of the computer **76** is essentially the same as a hardware configuration of the computer **64**, the description of the hardware configuration of the computer **76** will be omitted here.

[0082] The external I/F **78** controls the transmission and the reception of various types of information between one or more devices (hereinafter, also referred to as "second external devices") outside the image processing device **25** and the processor **80**. An example of the external I/F **78** is a USB interface.

[0083] The control device **22** is connected to the external I/F **78** as one of the second external devices. In the example shown in FIG. **3**, the external I/F **68** of the control device **22** is connected to the external I/F **78**. The external I/F **78** controls the transmission and the reception of various types of information between the processor **80** of the image processing device **25** and the processor **70** of the control device **22**. For example, the processor **80** acquires the captured image **40** (see FIG. **1**) from the processor **70** of the control device **22** via the external I/Fs **68** and **78** and performs various types of image processing on the acquired captured image **40**.

[0084] The display device **13** is connected to the external I/F **78** as one of the second external devices. The processor **80** controls the display device **13** via the external I/F **78** such that various types of information (for example, the captured image **40** subjected to various types of image processing) are displayed on the display device **13**.

[0085] As one of treatments for the duodenum using the duodenoscope **12**, a treatment called endoscopic retrograde cholangio-pancreatography (ERCP) examination is known. As shown in FIG. **4** as an example, in the ERCP examination, for example, first, the duodenoscope **12** is inserted into a duodenum **88** through the esophagus and the stomach. In this case, an insertion state of the duodenoscope **12** may be checked by using an X-ray image obtained by X-ray imaging. Then, the distal end part **46** of the duodenoscope **12** reaches the vicinity of a duodenal papilla **90** (hereinafter, also simply referred to as a "papilla **90**") present in the intestinal wall of the duodenum **88**.

[0086] In the ERCP examination, for example, a cannula **54**A, which is a type of treatment tool **54**, is inserted into the papilla **90** from the duodenum **88** side. Here, the papilla **90** is a part that protrudes from the intestinal wall of the duodenum **88**. An end part of one or more ducts **92** leading to internal organs (for example, a gallbladder and a pancreas), that is, an opening **90A1** leading to the duct **92** is present at a papillary protuberance **90**A, which is a distal end part of the papilla **90**. In other words, the duct **92** leads to the opening **90A1** present in the papillary protuberance **90**A.

[0087] Examples of one or more ducts **92** include a bile duct **92**A and a pancreatic duct **92**B. The opening **90A1** may be individually present for each of the bile duct **92**A and the pancreatic duct **92**B, or may be present in common to the bile duct **92**A and the pancreatic duct **92**B. The bile duct **92**A is an example of the "bile duct" according to the technology

of the present disclosure, and the pancreatic duct **92**B is an example of the "pancreatic duct" according to the technology of the present disclosure. In the following, for convenience of description, in a case where it is not necessary to distinguish between the bile duct **92**A and the pancreatic duct **92**B, the bile duct **92**A and the pancreatic duct **92**B will be referred to as the "duct **92**".

[0088] In the ERCP examination, the X-ray imaging is performed in a state in which a contrast agent is injected into the duct **92** through the opening **90**A**1**. Here, in a case in which the doctor **14** inserts the cannula **54**A into the duct **92**, it is necessary to accurately grasp a running direction **94** of the duct **92**. In particular, since the running direction **94** in the vicinity of the opening **90**A**1** substantially matches the insertion direction of the cannula **54**A with respect to the opening **90**A**1**, it is very important for the doctor **14** to visually grasp the running direction **94** in the vicinity of the opening **90**A**1**.

[0089] Examples of the running direction **94** of the duct **92** include a running direction **94**A of the bile duct **92**A and a running direction **94**B of the pancreatic duct **92**B. It is effective for the doctor **14** to visually grasp the running direction **94**A in a case in which the cannula **54**A is inserted into the bile duct **92**A, and it is effective for the doctor **14** to visually grasp the running direction **94**B in a case in which the cannula **54**A is inserted into the pancreatic duct **92**B. Here, although an example in which the cannula **54**A is inserted into the opening **90**A**1** has been described, even in a case where a catheter or a guide wire is inserted into the duct **92** as the treatment tool **54**, or even in a case where a papillotomy knife is brought into contact with the opening **90**A**1** as the treatment tool **54**, it is very effective for the doctor **14** to visually grasp the running direction **94**.

[0090] Thus, in view of these circumstances, in the present embodiment, for example, as shown in FIG. **5**, the processor **80** of the image processing device **25** performs the medical support processing.

[0091] A medical support program **96** is stored in the NVM **84**. The medical support program **96** is an example of the "program" according to the technology of the present disclosure. The processor **80** reads out the medical support program **96** from the NVM **84** and executes the read medical support program **96** on the RAM **82** to perform the medical support processing. The medical support processing is realized by the processor **80** operating as a first acquisition unit **80**A, a second acquisition unit **80**B, a third acquisition unit **80**C, an adjustment unit **80**D, a synthesis unit **80**E, and a control unit **80**F according to the medical support program **96** executed on the RAM **82**.

[0092] A 3D construction model **98**, a papilla detection model **100**, a type prediction model **102**, and a support information table **104** are stored in the NVM **84**. As will be described in detail below, the 3D construction model **98** is used by the first acquisition unit **80**A, the papilla detection model **100** is used by the adjustment unit **80**D, and the type prediction model **102** and the support information table **104** are used by the control unit **80**F.

[0093] As shown in FIG. **6** as an example, the first acquisition unit **80**A acquires a first duodenum image **108** based on a time-series image group **106**. The acquisition of the first duodenum image **108** is realized, for example, by generating the first duodenum image **108** by using the 3D construction model **98**.

[0094] In order to realize the generation of the first duodenum image **108**, first, the first acquisition unit **80**A acquires the captured image **40** generated by being captured by the camera **48** according to an imaging frame rate (for example, several tens of frames/second) in units of one frame from the camera **48**. The units of one frame are an example of the "units of a designated number of frames" according to the technology of the present disclosure. In addition, here, although the units of one frame are exemplified, this is merely an example, and units of a designated number of frames including two or more of frames may be used.

[0095] The first acquisition unit **80**A holds the time-series image group **106**. The time-series image group **106** is a plurality of frames of the captured images **40** in a time series in which the observation target **21** is captured. The time-series image group **106** includes, for example, a predetermined number of frames (for example, a predetermined number of frames within a range of several tens to several hundreds of frames) of captured images **40**. In addition, the papilla **90** is captured in one or more frames of the captured images **40** among the predetermined number of frames of captured images **40**. That is, one or more frames of the captured images **40** include a papilla image **110** showing the papilla **90**.

[0096] The first acquisition unit **80**A updates the time-series image group **106** using a FIFO method each time the captured image **40** is acquired from the camera **48**.

[0097] Here, a form example in which the time-series image group **106** is held and updated by the first image acquisition unit **80**A has been described, but this is merely an example. For example, the time-series image group **106** may be held and updated in a memory, such as the RAM **82**, which is connected to the processor **80**.

[0098] The 3D construction model **98** is a generation model using a neural network, and generates the first duodenum image **108**, which is a three-dimensional image, based on the time-series image group **106**. The 3D construction model **98** is a trained model obtained by performing machine learning using a plurality of images corresponding to the time-series image group **106** as training data on the neural network (for example, a recurrent neural network). An example of the 3D construction model **98** includes RNN-SLAM. In addition, the RNN-SLAM is merely an example, and the 3D construction model **98** may be an auto-encoder such as a VAE or a GAN, or any other trained generative network capable of generating the first duodenum image **108**.

[0099] The first acquisition unit **80**A inputs the time-series image group **106** to the 3D construction model **98**. In response to this, the 3D construction model **98** generates and outputs the first duodenum image **108** based on the time-series image group **106**. The first acquisition unit **80**A acquires the first duodenum image **108** output from the 3D construction model **98**.

[0100] The first duodenum image **108** includes a first papilla region **108**A. The first papilla region **108**A is information capable of three-dimensionally specifying the papilla **90** included in the duodenum **88**. In the example shown in FIG. **6**, an image region in which the papilla **90** is represented as a three-dimensional image is shown as an example of the first papilla region **108**A. The first duodenum image **108** is generated each time the time-series image group **106**

is updated by the first acquisition unit **80**A by acquiring the captured image **40** in units of one frame.

[0101] In the present embodiment, the papilla **90** is an example of the "reference part" and the "duodenal papilla" according to the technology of the present disclosure. The first papilla region **108**A is an example of the "first reference part information" and the "first image region" according to the technology of the present disclosure.

[0102] As shown in FIG. **7** as an example, volume data **112** is stored in the NVM **84**. The volume data **112** is an image obtained by stacking a plurality of two-dimensional slice images **114** obtained by imaging the subject **20** according to the modality and dividing the stacked images into voxels V. Examples of the modality include a CT apparatus. The CT apparatus is merely an example, and other examples of the modality include an MRI apparatus and an ultrasound diagnostic device. The position of each of all the voxels V that define the three-dimensional image is specified by three-dimensional coordinates.

[0103] The second acquisition unit **80**B acquires information related to an observation target part from the volume data **112**. In the example shown in FIG. **7**, an observation target part image **116**, which is a three-dimensional image showing the observation target part, is shown as the information related to the observation target part. That is, the second acquisition unit **80**B acquires the observation target part image **116** as the information related to the observation target part from the volume data **112**.

[0104] The observation target part is the duodenum **88**, including the papilla **90**, and the duct **92** (see FIG. **4**). The observation target part (that is, the observation target part image **116** acquired from the volume data **112** by the second acquisition unit **80**B) is selected, for example, according to an instruction received by the receiving device **62**.

[0105] The observation target part image **116** acquired from the volume data **112** by the second acquisition unit **80**B includes a second duodenum image **118** and a duct image **120**. The second duodenum image **118** is a three-dimensional image showing the duodenum **88**. The second duodenum image **118** includes a second papilla region **118**A. The second papilla region **118**A is an image region in which the papilla **90** is represented as a three-dimensional image. The duct image **120** is an image region in which the duct **92** is represented as a three-dimensional image. The duct image **120** includes a bile duct image **120**A and a pancreatic duct image **120**B. The bile duct image **120**A is an image region in which the bile duct **92**A is represented as a three-dimensional image, and the pancreatic duct image **120**B is an image region in which the pancreatic duct **92**B is represented as a three-dimensional image. In the present embodiment, the second papilla region **118**A is an example of the "second reference part information" and the "second image region" according to the technology of the present disclosure.

[0106] As shown in FIG. **8** as an example, the adjustment unit **80**D detects the papilla image **110** in the captured image **40** by performing object detection processing using the papilla detection model **100** on the captured image **40**. The papilla detection model **100** is a trained model for object detection using an AI method and is optimized by performing machine learning using first training data on a neural network. The first training data is a plurality of data items (that is, data corresponding to a plurality of frames) in which first example data and first correct answer data have been associated with each other. The first example data is an image corresponding to the captured image **40**. The first correct answer data refers to correct answer data (that is, an annotation) for the first example data. An example of the first correct answer data includes an annotation capable of specifying an image region in which the papilla **90** is captured.

[0107] The adjustment unit **80**D acquires the captured image **40** from the camera **48** and inputs the acquired captured image **40** to the papilla detection model **100**. Accordingly, the papilla detection model **100** detects the papilla image **110** from the input captured image **40** and outputs specific information **122** (for example, a plurality of coordinates indicating the position of the papilla image **110** in the captured image **40**) capable of specifying the detected papilla image **110**. The adjustment unit **80**D acquires the specific information **122** output from the papilla detection model **100**.

[0108] The adjustment unit **80**D acquires a distance **125** measured by the distance-measuring sensor **49** in synchronization with the imaging performed by the camera **48** in order to obtain the captured image **40** input to the papilla detection model **100**. The distance **125** refers to, for example, a distance from a reference position (here, as an example, the position of an imaging surface of the camera **48** that has performed imaging in order to obtain the captured image **40** input to the papilla detection model **100**) to an intestinal wall **88**A including the papilla **90** in the duodenum **88**. In the example shown in FIG. **8**, a pylorus is exemplified as an example of the reference position. The distance-measuring sensor **49** measures a plurality of distances **125** from the reference position to a plurality of points in the intestinal wall **88**A.

[0109] The adjustment unit **80**D calculates a first reference distance **126**, which is a distance to the papilla **90** indicated by the papilla image **110** specified by the specific information **122**. For example, in a case in which a plurality of measurement points are present in the papilla **90** indicated by the papilla image **110** specified by the specific information **122**, an average value of the plurality of distances **125** for the plurality of measurement points is calculated as the first reference distance **126**. In addition, here, although the average value of the plurality of distances **125** for the plurality of measurement points in the papilla **90** is shown, a statistical value such as a median value, a most frequent value, or a maximum value of the plurality of distances **125** for the plurality of measurement points in the papilla **90** may be used.

[0110] The adjustment unit **80**D measures, as a second reference distance **128**, a distance from a reference position (here, as an example, the pylorus) to the papilla **90** indicated by the second papilla region **118**A, using the second duodenum image **118** included in the observation target part image **116** acquired by the second acquisition unit **80**B.

[0111] As shown in FIG. **9** as an example, the adjustment unit **80**D calculates a difference degree **129** between the first reference distance **126** and the second reference distance **128**. Examples of the difference degree **129** include a ratio of the second reference distance **128** to the first reference distance **126**, an absolute value of a difference between the first reference distance **126** and the second reference distance **128**, or the like.

[0112] The adjustment unit **80**D adjusts the scale of the observation target part image **116** acquired by the second acquisition unit **80**B with reference to the difference degree

129. For example, the adjustment unit 80D adjusts the scale of the observation target part image 116 by using the difference degree 129 itself as the magnification, or adjusts the scale of the observation target part image 116 by the magnification calculated based on the difference degree 129. An example of the magnification calculated based on the difference degree 129 includes a magnification derived from a calculation expression in which the difference degree 129 is set as an independent variable and the magnification is set as a dependent variable.

[0113] As shown in FIG. 10 as an example, the synthesis unit 80E generates a synthesis image 123 based on the first duodenum image 108 acquired by the first acquisition unit 80A and on the observation target part image 116 of which the scale is adjusted by the adjustment unit 80D. In order to generate the synthesis image 123, first, the synthesis unit 80E adjusts the duct image 120 by matching the first papilla region 108A included in the first duodenum image 108 acquired by the first acquisition unit 80A with the second papilla region 118A included in the observation target part image 116 of which the scale is adjusted by the adjustment unit 80D. For example, the synthesis unit 80E performs registration between the observation target part image 116 and the first duodenum image 108 with reference to the first papilla region 108A and the second papilla region 118A. That is, the observation target part image 116 is registered with the first duodenum image 108 such that the first papilla region 108A matches the second papilla region 118A. Here, the registration of the observation target part image 116 with respect to the first duodenum image 108 is performed, but this is realized, for example, by registering a plurality of feature points common between the first papilla region 108A and the second papilla region 118A.

[0114] In a state in which the observation target part image 116 is registered with the first duodenum image 108 in this way, the synthesis unit 80E synthesizes the duct image 120 with the first duodenum image 108 to generate a synthesis image 123. That is, the synthesis unit 80E synthesizes the duct image 120 with the first duodenum image 108 by assigning the duct image 120 to a position (that is, a position corresponding to the position of the duct image 120 connected to the second papilla region 118A) corresponding to the second papilla region 118A in the first papilla region 108A.

[0115] As shown in FIG. 11 as an example, the third acquisition unit 80C acquires a three-dimensional running direction image 124 as information related to the running direction 94 of the duct 92 leading to the duodenum 88 (see FIG. 4) based on the synthesis image 123 generated by the synthesis unit 80E. The three-dimensional running direction image 124 is an image in which the running direction 94 of the duct 92 is represented by a three-dimensional image. The three-dimensional running direction image 124 is an example of the "direction information" and the "three-dimensional direction image" according to the technology of the present disclosure.

[0116] The third acquisition unit 80C performs thinning processing on the duct image 120 synthesized with the first duodenum image 108 to generate a three-dimensional running direction image 124 (for example, a curve indicating the running direction 94) indicating the running direction 94 of the duct 92 indicated by the duct image 120. The running direction 94 of the duct 92 can also be referred to as an axial direction of the duct image 120.

[0117] The three-dimensional running direction image 124 includes a three-dimensional bile duct direction image 124A and a three-dimensional pancreatic duct direction image 124B. The three-dimensional bile duct direction image 124A shows the running direction 94A (see FIG. 4) of the bile duct 92A, and is obtained by thinning the bile duct image 120A. The three-dimensional pancreatic duct direction image 124B shows the running direction 94B (see FIG. 4) of the pancreatic duct 92B, and is obtained by thinning the pancreatic duct image 120B.

[0118] The third acquisition unit 80C acquires the captured image 40 including the papilla image 110 from the camera 48. The third acquisition unit 80C specifies a three-dimensional region 108B corresponding to the captured image 40 acquired from the camera 48 from the synthesis image 123. The captured image 40 acquired from the camera 48 by the third acquisition unit 80C corresponds to a two-dimensional image in which the three-dimensional region 108B is projected onto a plane. The third acquisition unit 80C sets the captured image 40 as a projection surface at a position directly facing the three-dimensional region 108B in the synthesis image 123. The third acquisition unit 80C generates a synthesized captured image 130 by rendering the three-dimensional running direction image 124 in the captured image 40 set in the synthesis image 123.

[0119] The synthesized captured image 130 is an image (for example, an image in which a two-dimensional running direction image 132 is superimposed on the captured image 40) including the captured image 40 and the two-dimensional running direction image 132. The two-dimensional running direction image 132 is an image (that is, an image in which the three-dimensional running direction image 124 is projected onto the captured image 40) in which the three-dimensional running direction image 124 is rendered on the captured image 40. The two-dimensional running direction image 132 includes a two-dimensional bile duct direction image 132A and a two-dimensional pancreatic duct direction image 132B. The two-dimensional bile duct direction image 132A is an image in which the three-dimensional bile duct direction image 124A is rendered on the captured image 40. The two-dimensional pancreatic duct direction image 132B is an image in which the three-dimensional pancreatic duct direction image 124B is rendered on the captured image 40.

[0120] As shown in FIG. 12 as an example, the third acquisition unit 80C acquires a simplified running direction image 136 obtained by simplifying the two-dimensional running direction image 132 in the synthesized captured image 130. The simplified running direction image 136 is an example of the "running direction image" according to the technology of the present disclosure.

[0121] In order to generate the simplified running direction image 136, first, the third acquisition unit 80C extracts a tangent line 134 from the two-dimensional running direction image 132. The tangent line 134 is a tangent line with respect to an end (that is, a position where the opening 90A1 (see FIG. 4) is captured) on the papilla image 110 side in the two-dimensional running direction image 132. The tangent line 134 is classified into a bile duct tangent line 134A and a pancreatic duct tangent line 134B. The bile duct tangent line 134A is a tangent line with respect to an end (that is, a position at which the opening 90A1 leading to the bile duct 92A (see FIG. 4) is captured) on the papilla image 110 side in the two-dimensional bile duct direction image 132A. The

pancreatic duct tangent line **134**B is a tangent line with respect to an end (that is, a position at which the opening **90**A**1** leading to the pancreatic duct **92**B (see FIG. **4**) is captured) on the papilla image **110** side in the two-dimensional pancreatic duct direction image **132**B.

[0122] The third acquisition unit **80**C generates a simplified running direction image **136** by imaging the running direction **94** of the duct **92** in accordance with the synthesized captured image **130** based on the two-dimensional running direction image **132**. For example, the third acquisition unit **80**C generates the simplified running direction image **136** by imaging the tangent line **134**. The simplified running direction image **136** is an image showing an arrow formed along the tangent line **134** with an end (that is, a position at which the opening **90**A**1** leading to the duct **92** (see FIG. **4**) is captured) on the papilla image **110** side of the tangent line **134** as a start point. The direction indicated by the arrow shown in the simplified running direction image **136** corresponds to the running direction **94** of the duct **92** at the position of the opening **90**A**1**.

[0123] In the present embodiment, the start point of the arrow indicated by the simplified running direction image **136** is an example of the "base point" according to the technology of the present disclosure, the running direction **94** of the duct **92** is an example of the "first direction" and the "direction corresponding to the insertion direction" according to the technology of the present disclosure, and the simplified running direction image **136** is an example of the "image indicating the first direction" according to the technology of the present disclosure.

[0124] The simplified running direction image **136** includes a simplified bile duct direction image **136**A and a simplified pancreatic duct direction image **136**B. The simplified bile duct direction image **136**A is an image showing an arrow formed along the bile duct tangent line **134**A with an end (that is, a position at which the opening **90**A**1** leading to the bile duct **92**A (see FIG. **4**) is captured) on the papilla image **110** side of the bile duct tangent line **134**A as a start point. The direction indicated by the arrow shown in the simplified bile duct direction image **136**A corresponds to the running direction **94**A (see FIG. **4**) of the bile duct **92**A at the position of the opening **90**A**1**, and is referred to by the doctor **14** as the insertion direction of the cannula **54**A or the like with respect to the bile duct **92**A. The insertion direction of the cannula **54**A or the like with respect to the bile duct **92**A is an example of the "insertion direction of a medical instrument to be inserted into a duct" according to the technology of the present disclosure.

[0125] The simplified pancreatic duct direction image **136**B is an image showing an arrow formed along the pancreatic duct tangent line **134**B with an end (that is, a position at which the opening **90**A**1** leading to the pancreatic duct **92**B (see FIG. **4**) is captured) on the papilla image **110** side of the pancreatic duct tangent line **134**B as a start point. The direction indicated by the arrow shown in the simplified pancreatic duct direction image **136**B corresponds to the running direction **94**B (see FIG. **4**) of the pancreatic duct **92**B at the position of the opening **90**A**1**, and is referred to by the doctor **14** as the insertion direction of the cannula **54**A or the like with respect to the pancreatic duct **92**B. The insertion direction of the cannula **54**A or the like with respect to the pancreatic duct **92**B is an example of the "insertion direction of a medical instrument to be inserted into a duct" according to the technology of the present disclosure.

[0126] The simplified bile duct direction image **136**A and the simplified pancreatic duct direction image **136**B are generated in a distinguishable manner. For example, the third acquisition unit **80**C generates the simplified bile duct direction image **136**A and the simplified pancreatic duct direction image **136**B in a distinguishable manner by changing the color, density, brightness, and/or pattern of the simplified bile duct direction image **136**A and the simplified pancreatic duct direction image **136**B.

[0127] As shown in FIG. **13** as an example, the control unit **80**F predicts the type of the papilla **90** captured in the synthesized captured image **130** by performing image recognition processing using the type prediction model **102** on the synthesized captured image **130** acquired by the third acquisition unit **80**C. Then, the control unit **80**F acquires type information **138** (for example, the name of the type of the papilla **90**) indicating a predicted type.

[0128] The type prediction model **102** is obtained by performing machine learning using second training data on the neural network to optimize the neural network. The second training data is a plurality of data items (that is, data corresponding to a plurality of frames) in which second example data and second correct answer data have been associated with each other. The second example data is, for example, an image (for example, an image corresponding to the synthesized captured image **130** to which the simplified running direction image **136** is added) obtained by assigning an image corresponding to the simplified running direction image **136** to an image obtained by imaging a part (for example, an inner wall of the duodenum) that can be a target for the ERCP examination. The second correct answer data refers to correct answer data (that is, an annotation) corresponding to the second example data. An example of the second correct answer data is an annotation indicating the type of the papilla **90**.

[0129] In addition, here, although the image obtained by assigning the image corresponding to the simplified running direction image **136** to the image obtained by imaging a part that can be a target for the ERCP examination is shown as example data included in the second training data, this is merely an example. For example, the example data included in the second training data may be an image itself (that is, an image corresponding to the captured image **40** to which the simplified running direction image **136** is not assigned) obtained by imaging a part that can be a target for the ERCP examination.

[0130] In addition, here, although the form example in which only one type prediction model **102** is used by the control unit **80**F is described, this is merely an example. For example, the type prediction model **102** selected from a plurality of type prediction models **102** may be used by the control unit **80**F. In this case, various type prediction models **102** are created by performing machine learning specialized for each procedure (for example, the position of the duodenoscope **12** with respect to the papilla **90**) of the ERCP examination, and the type prediction model **102** corresponding to the procedure of the ERCP examination currently being performed may be selected and used by the control unit **80**F.

[0131] The control unit **80**F inputs the synthesized captured image **130** acquired by the third acquisition unit **80**C

to the type prediction model **102**. Accordingly, the type prediction model **102** predicts the type of the papilla **90** included in the input synthesized captured image **130** and outputs type information **138** indicating a predicted type. The control unit **80**F acquires the type information **138** output from the type prediction model **102**.

[0132] The control unit **80**F derives support information **140**, corresponding to the type information **138** acquired from the type prediction model **102**, from the support information table **104**. The support information table **104** is a table in which papilla type information **104**A, merging format information **104**B, and a schema **104**C that have a correspondence relationship with each other are associated with each other. The papilla type information **104**A is information (for example, the name of the type of the papilla **90**) capable of specifying the type of the papilla **90**. The merging format information **104**B is determined for each type of the papilla **90**, and is information for specifying a merging format in which the bile duct and the pancreatic duct merge with each other. The schema **104**C is a schematic diagram schematically showing an aspect in which the bile duct and the pancreatic duct merge with each other.

[0133] The support information **140** is information including the papilla type information **104**A, the merging format information **104**B, and the schema **104**C corresponding to the type information **138** acquired from the type prediction model **102** by the control unit **80**F.

[0134] As shown in FIG. **14** as an example, the control unit **80**F displays the synthesized captured image **130** acquired by the third acquisition unit **80**C on the screen **36**A, displays the support information **140** on the screen **36**B, and displays the synthesis image **123** generated by the synthesis unit **80**E on the screen **36**C. The synthesized captured image **130** displayed on the screen **36**A is updated in real time. In this case, for example, the synthesis image **123** is updated each time the captured image **40** is acquired by the first acquisition unit **80**A and the time-series image group **106** is updated, and the synthesized captured image **130** including the two-dimensional running direction image **132** is updated and the simplified running direction image **136** is also updated accordingly each time the synthesis image **123** is updated.

[0135] The update of the synthesized captured image **130** displayed on the screen **36**A may be performed each time the first acquisition unit **80**A acquires the captured image **40** in units of one frame, or may be performed each time the first acquisition unit **80**A acquires the captured image **40** in units of a plurality of frames.

[0136] Next, the operation of the portion of the duodenoscope system **10** according to the technology of the present disclosure will be described with reference to FIGS. **15**A and **15**B.

[0137] FIGS. **15**A and **15**B show an example of a flow of the medical support processing executed by the processor **80**. The flow of the medical support processing shown in FIGS. **15**A and **15**B is an example of the "medical support method" according to the technology of the present disclosure.

[0138] In the medical support processing shown in FIG. **15**A, first, in step ST**10**, the first acquisition unit **80**A determines whether or not one frame of imaging for the observation target **21** is performed by the camera **48**. In step ST**10**, in a case where the camera **48** does not perform one frame of imaging for the observation target **21**, the determination result is "No", and the determination in step ST**10** is performed again. In step ST**10**, in a case in which the camera **48** performs one frame of imaging for the observation target **21**, the determination result is "Yes", and the medical support processing proceeds to step ST**12**.

[0139] In step ST**12**, the first acquisition unit **80**A acquires one frame of the captured image **40** obtained by imaging the observation target **21** with the camera **48** (see FIG. **6**). After the processing in step ST**12** is executed, the medical support processing proceeds to step ST**14**.

[0140] In step ST**14**, the first acquisition unit **80**A determines whether or not a predetermined number of frames of the captured images **40** is held. In a case where the predetermined number of frames of captured images **40** is not held in step ST**14**, the determination result is "No", and the medical support processing proceeds to step ST**10**. In a case where the predetermined number of frames of captured images **40** is held in step ST**14**, the determination result is "Yes", and the medical support processing proceeds to step ST**16**.

[0141] In step ST**16**, the first acquisition unit **80**A updates the time-series image group **106** by adding the captured image **40** acquired in step ST**12** to the time-series image group **106** using the FIFO method (see FIG. **6**). After the processing in step ST**16** is executed, the medical support processing proceeds to step ST**18**.

[0142] In step ST**18**, the first acquisition unit **80**A acquires the first duodenum image **108** by inputting the time-series image group **106** to the 3D construction model **98**. After the processing in step ST**18** is executed, the medical support processing proceeds to step ST**20**.

[0143] In step ST**20**, the second acquisition unit **80**B acquires the observation target part image **116** from the volume data **112** (see FIG. **7**). After the processing in step ST**20** is executed, the medical support processing proceeds to step ST**22**.

[0144] In step ST**22**, the adjustment unit **80**D acquires the first reference distance **126** (see FIG. **8**) based on the captured image **40** used to acquire the first duodenum image **108** and on a distance measurement result obtained by the distance-measuring sensor **49**, and acquires the second reference distance **128** (see FIG. **8**) using the second duodenum image **118** included in the observation target part image **116** acquired by the second acquisition unit. After the processing in step ST**22** is executed, the medical support processing proceeds to step ST**24**.

[0145] In step ST**24**, the adjustment unit **80**D adjusts the scale of the observation target part image **116** acquired in step ST**20** based on the difference degree **129** between the first reference distance **126** and the second reference distance **128** acquired in step ST**22** (see FIG. **9**). After the processing in step ST**24** is executed, the medical support processing proceeds to step ST**26**.

[0146] In step ST**26**, the synthesis unit **80**E adjusts the duct image **120** by matching the first papilla region **108**A included in the first duodenum image **108** acquired in step ST**18** with the second papilla region **118**A included in the observation target part image **116** of which the scale is adjusted in step ST**24**. The synthesis unit **80**E generates the synthesis image **123** by synthesizing the duct image **120** with the first duodenum image **108** (see FIG. **10**). After the processing in step ST**26** is executed, the medical support processing proceeds to step ST**28**.

[0147] In step ST**28**, the thinning processing is performed on the duct image **120** to generate the three-dimensional running direction image **124** indicating the running direction **94** of the duct **92** indicated by the duct image **120** (see FIG. **11**). After the processing in step ST**28** is executed, the medical support processing proceeds to step ST**30** shown in FIG. **15**B.

[0148] In step ST**30** shown in FIG. **15**B, the third acquisition unit **80**C acquires the captured image **40** including the papilla image **110** from the camera **48** (refer to FIG. **11**). Then, the third acquisition unit **80**C specifies the three-dimensional region **108**B, corresponding to the captured image **40** acquired from the camera **48**, from the synthesis image **123** (see FIG. **11**). After the process in step ST**30** is executed, the medical support processing proceeds to step ST**32**.

[0149] In step ST**32**, the third acquisition unit **80**C sets the captured image **40** as the projection surface at a position directly facing the three-dimensional region **108**B in the synthesis image **123**. Then, the third acquisition unit **80**C renders the three-dimensional running direction image **124** on the captured image **40** set in the synthesis image **123** to generate the synthesized captured image **130** (refer to FIG. **11**).

[0150] After the processing in step ST**32** is executed, the medical support processing proceeds to step ST**34**.

[0151] In step ST**34**, the third acquisition unit **80**C extracts the tangent line **134** from the two-dimensional running direction image **132** included in the synthesized captured image **130** (see FIG. **12**). After the process in step ST**34** is executed, the medical support processing proceeds to step ST**36**.

[0152] In step ST**36**, the third acquisition unit **80**C generates the simplified running direction image **136** along the tangent line **134** based on the tangent line **134** (see FIG. **12**). After the process in step ST**36** is executed, the medical support processing proceeds to step ST**38**.

[0153] In step ST**38**, the control unit **80**F derives the support information **140** based on the synthesized captured image **130** (refer to FIG. **13**). After the processing in step ST**38** is executed, the medical support processing proceeds to step ST**40**.

[0154] In step ST**40**, the control unit **80**F displays the synthesized captured image **130** generated in step ST**32** on the screen **36**A, displays the support information **140** derived in step ST**38** on the screen **36**B, and displays the synthesis image **123** generated in step ST**26** on the screen **36**C. After the processing in step ST**40** is executed, the medical support processing proceeds to step ST**42**.

[0155] In step ST**42**, the control unit **80**F determines whether or not a medical support processing end condition is satisfied. An example of the medical support processing end condition is a condition (for example, a condition in which an instruction to end the medical support processing is received by the receiving device **62**) in which an instruction to end the medical support processing is issued to the duodenoscope system **10**.

[0156] In step ST**42**, in a case in which the medical support processing end condition is not satisfied, the determination result is "No", and the medical support processing proceeds to step ST**10** shown in FIG. **15**A. In a case in which the medical support processing end condition is satisfied in step ST**42**, an affirmative determination is made, and the medical support processing ends.

[0157] As described above, in the duodenoscope system **10**, the first duodenum image **108** is generated based on the captured image **40**, and the first papilla region **108**A is acquired from the first duodenum image **108**. In addition, the second papilla region **118**A and the three-dimensional running direction image **124** are acquired from the volume data **112**. In addition, the three-dimensional running direction image **124** adjusted by matching the first papilla region **108**A with the second papilla region **118**A is imaged in accordance with the captured image **40**. Accordingly, the simplified running direction image **136** is generated (see FIG. **12**). Then, the synthesized captured image **130** is displayed on the screen **36**A. The simplified running direction image **136** is displayed in the synthesized captured image **130** (FIG. **14**). The direction indicated by the arrow shown in the simplified running direction image **136** corresponds to the running direction **94** of the duct **92** at the position of the opening **90**A**1**. Therefore, the doctor **14** who observes the synthesized captured image **130** can be made to visually recognize the running direction **94** of the duct **92** leading to the duodenum **88** through the synthesized captured image **130**.

[0158] In addition, in the duodenoscope system **10**, the duct **92** includes the bile duct **92**A and the pancreatic duct **92**B. Therefore, the doctor **14** who observes the synthesized captured image **130** can be made to visually recognize the running direction **94**A of the bile duct **92**A leading to the duodenum **88** and the running direction **94**B of the pancreatic duct **92**B leading to the duodenum **88** through the synthesized captured image **130**.

[0159] In addition, in the duodenoscope system **10**, the position of the three-dimensional running direction image **124** is adjusted by performing the registration between the first papilla region **108**A and the second papilla region **118**A. Both the first papilla region **108**A and the second papilla region **118**A are image regions indicating the papilla **90**. Therefore, the first papilla region **108**A and the second papilla region **118**A can be easily registered. As a result, the position of the three-dimensional running direction image **124** can be easily adjusted.

[0160] In addition, in the duodenoscope system **10**, the simplified running direction image **136** is generated based on the three-dimensional running direction image **124** adjusted by performing the registration between the first papilla region **108**A and the second papilla region **118**A. The first papilla region **108**A is an image region obtained from the first duodenum image **108** generated based on the captured image **40**, and the second papilla region **118**A is an image region obtained from the observation target part image **116** acquired from the volume data **112**. Accordingly, the first papilla region **108**A and the second papilla region **118**A used for generating the simplified running direction image **136** can be easily obtained. As a result, the simplified running direction image **136** can be easily generated.

[0161] In addition, in the duodenoscope system **10**, the first duodenum image **108** is generated based on the updated captured image **40** each time the captured image **40** is updated in units of one frame. In addition, the simplified running direction image **136** is generated based on the three-dimensional running direction image **124** each time the first duodenum image **108** is generated. Then, the synthesized captured image **130** based on the updated captured image **40** is displayed on the screen **36**A, and each time the simplified running direction image **136** is generated, the

generated simplified running direction image **136** is displayed in the synthesized captured image **130** (see FIG. **14**). Therefore, each time the captured image **40** is updated, the doctor **14** who observes the synthesized captured image **130**, which is generated based on the captured image **40**, can be made to visually recognize the running direction **94** of the duct **92** leading to the duodenum **88** through the synthesized captured image **130**.

[0162] In addition, in the duodenoscope system **10**, the simplified running direction image **136** displayed in the synthesized captured image **130** is updated in real time. Therefore, the doctor **14** who observes the synthesized captured image **130** can be made to visually recognize the current running direction **94** of the duct **92**, corresponding to the synthesized captured image **130** displayed on the screen **36**A, through the synthesized captured image **130**.

[0163] In addition, in the duodenoscope system **10**, an image in which the three-dimensional running direction image **124** is rendered on the captured image **40** set as a projection surface at a position directly facing the three-dimensional region **108**B in the synthesis image **123** is used as the simplified running direction image **136**. Therefore, the running direction **94** of the duct **92** can be displayed as a two-dimensional image in the captured image **40**.

[0164] In addition, in the duodenoscope system **10**, the simplified running direction image **136** is displayed on the screen **36**A along the tangent line **134**. The tangent line **134** is a tangent line with respect to the duct **92** at the opening **90**A**1** of the papilla **90**, and is associated with the papilla image **110** showing the papilla **90**. Therefore, the simplified running direction image **136** is displayed on the screen **36**A in association with the papilla image **110**. Therefore, the doctor **14** who observes the synthesized captured image **130** can be made to visually recognize the relationship (for example, the positional relationship) between the running direction **94** of the duct **92** and the papilla **90**.

[0165] In addition, in the duodenoscope system **10**, an image showing the running direction **94** along the duct **92** with the opening **90**A**1** of the papilla **90** as a start point is displayed in the synthesized captured image **130** as the simplified running direction image **136**. Therefore, the doctor **14** who observes the synthesized captured image **130** can be made to visually recognize the running direction **94** along the duct **92** with the opening **90**A**1** of the papilla **90** as the start point. In addition, since the running direction **94** along the duct **92** with the opening **90**A**1** of the papilla **90** as a start point is a direction corresponding to the insertion direction of the cannula **54**A or the like, it is possible to support the doctor **14** who observes the synthesized captured image **130** in smoothly inserting the cannula **54**A or the like into the duct **92**.

[0166] In addition, in the duodenoscope system **10**, the scale of the three-dimensional running direction image **124** is adjusted based on the distance **125** measured by the distance-measuring sensor **49** and on the observation target part image **116** acquired from the volume data **112**. Therefore, the two-dimensional running direction image **132** can be generated based on the high-accuracy three-dimensional running direction image **124**.

[0167] In addition, in the above embodiment, the form example in which the simplified running direction image **136** exemplified as an example of the "running direction image" according to the technology of the present disclosure is displayed on the screen **36**A has been described, but this is merely an example. For example, the whole or a part (for example, a part of the image that continues from the opening **90**A**1** to the back side of the duct **92**) of the two-dimensional running direction image **132** may be displayed on the screen **36**A instead of the simplified running direction image **136** or together with the simplified running direction image **136**.

[0168] In the above embodiment, although the form example in which the synthesis unit **80**E adjusts the position of the duct image **120** by comparing the observation target part image **116** with the first duodenum image **108** to perform the registration has been described, the technology of the present disclosure is not limited to this. For example, the synthesis unit **80**E may adjust the position of the duct image **120** by performing the registration between the observation target part image **116** and the first duodenum image **108** by using three-dimensional coordinates defining the pixels of the observation target part image **116** and three-dimensional coordinates defining the pixels of the first duodenum image **108**. In this case, for example, the registration between the observation target part image **116** and the first duodenum image **108** may be performed based on the distance (that is, the plurality of distances **125** measured by the distance-measuring sensor **49**) from the reference position (for example, the position of the pylorus) to the plurality of feature points of the papilla **90**, the three-dimensional coordinates of the plurality of feature points in the first duodenum image **108**, and the three-dimensional coordinates of the plurality of feature points in the observation target part image **116**. The three-dimensional coordinates of the plurality of feature points in the first duodenum image **108** are an example of the "first reference part information" according to the technology of the present disclosure, and the three-dimensional coordinates of the plurality of feature points in the observation target part image **116** are an example of the "second reference part information" according to the technology of the present disclosure.

[0169] In the above embodiment, although the form example has been described in which the synthesis unit **80**E performs the registration between the first duodenum image **108** and the observation target part image **116** by using the first papilla region **108**A and the second papilla region **118**A indicating the papilla **90**, the technology of the present disclosure is not limited to this. For example, the synthesis unit **80**E may perform the registration between the first duodenum image **108** and the observation target part image **116** by using information (for example, three-dimensional coordinates or a three-dimensional image) capable of three-dimensionally specifying a medical marker (for example, a hemostatic clip or the like) included in the duodenum **88** and/or information (for example, three-dimensional coordinates or a three-dimensional image) capable of three-dimensionally specifying the fold of the duodenum **88**. In this case as well, the same effects as those of the above embodiment can be obtained.

[0170] In addition, here, as an example of the "first reference part information" according to the technology of the present disclosure, the information capable of three-dimensionally specifying the papilla **90**, the information capable of three-dimensionally specifying the medical marker, and/or the information capable of three-dimensionally specifying the fold are shown. However, the information capable of three-dimensionally specifying the reference part to be used for the registration may be determined according to the instruction (for example, the instruction received by

the receiving device **62**) given by the doctor **14** who observes the captured image **40** displayed on the screen **36**A. In addition, the front end position (that is, a position in contact with the opening **90**A**1**) of the treatment tool **54** may be detected by performing the image recognition processing using the AI method or a non-AI method according to the instruction (for example, the instruction received by the receiving device **62**) given by the doctor **14** in a case where the treatment tool **54** has reached the opening **90**A**1**, and the information capable of three-dimensionally specifying the detected front end position may be used as the information capable of three-dimensionally specifying the papilla **90**.

[0171] In the above embodiment, the second reference distance **128** is exemplified as an example of the "distance from the endoscope scope to the intestinal wall" according to the technology of the present disclosure, and the form example in which the distance from the pylorus to the papilla **90** is measured as the second reference distance **128** by using the second duodenum image **118** has been described, but this is merely an example. For example, the second reference distance **128** may be measured by using positional information (that is, information indicating the current position of the camera **48**) and posture information (that is, information indicating the posture of the camera **48**), which are obtained by using an optical fiber sensor provided inside the duodenoscope body **18** (for example, the insertion part **44** and the distal end part **46**) in a longitudinal direction. In addition, the second reference distance **128** may be measured using a known electromagnetic navigation method in the related art, without being limited to such an optical fiber method.

[0172] In the above embodiment, the second reference distance **128** is exemplified as an example of the "distance from the endoscope scope to the intestinal wall" according to the technology of the present disclosure, and the distance from the pylorus to the papilla **90** is exemplified as an example of the second reference distance **128**, but these are merely examples. Other examples of the distance from the camera **48** to the intestinal wall **88**A include a distance from the distal end of the distal end part **16** to the intestinal wall **88**A and a distance from the imaging position (that is, the current position of the camera **48**) of the camera **48** to the intestinal wall **88**A.

[0173] In the above embodiment, the form example (see FIG. **6**) in which the first duodenum image **108** is generated based on the time-series image group **106** has been described, but this is merely an example. For example, as shown in FIG. **16**, the first acquisition unit **80**A may generate the first duodenum image **108** based on a plurality of distance images **146**. In this case, for example, the first acquisition unit **80**A acquires the plurality of distance images **146** using a distance image generation model **144**. The acquisition of the plurality of distance images **146** is realized, for example, by generating the plurality of distance images **146** by using the 3D construction model **98**.

[0174] The distance image generation model **144** is a generation model using a neural network, and generates the plurality of distance images **146** based on the time-series image group **106** and the first reference distance **126**. The distance image generation model **144** is a trained model obtained by performing machine learning on a neural network using a plurality of images corresponding to the time-series image group **106** and a distance corresponding to the first reference distance **126** as training data. An example of the distance image generation model **144** is an auto-encoder such as a VAE or a GAN.

[0175] The first acquisition unit **80**A inputs the time-series image group **106** and the first reference distance **126** to the distance image generation model **144**. Accordingly, the distance image generation model **144** generates and outputs the plurality of distance images **146** based on the time-series image group **106** and the first reference distance **126**. The first acquisition unit **80**A acquires the plurality of distance images **146** output from the distance image generation model **144**.

[0176] The first acquisition unit **80**A generates the first duodenum image **108** by using a 3D construction model **148**. The 3D construction model **148** is a generation model using a neural network, and generates the first duodenum image **108** based on the plurality of distance images **146**. The 3D construction model **148** is different from the 3D construction model **98** shown in FIG. **6** in that the 3D construction model **148** is a trained model obtained by performing machine learning on the neural network using a plurality of distance images corresponding to the plurality of distance images **146** instead of the plurality of images corresponding to the time-series image group **106** as the training data.

[0177] The first acquisition unit **80**A inputs the plurality of distance images **146** to the 3D construction model **148**. In response to this, the 3D construction model **148** generates and outputs the first duodenum image **108** based on the plurality of distance images **146**. The first acquisition unit **80**A acquires the first duodenum image **108** output from the 3D construction model **148**. In the duodenoscope system **10**, the first duodenum image **108** acquired by the first acquisition unit **80**A is used in the same manner as in the above embodiment. Accordingly, the same effects as in the above embodiment are obtained.

[0178] In the above embodiment, although the form example in which the third acquisition unit **80**C forms the simplified running direction image **136** along the tangent line **134** with an end (that is, a position at which the opening **90**A**1** leading to the duct **92** (see FIG. **4**) is captured) on the papilla image **110** side of the tangent line **134** as a start point has been described, the technology of the present disclosure is not limited to this. For example, as shown in FIG. **17**, the third acquisition unit **80**C may form the simplified running direction image **136** along an extension line of the tangent line **134**.

[0179] In the example shown in FIG. **17**, the simplified running direction image **136** is disposed such that the distal end of the arrow indicated by the simplified running direction image **136** is positioned at the end (that is, a position where the opening **90**A**1** leading to the duct **92** (see FIG. **4**) is captured) on the papilla image **110** side of the tangent line **134**. Specifically, the simplified bile duct direction image **136**A is formed along an extension line of the bile duct tangent line **134**A such that the arrow indicated by the simplified bile duct direction image **136**A indicates an end (that is, a position at which the opening **90**A**1** leading to the bile duct **92**A (see FIG. **4**) is captured) on the papilla image **110** side of the bile duct tangent line **134**A. In addition, the simplified pancreatic duct direction image **136**B is formed along an extension line of the pancreatic duct tangent line **134**B such that the arrow indicated by the simplified pancreatic duct direction image **136**B indicates an end (that is, a position where the opening **90**A**1** leading to the pancreatic

duct **92**B (see FIG. **4**) is captured) on the papilla image **110** side of the pancreatic duct tangent line **134**B.

[0180] In this way, since the position (that is, the position of the distal end of the arrow shown in the simplified bile duct direction image **136**A) indicated by the arrow shown in the simplified bile duct direction image **136**A corresponds to the position where the opening **90**A**1** of the bile duct **92**A is present, the doctor **14** who observes the synthesized captured image **130** can be made to visually grasp the position of the opening **90**A**1** of the bile duct **92**A and the insertion direction of the cannula **54**A or the like with respect to the opening **90**A**1** of the bile duct **92**A. In addition, since the position (that is, the position of the distal end of the arrow shown in the simplified bile duct direction image **136**B) indicated by the arrow shown in the pancreatic duct-bile duct direction image **136**B corresponds to the position where the opening **90**A**1** of the pancreatic duct **92**B is present, the doctor **14** who observes the synthesized captured image **130** can be made to visually grasp the position of the opening **90**A**1** of the pancreatic duct **92**B and the insertion direction of the cannula **54** or the like with respect to the opening **90**A**1** of the pancreatic duct **92**B.

[0181] In the above embodiment, although the form example in which the synthesis image **123**, the synthesized captured image **130**, and the support information **140** are displayed on the display device **13** has been described, the technology of the present disclosure is not limited to this. For example, as shown in FIG. **18**, in a case where the image processing device **25** or the control device **22** is connected to a server **152** (for example, a server that manages an electronic medical record) via a network **150**, the synthesis image **123**, the synthesized captured image **130**, and/or the support information **140** may be output from the image processing device **25** or the control device **22** to the server **152** and stored in the server **152**. In addition, the synthesis image **123**, the synthesized captured image **130**, and/or the support information **140** may be stored in the electronic medical record.

[0182] In addition, in a case where a printer **154** is connected to the network **150**, the synthesis image **123**, the synthesized captured image **130**, and/or the support information **140** may be output to the printer **154** from the image processing device **25** or the control device **22**, and the synthesis image **123**, the synthesized captured image **130**, and the support information **140** may be printed on a recording medium (for example, paper or the like) by the printer **154**.

[0183] In the above embodiment, although the form example in which the papilla image **110** is detected by executing the processing (that is, the processing using the papilla detection model **100**) using the AI method has been described, the technology of the present disclosure is not limited to this. The papilla image **110** may be detected by executing the processing (for example, template matching or the like) using the non-AI method. The same applies to the processing using the type prediction model **102** shown in FIG. **13**.

[0184] In the above embodiment, the form example in which the medical support process is performed by the processor **70** of the computer **76** included in the duodenoscope **12** has been described, but the technology of the present disclosure is not limited to this. The device that performs the medical support processing may be provided outside the duodenoscope **12**. An example of the device provided outside the duodenoscope **12** is at least one server and/or at least one personal computer that is communicably connected to the duodenoscope **12**. In addition, the medical support processing may be performed in a distributed manner by a plurality of devices.

[0185] In the above embodiment, although the form example in which the medical support program **96** is stored in the NVM **74** has been described, the technology of the present disclosure is not limited to this. For example, the medical support program **96** may be stored in a computer-readable non-transitory storage medium such as an SSD or a USB memory. The non-transitory storage medium may be a stationary non-transitory storage medium or a portable non-transitory storage medium. The medical support program **96** stored in the non-transitory storage medium is installed in the computer **76** of the duodenoscope **12**. The processor **70** executes the medical support processing according to the medical support program **96**.

[0186] In addition, the medical support program **96** may be stored in a storage device of, for example, another computer or a server that is connected to the duodenoscope **12** via a network. Then, the medical support program **96** may be downloaded and installed in the computer **76** in response to a request from the duodenoscope **12**.

[0187] In addition, all of the medical support program **96** does not need to be stored in the storage device of, for example, another computer or the server connected to the duodenoscope **12** or the NVM **74**, and a portion of the medical support program **96** may be stored therein.

[0188] Various processors described below can be used as the hardware resource for executing the medical support processing. An example of the processor is a CPU which is a general-purpose processor that executes software, that is, a program, to function as the hardware resource performing the medical support processing. In addition, an example of the processor includes a dedicated electronic circuit, which is a processor having a dedicated circuit configuration designed to perform specific processing, such as an FPGA, a PLD, or an ASIC. Any processor has a memory built in or connected to it, and any processor executes the medical support processing by using the memory.

[0189] The hardware resource for executing the medical support processing may be configured by one of the various processors or by combining two or more processors of the same type or different types (for example, by combining a plurality of FPGAs or by combining a CPU and an FPGA). The hardware resource for executing the medical support processing may also be one processor.

[0190] A first example of the configuration using one processor is a form in which one processor is configured by combining one or more CPUs and software, and the processor functions as the hardware resource for executing the medical support processing. A second example of the configuration is an aspect in which a processor that implements the functions of the entire system including a plurality of hardware resources for performing the medical support processing using one IC chip is used. A representative example of this aspect is an SoC. In this way, the medical support processing is implemented by using one or more of the various processors as the hardware resource.

[0191] More specifically, an electric circuit in which circuit elements such as semiconductor elements are synthesized can be used as a hardware structure of the various processors. In addition, the above medical support process-

ing is merely an example. Therefore, it goes without saying that unnecessary steps may be deleted, new steps may be added, and the processing order may be changed within a range that does not deviate from the scope.

[0192] The above described contents and shown contents are detailed descriptions of portions relating to the technology of the present disclosure and are merely examples of the technology of the present disclosure. For example, the description of the configuration, the function, the operation, and the effect above are the description of examples of the configuration, the function, the operation, and the effect of the portions according to the technology of the present disclosure. Thus, it goes without saying that unnecessary portions may be deleted, new elements may be added, or replacement may be made to the above described contents and shown contents within a range that does not deviate from the scope of the technology of the present disclosure.

[0193] In addition, the description of, for example, common technical knowledge that does not need to be particularly described to enable the implementation of the technology of the present disclosure is omitted in the above described contents and shown contents in order to avoid confusion and to facilitate understanding of the portions relating to the technology of the present disclosure.

[0194] In the present specification, "A and/or B" is synonymous with "at least one of A or B". That is, "A and/or B" may mean only A, only B, or a combination of A and B. In the present specification, the same concept as "A and/or B" also applies to a case in which three or more matters are expressed by association with "and/or".

[0195] All documents, patent applications, and technical standards described in the present specification are incorporated in the present specification by reference in their entirety to the same extent as in a case where the individual documents, patent applications, and technical standards are specifically and individually written to be incorporated by reference.

What is claimed is:

1. A medical support device comprising:

a processor,

wherein the processor is configured to:

acquire first reference part information capable of three-dimensionally specifying a reference part included in a duodenum based on a captured image obtained by imaging an intestinal wall of the duodenum with an endoscope scope;

acquire second reference part information related to the reference part and direction information related to a running direction of a duct leading to the duodenum from volume data;

generate a running direction image in which the running direction is imaged in accordance with the captured image based on the direction information adjusted by matching the first reference part information with the second reference part information;

display the captured image on a screen; and

display the running direction image in the captured image.

2. The medical support device according to claim **1**,

wherein the first reference part information is a first image region in which the reference part is represented as a three-dimensional image,

the second reference part information is a second image region in which the reference part is represented as a three-dimensional image, and

the processor is configured to generate the running direction image based on the direction information adjusted by performing registration between the first image region and the second image region.

3. The medical support device according to claim **1**,

wherein the processor is configured to:

generate a duodenum image in which the duodenum is represented as a three-dimensional image based on the captured image; and

acquire the first reference part information from the duodenum image.

4. The medical support device according to claim **3**,

wherein the duodenum image is a three-dimensional image generated based on a plurality of distance images.

5. The medical support device according to claim **4**,

wherein, each time the captured image is updated in units of a designated number of frames,

the processor is configured to:

generate the duodenum image based on the updated captured image;

generate the running direction image based on the direction information each time the duodenum image is generated;

display the updated captured image on the screen; and

display the generated running direction image in the captured image each time the running direction image is generated.

6. The medical support device according to claim **1**,

wherein the direction information is a three-dimensional direction image in which the running direction is represented as a three-dimensional image, and

the running direction image is an image based on a two-dimensional image obtained by projecting the three-dimensional direction image onto the captured image.

7. The medical support device according to claim **1**,

wherein the captured image includes a papilla image showing a duodenal papilla, and

the running direction image is displayed in association with the papilla image.

8. The medical support device according to claim **7**,

wherein the duct leads to an opening in the duodenal papilla, and

the running direction image is an image showing a first direction along the duct with the opening as a base point.

9. The medical support device according to claim **8**,

wherein the first direction is a direction corresponding to an insertion direction of a medical instrument to be inserted into the duct.

10. The medical support device according to claim **1**,

wherein the reference part is a duodenal papilla, a medical marker, and/or a fold.

11. The medical support device according to claim **1**,

wherein the processor is configured to adjust a scale of the direction information based on a distance from the endoscope scope to the intestinal wall and on the volume data.

12. The medical support device according to claim **1**,

wherein the duct is a bile duct and/or a pancreatic duct.

13. The medical support device according to claim **1**,

wherein the running direction image displayed in the captured image is updated in real time.

14. An endoscope comprising:
the medical support device according to claim **1**; and
the endoscope scope.

15. A medical support method comprising:
acquiring first reference part information capable of three-dimensionally specifying a reference part included in a duodenum based on a captured image obtained by imaging an intestinal wall of the duodenum with an endoscope scope;
acquiring second reference part information related to the reference part and direction information related to a running direction of a duct leading to the duodenum from volume data;
generating a running direction image in which the running direction is imaged in accordance with the captured image based on the direction information adjusted by matching the first reference part information with the second reference part information;
displaying the captured image on a screen; and
displaying the running direction image in the captured image.

16. A non-transitory computer-readable storage medium storing a program executable by a computer to execute processing comprising:
acquiring first reference part information capable of three-dimensionally specifying a reference part included in a duodenum based on a captured image obtained by imaging an intestinal wall of the duodenum with an endoscope scope;
acquiring second reference part information related to the reference part and direction information related to a running direction of a duct leading to the duodenum from volume data;
generating a running direction image in which the running direction is imaged in accordance with the captured image based on the direction information adjusted by matching the first reference part information with the second reference part information;
displaying the captured image on a screen; and
displaying the running direction image in the captured image.

* * * * *