US 20250256390A1

(19) United States
(12) Patent Application Publication
Low et al.
(10) Pub. No.: US 2025/0256390 A1
(43) Pub. Date: Aug. 14, 2025

(54) **INSPECTION ROBOT WITH OFFSET SLED MOUNTS FOR INSPECTING THICK ASSETS**

(71) Applicant: **Gecko Robotics, Inc.**, Pittsburg, PA (US)

(72) Inventors: **Kevin Y. Low**, Pittsburgh, PA (US); **Edward A. Bryner**, Pittsburgh, PA (US); **Chase David**, Montgomery, TX (US); **Michael A. Binger**, Pittsburgh, PA (US); **Matthew St. Jean**, Pittsburgh, PA (US); **Ignacio J. Cordova**, Pittsburgh, PA (US)

(21) Appl. No.: **19/195,955**

(22) Filed: **May 1, 2025**

Related U.S. Application Data

(63) Continuation of application No. PCT/US23/78409, filed on Nov. 1, 2023.

(60) Provisional application No. 63/381,851, filed on Nov. 1, 2022.

Publication Classification

(51) **Int. Cl.**

B25J 9/00	(2006.01)
B25J 11/00	(2006.01)
B25J 19/02	(2006.01)

(52) **U.S. Cl.**

CPC ***B25J 9/0009*** (2013.01); ***B25J 11/008*** (2013.01); ***B25J 19/02*** (2013.01)

(57) **ABSTRACT**

A sled assembly for an inspection robot includes a first portion having a first sensor mount at a first horizontal position, and a second offset portion having a second sensor mount at a second horizontal position. The first horizontal position and the second horizontal position are horizontally displaced by a selected horizontal distance. The first portion includes a first plurality of sensor mounts, and the first plurality of sensor mounts include the first sensor mount. Also, the first plurality of sensor mounts include a first horizontal distribution profile providing a horizontal displacement between adjacent ones of the first plurality of sensor mounts that is not greater than a selected inspection resolution.

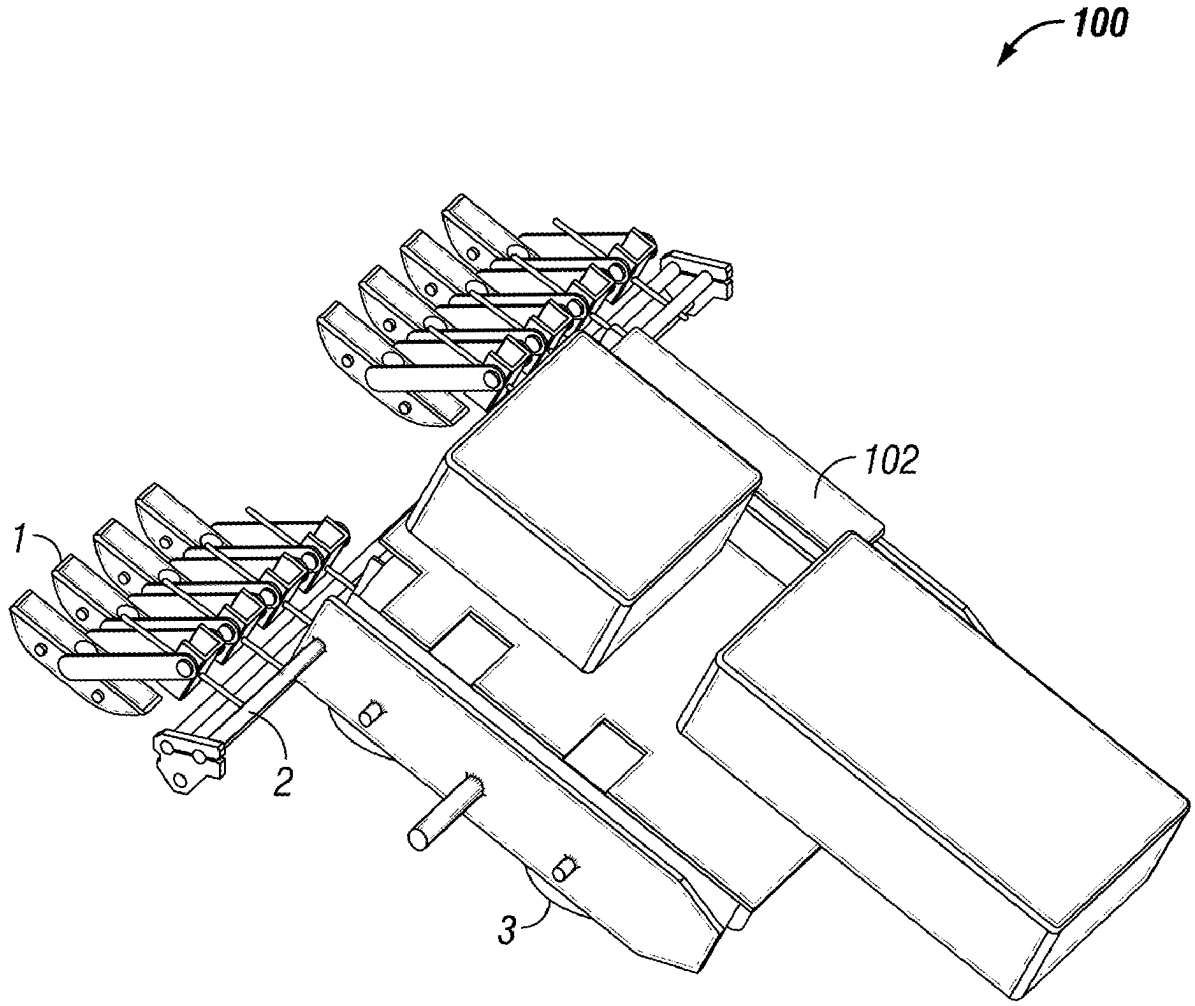

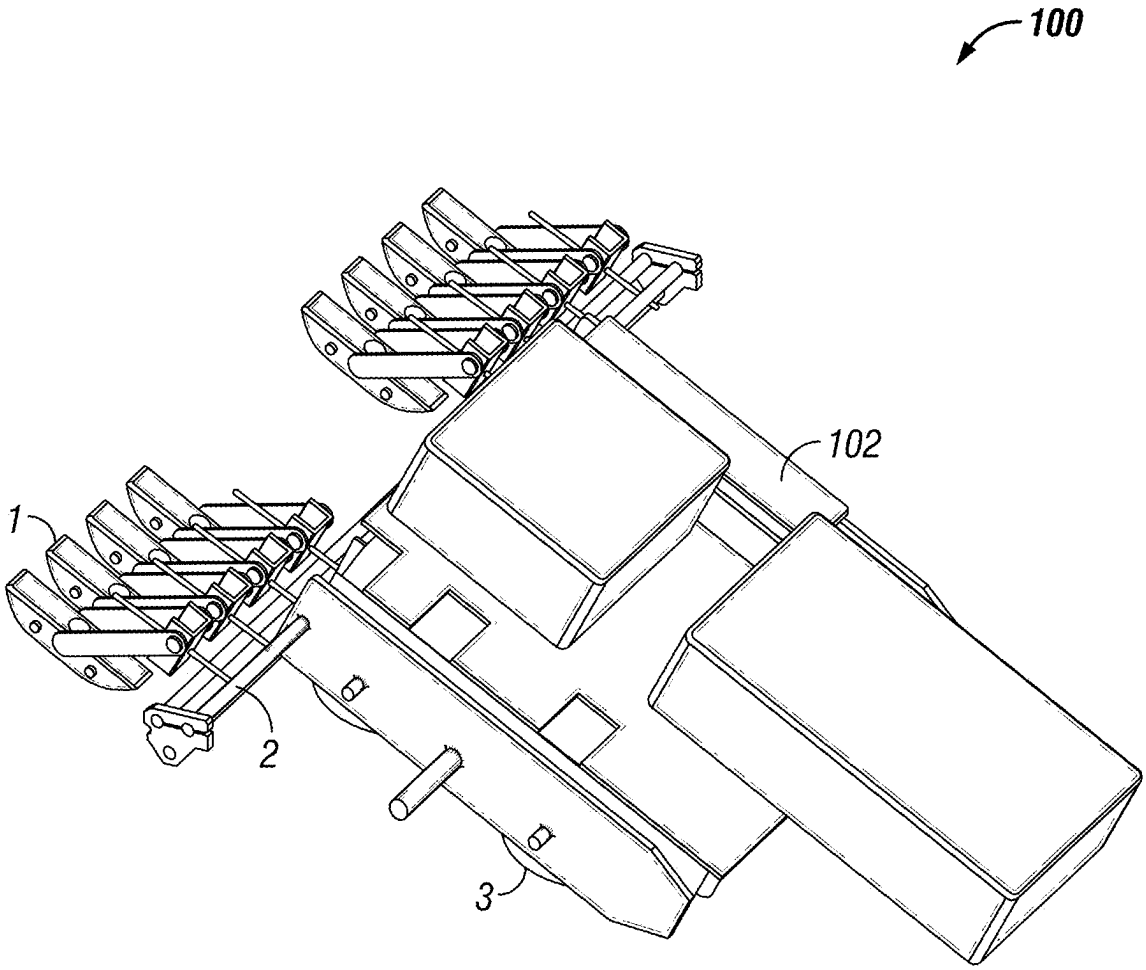

FIG. 1

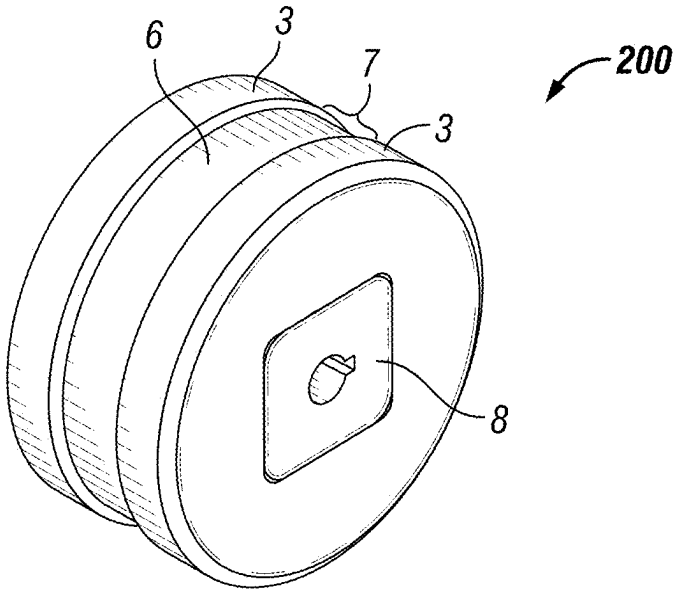

FIG. 2A

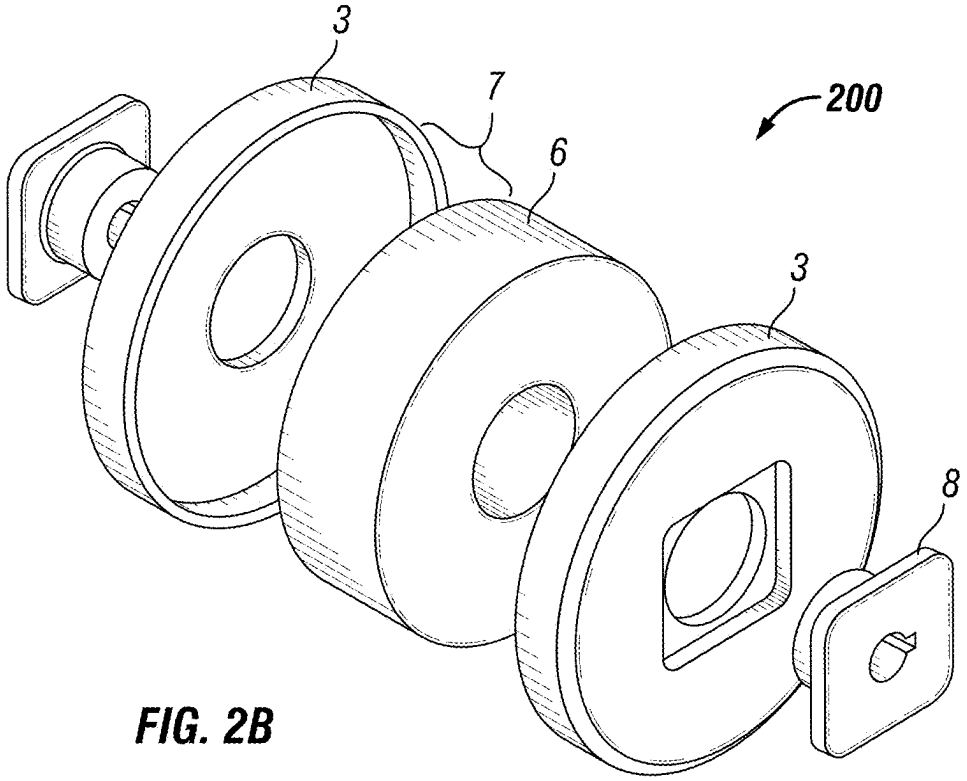

FIG. 2B

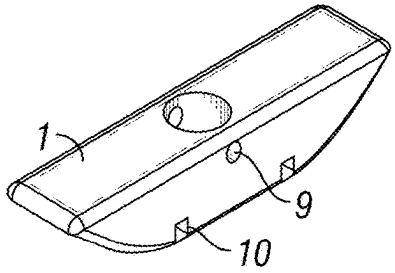

FIG. 3A

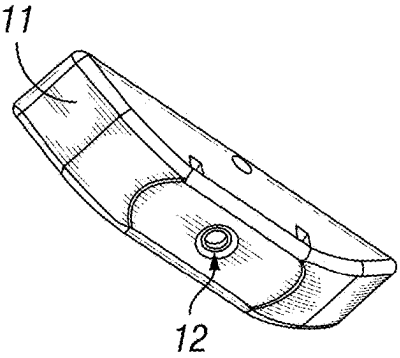

FIG. 3B

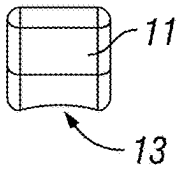

FIG. 3C

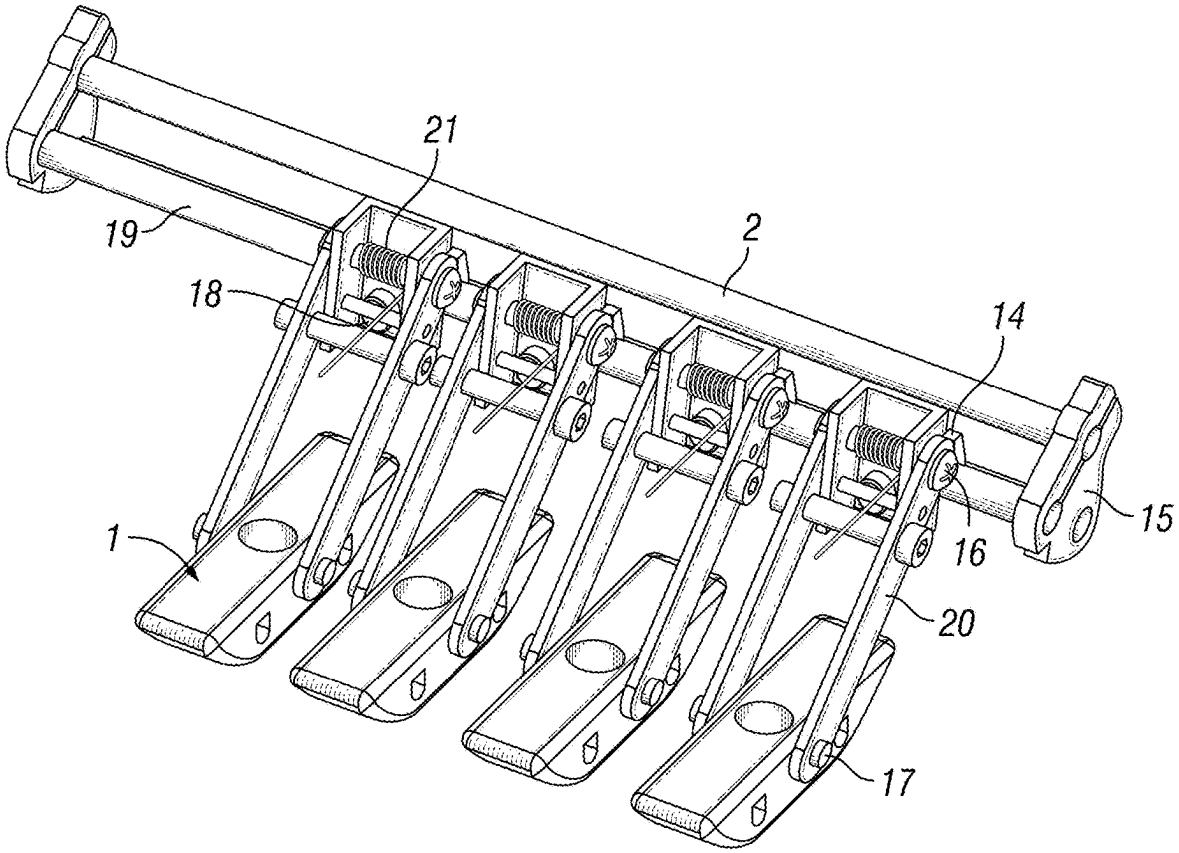

FIG. 4

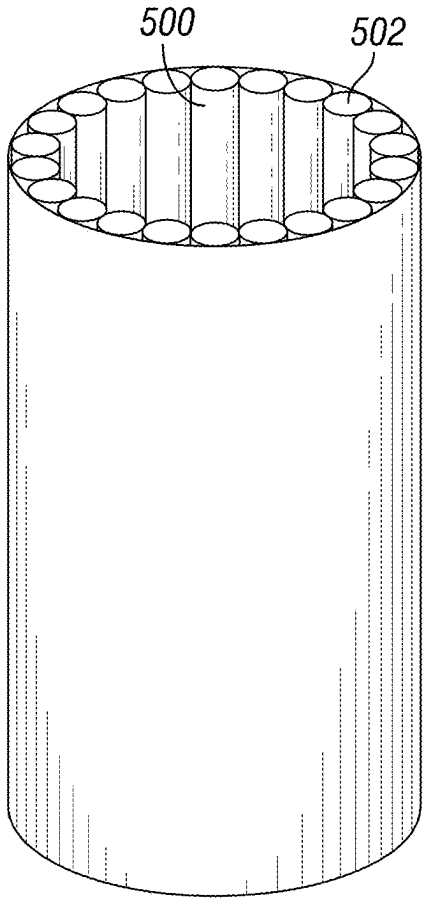

FIG. 5

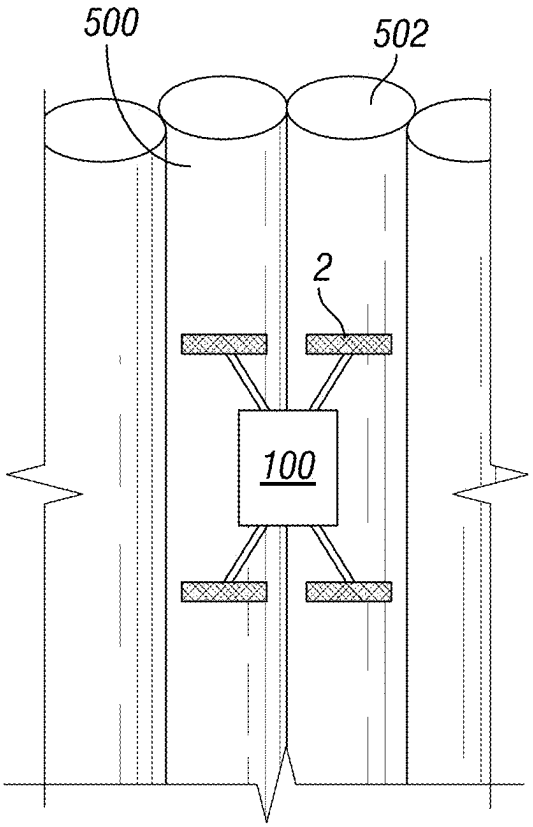

FIG. 6

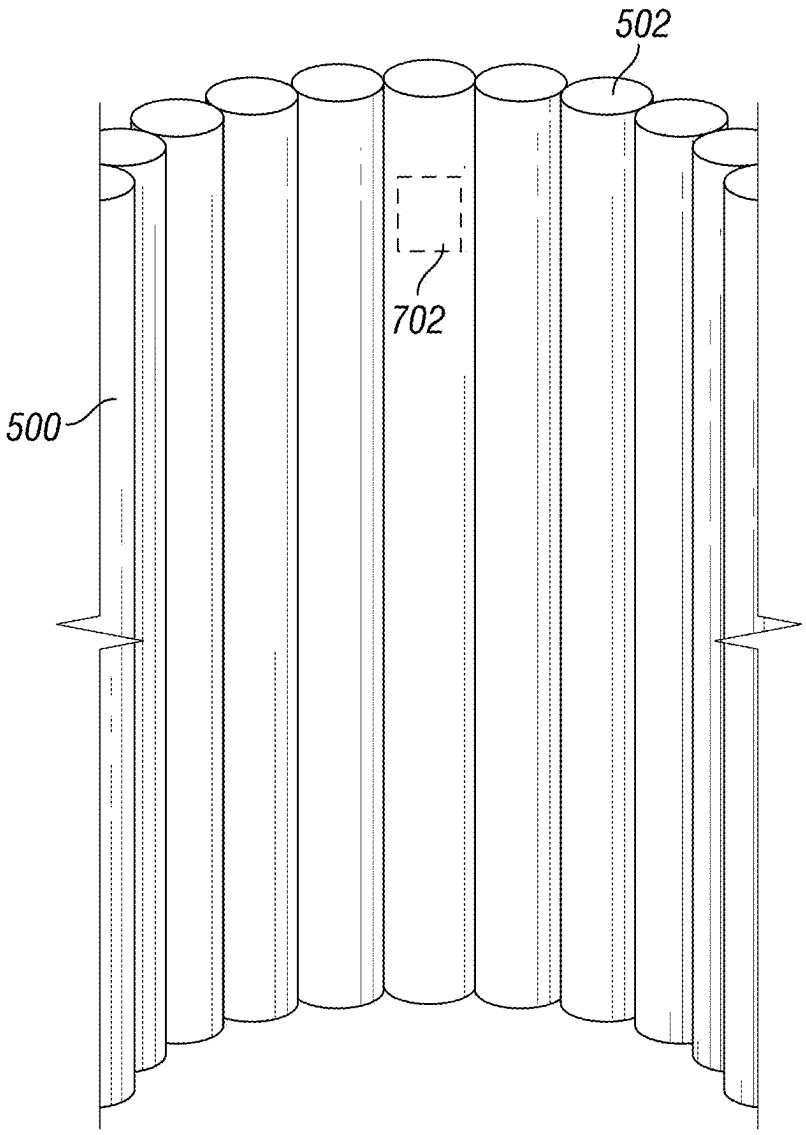

FIG. 7

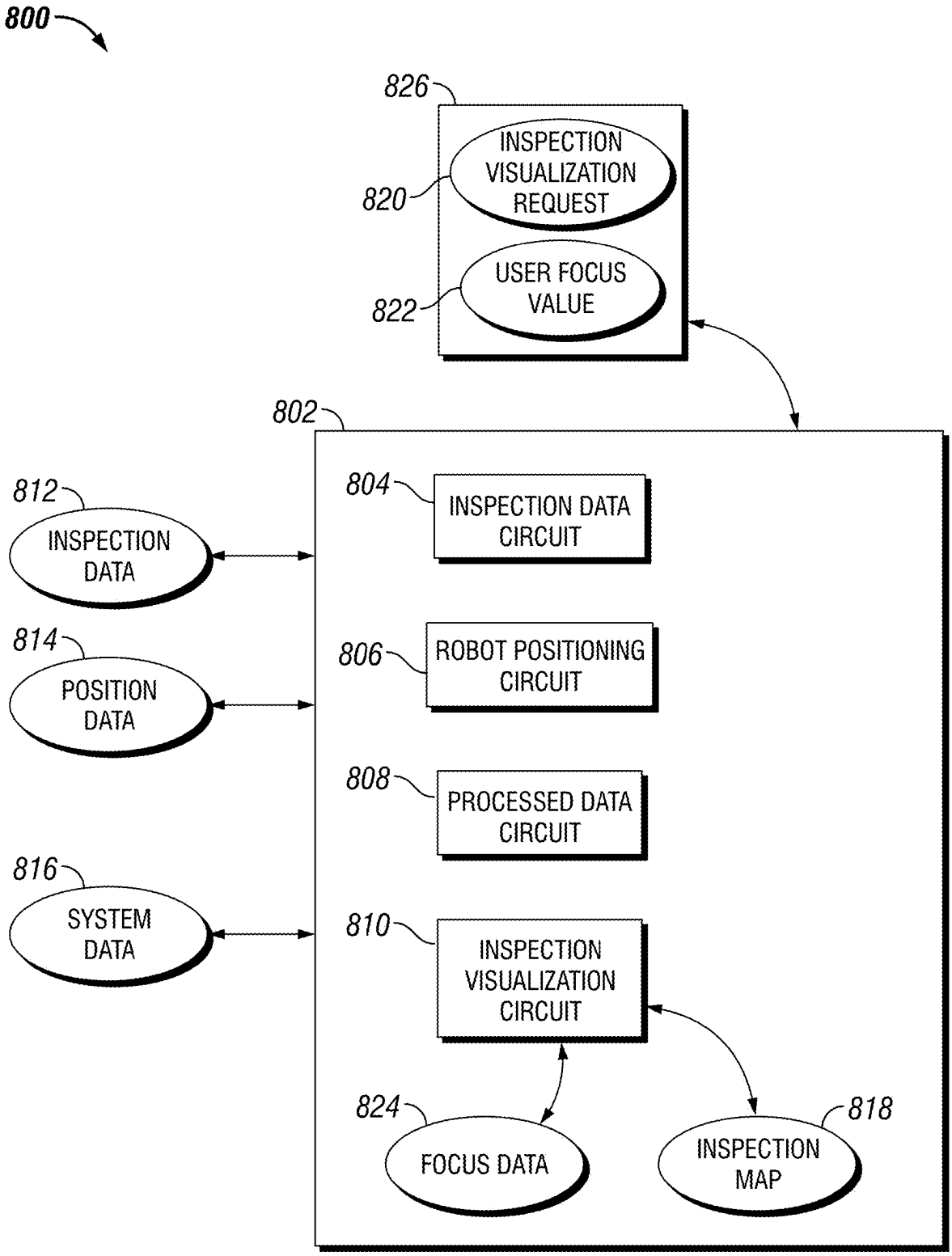
800
826
INSPECTION VISUALIZATION REQUEST
820
USER FOCUS VALUE
822
802
812
INSPECTION DATA
804
INSPECTION DATA CIRCUIT
814
POSITION DATA
806
ROBOT POSITIONING CIRCUIT
808
PROCESSED DATA CIRCUIT
816
SYSTEM DATA
810
INSPECTION VISUALIZATION CIRCUIT
824
FOCUS DATA
818
INSPECTION MAP

FIG. 8

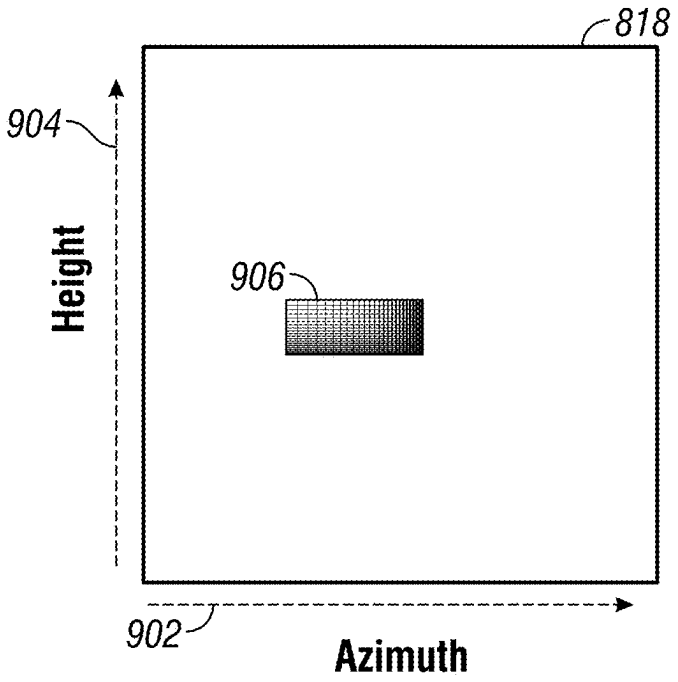
818
904
Height
906
902
Azimuth

FIG. 9

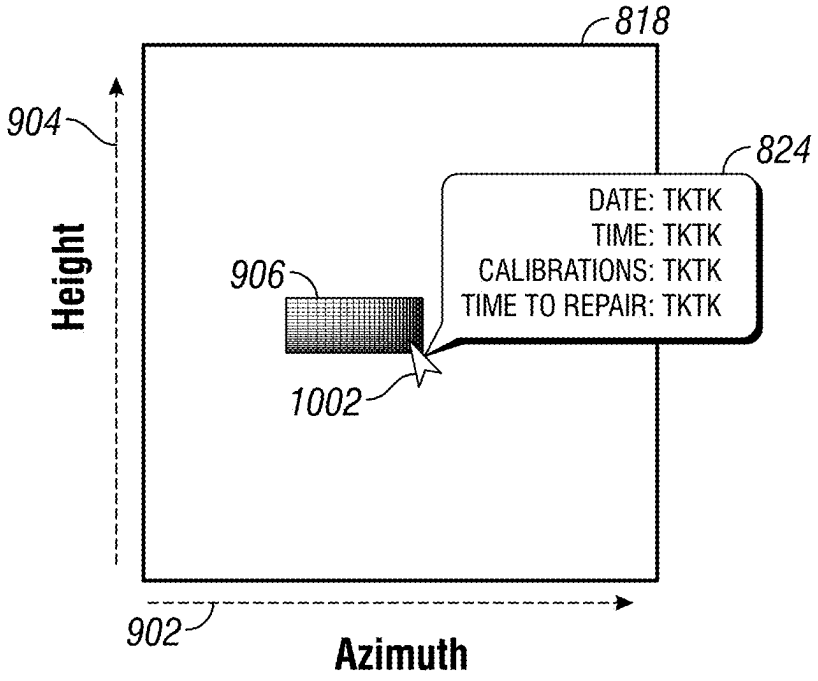
818
904
824
DATE: TKTK
TIME: TKTK
CALIBRATIONS: TKTK
TIME TO REPAIR: TKTK
Height
906
1002
902
Azimuth

FIG. 10

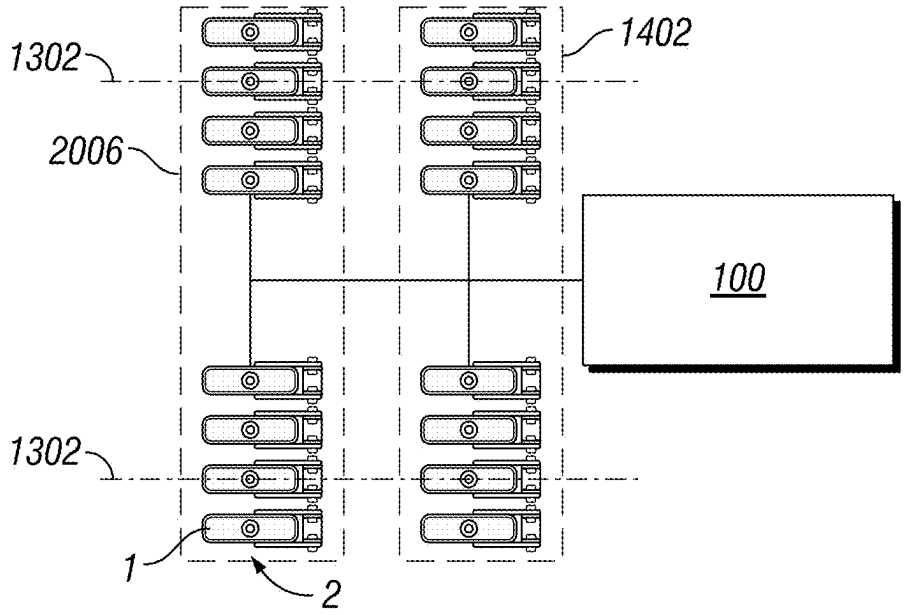

FIG. 11

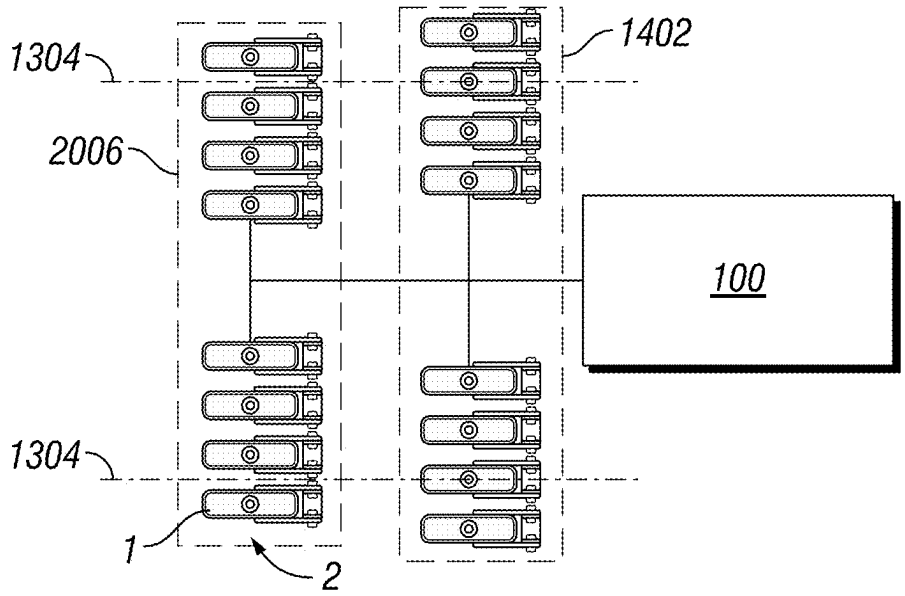

FIG. 12

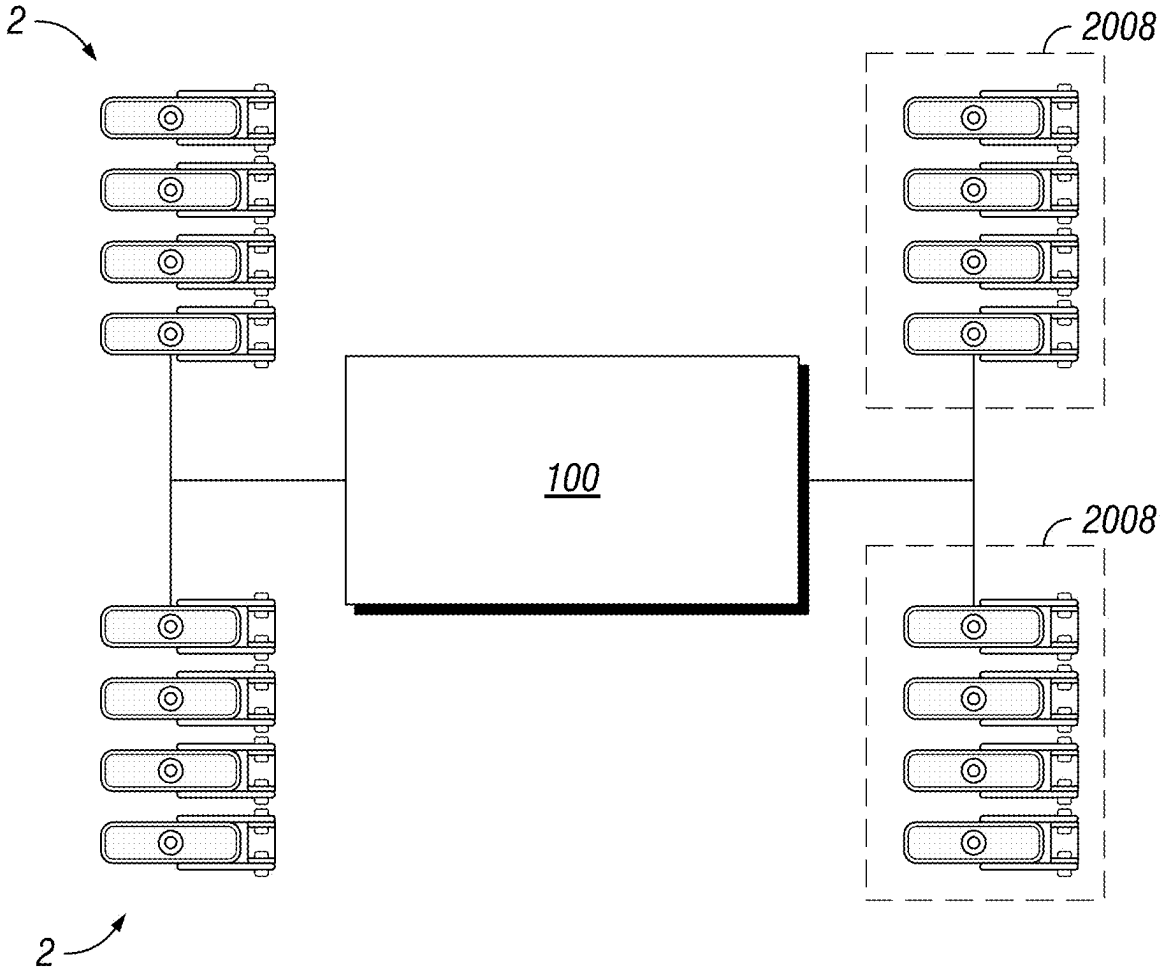

FIG. 13

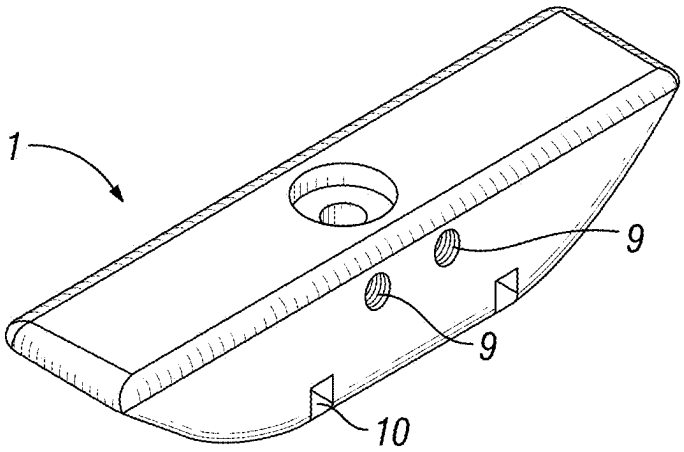

FIG. 14

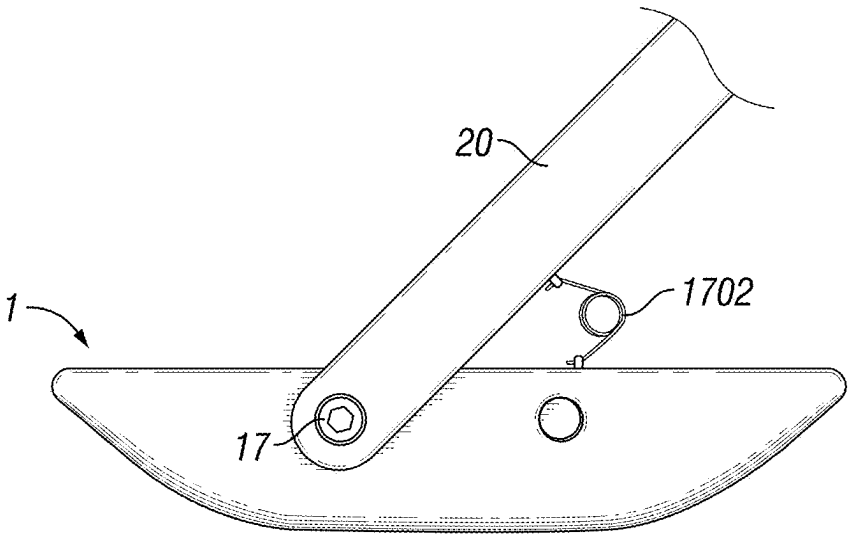

FIG. 15

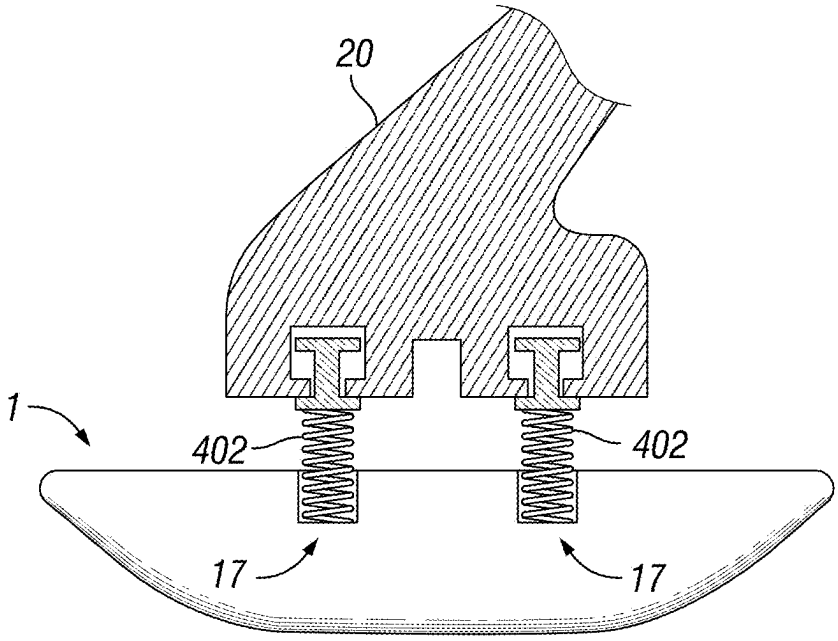

FIG. 16

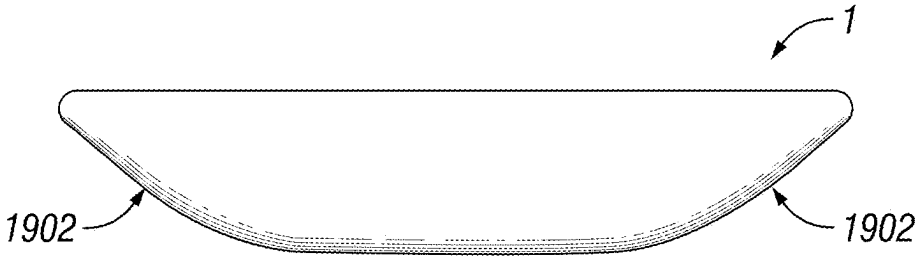

FIG. 17A

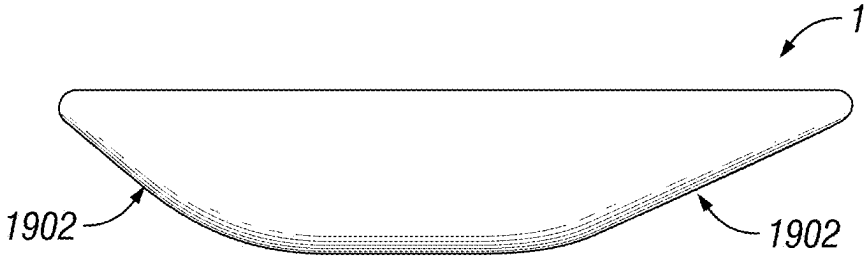

FIG. 17B

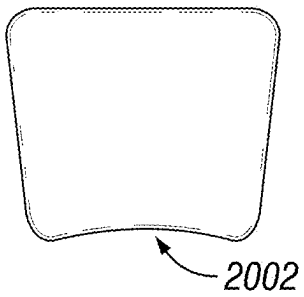

FIG. 18A

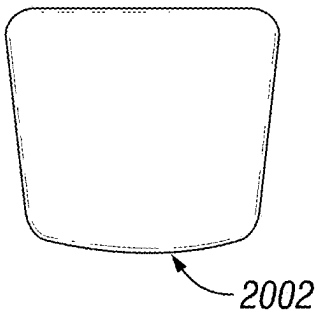

FIG. 18B

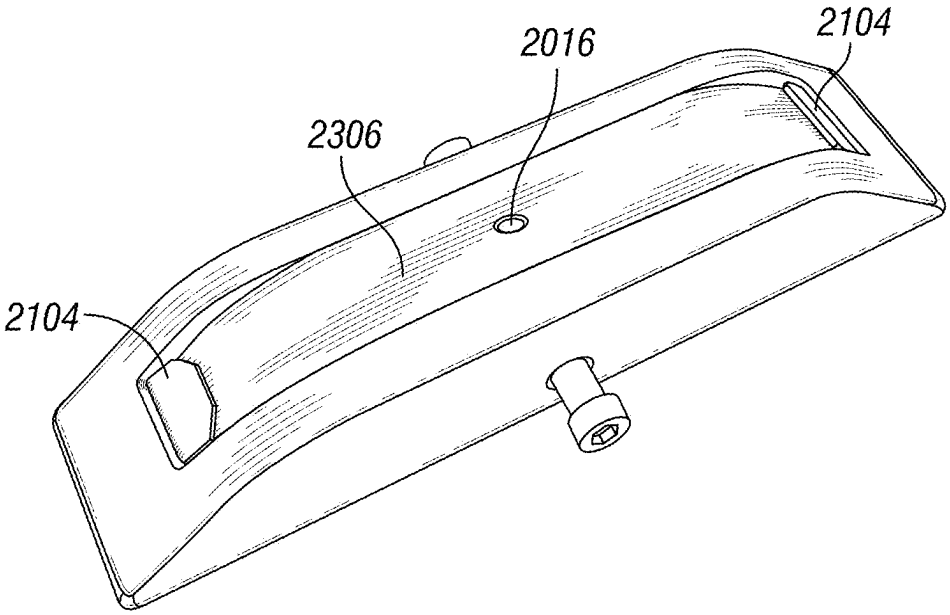

FIG. 19

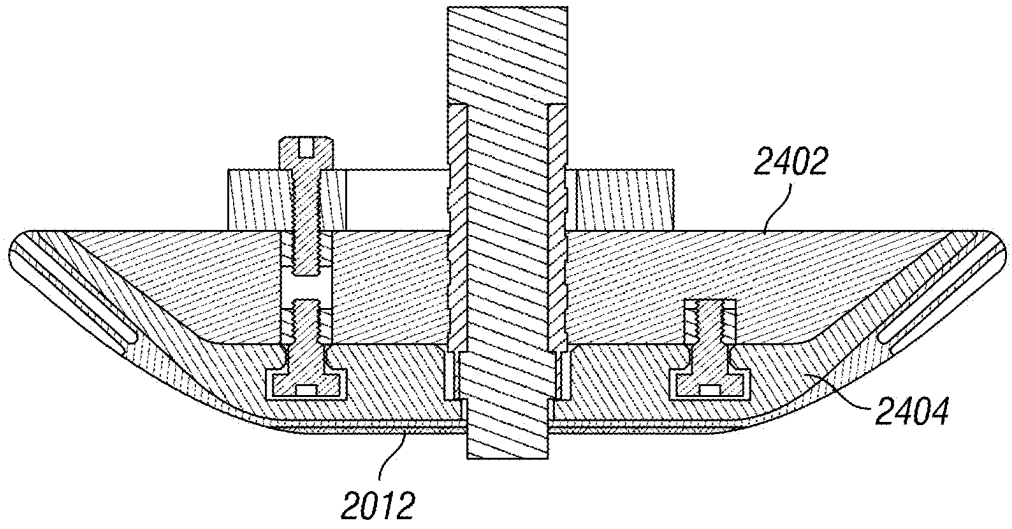

FIG. 20

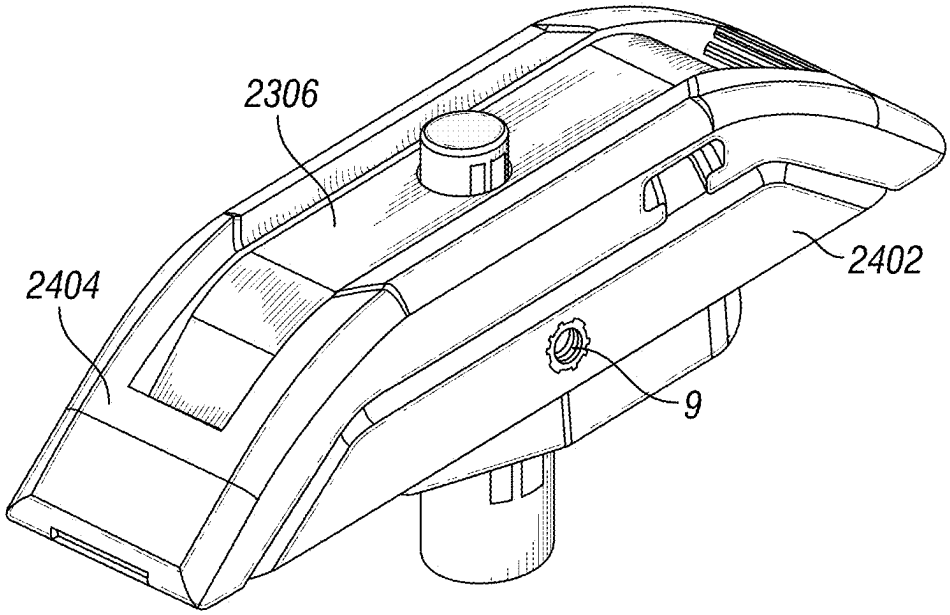

FIG. 21

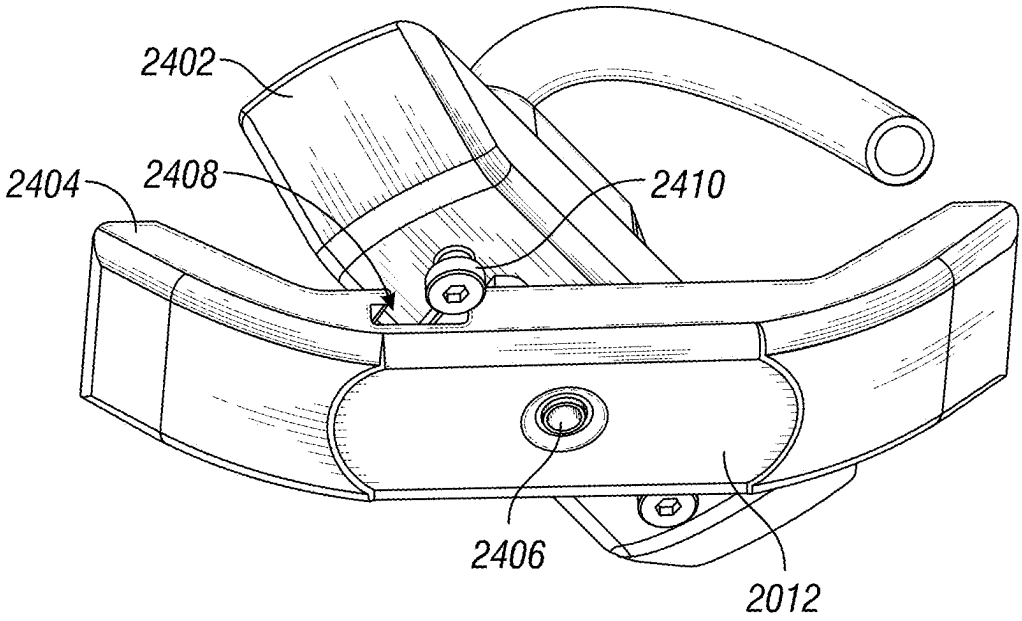

FIG. 22

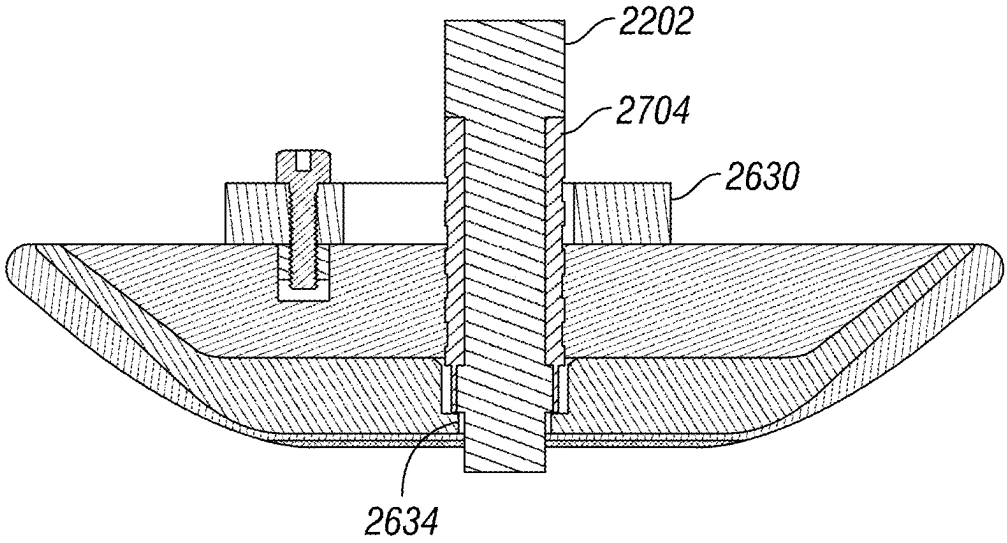

FIG. 23

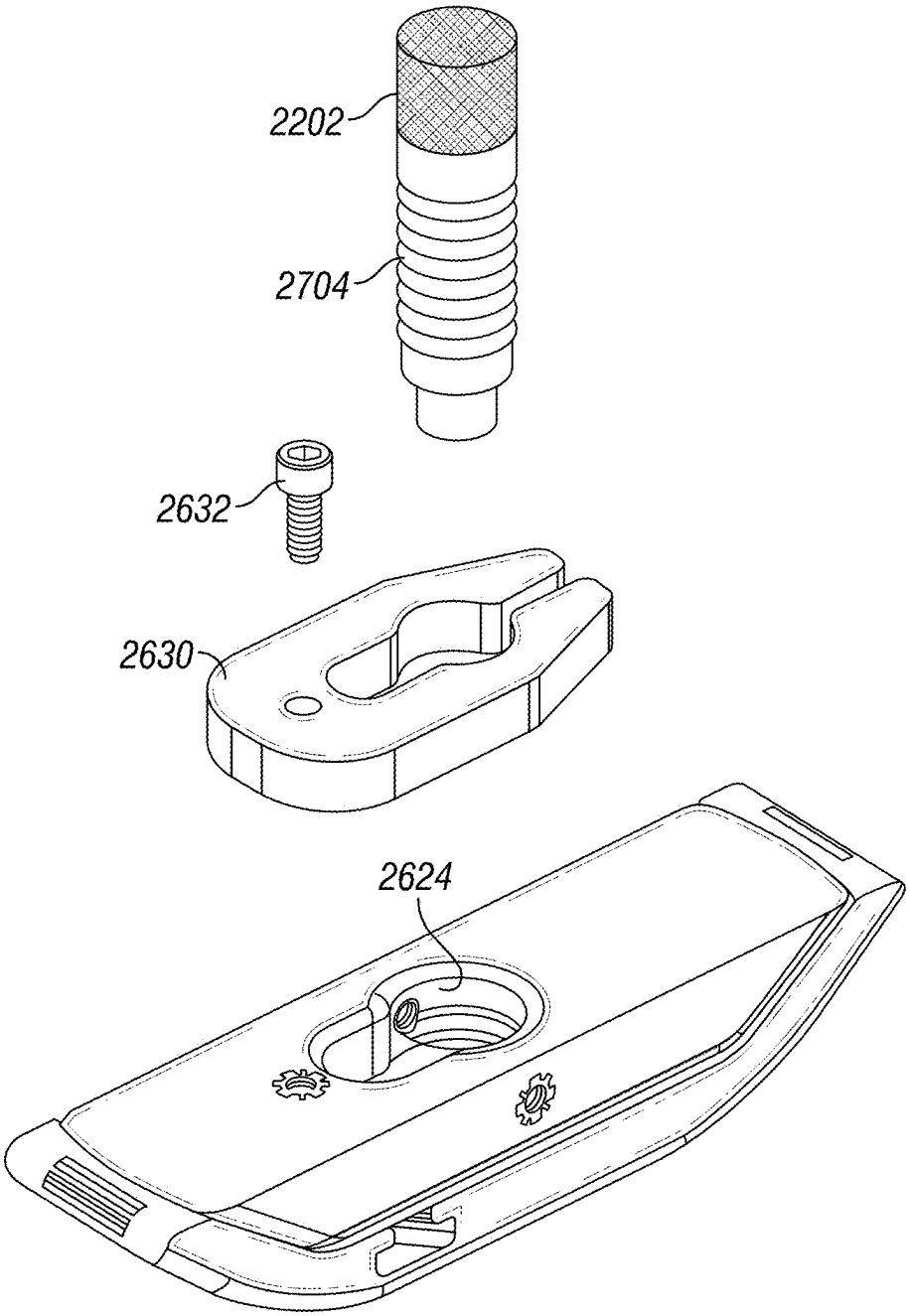

FIG. 24

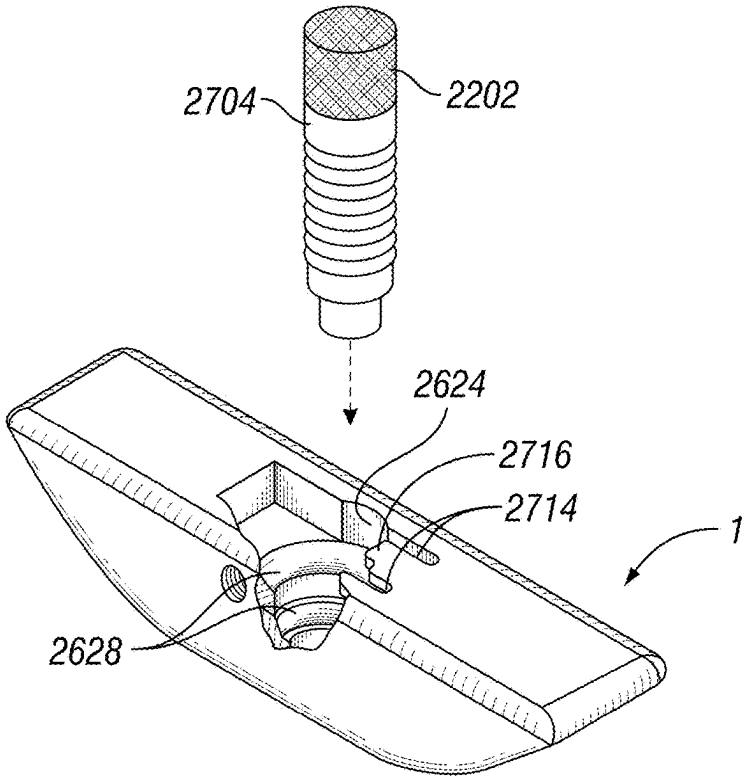

FIG. 25

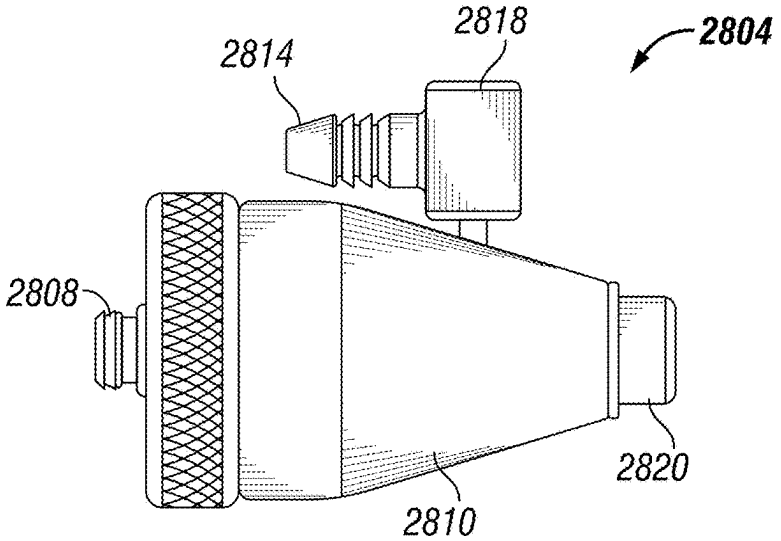

FIG. 26

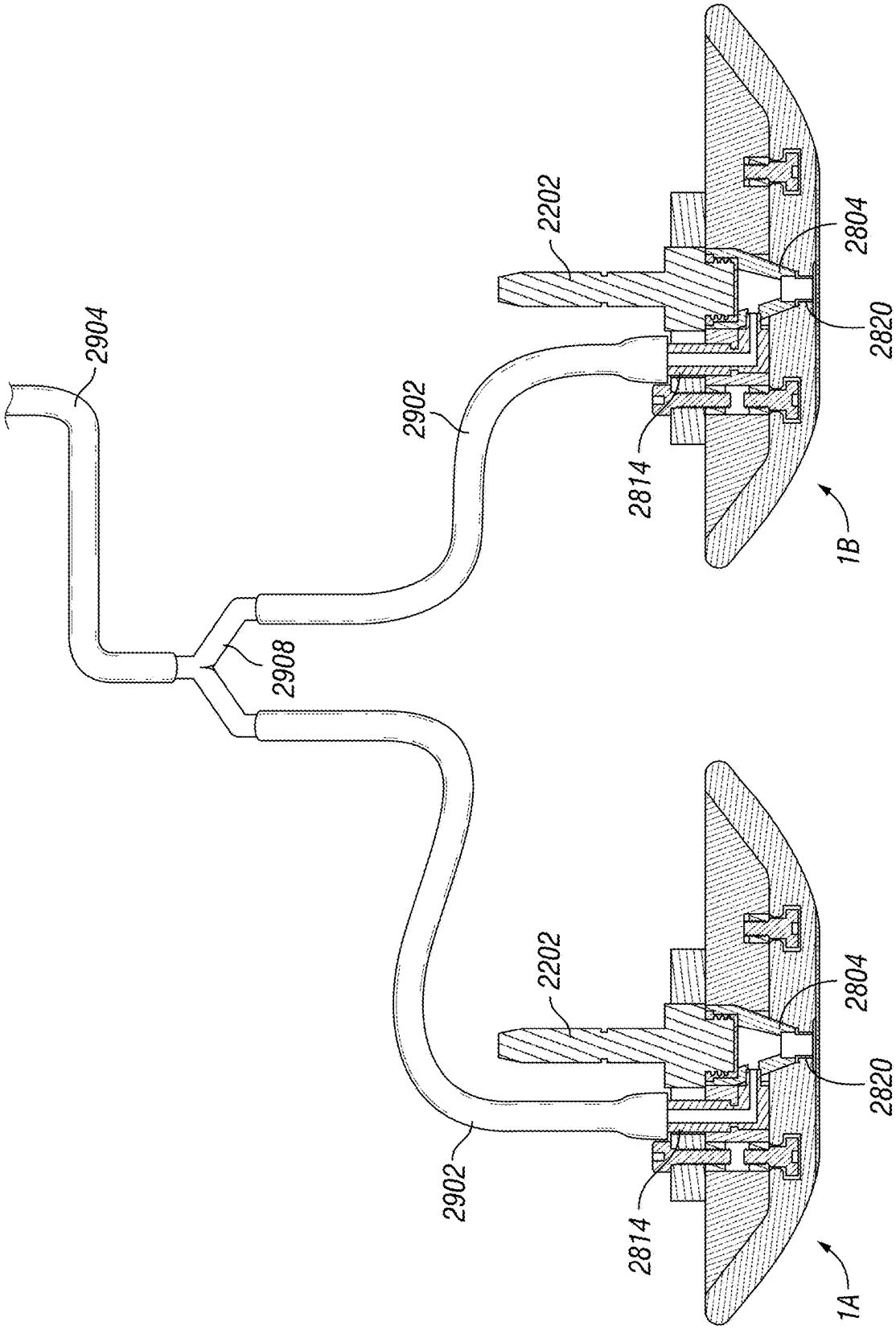
2904
2908
2902
2202
2814
2804
2820
1B
2902
2202
2814
2804
2820
1A

FIG. 27

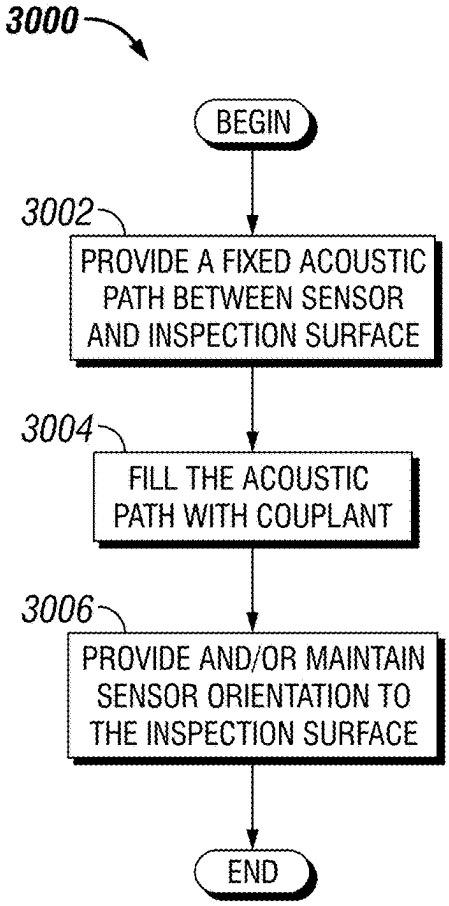
3000
BEGIN
3002
PROVIDE A FIXED ACOUSTIC PATH BETWEEN SENSOR AND INSPECTION SURFACE
3004
FILL THE ACOUSTIC PATH WITH COUPLANT
3006
PROVIDE AND/OR MAINTAIN SENSOR ORIENTATION TO THE INSPECTION SURFACE
END

FIG. 28

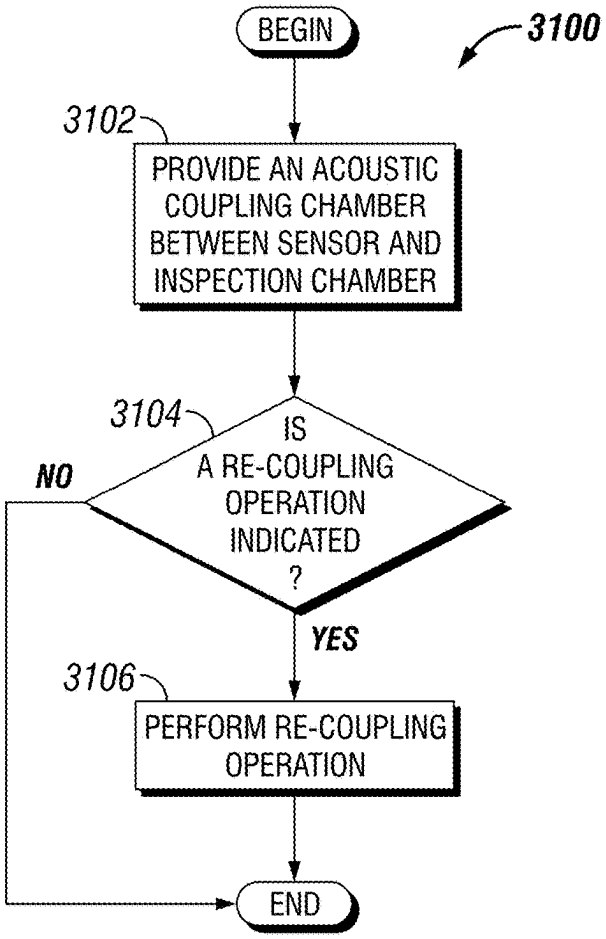
BEGIN
3100
3102
PROVIDE AN ACOUSTIC COUPLING CHAMBER BETWEEN SENSOR AND INSPECTION CHAMBER
3104
IS A RE-COUPLING OPERATION INDICATED ?
NO
YES
3106
PERFORM RE-COUPLING OPERATION
END

FIG. 29

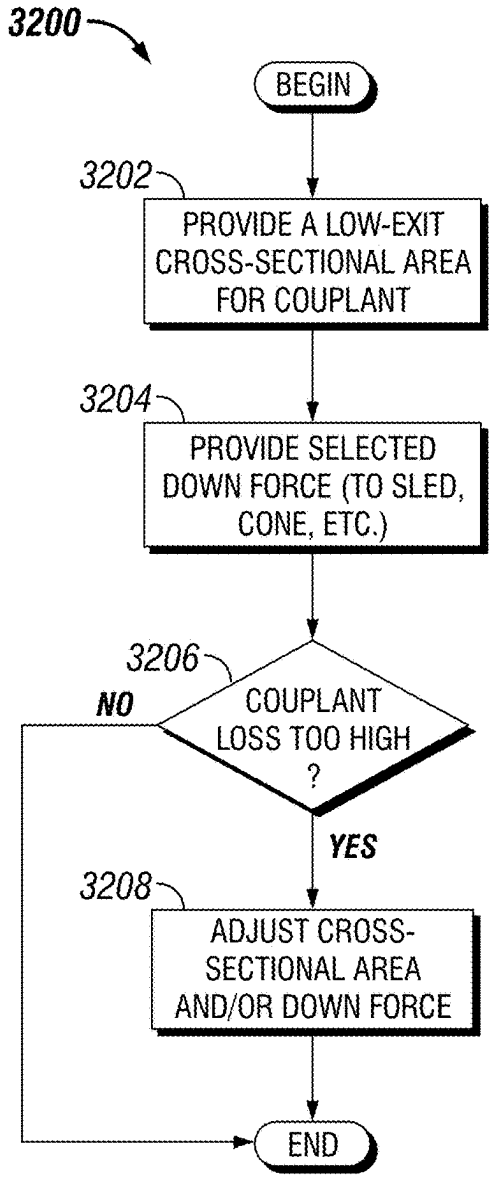
3200
BEGIN
3202
PROVIDE A LOW-EXIT CROSS-SECTIONAL AREA FOR COUPLANT
3204
PROVIDE SELECTED DOWN FORCE (TO SLED, CONE, ETC.)
3206
COUPLANT LOSS TOO HIGH ?
NO
YES
3208
ADJUST CROSS-SECTIONAL AREA AND/OR DOWN FORCE
END

FIG. 30

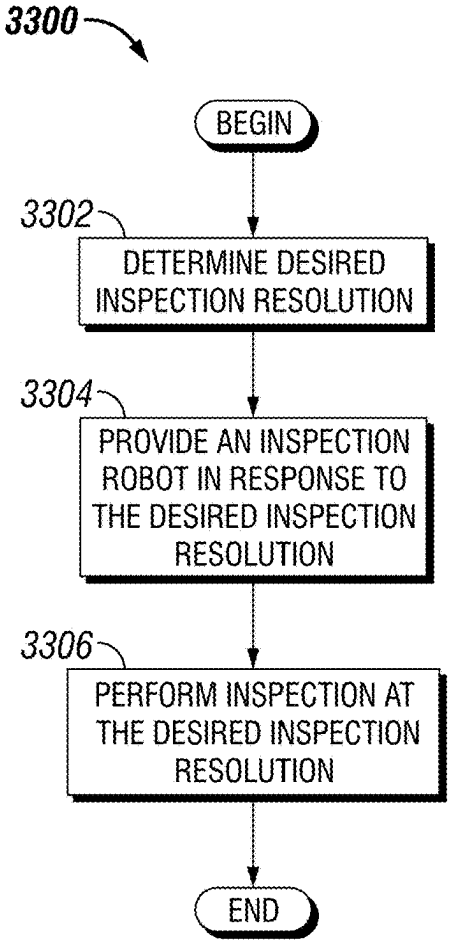
3300
BEGIN
3302
DETERMINE DESIRED INSPECTION RESOLUTION
3304
PROVIDE AN INSPECTION ROBOT IN RESPONSE TO THE DESIRED INSPECTION RESOLUTION
3306
PERFORM INSPECTION AT THE DESIRED INSPECTION RESOLUTION
END

FIG. 31

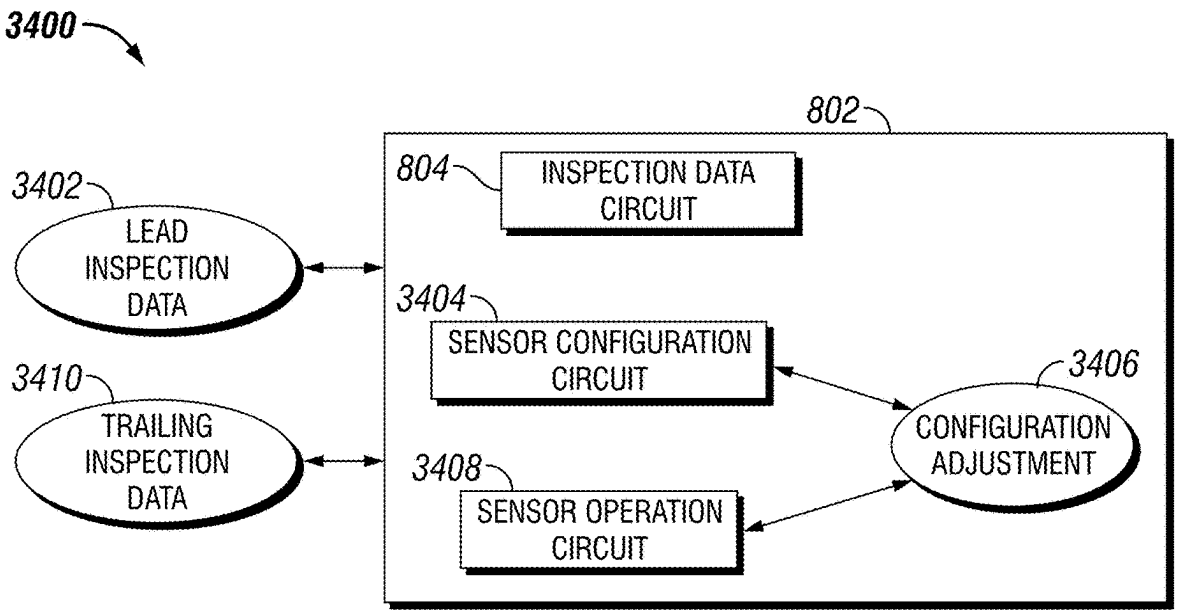
3400
802
804
INSPECTION DATA CIRCUIT
3402
LEAD INSPECTION DATA
3404
SENSOR CONFIGURATION CIRCUIT
3406
CONFIGURATION ADJUSTMENT
3410
TRAILING INSPECTION DATA
3408
SENSOR OPERATION CIRCUIT

FIG. 32

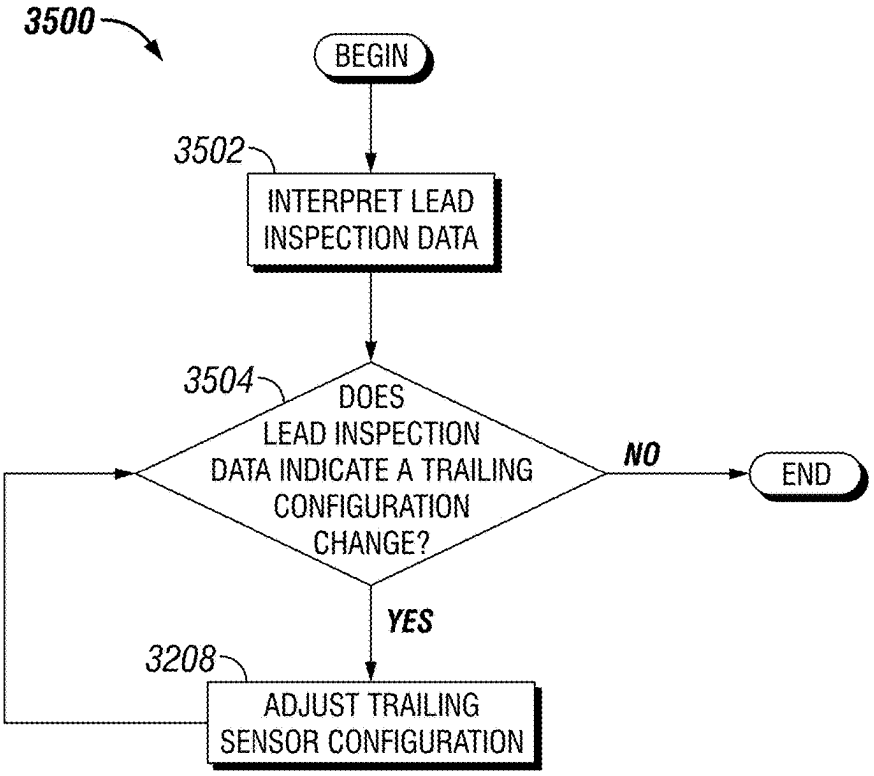
3500
BEGIN
3502
INTERPRET LEAD INSPECTION DATA
3504
DOES LEAD INSPECTION DATA INDICATE A TRAILING CONFIGURATION CHANGE?
NO
END
YES
3208
ADJUST TRAILING SENSOR CONFIGURATION

FIG. 33

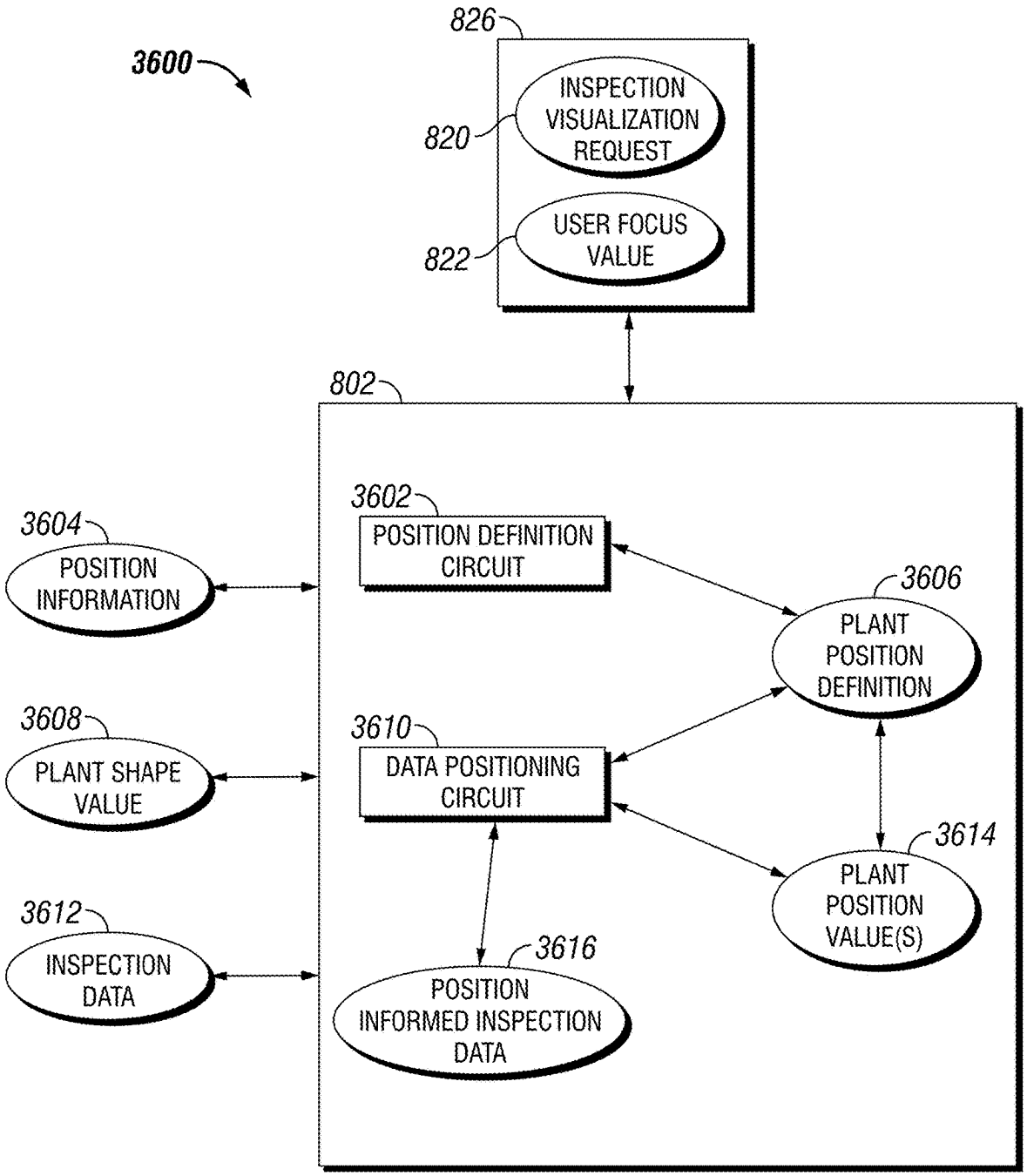
3600
826
820
INSPECTION VISUALIZATION REQUEST
822
USER FOCUS VALUE
802
3602
POSITION DEFINITION CIRCUIT
3604
POSITION INFORMATION
3606
PLANT POSITION DEFINITION
3608
PLANT SHAPE VALUE
3610
DATA POSITIONING CIRCUIT
3614
PLANT POSITION VALUE(S)
3612
INSPECTION DATA
3616
POSITION INFORMED INSPECTION DATA

FIG. 34

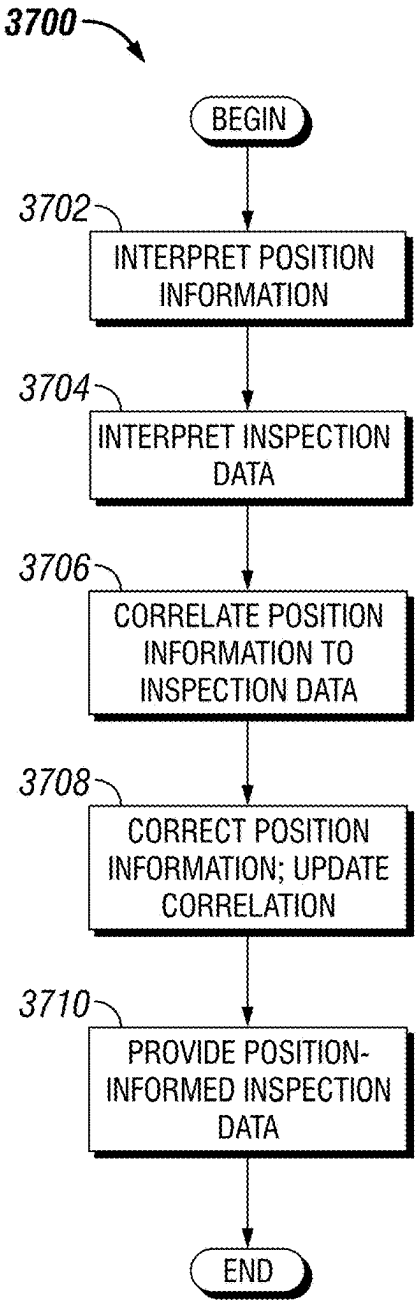
3700
BEGIN
3702
INTERPRET POSITION INFORMATION
3704
INTERPRET INSPECTION DATA
3706
CORRELATE POSITION INFORMATION TO INSPECTION DATA
3708
CORRECT POSITION INFORMATION; UPDATE CORRELATION
3710
PROVIDE POSITION-INFORMED INSPECTION DATA
END

FIG. 35

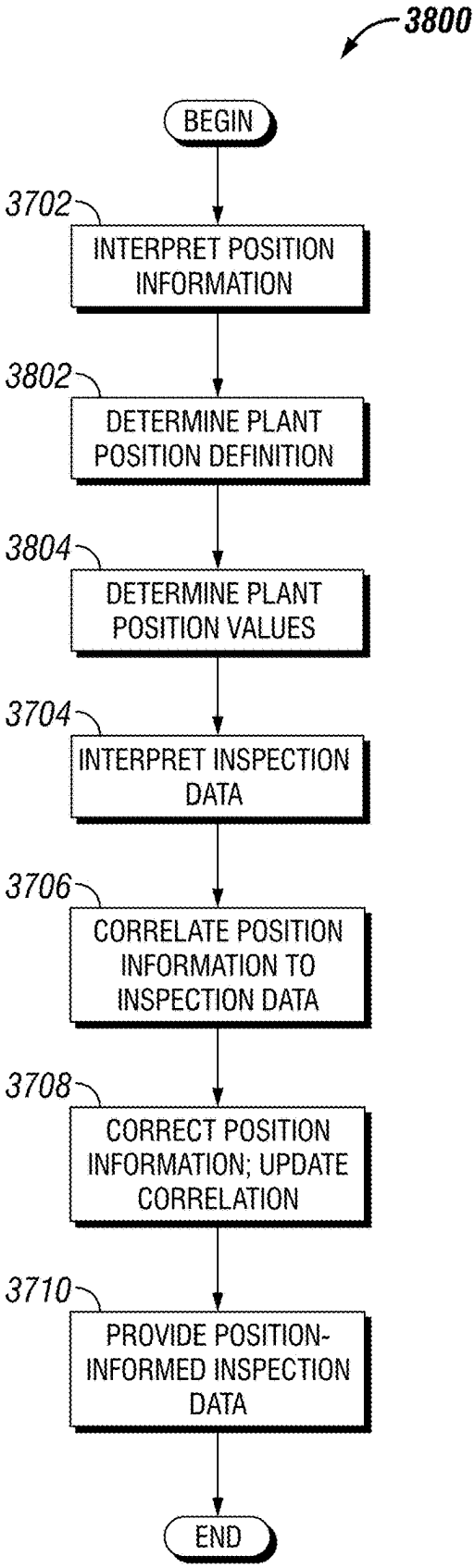
3800
BEGIN
3702
INTERPRET POSITION INFORMATION
3802
DETERMINE PLANT POSITION DEFINITION
3804
DETERMINE PLANT POSITION VALUES
3704
INTERPRET INSPECTION DATA
3706
CORRELATE POSITION INFORMATION TO INSPECTION DATA
3708
CORRECT POSITION INFORMATION; UPDATE CORRELATION
3710
PROVIDE POSITION-INFORMED INSPECTION DATA
END

FIG. 36

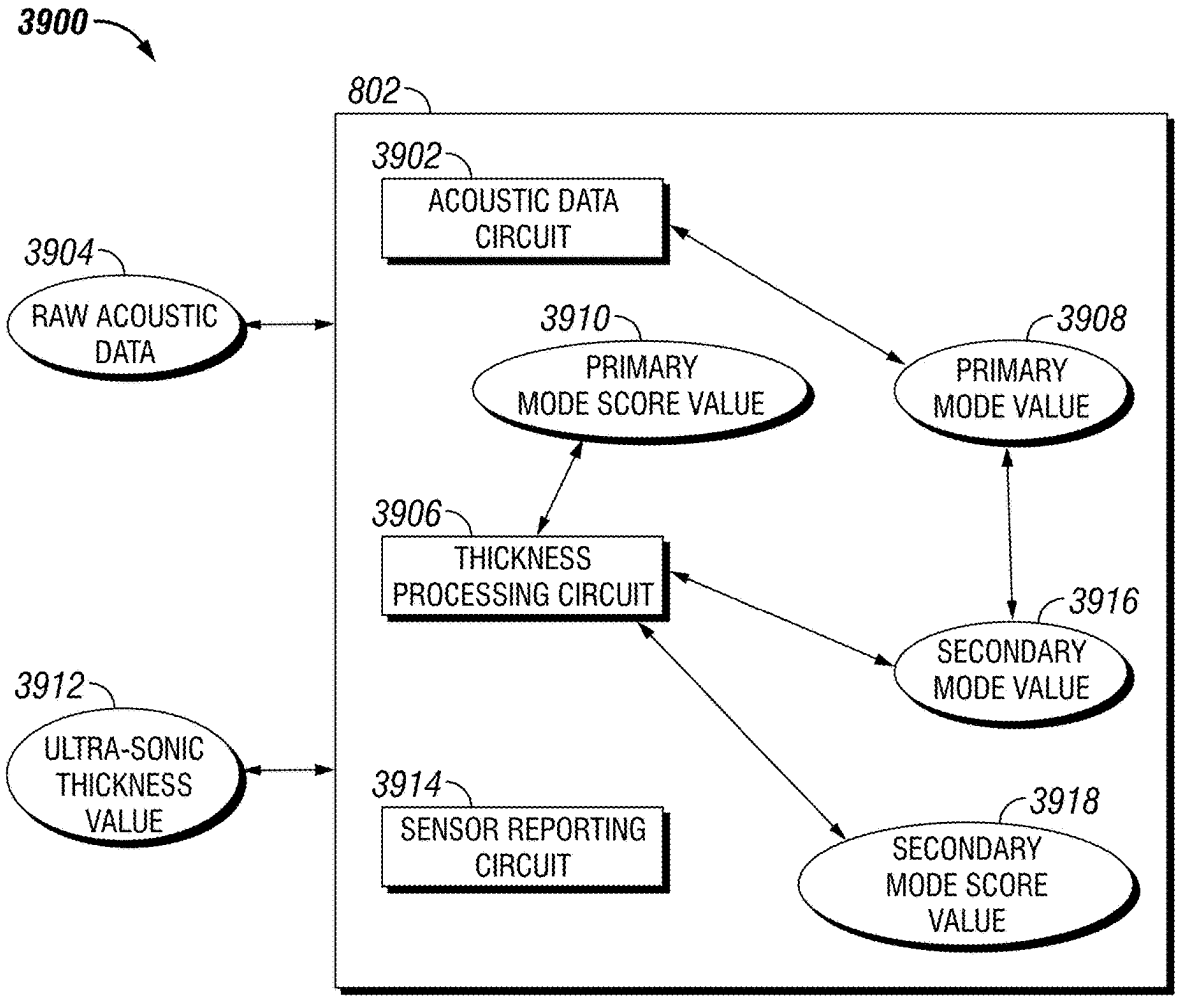
3900
802
3902
ACOUSTIC DATA CIRCUIT
3904
RAW ACOUSTIC DATA
3910
PRIMARY MODE SCORE VALUE
3908
PRIMARY MODE VALUE
3906
THICKNESS PROCESSING CIRCUIT
3916
SECONDARY MODE VALUE
3912
ULTRA-SONIC THICKNESS VALUE
3914
SENSOR REPORTING CIRCUIT
3918
SECONDARY MODE SCORE VALUE

FIG. 37

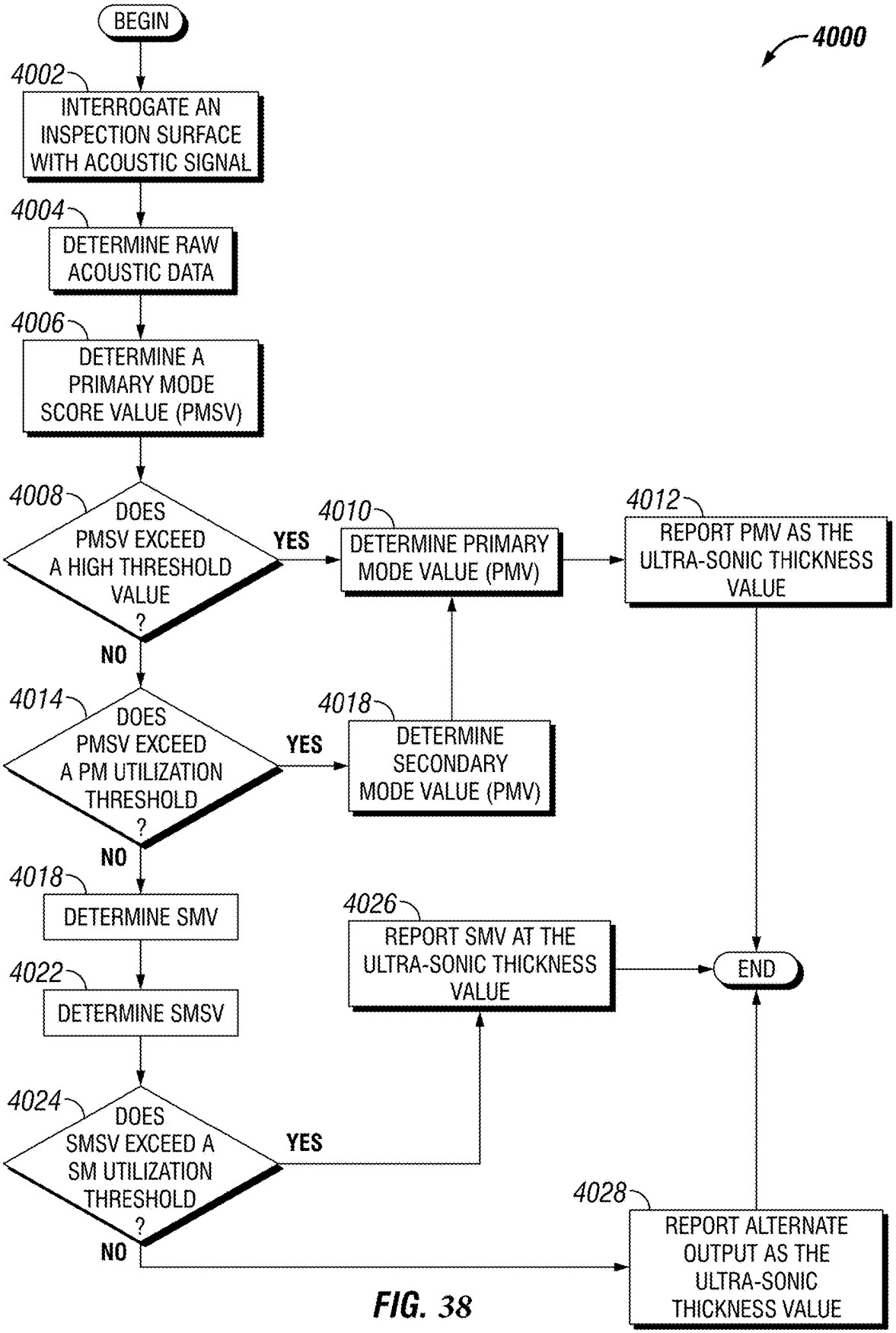
4000
BEGIN
4002
INTERROGATE AN INSPECTION SURFACE WITH ACOUSTIC SIGNAL
4004
DETERMINE RAW ACOUSTIC DATA
4006
DETERMINE A PRIMARY MODE SCORE VALUE (PMSV)
4008
DOES PMSV EXCEED A HIGH THRESHOLD VALUE ?
YES
NO
4010
DETERMINE PRIMARY MODE VALUE (PMV)
4012
REPORT PMV AS THE ULTRA-SONIC THICKNESS VALUE
4014
DOES PMSV EXCEED A PM UTILIZATION THRESHOLD ?
YES
NO
4018
DETERMINE SECONDARY MODE VALUE (PMV)
4018
DETERMINE SMV
4022
DETERMINE SMSV
4024
DOES SMSV EXCEED A SM UTILIZATION THRESHOLD ?
YES
NO
4026
REPORT SMV AT THE ULTRA-SONIC THICKNESS VALUE
END
4028
REPORT ALTERNATE OUTPUT AS THE ULTRA-SONIC THICKNESS VALUE

FIG. 38

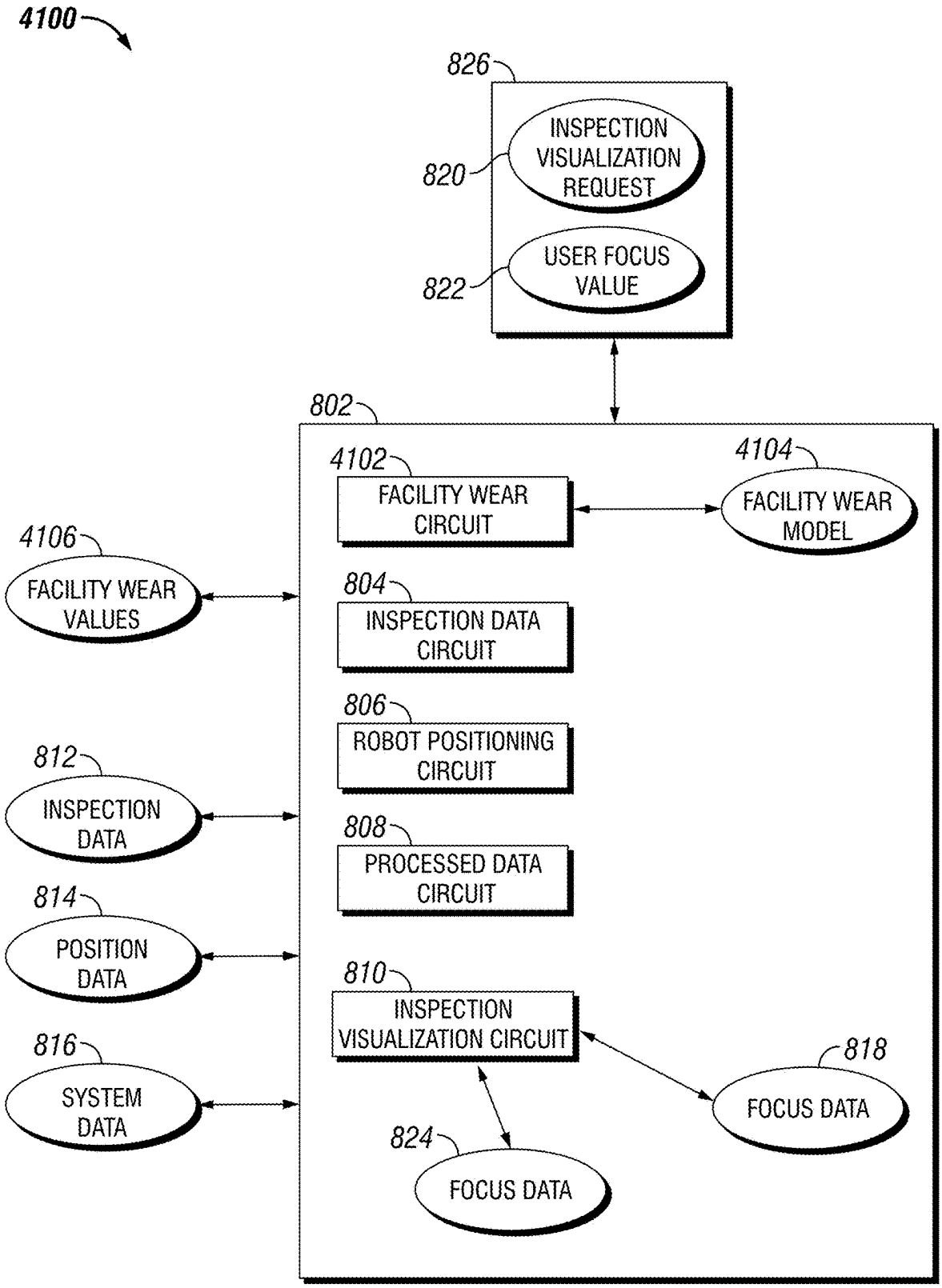
4100
826
INSPECTION VISUALIZATION REQUEST
820
USER FOCUS VALUE
822
802
4102
FACILITY WEAR CIRCUIT
4104
FACILITY WEAR MODEL
4106
FACILITY WEAR VALUES
804
INSPECTION DATA CIRCUIT
806
ROBOT POSITIONING CIRCUIT
812
INSPECTION DATA
808
PROCESSED DATA CIRCUIT
814
POSITION DATA
810
INSPECTION VISUALIZATION CIRCUIT
816
SYSTEM DATA
818
FOCUS DATA
824
FOCUS DATA

FIG. 39

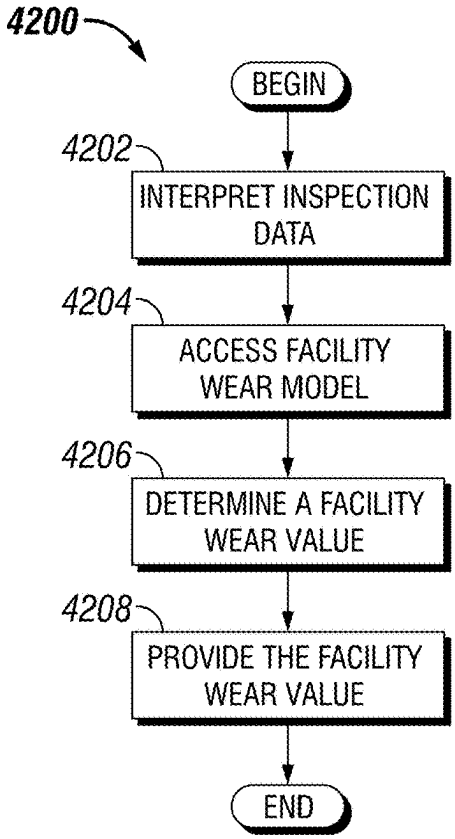
4200
BEGIN
4202
INTERPRET INSPECTION DATA
4204
ACCESS FACILITY WEAR MODEL
4206
DETERMINE A FACILITY WEAR VALUE
4208
PROVIDE THE FACILITY WEAR VALUE
END

FIG. 40

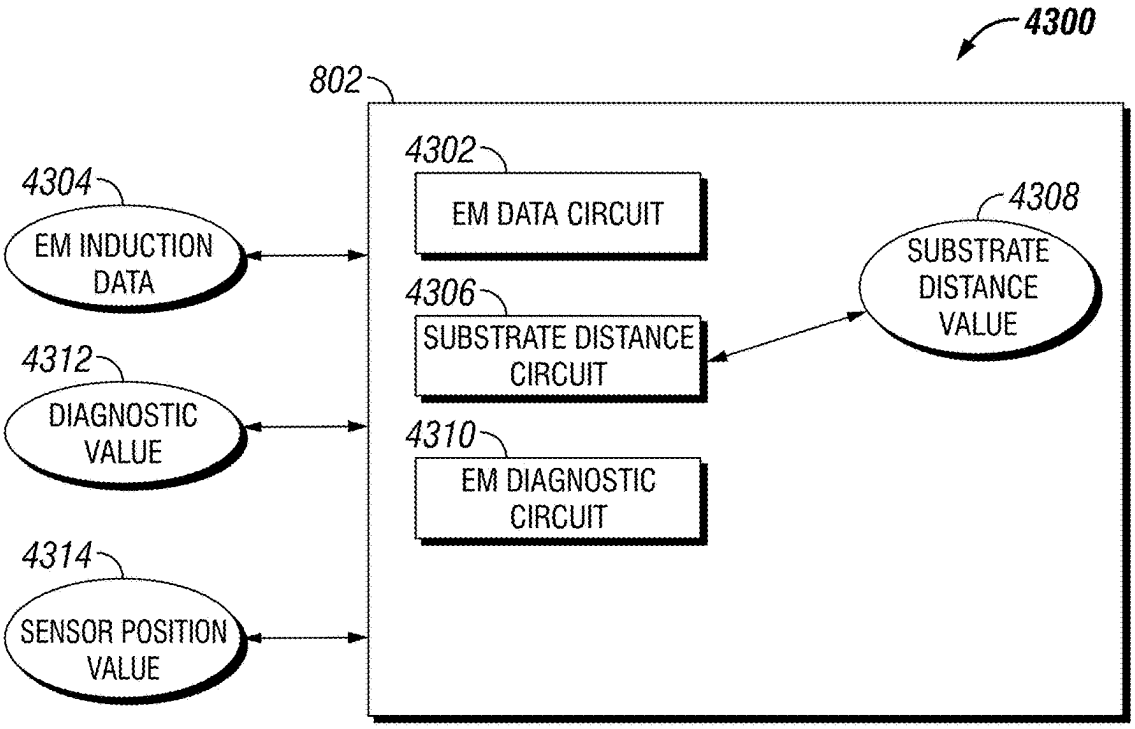
4300
802
4302
EM DATA CIRCUIT
4304
EM INDUCTION DATA
4306
SUBSTRATE DISTANCE CIRCUIT
4308
SUBSTRATE DISTANCE VALUE
4312
DIAGNOSTIC VALUE
4310
EM DIAGNOSTIC CIRCUIT
4314
SENSOR POSITION VALUE

FIG. 41

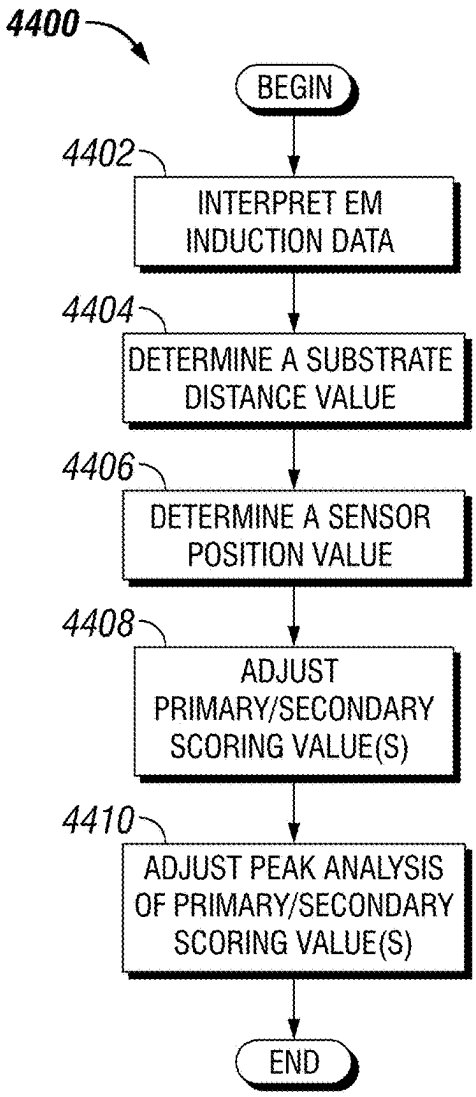
4400
BEGIN
4402
INTERPRET EM INDUCTION DATA
4404
DETERMINE A SUBSTRATE DISTANCE VALUE
4406
DETERMINE A SENSOR POSITION VALUE
4408
ADJUST PRIMARY/SECONDARY SCORING VALUE(S)
4410
ADJUST PEAK ANALYSIS OF PRIMARY/SECONDARY SCORING VALUE(S)
END

FIG. 42

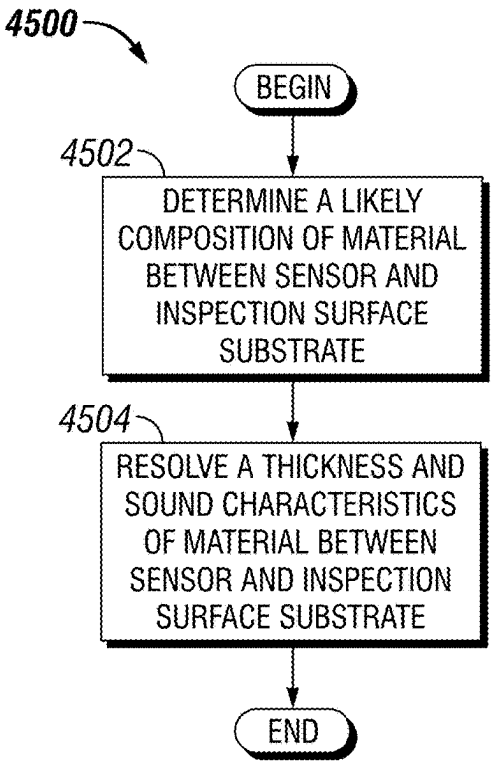
4500
BEGIN
4502
DETERMINE A LIKELY COMPOSITION OF MATERIAL BETWEEN SENSOR AND INSPECTION SURFACE SUBSTRATE
4504
RESOLVE A THICKNESS AND SOUND CHARACTERISTICS OF MATERIAL BETWEEN SENSOR AND INSPECTION SURFACE SUBSTRATE
END

FIG. 43

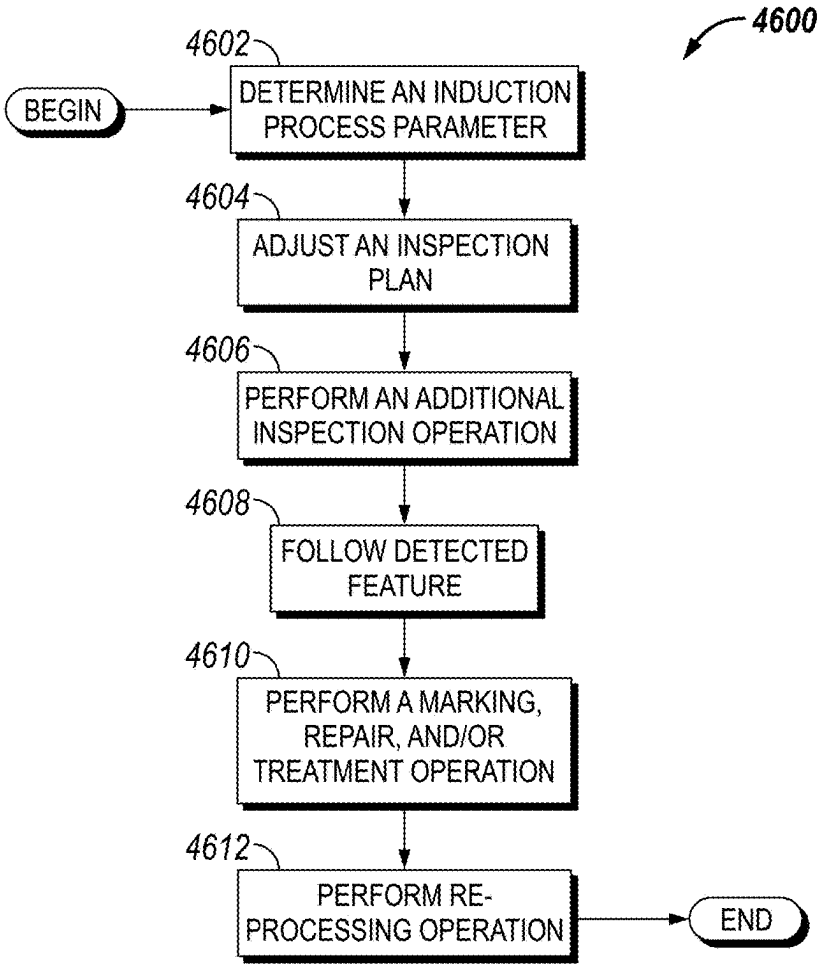
4600
4602
BEGIN
DETERMINE AN INDUCTION PROCESS PARAMETER
4604
ADJUST AN INSPECTION PLAN
4606
PERFORM AN ADDITIONAL INSPECTION OPERATION
4608
FOLLOW DETECTED FEATURE
4610
PERFORM A MARKING, REPAIR, AND/OR TREATMENT OPERATION
4612
PERFORM RE-PROCESSING OPERATION
END

FIG. 44

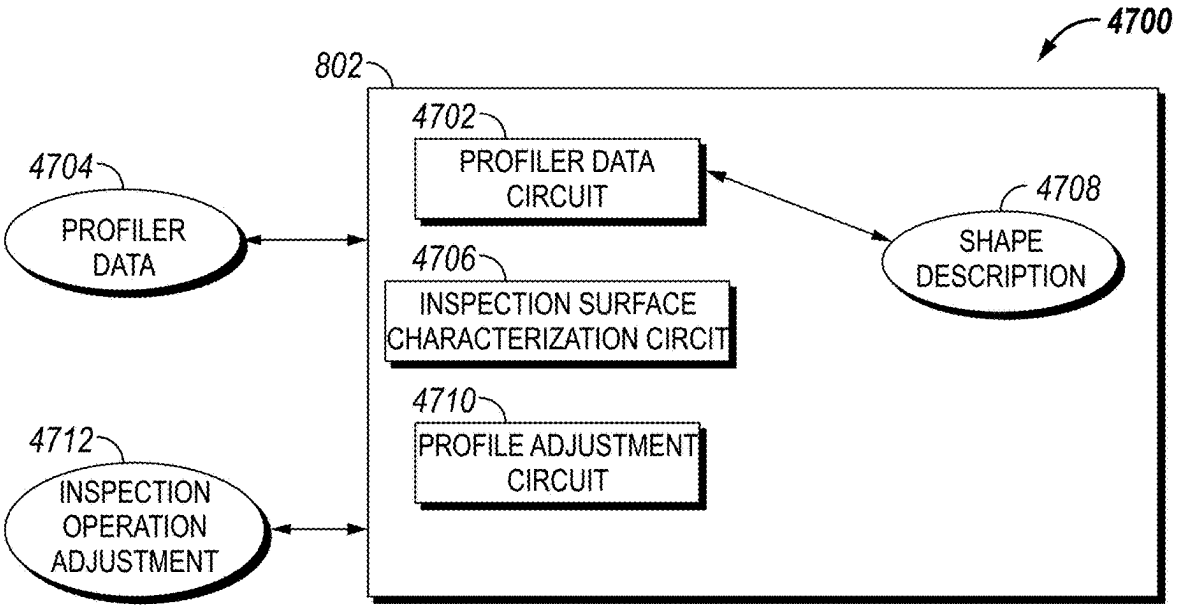
4700
802
4702
PROFILER DATA CIRCUIT
4704
PROFILER DATA
4708
SHAPE DESCRIPTION
4706
INSPECTION SURFACE CHARACTERIZATION CIRCIT
4710
PROFILE ADJUSTMENT CIRCUIT
4712
INSPECTION OPERATION ADJUSTMENT

FIG. 45

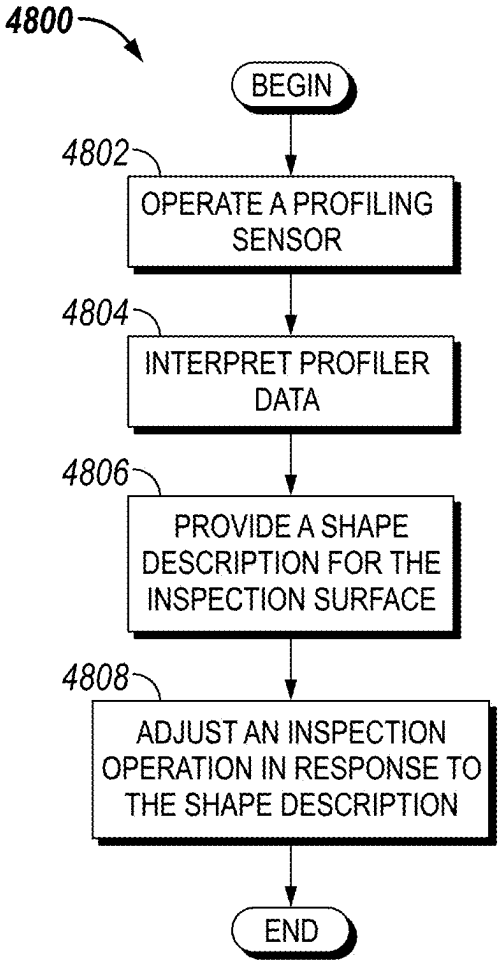
4800
BEGIN
4802
OPERATE A PROFILING SENSOR
4804
INTERPRET PROFILER DATA
4806
PROVIDE A SHAPE DESCRIPTION FOR THE INSPECTION SURFACE
4808
ADJUST AN INSPECTION OPERATION IN RESPONSE TO THE SHAPE DESCRIPTION
END

FIG. 46

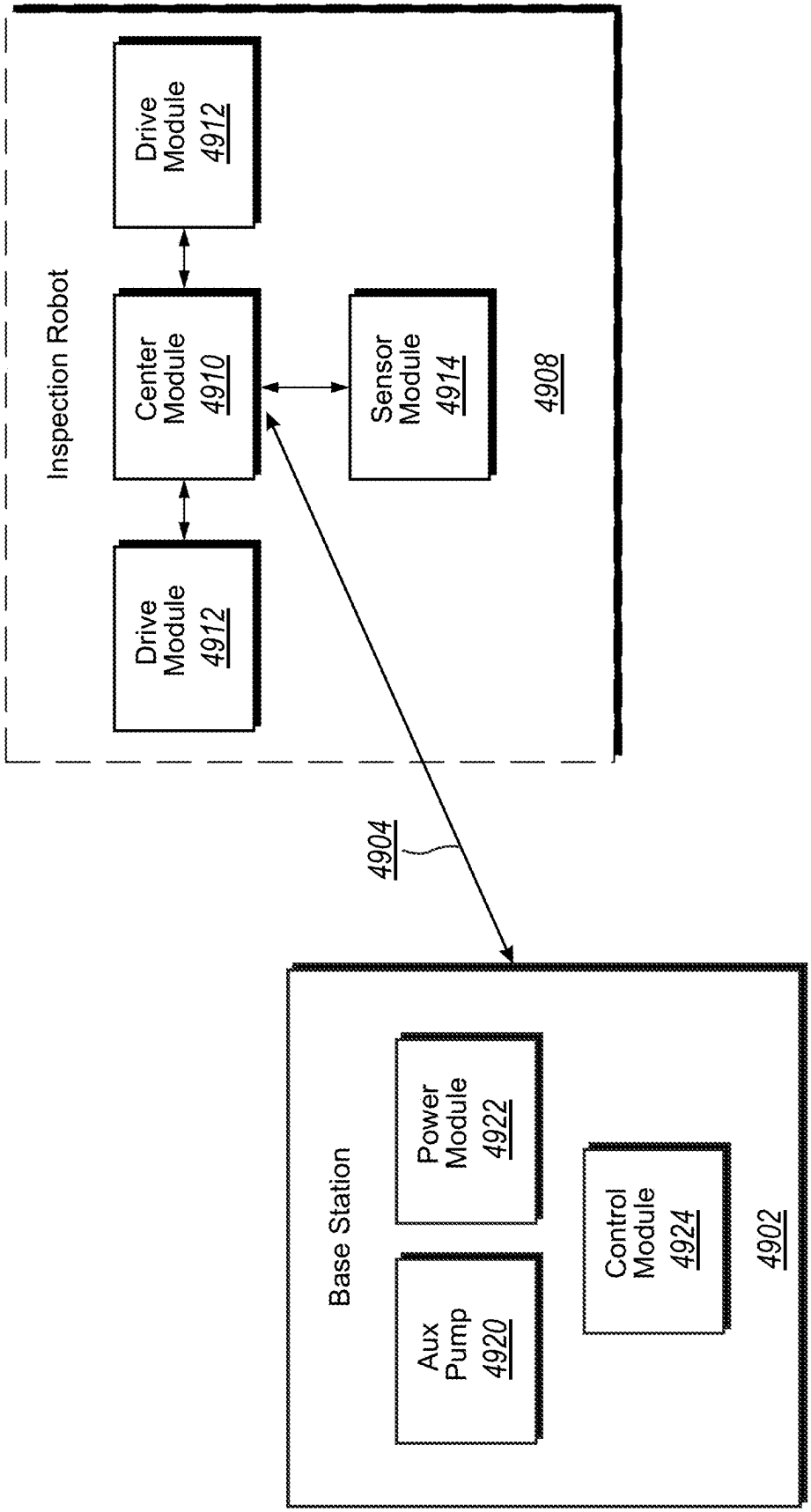
Inspection Robot
Drive Module 4912
Center Module 4910
Drive Module 4912
Sensor Module 4914
4908
4904
Base Station
Aux Pump 4920
Power Module 4922
Control Module 4924
4902

FIG. 47

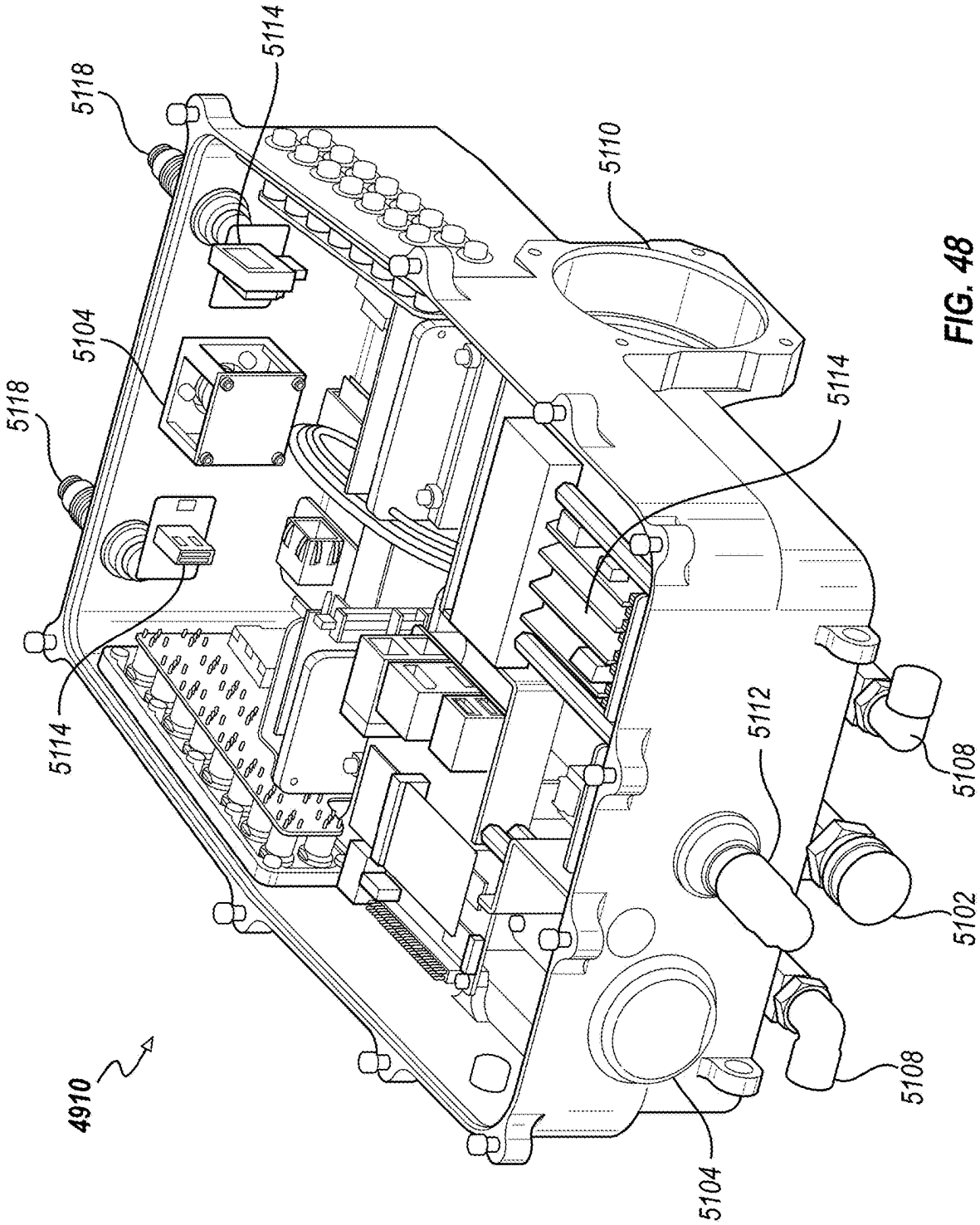
5118
5114
5104
5118
5114
5110
5114
5112
5108
5102
5108
5104
4910

FIG. 48

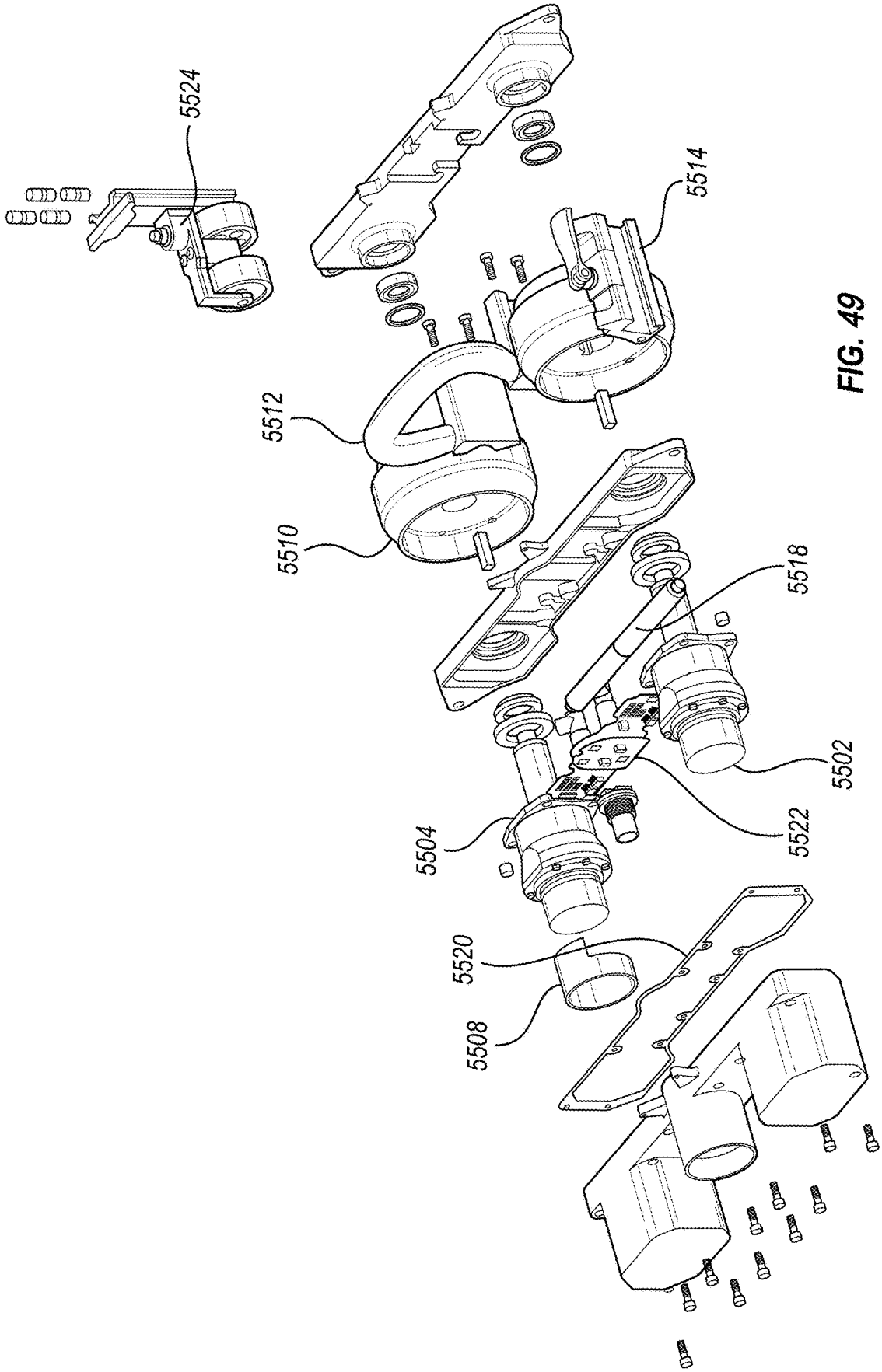

FIG. 49

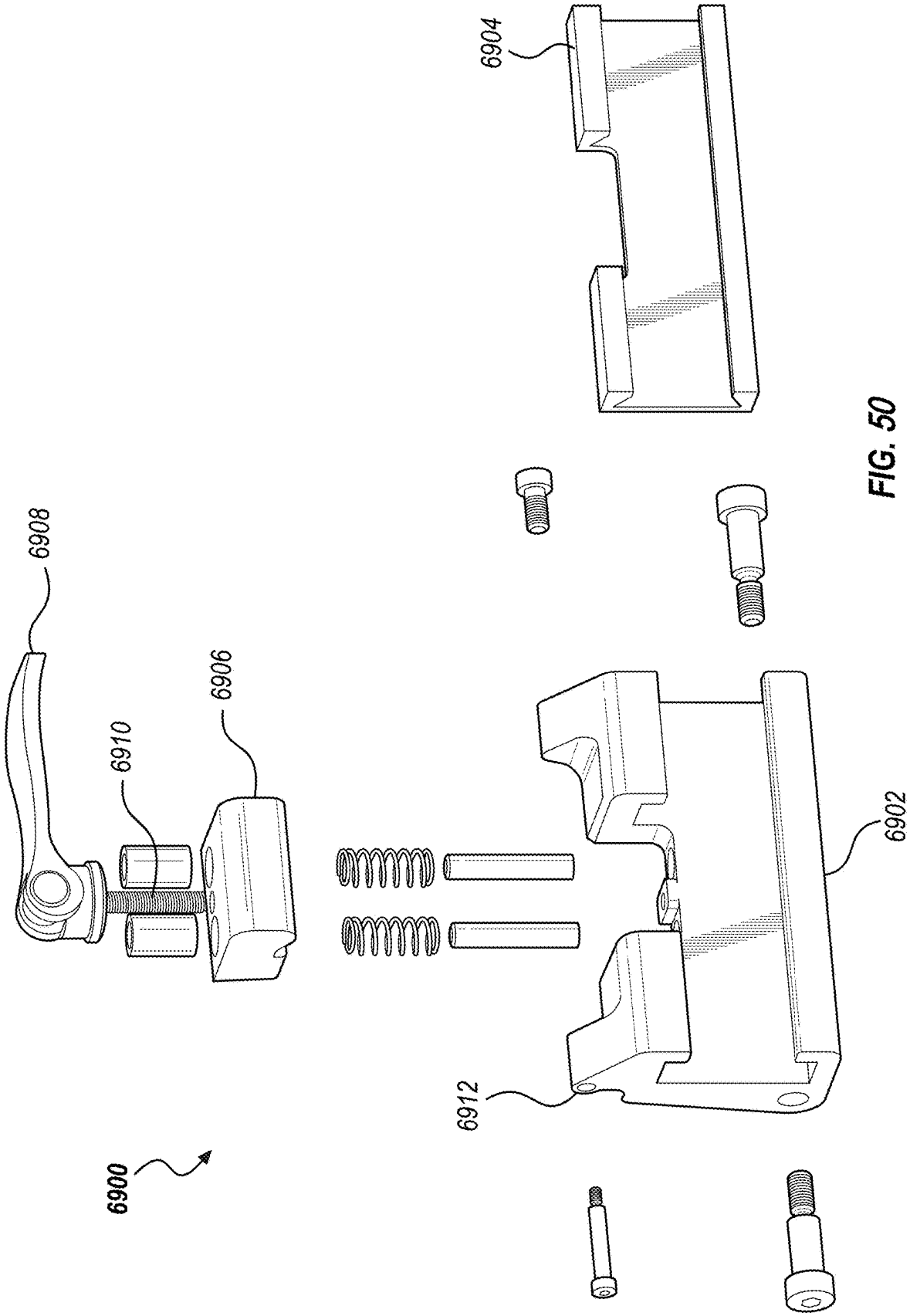

FIG. 50

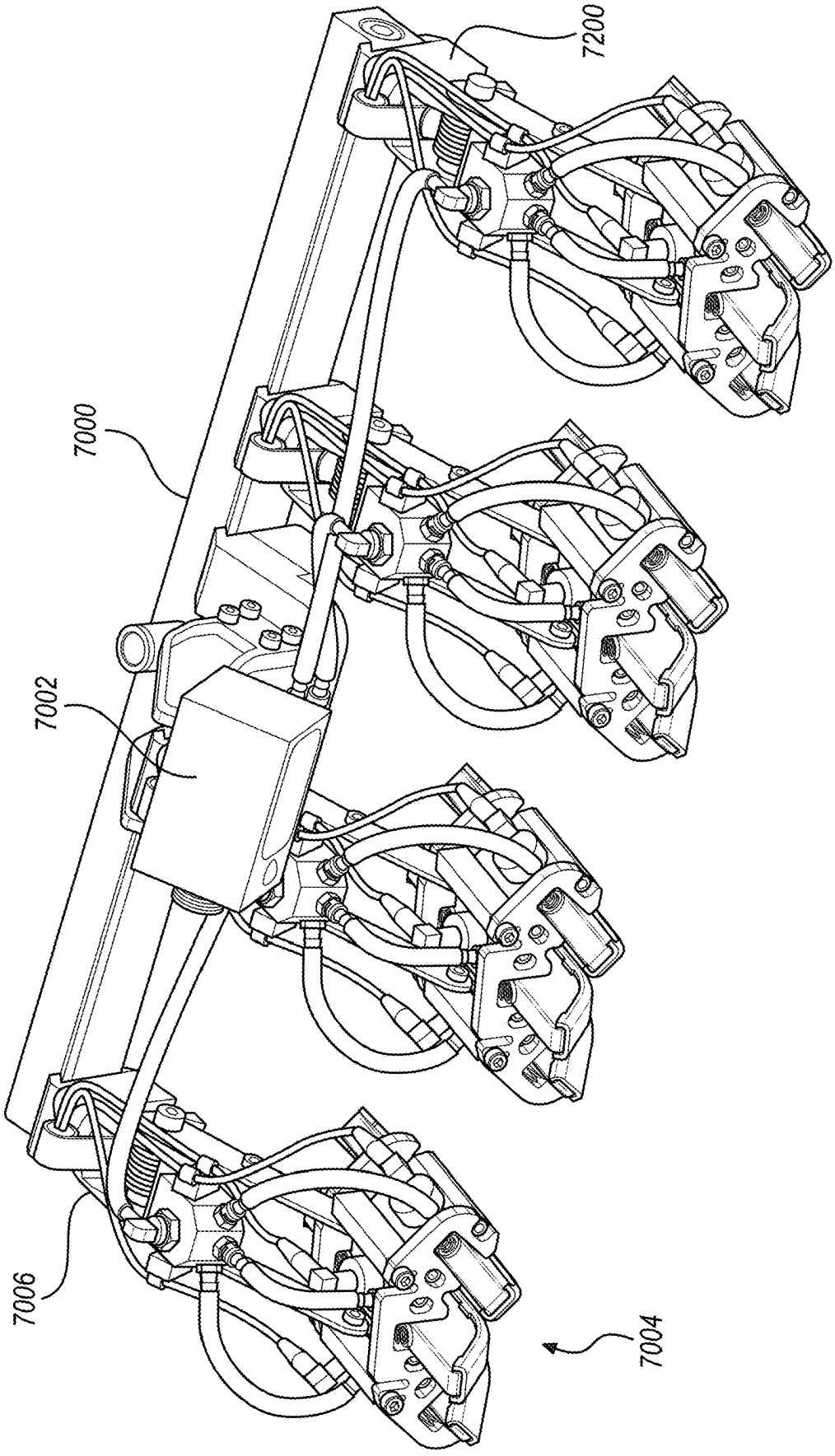

FIG. 51

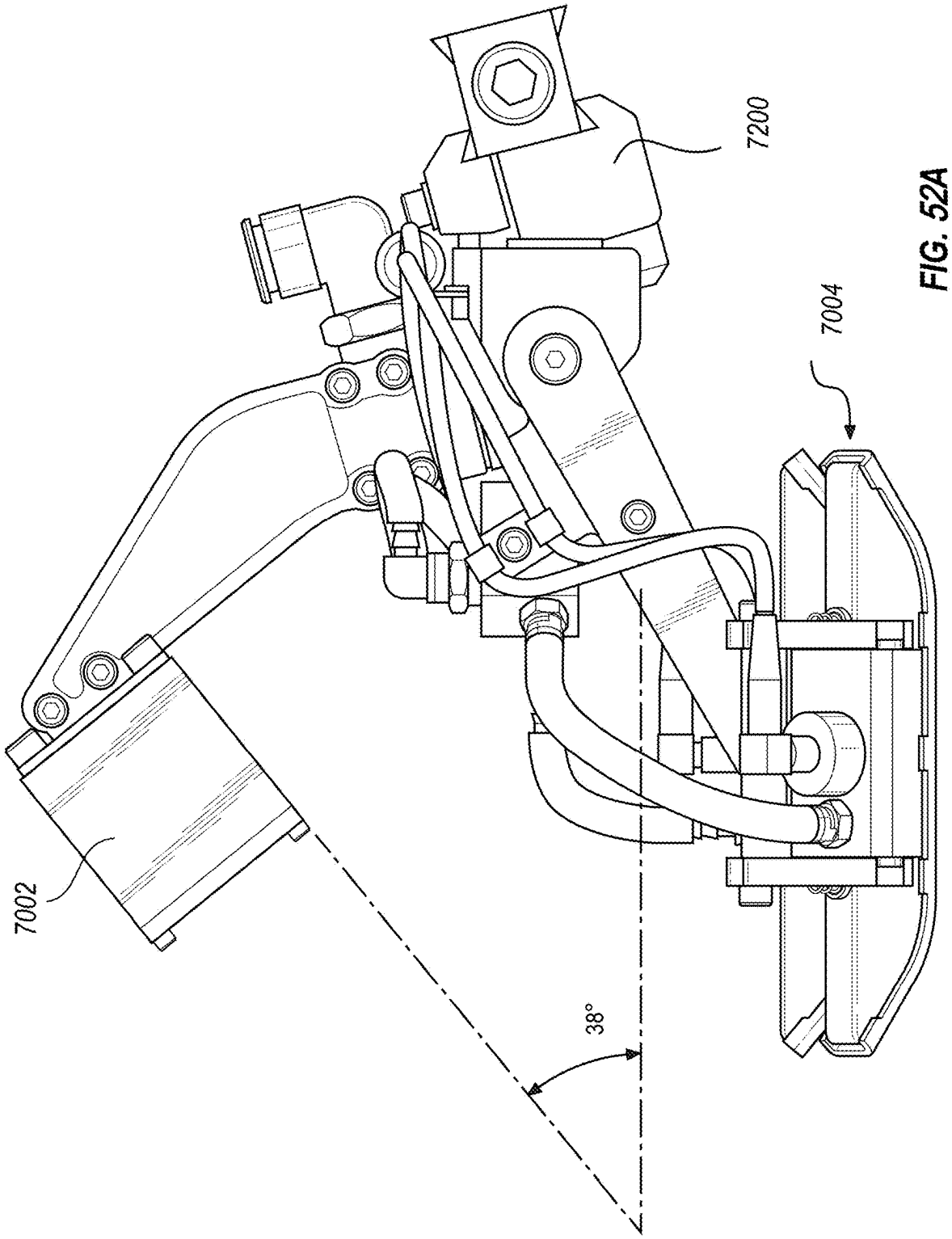

FIG. 52A

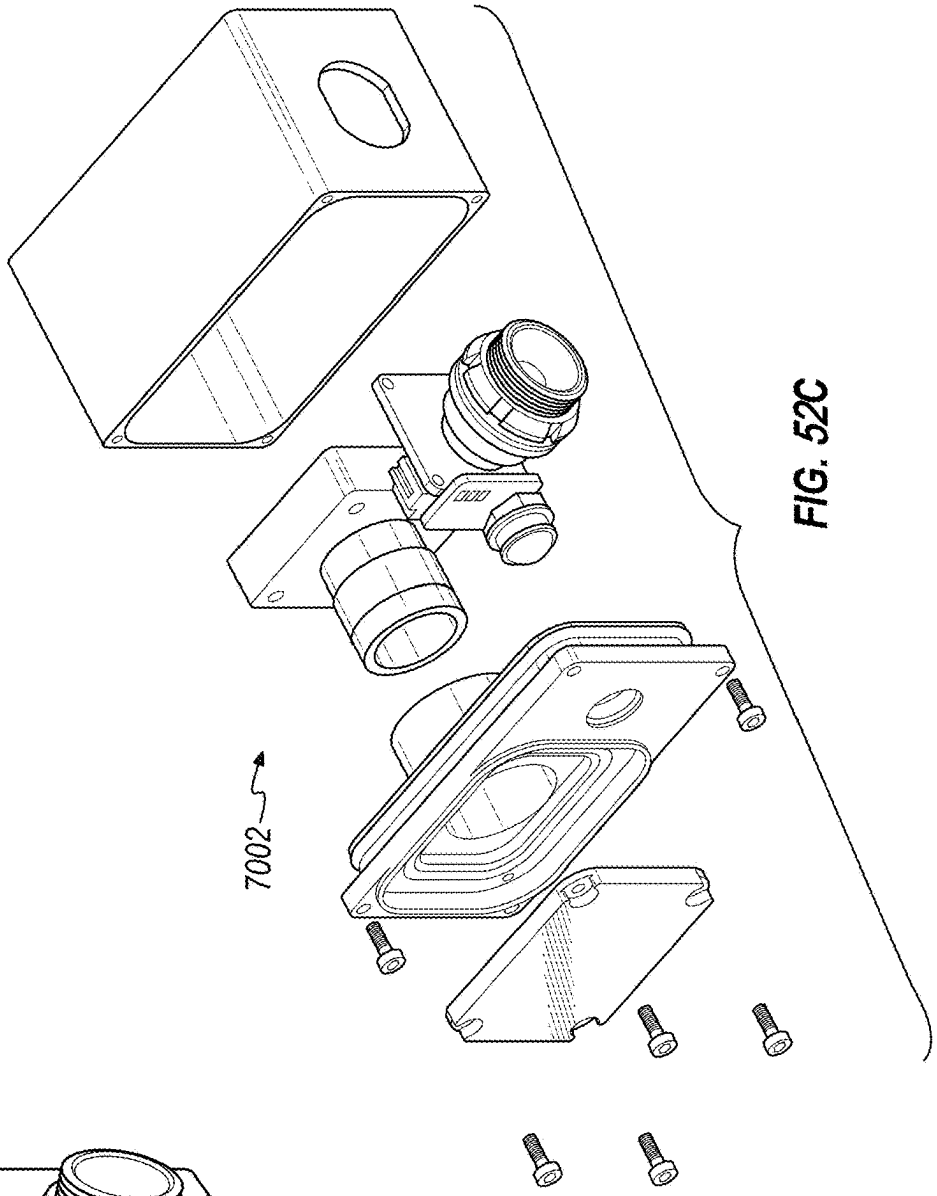

FIG. 52C

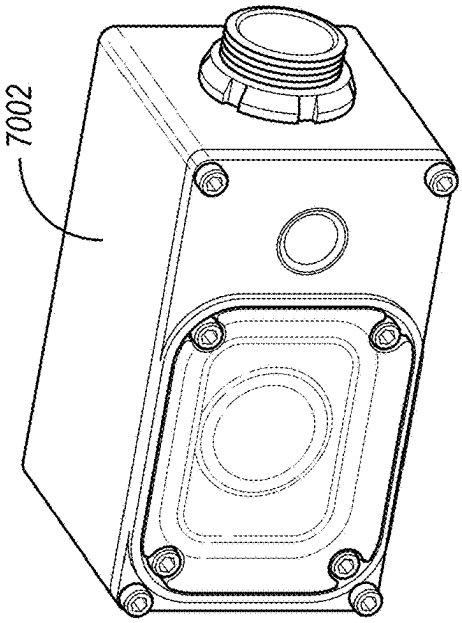

FIG. 52B

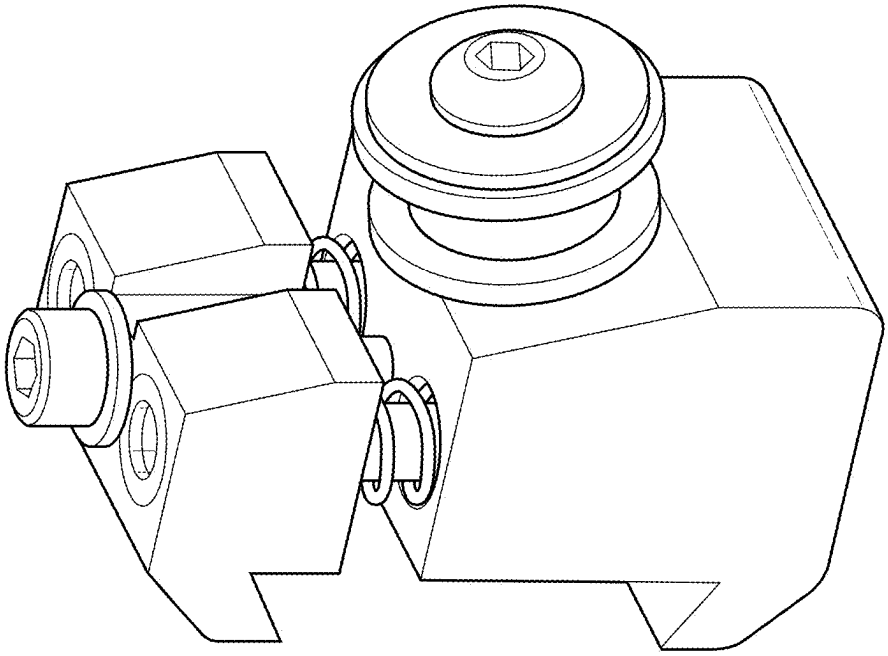

FIG. 53B

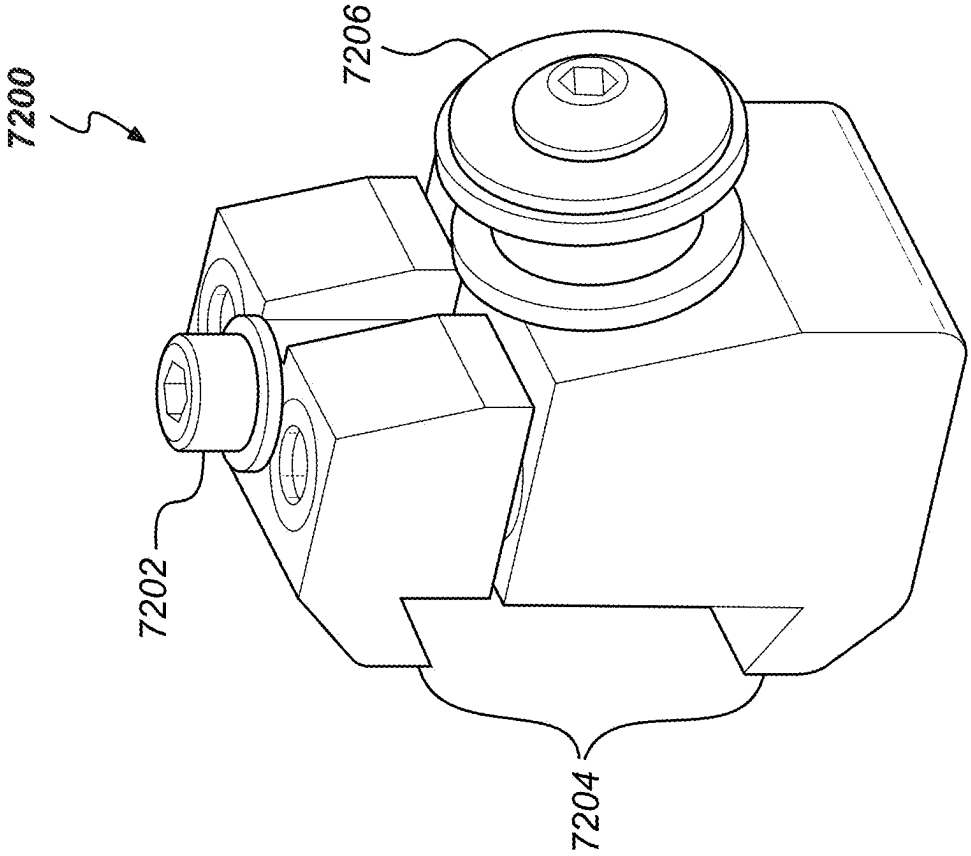

FIG. 53A

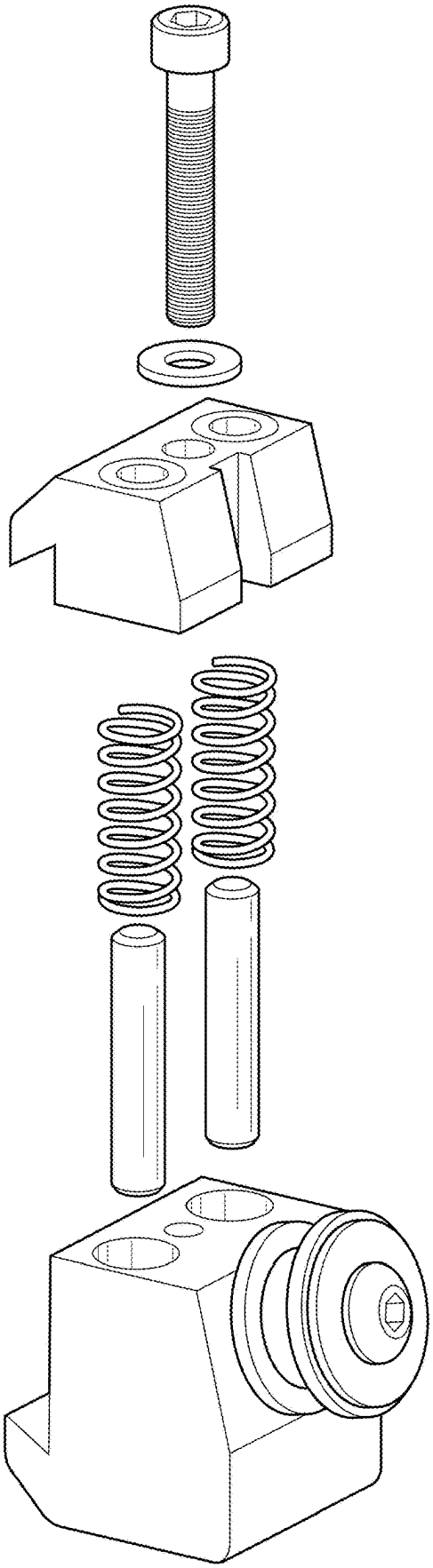

FIG. 53C

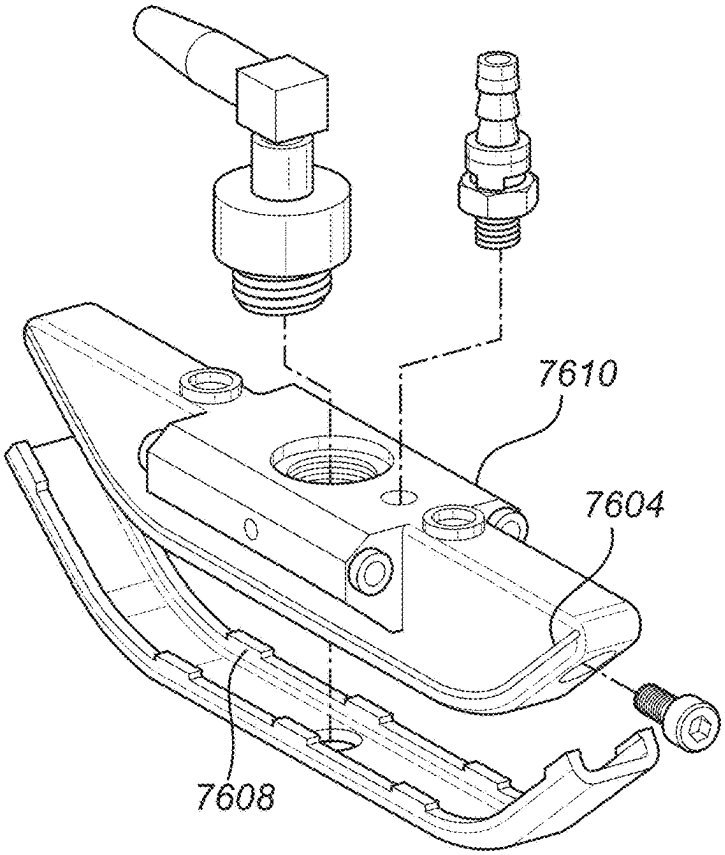

FIG. 54A

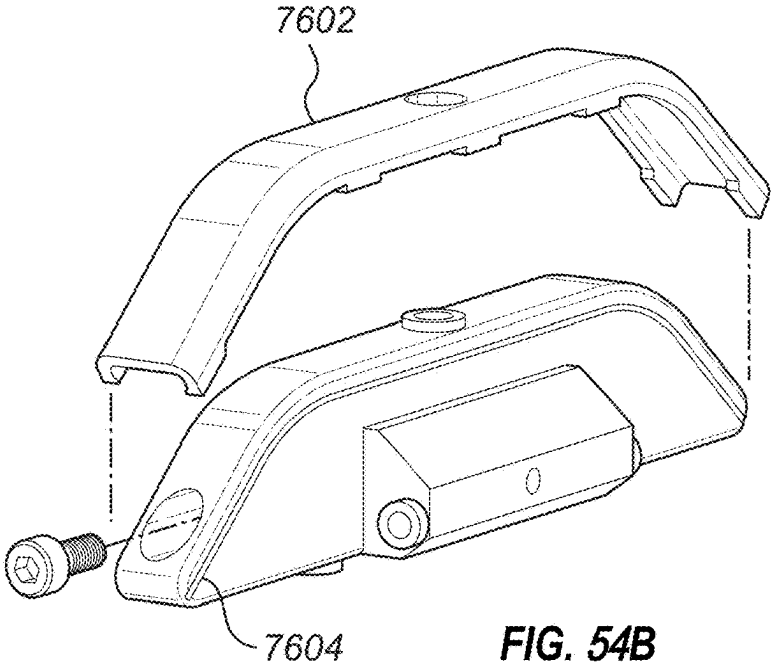

FIG. 54B

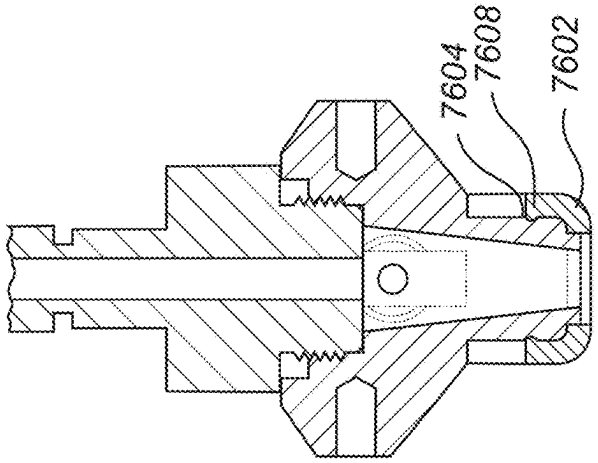

FIG. 54C

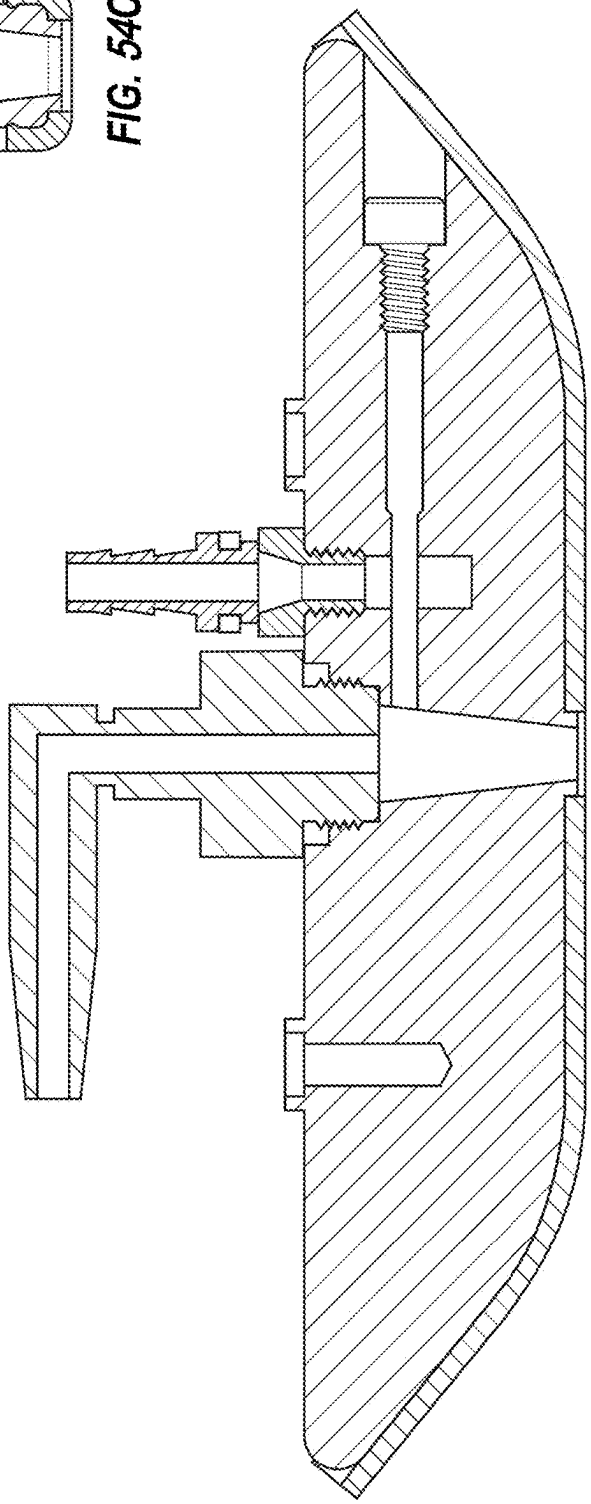

FIG. 54D

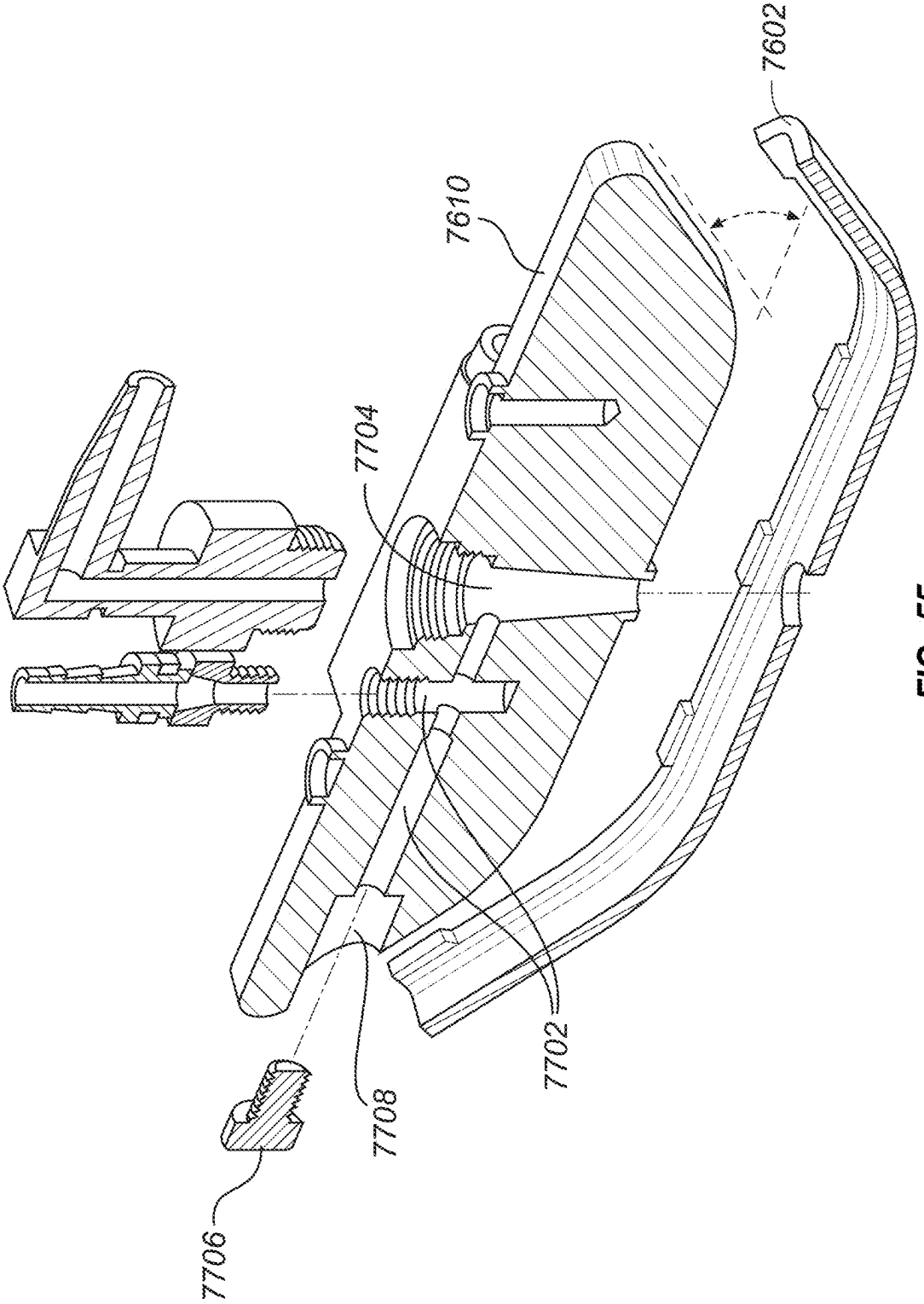

FIG. 55

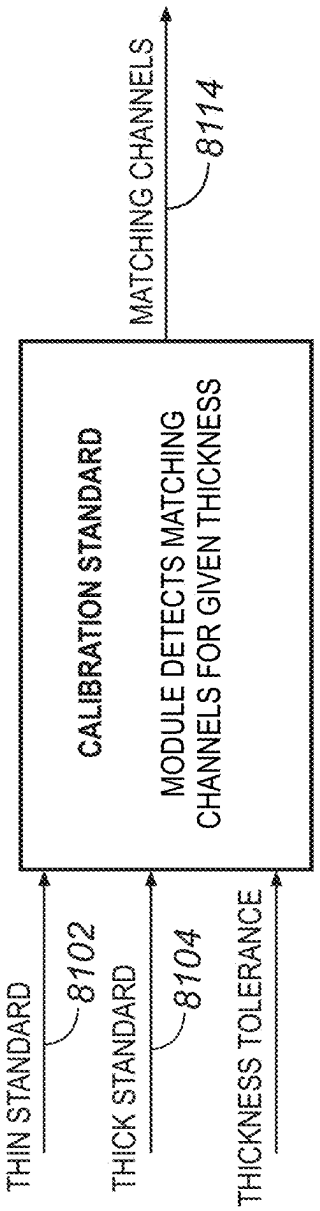

FIG. 56A

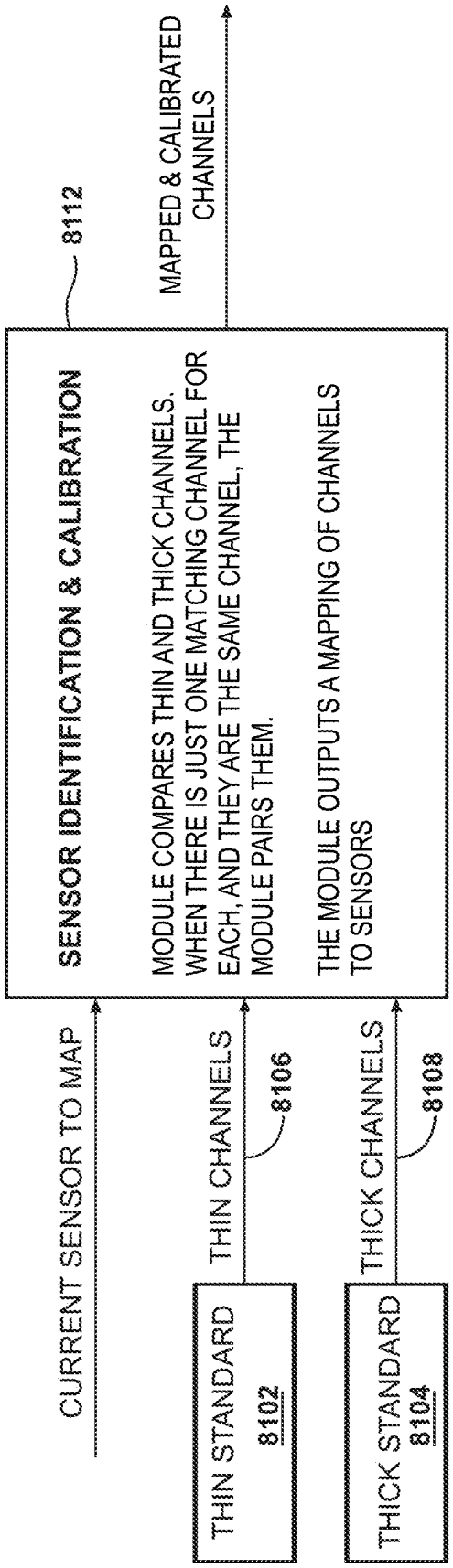

FIG. 56B

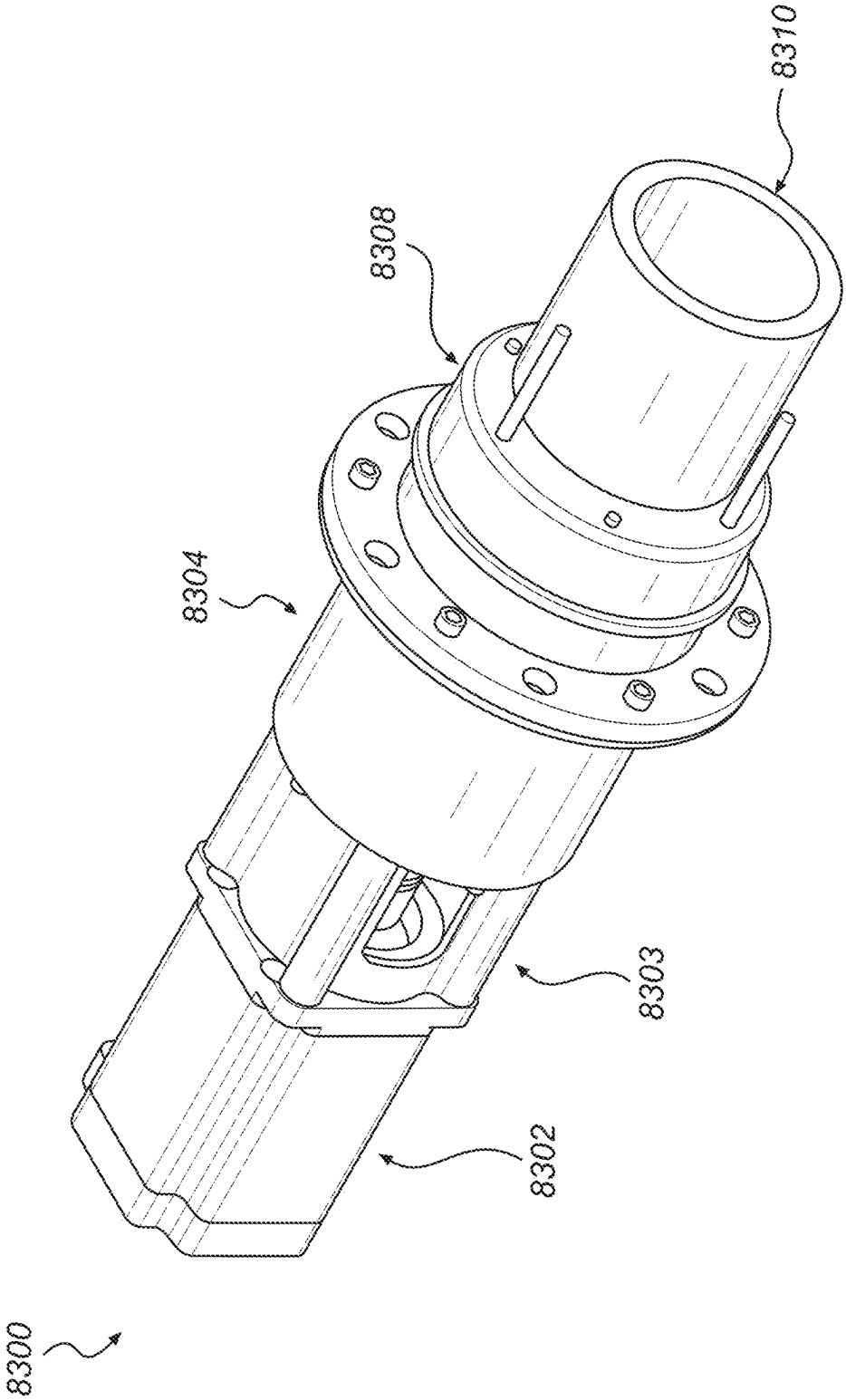

FIG. 57

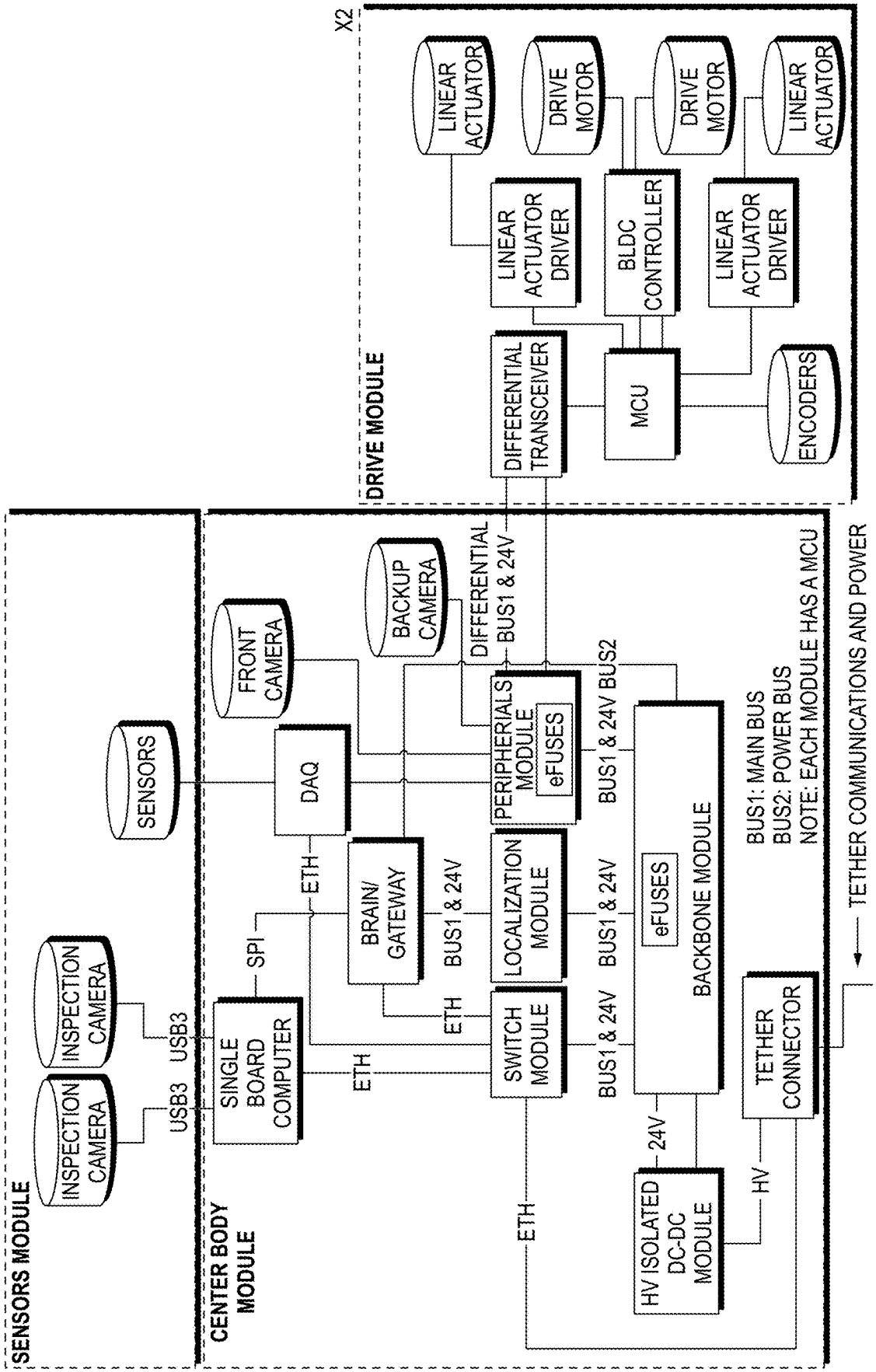
SENSORS MODULE
INSPECTION CAMERA
INSPECTION CAMERA
USB3
USB3
SENSORS
CENTER BODY MODULE
SINGLE BOARD COMPUTER
SPI
ETH
ETH
DAQ
FRONT CAMERA
BACKUP CAMERA
BRAIN/ GATEWAY
BUS1 & 24V
ETH
SWITCH MODULE
LOCALIZATION MODULE
PERIPHERIALS MODULE
eFUSES
DIFFERENTIAL
BUS1 & 24V
BUS1 & 24V
BUS1 & 24V
BUS1 & 24V
BUS2
BACKBONE MODULE
eFUSES
24V
HV ISOLATED DC-DC MODULE
HV
TETHER CONNECTOR
ETH
BUS1: MAIN BUS
BUS2: POWER BUS
NOTE: EACH MODULE HAS A MCU
TETHER COMMUNICATIONS AND POWER
DRIVE MODULE
X2
LINEAR ACTUATOR
DRIVE MOTOR
DRIVE MOTOR
LINEAR ACTUATOR
LINEAR ACTUATOR DRIVER
BLDC CONTROLLER
LINEAR ACTUATOR DRIVER
DIFFERENTIAL TRANSCEIVER
MCU
ENCODERS

FIG. 58

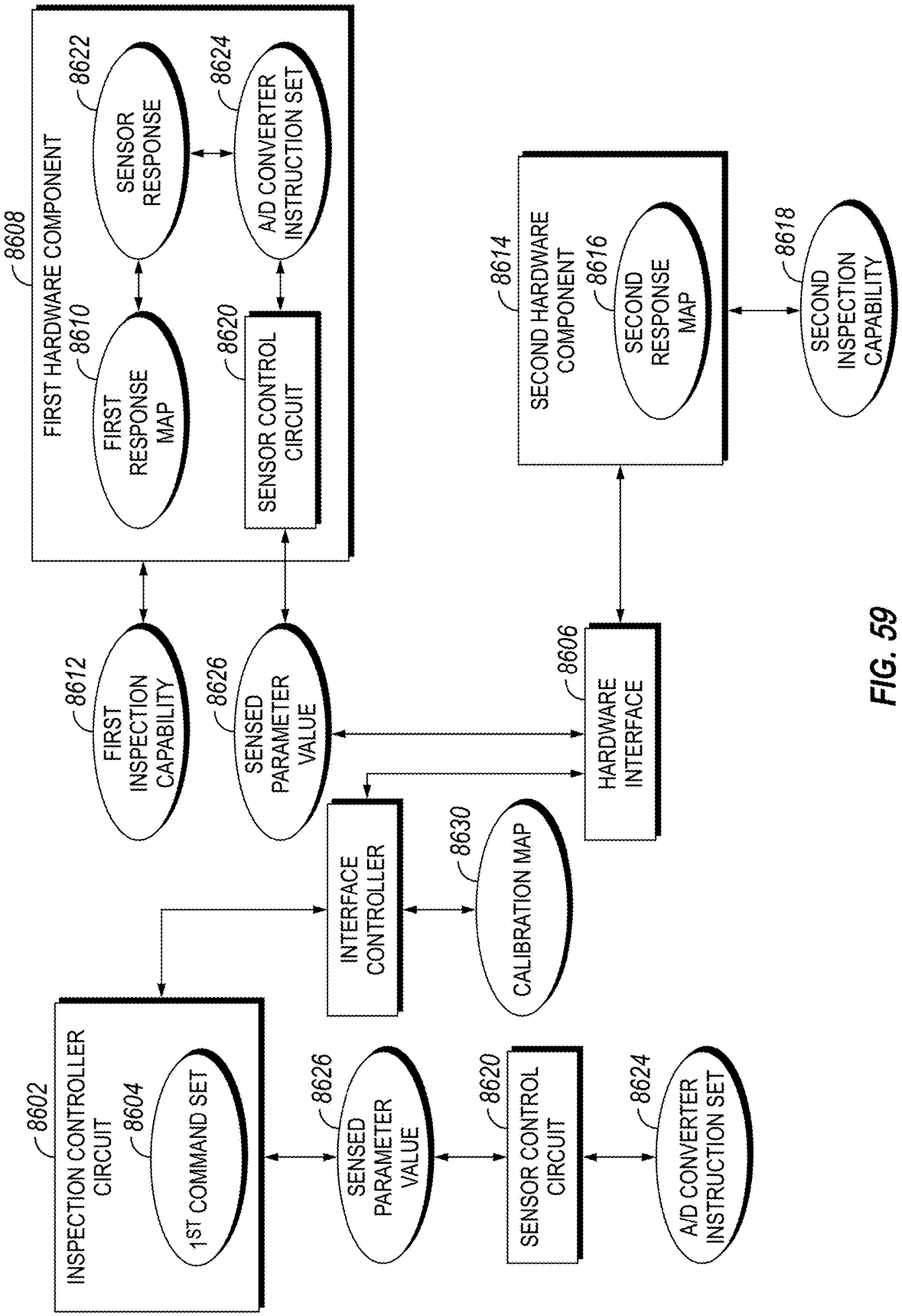
8608
FIRST HARDWARE COMPONENT
8610
FIRST RESPONSE MAP
8622
SENSOR RESPONSE
8624
A/D CONVERTER INSTRUCTION SET
8620
SENSOR CONTROL CIRCUIT
8612
FIRST INSPECTION CAPABILITY
8626
SENSED PARAMETER VALUE
8614
SECOND HARDWARE COMPONENT
8616
SECOND RESPONSE MAP
8618
SECOND INSPECTION CAPABILITY
8606
HARDWARE INTERFACE
INTERFACE CONTROLLER
8630
CALIBRATION MAP
8602
INSPECTION CONTROLLER CIRCUIT
8604
1ST COMMAND SET
8626
SENSED PARAMETER VALUE
8620
SENSOR CONTROL CIRCUIT
8624
A/D CONVERTER INSTRUCTION SET

FIG. 59

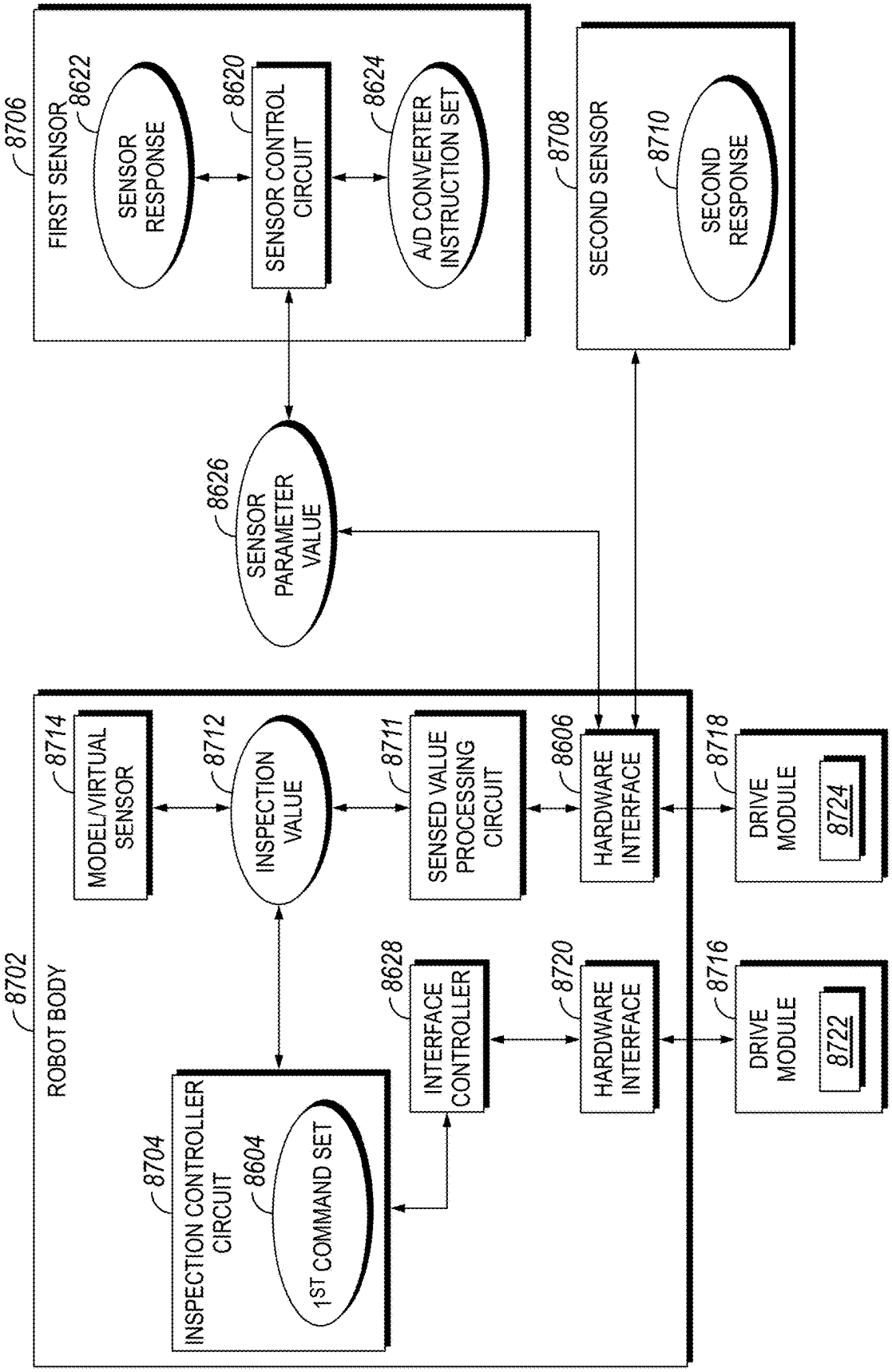
8706
FIRST SENSOR
8622
SENSOR RESPONSE
8620
SENSOR CONTROL CIRCUIT
8624
A/D CONVERTER INSTRUCTION SET
8708
SECOND SENSOR
8710
SECOND RESPONSE
8626
SENSOR PARAMETER VALUE
8702
ROBOT BODY
8714
MODEL/VIRTUAL SENSOR
8712
INSPECTION VALUE
8711
SENSED VALUE PROCESSING CIRCUIT
8606
HARDWARE INTERFACE
8718
DRIVE MODULE
8724
8628
INTERFACE CONTROLLER
8720
HARDWARE INTERFACE
8716
DRIVE MODULE
8722
8704
INSPECTION CONTROLLER CIRCUIT
8604
1ST COMMAND SET

FIG. 60

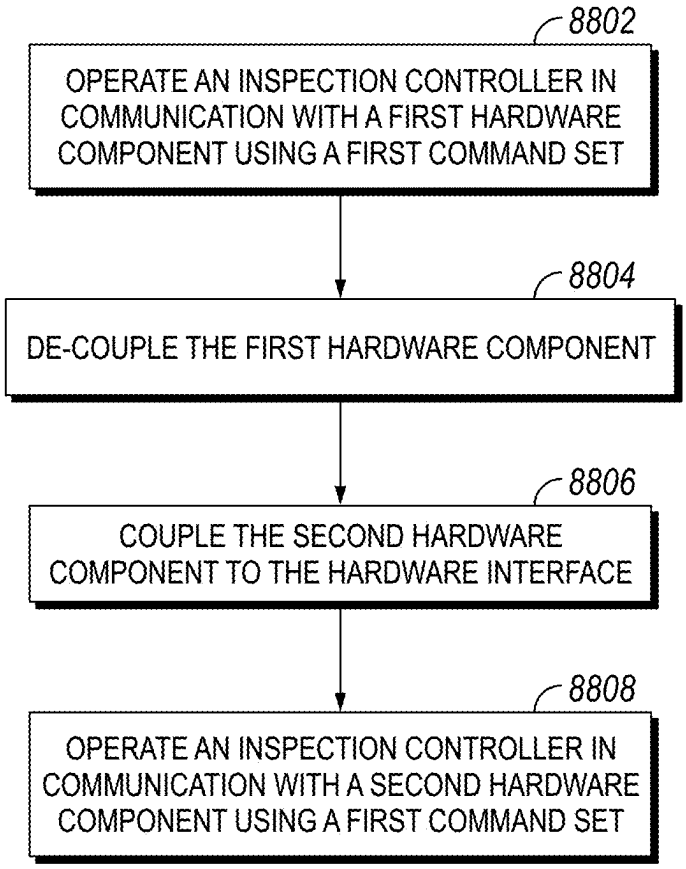
8802
OPERATE AN INSPECTION CONTROLLER IN COMMUNICATION WITH A FIRST HARDWARE COMPONENT USING A FIRST COMMAND SET
8804
DE-COUPLE THE FIRST HARDWARE COMPONENT
8806
COUPLE THE SECOND HARDWARE COMPONENT TO THE HARDWARE INTERFACE
8808
OPERATE AN INSPECTION CONTROLLER IN COMMUNICATION WITH A SECOND HARDWARE COMPONENT USING A FIRST COMMAND SET

FIG. 61

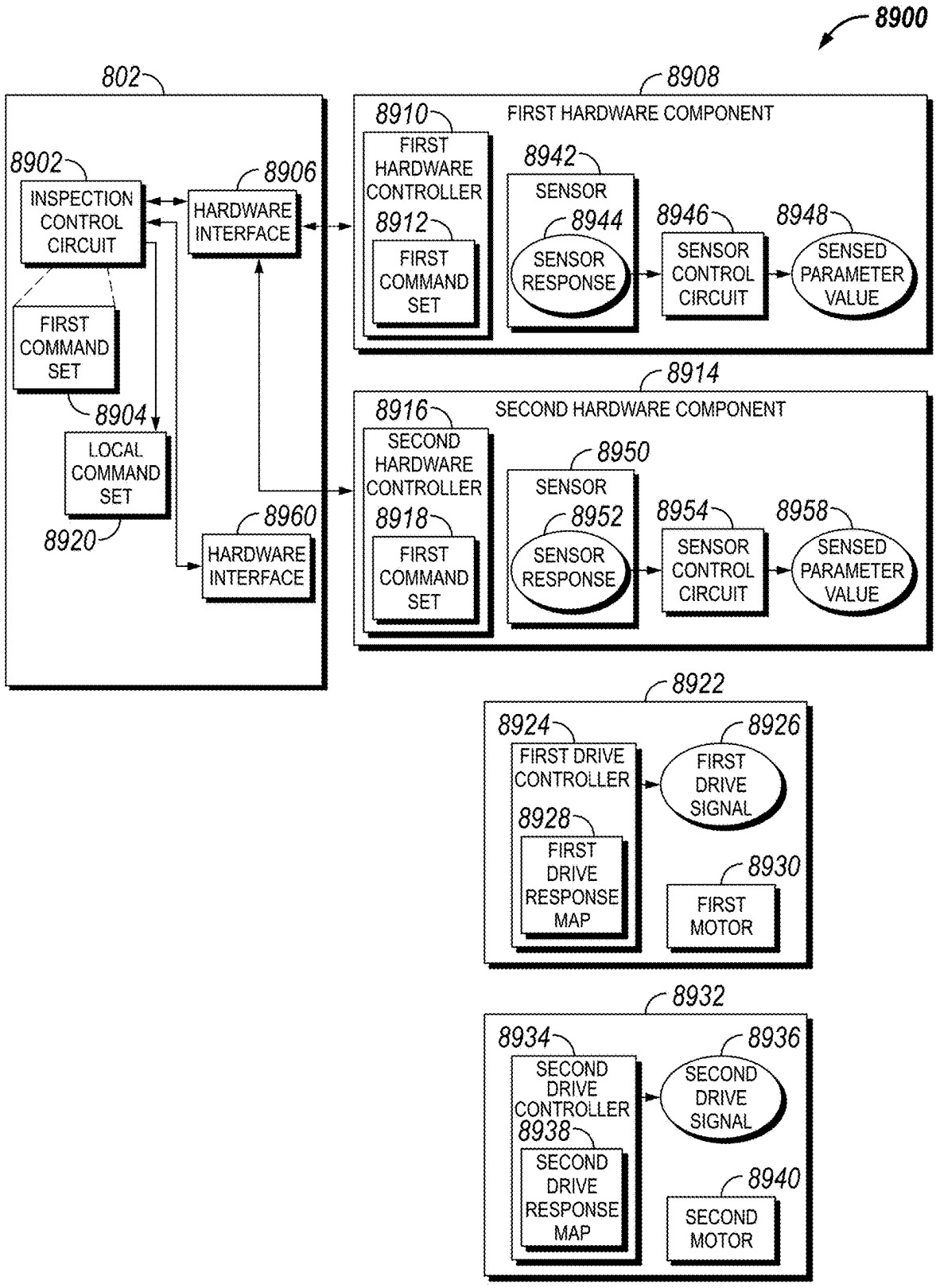
8900
802
8902
INSPECTION CONTROL CIRCUIT
8906
HARDWARE INTERFACE
FIRST COMMAND SET
8904
LOCAL COMMAND SET
8920
8960
HARDWARE INTERFACE
8908
FIRST HARDWARE COMPONENT
8910
FIRST HARDWARE CONTROLLER
8912
FIRST COMMAND SET
8942
SENSOR
8944
SENSOR RESPONSE
8946
SENSOR CONTROL CIRCUIT
8948
SENSED PARAMETER VALUE
8914
SECOND HARDWARE COMPONENT
8916
SECOND HARDWARE CONTROLLER
8918
FIRST COMMAND SET
8950
SENSOR
8952
SENSOR RESPONSE
8954
SENSOR CONTROL CIRCUIT
8958
SENSED PARAMETER VALUE
8922
8924
FIRST DRIVE CONTROLLER
8926
FIRST DRIVE SIGNAL
8928
FIRST DRIVE RESPONSE MAP
8930
FIRST MOTOR
8932
8934
SECOND DRIVE CONTROLLER
8936
SECOND DRIVE SIGNAL
8938
SECOND DRIVE RESPONSE MAP
8940
SECOND MOTOR

FIG. 62

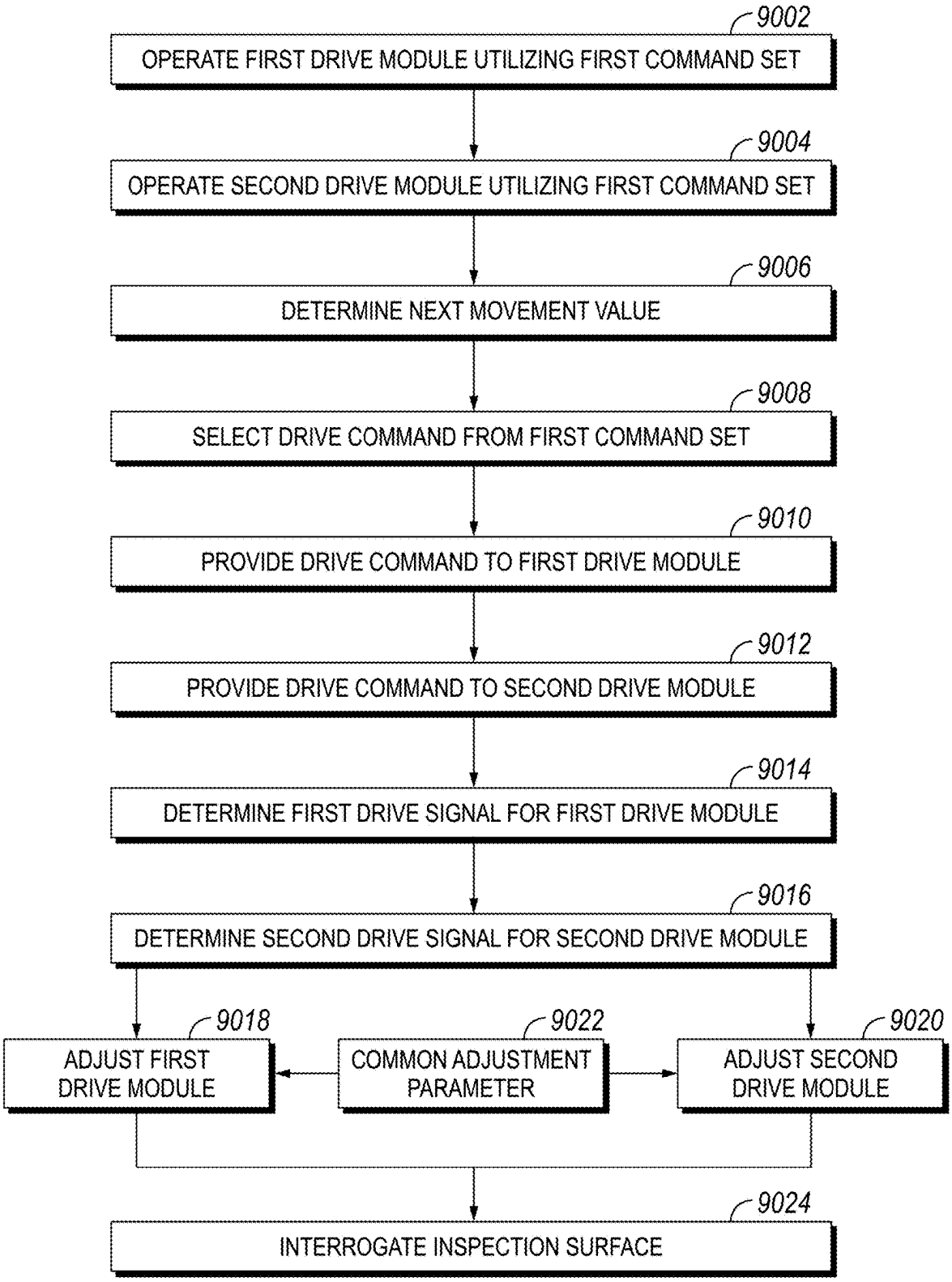
9002
OPERATE FIRST DRIVE MODULE UTILIZING FIRST COMMAND SET
9004
OPERATE SECOND DRIVE MODULE UTILIZING FIRST COMMAND SET
9006
DETERMINE NEXT MOVEMENT VALUE
9008
SELECT DRIVE COMMAND FROM FIRST COMMAND SET
9010
PROVIDE DRIVE COMMAND TO FIRST DRIVE MODULE
9012
PROVIDE DRIVE COMMAND TO SECOND DRIVE MODULE
9014
DETERMINE FIRST DRIVE SIGNAL FOR FIRST DRIVE MODULE
9016
DETERMINE SECOND DRIVE SIGNAL FOR SECOND DRIVE MODULE
9018
ADJUST FIRST DRIVE MODULE
9022
COMMON ADJUSTMENT PARAMETER
9020
ADJUST SECOND DRIVE MODULE
9024
INTERROGATE INSPECTION SURFACE

FIG. 63

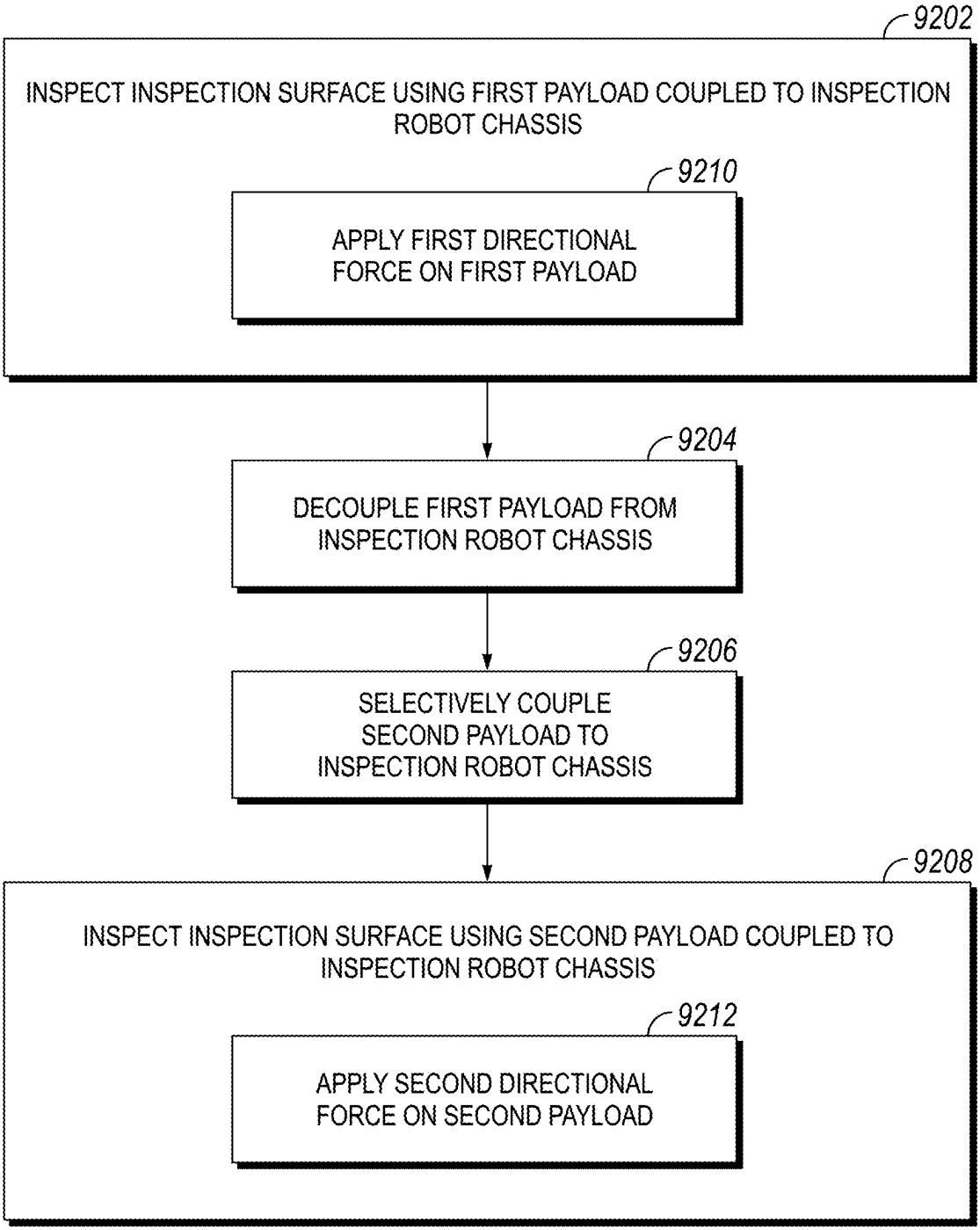
9202
INSPECT INSPECTION SURFACE USING FIRST PAYLOAD COUPLED TO INSPECTION ROBOT CHASSIS
9210
APPLY FIRST DIRECTIONAL FORCE ON FIRST PAYLOAD
9204
DECOUPLE FIRST PAYLOAD FROM INSPECTION ROBOT CHASSIS
9206
SELECTIVELY COUPLE SECOND PAYLOAD TO INSPECTION ROBOT CHASSIS
9208
INSPECT INSPECTION SURFACE USING SECOND PAYLOAD COUPLED TO INSPECTION ROBOT CHASSIS
9212
APPLY SECOND DIRECTIONAL FORCE ON SECOND PAYLOAD

FIG. 64

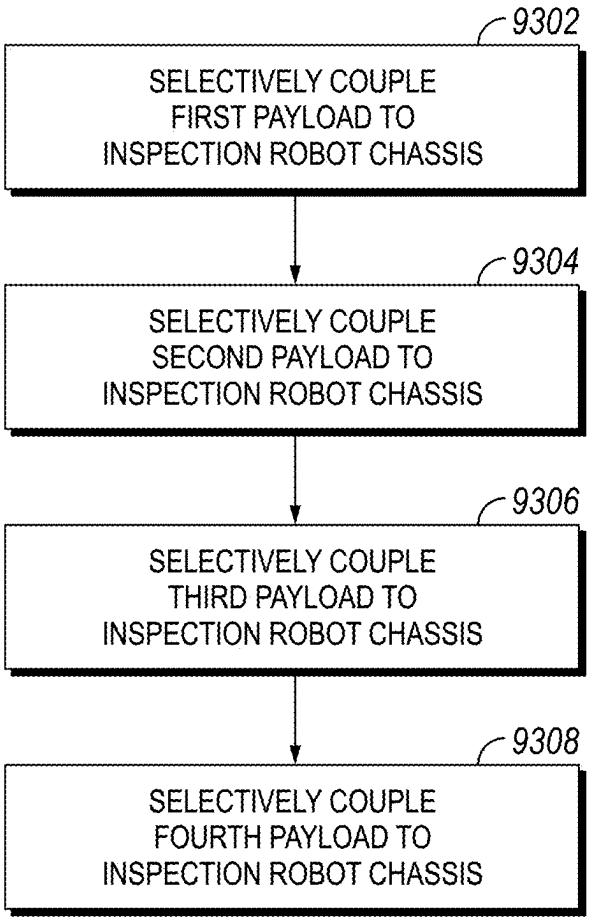
9302
SELECTIVELY COUPLE FIRST PAYLOAD TO INSPECTION ROBOT CHASSIS
9304
SELECTIVELY COUPLE SECOND PAYLOAD TO INSPECTION ROBOT CHASSIS
9306
SELECTIVELY COUPLE THIRD PAYLOAD TO INSPECTION ROBOT CHASSIS
9308
SELECTIVELY COUPLE FOURTH PAYLOAD TO INSPECTION ROBOT CHASSIS

FIG. 65

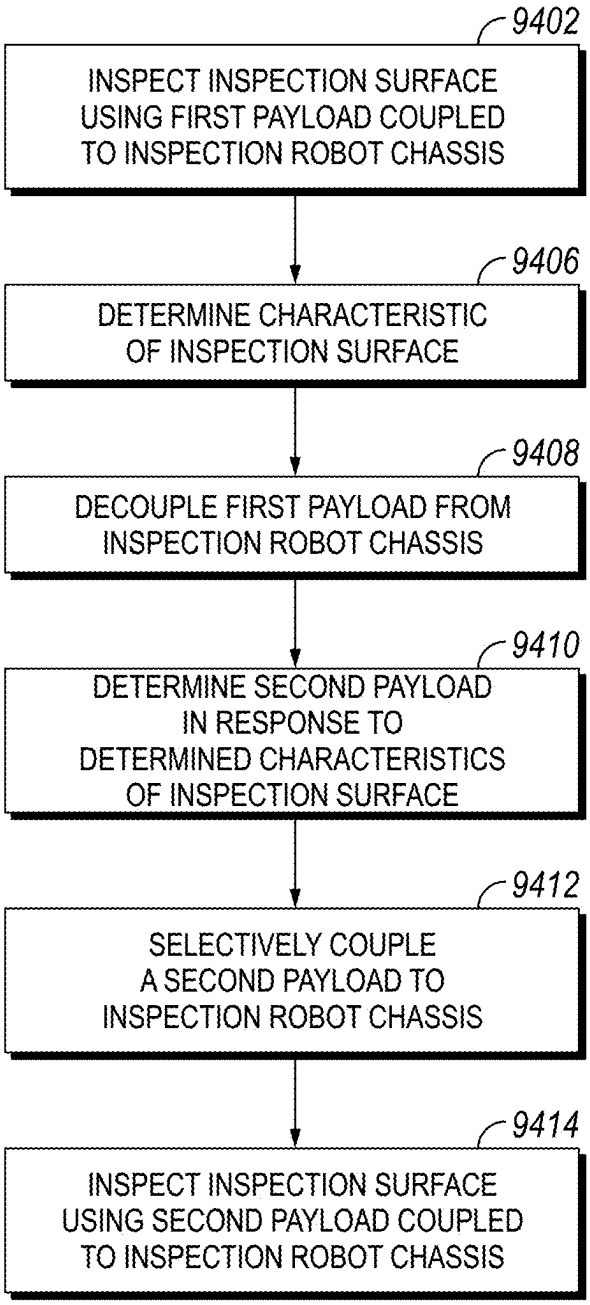
9402
INSPECT INSPECTION SURFACE USING FIRST PAYLOAD COUPLED TO INSPECTION ROBOT CHASSIS
9406
DETERMINE CHARACTERISTIC OF INSPECTION SURFACE
9408
DECOUPLE FIRST PAYLOAD FROM INSPECTION ROBOT CHASSIS
9410
DETERMINE SECOND PAYLOAD IN RESPONSE TO DETERMINED CHARACTERISTICS OF INSPECTION SURFACE
9412
SELECTIVELY COUPLE A SECOND PAYLOAD TO INSPECTION ROBOT CHASSIS
9414
INSPECT INSPECTION SURFACE USING SECOND PAYLOAD COUPLED TO INSPECTION ROBOT CHASSIS

FIG. 66

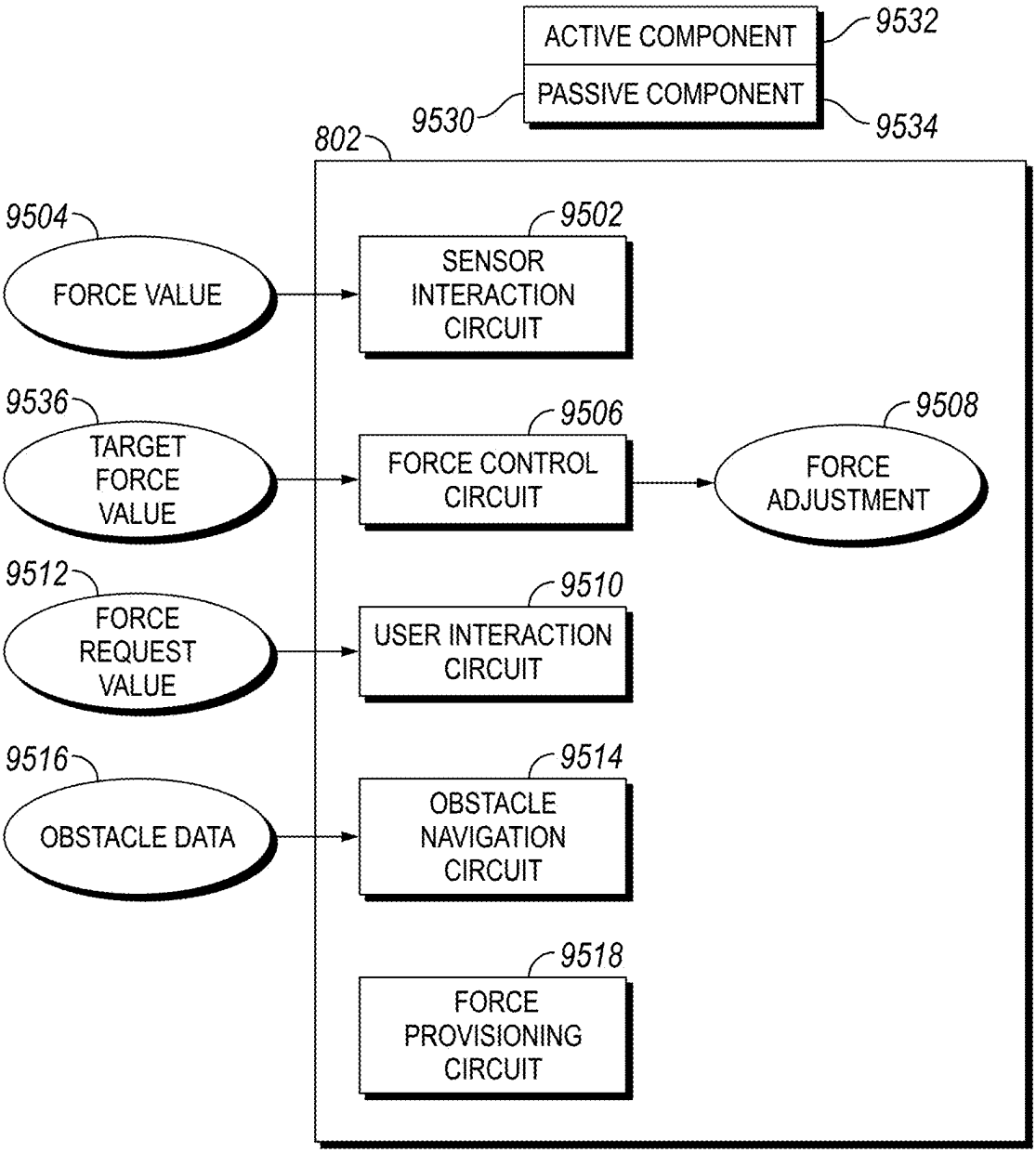
ACTIVE COMPONENT
PASSIVE COMPONENT
9532
9530
9534
802
9504
FORCE VALUE
9502
SENSOR INTERACTION CIRCUIT
9536
TARGET FORCE VALUE
9506
FORCE CONTROL CIRCUIT
9508
FORCE ADJUSTMENT
9512
FORCE REQUEST VALUE
9510
USER INTERACTION CIRCUIT
9516
OBSTACLE DATA
9514
OBSTACLE NAVIGATION CIRCUIT
9518
FORCE PROVISIONING CIRCUIT

FIG. 67

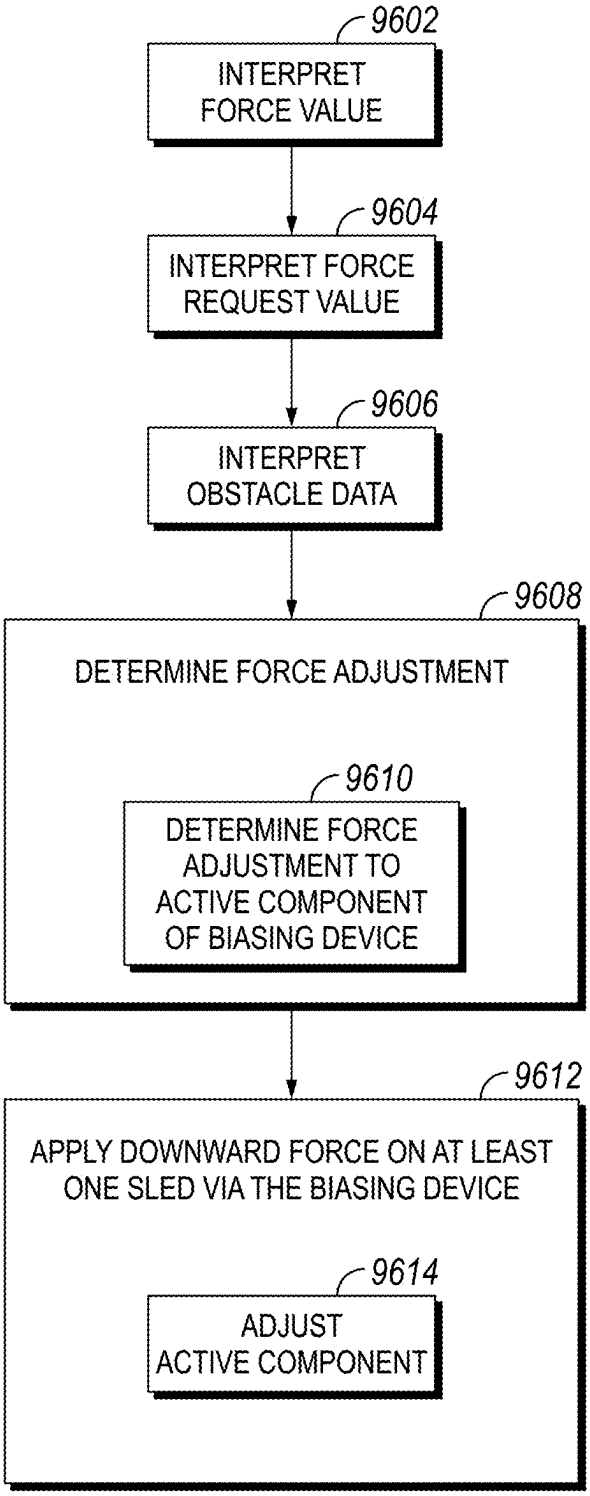
9602
INTERPRET FORCE VALUE
9604
INTERPRET FORCE REQUEST VALUE
9606
INTERPRET OBSTACLE DATA
9608
DETERMINE FORCE ADJUSTMENT
9610
DETERMINE FORCE ADJUSTMENT TO ACTIVE COMPONENT OF BIASING DEVICE
9612
APPLY DOWNWARD FORCE ON AT LEAST ONE SLED VIA THE BIASING DEVICE
9614
ADJUST ACTIVE COMPONENT

FIG. 68

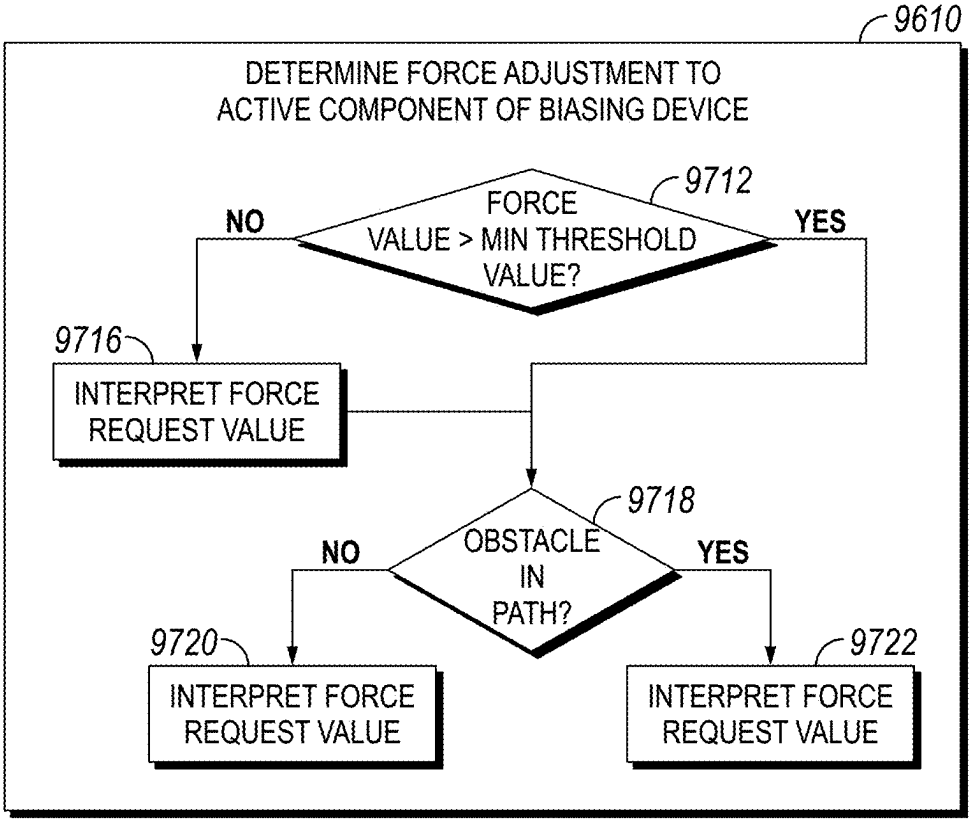
9610
DETERMINE FORCE ADJUSTMENT TO ACTIVE COMPONENT OF BIASING DEVICE
9712
FORCE VALUE > MIN THRESHOLD VALUE?
NO
YES
9716
INTERPRET FORCE REQUEST VALUE
9718
OBSTACLE IN PATH?
NO
YES
9720
INTERPRET FORCE REQUEST VALUE
9722
INTERPRET FORCE REQUEST VALUE

FIG. 69

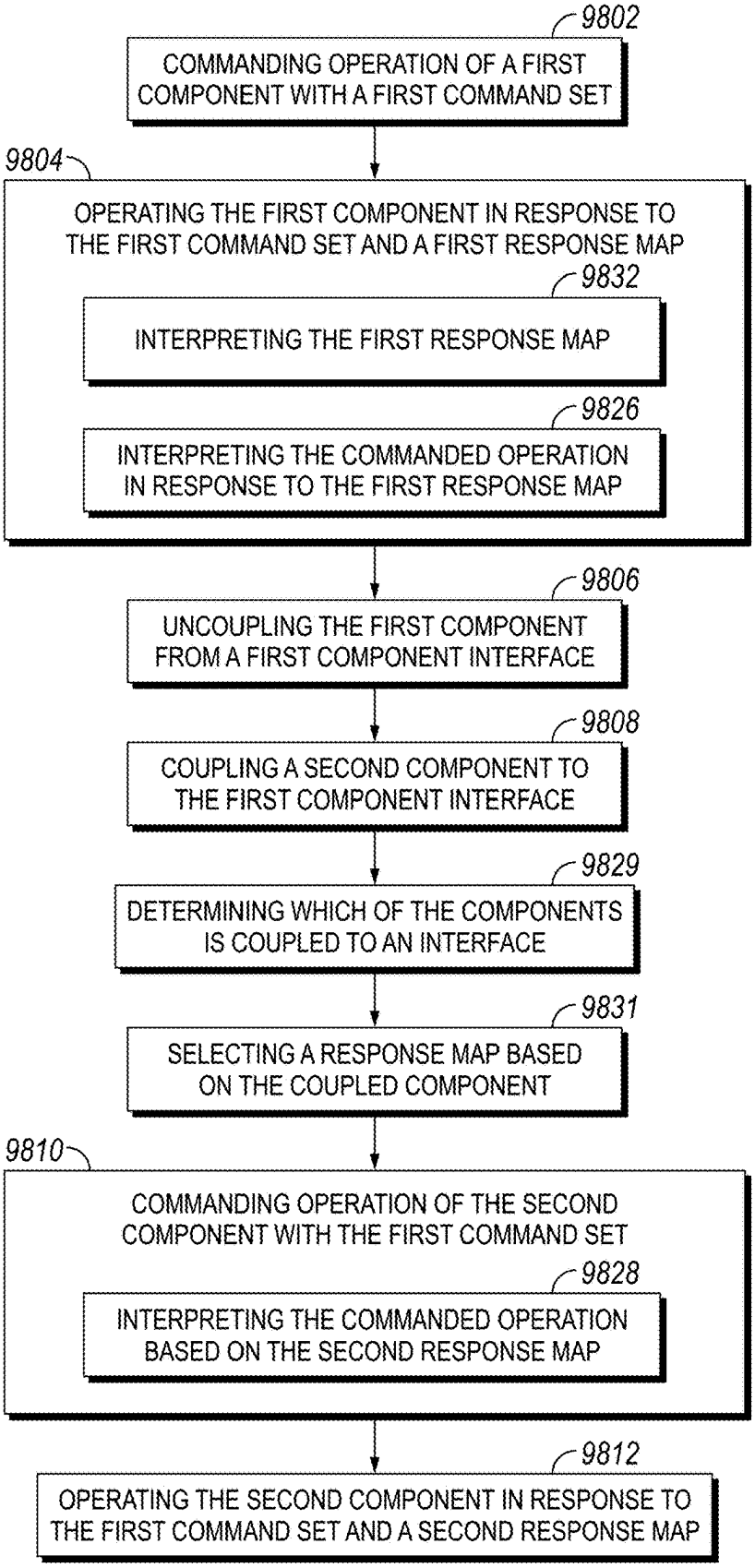
9802
COMMANDING OPERATION OF A FIRST COMPONENT WITH A FIRST COMMAND SET
9804
OPERATING THE FIRST COMPONENT IN RESPONSE TO THE FIRST COMMAND SET AND A FIRST RESPONSE MAP
9832
INTERPRETING THE FIRST RESPONSE MAP
9826
INTERPRETING THE COMMANDED OPERATION IN RESPONSE TO THE FIRST RESPONSE MAP
9806
UNCOUPLING THE FIRST COMPONENT FROM A FIRST COMPONENT INTERFACE
9808
COUPLING A SECOND COMPONENT TO THE FIRST COMPONENT INTERFACE
9829
DETERMINING WHICH OF THE COMPONENTS IS COUPLED TO AN INTERFACE
9831
SELECTING A RESPONSE MAP BASED ON THE COUPLED COMPONENT
9810
COMMANDING OPERATION OF THE SECOND COMPONENT WITH THE FIRST COMMAND SET
9828
INTERPRETING THE COMMANDED OPERATION BASED ON THE SECOND RESPONSE MAP
9812
OPERATING THE SECOND COMPONENT IN RESPONSE TO THE FIRST COMMAND SET AND A SECOND RESPONSE MAP

FIG. 70

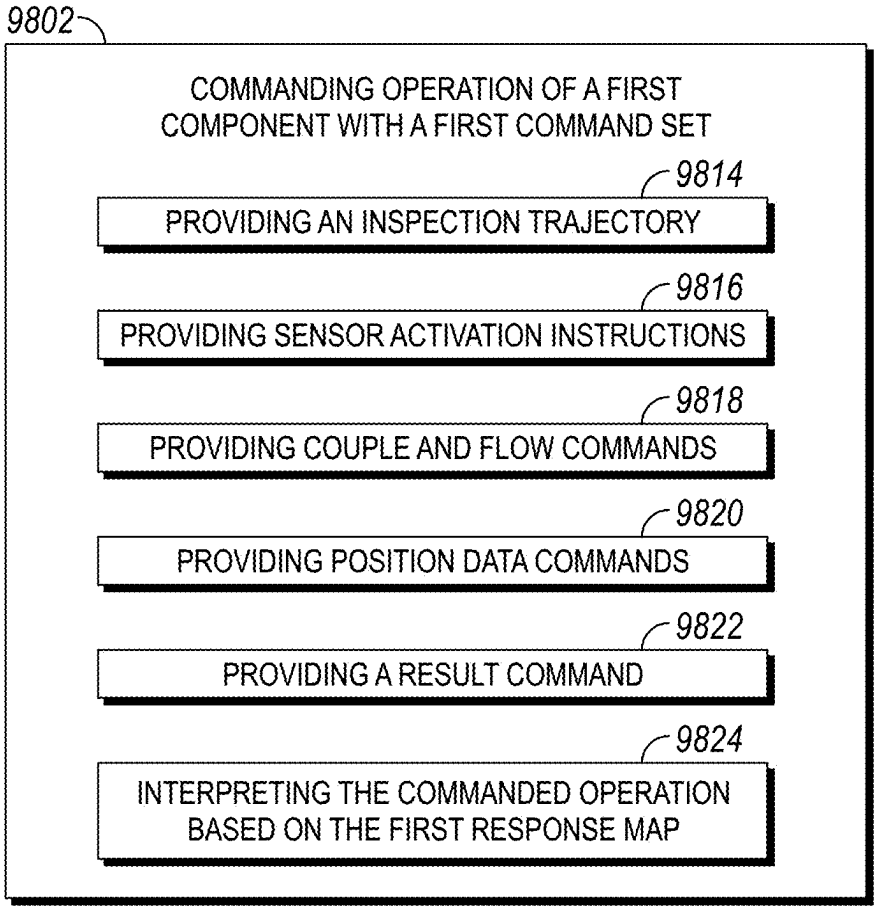
9802
COMMANDING OPERATION OF A FIRST COMPONENT WITH A FIRST COMMAND SET
9814
PROVIDING AN INSPECTION TRAJECTORY
9816
PROVIDING SENSOR ACTIVATION INSTRUCTIONS
9818
PROVIDING COUPLE AND FLOW COMMANDS
9820
PROVIDING POSITION DATA COMMANDS
9822
PROVIDING A RESULT COMMAND
9824
INTERPRETING THE COMMANDED OPERATION BASED ON THE FIRST RESPONSE MAP

FIG. 71

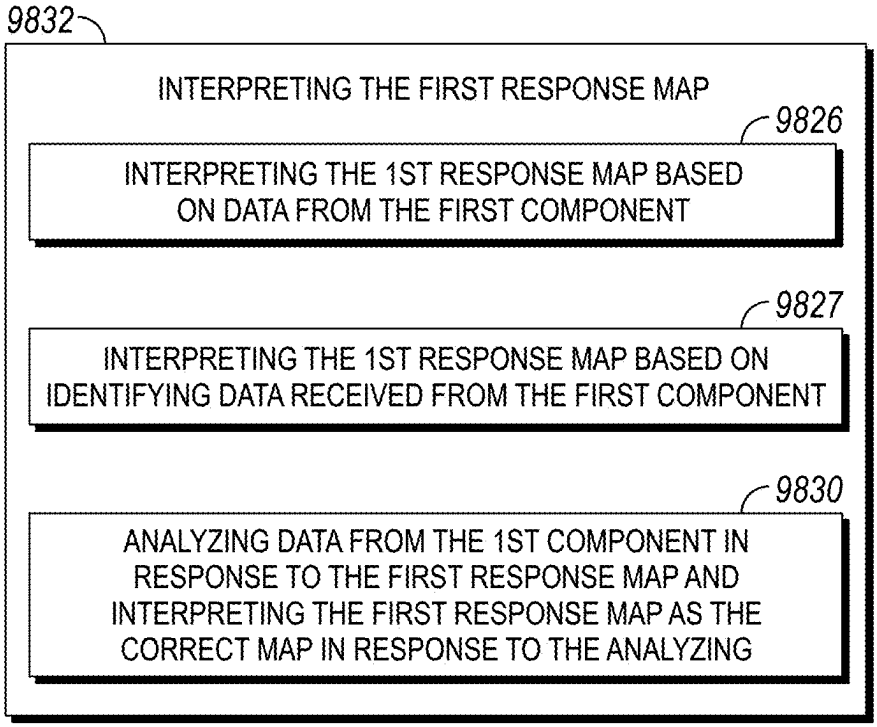
9832
INTERPRETING THE FIRST RESPONSE MAP
9826
INTERPRETING THE 1ST RESPONSE MAP BASED ON DATA FROM THE FIRST COMPONENT
9827
INTERPRETING THE 1ST RESPONSE MAP BASED ON IDENTIFYING DATA RECEIVED FROM THE FIRST COMPONENT
9830
ANALYZING DATA FROM THE 1ST COMPONENT IN RESPONSE TO THE FIRST RESPONSE MAP AND INTERPRETING THE FIRST RESPONSE MAP AS THE CORRECT MAP IN RESPONSE TO THE ANALYZING

FIG. 72

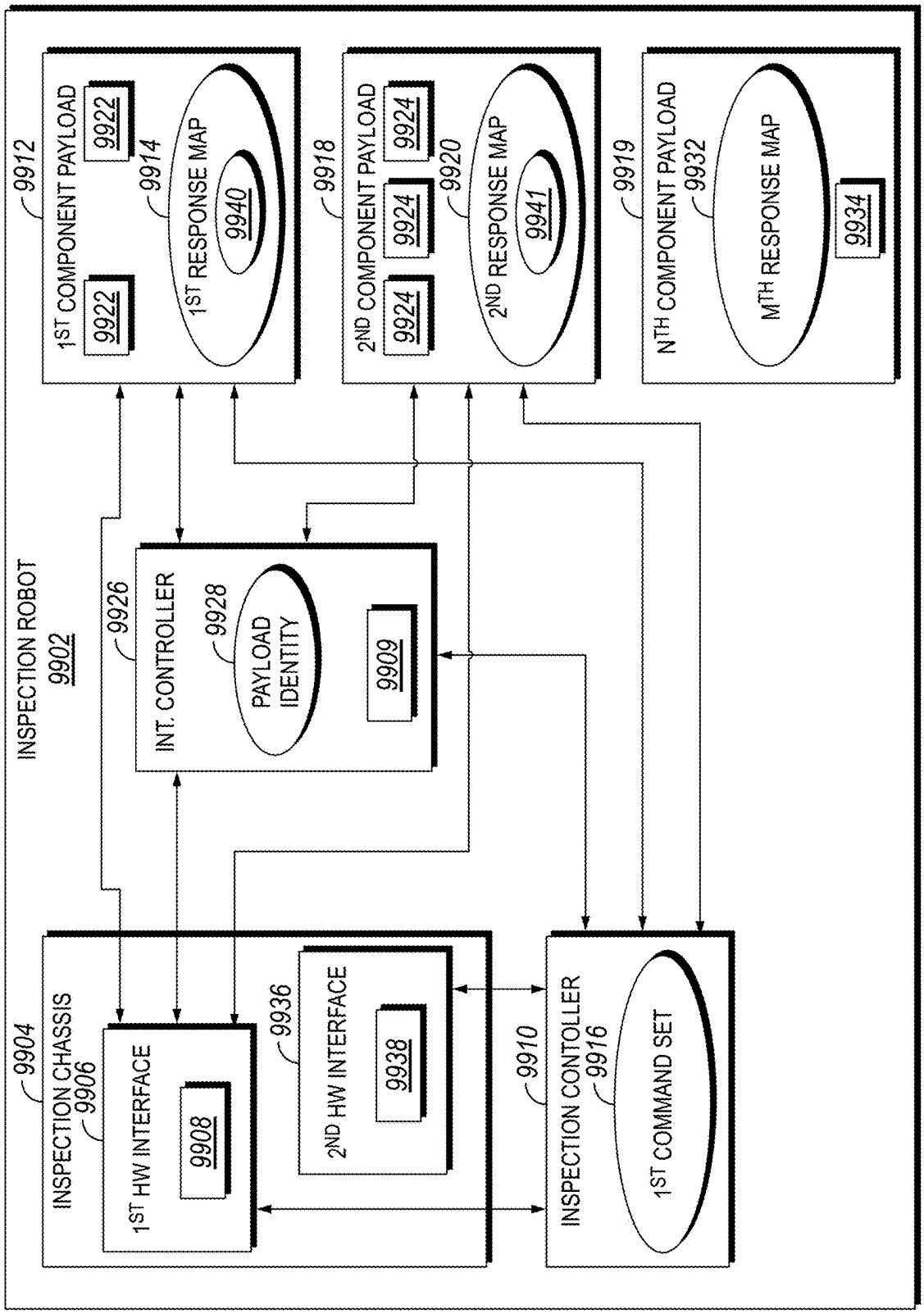
INSPECTION ROBOT
9902
9912
1ST COMPONENT PAYLOAD
9922
9922
9914
1ST RESPONSE MAP
9940
9918
2ND COMPONENT PAYLOAD
9924
9924
9924
9920
2ND RESPONSE MAP
9941
9919
NTH COMPONENT PAYLOAD
9932
MTH RESPONSE MAP
9934
9926
INT. CONTROLLER
9928
PAYLOAD IDENTITY
9909
9904
INSPECTION CHASSIS
9906
1ST HW INTERFACE
9908
9936
2ND HW INTERFACE
9938
9910
INSPECTION CONTOLLER
9916
1ST COMMAND SET

FIG. 73

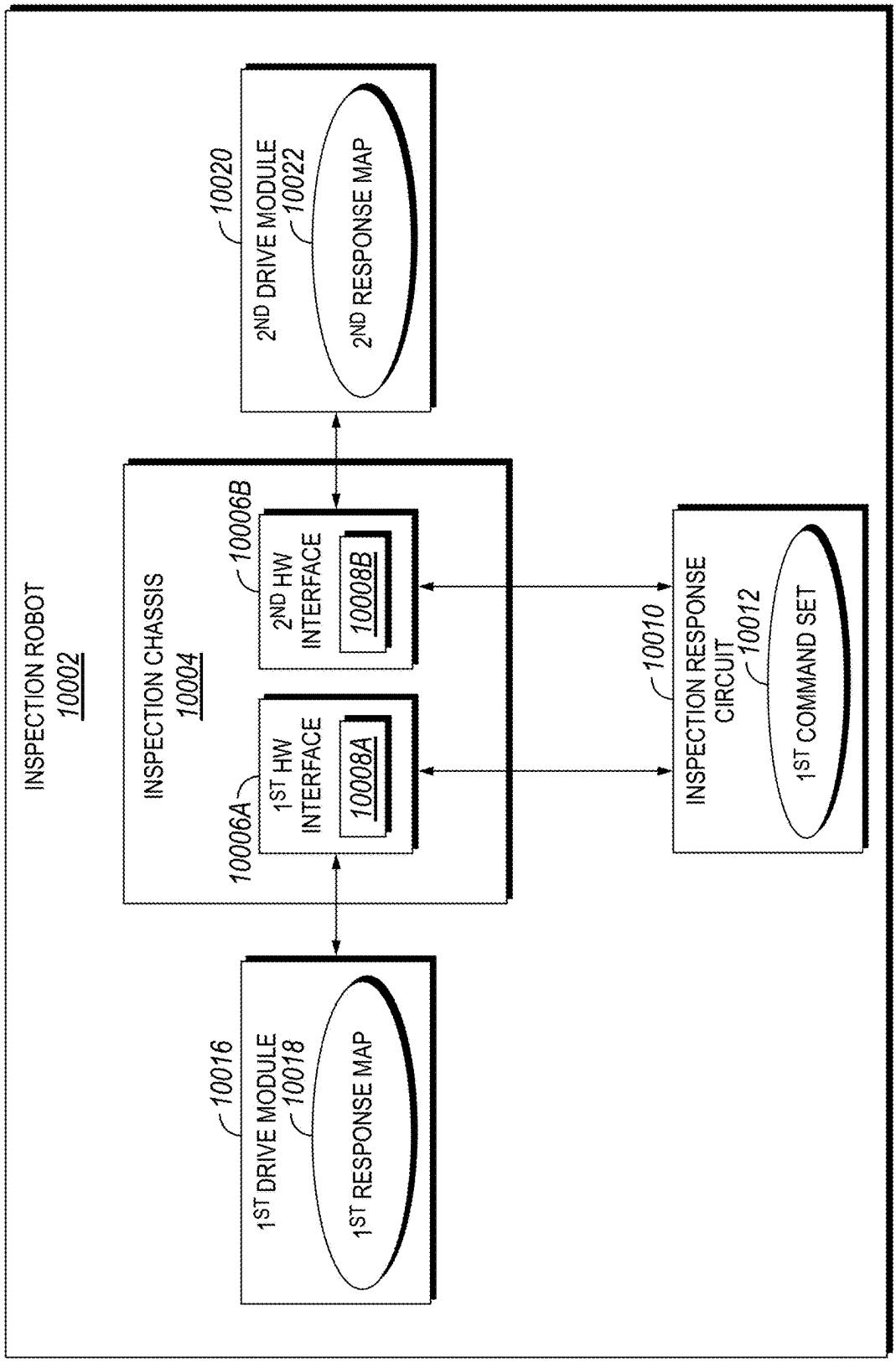
INSPECTION ROBOT
10002
INSPECTION CHASSIS
10004
10006A
1ST HW INTERFACE
10008A
10006B
2ND HW INTERFACE
10008B
10016
1ST DRIVE MODULE
10018
1ST RESPONSE MAP
10020
2ND DRIVE MODULE
10022
2ND RESPONSE MAP
10010
INSPECTION RESPONSE CIRCUIT
10012
1ST COMMAND SET

FIG. 74

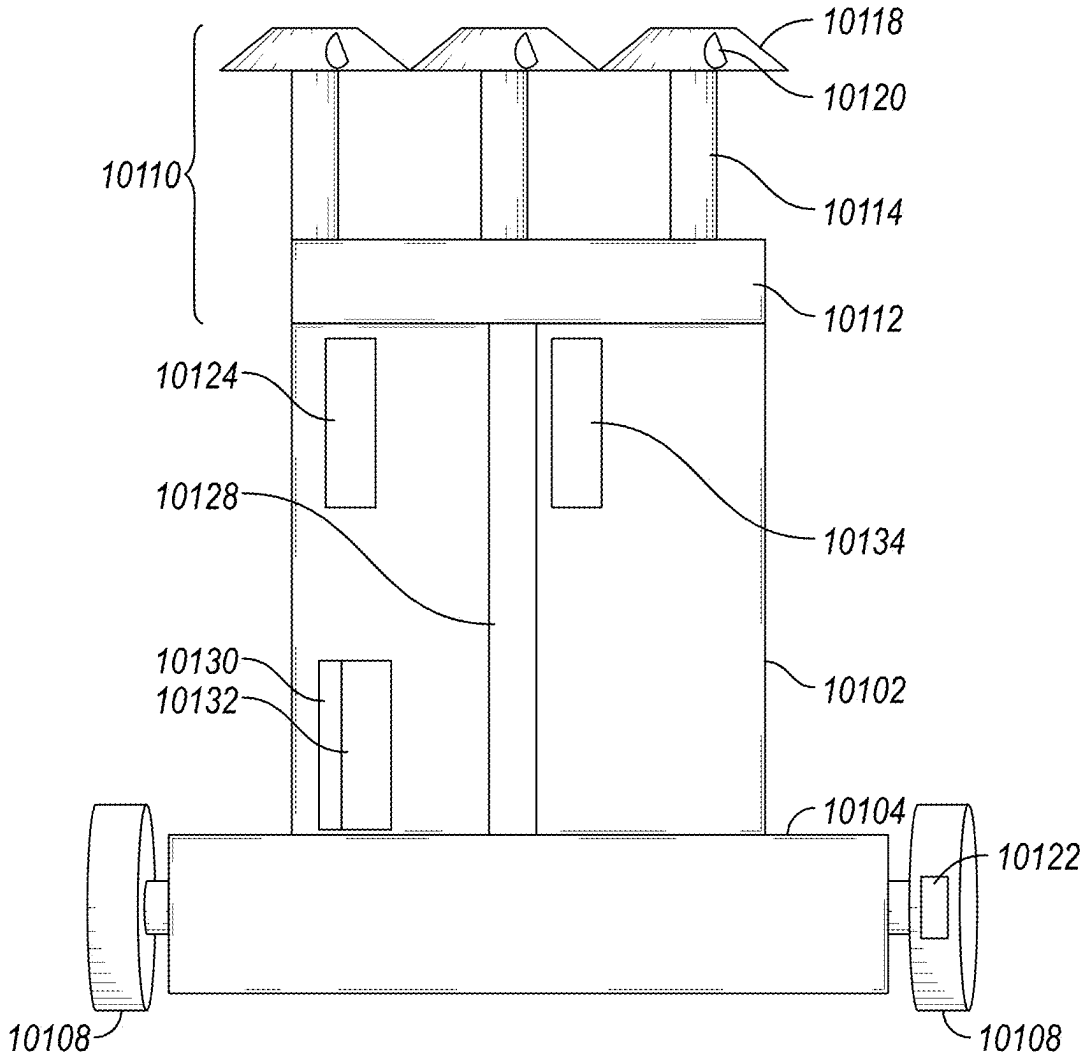
10118
10120
10110
10114
10112
10124
10128
10134
10130
10132
10102
10104
10122
10108
10108

FIG. 75

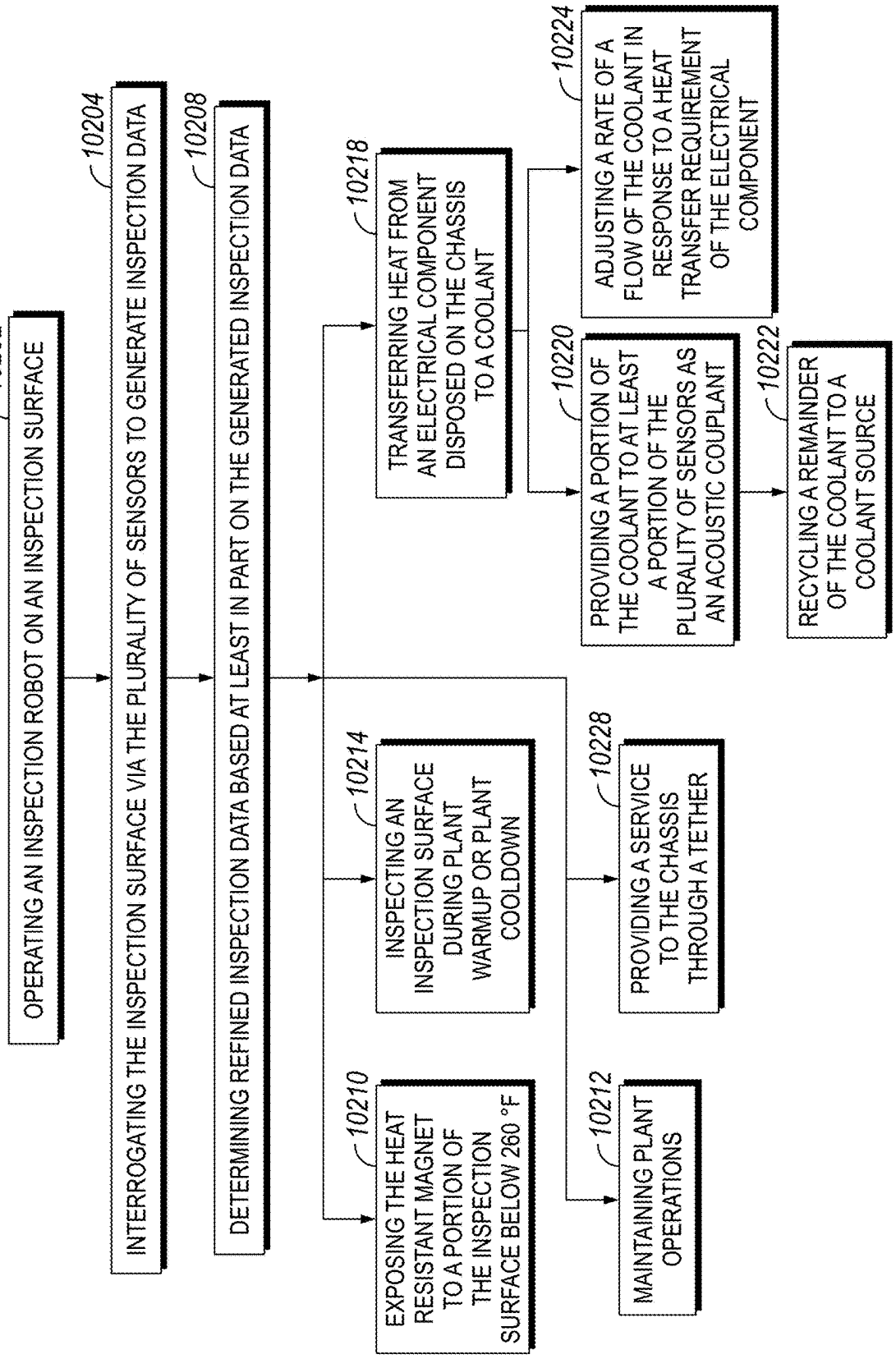
10202
OPERATING AN INSPECTION ROBOT ON AN INSPECTION SURFACE
10204
INTERROGATING THE INSPECTION SURFACE VIA THE PLURALITY OF SENSORS TO GENERATE INSPECTION DATA
10208
DETERMINING REFINED INSPECTION DATA BASED AT LEAST IN PART ON THE GENERATED INSPECTION DATA
10210
EXPOSING THE HEAT RESISTANT MAGNET TO A PORTION OF THE INSPECTION SURFACE BELOW 260 °F
10212
MAINTAINING PLANT OPERATIONS
10214
INSPECTING AN INSPECTION SURFACE DURING PLANT WARMUP OR PLANT COOLDOWN
10218
TRANSFERRING HEAT FROM AN ELECTRICAL COMPONENT DISPOSED ON THE CHASSIS TO A COOLANT
10220
PROVIDING A PORTION OF THE COOLANT TO AT LEAST A PORTION OF THE PLURALITY OF SENSORS AS AN ACOUSTIC COUPLANT
10222
RECYCLING A REMAINDER OF THE COOLANT TO A COOLANT SOURCE
10224
ADJUSTING A RATE OF A FLOW OF THE COOLANT IN RESPONSE TO A HEAT TRANSFER REQUIREMENT OF THE ELECTRICAL COMPONENT
10228
PROVIDING A SERVICE TO THE CHASSIS THROUGH A TETHER

FIG. 76

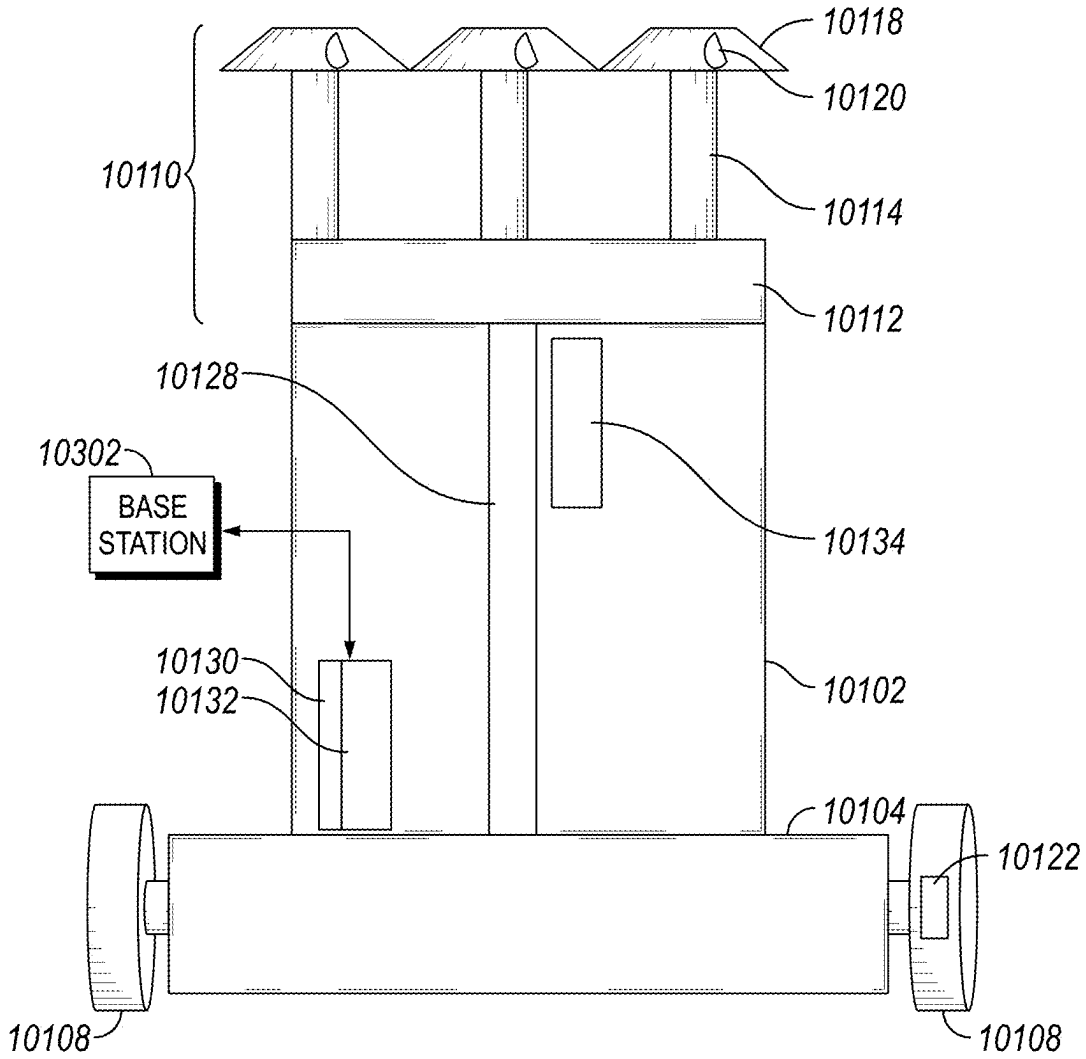
10118
10120
10110
10114
10112
10128
10302
BASE STATION
10134
10130
10132
10102
10104
10122
10108
10108

FIG. 77

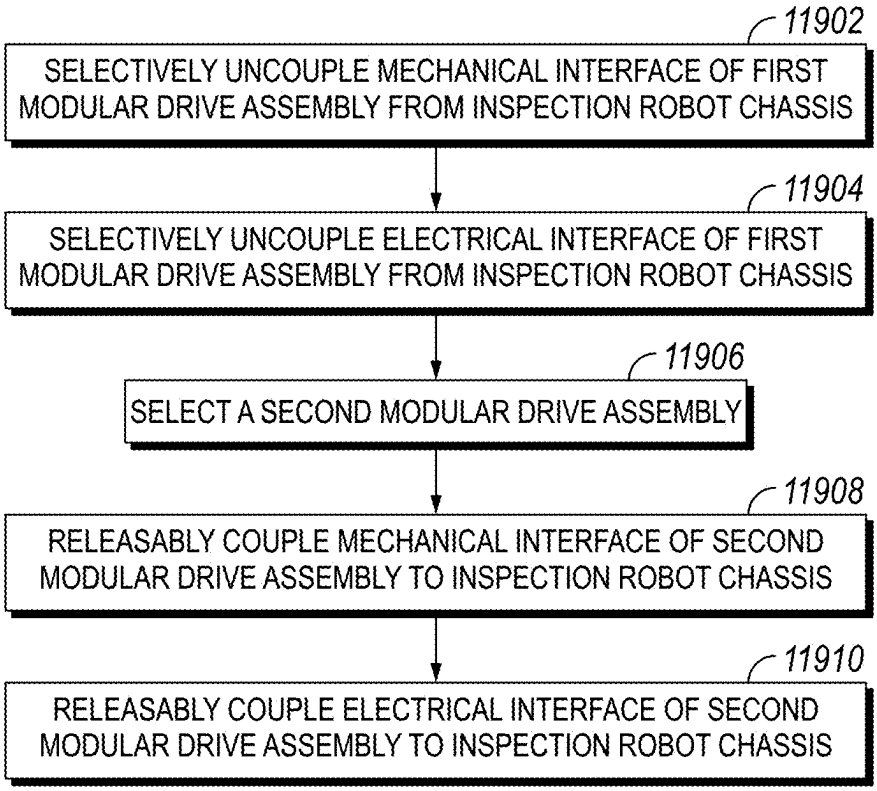
11902
SELECTIVELY UNCOUPLE MECHANICAL INTERFACE OF FIRST MODULAR DRIVE ASSEMBLY FROM INSPECTION ROBOT CHASSIS
11904
SELECTIVELY UNCOUPLE ELECTRICAL INTERFACE OF FIRST MODULAR DRIVE ASSEMBLY FROM INSPECTION ROBOT CHASSIS
11906
SELECT A SECOND MODULAR DRIVE ASSEMBLY
11908
RELEASABLY COUPLE MECHANICAL INTERFACE OF SECOND MODULAR DRIVE ASSEMBLY TO INSPECTION ROBOT CHASSIS
11910
RELEASABLY COUPLE ELECTRICAL INTERFACE OF SECOND MODULAR DRIVE ASSEMBLY TO INSPECTION ROBOT CHASSIS

FIG. 78

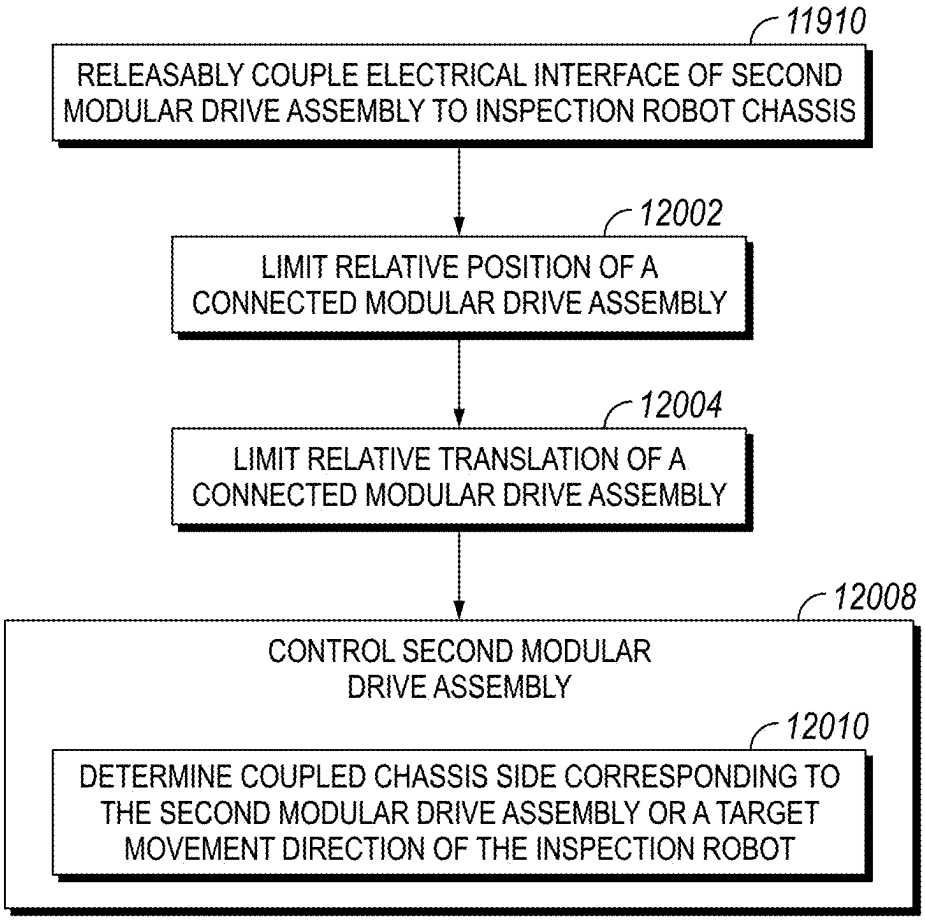
11910
RELEASABLY COUPLE ELECTRICAL INTERFACE OF SECOND MODULAR DRIVE ASSEMBLY TO INSPECTION ROBOT CHASSIS
12002
LIMIT RELATIVE POSITION OF A CONNECTED MODULAR DRIVE ASSEMBLY
12004
LIMIT RELATIVE TRANSLATION OF A CONNECTED MODULAR DRIVE ASSEMBLY
12008
CONTROL SECOND MODULAR DRIVE ASSEMBLY
12010
DETERMINE COUPLED CHASSIS SIDE CORRESPONDING TO THE SECOND MODULAR DRIVE ASSEMBLY OR A TARGET MOVEMENT DIRECTION OF THE INSPECTION ROBOT

FIG. 79

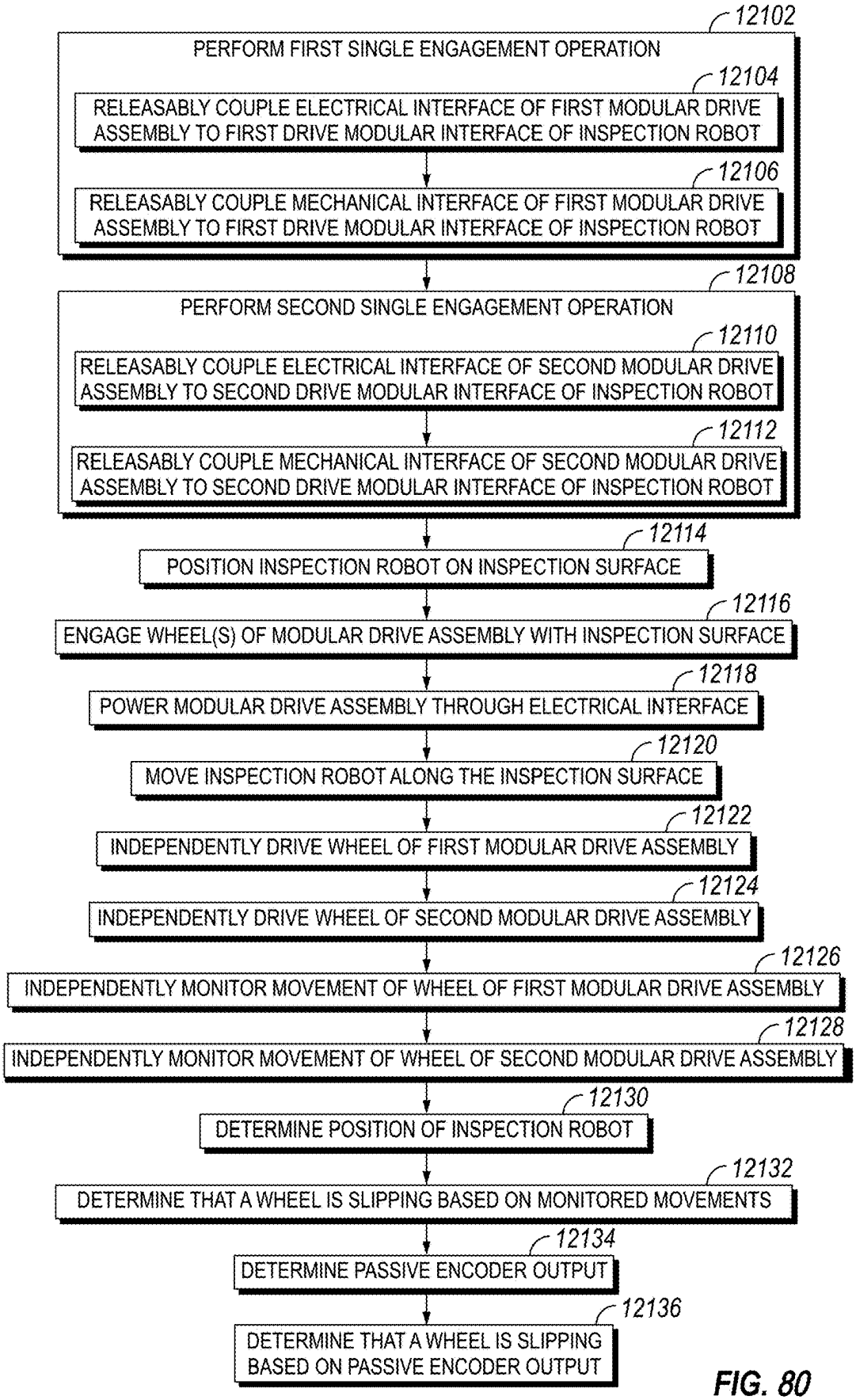
12102
PERFORM FIRST SINGLE ENGAGEMENT OPERATION
12104
RELEASABLY COUPLE ELECTRICAL INTERFACE OF FIRST MODULAR DRIVE ASSEMBLY TO FIRST DRIVE MODULAR INTERFACE OF INSPECTION ROBOT
12106
RELEASABLY COUPLE MECHANICAL INTERFACE OF FIRST MODULAR DRIVE ASSEMBLY TO FIRST DRIVE MODULAR INTERFACE OF INSPECTION ROBOT
12108
PERFORM SECOND SINGLE ENGAGEMENT OPERATION
12110
RELEASABLY COUPLE ELECTRICAL INTERFACE OF SECOND MODULAR DRIVE ASSEMBLY TO SECOND DRIVE MODULAR INTERFACE OF INSPECTION ROBOT
12112
RELEASABLY COUPLE MECHANICAL INTERFACE OF SECOND MODULAR DRIVE ASSEMBLY TO SECOND DRIVE MODULAR INTERFACE OF INSPECTION ROBOT
12114
POSITION INSPECTION ROBOT ON INSPECTION SURFACE
12116
ENGAGE WHEEL(S) OF MODULAR DRIVE ASSEMBLY WITH INSPECTION SURFACE
12118
POWER MODULAR DRIVE ASSEMBLY THROUGH ELECTRICAL INTERFACE
12120
MOVE INSPECTION ROBOT ALONG THE INSPECTION SURFACE
12122
INDEPENDENTLY DRIVE WHEEL OF FIRST MODULAR DRIVE ASSEMBLY
12124
INDEPENDENTLY DRIVE WHEEL OF SECOND MODULAR DRIVE ASSEMBLY
12126
INDEPENDENTLY MONITOR MOVEMENT OF WHEEL OF FIRST MODULAR DRIVE ASSEMBLY
12128
INDEPENDENTLY MONITOR MOVEMENT OF WHEEL OF SECOND MODULAR DRIVE ASSEMBLY
12130
DETERMINE POSITION OF INSPECTION ROBOT
12132
DETERMINE THAT A WHEEL IS SLIPPING BASED ON MONITORED MOVEMENTS
12134
DETERMINE PASSIVE ENCODER OUTPUT
12136
DETERMINE THAT A WHEEL IS SLIPPING BASED ON PASSIVE ENCODER OUTPUT

FIG. 80

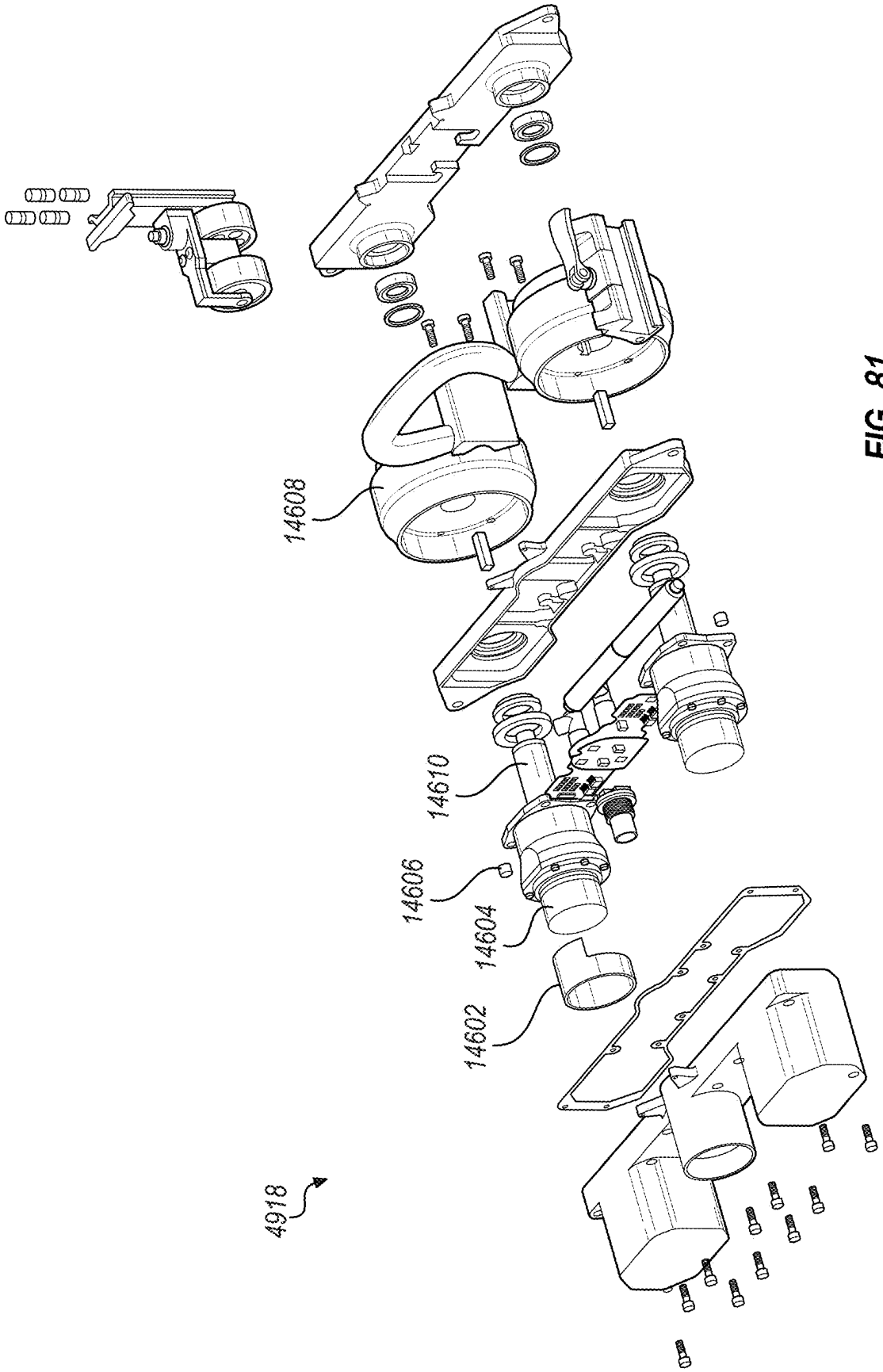

FIG. 81

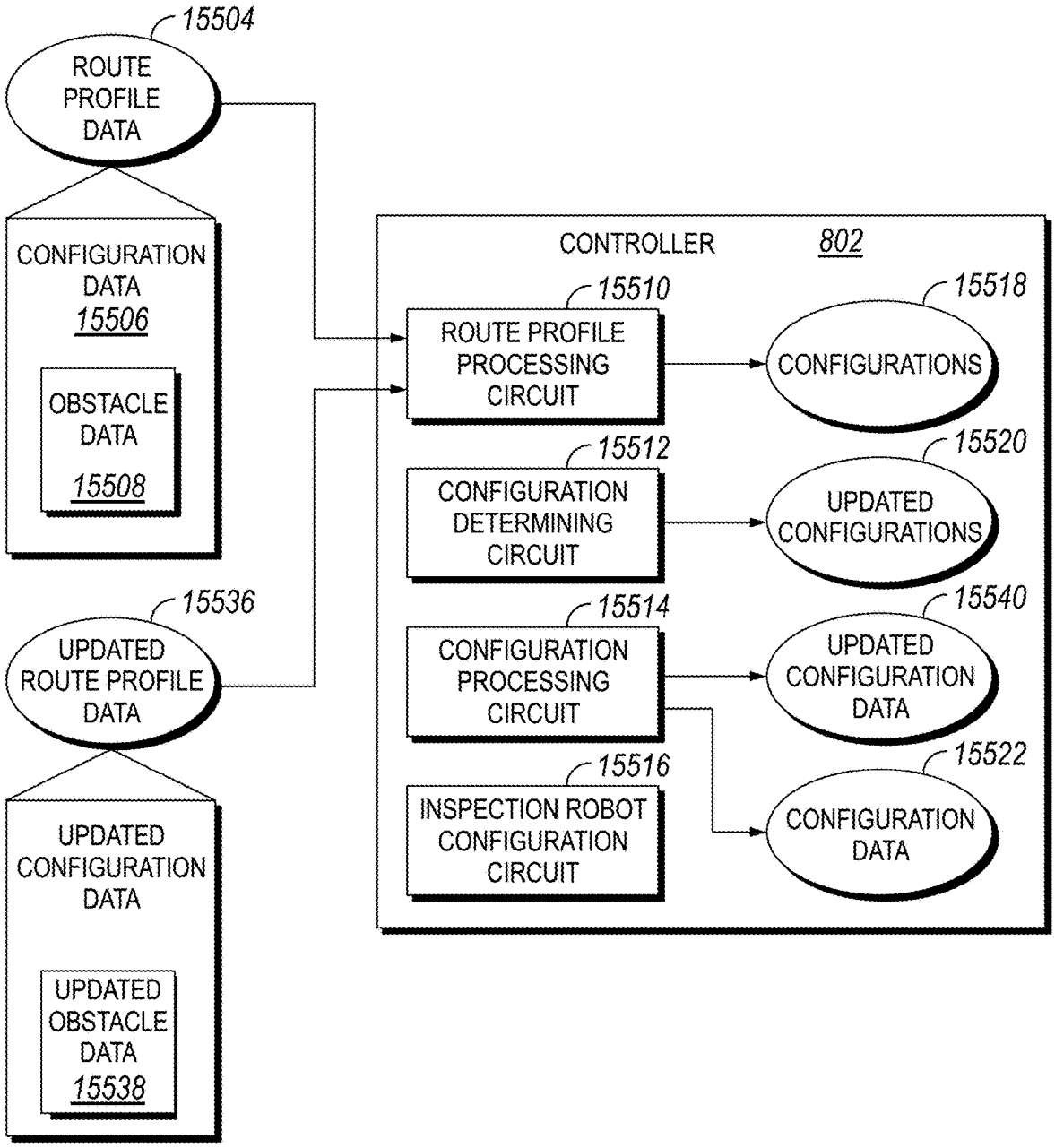
15504
ROUTE PROFILE DATA
CONFIGURATION DATA
15506
OBSTACLE DATA
15508
15536
UPDATED ROUTE PROFILE DATA
UPDATED CONFIGURATION DATA
UPDATED OBSTACLE DATA
15538
CONTROLLER
802
15510
ROUTE PROFILE PROCESSING CIRCUIT
15512
CONFIGURATION DETERMINING CIRCUIT
15514
CONFIGURATION PROCESSING CIRCUIT
15516
INSPECTION ROBOT CONFIGURATION CIRCUIT
15518
CONFIGURATIONS
15520
UPDATED CONFIGURATIONS
15540
UPDATED CONFIGURATION DATA
15522
CONFIGURATION DATA

FIG. 82

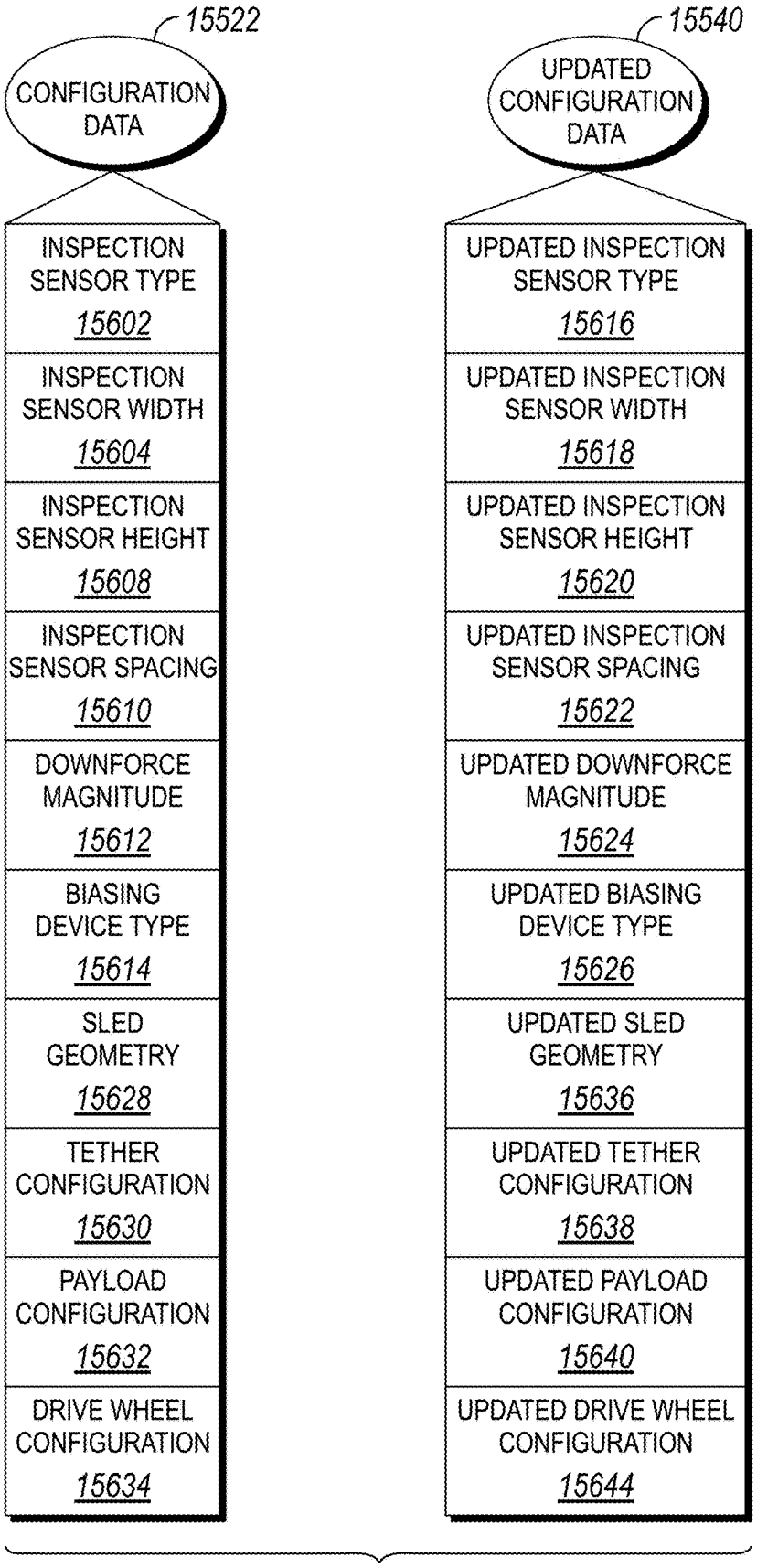
15522
CONFIGURATION DATA
INSPECTION SENSOR TYPE
15602
INSPECTION SENSOR WIDTH
15604
INSPECTION SENSOR HEIGHT
15608
INSPECTION SENSOR SPACING
15610
DOWNFORCE MAGNITUDE
15612
BIASING DEVICE TYPE
15614
SLED GEOMETRY
15628
TETHER CONFIGURATION
15630
PAYLOAD CONFIGURATION
15632
DRIVE WHEEL CONFIGURATION
15634
15540
UPDATED CONFIGURATION DATA
UPDATED INSPECTION SENSOR TYPE
15616
UPDATED INSPECTION SENSOR WIDTH
15618
UPDATED INSPECTION SENSOR HEIGHT
15620
UPDATED INSPECTION SENSOR SPACING
15622
UPDATED DOWNFORCE MAGNITUDE
15624
UPDATED BIASING DEVICE TYPE
15626
UPDATED SLED GEOMETRY
15636
UPDATED TETHER CONFIGURATION
15638
UPDATED PAYLOAD CONFIGURATION
15640
UPDATED DRIVE WHEEL CONFIGURATION
15644

FIG. 83

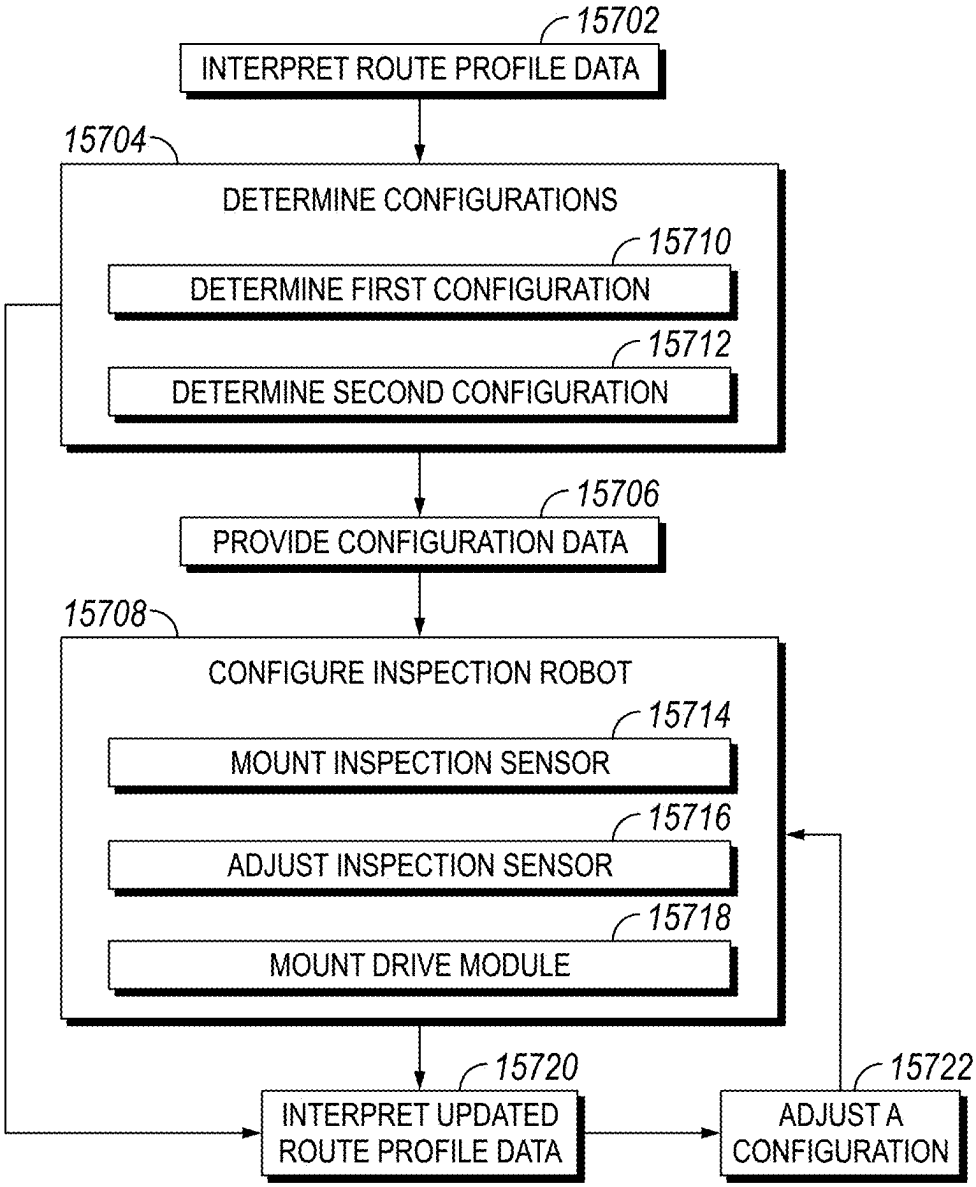
15702
INTERPRET ROUTE PROFILE DATA
15704
DETERMINE CONFIGURATIONS
15710
DETERMINE FIRST CONFIGURATION
15712
DETERMINE SECOND CONFIGURATION
15706
PROVIDE CONFIGURATION DATA
15708
CONFIGURE INSPECTION ROBOT
15714
MOUNT INSPECTION SENSOR
15716
ADJUST INSPECTION SENSOR
15718
MOUNT DRIVE MODULE
15720
INTERPRET UPDATED ROUTE PROFILE DATA
15722
ADJUST A CONFIGURATION

FIG. 84

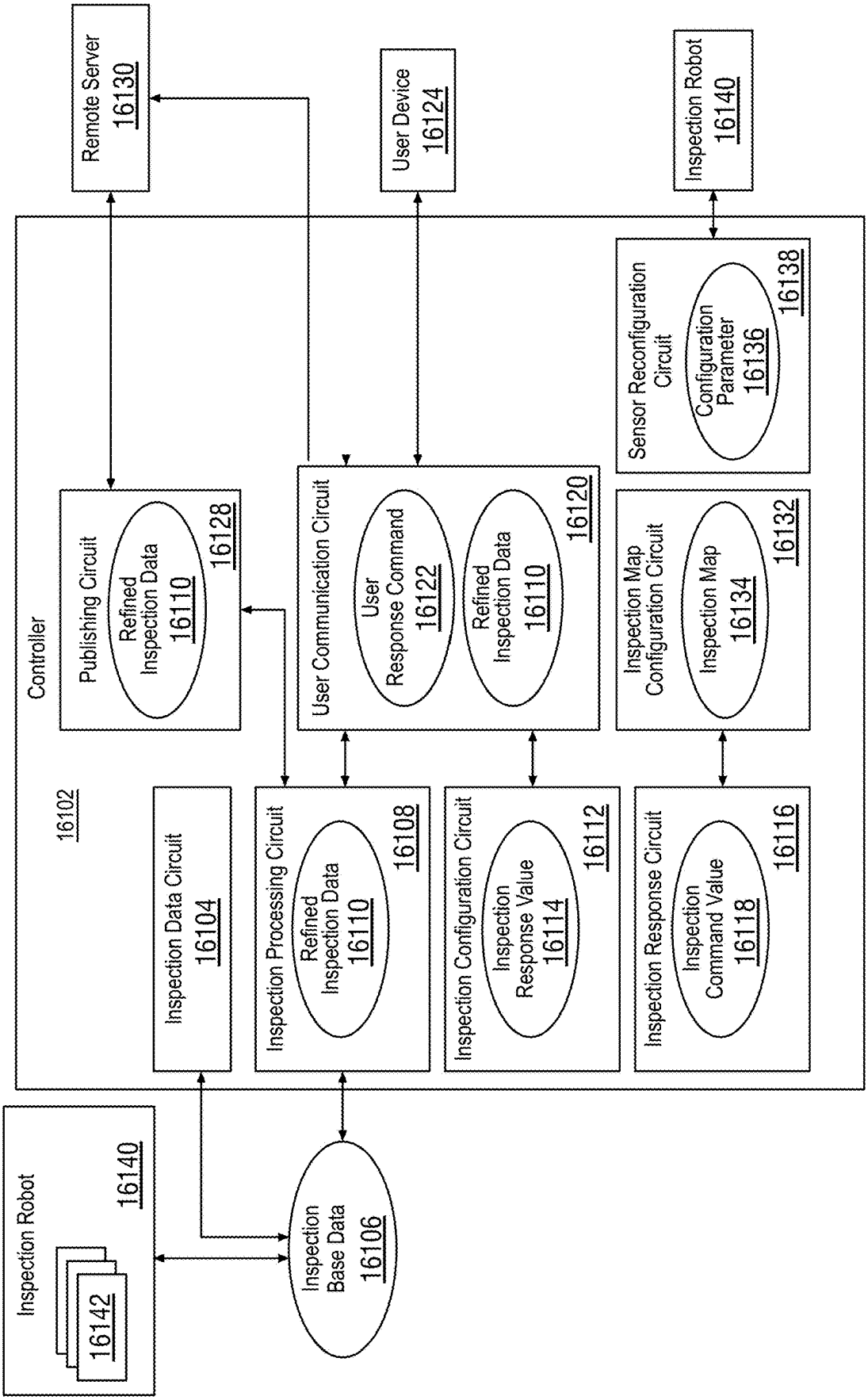
Remote Server
16130
User Device
16124
Inspection Robot
16140
Controller
16102
Publishing Circuit
Refined Inspection Data
16110
16128
User Communication Circuit
User Response Command
16122
Refined Inspection Data
16110
16120
Sensor Reconfiguration Circuit
Configuration Parameter
16136
16138
Inspection Map Configuration Circuit
Inspection Map
16134
16132
Inspection Data Circuit
16104
Inspection Processing Circuit
Refined Inspection Data
16110
16108
Inspection Configuration Circuit
Inspection Response Value
16114
16112
Inspection Response Circuit
Inspection Command Value
16118
16116
Inspection Robot
16140
16142
Inspection Base Data
16106

FIG. 85

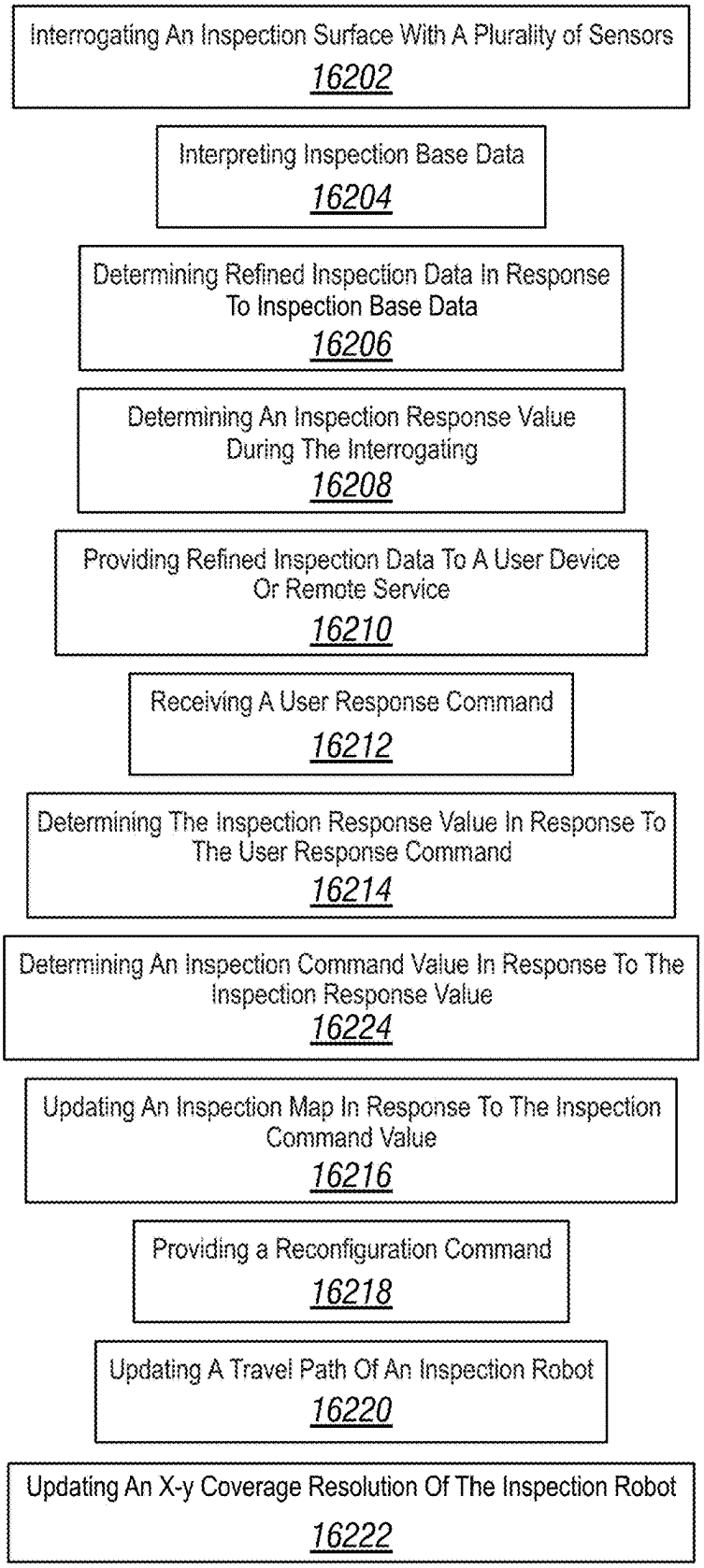
Interrogating An Inspection Surface With A Plurality of Sensors
16202
Interpreting Inspection Base Data
16204
Determining Refined Inspection Data In Response To Inspection Base Data
16206
Determining An Inspection Response Value During The Interrogating
16208
Providing Refined Inspection Data To A User Device Or Remote Service
16210
Receiving A User Response Command
16212
Determining The Inspection Response Value In Response To The User Response Command
16214
Determining An Inspection Command Value In Response To The Inspection Response Value
16224
Updating An Inspection Map In Response To The Inspection Command Value
16216
Providing a Reconfiguration Command
16218
Updating A Travel Path Of An Inspection Robot
16220
Updating An X-y Coverage Resolution Of The Inspection Robot
16222

FIG. 86

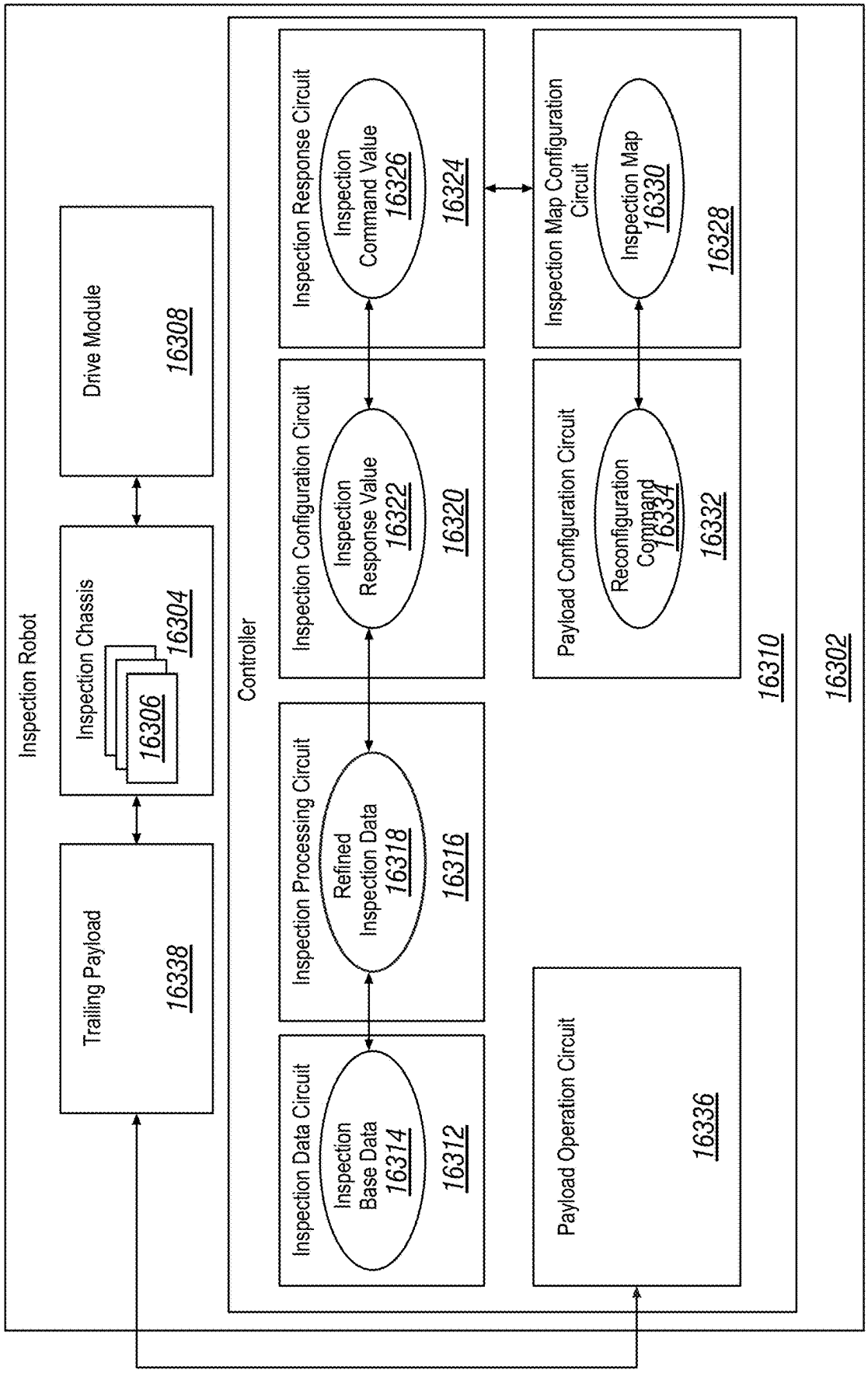
Inspection Robot
Drive Module
16308
Inspection Chassis
16306
16304
Trailing Payload
16338
Controller
Inspection Data Circuit
Inspection Base Data
16314
16312
Inspection Processing Circuit
Refined Inspection Data
16318
16316
Inspection Configuration Circuit
Inspection Response Value
16322
16320
Inspection Response Circuit
Inspection Command Value
16326
16324
Payload Operation Circuit
16336
Payload Configuration Circuit
Reconfiguration Command
16334
16332
Inspection Map Configuration Circuit
Inspection Map
16330
16328
16310
16302

FIG. 87

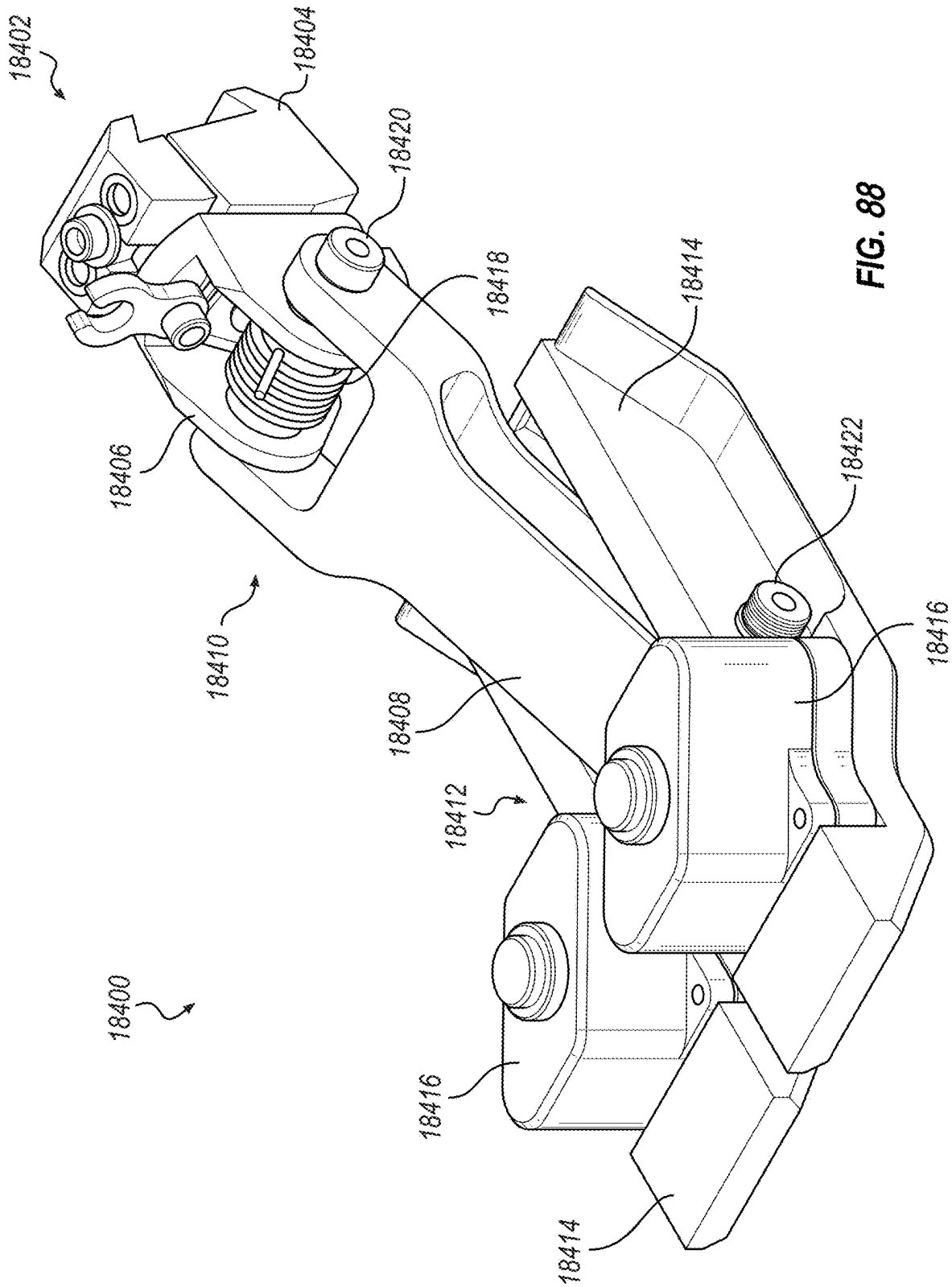
18402
18404
18420
18418
18414
18406
18422
18410
18416
18408
18412
18400
18416
18414

FIG. 88

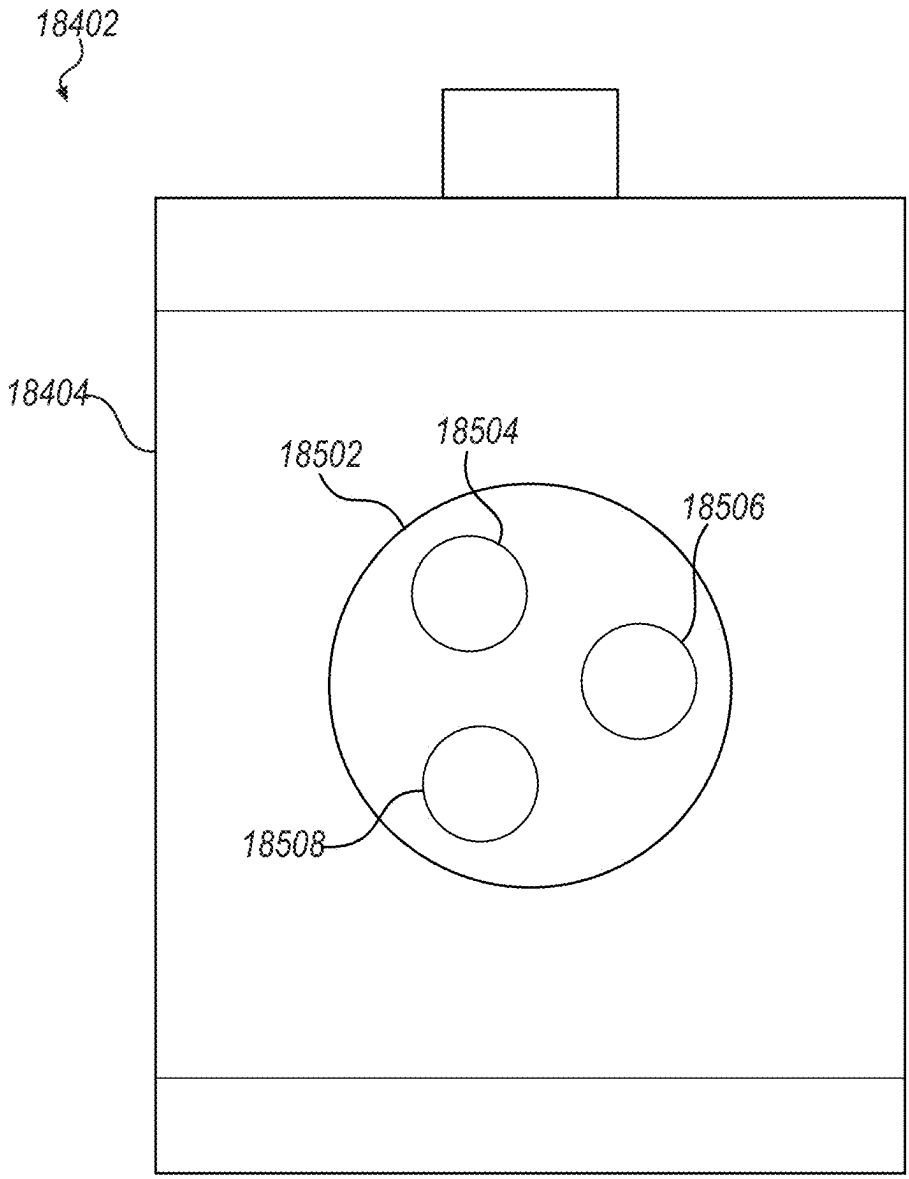

FIG. 89

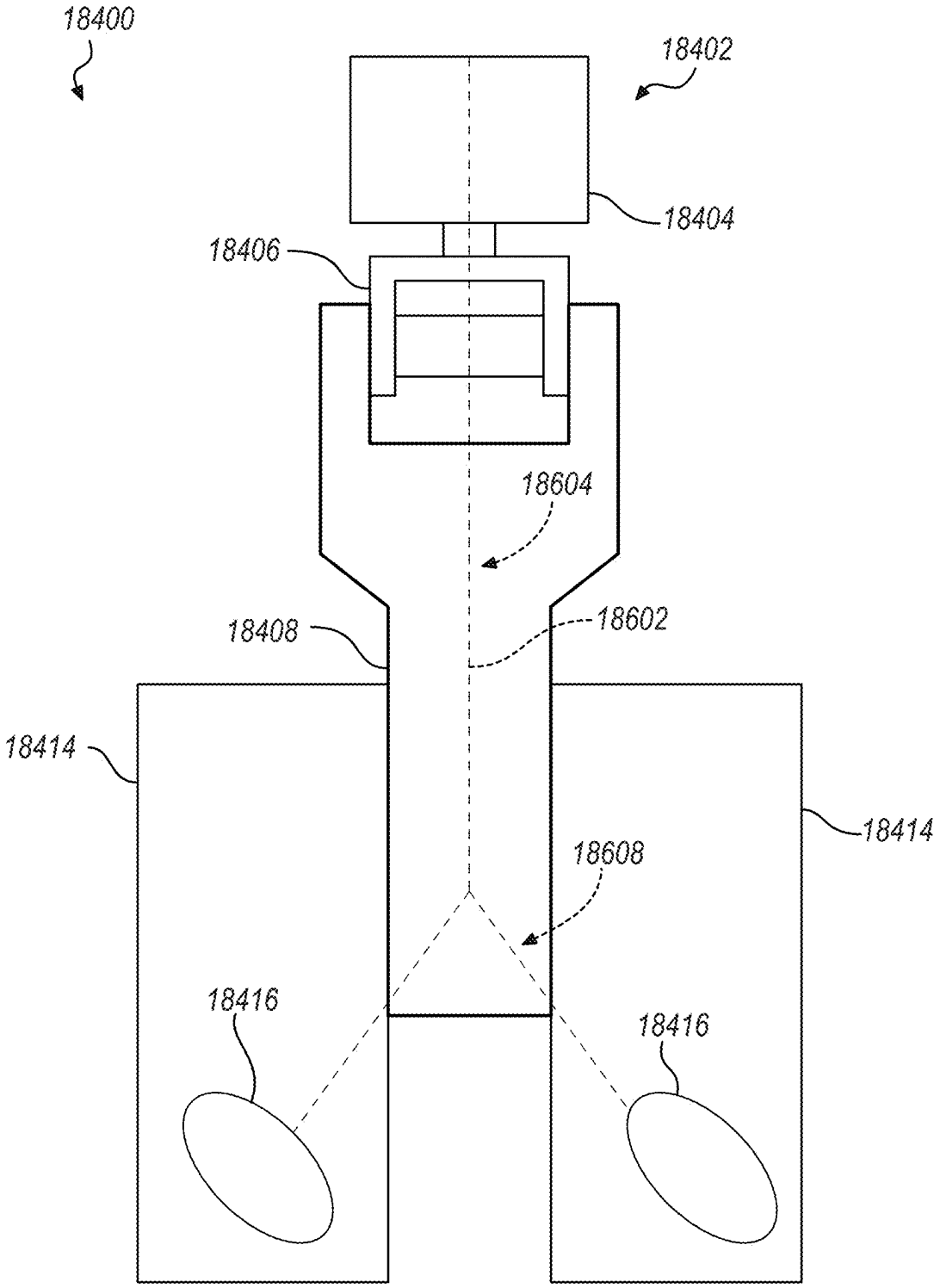
18400
18402
18404
18406
18604
18408
18602
18414
18414
18608
18416
18416

FIG. 90

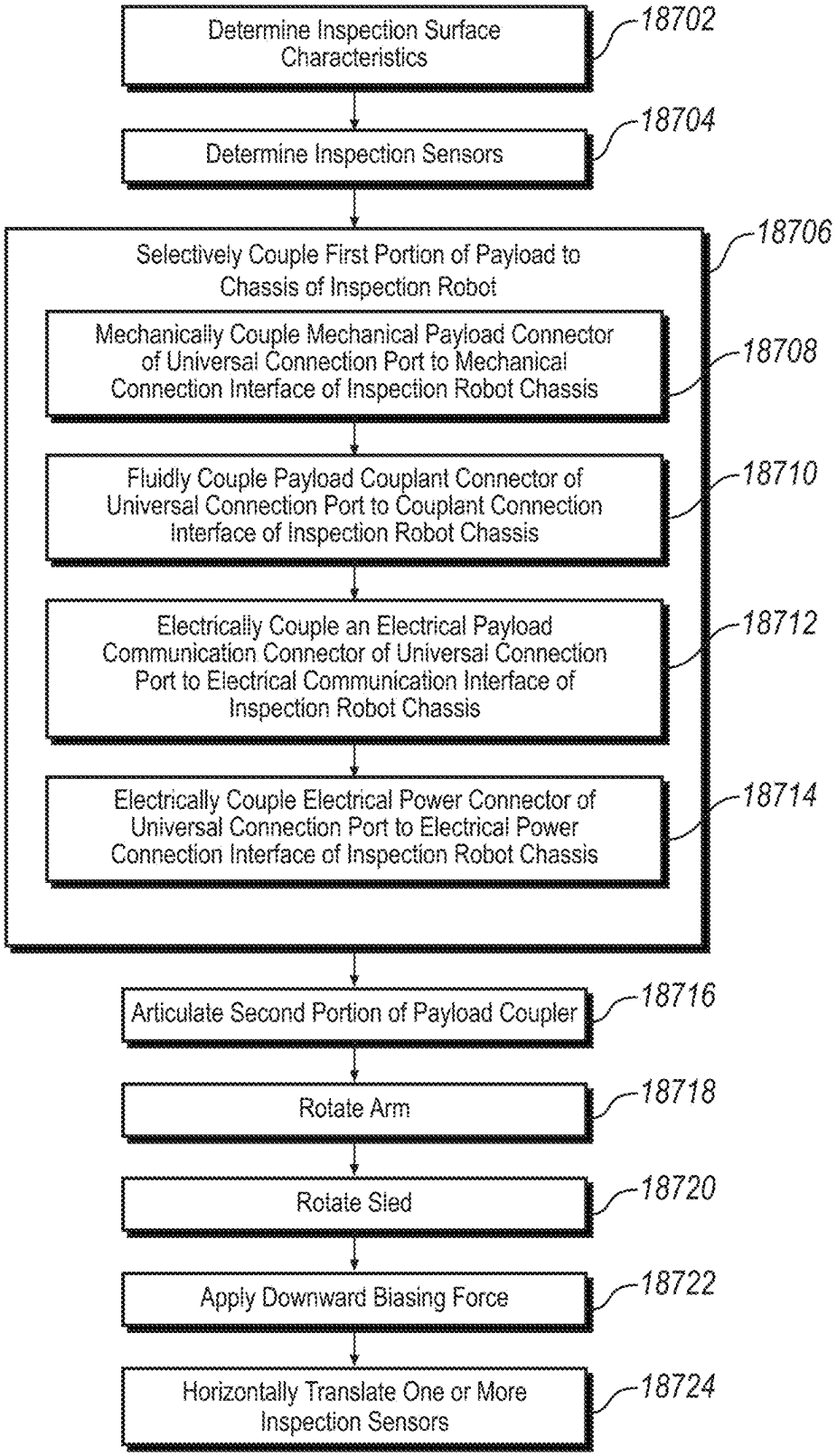
Determine Inspection Surface Characteristics
18702
Determine Inspection Sensors
18704
Selectively Couple First Portion of Payload to Chassis of Inspection Robot
18706
Mechanically Couple Mechanical Payload Connector of Universal Connection Port to Mechanical Connection Interface of Inspection Robot Chassis
18708
Fluidly Couple Payload Couplant Connector of Universal Connection Port to Couplant Connection Interface of Inspection Robot Chassis
18710
Electrically Couple an Electrical Payload Communication Connector of Universal Connection Port to Electrical Communication Interface of Inspection Robot Chassis
18712
Electrically Couple Electrical Power Connector of Universal Connection Port to Electrical Power Connection Interface of Inspection Robot Chassis
18714
Articulate Second Portion of Payload Coupler
18716
Rotate Arm
18718
Rotate Sled
18720
Apply Downward Biasing Force
18722
Horizontally Translate One or More Inspection Sensors
18724

FIG. 91

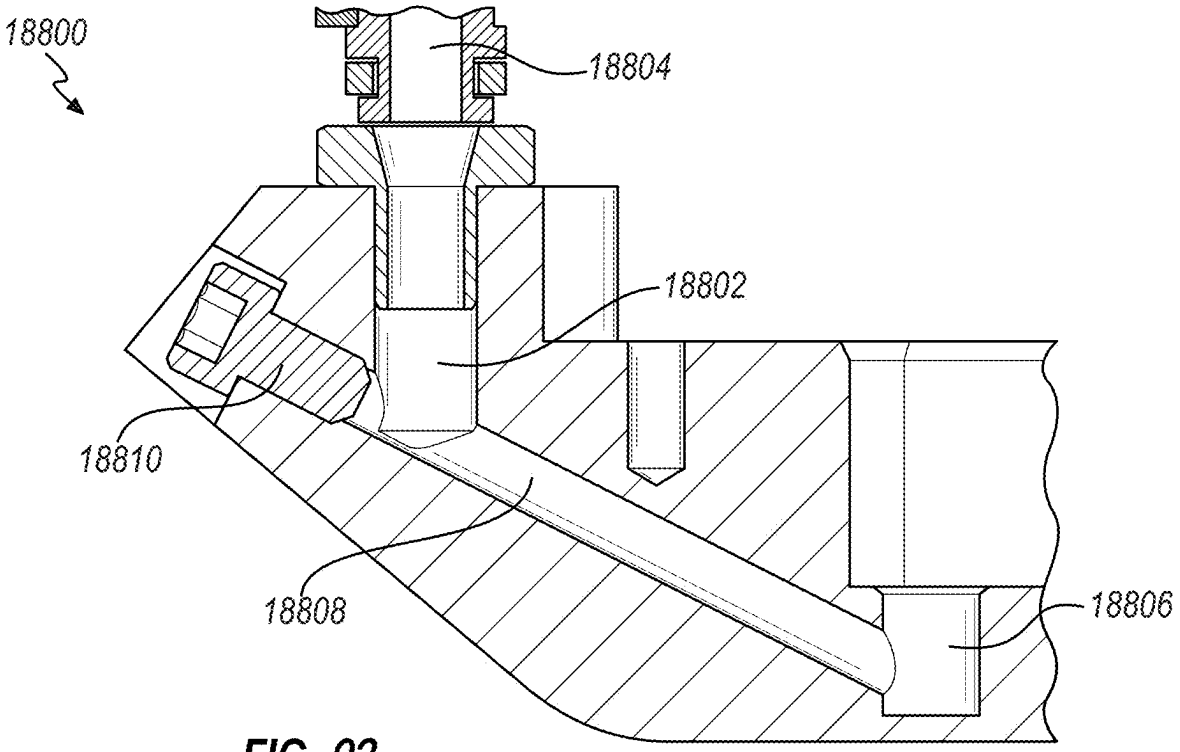
18800
18804
18802
18810
18808
18806

FIG. 92

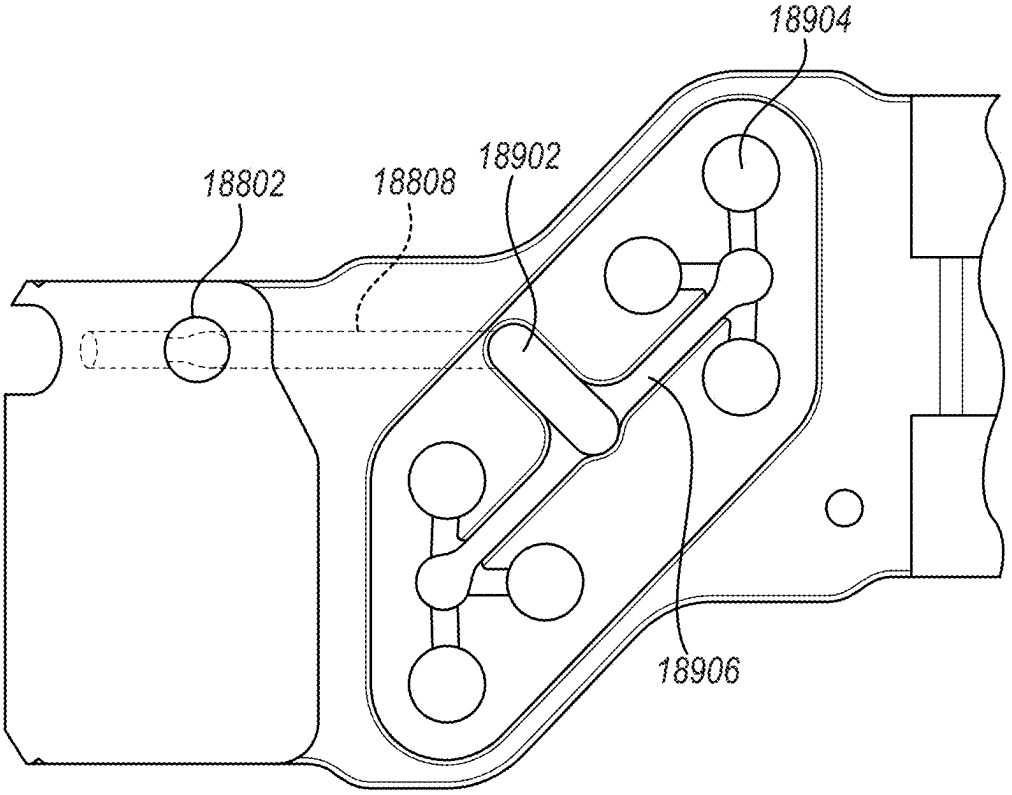
18904
18902
18802
18808
18906

FIG. 93

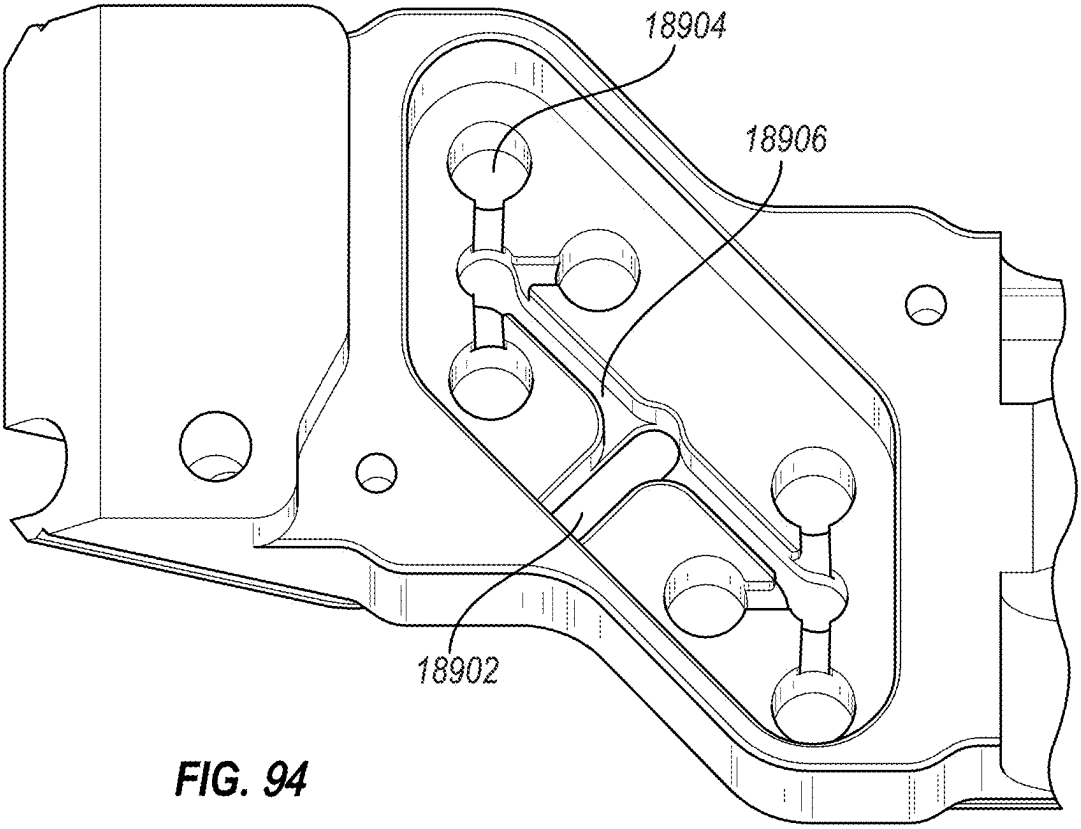

FIG. 94

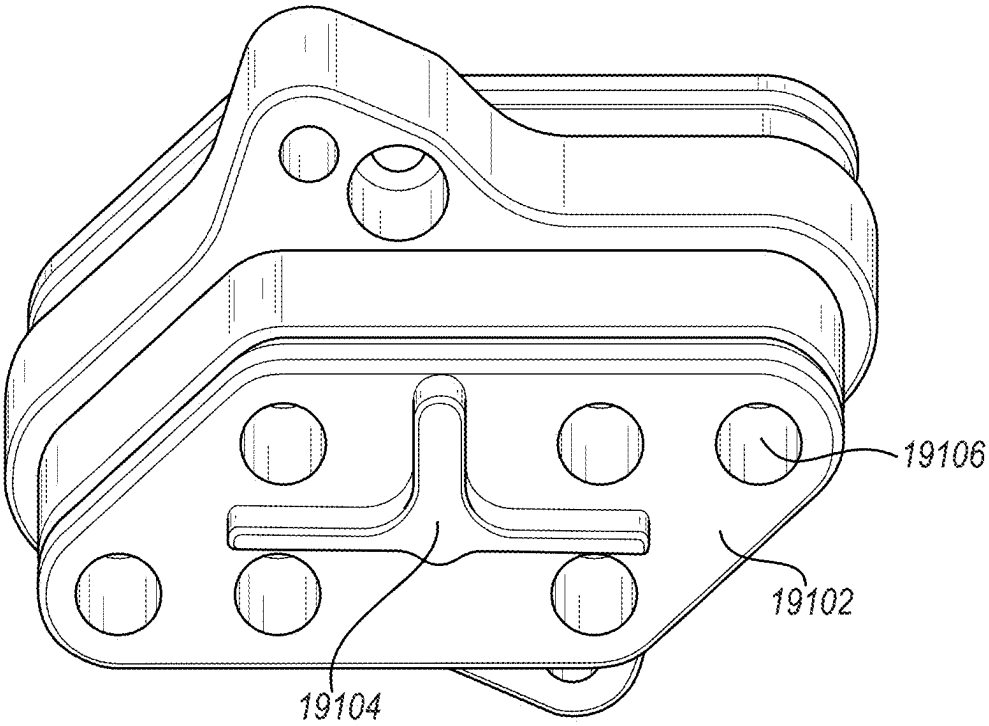

FIG. 95

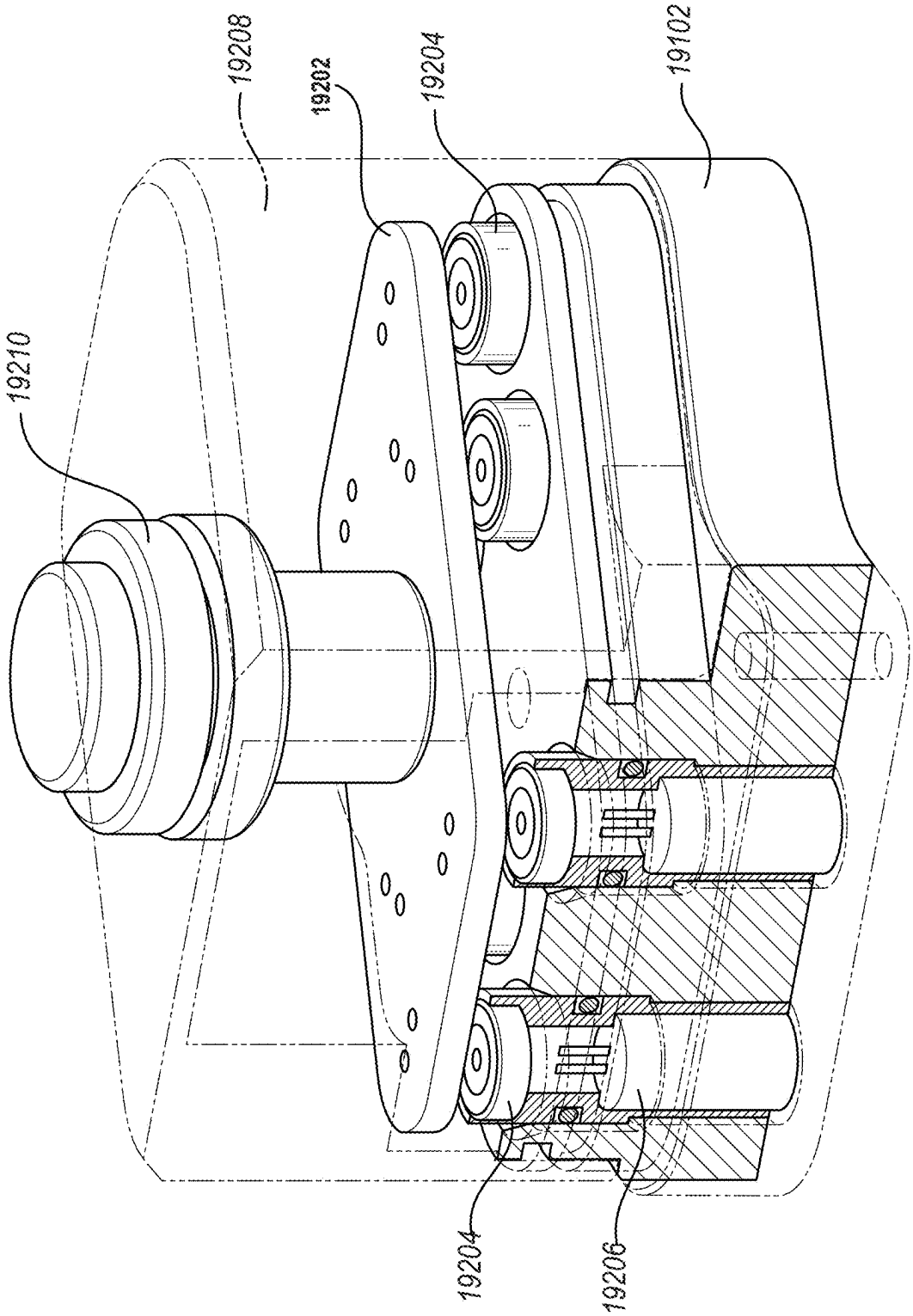

FIG. 96

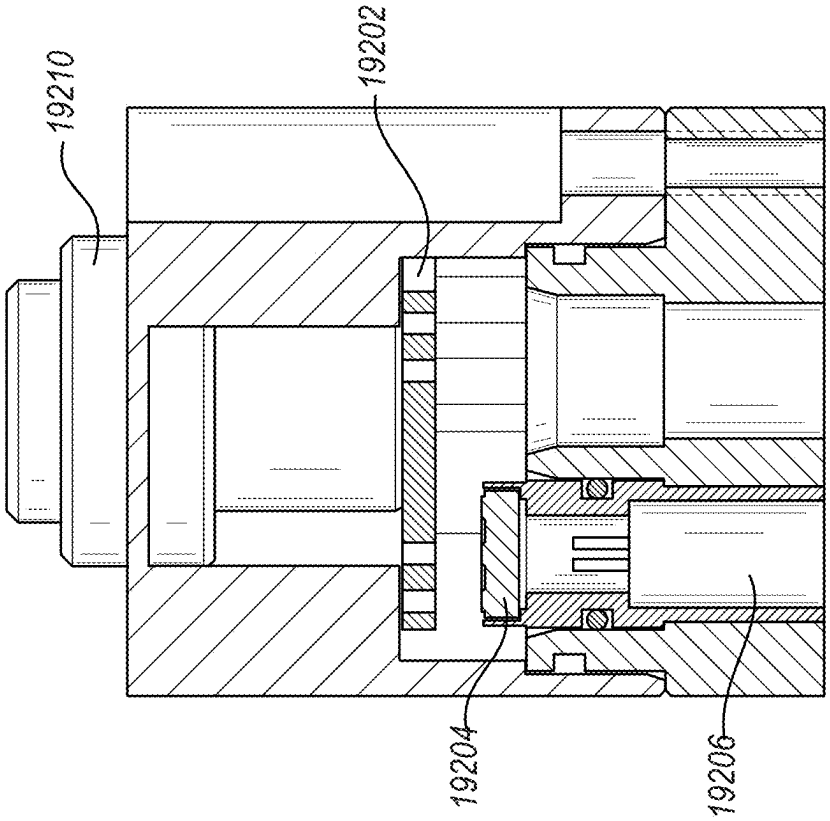

FIG. 98

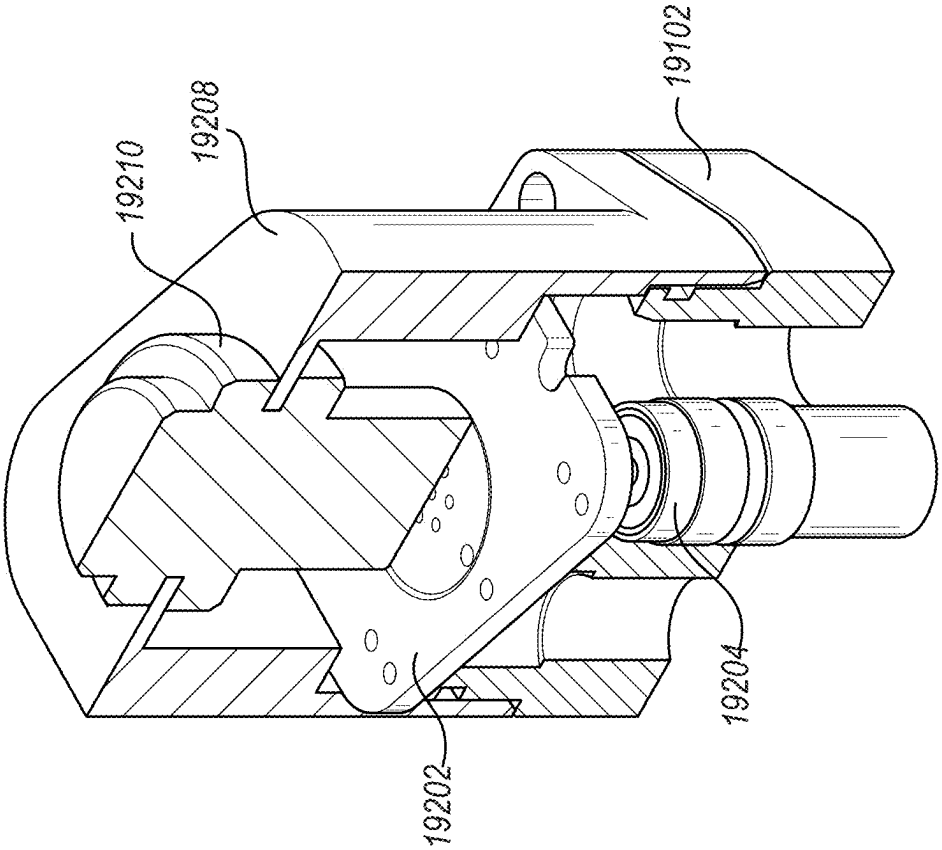

FIG. 97

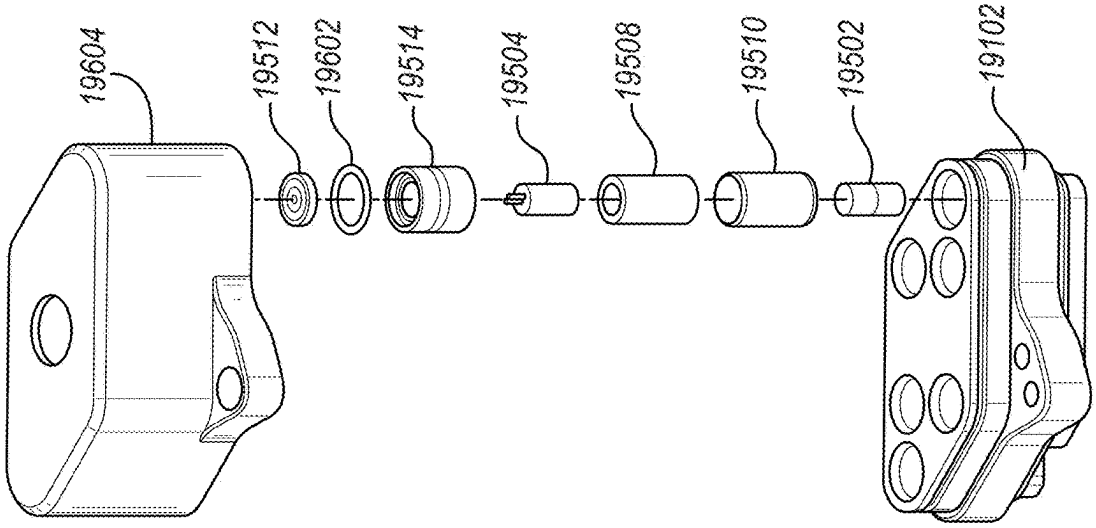

FIG. 100

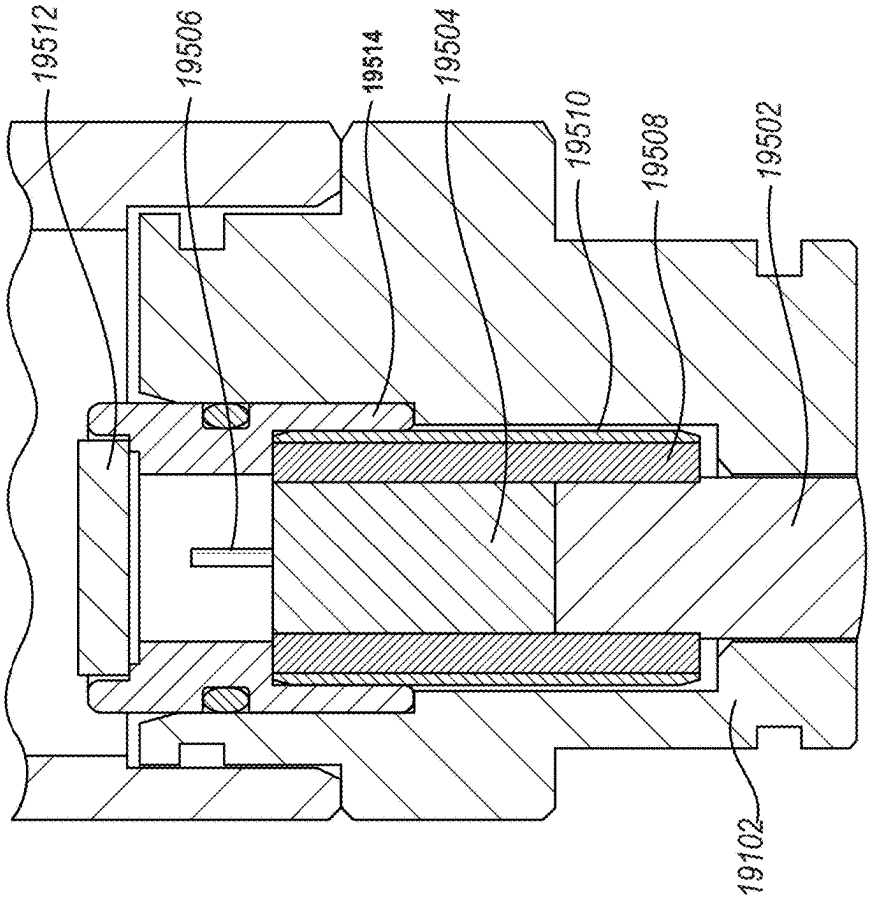

FIG. 99

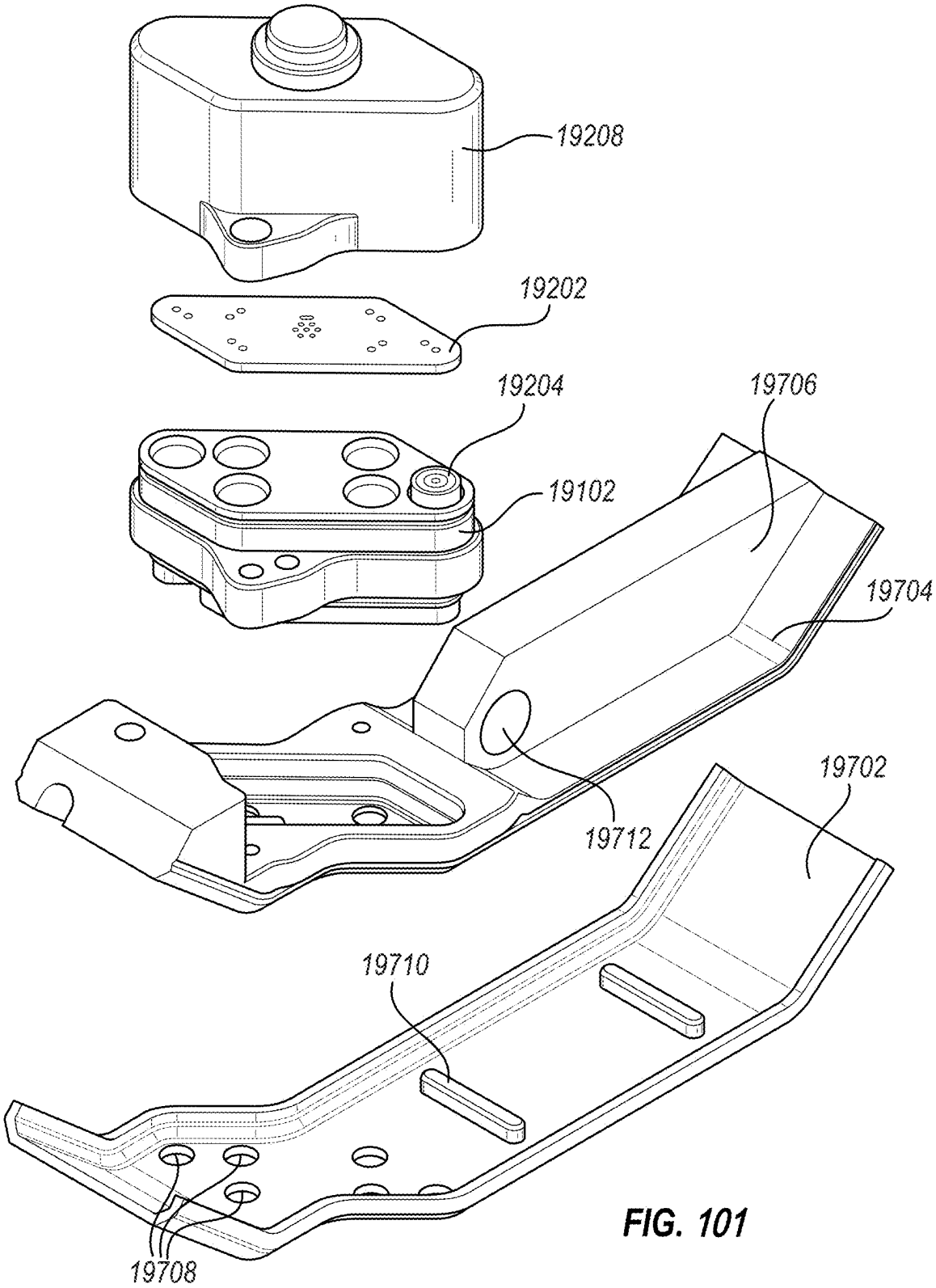
19208
19202
19204
19706
19102
19704
19712
19702
19710
19708

FIG. 101

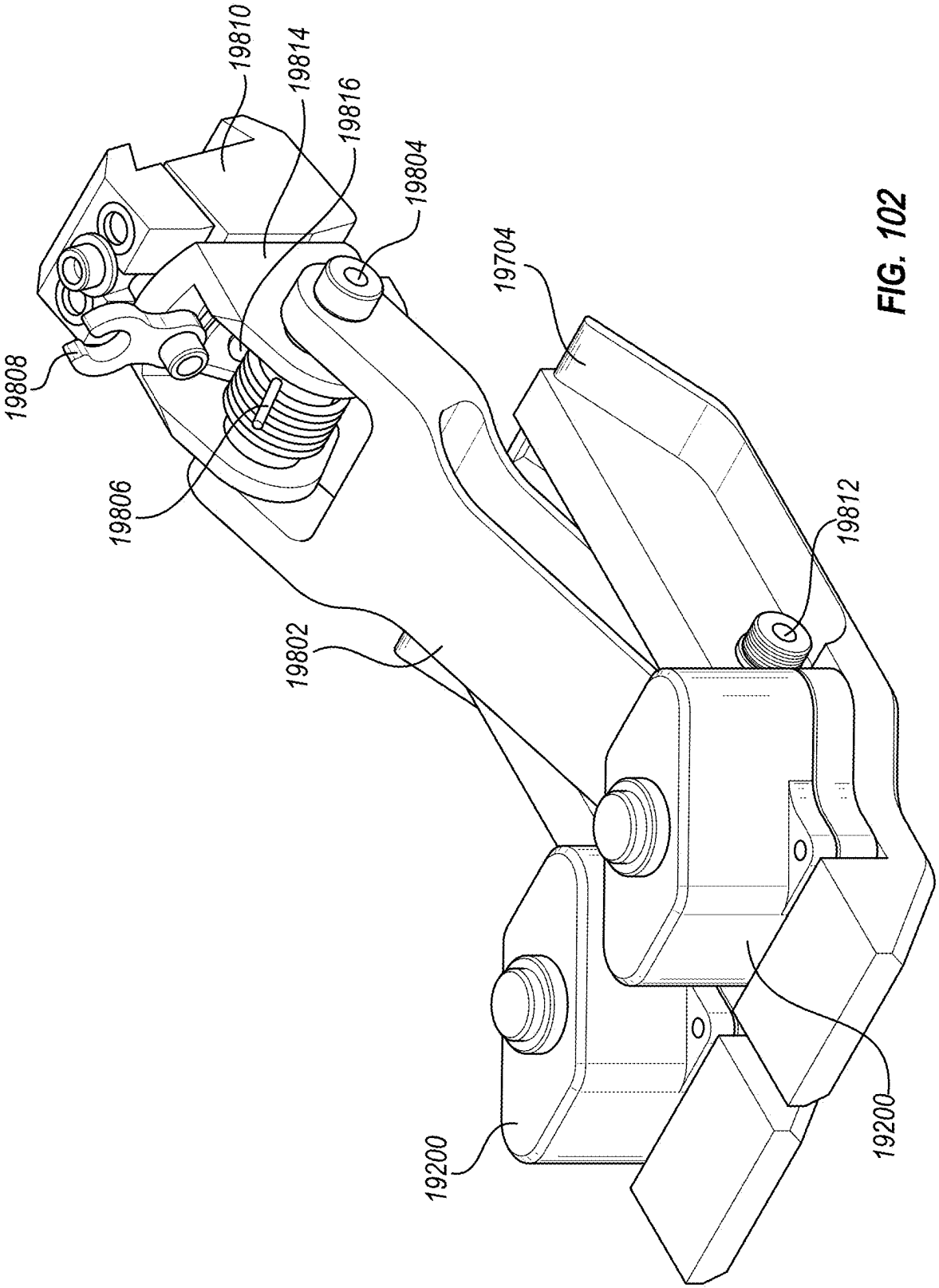
19810
19814
19816
19804
19704
19808
19806
19812
19802
19200
19200

FIG. 102

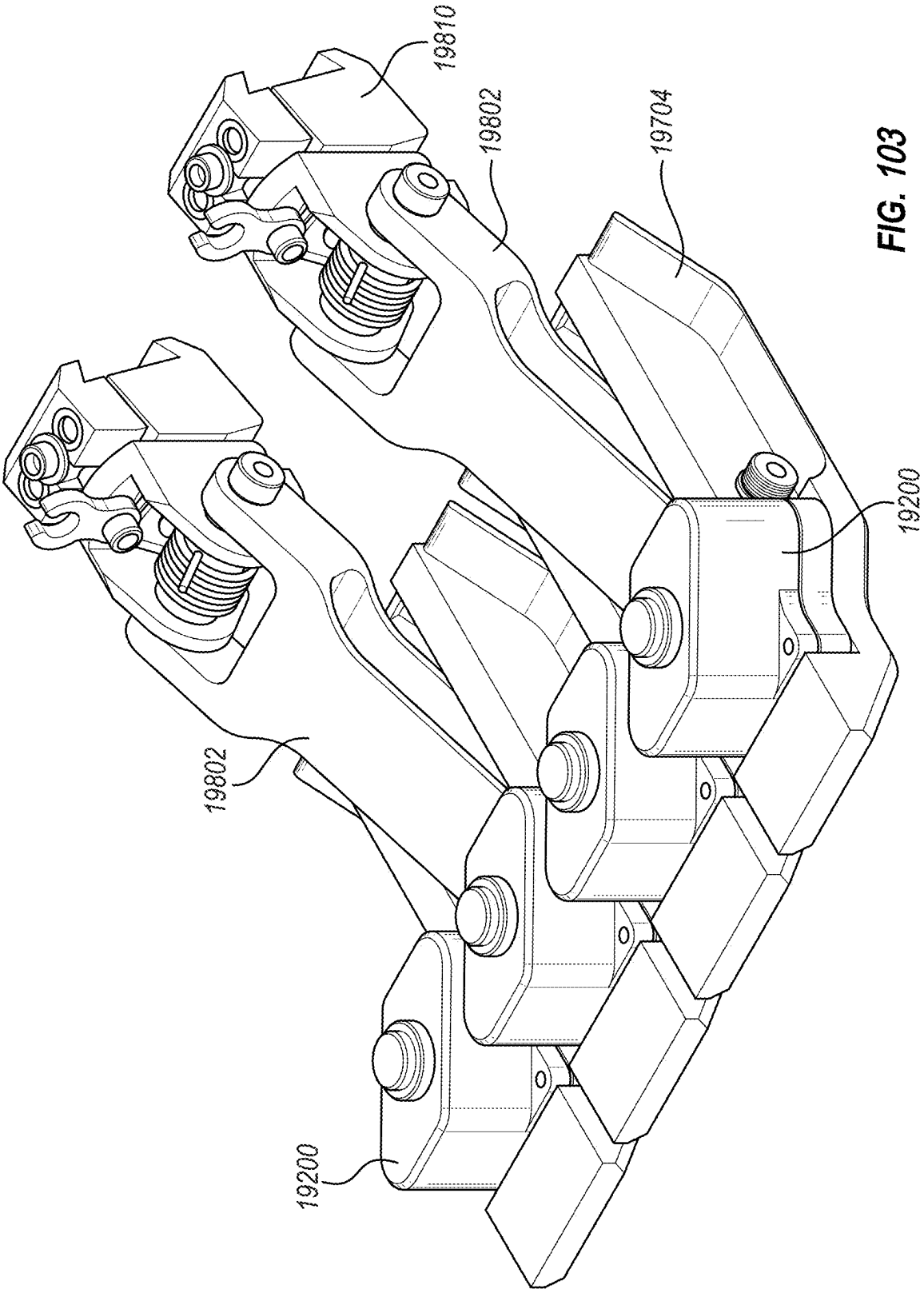

FIG. 103

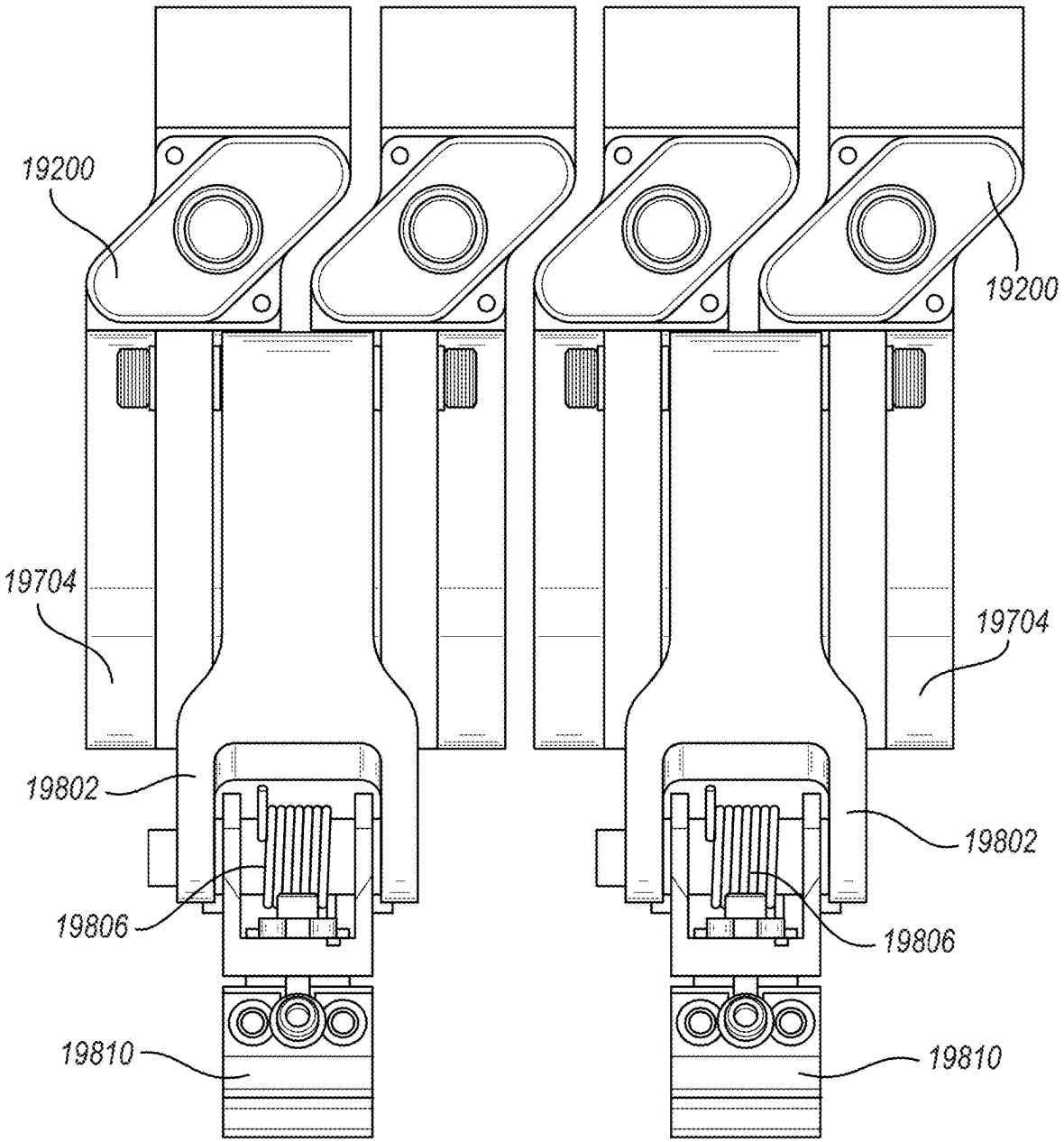
19200
19200
19704
19704
19802
19802
19806
19806
19810
19810

FIG. 104

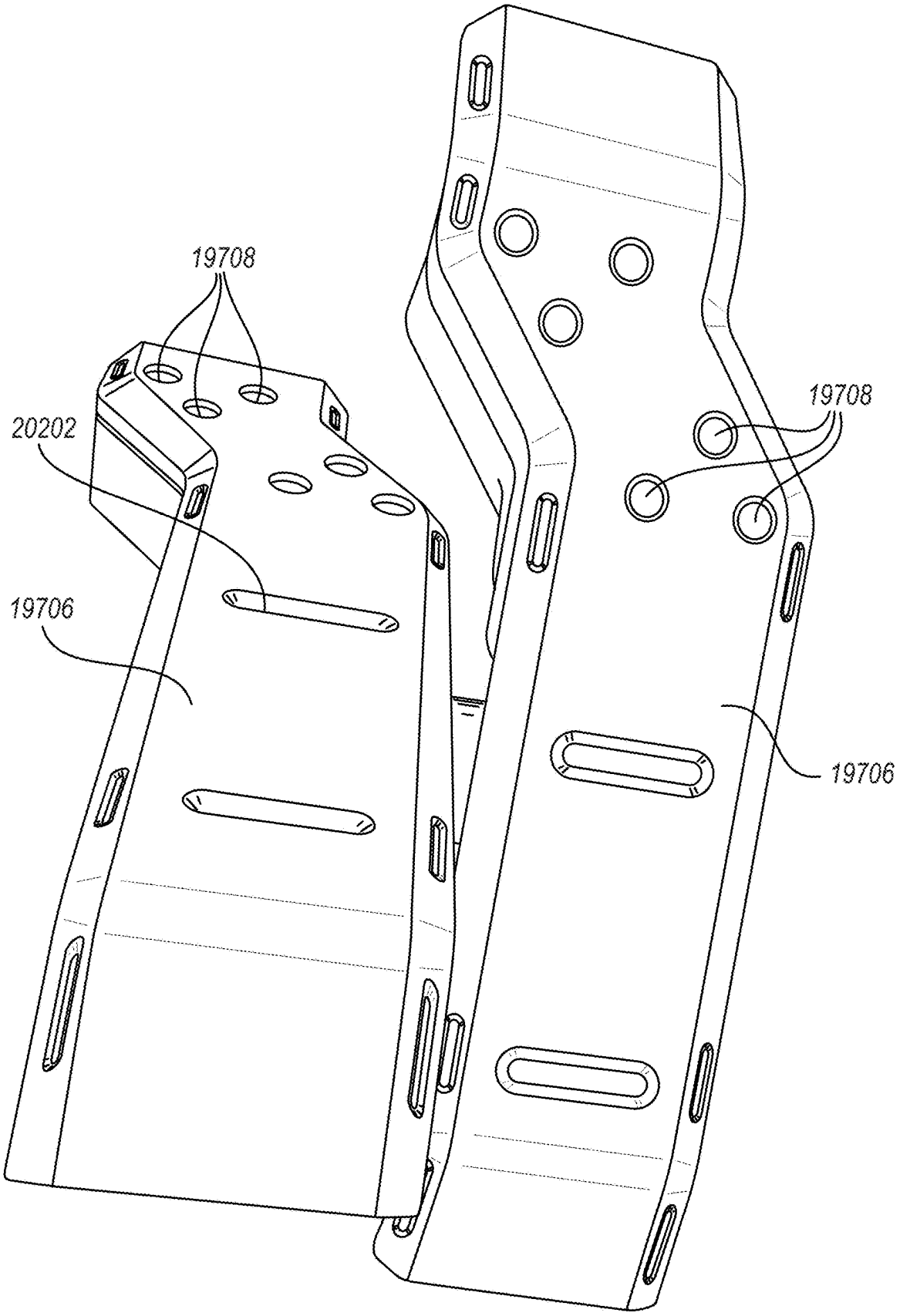

FIG. 105

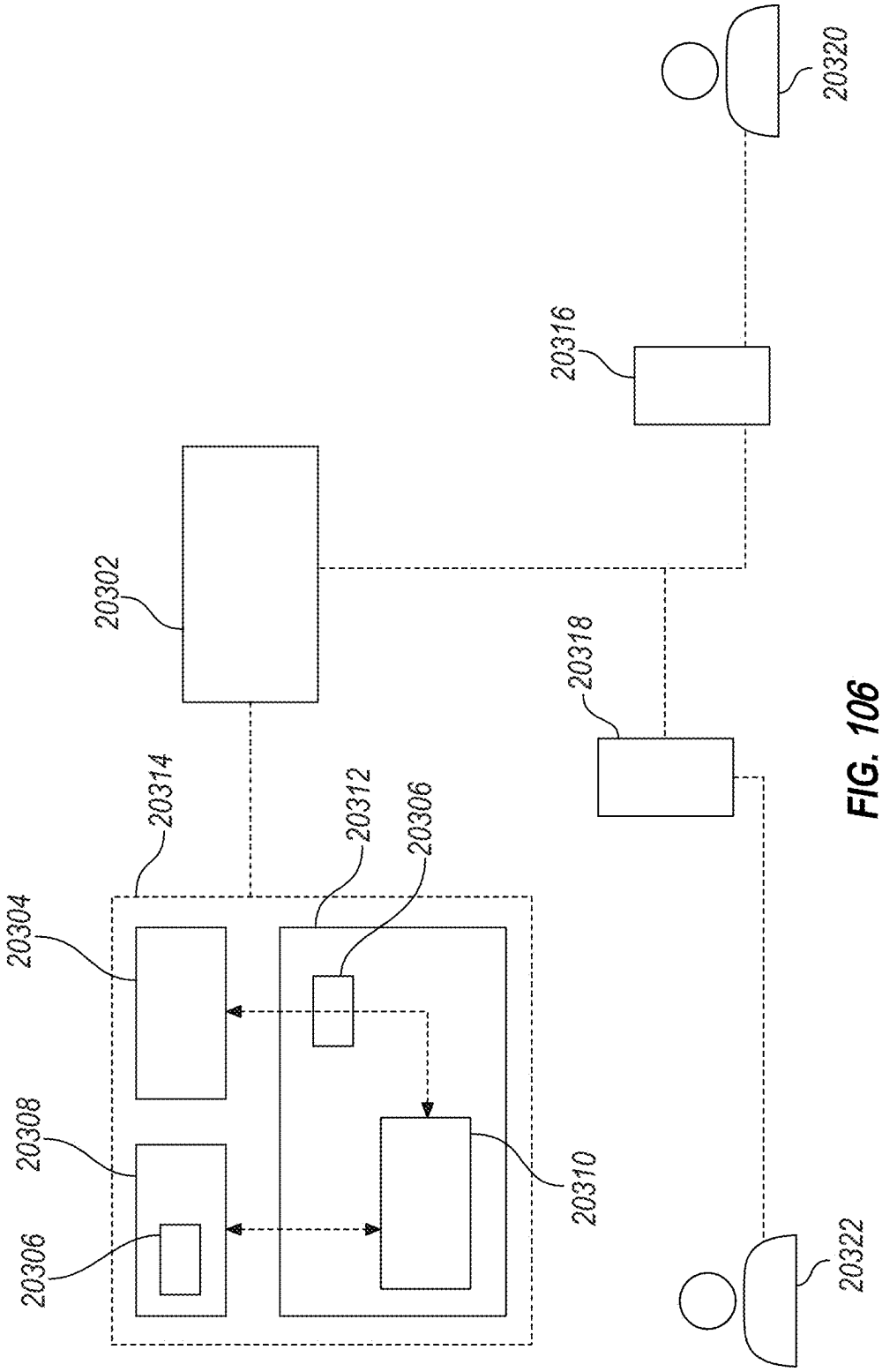
20320
20316
20302
20318
20314
20312
20306
20304
20308
20306
20310
20322

FIG. 106

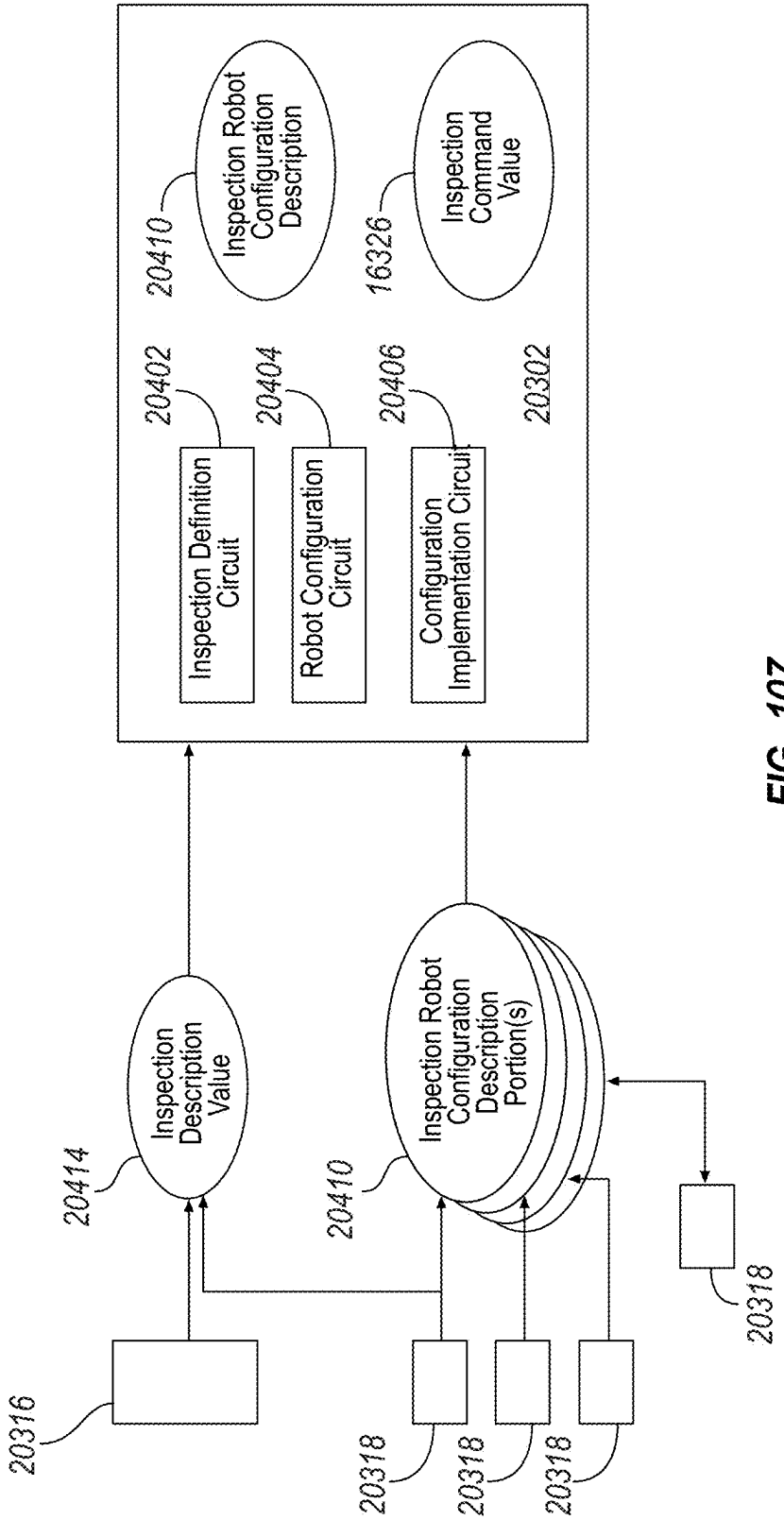
20316
20414
Inspection Description Value
20410
Inspection Robot Configuration Description Portion(s)
20318
20318
20318
20318
20402
Inspection Definition Circuit
20404
Robot Configuration Circuit
20406
Configuration Implementation Circuit
20302
20410
Inspection Robot Configuration Description
16326
Inspection Command Value

FIG. 107

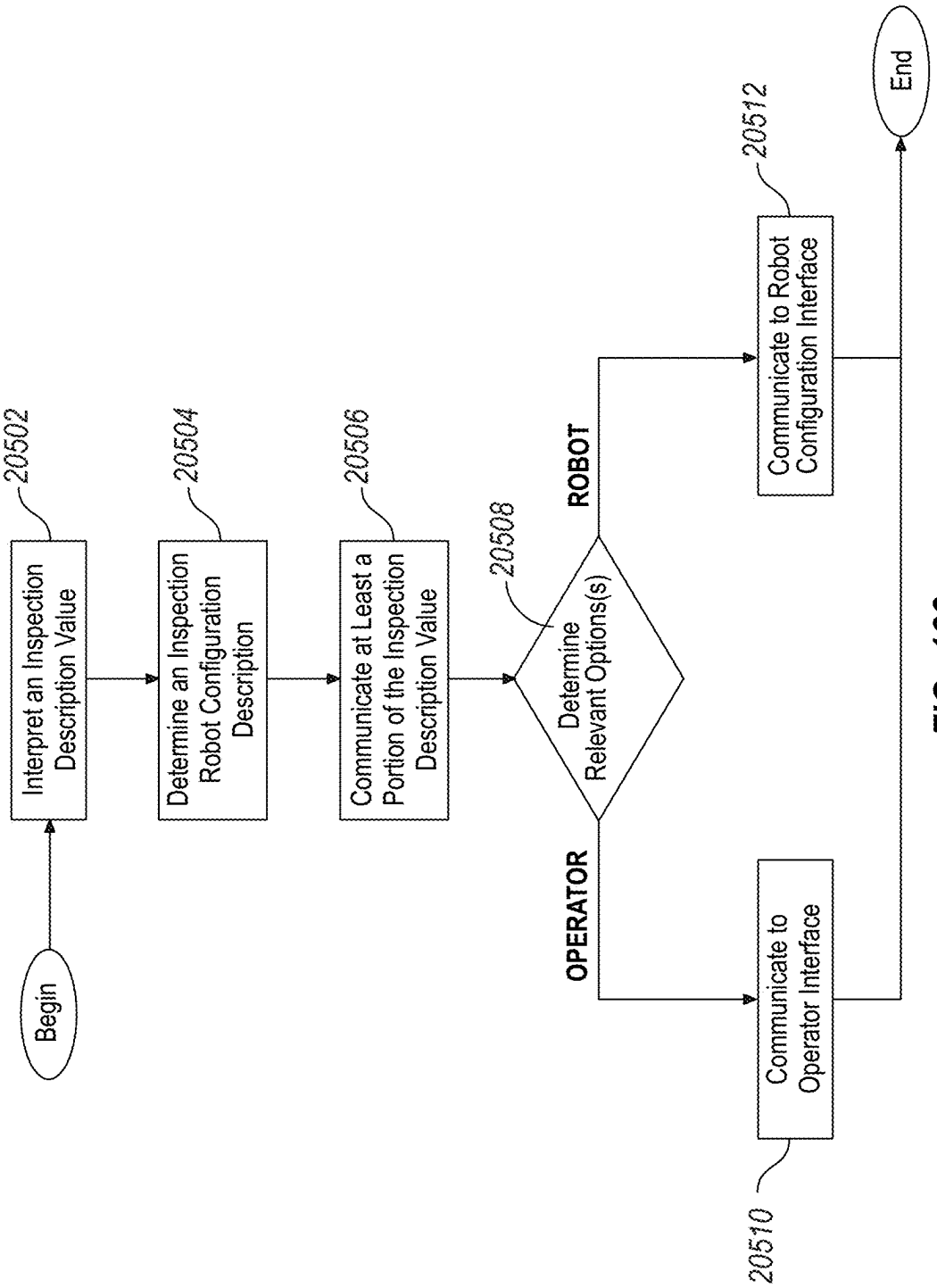
Begin
20502
Interpret an Inspection Description Value
20504
Determine an Inspection Robot Configuration Description
20506
Communicate at Least a Portion of the Inspection Description Value
20508
Determine Relevant Options(s)
ROBOT
OPERATOR
20512
Communicate to Robot Configuration Interface
20510
Communicate to Operator Interface
End

FIG. 108

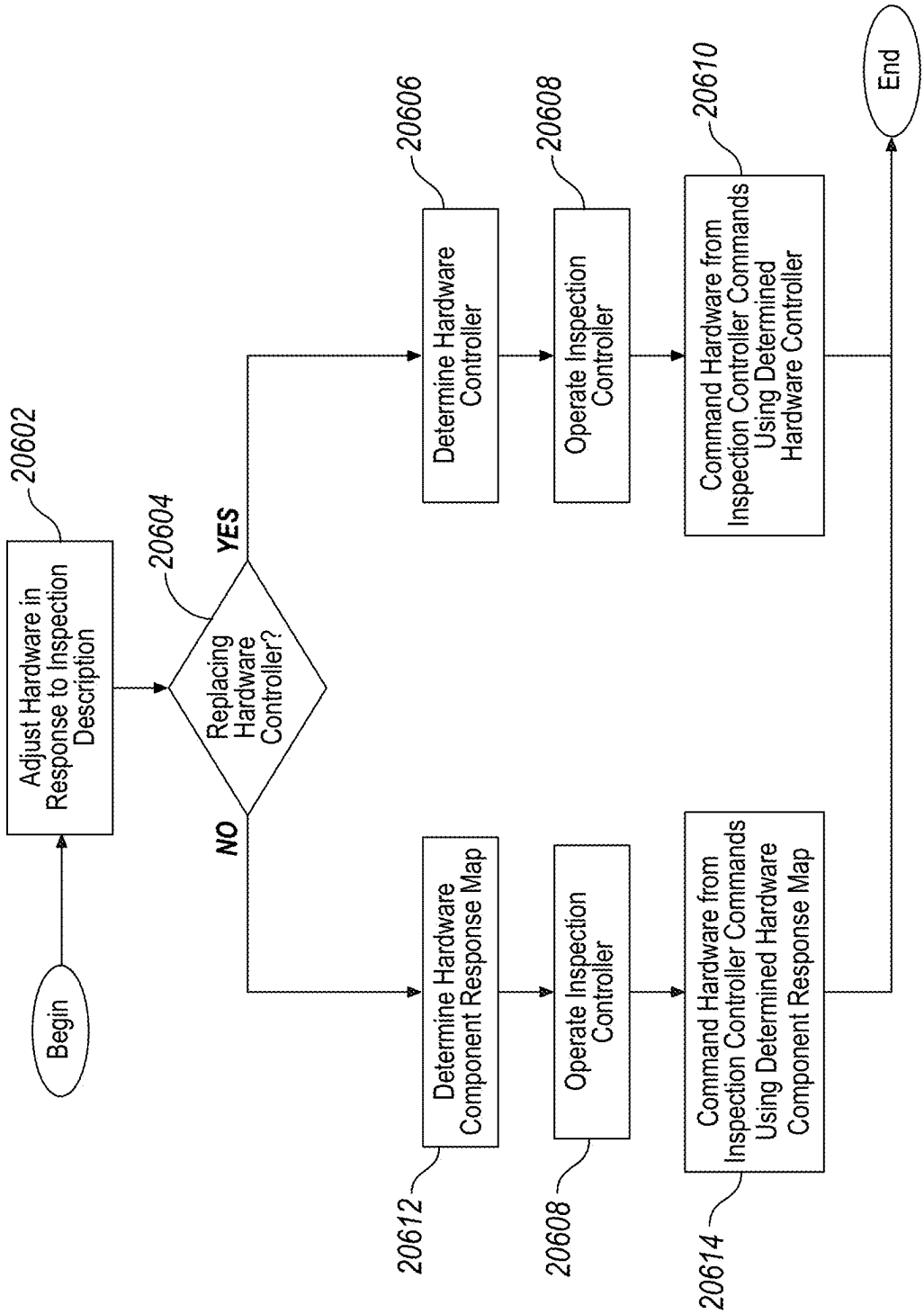
Begin
Adjust Hardware in Response to Inspection Description
20602
Replacing Hardware Controller?
20604
YES
NO
Determine Hardware Controller
20606
Operate Inspection Controller
20608
Command Hardware from Inspection Controller Commands Using Determined Hardware Controller
20610
Determine Hardware Component Response Map
20612
Operate Inspection Controller
20608
Command Hardware from Inspection Controller Commands Using Determined Hardware Component Response Map
20614
End

FIG. 109

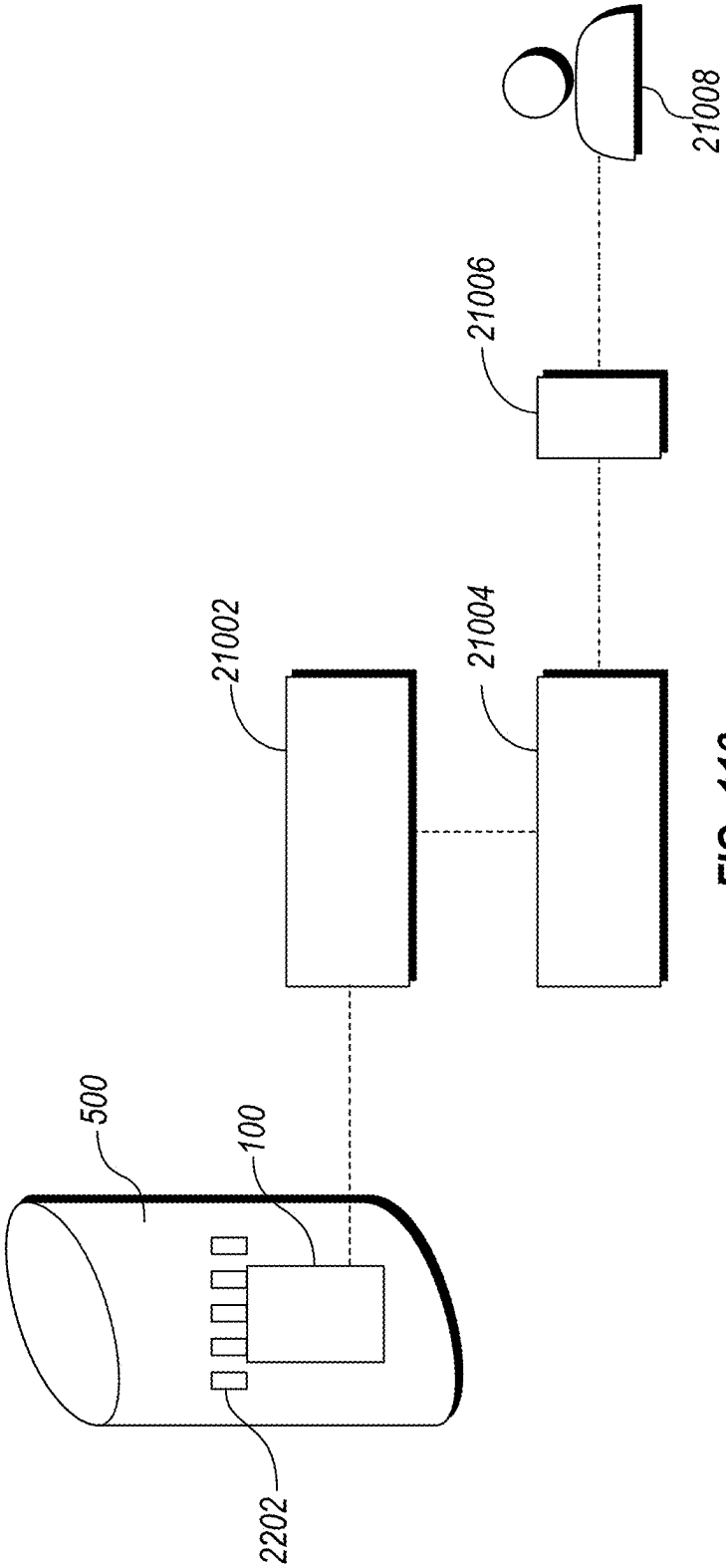

FIG. 110

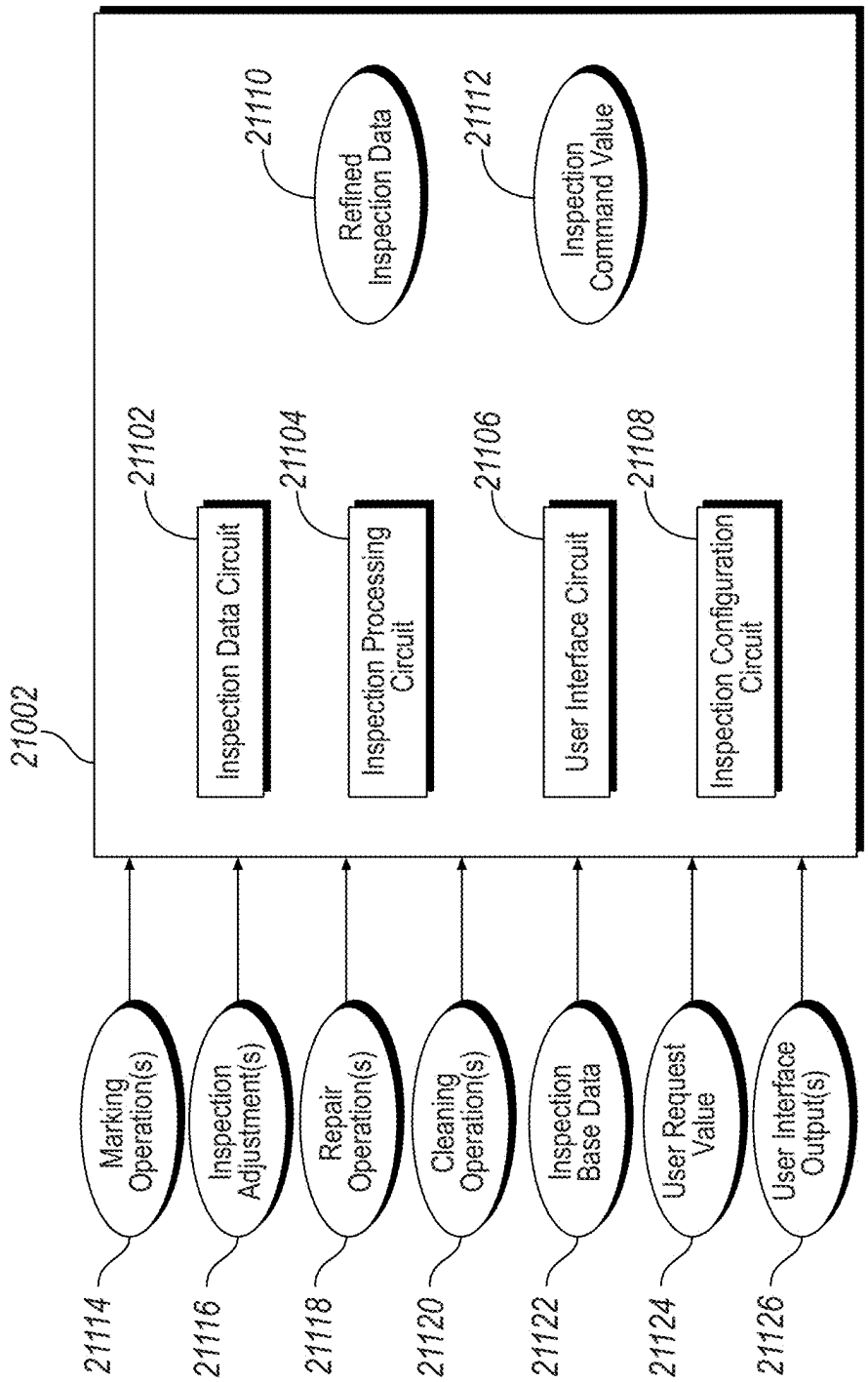
21002
Inspection Data Circuit
21102
Inspection Processing Circuit
21104
User Interface Circuit
21106
Inspection Configuration Circuit
21108
Refined Inspection Data
21110
Inspection Command Value
21112
Marking Operation(s)
21114
Inspection Adjustment(s)
21116
Repair Operation(s)
21118
Cleaning Operation(s)
21120
Inspection Base Data
21122
User Request Value
21124
User Interface Output(s)
21126

FIG. 111

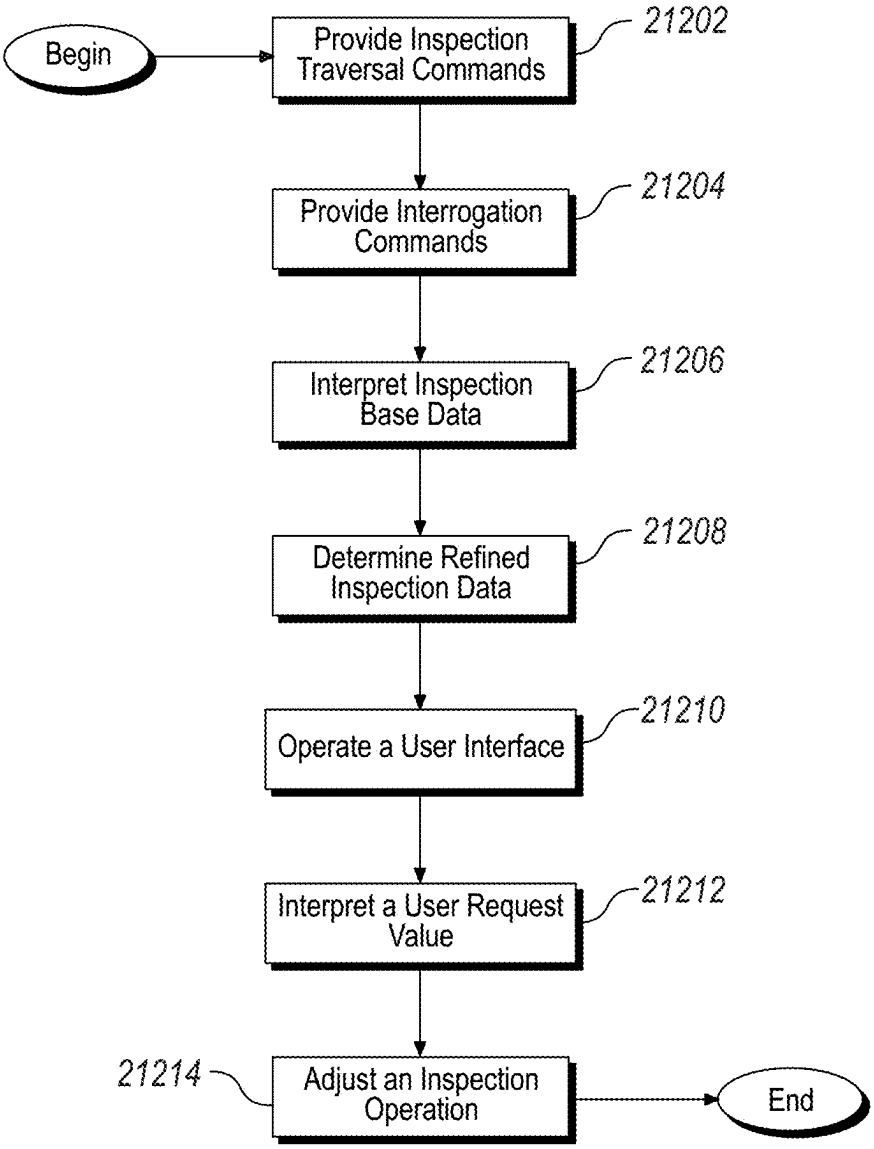
Begin
Provide Inspection Traversal Commands
21202
Provide Interrogation Commands
21204
Interpret Inspection Base Data
21206
Determine Refined Inspection Data
21208
Operate a User Interface
21210
Interpret a User Request Value
21212
21214
Adjust an Inspection Operation
End

FIG. 112

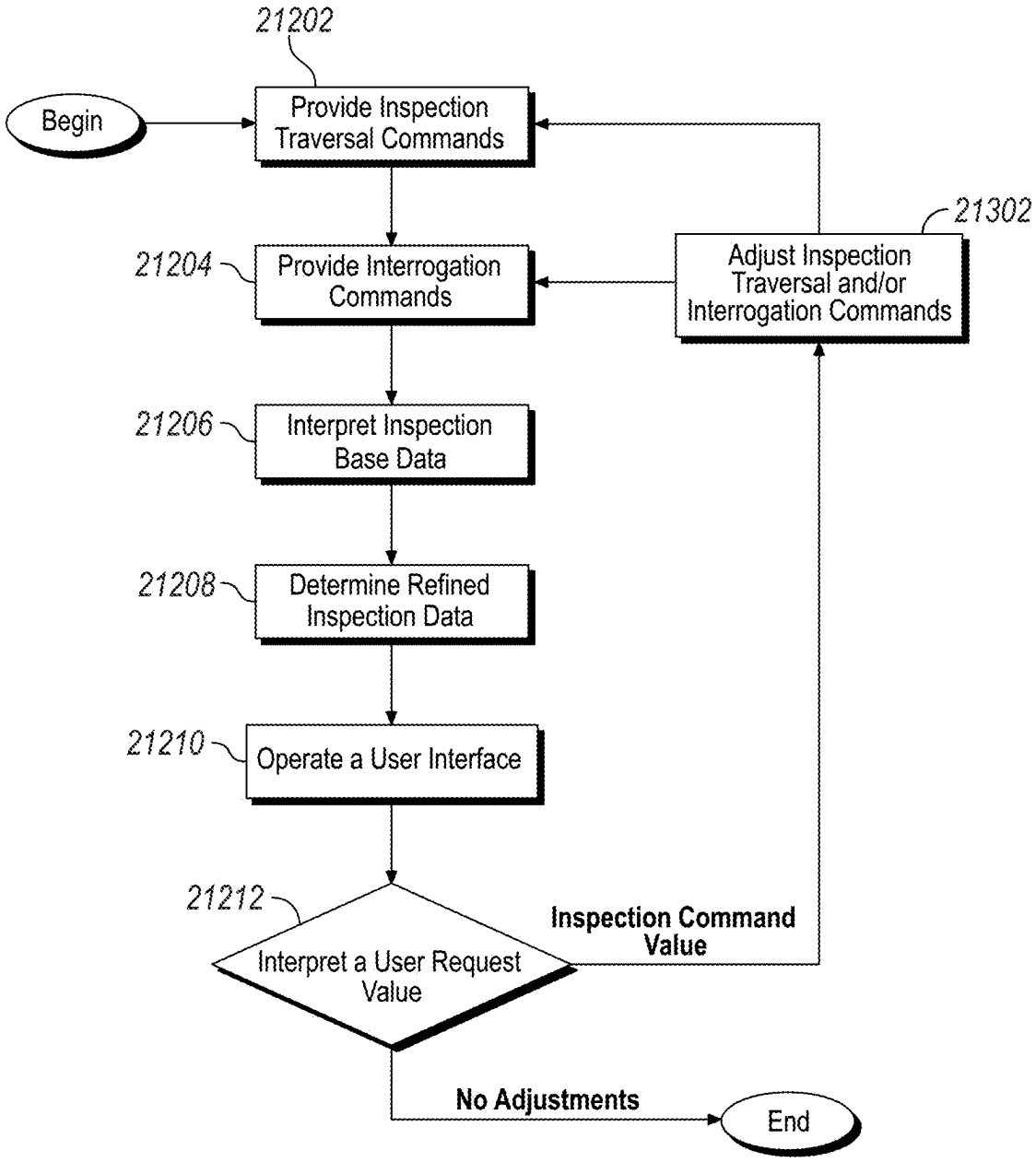
21202
Begin
Provide Inspection Traversal Commands
21204
Provide Interrogation Commands
21302
Adjust Inspection Traversal and/or Interrogation Commands
21206
Interpret Inspection Base Data
21208
Determine Refined Inspection Data
21210
Operate a User Interface
21212
Interpret a User Request Value
Inspection Command Value
No Adjustments
End

FIG. 113

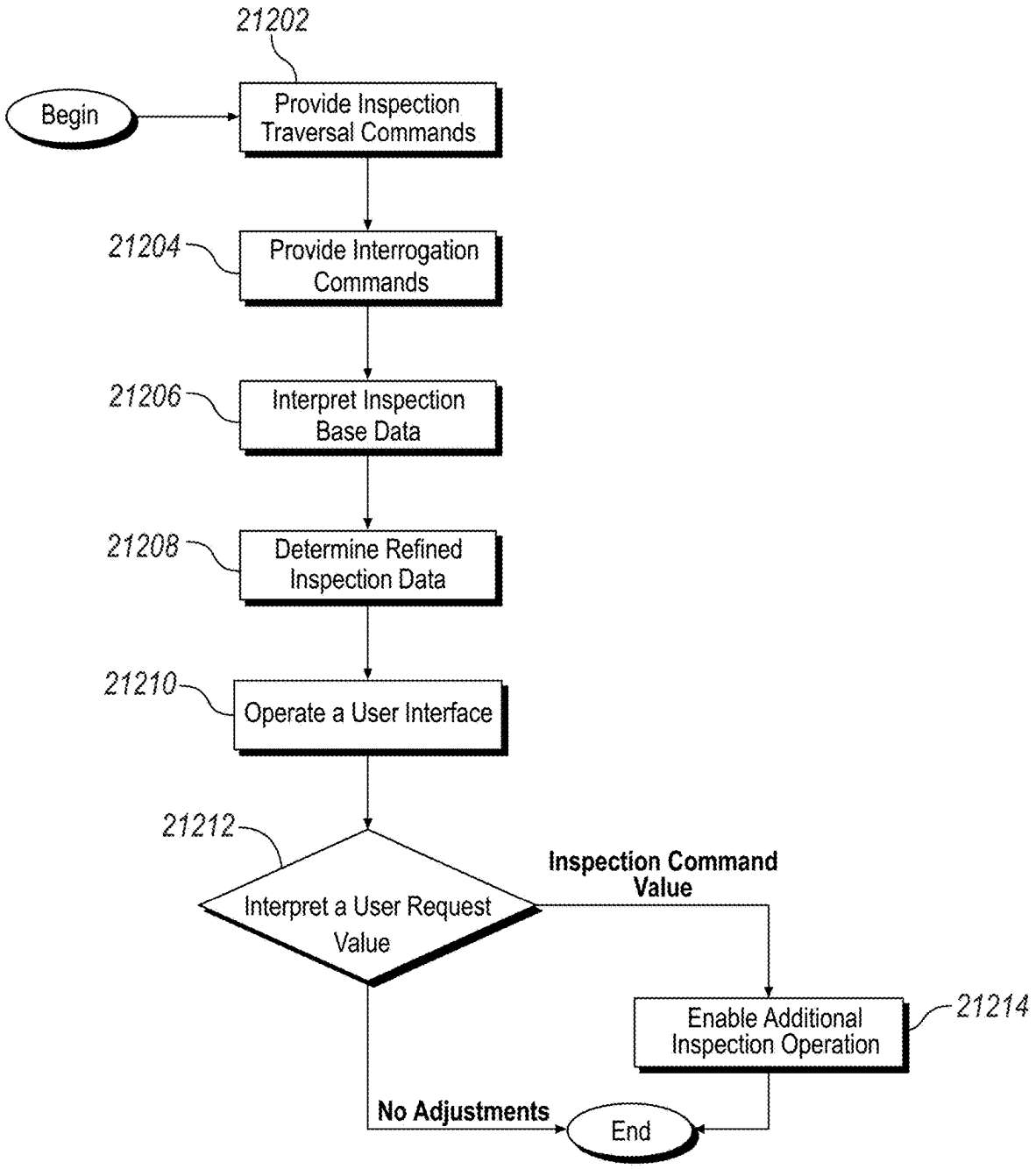
21202
Begin
Provide Inspection Traversal Commands
21204
Provide Interrogation Commands
21206
Interpret Inspection Base Data
21208
Determine Refined Inspection Data
21210
Operate a User Interface
21212
Interpret a User Request Value
Inspection Command Value
Enable Additional Inspection Operation
21214
No Adjustments
End

FIG. 114

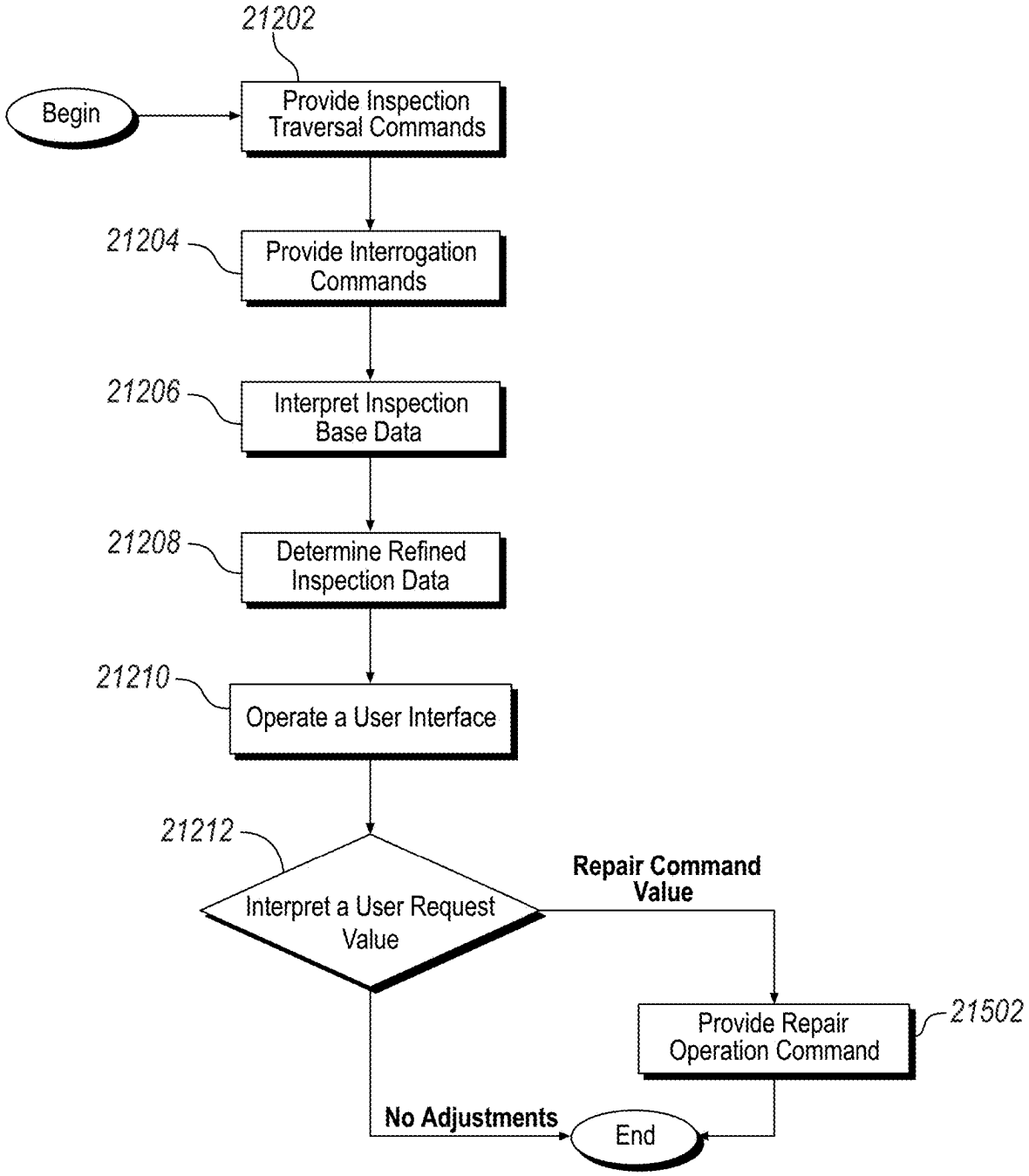
21202
Begin
Provide Inspection Traversal Commands
21204
Provide Interrogation Commands
21206
Interpret Inspection Base Data
21208
Determine Refined Inspection Data
21210
Operate a User Interface
21212
Interpret a User Request Value
Repair Command Value
Provide Repair Operation Command
21502
No Adjustments
End

FIG. 115

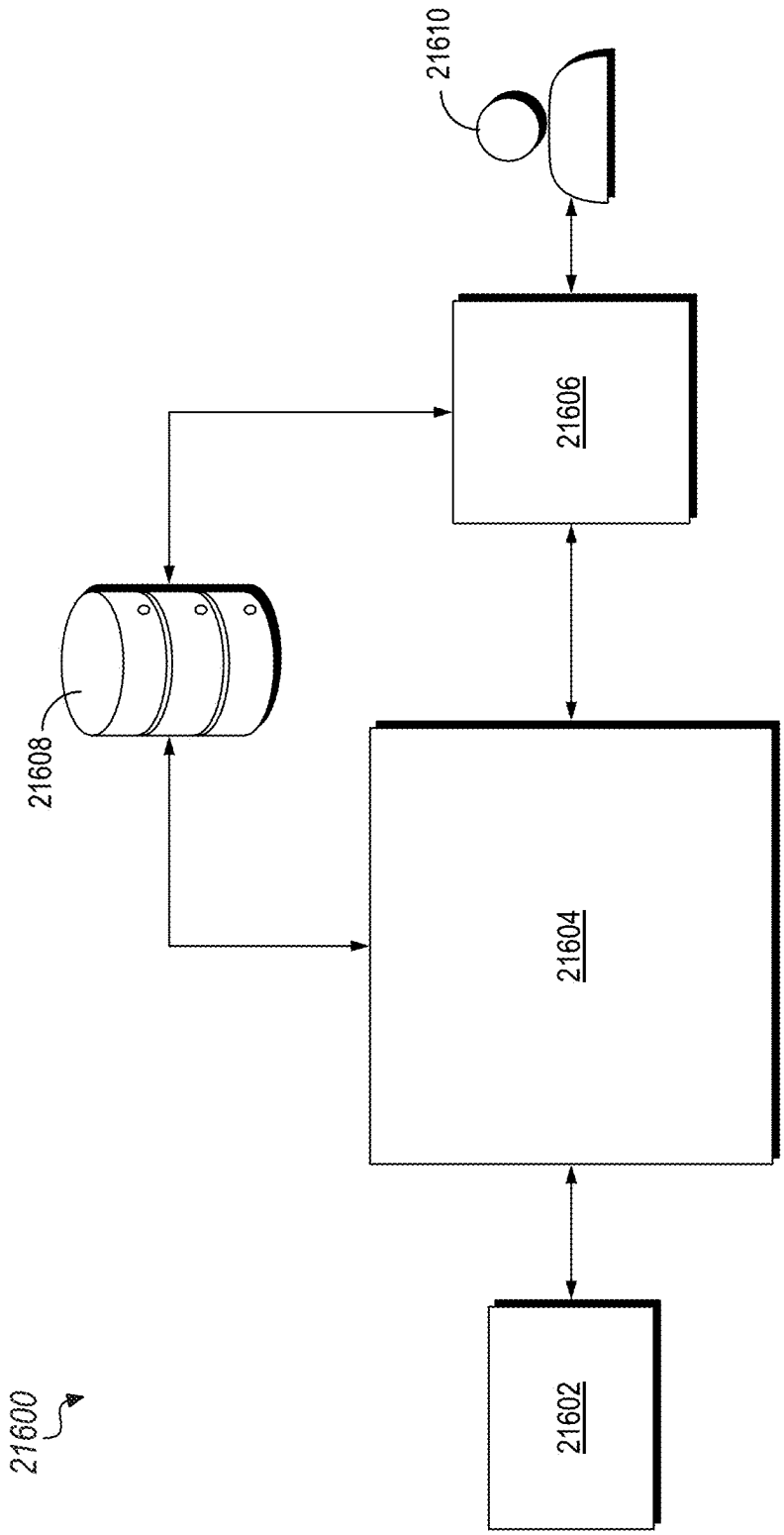

FIG. 116

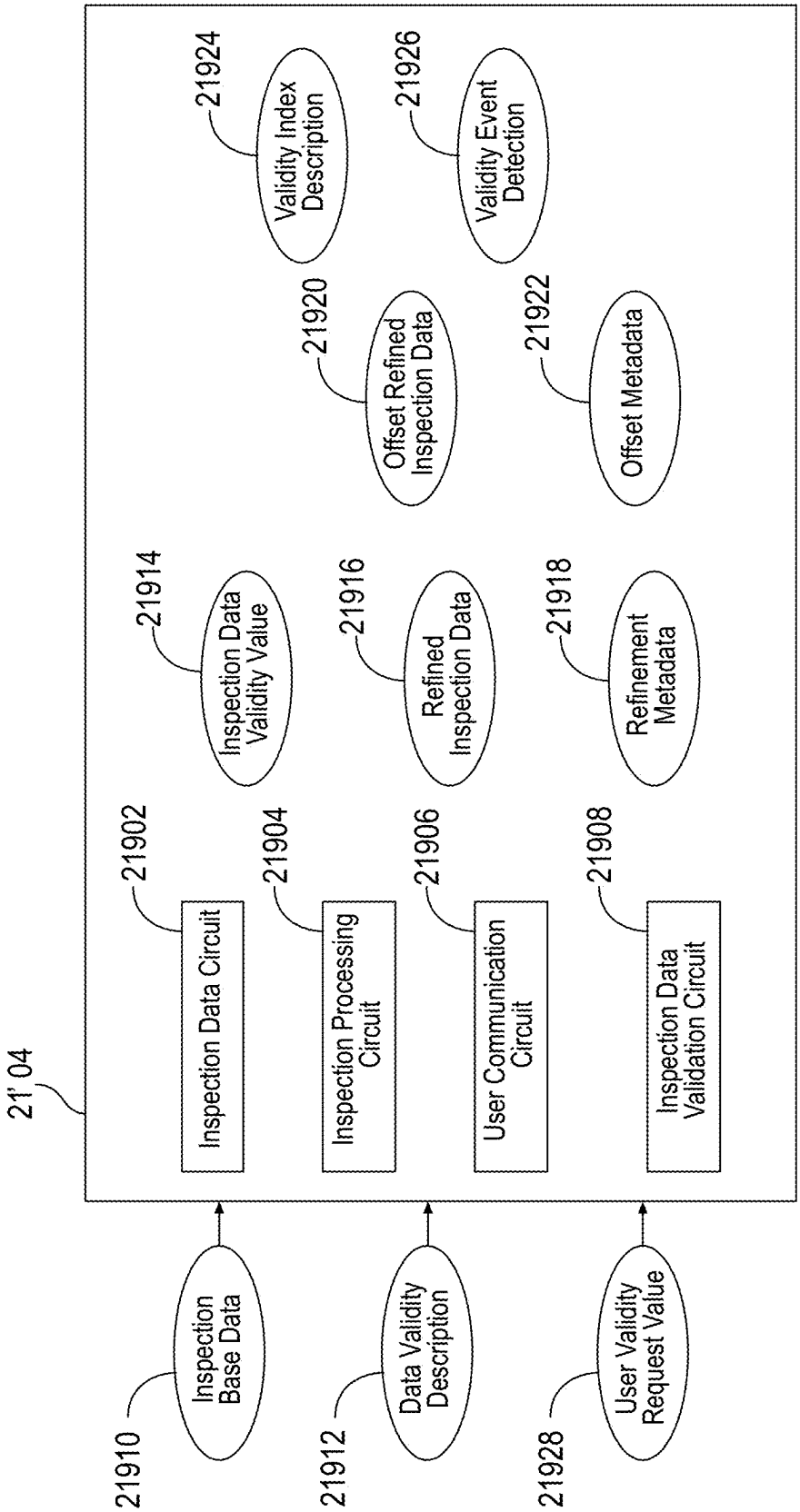
21'04
Inspection Data Circuit
21902
Inspection Processing Circuit
21904
User Communication Circuit
21906
Inspection Data Validation Circuit
21908
Inspection Base Data
21910
Data Validity Description
21912
User Validity Request Value
21928
Inspection Data Validity Value
21914
Refined Inspection Data
21916
Refinement Metadata
21918
Offset Refined Inspection Data
21920
Offset Metadata
21922
Validity Index Description
21924
Validity Event Detection
21926

FIG. 117

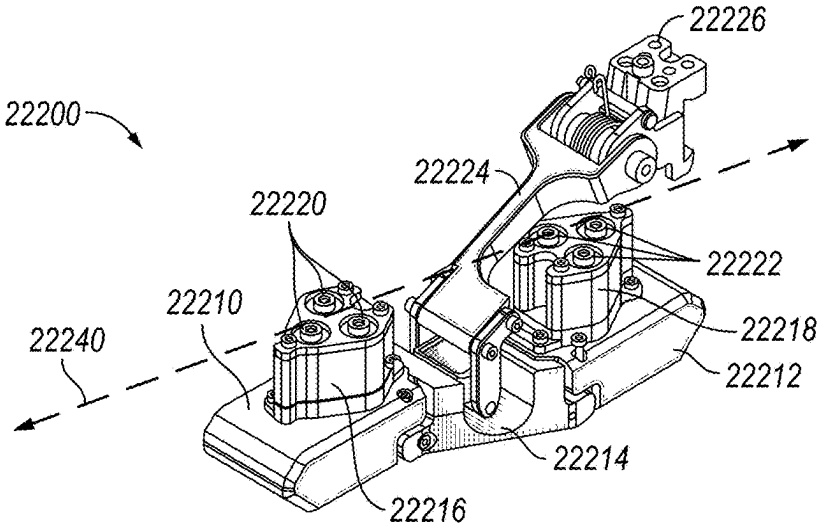

FIG. 118A

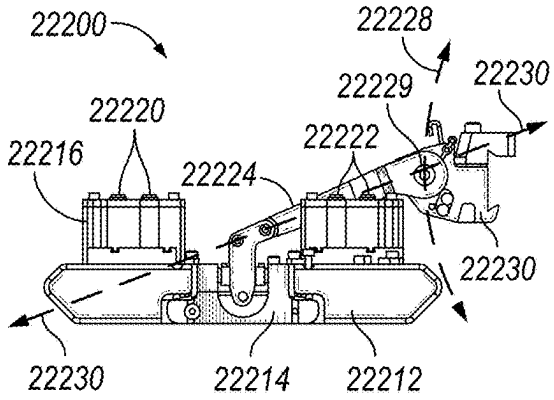

FIG. 118B

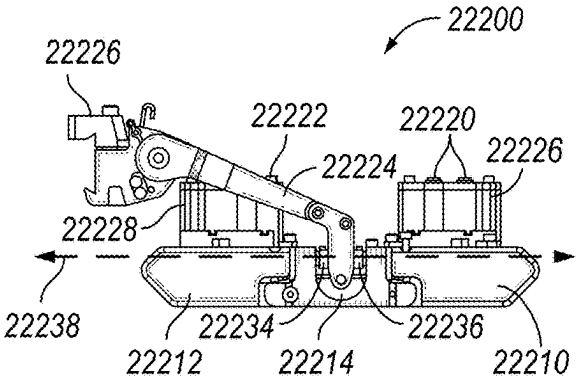

FIG. 118C

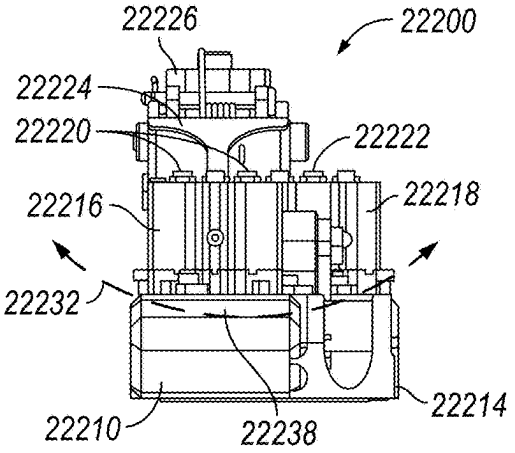

FIG. 118D

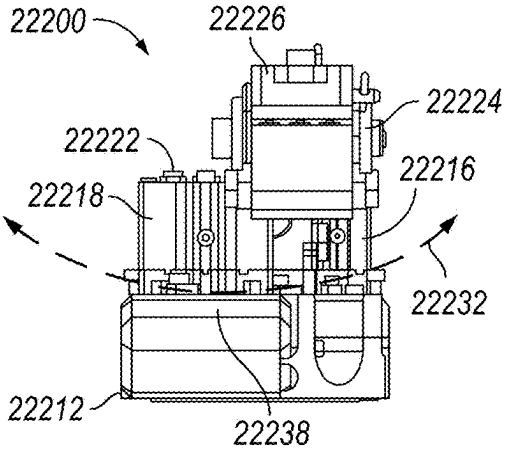

FIG. 118E

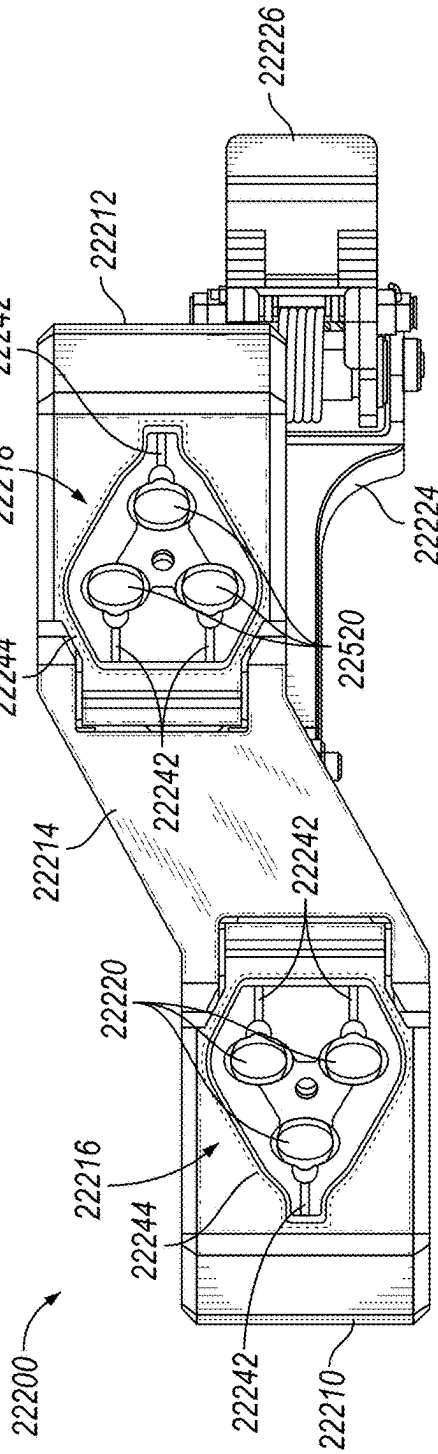

FIG. 118F

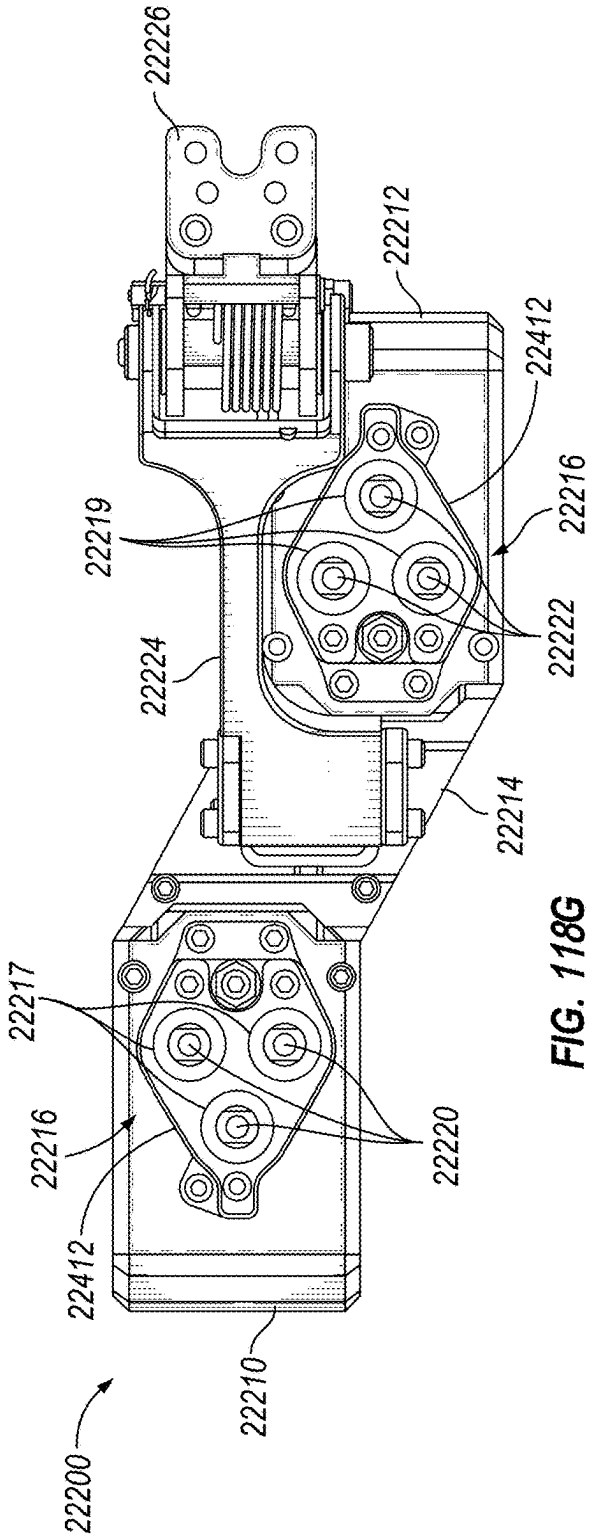

FIG. 118G

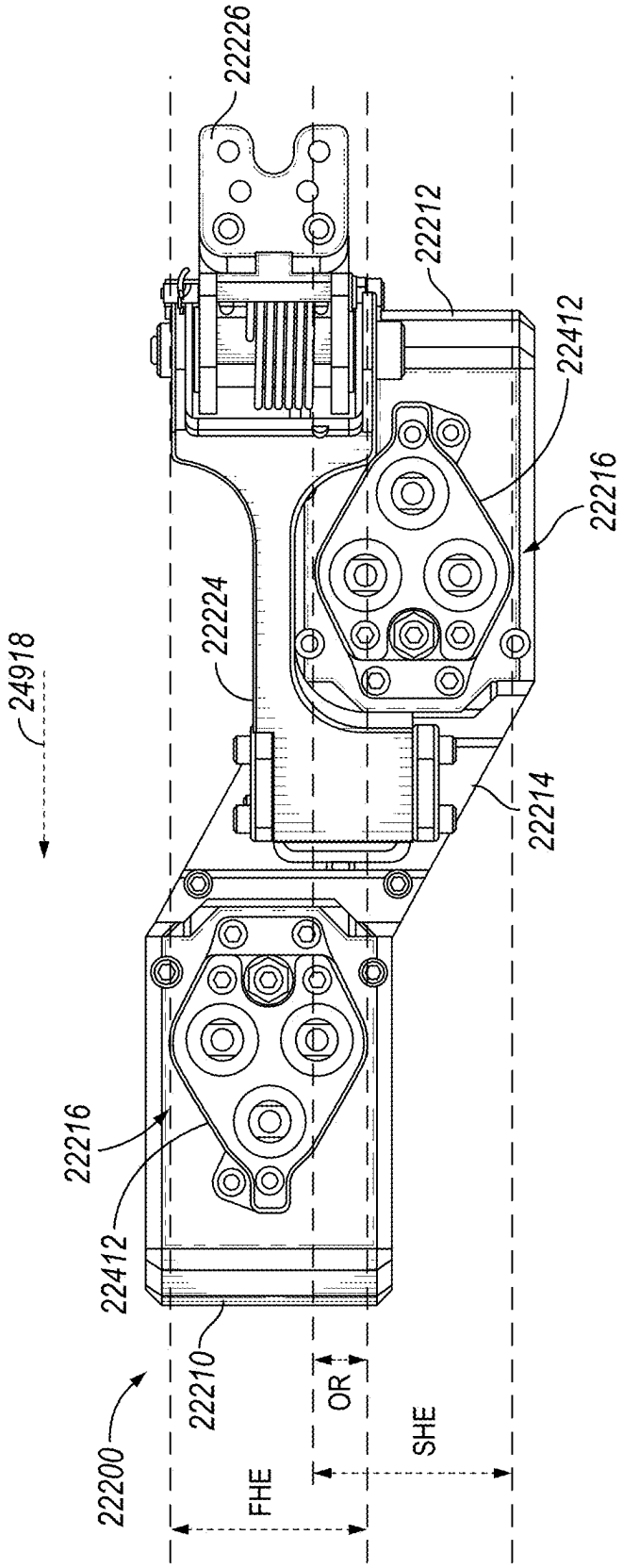
22226
22212
22412
22216
22224
24918
22214
22216
22412
22210
22200
FHE
OR
SHE

FIG. 118H

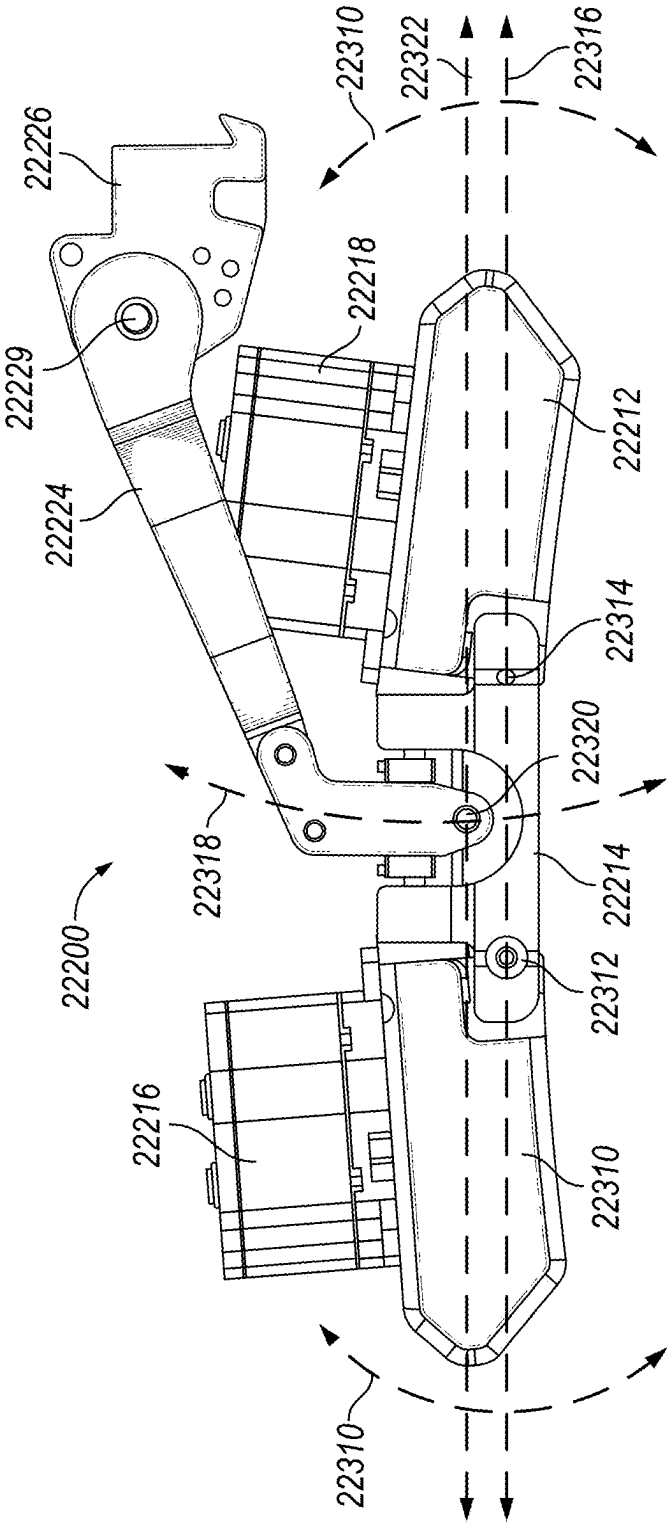
22226
22229
22224
22310
22322
22316
22218
22212
22314
22320
22318
22214
22200
22312
22216
22310
22310

FIG. 119

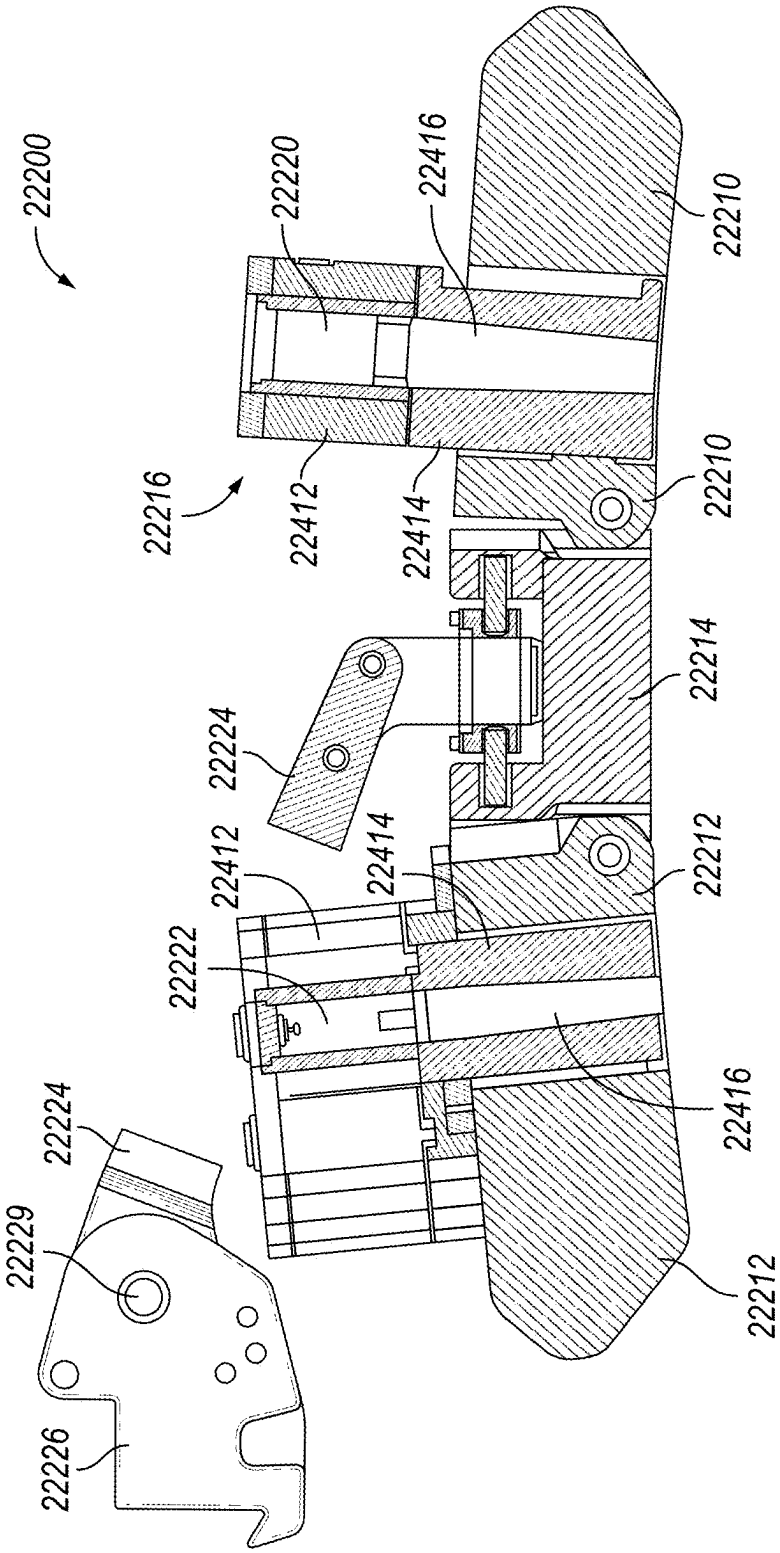
22200
22220
22416
22210
22216
22412
22414
22210
22214
22224
22412
22414
22212
22222
22416
22224
22229
22212
22226

FIG. 120

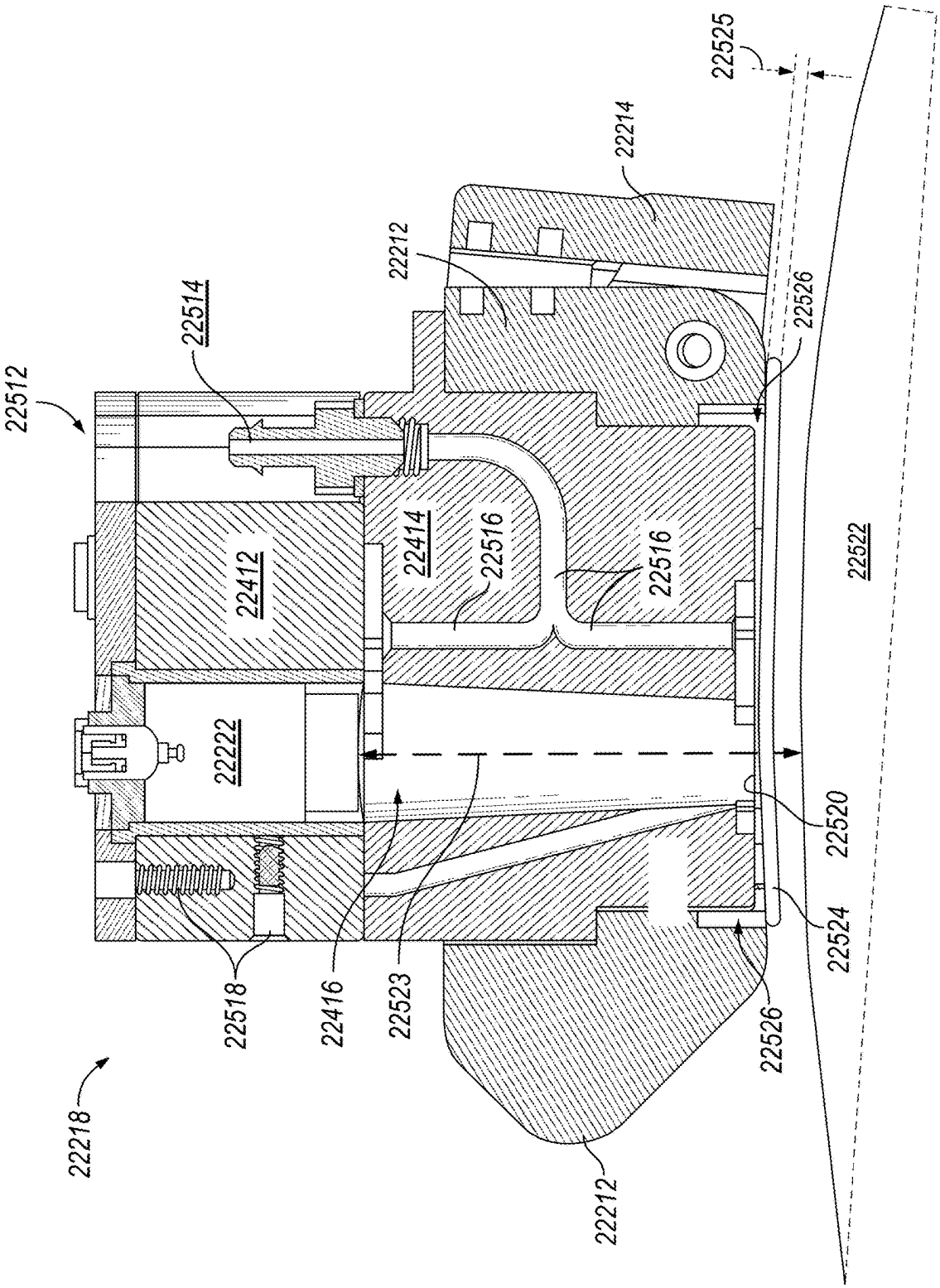
22512
22514
22412
22222
22218
22518
22416
22523
22414
22516
22516
22212
22214
22525
22526
22522
22520
22524
22526
22212

FIG. 121

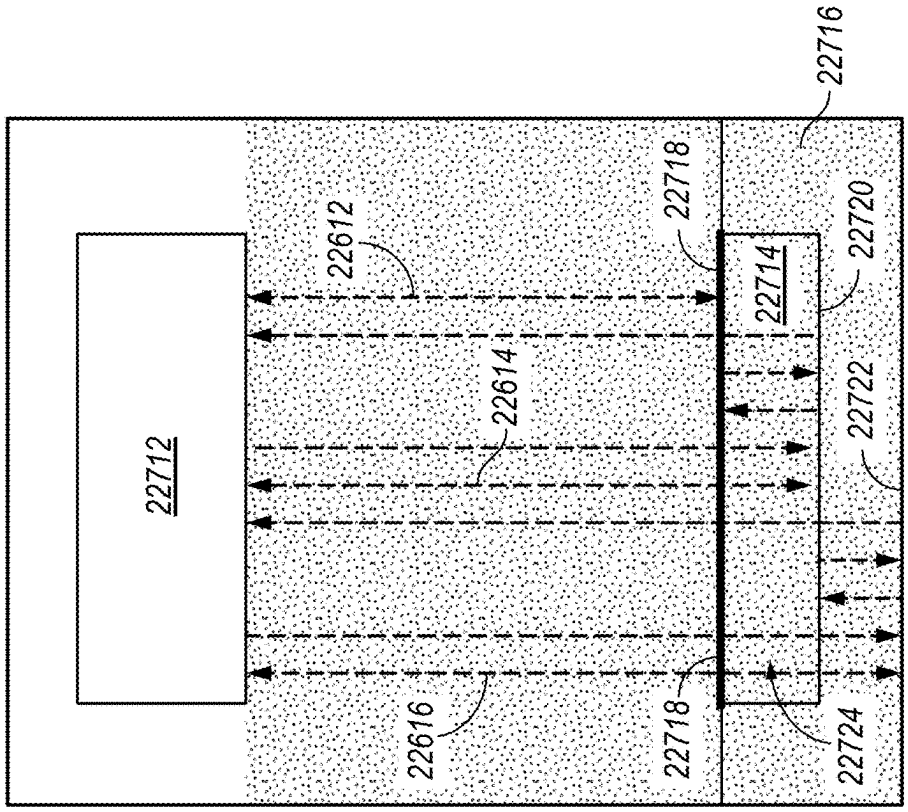

FIG. 123

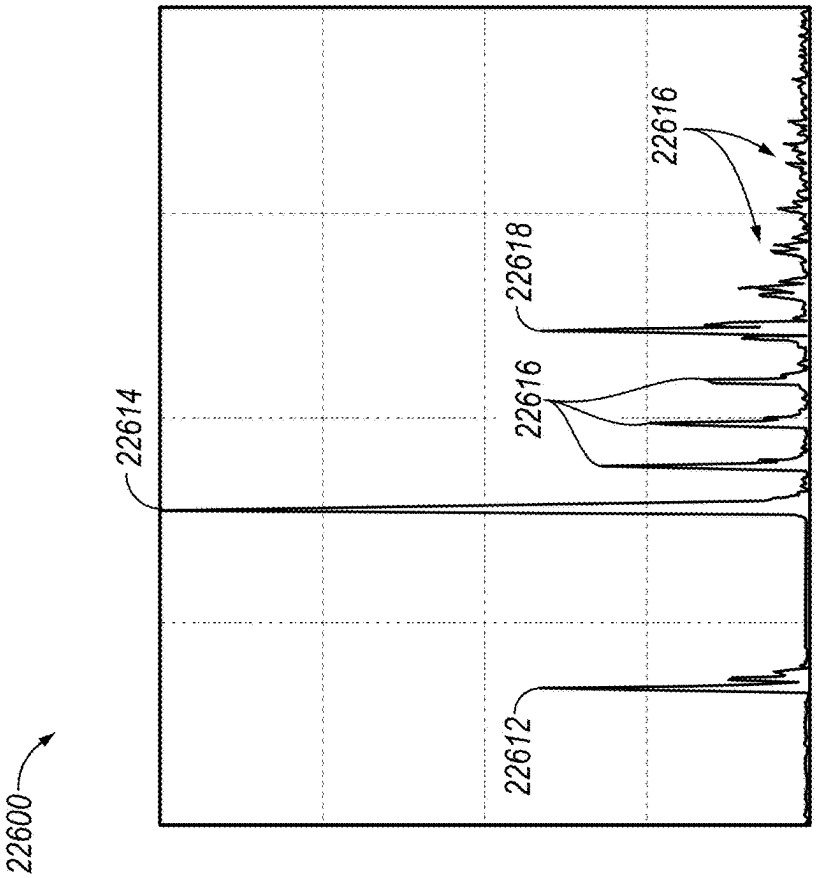

FIG. 122

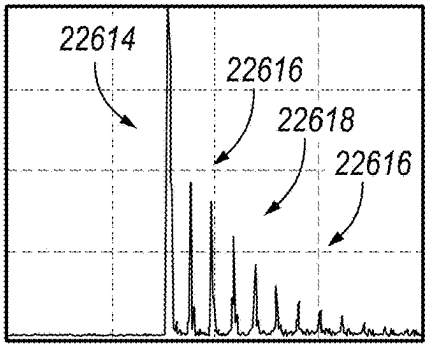

FIG. 124

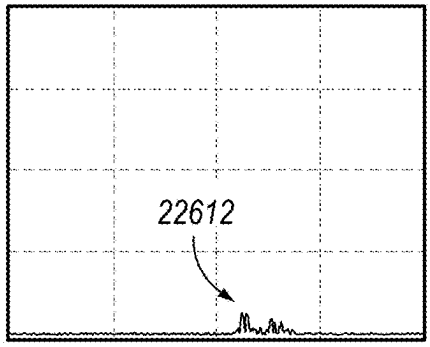

FIG. 125

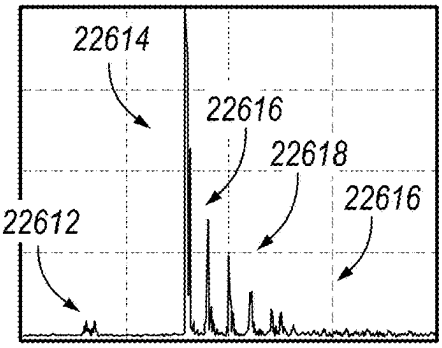

FIG. 126

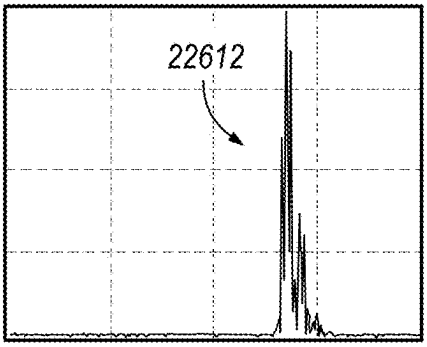

FIG. 127

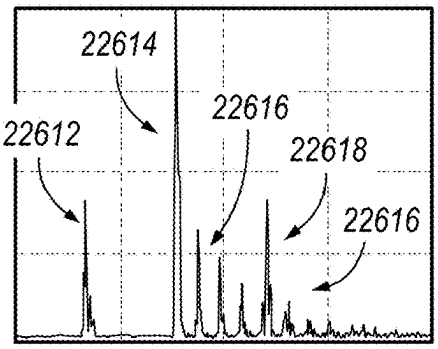

FIG. 128

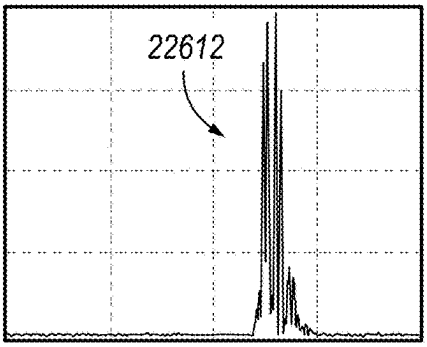

FIG. 129

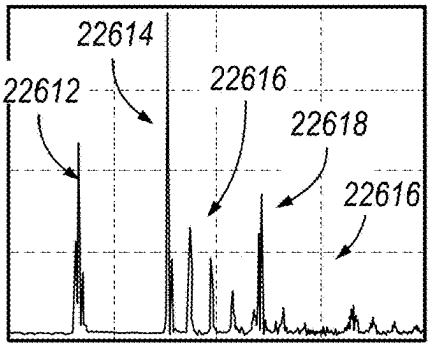

FIG. 130

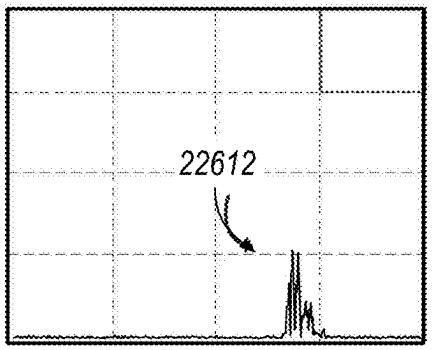

FIG. 131

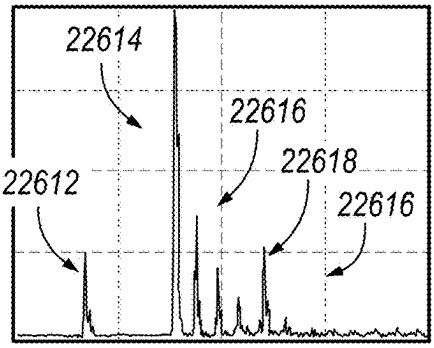

FIG. 132

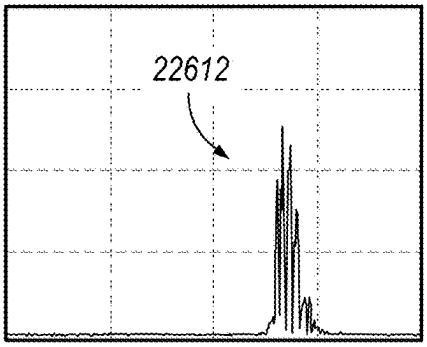

FIG. 133

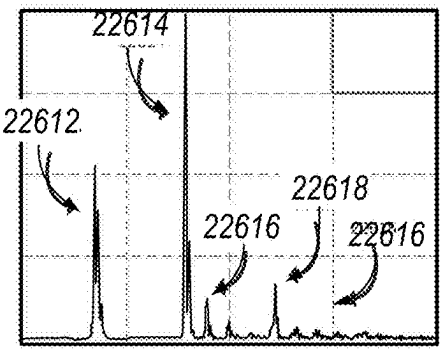

FIG. 134

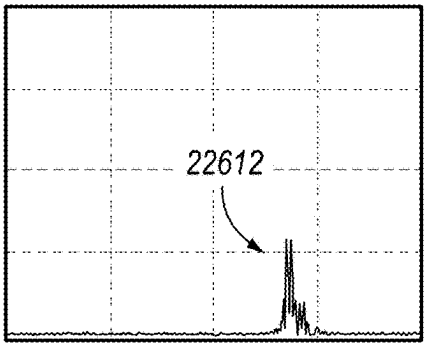

FIG. 135

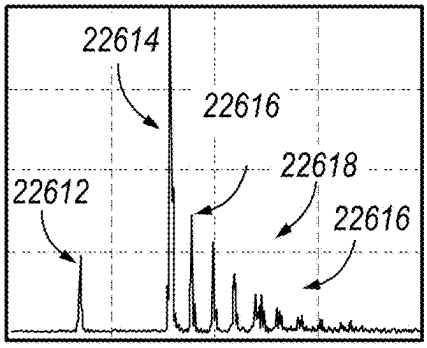

FIG. 136

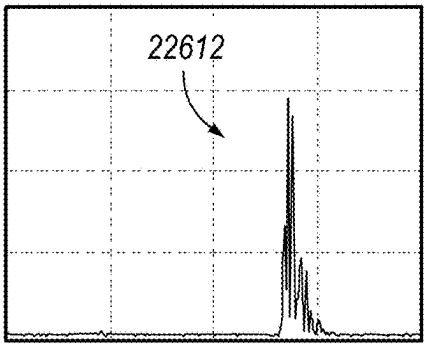

FIG. 137

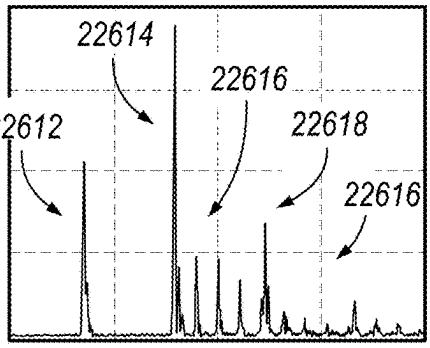

FIG. 138

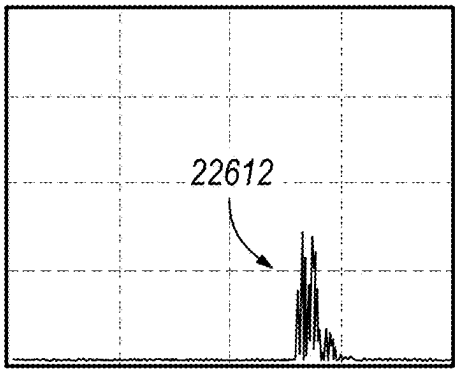

FIG. 139

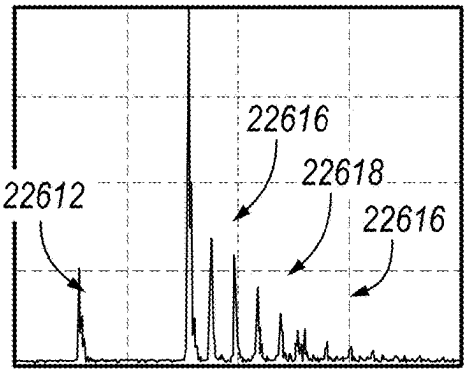

FIG. 140

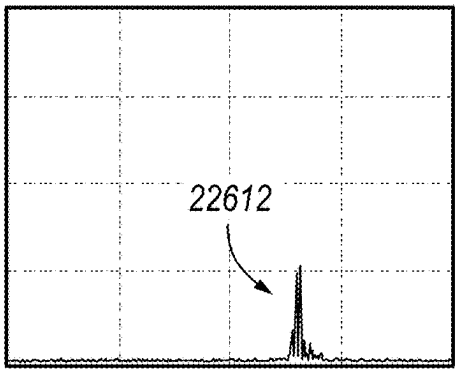

FIG. 141

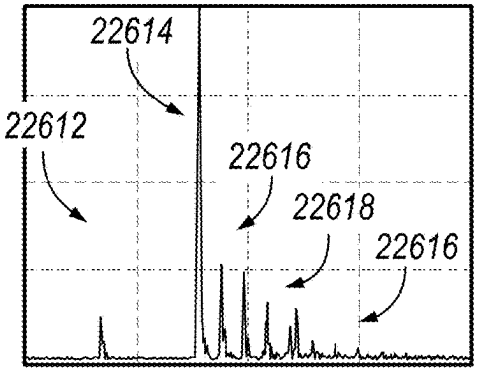

FIG. 142

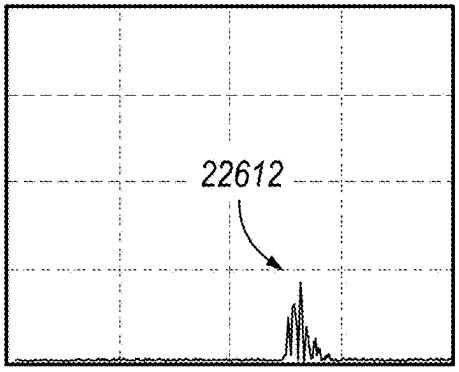

FIG. 143

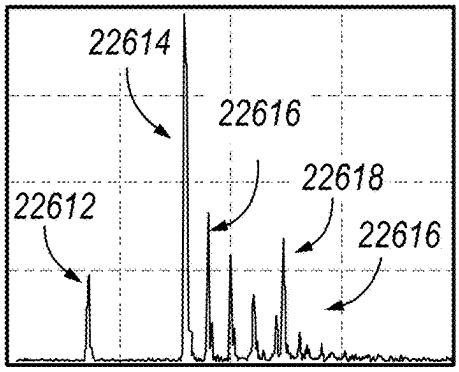

FIG. 144

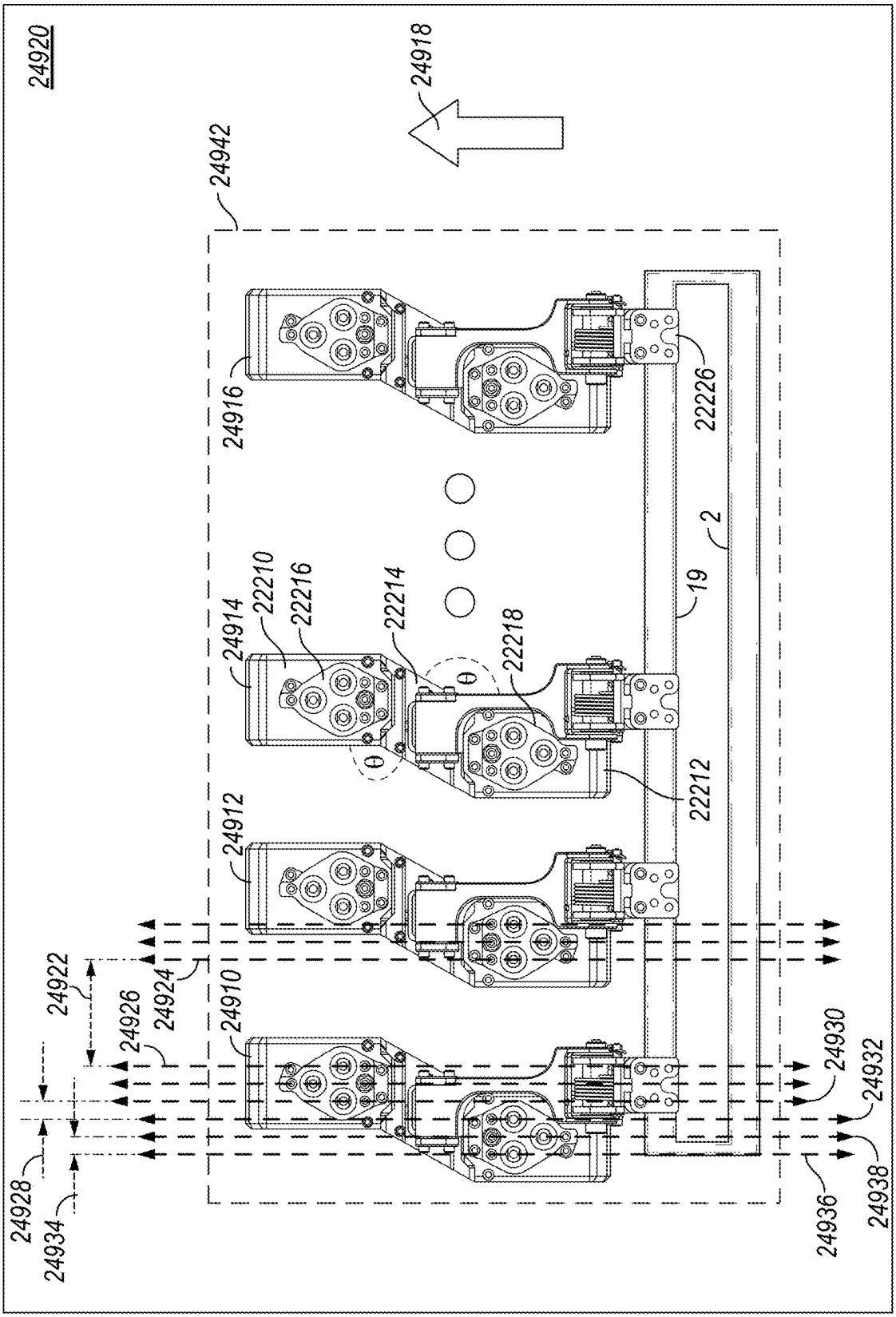
24920
24918
24942
24916
22226
2
19
24914
22210
22216
22214
22218
θ
θ
22212
24912
24922
24924
24926
24910
24930
24932
24928
24934
24936
24938

FIG. 145

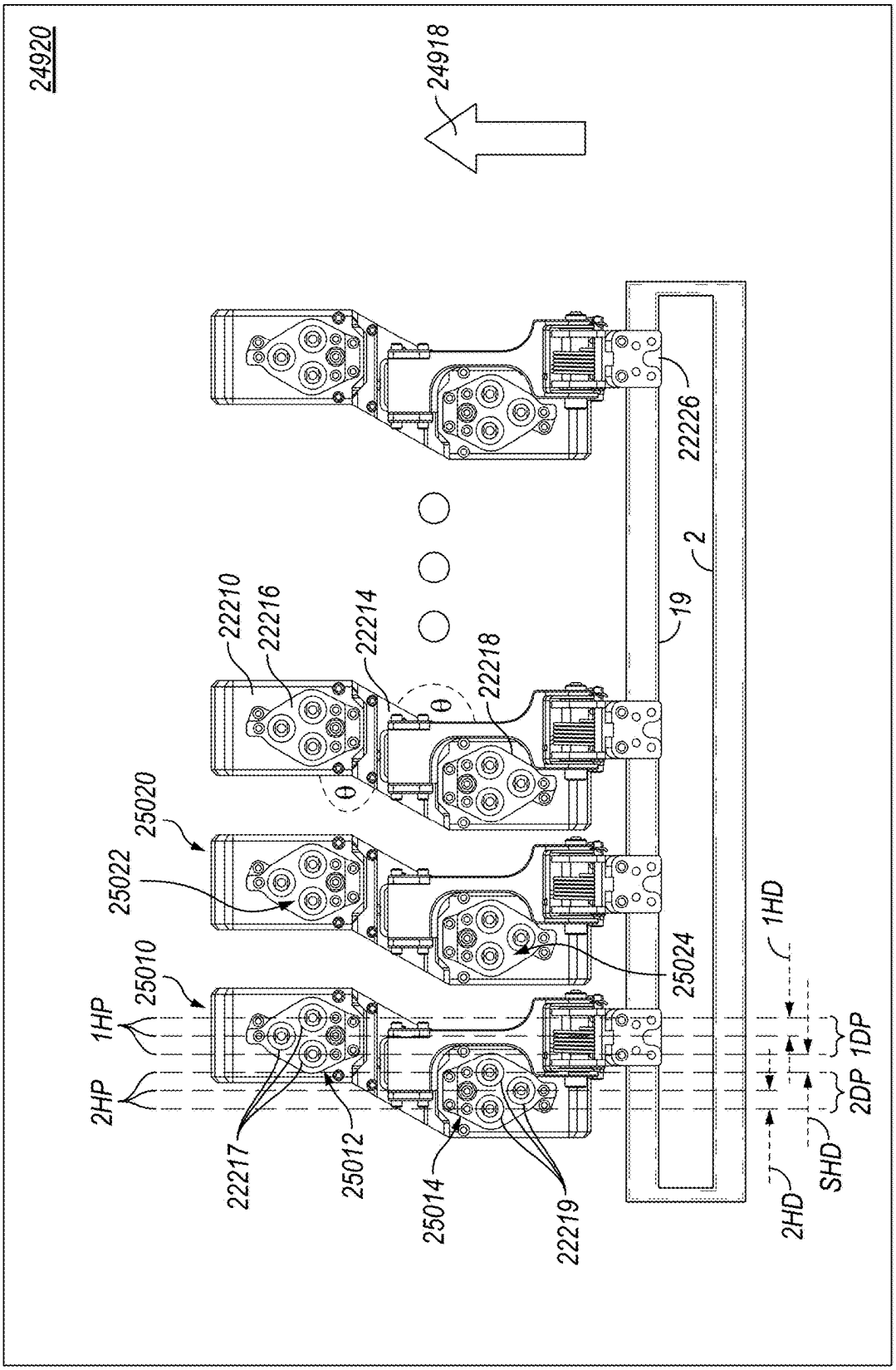
24920
24918
22226
2
19
22210
22216
22214
22218
θ
θ
25020
25022
25024
1HD
25010
1HP
2HP
1DP
2DP
22217
25012
25014
22219
2HD
SHD

FIG. 146

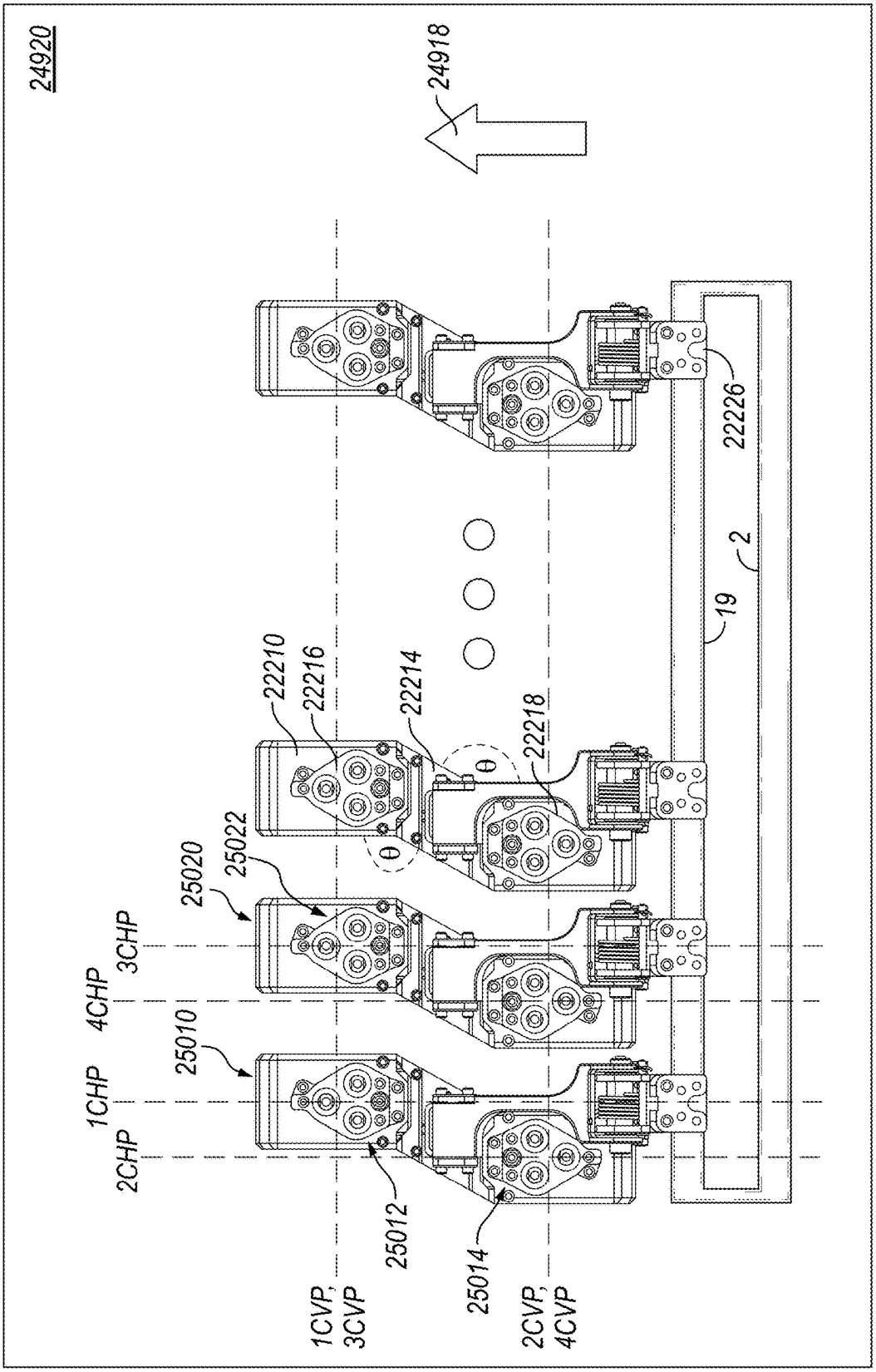
24920
24918
22226
2
19
22210
22216
22214
22218
θ
θ
25020
25022
3CHP
4CHP
25010
1CHP
2CHP
25012
25014
1CVP,
3CVP
2CVP,
4CVP

FIG. 147

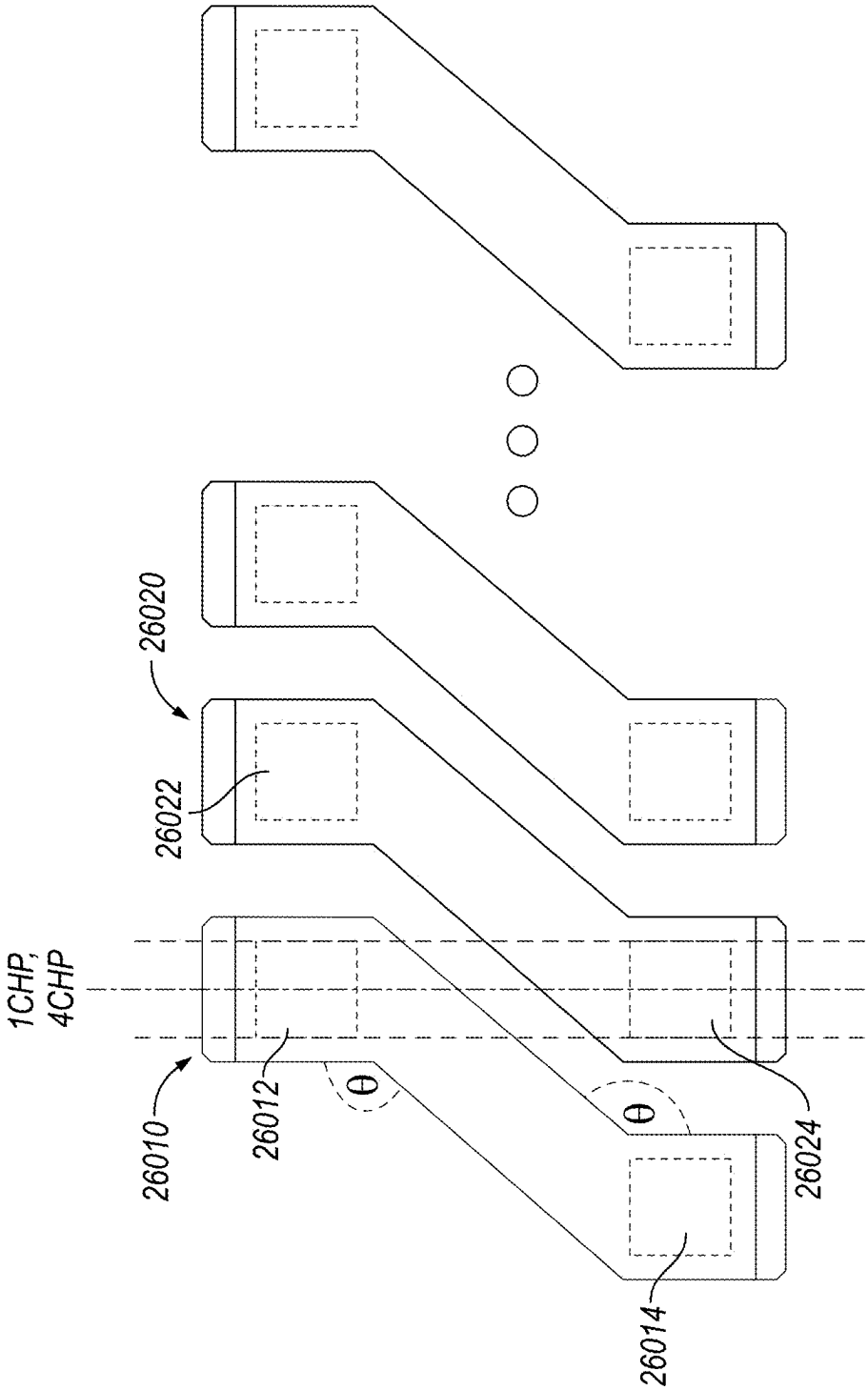

FIG. 148

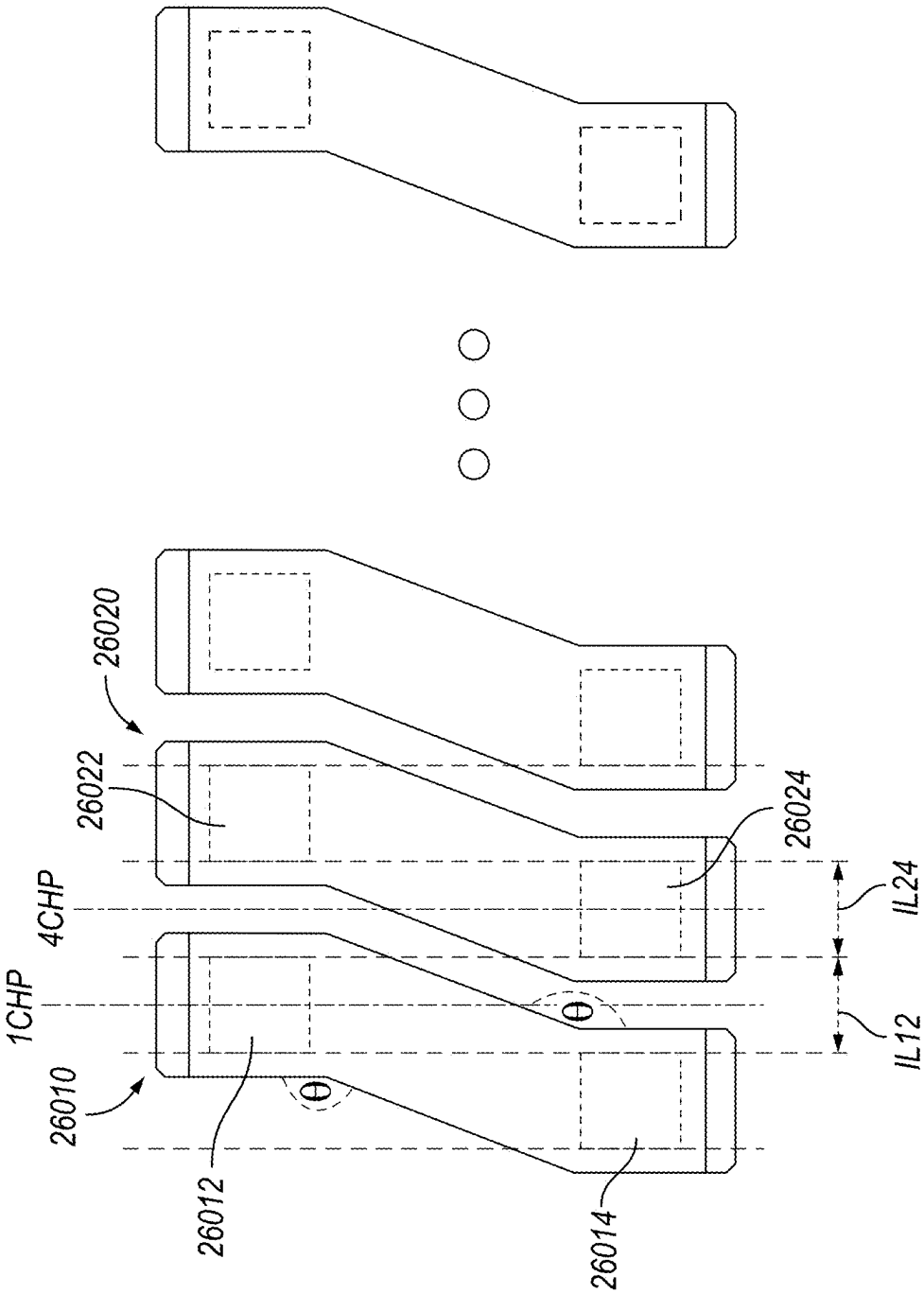

FIG. 149

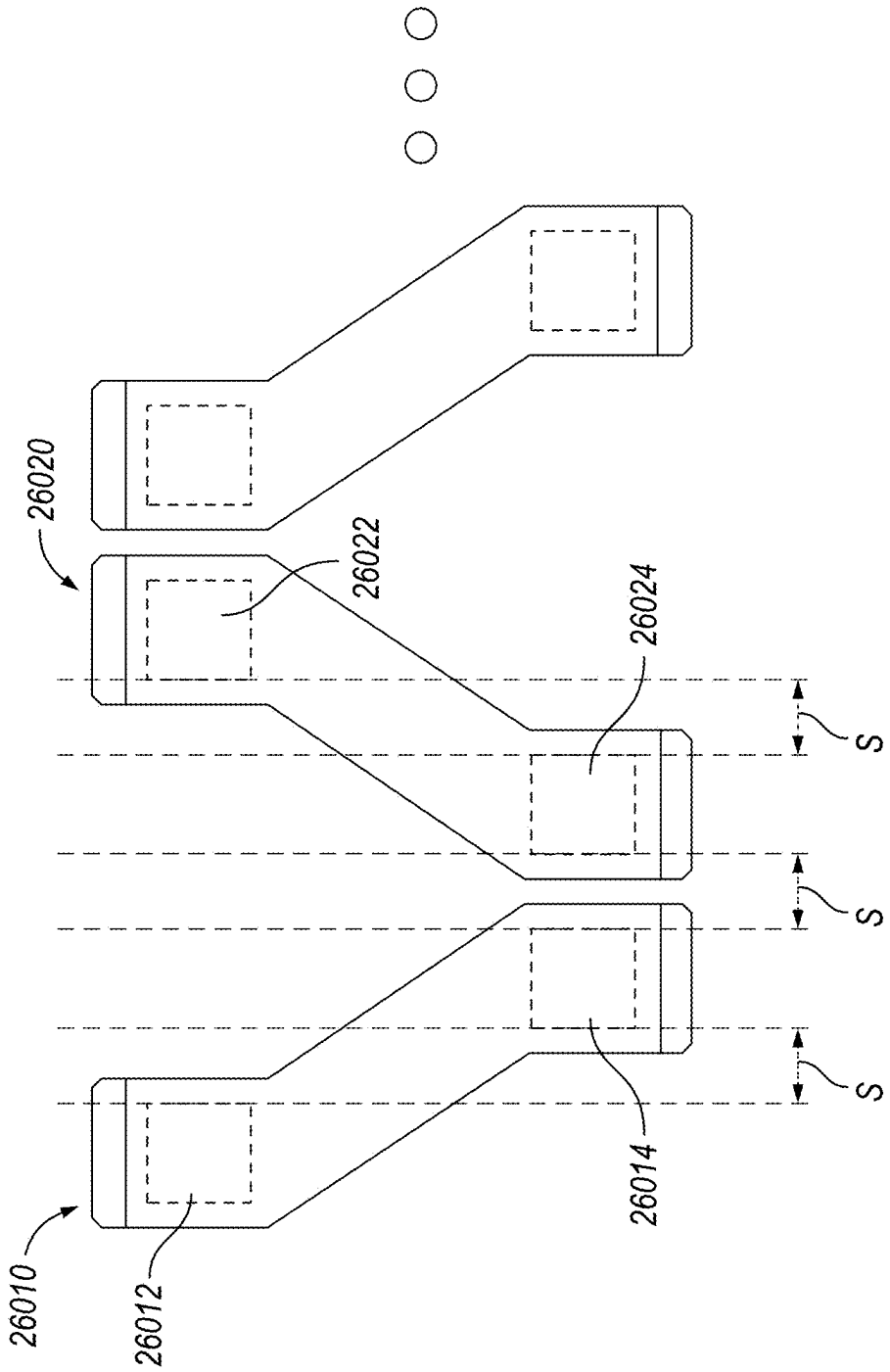

FIG. 150

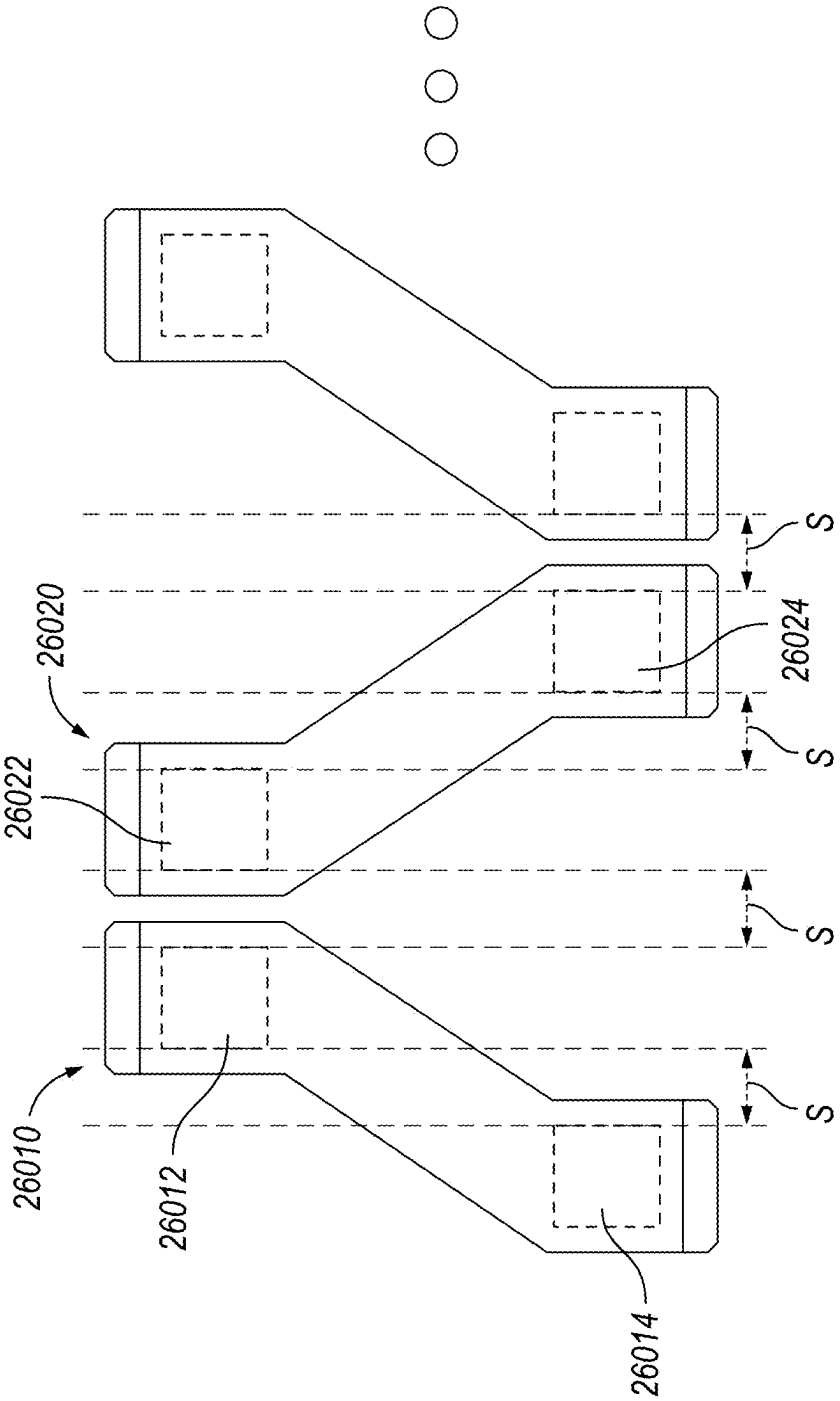

FIG. 151

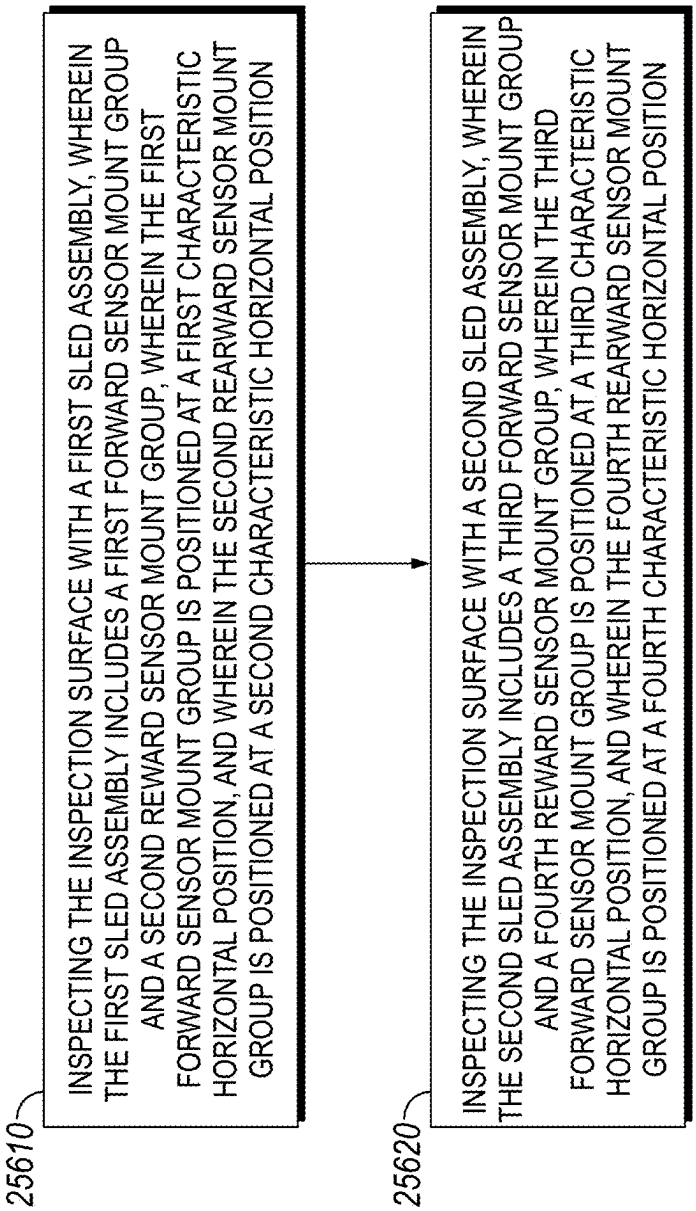
25610
INSPECTING THE INSPECTION SURFACE WITH A FIRST SLED ASSEMBLY, WHEREIN THE FIRST SLED ASSEMBLY INCLUDES A FIRST FORWARD SENSOR MOUNT GROUP AND A SECOND REWARD SENSOR MOUNT GROUP, WHEREIN THE FIRST FORWARD SENSOR MOUNT GROUP IS POSITIONED AT A FIRST CHARACTERISTIC HORIZONTAL POSITION, AND WHEREIN THE SECOND REARWARD SENSOR MOUNT GROUP IS POSITIONED AT A SECOND CHARACTERISTIC HORIZONTAL POSITION
25620
INSPECTING THE INSPECTION SURFACE WITH A SECOND SLED ASSEMBLY, WHEREIN THE SECOND SLED ASSEMBLY INCLUDES A THIRD FORWARD SENSOR MOUNT GROUP AND A FOURTH REWARD SENSOR MOUNT GROUP, WHEREIN THE THIRD FORWARD SENSOR MOUNT GROUP IS POSITIONED AT A THIRD CHARACTERISTIC HORIZONTAL POSITION, AND WHEREIN THE FOURTH REARWARD SENSOR MOUNT GROUP IS POSITIONED AT A FOURTH CHARACTERISTIC HORIZONTAL POSITION

FIG. 152

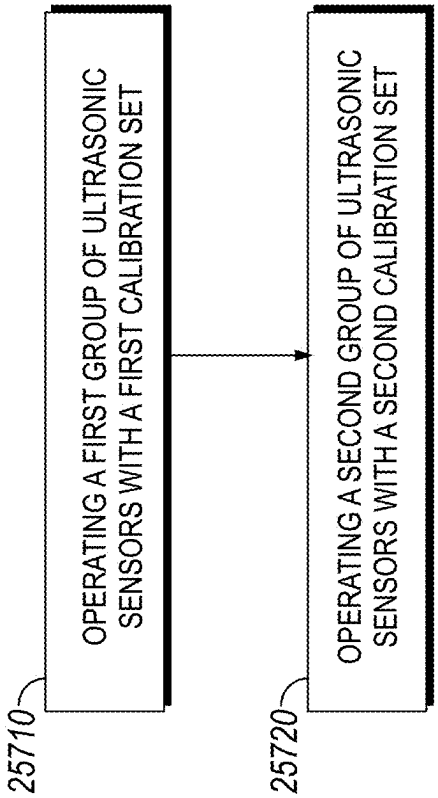
25710
OPERATING A FIRST GROUP OF ULTRASONIC SENSORS WITH A FIRST CALIBRATION SET
25720
OPERATING A SECOND GROUP OF ULTRASONIC SENSORS WITH A SECOND CALIBRATION SET

FIG. 153

INSPECTION ROBOT WITH OFFSET SLED MOUNTS FOR INSPECTING THICK ASSETS

CROSS-REFERENCE TO RELATED APPLICATIONS

[0001] This application is a continuation of, and claims priority to, PCT Patent Application Serial No. PCT/US2023/078409 (Attorney Docket No. GROB-0015-WO), filed on Nov. 1, 2023, published on May 10, 2024, as International Publication No. WO 2024/097795, and entitled "INSPECTION ROBOT WITH PROFILE ADAPTING SLED, COUPLANT REDUCTION FILM AND TRANSDUCER POD FOR THICK ASSETS".

[0002] PCT Patent Application Serial No. PCT/US2023/078409 (Attorney Docket No. GROB-0015-WO) claims the benefit of priority to U.S. Provisional Patent Application Ser. No. 63/381,851 (Attorney Docket No. GROB-0015-P01), filed Nov. 1, 2022, and titled "INSPECTION ROBOT HAVING AN ENLARGED TRANSDUCER".

[0003] All of the foregoing listed patent documents are incorporated herein by reference in their entirety for all purposes.

BACKGROUND

[0004] The present disclosure relates to robotic inspection and treatment of industrial surfaces.

SUMMARY

[0005] Previously known inspection and treatment systems for industrial surfaces suffer from a number of drawbacks. Industrial surfaces are often required to be inspected to determine whether a pipe wall, tank surface, or other industrial surface feature has suffered from corrosion, degradation, loss of a coating, damage, wall thinning or wear, or other undesirable aspects. Industrial surfaces are often present within a hazardous location—for example in an environment with heavy operating equipment, operating at high temperatures, in a confined environment, at a high elevation, in the presence of high voltage electricity, in the presence of toxic or noxious gases, in the presence of corrosive liquids, and/or in the presence of operating equipment that is dangerous to personnel. Accordingly, presently known systems require that a system be shutdown, that a system be operated at a reduced capacity, that stringent safety procedures be followed (e.g., lockout/tagout, confined space entry procedures, harnessing, etc.), and/or that personnel are exposed to hazards even if proper procedures are followed. Additionally, the inconvenience, hazards, and/or confined spaces of personnel entry into inspection areas can result in inspections that are incomplete, of low resolution, that lack systematic coverage of the inspected area, and/or that are prone to human error and judgement in determining whether an area has been properly inspected.

[0006] Embodiments of the present disclosure provide for systems and methods of inspecting an inspecting an inspection surface with an improved inspection robot. Example embodiments include modular drive assemblies that are selectively coupled to a chassis of the inspection robot, wherein each drive assembly may have distinct wheels suited to different types of inspection surfaces. Other embodiments include payloads selectively couplable to the inspection robot chassis via universal connectors that provide for the exchange of couplant, electrical power and/or data communications. The payload may each have different sensor configurations suited for interrogating different types of inspection surfaces.

[0007] Embodiments of the present disclosure may provide for improved customer responsiveness by generating interactive inspection maps that depict past, present and/or predicted inspection data of an inspection surface. In embodiments, the inspection maps may be transmitted and displayed on user electronic devices and may provide for control of the inspection robot during an inspection run.

[0008] Embodiments of the present disclosure may provide for an inspection robot with improved environmental capabilities. For example, some embodiments have features for operating in hostile environments, e.g., high temperature environments. Such embodiments may include low operational impact capable cooling systems.

[0009] Embodiments of the present disclosure may provide for an inspection robot having an improved, e.g., reduced, footprint which may further provide for increased climbing of inclined and/or vertical inspection surfaces. The reduced footprint of certain embodiments may also provide for inspection robots having improve the horizontal range due to reduced weight.

[0010] In some aspects, the techniques described herein relate to a sled assembly for an inspection robot, the sled assembly including: a first portion having a first sensor mount, at a first horizontal position, the first sensor mount structured to accommodate a first inspection sensor and thereby interrogate an inspection surface; a second offset portion having a second sensor mount, at a second horizontal position, the second sensor mount structured to accommodate a second inspection sensor and thereby interrogate the inspection surface; and wherein the first horizontal position and the second horizontal position are horizontally displaced by a selected horizontal distance.

[0011] In some aspects, the techniques described herein relate to a sled assembly, wherein the first portion includes a first plurality of sensor mounts, the first plurality of sensor mounts including the first sensor mount, and wherein the first plurality of sensor mounts include a first horizontal distribution profile providing a horizontal displacement between adjacent ones of the first plurality of sensor mounts that is not greater than a selected inspection resolution.

[0012] In some aspects, the techniques described herein relate to a sled assembly, wherein the first horizontal distribution profile provides for equal spacing between each adjacent one of the first plurality of sensor mounts.

[0013] In some aspects, the techniques described herein relate to a sled assembly, wherein the second offset portion includes a second plurality of sensor mounts, the second plurality of sensor mounts including the second sensor mount, and wherein the second plurality of sensor mounts includes a second horizontal distribution profile providing a horizontal displacement between adjacent ones of the second plurality of sensor mounts that is not greater than the selected inspection resolution.

[0014] In some aspects, the techniques described herein relate to a sled assembly, wherein the second horizontal distribution profile provides for equal spacing between each adjacent one of the second plurality of sensor mounts.

[0015] In some aspects, the techniques described herein relate to a sled assembly, wherein the selected horizontal distance, the first horizontal distribution profile, and the second horizontal distribution profile are selected such that

a distance between a last one of the first plurality of sensor mounts and a first one of the second plurality of sensor mounts is not greater than the selected inspection resolution.

[0016] In some aspects, the techniques described herein relate to a sled assembly, wherein the selected horizontal distance, the first horizontal distribution profile, and the second horizontal distribution profile are selected to provide equal spacing between each adjacent one of the first plurality of sensor mounts and each adjacent one of the second plurality of sensor mounts.

[0017] In some aspects, the techniques described herein relate to a sled assembly, wherein the horizontal distance, the first horizontal distribution profile, and the second horizontal distribution profile are further selected to provide the equal spacing between the last one of the first plurality of sensor mounts and the first one of the second plurality of sensor mounts.

[0018] In some aspects, the techniques described herein relate to a sled assembly, wherein the first portion includes: a UT sensor housing that includes the first sensor mount and includes an opening for couplant to flow through; and a film disposed over the opening and structured to regulate the flow of the couplant through the opening.

[0019] In some aspects, the techniques described herein relate to a sled assembly, wherein the first portion includes a first UT sensor housing that includes the first sensor mount, wherein the first UT sensor housing includes a delay line for the first inspection sensor coupled to the first sensor mount of between 5 mm to 50 mm inclusive.

[0020] In some aspects, the techniques described herein relate to a sled assembly, wherein the first portion includes a first UT sensor housing that includes the first sensor mount, wherein the first UT sensor housing includes a delay line for a UT sensor coupled to the first sensor mount of between 0.20" to 1.97" inclusive.

[0021] In some aspects, the techniques described herein relate to a sled assembly, wherein the delay line is about 1.25".

[0022] In some aspects, the techniques described herein relate to a sled assembly, wherein the first portion includes a first UT sensor housing that includes the first sensor mount, wherein the first UT sensor housing includes a delay line for a UT sensor coupled to the first sensor mount structured to provide for two backwall echoes from the inspection surface.

[0023] In some aspects, the techniques described herein relate to a sled assembly, further including: a third portion connecting the first portion to the second offset portion and having a shape structured to provide the selected horizontal distance.

[0024] In some aspects, the techniques described herein relate to a sled assembly, further including: a first sensor housing that includes the first sensor mount, the first sensor housing defining a first horizontal extent; a second sensor housing that includes the second sensor mount, the second sensor housing defining a second horizontal extent; and wherein the first horizontal extent and the second horizontal extent include an overlap region.

[0025] In some aspects, the techniques described herein relate to a payload for an inspection robot including: a first sled assembly including a first sensor mount group and a second sensor mount group, wherein the first sensor mount group is positioned at a first characteristic horizontal position and a first characteristic vertical position, wherein the second sensor mount group is positioned at a second characteristic horizontal position and a second characteristic vertical position; a second sled assembly including a third sensor mount group and a fourth sensor mount group, wherein the third sensor mount group is positioned at a third characteristic horizontal position and a third characteristic vertical position, wherein the fourth sensor mount group is positioned at a fourth characteristic horizontal position and a fourth characteristic vertical position; and a payload mount configured to couple the first sled assembly and the second sled assembly to the inspection robot.

[0026] In some aspects, the techniques described herein relate to a payload, wherein the first characteristic horizontal position is aligned with the fourth characteristic horizontal position.

[0027] In some aspects, the techniques described herein relate to a payload, wherein each mount of the first sensor mount group includes an ultrasonic sensor mount, and wherein each mount of the fourth sensor mount group includes a distinct sensor mount.

[0028] In some aspects, the techniques described herein relate to a payload, wherein each mount of the first sensor mount group and the fourth sensor mount group includes an ultrasonic sensor mount.

[0029] In some aspects, the techniques described herein relate to a payload, further including: a first group of ultrasonic sensors each mounted to one of the mounts of the first sensor mount group, the first group of ultrasonic sensors calibrated with a first calibration set; and a fourth group of ultrasonic sensors each mounted to one of the mounts of the fourth sensor mount group, the fourth group of ultrasonic sensors calibrated with a second calibration set.

[0030] In some aspects, the techniques described herein relate to a payload, further including: a first group of ultrasonic sensors each mounted to one of the mounts of the first sensor mount group; a fourth group of ultrasonic sensors each mounted to one of the mounts of the fourth sensor mount group.

[0031] In some aspects, the techniques described herein relate to a system, including: an inspection robot including: a payload, including: a first sled assembly including a first forward sensor mount group and a second rearward sensor mount group, wherein the first forward sensor mount group is positioned at a first characteristic horizontal position, and wherein the second rearward sensor mount group is positioned at a second characteristic horizontal position; a second sled assembly including a third forward sensor mount group and a fourth rearward sensor mount group, wherein the third forward sensor mount group is positioned at a third characteristic horizontal position, and wherein the fourth rearward sensor mount group is positioned at a fourth characteristic horizontal position; and a payload mount, wherein the first sled assembly is coupled to the payload mount at a first mounting position, and wherein the second sled assembly is coupled to the payload mount at a second mounting position, and wherein the payload mount is coupled to a body of the inspection robot.

[0032] In some aspects, the techniques described herein relate to a system, wherein the first characteristic horizontal position is aligned with the fourth characteristic horizontal position.

[0033] In some aspects, the techniques described herein relate to a system, wherein the first characteristic horizontal position and the fourth characteristic horizontal position are

selected such that a last sensor mount of the first forward sensor mount group is horizontally displaced from a first sensor mount of the fourth rearward sensor mount group by not greater than a selected inspection resolution.

[0034] In some aspects, the techniques described herein relate to a system, wherein the first forward sensor mount group and the third forward sensor mount group each include mounts for a first sensor type, and wherein the second rearward sensor mount group and the fourth rearward sensor mount group each includes mounts for a second sensor type.

[0035] In some aspects, the techniques described herein relate to a system, wherein the first characteristic horizontal position is aligned with the fourth characteristic horizontal position.

[0036] In some aspects, the techniques described herein relate to a system, wherein each sensor mount of the first forward sensor mount group is aligned with a corresponding sensor mount of the fourth rearward sensor mount group.

[0037] In some aspects, the techniques described herein relate to a system, wherein the first characteristic horizontal position and the third characteristic horizontal position are selected such that a last sensor mount of the first forward sensor mount group is horizontally displaced from a first sensor mount of the third forward sensor mount group by not greater than a selected inspection resolution.

[0038] In some aspects, the techniques described herein relate to a system, further including a means for inspecting an inspection surface at a selected inspection resolution between a first sensor mount of the second rearward sensor mount group and a last sensor mount of the third forward sensor mount group, inclusive.

[0039] In some aspects, the techniques described herein relate to a system, further including a means for inspecting an inspection surface at a selected inspection resolution between a first sensor mount of the first forward sensor mount group and a last sensor mount of the third forward sensor mount group, inclusive.

[0040] In some aspects, the techniques described herein relate to a system, further including a means for inspecting an inspection surface at a selected inspection resolution between a first sensor mount of the second rearward sensor mount group and a last sensor mount of the fourth rearward sensor mount group, inclusive.

[0041] In some aspects, the techniques described herein relate to a system, further including: a controller configured to: interpret a first calibration value for a plurality of sensors of the first forward sensor mount group and a plurality of sensors of the third forward sensor mount group; perform inspection operations based on the first calibration value; and capture inspection data based on the inspection operations, wherein the plurality of sensors of the first forward sensor mount group and the plurality of sensors of the third forward sensor mount group are a same type of sensor.

[0042] In some aspects, the techniques described herein relate to a system, further including: a controller configured to: interpret a first processing value for a plurality of sensors of the first forward sensor mount group and a plurality of sensors of the third forward sensor mount group; interpret a second processing value for a plurality of sensors of the second rearward sensor mount group and a plurality of sensors of the fourth rearward sensor mount group; perform inspection operations based on the first processing value and the second processing value; and capture inspection data based on the inspection operations, wherein the plurality of sensors of the first forward sensor mount group and the plurality of sensors of the third forward sensor mount group are a same type of sensor.

[0043] In some aspects, the techniques described herein relate to a system, further including: a controller configured to: interpret a first calibration value for a plurality of sensors of the first forward sensor mount group and a plurality of sensors of the second rearward sensor mount group; perform inspection operations based on the first calibration value; and capture inspection data based on the inspection operations, wherein the plurality of sensors of the first forward sensor mount group and the plurality of sensors of the second rearward sensor mount group are a same type of sensor.

[0044] In some aspects, the techniques described herein relate to a system, further including: a controller configured to: interpret a first processing value for a plurality of sensors of the first forward sensor mount group and a plurality of sensors of the second rearward sensor mount group; perform inspection operations based on the first processing value; and capture inspection data based on the inspection operations, wherein the plurality of sensors of the first forward sensor mount group and the plurality of sensors of the second rearward sensor mount group are a same type of sensor.

[0045] In some aspects, the techniques described herein relate to a method for inspecting an inspection surface using an inspection robot, including: inspecting the inspection surface with a first sled assembly, wherein the first sled assembly includes a first forward sensor mount group and a second rearward sensor mount group, wherein the first forward sensor mount group is positioned at a first characteristic horizontal position, and wherein the second rearward sensor mount group is positioned at a second characteristic horizontal position; and inspecting the inspection surface with a second sled assembly, wherein the second sled assembly includes a third forward sensor mount group and a fourth rearward sensor mount group, wherein the third forward sensor mount group is positioned at a third characteristic horizontal position, and wherein the fourth rearward sensor mount group is positioned at a fourth characteristic horizontal position.

[0046] In some aspects, the techniques described herein relate to a method, further including: interpreting a first calibration value for a plurality of sensors of the first forward sensor mount group and a plurality of sensors of the third forward sensor mount group; performing inspection operations based on the first calibration value; and capturing inspection data based on the inspection operations, wherein the plurality of sensors of the first forward sensor mount group and the plurality of sensors of the third forward sensor mount group are a same type of sensor.

[0047] In some aspects, the techniques described herein relate to a method, further including: interpreting a first processing value for a plurality of sensors of the first forward sensor mount group and a plurality of sensors of the third forward sensor mount group; interpreting a second processing value for a plurality of sensors of the second rearward sensor mount group and a plurality of sensors of the fourth rearward sensor mount group; performing inspection operations based on the first processing value and the second processing value; and capturing inspection data based on the inspection operations, wherein the plurality of sensors of the

first forward sensor mount group and the plurality of sensors of the third forward sensor mount group are a same type of sensor.

[0048] In some aspects, the techniques described herein relate to a method, further including: interpreting a first calibration value for a plurality of sensors of the first forward sensor mount group and a plurality of sensors of the second rearward sensor mount group; performing inspection operations based on the first calibration value; and capturing inspection data based on the inspection operations, wherein the plurality of sensors of the first forward sensor mount group and the plurality of sensors of the second rearward sensor mount group are a same type of sensor.

[0049] In some aspects, the techniques described herein relate to a method, further including: interpreting a first processing value for a plurality of sensors of the first forward sensor mount group and a plurality of sensors of the second rearward sensor mount group; performing inspection operations based on the first processing value; and capturing inspection data based on the inspection operations, wherein the plurality of sensors of the first forward sensor mount group and the plurality of sensors of the second rearward sensor mount group are a same type of sensor.

[0050] In some aspects, the techniques described herein relate to a method for inspecting an inspection surface using an inspection robot, including: operating a first group of ultrasonic sensors with a first calibration set; and operating a second group of ultrasonic sensors with a second calibration set, wherein the first group of ultrasonic sensors is included in a first sled assembly of a payload for the inspection robot, and the second group of ultrasonic sensors is included in a second sled assembly of the payload for the inspection robot; and wherein the first group of ultrasonic sensors is at a first characteristic vertical position on the first sled assembly, and the second group of ultrasonic sensors is at a second characteristic vertical position on the second sled assembly.

[0051] In some aspects, the techniques described herein relate to a method, wherein the first characteristic vertical position is forward of the second characteristic vertical position relative to an inspection direction of the inspection robot.

[0052] In some aspects, the techniques described herein relate to a method, wherein the first calibration set includes a same calibration as the second calibration set, and the second group of ultrasonic sensors provides inspection data that is redundant with inspection data provided by the first group of ultrasonic sensors.

[0053] In some aspects, the techniques described herein relate to a method, wherein the first calibration set is distinct from the second calibration set such that the second group of ultrasonic sensors inspects the inspection surface with a different calibration than the first group of ultrasonic sensors.

[0054] In some aspects, the techniques described herein relate to a payload for an inspection robot including: a plurality of assembly sleds each including: a first sensor structured to interrogate an inspection surface; and a second sensor structured to interrogate the inspection surface; wherein: each assembly sled of the plurality has a shape structured to offset an inspection path of the first sensor with respect to an inspection path of the second sensor along the inspection surface; and the plurality of assembly sleds are disposed in a staggered arrangement structured to offset the inspection paths of the first sensor and the second sensor of a first assembly sled, of the plurality of assembly sleds, from the inspection paths of the first sensor and the second sensor of a second assembly sled, of the plurality of assembly sleds.

[0055] In some aspects, the techniques described herein relate to a payload, wherein each assembly sled of the plurality further includes: a first portion that includes the first sensor; a second portion that includes the second sensor; and a third portion connecting the first portion to the second portion and having a shape structured to provide the offset of the inspection path of the first sensor with respect to the inspection path of the second sensor along the inspection surface.

[0056] In some aspects, the techniques described herein relate to a payload, wherein: the first portion includes a first sensor housing that includes a first plurality of sensors structured to interrogate the inspection surface, the first plurality of sensors including the first sensor, wherein the first sensor housing arranges the first plurality of sensors such that there is intra-housing spacing between scanning paths of the first plurality of sensors; and the second portion includes a second sensor housing that includes a second plurality of sensors structured to interrogate the inspection surface, the second plurality of sensors including the second sensor, wherein the second sensor housing arranges the second plurality of sensors such that there is intra-housing spacing between scanning paths of the second plurality of sensors.

[0057] In some aspects, the techniques described herein relate to a payload, wherein at least one assembly sled of the plurality includes: a sensor housing that includes the first sensor and has an opening through which couplant flows; and a film disposed over the opening so as to regulate the flow of couplant through the opening.

[0058] In some aspects, the techniques described herein relate to a payload, wherein at least one assembly sled of the plurality includes: a sensor housing that includes the first sensor, wherein the sensor housing includes a delay line for the first sensor of between 5 mm to 50 mm inclusive

[0059] In some aspects, the techniques described herein relate to a payload, wherein at least one assembly sled of the plurality includes: a sensor housing that includes the first sensor, wherein the sensor housing includes a delay line for the first sensor of between 0.20" to 1.97" inclusive.

[0060] In some aspects, the techniques described herein relate to a payload, wherein the delay line is about 1.25".

[0061] In some aspects, the techniques described herein relate to a payload, wherein at least one assembly sled of the plurality includes: a sensor housing that includes the first sensor, wherein the sensor housing includes a delay line structured to provide for two backwall echoes from the inspection surface.

[0062] In some aspects, the techniques described herein relate to a payload, wherein the first sensor includes a first plurality of ultrasonic (UT) sensors, and the second sensor includes a second plurality of UT sensors.

[0063] In some aspects, the techniques described herein relate to a sled assembly for an inspection robot, the sled assembly including: an ultrasonic (UT) sensor housing having a couplant chamber with an opening structured to disperse couplant onto an inspection surface; and a film disposed over the opening and structured to regulate a flow of the couplant out of the opening.

[0064] In some aspects, the techniques described herein relate to a sled assembly, wherein the film and the UT sensor housing define at least one opening for the couplant to flow through.

[0065] In some aspects, the techniques described herein relate to a sled assembly, wherein: the UT sensor housing is structured to house a plurality of UT sensors; and the film and the UT sensor housing define a plurality of openings each corresponding to a distinct one of the plurality of UT sensors, wherein the plurality of openings are for couplant to flow through.

[0066] In some aspects, the techniques described herein relate to a sled assembly, wherein the film includes at least one of: a low density polyethylene; tin; nylon; polyester ether ketone; acrylonitrile butadiene styrene; or polyfluoroethylene.

[0067] In some aspects, the techniques described herein relate to a sled assembly, wherein the film is secured to the UT sensor housing via at least one of an adhesive or a mechanical coupling.

[0068] In some aspects, the techniques described herein relate to a sled assembly, wherein the UT sensor housing includes a plurality of channels extending from the opening to provide for couplant to flow out of the couplant chamber and around sides of the film to thereby maintain a layer of couplant between the film and the inspection surface.

[0069] In some aspects, the techniques described herein relate to a sled assembly for an inspection robot, the sled assembly including: a first portion having a first ultrasonic (UT) sensor structured to interrogate an inspection surface; and a second portion having a second UT sensor structured to interrogate the inspection surface, wherein the first portion and the second portion move independently of each other.

[0070] In some aspects, the techniques described herein relate to a sled assembly, further including: a third portion connecting the first portion to the second portion and structured such that the first portion and the second portion move independently of each other

[0071] In some aspects, the techniques described herein relate to a sled assembly, wherein the third portion has a shape structured to offset an inspection path of the first UT sensor with respect to an inspection path of the second UT sensor along the inspection surface.

[0072] In some aspects, the techniques described herein relate to a sled assembly, wherein the third portion includes: a pivot point for connecting the third portion to an arm of a payload for the inspection robot, wherein the pivot point is structured to provide movement of the third portion with respect to the arm.

[0073] In some aspects, the techniques described herein relate to a sled assembly, wherein the independent movement of the first portion and the second portion includes rotating and tilting.

[0074] In some aspects, the techniques described herein relate to a sled assembly, wherein: the first portion includes: a first UT sensor housing that includes a first plurality of UT sensors structured to interrogate the inspection surface, the first plurality of UT sensors including the first UT sensor, wherein the first UT sensor housing arranges the first plurality of UT sensors such that there is intra-housing spacing between scanning paths of the first plurality of UT sensors; and the second portion includes: a second UT sensor housing that includes a second plurality of UT sensors structured to interrogate the inspection surface, the second plurality of UT sensors including the second UT sensor, wherein the second UT sensor housing arranges the second plurality of UT sensors such that there is intra-housing spacing between scanning paths of the second plurality of UT sensors.

BRIEF DESCRIPTION OF THE FIGURES

[0075] FIG. **1** is a schematic depiction of an inspection robot consistent with certain embodiments of the present disclosure.

[0076] FIG. **2**A is a schematic depiction of a wheel and splined hub design consistent with certain embodiments of the present disclosure.

[0077] FIG. **2**B is an exploded view of a wheel and splined hub design consistent with certain embodiments of the present disclosure.

[0078] FIGS. **3**A to **3**C are schematic views of a sled consistent with certain embodiments of the present disclosure.

[0079] FIG. **4** is a schematic depiction of a payload consistent with certain embodiments of the present disclosure.

[0080] FIG. **5** is a schematic depiction of an inspection surface.

[0081] FIG. **6** is a schematic depiction of an inspection robot positioned on an inspection surface.

[0082] FIG. **7** is a schematic depiction of a location on an inspection surface.

[0083] FIG. **8** is a schematic block diagram of an apparatus for providing an inspection map.

[0084] FIG. **9** depicts an illustrative inspection map.

[0085] FIG. **10** depicts an illustrative inspection map and focus data.

[0086] FIG. **11** is a schematic diagram of a payload arrangement.

[0087] FIG. **12** is another schematic diagram of a payload arrangement.

[0088] FIG. **13** is another schematic diagram of a payload arrangement.

[0089] FIG. **14** is a schematic perspective view of a sled.

[0090] FIG. **15** is a schematic side view of a sled.

[0091] FIG. **16** is a schematic cutaway view of a sled.

[0092] FIGS. **17**A and **17**B depict schematic side views of alternate embodiments of a sled.

[0093] FIGS. **18**A and **18**B depict schematic front views of alternate embodiments of a sled.

[0094] FIG. **19** is a schematic bottom view of a sled.

[0095] FIG. **20** is a schematic cutaway side view of a sled.

[0096] FIG. **21** is a schematic bottom view of a sled.

[0097] FIG. **22** is a schematic view of a sled having separable top and bottom portions.

[0098] FIG. **23** is a schematic cutaway side view of a sled.

[0099] FIG. **24** is a schematic exploded view of a sled with a sensor.

[0100] FIG. **25** is a schematic, partially exploded, partially cutaway view of a sled with a sensor.

[0101] FIG. **26** is a schematic depiction of an acoustic cone.

[0102] FIG. **27** is a schematic view of couplant lines to a number of sleds.

[0103] FIG. **28** is a schematic flow diagram of a procedure to provide sensors for inspection of an inspection surface.

[0104] FIG. **29** is a schematic flow diagram of a procedure to re-couple a sensor to an inspection surface.

[0105] FIG. **30** is a schematic flow diagram of a procedure to provide for low couplant loss.
[0106] FIG. **31** is a schematic flow diagram of a procedure to perform an inspection at an arbitrary resolution.
[0107] FIG. **32** is a schematic block diagram of an apparatus for adjusting a trailing sensor configuration.
[0108] FIG. **33** is a schematic flow diagram of a procedure to adjust a trailing sensor configuration.
[0109] FIG. **34** is a schematic block diagram of an apparatus for providing position informed inspection data.
[0110] FIG. **35** is a schematic flow diagram of a procedure to provide position informed inspection data.
[0111] FIG. **36** is a schematic flow diagram of another procedure to provide position informed inspection data.
[0112] FIG. **37** is a schematic block diagram of an apparatus for providing an ultra-sonic thickness value.
[0113] FIG. **38** is a schematic flow diagram of a procedure to provide an ultra-sonic thickness value.
[0114] FIG. **39** is a schematic block diagram of an apparatus for providing a facility wear value.
[0115] FIG. **40** is a schematic flow diagram of a procedure to provide a facility wear value.
[0116] FIG. **41** is a schematic block diagram of an apparatus for utilizing EM induction data.
[0117] FIG. **42** is a schematic flow diagram of a procedure to utilize EM induction data.
[0118] FIG. **43** is a schematic flow diagram of a procedure to determine a coating thickness and composition.
[0119] FIG. **44** is a schematic flow diagram of a procedure to re-process sensor data based on an induction process parameter.
[0120] FIG. **45** is a schematic block diagram of a procedure to utilize a shape description.
[0121] FIG. **46** is a schematic flow diagram of a procedure to adjust an inspection operation in response to profiler data.
[0122] FIG. **47** depicts a schematic of an example system including a base station and an inspection robot.
[0123] FIG. **48** depicts an internal view of certain components of the center module.
[0124] FIG. **49** depicts an exploded view of a drive module.
[0125] FIG. **50** depicts an exploded view of a dovetail payload rail mount assembly.
[0126] FIG. **51** depicts a payload with sensor carriages and an inspection camera.
[0127] FIG. **52**A depicts an example side view of a payload and inspection camera.
[0128] FIGS. **52**B-**52**C depict details of an example inspection camera.
[0129] FIGS. **53**A-**53**B depict clamped and un-clamped views of a sensor clamp.
[0130] FIG. **53**C depicts an exploded view of a sensor carriage clamp.
[0131] FIG. **54**A depicts a perspective view looking down on an exploded view of a sensor housing.
[0132] FIG. **54**B depicts a perspective view looking up on an exploded view of the bottom of a sensor housing.
[0133] FIG. **54**C depicts a front view cross-section of a sensor housing and surface contact relative to an inspection surface.
[0134] FIG. **54**D depicts a side view cross-section of a sensor housing.
[0135] FIG. **55** depicts an exploded view of a cross-section of a sensor housing.
[0136] FIG. **56**A depicts a calibration data flow for an ultra-sonic inspection robot.
[0137] FIG. **56**B depicts the flow of data for sensor identification and calibration.
[0138] FIG. **57** depicts a wheel assembly machine.
[0139] FIG. **58** depicts a schematic block diagram of a control scheme for an inspection robot.
[0140] FIG. **59** is a schematic diagram of a system for distributed control of an inspection robot.
[0141] FIG. **60** is a schematic diagram of an inspection robot supporting modular component operations.
[0142] FIG. **61** is a schematic flow diagram of a procedure for operating an inspection robot.
[0143] FIG. **62** is a schematic diagram of a system for distributed control of an inspection robot.
[0144] FIG. **63** is a schematic flow diagram of a procedure for operating an inspection robot having distributed control.
[0145] FIG. **64** is a flow chart depicting a method of inspecting an inspection surface with an inspection robot.
[0146] FIG. **65** is a flow chart depicting another method of inspecting an inspection surface with an inspection robot.
[0147] FIG. **66** is a flow chart depicting another method of inspecting an inspection surface with an inspection robot.
[0148] FIG. **67** depicts a controller for an inspection robot.
[0149] FIG. **68** depicts a method for dynamic adjustment of a biasing force for an inspection robot.
[0150] FIG. **69** a method to determine a force adjustment to a biasing force of an inspection robot.
[0151] FIGS. **70**-**72** depict a method of operating an inspection robot.
[0152] FIG. **73** depicts an inspection robot.
[0153] FIG. **74** depicts an inspection robot.
[0154] FIG. **75** is a schematic depicting an inspection robot having one or more features for operating in a hazardous environment.
[0155] FIG. **76** depicts a method for operating an inspection robot in a hazardous environment.
[0156] FIG. **77** is another schematic depicting an inspection robot having one or more features for operating in a hazardous environment.
[0157] FIG. **78** depicts a method for coupling drive assemblies to an inspection robot.
[0158] FIG. **79** depicts a method for coupling drive assemblies to an inspection robot.
[0159] FIG. **80** depicts a method of releasably coupling an electrical interface and a mechanical interface of a modular drive assembly.
[0160] FIG. **81** is a schematic diagram depicting an exploded view of a modular drive module for an inspection robot.
[0161] FIG. **82** depicts a controller.
[0162] FIG. **83** depicts data.
[0163] FIG. **84** depicts a method.
[0164] FIG. **85** depicts an example controller configured to perform operations for rapid response to inspection data.
[0165] FIG. **86** is a schematic diagram of an example system for rapid response to inspection data.
[0166] FIG. **87** is a schematic flow diagram of a procedure for rapid response to inspection data.
[0167] FIG. **88** depicts a payload for an inspection robot.
[0168] FIG. **89** depicts a payload coupler for a payload of an inspection robot for inspecting an inspection surface.
[0169] FIG. **90** depicts a payload for an inspection robot.

[0170] FIG. **91** depicts a method of inspecting an inspection surface with an inspection robot.

[0171] FIG. **92** depicts a side cutaway view of an example couplant routing mechanism for a sled.

[0172] FIG. **93** depicts a partial cutaway bottom view of the example couplant routing mechanism for a sled.

[0173] FIG. **94** depicts a perspective view of the example couplant routing mechanism for a sled.

[0174] FIG. **95** depicts a perspective view of a sensor mounting insert for a sled.

[0175] FIG. **96** depicts a partial cutaway view of a sensor electronics interface and a sensor mounting insert for a sled.

[0176] FIG. **97** depicts a cutaway perspective view of another embodiment of a sensor electronics interface and a sensor mounting insert for a sled.

[0177] FIG. **98** depicts a cutaway side view of the sensor electronics interface and a sensor mounting insert for a sled.

[0178] FIG. **99** depicts a side cutaway view of a sensor mounting interface.

[0179] FIG. **100** depicts an exploded view of a sensor integrated into a sensor mounting insert.

[0180] FIG. **101** depicts an exploded view of a sled and sensor mounting insert.

[0181] FIG. **102** depicts an example payload having an arm and two sleds mounted thereto.

[0182] FIG. **103** depicts an example payload having two arms and four sleds mounted thereto.

[0183] FIG. **104** depicts a top view of the example payload of FIG. **103**.

[0184] FIG. **105** depicts a bottom view of two sleds in a pivoted position.

[0185] FIG. **106** depicts a system capable to perform rapid configuration of an inspection robot.

[0186] FIG. **107** depicts an example robot configuration controller having a number of circuits.

[0187] FIG. **108** is a schematic diagram of an example system for rapid development of an inspection scheme for an inspection robot.

[0188] FIG. **109** is a schematic diagram of an example controller for providing rapid configuration of an inspection robot.

[0189] FIG. **110** is a schematic flow diagram of an example procedure to adjust a hardware component independently of an inspection controller for an inspection robot.

[0190] FIG. **111** is a schematic flow diagram of an example procedure to provide for configuration of an inspection scheme responsive to a user request.

[0191] FIG. **112** is a schematic diagram of an example system for providing real-time processed inspection data to a user.

[0192] FIG. **113** is a schematic diagram of an example controller for providing real-time processed inspection data to a user.

[0193] FIG. **114** is a schematic flow diagram of an example procedure to adjust inspection operations.

[0194] FIG. **115** is a schematic flow diagram of an example procedure to adjust inspection traversal and/or interrogation commands.

[0195] FIG. **116** is a schematic flow diagram of an example procedure to provide a marking operation.

[0196] FIG. **117** is a schematic flow diagram of an example procedure to selectively display a virtual mark.

[0197] FIGS. **118**A-H are schematic diagrams of a sled assembly, in accordance with embodiments of the present disclosure;

[0198] FIG. **119** is another schematic diagram of the sled assembly, in accordance with embodiments of the present disclosure;

[0199] FIG. **120** is another schematic diagram of the sled assembly, in accordance with embodiments of the present disclosure;

[0200] FIG. **121** is another schematic diagram of the sled assembly with a film, in accordance with embodiments of the present disclosure;

[0201] FIG. **122** is a chart depicting reflected sound wave peaks, in accordance with embodiments of the present disclosure;

[0202] FIG. **123** is a schematic diagram of a sensor interrogating an inspection surface through a film, in accordance with embodiments of the present disclosure;

[0203] FIGS. **124-144** are charts depicting reflected sound wave peaks, in accordance with embodiments of the present disclosure; and

[0204] FIG. **145** is a schematic diagram of a payload having sled assemblies in a staggered arrangement, in accordance with embodiments of the present disclosure.

[0205] FIG. **146** is a schematic diagram of a payload having sled assemblies in a staggered arrangement, in accordance with embodiments of the present disclosure.

[0206] FIG. **147** is a schematic diagram of a payload having sled assemblies in a staggered arrangement, in accordance with embodiments of the present disclosure.

[0207] FIGS. **148-151** are schematic diagrams of sled assemblies in various arrangements in accordance with embodiments of the present disclosure.

[0208] FIG. **152** is a flowchart of an example method for inspecting an inspection surface using an inspection robot in accordance with embodiments of the present disclosure.

[0209] FIG. **153** is a flowchart of an example method for inspecting an inspection surface using an inspection robot in accordance with embodiments of the present disclosure.

DETAILED DESCRIPTION

[0210] The present disclosure relates to a system developed for traversing, climbing, or otherwise traveling over walls (curved or flat), or other industrial surfaces. Industrial surfaces, as described herein, include any tank, pipe, housing, or other surface utilized in an industrial environment, including at least heating and cooling pipes, conveyance pipes or conduits, and tanks, reactors, mixers, or containers. In certain embodiments, an industrial surface is ferromagnetic, for example including iron, steel, nickel, cobalt, and alloys thereof. In certain embodiments, an industrial surface is not ferromagnetic.

[0211] Certain descriptions herein include operations to inspect a surface, an inspection robot or inspection device, or other descriptions in the context of performing an inspection. Inspections, as utilized herein, should be understood broadly. Without limiting any other disclosures or embodiments herein, inspection operations herein include operating one or more sensors in relation to an inspected surface, electromagnetic radiation inspection of a surface (e.g., operating a camera) whether in the visible spectrum or otherwise (e.g., infrared, UV, X-Ray, gamma ray, etc.), high-resolution inspection of the surface itself (e.g., a laser profiler, caliper, etc.), performing a repair operation on a surface, performing

a cleaning operation on a surface, and/or marking a surface for a later operation (e.g., for further inspection, for repair, and/or for later analysis). Inspection operations include operations for a payload carrying a sensor or an array of sensors (e.g. on sensor sleds) for measuring characteristics of a surface being traversed such as thickness of the surface, curvature of the surface, ultrasound (or ultra-sonic) measurements to test the integrity of the surface and/or the thickness of the material forming the surface, heat transfer, heat profile/mapping, profiles or mapping any other parameters, the presence of rust or other corrosion, surface defects or pitting, the presence of organic matter or mineral deposits on the surface, weld quality and the like. Sensors may include magnetic induction sensors, acoustic sensors, laser sensors, LIDAR, a variety of image sensors, and the like. The inspection sled may carry a sensor for measuring characteristics near the surface being traversed such as emission sensors to test for gas leaks, air quality monitoring, radioactivity, the presence of liquids, electro-magnetic interference, visual data of the surface being traversed such as uniformity, reflectance, status of coatings such as epoxy coatings, wall thickness values or patterns, wear patterns, and the like. The term inspection sled may indicate one or more tools for repairing, welding, cleaning, applying a treatment or coating the surface being treated. Treatments and coatings may include rust proofing, sealing, painting, application of a coating, and the like. Cleaning and repairing may include removing debris, sealing leaks, patching cracks, and the like. The term inspection sled, sensor sled, and sled may be used interchangeably throughout the present disclosure.

[0212] In certain embodiments, for clarity of description, a sensor is described in certain contexts throughout the present disclosure, but it is understood explicitly that one or more tools for repairing, cleaning, and/or applying a treatment or coating to the surface being treated are likewise contemplated herein wherever a sensor is referenced. In certain embodiments, where a sensor provides a detected value (e.g., inspection data or the like), a sensor rather than a tool may be contemplated, and/or a tool providing a feedback value (e.g., application pressure, application amount, nozzle open time, orientation, etc.) may be contemplated as a sensor in such contexts.

[0213] Inspections are conducted with a robotic system **100** (e.g., an inspection robot, a robotic vehicle, etc.) which may utilize sensor sleds **1** and a sled array system **2** which enables accurate, self-aligning, and self-stabilizing contact with a surface (not shown) while also overcoming physical obstacles and maneuvering at varying or constant speeds. In certain embodiments, mobile contact of the system **100** with the surface includes a magnetic wheel **3**. In certain embodiments, a sled array system **2** is referenced herein as a payload **2**—wherein a payload **2** is an arrangement of sleds **1** with sensor mounted thereon, and wherein, in certain embodiments, an entire payload **2** can be changed out as a unit. The utilization of payloads **2**, in certain embodiments, allows for a pre-configured sensor array that provides for rapid re-configuration by swapping out the entire payload **2**. In certain embodiments, sleds **1** and/or specific sensors on sleds **1**, are changeable within a payload **2** to reconfigure the sensor array.

[0214] An example sensor sled **1** includes, without limitation, one or more sensors mounted thereon such that the sensor(s) is operationally couplable to an inspection surface in contact with a bottom surface of the corresponding one of the sleds. For example, the sled **1** may include a chamber or mounting structure, with a hole at the bottom of the sled **1** such that the sensor can maintain line-of-sight and/or acoustic coupling with the inspection surface. The sled **1** as described throughout the present disclosure is mounted on and/or operationally coupled to the inspection robot **100** such that the sensor maintains a specified alignment to the inspection surface **500**—for example a perpendicular arrangement to the inspection surface, or any other specified angle. In certain embodiments, a sensor mounted on a sled **1** may have a line-of-sight or other detecting arrangement to the inspection surface that is not through the sled **1**—for example a sensor may be mounted at a front or rear of a sled **1**, mounted on top of a sled **1** (e.g., having a view of the inspection surface that is forward, behind, to a side, and/or oblique to the sled **1**). It will be seen that, regardless of the sensing orientation of the sensor to the inspection surface, maintenance of the sled **1** orientation to the inspection surface will support more consistent detection of the inspection surface by the sensor, and/or sensed values (e.g., inspection data) that is more consistently comparable over the inspection surface and/or that has a meaningful position relationship compared to position information determined for the sled **1** or inspection robot **100**. In certain embodiments, a sensor may be mounted on the inspection robot **100** and/or a payload **2**—for example a camera mounted on the inspection robot **100**.

[0215] The present disclosure allows for gathering of structural information from a physical structure. Example physical structures include industrial structures such as boilers, pipelines, tanks, ferromagnetic structures, and other structures. An example system **100** is configured for climbing the outside of tube walls.

[0216] As described in greater detail below, in certain embodiments, the disclosure provides a system that is capable of integrating input from sensors and sensing technology that may be placed on a robotic vehicle. The robotic vehicle is capable of multi-directional movement on a variety of surfaces, including flat walls, curved surfaces, ceilings, and/or floors (e.g., a tank bottom, a storage tank floor, and/or a recovery boiler floor). The ability of the robotic vehicle to operate in this way provides unique access especially to traditionally inaccessible or dangerous places, thus permitting the robotic vehicle to gather information about the structure it is climbing on.

[0217] The system **100** (e.g., an inspection robot, a robotic vehicle, and/or supporting devices such as external computing devices, couplant or fluid reservoirs and delivery systems, etc.) in FIG. **1** includes the sled **1** mounted on a payload **2** to provide for an array of sensors having selectable contact (e.g., orientation, down force, sensor spacing from the surface, etc.) with an inspected surface. The payload **2** includes mounting posts mounted to a main body **102** of the system **100**. The payload **2** thereby provides a convenient mounting position for a number of sleds **1**, allowing for multiple sensors to be positioned for inspection in a single traverse of the inspected surface. The number and distance of the sleds **1** on the payload **2** are readily adjustable—for example by sliding the sled mounts on the payload **2** to adjust spacing. Referencing FIG. **3**B, an example sled **1** has an aperture **12**, for example to provide for couplant communication (e.g., an acoustically and/or optically continuous path of couplant) between the sensor mounted on the

sled **1** and a surface to be inspected, to provide for line-of-sight availability between the sensor and the surface, or the like.

[0218] Referencing FIG. **4**, an example system **100** includes the sled **1** held by an arm **20** that is connected to the payload **2** (e.g., a sensor array or sensor suite). An example system includes the sled **1** coupled to the arm **20** at a pivot point **17**, allowing the sensor sled to rotate and/or tilt. On top of the arm **20**, an example payload **2** includes a biasing member **21** (e.g., a torsion spring) with another pivot **16**, which provides for a selectable down-force of the arm **20** to the surface being inspected, and for an additional degree of freedom in sled **1** movement to ensure the sled **1** orients in a desired manner to the surface. In certain embodiments, down-force provides for at least a partial seal between the sensor sled **1** and surface to reduce or control couplant loss (e.g., where couplant loss is an amount of couplant consumed that is beyond what is required for operations), control distance between the sensor and the surface, and/or to ensure orientation of the sensor relative to the surface. Additionally or alternatively, the arm **20** can lift in the presence of an obstacle, while traversing between surfaces, or the like, and return to the desired position after the maneuver is completed. In certain embodiments, an additional pivot **18** couples the arm **20** to the payload **2**, allowing for an additional rolling motion. In certain embodiments, pivots **16**, **17**, **18** provide for three degrees of freedom on arm **20** motion, allowing the arm **20** to be responsive to almost any obstacle or surface shape for inspection operations. In certain embodiments, various features of the system **100**, including one or more pivots **16**, **17**, **18**, co-operate to provide self-alignment of the sled **1** (and thus, the sensor mounted on the sled) to the surface. In certain embodiments, the sled **1** self-aligns to a curved surface and/or to a surface having variability in the surface shape.

[0219] In certain embodiments, the system is also able to collect information at multiple locations at once. This may be accomplished through the use of a sled array system. Modular in design, the sled array system allows for mounting sensor mounts, like the sleds, in fixed positions to ensure thorough coverage over varying contours. Furthermore, the sled array system allows for adjustment in spacing between sensors, adjustments of sled angle, and traveling over obstacles. In certain embodiments, the sled array system was designed to allow for multiplicity, allowing sensors to be added to or removed from the design, including changes in the type, quantity, and/or physical sensing arrangement of sensors. The sensor sleds that may be employed within the context of the present invention may house different sensors for diverse modalities useful for inspection of a structure. These sensor sleds are able to stabilize, align, travel over obstacles, and control, reduce, or optimize couplant delivery which allows for improved sensor feedback, reduced couplant loss, reduced post-inspection clean-up, reduced downtime due to sensor re-runs or bad data, and/or faster return to service for inspected equipment.

[0220] There may be advantages to maintaining a sled with associated sensors or tools in contact and/or in a fixed orientation relative to the surface being traversed even when that surface is contoured, includes physical features, obstacles, and the like. In embodiments, there may be sled assemblies which are self-aligning to accommodate variabilities in the surface being traversed (e.g., an inspection surface) while maintaining the bottom surface of the sled (and/or a sensor or tool, e.g. where the sensor or tool protrudes through or is flush with a bottom surface of the sled) in contact with the inspection surface and the sensor or tool in a fixed orientation relative to the inspection surface. In an embodiment, as shown in FIG. **11** there may be a number of payloads **2**, each payload **2** including a sled **1** positioned between a pair of sled arms **20**, with each side exterior of the sled **1** attached to one end of each of the sled arms **20** at a pivot point **17** so that the sled **1** is able to rotate around an axis that would run between the pivot points **17** on each side of the sled **1**. As described elsewhere herein, the payload **2** may include one or more inspection sleds **1** being pushed ahead of the payload **2**, pulled behind the payload **2**, or both. The other end of each sled arm **20** is attached to an inspection sled mount **14** with a pivot connection **16** which allows the sled arms to rotate around an axis running through the inspection sled mount **14** between the two pivot connections **16**. Accordingly, each pair of sled arms **20** can raise or lower independently from other sled arms **20**, and with the corresponding sled **1**. The inspection sled mount **14** attaches to the payload **2**, for example by mounting on payload shaft **19**. The inspection sled mount **14** may connect to the payload shaft **19** with a pivot **18** connection which allows the sled **1** and corresponding arms **20** to rotate from side to side in an arc around a perpendicular to the payload shaft **19**. Together the up and down and side to side arc, where present, allow two degrees of rotational freedom to the sled arms. Pivot **18** connection is illustrated as a gimbal mount in the example of FIG. **4**, although any type of connection providing a rotational degree of freedom for movement is contemplated herein, as well as embodiments that do not include a rotational degree of freedom for movement. The gimbal mount (pivot **18**) allows the sled **1** and associated arms **20** to rotate to accommodate side to side variability in the surface being traversed or obstacles on one side of the sled **1**. The pivot **17** between the sled arms **20** and the sled **1** allow the sled **1** to rotate (e.g., tilt in the direction of movement of the inspection robot **100**) to conform to the surface being traversed and accommodate to variations or obstacles in the surface being traversed. Pivot **17**, together with the rotational freedom of the arms, provides the sled three degrees of rotational freedom relative to the inspection surface. The ability to conform to the surface being traversed facilitated the maintenance of a perpendicular interface between the sensor and the surface allowing for improved interaction between the sled **1** and the inspection surface. Improved interaction may include ensuring that the sensor is operationally couplable to the inspection surface.

[0221] Within the inspection sled mount **14** there may be a biasing member (e.g., torsion spring **21**) which provides a down force to the sled **1** and corresponding arms **20**. In the example, the down force is selectable by changing the torsion spring, and/or by adjusting the configuration of the torsion spring (e.g., confining or rotating the torsion spring to increase or decrease the down force). Analogous operations or structures to adjust the down force for other biasing members (e.g., a cylindrical spring, actuator for active down force control, etc.) are contemplated herein.

[0222] In certain embodiments, the inspection robot **100** includes a tether (not shown) to provide power, couplant or other fluids, and/or communication links to the robot **100**. It has been demonstrated that a tether to support at least 200 vertical feet of climbing can be created, capable of couplant delivery to multiple ultra-sonic sensors, sufficient power for

the robot, and sufficient communication for real-time processing at a computing device remote from the robot. Certain aspects of the disclosure herein, such as but not limited to utilizing couplant conservation features such as sled downforce configurations, the acoustic cone, and water as a couplant, support an extended length of tether. In certain embodiments, multiple ultra-sonic sensors can be provided with sufficient couplant through a ⅛" couplant delivery line, and/or through a ¼" couplant delivery line to the inspection robot **100**, with ⅛" final delivery lines to individual sensors. While the inspection robot **100** is described as receiving power, couplant, and communications through a tether, any or all of these, or other aspects utilized by the inspection robot **100** (e.g., paint, marking fluid, cleaning fluid, repair solutions, etc.) may be provided through a tether or provided in situ on the inspection robot **100**. For example, the inspection robot **100** may utilize batteries, a fuel cell, and/or capacitors to provide power; a couplant reservoir and/or other fluid reservoir on the robot to provide fluids utilized during inspection operations, and/or wireless communication of any type for communications, and/or store data in a memory location on the robot for utilization after an inspection operation or a portion of an inspection operation.

[0223] In certain embodiments, maintaining sleds **1** (and sensors or tools mounted thereupon) in contact and/or selectively oriented (e.g., perpendicular) to a surface being traversed provides for: reduced noise, reduced lost-data periods, fewer false positives, and/or improved quality of sensing; and/or improved efficacy of tools associated with the sled (less time to complete a repair, cleaning, or marking operation; lower utilization of associated fluids therewith; improved confidence of a successful repair, cleaning, or marking operation, etc.). In certain embodiments, maintaining sleds **1** in contacts and/or selectively oriented to the surface being traversed provides for reduced losses of couplant during inspection operations.

[0224] In certain embodiments, the combination of the pivots **16**, **17**, **18**) and torsion spring (biasing device **21**) act together to position the sled **1** perpendicular to the surface being traversed. The biasing force of the spring (biasing device **21**) may act to extend the sled arms **20** downward and away from the payload shaft **19** and inspection sled mount **14**, pushing the sled **1** toward the inspection surface. The torsion spring (biasing device **21**) may be passive, applying a constant downward pressure, or the torsion spring (biasing device **21**) or other biasing member may be active, allowing the downward pressure to be varied. In an illustrative and non-limiting example, an active torsion spring (biasing device **21**) might be responsive to a command to relax the spring tension, reducing downward pressure and/or to actively pull the sled **1** up, when the sled **1** encounters an obstacle, allowing the sled **1** to more easily move over the obstacle. The active torsion spring (biasing device **21**) may then be responsive to a command to restore tension, increasing downward pressure, once the obstacle is cleared to maintain the close contact between the sled **1** and the surface. The use of an active spring may enable changing the angle of a sensor or tool relative to the surface being traversed during a traverse. Design considerations with respect to the surfaces being inspected may be used to design the active control system. If the spring (biasing device **21**) is designed to fail closed, the result would be similar to a passive spring and the sled **1** would be pushed toward the surface being inspected. If the spring (biasing device **21**) is designed to fail open, the result would be increased obstacle clearance capabilities. In embodiments, spring (biasing device **21**) may be a combination of passive and active biasing members.

[0225] The downward pressure applied by the torsion spring (biasing device **21**) may be supplemented by a spring within the sled **1** further pushing a sensor or tool toward the surface. The downward pressure may be supplemented by one or more magnets in/on the sled **1** pulling the sled **1** toward the surface being traversed. The one or more magnets may be passive magnets that are constantly pulling the sled **1** toward the surface being traversed, facilitating a constant distance between the sled **1** and the surface. The one or magnets may be active magnets where the magnet field strength is controlled based on sensed orientation and/or distance of the sled **1** relative to the inspection surface. In an illustrative and non-limiting example, as the sled **1** lifts up from the surface to clear an obstacle and it starts to roll, the strength of the magnet may be increased to correct the orientation of the sled **1** and draw it back toward the surface.

[0226] The connection between each sled **1** and the sled arms **20** may constitute a simple pin or other quick release connect/disconnect attachment. The quick release connection at the pivot **17** may facilitate attaching and detaching sleds **1** enabling a user to easily change the type of inspection sled attached, swapping sensors, types of sensors, tools, and the like.

[0227] In embodiments, as depicted in FIG. **12**, there may be multiple attachment or pivot point accommodations **9** available on the sled **1** for connecting the sled arms **20**. The location of the pivot point accommodations **9** on the sled **1** may be selected to accommodate conflicting goals such as sled **1** stability and clearance of surface obstacles. Positioning the pivot point accommodations **9** behind the center of sled in the longitudinal direction of travel may facilitate clearing obstacles on the surface being traversed. Positioning the pivot point accommodation **9** forward of the center may make it more difficult for the sled **1** to invert or flip to a position where it cannot return to a proper inspection operation position. It may be desirable to alter the connection location of the sled arms **20** to the pivot point accommodations **9** (thereby defining the pivot **17**) depending on the direction of travel. The location of the pivot **17** on the sled **1** may be selected to accommodate conflicting goals such as sensor positioning relative to the surface and avoiding excessive wear on the bottom of the sled. In certain embodiments, where multiple pivot point accommodations **9** are available, pivot **17** selection can occur before an inspection operation, and/or be selectable during an inspection operation (e.g., arms **20** having an actuator to engage a selected one of the pivot point accommodations **9**, such as extending pegs or other actuated elements, thereby selecting the pivot **17**).

[0228] In embodiments, the degree of rotation allowed by the pivot **17** may be adjustable. This may be done using mechanical means such as a physical pin, or lock. In embodiments, as shown in FIG. **15**, the connection between the sled **1** and the sled arms **20** may include a spring **1702** that biases the pivot **17** to tend to pivot in one direction or another. The spring **1702** may be passive, with the selection of the spring based on the desired strength of the bias, and the installation of the spring **1702** may be such as to preferentially push the front or the back of the sled **1** down.

In embodiments, the spring **1702** may be active and the strength and preferential pivot may be varied based on direction of travel, presence of obstacles, desired pivoting responsiveness of the sled **1** to the presence of an obstacle or variation in the inspection surface, and the like. In certain embodiments, opposing springs or biasing members may be utilized to bias the sled **1** back to a selected position (e.g., neutral/flat on the surface, tilted forward, tilted rearward, etc.). Where the sled **1** is biased in a given direction (e.g., forward or rearward), the sled **1** may nevertheless operate in a neutral position during inspection operations, for example due to the down force from the arm **20** on the sled **1**.

[0229] An example sled **1**, for example as shown in FIG. **16**, includes more than one pivot **17**, for example utilizing springs **402** to couple to the sled arm **20**. In the example of FIG. **14**, the two pivots **17** provide additional clearance for the sled **1** to clear obstacles. In certain embodiments, both springs **402** may be active, for example allowing some rotation of each pivot simultaneously, and/or a lifting of the entire sled. In certain embodiments, springs **402** may be selectively locked—for example before inspection operations and/or actively controlled during inspection operations. Additionally or alternatively, selection of pivot position, spring force and/or ease of pivoting at each pivot may be selectively controlled—for example before inspection operations and/or actively controlled during inspection operations (e.g., using a controller **802**). The utilization of springs **402** is a non-limiting example of simultaneous multiple pivot points, and leaf springs, electromagnets, torsion springs, or other flexible pivot enabling structures are contemplated herein. The spring tension or pivot control may be selected based on the uniformity of the surface to be traversed. The spring tension may be varied between the front and rear pivot points depending on the direction of travel of the sled **1**. In an illustrative and non-limiting example, the rear spring (relative to the direction of travel) might be locked and the front spring active when traveling forward to better enable obstacle accommodation. When direction of travel is reversed, the active and locked springs **402** may be reversed such that what was the rear spring **402** may now be active and what was the front spring **402** may now be locked, again to accommodate obstacles encountered in the new direction of travel.

[0230] In embodiments, the bottom surface of the sled **1** may be shaped, as shown in FIGS. **17**A, **17**B, with one or more ramps **1902** to facilitate the sled **1** moving over obstacles encountered along the direction of travel. The shape and slope of each ramp **1902** may be designed to accommodate conflicting goals such as sled **1** stability, speed of travel, and the size of the obstacle the sled **1** is designed to accommodate. A steep ramp angle might be better for accommodating large obstacles but may be required to move more slowly to maintain stability and a good interaction with the surface. The slope of the ramp **1902** may be selected based on the surface to be traversed and expected obstacles. If the sled **1** is interacting with the surface in only one direction, the sled **1** may be designed with only one ramp **1902**. If the sled **1** is interacting with the surface going in two directions, the sled **1** may be designed with two ramps **1902**, e.g., a forward ramp and a rearward ramp, such that the sled **1** leads with a ramp **1902** in each direction of travel. Referencing FIG. **17**B, the front and rear ramps **1902** may have different angles and/or different total height values. While the ramps **1902** depicted in FIGS. **17**A and **17**B are linear ramps, a ramp **1902** may have any shape, including a curved shape, a concave shape, a convex shape, and/or combinations thereof. The selection of the ramp angle, total ramp height, and bottom surface shape is readily determinable to one of skill in the art having the benefit of the disclosure herein and information ordinarily available when contemplating a system. Certain considerations for determining the ramp angle, ramp total height, and bottom surface shape include considerations of manufacturability, obstacle geometries likely to be encountered, obstacle materials likely to be encountered, materials utilized in the sled **1** and/or ramp **1902**, motive power available to the inspection robot **100**, the desired response to encountering obstacles of a given size and shape (e.g., whether it is acceptable to stop operations and re-configure the inspection operations for a certain obstacle, or whether maximum obstacle traversal capability is desired), and/or likely impact speed with obstacles for a sled.

[0231] In embodiments, as shown in FIGS. **18**A and **18**B, the bottom surface **2002** of the sled **1** may be contoured or curved to accommodate a known texture or shape of the surface being traversed, for example such that the sled **1** will tend to remain in a desired orientation (e.g., perpendicular) with the inspection surface as the sled **1** is moved. The bottom surface **2002** of the sled **1** may be shaped to reduce rotation, horizontal translation and shifting, and/or yaw or rotation of the sled **1** from side to side as it traverses the inspection surface. Referencing FIG. **18**B, the bottom surface **2002** of the sled **1** may be convex for moving along a rounded surface, on the inside of a pipe or tube, and/or along a groove in a surface. Referencing FIG. **18**A, the bottom surface **2002** of the sled **1** may be concave for the exterior of a rounded surface, such as riding on an outer wall of a pipe or tube, along a rounded surface, and/or along a ridge in a surface. The radius of curvature of the bottom surface **2002** of the sled **1** may be selected to facilitate alignment given the curvature of the surface to be inspected. The bottom surface **2002** of the sled **1** may be shaped to facilitate maintaining a constant distance between sensors or tools in the sled **1** and the inspection surface being traversed. In embodiments, at least a portion the bottom of the sled **1** may be flexible such that the bottom of the sled **1** may comply to the shape of the surface being traversed. This flexibility may facilitate traversing surfaces that change curvature over the length of the surface without the adjustments to the sled **1**.

[0232] For a surface having a variable curvature, a chamfer or curve on the bottom surface **2002** of a sled **1** tends to guide the sled **1** to a portion of the variable curvature matching the curvature of the bottom surface **2002**. Accordingly, the curved bottom surface **2002** supports maintaining a selected orientation of the sled **1** to the inspection surface. In certain embodiments, the bottom surface **2002** of the sled **1** is not curved, and one or more pivots **16**, **17**, **18** combined with the down force from the arms **20** combine to support maintaining a selected orientation of the sled **1** to the inspection surface. In some embodiments, the bottom of the sled **1** may be flexible such that the curvature may adapt to the curvature of the surface being traversed.

[0233] The material on the bottom of the sled **1** may be chosen to prevent wear on the sled **1**, reduce friction between the sled **1** and the surface being traversed, or a combination of both. Materials for the bottom of the sled may include materials such as plastic, metal, or a combination thereof. Materials for the bottom of the sled may include

an epoxy coat, a replaceable layer of polytetrafluoroethylene (e.g., Teflon), acetyl (e.g., —Delrin® acetyl resin), ultrafine molecular weight polyethylene (PMW), and the like. In embodiments, as shown in FIGS. **22**, the material on the bottom of the sled **1** may be removable layer such as a sacrificial film layer **2012** (or layer, and/or removable layer) that is applied to the bottom of the sled **1** and then lifted off and replaced at selected intervals, before each inspection operation, and/or when the sacrificial film layer **2012** or bottom of the sled begin to show signs of wear or an increase in friction. An example sled **1** includes an attachment mechanism **2104**, such as a clip, to hold the sacrificial film layer **2012** in place. Referencing FIG. **19**, an example sled **1** includes a recess **2306** in the bottom surface of the sled to retain the sacrificial film layer **2012** and allow the sacrificial film layer **2012** to have a selected spatial orientation between the inspection contact side (e.g., the side of the sacrificial film layer **2012** exposed to the inspection surface) with the bottom surface **2002** of the sled **1** (e.g., flush with the bottom, extending slightly past the bottom, etc.). In certain embodiments, the removable layer may include a thickness that provides a selected spatial orientation between an inspection contact side in contact with the inspection surface and the bottom surface of the sled. In certain embodiments, the sacrificial film layer **2012** includes an adhesive, for example with an adhesive backing to the layer, and/or may be applied as an adhesive (e.g., an epoxy layer or coating that is refreshed or reapplied from time to time). An example sacrificial film layer **2012** includes a hole therethrough, for example allowing for visual and/or couplant contact between a sensor **2202** attached to the sled **1** and the inspection surface. The hole may be positioned over the sensor **2202**, and/or may accommodate the sensor **2202** to extend through the sacrificial film layer **2012**, and/or may be aligned with a hole **2016** (e.g., FIG. **19**) or aperture **12** (e.g., FIG. **3**B) in the sled bottom.

[0234] In embodiments, as shown in FIG. **20-22**, an example sled **1** includes an upper portion **2402** and a replaceable lower portion **2404** having a bottom surface. In some embodiments, the replaceable lower portion **2404** may be designed to allow the bottom surface and shape to be changed to accommodate the specific surface to be traversed without having to disturb or change the upper portion **2402**. Accordingly, where sensors or tools engage the upper portion **2402**, the replaceable lower portion **2404** can be rapidly changed out to configure the sled **1** to the inspection surface, without disturbing sensor connections and/or coupling to the arms **20**. The replaceable lower portion **2404** may additionally or alternatively be configured to accommodate a sacrificial film layer **2012**, including potentially with a recess **2306**. An example sled **1** includes a replaceable lower portion **2404** designed to be easily replaced by lining up the upper portion **2402** and the replaceable lower portion **2404** at a pivot point **2406**, and then rotating the pieces to align the two portions. In certain embodiments, the sensor, installation sleeve, cone tip, or other portion protruding through aperture **12** forms the pivot point **2406**. One or more slots **2408** and key **2410** interfaces or the like may hold the two portions together.

[0235] The ability to quickly swap the replaceable lower portion **2404** may facilitate changing the bottom surface of the sled **1** to improve or optimize the bottom surface of the sled **1** for the surface to be traversed. The lower portion may be selected based on bottom surface shape, ramp angle, or ramp total height value. The lower portion may be selected from a multiplicity of pre-configured replaceable lower portions in response to observed parameters of the inspection surface after arrival to an inspection site. Additionally or alternatively, the replaceable lower portion **2404** may include a simple composition, such as a wholly integrated part of a single material, and/or may be manufactured on-site (e.g., in a 3-D printing operation) such as for a replacement part and/or in response to observed parameters of the inspection surface after arrival to an inspection site. Improvement and/or optimization may include: providing a low friction material as the bottom surface to facilitate the sled **1** gliding over the surface being traversed, having a hardened bottom surface of the sled **1** if the surface to be traversed is abrasive, producing the replaceable lower portion **2404** as a wear material or low-cost replacement part, and the like. The replaceable lower portion **2404** may allow for quick replacement of the bottom surface when there is wear or damage on the bottom surface of the sled **1**. Additionally or alternatively, a user may alter a shape/curvature of the bottom of the sled, a slope or length of a ramp, the number of ramps, and the like. This may allow a user to swap out the replaceable lower portion **2404** of an individual sled **1** to change a sensor to a similar sensor having a different sensitivity or range, to change the type of sensor, manipulate a distance between the sensor and the inspection surface, replace a failed sensor, and the like. This may allow a user to swap out the replaceable lower portion **2404** of an individual sled **1** depending upon the surface curvature of the inspection surface, and/or to swap out the replaceable lower portion **2404** of an individual sled **1** to change between various sensors and/or tools.

[0236] In embodiments, as shown in FIGS. **23-25**, a sled **1** may have a chamber **2624** sized to accommodate a sensor **2202**, and/or into which a sensor **2202** may be inserted. The chamber **2624** may have chamfers **2628** on at least one side of the chamber to facilitate ease of insertion and proper alignment of the sensor **2202** in the chamber **2624**. An example sled **1** includes a holding clamp **2630** that accommodates the sensor **2202** to pass therethrough, and is attached to the sled **1** by a mechanical device **2632** such as a screw or the like. An example sled **1** includes stops **2634** at the bottom of the chamber **2624**, for example to ensure a fixed distance between the sensor **2202** and bottom surface of the sled and/or the inspection surface, and/or to ensure a specific orientation of the sensor **2202** to the bottom surface of the sled and/or the inspection surface.

[0237] Referencing FIG. **25**, an example sled **1** includes a sensor installation sleeve **2704**, which may be positioned, at least partially, within the chamber. The example sensor installation sleeve **2704** may be formed from a compliant material such as neoprene, rubber, an elastomeric material, and the like, and in certain embodiments may be an insert into a chamber **2624**, a wrapper material on the sensor **2202**, and/or formed by the substrate of the sled **1** itself (e.g., by selecting the size and shape of the chamber **2624** and the material of the sled **1** at least in the area of the chamber **2624**). An example sensor installation sleeve **2704** includes an opening **2** sized to receive a sensor **2202** and/or a tool (e.g., marking, cleaning, repair, and/or spray tool). In the example of FIG. **27**, the sensor installation sleeve **2704** flexes to accommodate the sensor **2202** as the sensor **2202** is inserted. Additionally or alternatively, a sensor installation sleeve **2704** may include a material wrapping the sensor

2202 and slightly oversized for the chamber **2624**, where the sleeve compresses through the hole into the chamber **2624**, and expands slightly when released, thereby securing the sensor **2202** into the sled **1**. In the example of FIG. **25**, an installation tab **2716** is formed by relief slots **2714**. The tab **2716** flexes to engage the sensor **2202**, easing the change of the sensor **2202** while securing the sensor **2202** in the correct position once inserted into the sled **1**.

[0238] It can be seen that a variety of sensor and tool types and sizes may be swapped in and out of a single sled **1** using the same sensor installation sleeve **2704**. The opening of the chamber **2624** may include the chamfers **2628** to facilitate insertion, release, and positioning of the sensor **2202**, and/or the tab **2716** to provide additional compliance to facilitate insertion, release, and positioning of the sensor **2202** and/or to accommodate varying sizes of sensors **2202**. Throughout the present disclosure, a sensor **2202** includes any hardware of interest for inserting or coupling to a sled **1**, including at least: a sensor, a sensor housing or engagement structure, a tool (e.g., a sprayer, marker, fluid jet, etc.), and/or a tool housing or engagement structure.

[0239] Referencing FIG. **26**, an acoustic cone **2804** is depicted. The acoustic cone **2804** includes a sensor interface **2808**, for example to couple an acoustic sensor with the cone **2804**. The example acoustic cone **2804** includes a couplant interface **2814**, with a fluid chamber **2818** coupling the couplant interface **2814** to the cone fluid chamber **2810**. In certain embodiments, the cone tip **2820** of the acoustic cone **2804** is kept in contact with the inspection surface, and/or kept at a predetermined distance from the inspection surface while the acoustic sensor is mounted at the opposite end of the acoustic cone **2804** (e.g., at sensor interface **2808**). The cone tip **2820** may define a couplant exit opening between the couplant chamber and the inspection surface. The couplant exit opening may be flush with the bottom surface or extend through the bottom of the sled. Accordingly, a delay line (e.g., acoustic or vibration coupling of a fixed effective length) between the sensor and the inspection surface is kept at a predetermined distance throughout inspection operations. Additionally, the acoustic cone **2804** couples to the sled **1** in a predetermined arrangement, allowing for replacement of the sensor, and/or swapping of a sled **1** without having to recalibrate acoustic and/or ultra-sonic measurements. The volume between the sensor and the inspection surface is maintained with couplant, providing a consistent delay line between the sensor and the inspection surface. Example and non-limiting couplant fluids include alcohol, a dye penetrant, an oil-based liquid, an ultra-sonic gel, or the like. An example couplant fluid includes particle sizes not greater than 1/16 of an inch. In certain embodiments, the couplant is filtered before delivery to the sled **1**. In certain embodiments, the couplant includes water, which is low cost, low viscosity, easy to pump and compatible with a variety of pump types, and may provide lower resistance to the movement of the inspection sled over the surface than gels. In certain embodiments, water may be an undesirable couplant, and any type of couplant fluid may be provided.

[0240] An example acoustic cone **2804** provides a number of features to prevent or remove air bubbles in the cone fluid chamber **2810**. An example acoustic cone **2804** includes entry of the fluid chamber **2818** into a vertically upper portion of the cone fluid chamber **2810** (e.g., as the inspection robot **100** is positioned on the inspection surface, and/or in an intended orientation of the inspection robot **100** on the inspection surface, which may toward the front of the robot where the robot is ascending vertically), which tends to drive air bubbles out of the cone fluid chamber **2810**. In certain embodiments, the utilization of the acoustic cone **2804**, and the ability to minimize sensor coupling and de-coupling events (e.g., a sled can be swapped out without coupling or decoupling the sensor from the cone) contributes to a reduction in leaks and air bubble formation. In certain embodiments, a controller **802** periodically and/or in response to detection of a potential air bubble (e.g., due to an anomalous sensor reading) commands a de-bubbling operation, for example increasing a flow rate of couplant through the cone **2804**. In certain embodiments, the arrangements described throughout the present disclosure provide for sufficient couplant delivery to be in the range of 0.06 to 0.08 gallons per minute using a 1/8" fluid delivery line to the cone **2804**. In certain embodiments, nominal couplant flow and pressure is sufficient to prevent the formation of air bubbles in the acoustic cone **2804**.

[0241] As shown in FIG. **27**, individual tubing **2902** may be connected to each couplant interface **2814**. In some embodiments, the individual tubing **2902** may be connected directly to a sled **1**A, **1**B rather than the individual tubing **2902**, for example with sled **1**A, **1**B plumbing permanently coupled to the couplant interface **2814**. Two or more individual tubing **2902** sections may then be joined together in a tubing junction **2908** with a single tube **2904** leaving the junction. In this way, a number of individual tubes **2902** may be reduced to a single tube **2904** that may be easily connected/disconnected from the source of the couplant. In certain embodiments, an entire payload **2** may include a single couplant interface, for example to the inspection robot **100**. The inspection robot **100** may include a couplant reservoir and/or a delivery pump thereupon, and/or the inspection robot **100** may be connected to an external couplant source. In certain embodiments, an entire payload **2** can be changed out with a single couplant interface change, and without any of the cone couplant interfaces and/or sensor couplant interface being disconnected. In certain embodiments, the integration of the sensor **2202**, acoustic cone **2804**, and cone tip **2820** is designed to maintain a constant distance between the surface being measured and the acoustic sensor **2202**. The constant distance facilitates in the interpretation of the data recorded by the acoustic sensor **2202**. In certain embodiments, the distance between the surface being measured and the acoustic sensor **2202** may be described as the "delay line."

[0242] Certain embodiments include an apparatus for providing acoustic coupling between a carriage (or sled) mounted sensor and an inspection surface. Example and non-limiting structures to provide acoustic coupling between a carriage mounted sensor and an inspection surface include an acoustic (e.g., an ultra-sonic) sensor mounted on a sled **1**, the sled **1** mounted on a payload **2**, and the payload **2** coupled to an inspection robot. An example apparatus further includes providing the sled **1** with a number of degrees of freedom of motion, such that the sled **1** can maintain a selected orientation with the inspection surface—including a perpendicular orientation and/or a selected angle of orientation. Additionally or alternatively, the sled **1** is configured to track the surface, for example utilizing a shaped bottom of the sled **1** to match a shape of the inspection surface or a portion of the inspection surface, and/or the sled **1** having an orientation such that, when the

bottom surface of the sled **1** is positioned against the inspection surface, the sensor maintains a selected angle with respect to the inspection surface.

[0243] Certain additional embodiments of an apparatus for providing acoustic coupling between a carriage mounted sensor and an inspection surface include utilization of a fixed-distance structure that ensures a consistent distance between the sensor and the inspection surface. For example, the sensor may be mounted on a cone, wherein an end of the cone touches the inspection surface and/or is maintained in a fixed position relative to the inspection surface, and the sensor mounted on the cone thereby is provided at a fixed distance from the inspection surface. In certain embodiments, the sensor may be mounted on the cone, and the cone mounted on the sled **1**, such that a change-out of the sled **1** can be performed to change out the sensor, without engaging or disengaging the sensor from the cone. In certain embodiments, the cone may be configured such that couplant provided to the cone results in a filled couplant chamber between a transducer of the sensor and the inspection surface. In certain additional embodiments, a couplant entry position for the cone is provided at a vertically upper position of the cone, between the cone tip portion and the sensor mounting end, in an orientation of the inspection robot as it is positioned on the surface, such that couplant flow through the cone tends to prevent bubble formation in the acoustic path between the sensor and the inspection surface. In certain further embodiments, the couplant flow to the cone is adjustable, and is capable, for example, to be increased in response to a determination that a bubble may have formed within the cone and/or within the acoustic path between the sensor and the inspection surface. In certain embodiments, the sled **1** is capable of being lifted, for example with an actuator that lifts an arm **20**, and/or that lifts a payload **2**, such that a free fluid path for couplant and attendant bubbles to exit the cone and/or the acoustic path is provided. In certain embodiments, operations to eliminate bubbles in the cone and/or acoustic path are performed periodically, episodically (e.g., after a given inspection distance is completed, at the beginning of an inspection run, after an inspection robot pauses for any reason, etc.), and/or in response to an active determination that a bubble may be present in the cone and/or the acoustic path.

[0244] An example apparatus provides for low or reduced fluid loss of couplant during inspection operations. Example and non-limiting structures to provide for low or reduced fluid loss include providing for a limited flow path of couplant out of the inspection robot system—for example utilizing a cone having a smaller exit couplant cross-sectional area than a cross-sectional area of a couplant chamber within the cone. In certain embodiments, an apparatus for low or reduced fluid loss of couplant includes structures to provide for a selected down force on a sled **1** which the sensor is mounted on, on an arm **20** carrying a sled **1** which the sensor is mounted on, and/or on a payload **2** which the sled **1** is mounted on. Additionally or alternatively, an apparatus providing for low or reduced fluid loss of couplant includes a selected down force on a cone providing for couplant connectivity between the sensor and the inspection surface—for example, a leaf spring or other biasing member within the sled **1** providing for a selected down force directly to the cone. In certain embodiments, low or reduced fluid loss includes providing for an overall fluid flow of between 0.12 to 0.16 gallons per minute to the inspection robot to support at least 10 ultra-sonic sensors. In certain embodiments, low or reduced fluid loss includes providing for an overall fluid flow of less than 50 feet per minute, less than 100 feet per minute, and less than 200 feet per minute fluid velocity in a tubing line feeding couplant to the inspection robot. In certain embodiments, low or reduced fluid loss includes providing sufficient couplant through a ¼" tubing line to feed couplant to at least 6, at least 8, at least 10, at least 12, or at least 16 ultra-sonic sensors to a vertical height of at least 25 feet, at least 50 feet, at least 100 feet, at least 150 feet, or at least 200 feet. An example apparatus includes a ¼" feed line to the inspection robot and/or to the payload **2**, and a ⅛" feed line to individual sleds **1** and/or sensors (or acoustic cones associated with the sensors). In certain embodiments, larger and/or smaller diameter feed and individual fluid lines are provided.

[0245] Referencing FIG. **28**, an example procedure **3000** to provide acoustic coupling between a sensor and an inspection surface is depicted schematically. The example procedure **3000** includes an operation **3002** to provide a fixed acoustic path between the sensor and the inspection surface. The example procedure **3000** further includes an operation **3004** to fill the acoustic path with a couplant. The example procedure **3000** further includes an operation **3006** to provide for a selected orientation between the sensor and the inspection surface. In certain embodiments, certain operations of the procedure **3000** are performed iteratively throughout inspection operations—for example operations **3006** may include maintaining the orientation throughout inspection operations—such as providing the sensor on a sled having a bottom surface and/or maneuverability to passively or actively self-align to the inspection surface, and/or to return to alignment after a disturbance such as traversal of an obstacle. In another example, operations **3004** include providing a couplant flow to keep the acoustic path between the sensor and the inspection surface filled with couplant, and/or adjusting the couplant flow during inspection operations. Certain operations of procedure **3000** may be performed by a controller **802** during inspection operations.

[0246] Referencing FIG. **29**, an example procedure **3100** to ensure acoustic engagement between a sensor and an inspection surface is depicted schematically. The example procedure **3100** includes an operation **3102** to provide an acoustic coupling chamber between the sensor and the inspection surface. Example and non-limiting operations **3102** include providing the acoustic coupling chamber with an arrangement that tends to reduce bubble formation within the acoustic path between the sensor and the inspection surface. The example procedure **3100** further includes an operation **3104** to determine that the sensor should be re-coupled to the inspection surface. Example and non-limiting operations **3104** include determining that a time has elapsed since a last re-coupling operation, determining that an event has occurred and performing a re-coupling operation in response to the event, and/or actively determining that the acoustic path has been interrupted. Example and non-limiting events include a pausing of the inspection robot, a beginning of inspection operations and/or completion of a selected portion of inspection operations, and/or an interruption of couplant flow to the inspection robot. Example and non-limiting operation to actively determine that the acoustic path has been interrupted include an observation of a bubble (e.g., in an acoustic cone), an

indication that couplant may have exited the acoustic path (e.g., the sled **1** has lifted either for an obstacle or for another operation, observation of an empty cone, etc.), and/or an indication that a sensor reading is off-nominal (e.g., signal seems to have been lost, anomalous reading has occurred, etc.). The example procedure **3100** further includes an operation **3106** to re-couple the sensor to the inspection surface. Example and non-limiting operations **3106** include resuming and/or increasing a couplant flow rate, and/or briefly raising a sled, sled arm, and/or payload from the inspection surface. The procedure **3100** and/or portions thereof may be repeated iteratively during inspection operations. Certain operations of procedure **3100** may be performed by a controller **802** during inspection operations.

[0247] Referencing FIG. **30**, an example procedure **3200** to provide low fluid loss (and/or fluid consumption) between an acoustic sensor and an inspection surface is depicted schematically. An example procedure **3200** includes an operation **3202** to provide for a low exit cross-sectional area for couplant from an acoustic path between the sensor and the inspection surface—including at least providing an exit from a couplant chamber formed by a cone as the exit cross-sectional area, and/or providing an exit cross-sectional area that is in a selected proximity to, and/or in contact with, the inspection surface. The example procedure **3200** further includes an operation **3204** to provide a selected down force to a sled having the sensor mounted thereon, and/or to a couplant chamber. In certain embodiments, the example procedure **3200** includes an operation **3206** to determine if fluid loss for the couplant is excessive (e.g., as measured by replacement couplant flow provided to an inspection robot, and/or by observed couplant loss), and an operation **3208** to increase a down force and/or reduce a couplant exit cross-sectional area from a couplant chamber. In certain embodiments, an inspection robot includes a configurable down force, such as: an active magnet strength control; a biasing member force adjustment (e.g., increasing confinement of a spring to increase down force); sliding of a weight in a manner to adjust down force on the sled and/or cone; combinations of these; or the like. In certain embodiments, an exit cross-sectional are for couplant is adjustable—for example, an iris actuator (not shown), gate valve, or cross-sectional area adjustment is provided. In certain embodiments, cross-sectional area is related to the offset distance of the couplant chamber exit (e.g., cone tip) from the inspection surface, whereby a reduction of the selected offset distance of the couplant chamber exit to the inspection surface reduces the effective exit flow area of the couplant chamber. Example operations to adjust the selected offset distance include lowering the couplant chamber within the sled and/or increasing a down force on the sled and/or couplant chamber. Certain operations of procedure **3200** may be performed by a controller **802** during inspection operations.

[0248] Referencing FIGS. **2**A and **2**B, an example system includes a wheel **200** design that enables modularity, adhesion to the structure's surface, and obstacle traversing. A splined hub, wheel size, and the use of magnets allow the system to be effective on many different surfaces. In some embodiments, the wheel **200** includes a splined hub **8**. The wheel **200** permits a robotic vehicle **100** to climb on walls, ceilings, and other ferromagnetic surfaces. As shown in the embodiment depicted in FIGS. **2**A and **2**B, this may be accomplished by embedding magnets **6** in a ferromagnetic enclosure **3** and/or an electrically conductive enclosure to protect the magnet **6**, improve alignment, and allow for ease of assembly. For example, the magnet **6** may be a permanent magnet and/or a controllable electromagnet, and may further include a rare earth magnet. The ferromagnetic enclosure **3** protects the magnet **6** from directly impacting the inspected surface, reduces impacts and damage to the magnet **6**, and reduces wear on the surface and the magnet **6**. The ferromagnetic and/or electrical conductivity of the enclosure **3** reduces magnetic field lines in not-useful directions (e.g., into the housing **102**, electrical lines or features that may be present near the inspected surface, etc.) and guides the magnetic field lines to the inspected surface. In certain embodiments, the enclosure **3** may not be ferromagnetic or conductive, and/or the enclosure **3** may be at least partially covered by a further material (e.g., molded plastic, a coating, paint, etc.), for example to protect the inspected surface from damage, to protect the enclosure **3** from wear, for aesthetic reasons, or for any other reason. In certain embodiments, the magnet **6** is not present, and the system **100** stays in contact with the surface in another manner (e.g., surface tension adhesion, gravity such as on a horizontal or slightly inclined inspection surface, movement along a track fixed to the surface, or the like). Any arrangements of an inspection surface, including vertical surfaces, overhang or upside-down surfaces, curved surfaces, and combinations of these, are contemplated herein.

[0249] The wheel **200** includes a channel **7** formed between enclosures **3**, for example at the center of the wheel **200**. In certain embodiments, the channel **7** provides for self-alignment on surfaces such as tubes or pipes. In certain embodiments, the enclosures **3** include one or more chamfered edges or surfaces (e.g., the outer surface in the example of FIGS. **3**B-**3**C), for example to improve contact with a rough or curved surface, and/or to provide for a selected surface contact area to avoid damage to the surface and/or the wheel **200**. The flat face along the rim also allows for adhesion and predictable movement on flat surfaces.

[0250] The wheel **200** may be connected to the shaft using a splined hub **8**. This design makes the wheel modular and also prevents it from binding due to corrosion. The splined hub **8** transfers the driving force from the shaft to the wheel. An example wheel **200** includes a magnetic aspect (e.g., magnet **6**) capable to hold the robot on the wall, and accept a driving force to propel the robot, the magnet **6** positioned between conductive and/or ferromagnetic plates or enclosures, a channel **7** formed by the enclosures or plates, one or more chamfered and/or shaped edges, and/or a splined hub attachment to a shaft upon which the wheel is mounted.

[0251] The robotic vehicle may utilize a magnet-based wheel design that enables the vehicle to attach itself to and operate on ferromagnetic surfaces, including vertical and inverted surfaces (e.g., walls and ceilings). As shown in FIGS. **2**A and **2**B, the wheel design may comprise a cylindrical magnet **6** mounted between two wheel enclosures **3** with a splined hub **8** design for motor torque transfer, where the outer diameter of the two enclosures **3** is greater than the outer diameter of the magnet **6**. Once assembled, this configuration creates a channel **7** between the two wheel enclosures **3** that prevents the magnet **6** from making physical contact with the surface as the wheel rolls on the outer diameter surface of the wheel enclosures **3**. In certain embodiments, the material of the magnet **6** may include a rare earth material (e.g., neodymium, yttrium-cobalt, samarium-cobalt, etc.), which may be expensive to produce,

handle, and/or may be highly subject to damage or corrosion. Additionally, any permanent magnet material may have a shorter service life if exposed to direct shocks or impacts.

[0252] The channel **7** may also be utilized to assist in guiding the robotic vehicle along a feature of an inspection surface **500**, such as where the channel **7** is aligned along the top of a rounded surface (e.g., pipe, or other raised feature) that the wheel uses to guide the direction of travel. The wheel enclosures **3** may also have guiding features, such as grooves, concave or convex curvature, chamfers on the inner and/or outer edges, and the like.

[0253] One skilled in the art will appreciate that a great variety of different guiding features may be used to accommodate the different surface characteristics to which the robotic vehicle may be applied. In certain embodiments, combinations of features provide for the inspection robot **100** to traverse multiple surfaces for a single inspection operation, reducing change-time for the wheels and the like. In certain embodiments, chamfer angles, radius of curvature, vertical depth of chamfers or curves, and horizontal widths of chamfers or curves are selectable to accommodate the sizing of the objects to be traversed during inspection operations. It can be seen that the down force provided by the magnet **6** combined with the shaping of the enclosure **3** guiding features combine to provide for self-alignment of the inspection robot **100** on the surface **500**, and additionally provide for protection of the magnet **6** from exposure to shock, impacts, and/or materials that may be present on the inspection surface. In certain embodiments, the magnet **6** may be shaped—for example with curvature, to better conform to the inspection surface **500** and/or prevent impact or contact of the magnet **6** with the surface.

[0254] Additionally or alternatively, guiding features may be selectable for the inspection surface—for example multiple enclosures **3** (and/or multiple wheel assemblies including the magnet **6** and enclosure **3**) may be present for an inspection operation, and a suitable one of the multiple enclosures **3** provided according to the curvature of surfaces present, the spacing of pipes, the presence of obstacles, or the like. In certain embodiments, an enclosure **3** may have an outer layer (e.g., a removable layer—not shown)—for example a snap on, slide over, coupled with set screws, or other coupling mechanism for the outer layer, such that just an outer portion of the enclosure is changeable to provide the guiding features. In certain embodiments, the outer layer may be a non-ferrous material (e.g., making installation and changes of the outer layer more convenient in the presence to the magnet **6**, which may complicate quick changes of a fully ferromagnetic enclosure **3**), such as a plastic, elastomeric material, aluminum, or the like. In certain embodiments, the outer layer may be a 3-D printable material (e.g., plastics, ceramics, or any other 3-D printable material) where the outer layer can be constructed at an inspection location after the environment of the inspection surface **500** is determined. An example includes the controller **802** (e.g., reference FIG. **8** and the related description) structured to accept inspection parameters (e.g., pipe spacing, pipe sizes, tank dimensions, etc.), and to provide a command to a 3-D printer responsive to the command to provide an outer layer configured for the inspection surface **500**. In certain embodiments, the controller **802** further accepts an input for the wheel definition (e.g., where selectable wheel sizes, clearance requirements for the inspection robot **100**, or other parameters not necessarily defined by the inspection surface **500**), and further provides the command to the 3-D printer, to provide an outer layer configured for the inspection surface **500** and the wheel definition.

[0255] An example splined hub **8** design of the wheel assembly may enable modular re-configuration of the wheel, enabling each component to be easily switched out to accommodate different operating environments (e.g., ferromagnetic surfaces with different permeability, different physical characteristics of the surface, and the like). For instance, enclosures with different guiding features may be exchanged to accommodate different surface features, such as where one wheel configuration works well for a first surface characteristic (e.g., a wall with tightly spaced small pipes) and a second wheel configuration works well for a second surface characteristic (e.g., a wall with large pipes). The magnet **6** may also be exchanged to adjust the magnetic strength available between the wheel assembly and the surface, such as to accommodate different dimensional characteristics of the surface (e.g., features that prevent close proximity between the magnet **6** and a surface ferromagnetic material), different permeability of the surface material, and the like. Further, one or both enclosures **3** may be made of ferromagnetic material, such as to direct the flux lines of the magnet toward a surface upon which the robotic vehicle is riding, to direct the flux lines of the magnet away from other components of the robotic vehicle, and the like, enabling the modular wheel configuration to be further configurable for different ferromagnetic environments and applications.

[0256] The present disclosure provides for robotic vehicles that include a sensor sled components, permitting evaluation of particular attributes of the structure. As shown in the embodiments depicted in FIGS. **3**A to **3**C, the sled **1** may hold the sensor that can perform inspection of the structure. The sensor may be perpendicular to the surface being inspected and, in some embodiments, may have a set distance from the surface to protect it from being damaged. In other embodiments, the distance from the surface to the sensor may be adjusted to accommodate the technical requirements of the sensor being utilized. A couplant retaining column may be added at the sensor outlet to retain couplant depending on the type of sensor being used. In certain embodiments, an aperture **12** may be provided at a bottom of the sled **1** to allow an installed sensor to operatively communicate with an inspection surface.

[0257] The sleds of the present disclosure may slide on a flat or curved surface and may perform various types of material testing using the sensors incorporated into the sled. The bottom surface **13** of the sled may be fabricated from numerous types of materials which may be chosen by the user to fit the shape of the surface. Note that depending on the surface condition, a removeable, replaceable, and/or sacrificial layer of thin material may be positioned on the bottom surface of the sled to reduce friction, create a better seal, and protect the bottom of the sled from physical damage incurred by the surface. In certain embodiments, the sled may include ramp surfaces **11** at the front and back of the sled. The ramp and available pivot point accommodation **9** (described below—for example, an option for pivot **17**) give the sled the ability to travel over obstacles. This feature allows the sled to work in industrial environments with surfaces that are not clean and smooth. In certain embodiments, one or more apertures **10** may be provided, for example to allow a sacrificial layer to be fixed to the bottom of the sled **1**.

[0258] In summary, an example robotic vehicle **100** includes sensor sleds having the following properties capable of providing a number of sensors for inspecting a selected object or surface, including a soft or hard bottom surface, including a bottom surface that matches an inspection surface (e.g., shape, contact material hardness, etc.), having a curved surface and/or ramp for obstacle clearance (including a front ramp and/or a back ramp), includes a column and/or couplant insert (e.g., a cone positioned within the sled, where the sensor couples to the cone) that retains couplant, improves acoustic coupling between the sensor and the surface, and/or assists in providing a consistent distance between the surface and the sensor; a plurality of pivot points between the main body **102** and the sled **1** to provide for surface orientation, improved obstacle traversal, and the like, a sled **1** having a mounting position configured to receive multiple types of sensors, and/or magnets in the sled to provide for control of downforce and/or stabilized positioning between the sensor and the surface. In certain implementations of the present invention, it is advantageous to not only be able to adjust spacing between sensors but also to adjust their angular position relative to the surface being inspected. The present invention may achieve this goal by implementing systems having several translational and rotational degrees of freedom.

[0259] Referencing FIG. **4**, an example payload **2** includes selectable spacing between sleds **1**, for example to provide selectable sensor spacing. In certain embodiments, spacing between the sensors may be adjusted using a lockable translational degree of freedom such as a set screw allowing for the rapid adjustment of spacing. Additionally or alternatively, any coupling mechanism between the arm **20** and the payload **2** is contemplated herein. In certain embodiments, a worm gear or other actuator allows for the adjustment of sensor spacing by a controller and/or in real time during operations of the system **100**. In certain embodiments, the payload **2** includes a payload shaft **19** whereupon sleds **1** are mounted (e.g., via the arms **20**). In these embodiments, the inspection sled mounts **14** are mounted on a payload shaft **19**. The example of FIG. **4** includes a shaft cap **15** providing structural support to a number of shafts of the payload **2**. In the example of FIG. **4**, two shafts are utilized to mount the payload **2** onto the housing **102**, and one payload shaft **19** is utilized to mount the arms **20** onto the payload **2**. The arrangement utilizing a payload **2** is a non-limiting example, that allows multiple sensors and sleds **1** to be configured in a particular arrangement, and rapidly changed out as a group (e.g., swapping out a first payload and set of sensors for a second payload and set of sensors, thereby changing an entire sensor arrangement in a single operation). However, in certain embodiments one or more of the payload **2**, arms **20**, and/or sleds **1** may be fixedly coupled to the respective mounting features, and numerous benefits of the present disclosure are nevertheless achieved in such embodiments.

[0260] During operation, an example system **100** encounters obstacles on the surface of the structure being evaluated, and the pivots **16**, **17**, **18** provide for movement of the arm **20** to traverse the obstacle. In certain embodiments, the system **100** is a modular design allowing various degrees of freedom of movement of sleds **1**, either in real-time (e.g., during an inspection operation) and/or at configuration time (e.g., an operator or controller adjusts sensor or sled positions, down force, ramp shapes of sleds, pivot angles of pivots **16**, **17**, **18** in the system **100**, etc.) before an inspection operation or a portion of an inspection operation, and including at least the following degrees of freedom: translation (e.g., payload **2** position relative to the housing **102**); translation of the sled arm **20** relative to the payload **2**, rotation of the sled arm **20**, rotation of the sled arm **20** mount on the payload **2**, and/or rotation of the sled **1** relative to the sled arm **20**.

[0261] In certain embodiments, a system **100** allows for any one or more of the following adjustments: spacing between sensors (perpendicular to the direction of inspection motion, and/or axially along the direction of the inspection motion); adjustments of an angle of the sensor to an outer diameter of a tube or pipe; momentary or longer term displacement to traverse obstacles; provision of an arbitrary number and positioning of sensors; etc.

[0262] An example inspection robot **100** may utilize downforce capabilities for sensor sleds **1**, such as to control proximity and lateral stabilization of sensors. For instance, an embedded magnet (not shown) positioned within the sled **1** may provide passive downforce that increases stabilization for sensor alignment. In another example, the embedded magnet may be an electromagnet providing active capability (e.g., responsive to commands from a controller **802**—reference FIG. **8**) that provide adjustable or dynamic control of the downforce provided to the sensor sled. In another example, magnetic downforce may be provided through a combination of a passive permanent magnet and an active electromagnet, providing a default minimum magnetic downforce, but with further increases available through the active electromagnet. In embodiments, the electromagnet may be controlled by a circuit where the downforce is set by the operator, controlled by an on-board processor, controlled by a remote processor (e.g., through wireless communications), and the like, where processor control may utilize sensor data measurements to determine the downforce setting. In embodiments, downforce may be provided through suction force, spring force, and the like. In certain embodiments, downforce may be provided by a biasing member, such as a torsion spring or leaf spring, with active or passive control of the downforce—for example positioning a tension or confinement of the spring to control the downforce. In certain embodiments, the magnet, biasing member, or other downforce adjusting member may adjust the downforce on the entire sled **1**, on an entire payload **2**, and/or just on the sensor (e.g., the sensor has some flexibility to move within the sled **1**, and the downforce adjustment acts on the sensor directly).

[0263] An example system **100** includes an apparatus **800** (reference FIG. **8** and the disclosure referencing FIG. **8**) for providing enhanced inspection information, including position-based information. The apparatus **800** and operations to provide the position-based information are described in the context of a particular physical arrangement of an industrial system for convenient illustration, however any physical arrangement of an industrial system is contemplated herein. Referencing FIG. **5**, an example system includes a number of pipes **502**—for example vertically arranged pipes such as steam pipes in a power plant, pipes in a cooling tower, exhaust or effluent gas pipes, or the like. The pipes **502** in FIG. **5** are arranged to create a tower having a circular cross-section for ease of description. In certain embodiments, periodic inspection of the pipes is utilized to ensure that pipe degradation is within limits, to ensure proper

operation of the system, to determine maintenance and repair schedules, and/or to comply with policies or regulations. In the example of FIG. **5**, an inspection surface **500** includes the inner portion of the tower, whereby an inspection robot **100** traverses the pipes **502** (e.g., vertically, inspecting one or more pipes on each vertical run). An example inspection robot **100** includes configurable payloads **2**, and may include ultra-sonic sensors (e.g., to determine wall thickness and/or pipe integrity), magnetic sensors (e.g., to determine the presence and/or thickness of a coating on a pipe), cameras (e.g., to provide for visual inspection, including in EM ranges outside of the visual range, temperatures, etc.), composition sensors (e.g., gas chromatography in the area near the pipe, spectral sensing to detect leaks or anomalous operation, etc.), temperature sensing, pressure sensing (ambient and/or specific pressures), vibration sensing, density sensing, etc. The type of sensing performed by the inspection robot **100** is not limiting to the present disclosure except where specific features are described in relation to specific sensing challenges and opportunities for those sensed parameters as will be understood to one of skill in the art having the benefit of the disclosures herein.

[0264] In certain embodiments, the inspection robot **100** has alternatively or additionally, payload(s) **2** configured to provide for marking of aspects of the inspection surface **500** (e.g., a paint sprayer, an invisible or UV ink sprayer, and/or a virtual marking device configured to mark the inspection surface **500** in a memory location of a computing device but not physically), to repair a portion of the inspection surface **500** (e.g., apply a coating, provide a welding operation, apply a temperature treatment, install a patch, etc.), and/or to provide for a cleaning operation. Referencing FIG. **6**, an example inspection robot **100** is depicted in position on the inspection surface **500** at a location. In the example, the inspection robot **100** traverses vertically and is positioned between two pipes **502**, with payloads **2** configured to clean, sense, treat, and/or mark two adjacent pipes **502** in a single inspection run. The inspection robot **100** in the example includes two payloads **2** at the "front" (ahead of the robot housing in the movement direction) and two payloads **2** at the "rear" (behind the robot housing in the movement direction). The inspection robot **100** may include any arrangement of payloads **2**, including just one or more payloads in front or behind, just one or more payloads off to either or both sides, and combinations of these. Additionally or alternatively, the inspection robot **100** may be positioned on a single pipe, and/or may traverse between positions during an inspection operation, for example to inspect selected areas of the inspection surface **500** and/or to traverse obstacles which may be present.

[0265] In certain embodiments, a "front" payload **2** includes sensors configured to determine properties of the inspection surface, and a "rear" payload **2** includes a responsive payload, such as an enhanced sensor, a cleaning device such as a sprayer, scrubber, and/or scraper, a marking device, and/or a repair device. The front-back arrangement of payloads **2** provides for adjustments, cleaning, repair, and/or marking of the inspection surface **500** in a single run—for example where an anomaly, gouge, weld line, area for repair, previously repaired area, past inspection area, etc., is sensed by the front payload **2**, the anomaly can be marked, cleaned, repaired, etc. without requiring an additional run of the inspection robot **100** or a later visit by repair personnel. In another example, a first calibration of sensors for the front payload may be determined to be incorrect (e.g., a front ultra-sonic sensor calibrated for a particular coating thickness present on the pipes **502**) and a rear sensor can include an adjusted calibration to account for the detected aspect (e.g., the rear sensor calibrated for the observed thickness of the coating). In another example, certain enhanced sensing operations may be expensive, time consuming, consume more resources (e.g., a gamma ray source, an alternate coupling such as a non-water or oil-based acoustic coupler, require a high energy usage, require greater processing resources, and/or incur usage charges to an inspection client for any reason) and the inspection robot **100** can thereby only utilize the enhanced sensing operations selectively and in response to observed conditions.

[0266] Referencing FIG. **7**, a location **702** on the inspection surface **500** is identified for illustration. In certain embodiments, the inspection robot **100** and/or apparatus **800** includes a controller **802** having a number of circuits structured to functionally execute operations of the controller **802**. The controller **802** may be a single device (e.g., a computing device present on the robot **100**, a computing device in communication with the robot **100** during operations and/or post-processing information communicated after inspection operations, etc.) and/or a combination of devices, such as a portion of the controller **802** positioned on the robot **100**, a portion of the controller **802** positioned on a computing device in communication with the robot **100**, a portion of the controller **802** positioned on a handheld device (not shown) of an inspection operator, and/or a portion of the controller **802** positioned on a computing device networked with one or more of the preceding devices. Additionally or alternatively, aspects of the controller **802** may be included on one or more logic circuits, embedded controllers, hardware configured to perform certain aspects of the controller **802** operations, one or more sensors, actuators, network communication infrastructure (including wired connections, wireless connections, routers, switches, hubs, transmitters, and/or receivers), and/or a tether between the robot **100** and another computing device. The described aspects of the example controller **802** are non-limiting examples, and any configuration of the robot **100** and devices in communication with the robot **100** to perform all or selected ones of operations of the controller **802** are contemplated herein as aspects of an example controller **802**.

[0267] An example controller **802** includes an inspection data circuit **804** that interprets inspection data **812**—for example sensed information from sensors mounted on the payload and determining aspects of the inspection surface **500**, the status, deployment, and/or control of marking devices, cleaning devices, and/or repair devices, and/or post-processed information from any of these such as a wall thickness determined from ultra-sonic data, temperature information determined from imaging data, and the like. The example controller **802** further includes a robot positioning circuit **806** that interprets position data **814**. An example robot positioning circuit **806** determines position data by any available method, including at least triangulating (or other positioning methods) from a number of available wireless devices (e.g., routers available in the area of the inspection surface **500**, intentionally positioned transmitters/transceivers, etc.), a distance of travel measurement (e.g., a wheel rotation counter which may be mechanical, electro-magnetic, visual, etc.; a barometric pressure measurement; direct

visual determinations such as radar, Lidar, or the like), a reference measurement (e.g., determined from distance to one or more reference points); a time-based measurement (e.g., based upon time and travel speed); and/or a dead reckoning measurement such as integration of detection movements. In the example of FIG. **5**, a position measurement may include a height determination combined with an azimuthal angle measurement and/or a pipe number value such that the inspection surface **500** location is defined thereby. Any coordinate system and/or position description system is contemplated herein. In certain embodiments, the controller **802** includes a processed data circuit **808** that combines the inspection data **812** with the position data **814** to determine position-based inspection data. The operations of the processed data circuit **808** may be performed at any time—for example during operations of the inspection robot **100** such that inspection data **812** is stored with position data **814**, during a post-processing operation which may be completed separately from the inspection robot **100**, and/or which may be performed after the inspection is completed, and/or which may be commenced while the inspection is being performed. In certain embodiments, the linking of the position data **814** with the inspection data **812** may be performed if the linked position-inspection data is requested—for example upon a request by a client for an inspection map **818**. In certain embodiments, portions of the inspection data **812** are linked to the position data **814** at a first time, and other portions of the inspection data **812** are linked to the position data **814** at a later time and/or in response to post-processing operations, an inspection map **818** request, or other subsequent event.

[0268] The example controller **802** further includes an inspection visualization circuit **810** that determines the inspection map **818** in response to the inspection data **812** and the position data **814**, for example using post-processed information from the processed data circuit **808**. In a further example, the inspection visualization circuit **810** determines the inspection map **818** in response to an inspection visualization request **820**, for example from a client computing device **826**. In the example, the client computing device **826** may be communicatively coupled to the controller **802** over the internet, a network, through the operations of a web application, and the like. In certain embodiments, the client computing device **826** securely logs in to control access to the inspection map **818**, and the inspection visualization circuit **810** may prevent access to the inspection map **818**, and/or provide only portions of the inspection map **818**, depending upon the successful login from the client computing device **826**, the authorizations for a given user of the client computing device **826**, and the like.

[0269] In certain embodiments, the inspection visualization circuit **810** and/or inspection data circuit **804** further accesses system data **816**, such as a time of the inspection, a calendar date of the inspection, the robot **100** utilized during the inspection and/or the configurations of the robot **100**, a software version utilized during the inspection, calibration and/or sensor processing options selected during the inspection, and/or any other data that may be of interest in characterizing the inspection, that may be requested by a client, that may be required by a policy and/or regulation, and/or that may be utilized for improvement to subsequent inspections on the same inspection surface **500** or another inspection surface. In certain embodiments, the processed data circuit **808** combines the system data **816** with the processed data for the inspection data **812** and/or the position data **814**, and/or the inspection visualization circuit incorporates the system data **816** or portions thereof into the inspection map **818**. In certain embodiments, any or all aspects of the inspection data **812**, position data **814**, and/or system data **816** may be stored as meta-data (e.g., not typically available for display), may be accessible in response to prompts, further selections, and/or requests from the client computing device **826**, and/or may be utilized in certain operations with certain identifiable aspects removed (e.g., to remove personally identifiable information or confidential aspects) such as post-processing to improve future inspection operations, reporting for marketing or other purposes, or the like.

[0270] In certain embodiments, the inspection visualization circuit **810** is further responsive to a user focus value **822** to update the inspection map **818** and/or to provide further information (e.g., focus data **824**) to a user, such as a user of the client computing device **826**. For example, a user focus value **822** (e.g., a user mouse position, menu selection, touch screen indication, keystroke, or other user input value indicating that a portion of the inspection map **818** has received the user focus) indicates that a location **702** of the inspection map **818** has the user focus, and the inspection visualization circuit **810** generates the focus data **824** in response to the user focus value **822**, including potentially the location **702** indicated by the user focus value **822**.

[0271] Referencing FIG. **9**, an example inspection map **818** is depicted. In the example, the inspection surface **500** may be similar to that depicted in FIG. **5**—for example the interior surface of tower formed by a number of pipes to be inspected. The example inspection map **818** includes an azimuthal indication **902** and a height indication **904**, with data from the inspection depicted on the inspection map **818** (e.g., shading at **906** indicating inspection data corresponding to that visual location). Example and non-limiting inspection maps **818** include numeric values depicted on the visualization, colors, shading or hatching, and/or any other visual depiction method. In certain embodiments, more than one inspection dimension may be visualized (e.g., temperatures and wall thickness), and/or the inspection dimension may be selected or changed by the user. Additionally or alternatively, physical elements such as obstacles, build up on the inspection surface, weld lines, gouges, repaired sections, photos of the location (e.g., the inspection map **818** laid out over a panoramic photograph of the inspection surface **500** with data corresponding to the physical location depicted), may be depicted with or as a part of the inspection map **818**. Additionally or alternatively, visual markers may be positioned on the inspection map **818**—for example, a red "X" (or any other symbol, including a color, bolded area, highlight, image data, a thumbnail, etc.) at a location of interest on the map—which marking may be physically present on the actual inspection surface **500** or only virtually depicted on the inspection map **818**. It can be seen that the inspection map **818** provides for a convenient and powerful reference tool for a user to determine the results of the inspection operation and plan for future maintenance, repair, or inspections, as well as planning logistics in response to the number of aspects of the system requiring further work or analysis and the location of the aspects requiring further work or analysis. Accordingly, inspection results can be analyzed more quickly, regulatory or policy approvals and

system up-time can be restored more quickly (if the system was shut-down for the inspection), configurations of an inspection robot **100** for a future inspection can be performed more quickly (e.g. preparing payload **2** configurations, obstacle management, and/or sensor selection or calibration), any of the foregoing can be performed with greater confidence that the results are reliable, and/or any combinations of the foregoing. Additionally or alternatively, less invasive operations can be performed, such as virtual marking which would not leave marks on the inspection surface **500** that might be removed (e.g., accidentally) before they are acted upon, which may remain after being acted upon, or which may create uncertainty as to when the marks were made over the course of multiple inspections and marking generations.

[0272] Referencing FIG. **10**, an illustrative example inspection map **818** having focus data **824** is depicted. The example inspection map **818** is responsive to a user focus value **822**, such as a mouse cursor **1002** hovering over a portion of the inspection map **818**. In the example, the focus data **824** comes up as a tooltip, although any depiction operations such as output to a file, populating a static window for focus data **824**, or any other operations known in the art are contemplated herein. The example focus data **824** includes a date (e.g., of the inspection), a time (e.g., of the inspection), the sensor calibrations utilized for the inspection, and the time to repair (e.g., down-time that would be required, actual repair time that would be required, the estimated time until the portion of the inspection surface **500** will require a repair, or any other description of a "time to repair"). The depicted focus data **824** is a non-limiting example, and any other information of interest may be utilized as focus data **824**. In certain embodiments, a user may select the information, or portions thereof, utilized on the inspection map **818**—including at least the axes **902**, **904** (e.g., units, type of information, relative versus absolute data, etc.) and the depicted data (e.g., units, values depicted, relative versus absolute values, thresholds or cutoffs of interest, processed values such as virtually determined parameters, and/or categorical values such as "PASSED" or "FAILED"). Additionally or alternatively, a user may select the information, or portions thereof, utilized as the focus data **824**.

[0273] In certain embodiments, an inspection map **818** (or display) provides an indication of how long a section of the inspection surface **500** is expected to continue under nominal operations, how much material should be added to a section of the inspection surface **500** (e.g., a repair coating or other material), and/or the type of repair that is needed (e.g., wall thickness correction, replacement of a coating, fixing a hole, breach, rupture, etc.).

[0274] Referencing FIG. **39**, an apparatus **4100** for determining a facility wear value **4106** is depicted. The example apparatus **4100** includes a facility wear circuit **4102** that determines a facility wear model **4104** corresponding to the inspection surface **500** and/or an industrial facility, industrial system, and/or plant including the inspection surface **500**. An example facility wear circuit **4102** accesses a facility wear model **4104**, and utilizes the inspection data **812** to determine which portions of the inspection surface **500** will require repair, when they will require repair, what type of repair will be required, and a facility wear value **4106** including a description of how long the inspection surface **500** will last without repair, and/or with selected repairs. In certain embodiments, the facility wear model **4104** includes historical data for the particular facility, system, or plant having the inspection surface **500**—for example through empirical observation of previous inspection data **812**, when repairs were performed, what types of repairs were performed, and/or how long repaired sections lasted after repairs.

[0275] Additionally or alternatively, the facility wear model **4104** includes data from offset facilities, systems, or plants (e.g., a similar system that operates a similar duty cycle of relevant temperatures, materials, process flow streams, vibration environment, etc. for the inspection surface **500**; and which may include inspection data, repair data, and/or operational data from the offset system), canonical data (e.g., pre-entered data based on estimates, modeling, industry standards, or other indirect sources), data from other facilities from the same data client (e.g., an operator, original equipment manufacturer, owner, etc. for the inspection surface), and/or user-entered data (e.g., from an inspection operator and/or client of the data) such as assumptions to be utilized, rates of return for financial parameters, policies or regulatory values, and/or characterizations of experience in similar systems that may be understood based on the experience of the user. Accordingly, operations of the facility wear circuit **4102** can provide an overview of repair operations recommended for the inspection surface **500**, including specific time frame estimates of when such repairs will be required, as well as a number of options for repair operations and how long they will last.

[0276] In certain embodiments, the facility wear value **4106**, and/or facility wear value **4106** displayed on an inspection map **818**, allows for strategic planning of repair operations, and/or coordinating the life cycle of the facility including the inspection surface **500**—for example performing a short-term repair at a given time, which might not be intuitively the "best" repair operation, but in view of a larger repair cycle that is upcoming for the facility. Additionally or alternatively, we facility wear value **4106** allows for a granular review of the inspection surface **500**—for example to understand operational conditions that drive high wear, degradation, and/or failure conditions of aspects of the inspection surface **500**. In certain embodiments, repair data and/or the facility wear value **4106** are provided in a context distinct from an inspection map **818**—for example as part of an inspection report (not shown), as part of a financial output related to the system having the inspection surface (e.g., considering the costs and shutdown times implicated by repairs, and/or risks associated with foregoing a repair).

[0277] Referencing FIG. **40**, a procedure **4200** for determining a facility wear value is depicted schematically. An example procedure **4200** includes an operation **4202** to interpret inspection data for an inspection surface, and an operation **4204** to access a facility wear model. The example procedure **4200** further includes an operation **4206** to determine a facility wear value in response to the inspection data and the facility wear model. The example procedure **4200** further includes an operation **4208** to provide the facility wear value—for example as a portion of an inspection map, an inspection report, and/or a financial report for a facility having the inspection surface.

[0278] In embodiments, the robotic vehicle may incorporate a number of sensors distributed across a number of sensor sleds **1**, such as with a single sensor mounted on a single sensor sled **1**, a number of sensors mounted on a

single sensor sled **1**, a number of sensor sleds **1** arranged in a linear configuration perpendicular to the direction of motion (e.g., side-to-side across the robotic vehicle), arranged in a linear configuration along the direction of motion (e.g., multiple sensors on a sensor sled **1** or multiple sensor sleds **1** arranged to cover the same surface location one after the other as the robotic vehicle travels). Additionally or alternatively, a number of sensors may be arranged in a two-dimensional surface area, such as by providing sensor coverage in a distributed manner horizontally and/or vertically (e.g., in the direction of travel), including offset sensor positions (e.g., reference FIG. **14**). In certain embodiments, the utilization of payloads **2** with sensor sleds mounted thereon enables rapid configuration of sensor placement as desired, sleds **1** on a given payload **2** can be further adjusted, and/or sensor(s) on a given sled can be changed or configured as desired.

[0279] In certain embodiments, two payloads **2** side-by-side allow for a wide horizontal coverage of sensing for a given travel of the inspection robot **100**—for example as depicted in FIG. **1**. In certain embodiments, a payload **2** is coupled to the inspection robot **100** with a pin or other quick-disconnect arrangement, allowing for the payload **2** to be removed, to be reconfigured separately from the inspection robot **100**, and/or to be replaced with another payload **2** configured in a desired manner. The payload **2** may additionally have a couplant connection to the inspection robot **100** (e.g., reference FIG. **27**—where a single couplant connection provides coupling connectivity to all sleds **1**A and **1**B) and/or an electrical connection to the inspection robot **100**. Each sled may include a couplant connection conduit where the couplant connection conduit is coupled to a payload couplant connection at the upstream end and is coupled to the couplant entry of the cone at the downstream end. Multiple payload couplant connections on a single payload may be coupled together to form a single couplant connection between the payload and the inspection robot. The single couplant connection per payload facilitates the changing of the payload without having to connect/disconnect the couplant line connections at each sled. The couplant connection conduit between the payload couplant connection and the couplant entry of the cone facilitates connecting/disconnecting a sled from a payload without having to connect/disconnect the couplant connection conduit from the couplant entry of the cone. The couplant and/or electrical connections may include power for the sensors as required, and/or communication coupling (e.g., a datalink or network connection). Additionally or alternatively, sensors may communicate wirelessly to the inspection robot **100** or to another computing device, and/or sensors may store data in a memory associated with the sensor, sled **1**, or payload **2**, which may be downloaded at a later time. Any other connection type required for a payload **2**, such as compressed air, paint, cleaning solutions, repair spray solutions, or the like, may similarly be coupled from the payload **2** to the inspection robot **100**.

[0280] The horizontal configuration of sleds **1** (and sensors) is selectable to achieve the desired inspection coverage. For example, sleds **1** may be positioned to provide a sled running on each of a selected number of pipes of an inspection surface, positioned such that several sleds **1** combine on a single pipe of an inspection surface (e.g., providing greater radial inspection resolution for the pipe), and/or at selected horizontal distances from each other (e.g., to provide 1 inch resolution, 2 inch resolution, 3 inch resolution, etc.). In certain embodiments, the degrees of freedom of the sensor sleds **1** (e.g., from pivots **16**, **17**, **18**) allow for distributed sleds **1** to maintain contact and orientation with complex surfaces.

[0281] In certain embodiments, sleds **1** are articulable to a desired horizontal position. For example, quick disconnects may be provided (pins, claims, set screws, etc.) that allow for the sliding of a sled **1** to any desired location on a payload **2**, allowing for any desired horizontal positioning of the sleds **1** on the payload **2**. Additionally or alternatively, sleds **1** may be movable horizontally during inspection operations. For example, a worm gear or other actuator may be coupled to the sled **1** and operable (e.g., by a controller **802**) to position the sled **1** at a desired horizontal location. In certain embodiments, only certain ones of the sleds **1** are moveable during inspection operations—for example outer sleds **1** for maneuvering past obstacles. In certain embodiments, all of the sleds **1** are moveable during inspection operations—for example to support arbitrary inspection resolution (e.g., horizontal resolution, and/or vertical resolution), to configure the inspection trajectory of the inspection surface, or for any other reason. In certain embodiments, the payload **2** is horizontally moveable before or during inspection operations. In certain embodiments, an operator configures the payload **2** and/or sled **1** horizontal positions before inspection operations (e.g., before or between inspection runs). In certain embodiments, an operator, or a controller **802** configures the payload **2** and/or sled **1** horizontal positions during inspection operations. In certain embodiments, an operator can configure the payload **2** and/or sled **1** horizontal positions remotely, for example communicating through a tether or wirelessly to the inspection robot.

[0282] The vertical configuration of sleds **1** is selectable to achieve the desired inspection coverage (e.g., horizontal resolution, vertical resolution, and/or redundancy). For example, referencing FIG. **11**, multiple payloads **2** are positioned on a front side of the inspection robot **100**, with forward payloads **2006** and rear payloads **1402**. In certain embodiments, a payload **2** may include a forward payload **2006** and a rear payload **1402** in a single hardware device (e.g., with a single mounting position to the inspection robot **100**), and/or may be independent payloads **2** (e.g., with a bracket extending from the inspection robot **100** past the rear payload **1402** for mounting the forward payloads **2006**). In the example of FIG. **11**, the rear payload **1402** and forward payload **2006** include sleds **1** mounted thereupon which are in vertical alignment **1302**—for example a given sled **1** of the rear payload **1402** traverses the same inspection position (or horizontal lane) of a corresponding sled **1** of the forward payload **2006**. The utilization of aligned payloads **2** provides for a number of capabilities for the inspection robot **100**, including at least: redundancy of sensing values (e.g., to develop higher confidence in a sensed value); the utilization of more than one sensing calibration for the sensors (e.g., a front sensor utilizes a first calibration set, and a rear sensor utilizes a second calibration set); the adjustment of sensing operations for a rear sensor relative to a forward sensor (e.g., based on the front sensed parameter, a rear sensor can operate at an adjusted range, resolution, sampling rate, or calibration); the utilization of a rear sensor in response to a front sensor detected value (e.g., a rear sensor may be a high cost sensor—either high power, high computing/processing

requirements, an expensive sensor to operate, etc.) where the utilization of the rear sensor can be conserved until a front sensor indicates that a value of interest is detected; the operation of a repair, marking, cleaning, or other capability rear payload **1402** that is responsive to the detected values of the forward payload **2006**; and/or for improved vertical resolution of the sensed values (e.g., if the sensor has a given resolution of detection in the vertical direction, the front and rear payloads can be operated out of phase to provide for improved vertical resolution).

[0283] In another example, referencing FIG. **12**, multiple payloads **2** are positioned on the front of the inspection robot **100**, with sleds **1** mounted on the forward payload **2006** and rear payload **1402** that are not aligned (e.g., lane **1304** is not shared between sleds of the forward payload **2006** and rear payload **1402**). The utilization of not aligned payloads **2** allows for improved resolution in the horizontal direction for a given number of sleds **1** mounted on each payload **2**. In certain embodiments, not aligned payloads may be utilized where the hardware space on a payload **2** is not sufficient to conveniently provide a sufficient number or spacing of sleds **1** to achieve the desired horizontal coverage. In certain embodiments, not aligned payloads may be utilized to limit the number of sleds **1** on a given payload **2**, for example to provide for a reduced flow rate of couplant through a given payload-inspection robot connection, to provide for a reduced load on an electrical coupling (e.g., power supply and/or network communication load) between a given payload and the inspection robot. While the examples of FIGS. **11** and **12** depict aligned or not aligned sleds for convenience of illustration, a given inspection robot **100** may be configured with both aligned and not aligned sleds **1**, for example to reduce mechanical loads, improve inspection robot balance, in response to inspection surface constraints, or the like.

[0284] It can be seen that sensors may be modularly configured on the robotic vehicle to collect data on specific locations across the surface of travel (e.g., on a top surface of an object, on the side of an object, between objects, and the like), repeat collection of data on the same surface location (e.g., two sensors serially collecting data from the same location, either with the same sensor type or different sensor types), provide predictive sensing from a first sensor to determine if a second sensor should take data on the same location at a second time during a single run of the robotic vehicle (e.g., an ultra-sonic sensor mounted on a leading sensor sled taking data on a location determines that a gamma-ray measurement should be taken for the same location by a sensor mounted on a trailing sensor sled configured to travel over the same location as the leading sensor), provide redundant sensor measurements from a plurality of sensors located in leading and trailing locations (e.g., located on the same or different sensor sleds to repeat sensor data collection), and the like.

[0285] In certain embodiments, the robotic vehicle includes sensor sleds with one sensor and sensor sleds with a plurality of sensors. A number of sensors arranged on a single sensor sled may be arranged with the same sensor type across the direction of robotic vehicle travel (e.g., perpendicular to the direction of travel, or "horizontal") to increase coverage of that sensor type (e.g., to cover different surfaces of an object, such as two sides of a pipe), arranged with the same sensor type along the direction of robotic vehicle travel (e.g., parallel to the direction of travel, or "vertical") to provide redundant coverage of that sensor type over the same location (e.g., to ensure data coverage, to enable statistical analysis based on multiple measurements over the same location), arranged with a different sensor type across the direction of robotic vehicle travel to capture a diversity of sensor data in side-by-side locations along the direction of robotic vehicle travel (e.g., providing both ultra-sonic and conductivity measurements at side-by-side locations), arranged with a different sensor type along the direction of robotic vehicle travel to provide predictive sensing from a leading sensor to a trailing sensor (e.g., running a trailing gamma-ray sensor measurement only if a leading ultra-sonic sensor measurement indicates the need to do so), combinations of any of these, and the like. The modularity of the robotic vehicle may permit exchanging sensor sleds with the same sensor configuration (e.g., replacement due to wear or failure), different sensor configurations (e.g., adapting the sensor arrangement for different surface applications), and the like.

[0286] Providing for multiple simultaneous sensor measurements over a surface area, whether for taking data from the same sensor type or from different sensor types, provides the ability to maximize the collection of sensor data in a single run of the robotic vehicle. If the surface over which the robotic vehicle was moving were perfectly flat, the sensor sled could cover a substantial surface with an array of sensors. However, the surface over which the robotic vehicle travels may be highly irregular, and have obstacles over which the sensor sleds must adjust, and so the preferred embodiment for the sensor sled is relatively small with a highly flexible orientation, as described herein, where a plurality of sensor sleds is arranged to cover an area along the direction of robotic vehicle travel. Sensors may be distributed amongst the sensor sleds as described for individual sensor sleds (e.g., single sensor per sensor sled, multiple sensors per sensor sled (arranged as described herein)), where total coverage is achieved through a plurality of sensor sleds mounted to the robotic vehicle. One such embodiment, as introduced herein, such as depicted in FIG. **1**, comprises a plurality of sensor sleds arranged linearly across the direction of robotic vehicle travel, where the plurality of sensor sleds is capable of individually adjusting to the irregular surface as the robotic vehicle travels. Further, each sensor sled may be positioned to accommodate regular characteristics in the surface (e.g., positioning sensor sleds to ride along a selected portion of a pipe aligned along the direction of travel), to provide for multiple detections of a pipe or tube from a number of radial positions, sensor sleds may be shaped to accommodate the shape of regular characteristics in the surface (e.g., rounded surface of a pipe), and the like. In this way, the sensor sled arrangement may accommodate both the regular characteristics in the surface (e.g., a series of features along the direction of travel) and irregular characteristics along the surface (e.g., obstacles that the sensor sleds flexibly mitigate during travel along the surface).

[0287] Although FIG. **1** depicts a linear arrangement of sensor sleds with the same extension (e.g., the same connector arm length), another example arrangement may include sensor sleds with different extensions, such as where some sensor sleds are arranged to be positioned further out, mounted on longer connection arms. This arrangement may have the advantage of allowing a greater density of sensors across the configuration, such as where a more leading

sensor sled could be positioned linearly along the configuration between two more trailing sensor sleds such that sensors are provided greater linear coverage than would be possible with all the sensor sleds positioned side-by-side. This configuration may also allow improved mechanical accommodation between the springs and connectors that may be associated with connections of sensor sleds to the arms and connection assembly (e.g., allowing greater individual movement of sensor sleds without the sensor sleds making physical contact with one another).

[0288] Referring to FIG. **11**, an example configuration of sensor sleds includes the forward payload **2006** ahead of the rear payload, each payload includes a sled array, such as where each utilizes a sensor sled connector assembly for mounting the payloads. Again, although FIG. **11** depicts the sensor sleds arranged on the sensor sled connector assembly with equal length arms, different length arms may be utilized to position, for instance, sensor sleds of sensor sled array of the rear payload **1402** in intermediate positions between other rear sensor sleds of rear payload **1402** and forward sensor sleds of the forward payload **2006**. As was the case with the arrangement of a plurality of sensors on a single sensor sled to accommodate different coverage options (e.g., maximizing coverage, predictive capabilities, redundancy, and the like), the extended area configuration of sensors in this multiple sensor sled array arrangement allows similar functionality. For instance, a sensor sled positioned in a lateral position on the forward payload **2006** may provide redundant or predictive functionality for another sensor sled positioned in the same lateral position on the rear payload **1402**. In the case of a predictive functionality, the greater travel distance afforded by the separation between a sensor sled mounted on a second sensor sled array of the forward payload **2006** and a sensor sled array of the rear payload **1402** may provide for additional processing time for determining, for instance, whether the sensor in the trailing sensor sled should be activated. For example, the leading sensor collects sensor data and sends that data to a processing function (e.g., wired communication to on-board or external processing, wireless communication to external processing), the processor takes a period of time to determine if the trailing sensor should be activated, and after the determination is made, activates the trailing sensor. The separation of the two sensors, divided by the rate of travel of the robotic vehicle, determines the time available for processing. The greater the distance, the greater the processing time allowed. Referring to FIG. **13**, in another example, distance is increased further by utilizing a trailing payload **2008**, thus increasing the distance and processing time further. Additionally or alternatively, the hardware arrangement of FIG. **13** may provide for more convenient integration of the trailing payload **2008** rather than having multiple payloads **1402**, **2006** in front of the inspection robot **100**. In certain embodiments, certain operations of a payload **2** may be easier or more desirable to perform on a trailing side of the inspection robot **100**—such as spraying of painting, marking, or repair fluids, to avoid the inspection robot **100** having to be exposed to such fluids as a remaining mist, by gravity flow, and/or having to drive through the painted, cleaned, or repaired area. In certain embodiments, an inspection robot **100** may additionally or alternatively include both multiple payloads **1402**, **2006** in front of the inspection robot (e.g., as depicted in FIGS. **11** and **12**) and/or one or more trailing payloads (e.g., as depicted in FIG. **13**).

[0289] In another example, the trailing payload **2008** (e.g. a sensor sled array) may provide a greater distance for functions that would benefit the system by being isolated from the sensors in the forward end of the robotic vehicle. For instance, the robotic vehicle may provide for a marking device (e.g., visible marker, UV marker, and the like) to mark the surface when a condition alert is detected (e.g., detecting corrosion or erosion in a pipe at a level exceeding a predefined threshold, and marking the pipe with visible paint).

[0290] Embodiments with multiple sensor sled connector assemblies provide configurations and area distribution of sensors that may enable greater flexibility in sensor data taking and processing, including alignment of same-type sensor sleds allowing for repeated measurements (e.g., the same sensor used in a leading sensor sled as in a trailing sensor sled, such as for redundancy or verification in data taking when leading and trailing sleds are co-aligned), alignment of different-type sensor sleds for multiple different sensor measurements of the same path (e.g., increase the number of sensor types taking data, have the lead sensor provide data to the processor to determine whether to activate the trailing sensor (e.g., ultra-sonic/gamma-ray, and the like)), off-set alignment of same-type sensor sleds for increased coverage when leading and trailing sleds are off-set from one another with respect to travel path, off-set alignment of different-type sensor sleds for trailing sensor sleds to measure surfaces that have not been disturbed by leading sensor sleds (e.g., when the leading sensor sled is using a couplant), and the like.

[0291] The modular design of the robotic vehicle may provide for a system flexible to different applications and surfaces (e.g., customizing the robot and modules of the robot ahead of time based on the application, and/or during an inspection operation), and to changing operational conditions (e.g., flexibility to changes in surface configurations and conditions, replacement for failures, reconfiguration based on sensed conditions), such as being able to change out sensors, sleds, assemblies of sleds, number of sled arrays, and the like.

[0292] An example inspection robot utilizes a magnet-based wheel design (e.g., reference FIGS. **2A-2B** and the related description). Although the inspection robot may utilize flux directing ferromagnetic wheel components, such as ferromagnetic magnet enclosures **3** to minimize the strength of the extended magnetic field, ferromagnetic components within the inspection robot may be exposed to a magnetic field. One component that may experience negative effects from the magnetic field is the gearbox, which may be mounted proximate to the wheel assembly.

[0293] Throughout the present description, certain orientation parameters are described as "horizontal," "perpendicular," and/or "across" the direction of travel of the inspection robot, and/or described as "vertical," "parallel," and/or in line with the direction of travel of the inspection robot. It is specifically contemplated herein that the inspection robot may be travelling vertically, horizontally, at oblique angles, and/or on curves relative to a ground-based absolute coordinate system. Accordingly, except where the context otherwise requires, any reference to the direction of travel of the inspection robot is understood to include any orientation of the robot—such as an inspection robot traveling horizontally on a floor may have a "vertical" direction for purposes of understanding sled distribution that is in a

"horizontal" absolute direction. Additionally, the "vertical" direction of the inspection robot may be a function of time during inspection operations and/or position on an inspection surface—for example as an inspection robot traverses over a curved surface. In certain embodiments, where gravitational considerations or other context based aspects may indicate—vertical indicates an absolute coordinate system vertical—for example in certain embodiments where couplant flow into a cone is utilized to manage bubble formation in the cone. In certain embodiments, a trajectory through the inspection surface of a given sled may be referenced as a "horizontal inspection lane"—for example, the track that the sled takes traversing through the inspection surface.

[0294] Certain embodiments include an apparatus for acoustic inspection of an inspection surface with arbitrary resolution. Arbitrary resolution, as utilized herein, includes resolution of features in geometric space with a selected resolution—for example resolution of features (e.g., cracks, wall thickness, anomalies, etc.) at a selected spacing in horizontal space (e.g., perpendicular to a travel direction of an inspection robot) and/or vertical space (e.g., in a travel direction of an inspection robot). While resolution is described in terms of the travel motion of an inspection robot, resolution may instead be considered in any coordinate system, such as cylindrical or spherical coordinates, and/or along axes unrelated to the motion of an inspection robot. It will be understood that the configurations of an inspection robot and operations described in the present disclosure can support arbitrary resolution in any coordinate system, with the inspection robot providing sufficient resolution as operated, in view of the target coordinate system. Accordingly, for example, where inspection resolution of 6-inches is desired in a target coordinate system that is diagonal to the travel direction of the inspection robot, the inspection robot and related operations described throughout the present disclosure can support whatever resolution is required (whether greater than 6-inches, less than 6-inches, or variable resolution depending upon the location over the inspection surface) to facilitate the 6-inch resolution of the target coordinate system. It can be seen that an inspection robot and/or related operations capable of achieving an arbitrary resolution in the coordinates of the movement of the inspection robot can likewise achieve arbitrary resolution in any coordinate system for the mapping of the inspection surface. For clarity of description, apparatus, and operations to support an arbitrary resolution are described in view of the coordinate system of the movement of an inspection robot.

[0295] An example apparatus to support acoustic inspection of an inspection surface includes an inspection robot having a payload and a number of sleds mounted thereon, with the sleds each having at least one acoustic sensor mounted thereon. Accordingly, the inspection robot is capable of simultaneously determining acoustic parameters at a range of positions horizontally. Sleds may be positioned horizontally at a selected spacing, including providing a number of sleds to provide sensors positioned radially around several positions on a pipe or other surface feature of the inspection surface. In certain embodiments, vertical resolution is supported according to the sampling rate of the sensors, and/or the movement speed of the inspection robot. Additionally or alternatively, the inspection robot may have vertically displaced payloads, having an additional number of sleds mounted thereon, with the sleds each having at least one acoustic sensor mounted thereon. The utilization of additional vertically displaced payloads can provide additional resolution, either in the horizontal direction (e.g., where sleds of the vertically displaced payload(s) are offset from sleds in the first payload(s)) and/or in the vertical direction (e.g., where sensors on sleds of the vertically displaced payload(s) are sampling such that sensed parameters are vertically offset from sensors on sleds of the first payload(s)). Accordingly, it can be seen that, even where physical limitations of sled spacing, numbers of sensors supported by a given payload, or other considerations limit horizontal resolution for a given payload, horizontal resolution can be enhanced through the utilization of additional vertically displaced payloads. In certain embodiments, an inspection robot can perform another inspection run over a same area of the inspection surface, for example with sleds tracking in an offset line from a first run, with positioning information to ensure that both horizontal and/or vertical sensed parameters are offset from the first run.

[0296] Accordingly, an apparatus is provided that achieves significant resolution improvements, horizontally and/or vertically, over previously known systems. Additionally or alternatively, an inspection robot performs inspection operations at distinct locations on a descent operation than on an ascent operation, providing for additional resolution improvements without increasing a number of run operations required to perform the inspection (e.g., where an inspection robot ascends an inspection surface, and descends the inspection surface as a normal part of completing the inspection run). In certain embodiments, an apparatus is configured to perform multiple run operations to achieve the selected resolution. It can be seen that the greater the number of inspection runs required to achieve a given spatial resolution, the longer the down time for the system (e.g., an industrial system) being inspected (where a shutdown of the system is required to perform the inspection), the longer the operating time and greater the cost of the inspection, and/or the greater chance that a failure occurs during the inspection. Accordingly, even where multiple inspection runs are required, a reduction in the number of the inspection runs is beneficial.

[0297] In certain embodiments, an inspection robot includes a low fluid loss couplant system, enhancing the number of sensors that are supportable in a given inspection run, thereby enhancing available sensing resolution. In certain embodiments, an inspection robot includes individual down force support for sleds and/or sensors, providing for reduced fluid loss, reduced off-nominal sensing operations, and/or increasing the available number of sensors supportable on a payload, thereby enhancing available sensing resolution. In certain embodiments, an inspection robot includes a single couplant connection for a payload, and/or a single couplant connection for the inspection robot, thereby enhancing reliability and providing for a greater number of sensors on a payload and/or on the inspection robot that are available for inspections under commercially reasonable operations (e.g., configurable for inspection operations with reasonable reliability, checking for leaks, expected to operate without problems over the course of inspection operations, and/or do not require a high level of skill or expensive test equipment to ensure proper operation). In certain embodiments, an inspection robot includes acoustic sensors coupled to acoustic cones, enhancing robust detection operations (e.g., a high percentage of valid sensing

data, ease of acoustic coupling of a sensor to an inspection surface, etc.), reducing couplant fluid losses, and/or easing integration of sensors with sleds, thereby supporting an increased number of sensors per payload and/or inspection robot, and enhancing available sensing resolution. In certain embodiments, an inspection robot includes utilizing water as a couplant, thereby reducing fluid pumping losses, reducing risks due to minor leaks within a multiple plumbing line system to support multiple sensors, and/or reducing the impact (environmental, hazard, clean-up, etc.) of performing multiple inspection runs and/or performing an inspection operation with a multiplicity of acoustic sensors operating.

[0298] Referencing FIG. **31**, an example procedure **3300** to acoustically inspect an inspection surface with an arbitrary (or selectable) resolution is schematically depicted. The example procedure **3300** includes an operation **3302** to determine a desired resolution of inspection for the surface. The operation **3302** includes determining the desired resolution in whatever coordinate system is considered for the inspection surface, and translating the desired resolution for the coordinate system of the inspection surface to a coordinate system of an inspection robot (e.g., in terms of vertical and horizontal resolution for the inspection robot), if the coordinate system for the inspection surface is distinct from the coordinate system of the inspection robot. The example procedure **3300** further includes an operation **3304** to provide an inspection robot in response to the desired resolution of inspection, the inspection robot having at least one payload, a number of sleds mounted on the payload, and at least one acoustic sensor mounted on each sled. It will be understood that certain sleds on the payload may not have an acoustic sensor mounted thereupon, but for provision of selected acoustic inspection resolution, only the sleds having an acoustic sensor mounted thereupon are considered. In certain embodiments, operation **3304** additionally or alternatively includes one or more operations such as: providing multiple payloads; providing vertically displaced payloads; providing offset sleds on one or more vertically displaced payloads; providing payloads having a single couplant connection for the payload; providing an inspection robot having a single couplant connection for the inspection robot; providing an inspection robot utilizing water as a couplant; providing a down force to the sleds to ensure alignment and/or reduced fluid loss; providing degrees of freedom of movement to the sleds to ensure alignment and/or robust obstacle traversal; providing the sensors coupled to an acoustic cone; and/or configuring a horizontal spacing of the sleds in response to the selected resolution (e.g., spaced to support the selected resolution, spaced to support the selected resolution between an ascent and a descent, and/or spaced to support the selected resolution with a scheduled number of inspection runs).

[0299] The example procedure **3300** further includes an operation **3306** to perform an inspection operation of an inspection surface with arbitrary resolution. For example, operation **3306** includes at least: operating the number of horizontally displaced sensors to achieve the arbitrary resolution; operating vertically displaced payloads in a scheduled manner (e.g., out of phase with the first payload thereby inspecting a vertically distinct set of locations of the inspection surface); operating vertically displaced payloads to enhance horizontal inspection resolution; performing an inspection on a first horizontal track on an ascent, and a second horizontal track distinct from the first horizontal track on a descent; performing an inspection on a first vertical set of points on an ascent, and on a second vertical set of points on a descent (which may be on the same or a distinct horizontal track); and/or performing a plurality of inspection runs where the horizontal and/or vertical inspection positions of the multiple runs are distinct from the horizontal and/or vertical inspection positions of a first run. Certain operations of the example procedure **3300** may be performed by a controller **802**.

[0300] While operations of procedure **3300**, and an apparatus to provide for arbitrary or selected resolution inspections of a system are described in terms of acoustic sensing, it will be understood that arbitrary or selected resolution of other sensed parameters are contemplated herein. In certain embodiments, acoustic sensing provides specific challenges that are addressed by certain aspects of the present disclosure. However, sensing of any parameter, such as temperature, magnetic or electro-magnetic sensing, infra-red detection, UV detection, composition determinations, and other sensed parameters also present certain challenges addressed by certain aspects of the present disclosure. For example, the provision of multiple sensors in a single inspection run at determinable locations, the utilization of an inspection robot (e.g., instead of a person positioned in the inspection space), including an inspection robot with position sensing, and/or the reduction of sensor interfaces including electrical and communication interfaces, provides for ease of sensing for any sensed parameters at a selected resolution. In certain embodiments, a system utilizes apparatuses and operations herein to achieve arbitrary resolution for acoustic sensing. In certain embodiments, a system additionally or alternatively utilizes apparatuses and operations herein to achieve arbitrary resolution for any sensed parameter.

[0301] Referencing FIG. **32**, an example apparatus **3400** is depicted for configuring a trailing sensor inspection scheme in response to a leading sensor inspection value. The example apparatus **3400** includes a controller **802** having an inspection data circuit **804** that interprets lead inspection data **3402** from a lead sensor. Example and non-limiting lead sensors include a sensor mounted on a sled of a forward payload **2006**, a sensor mounted on either a forward payload **2006** or a rear payload **1402** of an inspection robot having a trailing payload **2008**, and/or a sensor operated on a first run of an inspection robot, where operations of the apparatus **3400** proceed with adjusting operations of a sensor on a subsequent run of the inspection robot (e.g., the first run is ascending, and the subsequent run is descending; the first run is descending, and the subsequent run is ascending; and/or the first run is performed at a first time, and the subsequent run is performed at a second, later, time).

[0302] The example controller **802** further includes a sensor configuration circuit **3404** structured to determine a configuration adjustment **3406** for a trailing sensor. Example and non-limiting trailing sensors include any sensor operating over the same or a substantially similar portion of the inspection surface as the lead sensor, at a later point in time. A trailing sensor may be a sensor positioned on a payload behind the payload having the lead sensor, a physically distinct sensor from the lead sensor operating over the same or a substantially similar portion of the inspection surface after the lead sensor, and/or a sensor that is physically the same sensor as the lead sensor, but reconfigured in some aspect (e.g., sampling parameters, calibrations, inspection robot rate of travel change, etc.). A portion that is substan-

tially similar includes a sensor operating on a sled in the same horizontal track (e.g., in the direction of inspection robot movement) as the lead sensor, a sensor that is sensing a portion of the inspection sensor that is expected to determine the same parameters (e.g., wall thickness in a given area) of the inspection surface as that sensed by the lead sensor, and/or a sensor operating in a space of the inspection area where it is expected that determinations for the lead sensor would be effective in adjusting the trailing sensor. Example and non-limiting determinations for the lead sensor to be effective in adjusting the trailing sensor include pipe thickness determinations for a same pipe and/or same cooling tower, where pipe thickness expectations may affect the calibrations or other settings utilized by the lead and trailing sensors; determination of a coating thickness where the trailing sensor operates in an environment that has experienced similar conditions (e.g., temperatures, flow rates, operating times, etc.) as the conditions experienced by the environment sensed by the lead sensor; and/or any other sensed parameter affecting the calibrations or other settings utilized by the lead and trailing sensors where knowledge gained by the lead sensor could be expected to provide information utilizable for the trailing sensor.

[0303] Example and non-limiting configuration adjustments **3406** include changing of sensing parameters such as cut-off times to observe peak values for ultra-sonic processing, adjustments of rationality values for ultra-sonic processing, enabling of trailing sensors or additional trailing sensors (e.g., X-ray, gamma ray, high resolution camera operations, etc.), adjustment of a sensor sampling rate (e.g., faster or slower), adjustment of fault cut-off values (e.g., increase or decrease fault cutoff values), adjustment of any transducer configurable properties (e.g., voltage, waveform, gain, filtering operations, and/or return detection algorithm), and/or adjustment of a sensor range or resolution value (e.g., increase a range in response to a lead sensing value being saturated or near a range limit, decrease a range in response to a lead sensing value being within a specified range window, and/or increase or decrease a resolution of the trailing sensor). In certain embodiments, a configuration adjustment **3406** to adjust a sampling rate of a trailing sensor includes by changing a movement speed of an inspection robot. Example and non-limiting configuration adjustments include any parameters described in relation to FIGS. **37**, **38**, and **41-46** and the related descriptions. It can be seen that the knowledge gained from the lead inspection data **3402** can be utilized to adjust the trailing sensor plan which can result more reliable data (e.g., where calibration assumptions appear to be off-nominal for the real inspection surface), the saving of one or more inspection runs (e.g., reconfiguring the sensing plan in real-time to complete a successful sensing run during inspection operations), improved operations for a subsequent portion of a sensing run (e.g., a first inspection run of the inspection surface improves the remaining inspection runs, even if the vertical track of the first inspection run must be repeated), and/or efficient utilization of expensive sensing operations by utilizing such operations only when the lead inspection data **3402** indicates such operations are useful or required. The example controller **802** includes a sensor operation circuit **3408** that adjusts parameters of the trailing sensor in response to the configuration adjustment **3406**, and the inspection data circuit **804** interpreting trailing inspection data **3410**, wherein the trailing sensors are responsive to the adjusted parameters by the sensor operation circuit.

[0304] Referencing FIG. **33**, an example procedure **3500** to configure a trailing sensor in response to a leading sensor value is depicted. The example procedure **3500** includes an operation **3502** to interpret lead inspection data provided by a leading sensor, and an operation **3504** to determine whether the lead inspection data indicates that a trailing sensor configuration should be adjusted. Where the operation **3504** determines that the trailing sensor configuration should be adjusted, the example procedure **3500** includes an operation **3508** to adjust the trailing sensor configuration in response to the lead inspection data. Example and non-limiting operations **3508** to adjust a trailing sensor configuration include changing a calibration for the sensor (e.g., an analog/digital processor configuration, cutoff time values, and/or speed-of-sound values for one or more materials), changing a range or resolution of the trailing sensor, enabling or disabling sensing operations of a trailing sensor, and/or adjusting a speed of travel of an inspection robot. In certain embodiments, operations **3508** include adjusting a horizontal position of a trailing sensor (e.g., where a horizontal position of a sled **1** on a payload **2** is actively controllable by a controller **802**, and/or adjusted manually between the lead sensing operation and the trailing sensing operation).

[0305] In certain embodiments, lead inspection data **3402** includes ultra-sonic information such as processed ultra-sonic information from a sensor, and the sensor configuration circuit **3404** determines to utilize a consumable, slower, and/or more expensive sensing, repair, and/or marking operation by providing a configuration adjustment **3406** instructing a trailing sensor to operate, or to change nominal operations, in response to the lead inspection data **3402**. For example, lead inspection data **3402** may indicate a thin wall, and sensor configuration circuit **3404** provides the configuration adjustment **3406** to alter a trailing operation such as additional sensing with a more capable sensor (e.g., a more expensive or capable ultra-sonic sensor, an X-ray sensor, a gamma ray sensor, or the like) and/or to operate a repair or marking tool (e.g., which may have a limited or consumable amount of coating material, marking material, or the like) at the location determined to have the thin wall. Accordingly, expense, time, and/or operational complication can be added to inspection operations in a controlled manner according to the lead inspection data **3402**.

[0306] An example apparatus is disclosed to perform an inspection of an industrial surface. Many industrial surfaces are provided in hazardous locations, including without limitation where heavy or dangerous mechanical equipment operates, in the presence of high temperature environments, in the presence of vertical hazards, in the presence of corrosive chemicals, in the presence of high pressure vessels or lines, in the presence of high voltage electrical conduits, equipment connected to and/or positioned in the vicinity of an electrical power connection, in the presence of high noise, in the presence of confined spaces, and/or with any other personnel risk feature present. Accordingly, inspection operations often include a shutdown of related equipment, and/or specific procedures to mitigate fall hazards, confined space operations, lockout-tagout procedures, or the like. In certain embodiments, the utilization of an inspection robot allows for an inspection without a shutdown of the related equipment. In certain embodiments, the utilization of an

inspection robot allows for a shutdown with a reduced number of related procedures that would be required if personnel were to perform the inspection. In certain embodiments, the utilization of an inspection robot provides for a partial shutdown to mitigate some factors that may affect the inspection operations and/or put the inspection robot at risk, but allows for other operations to continue. For example, it may be acceptable to position the inspection robot in the presence of high pressure or high voltage components, but operations that generate high temperatures may be shut down.

[0307] In certain embodiments, the utilization of an inspection robot provides additional capabilities for operation. For example, an inspection robot having positional sensing within an industrial environment can request shutdown of only certain aspects of the industrial system that are related to the current position of the inspection robot, allowing for partial operations as the inspection is performed. In another example, the inspection robot may have sensing capability, such as temperature sensing, where the inspection robot can opportunistically inspect aspects of the industrial system that are available for inspection, while avoiding other aspects or coming back to inspect those aspects when operational conditions allow for the inspection. Additionally, in certain embodiments, it is acceptable to risk the industrial robot (e.g., where shutting down operations exceed the cost of the loss of the industrial robot) to perform an inspection that has a likelihood of success, where such risks would not be acceptable for personnel. In certain embodiments, a partial shutdown of a system has lower cost than a full shutdown, and/or can allow the system to be kept in a condition where restart time, startup operations, etc. are at a lower cost or reduced time relative to a full shutdown. In certain embodiments, the enhanced cost, time, and risk of performing additional operations beyond mere shutdown, such as compliance with procedures that would be required if personnel were to perform the inspection, can be significant.

[0308] Referencing FIG. **34**, an example apparatus **3600** to inspect a plant, industrial system, and/or inspection surface utilizing position information is depicted schematically. The example apparatus **3600** includes a position definition circuit **3602** that interprets position information **3604**, and/or determines a plant position definition **3606** (e.g., a plant definition value) and an inspection robot position (e.g., as one or more plant position values **3614**) in response to the position information **3604**. Example and non-limiting position information **3604** includes relative and/or absolute position information—for example a distance from a reference position (e.g., a starting point, stopping point, known object in proximity to the plant, industrial system, and/or inspection surface, or the like). In certain embodiments, position information **3604** is determinable according to a global positioning service (GPS) device, ultra-wide band radio frequency (RF) signaling, LIDAR or other direct distance measurement devices (including line-of-sight and/or sonar devices), aggregating from reference points (e.g., routers, transmitters, know devices in communication with the inspection robot, or the like), utilizing known obstacles as a reference point, encoders (e.g., a wheel counter or other device), barometric sensors (e.g., altitude determination), utilization of a known sensed value correlated to position (e.g., sound volume or frequency, temperature, vibration, etc.), and/or utilizing an inertial measurement unit (e.g., measuring and/or calculating utilizing an accelerometer and/or gyroscope). In certain embodiments, values may be combined to determine the position information **3604**—for example in 3-D space without further information, four distance measurements are ordinarily required to determine a specific position value. However, utilizing other information, such as a region of the inspection surface that the inspection robot is operating on (e.g., which pipe the inspection robot is climbing), an overlay of the industrial surface over the measurement space, a distance traveled from a reference point, a distance to a reference point, etc., the number of distance measurements required to determine a position value can be reduced to three, two, one, or even eliminated and still position information **3604** is determinable. In certain embodiments, the position definition circuit **3602** determines the position information **3604** completely or partially on dead reckoning (e.g., accumulating speed and direction from a known position, and/or direction combined with a distance counter), and/or corrects the position information **3604** when feedback based position data (e.g., a true detected position) is available.

[0309] Example and non-limiting plant position values **3608** include the robot position information **3604** integrated within a definition of the plant space, such as the inspection surface, a defined map of a portion of the plant or industrial system, and/or the plant position definition **3606**. In certain embodiments, the plant space is predetermined, for example as a map interpreted by the controller **802** and/or pre-loaded in a data file describing the space of the plant, inspection surface, and/or a portion of the plant or industrial surface. In certain embodiments, the plant position definition **3606** is created in real-time by the position definition circuit **3602**—for example by integrating the position information **3604** traversed by the inspection robot, and/or by creating a virtual space that includes the position information **3604** traversed by the inspection robot. For example, the position definition circuit **3602** may map out the position information **3604** over time, and create the plant position definition **3606** as the aggregate of the position information **3604**, and/or create a virtual surface encompassing the aggregated plant position values **3614** onto the surface. In certain embodiments, the position definition circuit **3602** accepts a plant shape value **3608** as an input (e.g., a cylindrical tank being inspected by the inspection robot having known dimensions), deduces the plant shape value **3608** from the aggregated position information **3604** (e.g., selecting from one of a number of simple or available shapes that are consistent with the aggregated plant position definition **3606**), and/or prompts a user (e.g., an inspection operator and/or a client for the data) to select one of a number of available shapes to determine the plant position definition **3606**.

[0310] The example apparatus **3600** includes a data positioning circuit **3610** that interprets inspection data **3612** and correlates the inspection data **3612** to the position information **3604** and/or to the plant position values **3614**. Example and non-limiting inspection data **3612** includes: sensed data by an inspection robot; environmental parameters such as ambient temperature, pressure, time-of-day, availability and/or strength of wireless communications, humidity, etc.; image data, sound data, and/or video data taken during inspection operations; metadata such as an inspection number, customer number, operator name, etc.; setup parameters such as the spacing and positioning of sleds, payloads, mounting configuration of sensors, and the like; calibration

values for sensors and sensor processing; and/or operational parameters such as fluid flow rates, voltages, pivot positions for the payload and/or sleds, inspection robot speed values, downforce parameters, etc. In certain embodiments, the data positioning circuit **3610** determines the positional information **3604** corresponding to inspection data **3612** values, and includes the positional information **3604** as an additional parameter with the inspection data **3612** values and/or stores a correspondence table or other data structure to relate the positional information **3604** to the inspection data **3612** values. In certain embodiments, the data positioning circuit **3610** additionally or alternatively determines the plant position definition **3606**, and includes a plant position value **3614** (e.g., as a position within the plant as defined by the plant position definition **3606**) as an additional parameter with the inspection data **3612** values and/or stores a correspondence table or other data structure to relate the plant position values **3614** to the inspection data **3612** values. In certain embodiments, the data positioning circuit **3610** creates position informed data **3616**, including one or more, or all, aspects of the inspection data **3612** correlated to the position information **3604** and/or to the plant position values **3614**.

[0311] In certain embodiments, for example where dead reckoning operations are utilized to provide position information **3604** over a period of time, and then a corrected position is available through a feedback position measurement, the data positioning circuit **3602** updates the position informed inspection data **3616**—for example re-scaling the data according to the estimated position for values according to the changed feedback position (e.g., where the feedback position measurement indicates the inspection robot traveled 25% further than expected by dead reckoning, position information **3604** during the dead reckoning period can be extended by 25%) and/or according to rationalization determinations or externally available data (e.g., where over 60 seconds the inspection robot traverses 16% less distance than expected, but sensor readings or other information indicate the inspection robot may have been stuck for 10 seconds, then the position information **3604** may be corrected to represent the 10-seconds of non-motion rather than a full re-scale of the position informed inspection data **3616**). In certain embodiments, dead reckoning operations may be corrected based on feedback measurements as available, and/or in response to the feedback measurement indicating that the dead reckoning position information exceeds a threshold error value (e.g., 1%, 0.1%, 0.01%, etc.).

[0312] It can be seen that the operations of apparatus **3600** provide for position-based inspection information. Certain systems, apparatuses, and procedures throughout the present disclosure utilize and/or can benefit from position informed inspection data **3616**, and all such embodiments are contemplated herein. Without limitation to any other disclosures herein, certain aspects of the present disclosure include: providing a visualization of inspection data **3612** in position information **3604** space and/or in plant position value **3614** space; utilizing the position informed inspection data **3616** in planning for a future inspection on the same or a similar plant, industrial system, and/or inspection surface (e.g., configuring sled number and spacing, inspection robot speed, inspection robot downforce for sleds and/or sensors, sensor calibrations, planning for traversal and/or avoidance of obstacles, etc.); providing a format for storing a virtual mark (e.g., replacing a paint or other mark with a virtual mark as a parameter in the inspection data **3612** correlated to a position); determining a change in a plant condition in response to the position informed inspection data **3616** (e.g., providing an indication that expected position information **3604** did not occur in accordance with the plant position definition **3606**—for example indicating a failure, degradation, or unexpected object in a portion of the inspected plant that is not readily visible); and/or providing a health indicator of the inspection surface (e.g., depicting regions that are nominal, passed, need repair, will need repair, and/or have failed). In certain embodiments, it can be seen that constructing the position informed inspection data **3616** using position information **3604** only, including dead reckoning based position information **3604**, nevertheless yields many of the benefits of providing the position informed inspection data **3616**. In certain further embodiments, the position informed inspection data **3616** is additionally or alternatively constructed utilizing the plant position definition **3606**, and/or the plant position values **3614**.

[0313] Referencing FIG. **35**, an example procedure **3700** to inspect a plant, industrial system, and/or inspection surface utilizing position information is depicted. The example procedure **3700** includes an operation **3702** to interpret position information, an operation **3704** to interpret inspection data, and an operation **3706** correlate the inspection data to the position information. The example procedure **3700** further includes an operation **3708** to correct the position information (e.g., updating a dead reckoning-based position information), and to update the correlation of the inspection data to the position information. The example procedure further includes an operation **3710** to provide position informed inspection data in response to the correlated inspection data. In certain embodiments, operation **3706** is additionally or alternatively performed on the position informed inspection data, where the position informed inspection data is corrected, and operation **3710** includes providing the position informed inspection data. In certain embodiments, one or more operations of a procedure **3700** are performed by a controller **802**.

[0314] Referencing FIG. **36**, an example procedure **3800** to inspect a plant, industrial system, and/or inspection surface utilizing position information is depicted. In addition to operations of procedure **3700**, example procedure **3800** includes an operation **3802** to determine a plant definition value, and an operation **3804** to determine plant position values in response to the position information and the plant position definition. Operation **3706** further includes an operation to correlate the inspection data with the position information and/or the plant position values. In certain embodiments, one or more operations of procedure **3800** are performed by a controller **802**.

[0315] Referencing FIG. **37**, an example apparatus **3900** for processing ultra-sonic sensor readings is depicted schematically. The example apparatus **3900** includes a controller **802** having an acoustic data circuit **3902** that determines return signals from the tested surface—for example a transducer in the sensor **2202** sends a sound wave through the couplant chamber to the inspection surface, and the raw acoustic data **3904** includes primary (e.g., from the surface inspection surface), secondary (e.g., from a back wall, such as a pipe wall or tank wall) and/or tertiary (e.g., from imperfections, cracks, or defects within the wall) returns from the inspection surface.

[0316] In certain embodiments, the controller **802** includes a thickness processing circuit **3906** that determines a primary mode value **3908** in response to the raw acoustic data **3904**. The primary mode value **3908**, in certain embodiments, includes a determination based upon a first return and a second return of the raw acoustic data **3904**, where a time difference between the first return and the second return indicates a thickness of the inspection surface material (e.g., a pipe). The foregoing operations of the thickness processing circuit **3906** are well known in the art, and are standard operations for ultra-sonic thickness testing. However, the environment for the inspection robot is not typical, and certain further improvements to operations are described herein. An inspection robot, in certain embodiments, performs a multiplicity of ultra-sonic thickness determinations, often with simultaneous (or nearly) operations from multiple sensors. Additionally, in certain embodiments, it is desirable that the inspection robot operate: autonomously without the benefit of an experienced operator; without high-end processing in real-time to provide substantial displays to a user to determine whether parameters are not being determined properly; and/or with limited communication resources utilized for post-processing that is fast enough that off nominal operation can be adjusted after significant post-processing.

[0317] In certain embodiments, the thickness processing circuit **3906** determines a primary mode score value **3910**. In certain embodiments, the thickness processing circuit **3906** determines the primary mode score value **3910** in response to a time of arrival for the primary (e.g., inspection surface face) return from the raw acoustic data **3904**. Because the delay time for the sensor is a known and controlled value (e.g., reference FIGS. **26** and **29**, and the related description), the return time of the primary return is known with high confidence. Additionally or alternatively, the thickness processing circuit **3906** determines the primary mode score value **3910** in response to the character of the primary return—for example a sharp peak of a known width and/or amplitude. In certain embodiments, the primary mode score value **3910** calculation is calibrated in response to the material of the inspection surface—although known materials such as iron, various types of steel, and other surfaces can utilize nominal calibrations. In certain embodiments, the configuration adjustment **3406** based on lead inspection data **3402** is utilized to calibrate a primary mode score value **3910** calculation for a sensor providing the trailing inspection data **3410**. In certain embodiments, determining that the first peak (related to the primary return) meets expected characteristics is sufficient to provide confidence to utilize the primary mode value **3908** as the ultra-sonic thickness value **3912**. In certain embodiments, the ultra-sonic thickness value **3912** is the inspection data for the sensor, and/or a part of the inspection data for the sensor.

[0318] In certain embodiments, the thickness processing circuit **3906** additionally or alternatively considers the timing of arrival for a secondary return, peak arrival time, and/or peak width of the secondary return (e.g., from the back wall) in determining the primary mode score value **3910**. For example, if the secondary return indicates a wall thickness that is far outside of an expected thickness value, either greater or lower, the primary mode score value **3910** may be reduced. In certain embodiments, if the secondary return has a peak characteristic that is distinct from the expected characteristic (e.g., too narrow, not sharp, etc.) then the primary mode score value **3910** may be reduced. Additionally or alternatively, feedback data regarding the sensor may be utilized to adjust the primary mode score value **3910**—for example if the sensor is out of alignment with the inspection surface, the sensor (or sled) has lifted off of the inspection surface, a sled position for a sled having an acoustic sensor, and/or if a couplant anomaly is indicated (e.g., couplant flow is lost, a bubble is detected, etc.) then the primary mode score value **3910** may be reduced.

[0319] In certain embodiments, for example when the primary mode score value **3910** indicates that the primary mode value **3908** is to be trusted, the controller **802** includes a sensor reporting circuit **3914** that provides the ultra-sonic thickness value **3912** in response to the primary mode value **3908**. In certain embodiments, if the primary mode score value **3910** is sufficiently high, the thickness processing circuit **3906** omits operations to determine a secondary mode value **3916**. In certain embodiments, the thickness processing circuit **3906** performs operations to determine the secondary mode value **3916** in response to the primary mode score value **3910** is at an intermediate value, and/or if feedback data regarding the sensor indicates off-nominal operation, even when the primary mode score value **3910** is sufficiently high (e.g., to allow for improved post-processing of the inspection data). In certain embodiments, the thickness processing circuit **3906** determines the secondary mode value **3916** at all times, for example to allow for improved post-processing of the inspection data. In certain embodiments, the sensor reporting circuit **3914** provides processed values for the primary mode value **3908** and/or the secondary mode value **3916**, and/or the primary mode scoring value **3910** and/or a secondary mode score value **3918**, either as the inspection data and/or as stored data to enable post-processing and/or future calibration improvements. In certain embodiments, the sensor reporting circuit **3914** provides the raw acoustic data **3904**, either as the inspection data and/or as stored data to enable post-processing and/or future calibration improvements.

[0320] The example thickness processing circuit **3906** further determines, in certain embodiments, a secondary mode value **3916**. An example secondary mode value **3916** includes values determined from a number of reflected peaks—for example determining which of a number of reflected peaks are primary returns (e.g., from a face of the inspection surface) and which of a number of reflected peaks are secondary returns (e.g., from a back wall of the inspection surface). In certain embodiments, a Fast-Fourier Transform (FFT), wavelet analysis, or other frequency analysis technique is utilized by the thickness processing circuit **3906** to determine the energy and character of the number of reflected peaks. In certain embodiments, the thickness processing circuit **3906** determines a secondary mode score value **3918**—for example from the character and consistency of the peaks, and determines an ultra-sonic thickness value **3912** from the peak-to-peak distance of the number of reflected peaks. The operations of the example apparatus **3900**, which in certain embodiments favor utilization of the primary mode value **3908**, provide for rapid and high confidence determinations of the ultra-sonic thickness value **3912** in an environment where a multiplicity of sensors are providing raw acoustic data **3904**, computing resources are limited, and a large number of sensor readings are to be performed without supervision of an experienced operator.

[0321] In certain embodiments, any one or more of the ultra-sonic thickness value **3912**, the primary mode value

3908, the secondary mode value **3916**, the primary mode score value **3910**, and/or the secondary mode score value **3918** are provided or stored as position informed inspection data **3616**. The correlation of the values **3912**, **3908**, **3916**, **3910**, and/or **3918** with position data as position informed inspection data **3616** provides for rapid visualizations of the characteristics of the inspection surface, and provides for rapid convergence of calibration values for inspection operations on the inspection surface and similar surfaces. In certain embodiments, the raw acoustic data **3904** is provided or stored as position informed inspection data **3616**.

[0322] Referencing FIG. **38**, an example procedure **4000** to process ultra-sonic sensor readings is depicted schematically. In certain embodiments, procedure **4000** processes ultra-sonic sensor readings for an inspection robot having a number of ultra-sonic sensor mounted thereon. The example procedure **4000** includes an operation **4002** to interrogate an inspection surface with an acoustic signal (e.g., acoustic impulse from a transducer). The example procedure **4000** further includes an operation **4004** to determine raw acoustic data, such as return signals from the inspection surface. The example procedure **4000** further includes an operation **4006** to determine a primary mode score value in response to a primary peak value, and/or further in response to a secondary peak value, from the raw acoustic data. The example procedure **4000** further includes an operation **4008** to determine whether the primary mode score value exceeds a high threshold value, such as whether the primary mode value is deemed to be reliable without preserving a secondary mode value. In response to the operation **4008** determining the primary mode score value exceeds the high threshold value, the procedure **4000** further includes an operation **4010** to determine the primary mode value, and an operation **4012** to report the primary mode value as an ultra-sonic thickness value. In response to the operation **4008** determining the primary mode score value does not exceed the high threshold value, the procedure includes an operation **4014** to determine whether the primary mode score value exceeds a primary mode utilization value. In certain embodiments, in response to the operation **4014** determining the primary mode score value exceeds the primary mode utilization value, the procedure **4000** includes the operation **4010** to determine the primary mode value, an operation **4018** to determine the secondary mode value, and the operation **4012** to provide the primary mode value as the ultra-sonic thickness value. In response to the operation **4014** determining the primary mode score value does not exceed the primary mode utilization value, the procedure **4000** includes the operation **4018** to determine the secondary mode value and an operation **4022** to determine the secondary mode score value. The procedure **4000** further includes an operation **4024** to determine whether the secondary mode score value exceeds a secondary mode utilization value, and in response to operation **4024** determining the secondary mode score value exceeds the secondary mode utilization value, the procedure **4000** includes an operation **4026** to provide the secondary mode value as the ultra-sonic thickness value. In response to the operation **4024** determining the secondary mode score value does not exceed the secondary mode utilization value, the procedure **4000** includes an operation **4028** to provide an alternate output as the ultra-sonic thickness value. In certain embodiments, operation **4028** includes providing an error value (e.g., data not read), one of the primary mode value and the secondary mode value having a higher score, and/or combinations of these (e.g., providing a "best" value, along with an indication that the ultra-sonic thickness value for that reading may not be reliable).

[0323] As with all schematic flow diagrams and operational descriptions throughout the present disclosure, operations of procedure **4000** may be combined or divided, in whole or part, and/or certain operations may be omitted or added. Without limiting the present description, it is noted that operation **4022** to determine the secondary mode score value and operation **4024** to determine whether the secondary mode score value exceeds a utilization threshold may operate together such that operation **4018** to determine the secondary mode score is omitted. For example, where the secondary mode score value indicates that the secondary mode value is not sufficiently reliable to use as the ultra-sonic thickness value, in certain embodiments, processing to determine the secondary mode value are omitted. In certain embodiments, one or more of operations **4014** and/or **4008** to compare the primary mode score value to certain thresholds may additionally or alternatively include comparison of the primary mode score value to the secondary mode score value, and/or utilization of the secondary mode value instead of the primary mode value where the secondary mode score value is higher, or sufficiently higher, than the primary mode score value. In certain embodiments, both the primary mode value and the secondary mode value are determined and stored or communicated, for example to enhance future calibrations and/or processing operations, and/or to enable post-processing operations. In certain embodiments, one or more operations of procedure **4200** are performed by a controller **802**.

[0324] Referencing FIG. **41**, an example apparatus **4300** for operating a magnetic induction sensor for an inspection robot is depicted. In certain embodiments, the magnetic induction sensor is mounted on a sled **1**, and/or on a payload **2**. In certain embodiments, the magnetic induction sensor is a lead sensor as described throughout the present disclosure, although operations of the apparatus **4300** for operating the magnetic induction sensor for the inspection robot include the magnetic induction sensor positioned on any payload and/or any logistical inspection operation runs. In certain embodiments, the magnetic induction sensor is a lead sensor and positioned on a same sled as an ultra-sonic or other sensor. In certain embodiments, the magnetic induction sensor is included on a payload **2** with other sensors, potentially including an ultra-sonic sensor, and may be on a same sled **1** or an offset sled (e.g., one or more magnetic sensors on certain sleds **1** of a payload **2**, and ultra-sonic or other sensors on other sleds **1** of the payload **2**).

[0325] An example apparatus **4300** includes an EM data circuit **4302** structured to interpret EM induction data **4304** provided by a magnetic induction sensor. The EM induction data **4304** provides an indication of the thickness of material, including coatings, debris, non-ferrous metal spray material (e.g., repair material), and/or damage, between the sensor and a substrate ferrous material, such as a pipe, tube, wall, tank wall, or other material provided as a substrate for an inspection surface. The foregoing operations of the EM data circuit **4302** and magnetic induction sensor are well known in the art, and are standard operations for determining automotive paint thickness or other applications. However, the environment for the inspection robot is not typical, and certain further improvements to operations are described herein.

[0326] In certain embodiments, an inspection robot includes sled configurations, including any configurations described throughout the present disclosure, to ensure expected contact, including proximity and/or orientation, between the inspection surface and the magnetic induction sensor. Accordingly, a magnetic induction sensor included on a sled **1** of the inspection robot in accordance with the present disclosure provides a reliable reading of distance to the substrate ferrous material. In certain embodiments, the apparatus **4300** includes a substrate distance circuit **4306** that determines a substrate distance value **4308** between the magnetic induction sensor and a ferrous substrate of the inspection surface. Additionally or alternatively, the substrate distance value **4308** may be a coating thickness, a delay line correction factor (e.g., utilized by a thickness processing circuit **3906**), a total debris-coating distance, or other value determined in response to the substrate distance value **4308**.

[0327] In certain embodiments, the controller **802** further includes an EM diagnostic circuit **4310** that supports one or more diagnostics in response to the substrate distance value **4308**. An example diagnostic includes a diagnostic value **4312** (e.g., a rationality diagnostic value, or another value used for a diagnostic check), wherein the EM diagnostic circuit **4310** provides information utilized by the thickness processing circuit **3906**, for example to a thickness processing circuit **3906**. For example, the layer of coating, debris, or other material between the substrate of the inspection surface and an ultra-sonic sensor can affect the peak arrival times. In a further example, the layer of coating, debris, or other material between the substrate of the inspection surface and an ultra-sonic sensor can act to increase the effective delay line between the transducer of the ultra-sonic sensor and the inspection surface. In certain embodiments, the thickness processing circuit **3906** utilizes the rationality diagnostic value **4312** to adjust expected arrival times for the primary return and/or secondary return values, and/or to adjust a primary mode scoring value and/or a secondary mode score value.

[0328] In certain embodiments, the EM diagnostic circuit **4310** operates to determine a sensor position value **4314**. In certain embodiments, the sensor position value **4314** provides a determination of the sensor distance to the substrate. In certain embodiments, the sensor position value **4314** provides a rationality check whether the sensor is positioned in proximity to the inspection surface. For example, an excursion of the EM induction data **4304** and/or substrate distance value **4308** may be understood to be a loss of contact of the sensor with the inspection surface, and/or may form a part of a determination, combined with other information such as an arm **20**, sled **1**, or payload **2** position value, a value of any of the pivots **16**, **17**, **18**, and/or information from a camera or other visual indicator, to determine that a sled **1** including the magnetic induction sensor, and/or the magnetic induction sensor, is not properly positioned with regard to the inspection surface. Additionally or alternatively, a thickness processing circuit **3906** may utilize the sensor position value **4314** to adjust the primary mode scoring value and/or the secondary mode score value—for example to exclude or label data that is potentially invalid. In certain embodiments, the sensor position value **4314** is utilized on a payload **2** having both an ultra-sonic sensor and a magnetic induction sensor, and/or on a sled **1** having both an ultra-sonic sensor and a magnetic induction sensor (e.g., where the sensor position value **4314** is likely to provide direct information about the ultra-sonic sensor value). In certain embodiments, the sensor position value **4314** is utilized when the magnetic induction sensor is not on a same payload **2** or sled **1** with an ultra-sonic sensor—for example by correlating with position data to identify a potential obstacle or other feature on the inspection surface that may move the sled **1** out of a desired alignment with the inspection surface. In certain embodiments, the sensor position value **4314** is utilized when the magnetic induction sensor is not on a same payload **2** or sled **1** with an ultra-sonic sensor, and is combined with other data in a heuristic check to determine if the ultra-sonic sensor (and/or related sled or payload) experiences the same disturbance at the same location that the magnetic induction sensor (and/or related sled or payload) experienced.

[0329] In certain embodiments, the substrate distance value **4308** is provided to a thickness processing circuit **3906**, which utilizes the substrate distance value **4308** to differentiate between a utilization of the primary mode value **3908** and/or the secondary mode value **3916**. For example, the thickness of a coating on the inspection surface can affect return times and expected peak times. Additionally or alternatively, where the speed of sound through the coating is known or estimated, the peak analysis of the primary mode value **3908** and/or the secondary mode value **3916** can be adjusted accordingly. For example, the secondary mode value **3916** will demonstrate additional peaks, which can be resolved with a knowledge of the coating thickness and material, and/or the speed of sound of the coating material can be resolved through deconvolution and frequency analysis of the returning peaks if the thickness of the coating is known. In another example, the primary mode value **3908** can be adjusted to determine a true substrate first peak response (which will, in certain embodiments, occur after a return from the coating surface), which can be resolved with a knowledge of the coating thickness and/or the speed of sound of the coating material. In certain embodiments, a likely composition of the coating material is known—for example based upon prior repair operations performed on the inspection surface. In certain embodiments, as described, sound characteristics of the coating material, and/or effective sound characteristics of a pseudo-material (e.g., a mix of more than one material modeled as an aggregated pseudo-material) acting as the aggregate of the coating, debris, or other matter on the substrate of the inspection surface, can be determined through an analysis of the ultra-sonic data and/or coupled with knowledge of the thickness of the matter on the substrate of the inspection surface.

[0330] Referencing FIG. **42**, an example procedure **4400** for operating and analyzing a magnetic induction sensor on an inspection robot is schematically depicted. The example procedure **4400** includes an operation **4402** to interpret EM induction data provided by a magnetic induction sensor, and an operation **4404** to determine a substrate distance value between the magnetic induction sensor and a ferrous substrate of the inspection surface. The example procedure **4400** further includes an operation **4406** to determine a sensor position value, such as: a sensor distance from a substrate of the inspection surface; and/or a sensor pass/fail orientation, alignment or position check. In certain embodiments, the example procedure **4400** further includes an operation **4408** to adjust a primary mode scoring value and/or a secondary mode score value in response to the substrate distance value

and/or the sensor position value. In certain embodiments, operation **4408** includes an operation to set the primary mode scoring value and/or secondary mode score value to a value that excludes the primary mode value and/or the secondary mode value from being used, and/or labels the primary mode value and/or the secondary mode value as potentially erroneous. In certain embodiments, an operation includes determining a reliability of the primary mode value and/or the secondary mode value—for example where sonic properties of the matter between the ultra-sonic sensor and the inspection surface substrate are determined with a high degree of reliability—and the reliability determined for the primary mode value and/or the secondary mode value is utilized to adjust the primary mode scoring value and/or the secondary mode score value. An example procedure **4400** further includes an operation **4410** to adjust a peak analysis of a primary mode value and/or a secondary mode value in response to the substrate distance value and/or the sensor position value. In certain embodiments, one or more operations of procedure **4400** are performed by a controller **802**.

[0331] Referencing FIG. **43**, an example procedure **4500** to adjust a peak analysis of a primary mode value and/or a secondary mode value is schematically depicted. The example procedure **4500** includes an operation **4504** to resolve a thickness and a sound characteristic of material positioned between a substrate of an inspection surface and an ultra-sonic sensor. In certain embodiments, operation **4504** includes a deconvolution of peak values including a frequency analysis of peaks observed in view of the substrate distance value and/or the sensor position value. In certain embodiments, the example procedure **4500** further includes an operation **4502** to determine a likely composition of the coating material—for example in response to a defined parameter by an inspection operator, and/or a previously executed repair operation on the inspection surface. In certain embodiments, operations of any of procedure **4400** and/or procedure **4500** are performed in view of position information of the magnetic induction sensor, and/or correlating position information of the ultra-sonic sensor. In certain embodiments, one or more operations of procedure **4500** are performed by a controller **802**.

[0332] Referencing FIG. **44**, an example procedure **4600** to adjust an inspection operation in real-time in response to a magnetic induction sensor is schematically depicted. In certain embodiments, example procedure **4600** includes an operation **4602** to determine an induction processing parameter, such as a substrate distance value, a sensor position value, and/or a rationality diagnostic value. In certain embodiments, the example procedure **4600** includes an operation **4604** to adjust an inspection plan in response to the induction processing parameter. Example and non-limiting operations **4604** to an inspection plan include: adjusting a sensor calibration value (e.g., for an ultra-sonic sensor, a temperature sensor, etc.) for a sensor that may be affected by the coating, debris, or other matter between the magnetic induction sensor and a substrate of the inspection surface; adjusting an inspection resolution for one or more sensors for a planned inspection operation; adjusting a planned inspection map display for an inspection operation, and/or including adjusting sensors, sled positions, and/or an inspection robot trajectory to support the planned inspection map display; adjusting an inspection robot trajectory (e.g., locations, paths, number of runs, and/or movement speed on the inspection surface); adjusting a number, type, and/or positioning (e.g., sled numbers, placement, and/or payload positions) for sensors for an inspection operation; adjusting a wheel magnet strength and/or wheel configuration of an inspection robot in response to the induction processing parameter (e.g., adjusting for an expected distance to a ferrous material, configuring the wheels to manage debris, etc.); adjusting a sled ramp configuration (e.g., sled ramp leading and/or following slope, shape, and/or depth); and/or adjusting a down force for a sled and/or sensor. Operations **4604** may be performed in real-time, such as a change of an inspection plan during inspection operations, and/or at design or set-up time, such as a change of a configuration for the inspection robot or any other aspects described herein before an inspection run, between inspection runs, or the like.

[0333] In certain embodiments, the example procedure **4600** includes an operation **4606** to perform an additional inspection operation in response to the induction processing parameter. For example, operation **4606** may include operations such as: inspecting additional portions of the inspection surface and/or increasing the size of the inspection surface (e.g., to inspect other portions of an industrial system, facility, and/or inspection area encompassing the inspection surface); to activate trailing payloads and/or a rear payload to perform the additional inspection operation; re-running an inspection operation over an inspection area that at least partially overlaps a previously inspected area; and/or performing a virtual additional inspection operation—for example re-processing one or more aspects of inspection data in view of the induction processing parameter.

[0334] In certain embodiments, the example procedure **4600** includes an operation **4608** to follow a detected feature, for example activating a sensor configured to detect the feature as the inspection robot traverses the inspection surface, and/or configuring the inspection robot to adjust a trajectory to follow the feature (e.g., by changing the robot trajectory in real-time, and/or performing additional inspection operations to cover the area of the feature). Example and non-limiting features include welds, grooves, cracks, coating difference areas (e.g., thicker coating, thinner coating, and/or a presence or lack of a coating). In certain embodiments, the example procedure **4600** includes an operation **4610** to perform at least one of a marking, repair, and/or treatment operation, for example marking features (e.g., welds, grooves, cracks, and/or coating difference areas), and/or performing a repair and/or treatment operation (e.g., welding, applying an epoxy, applying a cleaning operation, and/or applying a coating) appropriate for a feature. In certain embodiments, operation **4610** to perform a marking operation includes marking the inspection surface in virtual space—for example as a parameter visible on an inspection map but not physically applied to the inspection surface.

[0335] In certain embodiments, the example procedure **4600** includes an operation **4612** to perform a re-processing operation in response to the induction processing parameter. For example, and without limitation, acoustic raw data, primary mode values and/or primary mode score values, and/or secondary mode values and/or secondary mode score values may be recalculated over at least a portion of an inspection area in response to the induction processing parameter. In certain embodiments, ultra-sonic sensor calibrations may be adjusted in a post-processing operation to

evaluate, for example, wall thickness and/or imperfections (e.g., cracks, deformations, grooves, etc.) utilizing the induction processing parameter(s).

[0336] Operations for procedure **4600** are described in view of an induction processing parameter for clarity of description. It is understood that a plurality of induction processing parameters, including multiple parameter types (e.g., coating presence and/or coating thickness) as well as a multiplicity of parameter determinations (e.g., position based induction processed values across at least a portion of the inspection surface) are likewise contemplated herein. In certain embodiments, one or more operations of procedure **4600** are performed by a controller **802**.

[0337] Referencing FIG. **45**, an example apparatus **4700** for utilizing a profiling sensor on an inspection robot is schematically depicted. Example and non-limiting profiling sensors include a laser profiler (e.g., a high spatial resolution laser beam profiler) and/or a high resolution caliper log. A profiling sensor provides for a spatial description of the inspection surface—for example variations in a pipe **502** or other surface can be detected, and/or a high resolution contour of at least a portion of the inspection surface can be determined. In certain embodiments, a controller **802** includes a profiler data circuit **4702** that interprets profiler data **4704** provided by the profiling sensor. The example controller **802** further includes an inspection surface characterization circuit **4706** that provides a characterization of the shape of the inspection surface in response to the profiler data—for example as a shape description **4708** of the inspection surface, including anomalies, variations in the inspection surface geometry, and/or angles of the inspection surface (e.g., to determine a perpendicular angle to the inspection surface). The example controller **802** further includes a profile adjustment circuit **4710** that provides an inspection operation adjustment **4712** in response to the shape description **4708**. Example and non-limiting inspection operation adjustments **4712** include: providing an adjustment to a sled, payload, and/or sensor orientation within a sled (e.g., to provide for a more true orientation due to a surface anomaly, including at least changing a number and configuration of sleds on a payload, configuring a payload to avoid an obstacle, adjusting a down force of a sled, arm, sensor, and/or payload, and/or adjusting a shape of a sled bottom surface); a change to a sensor resolution value (e.g., to gather additional data in the vicinity of an anomaly or shape difference of the inspection surface); a post-processing operation (e.g., re-calculating ultra-sonic and/or magnetic induction data—for example in response to a shape of the inspection surface, and/or in response to a real orientation of a sensor to the inspection surface—such as correcting for oblique angles and subsequent sonic and/or magnetic effects); a marking operation (e.g., marking an anomaly, shape difference, and/or detected obstacle in real space—such as on the inspection surface—and/or in virtual space such as on an inspection map); and/or providing the inspection operation adjustment **4712** as an instruction to a camera to capture an image of an anomaly and/or a shape difference.

[0338] Referencing FIG. **46**, an example procedure **4800** for utilizing a profiling sensor on an inspection robot is schematically depicted. The example procedure **4800** includes an operation **4802** to operate a profiling sensor on at least a portion of an inspection surface, and an operation **4804** to interpret profiler data in response to the operation **4802**. The example procedure **4800** further includes an operation **4806** to characterize a shape of the inspection surface, and/or thereby provide a shape description for the inspection surface, and an operation **4808** to adjust an inspection operation in response to the shape of the inspection surface.

[0339] As shown in FIG. **47**, a system may comprise a base station **4902** connected by a tether **4904** to a center module **4910** of a robot **4908** used to traverse an industrial surface. The tether **4904** may be a conduit for power, fluids, control, and data communications between the base station **4902** and the robot **4908**. The robot **4908** may include a center module **4910** connected to one or more drive modules **4912** which enable the robot **4908** to move along an industrial surface. The center module **4910** may be coupled to one or more sensor modules **4914** for measuring an industrial surface—for example the sensor modules **4914** may be positioned on a drive module **4912**, on the payload, in the center body housing, and/or aspects of a sensor module **4914** may be distributed among these. An example embodiment includes the sensor modules **4914** each positioned on an associated drive module **4912**, and electrically coupled to the center module **4910** for power, communications, and/or control. The base station **4902** may include an auxiliary pump **4920**, a control module **4924** and a power module **4922**. The example robot **4908** may be an inspection robot, which may include any one or more of the following features: inspection sensors, cleaning tools, and/or repair tools. In certain embodiments, it will be understood that an inspection robot **4908** is configured to perform only cleaning and/or repair operations, and/or may be configured for sensing, inspection, cleaning, and/or repair operations at different operating times (e.g., performing one type of operation at a first operating time, and performing another type of operation at a second operating time), and/or may be configured to perform more than one of these operations in a single run or traversal of an industrial surface (e.g., the "inspection surface"). The modules **4910**, **4912**, **4914**, **4920**, **4922**, **4924** are configured to functionally execute operations described throughout the present disclosure, and may include any one or more hardware aspects as described herein, such as sensors, actuators, circuits, drive wheels, motors, housings, payload configurations, and the like.

[0340] As shown in FIG. **48**, the center module **4910** (or center body or chassis) of the robot may include a couplant interface **5102**, a data communications/power/control tether input **5112**, forward facing and reverse facing navigation cameras **5104**, multiple sensor connectors **5118**, couplant outlets **5108** (e.g., to each payload), and one or more drive module connections **5110** (e.g., one on each side). An example center module **4910** includes a distributed controller design, with low-level and hardware control decision making pushed down to various low level control modules (e.g., **5114**, and/or further control modules on the drive modules as described throughout the present disclosure). The utilization of a distributed controller design, for example as depicted schematically in FIG. **85**, facilitates rapid design, rapid upgrades to components, and compatibility with a range of components and associated control modules **5114**. For example, the distributed controller design allows the high level controller (e.g., the brain/gateway) to provide communications in a standardized high-level format (e.g., requesting movement rates, sensed parameter values, powering of components, etc.) without

utilizing the hardware specific low-level controls and interfaces for each component, allowing independent development of hardware components and associated controls. The use of the low-level control modules may improve development time and enable the base level control module to be component neutral and send commands, leaving the specific implementation up to the low-level control module **5114** associated with a specific camera, sensor, sensor module, actuator, drive module, and the like. The distributed controller design may extend to distributing the local control to the drive module(s) and sensor module(s) as well.

[0341] FIG. **49** shows an exterior and exploded view of a drive module **4912**. A drive module **4912** may include motors **5502** and motor shielding **5508**, a wheel actuator assembly **5504** housing the motor, and wheel assemblies **5510** including, for example, a magnetic wheel according to any magnetic wheel described throughout the present disclosure. An example drive module **4912** includes a handle **5512** to enable an operator to transport the robot **4908** and position the robot **4908** on an industrial surface. The motor shielding **5508** may be made of an electrically conductive material, and provide protection for the motors **5502** and associated motor position and/or speed sensors (e.g., a hall effect sensor) from electro-magnetic interference (EMI) generated by the wheel assembly **5510**. The drive module **4912** provides a mounting rail **5514** for a payload and/or sensor module **4914**, which may cooperate with a mounting rail on the center body to support the payload. An example drive module **4912** includes one or more payload actuators **5518** (e.g., the payload gas spring) for engaging and disengaging the payload or sensor module **4914** from an inspection surface (or industrial surface), and/or for adjusting a down force of the payload (and thereby a downforce for specific sensor carriages and/or sleds) relative to the inspection surface. The drive module **4912** may include a connecter **5522** that provides an interface with the center module for power and communications and a cover **5520** for the motors.

[0342] A drive module (FIG. **49**) may include a hall effect sensor in each of the motors **5502** as part of non-contact encoder for measuring the rotation of each motor as it drives the associated wheel assembly **5510**. There may be shielding **5508** (e.g., a conductive material such as steel) to prevent unintended EMI noise from a magnet in the wheel inducing false readings in the hall effect sensor.

[0343] Data from the encoder assembly encoder and the driven wheel encoder **5524** (e.g., the motion and/or position sensor associated with the drive motor for the magnetic wheels) provide an example basis for deriving additional information, such as whether a wheel is slipping by comparing the encoder assembly readings (which should reliably show movement only when actual movement is occurring) to those of the driven wheel encoders on the same drive module. If the encoder assembly shows limited or no motion while the driven wheel encoder(s) show motion, drive wheels slipping may be indicated. Data from the encoder assembly and the driven wheel encoders may provide a basis for deriving additional information such as whether the robot is travelling in a straight line, as indicated by similar encoder values between corresponding encoders in each of the two drive modules on either side of the robot. If the encoders on one of the drive modules indicate little or no motion while the encoders of the other drive module show motion, a turning of the inspection robot toward the side with limited movement may be indicated.

[0344] The base station may include a GPS module or other facility for recognizing the position of the base station in a plant. The encoders on the drive module provide both absolute (relative to the robot) and relative information regarding movement of the robot over time. The combination of data regarding an absolute position of the base station and the relative movement of the robot may be used to ensure complete plant inspection and the ability to correlate location with inspection map.

[0345] The central module (FIG. **48**) may have a camera **5104** that may be used for navigation and obstacle detection, and/or may include both a front and rear camera **5104** (e.g., as shown in FIG. **48**). A video feed from a forward facing camera (relative to the direction of travel) may be communicated to the base station to assist an operator in obstacle identification, navigation, and the like. The video feed may switch between cameras with a change in direction, and/or an operator may be able to selectively switch between the two camera feeds. Additionally or alternatively, both cameras may be utilized at the same time (e.g., provided to separate screens, and/or saved for later retrieval). The video and the sensor readings may be synchronized such that, for example: an operator (or display utility) reviewing the data would be able to have (or provide) a coordinated visual of the inspection surface in addition to the sensor measurements to assist in evaluating the data; to provide repairs, mark repair locations, and/or confirm repairs; and/or to provide cleaning operations and/or confirm cleaning operations. The video camera feeds may also be used for obstacle detection and path planning, and/or coordinated with the encoder data, other position data, and/or motor torque data for obstacle detection, path planning, and/or obstacle clearance operations.

[0346] Referring to FIG. **50**, a drive module (and/or the center body) may include one or more payload mount assemblies **6900**. The payload mount assembly **6900** may include a rail mounting block **6902** with a wear resistant sleeve **6904** and a rail actuator connector **6912**. Once a rail of the payload is slid into position, a dovetail clamping block **6906** may be screwed down with a thumbscrew **6910** to hold the rail in place with a cam-lock clamping handle **6908**. The wear resistant sleeve **6904** may be made of Polyoxymethylene (POM), a low friction, strong, high stiffness material such as Delrin, Celecon, Ramtal, Duracon, and the like. The wear resistant sleeve **6904** allows the sensor to easily slide laterally within the rail mounting block **6902**. The geometry of the dovetail clamping block **6906** limits lateral movement of the rail once it is clamped in place. However, when unclamped, it is easy to slide the rail off to change the rail. In another embodiment, the rail mounting block may allow for open jawed, full rail coupling allowing the rail to be rapidly attached and detached without the need for sliding into position.

[0347] Referring to FIGS. **51** and **52**A-C, an example of a rail **7000** is seen with a plurality of sensor carriages **7004** attached and an inspection camera **7002** attached. As shown in FIG. **52**A, the inspection camera **7002** may be aimed downward (e.g., at 38 degrees) such that it captures an image of the inspection surface that can be coordinated with sensor measurements. The inspection video captured may be synchronized with the sensor data and/or with the video captured by the navigation cameras on the center module. The

inspection camera **7002** may have a wide field of view such that the image captured spans the width of the payload and the surface measured by all of the sensor carriages **7004** on the rail **7000**.

[0348] The length of the rail may be designed to according to the width of sensor coverage to be provided in a single pass of the inspection robot, the size and number of sensor carriages, the total weight limit of the inspection robot, the communication capability of the inspection robot with the base station (or other communicated device), the deliverability of couplant to the inspection robot, the physical constraints (weight, deflection, etc.) of the rail and/or the clamping block, and/or any other relevant criteria. A rail may include one or more sensor carriage clamps **7006**, **7200** having joints with several degrees of freedom for movement to allow the robot to continue even if one or more sensor carriages encounter unsurmountable obstacles (e.g., the entire payload can be raised, the sensor carriage can articulate vertically and raise over the obstacle, and/or the sensor carriage can rotate and traverse around the obstacle).

[0349] The rail actuator connector **6912** may be connected to a payload actuator **5518** (FIG. **49**) which is able to provide a configurable down-force on the rail **7000** and the attached sensor carriages **7004** to assure contact and/or desired engagement angle with the inspection surface. The payload actuator **5518** may facilitate engaging and disengaging the rail **7000** (and associated sensor carriages **7004**) from the inspection surface to facilitate obstacle avoidance, angle transitions, engagement angle, and the like. Payload actuators **5518** may operate independently of one another. Thus, rail engagement angle may vary between drive modules on either side of the center module, between front and back rails on the same drive module, and the like.

[0350] Referring to FIGS. **53**A-**53**C, a sensor clamp **7200** may allow sensor carriages **7004** to be easily added individually to the rail (payload) **7000** without disturbing other sensor carriages **7004**. A simple sensor set screw **7202** tightens the sensor clamp edges **7204** of the sensor clamp **7200** over the rail. In the example of FIGS. **53**A-**53**C, a sled carriage mount **7206** provides a rotational degree of freedom for movement.

[0351] Referring to FIGS. **54**A-**54**D, a sled may include a sensor housing **7610** having a groove **7604**. A replaceable engagement surface **7602** may include one or more hooks **7608** which interact with the groove **7604** to snap the replaceable engagement surface **7602** to the sensor housing **7610**. The sensor housing **7610**, a cross section of which is shown in FIG. **55**, may be a single machined part which may include an integral couplant channel **7702**, in some embodiments this is a water line, and an integrated cone assembly **7704** to allow couplant to flow from a couplant connector down to the inspection surface. There may be a couplant plug **7706** to prevent the couplant from flowing out of a machining hole **7708** rather than down through the integrated cone assembly **7704** to the inspection surface. The front and back surface of the sled may be angled at approximately 40° to provide the ability of the sled to surmount obstacles on the navigation surface. If the angle is too shallow, the size of obstacle the sled is able to surmount is small. If the angle is too steep, the sled may be more prone to jamming into obstacles rather than surmounting the obstacles. The angle may be selected according to the size and type of obstacles that will be encountered, the available contingencies for obstacle traversal (degrees of freedom and amount of motion available, actuators available, alternate routes available, etc.), and/or the desired inspection coverage and availability to avoid obstacles.

[0352] In addition to structural integrity and machinability, the material used for the sensor housing **7610** may be selected based on acoustical characteristics (such as absorbing rather than scattering acoustic signals, harmonics, and the like), hydrophobic properties (waterproof), and the ability to act as an electrical insulator to eliminate a connection between the sensor housing and the chassis ground, and the like such that the sensor housing may be suitable for a variety of sensors including EMI sensors. A PEI plastic such as ULTEM® 1000 (unreinforced amorphous thermoplastic polyetherimide) may be used for the sensor housing **7610**.

[0353] In embodiments, identification of a sensor and its location on a rail and relative to the center module may be made in real-time during a pre-processing/calibration process immediately prior to an inspection run, and/or during an inspection run (e.g., by stopping the inspection robot and performing a calibration). Identification may be based on a sensor ID provided by an individual sensor, visual inspection by the operator or by image processing of video feeds from navigation and inspection cameras, and user input include including specifying the location on the robot and where it is plugged in. In certain embodiments, identification may be automated, for example by powering each sensor separately and determining which sensor is providing a signal.

[0354] In other embodiments, as shown in FIG. **56**A, a sensor may be initially calibrated by measuring a thin standard **8102** and a thick standard **8104** (e.g., a thick and thin standard for the type of surface, pipe, etc. being measured), and matching the sensor being calibrated with the matching thick and thin channel measurements resulting in matching channel data **8114** having thick and thin channels that map to a specific sensor or sensor type. In certain embodiments, sensor measurements (e.g., return times, as described elsewhere in the present disclosure) may be matched by interpolation between the thin standard **8102** and the thick standard **8104**. In certain embodiments, depending upon the material response and the desired measurement accuracy, measurements may be extrapolated outside of the thin standard **8102** and the thick standard **8104**. Additionally or alternatively, a single standard may be utilized in certain embodiments, with measurement comparisons to the standard to provide the measured thickness value of the inspection surface.

[0355] As shown in FIG. **56**B, a calibration block may include both a thick standard **8104** and a thin standard **8102**, each standard **8102**, **8104** having precisely known thicknesses. Measurements may be made of each standard **8102**, **8104**, resulting in thin channels of data **8106** and thick channels of data **8108**. The sensor identification and calibration module **8112** compares the incoming thin and thick channels of data **8106**, **8108** with a plurality of matching channel data **8114** and, once matches for both the thin channel of data **8106** and the thick channel of data **8108** are found in a single matching channel, the sensor identification and calibration module **8112** pairs the sensor definition with the data coming in from that sensor. The thin and thick channel data may be compared with data expected from standards of the specified thickness and an offset calibration map may be developed that may be applied to data obtained by the given sensor during an inspection run post calibration.

There may be different calibration blocks based on different inspection surface characteristics such as outer diameter of pipes to be inspected, material making up inspection surface (different materials having different acoustic properties), type of inspection surface (e.g., pipes, tank, nominal thicknesses of the target surface), and the like. Having offsets for different thickness may enable the system to interpolate a needed offset for intervening thickness values, and may improve the accuracy of the measurements. This resulting in mapping received data channels to sensors as well as calibration maps for mapping correcting offsets in the data received from the mapped sensor. Sensors may be identified according to the response of the sensor, where the match is determined from the sensor return for the known thickness value for a particular channel, then the sensor can be identified for that data channel.

[0356] In order to safely manufacture the wheels using a high strength magnet, a wheel assembly machine ("WAM") may be used to assemble the wheel while providing increased safety for a worker assembling the wheel. FIG. **57** depicts a wheel assembly machine **8300**. The wheel assembly machine **8300** may include a motor **8302**, a shaft coupler **8303**, a drum assembly **8304**, a fixture assembly **8308**, and an alignment shaft **8310**. The fixture assembly **8308** may include an actuated flange with pins, a limit switch and a ball screw and nut. The motor **8302** may allow the pins to be raised and lowered, moving the magnet toward or away from the wheel plate, and further avoiding a pinch hazard between the magnet and the wheel plate.

[0357] An example procedure for detecting and/or traversing obstacles is described following. An example procedure includes evaluating at least one of: a wheel slippage determination value, a motor torque value, and a visual inspection value (e.g., through the camera, by an operator or controller detecting an obstacle directly and/or verifying motion). The example procedure further includes determining that an obstacle is present in response to the determinations. In certain embodiments, one or more determinations are utilized to determine that an obstacle may be present (e.g., a rapid and/or low-cost determination, such as the wheel slippage determination value and/or the motor torque value), and another determination is utilized to confirm the obstacle is present and/or to confirm the location of the obstacle (e.g., the visual inspection value and/or the wheel slippage determination value, which may be utilized to identify the specific obstacle and/or confirm which side of the inspection robot has the obstacle). In certain embodiments, one or more obstacle avoidance maneuvers may be performed, which may be scheduled in an order of cost, risk, and/or likelihood of success, including such operations as: raising the payload, facilitating a movement of the sensor carriage around the obstacle, reducing and/or manipulating a down force of the payload and/or of a sensor carriage, moving the inspection robot around and/or to avoid the obstacle, and/or changing the inspection run trajectory of the inspection robot.

[0358] FIG. **58** depicts a schematic block diagram of a control scheme for an inspection robot. The example control scheme includes distributed control, with a high level controller (e.g., the brain/gateway, and/or with distributed elements in the base station) providing standardized commands and communications to highly capable low-level controllers that provide hardware specific responses. Various communication and/or power paths are depicted between controllers in the example of FIG. **58**, although specific communication protocols, electrical power characteristics, and the like are non-limiting examples for clarity of the present description. In the example of FIG. **58**, two separate drive modules may be present in certain embodiments, each having an interface to the center body. In the example of FIG. **58**, the sensor module includes the inspection cameras and sensor communications, and may be on the payload and/or associated with the payload (e.g., on the center body side and in communication with sensors of the payload).

[0359] Referencing FIG. **59**, an example system for operating an inspection robot having a distributed microcontroller assembly is depicted, the distributed microcontroller assembly supporting modular control operations, and allowing for rapid prototyping, testing, reconfiguration of the inspection robot, and swapping of hardware components without requiring changes to the primary inspection control functions of the inspection robot.

[0360] The example system includes an inspection controller circuit **8602** that operates an inspection robot using a first command set **8604**. In certain embodiments, the first command set **8604** includes high-level inspection control commands, such as robot positioning and/or movement instructions, instructions to perform sensing operations and/or actuator operations, and may further include instructions using standardized parameters, state values, and the like that are separated from low-level instructions that might be configured for the specific characteristics of hardware components of the inspection robot. For example, an actuator may be responsive to specific voltage values, position instructions, or the like, where the example first command set includes instructions such as whether the actuator should be activated, a down force to be applied by the actuator, a position target value of an actuated component such as a payload or stability assist device, and/or a state value such as "inspecting", "stability assist stored", "stability assist deployed", "payload raised", etc.

[0361] The example system includes a hardware interface **8606** in communication with the inspection coordination controller **8704** (which may be a circuit), where the hardware interface utilizes the first command set **8604**. The example system further includes a first hardware component **8608** that is operatively couplable to the hardware interface **8606**, and a second hardware component **8614** that is couplable to the hardware interface **8606**. The hardware components **8608**, **8614** may include sensors, actuators, payloads, and/or any other device that, when coupled to the inspection robot, communicates and/or is controlled by the inspection robot during inspection operations. In certain embodiments, one or more of the hardware components **8608**, **8614** includes a painting device, an actuator, a camera, a welding device, a marking device, and/or a cleaning device. The example first hardware component **8608** includes a first response map **8610**, which may include a description of sensor response values (e.g., voltages, frequency values, current values, or the like) provided by the hardware component **8608** and corresponding values used by the inspection robot, such as the represented sensed values (e.g., temperature, UT return time, wall thickness indicated, etc.). Another example first response map **8610** may include a description of actuation command values provided by the inspection robot corresponding to actuator responses for the values. For example, actuation command values may be an actuator position value, where the actuator responses may be voltage values, current values, or the like

provided to the actuator. The example second hardware component **8614** including a second response map **8616**. In certain embodiments, the first response map **8610** is distinct from the second response map **8616**.

[0362] In certain embodiments, the actuation command values and/or the represented sensed values are more specific to the hardware component than parameters utilized in the first command set **8604**. In certain embodiments, as described following, an interface controller **8628** and/or a low level hardware control circuit (e.g., sensor control circuit **8620**) may be present and interposed between the hardware component and the inspection controller circuit **8602**. Intermediate controllers or control circuits may be positioned on either side of the hardware interface **8606**, and may further be positioned on the respective hardware controller.

[0363] The system includes the inspection controller circuit **8602** controlling the first hardware component **8608** or the second hardware component **8614** utilizing the first command set **8604**. The system having the first hardware component **8608** coupled to the hardware interface **8606** has a first inspection capability **8612**, and the system having the second hardware component **8614** coupled to the hardware interface **8606** has a second inspection capability **8618**. In certain embodiments, the first inspection capability **8612** is distinct from the second inspection capability **8618**, such as distinct inspection and/or sensing capabilities, and/or distinct actuation capabilities. The first hardware component **8608** and/or the second hardware component **8614** may include more than one sensor (e.g., a group of sensors having a single interface to the hardware interface **8606**), more than one actuator (e.g., a drive module having a drive actuator and a payload actuator), or combinations of these (e.g., a drive module or payload having at least one sensor and at least one actuator).

[0364] An example system includes at least one of the hardware components **8608**, **8614** including a sensor (depicted as the first hardware component **8608** in the example of FIG. **59**), and a sensor control circuit **8620** that converts a sensor response **8622** to a sensed parameter value **8626**. The example sensor control circuit **8620** is depicted as positioned on the hardware component, and as interposed between the hardware interface **8606** and the inspection controller circuit **8602**, although the sensor control circuit **8620** may be positioned in only one of these locations for a given embodiment. The example sensor control circuit **8620** utilizes an A/D converter instruction set **8624** to convert the sensor response **8622**. In certain embodiments, the sensor control circuit **8620** performs one or more operations such as debouncing, noise removal, filtering, saturation management, slew rate management, hysteresis operations, and/or diagnostic processing on the sensor response **8622** to determine the sensed parameter value **8626**. In certain embodiments, the sensor control circuit **8620** additionally or alternatively interprets the sensor response **8622** by converting the sensor response **8622** from sensor provided units (e.g., voltage, bits, frequency values, etc.) to the sensed parameter value **8626**. In certain embodiments, for example where the sensor is a smart sensor or a high capability sensor, the sensor may be configured to provide the sensed parameter value **8626** directly, and/or the sensor control circuit **8620** may be positioned on the sensor to provide the sensed parameter value **8626**.

[0365] In certain embodiments, the inspection controller circuit **8602** utilizes the sensed parameter value **8626**. The sensed parameter value **8626** may be communicated to the inspection controller circuit **8602** from the sensor control circuit **8620**, for example where the interface controller **8628** receives the sensor response **8622**, and the sensor control circuit **8620** is interposed between the hardware interface **8606** and the inspection controller circuit **8602**. In certain embodiments, the sensed parameter value **8626** may be communicated to the inspection controller circuit **8602** from the interface controller **8628**, for example where the interface controller **8628** receives the sensed parameter value **8626** from the sensor control circuit **8620** interposed between the hardware interface **8606** and the sensor.

[0366] An example interface controller **8628** interprets the sensor response **8622** utilizing a calibration map **8630**. For example, the calibration map **8630** may include interface information between the first command set **8604** and responses and/or commands from/to the respective hardware component **8608**, **8614**. In certain embodiments, when a hardware component coupled to the hardware interface **8606** is changed, the interface controller updates the calibration map **8630**, for example selecting an applicable calibration map **8630** from a number of available calibration maps **8630**, and/or receiving an update (e.g., a new calibration, and/or updated firmware for the interface controller **8628**) to provide the updated calibration map **8630**. In certain embodiments, the hardware component provides an identifier, such as part number, build number, component type information, or the like, and the interface controller **8628** selects a calibration map **8630** in response to the identifier of the hardware component.

[0367] Referencing FIG. **60**, an example inspection robot for performing inspection operations having a distributed microcontroller assembly is depicted, the distributed microcontroller assembly supporting modular control operations, and allowing for rapid prototyping, testing, reconfiguration of the inspection robot, and swapping of hardware components without requiring changes to the primary inspection control functions of the inspection robot. The inspection robot includes a robot body **8702** including an inspection coordination controller **8704** that controls a first inspection utilizing a first command set **8604**. The inspection robot includes a hardware interface **8606** in communication with the inspection coordination controller **8704**, a first sensor **8706** operatively couplable to the hardware interface **8606**, where the first sensor has a first response map **8610**, and a second sensor **8708** operatively couplable to the hardware interface **8606**, where the second sensor **8708** has a second response map **8616**. In certain embodiments, the second response map **8616** is distinct from the first response map **8610**. The inspection coordination controller **8704** further controls, using the first command set **8604**, the first sensor **8706** or the second sensor **8708**.

[0368] In certain embodiments, the first sensor **8706** and second sensor **8708** are swappable, such as where either the first sensor **8706** or the second sensor **8708** can be coupled to the hardware interface **8606**, and the inspection coordination controller **8704** can continue to control inspection operations without a change to the first command set **8604**. In certain embodiments, the swappable first sensor **8706** or the second sensor **8708** indicates that a same functionality of the inspection robot is available, even where the sensor responses **8622**, **8710** are distinct (e.g., the sensors have a

same type, can fulfill a same function, and/or they can be utilized with other components of the inspection robot to provide a same function).

[0369] An example inspection robot includes a sensor control circuit **8620** included on the first sensor **8706** and/or the second sensor **8708** (the first sensor **8706** in the example of FIG. **60**) that converts the sensor response **8622** to a sensed parameter value **8626**. In certain embodiments, the sensor control circuit **8620** provides the sensed parameter value **8626** to the hardware interface **8606**. In certain embodiments, the sensor control circuit **8620** converts the sensor response **8622** by performing one or more of debouncing, noise removal, filtering, saturation management, slew rate management, hysteresis operations, and/or diagnostic processing on the sensor response **8622** provided by the sensor. In certain embodiments, the sensor control circuit **8620** performs an A/D conversion on the sensor response **8622** provided by the sensor.

[0370] An example inspection robot includes an interface controller **8628** in communication with the hardware interface **8606**, where the interface controller **8628** further receives one of the sensed parameter value **8626** or the sensor response **8622**, **8710**. In certain embodiments, the inspection robot further includes a sensed value processing circuit **8711** that converts the sensed parameter value **8626** to an inspection value **8712** (e.g., converting a sensed value to a secondary value such as a wall thickness, coating thickness, etc.). An example sensed value processing circuit **8711** provides the inspection value **8712** to the inspection coordination controller **8704**, and/or to a model or virtual sensor **8714**. In certain embodiments, the model or virtual sensor **8714** utilizes the inspection value **8712** to determine other values in the system.

[0371] An example inspection robot includes two drive modules **8716**, **8718**, each operatively coupled to a respective hardware interface **8606**, **8720**. The example system includes the interface controller **8628** interposed between the inspection coordination controller **8704** and each of the hardware interfaces **8606**, **8720**. The example inspection robot further includes each drive module **8716**, **8718** having a respective drive controller **8722**, **8724**, where each drive controller **8722**, **8724** is in communication with the respective hardware interface **8606**, **8720**. The example including the drive modules **8716**, **8718** and the interface controller **8628** provides for separation between the first command set **8604** and the specific communication protocols, command values, and the like for the drive modules **8716**, **8718**. In certain embodiments, the example including the drive modules **8716**, **8718** and the interface controller **8628** provides for swapability and/or reversibility of the drive modules **8716**, **8718** between the hardware interfaces **8606**, **8720**.

[0372] Referencing FIG. **61**, an example procedure for operating an inspection robot having a distributed microcontroller assembly is depicted. The example procedure includes an operation **8802** to operate an inspection controller in communication with a first hardware component coupled to a hardware interface utilizing a first command set, where the first hardware component includes a first response map, an operation **8804** to de-couple the first hardware component from the hardware interface, an operation **8806** to couple a second hardware component to the hardware interface, where the second hardware component includes a second response map, and an operation **8808** to operate the inspection controller in communication with the second hardware component utilizing the first command set.

[0373] An example procedure includes one of the response maps including an A/D converter instruction set, and/or where the first response map is distinct from the second response map. An example procedure includes an operation (not shown) to operate an interface controller communicatively coupled to the hardware interface, where the operating of the interface controller includes interpreting data from the first hardware component utilizing the first response map, interpreting data from the second hardware component utilizing the second response map, and communicating with the inspection controller in response to the first command set. In certain embodiments, interpreting data from the first hardware component is performed in a first hardware configuration (e.g., with the first hardware component coupled to the hardware interface), and interpreting data from the second hardware component is performed in a second hardware configuration (e.g., with the second hardware component coupled to the hardware interface).

[0374] An example procedure includes one of the response maps including an A/D converter instruction set, and/or where the first response map is distinct from the second response map. An example procedure includes an operation (not shown) to operate an interface controller communicatively coupled to the hardware interface, where the operating of the interface controller includes providing actuator command values to the first hardware component utilizing the first response map, providing actuator command values to the second hardware component utilizing the second response map, and communicating with the inspection controller in response to the first command set. In certain embodiments, providing actuator command values to the first hardware component is performed in a first hardware configuration (e.g., with the first hardware component coupled to the hardware interface), and providing actuator command values to the second hardware component is performed in a second hardware configuration (e.g., with the second hardware component coupled to the hardware interface). In certain embodiments, the procedure includes an operation to update computer readable instructions accessible to the interface controller before operating the inspection controller in communication with one of the hardware components, for example after a swap from the first hardware component to the second hardware component.

[0375] Referencing FIG. **62**, an example system **8900** for distributed control of an inspection robot is depicted. The inspection robot may include any embodiment of an inspection robot as set forth throughout the present disclosure. The example system includes an inspection control circuit **8902** structured to operate the inspection robot utilizing a first command set, such as high level operation descriptions including movement commands, sensor commands (e.g., sensor on/off times, sampling rates, etc.), actuator commands (e.g., actuator activation or deactivation, actuator positions, and/or result commands such as applying a selected downforce, position for a payload, position for a sled, etc.). The example system includes a hardware interface **8906** in communication with the inspection control circuit **8902**, where the hardware interface utilizes the first command set.

[0376] The example system includes a first hardware component **8908** operatively couplable to the hardware interface **8906**, where the first hardware component includes

and/or is in communication with a first hardware controller **8910**. The first hardware controller **8910** includes a first response map **8912**, for example including interface descriptions, A/D mapping, hardware responses to commands, and the like, where the first hardware controller **8910** commands the first hardware component **8908** in response to the first response map **8912** and the first command set **8904**.

[0377] The example system includes a second hardware component **8914** operatively couplable to the hardware interface **8906**, where the second hardware component includes and/or is in communication with a second hardware controller **8916**. The second hardware controller **8916** includes a second response map **8918**, and commands the second hardware component **8914** in response to the second response map **8918** and the first command set **8904**.

[0378] It can be seen that the system of FIG. **62** provides for an inspection robot controller **802** operable to command inspection operations of the inspection robot, with either the first hardware component **8908** or the second hardware component **8914** coupled to the hardware interface **8906**, without a change in the coupled hardware component requiring a change in the inspection robot controller **802** or the first command set **8904**.

[0379] The example system **8900** further includes the first hardware controller **8910** utilizing a local command set **8920** to command the first hardware component **8908**. For example, the inspection robot controller **802** may store a number of command sets thereon, wherein the first hardware controller **8910** selects one of the number of command sets as the local command set **8920** based on the type of hardware component being controlled, a function of the hardware component (e.g., sensing, a type of sensor, actuating a payload, actuating a sensor position, actuating a down force value, actuating a drive wheel, etc.) and/or the type of command present in the first command set **8904**. The utilization of a local command set **8920** allows for the implementation of different hardware component types, while allowing the high level first command set **8904** to operate utilizing functional commands disassociated with the specific hardware components implementing the commands. In certain embodiments, a system **8900** may be changed to be compatible with additional hardware component types, actuator positions (e.g., a payload actuator coupled to a drive module or to a center chassis), by adding to available command sets available as local command sets **8920** without changing the inspection control circuit **8902** or the first command set **8904**.

[0380] An example system **8900** includes the first response map **8912** being distinct from the second response map **8918**, for example where the first hardware component **8908** is a different type of component than the second hardware component **8914**, and/or has different interaction values such as response curves relative to electrical control values.

[0381] An example system **8900** includes a first drive module **8922** (which may be the first hardware component **8908**, although they are depicted separately in the example of FIG. **62**) having a first drive controller **8924** that determines a first drive signal **8926** in response to the first command set **8904** and a first drive module response map **8928**. The first drive module **8922** may include a first motor **8930** (e.g., coupled to a drive wheel of the first drive module **8922**) that is responsive to the first drive signal **8926**.

[0382] An example system **8900** includes a second drive module **8932** (which may be the second hardware component **8914**) having a second drive controller **8934** that determines a second drive signal **8936** in response to the first command set **8904** and a second drive module response map **8938**. The second drive module **8932** may include a second motor **8940** that is responsive to the second drive signal **8936**.

[0383] In certain embodiments, one of the first drive module **8922** or the second drive module **8932** may be coupled to the hardware interface **8906**. Additionally or alternatively, one or both of the drive modules may be coupled to one or more additional hardware interfaces **8960**, for example with a first drive module **8922** coupled to a center chassis on a first side, and a second drive module **8932** coupled to the center chassis on a second side. In certain embodiments, the drive controllers **8924**, **8934** are configured to provide appropriate drive signals **8926**, **8936** to the drive modules **8922**, **8932** responsive to the first command set **8904**, based on the response maps **8928**, **8938** and/or which hardware interface **8960** the drive modules **8922**, **8932** are coupled to. In certain embodiments, the first command set **8904** may include a command to move the inspection robot in a desired direction and speed, and the operation of the drive controllers **8924**, **8934** allow for proper movement (direction and speed) regardless of which side the drive modules are coupled to. Accordingly, in certain embodiments, the drive modules **8922**, **8932** are swappable, and/or reversible, without changes to the inspection control circuit **8902** or the first command set **8904**. In certain embodiments, the first drive module response map **8928** is distinct from the second drive module response map **8938**, for example where the motors are distinct, where the drive modules **8922**, **8932** include different actuators (e.g., a payload actuator on one, and a stability support device actuator on the other), and/or where the drive modules **8922**, **8932** are positioned on opposing sides of the center chassis (e.g., where reversibility management is performed response map **8928**, **8938** rather than through a hardware interface **8960** detection). In certain embodiments, the first drive signal **8926** is distinct from the second drive signal **8936**, even where an identical drive response is desired from the first drive module **8922** and the second drive module **8932**. In certain embodiments, the drive signals **8926**, **8936** may be a commanded parameter to the motor (e.g., 50% torque), and/or the drive signals **8926**, **8936** may be a voltage value or a current value provided to the respective drive motor **8930**, **8940**.

[0384] An example hardware component **8908**, **8914** includes a sensor **8942**, **8950**, where the hardware component **8908**, **8914** further includes a sensor control circuit **8946**, **8954** that converts a sensor response of the sensor (e.g., depicted as **8944**, **8952**) to a sensed parameter value **8948**, **8958**. In certain embodiments, the inspection control circuit **8902** utilizes the sensed parameter value **8948**, **8958**, for example as a representation of a parameter sensed by the respective sensor, as a base sensor value, and/or as a minimally processed sensor value.

[0385] In certain embodiments, the sensor control circuits **8946**, **8954** converts the sensor response **8944**, **8952** by performing one or more of debouncing, noise removal, filtering, saturation management, slew rate management (e.g., allowable sensor response change per unit time, sampling value, and/or execution cycle), hysteresis operations

(e.g., filtering, limiting, and/or ignoring sensor response sign changes and/or increase/decrease changes to smooth the sensed parameter value **8948**, **8958** and/or avoid cycling), and/or diagnostic processing (e.g., converting known sensor response **8944**, **8952** values that may be indicating a fault, electrical failure, and/or diagnostic condition instead of a sensed value—for example utilizing reserved bits of the sensor response map) on the sensor response **8944** value.

[0386] In certain embodiments, one or more hardware controllers **8910**, **8946**, **8916**, **8954**, **8924**, **8934** and/or response maps **8912**, **8918**, **8928**, **8938** may be positioned on the inspection robot controller **802**, positioned on another controller in communication with the inspection robot controller **802**, and/or positioned on the respective hardware component (e.g., as a smart component, and/or as a closely coupled component controller). In certain embodiments, one or more hardware controllers **8910**, **8946**, **8916**, **8954**, **8924**, **8934** are interposed between the inspection control circuit **8902** and the respective hardware component.

[0387] Referencing FIG. **63**, an example procedure to operate distinct hardware devices, such as drive modules, utilizing a same first command set, and/or utilizing a swappable hardware interface, is depicted. The example procedure includes an operation **9002** to operate a first drive module with the first command set, and an operation **9004** to operate a second drive module with the first command set. The example procedure further includes an operation **9006** to determine a next movement value in response to the first command set, an operation **9008** to select a drive command from the first command set (e.g., where the first command set includes a number of additional commands in addition to drive commands), and an operations **9010**, **9012** to provide drive command to each of the first drive module and the second drive module.

[0388] In certain embodiments, the example procedure further includes an operation **9014** to determine a first drive signal for the first drive module in response to a first response map for the first drive module, and an operation **9016** to determine a second drive signal for the second drive module in response to a second response map for the second drive module. The example procedure includes operations, to adjust the first drive module **9018** and the second drive module **9020** (and/or the first drive signal or the second drive signal), respectively, by an adjustment amount having a common adjustment parameter. In certain embodiments, the procedure includes an operation to determine the common adjustment parameter **9022** as one of a speed parameter, a distance parameter, and/or a direction parameter. For example, the determined common adjustment parameter **9022** may be utilized to adjust the first drive module **9018** in a first direction and to adjust the second drive module **9020** in an opposite direction to account for the positions of the reversible drive modules with respect to a center chassis of the inspection robot. In another example, the determined common adjustment parameter **9022** may be utilized to prevent wheel slipping, for example where the inspection robot is turning on a surface, by commanding an inner one of the drive modules to turn slightly slower and/or traverse a smaller distance, and commanding an outer one of the drive modules to turn slightly faster or traverse a larger distance.

[0389] In certain embodiments, operations to adjust the drive modules **9018**, **9020** (and/or drive module signals) are performed to achieve a target provided by the first command set, where the adjustments do not have a common adjustment parameter, and/or where the adjustments are not adjusted by a same or similar amount (e.g., where a wheel of one of the drive modules is determined to be slipping). The procedure further includes an operation **9024** to interrogate the inspection surface (e.g., perform sensing operations) in response to the first command set.

[0390] Referring to FIGS. **64-66**, example methods for inspecting an inspection surface with an inspection robot using configurable payloads are depicted. The inspection robot includes any inspection robot having a number of sensors associated therewith and configured to inspect a selected area. Without limitation to any other aspect of the present disclosure, an inspection robot as set forth throughout the present disclosure, including any features or characteristics thereof, is contemplated for the example methods depicted in FIGS. **64-66**. In certain embodiments, the inspection robot **100** (FIG. **1**) may have one or more payloads **2** (FIG. **1**) and may include one or more sensors **2202** (FIG. **27**) on each payload **2**.

[0391] Operations of the inspection robot **100** provide the sensors **2202** in proximity to selected locations of the inspection surface **500** and collect associated data, thereby interrogating the inspection surface **500**. Interrogating, as utilized herein, includes any operations to collect data associated with a given sensor, to perform data collection associated with a given sensor (e.g., commanding sensors, receiving data values from the sensors, or the like), and/or to determine data in response to information provided by a sensor (e.g., determining values, based on a model, from sensor data; converting sensor data to a value based on a calibration of the sensor reading to the corresponding data; and/or combining data from one or more sensors or other information to determine a value of interest). A sensor **2202** may be any type of sensor as set forth throughout the present disclosure, but includes at least a UT sensor, an EMI sensor (e.g., magnetic induction or the like), a temperature sensor, a pressure sensor, an optical sensor (e.g., infrared, visual spectrum, and/or ultra-violet), a visual sensor (e.g., a camera, pixel grid, or the like), or combinations of these.

[0392] As illustrated in FIG. **64**, a first method includes a first inspection pass **9022** inspecting an inspection surface using a first payload coupled to a chassis of the inspection robot, decoupling **9204** the first payload from the inspection robot, and selectively coupling **9206** a second payload to the chassis of the inspection robot. As will be explained in greater detail below, the first payload has a first inspection characteristic and the second payload has a second inspection characteristic that is distinct from the first inspection characteristic. In embodiments, the method further includes a second inspection pass **9208** inspecting the inspection surface using the second payload.

[0393] In embodiments, the inspection characteristic distinction may be a difference between a configuration of the one or more inspection sensors of the first payload and a configuration of the one or more inspection sensors of the second payload. The configuration difference may be a difference in a type of inspection sensor between the first and second payloads. In such embodiments, the sensors may be ultrasonic sensors, electromagnetic induction (EMI) sensors, photonic sensors, infrared sensors, ultraviolet sensors, electromagnetic radiation sensors, camera sensors, and/or optical sensors. For example, a first portion of an inspection run may use a first payload having ultrasonic sensors for a first

inspection pass **9202** of the inspection surface. In the event an abnormality is found, the first payload may be swapped out for a second payload having optical sensors for use in a second inspection pass **9208** over the inspection surface to acquire images of the abnormality. As will be understood, various other combinations of sensors between the first and second payloads may be used.

[0394] In embodiments, both the first payload and the second payload may each comprise two or more inspection sensors, and the difference in the configuration of the first payload and the second payload may be a difference in spacing between the inspection sensors on the first payload and the inspection sensors on the second payload. For example, a first inspection pass **9202** over the inspection surface may use a payload with a wide spacing between inspection sensors in order to save on the amount of data and/or time needed to capture the status of the inspection surface. In the event that an abnormality is found during the first pass, a second payload, having a smaller spacing between the sensors than the first payload, may be swapped in place of the first payload for a second inspection pass **9208** in order to obtain higher quality data of the abnormality, but while taking a longer period of time to cover the same amount of area on the inspection surface as the first payload. As another example, the first inspection pass **9202** may cover a first portion of the inspection surface that may require a lower level of resolution, where the first payload has a wider spacing between sensors than the second payload which is used to cover a second portion of the inspection surface that requires higher resolution. In embodiments, the difference of spacing may be defined at least in part on a difference in a spacing of at least two sleds of the first payload and a spacing of at least two sleds of the second payload.

[0395] In embodiments, the difference in the configuration between the first and second payloads may be a difference between a first directional force applied **9210** on the first payload, e.g., a downward force applied by a first biasing member of the first payload to at least one inspection sensor of the first payload, and a second directional force applied **9212** on the second payload, e.g., a downward force, distinct from the first downward force, applied by a second biasing member of the second payload to at least one inspection sensor of the second payload. In embodiments, the distinction between the first and the second directional forces may be one of a magnitude, angle, and/or direction. The angle may be relative to the inspection surface. For example, in embodiments, the second payload may have a stronger downward biasing force than the first payload. In such embodiments, an operator of the inspection robot may attempt to use the first payload to inspect **9202** the inspection surface only to discover that the sensors of the first payload are having difficulty coupling to the inspection surface. The operator may then recall the inspection robot and swap out the first payload for the second payload to employ the stronger downward biasing force to couple the sensors of the second payload to the inspection surface.

[0396] In embodiments, the difference in the configuration between the first and second payloads may be a difference in a first spacing between at least two arms of the first payload and a spacing between at least two arms of the second payload.

[0397] In embodiments, the difference in the configuration between the first and second payloads may be a difference in spacing defined at least in part on a difference in a first number of inspection sensors on a sled of the first payload and a second number of inspection sensors on a sled of the second payload.

[0398] In embodiments, the distinction between the first inspection characteristic and the second inspection characteristic include at least one of a sensor interface, a sled ramp slope, a sled ramp height, a sled pivot location, an arm pivot location, a sled pivot range of motion, an arm pivot range of motion, a sled pivot orientation, an arm pivot orientation, a sled width, a sled bottom surface configuration, a couplant chamber configuration, a couplant chamber side, a couplant chamber routing, or a couplant chamber orientation.

[0399] In embodiments, the distinction between the first inspection characteristic and the second inspection characteristic is of biasing member type. For example, the first payload may have an active biasing member and the second payload may have a passive biasing member or vice versa. In such embodiments, the active biasing member may be motively coupled to an actuator, wherein a motive force of the actuator includes an electromagnetic force, a pneumatic force, or a hydraulic force. In embodiments, the passive biasing member may include a spring or a permanent magnet.

[0400] In embodiments, the distinction between the first inspection characteristic and the second inspection characteristic may be a side of the inspection robot chassis which the first payload is operative to be disposed and a side of the inspection robot chassis which the second payload is operative to be disposed. For example, the chassis may have a first payload interface on a first side and a second payload interface on a second side opposite the first side, wherein first payload may be operative to mount/couple to the first payload interface and lead the chassis and the second payload may be operative to mount/couple to the second payload interface and trail the chassis or vice versa.

[0401] Turning to FIG. **65**, in embodiments, a second method includes selectively coupling **9302** a first payload to the inspection robot chassis, and selectively coupling **9304** a second payload distinct from the first payload to the inspection robot chassis. The method may further include selectively coupling **9306** a third payload distinct from the first and second payload to the inspection robot chassis. The method may further include selectively coupling **9308** a fourth payload distinct from the first, second and third payloads to the inspection robot chassis. The method may further include coupling yet additional payloads to the inspection robot chassis distinct from the first, second, third and fourth payloads.

[0402] Moving to FIG. **66**, a third method includes inspecting **9402** the inspection surface using a first payload coupled to the inspection robot chassis, determining **9406** a characteristic of the inspection surface, decoupling **9408** the first payload from the inspection robot chassis, determining **9410** a second payload in response to the determined characteristic of the inspection surface, selectively coupling **9412** the second payload to the inspection surface, and inspecting **9414** the inspection surface using the second payload coupled to the inspection robot chassis.

[0403] In an embodiment, and referring to FIG. **88**, a payload **18400** for an inspection robot for inspecting an inspection surface may include a payload coupler **18402** having a first portion **18404** and a second portion **18406**, the first portion **18404** selectively couplable to a chassis of the

inspection robot; an arm **18408** having a first end **18410** and a second end **18412**, the first end **18410** coupled to the second portion **18406** of the payload coupler **18402**; one or more sleds **18414** mounted to the second end **18412** of the arm **18408**; and at least two inspection sensors **18416**, wherein each of the at least two inspection sensors **18416** are mounted to a corresponding sled **18414** of the one or more sleds, and operationally couplable to the inspection surface; wherein the second portion **18406** of the payload coupler **18402** may be moveable in relation to the first portion **18404**.

[0404] The term selectively couplable (and similar terms) as utilized herein should be understood broadly. Without limitation to any other aspect or description of the present disclosure, selectively couplable describes a selected association between objects. For example, an interface of object **1** may be so configured as to couple with an interface of object **2** but not with the interface of other objects. An example of selective coupling includes a power cord designed to couple to certain models of a particular brand of computer, while not being able to couple with other models of the same brand of computer. In certain embodiments, selectively couplable includes coupling under selected circumstances and/or operating conditions, and/or includes de-coupling under selected circumstances and/or operating conditions.

[0405] In an embodiment, the second portion **18406** of the payload coupler **18402** may be rotatable with respect to the first portion **18404**. In an embodiment, the first end of the arm **18408** may be moveable in relation to the second portion **18406** of the payload coupler **18402**. In an embodiment, the first end **18410** of the arm **18408** may rotate in relation to the second portion **18406** of the payload coupler **18402**. In an embodiment, the first portion of the payload coupler is rotatable with respect to a first axis, and wherein the first end of the arm is rotatable in a second axis distinct from the first axis.

[0406] In an embodiment, the one or more sleds **18414** may be rotatable in relation to the second end **18412** of the arm **18408**. The payload may further include at least two sleds **18414**, and wherein the at least two sleds **18414** may be rotatable as a group in relation to the second end **18412** of the arm **18408**—for example, by a pivot coupling **18422** to the arm **18408**. The payload may further include a downward biasing force device **18418** structured to selectively apply a downward force to the at least two inspection sensors **18416** with respect to the inspection surface. In embodiments, the weight position of the device **18418** may be set at design time or run time. In some embodiments, weight positions may only include a first position or a second position, or positions in between (a few, a lot, or continuous). In embodiments, the downward biasing force device **18418** may be disposed on the second portion **18406** of the payload coupler **18402** along an axis running through **18420**. The downward biasing force device **18418** may be one or more of a weight, a spring, an electromagnet, a permanent magnet, or an actuator. The downward biasing force device **18418** may include a weight moveable between a first position applying a first downward force and a second position applying a second downward force. The downward biasing force device **18418** may include a spring, and a biasing force adjustor moveable between a first position applying a first downward force and a second position applying a second downward force. In embodiments, the force of the device **18418** may be set at design time or run time. In embodiments, the force of the device **18418** may be available only at a first position/second position, or positions in between (a few, a lot, or continuous). For example, setting the force may involve compressing a spring or increasing a tension, such as in a relevant direction based on spring type. In another example, setting the force may involve changing out a spring to one having different properties, such as at design time. In embodiments, the spring may include at least one of a torsion spring, a tension spring, a compression spring, or a disc spring. The payload **18400** may further include an inspection sensor position actuator, e.g., **6072**, structured to adjust a position of the at least two inspection sensors **18416** with respect to the inspection surface. The payload may further include at least two sensors **18416**, wherein the payload coupler **18402** may be moveable with respect to the chassis of the inspection robot and the inspection sensor position actuator may be coupled to the chassis, wherein the inspection sensor position actuator in a first position moves the payload coupler **18402** to a corresponding first coupler position, thereby moving the at least two sensors **18416** to a corresponding first sensor position, and wherein the inspection sensor position actuator in a second position moves the payload coupler **18402** to a corresponding second coupler position, thereby moving the at least two sensors **18416** to a corresponding second sensor position. In some embodiments, the inspection sensor position actuator may be coupled to a drive module. In some embodiments, a payload position may include a down force selection (e.g., actuator moves to touch sensors down, further movement may be applying force and may not correspond to fully matching geometric movement of the payload coupler). In embodiments, the inspection sensor position actuator may be structured to rotate the payload coupler **18402** between the first coupler position and the second coupler position. The actuator may be structured to horizontally translate the payload coupler **18402** between the first coupler position and the second coupler position. The payload may further include a couplant conduit **18506** structured to fluidly communicate couplant between a chassis couplant interface **5102** (FIG. **51**) and a payload couplant interface, e.g., interface **18502**, and wherein each of the at least two inspection sensors **18416** may be fluidly coupled to the payload couplant interface. In an embodiment, the couplant conduit **18506** may be from the chassis to the payload such that a single payload connection supplies all related sensors.

[0407] The term fluidly communicate (and similar terms) as utilized herein should be understood broadly. Without limitation to any other aspect or description of the present disclosure, fluid communication describes a movement of a fluid, a gas, or a liquid, between two points. In some examples, the movement of the fluid between the two points can be one of multiple ways the two points are connected, or may be the only way they are connected. For example, a device may supply air bubbles into a liquid in one instance, and in another instance the device may also supply electricity from a battery via the same device to electrochemically activate the liquid.

[0408] The payload may further include at least two sensor couplant channels, each of the at least two sensor couplant channels, e.g., **18608**, fluidly coupled to the payload couplant interface at a first end, and fluidly coupled to a couplant chamber, e.g., **2810** (FIG. **26**), for a corresponding one of the at least two inspection sensors **18416** at a second end. In an

embodiment, the arm **18408** defines at least a portion of each of the at least two sensor couplant channels **18608**, that is, the at least two sensor couplant channels share some of their length in the arm portion before branching out. The payload **18400** may further include a communication conduit **18504** structured to provide electrical communication between a a data communications/power/control tether input **5112** (FIG. **48**) and a payload control interface e.g., interface **18502**, and wherein each of the at least two inspection sensors **18416** may be communicatively coupled to the payload control interface **18502**. The communication conduit **18504** may include at least two sensor control channels, e.g., **18608**, each of the at least two sensor control channels **18608** communicatively coupled to the payload control interface at a first end, and communicatively coupled to a corresponding one of the at least two inspection sensors **18416** at a second end. The arm **18408** may define at least a portion of each of the at least two sensor control channels. Referring to FIG. **89**, the payload **18400** may further include a universal conduit **18502** structured to provide fluid communication of couplant between a chassis couplant interface **5102** and a couplant chamber **2810** (FIG. **26**) corresponding to each of the at least two inspection sensors **18416**; electrical communication between a, a data communications/power/control tether input **5112** and each of the at least two inspection sensors **18416**; and electrical power between multiple sensor connectors **5118** (FIG. **48**), and each of the at least two inspection sensors **18416**.

[0409] The term universal conduit (and similar terms) as utilized herein should be understood broadly. Without limitation to any other aspect or description of the present disclosure, a universal conduit describes a conduit capable of providing multiple other conduits or connectors, such as fluid, electricity, communications, or the like. In certain embodiments, a universal conduit includes a conduit at least capable to provide an electrical connection and a fluid connection. In certain embodiments, a universal conduit includes a conduit at least capable to provide an electrical connection and a communication connection.

[0410] In an embodiment, and referring to FIG. **89** and FIG. **90**, the universal conduit **18502** may include a single channel portion **18604** defining a single channel extending between the chassis and the payload coupler **18402**; and a multi-channel portion **18608** defining a plurality of channels extending between the payload coupler **18402** and each of the one or more sleds **18414**. In embodiments, there may be more than one single channel to support a number of payloads, or more than one chassis interface. In embodiments, the arm **18408** may define at least a portion of the multi-channel portion **18608** of the universal conduit **18602**. The first portion **18404** of the payload coupler **18402** may include a universal connection port **18502** that may include a mechanical payload connector structured to mechanically couple with a mechanical connection interface of the chassis **102** (FIG. **1**) of the inspection robot **100**; and at least one connector selected from the connectors consisting of a payload couplant connector **18506** structured to fluidly communicate with a couplant interface **5102** of the chassis **102** of the inspection robot **100**; a payload communication connector **18504** structured to electrically communicate with an electrical communication interface of the data communications/control tether input **5112** of the chassis **102** of the inspection robot **100**; and an electrical power connector **18508** structured to electrically communicate with an electrical power interface of the data communications/control tether input **5112** of the chassis **102** of the inspection robot **100**.

[0411] The term mechanically couple (and similar terms) as utilized herein should be understood broadly. Without limitation to any other aspect or description of the present disclosure, mechanically coupling describes connecting objects using a mechanical interface, such as joints, fasteners, snap fit joints, hook and loop, zipper, screw, rivet, or the like.

[0412] In an embodiment, and referring to FIG. **89**, a payload coupler **18402** for a payload of an inspection robot for inspecting an inspection surface may include a first portion **18404** selectively couplable to a chassis of the inspection robot; a second portion **18406** couplable to an arm **18408** of the payload **18400**; and a universal connection port **18502** disposed on the first portion **18404** and comprising: a mechanical payload connector structured to mechanically couple with a mechanical connection interface of the chassis of the inspection robot. The universal connection port may further include a payload couplant connector **18506** structured to fluidly communicate with a couplant interface **5102** of the chassis **102** of the inspection robot **100**. The universal connection port **18502** may further include a payload communication connector **18504** structured to electrically communicate with an electrical communication interface of the data communications/control tether input **5112** of the chassis **102** of the inspection robot **100**. The universal connection port **18502** may further include an electrical power connector **18508** structured to electrically communicate with an electrical power interface of the data communications/control tether input **5112** of the chassis **102** of the inspection robot **100**. In certain embodiments, the payload coupler includes a single fluid connection port for a payload, and a separate single electrical connection port. In the example, the single fluid connection port provides for couplant or other working fluid provision to all sensors or devices on the payload, and the single electrical connection port provides for all electrical power and communication connections for all sensors or devices on the payload.

[0413] In an embodiment, and referring to FIG. **91**, a method of inspecting an inspection surface with an inspection robot may include determining one or more surface characteristics of the inspection surface **18702**; determining at least two inspection sensors **18704** for inspecting the inspection surface in response to the determined surface characteristics, the at least two inspection sensors each mounted to a corresponding sled, the corresponding sleds coupled to an arm, the arm coupled to a second portion of a payload coupler; selectively coupling a first portion of the payload coupler to a chassis of the inspection robot **18706**; and articulating the first portion of the payload coupler **18716** causing relative movement between the first portion of the payload coupler and the second portion of the payload coupler. In an embodiment, selectively coupling the first portion of the payload coupler to a chassis of the inspection robot includes mechanically coupling a mechanical payload connector of a universal connection port, disposed on the first portion, to a mechanical connection interface of the chassis of the inspection robot **18708**; and fluidly coupling a payload couplant connector of the universal connection port to a couplant interface of the chassis **18710**. In an embodiment, selectively coupling a second portion of the

payload coupler to a chassis of the inspection robot includes mechanically coupling a mechanical payload connector of a universal connection port, disposed on the second portion, to a mechanical connection interface of the chassis of the inspection robot **18708**; and electrically coupling a payload communication connector of the universal connection port to an electrical communication interface of the chassis **18712**. In an embodiment, selectively coupling the first portion of the payload coupler to a chassis of the inspection robot may include mechanically coupling a mechanical payload connector of a universal connection port, disposed on the first portion, to a mechanical connection interface of the chassis of the inspection robot **18708**; and electrically coupling an electrical power connector of the universal connection port to an electrical power interface of the chassis **18714**.

[0414] In an embodiment, selectively coupling the first portion of the payload coupler to a chassis of the inspection robot may include mechanically coupling a mechanical payload connector of a universal connection port, disposed on the first portion, to a mechanical connection interface of the chassis of the inspection robot **18708**; fluidly coupling a payload couplant connector of the universal connection port to a couplant interface of the chassis **18710**; electrically coupling an payload communication connector of the universal connection port to an electrical communication interface of the chassis **18712**; and electrically coupling an electrical power connector of the universal connection port to an electrical power interface of the chassis **18714**. The method may further include rotating the second portion of the payload coupler in relation to the first portion. The method may further include rotating the arm in relation to the payload coupler **18718**. The method may further include rotating at least one of the corresponding sleds in relation to the arm **18720**. The method may further include applying a downward biasing force to the at least two inspection sensors with respect to the inspection surface via a downward biasing force device **18722**. The downward biasing force device may be disposed on the chassis of the inspection robot and may apply a rotational force to the payload coupler. The method may further include horizontally translating the at least two inspection sensors with respect to the chassis of the inspection robot **18724**.

[0415] Turning now to FIG. **67**, an example system and/or apparatus for providing dynamic adjustment of a biasing force for an inspection robot **100** (FIG. **1**) is depicted. The example inspection robot **100** includes any inspection robot having a number of sensors associated therewith and configured to inspect a selected area. Without limitation to any other aspect of the present disclosure, an inspection robot **100** as set forth throughout the present disclosure, including any features or characteristics thereof, is contemplated for the example system depicted in FIG. **67**. In certain embodiments, the inspection robot **100** may have one or more payloads **2** (FIG. **1**) and may include one or more sensors **2202** (FIG. **27**) on each payload **2**.

[0416] Operations of the inspection robot **100** provide the sensors **2202** in proximity to selected locations of the inspection surface **500** and collect associated data, thereby interrogating the inspection surface **500**. Interrogating, as utilized herein, includes any operations to collect data associated with a given sensor, to perform data collection associated with a given sensor (e.g., commanding sensors, receiving data values from the sensors, or the like), and/or to determine data in response to information provided by a sensor (e.g., determining values, based on a model, from sensor data; converting sensor data to a value based on a calibration of the sensor reading to the corresponding data; and/or combining data from one or more sensors or other information to determine a value of interest). A sensor **2202** may be any type of sensor as set forth throughout the present disclosure, but includes at least a UT sensor, an EMI sensor (e.g., magnetic induction or the like), a temperature sensor, a pressure sensor, an optical sensor (e.g., infrared, visual spectrum, and/or ultra-violet), a visual sensor (e.g., a camera, pixel grid, or the like), or combinations of these.

[0417] The example system further includes a biasing device/member **9530** that applies a downward force on at least one sled **1** (FIG. **1**) of a payload **2** in a direction towards the inspection surface **500**. The biasing device **9530** may be disposed on the inspection robot **100** and have a passive component **9534** and an active component **9532**. The passive component **9534** may include a biasing member **21** such as a spring (FIG. **4**), a permanent magnet, weight and/or other device that provides a relatively consistent force. The active component **9532** may include an electromagnet, a suction device, a sliding weight, an adjustable spring (e.g., coupled to an actuator that selectively increases compression, tension, or torsion of the spring), and/or other devices that provide for an adjustable/controllable force. The passive **9534** and/or active **9532** components may be mounted to a payload **2**, sensors **2202** or other portions of the inspection robot **100** where the components **9532** and **9534** can provide a downward force on the sensors **2202** towards the inspection surface **500**. For example, in embodiments, the passive component **9534** may be a permanent magnet that provides a constant baseline amount of force directing the sensors **2202** towards the inspection surface **500** with the active component **9532** being an electromagnet that provides an adjustable amount of force directing the sensors **2202** towards the inspection surface **500** that supplements the force provided by the passive component.

[0418] The example system further includes a controller **802** having a number of circuits configured to functionally perform operations of the controller **802**. The example system includes the controller **802** having a sensor interaction circuit **9502**, a force control circuit **9506** and a force provisioning circuit **9518**. In embodiments, the controller **802** may further include a user interaction circuit **9510** and/or an obstacle navigation circuit **9514**. The example controller **802** may additionally or alternatively include aspects of any controller, circuit, or similar device as described throughout the present disclosure. Aspects of example circuits may be embodied as one or more computing devices, computer-readable instructions configured to perform one or more operations of a circuit upon execution by a processor, one or more sensors, one or more actuators, and/or communications infrastructure (e.g., routers, servers, network infrastructure, or the like). Further details of the operations of certain circuits associated with the controller **802** are set forth, without limitation, in the portion of the disclosure referencing FIGS. **67-69**.

[0419] The example controller **802** is depicted schematically as a single device for clarity of description, but the controller **802** may be a single device, a distributed device, and/or may include portions at least partially positioned with other devices in the system (e.g., on the inspection robot **100**). In certain embodiments, the controller **802** may be at

least partially positioned on a computing device associated with an operator of the inspection (not shown), such as a local computer at a facility including the inspection surface **500**, a laptop, and/or a mobile device. In certain embodiments, the controller **802** may alternatively or additionally be at least partially positioned on a computing device that is remote to the inspection operations, such as on a web-based computing device, a cloud computing device, a communicatively coupled device, or the like.

[0420] Accordingly, as illustrated in FIGS. **67** and **68**, the sensor interaction circuit **9502** interprets **9602** a force value **9504** representing an amount of the downward force applied by the biasing device **9530** on a sled **1** in a direction towards the inspection surface **500**. The force control circuit **9506** determines **9608** a force adjustment value **9508** in response to the force value **9504** and a target force value **9536**. The force provisioning circuit **9518** provides the force adjustment value **9508** to the active component **9532**, which is responsive to the force adjustment value **9508**. In other words, the active component **9532** is adjusted **9614** based at least in part on the determined force adjustment value **9508**. In embodiments, determining **9608** the force adjustment value **9508** may include determining **9610** the force adjustment value **9608** to the active component **9532**. The biasing device **9530** may then apply **9612** the downward force to the sled **1** and/or sensors **2202**, which, as discussed above, may be performed by adjusting **9614** the active component **9532**.

[0421] For example, in embodiments, the passive component **9534** may be configured to provide the target force value **9536** to the sled **1** and/or sensors **2202**, wherein the target force value **9536** may correspond to an ideal/optimal amount of force for keeping the sensors **2202** coupled to the inspection surface **500** as the sled **1** bounces, jostles and/or otherwise moves in relation to the inspection surface **500** during an inspection run. It will also be understood that the passive component **9534** and the active component **9532** may be configured to collectively provide the target force value **9536**.

[0422] Accordingly, in embodiments, the force control circuit **9506** may determine **9608** the force adjustment value **9508** so that the magnitude of the downward force applied by the biasing device **9530** is increased or decreased as conditions encountered by the inspection robot **100** while traversing the inspection surface **500** make it more or less likely that the sensors **2202** will be jostled, bounced, and/or otherwise moved away from an ideal position with respect to the inspection surface **500**. In other words, as conditions become more difficult or easy for the sensors **2202** to remain coupled to the inspection surface **500**, the target force value **9536** may increase or decrease and the controller **802** may increase or decrease the amount of downward force applied by the active component **9532** in an effort to make the amount of downward force applied by the biasing device **9530**, i.e., the sum of the passive **9534** and active **9532** components, to be equal, or nearly equal, to the target force value **9536**. In such embodiments, the force adjustment value **9508** may be determined **9608** in response to determining that a coupling quality value is below a coupling quality threshold. As will be appreciated, dynamic adjustment of the amount of downward force provided by the biasing device **9530** improves the overall likelihood that the sensors **2202** will remain coupled to the inspection surface **500** during an inspection run.

[0423] As shown in FIGS. **68** and **69**, in embodiments, the obstacle navigation circuit **9514** may interpret **9606** obstacle data **9516** from one or more obstacle sensor, which may be mounted on the inspection robot **100** or located off the inspection robot **100**. Such obstacle data **9516** may include the location and/or type of structures on the surface, cracks in the surface, gaps in the inspection surface **500** and/or any other type of information (as described herein) relating to an obstacle which may need to be traversed by the inspection robot **100**. In such embodiments, the force control circuit **9506** may update the force adjustment value **9508** when the obstacle navigation circuit **9514** determines **9718** from the obstacle data **9516** that an obstacle is in the path of the inspection robot **100** along the inspection surface **500** and/or when the obstacle data **9516** indicates the obstacle is no longer in the path of the inspection robot **100**. For example, where the obstacle data **9516** indicates that an obstacle, e.g., a pipe head, is in the path of the inspection robot **100**, the force control circuit **9506** may determine the force adjustment value **9508** to be negative to reduce **9722** the amount of force applied by the biasing device **9530** so that the sensors **2202** and/or sled **1** can more easily move over and/or away from the obstacle. As will be appreciated, in some embodiments, the direction of the fore supplied by the active component **9532** may be reversed to as to lift the sensors **2202** and/or sled **1** away from the inspection surface **500**. Upon determining **9718** that the obstacle has been cleared, the force adjustment value **9508** may be made positive to increase **9720** the amount of force applied by the biasing device **9530** to improve sensor **2202** coupling with the inspection surface **500**.

[0424] As further shown in FIGS. **68** and **69**, in embodiments, the force control circuit **9506** may determine **9608** the force adjustment value **9508** such that the amount of the downward force applied by the biasing device **9530** is above a minimum threshold value **9712**. For example, in embodiments, the minimum threshold value **9712** may correspond to an amount of force for keeping the sensors **2202** and/or sled **1** from decoupling from the inspection surface **500**, e.g., when the inspection surface **500** is inclined and/or vertical with respect to the Earth's gravitational field. For example, in situations where the inspection robot **100** is inspecting a vertical metal wall, the control circuit may first attempt to traverse an obstacle by reducing an amount of force applied by an electromagnet of the active component **9532** with the minimum threshold value **9712** serving as a safety feature to prevent undesirable departure of the sensors **2202**, sleds **1** and/or inspection robot (as a whole) from the inspection surface **500**. When the force value **9504** is below the minimum threshold value **9712**, or when a determined force adjustment value **9508** would result in the force value **9504** dropping below the minimum threshold value **9712**, the force control circuit **9506** may increase **9716** the amount of downward force supplied by the biasing device **9530** by increasing the amount of the force supplied by the active component **9532**.

[0425] As yet further shown in FIG. **68**, in embodiments, the user interaction circuit **9510** interprets **9604** a force request value **9512**. The force adjustment value **9508** may be based, at least in part, on the force request value **9512**. For example, the inspection robot **100** may encounter an obstacle and send a notification to an operator. Upon receiving the notification, the operator may determine that the obstacle may be best traversed by decreasing the amount of

downward force applied by the biasing device **9530**. The operator may then send a force request value **9512** to the controller **802** that calls for decreasing the downward force applied by the biasing device **9530**, with the force control circuit **9506** adjusting **9614** the active component **9532** in kind. The operator may also determine that an obstacle is best traversed by increasing the amount of downward biasing force and send a force request value **9512** to the controller **802** calling for an increase in the downward biasing force applied by the biasing device **9530**. For example, an operator may detect that the inspection robot **100** has encountered a portion of the inspection surface **500** that is bumpier than expected such that the sensors **2202** are uncoupling, or are about to uncouple, from the surface **500**. Accordingly, the operator may increase the amount of biasing force provided by the active component **9532**. As another example, the operator may detect that the inspection robot **1** needs to cross a gap and/or small step in the surface **500**. In such cases, the operator may decrease the amount of biasing force applied by the active component **9532** to facilitate and easier crossing.

[0426] In embodiments, the minimum threshold value **9712** may be based, at least in part, on the force request value **9512**. For example, an operator may detect that the inspection surface **500** is steeper and/or bumpier than originally expected and send a force request value **9512** to the controller **802** that sets and/or increases the minimum threshold value **9712** to reduce the risk of the sensors **2202**, sled **1** and/or inspection robot **100** (as a whole) from undesirably departing the inspection surface **500**.

[0427] In embodiments, the force adjustment value **9508** may be determined **9608** further in response to determining that an excess fluid loss value exceeds a threshold value. For example, the controller **802** and/or operator may detect that couplant is being lost at a rate faster than desired and, in turn, increase the amount of the downward force applied by the active component **9532** to reduce couplant loss by decreasing the space between the sensors **2202** and the inspection surface **500**.

[0428] In embodiments, the active component **9532** may be adjusted to compensate for a temperature of the active component **9532**, passive component **9534**, inspection surface **500** and/or ambient environment. For example, in embodiments where the passive component **9534** is a permanent magnet, the amount of force supplied by the permanent magnet may decrease due to a hot inspection surface and/or hot environmental temperatures. The decrease in the force supplied by the passive component **9534** may be compensated for by increasing the amount of force supplied by the active component **9532**. Further, as temperatures changes may affect the efficiency of an electromagnet, in embodiments, the amount of the force called for by the controller **802** of the active component **9532** may need to change as the electromagnet increases and decreases in temperature in order to provide for a consistent amount of force.

[0429] Referring to FIGS. **70-72**, a method of operating an inspection robot is depicted. The method may include commanding operation of a first component of an inspection robot with a first command set (step **9802**) and operating the first component in response to the first command set and a first response map (step **9804**). The first component may be uncoupled from a first component interface of the inspection robot (step **9806**) and a second component of the inspection robot coupled to the first component interface (**9808**). The method may further include commanding operation of a second component with the first command set (step **9810**) and operating the second component in response to the first command set and a second response map (step **9812**). Operating the first component may include interpreting the commanded operation in response to the first response map (step **9826**) and operating the second component may include interpreting the commanded operation in response to the second response map (step **9828**). The first response map and the second response map may be the same or distinct. In embodiments the method may further include determining which of the first component of the second component is coupled to the first component interface (step **9829**) and selecting one of the first response map or the second response map based on the coupled component (step **9831**). While examples of a first component with a first response map and a second component with a second response map are described, it should be understood that there may be a plurality of components, each having a component response map.

[0430] In embodiments, the first component may include a first sensor carriage with at least two sensors coupled to the first sensor carriage. The second component may include a second sensor carriage, the second carriage also having at least two sensors coupled to the second sensor carriage. The inspection configuration of the different sensor carriages may be the same or distinct from one another. In embodiments, the first component may include a first inspection payload and the second component may include a second inspection payload. The payloads may be distinct in terms of types and configurations of payloads.

[0431] As depicted in FIG. **71**, commanding operation of the first component (step **9802**) may include: providing an inspection trajectory for the inspection robot (step **9814**), providing sensor activation instructions for a plurality of sensors corresponding to a first component(step **9816**), providing couplant flow commands for the first component (step **9818**), providing position data commands corresponding to inspection data from the first component (step **9820**), or providing a result command for the first component (step **9822**). Further, interpreting the first response map may include interpreting (step **9824**) the first response map based on data received from the first component, interpreting the first response map based on identifying data received from the first component, analyzing data from the first component in response to at least the first response map and interpreting the first response map as the correct map in response to the analyzing, and the like.

[0432] As depicted in FIG. **72**, operating the first component (step **9804**) may include interpreting the first response map (step **9832**). Interpreting the first response map may include: interpreting the first response map based on data received from the first component (step **9826**); interpreting the first response map based on identifying data received from the first component (step **9827**); analyzing data from the first component in response to at least the first response map and interpreting the first response map as the correct map in response to the analyzing (step **9830**); and the like. Similarly, operating the second component (or other components) may include interpreting the component response map. Interpreting the component response map may include: interpreting the component response map based on data received from the component interpreting the component

response map based on identifying data received from the component; analyzing data from the component in response to at least the component response map and interpreting the component response map as the correct map in response to the analyzing; and the like. While an example of commanding operation of a first component with a first command set and interpreting the first response map has been provided, it is understood that the example is not limited to the first component but rather map be understood to apply to a plurality of different components.

[0433] Referring to FIG. **73**, an inspection robot **9902** is depicted. The inspection robot **9902** may include an inspection chassis **9904** having a first hardware interface **9906** with a first quick release connection **9908** and a second hardware interface **9936** with a second quick release connection **9938**. The example inspection robot **9902** includes an inspection controller **9910** communicatively coupled to the first hardware interface **9906**, and structured to control a payload component **9922**, **9924** using a first command set **9916**. The example inspection robot **9902** includes a first component payload **9912** operably couplable to the first hardware interface **9906**, and having a first payload component **9922** with a first response map **9914**, where the first payload component **9922** interacts with the inspection controller **9926** using the first command set **9916**. The example inspection robot **9902** further includes a second component payload **9918** that includes a second payload component **9924** having a second response map **9920** and structured to interact with the inspection controller **9910** using the first command set **9916**.

[0434] In certain further embodiments, the first payload component **9922** includes at least two sensors, and/or the second payload component **9924** includes at least two sensors. In certain further embodiments, the first response map **9914** is distinct from the second response map **9920**. In certain embodiments, the first payload component **9922** includes a different number of sensors relative to the second payload component **9924**. In certain embodiments, the first hardware interface **9906** includes a couplant connection.

[0435] Example and non-limiting first command set parameters include one or more of: an inspection trajectory for the inspection robot, sensor activation instructions for the inspection robot, couplant flow commands for the inspection robot, position data commands corresponding to inspection data from the first component or the second component for the inspection robot, a result command for the inspection robot, and/or an inspection result command for the inspection robot.

[0436] An example inspection robot **9902** includes an intermediary controller **9926** structured to determine whether the first component payload **9912** or the second component payload **9918** is coupled to the first hardware interface **9906**, and to select an appropriate one of the first response map **9914** or the second response map **9920** based on the coupled component payload. An example inspection robot **9902** further includes the intermediary controller **9926** further determining whether the first component payload **9912** or the second component payload **9918** is coupled to the first hardware interface **9906** by performing an operation such as: interrogating a coupled payload for identifying information (e.g., payload identity **9928**), analyzing data received from a coupled payload with the first response map **9914** and the second response map **9920** (e.g., determining which response map provides for sensible and/or expected information based on communicated data from the respective component, and/or determining which response map results in an actuator providing the expected response), using the analyzing data received from a coupled payload and determining the coupled payload in response to the analyzing (e.g., determining the type of data, the sampling rate, the range, etc., to determine which component is coupled).

[0437] An example intermediary controller **9926** interprets a corresponding response map **9914**, **9920** from the coupled payload, and adjusts communications of the first command set **9916** in response to the corresponding response map **9914**, **9920** to determine an adjusted command set **9909**, and commands operations of the coupled payload in response to the adjusted first command set. An example intermediary controller **9926** interprets identifying information **9940**, **9941** from the coupled component to determine which component is coupled to the first hardware interface **9906**. An example intermediary controller **9926** interprets inspection data from the coupled payload in response to the corresponding response map.

[0438] An example inspection robot **9902** includes the inspection chassis **9904** having a second hardware interface **9936** including a second quick release connection **9938**, wherein the first component payload **9912** and the second component payload **9918** are operably couplable to the second hardware interface **9936**. In certain embodiments, the first component payload **9912** and the second component payload **9918** are swappable between the first hardware interface **9906** and the second hardware interface **9936**. In certain embodiments, the inspection robot **9902** includes an additional number of payloads **9919**, each having a corresponding response map **9932** (and/or a controller **9934**), where the inspection robot **9902** is configured to interact with coupled members of the number of component payloads using the first command set **9916**. In certain embodiments, the interaction controller **9926** interacts with the inspection controller **9910** and the coupled component payloads **9912**, **9918**, determining response maps and/or adjusting the first command set **9916**, thereby isolating operations, command values, and/or parameter values of the inspection controller **9910** from the coupled component payload **9918**, and allowing for utilization of each hardware interface **9906**, **9936** for any one or more of, and/or for selected subsets of, the number of component payloads **9912**, **9918**.

[0439] Example and non-limiting component payloads include one or more components such as: a sensor, an actuator, a welder, a visible marking device, a coating device, and a cleaning tool. An example embodiment includes the first payload component **9922** comprises a first drive module, wherein the second payload component **9918** comprises a second drive module, where the first hardware interface **9906** comprises a first connection port on a first chassis side of the inspection robot, and wherein the second hardware interface **9936** comprises a second connection port on a second chassis side of the inspection robot.

[0440] Example and non-limiting response maps for components include one or more component descriptions such as: a raw sensor data to processed value calibration, an actuator command description, a sensor output value, an analog-to-digital description corresponding to the component, diagnostic data corresponding to the associated component, and/or fault code data corresponding to the associated component.

[0441] Referencing FIG. **74**, an example inspection robot **10002** having swappable and reversible drive modules **10016**, **10020** is depicted. The example inspection robot **10002** includes an inspection chassis **10004** having a first hardware interface **10006**A and a second hardware interface **10006**B, which may include a connecting port on the chassis housing, and/or a drive suspension couplable to a drive module and having rotation allowance/limiting features, translation allowance/limiting features, electrical connections, mechanical connections, and/or communication connections for the drive modules **10016**, **10020**. The example inspection robot **10002** includes an inspection response circuit **10010**, depicted apart from the inspection chassis **10004** but optionally positioned in whole or part on the inspection chassis, and depicted on the inspection robot **10002** but optionally positioned in whole or part away from the inspection chassis. The example inspection response circuit **10010** receives inspection response values (e.g., determined responses for reconfiguration, adjusting an inspection operation, and/or a user request value to adjust operations), and provides a first command set **10012** in response to the adjustments. In certain embodiments, the hardware interfaces **10006**A, **10006**B include intermediate drive controllers **10008**A, **10008**B configured to provide commands responsive to the first command set **10012**, and further in response to a first response map **10018** and the second response map **10022**. In certain embodiments, the example of FIG. **74** allows for the drive modules **10016**, **10020** to be coupled to either hardware interface and perform inspection operations and/or adjustments.

[0442] Turning now to FIG. **75**, an example system and/or apparatus for operating an inspection robot in a hazardous environment is depicted. The example inspection robot includes any inspection robot having a number of sensors associated therewith and configured to inspect a selected area. Without limitation to any other aspect of the present disclosure, an inspection robot as set forth throughout the present disclosure, including any features or characteristics thereof, is contemplated for the example system depicted in FIG. **75**. In certain embodiments, the inspection robot may include a chassis **10102** to which one or more payloads **10110** are mounted. The payloads **10110** may have a body **10112** to which one or more arms **10114** are mounted. One or more sleds **10118**, having one or more inspection sensors **10120**, may be mounted to the arms **10114**. One or more drive modules **10104**, having one or more wheel assemblies **10108**, may be mounted to the chassis **10102**.

[0443] Operations of the inspection robot provide the sensors **10120** in proximity to selected locations of the inspection surface **500** (FIG. **5**) and collect associated data, thereby interrogating the inspection surface **500**. Interrogating, as utilized herein, includes any operations to collect data associated with a given sensor, to perform data collection associated with a given sensor (e.g., commanding sensors, receiving data values from the sensors, or the like), and/or to determine data in response to information provided by a sensor (e.g., determining values, based on a model, from sensor data; converting sensor data to a value based on a calibration of the sensor reading to the corresponding data; and/or combining data from one or more sensors or other information to determine a value of interest). A sensor **10120** may be any type of sensor as set forth throughout the present disclosure, but includes at least a UT sensor, an EMI sensor (e.g., magnetic induction or the like), a temperature sensor, a pressure sensor, an optical sensor (e.g., infrared, visual spectrum, and/or ultra-violet), a visual sensor (e.g., a camera, pixel grid, or the like), or combinations of these.

[0444] In embodiments, the one or more wheel assemblies **10108** may have a heat resistant magnet **10122** and/or heat resistant magnetic arrangement. The heat resistant magnet **10122** may have a working temperature rating of at least 250° F. In embodiments, the heat resistant magnet **10122** may have a working temperature rating of at least 80° C. In embodiments, the heat resistant magnet **10122** may have a working temperature rating of at least 150° C. In embodiments, the heat resistant magnet **10122** may include a rare earth metal, e.g., neodymium, samarium, and compounds thereof, e.g., NdFeB and SmCo. Materials capable of generating a BHmax greater than forty (40) with a working temperature rating of at least 250° F. may also be included in the magnet. An example heat resistant magnetic arrangement includes a selected spacing of the magnetic hub from the inspection surface (e.g., utilizing the enclosures and/or a cover for the wheel), reducing conduction to the magnetic hub (e.g., a coating for the enclosures and/or the magnetic hub, and/or a wheel cover having a selected low conductivity material), and/or reducing radiative heating to the magnetic hub (e.g., adjusting an absorption coefficient for the hub with polishing and/or a coating, covering a line of sight between the magnetic hub and the inspection surface with a wheel cover, and/or reducing an exposed surface area of the magnetic hub with an enclosure arrangement, wheel cover, and/or coating).

[0445] As further shown in FIG. **75**, in embodiments, the inspection robot may further include a cooling plate **10124** thermally coupled to an electrical component **10134** which may be disposed on the chassis **10102** and/or other portions of the inspection robot, e.g., the payloads **10110** and/or drive modules **10104**. The cooling plate **10124** may be designed to transfer heat away from the electrical component **10134** and radiate it into the surrounding environment. In embodiments, the cooling plate **10124** may be disposed on a side of the chassis **10102** facing the inspection surface **500** during an inspection run. In embodiments, the cooling plate **10124** may be on a side of the chassis **10102** facing away from the inspection surface **500** during an inspection run. In embodiments, the cooling plate **10124** may be thermally coupled to a couplant manifold (e.g., a manifold within the inspection robot body to distribute couplant) to transfer heat from the electrical component **10134** and radiate it into the couplant in the manifold. In embodiments, the cooling plate **10124** may be thermally coupled to the couplant manifold to transfer heat from the couplant in the manifold and radiate it into the ambient environment.

[0446] In embodiments, the inspection robot may include a conduit **10128** that provides coolant to the electrical component **10134**, wherein heat is transferred **10218** from the electrical component to the coolant. In embodiments, the coolant may be the couplant. In embodiments, the coolant may be distinct from the couplant. In embodiments, the coolant may be water, alcohol, glycol, and combinations thereof. In embodiments where the coolant is the couplant, the conduit **10128** may be fluidly connected to the couplant manifold. In embodiments, wherein the coolant is the couplant, the conduit **10128** may provide **10220** the couplant to the sleds **10118** to promote acoustic coupling of at least a portion of the sensors to the inspection surface. In embodiments, a flow rate of the coolant may be adjusted **10224** in

response to a heat transfer requirement of the electrical component **10134**. For example, if the electrical component **10134** is increasing in temperature, the flow rate of the coolant may be increased to so that more coolant passes through the conduit **10128** thereby increasing the transfer rate of heat from the electrical component **10134** to the coolant. Conversely, if the electrical component **10134** is not at risk from malfunctioning due to excessive heat, the flow rate of the coolant may be reduced to conserve the coolant and/or energy in transporting the coolant to the inspection robot.

[0447] In embodiments, the conduit **10128** may be fluidly connected to a tether **10130** that provides the coolant and/or other services **10228**, e.g., electrical power, data communications, provision and/or recycling of coolant and/or couplant. In such embodiments, the tether **10130** may be connected to a coolant source, e.g., base station **10302** (FIG. **77**), that supplies the coolant and, optionally, cools the coolant. In some embodiments, the coolant may be cycled/recycled **10222** between the inspection robot and a coolant source, e.g., the base station **10302**, via the tether **10130**. As will be appreciated, recycling coolant and/or couplant may reduce the costs of operating the inspection robot. In embodiments, the tether **10130** may have a heat resistant jacketing **10132**, e.g., silicone rubber and/or other heat resistant materials.

[0448] In embodiments, the sleds **10118** may include polyetherimide (PEI). In such embodiments, the sleds **10118** may be additively manufactured. As will be appreciated, polyetherimide provides for the sleds **10118** to be exposed to surface temperatures of at least 250° F. without structural failures.

[0449] Accordingly, in operation, (as shown in FIG. **76**), an inspection robot having one or more of the hazardous environment features disclosed herein may be operated **10202** on the inspection surface **500** so as to interrogate **10204** the inspection surface with the sensors **10120** to generate inspection data. Refined data may be determined **10208** based at least in part on the generated inspection data. The inspection surface **500**, or its environment, may expose **10210**, the heat resistant magnet **10122** to temperatures below 260° F. As will be appreciated, the ability of an inspection robot, in accordance with the embodiments disclosed herein, to operate in such temperatures may provide for a plant, e.g., a power plant, corresponding to the inspection surface to maintain operations **10212** during an inspection run by the inspection robot. In embodiments, the inspection run may be performed during a warmup and/or cooldown period **10214** of the plant. By providing for the ability to perform an inspection run without disrupting a plant's operations, some embodiments of the inspection robot may improve the plant overall efficiency by reducing and/or eliminating down downtime of the plant traditionally associated with performing inspections on the inspection surface.

[0450] In embodiments, a drive motor (e.g., reference FIG. **81**) in a drive module **4912** (FIG. **47**) of the inspection robot **100** may include a power rating that exceeds a combined gravitational force on the inspection robot and the tether. In other words, the drive motors of some embodiments require enough electrical power to transport the weight of the inspection robot **100**, the tether and the couplant flowing in the robot **100** and tether, up a vertical face of an inspection surface **500**. In embodiments, the inspection surface **500** may have at least one portion with vertical extent greater than or equal to 6 feet, 12 feet, 20 feet, 34 feet, 50 feet, 100 feet, and/or 200 feet.

[0451] Turning now to FIG. **78**, a method for coupling drive assemblies to an inspection robot **100** (FIG. **1**) is depicted. The example inspection robot **100** includes any inspection robot having a number of sensors associated therewith and configured to inspect a selected area. Without limitation to any other aspect of the present disclosure, an inspection robot **100** as set forth throughout the present disclosure, including any features or characteristics thereof, is contemplated for the example methods depicted in FIGS. **78-80**. In certain embodiments, the inspection robot **100** may have one or more payloads **2** (FIG. **1**) and may include one or more sensors **2202** (FIG. **5**) on each payload. In embodiments, the inspection robot **100** may have one or more modular drive assemblies **4918**.

[0452] Operations of the inspection robot **100** provide the sensors **2202** in proximity to selected locations of the inspection surface **500** and collect associated data, thereby interrogating the inspection surface **500**. Interrogating, as utilized herein, includes any operations to collect data associated with a given sensor, to perform data collection associated with a given sensor (e.g., commanding sensors, receiving data values from the sensors, or the like), and/or to determine data in response to information provided by a sensor (e.g., determining values, based on a model, from sensor data; converting sensor data to a value based on a calibration of the sensor reading to the corresponding data; and/or combining data from one or more sensors or other information to determine a value of interest). A sensor **2202** may be any type of sensor as set forth throughout the present disclosure, but includes at least a UT sensor, an EMI sensor (e.g., magnetic induction or the like), a temperature sensor, a pressure sensor, an optical sensor (e.g., infrared, visual spectrum, and/or ultra-violet), a visual sensor (e.g., a camera, pixel grid, or the like), or combinations of these.

[0453] As shown in FIGS. **78** and **79**, a first method may include selectively uncoupling a first mechanical interface **11902** and a first electrical interface **11904** of a first connector of a first modular drive assembly from a drive module interface of a chassis of the inspection robot **100**. The method may further include selecting **11906** a second modular drive assembly having a second connector. In embodiments, the method may further include releasably coupling a second mechanical interface **11908** and a second electrical interface **11910** of the second connector to the drive module interface of the chassis of the inspection robot. The first and the second electrical interfaces may include electrical power and control connections for the respective modular drive assembly, and the first and second mechanical interfaces may mechanically couple the respective modular drive assembly. In embodiments, the first and the second modular drive assemblies each have at least two wheels positioned to be in contact with the inspection surface when the inspection robot is positioned on the inspection surface. In embodiments, at least one wheel of the second modular drive assembly has a different wheel configuration than at least one corresponding wheel of the first modular drive assembly. In embodiments, the first mechanical interface may include a first rotation limiter, and/or wherein the second mechanical interface includes a second rotation limiter. In such embodiments, the method may further includes limit-

ing **12002** a relative rotation/position of a connected modular drive assembly in response to the respective coupled rotation limiter.

[0454] In embodiments, the first mechanical interface includes a first translation limiter, such as a piston stop, wherein the second mechanical interface includes a second translation limiter, e.g., a piston stop. In such embodiments, the method may further include limiting **12004** a relative translation of a connected modular drive assembly in response to the respective coupled translation limiter. In certain embodiments, only one, or neither, of the drive modules is coupled to the chassis with the ability to translate and/or rotate relative to the chassis.

[0455] In embodiments, the method my further include selectively controlling **12008** the second modular drive assembly in one of a first direction or a second direction. In embodiments, selectively controlling **12008** may include determining **12010** one of a coupled chassis side corresponding to the second modular drive assembly or a target movement direction of the inspection robot.

[0456] Turning to FIG. **80**, another method includes releasably coupling **12102** an electrical interface and a mechanical interface of a modular drive assembly to a drive module interface of the inspection robot; positioning **12114** the inspection robot on the inspection surface, thereby engaging **12116** at least one wheel of the modular drive assembly with the inspection surface; and powering **12118** the modular drive assembly through the electrical interface, thereby controllably moving the inspection robot along the inspection surface. In embodiments, releasably coupling **12102** the electrical interface **12104** and the mechanical interface **12106** may include performing a single engagement operation. In embodiments, the method may further include limiting a relative rotation between the modular drive assembly and a chassis of the inspection robot through the mechanical interface. In embodiments, the method may further include limiting a translation movement between the modular drive assembly and a chassis of the inspection robot through the mechanical interface. In embodiment, the method may further include releasably coupling **12108** an electrical interface **12110** and a mechanical interface **12112** of a second modular drive assembly to a second drive module interface of the inspection robot. In such embodiments, the drive module interface may be positioned on a first side of a chassis of the inspection robot, and the second drive module interface may be positioned on a second side of the chassis of the inspection robot. In embodiments, controllably moving **12120** the inspection robot on the inspection surface may include independently driving **12122**, **12124** the at least one wheel of the modular drive assembly and at least one wheel of the second modular drive assembly. In embodiments, the method may further include independently monitoring **12126** movement of the at least one wheel of the modular drive assembly and the at least one wheel of the second modular drive assembly. In embodiments, the method may further include determining **12130** a position of the inspection robot based at least in part on the monitored movements of the one or more wheels. In embodiments, the method may further include determining **12132** that at least one of the at least one wheel of the modular drive assembly and/or the at least one wheel of the second modular drive assembly is slipping with respect to the inspection surface based at least in part on the monitored movement of the one or more wheels. In embodiments, the method may further include determining **12126** a passive encoder output from a passive encoder associated with one of the modular drive assembly or the second modular drive assembly. In such embodiments, determining **12132** that at least one of the at least one wheel of the modular drive assembly or the at least one wheel of the second modular drive assembly is slipping with respect to the inspection surface may be based at least in part on the passive encoder output (e.g., operation **12136**).

[0457] As will be appreciated, embodiments of the modular drive assemblies disclosed herein may provide for the ability to quickly swap out wheel configurations for the inspection robot. For example, a first modular drive assembly having wheels with a first shape corresponding to a first portion of an inspection surface (or the surface as a whole) may be switched out with another modular drive assembly having wheels with a shape corresponding to a second portion of the inspection surface (or a second inspection surface). For example, a first modular drive assembly may be used to inspect a first pipe having a first curvature and a second modular drive assembly may be used to inspect a second pipe having a second curvature.

[0458] Turning now to FIG. **81**, an example modular drive assembly **4918** for an inspection robot **100** (FIG. **1**) is depicted. The example inspection robot **100** includes any inspection robot having a number of sensors associated therewith and configured to inspect a selected area. Without limitation to any other aspect of the present disclosure, an inspection robot **100** as set forth throughout the present disclosure, including any features or characteristics thereof, is contemplated for the example modular drive assembly **4918** depicted in FIG. **81**. In certain embodiments, the inspection robot **100** may have one or more payloads **2** (FIG. **1**) and may include one or more sensors **2202** (FIG. **27**) on each payload.

[0459] Operations of the inspection robot **100** provide the sensors **2202** in proximity to selected locations of the inspection surface **500** and collect associated data, thereby interrogating the inspection surface **500**. Interrogating, as utilized herein, includes any operations to collect data associated with a given sensor, to perform data collection associated with a given sensor (e.g., commanding sensors, receiving data values from the sensors, or the like), and/or to determine data in response to information provided by a sensor (e.g., determining values, based on a model, from sensor data; converting sensor data to a value based on a calibration of the sensor reading to the corresponding data; and/or combining data from one or more sensors or other information to determine a value of interest). A sensor **2202** may be any type of sensor as set forth throughout the present disclosure, but includes at least a UT sensor, an EMI sensor (e.g., magnetic induction or the like), a temperature sensor, a pressure sensor, an optical sensor (e.g., infrared, visual spectrum, and/or ultra-violet), a visual sensor (e.g., a camera, pixel grid, or the like), or combinations of these.

[0460] As shown in FIG. **81**, the modular drive assembly **4918** may include a motor **14604** coupled to a magnetic wheel assembly **14608**. In embodiments, the modular drive assembly **4918** may be mounted to the chassis **102** (FIG. **1**) of the inspection robot **100**. In embodiments, the magnetic wheel assembly **14608** and/or motor **14604** may be directly mounted to the chassis. One or more electromagnetic sensors **14606** may be coupled to the motor **14604**. The modular drive assembly **4918** may further include a magnetic shield-

ing assembly **14602** structured to shield the motor **14604** from electromagnetic interference generated by the magnetic wheel assembly **14608**.

[0461] The motor **14604** may be an electromagnetic based motor, e.g., DC and/or AC, and coupled to the magnetic wheel assembly **14608** via a drive shaft **14610**. The motor **14604** may be substantially cylindrical in shape and have one or more coil windings and/or permanent magnets that cause a rotor of the motor to rotate when in the presence of an electromagnetic filed generated by passing an electrical current through the motor. While the embodiment of the modular drive assembly **4918** shown in FIG. **151** the motor **14604** disposed between the magnetic wheel assembly **14608** and the chassis **102** of the inspection robot **100**, it will be understood that embodiments may have the motor **14604** disposed such that the magnetic wheel assembly **14608** is disposed between the chassis **102** and the motor **14604**.

[0462] The magnetic wheel assembly **14608** may include one or more magnets operative to couple the inspection robot **100** to an inspection surface **500**. Without limitation to any other aspect of the present disclosure, a magnetic wheel assembly **14608** as set forth throughout the present disclosure, including any features or characteristics thereof, is contemplated for the example modular drive assembly **4918** depicted in FIG. **81**. As will be appreciated, the magnets within the magnetic wheel assembly **14608** generate a magnetic field having field lines that may penetrate the motor **14604**.

[0463] The electromagnetic sensors **14606** may be operative to measure one or more characteristics of the motor, e.g., rotations per minute (RPMs) and/or other properties via interfacing with electromagnetic radiation, e.g., magnetic field lines, of the electromagnetic motor. For example, in embodiments, the electromagnetic sensors **14606** may be hall effect sensors. In embodiments, the electromagnetic sensors **14606** may be disposed next and/or near the motor **14604**. In embodiments wherein the electromagnetic sensors **14606** are hall effect sensors, the plane of the conductive plane of the sensor may be oriented such that the magnetic field lines of the motor **14604** pass through the plane at right (90°) or nearly right angles.

[0464] The magnetic shielding assembly **14602** may be disposed such that it intercepts some or all of the magnetic field lines of the magnetic wheel assembly **14608** before those field lines penetrate the electromagnetic sensor **14606** and/or the motor **14604**, while also allowing magnetic field lines from the motor **14604** to penetrate the electromagnetic sensor **14606**.

[0465] Referencing FIG. **106**, an example system is depicted, capable to perform rapid configuration of an inspection robot in response to planned inspection operations and/or an inspection request from a consumer of the inspection data and/or processed values and/or visualizations determined from the inspection data.

[0466] The example system includes an inspection robot **20314**. The inspection robot **20314** includes any inspection robot configured according to any embodiment set forth throughout the present disclosure, including for example, an inspection robot configured to interrogate an inspection surface using a number of input sensors. In certain embodiments, the sensors may be coupled to the inspection robot center chassis **20312** (and/or center chassis, chassis housing, or similar components of the inspection robot) using one or more payloads. Each payload may additionally include components such as arms (e.g., to fix horizontal positions of a sensor or group of sensors relative to the payload, to allow for freedom of movement pivotally, rotationally, or the like). Each arm, where present, or the payload directly, may be coupled to a sled housing one or more of the input sensors. The inspection robot **20314** may further include a tether providing for freedom of movement along an inspection surface, while having supplied power, couplant, communications, or other aspects as described herein. The inspection robot **20314** and/or components thereof may include features to allow for quick changes to sleds or sled portions (e.g., a bottom contact surface), to arms of a payload, and/or for entire payload changes (e.g., from first payload having a first sensor group to a second payload having a second sensor group, between payloads having pre-configured and distinct sensor arrangements or horizontal spacing, between payloads having pre-configured arrangements for different types or characteristics of an inspection surface, etc.). The inspection robot may include features allowing for rapid changing of payloads, for example having a single interface for communications and/or couplant compatible with multiple payloads, removable and/or switchable drive modules allowing for rapid changing of wheel configurations, encoder configurations, motor power capabilities, stabilizing device changes, and/or actuator changes (e.g., for an actuator coupled to a payload to provide for raising/lowering operations of the payload, selectable down force applied to the payload, etc.). The inspection robot may further include a distribution of controllers and/or control modules within the inspection robot body, on drive modules, and/or associated with sensors, such that hardware changes can be implemented without changes required for a high level inspection controller. The inspection robot may further include distribution of sensor processing or post-processing, for example between the inspection controller or another controller positioned on the inspection robot, a base station computing device, an operator computing device, and/or a non-local computing device (e.g., on a cloud server, a networked computing device, a base facility computing device where the base facility is associated with an operator for the inspection robot), or the like. Any one or more of the described features for the inspection robot **20314**, without limitation to any other aspect of the present disclosure, may be present and/or may be available for a particular inspection robot **20314**. It can be seen that the embodiments of the present disclosure provide for multiple options to configure an inspection robot **20314** for the specific considerations of a particular inspection surface and/or inspection operation of an inspection surface. The embodiments set forth in FIGS. **106-109** and **110-111**, and other embodiments set forth in the present disclosure, provide for rapid configuration of the inspection robot, and further provide for, in certain embodiments, responsiveness to inspection requirements and/or inspection requests, improved assurance that a configuration will be capable to perform a successful inspection operation including capability to retrieve the selected data and to successfully traverse the inspection surface.

[0467] The example inspection robot **20314** includes one or more hardware components **20304**, **20308**, which may be sensors and/or actuators of any type as set forth throughout the present disclosure. The hardware components **20304**, **20308** are depicted schematically as coupled to the center chassis **20312** of the inspection robot **20314**, and may further be mounted on, or form part of a sled, arm, payload,

drive module, or any other aspect as set forth herein. The example inspection robot **20314** includes hardware controller **20306**, with one example hardware controller positioned on an associated component, and another example hardware controller separated from the inspection controller **20310**, and interfacing with the hardware component and the inspection controller.

[0468] The example of FIG. **106** further includes a robot configuration controller **20302**. In the example, the robot configuration controller **20302** is communicatively coupled to the inspection robot **20314**, a user interface **20316**, and/or an operator interface **20318**. The example robot configuration controller **20302** is depicted separately for clarity of the present description, but may be included, in whole or part, on other components of the system, such as the operator interface **20318** (and/or an operator associated computing device) and/or on the inspection robot **20314**. Communicative coupling between the robot configuration controller **20302** and other components of the system may include a web based coupling, an internet based coupling, a LAN or WAN based coupling, a mobile device coupling, or the like. In certain embodiments, one or more aspects of the robot configuration controller **20302** are implemented as a web portal, a web page, an application and/or an application with an API, a mobile application, a proprietary or dedicated application, and/or combinations of these.

[0469] In the example of FIG. **106**, a user **20320** is depicted interacting with the user interface **20316**. The user interface **20316** may provide display outputs to the user **20320**, such as inspection data, visualizations of inspection data, refined inspection data, or the like. The user interface **20316** may communicate user inputs to the robot configuration controller **20302** or other devices in the system. User inputs may be provided as interactions with an application, touch screen inputs, mouse inputs, voice command inputs, keyboard inputs, or the like. The user interface **20316** is depicted as a single device, but multiple user interfaces **20316** may be present, including multiple user interfaces **20316** for a single user (e.g., multiple physical devices such as a laptop, smart phone, desktop, terminal, etc.) and/or multiple back end interfaces accessible to the user (e.g., a web portal, web page, mobile application, etc.). In certain embodiments, a given user interface **20316** may be accessible to more than one user **20320**.

[0470] In the example of FIG. **106**, an operator **20322** is depicted interacting with the operator interface **20318** and/or the inspection robot **20314**. As with the user **20320** and the user interface **20316**, more than one operator **20322** and operator interface **20318** may be present, and further may be present in a many-to-many relationship. As utilized herein, and without limitation to any other aspect of the present disclosure, the operator **20322** participates in or interacts with inspection operations of the inspection robot **20314**, and/or accesses the inspection robot **20314** to perform certain configuration operations, such as adding, removing, or switching hardware components, hardware controllers, or the like.

[0471] An example system includes an inspection robot **20314** having an inspection controller **20310** that operates the inspection robot utilizing a first command set. The operations utilizing the first command set may include high level operations, such as commanding sensors to interrogate the inspection surface, commanding the inspection robot **20314** to traverse the surface (e.g., position progressions or routing, movement speed, sensor sampling rates and/or inspection resolution/spacing on the inspection surface, etc.), and/or determining inspection state conditions such as beginning, ending, sensing, etc.

[0472] The example system further includes a hardware component **20304**, **20308** operatively couplable to the inspection controller **20310**, and a hardware controller **20306** that interfaces with the inspection controller **20310** in response to the first command set, and commands the hardware component **20304**, **20308** in response to the first command set. For example, the inspection controller **20310** may provide a command such as a parameter instructing a drive actuator to move, instructing a sensor to begin sensing operations, or the like, and the hardware controller **20306** determines specific commands for the hardware component **20304**, **20308** to perform operations consistent with the command from the inspection controller **20310**. In another example, the inspection controller **20310** may request a data parameter (e.g., a wall thickness of the inspection surface), and the hardware controller interprets the hardware component **20304**, **20308** sensed values that are responsive to the requested data parameter. In certain embodiments, the hardware controller **20306** utilizes a response map for the hardware component **20304**, **20308** to control the component and/or understand data from the component, which may include A/D conversions, electrical signal ranges and/or reserved values, calibration data for sensors (e.g., return time assumptions, delay line data, electrical value to sensed value conversions, electrical value to actuator response conversions, etc.). It can be seen that the example arrangement utilizing the inspection controller **20310** and the hardware controller **20306** relieves the inspection controller **20310** from relying upon low-level hardware interaction data, and allows for a change of a hardware component **20304**, **20308**, even at a given interface to the inspection controller **20310** (e.g., connected to a connector pin, coupled to a payload, coupled to an arm, coupled to a sled, coupled to a power supply, and/or coupled to a fluid line), without requiring a change in the inspection controller **20310**. Accordingly, a designer, configuration operator, and/or inspection operator, considering operations performed by the inspection controller **20310** and/or providing algorithms to the inspection controller **20310** can implement and/or update those operations or algorithms without having to consider the specific hardware components **20304**, **20308** that will be present on a particular embodiment of the system. Embodiments described herein provide for rapid development of operational capabilities, upgrades, bug fixing, component changes or upgrades, rapid prototyping, and the like by separating control functions.

[0473] The example system includes a robot configuration controller **20302** that determines an inspection description value, determines an inspection robot configuration description in response to the inspection description value, and provides at least a portion of the inspection robot configuration description to a configuration interface (not shown) of the inspection robot **20314**, to the operator interface **20318**, or both, and may provide a first portion (or all) of the inspection robot configuration description to the configuration interface, and a second portion (or all) of the inspection robot configuration description to the operator interface **20318**. In certain embodiments, the first portion and the second portion may include some overlap, and/or the superset of the first portion and second portion may not include all

aspects of the inspection robot configuration description. In certain embodiments, the second portion may include the entire inspection robot configuration description and/or a summary of portions of the inspection robot configuration description—for example to allow the operator (and/or one or more of a number of operators) to save the configuration description (e.g., to be communicated with inspection data, and/or saved with the inspection data), and/or for verification (e.g., allowing an operator to determine that a configuration of the inspection robot is properly made, even for one or more aspects that are not implemented by the verifying operator). Further details of operations of the robot configuration controller **20302** that may be present in certain embodiments are set forth in the disclosure referencing FIG. **107**.

[0474] In certain embodiments, the hardware controller **20306** determines a response map for the hardware component **20304**, **20308** in response to the provided portion of the inspection robot configuration description.

[0475] In certain embodiments, the robot configuration controller **20302** interprets a user inspection request value, for example from the user interface **20316**, and determines the inspection description value in response to the user inspection request value. For example, one or more users **20320** may provide inspection request values, such as an inspection type value (e.g., type of data to be taken, result types to be detected such as wall thickness, coating conformity, damage types, etc.), an inspection resolution value (e.g., a distance between inspection positions on the inspection surface, a position map for inspection positions, a largest un-inspected distance allowable, etc.), an inspected condition value (e.g., pass/fail criteria, categories of information to be labeled for the inspection surface, etc.), an inspection ancillary capability value (e.g., capability to repair, mark, and/or clean the surface, capability to provide a couplant flow rate, capability to manage a given temperature, capability to perform operations given a power source description, etc.), an inspection constraint value (e.g., a maximum time for the inspection, a defined time range for the inspection, a distance between an available base station location and the inspection surface, a couplant source amount or delivery rate constraint, etc.), an inspection sensor distribution description (e.g., a horizontal distance between sensors, a maximum horizontal extent corresponding to the inspection surface, etc.), an ancillary component description (e.g., a component that should be made available on the inspection robot, a description of a supporting component such as a power connector type, a couplant connector type, a facility network description, etc.), an inspection surface vertical extent description (e.g., a height of one or more portions of the inspection surface), a couplant management component description (e.g., a composition, temperature, pressure, etc. of a couplant supply to be utilized by the inspection robot during inspection operations), and/or a base station capability description (e.g., a size and/or position available for a base station, coupling parameters for a power source and/or couplant source, relationship between a base station position and power source and/or couplant source positions, network type and/or availability, etc.).

[0476] Referencing FIG. **107**, an example robot configuration controller **20302** is depicted having a number of circuits configured to functionally execute one or more operations of the robot configuration controller **20302**. The example robot configuration controller **20302** includes an inspection definition circuit **20402** that interprets an inspection description value **20414**, for example from a user interaction request value provided through the user interface **20316**. In certain embodiments, the inspection description value **20414** may further be provided, in whole or part, through an operator interface **20318**. The example robot configuration controller **20302** further includes a robot configuration circuit **20404** that determines an inspection robot configuration description **20410** in response to the inspection description value **20414**. An example inspection robot configuration description **20410** may include one or more of: a sensor type description, sensor horizontal position description, a payload configuration description, an arm configuration description, a sled configuration description, nominal inspection surface values (e.g., an expected wall thickness, coating thickness, obstacle positions, etc.), constraints for the inspection robot (e.g., weight, width, and/or height), actuator types for the inspection robot, vertical distance capability for the inspection robot, etc. The example robot configuration controller **20302** further includes a configuration implementation circuit **20406** that provides at least a portion of the inspection robot configuration description **20410** to a configuration interface of the inspection robot **20314** and/or to one or more operator interfaces **20318**. In certain embodiments, the configuration implementation circuit **20406** provides relevant portions of the inspection robot configuration description **20410** to the inspection robot **20314** that can be configured by the inspection robot independently of an operator (e.g., to set enable/disable values for sensors, actuators, and/or available features of the inspection robot), and/or portions of the inspection robot configuration description **20410** to otherwise be available to the inspection robot (e.g., to provide verification via an operator interface positioned on the robot such as a display, to utilize in marking data values for later processing of the inspection data, and/or utilizable by the inspection controller such as to ensure that an inspection operation appears to be consistent with a plan, and/or to determine whether off-nominal or unexpected conditions are present). In certain embodiments, the configuration implementation circuit **20406** provides relevant portions of the inspection robot configuration description **20410** to the one or more operator interfaces **20318** that are planned to be implemented and/or verified by the associated operator with each respective operator interface, that may be utilized by the operator during the inspection operations, and/or that may be entered by the operator into a base station, into an inspection report, or the like.

[0477] Example and non-limiting user inspection request values include an inspection type value, an inspection resolution value, an inspected condition value, and/or an inspection constraint value. Example and non-limiting inspection robot configuration description(s) **20410** include one or more of an inspection sensor type description (e.g., sensed values; sensor capabilities such as range, sensing resolution, sampling rates, accuracy values, precision values, temperature compatibility, etc.; and/or a sensor model number, part number, or other identifying description), an inspection sensor number description (e.g., a total number of sensors, a number of sensors per payload, a number of sensors per arm, a number of sensors per sled, etc.), an inspection sensor distribution description (e.g., horizontal distribution; vertical distribution; spacing variations; and/or combinations of these with sensor type, such as a differential lead/trailing

sensor type or capability), an ancillary component description (e.g., a repair component, marking component, and/or cleaning component, including capabilities and/or constraints applicable for the ancillary component), a couplant management component description (e.g., pressure and/or pressure rise capability, reservoir capability, composition compatibility, heat rejection capability, etc.), and/or a base station capability description (e.g., computing power capability, power conversion capability, power storage and/or provision capability, network or other communication capability, etc.).

[0478] Referencing FIG. **108**, an example procedure to provide for rapid configuration of an inspection robot is depicted. The example procedure includes an operation **20502** to interpret an inspection description value, an operation **20504** to determine an inspection robot configuration description in response to the inspection description value, and an operation **20506** to communicate at least a portion of the inspection description value. The example procedure includes an operation **20508** to determine whether an inspection description value portion is to be communicated to a ROBOT, and/or to an OPERATOR. Where a portion is to be communicated to an inspection robot (operation **20508**, ROBOT), the procedure includes an operation **20512** to communicate the portion to a robot configuration interface, such as to a hardware controller, inspection controller, and/or a configuration management controller of the inspection robot. Where a portion is to be communicated to an operator (operation **20508**, OPERATOR), the procedure includes an operation **20510** to communicate the portion to an operator interface. The example procedure may include repeating operations **20506**, **20508**, and/or **20510**, **20512** until the determined portions have been communicated to all of the planned inspection robots and/or operators.

[0479] Referencing FIG. **109**, an example procedure is provided to configure an inspection robot by adjusting a hardware component (e.g., a sensor and/or an actuator) of the inspection robot. The example procedure includes an operation **20602** wherein a configuration adjustment includes adjusting a sensor and/or an actuator in response to the inspection description value. Example adjustments include changing one hardware component for another hardware component, changing a response of the sensor or actuator (e.g., changing a sensed value to electrical signal mapping, and/or an electrical signal to actuator response mapping). The example procedure includes an operation **20604** to determine whether a hardware controller should be replaced with the hardware component adjustment. For example, where a hardware controller utilizes a selected response map from a number of available response maps based on the hardware adjustment, and/or downloads or otherwise accesses an alternate response map based on the hardware adjustment, operation **20604** may be determined as NO, where the previous hardware controller is capable to manage the configuration adjustment. In another example, where the hardware controller is coupled with the sensor or actuator, and/or where the hardware controller does not have an available response map for the adjusted sensor or actuator, operation **20604** may be determined as YES, where the previous hardware controller will be changed with the hardware component. The procedure further includes an operation **20612** (from **20604** determining NO) to determine a hardware component response map (e.g., selecting a map based on an identified hardware component), an operation **20608** to operate an inspection controller to perform an inspection operation with the inspection robot, and an operation **20614** to command the hardware component (e.g., interpret sensor data, instruct sensor on/off operations, and/or command actuator operations) using the determined hardware component response map to implement commands from the inspection controller. The example procedure further includes an operation **20606** (from **20604** determining YES) to determine a hardware controller (e.g., a hardware controller compatible with, and/or configured for, the adjusted hardware component) and install the determined hardware controller as a part of the configuration adjustment for the inspection robot, the operation **20608** to operate the inspection controller to perform the inspection operation with the inspection robot, and an operation **20610** to command the hardware component using the determined hardware controller to implement commands from the inspection controller.

[0480] Referring now to FIG. **82**, an apparatus for configuring an inspection robot for inspecting an inspection surface may include a route profile processing circuit **15510** structured to interpret route profile data **15504** for the inspection robot relative to the inspection surface. The planned route implies the way the inspection robot will traverse the surface, and is configurable. The route profile data **15504** may include the planned route, or may simply define the area to be inspected. The apparatus may also include a configuration determining circuit **15512** structured to determine one or more configurations **15518** for the inspection robot in response to the route profile data **15504**. The apparatus may further include a configuration processing circuit **15514** structured to provide configuration data **15522** in response to the determined one or more configurations **15518**, the configuration data **15522** defining, in part, one or more inspection characteristics for the inspection robot. For example, the configuration data **15522** may be provided to an inspection robot configuration circuit **15516**. In another example, the configuration data **15522** may be provided to an operator, such as an operator on a site to help the operator ensure the right parts and capabilities are provided that satisfy the requirements and are responsive to the inspection surface. In yet another example, the configuration data **15522** may be provided to an operator that is remotely positioned, which may allow the operator to configure the robot before leaving for a site, where superior installation/adjustment infrastructure may be available. In embodiments, the apparatus may configure the inspection robot automatically without operator configuration. For example, the apparatus may automatically configure various features of the inspection robot, including one or more of sensor spacing, downforce, sensors activated, routing of robot, sensor sampling rates and/or sensor data resolution, on-surface inspected resolution as a function of surface position, or the like.

[0481] In embodiments, and referring to FIG. **83**, the one or more inspection characteristics may include at least one inspection characteristic selected from the inspection characteristics consisting of: a type of inspection sensor **15602** for the inspection robot; a horizontal spacing **15610** between adjacent inspection sensors for the inspection robot; a horizontal spacing between inspection lanes for an inspection operation of the inspection robot; any spacing enforcement such as covering the lanes in separate inspection runs, front/back sensors, non-adjacent sensors, etc.; a magnitude

of a downward force **15612** applied to a sled housing an inspection sensor of the inspection robot; a sled geometry **15628** for a sled housing an inspection sensor of the inspection robot; a tether configuration **15630** description for the inspection robot; a payload configuration **15632** for a payload of the inspection robot; a drive wheel configuration **15634** for the inspection robot; a type of a downward force biasing device **15614** for the inspection robot structured to apply a downward force on an inspection sensor of the inspection robot, an inspection sensor width **15604**, an inspection sensor height **15608**, or the like. The one or more inspection characteristics may include trajectories of any inspection characteristic. For example, the inspection characteristic may be adjustments made during an inspection run, such as Downforce A for portion A of the inspection route, Downforce B for portion B of the inspection route, etc. The tether configuration **15630** description may include conduits applicable (e.g., which ones to be included such as power, couplant, paint, cleaning solution, communication), sizing for conduits (couplant rate, power rating, length), selected outer surface (abrasion resistant, temperature rating), or the like. The payload configuration **15632** may be a sled/arm spacing, a sled configuration type (e.g., individual sled, sled triplets, new sled types), an arm configuration (articulations available, a couplant support/connection types, sensor interfaces), or the like. A drive wheel configuration **15634** may be a wheel contact shape (convex, concave, mixed); a surface material (coating, covering, material of enclosure for hub); a magnet strength and/or temperature rating, or the like.

[0482] The apparatus may further include a robot configuring circuit **15516** structured to configure the inspection robot in response to the provided configuration data **15506**, wherein the robot configuring circuit **15516** is further structured to configure the inspection robot by performing at least one operation selected from the operations consisting of: configuring a horizontal spacing between inspection lanes for an inspection operation of the inspection robot; configuring at least one of an inspection route and a horizontal spacing between adjacent inspection sensors, thereby performing an inspection operation compliant with an on-surface inspected resolution target; or configuring a downward force biasing device to apply a selected down force to a sled housing an inspection sensor of the inspection robot. The on-surface inspected resolution target may include a positional map of the surface with inspected positions, and/or regions having defined inspection resolution targets. The positional map may be overlaid with inspection operations to be performed, sensor sampling rates, and/or sensor data resolutions. The configuration determining circuit **15512** may be further structured to determine a first configuration **15710** of the one or more configurations for a first portion of the inspection surface; and determine a second configuration **15712** of the one or more configurations distinct for a second portion of the inspection surface, wherein the second configuration is distinct from the first configuration. The route profile processing circuit **15510** may be further structured to interpret updated route profile data **15536**, such as updated obstacle data **15538**, during an inspection operation of the inspection surface by the inspection robot, the configuration determining circuit **15512** may be further structured to determine one or more updated configurations **15520** of the inspection robot in response to the updated route profile data **15536**; and the configuration processing circuit **15514** may be further structured to provide updated configuration data **15540** in response to the determined updated one or more configurations **15520**. The updated configuration data may include updated inspection sensor type **15616**, updated inspection sensor width **15618**, an updated inspection sensor height **15620**, updated inspection sensor spacing **15622**, updated downforce magnitude **15624**, updated biasing device type **15626**, updated sled geometry **15636**, updated tether configuration **15638**, updated payload configuration **15640**, updated drive wheel configuration **15644**, or the like.

[0483] The apparatus may further include a robot configuring circuit **15516** structured to re-configure the inspection robot in response to the updated one or more configurations **15520**. The route profile data **15504** may include obstacle data **15508**.

[0484] Referring to FIG. **84**, a method for configuring an inspection robot **15708** for inspecting an inspection surface may include interpreting route profile data **15702** for the inspection robot relative to the inspection surface; determining one or more configurations **15704** for the inspection robot in response to the route profile data; and providing configuration data **15706** in response to the determined one or more configurations, the configuration data defining, at least in part, one or more inspection characteristics for the inspection robot. The one or more inspection characteristics include at least one inspection characteristic selected from the inspection characteristics consisting of a type of inspection sensor for the inspection robot; a horizontal spacing between adjacent inspection sensors for the inspection robot; a horizontal spacing between inspection lanes for an inspection operation of the inspection robot; a magnitude of a downward force applied to a sled housing an inspection sensor of the inspection robot; a sled geometry for a sled housing an inspection sensor of the inspection robot; a tether configuration description for the inspection robot; a payload configuration for a payload of the inspection robot; a drive wheel configuration for the inspection robot; and a type of a downward force biasing device for the inspection robot structured to apply a downward force to a sled housing an inspection sensor of the inspection robot. Providing the configuration data **15706** may include communicating the configuration data to a user device, wherein the user device is positioned at a distinct location from a location of the inspection surface. Communicating the configuration data to the user device may be performed before transporting the inspection robot to a location of the inspection surface. Determining one or more configurations for the inspection robot may be performed during an inspection operation of the inspection robot of the inspection surface. Determining one or more configurations may further include adjusting a configuration **15722** of the inspection robot in response to the determined one or more configurations for the inspection robot during the inspection operation of the inspection robot.

[0485] Adjusting the configuration **15722** of the inspection robot may include at least one operation selected from the operations consisting of: configuring a horizontal spacing between inspection lanes for an inspection operation of the inspection robot; configuring at least one of an inspection route and a horizontal spacing between adjacent inspection sensors, thereby performing an inspection operation compliant with an on-surface inspected resolution target; or configuring a downward force biasing device to apply a selected down force to a sled housing an inspection sensor

of the inspection robot. The method may further include mounting an inspection sensor **15714** to the inspection robot in response to the provided configuration data. The method may further include mounting a drive module **15718** to the inspection robot in response to the provided configuration data. The method may further include adjusting an inspection sensor **15716** disposed on the inspection robot in response to the provided configuration data. Determining one or more configurations **15704** for the inspection robot in response to the route profile data comprises: determining a first configuration **15710** of the one or more configurations for a first portion of the inspection surface; and determining a second configuration **15712** of the one or more configurations for a second portion of the inspection surface, wherein the second configuration is distinct from the first configuration.

[0486] In an embodiment, a system may include an inspection robot comprising a payload comprising at least two inspection sensors coupled thereto; and a controller **802** comprising a route profile processing circuit **15510** structured to interpret route profile data **15504** for the inspection robot relative to an inspection surface; a configuration determining circuit **15512** structured to determine one or more configurations **15518** for the inspection robot in response to the route profile data **15504**; and a configuration processing circuit **15514** structured to provide configuration data **15522** in response to the determined one or more configurations **15518**, the configuration data defining, at least in part, one or more inspection characteristics for the inspection robot. The one or more inspection characteristics may include a type of inspection sensor for the inspection robot. The one or more inspection characteristics may include a horizontal spacing between adjacent inspection sensors for the inspection robot. The payload may include an adjustable sled coupling position for at least two sleds, each of the at least two sleds housing at least one of the at least two inspection sensors. The payload may include an adjustable arm coupling position for at least two arms, each of the at least two arms associated with at least one of the at least two inspection sensors. Each of the at least two arms further comprises at least one sled coupled thereto, each of the at least one sled housing at least one of the at least two inspection sensors.

[0487] The one or more inspection characteristics may include a horizontal spacing between inspection lanes for an inspection operation of the inspection robot, or any spacing enforcement, such as covering the lanes in separate inspection runs, front/back sensors, non-adjacent sensors, etc. The one or more inspection characteristics may include a magnitude of a downward force **15612** applied to a sled housing at least one of the at least two inspection sensors. The one or more inspection characteristics include a sled geometry **15628** for a sled housing at least one of the at least two inspection sensors. The one or more inspection characteristics include a tether configuration **15630** description for the inspection robot (e.g. conduits applicable (e.g., which ones to be included such as power, couplant, paint, cleaning solution, communication), sizing for conduits (couplant rate, power rating, length), selected outer surface (abrasion resistant, temperature rating), etc.), the system further including a tether structured to couple a power source and a couplant source to the inspection robot. The one or more inspection characteristics may include a payload configuration **15632** for the payload of the inspection robot. The payload configuration **15632** may include sled/arm spacing, sled configuration type (e.g., individual sled, sled triplets, new sled types), arm configuration (articulations available, couplant support/connection types, sensor interfaces), or the like. The one or more inspection characteristics may include a drive wheel configuration **15634** for the inspection robot (e.g. wheel contact shape (convex, concave, mixed); surface material (coating, covering, material of enclosure for hub); magnet strength and/or temperature rating). The one or more inspection characteristics may include a type of a downward force biasing device **15614** for the inspection robot structured to apply a downward force to a sled housing at least one of the at least two inspection sensors of the inspection robot. The system may further include a robot configuring circuit **15516** structured to configure the inspection robot in response to the provided configuration data. The robot configuring circuit **15516** may be further structured to configure the inspection robot by performing at least one operation selected from the operations consisting of: configuring a horizontal spacing between inspection lanes for an inspection operation of the inspection robot; configuring at least one of an inspection route and a horizontal spacing between adjacent inspection sensors, thereby performing an inspection operation compliant with an on-surface inspected resolution target; or configuring a downward force biasing device to apply a selected down force to a sled housing at least one of the at least two inspection sensors of the inspection robot. The on-surface inspected resolution target may include a positional map of the surface with inspected positions, and/or regions having defined inspection resolution targets which can be overlaid with inspection operations to be performed, sensor sampling rates, and/or sensor data resolutions. The configuration determining circuit **15512** may be further structured to determine a first configuration **15710** of the one or more configurations for a first portion of the inspection surface; and determine a second configuration **15712** of the one or more configurations distinct for a second portion of the inspection surface, wherein the second configuration is distinct from the first configuration. In embodiments, the route profile processing circuit **15510** may be further structured to interpret **15720** updated route profile data **15504** during an inspection operation of the inspection surface by the inspection robot; the configuration determining circuit **15512** may be further structured to determine one or more updated configurations **15520** of the inspection robot in response to the updated route profile data **15536**; and the configuration processing circuit **15514** may be further structured to provide updated configuration data **15540** in response to the determined updated one or more configurations. The system may further include a robot configuring circuit **15516** structured to re-configure the inspection robot in response to the updated one or more configurations. In embodiments, the route profile data may include obstacle data **15508**.

[0488] Referencing FIG. **116**, an example system **21600** for rapid validation of inspection data provided by an inspection robot is depicted. A system having the capability to perform rapid validation of inspection data provides numerous benefits over previously known systems, for example providing for earlier communication of inspection data to customers of the data, such as an owner or operator of a facility having an inspection surface. Sharing of inspection data with the consumer of the data requires that the data be validated, to manage risk, liability, and to ensure that the

inspection data can be utilized for the intended purpose, which may include providing the data to regulatory agencies, for maintenance records, to fulfill contractual obligations, and/or to preserve inspection information that may be later accessed for legal, regulatory, or other critical purposes. Additionally, providing access to the inspection data may be later understood for certain purposes to put the customer on notice of the results indicated by the inspection data. Accordingly, before inspection information is shared to a customer of the data, including before information is made available for access to a customer of the data, validation of the data, for example to ensure that the inspection data collected accurately represents the condition of the inspection surface. Additionally, the availability of rapid validation of inspection data has a number of additional benefits in view of the embodiments of inspection robots and related systems, procedures, and the like, of the present disclosure. For example, rapid validation of inspection data allows for reconfiguration of the inspection robot, allowing for a corrective action to be taken during the inspection operations and achieve a successful inspection operation. The availability of highly configurable inspection robot embodiments further allows for configuring an inspection robot to address issues of the inspection operation that lead to invalid data collection.

[0489] A data validation that is rapid, as used herein, and without limitation to any other aspect of the present disclosure, includes a validation capable of being performed in a time relevant to the considered downstream utilization of the validated data. For example, a validation that can be performed during the inspection operation, and/or before the completion of the inspection operation, may be considered a rapid validation of inspection data in certain embodiments, allowing for the completion of the inspection operation configured to address issues of the inspection operation that lead invalid data collection. Certain further example rapid validation times include: a validation that can be performed before the operator leaves the location of the inspection surface (e.g., without requiring the inspection robot be returned to a service or dispatching facility for reconfiguration); a validation that can be performed during a period of time before a downstream customer (e.g., an owner or operator of a facility including the inspection surface; an operator of the inspection robot performing the inspection operations; and/or a user related to the operator of the inspection robot, such as a supporting operator, supervisor, data verifier, etc.) has a requirement to utilize the inspection data; and/or a validation that can be performed within a specified period of time (e.g., before a second inspection operation of a second inspection surface at a same facility including both the inspection surface and the second inspection surface; within a specified calendar period such as a day, three days, a week, etc.), for example to ensure that a subsequent inspection operation can be performed with a configuration responsive to issues that lead to the invalid data collection. An example rapid validation operation includes a validation that can be performed within a specified time related to interactions between an entity related to the operator of the inspection robot and an entity related to a downstream customer. For example, the specified time may be a time related to an invoicing period for the inspection operation, a warranty period for the inspection operation, a review period for the inspection operation, and or a correction period for the inspection operation. Any one or more of the specified times related to interactions between the entities may be defined by contractual terms related to the inspection operation, industry standard practices related to the inspection operation, an understanding developed between the entities related to the inspection operation, and/or the ongoing conduct of the entities for a number inspection operations related to the inspection operation, where the number of inspection operations may be inspection operations for related facilities, related inspection surfaces, and/or previous inspection operations for the inspection surface. One of skill in the art, having the benefit of the disclosure herein and information ordinarily available when contemplating a particular system and/or inspection robot, can readily determine validation operations and validation time periods that are rapid validations for the purposes of the particular system.

[0490] With reference to FIG. **116**, an example system **21600** includes an inspection robot **21602** that interprets inspection base data including data provided by an inspection robot interrogating an inspection surface with a plurality of inspection sensors. The inspection robot **21602** may include an inspection robot configured according to any of the embodiments or aspects as set forth in the present disclosure.

[0491] The example system **21600** includes a controller **21604** configured to perform rapid inspection data validation operations. The controller **21604** includes a number of circuits configured to functionally execute operations of the controller **21604**. An example controller **21604** includes an inspection data circuit that interprets inspection base data comprising data provided by the inspection robot interrogating the inspection surface with a number of inspection sensors, an inspection processing circuit that determines refined inspection data in response to the inspection base data, an inspection data validation circuit that determines an inspection data validity value in response to the refined inspection data, and a user communication circuit that provides a data validity description to a user device in response to the inspection data validity value. Further details of an example controller **21604** are provided in the portion referencing FIG. **117**. The example system **21600** further includes a user device **21606** that is communicatively coupled to the controller **21604**. The user device **21606** is configured to provide a user interface for interacting operations of the controller **21604** with the user **21610**, including providing information, alerts, and/or notifications to the user **21610**, receiving user requests or inputs and communicating those to the controller **21604**, and accessing a data store **21608**, for example to provide access to data for the user **21610**.

[0492] Referencing FIG. **117**, an example controller **21604** for performing operations to rapidly validate inspection data is depicted. The example controller **21604** is compatible for use in a system **21600** such as the system of FIG. **116**. The example controller **21604** includes an inspection data circuit **21902** that interprets inspection base data **21910** including data provided by an inspection robot interrogating an inspection surface with a number of inspection sensors. The example controller **21604** further includes an inspection processing circuit **21904** that determines refined inspection data **21916** in response to the inspection base data **21910**. The refined inspection data **21916** includes processed data from the inspection base data **21910**, such as refined UT sensor data to determine wall thickness values,

coating values, or the like, EM sensor data (e.g., induction data, conductive material proximity data, or the like), and/or combined sensor data utilized in models, virtual sensors, or other post-processed values from the inspection base data **21910**. The example controller **21604** includes an inspection data validation circuit **21908** that determines an inspection data validity value **21914** that provides a data validity description **21912** in response to the refined inspection data **21916**. Without limitation to any other aspect of the present disclosure, the inspection data validation circuit **21908** determines the inspection data validity value **21914** in response to determining a consistency of the inspection base data **21910** (e.g., comparing a rate of change of the data versus time, sampling values, and/or position on the inspection surface), compared to expected values and/or rationalized values, and/or relative to detected conditions (e.g., a lifted payload and/or sensor, a fault condition of a component of the inspection robot, the presence of an obstacle, etc.) to determine the inspection data validity value **21914**.

[0493] The example controller **21604** further includes a user communication circuit **21906** that provides a data validity description **21912** to a user device in response to the inspection data validity value **21914**. In certain embodiments, the data validity description **21912** includes an indication that inspection data values are validated, potentially not valid, likely to be invalid, and/or confirmed to be invalid. In certain embodiments, the data validity description **21912** is provided as a layer, dimension, and/or data value overlaid onto a depiction of the inspection surface. In certain embodiments, the user associated with the user device is an operator, a user related to the operator of the inspection robot, such as a supporting operator, supervisor, data verifier, etc., and/or a downstream customer of the inspection data. In certain embodiments, information provided with the inspection data validity value **21914**, and/or the data and/or format of the inspection data validity value **21914**, is configured according to the user. For example, where the user is a downstream customer of the inspection data, the inspection data validity value **21914** may be limited to a general description of the inspection operation, such as to avoid communicating potentially invalid inspection data to the downstream customer. In another example, such as for a user associated with an operator of the inspection information that may be verifying the inspection operation and/or inspection data, the inspection data validity value **21914** may include and/or be provided with additional data, such as parameter utilized to determine that the inspection data validity value **21914** may be low, fault code status of the inspection robot, indicators of the inspection robot condition (e.g., actuator positions, inspection sensors active, power levels, couplant flow rates, etc.).

[0494] In certain embodiments, the controller **21604** includes the user communication circuit **21906** further providing the inspection data validity value **21914** as a notification or an alert, for example in response to determining the inspection data validity value **21914** is not a confirmed valid value. In certain embodiments, the notification and/or alert is provided to the user device, which may be one of several user devices, such as a computing device, a mobile device, a laptop, a desktop, or the like. In certain embodiments, the user communication circuit **21906** provides the notification or alert to the user device by sending a text message, e-mail, message for an application, publishing the notice to a web portal, web pages, monitoring application, or the like, where the communication is accessible to the user device.

[0495] An example user communication circuit **21906** provides at least a portion of the refined inspection data **21916** to the user device in response to determining the inspection data validity value **21914** is not a confirmed valid value. For example, the user communication circuit **21906** may provide the refined inspection data **21916** that is associated with the potential invalidation determination, representative data values from the refined inspection data **21916** that is associated with the potential invalidation determination, and/or data preceding the refined inspection data **21916** that is associated with the potential invalidation determination. In certain embodiments, the parameters of the refined inspection data **21916** that are provided with the data validity description **21912** are configured at least partially in response to a user validity request value **21928**.

[0496] An example user communication circuit **21906** further provides refinement metadata **21918** corresponding to the portion of the refined inspection data **21916** provided with the data validity description **21912**. Example and non-limiting refinement metadata **21918** values include one or more of: sensor calibration values corresponding to the number of inspection sensors (e.g., calibration settings for the sensors, values used to calculate wall thickness, delay line values, etc.), a fault description for the inspection robot (e.g., faults active, faults in processing such as faults about to be set, faults recently cleared, etc.), a coupling description for the number of inspection sensors (e.g., direct or indirect indicators whether sensor coupling to the inspection surface is successful, such as actuator positions, down force descriptions, couplant pressure parameters, sled positions, etc.), a re-coupling operation record for the number of inspection sensors (e.g., re-coupling operations performed over time and/or inspection surface position preceding and/or during the potentially invalid data, for example allowing for determination of an indication of a coupling problem, statistical analysis of re-coupling events, or the like), a scoring value record for the at least a portion of the refined inspection data (e.g., determinations of refined inspection data determined from a primary mode scoring value relative to a secondary mode scoring value, progression of scores over time and/or related to inspection surface position, scores utilized for data collection, ratios of primary mode to secondary mode scores utilized for data collection, etc.), and/or operational data for the inspection robot (e.g., to allow for determination of anomalies in operational data, to confirm that operations are nominal, track trends, or the like).

[0497] An example user communication circuit **21906** provides offset refined inspection data **21920** to the user device in response to determining the inspection data validity value **21914** is not a confirmed valid value. For example, the offset refined inspection data **21920** may include data preceding the refined inspection data **21916** associated with the potentially invalid data, related data such as data taken in a similar position (e.g., a similar vertical position, dating having similar scoring or other operational parameters to the potentially invalid data, or the like). In certain embodiments, the user communication circuit **21906** further provides offset metadata **21922** corresponding to the offset refined inspection data **21920**.

[0498] An example inspection data validation circuit **21908** further determines the inspection data validity value **21914** as a categorical description of the inspection data

validity status, such as: a confirmed valid value, a suspect valid value, a suspect invalid value, and/or a confirmed invalid value. In certain embodiments, the categorical description may be determined according to the determinations made in response to the information utilized to determine the inspection data validity value **21914** and the confidence in that information. In certain embodiments, where the refined inspection data **21916** has indicators that the data may be invalid (e.g., a fault code, coupling information, etc.) but the data appears to be valid (e.g., consistent with adjacent data, within expected ranges, etc.), the data may be determined as a suspect valid value. In certain embodiments, wherein the refined inspection data **21916** has stronger indicator that the data may be invalid, and/or the data is marginally valid, the data may be determined as a suspect invalid value. In certain embodiments, where a determinative indicator is present that the data is not valid (e.g., a sensor has failed, a position of the sled/sensor is inconsistent with valid data, etc.) and/or indicators that the data is very likely to be invalid, the data may be determined to be confirmed invalid.

[0499] In certain embodiments, the inspection data validation circuit **21908** determines the inspection data validity value **21914** in response to a validity index description **21924**, and comparing the validity index description **21924** to a number of validity threshold values (e.g., values determined to relate to validity descriptions, such as valid, invalid, and/or suspected versions of these). In certain embodiments, the validity index description **21924** may be determined by scoring a number of contributing factors to the invalidity determination, and combining the contributing factors into an index for relative comparison of invalidity determinations. An example inspection data validation circuit **21908** further determines the inspection data validity value **21914** in response to a validity event detection **21926**. In certain embodiments, certain events provide a strong indication that related data is invalid, and/or provide a determinative indication that related data is invalid. For example, certain fault codes and/or failed components of the inspection robot may indicate that related data may be invalid and/or is more likely to be invalid. In certain embodiments, certain indicators such as a raised payload, a deactivated sensor, or the like, may provide a determinative indication that related data is invalid.

[0500] In certain embodiments, the user communication circuit **21906** further provides the inspection data validity value **21914** as one of a notification or an alert in response to determining the inspection data validity value is not a confirmed valid value. In certain further embodiments, the user communication circuit **21906** further configures a content of the one of the notification or the alert in response to a value of the inspection data validity value **21914**, for example providing a more intrusive alert or notification in response to an inspection data validity value **21914** indicating a higher likelihood of invalid data, and/or based on the criticality of the potentially invalid data.

[0501] An example user communication circuit **21906** further interprets a user validity request value **21928** and provides one or more of a portion of the refined inspection data **21916** to the user device in response to the user validity request value **21928**, a portion of the refined inspection data **21916** to the user device in response to the user validity request value **21928**, offset refined inspection data **21920**, and/or offset metadata **21922** corresponding to the offset refined inspection data **21920** in response to the user validity request value **21928**.

[0502] Referencing FIG. **85**, an example controller **16102** is depicted, where the controller **16102** is configured to perform operations for rapid response to inspection data, for example inspection data collected by an inspection robot performing an inspection operation on an inspection surface. The example controller **16102** includes a number of circuits configured to functionally execute certain operations of the controller **16102**. The example controller **16102** depicts an example logical arrangement of circuits for clarity of the description, but circuits may be distributed, in whole or part, among a number of controllers, including an inspection robot controller, a base station controller, an operator computing device, a user device, a server and/or cloud computing device, and/or as an application provided at least in part on any one or more of the foregoing. In certain embodiments, the controller **16102** and/or portions of the controller **16102** are utilizable to perform certain operations associated with embodiments presented throughout the present disclosure.

[0503] A response, as used herein, and without limitation to any other aspect of the present disclosure, includes an adjustment to at least one of: an inspection configuration for the inspection robot while on the surface (e.g., a change to sensor operations; couplant operations; robot traversal commands and/or pathing; payload configurations; and/or down force configuration for a payload, sled, sensor, etc.); a change to display operations of the inspection data; a change to inspection data processing operations, including determining raw sensor data, minimal processing operations, and/or processed data values (e.g., wall thickness, coating thickness, categorical descriptions, etc.); an inspection configuration for the inspection robot performed with the inspection robot removed from the inspection surface (e.g., changed wheel configurations, changed drive module configurations; adjusted and/or swapped payloads; changes to sensor configurations (e.g., switching out sensors and/or sensor positions); changes to hardware controllers (e.g., switching a hardware controller, changing firmware and/or calibrations for a hardware controller, etc.); and/or changing a tether coupled to the inspection robot. The described responses are non-limiting examples, and any other adjustments, changes, updates, or responses set forth throughout the present disclosure are contemplated herein for potential rapid response operations. Certain responses are described as performed while the inspection robot is on the inspection surface and other responses are described as performed with the inspection robot removed from the inspection surface, although any given response may be performed in the other condition, and the availability of a given response as on-surface or off-surface may further depend upon the features and configuration of a particular inspection robot, as set forth in the multiple embodiments described throughout the present disclosure. Additionally or alternatively, certain responses may be available only during certain operating conditions while the inspection robot is on the inspection surface, for example when the inspection robot is in a location physically accessible to an operator, and/or when the inspection robot can pause physical movement and/or inspection operations such as data collection. One of skill in the art, having the benefit of the present disclosure and information ordinarily available when contemplating a par-

ticular system and/or inspection robot, can readily determine response operations available for the particular system and/or inspection robot.

[0504] A response that is rapid, as used herein, and without limitation to any other aspect of the present disclosure, includes a response capable of being performed in a time relevant to the considered downstream utilization of the response. For example, a response that can be performed during the inspection operation, and/or before the completion of the inspection operation, may be considered a rapid response in certain embodiments, allowing for the completion of the inspection operation utilizing the benefit of the rapid response. Certain further example rapid response times include: a response that can be performed at the location of the inspection surface (e.g., without requiring the inspection robot be returned to a service or dispatching facility for reconfiguration); a response that can be performed during a period of time wherein a downstream customer (e.g., an owner or operator of a facility including the inspection surface; an operator of the inspection robot performing the inspection operations; and/or a user related to the operator of the inspection robot, such as a supporting operator, supervisor, data verifier, etc.) of the inspection data is reviewing the inspection data and/or a visualization corresponding to the inspection data; and/or a response that can be performed within a specified period of time (e.g., before a second inspection operation of a second inspection surface at a same facility including both the inspection surface and the second inspection surface; within a specified calendar period such as a day, three days, a week, etc.). An example rapid response includes a response that can be performed within a specified time related to interactions between an entity related to the operator of the inspection robot and an entity related to a downstream customer. For example, the specified time may be a time related to an invoicing period for the inspection operation, a warranty period for the inspection operation, a review period for the inspection operation, and or a correction period for the inspection operation. Any one or more of the specified times related to interactions between the entities may be defined by contractual terms related to the inspection operation, industry standard practices related to the inspection operation, an understanding developed between the entities related to the inspection operation, and/or the ongoing conduct of the entities for a number inspection operations related to the inspection operation, where the number of inspection operations may be inspection operations for related facilities, related inspection surfaces, and/or previous inspection operations for the inspection surface. One of skill in the art, having the benefit of the disclosure herein and information ordinarily available when contemplating a particular system and/or inspection robot, can readily determine response operations and response time periods that are rapid responses for the purposes of the particular system.

[0505] Certain considerations for determining whether a response is a rapid response include, without limitation, one or more of:

[0506] the purpose of the inspection operation, how the downstream customer will utilize the inspection data from the inspection operation, and/or time periods related to the utilization of the inspection data;

[0507] entity interaction information such as time periods wherein inspection data can be updated, corrected, improved, and/or enhanced and still meet contractual obligations, customer expectations, and/or industry standard obligations related to the inspection data;

[0508] source information related to the response, such as whether the response addresses an additional request for the inspection operation after the initial inspection operation was performed, whether the response addresses initial requirements for the inspection operation that were available before the inspection operation was commenced, whether the response addresses unexpected aspects of the inspection surface and/or facility that were found during the inspection operations, whether the response addresses an issue that is attributable to the downstream customer and/or facility owner or operator, such as:

[0509] inspection surface has a different configuration than was indicated at the time the inspection operation was requested;

[0510] the facility owner or operator has provided inspection conditions that are different than planned conditions, such as couplant availability, couplant composition, couplant temperature, distance from an available base station location to the inspection surface, coating composition or thickness related to the inspection surface, vertical extent of the inspection surface, geometry of the inspection surface such as pipe diameters and/or tank geometry, availability of network infrastructure at the facility, availability of position determination support infrastructure at the facility, operating conditions of the inspection surface (e.g., temperature, obstacles, etc.);

[0511] additional inspected conditions are requested than were indicated at the time of the inspection operation was requested; and/or

[0512] additional inspection robot capabilities such as marking, repair, and/or cleaning are requested than were indicated at the time the inspection operation was requested.

[0513] The example controller **16102** includes an inspection data circuit **16104** that interprets inspection base data **16106** (e.g., raw sensor data and/or minimally processed data inspection sensors) provided by an inspection robot **16140** interrogating an inspection surface with a number of inspection sensors **16142**. The example controller **16102** further includes an inspection processing circuit **16108** that determines refined inspection data **16110** (e.g., processed inspection data, determined state values and/or categories related to the inspection surface from the inspection data, data values configured for depiction or display on a user device, and/or any other refined inspection data according to the present disclosure) in response to the inspection base data **16106**, and an inspection configuration circuit **16112** that determines an inspection response value **16114** in response to the refined inspection data **16110**. The example controller **16102** includes an inspection response circuit **16116** that provides an inspection command value **16118** in response to the inspection response value **16114**.

[0514] Example and non-limiting inspection command values **16118** include one or more commands configured for communication to the inspection robot **16140**, such that the inspection robot **16140** can change a configuration aspect (e.g., a sensor setting and/or enable value; an actuator setting or position; an inspection plan such as inspection route and/or inspection operations to be performed for selected regions of the inspection surface) in response to the inspec-

tion command value **16118**. Additionally or alternatively, inspection command values **16118** may be proved to any other aspect of a system including the controller **16102**, including without limitation command values to adjust inspection data displays, inspection data processing operations, inspection robot configurations communicated to an operator (and/or operator device) for adjustment of the inspection robot configuration at the location of the inspection surface, and/or inspection robot configurations communicated to a user (and/or user device) related to the operator of the inspection robot, such as a supporting operator, supervisor, data verifier of the inspection data.

[0515] In certain embodiments, the inspection configuration circuit **16112** provides the inspection command values **16118** during the interrogating of the inspection surface by the inspection robot **16140**, for example to provide for configuration updates during the inspection operation.

[0516] Additionally or alternatively, the inspection configuration circuit **16112** provides the inspection command values **16118** to provide for a rapid response configuration of the inspection robot, to provide for configuration updates within a time period that would be considered a rapid response for a system including the controller **16102**.

[0517] In certain embodiments, the controller **16102** includes a user communication circuit **16120** that provides the refined inspection data **16110** to a user device **16124**, and receives a user response command **16122**, where the inspection configuration circuit **16112** further determines the inspection response value **16114** in response to the user response command **16122**. For example, the user device **16124** may be a device accessible to a user such as a downstream customer of the inspection data, allowing for the user to make additional inspection requests, to change conditions that are determined from the inspection data, or the like, during the inspection operations and/or within a time period consistent with a rapid response time period. In another example, the user device **16124** may be a device accessible to a user related to the operator of the inspection robot, such as a supporting operator, supervisor, data verifier of the inspection data.

[0518] In a further example, the user observes the refined inspection data **16110**, such as in a display or visualization of the inspection data, and provides the user response command **16122** in response to the refined inspection data **16110**, for example requesting that additional data or data types be collected, requesting that additional conditions (e.g., anomalies, damage, condition and/or thickness of a coating, higher resolution determinations—either spatial resolution such as closer or more sparse data collection positions, or sensed data resolution such as higher or lower precision sensing values, etc.) be inspected, extending the inspection surface region to be inspected, and/or omitting inspection of regions of the inspection surface that were originally planned for inspection. In certain embodiments, the user response command **16122** allows the user to change inspection operations in response to the results of the inspection operations, for example where the inspection surface is found to be in a better or worse condition than expected, where an unexpected condition or data value is detected during the inspection, and/or where external considerations to the inspection occur (e.g., more or less time are available for the inspection, a system failure occurs related to the facility or an offset facility, or the like) and the user wants to make a change to the inspection operations in response to the external condition. In certain embodiments, the user response command **16122** allows for the user to change inspection operations in response to suspected invalid data (e.g., updating sensor calibrations, performing coupling operations to ensure acoustic coupling between a sensor and the inspection surface, and/or repeating inspection operations to ensure that the inspection data is repeatable for a region of the inspection surface), in response to a condition of the inspection surface such as an assumed value (e.g., wall thickness, coating thickness and/or composition, and/or presence of debris) that may affect processing the refined inspection data **16110**, allowing for corrections or updates to sensor settings, couplant flow rates, down force provisions, speed of the inspection robot, distribution of sensors, etc. responsive to the difference in the assumed value and the inspection determined condition of the inspection surface.

[0519] An example controller **16102** further includes a publishing circuit **16128** that provides the refined inspection data **16110** to a remove server **16130**, which may be a computing device communicatively coupled to the controller **16102** and one or more user devices **16124**, for example to operate a web portal, web page, mobile application, proprietary application, database, API related to the refined inspection data **16110**, and/or that operates as a data store for inspection base data **16106** and/or refined inspection data **16110**. In the example, the user communication circuit **16120** receives the user response command **16122**, and the inspection configuration circuit **16112** determines the inspection response value **16114** in response to the user response command **16122**.

[0520] An example controller **16102** includes an inspection map configuration circuit that updates an inspection map **16134** in response to the inspection command value **16118**. An example inspection map **16134** includes one or more of: planned inspection region(s) of the inspection surface; inspection operations to be performed for each of one or more regions of the inspection surface; and/or configurations of the inspection robot (e.g., down force, payload configurations, sensor distributions, sensor types to be utilized, and/or sled configurations such as ramp heights, slope, and/or pivot arrangements) for each of one or more regions of the inspection surface. An example controller **16102** further includes a sensor reconfiguration circuit **16138** that provides a configuration parameter **16136** to the inspection robot **16140** in response to a reconfiguration command (e.g., sensor configuration parameters responsive to the inspection map and/or updates to the inspection map). In certain embodiments, an update to the inspection map **16134** includes the reconfiguration command, and/or includes an update to a travel path of the inspection robot **16140**. An example reconfiguration command includes a change to at attribute such as a sensor spacing (e.g., horizontal and/or vertical), a couplant flow (e.g., a rate of flow and/or a change to a couplant flow re-coupling operation timing, triggering conditions, and/or flow rate), and/or a force on an inspection sensor (e.g., an active or passive down force, and/or a change in operations of a biasing member and/or an actuator of a payload, arm, and/or sled associated with the inspection sensor). An example update to the travel path of the inspection robot **16140** includes an update to re-traverse a portion of the inspection surface. An example update to the travel path of the inspection robot **16140** includes an update to an x-y coverage resolution of the inspection robot **16140** (e.g.,

a macro resolution, such as a distance between inspected regions of a payload, a distance between horizontal inspection lanes; and/or a micro-resolution such as a distance between adjacent sensors of a payload and/or of the inspection robot).

[0521] The example utilizes x-y coverage resolution to illustrate the inspection surface as a two-dimensional surface having a generally horizontal (or perpendicular to the travel direction of the inspection robot) and vertical (or parallel to the travel direction of the inspection robot) component of the two-dimensional surface. However, it is understood that the inspection surface may have a three-dimensional component, such as a region within a tank having a surface curvature with three dimensions, a region having a number of pipes or other features with a depth dimension, or the like. In certain embodiments, the x-y coverage resolution describes the surface of the inspection surface as traversed by the inspection robot, which may be two dimensional, conceptually two dimensional with aspects have a three dimensional component, and/or three dimensional. The description of horizontal and vertical as related to the direction of travel is a non-limiting example, and the inspection surface may have a first conceptualization of the surface (e.g., x-y in a direction unrelated to the traversal direction of the inspection robot), where the inspection robot traverses the inspection surface in a second conceptualization of the surface (e.g., x-y axes oriented in a different manner than the x-y directions of the first conceptualization), where the operations of the inspection robot **16140** such as movement paths and/or sensor inspection locations performed in the second conceptualization are transformed and tracked in the first conceptualization (e.g., by the inspection map configuration circuit **16132**, a controller on the inspection robot, a controller on a base station, etc.) to ensure that the desired inspection coverage from the view of the first conceptualization are achieved. Accordingly, the user response command **16122** and communications to the user device **16124** can be operated in the first conceptualization or the second conceptualization according to the preferences of the user, an administrator for the system, the operator, or the like.

[0522] While the first conceptualization and the second conceptualization are described in relation to a two-dimensional description of the inspection surface for clarity of the present description, either or both of the first conceptualization and the second conceptualization may include three-dimensional components and/or may be three-dimensional descriptions of the inspection surface. In certain embodiments, the first conceptualization and the second conceptualization may be the same and/or overlay each other (e.g., where the traversal axes of the robot define the view of the inspection surface, and/or where the axes of the inspection surface view and the traversal axes of the robot coincide).

[0523] While the first conceptualization and the second conceptualization are described in terms of the inspection robot traversal and the user device **16124** interface, additional or alternative conceptualizations are possible, such as in terms of an operator view of the inspection surface, other users of the inspection surface, and/or analysis of the inspection surface (e.g., where aligning one axis with a true vertical of the inspection surface, aligning an axis with a temperature gradient of the inspection surface, or other arrangement may provide a desirable feature for the conceptualization for some purpose of the particular system).

[0524] In certain embodiments, the user may provide a desired conceptualization (e.g., orientation of x-y axes, etc.) as a user response command **16122**, and/or as any other user interaction as set forth throughout the present disclosure, allowing for the user to interface with depictions of the inspection surface in any desired manner. It can be seen that the utilization of one or more conceptualizations of the inspection surface provide for simplification of certain operations of aspects of systems, procedures, and/or controllers throughout the present disclosure (e.g., user interfaces, operator interfaces, inspection robot movement controls, etc.). It can be seen that the utilization of one or more conceptualizations of the inspection surface allow for combined conceptualizations that have distinct dimensionality, such as two-dimensional for a first conceptualization (e.g., traversal commands and/or sensor distributions for an inspection robot operating on a curved surface such as a tank interior, where the curved surface includes a related three-dimensional conceptualization; and/or where a first conceptualization eliminates the need for a dimension, such as by aligning an axis perpendicular to a cylindrical inspection surface), and a either three-dimensional or a non-simple transformation to a different two-dimensional for a second conceptualization (e.g., a conceptualization having an off-perpendicular axis for a cylindrical inspection surface, where a progression of that axis along the inspection surface would be helical, leading to either a three dimensional conceptualization, or a complex transformed two dimensional conceptualization).

[0525] Referencing FIG. **86**, an example procedure for rapid reconfiguration of an inspection robot is depicted. The example procedure includes an operation **16202** to interrogate an inspection surface with a number of sensors, an operation **16204** to interpret inspection base data from the sensors, and an operation **16206** to determine refined inspection data in response to the inspection base data. The example procedure further includes an operation **16208** to determine an inspection response value during the interrogating. The example operation **16208** may additionally or alternatively determine the response value during a period of time that corresponds to a rapid response time. The example procedure further includes an operation **16224** to determine an inspection command value in response to the inspection response value.

[0526] The example procedure may further include an operation **16210** to provide the refined inspection data to a user device, remove server or service, and/or to an operator device, an operation **16212** to receive a user response command from the user device, remove server or service, and/or the operator device, and an operation **16214** to determine the inspection response value further in response to the user response command.

[0527] The example procedure may further include an operation **16216** to update an inspection map in response to the inspection command value. The example procedure may further include an operation **16218** to provide a reconfiguration command, and/or an operation **16220** to update a travel path of the inspection robot, in response to the inspection command value. The example procedure may further include an operation **16222** to update an x-y coverage resolution of the inspection robot in response to the inspection command value. In certain embodiments, the operation **16220** includes providing an updated inspection map for operation **16216**, and/or providing an updated travel

path for operation **16220**. In certain embodiments, operation **16220** includes an operation to update coverage resolution of the inspection robot in response to the inspection command value, where the updated coverage resolution corresponds to a selected conceptualization of the inspection surface.

[0528] Referencing FIG. **87**, an example inspection robot **16302** is depicted, with the inspection robot **16302** operable to perform rapid response configuration and/or reconfiguration for inspection operations of an inspection surface. In certain embodiments, the example inspection robot **16302** is compatible to interact with a controller is configured to perform operations for rapid response to inspection data (e.g., reference FIG. **85** and the related description), and/or may include portions or all of such a controller. Rapid response configuration and/or reconfiguration inspection operations include, without limitation, configuration and/or reconfiguration operations performed during an inspection operation, and/or performed during a period of time that corresponds to a rapid response time. An example inspection robot **16302** may additionally or alternatively include any components, features, and/or aspects of embodiments for an inspection robot as set forth throughout the present disclosure.

[0529] The example inspection robot **16302** includes an inspection chassis **16304** having a number of inspection sensors **16306** configured to interrogate an inspection surface. In certain embodiments, the inspection chassis **16304** corresponds to an inspection robot body, a center chassis, a robot chassis, and/or other similar terminology as utilized throughout the present disclosure. In certain embodiments, the inspection chassis **16304** further includes a payload, for example a payload coupled to the inspection robot body, and having at least some of the inspection sensors **16306** coupled thereto. Any example payloads and/or inspection sensors and coupling arrangements set forth throughout the present disclosure are contemplated herein.

[0530] The example inspection robot **16302** further includes a drive module **16308** coupled to the inspection chassis **16304**, for example a drive module **16308** including one or more wheels, and power, mechanical, and/or communication interfaces to the inspection chassis **16304**. The example drive module **16308** is structured to drive the inspection robot over the inspection surface, for example by powering at least one wheel of the drive module **16308**, thereby propelling the inspection robot **16302** relative to the inspection surface.

[0531] The example inspection robot **16302** includes a controller **16310** having a number of circuits configured to functionally execute operations of the controller **16310**. The arrangement depicted in FIG. **87** is a non-limiting example for clarity of description, and the arrangement of the controller **16310** and/or circuits thereof may vary, for example with the controller **16310** and/or portions thereof positioned on the inspection chassis **16304** and/or other components of the inspection robot **16302**, and/or portions of the controller **16310** positioned on a base station, operator computing device, user computing device, remote server, and/or other locations within a system including the inspection robot **16302**. The example controller **16310** includes an inspection data circuit **16312** that interprets inspection base data **16314** including data provided by the inspection sensors **16306**, and an inspection processing circuit **16316** that determines refined inspection data **16318** in response to the inspection base data **16314**. The example controller **16310** includes an inspection configuration circuit **16320** that determines an inspection response value **16322** in response to the refined inspection data, and an inspection response circuit **16324** that provides an inspection command value **16326** in response to the inspection response value **16322**. In certain embodiments, the inspection response circuit **16324** provides the inspection command value **16326** during the inspection operations of the inspection robot **16302**, and/or during a period of time that corresponds to a rapid response time. In certain embodiments, the inspection response value **16322** and/or the inspection command value **16326** may be determined in whole or part on a controller (e.g., controller **16102**, reference FIG. **85**) and received by the inspection configuration circuit **16320** and/or inspection response circuit **16324** for utilization by the controller **16310** to perform configuration and/or reconfiguration operations. In certain embodiments, the inspection configuration circuit **16320** and/or inspection response circuit **16324** determine relevant portions of the received inspection response value **16322** and/or the inspection command value **16326** for operations of the inspection robot **16302**, and provide the relevant portions of inspection response value **16322** and/or the inspection command value **16326** as response and/or command instructions for the inspection robot **16302** and/or relevant components of the inspection robot **16302**.

[0532] The example controller **16310** includes an inspection map configuration circuit **16328** that updates an inspection map **16330** in response to the inspection command value **16326**. An example controller **16310** further includes a payload configuration circuit **16332** that provides a reconfiguration command **16334** in response to the inspection command value **16326**. In certain embodiments, the payload configuration circuit may additionally or alternatively be referenced as a payload reconfiguration circuit and/or a sensor reconfiguration circuit, as operations of the payload configuration circuit **16332** may adjust, readjust, and/or reconfigure the payload and/or inspection sensors coupled to the payload. Example and non-limiting reconfiguration commands **16334** include a sensor spacing (e.g., horizontal and/or vertical sensor spacing), a couplant flow (e.g., flow rate and/or flow response characteristics such as re-coupling flow responses), a change in an inspection sensor (e.g., activating or de-activating a sensor, data collection from the sensor, and/or determination of inspection base data and/or refined data from the sensor; a change in a scale, sensed resolution, and/or calibrations for a sensor; and/or a change in a sampling rate of the sensor), and/or a force on an inspection sensor (e.g., an active or passive down force, and/or a change in operations of a biasing member and/or an actuator of a payload, arm, and/or sled associated with the inspection sensor). An example inspection robot **16302** is structured to re-traverse a portion of the inspection surface, and/or update an x-y coverage of the inspection operation, for example in response to an update of the inspection map **16330**.

[0533] An example inspection robot **16302** includes a trailing payload **16338** structured to perform an operation on the inspection surface, such as altering the inspection surface, in response to the inspection command value **16326**. The trailing payload **16338** may be coupled to a rear portion of the inspection chassis **16304**. An example inspection robot **16302** includes a payload operation circuit **16336** that selectively operates the trailing payload **16338** in response

to the inspection command value **16326**, wherein the inspection command value **16326** includes a command for an operation such as a repair of the inspection surface, painting the inspection surface, welding the inspection surface, and/or applying a visible mark to the inspection surface. An example inspection command value **16326** may additionally or alternatively include a command for an operation such as a cleaning operation for the inspection surface, application of a coating and/or material addition to the inspection surface, and/or applying a selectively visible mark to the inspection surface. An example inspection robot **16302** is further configure to send an alarm and/or a notification to a user device in response to the inspection response value **16322**, for example to notify the user and/or an operator that an off-nominal condition has been detected, that a configuration change to the inspection robot **16302** has been performed, and/or that a configuration change is unavailable and/or unsuccessful in whole or part. In certain embodiments, an alert and/or a notification to the user may be performed via a communication to an external controller (e.g., controller **16102** in FIG. **85**), and/or the alert and/or notification may be provided by any applicable circuit of the controller **16310**.

[0534] Referencing FIG. **112**, an example system for providing real-time processed inspection data to a user is depicted. The example system includes an inspection robot **100** positioned on an inspection surface **500**. The example inspection robot **100** includes any inspection robot having a number of sensors associated therewith and configured to inspect a selected area. Without limitation to any other aspect of the present disclosure, an inspection robot **100** as set forth throughout the present disclosure, including any features or characteristics thereof, is contemplated for the example system depicted in FIG. **112**. In certain embodiments, the inspection robot **100** may have one or more payloads, and may include one or more sensors on each payload.

[0535] The example inspection robot **100** includes a number of sensors **2202**, where the operations of the inspection robot **100** provide the sensors **2202** in proximity to selected locations of the inspection surface **500** and collect associated data, thereby interrogating the inspection surface **500**. Interrogating, as utilized herein, includes any operations to collect data associated with a given sensor, to perform data collection associated with a given sensor (e.g., commanding sensors, receiving data values from the sensors, or the like), and/or to determine data in response to information provided by a sensor (e.g., determining values, based on a model, from sensor data; converting sensor data to a value based on a calibration of the sensor reading to the corresponding data; and/or combining data from one or more sensors or other information to determine a value of interest). A sensor **2202** may be any type of sensor as set forth throughout the present disclosure, but includes at least a UT sensor, an EMI sensor (e.g., magnetic induction or the like), a temperature sensor, a pressure sensor, an optical sensor (e.g., infrared, visual spectrum, and/or ultra-violet), a visual sensor (e.g., a camera, pixel grid, or the like), or combinations of these.

[0536] The example system further includes a controller **21002** having a number of circuits configured to functionally perform operations of the controller **21002**. The example system includes the controller **21002** having an inspection data circuit that interprets inspection base data from the sensors **2202**, an inspection processing circuit that determines refined inspection data in response to the inspection base data, and a user interface circuit that provides the refined inspection data to a user interface device **21006**. The user interface circuit further communicates with the user interface device **21006**, for example to interpret a user request value such as a request to change a display value, to change inspection parameters, and/or to perform marking, cleaning, and/or repair operations related to the inspection surface **500**. The example controller **21002** may additionally or alternatively include aspects of any controller, circuit, or similar device as described throughout the present disclosure. Aspects of example circuits may be embodied as one or more computing devices, computer-readable instructions configured to perform one or more operations of a circuit upon execution by a processor, one or more sensors, one or more actuators, and/or communications infrastructure (e.g., routers, servers, network infrastructure, or the like). Further details of the operations of certain circuits associated with the controller **21002** are set forth, without limitation, in the portion of the disclosure referencing FIG. **113**.

[0537] The example controller **21002** is depicted schematically as a single device for clarity of description, but the controller **21002** may be a single device, a distributed device, and/or may include portions at least partially positioned with other devices in the system (e.g., on the inspection robot **100**, or the user interface device **21006**). In certain embodiments, the controller **21002** may be at least partially positioned on a computing device associated with an operator of the inspection (not shown), such as a local computer at a facility including the inspection surface **500**, a laptop, and/or a mobile device. In certain embodiments, the controller **21002** may alternatively or additionally be at least partially positioned on a computing device that is remote to the inspection operations, such as on a web-based computing device, a cloud computing device, a communicatively coupled device, or the like.

[0538] In certain embodiments, the controller **21002** communicates to the user interface device **21006** using an intermediate structure **21004**, such as a web portal, mobile application service, network connection, or the like. In certain embodiments, the intermediate structure **21004** may be varied by the controller **21002** and/or a user **21008**, for example allowing the user **21008** to connect to the controller **21002** using a web portal at one time, and a mobile application at a different time. The controller **21002** may include operations such as performing an authentication operation, a login operation, or other confirmation that a user **21008** is authorized to interact with the controller **21002**. In certain embodiments, the interactions of the user **21008** may be limited according to permissions related to the user **21008**, the user interface device **21006**, and/or any other considerations (e.g., a location of the user, an operating stage of an inspection, a limitation imposed by an operator of the inspection, etc.). In certain embodiments, and/or during certain operating conditions, the controller **21002** communicates directly with the user interface device **21006**, and/or the user **21008** may interface directly with a computing device having at least a portion of the controller **21002** positioned thereon.

[0539] The example system further includes the inspection data circuit responsive to the user request value to adjust the interpreted inspection base data and/or the interrogation of the inspection surface. For example, and without limitation, the user request value may provide for a change to an

inspection resolution (e.g., a horizontal distance between sensors **2202**, a vertical distance at which sensor sampling is performed, selected positions of the inspection surface **500** to be interrogated, etc.), a change to sensor values (e.g., sensor resolution such as dedicated bits for digitization; sensor scaling; sensor communicated data parameters; sensor minimum or maximum values, etc.), a change to the planned location trajectory of the inspection robot (e.g., scheduling additional inspection passes, changing inspected areas, canceling planned inspection portions, adding inspection portions, etc.), and/or a change in sensor types (e.g., adding, removing, or replacing utilized sensors). In certain embodiments, the inspection data circuit responds to the user request value by performing an inspection operation that conforms with the user request value, by adjusting inspection operations to incrementally change the inspection scheme to be closer to the user request value (e.g., where the user request value cannot be met, where other constraints prevent the user request value from being met, and/or where permissions of the user **21008** allow only partial performance of the user request value). In certain embodiments, a difference between the user request value and the adjusted interpreted inspection base data and/or interrogation scheme may be determined, and/or may be communicated to the user, an operator, an administrator, another entity, and/or recorded in association with the data (e.g., as a data field, metadata, label for the data, etc.).

[0540] In certain embodiments, the inspection processing circuit is responsive to the user request value to adjust the determination of the refined inspection data. In certain embodiments, certain sensed values utilize a significant amount of post-processing to determine a data value. For example, a UT sensor may output a number of return times, which may be filtered, compared to thresholds, subjected to frequency analysis, or the like. In certain embodiments, the inspection base data includes information provided by the sensor **2202**, and/or information provided by the inspection robot **100** (e.g., using processing capability on the inspection robot **100**, hardware filters that act on the sensor **2202** raw data, de-bounced data, etc.). The inspection base data may be raw data—for example, the actual response provided by the sensor such as an electronic value (e.g., a voltage, frequency, or current output), but the inspection base data may also be processed data (e.g., return times, temperature, pressure, etc.). As utilized herein, the refined inspection data is data that is subjected to further processing, generally to yield data that provides a result value of interest (e.g., a thickness, or a state value such as "conforming" or "failed") or that provides a utilizable input for another model or virtual sensor (e.g., a corrected temperature, corrected flow rate, etc.). Accordingly, the inspection base data includes information from the sensor, and/or processed information from the sensor, while the refined inspection data includes information from the inspection base data that has been subjected to further processing. In certain embodiments, the computing time and/or memory required to determine the refined inspection data can be very significant. In certain embodiments, determination of the refined inspection data can be improved with the availability of significant additional data, such as data from offset and/or related inspections performed in similar systems, calibration options for sensors, and/or correction options for sensors (e.g., based on ambient conditions; available power for the sensor; materials of the inspection surface, coatings, or the like; etc.). Accordingly, in previously known systems, the availability of refined inspection data was dependent upon the meeting of the inspection base data with significant computing resources (including processing, memory, and access to databases), introducing significant delays (e.g., downloading data from the inspection robot **100** after an inspection is completed) and/or costs (e.g., highly capable computing devices on the inspection robot **100** and/or carried by an inspection operator) before the refined inspection data is available for analysis. Further, previously known systems do not allow for the utilization of refined inspection data during inspection operations (e.g., making an adjustment before the inspection operation is complete) and/or utilization by a customer of the data (e.g., a user **21008**) that may have a better understanding of the commercial considerations of the inspection output than an inspection operator.

[0541] Referencing FIG. **113**, an example controller **21002** is depicted. The example controller **21002** is consistent with a controller usable in a system, for example the system depicted in FIG. **112**, although the controller **21002** and/or aspects thereof may be usable in any system and/or with any embodiments set forth in the present disclosure.

[0542] The example controller **21002** includes an inspection data circuit **21102**. The example inspection data circuit **21102** interprets inspection base data **21122**, including data provided by an inspection robot **100** interrogating an inspection surface **500** with a number of inspection sensors **2202**. The example controller **21002** further includes an inspection processing circuit **21104** that determines refined inspection data **21110** in response to the inspection base data **21122**.

[0543] The example controller further includes a user interface circuit **21106** the provides the refined inspection data **21110** to a user interface device (e.g., as a user interface output **21126**). In certain embodiments, the refined inspection data **21110** includes and/or is utilized to generate depictions of inspection results, including with quantified and/or qualitative values of the inspection results, such as wall thicknesses, coating thicknesses, compliant or non-compliant areas, service life descriptions (e.g., time remaining until service is required, service cost or amortization values, etc.), and/or any other values of interest determinable from the refined inspection data **21110**. In certain embodiments, the refined inspection data **21110** may additionally or alternatively include data quality descriptions, such as confidence values, missing data descriptions, and/or sensing or data processing quality descriptions. In certain embodiments, the user interface circuit **21106** may be configured to adjust the displayed data, the display type, and/or provide a selection interface allowing a user to choose from among available data displays. The example user interface circuit **21106** further interprets a user request value **21124**, and determines an inspection command value **21112** in response to the user request value **21124**. In certain embodiments, the controller **21002** may be configured to utilize the user request value **21124** directly, where the user interface circuit **21106** accordingly passes the user request value **21124** to other aspects of the controller **21002** as the inspection command value **21112**. In certain embodiments, the user interface circuit **21106** determines which aspects of the controller **21002** will be responsive to the user request value **21124**, and determines one or more inspection command values **21112** to pass to the respective aspects of the controller **21002** to be responsive to the user request value **21124**. For example, a user request value **21124** to inspect

certain areas of the inspection surface **500**, to change a planned position trajectory of the inspection robot **100**, or the like, may be passed as inspection adjustments **21116** by an inspection configuration circuit **21108** to make appropriate adjustments to the inspection operations of the inspection robot **100** (e.g., utilizing command to the inspection robot **100**, to an operator of the inspection robot **100**, changing a planned path data structure, or the like). The example controller **21002** further includes the inspection configuration circuit **21108** that provides the inspection command value(s) **21112** to the inspection robot **100** (and/or to other aspects of the system) during the interrogating of the inspection surface **500** (e.g., while the inspection is occurring, and/or before the inspection is considered to be complete).

[0544] An example embodiment includes the inspection command value **21112** including a command to adjust in inspection operation (e.g., inspection adjustment **21116**) of the inspection robot **100**. Example and non-limiting inspection adjustments **21116** include adjusting an inspection location trajectory of the inspection robot (e.g., the region of the inspection surface to be inspected, the inspection pathing on the inspection surface, and/or the spatial order of inspection of the inspection surface), adjusting a calibration value of one of the inspection sensors (e.g., A/D conversion values, UT calibrations and/or assumptions utilized to process signals, and/or other parameters utilized to operate sensors, interpret data, and/or post-process data from sensors), and/or a command to enable at least one additional inspection sensor (e.g., activating an additional sensor, receiving data provided by the sensor, and/or storing data provided by the sensor). In certain embodiments, the at least one additional inspection sensor is a sensor having a different type of sensing relative to a previously operating sensor, and/or a sensor having a different capability and/or different position on the inspection robot (e.g., positioned on a different payload, different sled, and/or at a different position on a sled). An example inspection adjustment **21116** command includes a command to enable at least one additional inspection operation, where the inspection processing circuit **21104** determines the refined inspection data **21110** in response to the at least one additional inspection operation. Example and non-limiting additional inspection operations include re-inspecting at least portion of the inspection surface, performing an inspection with a sensor having distinct capabilities, sensing type, and/or calibrations relative to a previously operating sensor, inspecting additional regions of the inspection surface beyond an initially planned region, changing an inspection resolution (e.g., a spacing between sensed locations), changing a traversal speed of the inspection robot during inspection operations, or the like.

[0545] An example inspection command value **21112** includes a command to perform a repair operation **21118** of the inspection surface, such as a welding operation, applying a coating, a painting operation, a cleaning operation **21120**, and/or applying an additive operation (e.g., adding substrate material, a coating material, a marking material, and/or a paint) to at least a portion of the inspection surface. An example inspection command value **21112** includes an operation to perform a marking operation **21114** on the inspection surface. Example and non-limiting marking operations include applying a visible mark, applying a selectively visible mark (e.g., a material visible under certain conditions such as in the presence of a UV light), and/or an operation to apply a virtual mark to at least a portion of the inspection surface. In certain embodiments, the marking operation **21114** additionally includes performing operations such as cleaning, repairing, and/or collecting additional data in relation to the portion of the inspection surface to be marked. In certain embodiments, a marking operation includes mitigation operations (e.g., to extend a service time, allow a facility to continue operations, and/or provide time to allow for additional inspections or subsequent service or repair to be performed), inspection operations (e.g., gathering more detailed information, confirming information, imaging information, etc. related to the marked region), and/or cleaning operations (e.g., to ensure that data collection is reliable, to ensure that a mark adheres and/or can be seen, and/or to enhance related imaging information) for the marked region of the inspection surface and/or adjacent regions.

[0546] An example inspection command value **21112** includes a command to capture a visual representation of at least a portion of the inspection surface, such as an image, a series of images, and/or video images, of the area to be marked, adjacent areas, and/or perspective views (e.g., to provide context, allow for easier location of the marked area, etc.) of related to the region of the inspection surface to be marked.

[0547] An example inspection command value **21112** includes a display threshold adjustment value, such as a threshold utilized to label, categorize, colorize, or otherwise depict aspects of the inspection data on a visual representation of at least a portion of the inspection surface. In certain embodiments, the display threshold adjustment value may be determined in response to the inspection data (e.g., to show anomalous regions based on the inspection data values, based on averages, quartiles, or other statistical determinations, etc.), in response to user request values **21124** received from a user interface provided to a user device, and/or in response to operator commands (e.g., from an operator interacting with a base station, local computing device, mobile computing device, dedicated device communicatively coupled to the inspection robot, etc.).

[0548] In certain embodiments, a user device and/or user interface device includes a computing device communicative coupled to the controller **21002**. Communicative coupling may be provided through a local area network (e.g., a facility network where the facility includes the inspection surface), a wide area network, the internet, a web application, a mobile application, and/or combinations of these. Example and non-limiting user interface devices include a laptop, a desktop, or a mobile computing device such as a smart phone or tablet. In certain embodiments, the user interface device is positioned at a separate physical location from the inspection surface (e.g., at another location in a facility including the inspection surface, and/or away from the facility).

[0549] In certain embodiments, the inspection command value **21112** includes a display threshold adjustment value, where the inspection processing circuit **21104** updates the refined inspection data **21110** in response to the display threshold adjustment value (e.g., changing a sensor, sensor parameter, inspection path, etc. to provide data sufficient to support the display threshold adjustment value; adjusting post-processing of inspection data in response to the display threshold adjustment value, such as determining anomalous data, enhancing or adjusting a resolution of the refined data,

and/or providing additional related data to data corresponding to the display threshold being adjusted).

[0550] In certain embodiments, the inspection based data includes raw sensor data, and/or minimally processed data. In certain embodiments, the inspection based data includes ultra-sonic (UT) sensor data, which may additionally or alternatively include sensor calibrations such as settings and assumptions utilized to determine a processed parameter (e.g., a wall thickness of the inspection surface, a presence of a crack or anomaly, and/or a thickness of a coating and/or debris). The sensor calibrations and/or other descriptive data (e.g., time stamps, location data, facility data, etc.) may be stored as metadata with the raw sensor data, and/or related to the raw sensor data such that a device accessing the raw sensor data can additionally request or retrieve the metadata. The present description references UT sensor data and related data, but sensor calibrations, related data, and/or metadata may be stored in relation to any type of raw sensor data and/or minimally processed data.

[0551] Referencing FIGS. **114-115**, an example procedure for adjusting an inspection operation in response to a user request value is depicted. The example procedure includes an operation **21202** to provide inspection traversal commands (e.g., a description of regions of an inspection surface to be inspected, a pathing description for an inspection robot, etc.), an operation **21204** to provide interrogation commands to a number of inspection sensors of the inspection robot, an operation **21206** to interpret inspection base data from the inspection sensors (e.g., raw sensor data, minimally processed sensor data, and/or sensor calibration or other metadata), an **21208** to determine refined inspection data in response to the inspection base data, an operation **21210** to operate a user interface accessible to a user interface device, and to provide the refined inspection data to the user interface. For example, the refined inspection data may include processed data values (e.g., thickness values, wear values, temperatures, coating indications, service life and/or service date values, etc.), which may be presented as tables, graphs, visual depictions of the inspection surface, or the like. In certain embodiments, refined inspection data may include raw sensor data and/or minimally processed sensor data, and/or may further include associated calibrations or other metadata, for example to allow the user to evaluate the processing and determine whether sensor data processing parameters should be updated or adjusted, perform sensitivity analysis with respect to processing calibrations and/or assumptions, etc. In certain embodiments, operation **21210** to operate the user interface includes operating a web portal, web site, mobile application, proprietary application, and/or a database accessible with an application programming interface (API), and interacting with a user device through any of the foregoing.

[0552] The example procedure further includes an operation to interpret a user request value **21212**, for example a request to adjust a display (e.g., displayed data, thresholds, virtual marks, displayed region of the inspection surface, etc.) presented on the user interface, a request to adjust any aspect of the inspection operation (e.g., sensors utilized and/or calibrations for the sensors; sensor positions on one or more payloads; sampling rates; robot traversal trajectory including locations to be inspected, traversal speed, areas to be re-inspected, imaged, and/or inspected with an additional inspection operations; authorizations for additional time, cost, utilization of certain operations such as welding, repair, or utilization of certain materials; adjusting downforce parameters for the inspection robot; adjusting thresholds for any operations described throughout the present disclosure, such as thresholds to enable additional or alternative inspection operations or sensors, thresholds to display information on an inspection display, thresholds to perform operations such as repair, marking, and/or cleaning and an operation, and/or thresholds to respond to off-nominal conditions such as couplant loss events, obstacle detection events, sensor evaluation, processing, or scoring values such as primary mode scores and/or secondary mode scores). The example procedure includes an operation **21214** to adjust the inspection operation in response to the user request value. One or more of any adjustments to the inspection robot and/or inspection operations as set forth throughout the present disclosure may be implemented for operation **21214**.

[0553] An example procedure includes adjusting the inspection operation by adjusting the inspection operation to achieve the implied conditions from the user request value, but adjusting the inspection operation may additionally or alternatively include one or more of: adjusting the inspection operation to comply with a portion of the user request value; considering the user request value adjustments (e.g., as part of a prioritization of one or more additional requests), where the user request value adjustments may not be implemented, implemented only in part, or implemented in whole; storing a description of adjustments of the inspection operation for implementation at a later time (e.g., later in the present inspection operation, and/or in a subsequent inspection operation); implementing one or more adjustments for which a user providing the user request value has authorization, and/or not implementing one or more adjustments for which the user providing the user request value does not have authorization; and/or preserving a capability to implement one or more adjustments for which the user providing the user request value does not have authorization and/or pending an authorization of the user (e.g., performing additional inspection operations to take additional data responsive to the user request value, but preventing access of the user to the additional data until the user is authorized to access the data, and/or until user authorization for the additional data is confirmed). In certain embodiments, the operation **21214** further includes providing an alert and/or notification to the user, user device, and/or user interface in response to a partial implementation and/or non-implementation of the adjustments. The alert and/or notification may include an indication that the adjustments were not performed, a description of which aspects of the adjustments were not performed, and indication of why no adjustments or incomplete adjustments were performed (e.g., indicating a higher priority request, system capability that is lacking, that the user requires authorization, etc.). In certain embodiments, the operation **21214** includes providing an alert and/or notification to an administrator, supervisor, super-user, and/or operator of the inspection robot, indicating that a user request value was received, and/or indicating whether the user request value was addressed in full or part. In certain embodiments, the operation **21214** further includes providing an authorization request to an administrator, supervisor, super-user, and/or operator of the inspection robot for the user in response to the user request value. The described example operations are non-limiting, and set forth to provide illustrations of certain capabilities of embodiments herein.

[0554] An example user request value includes an inspection command value, where the operation **21302** includes adjusting inspection traversal commands and/or the interrogation commands in response to the inspection command value. An example operation **21214** includes adjusting inspection traversal commands to adjust an inspection location trajectory (e.g., position trajectory) of the inspection robot, adjusting the interrogation command to adjust calibration value(s) for one or more inspection sensors, and/or adjusting the interrogation commands to enable one or more additional sensors. An example operation **21214** includes enabling at least one additional inspection operation in response to a user request value (e.g., as a repair command value), for example by providing a repair operation command. In certain embodiments, the repair command provides a welding operation command, a coating application command, a painting operation command, a cleaning operation command, and/or an additive operation command.

[0555] An example user request value includes a marking command value, and operation **21502** includes providing a marking operation command. In certain embodiments, the marking operation command includes a visible marking command, a selectively visible marking command, and/or a virtual marking command. In certain embodiments, operation **21210** to operate the user interface, and/or operation **21214** to adjust an inspection operation, include selectively providing a virtual mark to the user interface (e.g., showing virtual marks in a display layer of the user interface, showing virtual marks upon request by the user, showing virtual marks according to a mark type requested by the user, showing virtual marks in response to an authorization of the user, etc.).

[0556] An example user request value includes a visual capture command value, where operation **21214** includes providing a visual capture operation command in response to the visual capture command value (e.g., where a camera, optical sensor, or other device of the inspection robot is responsive to the visual capture operation command to capture associated visual data from the inspection surface).

[0557] Referring now to FIGS. **118**A-G, an example embodiment of a sensor sled assembly **22200** includes a first portion **22210**, a second portion **22212**, and a third portion **22214**. Some or all of the features of the sensor sled assembly **22200** as described with reference to this and other embodiments throughout the description may be the same as or otherwise combined with each other. The sensor sled assembly **22200** is depicted and described as having three portions for clarity of the description to highlight aspects of certain embodiments, but the number of portions may vary across embodiments, and/or embodiments may include a sensor sled assembly **22200** without portions or segments. Example embodiments may include one or more depicted portions being integrated, and/or logical or physical divisions of the sensor sled assembly **22200** within depicted portions. For example, embodiments of the sensor sled assembly **22200** may include a single portion, two portions, three portions (as shown in FIGS. **118**A-G) or more than three portions. The first portion **22210** and/or the second portion **22212** may each include one or more sensor housings **22216**, **22218** that each include one or more sensors **22220** and **22222**. Non-limiting examples of the sensors **22220** and **22222** include transducers of the types disclosed herein. In embodiments, the third portion **22214** may be connected/coupled to an arm **22224** which may be connected/coupled to a sled mount **22226** of an inspection robot **100** (FIG. **1**), as disclosed herein. The example embodiments of FIGS. **118**A-**145** are depicted including UT sensors, and provide examples for high density inspection operations, but may additionally or alternatively include additional or distinct sensor types, including EM sensors, profiling sensors, and/or any other sensor type as set forth herein. Embodiments herein to provide high density inspection operations allow for various enhancements to inspection operations, for example high speed inspections (e.g., high density of sensors providing significant surface inspection coverage in a single pass over the inspection surface), additional inspection capability (e.g., inspection operations with multiple closely positioned sensors, allowing for diversity of sensor types, diversity of sensing operations or calibrations among the sensors, etc.), and/or redundancy of inspection operations (e.g., allowing for error correction, confirmation, and/or providing backup inspection operations in a single pass, which may be useful, for example: where proper calibration settings and/or sensor configurations are uncertain; where access to the inspection surface is difficult and/or otherwise high cost; and/or where the inspection conditions elevate the risk for individual sensor failures during inspection operations).

[0558] Embodiments of the sensor sled assembly **22200** may provide for one or more degrees of freedom for motion of the assembly, for sleds, for sled mounts, and/or for sled portions. Motion degrees of freedom allow for improved inspection operations, for example limiting damage to the sensor sled assembly, allowing for traversal of a range of obstacles on the inspection surface, allowing for recovery and/or continuation of inspection operations without requiring downtime (e.g., removal of an inspection robot from the inspection surface to reset the configuration), and/or improving inspection through improved compliance of proper positioning for sensors to the inspection surface, and/or more rapid recovery of positioning in response to a disturbance such as traversal of an obstacle. For example, as shown in FIG. **118**B, a first degree of freedom **22228** may be about pivot joint **22229** and provide for the entire sled assembly **22200** to move in the directions indicated by the double arrowed lines with respect to the sled mount **22226**. In embodiments, the range of motion of the first degree of freedom **22228** may be about 5 to 60 degrees above and up to about thirty degrees below an axis **22230** that runs through the pivot joint **22229** and the length of the arm **22224** when the sled assembly **22200** is resting on a level surface. The range of motion of the first degree of freedom **22228** depends upon the purpose for allowing movement, the utilization, availability, and characteristics of a biasing force (e.g., using a biasing spring) to bias the arm **22224** during operations, or the like. One of skill in the art, having the benefit of the disclosures herein, can readily configure a range of motion for the first degree of freedom **22228** for a given system. Certain considerations for determining the degree of freedom **22228** (range of motion) to be provided include, without limitation: the shape of the inspection surface; the purpose for the range of motion **22228** (e.g., to support inspection operations, to support assembly and/or configuration of the inspection robot, to provide a configuration of the sensor sled assembly **22200** during storage or transit, etc.); the expected size and/or configuration of disturbances (e.g., obstacles on the inspection surface, surface anomalies such as burrs, welds, damage, etc.); aspects

of the hardware utilized to implement the range of motion (e.g., passive motion such as allowing the arm **22224** to passively raise for obstacles, and return with a biasing spring, versus active motion such as an actuator capable to selectively raise or lower the arm **22224**); and/or other limits in the system, such as stability limits (e.g., due to weight shifting of inspection robot on the inspection surface as the arm **22224** moves), height limits (e.g., total height limit of the inspection robot, for example due to aspects of the inspected region), etc. In embodiments, one or more hard points, e.g., screws, actuator limiters, stop pegs, etc., may be used to control the range of the degree of freedom **22228** above and/or below the axis **22230**.

[0559] As shown in FIGS. **118**C, **118**D, and **118**E, a second degree of freedom **22232** may be about rotational joints **22234** and **22236** such that the first portion **22210** rotates about joint **22236** and the second portion **22212** rotates about joint **22234** in the directions indicated by double arrowed line (second degree of freedom **22232**). In embodiments, the first portion **22210** and the second portion **22212** may rotate, respectively about joints **22236** and **22234**, synchronously, e.g., together, or asynchronously, e.g., independent of each other. In embodiments, the range of motion of the second degree of freedom **22232** may be up to about 15 degrees clockwise and about 15 degrees counter-clockwise respect to an axis **22238** that runs through the joints **22234** and **22236**, as measured from the position shown in FIGS. **118**C-E. In embodiments, one or more hard points, e.g., screws, may be used to control the range of the second degree of freedom **22232**. The limits of the second degree of freedom **22232** may be configured to accommodate obstacles, and/or may be selected in view of the range of motion **22228** selected in the first degree of freedom (e.g., allowing small obstacles to be accommodated with the second degree of freedom **22232**, with larger obstacles accommodated with the first degree of freedom). In certain embodiments, even a very limited second degree of freedom **22232**, for example an available rotation of +/−1 degree of freedom, is still useful to improve inspection operations, traverse obstacles, and/or provide for rapid return to inspection orientation during and after traversal of an obstacle. An obstacle or disturbance, as utilized herein, is described as such for clarity of the description. An obstacle may be an off-nominal condition, for example, due to surface damage, improper configuration, debris, or the like, and/or a nominal condition, for example, a seam, weld, bolt, change in curvature of the inspection surface, and/or change from a first inspection surface to a second inspection surface (e.g., a transition from a first sidewall to a second sidewall, a transition from a first pipe to a second pipe, etc.). Accordingly, an obstacle or disturbance, for the purpose of traversal of the inspection robot and/or sensor sled assembly **22200**, may be a properly designed aspect of the inspection surface, and/or an aspect of the inspection surface that is present due to damage, wear, corrosion, deposited material, installation of nearby equipment that impinges on the inspection region, or any other aspect that is not a designed aspect of the inspection surface.

[0560] FIG. **119** depicts a third degree of freedom **22310** about pivot points **22312** and **22314** (e.g., joints) such that the first portion **22210** and the second portion **22212** respectively pivot about points **22312** and **22314** in the direction indicated by the double arrowed lines (third degree of freedom **22310**) with respect to the third portion **22214**. In embodiments, the first portion **22210** and the second portion **22212** may pivot about points **22312** and **22314** synchronously, e.g., tighter, or asynchronously, e.g., independent of each other. In embodiments, the range of motion of the third degree of freedom **22310** may be about ten degrees above and about ten degrees below a longitudinal axis **22316** of the third portion **22214**. In embodiments, one or more hard points, e.g., screws, may be used to control the range of the third degree of freedom **22310** above and/or below the axis **22316**. The utilization of a third degree of freedom **22310** allows for independent traversal of obstacles for each sled portion, for example keeping a sensor on a first sled portion in an inspection orientation while a sensor on the other sled portion traverses the obstacle, allows for a more rapid return of a sensor to an inspection orientation after traversal, or the like. The ranges described for each degree of freedom (e.g., first, second, third, fourth, etc.) are non-limiting examples, and the ranges may be more limited, or allowed to exceed, the example ranges described herein.

[0561] In embodiments, the first **22210** and/or the second **22212** portions may be biased towards a particular position via the pivot points **22312** and **22314**. In embodiments, biasing of the first portion **22210** and/or second portion **22212** about points **22312** and **22314** may be achieved via biasing mechanisms such as springs, pneumatics, electromagnetics, and the like. Biasing of the first portion **22210** and/or the second portion **22212** about points **22312** and **22314** may provide for improved stability of the sled assemblies and/or the inspection robot **100**, as compared to certain embodiments that do not provide such biasing. For example, the size of the housings and/or weight of the sensors may shift the center of gravity (CoG), as compared to embodiments having smaller housings and/or sensors, such that the sled assembly **22200** may be prone to tipping, and the biasing of the first portion **22210** and/or the second portion **22212** about points **22312** and **22314** may mitigate the instability generated by the shifted CoG. Embodiments herein provide for sensor sled assemblies **22200** having a high sensor density, and/or high capability sensors (e.g., which may include a large sensor, for example, to accommodate a high energy transducer), where improved stability has even greater value than in previously known systems. In embodiments, the first portion **22210** and the second portion **22212** may be biased about points **22312** and **22314** concavely with respect to an inspection surface. In other embodiments, the first portion **22210** and the second portion **22212** may be biased about points **22312** and **22314** convexly with respect to an inspection surface. In embodiments, the first portion **22210** may be biased about point **22312** concavely and the second portion **22212** may be biased about point **22314** convexly with respect to the inspection surface or vice-versa. In embodiments, the biasing of the first portion **22210** and/or the second portion **22212** about points **22312** and **22314** may be activated/in effect while the inspection robot **100** is powered up and/or during an inspection run.

[0562] A fourth degree of freedom **22318** may be provided for the third portion **22214** about pivot point **22320** such that the first portion **22210**, second portion **22212**, and third portion **22214** pivot about point **22320** with respect to the arm **22224**. In embodiments, the range of motion of the fourth degree of freedom **22318** may be about thirty degrees above and about thirty degrees below an axis **22232** that runs through the pivot point **22320** and is parallel to the longi-

tudinal axis **22316** when the sled assembly **22200** is on a level surface. In embodiments, one or more hard points, e.g., screws, may be used to control the range of the fourth degree of freedom **22318** above and/or below the axis **22322**.

[0563] As will be appreciated, the degrees of freedom of the sled assembly **22200**, as disclosed herein, may provide for improved coupling of the sensors along curved and/or varying inspection surfaces, transitions between inspection surfaces, e.g., the interior and/or exterior of pipes, channels, ships, etc. Additionally or alternatively, the degrees of freedom of the sled assembly **22200** may improve traversal of the inspection robot and/or sled assembly **22200** during non-inspection operations, for example during traversal on a surface to an inspection location, traversal after inspection operations are complete, etc. Additionally or alternatively, the degrees of freedom of the sled assembly **22200** may improve traversal of the inspection robot and/or sled assembly **22200** in any direction, for example whether the inspection robot is going forward, reverse, turning, moving laterally, etc.

[0564] FIG. **120** is a cutaway view of the sled assembly **22200** along axis **22240** (shown in FIG. **118**A). The one or more housings **22216**, **22218** may have an upper housing portion **22412** and a lower housing portion **22414**. The upper housing portion **22412** may house the sensors **22220** and **22222**. The lower housing portion **22414** may include a couplant chamber **22416**. While FIG. **120** depicts the sensors **22220**, **22222** in the upper housing portion **22412** and the couplant chamber **22416** in the lower portion **22414**, in embodiments, the sensor **22220**, **22222** may extend into the lower housing portion **22414** and/or the couplant chamber **22416** may extend into the upper housing portion **22412**. In embodiments, the lower housing portion **22414** may be formed of one or more modules. In such embodiments, the one or more modules may be adjustable, e.g., switchable, so as to vary one or more properties, e.g., the delay line, surface curvature, couplant flow configuration, surface contact material, etc., of the lower housing portion **22414**.

[0565] FIG. **121** is a zoomed in view of the second portion **22212** with lower housing portion **22218**. In embodiments, the upper housing portion **22412** may include a couplant port **22512**. A connection point **22514** may be disposed within the port **22512** such that a couplant conduit, e.g., a hose, may be inserted into the port **22512** and coupled to the connection point **22514** so that couplant may flow from the hose and into the couplant chamber via one or more channels **22516** disposed in the lower housing portion **22414**. In embodiments, one or more fasteners, e.g., screws **22518** may be used to secure the sensor **22222** in the upper housing portion **22412**. The couplant chamber **22416** may have an opening **22520** which facilitates the flow of couplant to an inspection surface **22522**. The couplant chamber **22416** may have a delay line **22523** of between about 5 mm to about 50 mm, without limitation, to accommodate the sensor **22222** which may be structured to inspect surfaces having varying materials, thickness, and/or for inspection of various aspects (e.g., damage, physical geometry, corrosion, cracks, etc.). In embodiments, the delay line **22523** may be about 1.25". Embodiments of the lower housing portion **22218** may include backing to accommodate the sensor **22222**. In embodiments, the delay line **22523** may be structured to provide for two (2) backwall echoes and/or to provide for sufficient time to focus the sensor **22222** with respect to the inspection surface **22522**. In embodiments, the sensor **22222** and delay line **22523** may be configured to inspect a steel inspection surface having a thickness of about 0.5" to about 2". In embodiments, the sensor **22222** and delay line **22523** may be configured to inspect a 26" carbon steel inspection surface. In embodiments, the delay line **22523** may be structured to provide for two (2) backwall echoes on a 2" thick steel inspection surface.

[0566] Embodiments of the present disclosure may also provide for a film **22524** to be disposed across the opening **22520**. The film **22524** may be configured to provide for selected surface friction, to provide a sacrificial wear surface, to conform to minor surface anomalies and maintain acoustic coupling, to limit couplant loss, or the like. Non-limiting examples of materials that may be used for the film **22524** include: LDPE (low density polyethylene), UHMW (ultra high molecular weight polyethylene or other plastics), Aqualene™, Tin, Nylon, PEEK (polyether ether ketone), ABS (acrylonitrile butadiene styrene), PTFE (polyfluoroethylene, e.g., Teflon®), an elastomeric material, and/or any combination thereof. In embodiments, the lower housing portion **22414** may be positioned within the first **22210** and/or second **22212** portion such that a space **22526** is formed between the lower housing portion **22414** and an exterior surface of the first **22210** and/or second **22212** portion with respect to the inspection surface **22522**. For example, as shown in FIG. **121**, the lower housing portion **22414** may be recessed in the second portion **22212** to form space **22526**, wherein the film **22524** may be secured to the second portion **22212**, e.g., via adhesives and/or mechanical coupling (e.g., a clip). In embodiments, the film **22524** may be selectively removable and/or selectively attachable, e.g., use and/or configuration of the film **22524** may be selectable at an operator's discretion. In embodiments where the film **22524** is removed and/or otherwise absent, the space **22526** may be filled via couplant during operations.

[0567] Referring briefly to FIG. **118**F, the lower housing portions **22414** of the first **22210** and second **22212** portions are shown without a film **22524** (FIG. **121**). As can be seen in FIG. **118**F, in embodiments, the lower housing portion **22414** may have channels **22242** extending from the openings **22520** to provide for couplant to flow out of the couplant chamber **22416** (FIG. **120**) when the film **22524** is in place. In embodiments, the couplant may flow around the sides of the film so as to keep a micro-layer of fluid between the film **22524** (FIG. **121**) and the inspection surface **22522** (FIG. **121**) (e.g., to lubricate and/or support acoustic coupling). In embodiments, the film **22524** may be secured to the first **22210** and/or the second **22212** portions along a perimeter of the lower housing portion **22414** as represented by the dashed lines **22244**. As further shown in FIG. **118**F, embodiments of the opening **22520** may be circular in shape which, in turn, may reduce the amount of couplant required for an inspection run by about 40%. In embodiments, the channels **22242** may have a circular shape which, in turn, may reduce the amount of couplant required for an inspection run by about 40%.

[0568] As further shown in FIG. **121**, in embodiments, the film **22524** assists in regulating and/or restricting (e.g., impede, slow), the flow of couplant out of the chamber **22416** to reduce the amount of couplant used during an inspection run as compared to equivalent embodiments of the sled assembly **22200** that do not include the film **22524**. For example, the film **22524** may smooth out and/or buffer the effect of inconsistencies in the inspection surface **22522**,

e.g., the film **22524** may act as a sort of shock absorber for the water column along the delay line **22523** so as to mitigate the effect of noise on the sensor **22222** due to the inconsistencies. Embodiments of the film **22524** may assist in regulating and/or restrict the flow of the couplant due to the increased couplant column corresponding to the size of the delay line **22523**. Reducing the amount of couplant may improve the overall efficiency of the inspection robot **100** and make the robot **100** particularly suitable for inspecting surfaces in environments where couplant is not abundant and/or is expensive. A non-limiting use case includes using water as a couplant to inspect a surface of an oil refinery located in an arid location. Another non-limiting use case includes using deionized water, which can be expensive to produce and/or transport to an inspection location, as a couplant. Embodiments of the film **22524** may also conform to the shape of the inspection surface and/or otherwise mitigate the effects of surface inconsistencies of the inspection surface on the sensors during an inspection run. For example, conformance of the film **22524** may provide for improved coupling of the sensor **22222** to the inspection surface **22522**.

[0569] As will be understood, in certain embodiments, the film **22524** may be structured to: have acoustic properties, e.g., density and/or speed of sound, similar to the couplant intended for use in an inspection (to mitigate the effect of sound transmission/reflections from the sensor **22222**); sufficient durability for us to conduct one or more inspections; and/or have acceptable sound loss due to attenuation. Shown in FIGS. **122** and **123** is a chart **22600** (FIG. **122**) depicting reflected sound wave peaks **22612**, **22614**, **22616**, and **22618** received by an example sensor **22712** (FIG. **123**) (representative of the sensors **22220** and **22222** (FIG. **118**A) inspecting a channel **22714** of a surface **22716**, wherein the channel **22714** is covered by a film **22718**. The dashed lines in FIG. **123** represent paths traveled by sound (transmitted and received by the sensor **22712**) corresponding to the reflected sound wave peaks **22612**, **22614**, **22616**, and **22618** and have been labeled as such. Accordingly, peak **22612** corresponds to sound (from the sensor **22712**) reflected from the film **22718**, where the higher the amplitude of the peak the more the sound is reflected by the film **22718**, e.g., the smaller this peak, the more easily the sound waves pass through it and the less the negative impact the film **22718** has on the sensitivity and/or resolution of the sensor **22712**. As such, embodiments of the film **22718** may seek to reduce peak **22612**. Peak **22614** corresponds to sound reflected by the leading wall **22720** of the channel **22714**, where the higher the amplitude of this peak the more the sound reached the surface **22716**. As such, embodiments of the film **22718** may seek to optimize peak **22614**. Peaks **22616** correspond to sound reflected by the backwall **22722** of the surface **22716**. As such, embodiments of the film **22718** may seek to optimize peaks **22616**. Peak **22618**, which may partially intersect with peaks **22616**, corresponds to sound reflected by the couplant in the space **22724** between the leading wall **22720** and the film **22718**.

[0570] As stated herein, embodiments of the present disclosure may structure the film **22718** to minimize peak **22612** to make filtering of the peak **22612** less impactful on the peaks of interest, e.g., **22614**, **22616**, and/or **22618**. Non-limiting examples of filters suitable for filtering out peak **22612** include notch filters, location-based filters, gate-based filters, and the like. Embodiments of the present disclosure may also structure the film **22718** so that peak **22612** aligns with peak **22614**.

[0571] FIG. **124** is a chart depicting sound waves transmitted and received by the sensor **22712** reflected from the surface **22716** in the absence of the film **22718**. FIG. **125** depicts peak **22612** isolated from the full scan results shown in FIG. **126** where the film **22718** is 0.020" of Aqualene™ FIG. **127** depicts peak **22612** isolated from the full scan results shown in FIG. **128** where the film **22718** is 0.020" of PEEK. FIG. **129** depicts peak **22612** isolated from the full scan results shown in FIG. **130** where the film **22718** is 0.010" of PEEK. FIG. **131** depicts peak **22612** isolated from the full scan results shown in FIG. **132** where the film **22718** is 0.005" of UHMW. FIG. **133** depicts peak **22612** isolated from the full scan results shown in FIG. **134** where the film **22718** is 0.005" of PTFE. FIG. **135** depicts peak **22612** isolated from the full scan results shown in FIG. **136** where the film **22718** is 0.0025" of tin. FIG. **137** depicts peak **22612** isolated from the full scan results shown in FIG. **138** where the film **22718** is 0.004" of tin. FIG. **139** depicts peak **22612** isolated from the full scan results shown in FIG. **140** where the film **22718** is 0.002" of Nylon. FIG. **141** depicts peak **22612** isolated from the full scan results shown in FIG. **142** where the film **22718** is 0.003" of ABS. FIG. **143** depicts peak **22612** isolated from the full scan results shown in FIG. **144** where the film **22718** is 0.004" of LDPE. Tables 1, 2, and 3 below respectively provide a summary, detailed results, and conclusions of the performance of the various films (and lack of film) depicted in FIGS. **124-144**.

TABLE 1

(Summary of Films)

Film Material	Film Peak 22612 Height	Backwall Peak 22616 Height
No Film	N/A	47%
0.004" LDPE	25%	42%
0.005" UHMW	26%	38%
0.020" Aqualene ™	6%	37.5%
0.0025" Tin	25%	36%
0.002" Nylon	22%	36%
0.010" PEEK	60%	35%
0.002" PEEK	41%	33%
0.003" ABS	12.5%	31%
0.004" Tin	54%	25%
0.005" PTFE	54%	12.5%

TABLE 2

(Detailed Results)

Material	Film Thickness	Acoustic Impedance @5 Mhz (MPa*s/m)	Acoustic Attenuation @5 MHz (dB/m)
Water	N/A	1.48	
Aqualene ™	0.020"	1.49	264-483
PEEK	0.002"	3.24	456.8
UHMW	0.010"	2.33	800.0
PTFE	0.005"	3.08	390.0
Tin	0.0025"	1.9	
Tin	0.004"	1.9	
Nylon Clear	0.002	2.9	290.0
ABS Clear	0.003	3.26	640.0
LDPE Clear	0.004	1.79	240.0

TABLE 3

(Conclusions)

Film Material	Film Peak Height	Backwall Peak Height	Acoustic Impedance @5 Mhz (MPa*s/m)
No Film	N/A	47%	
0.004" LDPE	25%	42%	1.79
0.005" UHMW	26%	38%	2.33
0.020" Aqualene ™	6%	37.5%	1.49
0.0025" Tin	25%	36%	2.36
0.002" Nylon	22%	36%	2.9
0.010" PEEK	60%	35%	3.24
0.002" PEEK	41%	33%	3.24
0.003" ABS	12.5%	31%	3.26
0.004" Tin	54%	25%	2.36
0.005" PTFE	54%	12.5%	3.08

[0572] As gathered from the data, impedance may have a strong effect on the amount of sound that reaches a target inspection surface and is received by a sensor, which manifest in the data in Table 1 as the films with the higher backwall peaks **22616** also generally have acoustic impedances closes to that of the couplant, e.g., water. Thus, embodiments of the film **22718** may be formed of material (s) and thicknesses **22525** that exhibit an acoustic impedance that is the same and/or substantially close to that of the couplant, e.g., water. Attenuation may have a negligible effect on the backwall peaks **22616** when compared to the results shown in table 1, which may be due to the thickness of the films **22718** listed in table 1 since attenuation often causes sound power loss that is directly proportional to the thickness of the material the sound is traveling though. Accordingly, 0.005" PTFE and 0.004" SN may, for certain scenarios, make for non-ideal films; while 0.004" LDPE, 0.005" UHMW, and 0.020" Aqualene™ may, for certain scenarios, make for ideal films.

[0573] Embodiments of the sled assembly **22200** (FIGS. **118**A-**118**H) may be configured for use without a film **22524** such that the sensor **22222** may be used as a contact probe.

[0574] FIG. **145** illustrates an embodiment of a payload **2** where two or more sled assemblies **24910**, **24912**, **24914**, and **24916** (of the embodiment depicted in FIG. **118**A) are disposed on the payload **2** so as to provide a staggered sensor arrangement. As will be understood, the ellipse shown between sled assemblies **24914** and **24916** represents that additional sled assemblies **22200** may be included on the payload **2**. As shown in FIG. **145**, the third portions **22214** of the two or more sled assemblies **24910**, **24912**, **24914**, and **24916** may have a shape that provides for the sensors **22220** in the housings **22216** of the first portions **22210** to be offset from the sensors **22222** in the housings **22218** of the second portions **22212** with respect to an inspection direction (indicated by arrow **24918**) along an inspection surface **24920**. The offset, in turn, generates inter-sled **24922** spacing between the scanning paths **24924** and **24926** of the sensors **22220** and **22222** of adjacent sled assemblies **24910** and **24912**. Scanning paths may also be referred to herein as inspection paths. The offset may also provide for intra-sled spacing **24928** between the scanning paths **24930** and **24932** of sensors **22220** in the housing **22216** in the first portion **22210** and the sensors **22222** in the housing **22218** of the second portion **22218**. Further, the sensors, e.g., **22220**, in a housing, e.g., **22216**, may be arranged so as to provide intra-housing spacing **24934** between the scanning paths **24932**, **24936**, and **24938** of sensors within the same housing, e.g., **22216** and **22218**. In embodiments, the third portions **22214** may have an angled shape with an offset angle θ selected to provide an inter-sled spacing **24922** and intra-sled spacing **24928** to provide selected inspection lanes for each sensor, for each sled, and/or for the inspection assembly as a whole. In certain embodiments, spacing of sensors between sleds (inter-sled spacing) may be configured to match the spacing of sensors within sleds (intra-sled spacing), for example to provide a same resolution of sensing across the entire assembly. In certain embodiments, inter-sled spacing may vary from intra-sled spacing, where inspection resolution across the inspection assembly is nevertheless acceptable. In certain embodiments, intra-sled sensor spacing may be varied, where inspection resolution across the inspection assembly is nevertheless acceptable. In certain embodiments, variation of spacing in some regions of the inspection resolution across the inspection assembly may be desirable (e.g., near a seam, weld, or other region of interest for example a region where damage or wear is expected and/or more important to detect, and higher inspection resolution may be desirable) Offsetting the scanning paths via a staggered arrangement, as disclosed herein, reduces and/or mitigates interference between sensors which may be caused by soundwaves emitted by a leading sensor (with respect to the inspection direction indicated by arrow **24918**) being received by a trailing sensor (with respect to the inspection direction **24918**). As will be appreciated, embodiments of the current disclosure that provide for staggered sensor spacing, as disclosed herein, may provide for improved sensor density within an active scanning zone (represented by dashed line **24942**) as compared to other non-staggered sensor arrangements. While the embodiments of the sled assemblies **24910**, **24912**, **24914**, and **24916** are depicted herein with angled shapes, it is to be understood that embodiments of the sled assemblies may use other shapes, e.g., curved, to achieve the desired offset. In embodiments, the spacing between sensors, e.g., **22220** and/or **22222** may be about 0.3".

[0575] Further, while FIG. **145** depicts substantially uniform spacing between each sled assembly **24910**, **24912**, **24914**, and **24916**, it is to be understood that the spacing between one or more of the sled assemblies **24910**, **24912**, **24914**, and **24916** may be substantially non-uniform. In embodiments, the sled assemblies **24910**, **24912**, **24914**, and **24916** may form one or more groups where the spacing between the sled assemblies in a group is closer than the spacing between groups. In embodiments, the groups may be spaced uniformly from each other. In embodiments, the groups of sled assemblies may be uniformly spaced from each other while the sled assemblies within a group may be spaced non-uniformly. In embodiments, the groups of sled assemblies may be spaced non-uniformly from each other while the sled assemblies within a group may be spaced uniformly from each other.

[0576] Embodiments of the current disclosure may provide for multi-depth scanning of an inspection surface by varying the type of sensors within a sled assembly and/or across sled assemblies. For example, a first sled assembly **24910** could have housings and sensors optimized for a first depth of an inspection surface and a second sled assembly **24912** could have housings and sensors optimized to inspect a second depth of the inspection surface. In embodiments, the housing **22216** in the first portion **22210** of a sled

assembly **24910** could have sensors **22220** optimized to inspect a first depth and the housing **22218** of the second portion **22212** of the sled assembly **24910** could have sensors **22222** optimized to inspect a second depth of the inspection surface. In embodiments, a single housing may contain two or more sensors each optimized to inspect a different depth of an inspection surface. In embodiments, an inspection run by the robot **100** may be paused and/or broken up into different portions so that sled assemblies with different sensors optimized for different depths may be swapped out prior to completing the inspection run.

[0577] Referring again to FIGS. **118**A-G, an example embodiment of a sled assembly **22200** for an inspection robot may include a first portion **22210** and a second offset portion **22212**. In an example, the sled assembly **22200** may be referred to as a sensor sled assembly. The sled assembly **22200** may be for an inspection robot **100** or other inspection robot such as described herein. For example, with reference to FIG. **145**, the sled assembly **22200** may couple to a sled mount **22226** of an inspection robot **100** and may be a part of or separate from a payload **2**, as described herein.

[0578] The first portion **22210** of the sensor sled assembly **22200** may include one or more first sensor mounts **22217** (see FIGS. **118**G and **146**) at one or more first horizontal positions **1**HP (e.g., as measured at their center points). The one or more first sensor mounts **22217** may be structured to respectively accommodate one or more first inspection sensors **22220** to interrogate an inspection surface. In some embodiments, the one or more first sensor mounts **22217** may be included in a first sensor housing **22216**. For example, the one or more first sensor mounts **22217** may include one or more openings in the first sensor housing **22216** structured to (e.g., sized to) accommodate the one or more first inspection sensors **22220**.

[0579] The sensor sled assembly **22200** may include a second offset portion **22212**, which may be offset from the first portion and referred to herein as a second offset portion **22212**, and which may have one or more second sensor mounts **22219** at one or more second horizontal positions **2**HP (e.g., also as measured at their center points). The one or more second sensor mounts **22219** may be structured to respectively accommodate one or more second inspection sensors **22222** to interrogate the inspection surface. The one or more first horizontal positions **1**HP and the one or more second horizontal positions **2**HP may be horizontally displaced from each other (e.g., relative to their centers) by a selected horizontal distance SHD. In some examples, the selected horizontal distance SHD may be attributed to a physical footprint of the sensor sled assemblies, an offset angle or other structural feature of a third portion as discussed herein, location of the sensor housings, and/or location of the sensor mounts, as described herein.

[0580] In some embodiments, the first portion **22210** may include one first sensor mount **22217**. In some embodiments, the first portion **22210** may include a plurality of first sensor mounts **22217** (which may also be referred to as a first plurality of sensor mounts **22217**), and the plurality of first sensor mounts **22217** may include a first horizontal distribution profile **1**DP providing a horizontal displacement **1**HD between adjacent ones of the plurality of first sensor mounts **22217** (e.g., a pitch between sensor mounts **22217**, such as measured at a center of each sensor mount **22217**) that is not greater than a selected inspection resolution. The first horizontal distribution profile **1**DP may provide for equal spacing between each adjacent one of the first plurality of sensor mounts **22217**. For example, the horizontal displacement **1**HD between each adjacent one of the plurality of first sensor mounts **22217** may be equal.

[0581] In some embodiments, the second offset portion **22212** may include one second sensor mount **22219**. In some embodiments, the second offset portion **22212** may include a plurality of second sensor mounts **22219** (which may also be referred to as a second plurality of sensor mounts **22219**), and the plurality of second sensor mounts **22219** may include a second horizontal distribution profile **2**DP that may provide a horizontal displacement **2**HD between adjacent ones of the plurality of second sensor mounts **22219** that is not greater than the selected inspection resolution. The second horizontal distribution profile **2**DP may provide for equal spacing between each adjacent one of the second plurality of sensor mounts. For example, the horizontal displacement **2**HD between each adjacent one of the plurality of second sensor mounts **22219** may be equal.

[0582] In some embodiments, the first sensor mounts **22217** may be structured such that first sensors **22220** may be secured in the first sensor mounts **22217** by one or more fasteners, e.g., screws **22518** in the upper housing portion **22412** of the sensor housing, and the second sensor mounts **22219** may be structured such that second sensors **22222** may be secured in the second sensor mounts **22219** by one or more fasteners, e.g., screws **22518** in the upper housing portion **22412** of the senor housing, as described herein.

[0583] In some embodiments, the selected horizontal distance SHD, the first horizontal distribution profile **1**DP, and the second horizontal distribution profile **2**DP may be selected such that a distance between a last one of the first plurality of sensor mounts **22217** and a first one of the second plurality of sensor mounts **22219** is not greater than the selected inspection resolution.

[0584] In some embodiments, the selected horizontal distance SHD, the first horizontal distribution profile **1**DP, and the second horizontal distribution profile **2**DP may be selected to provide equal spacing between each adjacent one of the first plurality of sensor mounts **22217** and each adjacent one of the second plurality of sensor mounts **22219**. Furthermore, the horizontal distance SHD, the first horizontal distribution profile **1**DP, and the second horizontal distribution profile **2**DP may be selected to provide the same equal spacing between the last one of the first plurality of sensor mounts **22217** and the first one of the second plurality of sensor mounts **22219**. Thus, the sled assembly may provide a consistent inspection resolution as it inspects the inspection surface.

[0585] In some embodiments, the first portion **22210** of sled assembly **22200** may include a UT sensor housing that includes the one or more first sensor mounts **22217** and comprises an opening **22520** (see FIG. **121**) for couplant to flow through. For example, the first sensor housing **22216** may be or include the UT sensor housing. Furthermore, the first portion **22210** may include a film **22524** disposed over the opening **22520** and structured to regulate the flow of the couplant through the opening **22520**.

[0586] In some embodiments, the film **22524** may be structured to regulate the flow of the couplant through the opening **22520** such that a flow rate of the couplant through the opening **22520** is lower than if the film **22524** were not present (e.g., if the opening **22520** were wholly unobstructed). In an example, the film **22524** may provide a flow

rate that is equivalent to a flow rate when at or more than 90% of the opening **22520** flow area is blocked. As another example, the film **22524** may provide a flow rate that is equivalent to a flow rate when at or more than 99% of the opening **22520** flow area is blocked. As another example, the film **22524** may provide a flow rate that is sufficient to keep a delay line **22523** full within a pumping limit of a supply pump, accounting for a pressure head on the inspection surface and back pressure on the pump. In addition to providing fluid loss control, the film **22524** may help keep the delay line **22523** full and manage velocity profiles as well as the formation of bubbles. The selection of the film thickness, fluid loss configuration, and consequent flow rate to support these may be based on one or more considerations such as wear factors according to the film material type, expected surface conditions (e.g., roughness, hardness, uniformity, etc.), UT signal quality, reduction in flow rate desired (e.g., down force on sled/payload, sealing, presence and size of fluid loss paths to the surface), and the desired or acceptable replacement frequency for sled contact surfaces. In certain embodiments, the delay line is approximately sealed, with flow rate being controlled to maintain a desired head pressure.

[0587] In some embodiments, the first portion **22210** may include a first UT sensor housing that includes the one or more first sensor mounts **22217**, where the first UT sensor housing may include a delay line **22523** for the one or more first inspection sensors coupled to the one or more first sensor mounts. In an example, the delay line **22523** may be between 5 mm to 50 mm inclusive. In an example, the delay line **22523** may be about 31.75 mm—for example, 31.75 mm+/−5%.

[0588] In some embodiments, the first portion **22210** may include a first UT sensor housing that includes the one or more first sensor mounts **22217**, where the first UT sensor housing may include a delay line **22523** for a UT sensor coupled to one of the one or more first sensor mounts **22217**. In an example, the delay line **22523** may be between 0.20" to 1.97" inclusive. In some embodiments, the delay line **22523** may be about 1.25"—for example, 1.25"+/−5%.

[0589] In some embodiments, the first UT sensor housing may include a delay line **22523** for a UT sensor coupled to one of the one or more first sensor mounts **22217** to provide for two backwall echoes from the inspection surface. For example, the delay line **22523** may be sufficient to support the two backwall echoes, as may be exercised by a controller described herein.

[0590] With reference to FIGS. **118**A-**121** and **145**-**146**, in some embodiments, the sled assembly **22200** may include a third portion **22214** connecting the first portion **22210** to the second portion **22212**. The third portion **22214** may have a shape structured to provide the selected horizontal distance SHD. For example, the third portion **22214** may include a shape with an offset angle θ (see FIG. **146**) that is diagonal to a direction of inspection such that the first portion **22210** is offset (e.g., horizontally) from the second portion **22212** by the selected horizontal distance SHD, and thus, the first sensor group **25012** may be offset from the second sensor group **25014** by the selected horizontal distance SHD. In an example, this offset may be determined based on the offset angle θ and/or a physical footprint of the sled assembly **22200**.

[0591] The sled assembly **22200** may include a first sensor housing **22216** that may include a first sensor mount **22217** and a second sensor housing **22218** that may include a second sensor mount **22219**. With reference to FIG. **118**H, the first sensor housing **22216** may define a first horizontal extent FHE, and the second sensor housing **22218** may define a second horizontal extent SHE. For example, the first horizontal extent FHE may be defined by a horizontal width (e.g., a maximum horizontal width) of the first sensor housing **22216**, and the second horizontal extend SHE may be defined by a horizontal width (e.g., a maximum horizontal width) of the second sensor housing **22218**. The first horizontal extent FHE and the second horizontal extent SHE may include an overlap region OR.

[0592] Referring to FIGS. **118**A-H and FIG. **146**, a payload **2** for an inspection robot according to an example embodiment may include a first sled assembly **25010** including a first sensor mount group **25012** and a second sensor mount group **25014**, and a second sled assembly **25020** including a third sensor mount group **25022** and a fourth sensor mount group **25024**. The first sensor mount group **25012** and third sensor mount group **25022** (which may be termed "forward" sensor mount groups) may be forward of the second sensor mount group **25014** and the fourth sensor mount group **25024** (which may be termed "rearward" sensor mount groups). Each of the first sled assembly **25010** and the second sled assembly **25020** may be a sled assembly **22200** as described herein. The first sled assembly **25010** may include a third portion **22214** having a shape or other structural feature structured to provide an offset of an inspection path of the first sensor mount group **25012** with respect to an inspection path of the second sensor mount group **25014**, and the second sled assembly **25020** may include a portion having a shape or other structural feature structured to provide an offset of an inspection path of the third sensor mount group **25022** with respect to an inspection path of the fourth sensor mount group **25024**.

[0593] The first sensor mount group **25012** and the second sensor mount group **25014** of the first sled assembly **25010** may respectively include at least two sensor mounts **22217** and **22219**, and the third sensor mount group and the fourth sensor mount group of the second sled assembly **25020** may respectively include at least two sensor mounts **22217** and **22219**. While the example embodiment is described with reference to first and second sled assemblies **25010** and **25020**, embodiments are not limited to two sled assemblies, and may include any number of sled assemblies **22200** with features corresponding to the features of the described sled assemblies **25010** and **25020**.

[0594] With reference to FIG. **147**, the first sensor mount group **25012** may be positioned at a first characteristic horizontal position **1**CHP and a first characteristic vertical position **1**CVP, and the second sensor mount group **25014** may be positioned at a second characteristic horizontal position **2**CHP and a second characteristic vertical position **2**CVP. Likewise, the third sensor mount group **25022** may be positioned at a third characteristic horizontal position **3**CHP and a third characteristic vertical position **3**CVP, and the fourth sensor mount group **25024** may be positioned at a fourth characteristic horizontal position **4**CHP and a fourth characteristic horizontal position **4**CVP.

[0595] The first, second, third, and fourth characteristic vertical and horizontal positions of the first, second, third, and fourth sensor mount groups **25012**, **25014**, **25022**, **25024** may each be based on a characteristic that may be consistent between some or all of the sensor mount groups—

for example, a center of mass (e.g. geometric center or "mean" position) of the sensor mounts in each sensor mount group, a most forward of the sensor mounts in each sensor mount group, a most rearward of the sensor mounts in each sensor mount group, a median position of the sensor mounts in each sensor mount group, etc. For example, as described herein, the size of the housings and/or weight of the sensors may shift the center of gravity as compared to embodiments having smaller housings and/or sensors, such that the sled assembly **22200** may be prone to tipping, and the biasing of the first **22210** and/or the second **22212** portions about a center of mass may mitigate the instability.

[0596] In an example where the characteristic is based on a most forward (e.g., vertically forward) sensor and/or sensor mount for each of the sensor mount groups, all or some of the first, second, third, and fourth sensor mount groups **25012**, **25014**, **25022**, **25024** may be positioned based on the respective most forward positions of their sensors and/or sensor mounts. For example, the characteristic vertical and horizontal positions of each sensor mount group may be based on a position of each sensor mount group's most forward sensor. Thus, when the characteristic vertical positions of the first and third sensor mount groups are aligned, and the characteristic vertical positions of the second and fourth sensor mount groups are aligned, the starting location of inspection data obtained from the inspection surface may be aligned between the first and third sensor mount groups, and between the second and fourth sensor mount groups, and a controller as described herein may use that knowledge as well as knowledge of the spacings between the sensors to appropriately correlate the inspection data received from each sensor mount group.

[0597] In another example, the characteristic vertical and horizontal positions of each sensor mount group may be based on a center of mass (e.g., geometric) of the sensors and/or sensor mounts for each of the sensor mount groups. Thus, for example, regardless of whether the sensor mount groups include different sensors with different sizes (for example, UT sensors for the first and third sensor mount groups **25012** and **25022**, and EMI sensors for the second and fourth sensor mount groups **25014**, **25024**), a center of mass of each of the sensor mount groups may be selected to mitigate instability of the sled assemblies. For example, the first and third characteristic vertical positions may be aligned such that the center of mass of the first and third sensor mount groups **25012**, **25022** vertically coincide, and the second and fourth characteristic vertical positions may be aligned such that the center of mass of the second and fourth sensor mount groups **25014**, **25024** vertically coincide. Similarly, the first and third characteristic horizontal positions may be consistent between sled assemblies (e.g., including the first and third sensor mount groups **25012**, **25022**) such that the center of mass of the forward sensor mount groups (e.g., including **25012** and **25022**) may be at consistently placed locations in the horizontal direction, and the second and fourth characteristic horizontal positions may be aligned such that the center of mass of the rearward sensor mount groups (e.g., the second and fourth sensor mount groups **25014**, **25024**) may be at consistently placed locations in the horizontal direction. Thus, instability of the sled assemblies as well as the payload may be mitigated.

[0598] In some embodiments, like as described above, the first characteristic vertical position **1**CVP of the first sensor mount group **25012** and the third characteristic vertical position **3**CVP of the third sensor mount group **25022** may be the same. Likewise, the second characteristic vertical position **2**CVP of the second sensor mount group **25014** and the fourth characteristic vertical position **4**CVP of the fourth sensor mount group **25024** may be the same.

[0599] In an example where the characteristic includes a same mean position (e.g., a same geometric center of mass) of the sensor mount groups (e.g., of the sensors and/or sensor mounts of each of the sensor mount groups), all or some of the first, second, third, and fourth sensor mount groups **25012**, **25014**, **25022**, **25024** may be aligned with each other based on the respective mean positions of their sensors and/or sensor mounts. For example, as illustrated in FIG. **147**, the first characteristic vertical position **1**CVP and first characteristic horizontal position **1**CHP may correspond respectively to a vertical position and a horizontal position of the mean position for the first sensor mount group **25012**, the second characteristic vertical position **2**CVP and second characteristic horizontal position **2**CHP may correspond respectively to a vertical position and a horizontal position of the mean position for the second sensor mount group **25014**, the third characteristic vertical position **3**CVP and third characteristic horizontal position **3**CHP may correspond respectively to a vertical position and a horizontal position of the mean position for the third sensor mount group **25022**, and the fourth characteristic vertical position **4**CVP and fourth characteristic horizontal position **4**CHP may correspond respectively to a vertical position and a horizontal position of the mean position for the fourth sensor mount group **25024**.

[0600] Example embodiments may be described with reference to sled assemblies **25010** and **25020** and first through fourth sensor mount groups thereto for convenience of description, but embodiments are not limited thereto and may include any number of sled assemblies (subject to constraints of the system). In example embodiments with more than two sled assemblies, all or some of the sled assemblies may be positioned at respective characteristic horizontal positions and respective characteristic vertical positions based on a characteristic that may be consistent between all or some of the sensor mount groups, as described herein.

[0601] In an example embodiment where the sensor mount groups have distinct shapes (e.g., shapes of the sensors and/or sensor mounts) and/or numbers of mounts, the characteristic used for each might vary, but may still be determinative for the characteristic vertical and horizontal positions. For example, in an embodiment where the first sensor mount group **25012** and third sensor mount group **25022** include UT sensors, and the second sensor mount group **25014** and fourth sensor mount group **25024** include sensors that are distinct from UT sensors, the sensor mount groups may nevertheless have horizontal and vertical characteristic positions that are based on a characteristic such as, for example, a most forward or most reward sensor/sensor mount of each sensor mount group or a mean position of the sensors/sensor mounts of each sensor mount group.

[0602] Referring to FIG. **148**, in some embodiments, the first characteristic horizontal position **1**CHP may be aligned with the fourth characteristic horizontal position **4**CHP. Thus, the first sensor mount group **26012** and the fourth sensor mount group **26024** may inspect a same horizontal inspection lane (e.g., a same horizontal extent) as the inspection robot traverses the inspection surface.

[0603] Referring to FIG. **149**, in some embodiments, the first characteristic horizontal position **1**CHP may not be aligned with the fourth characteristic horizontal position **4**CHP. For example, the forward sensor mount group **26012** (e.g., the sensors of the first sensor mount group **26012**) may inspect a different lane of the inspection surface than the rearward sensor mount group **26024** of an adjacent sled assembly **26020** (e.g., sensors of the fourth sensor mount group **26024**). FIG. **149** illustrates first sensor mount group **26012** inspecting an inspection lane IL**12**, and fourth sensor mount group **26024** inspecting an inspection lane IL**24**. The inspection lanes may be inspected by the sensors of the respective sensor mount groups according to the horizontal distribution profiles of the respective sensor mount groups as described herein. In some embodiments, such as illustrated in FIG. **146**, the inspection lanes of adjacent sled assemblies (e.g., an inspection lane of sensor mount group **25012** and an inspection lane of the fourth sensor mount group **25024**) may be spaced apart from each other, or, as illustrated by example in FIG. **149**, they (e.g., their horizontal extents) may be immediately adjacent and contiguous to each other so as to keep a consistent horizontal inspection resolution (intra-sled and inter-sled) across some or all of the sled assemblies of the payload. As discussed elsewhere herein, the extent of an inter-sled spacing—which may correspond to the spacing between inspection lanes (if any) of adjacent sled assemblies—may depend on a desired inspection resolution of the inspection surface, and may be determined by the spacing of the sled assemblies on the payload, an offset angle θ, other structural features of the first, second, or third portions, and/or other factors. For example, for some inspections and to save on cost and/or time, it may be acceptable to have data gaps in the horizontal inspection data corresponding to the spacing apart of sensors relative to other sled assemblies and within the same sled assembly.

[0604] In example embodiments such as those described with reference to FIGS. **148** and **149**, one or more sensors of the first sensor mount group **26012** may be a distinct type of sensor from one or more sensors of the fourth sensor mount group **26024**, such sensor types as may be described herein.

[0605] Thus, with example reference to FIG. **148**, where the first characteristic horizontal position **1**CHP may be aligned with the fourth characteristic horizontal position **4**CHP, while the first sensor mount group **26012** and the fourth sensor mount group **26024** may inspect a same horizontal inspection lane, they may do so using different sensors and gather different data thereto. Likewise, consistent with the first and second sled assemblies and first through fourth sensor mount groups described herein, which be exemplary for a payload with more than two sled assemblies, the forward sensor mount groups of other sled assemblies may inspect a same horizontal inspection lane as rearward sensor mount groups of sled assemblies adjacent to those other sled assemblies. In some embodiments, including those where a forward sensor mount group inspects a same horizontal inspection lane as a rearward sensor mount group of an adjacent sled assembly, each mount of the forward (e.g., first) sensor mount group may include an ultrasonic sensor mount, and each mount of the rearward (e.g., fourth) sensor mount group in an adjacent sled assembly may include a distinct sensor mount—for example, any sensor mount other than an ultrasonic sensor mount, such as an EMI sensor mount, in order to obtain different inspection data from that of the first sensor mount group (and in some examples, in response to the inspection data obtained from the first sensor mount group).

[0606] However, in some embodiments, each mount of the first sensor mount group may include an ultrasonic sensor mount, and each mount of the fourth sensor mount group may include an ultrasonic sensor mount. A first group of ultrasonic sensors may each be mounted to one of the mounts of the first sensor mount group, and the first group of ultrasonic sensors may be calibrated (e.g., by a controller) with a first calibration set. A fourth group of ultrasonic sensors may each be mounted to one of the mounts of the fourth sensor mount group, and the fourth group of ultrasonic sensors calibrated with a second calibration set.

[0607] In some embodiments, a first group of ultrasonic sensors may each be mounted to one of the mounts of the first sensor mount group, and a fourth group of ultrasonic sensors may each be mounted to one of the mounts of the fourth sensor mount group. As discussed above, the first sensor mount group may be aligned with the fourth sensor mount group. For example, it may be desirable to follow an ultrasonic inspection of the inspection surface by the first group of ultrasonic sensors with an ultrasonic inspection of the inspection surface by the fourth group of ultrasonic sensors, such as when the first group of ultrasonic sensors are calibrated with a first calibration set that is different from a second calibration set used to calibrate the fourth group of ultrasonic sensors, when the first group of ultrasonic sensors inspects a different depth/delay line than the fourth group of ultrasonic sensors, when the ultrasonic data from the first group of ultrasonic sensors is processed differently than the ultrasonic data from the fourth group of ultrasonic sensors, or for redundancy in the inspection—e.g., when the inspection surface is challenging, increasing the risk of a failure of any type, and/or shutting down the equipment at the site of inspection is expensive, justifying the cost of redundancy to ensure a successful completion of the inspection.

[0608] In some embodiments, a first group of ultrasonic sensors may each be mounted to one of the mounts of the first sensor mount group, and a fourth group of ultrasonic sensors may each be mounted to one of the mounts of the fourth sensor mount group.

[0609] FIG. **152** is a flowchart of an example method for inspecting an inspection surface using an inspection robot. For example, with reference to step **25610**, the method may include inspecting the inspection surface with a first sled assembly. The first sled assembly may include a first forward sensor mount group and a second rearward sensor mount group, the first forward sensor mount group may be positioned at a first characteristic horizontal position, and the second rearward sensor mount group may be positioned at a second characteristic horizontal position. Furthermore, with reference to step **25620**, the method may include inspecting the inspection surface with a second sled assembly. The second sled assembly may include a third forward sensor mount group and a fourth rearward sensor mount group, the third forward sensor mount group may be positioned at a third characteristic horizontal position, and the fourth rearward sensor mount group may be positioned at a fourth characteristic horizontal position.

[0610] The example method may further include interpreting a first calibration value for a plurality of sensors of the first forward sensor mount group and a plurality of sensors of the third forward sensor mount group, performing inspection operations based on the first calibration value, and

capturing inspection data based on the inspection operations. The plurality of sensors of the first forward sensor group and the plurality of sensors of the third forward sensor group may be a same type of sensor.

[0611] The example method may further include interpreting a first processing value for a plurality of sensors of the first forward sensor mount group and a plurality of sensors of the third forward sensor mount group, interpreting a second processing value for a plurality of sensors of the second rearward sensor mount group and a plurality of sensors of the fourth rearward sensor mount group, performing inspection operations based on the first processing value and the second processing value, and capturing inspection data based on the inspection operations. The plurality of sensors of the first forward sensor mount group and the plurality of sensors of the third forward sensor mount group may be a same type of sensor.

[0612] The example method may further include interpreting a first calibration value for a plurality of sensors of the first forward sensor mount group and a plurality of sensors of the second rearward sensor mount group, performing inspection operations based on the first calibration value, and capturing inspection data based on the inspection operations. The plurality of sensors of the first forward sensor group and the plurality of sensors of the second rearward sensor group may be a same type of sensor.

[0613] The example method may further include interpreting a first processing value for a plurality of sensors of the first forward sensor mount group and a plurality of sensors of the second rearward sensor mount group, performing inspection operations based on the first processing value, and capturing inspection data based on the inspection operations. The plurality of sensors of the first forward sensor mount group and the plurality of sensors of the second rearward sensor mount group may be a same type of sensor.

[0614] FIG. **153** is a flowchart of an example method for inspecting an inspection surface using an inspection robot. For example, with reference to step **25710**, the method may include operating a first group of ultrasonic sensors with a first calibration set. Furthermore, with reference to step **25720**, the method may include operating a second group of ultrasonic sensors with a second calibration set. The first group of ultrasonic sensors may be included in a first sled assembly of a payload for the inspection robot, and the second group of ultrasonic sensors may be included in a second sled assembly of the payload for the inspection robot. The first group of ultrasonic sensors may be at a first characteristic vertical position on the first sled assembly, and the second group of ultrasonic sensors may be at a second characteristic vertical position on the second sled assembly.

[0615] In some examples, the first characteristic vertical position may be forward of the second characteristic vertical position relative to an inspection direction of the inspection robot.

[0616] In some examples, the first calibration set may include a same calibration as the second calibration set, and the second group of calibration sensors may provide inspection data that is redundant with inspection data provided by the first group of ultrasonic sensors.

[0617] In some examples, the first calibration set may be distinct from the second calibration set such that the second group of ultrasonic sensors inspects the inspection surface with a different calibration than the first group of ultrasonic sensors.

[0618] With reference to FIGS. **146-151**, a system according to an example embodiment may include an inspection robot having a payload **19**. The payload **19** may include a first sled assembly **25010** including a first forward sensor mount group **25012** and a second rearward sensor mount group **25014**. Each sensor mount group may include at least two sensor mounts. The first forward sensor mount group **25012** may be positioned at a first characteristic horizontal position **1**CHP, and the second rearward sensor mount group **25014** may be positioned at a second characteristic horizontal position **2**CHP. The payload **19** may include a second sled assembly **25020** including a third forward sensor mount group **25022** and a fourth rearward sensor mount group **25024**. The third forward sensor mount group **25022** may be positioned at a third characteristic horizontal position **3**CHP, and the fourth rearward sensor mount group may be positioned at a fourth characteristic horizontal position **4**CHP. The payload **19** may include a payload mount, such as a payload mount assembly as may be described herein, where the first sled assembly **25010** may be coupled to the payload mount at a first mounting position, and the second sled assembly may be coupled to the payload mount at a second mounting position. The payload mount may be coupled to a body of the inspection robot. However, embodiments are not limited thereto, and in some examples, a mount for the payload may be separate from the payload **19**.

[0619] With reference to FIG. **148**, in some embodiments, the first characteristic horizontal position **1**CHP may be aligned with the fourth characteristic horizontal position **4**CHP. However, in some embodiments, the first characteristic horizontal position **1**CHP and fourth characteristic horizontal position **4**CHP may be selected such that a last sensor mount of the first forward sensor mount group **26012** (e.g., the right-most sensor mount of the first forward sensor mount group **26012** in FIG. **148**) may be horizontally displaced from a first sensor mount of the fourth rearward sensor mount group **26024** (e.g., the left-most sensor mount of the fourth sensor mount group **26024** in FIG. **148**) by not greater than a selected inspection resolution—for example, by the same amount as a selected horizontal distance SHD as described herein.

[0620] In some embodiments, the first forward sensor mount group **26012** and third forward sensor mount group **26022** may each comprise mounts for a first sensor type, and the second rearward sensor mount group **26014** and fourth rearward sensor mount group **26024** may each comprise mounts for a second sensor type, as described herein. Furthermore, the first characteristic horizontal position **1**CHP may be aligned with the fourth characteristic horizontal position **4**CHP, but embodiments are not limited thereto. For example, in some embodiments, the first characteristic horizontal position **1**CHP may not be aligned with the fourth characteristic horizontal position **4**CHP, but both may be provided to provide a general inspection of the inspection surface without regard to their relative positioning in the forward versus rearward sensor mount groups or "layers" of the sled assemblies in the payload.

[0621] In some embodiments, with reference to FIG. **148**, each sensor mount of the first forward sensor mount group **26012** may be aligned with a corresponding sensor mount of the fourth rearward sensor mount group **26024**. For example, the first characteristic horizontal position **1**CHP may be the same as the fourth characteristic horizontal position **4**CHP, and the horizontal distribution profile of the

sensor mounts of the first forward sensor mount group **26012** may be the same as the horizontal distribution profile of the fourth rearward sensor mount group **26024**, such that the sensor mounts of the two sensor mount groups may be aligned.

[0622] In some embodiments, the first characteristic horizontal position **1**CHP and third characteristic horizontal position **3**CHP are selected such that a last sensor mount of the first forward sensor mount group **26012** is horizontally displaced from a first sensor mount of the third forward sensor mount group **26022** by not greater than a selected inspection resolution—for example, by the same as a selected horizontal distance SHD as described herein.

[0623] In some embodiments, such as where adjacent sled assemblies **26010** and **26020** have third portions (e.g., third portions **22214** as described herein) each with an angled shape angled in the same direction (e.g., offset angles θ that are both positive or negative, and which may have the same value), as illustrated by example in FIGS. **147** and **148**, the system may include a means for inspecting an inspection surface at a selected inspection resolution between a first sensor mount of the second rearward sensor mount group **26014** (e.g., a left-most sensor mount of the second rearward sensor mount group **26014**) and a last sensor mount of the third forward sensor mount group **26022** (e.g., a right-most sensor mount of the third forward sensor mount group **26022**), inclusive. For example, the means may include a structural configuration of the system, such as a configuration of the sled assemblies to select the characteristic positions and/or sensor mount positions of the sensor mount groups, including intra-sled spacing and inter-sled spacing of the sensor mounts therein.

[0624] In some examples, gaps between sensors in a sensor mount group (e.g., intra-sled spacing) may have equal spacing (e.g., equal pitch) within the inspection lane (e.g., IL**12** or IL**24**, as illustrated in FIG. **149**) to have a selected inspection resolution, which may correspond to (e.g., be the same as) the selected inspection resolution between the last sensor mount of the first forward sensor mount group **26012** and the first sensor mount of the third rearward sensor mount group **26024** (intra-sled sensor mount spacing). Thus, the payload may inspect the inspection surface at the selected inspection resolution between the first sensor mount of the second rearward sensor mount group **26014** and a last sensor mount of the third forward sensor mount group **26022**. In some embodiments, for some or all of the sled assemblies including the first and second sled assemblies expressly described herein, the last sensors/sensor mounts of the forward sensor mount groups and the first sensors/sensor mounts of the next adjacent sensor of the rearward sensor mount groups may have the selected inspection resolution.

[0625] In some examples, one sensor in each inspection lane may have a width of the inspection resolution. In some examples, there are no gaps between forward or rearward inspection sensors of the same or different sled assemblies greater than a width of the inspection resolution.

[0626] With reference to FIG. **150**, in some examples, the system may include a means for inspecting an inspection surface at a selected inspection resolution between a first sensor mount of the first forward sensor mount group **26012** and a last sensor mount of the third forward sensor mount group **26022**, inclusive. For example, the means may include adjacent first and second sled assemblies **26010** and **26020** having third portions (e.g., third portions **22214** as described herein) each with an angled shape, which are angled in opposite directions (e.g., offset angles θ with opposite magnitudes). The first forward sensor mount group **26012** and the third forward sensor mount group **26022** may be spaced apart from each other at a further distance than the second rearward sensor mount group and the fourth rearward sensor mount group, such that from the front to rear (e.g., relative to a direction of movement of the system and opposite to a direction of inspection), the third portions of each of the first and second sled assemblies **26010** and **26020** may be angled inwards in a V-shaped configuration, as illustrated by example in FIG. **150**. A spacing between the last sensor of the second rearward sensor mount group and the first sensor of the fourth rearward sensor mount group (e.g., a pitch) may correspond to a selected inspection resolution, and may be the same as the intra-sled sensor mount spacing of some or all of the first, second, third, and fourth sensor mount groups. Additionally, the spacing between the last sensor of the second rearward sensor mount group and the first sensor of the fourth rearward sensor mount group may be the same as a spacing between the last sensor of the first forward sensor mount group and the first sensor of the second rearward sensor mount group (e.g., a selected horizontal distance SHD as described herein), and may be the same as a spacing between the last sensor of the fourth rearward sensor mount group and the first sensor of the third forward sensor mount group. Thus, the system may inspect the inspection surface at the selected resolution corresponding to a consistent spacing (e.g., pitch) between each of the sensor mounts of the first, second, third, and fourth sensor mount groups.

[0627] Additionally, the spacing between the last sensor of the second rearward sensor mount group and the first sensor of the fourth rearward sensor mount group may be the same as the last sensor of the third forward sensor mount group and a first sensor of a forward sensor mount group in an immediately adjacent sled assembly. Indeed, the inter-sled spacing and intra-sled spacing may be at a consistent spacing (e.g., pitch) for some or all of the sled assemblies of the payload, not just the first and second sled assemblies expressly described herein, and the payload may inspect the inspection surface at the selected inspection resolution.

[0628] With reference to FIG. **151**, in some examples, the system may include a means for inspecting an inspection surface at a selected inspection resolution between a first sensor mount of the second rearward sensor mount group and a last sensor mount of the fourth rearward sensor mount group, inclusive. For example, the means may include adjacent first and second sled assemblies **26010** and **26020** having third portions each with an angled shape, which are angled in opposite directions (e.g., opposite offset angles θ). The first forward sensor mount group and the third forward sensor mount group may be spaced apart from each other at a closer distance than the second rearward sensor mount group and the fourth rearward sensor mount group, such that from the front to rear, the third portions of each of the first and second sled assemblies **26010** and **26020** may be angled outwards in an inverted-V-shaped configuration, as illustrated by example in FIG. **151**. A spacing between the last sensor of the first forward sensor mount group and the first sensor of the third forward sensor mount group (e.g., a pitch) may correspond to a selected inspection resolution, and may be the same as the intra-sled sensor mount spacing of some

or all of the first, second, third, and fourth sensor mount groups. Additionally, the spacing between the last sensor of the first forward sensor mount group and the first sensor of the third forward sensor mount group may be the same as the spacing between the first sensor of the first forward sensor mount group and the last sensor of the second sensor mount group, and may be the same as a spacing between the last sensor of the third forward sensor mount group and the first sensor of the fourth rearward sensor mount group. Thus, the system may inspect the inspection surface at the selected resolution corresponding to a consistent spacing (e.g., pitch) between each of the sensor mounts of the first, second, third, and fourth sensor mount groups.

[0629] Additionally, the spacing between the last sensor of the first forward sensor mount group and the first sensor of the third forward sensor mount group may be the same as the last sensor of the fourth rearward sensor mount group and a first sensor of a second rearward sensor mount group in an immediately adjacent sled assembly. Indeed, the inter-sled spacing and intra-sled spacing may be at a consistent spacing (e.g., pitch) for some or all of the sled assemblies of the payload, not just the first and second sled assemblies expressly described herein, and the payload may inspect the inspection surface at the selected inspection resolution.

[0630] In some embodiments, the first forward sensor mount group and the third forward sensor mount group may include a same first type of sensor. Additionally, the second rearward sensor mount group and the fourth rearward sensor mount group may include a same second type of sensor that is different from the first type, and/or may include the first type of sensor. Thus, the system (e.g., a controller of the system) may easily adjust a back sensor package (e.g., the rearward sensor mount groups including the second rearward sensor mount group and the fourth rearward sensor mount group) in response to the sensed values from the forward sensor mount groups (e.g., the first forward sensor mount group and the third forward sensor mount group). The controller may be configured to interpret a first calibration value and calibrate, based on the first calibration value, the sensors of the first sensor mount group and the third sensor mount group, and to interpret a second calibration value and calibrate, based on the second calibration value, the sensors of the second sensor mount group and the fourth sensor mount group. Calibration here may generally refer to parameters relating to how the sensors in the sensor mounts operate—for example, aspects such as voltages, operational parameters of the sensors, protocols used, data/firing rates, firing durations, firing amplitude, etc. In certain embodiments, calibrations may reference processing values (e.g., cutoff times, analysis operations, etc.) that are performed locally on the inspection robot, and/or that are performed by the sensor before being provided as "raw data" from the sensor. The controller may be configured to calibrate the sensors of the first and third forward sensor mount groups in a first calibration routine and to calibrate the sensors of the second and fourth rearward sensor mount groups in a second calibration routine. Furthermore, the controller may be configured to perform inspection operations with regard to the first and second calibration values, and to capture inspection data with regard the inspection operations.

[0631] In some embodiments, the first forward sensor mount group and the third forward sensor mount group may include a same first type of sensor. Additionally, the second rearward sensor mount group and the fourth rearward sensor mount group may include a same second type of sensor that is different from the first type, and/or may include the first type of sensor. For example, the first forward sensor mount group and the third forward sensor mount group may include UT sensors, and the second rearward sensor mount group and the fourth rearward sensor mount group may include EMI sensors. Or, for example, the first forward sensor mount group and the third forward sensor mount group may include EMI sensors, and the second rearward sensor mount group and the fourth rearward sensor mount group may include UT sensors. The system (e.g., a controller) may be configured to interpret a first calibration value and calibrate, based on the first calibration value, the sensors of the first sensor mount group and the third sensor mount group, and to interpret a second calibration value and calibrate, based on the second calibration value, the sensors of the second sensor mount group and the fourth sensor mount group. The controller may be configured to calibrate the sensors of the first and third forward sensor mount groups in a first calibration routine and to calibrate the sensors of the second and fourth rearward sensor mount groups in a second calibration routine. Furthermore, the controller may be configured to perform inspection operations with regard to processing values, and to capture inspection data with regard the inspection operations. For example, processing values may be adjusted, and may include aspects such as cutoff times, time window values, filtering constants, spectral analysis algorithms, and screening for good/bad data values. Processing here may generally refer to parameters around how inspection data may be interpreted to produce the detected values. For example, a given aspect could be a calibration or a processing value, depending upon how the sensors of the sensor mount groups are configured, and where the processing duties are assigned. For example, some low level processing may be performed at the sensor, by an A/D converter or other hardware-type processing near the sensor or within the sensor, at a DAQ converter or programmable logic circuit on the inspection robot, etc. Both the calibration and processing, as described here, and which may take the form of algorithms, are lower level than the level of processing that is used later to characterize the actual inspection surface. In some examples, the data created after the calibration and processing are applied may nominally be called the "raw data." However, such data may be an estimate, since some of the "true" raw data (e.g., the data that the sensors literally detected) may be lost in filters, data compression, downsampling, etc. In other words, entropy losses may have already occurred, as multiple true raw data states could describe the data after the calibration and processing.

[0632] In some embodiments, the first forward sensor group and the second rearward sensor group may have a same first type of sensor. Additionally, the third forward sensor group and the fourth rearward sensor group may have a second same type of sensor, which may be different from the first type of sensor. Such embodiments may provide for an easier hardware configuration, since a same sled assembly (e.g. the first sled assembly **26010**) may include all sensors of a same type. In some examples, the system (e.g., a controller) may be configured to calibrate the sensors of the first forward sensor group and the second rearward sensor group using a first calibration value. In some examples, the controller may be configured to process the data from the first forward sensor group and the second rearward sensor group using a first processing value. Fur-

thermore, in some examples, the controller may be configured to calibrate the sensors of the third forward sensor group and the fourth rearward sensor group using a second calibration value, and in some examples, the controller may be configured to process the data from the third forward sensor group and the fourth rearward sensor group using a second processing value. Because inspection data from the first type of sensor in the rearward sensor mount group (e.g., the second rearward sensor mount group) has a delay from inspection data from the first type of sensor in the forward sensor mount group (e.g., the first forward sensor mount group) owing to the physical distance between the two groups, the controller may update the inspection data from the first forward sensor mount group based on inspection data from the second rearward sensor mount group. This may allow the system to generally respond to inspection information that it gleans from the inspection data.

[0633] With reference to FIGS. **118**A-**146**, a payload **2** for an inspection robot according to an example embodiment may include a plurality of assembly sleds **22200** (which may also be referred to herein as sled assemblies **22200**). Each assembly sled **22200** may include a first sensor **22220** structured to interrogate an inspection surface and a second sensor **22222** structured to interrogate the inspection surface. Furthermore, with reference to FIG. **145**, each assembly sled may have a shape structured to offset an inspection path **24930** (e.g., a scanning path) of the first sensor **22220** with respect to an inspection path **24938** of the second sensor **22222** along the inspection surface. The plurality of assembly sleds **24910**, **24912**, **24914**, and **24916** may be disposed in a staggered arrangement structured to offset the inspection paths **24930**, **24938** of the first sensor **22220** and the second sensor **22222** of a first assembly sled **24910**, of the plurality of assembly sleds, from the inspection paths of the first sensor **22220** and the second sensor **22222** of a second assembly sled **24912**, of the plurality of assembly sleds.

[0634] In some embodiments, each assembly sled of the plurality of assembly sleds of the payload **2** may include a first portion **22210** that includes the first sensor **22220**, a second portion **22212** that includes the second sensor **22222**, and a third portion **22214** connecting the first portion **22210** to the second portion **22212** and having a shape structured to provide the offset of the inspection path **24930** of the first sensor **22220** with respect to the inspection path **24938** of the second sensor **22222** along the inspection surface.

[0635] In some embodiments, the first portion **22210** may include a first sensor housing **22216** that includes a first plurality of sensors **22220** (see, e.g., FIG. **118**G) structured to interrogate the inspection surface, where the first plurality of sensors **22220** include the first sensor **22220**. The first sensor housing **22216** may arrange the first plurality of sensors **22220** such that there is intra-housing spacing between scanning paths (which may also be referred to herein as inspection paths) of the first plurality of sensors, as illustrated by example in FIG. **145**. Furthermore, the second portion **22212** may include a second sensor housing **22218** that includes a second plurality of sensors **22222** (see, e.g., FIG. **118**G) structured to interrogate the inspection surface, where the second plurality of sensors **22222** include the second sensor **22222**. The second sensor housing **22218** may arrange the second plurality of sensors **22222** such that there is intra-housing spacing between scanning paths of the second plurality of sensors, as illustrated by example in FIG. **145**.

[0636] With reference to FIGS. **120** and **121**, in some embodiments, at least one assembly sled of the plurality may include a sensor housing **22216** that includes the first sensor **22220** and has an opening **22520** through which couplant flows, and a film **22524** disposed over the opening **22520** so as to regulate the flow of couplant through the opening **22520**, as described herein.

[0637] In some embodiments, at least one assembly sled of the plurality may include a sensor housing **22216** that includes the first sensor **22220**. The sensor housing **22216** may include a delay line **22523** (e.g., included in a couplant chamber **22416**) for the first sensor **22220**. In some examples, the delay line **22523** may be between 5 mm to 50 mm inclusive. In some examples, the delay line **22523** may be between 0.20" to 1.97" inclusive. In some embodiments, the delay line may be about 1.25"—e.g., +−5%. In some examples, the delay line **22523** may be structured to provide for two backwall echoes from the inspection surface.

[0638] In some embodiments, the first plurality of sensors **22220** may be a first plurality of ultrasonic (UT) sensors, and the second plurality of sensors **22222** may be a second plurality of UT sensors.

[0639] A sled assembly for an inspection robot according to an example embodiment may include an ultrasonic (UT) sensor housing **22216** having a couplant chamber **22416** with an opening **22520** structured to disperse couplant onto an inspection surface, and a film **22524** disposed over the opening **22520** and structured to regulate a flow of the couplant out of the opening **22520**.

[0640] In some embodiments, the film **22524** and the UT sensor housing **22216** may define at least one opening **22520** for the couplant to flow through. With reference to FIGS. **118**F and **118**G, in some embodiments, the UT sensor housing **22216** may be structured to house a plurality of sensors **22220**, and the film **22524** and the UT sensor housing **22216** may define a plurality of openings **22520** each corresponding to a distinct one of the plurality of UT sensors **22220**, where the plurality of openings **22520** may be for couplant to flow through.

[0641] In some embodiments, the film **22524** may include at least one of a low density polyethylene, tin, nylon, polyester ether ketone, acrylonitrile butadiene styrene, or polyfluoroethylene.

[0642] In some embodiments, the film **22524** may be secured to the UT sensor housing **22216** via at least one of an adhesive or a mechanical coupling.

[0643] In some embodiments, the UT sensor housing **22216** may include a plurality of channels **22516** extending from the opening **22520** to provide for couplant to flow out of the couplant chamber **22416** and around the sides of the film **22524** to thereby maintain a layer of couplant between the film **22524** and the inspection surface.

[0644] A sled assembly **24910** for an inspection robot according to an example embodiment may include a first portion **22210** having a first ultrasonic (UT) sensor **22220** structured to interrogate an inspection surface, and a second portion **22212** having a second UT sensor **22222** structured to interrogate the inspection surface. The first portion **22210** (which may be a lead or "forward" portion) and the second portion **22212** (which may be a trailing or "rearward" portion) may move independently of each other.

[0645] In some embodiments, the sled assembly **24910** may include a third portion **22214** connecting the first portion **22210** to the second portion **22212** and structured such that the first portion **22210** and the second portion **22212** move independently of each other. In some examples, the independent movement of the first portion and the second portion includes rotating and/or tilting.

[0646] For example, as illustrated by example in FIG. **119**, a sled assembly **22200** may include pivot points **22312** and **22314** such that the first portion **22210** and the second portion **22212** respectively pivot about points **22312** and **22314** in the direction indicated by the double arrowed lines (third degree of freedom **22310**) with respect to the third portion **22214**, as described herein.

[0647] In some embodiments, the third portion **22214** may have a shape structured to offset an inspection path of the first UT sensor **22220** with respect to an inspection path of the second UT sensor **22222** along the inspection surface.

[0648] In some embodiments, the third portion **22214** may include a pivot point **22320** for connecting the third portion **22214** to an arm **22224** of a payload for the inspection robot. For example, the arm **22224** may be connected/coupled to a sled mount **22226** of an inspection robot **100** (FIG. **1**), as described herein. The pivot point **22320** may be structured to provide movement of the third portion **22214** with respect to the arm **22224**.

[0649] In some embodiments, the first portion **22210** of the sled assembly may include a first UT sensor housing **22216** that includes a first plurality of UT sensors **22220** structured to interrogate the inspection surface, the first plurality of UT sensors **22220** including the first UT sensor **22220**, where the first UT sensor housing **22216** may arrange the first plurality of UT sensors **22220** such that there is intra-housing spacing between scanning paths of the first plurality of UT sensors **22220** as described herein. The second portion **22212** of the sled assembly may include a second UT sensor housing **22218** that includes a second plurality of UT sensors **22222** structured to interrogate the inspection surface, where the second UT sensor housing **22218** arranges the second plurality of UT sensors **22222** such that there is intra-housing spacing between scanning paths of the second plurality of UT sensors **22222** as described herein.

[0650] Referencing FIGS. **92-104** and **105-107**, example alternate embodiments for sleds, arms, payloads, and sensor interfaces, including sensor mounting and/or sensor electronic coupling, are described herein. The examples of FIGS. **92-104** and **105-107**, and/or aspects of the examples of FIGS. **92-104** and **105-107**, may be included in embodiments of inspection robots, payloads, arms, sleds, and arrangements of these as described throughout the present disclosure. The examples of FIGS. **92-104** and **105-107** include features that provide for, without limitation, ease of integration, simplified coupling, and/or increased options to achieve selected horizontal positioning of sensors, selected horizontal sensor spacing, increased numbers of sensors on a payload and/or inspection robot, and/or increased numbers of sensor types available within a given geometric space for an inspection robot.

[0651] Referencing FIG. **92**, a side cutaway view **18800** of an example couplant routing mechanism for a sled is depicted. The example of FIG. **92** includes a couplant channel first portion **18802** that fluidly couples a couplant interface **18804** for the sled to a couplant manifold **18806** of the sled (via the couplant channel second portion **18808** in the example), providing for a single couplant interface **18804** to provide couplant to a number of sensors coupled to the sled. The example of FIG. **92** includes a couplant seal **18810** to selectively seal the couplant channel **18802**, **18808**, which may be provided as an access position for a sensor (e.g., to determine an aspect of the couplant in the couplant channel **18802**, **18808** such as a temperature, composition, etc.), and/or to allow for a simple fabrication of the sled. For example, the couplant channel first portion **18802** may be provided by a first drilling or machining operation, and the couplant channel second portion **18808** may be provided by a second drilling or machining operation, with the resulting opening sealed with the couplant seal **18810**. In certain embodiments, for example where the couplant channel **18802**, **18808** is formed by an additive manufacturing operation, the couplant channel **18802**, **18808** may be formed without the opening, and the couplant seal **18810** may be omitted. The couplant manifold **18806** may be formed by the sled, and/or may be formed by the sled interfacing with a sensor mounting insert (e.g., reference FIGS. **94**, **95** and the related descriptions).

[0652] Referencing FIG. **93**, a partial cutaway bottom view of the example couplant routing mechanism for the sled is depicted. The example of FIG. **93** is compatible with an embodiment having a sled lower body portion as partially depicted in FIG. **93**, wherein a sled mounting insert is coupled to the sled lower body portion forming the sled having sensors mounted thereon. The example of FIG. **93** includes a sled manifold portion **18902**, consistent with the side view depicting the couplant manifold **18806**. The sled manifold portion **18902** is fluidly coupled to the couplant channel **18808**, **18802**, and includes a distributing portion of lower portion manifold features **18906** routing couplant to couplant chamber groups associated with sensors to be mounted on the sled. The sled further includes a sensor opening **18904**, which is an opening defined by the manifold configuration. Each sensor opening **18904** may have a sensor mounted to interrogate the inspection surface through the sensor opening **18904**, where the manifold configuration defining the opening interacts with the sensor to form a couplant chamber. The couplant chamber, when filled with couplant, provides acoustic coupling between the sensor and the inspection surface, and a resulting distance between the inspection surface and the associated sensor at the respective sensor opening **18904** provides the delay line corresponding to that sensor. The example of FIG. **93** depicts a 6-sensor arrangement, where up to 6 sensors may be mounted on a single sled. Additionally, the position of the sensor openings **18904** and can be provided such that each sensor opening **18904** is horizontally displaced (e.g., at a distinct vertical position of FIG. **93** as depicted, where the sled in operation traverses the inspection surface to the left or to the right), and/or has a selected horizontal displacement. Accordingly, and embodiment such as that depicted in FIG. **93** includes multiple sensors on a single sled, having selected horizontal distribution. In certain embodiments, one of the available sensors may not be mounted on the sled, and the corresponding sensor opening **18904** may be sealed, and/or may just be allowed to leak couplant during operations of the inspection robot. In certain embodiments, one or more additional sensors (e.g., a sensor that is not a UT sensor) may be mounted to the sled at one of the sensor openings **18904**, and the sensor may operate in the presence of the couplant,

be sealed from the manifold, and/or a portion of the manifold may be omitted. For example, an embodiment of FIG. **93** where a leg of the manifold is omitted allows for three mounted UT sensors in a first sensor group, and three mounted sensor of another type in a second sensor group. Additionally or alternatively, a sensor mounting insert (e.g., reference FIG. **95**) a portion of the manifold, including a leg of the manifold and/or just a single sensor position, allowing for a group of sensors mounted on a sensor mounting insert to have the proper couplant flow configuration in a single operation of coupling the sensor mounting insert to the sled lower body portion.

[0653] Referencing FIG. **94**, a perspective view of a sled lower body portion is depicted. The example of FIG. **94** depicts the lower portion manifold features **18902**, **18906** as negative portions or cutouts of the sled lower body portion to form a portion of the couplant flow channels. Referencing FIG. **95**, a perspective view of a sensor mounting insert (or group housing bottom portion) is depicted. The example sensor mounting insert interfaces with the sled lower body portion, for example plugging into it, and may then be secured at matching locations where holes are provided for screw, bolt, or connection interfaces. The example sensor mounting insert includes a manifold portion **19104** as positive portion (e.g., extending from the surface) that interfaces with the sled body lower portion manifold features **18902**, **18906** to fully define the couplant manifold for the sensors. The manifold portion **19104** can be configured to seal one or more sensors from the manifold, and to form channels of selected size in the manifold. The example of FIGS. **94**, **95** depicts the negative manifold feature on the sled lower body portion, and the positive manifold feature on the sensor mounting insert, but these may be reversed in whole or part, and/or both the sled lower body portion and the sensor mounting insert may include matching negative manifold features for all or a portion of the defined manifold. The sensor mounting insert further includes a number of sensor mounting holes **19106** therethrough, wherein sensors may be mounted and exposed to the corresponding sled lower body holes **18904**. In certain embodiments, the sensors may be mounted on the sled mounting insert, allowing for the installation of the full sensor group in a single operation of coupling the sled mounting insert to the sled lower body portion.

[0654] Referencing FIG. **96**, a partial cutaway view of a sensor electronics interface and a sensor mounting insert for a sled is depicted. The example of FIG. **96** includes a sensor group housing upper portion **19208** coupled to the sensor group housing lower portion **19102** (or group housing lower portion), which may form a sensor group housing when coupled. The example of FIG. **96** further includes an electronic interface board **19202** for the sensors, providing an electrical interface between the group of sensors and a payload interface to the housing. The example of FIG. **96** includes a single connector interface **19210** that electronically couples all of the sensors of the sled at a single connector. The interface board **19202** may provide electrical connection, and/or may form a hardware controller or a portion of a hardware controller for an inspection robot. In certain embodiments, the interface board **19202** may include a sensor controller **19204** that determines raw sensor data, and/or partially processed sensor data, for example performing A/D operations, conversions of electrical values to sensed parameter values, and the like. In certain embodiments, the interface board **19202** may include a controller that performs minimal processing operations for sensor data, such as operations to determine a wall thickness value (e.g., in response to UT sensor data, and/or data calibrations such as expected return times, primary mode and/or secondary mode scoring, or the like). The example of FIG. **96** depicts sensors **19206** positioned within the group housing (in certain embodiments, a sensor **19206** is showing in FIG. **96**, additionally or alternatively **19206** may be a sensor sleeve or housing positioned around the sensor), and a sensor controller **19204**. The sensor controller **19204** is depicted away from the interface board **19202**, but may be formed on the interface board **19202** and coupled to the sensor **19206** when the interface board **19202** is positioned within the group housing, and/or the sensor controller **19204** may be positioned on the sensor **19206**, and engage connections to the interface board **19202** when the interface board **19202** is positioned within the group housing. The sensor controller **19204** may include an annular contact pad that engages a housing of the sensor **19206**. The interface board **19202** includes connections between the sensor controllers **19204** and a connector interface **19210**. The sensor controllers **19204** may be configured for the particular type of the corresponding sensor **19206**. In certain embodiments, the sensor group housing lower portion **19102** may be coupled to the sensor group housing upper portion **19208**, then the entire sensor group housing may be coupled to the sled lower body portion. In certain embodiments, the sensor group housing lower portion **19102** may first be coupled to the sled lower body portion, and then the sensor group housing upper portion **19208** is coupled to the sensor group housing lower portion, forming the entire sled with sensor mounted thereon.

[0655] FIG. **97** depicts a cutaway perspective view of another embodiment of a sensor electronics interface and a sensor mounting insert for a sled. The example of FIG. **97** includes a different shape for the sensor group housing upper portion **19208** and lower portion **19102**, allowing the embodiment of FIG. **97** to interface with a sled body lower portion having a different geometric arrangement than the embodiment of FIGS. **92-96**, but otherwise includes a similar arrangement. FIG. **98** depicts a cutaway side view depicting the sensor **19206**, the sensor controller **19204**, the interface board **19202**, and the connector interface **19210**.

[0656] Referencing FIGS. **99** and **100**, a detail side cutaway view and an exploded view of a sensor integrated into a sensor mounting insert are depicted. Except for minor adjustments for sensor group housing geometry, the example of FIGS. **99-100** is compatible with the examples of FIGS. **92-98**. The example of FIG. **100** includes the sensor group housing lower portion **19102** and the group housing top **19604**. The sensor integration arrangement includes a delay sleeve **19502** defining at least a portion of the delay line for the sensor, a structural tube **19510** supporting the sensor, a sensor isolation element **19508**, the sensor element **19504** that is positioned within the sensor isolation element **19508** and having connection elements **19506** extending therefrom, a sensor sealing cap **19514** and sensor O-ring **19602** that provide sealing between the sensor and the sensor controller **19512**, and the sensor controller **19512** (or board interface for coupling to the interface board, for example if the sensor controller is positioned on the board and/or on the inspection robot body). Referencing FIG. **99**, the arrangement of FIG. **100** is depicted in an assembled cutaway side view.

[0657] Referencing FIG. **101**, an example sled and sensor mounting insert is depicted in an exploded view. The example of FIG. **101** is compatible with the examples of FIGS. **92-100**, except for minor adjustments for sensor group housing geometry. The example of FIG. **101** depicts a sensor group housing upper portion **19208**, a sensor group housing lower portion **19102** having a sensor **19206** positioned therein, and an interface board **19202** that is coupled to the sensor controller **19204** when the sensor group housing upper and lower portions are joined. The example of FIG. **101** further includes a sled body lower portion **19706** having a selected ramp **19704**, with a ramp at each end of the sled body in the arrangement of FIG. **101**. The example of FIG. **101** further includes a sled bottom surface having a matching geometry to the sled body lower portion, including matching ramps **19702** and defining holes **19708** matching the hole arrangement of the sled body lower portion and the position of the sensors **19206**. The sled bottom surface may be a replaceable surface, and may further include coupling tabs **19710** that snap into matching slots of the sled body lower portion (reference FIG. **105**), for example to enable quick removal and/or replacement of the sled body lower portion. The sled body lower portion **19712** further defines an arm coupling hole, for example allowing pivotal coupling between the sled body lower portion and an arm or a payload.

[0658] Referencing FIG. **102**, an example payload having an arm and two sleds mounted thereto is depicted. In certain embodiments, the arrangement of FIG. **102** forms a portion of a payload, for example as an arm coupled to a payload at a selected horizontal position. In certain embodiments, the arrangement of FIG. **102** forms a payload, for example coupled at a selected horizontal position to a rail or other coupling feature of an inspection robot chassis, thereby forming a payload having a number of inspection sensors mounted thereon. The example of FIG. **102** includes sleds and sensor group housings that are consistent with the embodiments of FIGS. **92-101**, except for minor adjustments for sensor group housing geometry. The example of FIG. **102** includes an arm **19802** coupling the sled to a payload coupling **19810** (and/or chassis coupling **19810**). The arm **19802** defines a passage therethrough, wherein a couplant connection may pass through the passage, or may progress above the arm to couple with the sensor lower body portion (e.g., reference **18804** of FIG. **92**). The arrangement of FIG. **102** provides multiple degrees of freedom for movement of the sled, any one or more of which may be present in certain embodiments. For example, the pivot coupling **19812** of the arm **19802** to the sled (e.g., reference sled body lower portion **19712** at FIG. **101**) allows for pivoting of the sled relative to the arm **19802**, and each sled of the pair of sleds depicted may additionally or alternatively pivot separately or be coupled to pivot together (e.g., pivot coupling **19812** may be a single axle, or separate axles coupled to each sled). The arm coupling **19804** provides for pivoting of the arm **19802** relative to the inspection surface (e.g., raising or lowering), and a second arm coupling **19816** provides for rotation of the arm **19802** (and coupling joint **19814**) along a second perpendicular axis relative to arm coupling **19804**. Accordingly, couplings **19804**, **19816** operate together to in a two-axis gimbal arrangement, allowing for rotation in one axis, and pivoting in the other axis. The selected pivoting and/or rotational degrees of freedom are selectable, and one or more of the pivoting or rotational degrees of freedom may be omitted, limited in available range of motion, and/or be associated with a biasing member that urges the movement in a selected direction and/or urges movement back toward a selected position. In the example of FIG. **102**, a biasing spring **19806** urges the pivot coupling **19812** to move the arm **19802** toward the inspection surface, thereby contributing to a selected downforce on the sled. Any one or more of the biasing members may be passive (e.g., having a constant arrangement during inspection operations) and/or active (e.g., having an actuator that adjusts the arrangement, for example changing a force of the urging, changing a direction of the urging, and/or changing the selected position of the urging. The example of FIG. **102** depicts selected ramps **19704** defined by the sled, and sensor group housing **19200** elements positioned on each sled and coupling the sensors to the sled and/or the inspection surface. The example of FIG. **102** further includes a coupling line retainer **19808** that provides for routing of couplant lines and/or electrical communication away from rotating, pivoting, or moving elements, and provides for consistent positioning of the couplant lines and/or electrical communication for ease of interfacing the arrangement of FIG. **102** with a payload and/or inspection chassis upon which the arrangement is mounted. The example payload coupling **19810** includes a clamp having a moving portion and a stationary portion, and may be operable with a screw, a quick connect element (e.g., a wing nut and/or cam lever arrangement), or the like. The example payload coupling **19810** is a non-limiting arrangement, and the payload/chassis coupling may include any arrangement, including, without limitation, a clamp, a coupling pin, an R-clip (and/or a pin), a quick connect element, or combinations among these elements.

[0659] Referencing FIG. **103**, an example arrangement is depicted. The example of FIG. **103** may form a payload or a portion of a payload (e.g., with the arms coupled to the corresponding payload), and/or the example of FIG. **103** may depict two payloads (e.g., with the arms coupled to a feature of the inspection robot chassis). The arrangement of FIG. **103** is consistent with the arrangement of FIG. **102**, and depicts two arm assemblies in an example side-by-side arrangement. In an example embodiment wherein each sensor group housing **19200** includes six sensors mounted therein, the example of FIG. **103** illustrates how an arrangement of 24 sensors can be readily positioned on an inspection surface, with each of the sensors having a separate and configurable horizontal position on the inspection surface, allowing for rapid inspection of the inspection surface and/or high resolution (e.g., horizontal distance between adjacent sensors) inspection of the inspection surface. An example embodiment includes each arm having an independent couplant and/or electrical interface, allowing for a switch of 12 sensors at a time with a single couplant and/or electrical connection to be operated. An example embodiment includes the arms having a shared couplant interface (e.g., reference FIG. **51**) allowing for a switch of 24 sensors at a time with a single couplant connection to be operated. The pivotal and rotational couplings and/or degrees of freedom available may be varied between the arms, for example to allow for greater movement in one arm versus another (e.g., to allow an arm that is more likely to impact an obstacle, such as an outer one of the arms, to have more capability to deflect away from and/or around the obstacle).

[0660] Referencing FIG. **104**, an example arrangement is depicted as a top view, consistent with the arrangement of FIG. **103**. It can be seen that the sensor group housings **19200** can readily be configured to provide for selected horizontal distribution of the inspection sensors. The horizontal distribution can be adjusted by replacing the arms with arms having a different sensor group housing **19200** and sensor arrangement within the sensor group housing **19200**, by displacing the arms along a payload and/or along the inspection robot chassis, and/or displacing a payload (where the arms are mounted to the payload) along the inspection robot chassis.

[0661] FIG. **105** depicts a bottom view of two sled body lower portions **19706** in a pivoted position. The example of FIG. **105** is a schematic depiction of sled body lower portions, with the sled bottom surface omitted. In certain embodiments, the inspection robot may be operated with the sled lower body portions **19706** in contact with the inspection surface, and accordingly the sled bottom surface may be omitted. Additionally, the depiction of FIG. **105** with the sled bottom surface portion omitted allows for depiction of certain features of the example sled body lower portions **19706**. The example of FIG. **105** includes sled body lower portions **19706** having coupling slots **20202** engageable with matching coupling tabs **19710** of the sled bottom surface. The number and position of the slots **20202** and/or tabs **19710** is a non-limiting example, and a sled body lower portion **19706** may include slots **20202** that are not utilized by a particular sled bottom surface, for example to maintain compatibility with a number of sled bottom surface components. In certain embodiments, the slots **20202** positioned on the sled body lower portions **19706** rather than on the sled bottom surface portions allow for the sleds to be operated without the sled bottom surface. In certain embodiments, the slots **20202** may be present on the sled bottom surface, and the tabs **19710** may be present on the sled body lower portions **19706**, and/or the slots **20202** and tabs **19710** may be mixed between the sled bottom surface, and the tabs **19710** may be present on the sled body lower portions **19706**.

[0662] In certain embodiments, an inspection robot and/or payload arrangement may be configured to engage a flat inspection surface, for example at FIG. **103**. The depiction of FIG. **103** engageable to a flat inspection surface is a non-limiting example, and an arrangement otherwise consisting with FIG. **103** may be matched, utilizing sled bottom surfaces, overall sled engagement positions (e.g., see FIG. **51**), or freedom of relative movement of sleds and/or arms to engage a curved surface, a concave surface, a convex surface, and/or combinations of these (e.g., a number of parallel pipes having undulations, varying pipe diameters, etc.). An inspection robot and/or payload arrangement as set forth herein may be configured to provide a number of inspection sensors distributed horizontally and operationally engaged with the inspection surface, where movement on the inspection surface by the inspection robot moves the inspection sensors along the inspection surface. In certain embodiments, the arrangement is configurable to ensure the inspection sensors remain operationally engaged with a flat inspection surface, with a concave inspection surface, and/or with a convex inspection surface. Additionally, the arrangement is configurable, for example utilizing pivotal and/or rotation arrangements of the arms and/or payloads, to maintain operational contact between the inspection sensors and an inspection surface having a variable curvature. For example, an inspection robot positioned within a large concave surface such as a pipe or a cylindrical tank, where the inspection robot moves through a vertical orientation (from the inspection robot perspective) is not either parallel to or perpendicular to a longitudinal axis of the pipe, will experience a varying concave curvature with respect to the horizontal orientation (from the inspection robot perspective), even where the pipe has a constant curvature (from the perspective of the pipe). In another example, an inspection robot traversing an inspection surface having variable curvature, such as a tank having an ellipsoid geometry, or a cylindrical tank having caps with a distinct curvature relative to the cylindrical body of the tank.

[0663] Numerous embodiments described throughout the present disclosure are well suited to successfully execute inspections of inspection surfaces having flat and/or varying curvature geometries. For example, payload arrangements described herein allow for freedom of movement of sensor sleds to maintain operational contact with the inspection surface over the entire inspection surface space. Additionally, control of the inspection robot movement with positional interaction, including tracking inspection surface positions that have been inspected, determining the position of the inspection robot using dead reckoning, encoders, and/or absolute position detection, allows for assurance that the entire inspection surface is inspected according to a plan (e.g., an inspection map **16330**), and that progression across the surface can be performed without excessive repetition of movement. Additionally, the ability of the inspection robot to determine which positions have been inspected, to utilize transformed conceptualizations of the inspection surface (e.g., reference FIG. **85** and the related description), and the ability of the inspection robot to reconfigure (e.g., payload arrangements, physical sensor arrangements, down force applied, and/or to raise payloads), enable and/or disable sensors and/or data collection, allows for assurance that the entire inspection surface is inspected without excessive data collection and/or utilization of couplant. Additionally, the ability of the inspection robot to traverse between distinct surface orientations, for example by lifting the payloads and/or utilizing a stability support device, allows the inspection robot to traverse distinct surfaces, such as surfaces within a tank interior, surfaces in a pipe bend, or the like. Additionally, embodiments set forth herein allow for an inspection robot to traverse a pipe or tank interior or exterior in a helical path, allowing for an inspection having a selected inspection resolution of the inspection surface within a single pass (e.g., where representative points are inspected, and/or wherein the helical path is selected such that the horizontal width of the sensors overlaps and/or is acceptably adjacent on subsequent spirals of the helical path).

[0664] It can be seen that various embodiments herein provide for an inspection robot capable to inspect a surface such as an interior of a pipe and/or an interior of a tank. Additionally, embodiments of an inspection robot herein are operable at elevated temperatures relative to acceptable temperatures for personnel, and operable in composition environments (e.g., presence of CO_2, low oxygen, etc.) that are not acceptable to personnel. Additionally, in certain embodiments, entrance of an inspection robot into certain spaces may be a trivial operation, where entrance of a person into the space may require exposure to risk, and/or require

extensive preparation and verification (e.g., lock-out/tag-out procedures, confined space procedures, exposure to height procedures, etc.).

[0665] Accordingly, embodiments throughout the present disclosure provide for improved cost, safety, capability, and/or completion time of inspections relative to previously known systems or procedures. The methods and systems described herein may be deployed in part or in whole through a machine having a computer, computing device, processor, circuit, and/or server that executes computer readable instructions, program codes, instructions, and/or includes hardware configured to functionally execute one or more operations of the methods and systems disclosed herein. The terms computer, computing device, processor, circuit, and/or server, as utilized herein, should be understood broadly.

[0666] Any one or more of the terms computer, computing device, processor, circuit, and/or server include a computer of any type, capable to access instructions stored in communication thereto such as upon a non-transient computer readable medium, whereupon the computer performs operations of systems or methods described herein upon executing the instructions. In certain embodiments, such instructions themselves comprise a computer, computing device, processor, circuit, and/or server. Additionally or alternatively, a computer, computing device, processor, circuit, and/or server may be a separate hardware device, one or more computing resources distributed across hardware devices, and/or may include such aspects as logical circuits, embedded circuits, sensors, actuators, input and/or output devices, network and/or communication resources, memory resources of any type, processing resources of any type, and/or hardware devices configured to be responsive to determined conditions to functionally execute one or more operations of systems and methods herein.

[0667] Network and/or communication resources include, without limitation, local area network, wide area network, wireless, internet, or any other known communication resources and protocols. Example and non-limiting hardware, computers, computing devices, processors, circuits, and/or servers include, without limitation, a general purpose computer, a server, an embedded computer, a mobile device, a virtual machine, and/or an emulated version of one or more of these. Example and non-limiting hardware, computers, computing devices, processors, circuits, and/or servers may be physical, logical, or virtual. A computer, computing device, processor, circuit, and/or server may be: a distributed resource included as an aspect of several devices; and/or included as an interoperable set of resources to perform described functions of the computer, computing device, processor, circuit, and/or server, such that the distributed resources function together to perform the operations of the computer, computing device, processor, circuit, and/or server. In certain embodiments, each computer, computing device, processor, circuit, and/or server may be on separate hardware, and/or one or more hardware devices may include aspects of more than one computer, computing device, processor, circuit, and/or server, for example as separately executable instructions stored on the hardware device, and/or as logically partitioned aspects of a set of executable instructions, with some aspects of the hardware device comprising a part of a first computer, computing device, processor, circuit, and/or server, and some aspects of the hardware device comprising a part of a second computer, computing device, processor, circuit, and/or server.

[0668] A computer, computing device, processor, circuit, and/or server may be part of a server, client, network infrastructure, mobile computing platform, stationary computing platform, or other computing platform. A processor may be any kind of computational or processing device capable of executing program instructions, codes, binary instructions and the like. The processor may be or include a signal processor, digital processor, embedded processor, microprocessor, or any variant such as a co-processor (math co-processor, graphic co-processor, communication co-processor and the like) and the like that may directly or indirectly facilitate execution of program code or program instructions stored thereon. In addition, the processor may enable execution of multiple programs, threads, and codes. The threads may be executed simultaneously to enhance the performance of the processor and to facilitate simultaneous operations of the application. By way of implementation, methods, program codes, program instructions and the like described herein may be implemented in one or more threads. The thread may spawn other threads that may have assigned priorities associated with them; the processor may execute these threads based on priority or any other order based on instructions provided in the program code. The processor may include memory that stores methods, codes, instructions, and programs as described herein and elsewhere. The processor may access a storage medium through an interface that may store methods, codes, and instructions as described herein and elsewhere. The storage medium associated with the processor for storing methods, programs, codes, program instructions or other type of instructions capable of being executed by the computing or processing device may include but may not be limited to one or more of a CD-ROM, DVD, memory, hard disk, flash drive, RAM, ROM, cache, and the like.

[0669] A processor may include one or more cores that may enhance speed and performance of a multiprocessor. In embodiments, the process may be a dual core processor, quad core processors, other chip-level multiprocessor and the like that combine two or more independent cores (called a die).

[0670] The methods and systems described herein may be deployed in part or in whole through a machine that executes computer readable instructions on a server, client, firewall, gateway, hub, router, or other such computer and/or networking hardware. The computer readable instructions may be associated with a server that may include a file server, print server, domain server, internet server, intranet server and other variants such as secondary server, host server, distributed server, and the like. The server may include one or more of memories, processors, computer readable transitory and/or non-transitory media, storage media, ports (physical and virtual), communication devices, and interfaces capable of accessing other servers, clients, machines, and devices through a wired or a wireless medium, and the like. The methods, programs, or codes as described herein and elsewhere may be executed by the server. In addition, other devices required for execution of methods as described in this application may be considered as a part of the infrastructure associated with the server.

[0671] The server may provide an interface to other devices including, without limitation, clients, other servers, printers, database servers, print servers, file servers, com-

munication servers, distributed servers, and the like. Additionally, this coupling and/or connection may facilitate remote execution of instructions across the network. The networking of some or all of these devices may facilitate parallel processing of program code, instructions, and/or programs at one or more locations without deviating from the scope of the disclosure. In addition, all the devices attached to the server through an interface may include at least one storage medium capable of storing methods, program code, instructions, and/or programs. A central repository may provide program instructions to be executed on different devices. In this implementation, the remote repository may act as a storage medium for methods, program code, instructions, and/or programs.

[0672] The methods, program code, instructions, and/or programs may be associated with a client that may include a file client, print client, domain client, internet client, intranet client and other variants such as secondary client, host client, distributed client, and the like. The client may include one or more of memories, processors, computer readable transitory and/or non-transitory media, storage media, ports (physical and virtual), communication devices, and interfaces capable of accessing other clients, servers, machines, and devices through a wired or a wireless medium, and the like. The methods, program code, instructions, and/or programs as described herein and elsewhere may be executed by the client. In addition, other devices utilized for execution of methods as described in this application may be considered as a part of the infrastructure associated with the client.

[0673] The client may provide an interface to other devices including, without limitation, servers, other clients, printers, database servers, print servers, file servers, communication servers, distributed servers, and the like. Additionally, this coupling and/or connection may facilitate remote execution of methods, program code, instructions, and/or programs across the network. The networking of some or all of these devices may facilitate parallel processing of methods, program code, instructions, and/or programs at one or more locations without deviating from the scope of the disclosure. In addition, all the devices attached to the client through an interface may include at least one storage medium capable of storing methods, program code, instructions, and/or programs. A central repository may provide program instructions to be executed on different devices. In this implementation, the remote repository may act as a storage medium for methods, program code, instructions, and/or programs.

[0674] The methods and systems described herein may be deployed in part or in whole through network infrastructures. The network infrastructure may include elements such as computing devices, servers, routers, hubs, firewalls, clients, personal computers, communication devices, routing devices and other active and passive devices, modules, and/or components as known in the art. The computing and/or non-computing device(s) associated with the network infrastructure may include, apart from other components, a storage medium such as flash memory, buffer, stack, RAM, ROM, and the like. The methods, program code, instructions, and/or programs described herein and elsewhere may be executed by one or more of the network infrastructural elements.

[0675] The methods, program code, instructions, and/or programs described herein and elsewhere may be implemented on a cellular network having multiple cells. The cellular network may either be frequency division multiple access (FDMA) network or code division multiple access (CDMA) network. The cellular network may include mobile devices, cell sites, base stations, repeaters, antennas, towers, and the like.

[0676] The methods, program code, instructions, and/or programs described herein and elsewhere may be implemented on or through mobile devices. The mobile devices may include navigation devices, cell phones, mobile phones, mobile personal digital assistants, laptops, palmtops, netbooks, pagers, electronic books readers, music players, and the like. These mobile devices may include, apart from other components, a storage medium such as a flash memory, buffer, RAM, ROM and one or more computing devices. The computing devices associated with mobile devices may be enabled to execute methods, program code, instructions, and/or programs stored thereon.

[0677] Alternatively, the mobile devices may be configured to execute instructions in collaboration with other devices. The mobile devices may communicate with base stations interfaced with servers and configured to execute methods, program code, instructions, and/or programs. The mobile devices may communicate on a peer to peer network, mesh network, or other communications network. The methods, program code, instructions, and/or programs may be stored on the storage medium associated with the server and executed by a computing device embedded within the server. The base station may include a computing device and a storage medium. The storage device may store methods, program code, instructions, and/or programs executed by the computing devices associated with the base station.

[0678] The methods, program code, instructions, and/or programs may be stored and/or accessed on machine readable transitory and/or non-transitory media that may include: computer components, devices, and recording media that retain digital data used for computing for some interval of time; semiconductor storage known as random access memory (RAM); mass storage typically for more permanent storage, such as optical discs, forms of magnetic storage like hard disks, tapes, drums, cards and other types; processor registers, cache memory, volatile memory, non-volatile memory; optical storage such as CD, DVD; removable media such as flash memory (e.g., USB sticks or keys), floppy disks, magnetic tape, paper tape, punch cards, standalone RAM disks, Zip drives, removable mass storage, off-line, and the like; other computer memory such as dynamic memory, static memory, read/write storage, mutable storage, read only, random access, sequential access, location addressable, file addressable, content addressable, network attached storage, storage area network, bar codes, magnetic ink, and the like.

[0679] Certain operations described herein include interpreting, receiving, and/or determining one or more values, parameters, inputs, data, or other information. Operations including interpreting, receiving, and/or determining any value parameter, input, data, and/or other information include, without limitation: receiving data via a user input; receiving data over a network of any type; reading a data value from a memory location in communication with the receiving device; utilizing a default value as a received data value; estimating, calculating, or deriving a data value based on other information available to the receiving device; and/or updating any of these in response to a later received

data value. In certain embodiments, a data value may be received by a first operation, and later updated by a second operation, as part of the receiving a data value. For example, when communications are down, intermittent, or interrupted, a first operation to interpret, receive, and/or determine a data value may be performed, and when communications are restored an updated operation to interpret, receive, and/or determine the data value may be performed.

[0680] Certain logical groupings of operations herein, for example methods or procedures of the current disclosure, are provided to illustrate aspects of the present disclosure. Operations described herein are schematically described and/or depicted, and operations may be combined, divided, re-ordered, added, or removed in a manner consistent with the disclosure herein. It is understood that the context of an operational description may require an ordering for one or more operations, and/or an order for one or more operations may be explicitly disclosed, but the order of operations should be understood broadly, where any equivalent grouping of operations to provide an equivalent outcome of operations is specifically contemplated herein. For example, if a value is used in one operational step, the determining of the value may be required before that operational step in certain contexts (e.g. where the time delay of data for an operation to achieve a certain effect is important), but may not be required before that operation step in other contexts (e.g. where usage of the value from a previous execution cycle of the operations would be sufficient for those purposes). Accordingly, in certain embodiments an order of operations and grouping of operations as described is explicitly contemplated herein, and in certain embodiments re-ordering, subdivision, and/or different grouping of operations is explicitly contemplated herein.

[0681] The methods and systems described herein may transform physical and/or or intangible items from one state to another. The methods and systems described herein may also transform data representing physical and/or intangible items from one state to another.

[0682] The elements described and depicted herein, including in flow charts, block diagrams, and/or operational descriptions, depict and/or describe specific example arrangements of elements for purposes of illustration. However, the depicted and/or described elements, the functions thereof, and/or arrangements of these, may be implemented on machines, such as through computer executable transitory and/or non-transitory media having a processor capable of executing program instructions stored thereon, and/or as logical circuits or hardware arrangements. Example arrangements of programming instructions include at least: monolithic structure of instructions; standalone modules of instructions for elements or portions thereof; and/or as modules of instructions that employ external routines, code, services, and so forth; and/or any combination of these, and all such implementations are contemplated to be within the scope of embodiments of the present disclosure Examples of such machines include, without limitation, personal digital assistants, laptops, personal computers, mobile phones, other handheld computing devices, medical equipment, wired or wireless communication devices, transducers, chips, calculators, satellites, tablet PCs, electronic books, gadgets, electronic devices, devices having artificial intelligence, computing devices, networking equipment, servers, routers and the like. Furthermore, the elements described and/or depicted herein, and/or any other logical components, may be implemented on a machine capable of executing program instructions. Thus, while the foregoing flow charts, block diagrams, and/or operational descriptions set forth functional aspects of the disclosed systems, any arrangement of program instructions implementing these functional aspects are contemplated herein. Similarly, it will be appreciated that the various steps identified and described above may be varied, and that the order of steps may be adapted to particular applications of the techniques disclosed herein. Additionally, any steps or operations may be divided and/or combined in any manner providing similar functionality to the described operations. All such variations and modifications are contemplated in the present disclosure. The methods and/or processes described above, and steps thereof, may be implemented in hardware, program code, instructions, and/or programs or any combination of hardware and methods, program code, instructions, and/or programs suitable for a particular application. Example hardware includes a dedicated computing device or specific computing device, a particular aspect or component of a specific computing device, and/or an arrangement of hardware components and/or logical circuits to perform one or more of the operations of a method and/or system. The processes may be implemented in one or more microprocessors, microcontrollers, embedded microcontrollers, programmable digital signal processors or other programmable device, along with internal and/or external memory. The processes may also, or instead, be embodied in an application specific integrated circuit, a programmable gate array, programmable array logic, or any other device or combination of devices that may be configured to process electronic signals. It will further be appreciated that one or more of the processes may be realized as a computer executable code capable of being executed on a machine readable medium.

[0683] The computer executable code may be created using a structured programming language such as C, an object oriented programming language such as C++, or any other high-level or low-level programming language (including assembly languages, hardware description languages, and database programming languages and technologies) that may be stored, compiled or interpreted to run on one of the above devices, as well as heterogeneous combinations of processors, processor architectures, or combinations of different hardware and computer readable instructions, or any other machine capable of executing program instructions.

[0684] Thus, in one aspect, each method described above and combinations thereof may be embodied in computer executable code that, when executing on one or more computing devices, performs the steps thereof. In another aspect, the methods may be embodied in systems that perform the steps thereof, and may be distributed across devices in a number of ways, or all of the functionality may be integrated into a dedicated, standalone device or other hardware. In another aspect, the means for performing the steps associated with the processes described above may include any of the hardware and/or computer readable instructions described above. All such permutations and combinations are contemplated in embodiments of the present disclosure.

What is claimed is:

1. A sled assembly for an inspection robot, the sled assembly comprising:

a first portion having a first sensor mount, at a first horizontal position, the first sensor mount structured to accommodate a first inspection sensor and thereby interrogate an inspection surface;

a second offset portion having a second sensor mount, at a second horizontal position, the second sensor mount structured to accommodate a second inspection sensor and thereby interrogate the inspection surface;

wherein the first horizontal position and the second horizontal position are horizontally displaced by a selected horizontal distance; and

wherein the first portion comprises a first plurality of sensor mounts, the first plurality of sensor mounts including the first sensor mount, and wherein the first plurality of sensor mounts comprises a first horizontal distribution profile providing a horizontal displacement between adjacent ones of the first plurality of sensor mounts that is not greater than a selected inspection resolution.

2. The sled assembly of claim **1**, wherein the first horizontal distribution profile provides for equal spacing between each adjacent one of the first plurality of sensor mounts.

3. The sled assembly of claim **1**, wherein the second offset portion comprises a second plurality of sensor mounts, the second plurality of sensor mounts including the second sensor mount, and wherein the second plurality of sensor mounts comprises a second horizontal distribution profile providing a horizontal displacement between adjacent ones of the second plurality of sensor mounts that is not greater than the selected inspection resolution.

4. The sled assembly of claim **3**, wherein the second horizontal distribution profile provides for equal spacing between each adjacent one of the second plurality of sensor mounts.

5. The sled assembly of claim **3**, wherein the selected horizontal distance, the first horizontal distribution profile, and the second horizontal distribution profile are selected such that a distance between a last one of the first plurality of sensor mounts and a first one of the second plurality of sensor mounts is not greater than the selected inspection resolution.

6. The sled assembly of claim **5**, wherein the selected horizontal distance, the first horizontal distribution profile, and the second horizontal distribution profile are selected to provide equal spacing between each adjacent one of the first plurality of sensor mounts and each adjacent one of the second plurality of sensor mounts.

7. The sled assembly of claim **6**, wherein the horizontal distance, the first horizontal distribution profile, and the second horizontal distribution profile are further selected to provide the equal spacing between the last one of the first plurality of sensor mounts and the first one of the second plurality of sensor mounts.

8. The sled assembly of claim **1**, wherein the first portion comprises:

a UT sensor housing that includes the first sensor mount and comprises an opening for couplant to flow through; and

a film disposed over the opening and structured to regulate the flow of the couplant through the opening.

9. The sled assembly of claim **1**, wherein the first portion comprises a first UT sensor housing that includes the first sensor mount, wherein the first UT sensor housing includes a delay line for the first inspection sensor coupled to the first sensor mount of between 5 mm to 50 mm inclusive.

10. The sled assembly of claim **1**, wherein the first portion comprises a first UT sensor housing that includes the first sensor mount, wherein the first UT sensor housing includes a delay line for a UT sensor coupled to the first sensor mount of between 0.20" to 1.97" inclusive.

11. The sled assembly of claim **10**, wherein the delay line is about 1.25".

12. The sled assembly of claim **1**, wherein the first portion comprises a first UT sensor housing that includes the first sensor mount, wherein the first UT sensor housing includes a delay line for a UT sensor coupled to the first sensor mount structured to provide for two backwall echoes from the inspection surface.

13. The sled assembly of claim **1**, further comprising:

a third portion connecting the first portion to the second offset portion and having a shape structured to provide the selected horizontal distance.

14. The sled assembly of claim **1**, further comprising:

a first sensor housing that includes the first sensor mount, the first sensor housing defining a first horizontal extent;

a second sensor housing that includes the second sensor mount, the second sensor housing defining a second horizontal extent; and

wherein the first horizontal extent and the second horizontal extent comprise an overlap region.

15. A sled assembly for an inspection robot, the sled assembly comprising:

a first portion having a first sensor mount at a first horizontal position, the first sensor mount structured to accommodate a first inspection sensor and thereby interrogate an inspection surface;

a second offset portion having a second sensor mount at a second horizontal position, the second sensor mount structured to accommodate a second inspection sensor and thereby interrogate the inspection surface;

wherein the first horizontal position and the second horizontal position are horizontally displaced by a selected horizontal distance; and

wherein the first portion comprises a first UT sensor housing that includes the first sensor mount, wherein the first UT sensor housing includes a delay line for a UT sensor coupled to the first sensor mount structured to provide for two backwall echoes from the inspection surface.

16. The sled assembly of claim **15**, wherein the first UT sensor housing comprises an opening for couplant to flow through, and the first portion further comprises a film disposed over the opening and structured to regulate the flow of the couplant through the opening.

17. The sled assembly of claim **15**, wherein the first UT sensor housing includes the delay line of between 5 mm to 50 mm inclusive.

18. The sled assembly of claim **15**, wherein the first UT sensor housing includes the delay line of between 0.20" to 1.97" inclusive.

19. The sled assembly of claim **18**, wherein the delay line is about 1.25".

20. The sled assembly of claim **15**, further comprising:

a third portion connecting the first portion to the second offset portion and having a shape structured to provide the selected horizontal distance.

21. The sled assembly of claim **15**, further comprising:

the first UT sensor housing defining a first horizontal extent;

a second sensor housing that includes the second sensor mount, the second sensor housing defining a second horizontal extent; and

wherein the first horizontal extent and the second horizontal extent comprise an overlap region.

22. A sled assembly for an inspection robot, the sled assembly comprising:

a first portion having a first sensor mount, at a first horizontal position, the first sensor mount structured to accommodate a first inspection sensor and thereby interrogate an inspection surface;

a second offset portion having a second sensor mount, at a second horizontal position, the second sensor mount structured to accommodate a second inspection sensor and thereby interrogate the inspection surface;

wherein the first horizontal position and the second horizontal position are horizontally displaced by a selected horizontal distance;

a first sensor housing that includes the first sensor mount, the first sensor housing defining a first horizontal extent;

a second sensor housing that includes the second sensor mount, the second sensor housing defining a second horizontal extent; and

wherein the first horizontal extent and the second horizontal extent comprise an overlap region.

23. The sled assembly of claim **22**, wherein the first portion comprises:

the first sensor housing including a UT sensor housing that includes the first sensor mount and comprises an opening for couplant to flow through; and

a film disposed over the opening and structured to regulate the flow of the couplant through the opening.

24. The sled assembly of claim **22**, wherein the first sensor housing comprises a first UT sensor housing that includes the first sensor mount, wherein the first UT sensor housing includes a delay line for the first inspection sensor coupled to the first sensor mount of between 5 mm to 50 mm inclusive.

25. The sled assembly of claim **22**, wherein the first sensor housing comprises a first UT sensor housing that includes the first sensor mount, wherein the first UT sensor housing includes a delay line for a UT sensor coupled to the first sensor mount of between 0.20" to 1.97" inclusive.

26. The sled assembly of claim **25**, wherein the delay line is about 1.25".

27. The sled assembly of claim **22**, further comprising:

a third portion connecting the first portion to the second offset portion and having a shape structured to provide the selected horizontal distance.

* * * * *