US012394597B2

(12) **United States Patent**
Samuels

(10) **Patent No.: US 12,394,597 B2**
(45) **Date of Patent: Aug. 19, 2025**

(54) **ADAPTIVE ENGINE WITH ESTIMATION LAW MODULES FOR PLASMA PROCESSING POWER SYSTEM**

(71) Applicant: **Advanced Energy Industries, Inc.**, Denver, CO (US)

(72) Inventor: **Chad S. Samuels**, Fort Collins, CO (US)

(73) Assignee: **Advanced Energy Industries, Inc.**, Denver, CO (US)

(*) Notice: Subject to any disclaimer, the term of this patent is extended or adjusted under 35 U.S.C. 154(b) by 415 days.

(21) Appl. No.: **17/855,683**

(22) Filed: **Jun. 30, 2022**

(65) **Prior Publication Data**

US 2024/0006151 A1 Jan. 4, 2024

(51) **Int. Cl.**
G05B 13/04 (2006.01)
H01J 37/32 (2006.01)

(52) **U.S. Cl.**
CPC ***H01J 37/32137*** (2013.01); ***G05B 13/042*** (2013.01); *H01J 37/32183* (2013.01)

(58) **Field of Classification Search**
None
See application file for complete search history.

(56) **References Cited**

U.S. PATENT DOCUMENTS

4,860,215 A * 8/1989 Seraji B25J 9/1633 901/45
5,842,154 A 11/1998 Harnett
5,991,525 A 11/1999 Shah et al.
8,040,068 B2 10/2011 Coumou
8,258,874 B2 9/2012 van Zyl
8,716,984 B2 5/2014 Mueller
8,912,835 B2 12/2014 Nagarkatti
9,225,299 B2 12/2015 van Zyl
9,721,758 B2 8/2017 Coumou
10,049,857 B2 8/2018 Fisk, II
(Continued)

FOREIGN PATENT DOCUMENTS

CN 109460043 A 3/2019
CN 114527660 A 5/2022

OTHER PUBLICATIONS

ISA, "International Search Report and Written Opinion Regarding International Application No. PCT/US23/69393", Nov. 20, 2023, p. 11, Published in: US.

(Continued)

Primary Examiner — Bernard G Lindsay
(74) *Attorney, Agent, or Firm* — NOD Law PC

(57) **ABSTRACT**

This disclosure describes systems, methods, and apparatus for estimation law modules of an adaptive engine. The estimation law modules estimate estimated model parameter tensors for each control sample within a frame. These estimated model parameter tensors are passed to control law modules and used to determine possible control signals as well as being passed to an estimation portion of a nonlinear model of the system, along with the possible control signals, to estimate estimated system outputs corresponding to each of the possible control signals. A selector module can then select a control as one of the possible control signals or a combination of two or more of the possible control signals, based on comparing the corresponding estimated system outputs to a reference signal, and/or measured system outputs.

19 Claims, 61 Drawing Sheets

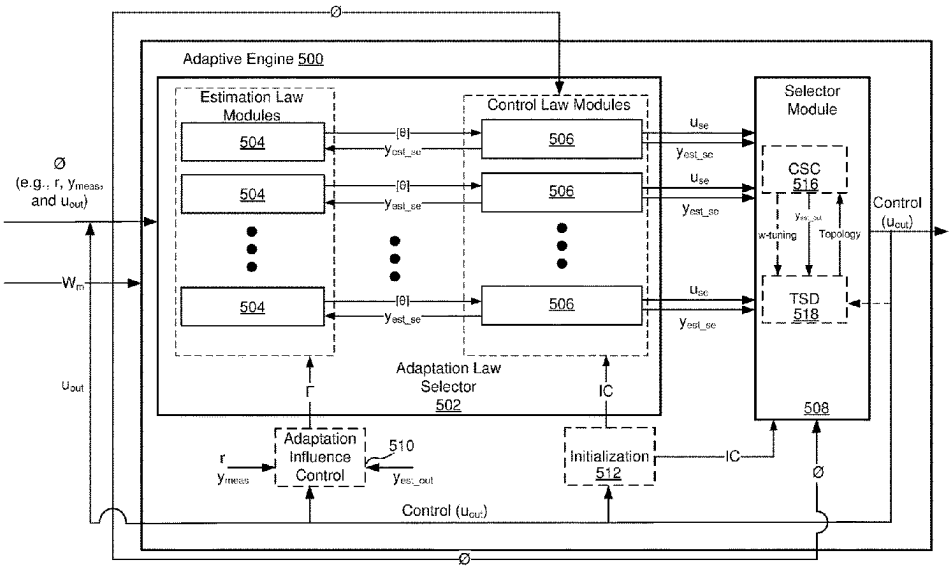

(56) **References Cited**

U.S. PATENT DOCUMENTS

10,095,198	B1	10/2018	Ross et al.	
12,197,174	B2	1/2025	Samuels	
2002/0132479	A1	9/2002	Coumou	
2004/0024750	A1	2/2004	Ulyanov et al.	
2004/0088059	A1*	5/2004	Johnson	G05B 13/027 700/28
2005/0221514	A1	10/2005	Pasadyn et al.	
2009/0254202	A1	10/2009	Pekar et al.	
2011/0054704	A1*	3/2011	Karpman	F02C 9/28 700/282
2011/0172897	A1*	7/2011	Tsuzuki	F02D 41/40 701/102
2011/0196514	A1	8/2011	Cao et al.	
2012/0218042	A1	8/2012	Mueller et al.	
2014/0269809	A1*	9/2014	Makrides	G01N 25/18 374/1
2014/0300470	A1*	10/2014	Toncrey	G08B 23/00 340/539.22
2015/0319837	A1	11/2015	Bhutta	
2016/0147201	A1	5/2016	Crncich-DeWolf et al.	
2016/0161950	A1	6/2016	Frangou	
2017/0243322	A1*	8/2017	Sigrist	B60K 35/22
2018/0017044	A1	1/2018	Faler	
2018/0119628	A1	5/2018	Zeller et al.	
2018/0119629	A1	5/2018	Cline et al.	
2019/0391547	A1*	12/2019	Coumou	H01J 37/32165
2020/0102902	A1	4/2020	Piche et al.	
2020/0141267	A1	5/2020	Wilson et al.	
2021/0159833	A1	5/2021	Qian et al.	
2022/0092426	A1	3/2022	Pang et al.	
2024/0004353	A1	1/2024	Samuels	
2024/0004354	A1	1/2024	Samuels	
2024/0006151	A1	1/2024	Samuels	
2024/0006169	A1	1/2024	Samuels	
2024/0012370	A1	1/2024	Samuels	
2024/0012371	A1	1/2024	Samuels	
2024/0012372	A1	1/2024	Samuels	
2024/0014017	A1	1/2024	Samuels	
2024/0019818	A1	1/2024	Samuels	
2024/0019819	A1	1/2024	Samuels	
2024/0310795	A1	9/2024	Nabi et al.	

OTHER PUBLICATIONS

Lindsay, Bernard G, Office Action issued in U.S. Appl. No. 17/855,577, Jun. 10, 2024, 98 pages.

Salmanpour et al. Event-Triggered Fuzzy Adaptive Leader-Following Tracking Control of Nonaffine Multiagent Systems With Finite-Time Output Constraint and Input Saturation, Apr. 2022, IEEE Transactions on Fuzzy Systems, vol. 30, No. 4.

Zeng et al., 'A functional variable universe fuzzy PID controller for load following operation of PWR with the multiple model', 2020, Annals of Nuclear Energy, 140 (2020) 107174.

Chung, Mong-Shune, Office Action issued in U.S. Appl. No. 17/855,644, Oct. 15, 2024, 47 pages.

Lindsay, Bernard G, Final Office Action issued in U.S. Appl. No. 17/855,577, Nov. 8, 2024, 74 pages.

Patel, Dhruvkumar, Office Action issued in U.S. Appl. No. 17/855,542, Sep. 29, 2024, 61 pages.

Klicos, Nicholas George, Non-final Office Action issued in U.S. Appl. No. 17/855,663, filed Apr. 21, 2025, 74 pages.

Kumpati Narendra et al., Adaptive Control Using Collective Information Obtained from Multiple Models, Aug. 28, 2011; Proceedings of the 18th World Congress The International Federation of Automatic Control Milano (Italy).

Qi, R. "Chapter 3: Adaptive Control A tutorial introduction", 2019, Communication and Control Engineering, URL: (Year: 2019).

Skrzycki, Jonathan Michael, Non Final Office Action issued in U.S. Appl. No. 17/855,587, filed Jan. 30, 2025, 132 pages.

* cited by examiner

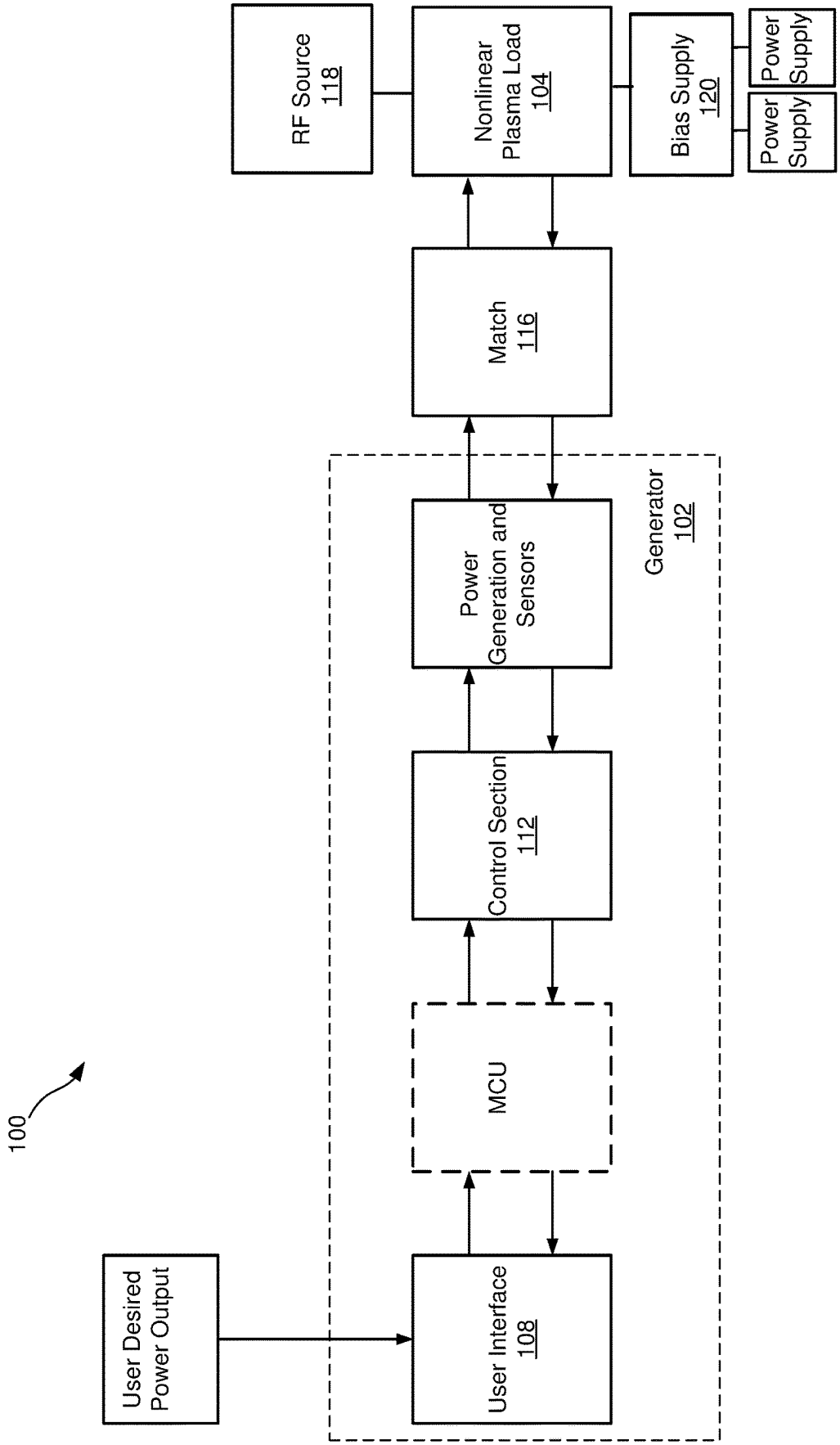
100
User Desired Power Output
User Interface 108
MCU
Control Section 112
Power Generation and Sensors
Generator 102
Match 116
RF Source 118
Nonlinear Plasma Load 104
Bias Supply 120
Power Supply
Power Supply

FIG. 1

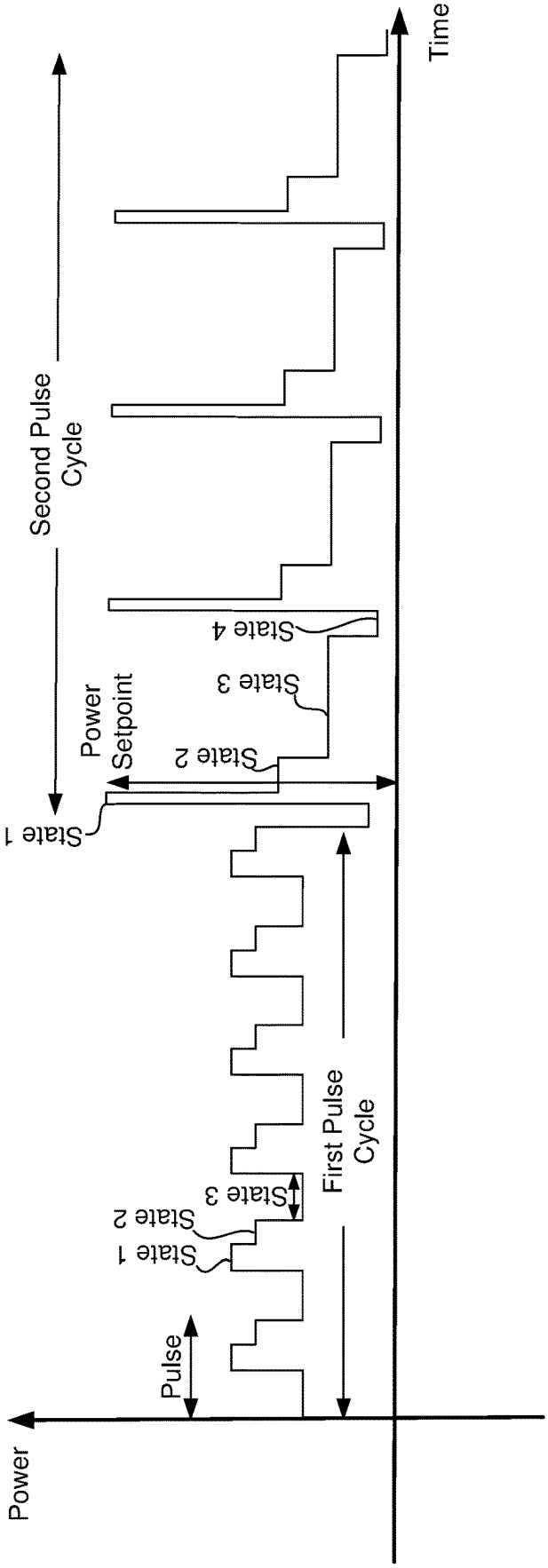
Power
Time
Pulse
State 1
State 2
State 3
First Pulse Cycle
State 1
Power Setpoint
State 2
State 3
State 4
Second Pulse Cycle

FIG. 2

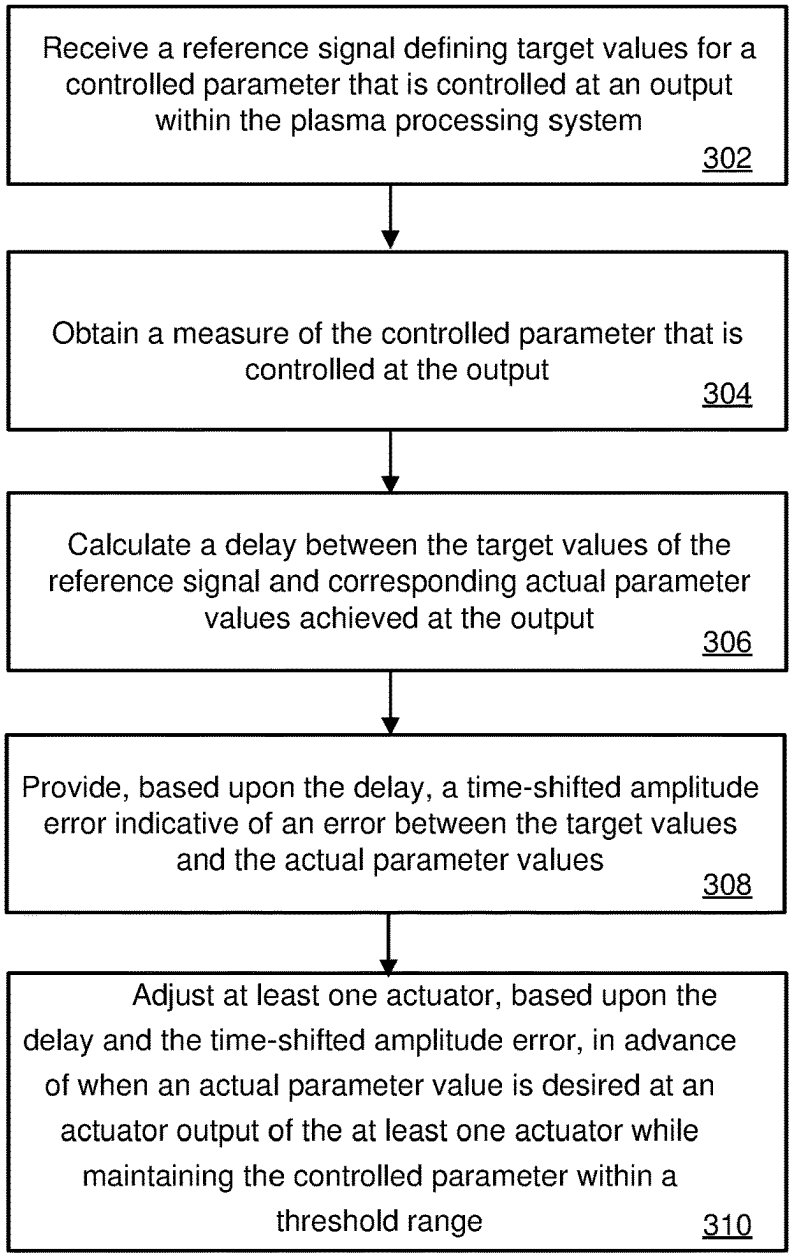
Receive a reference signal defining target values for a controlled parameter that is controlled at an output within the plasma processing system
302
Obtain a measure of the controlled parameter that is controlled at the output
304
Calculate a delay between the target values of the reference signal and corresponding actual parameter values achieved at the output
306
Provide, based upon the delay, a time-shifted amplitude error indicative of an error between the target values and the actual parameter values
308
Adjust at least one actuator, based upon the delay and the time-shifted amplitude error, in advance of when an actual parameter value is desired at an actuator output of the at least one actuator while maintaining the controlled parameter within a threshold range
310

FIG. 3

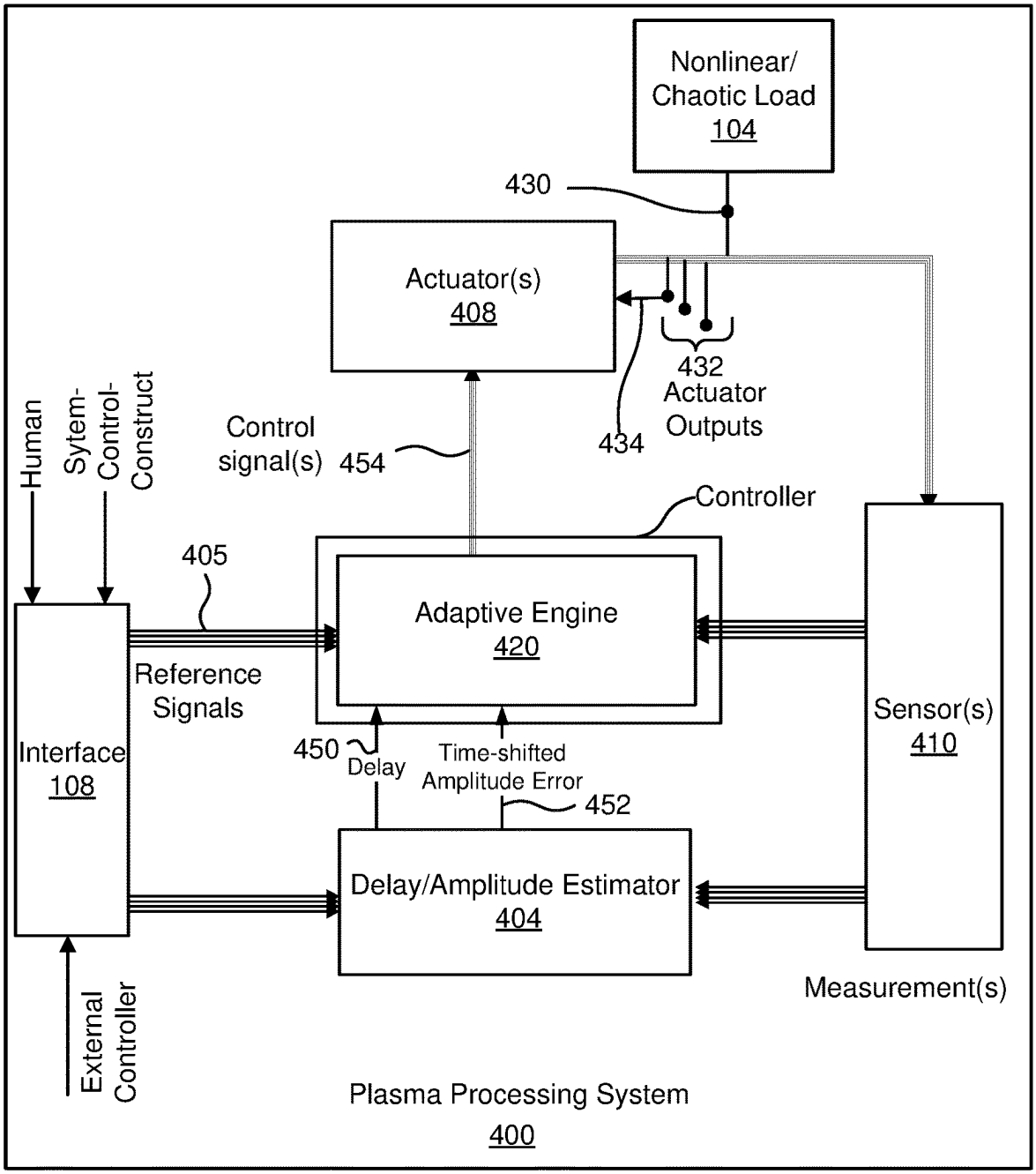
Nonlinear/
Chaotic Load
104
430
Actuator(s)
408
432
Actuator
Outputs
434
Human
Sytem-
Control-
Construct
Control
signal(s)
454
Controller
405
Adaptive Engine
420
Reference
Signals
Interface
108
450
Delay
Time-shifted
Amplitude Error
452
Sensor(s)
410
Delay/Amplitude Estimator
404
Measurement(s)
External
Controller
Plasma Processing System
400

FIG. 4

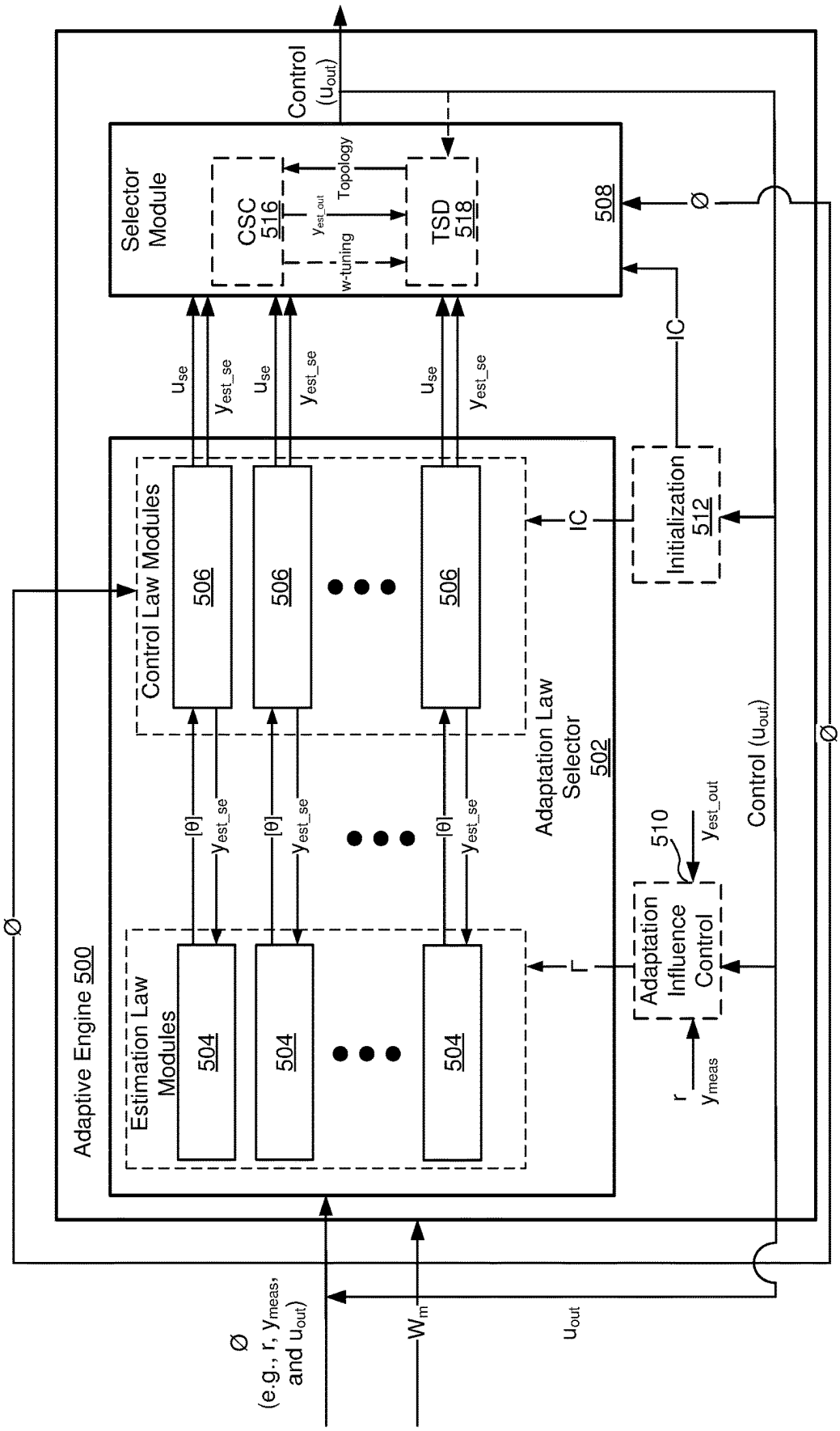
Control (u_{out})
Selector Module
CSC 516
Topology
y_{est_out}
w-tuning
TSD 518
508
Ø
IC
u_{se}
y_{est_se}
Control Law Modules
506
Initialization 512
Adaptation Law Selector 502
[θ]
510
Adaptation Influence Control
r
y_{meas}
Estimation Law Modules
504
Adaptive Engine 500
Ø (e.g., r, y_{meas}, and u_{out})
W_m
u_{out}

FIG. 5A

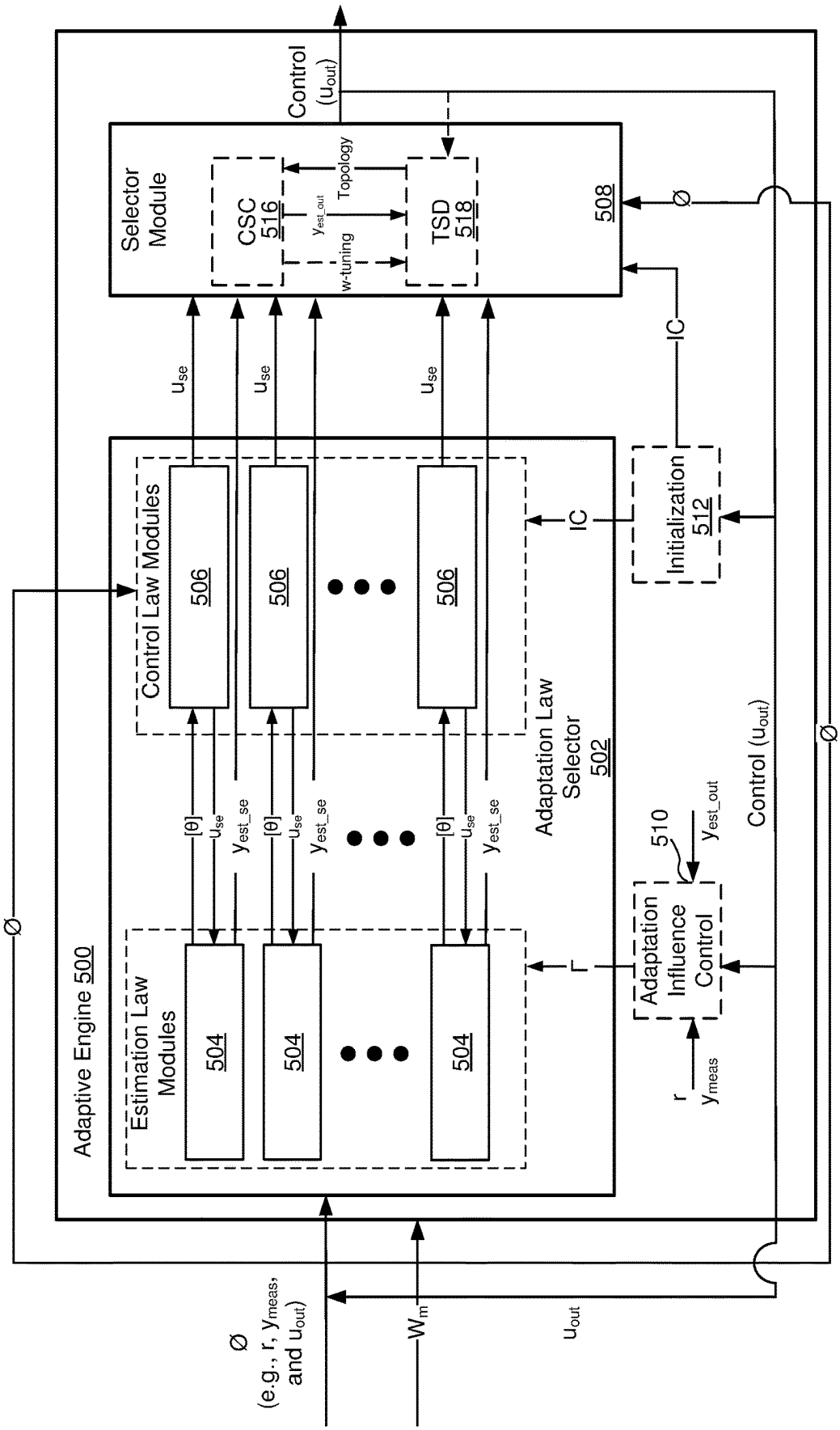
Control (u_{out})
Selector Module
CSC 516
Topology
y_{est_out}
w-tuning
TSD 518
508
Ø
IC
u_{se}
u_{se}
u_{se}
Control Law Modules
506
506
506
IC
Initialization 512
Adaptation Law Selector 502
[θ]
u_{se}
y_{est_se}
[θ]
u_{se}
y_{est_se}
[θ]
u_{se}
y_{est_se}
510
y_{est_out}
Control (u_{out})
Adaptation Influence Control
r
y_{meas}
Estimation Law Modules
504
504
504
Adaptive Engine 500
Ø
Ø
Ø (e.g., r, y_{meas}, and u_{out})
W_m
u_{out}

FIG. 5B

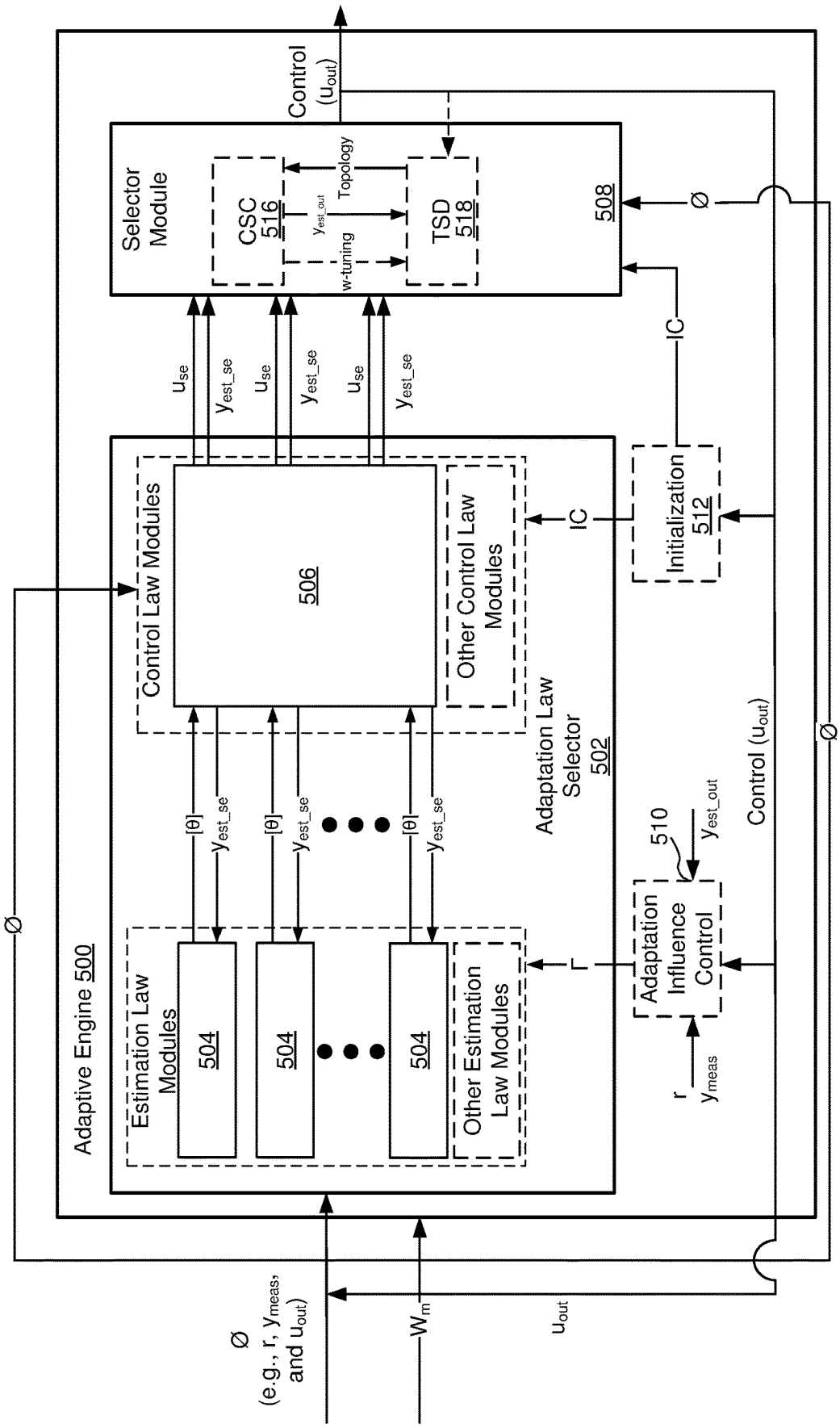
Control (u_{out})
Selector Module
CSC 516
Topology
y_{est_out}
w-tuning
TSD 518
508
Ø
IC
u_{se}
y_{est_se}
Control Law Modules
506
Other Control Law Modules
IC
Initialization 512
Adaptation Law Selector 502
[θ]
y_{est_se}
510
y_{est_out}
Control (u_{out})
Adaptation Influence Control
r
y_{meas}
Adaptive Engine 500
Estimation Law Modules
504
Other Estimation Law Modules
Ø
Ø (e.g., r, y_{meas}, and u_{out})
W_m
u_{out}

FIG. 5C

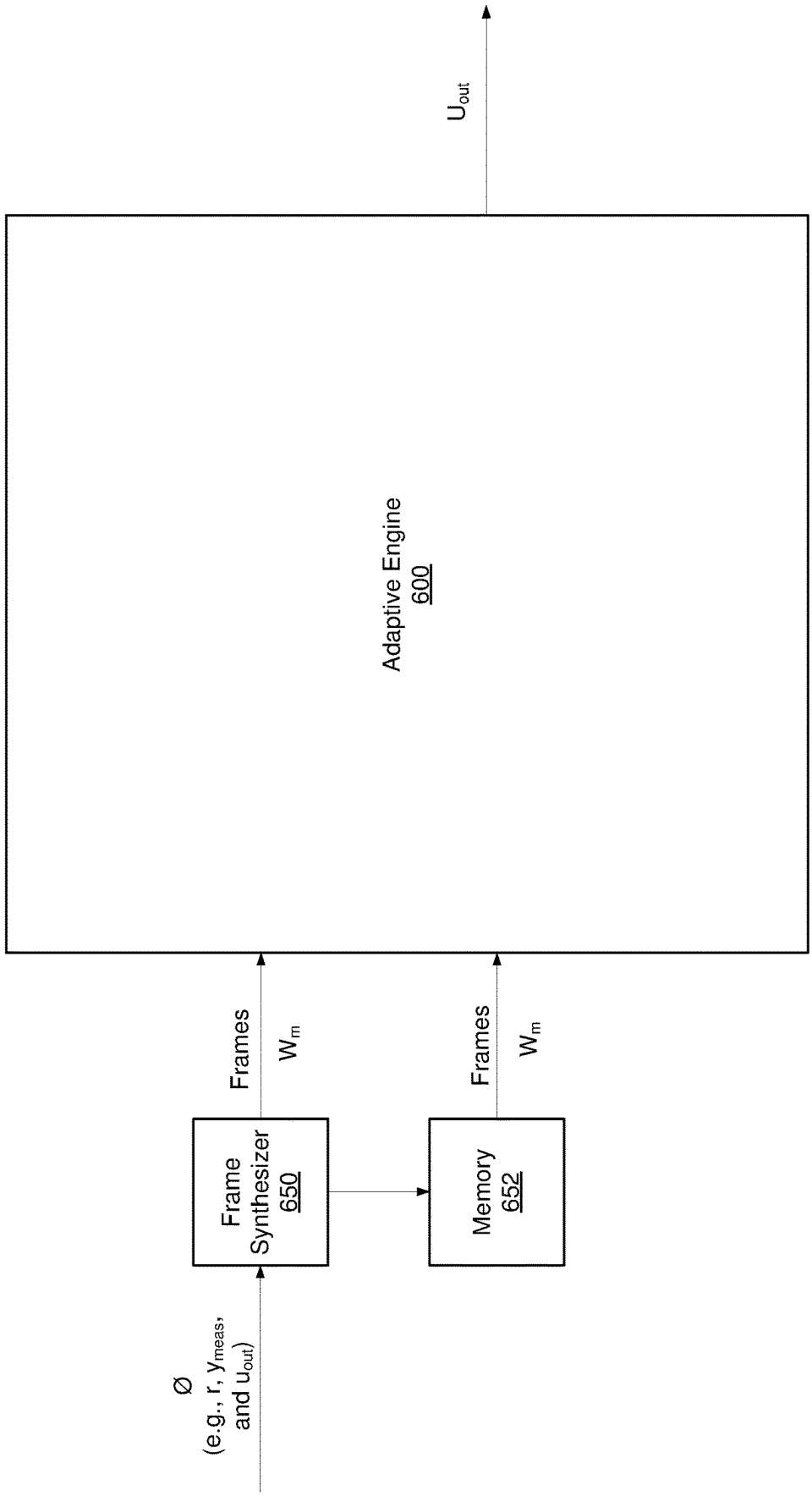
Ø
(e.g., r, y_{meas}, and u_{out})
Frame Synthesizer 650
Memory 652
Frames
W_m
Frames
W_m
Adaptive Engine 600
U_{out}

FIG. 6

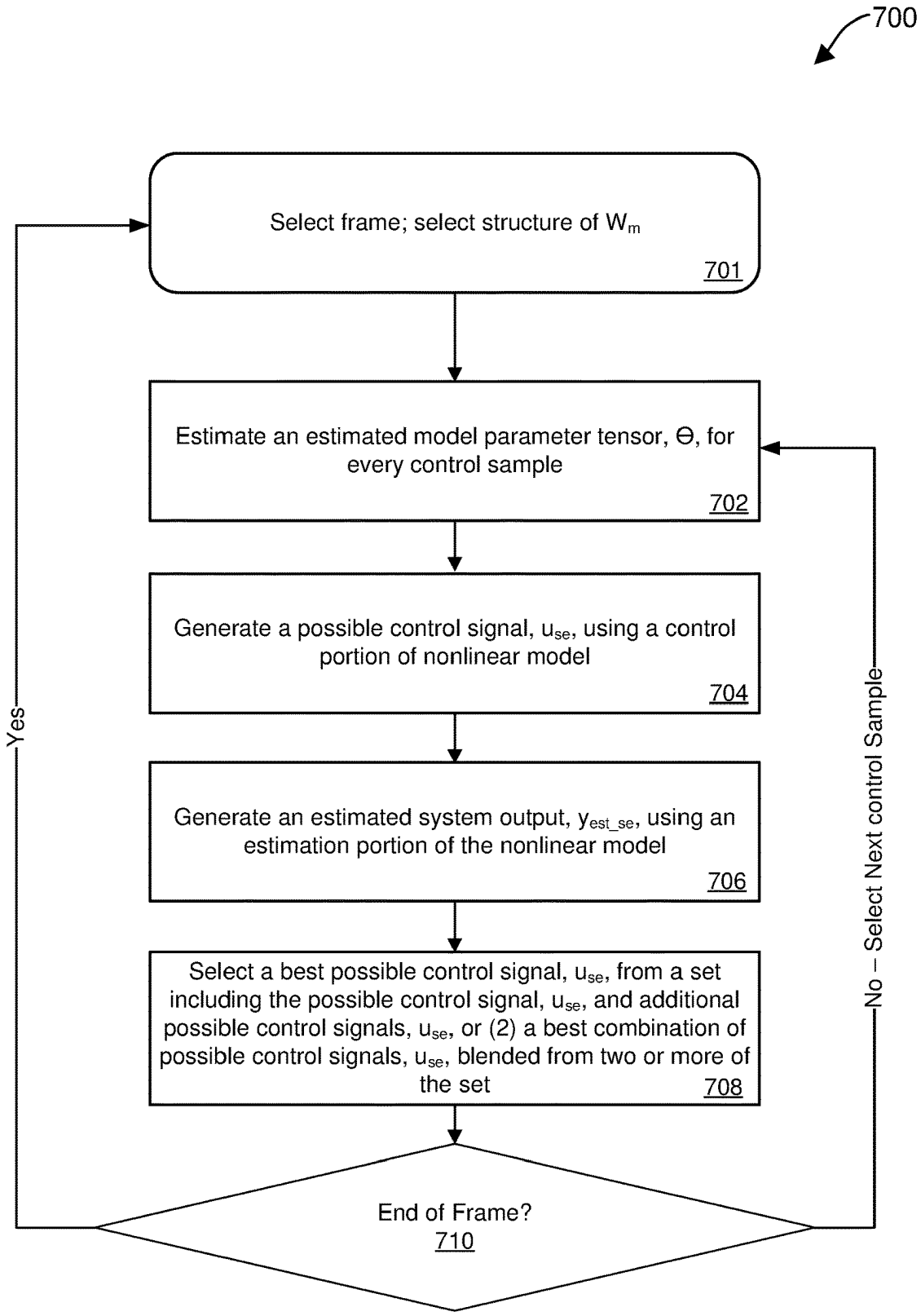
700
Select frame; select structure of W_m
701
Estimate an estimated model parameter tensor, Θ, for every control sample
702
Generate a possible control signal, u_{se}, using a control portion of nonlinear model
704
Generate an estimated system output, y_{est_se}, using an estimation portion of the nonlinear model
706
Select a best possible control signal, u_{se}, from a set including the possible control signal, u_{se}, and additional possible control signals, u_{se}, or (2) a best combination of possible control signals, u_{se}, blended from two or more of the set
708
End of Frame?
710
Yes
No – Select Next control Sample

FIG. 7

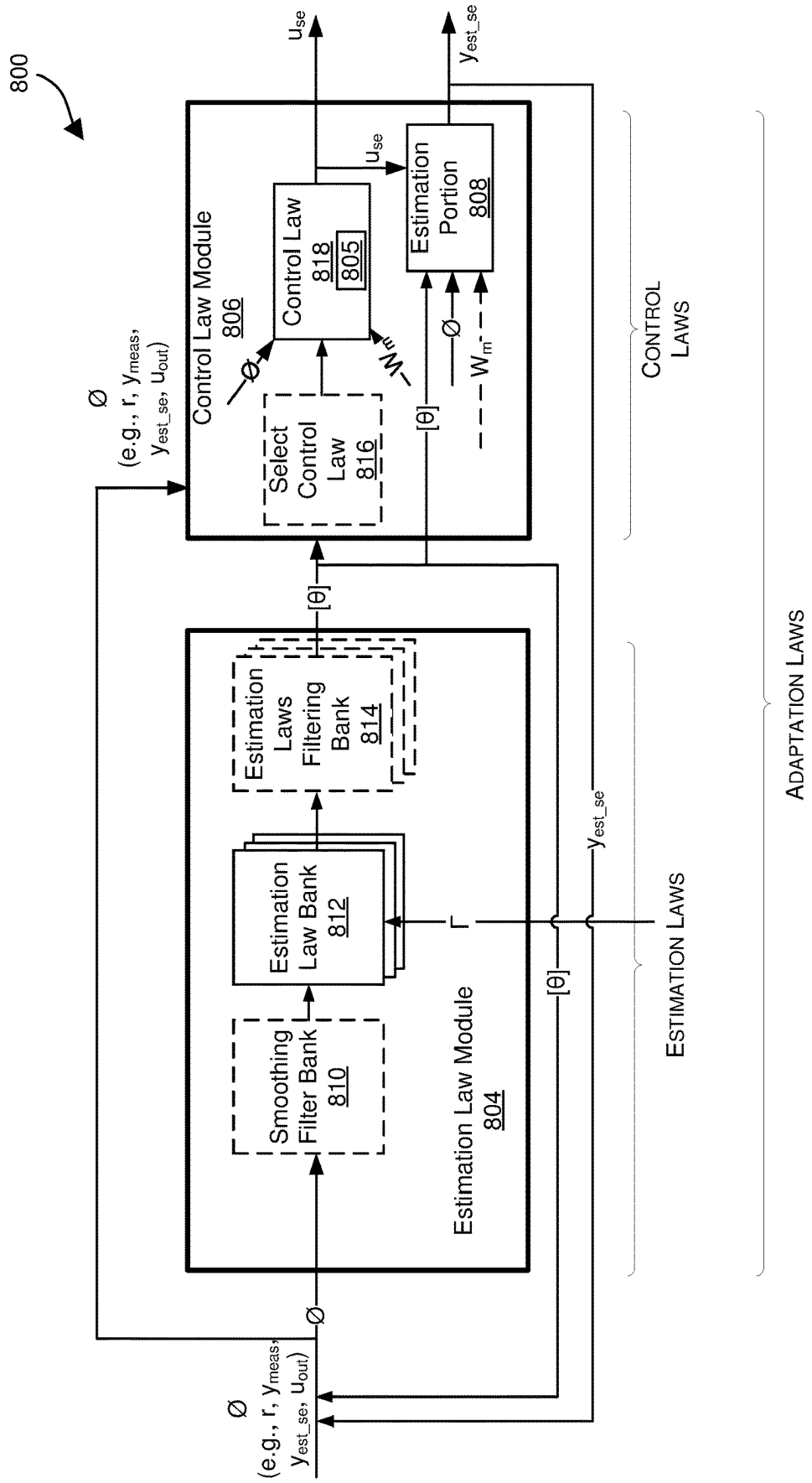
800
Control Law Module
806
Select Control Law
816
Control Law
818
805
Estimation Portion
808
u_{se}
y_{est_se}
W_m
[θ]
Ø
(e.g., r, y_{meas}, y_{est_se}, u_{out})
Estimation Laws Filtering Bank
814
Estimation Law Bank
812
Smoothing Filter Bank
810
Estimation Law Module
804
r
CONTROL LAWS
ESTIMATION LAWS
ADAPTATION LAWS

FIG. 8A

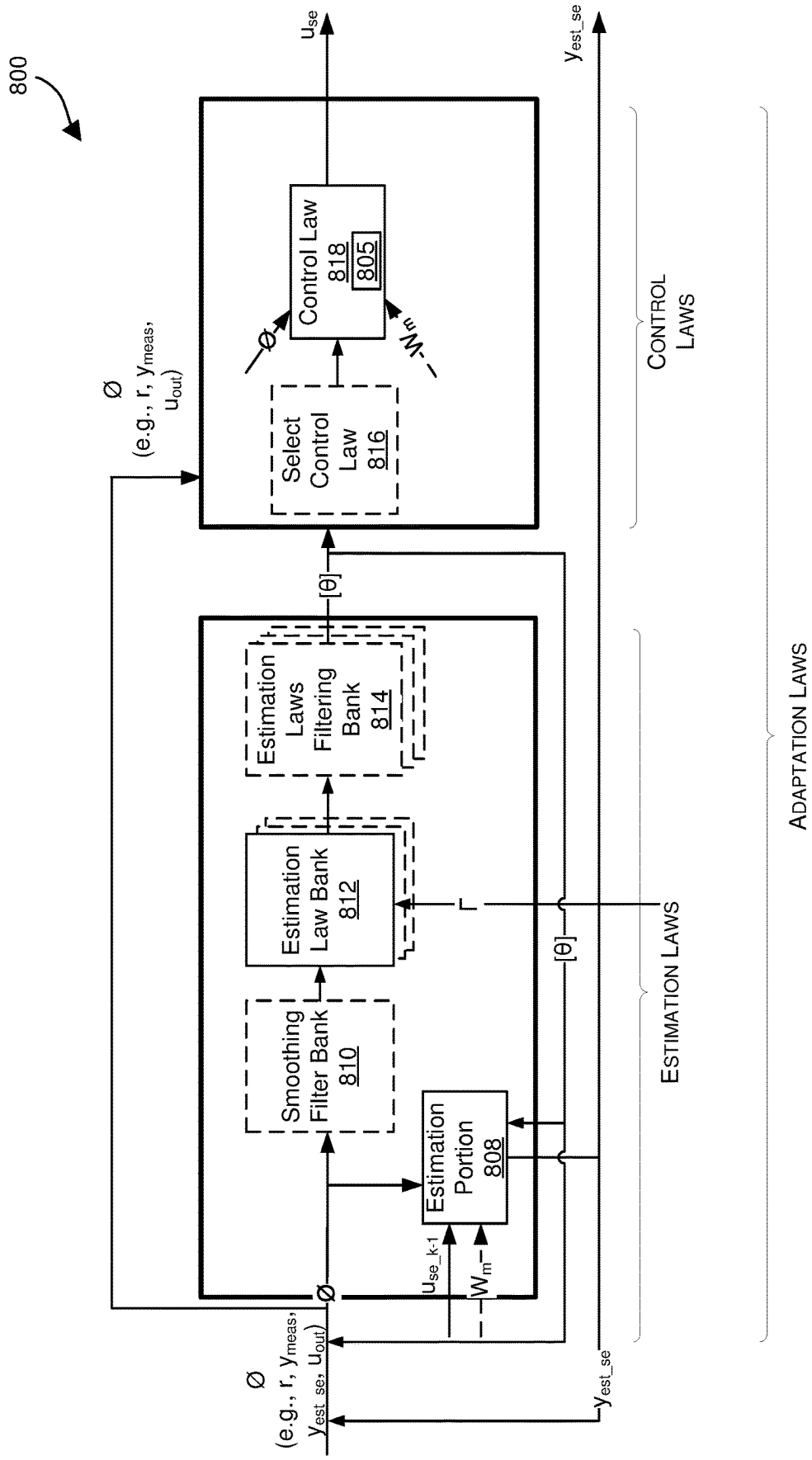
800
Ø
(e.g., r, y_{meas}, u_{out})
Select Control Law 816
Control Law 818
805
Ø
W_m
u_{se}
y_{est_se}
[θ]
Estimation Laws Filtering Bank 814
Estimation Law Bank 812
Smoothing Filter Bank 810
Estimation Portion 808
r
[θ]
u_{se_k-1}
W_m
Ø
Ø
(e.g., r, y_{meas}, y_{est_se}, u_{out})
y_{est_se}
CONTROL LAWS
ESTIMATION LAWS
ADAPTATION LAWS

FIG. 8B

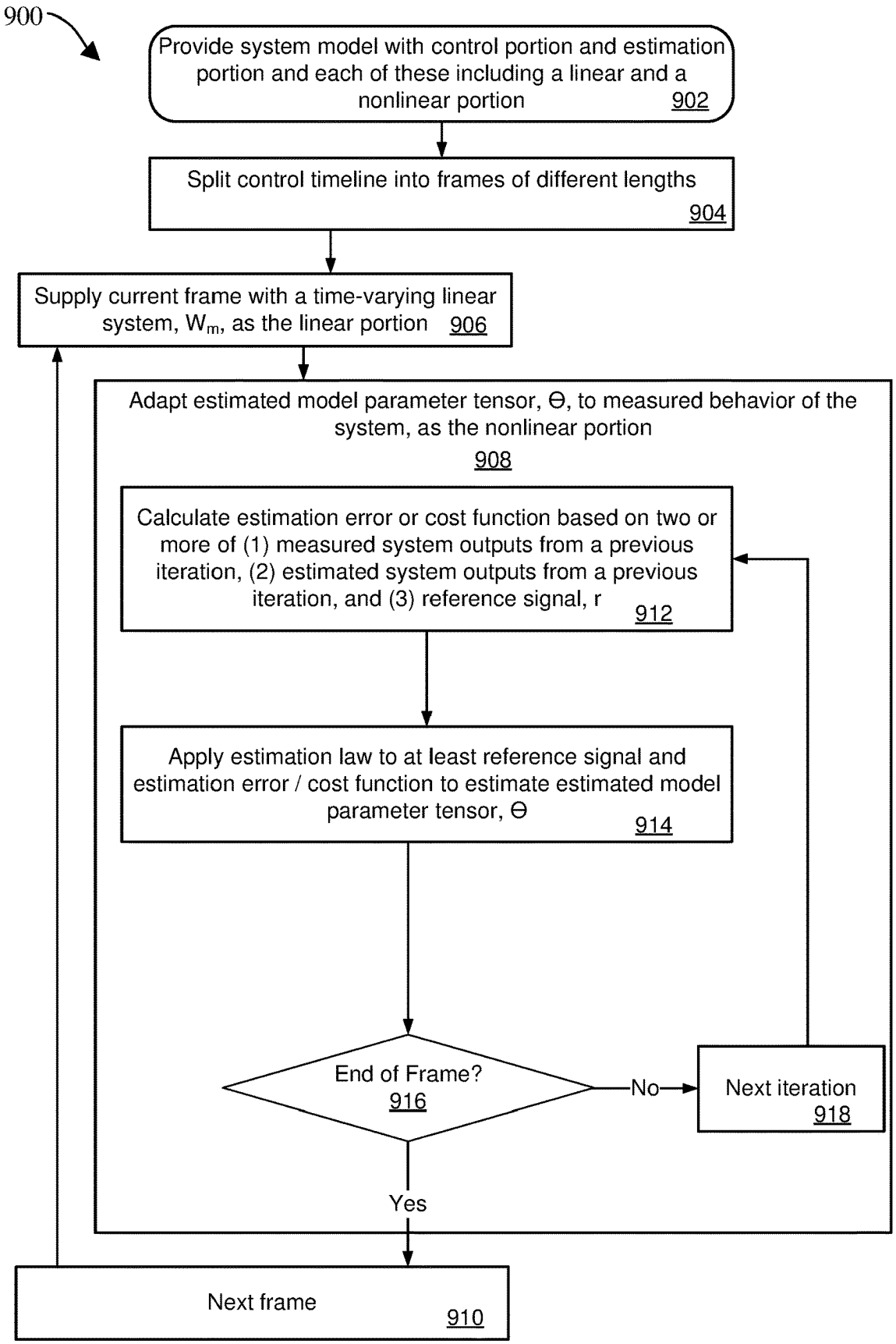
900
Provide system model with control portion and estimation portion and each of these including a linear and a nonlinear portion 902
Split control timeline into frames of different lengths 904
Supply current frame with a time-varying linear system, W_m, as the linear portion 906
Adapt estimated model parameter tensor, Θ, to measured behavior of the system, as the nonlinear portion 908
Calculate estimation error or cost function based on two or more of (1) measured system outputs from a previous iteration, (2) estimated system outputs from a previous iteration, and (3) reference signal, r 912
Apply estimation law to at least reference signal and estimation error / cost function to estimate estimated model parameter tensor, Θ 914
End of Frame? 916
No
Next iteration 918
Yes
Next frame 910

FIG. 9

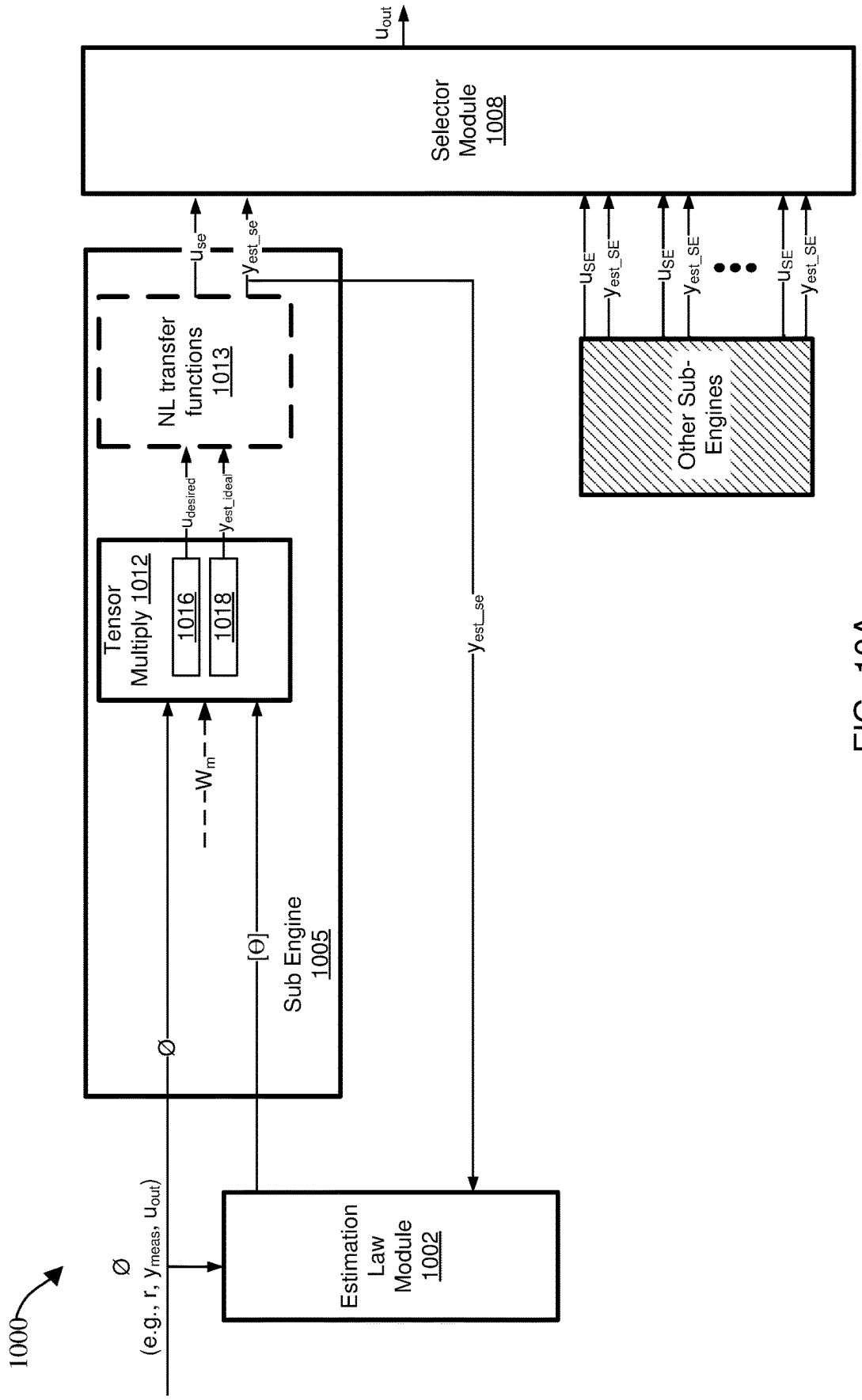
1000
Ø
(e.g., r, y_{meas}, u_{out})
Estimation Law Module 1002
Ø
[Θ]
W_m
Sub Engine 1005
Tensor Multiply 1012
1016
1018
$u_{desired}$
y_{est_ideal}
NL transfer functions 1013
u_{se}
y_{est_se}
y_{est_se}
Selector Module 1008
u_{out}
u_{SE}
y_{est_SE}
u_{SE}
y_{est_SE}
u_{SE}
y_{est_SE}
Other Sub-Engines

FIG. 10A

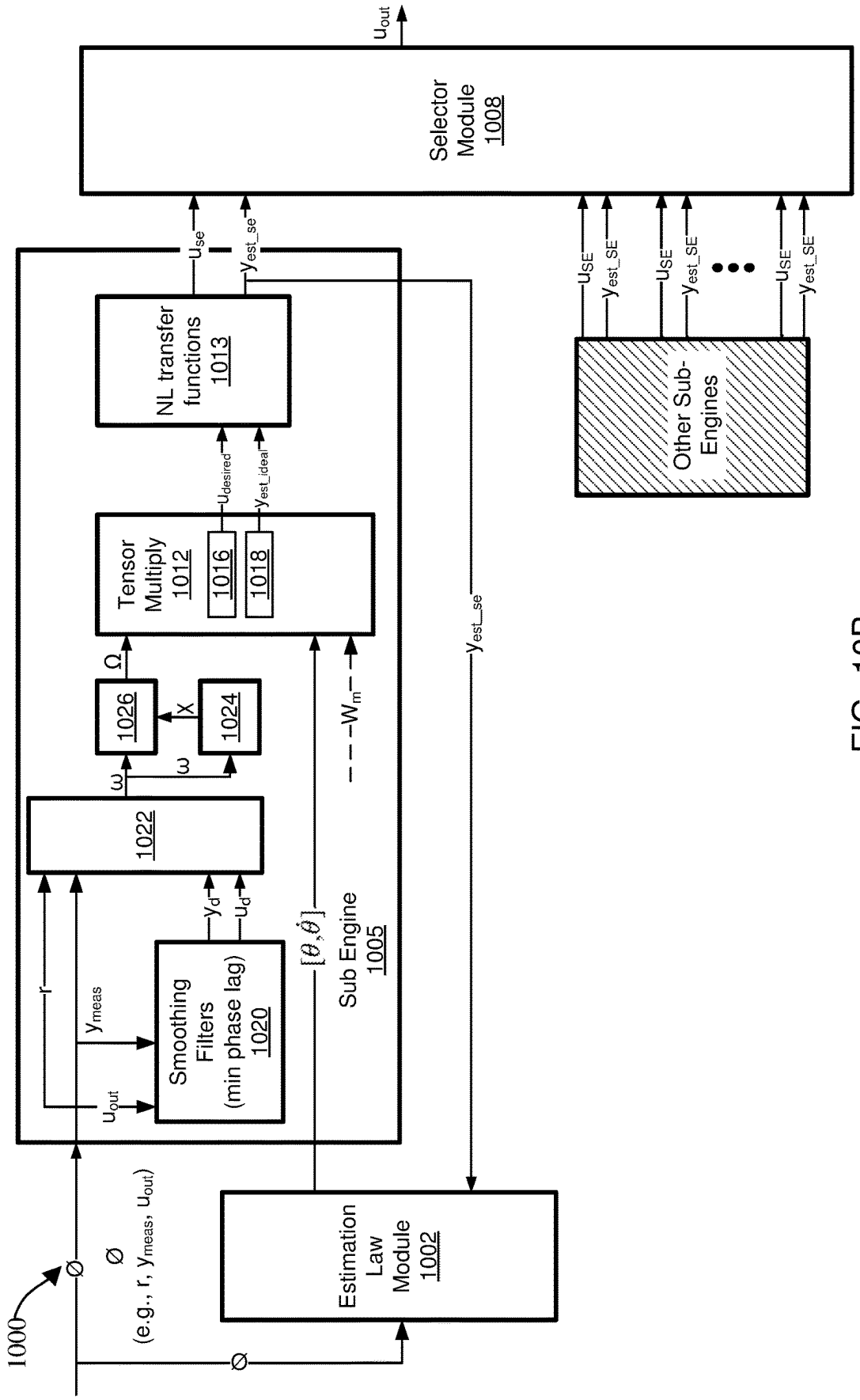
1000
Ø
(e.g., r, y_{meas}, u_{out})
Ø
Estimation Law Module 1002
r
y_{meas}
u_{out}
Smoothing Filters (min phase lag) 1020
y_d
u_d
1022
ω
ω
1026
X
1024
Ω
Tensor Multiply 1012
1016
1018
$u_{desired}$
y_{est_ideal}
NL transfer functions 1013
u_{se}
y_{est_se}
$[\theta, \hat{\theta}]$
W_m
Sub Engine 1005
y_{est_se}
Selector Module 1008
u_{out}
u_{SE}
y_{est_SE}
u_{SE}
y_{est_SE}
u_{SE}
y_{est_SE}
Other Sub-Engines

FIG. 10B

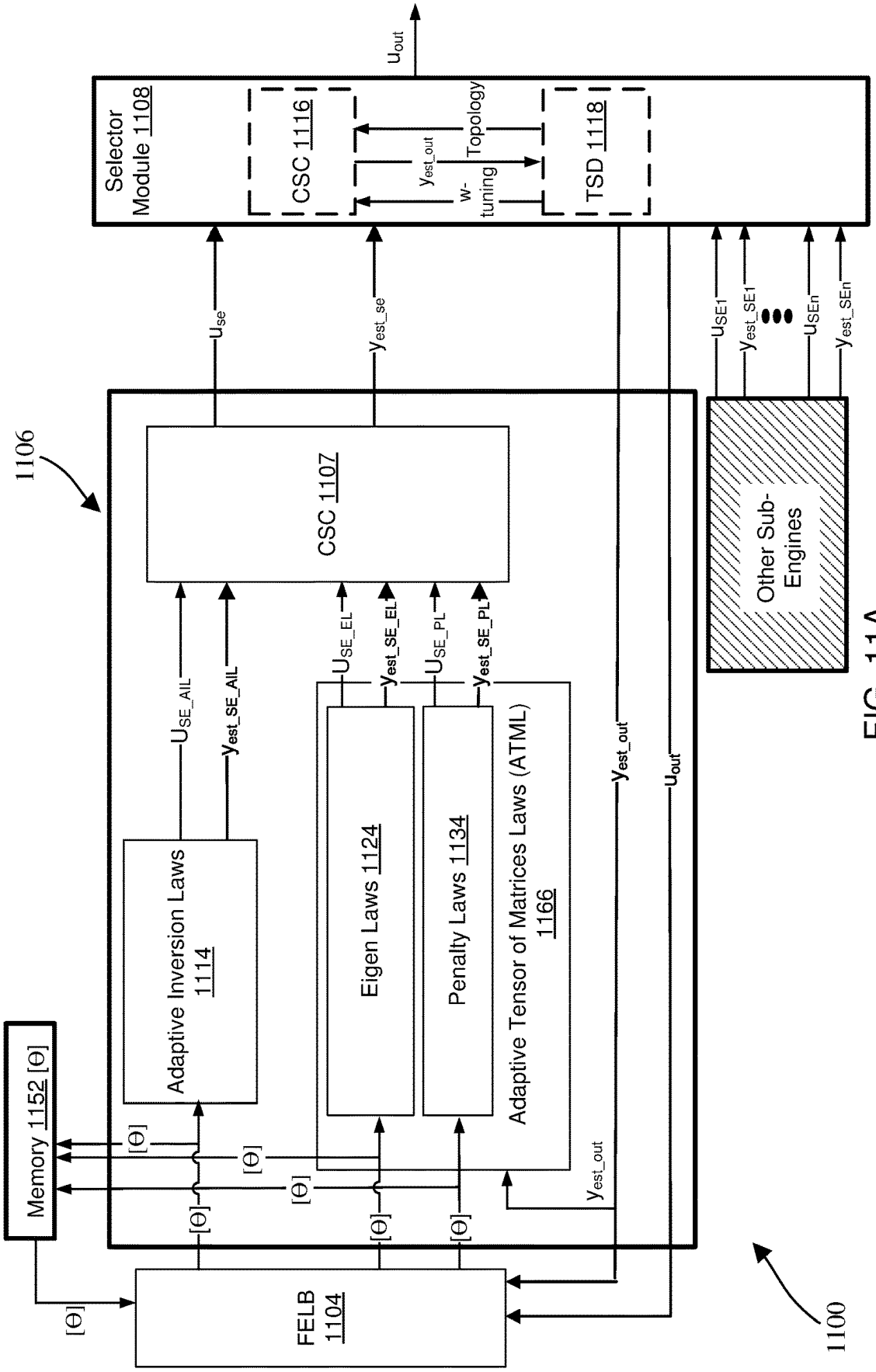
Selector Module 1108
CSC 1116
Topology
y_{est_out}
w-tuning
TSD 1118
u_{out}
u_{se}
y_{est_se}
u_{SE1}
y_{est_SE1}
u_{SEn}
y_{est_SEn}
1106
CSC 1107
Other Sub-Engines
U_{SE_AIL}
$y_{est_SE_AIL}$
U_{SE_EL}
$y_{est_SE_EL}$
U_{SE_PL}
$y_{est_SE_PL}$
Adaptive Inversion Laws 1114
Eigen Laws 1124
Penalty Laws 1134
Adaptive Tensor of Matrices Laws (ATML) 1166
y_{est_out}
u_{out}
Memory 1152 [Θ]
[Θ]
FELB 1104
1100

FIG. 11A

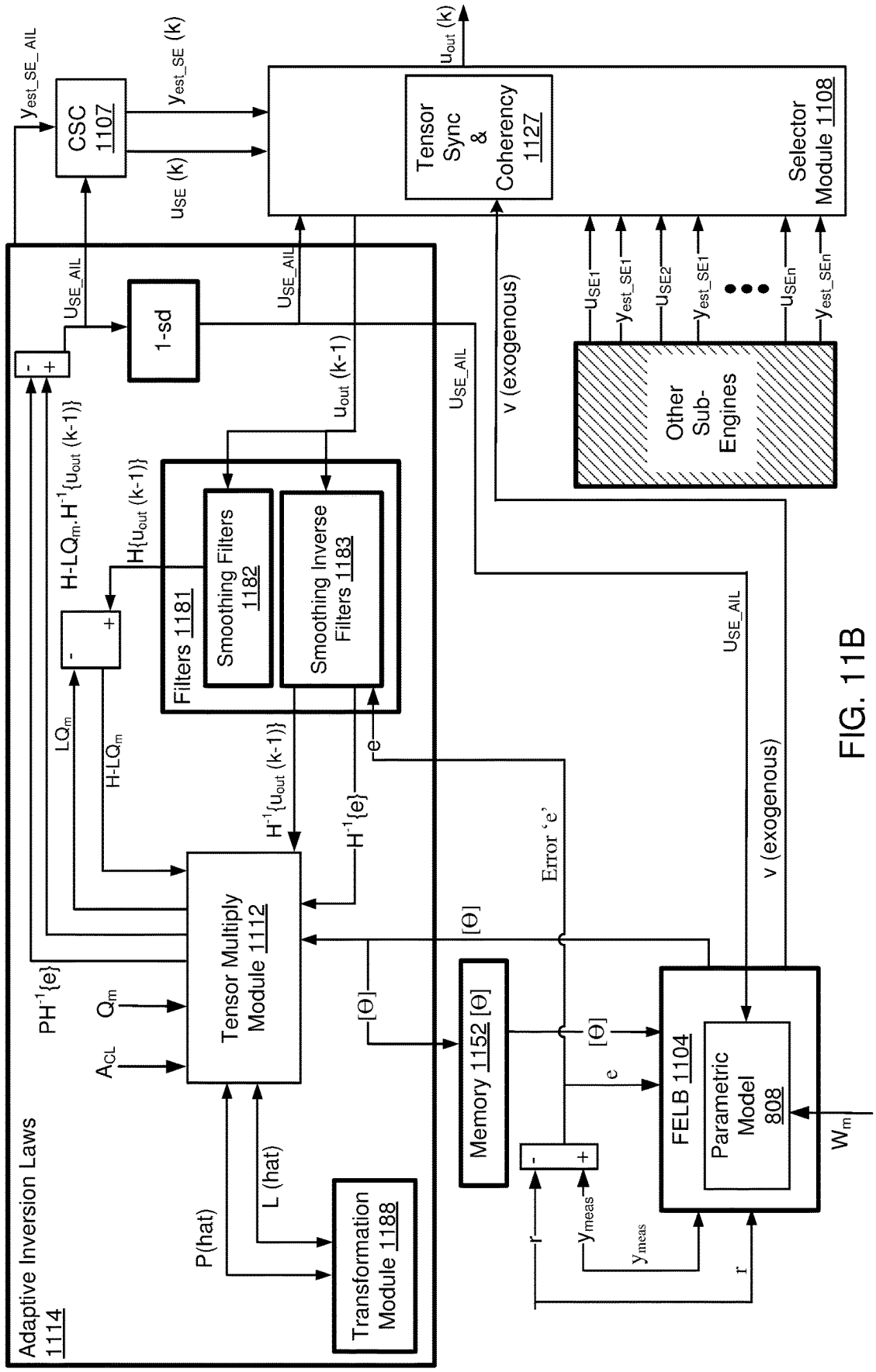
Adaptive Inversion Laws 1114
CSC 1107
$y_{est_SE_AIL}$
y_{est_SE} (k)
u_{SE} (k)
u_{out} (k)
Tensor Sync & Coherency 1127
Selector Module 1108
u_{SE_AIL}
1-sd
u_{out} (k-1)
v (exogenous)
u_{SE1}
y_{est_SE1}
u_{SE2}
y_{est_SE1}
u_{SEn}
y_{est_SEn}
Other Sub-Engines
$H\text{-}LQ_m.H^{-1}\{u_{out}(k-1)\}$
$H\{u_{out}(k-1)\}$
Filters 1181
Smoothing Filters 1182
Smoothing Inverse Filters 1183
LQ_m
$H\text{-}LQ_m$
$H^{-1}\{u_{out}(k-1)\}$
$H^{-1}\{e\}$
e
Error 'e'
$PH^{-1}\{e\}$
Q_m
A_{CL}
Tensor Multiply Module 1112
[Θ]
Memory 1152 [Θ]
FELB 1104
Parametric Model 808
W_m
y_{meas}
r
P(hat)
L (hat)
Transformation Module 1188

FIG. 11B

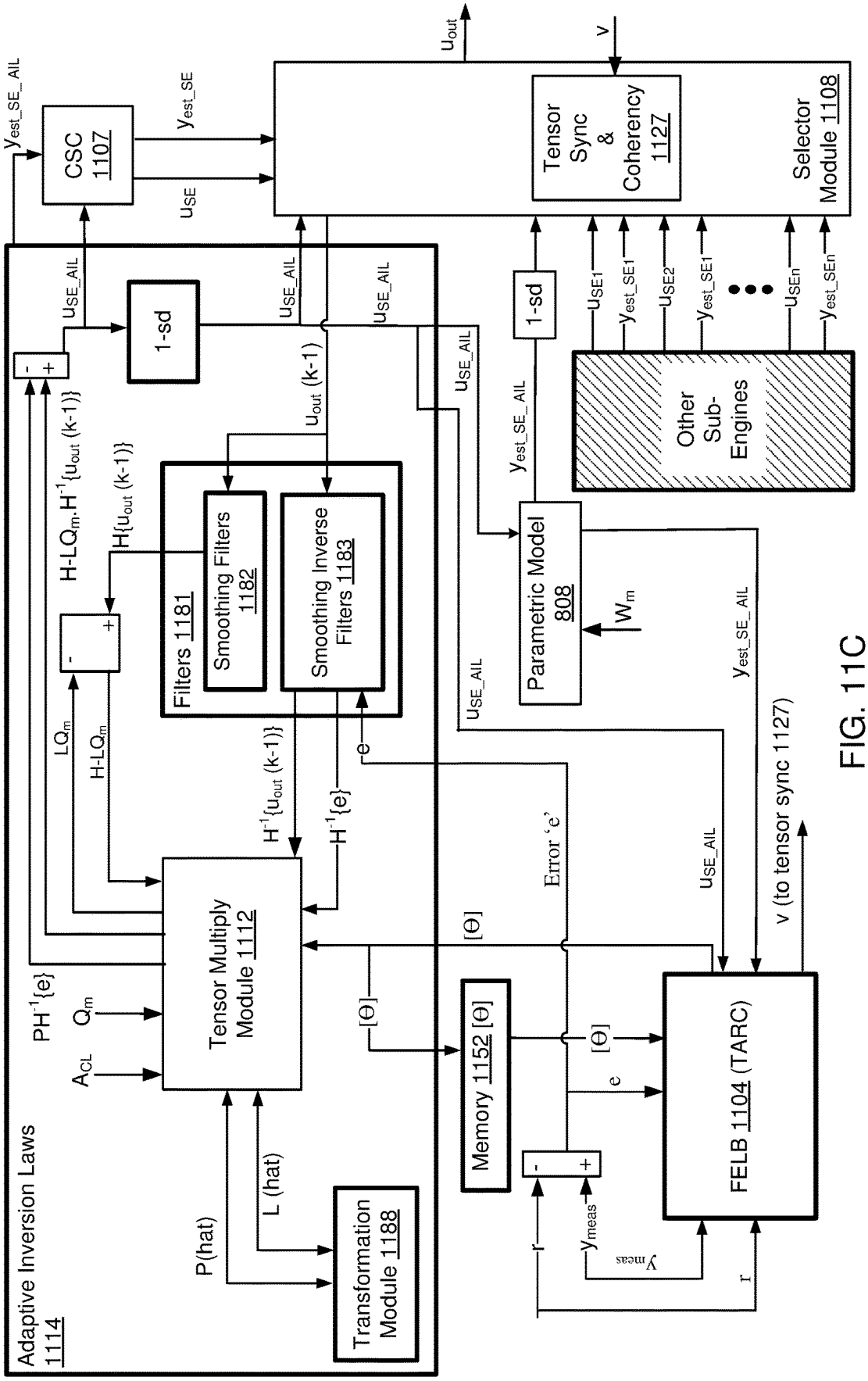
Adaptive Inversion Laws 1114
CSC 1107
$y_{est_SE_AIL}$
y_{est_SE}
u_{SE}
u_{out}
v
Tensor Sync & Coherency 1127
Selector Module 1108
u_{SE_AIL}
1-sd
u_{out} (k-1)
u_{SE1}
y_{est_SE1}
u_{SE2}
y_{est_SE1}
u_{SEn}
y_{est_SEn}
Other Sub-Engines
$y_{est_SE_AIL}$
Parametric Model 808
W_m
Filters 1181
Smoothing Filters 1182
Smoothing Inverse Filters 1183
$H\{u_{out}$ (k-1)$\}$
$H\text{-}LQ_m.H^{-1}\{u_{out}$ (k-1)$\}$
LQ_m
$H\text{-}LQ_m$
$H^{-1}\{u_{out}$ (k-1)$\}$
$H^{-1}\{e\}$
e
Error 'e'
$PH^{-1}\{e\}$
Q_m
A_{CL}
Tensor Multiply Module 1112
[Θ]
Memory 1152 [Θ]
FELB 1104 (TARC)
v (to tensor sync 1127)
P(hat)
L (hat)
Transformation Module 1188
r
y_{meas}

FIG. 11C

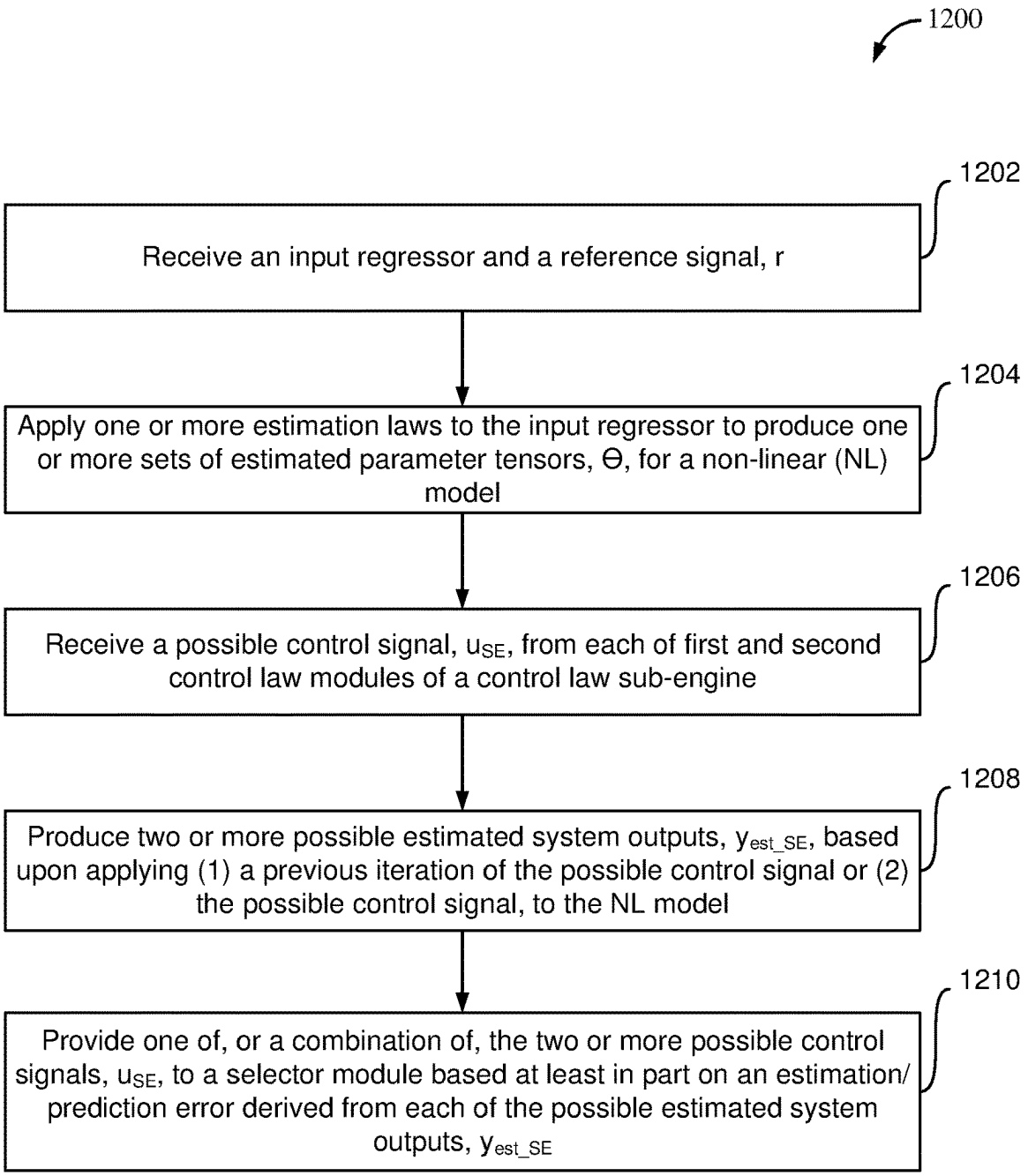
1200
1202
Receive an input regressor and a reference signal, r
1204
Apply one or more estimation laws to the input regressor to produce one or more sets of estimated parameter tensors, Θ, for a non-linear (NL) model
1206
Receive a possible control signal, u_{SE}, from each of first and second control law modules of a control law sub-engine
1208
Produce two or more possible estimated system outputs, y_{est_SE}, based upon applying (1) a previous iteration of the possible control signal or (2) the possible control signal, to the NL model
1210
Provide one of, or a combination of, the two or more possible control signals, u_{SE}, to a selector module based at least in part on an estimation/prediction error derived from each of the possible estimated system outputs, y_{est_SE}

FIG. 12

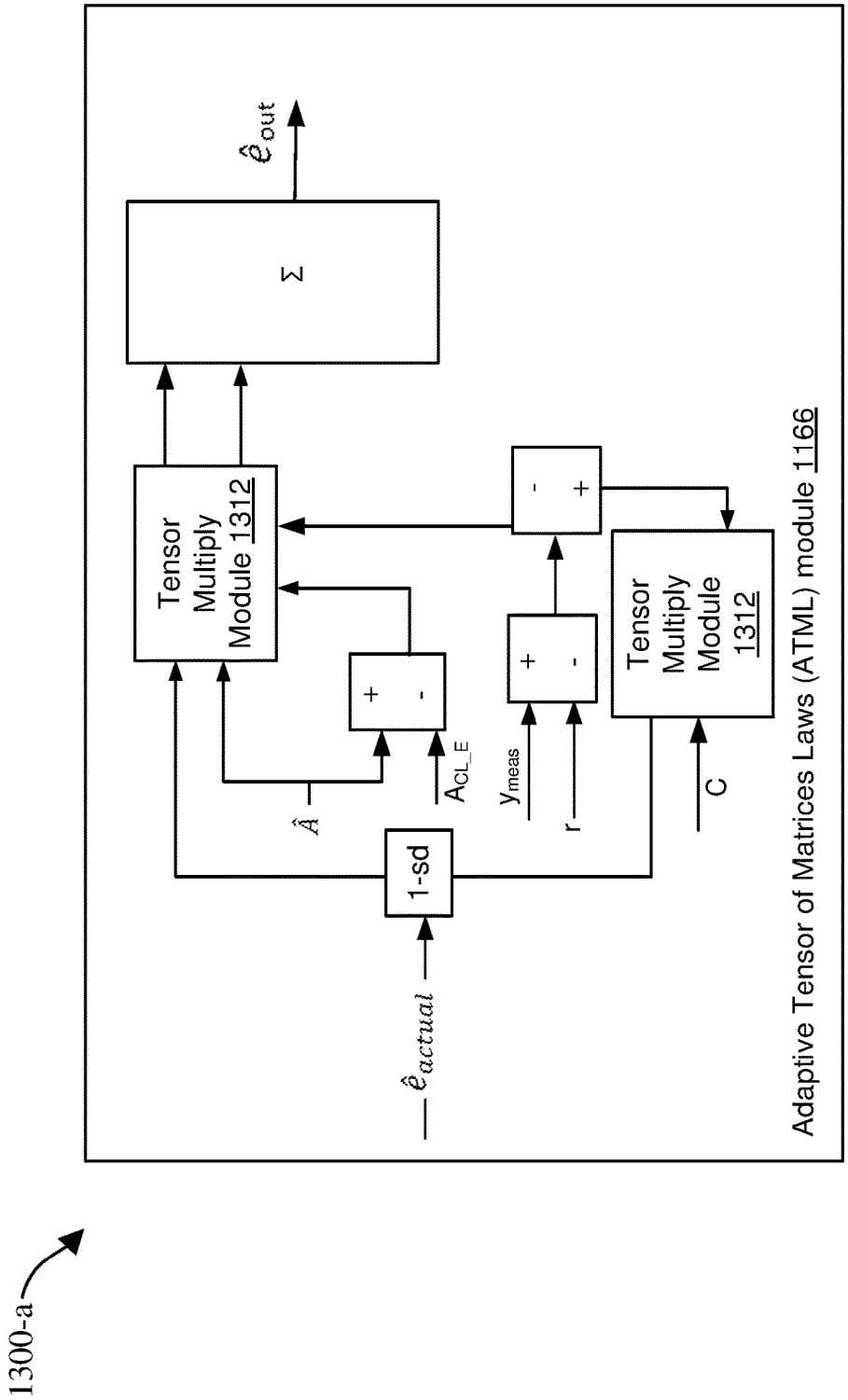
1300-a
$\hat{e}_{actual}$
1-sd
$\hat{A}$
+
-
A_{CL_E}
Tensor Multiply Module 1312
y_{meas}
r
+
-
-
+
Tensor Multiply Module 1312
C
Σ
$\hat{e}_{out}$
Adaptive Tensor of Matrices Laws (ATML) module 1166

FIG. 13A

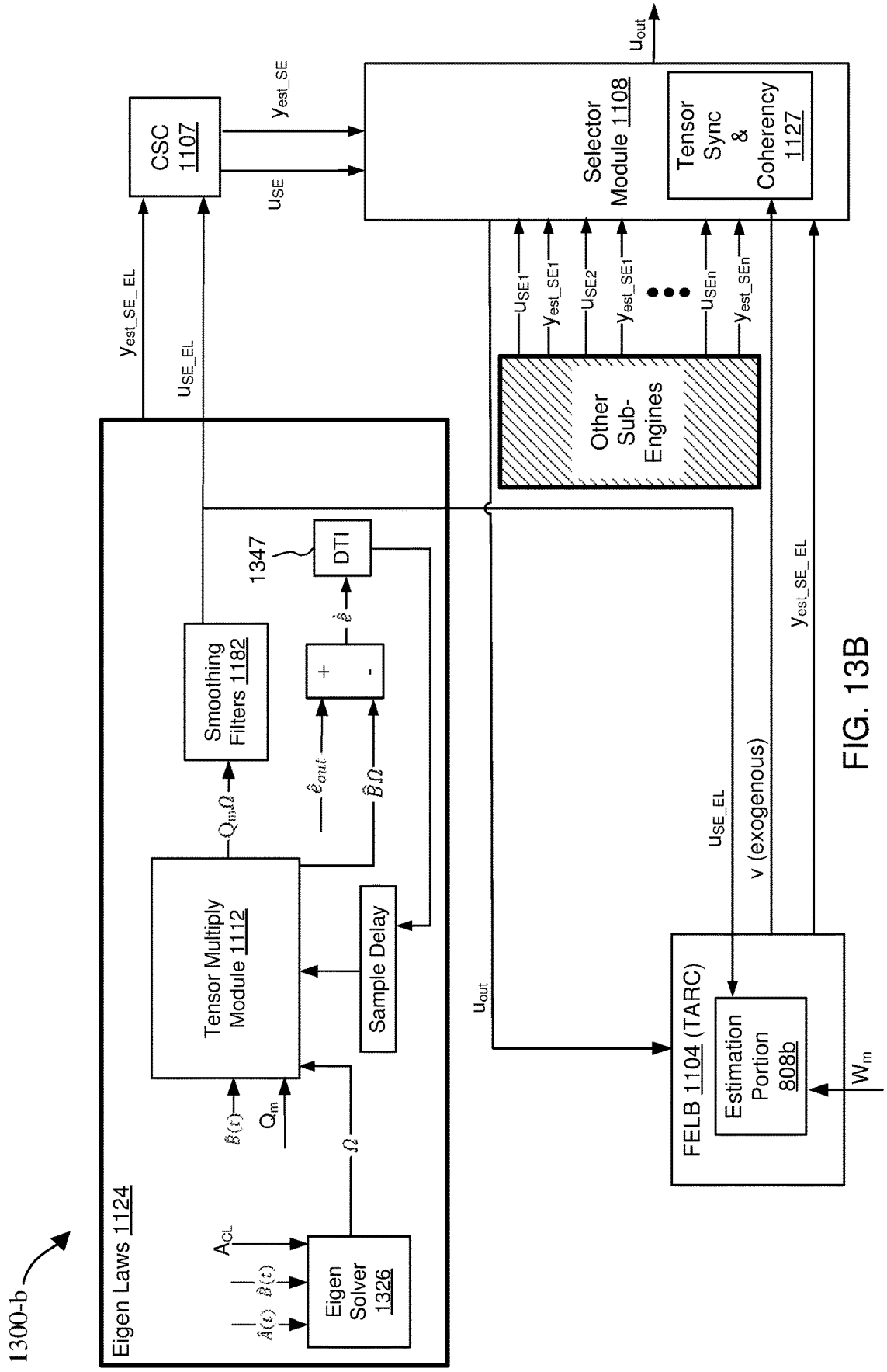
1300-b
Eigen Laws 1124
Eigen Solver 1326
Tensor Multiply Module 1112
Sample Delay
Smoothing Filters 1182
DTI
1347
CSC 1107
Selector Module 1108
Tensor Sync & Coherency 1127
Other Sub-Engines
FELB 1104 (TARC)
Estimation Portion 808b
v (exogenous)

FIG. 13B

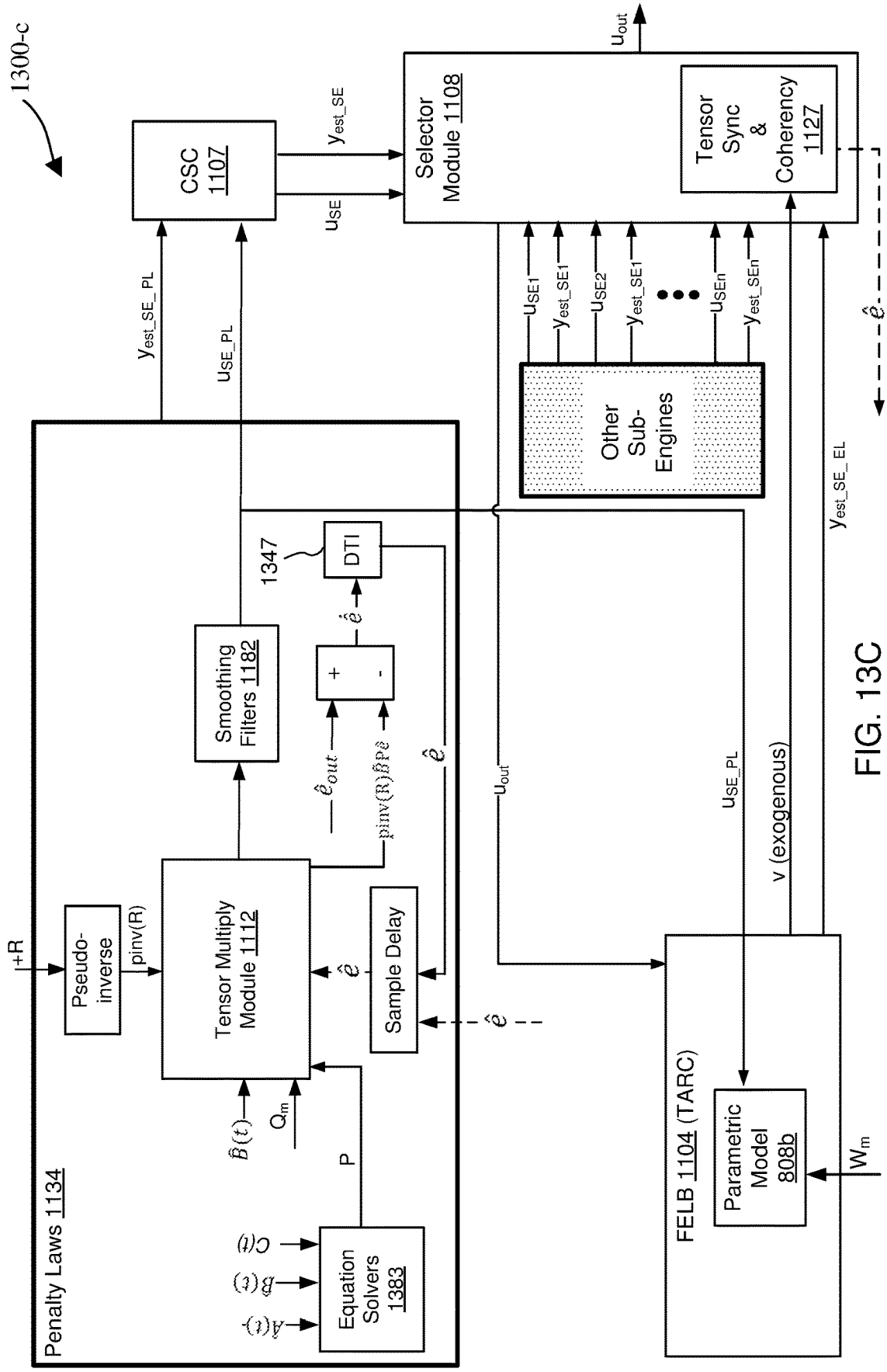
1300-c
CSC 1107
y_{est_SE}
u_{SE}
Selector Module 1108
u_{out}
Tensor Sync & Coherency 1127
$y_{est_SE_PL}$
u_{SE_PL}
u_{SE1}
y_{est_SE1}
u_{SE2}
y_{est_SE1}
u_{SEn}
y_{est_SEn}
Other Sub-Engines
$\hat{e}$
$y_{est_SE_EL}$
1347
DTI
Smoothing Filters 1182
+
-
$\hat{e}_{out}$
$\mathrm{pinv}(R)\hat{B}P\hat{e}$
$\hat{e}$
u_{out}
u_{SE_PL}
v (exogenous)
+R
Pseudo-inverse
pinv(R)
Tensor Multiply Module 1112
$\hat{e}$
Sample Delay
$\hat{e}$
$\hat{B}(t)$
Q_m
P
Penalty Laws 1134
$C(t)$
$B(t)$
$A(t)$
Equation Solvers 1383
FELB 1104 (TARC)
Parametric Model 808b
W_m

FIG. 13C

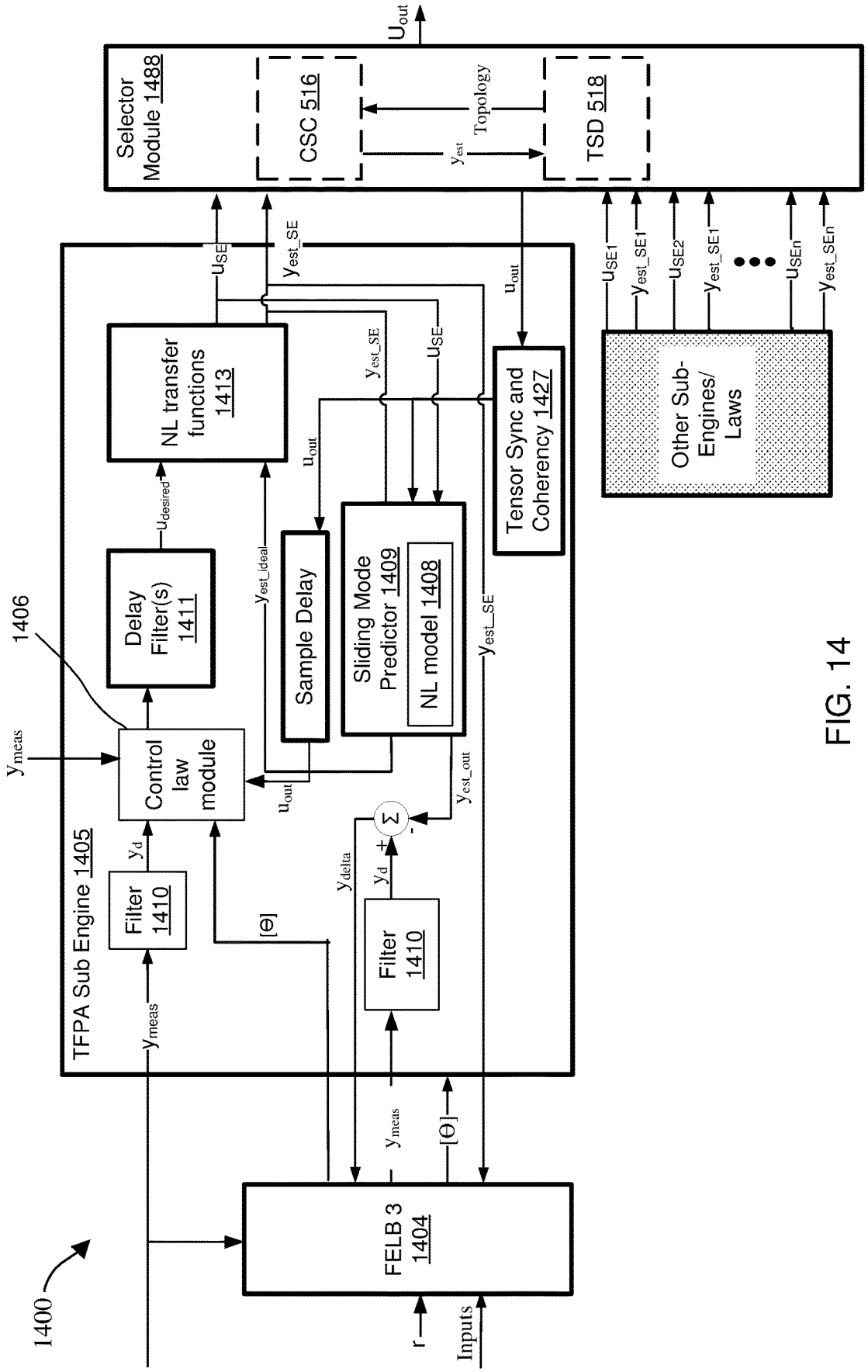
Selector Module 1488
CSC 516
Topology
y_{est}
TSD 518
u_{out}
u_{SE}
y_{est_SE}
u_{SE1}
y_{est_SE1}
u_{SE2}
y_{est_SE1}
u_{SEn}
y_{est_SEn}
Other Sub-Engines/ Laws
NL transfer functions 1413
Tensor Sync and Coherency 1427
$u_{desired}$
Delay Filter(s) 1411
y_{est_ideal}
Sample Delay
Sliding Mode Predictor 1409
NL model 1408
y_{est_out}
1406
y_{meas}
Control law module
TFPA Sub Engine 1405
y_d
Filter 1410
[Θ]
y_{delta}
Σ
+
-
1400
FELB 3 1404
r
Inputs

FIG. 14

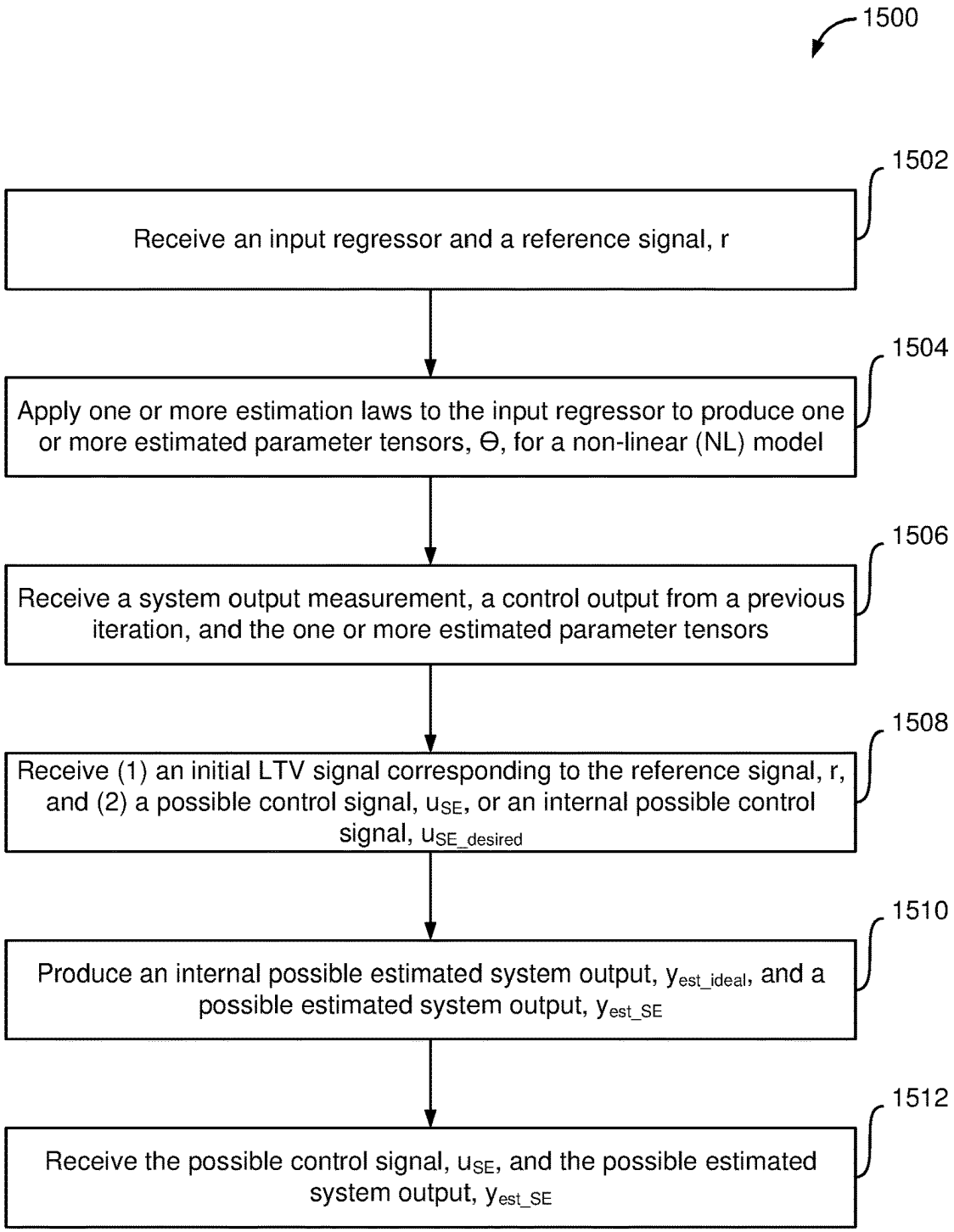
1500
1502
Receive an input regressor and a reference signal, r
1504
Apply one or more estimation laws to the input regressor to produce one or more estimated parameter tensors, Θ, for a non-linear (NL) model
1506
Receive a system output measurement, a control output from a previous iteration, and the one or more estimated parameter tensors
1508
Receive (1) an initial LTV signal corresponding to the reference signal, r, and (2) a possible control signal, u_{SE}, or an internal possible control signal, $u_{SE_desired}$
1510
Produce an internal possible estimated system output, y_{est_ideal}, and a possible estimated system output, y_{est_SE}
1512
Receive the possible control signal, u_{SE}, and the possible estimated system output, y_{est_SE}

FIG. 15

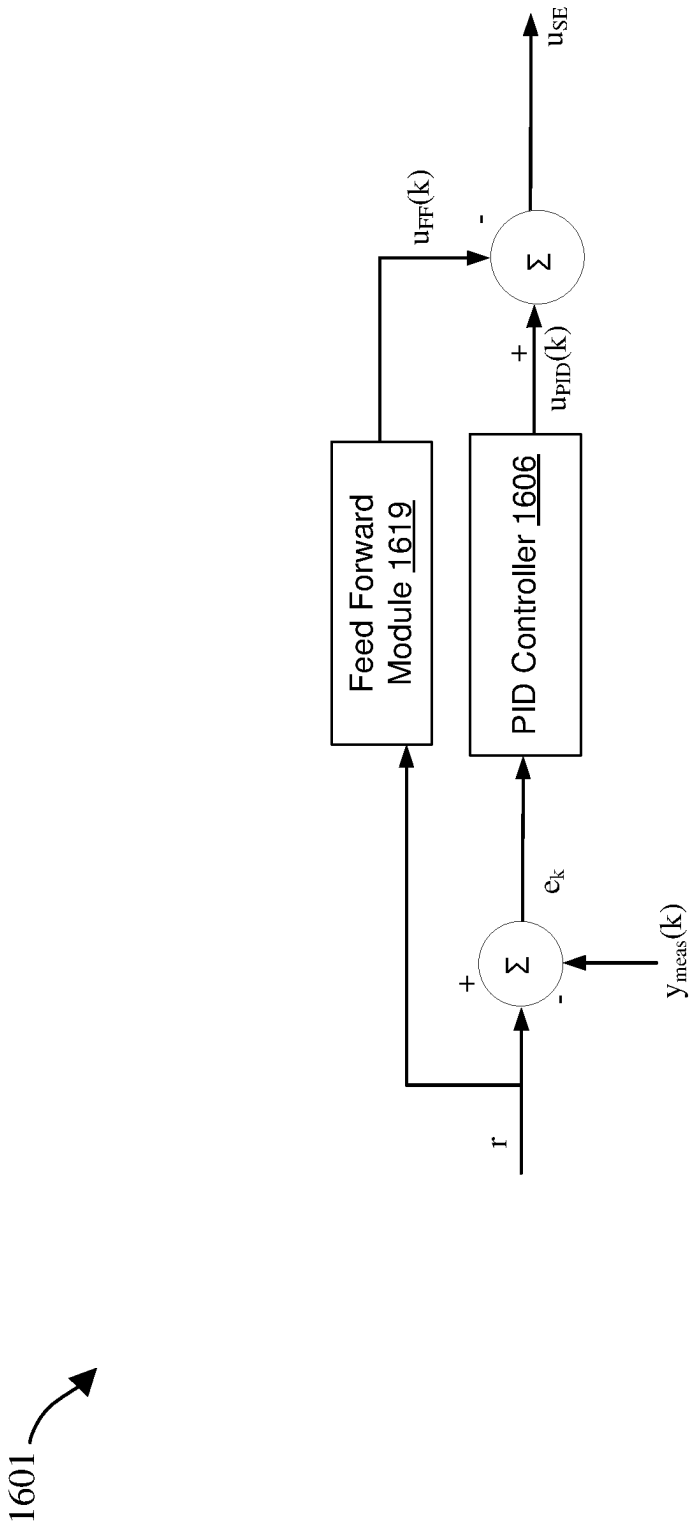
1601
r
Feed Forward Module 1619
+
Σ
-
$y_{meas}(k)$
e_k
PID Controller 1606
$u_{PID}(k)$
+
Σ
-
$u_{FF}(k)$
u_{SE}

FIG. 16

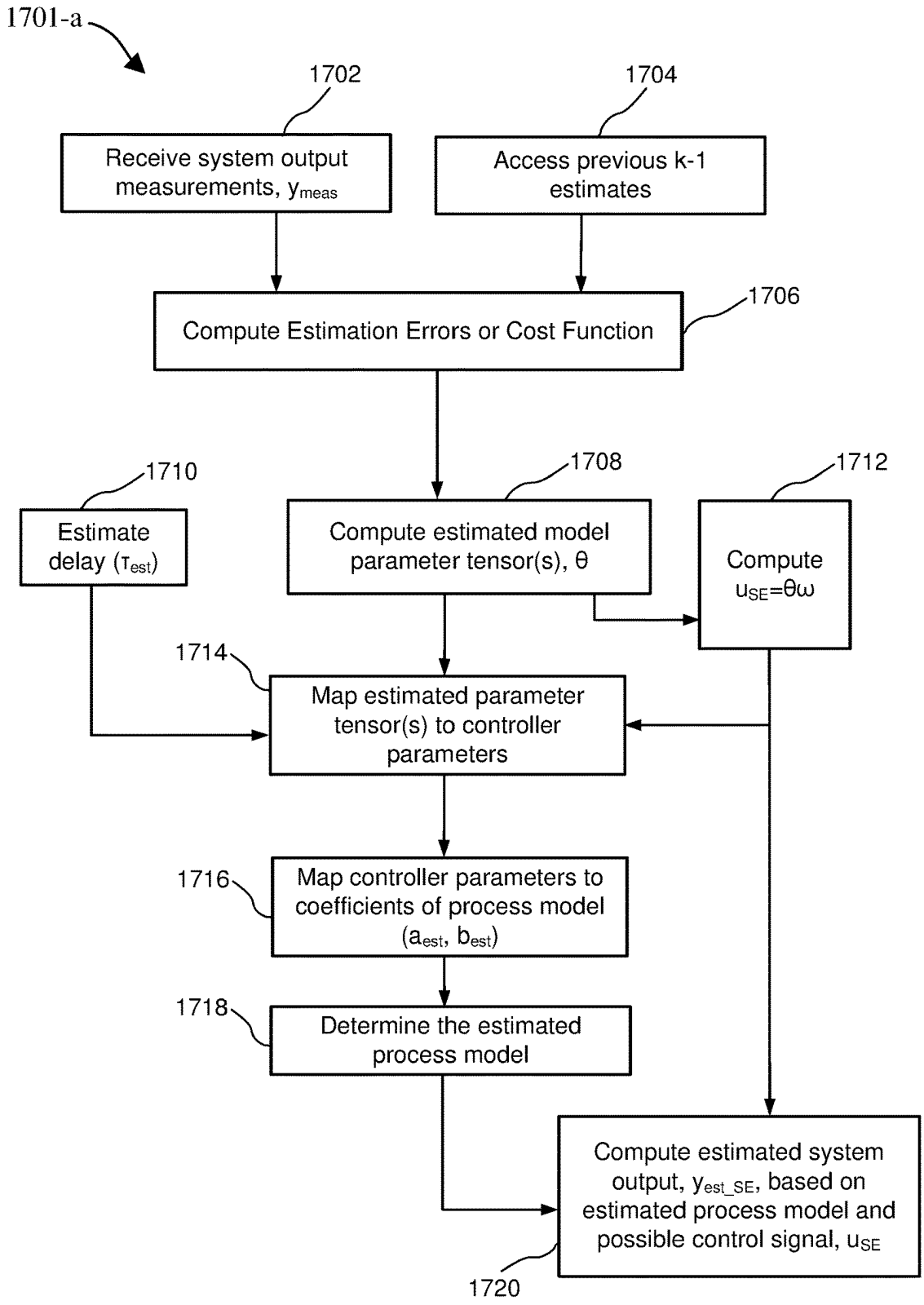
1701-a
1702
Receive system output measurements, y_{meas}
1704
Access previous k-1 estimates
1706
Compute Estimation Errors or Cost Function
1710
Estimate delay (τ_{est})
1708
Compute estimated model parameter tensor(s), θ
1712
Compute $u_{SE}=\theta\omega$
1714
Map estimated parameter tensor(s) to controller parameters
1716
Map controller parameters to coefficients of process model (a_{est}, b_{est})
1718
Determine the estimated process model
Compute estimated system output, y_{est_SE}, based on estimated process model and possible control signal, u_{SE}
1720

FIG. 17A

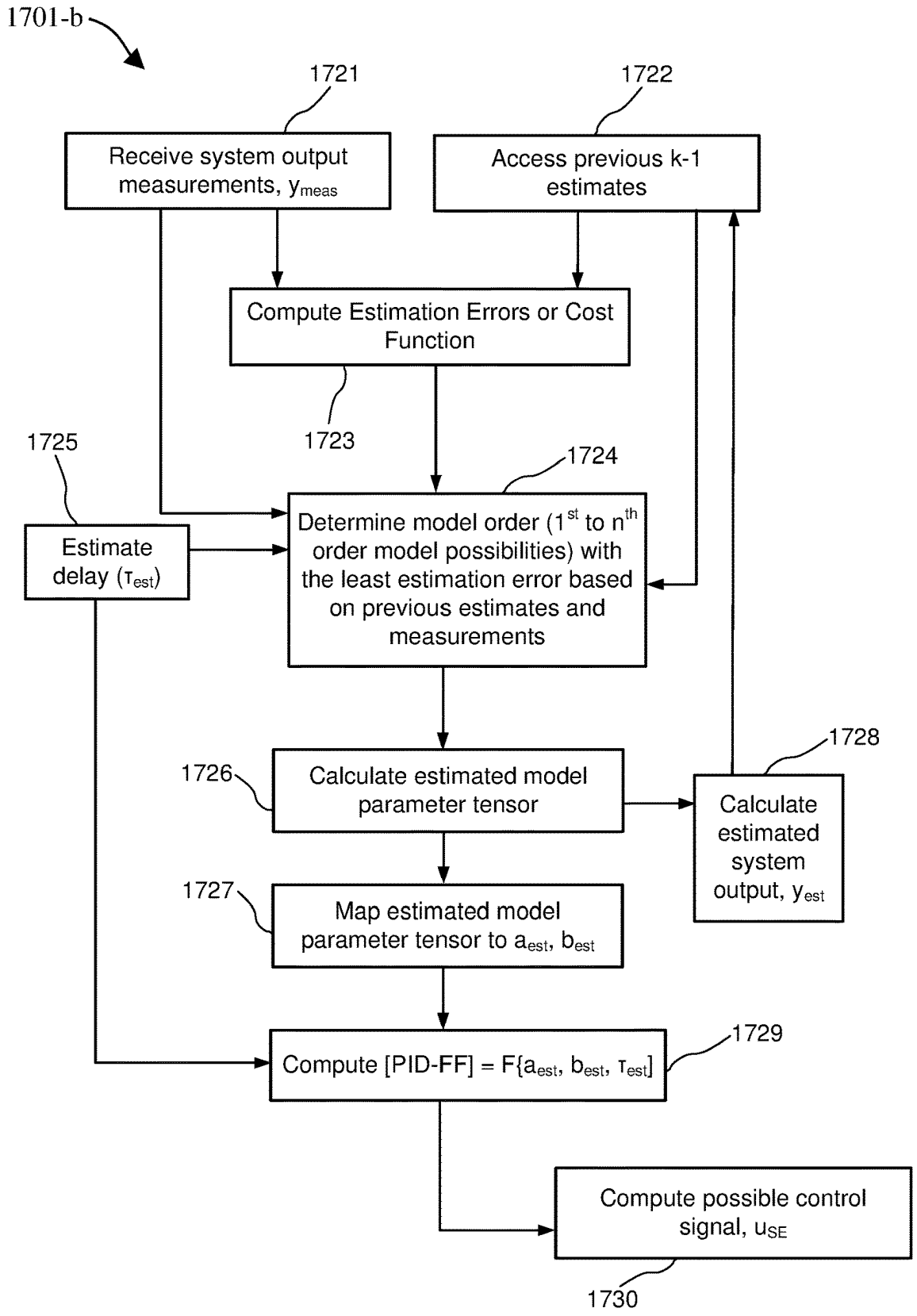
1701-b
1721
Receive system output measurements, y_{meas}
1722
Access previous k-1 estimates
Compute Estimation Errors or Cost Function
1723
1725
1724
Estimate delay (τ_{est})
Determine model order (1st to n^{th} order model possibilities) with the least estimation error based on previous estimates and measurements
1728
1726
Calculate estimated model parameter tensor
Calculate estimated system output, y_{est}
1727
Map estimated model parameter tensor to a_{est}, b_{est}
1729
Compute [PID-FF] = F{a_{est}, b_{est}, τ_{est}}
Compute possible control signal, u_{SE}
1730

FIG. 17B

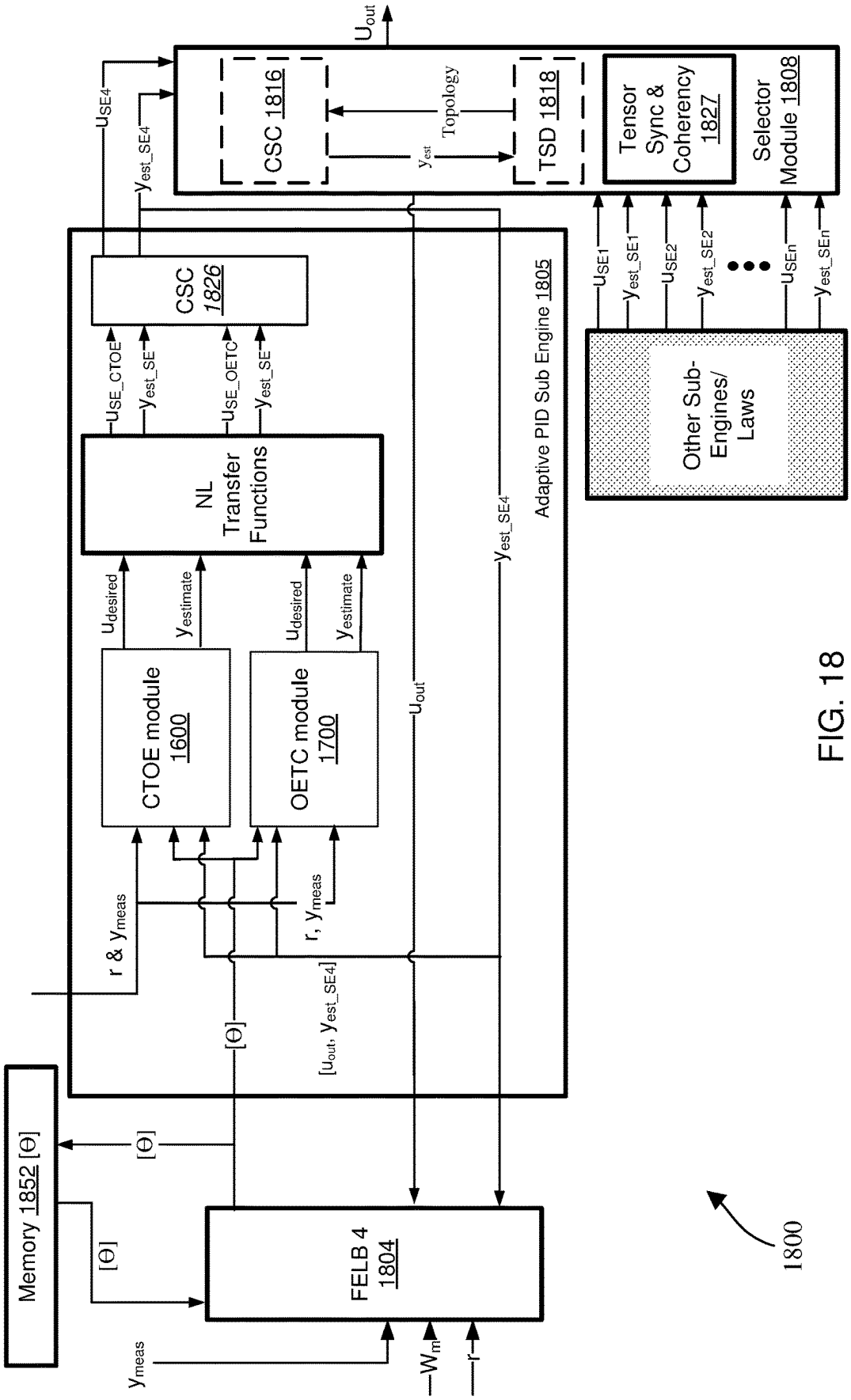
u_{out}
u_{SE4}
y_{est_SE4}
CSC 1816
Topology
y_{est}
TSD 1818
Tensor Sync & Coherency 1827
Selector Module 1808
CSC 1826
u_{SE_CTOE}
y_{est_SE}
u_{SE_OETC}
y_{est_SE}
NL Transfer Functions
$u_{desired}$
$y_{estimate}$
$u_{desired}$
$y_{estimate}$
CTOE module 1600
OETC module 1700
r & y_{meas}
r, y_{meas}
[Θ]
[u_{out}, y_{est_SE4}]
u_{out}
y_{est_SE4}
Adaptive PID Sub Engine 1805
u_{SE1}
y_{est_SE1}
u_{SE2}
y_{est_SE2}
u_{SEn}
y_{est_SEn}
Other Sub-Engines/ Laws
Memory 1852 [Θ]
[Θ]
[Θ]
FELB 4 1804
y_{meas}
W_m
r
1800

FIG. 18

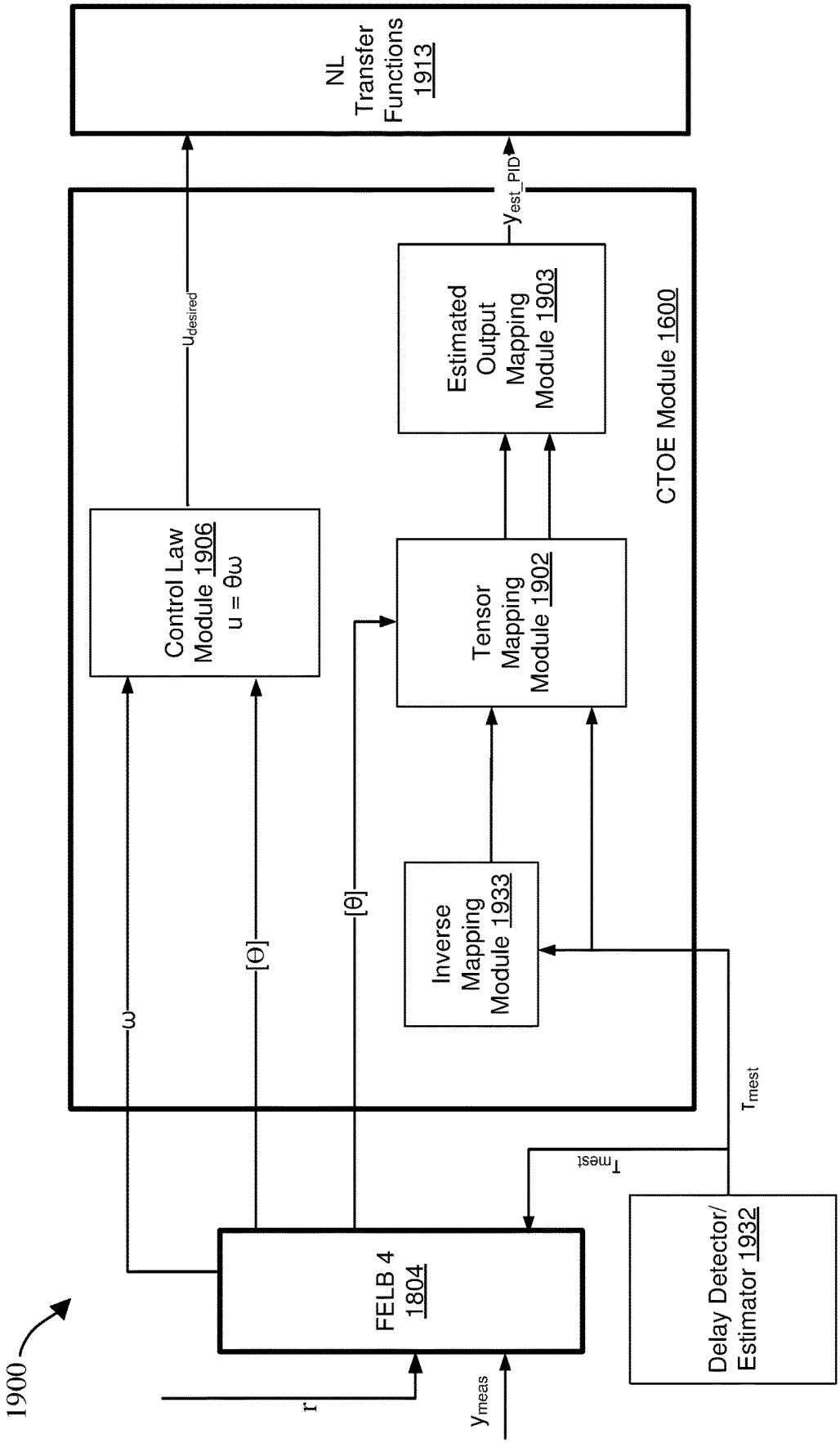
1900
NL Transfer Functions 1913
y_{est_PID}
$u_{desired}$
Estimated Output Mapping Module 1903
CTOE Module 1600
Control Law Module 1906 u = θω
Tensor Mapping Module 1902
Inverse Mapping Module 1933
ω
[Θ]
[θ]
τ_{mest}
T_{mest}
FELB 4 1804
Delay Detector/ Estimator 1932
r
y_{meas}

FIG. 19

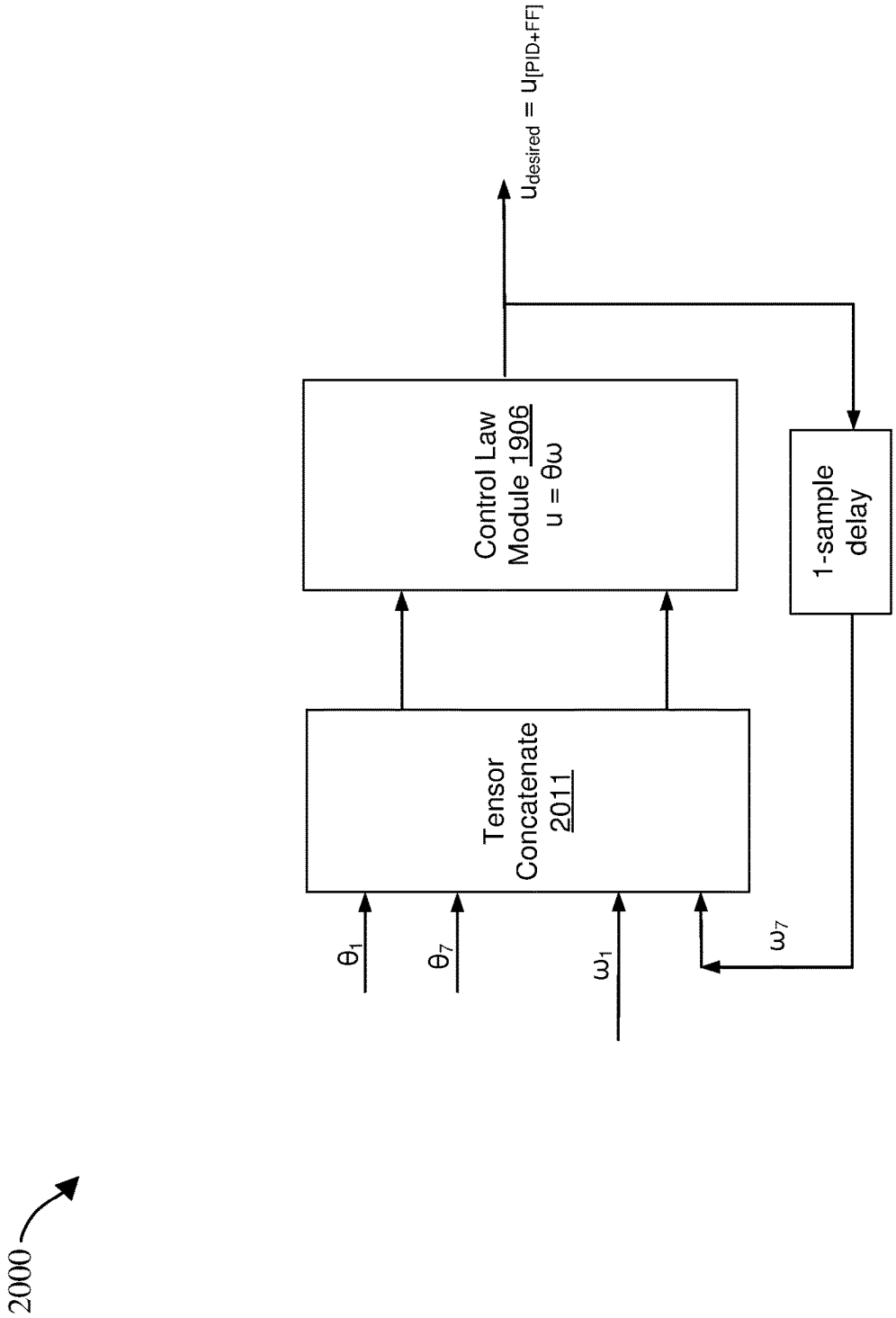
2000
θ1
θ7
ω1
ω7
Tensor Concatenate 2011
Control Law Module 1906
u = θω
1-sample delay
udesired = u[PID+FF]

FIG. 20

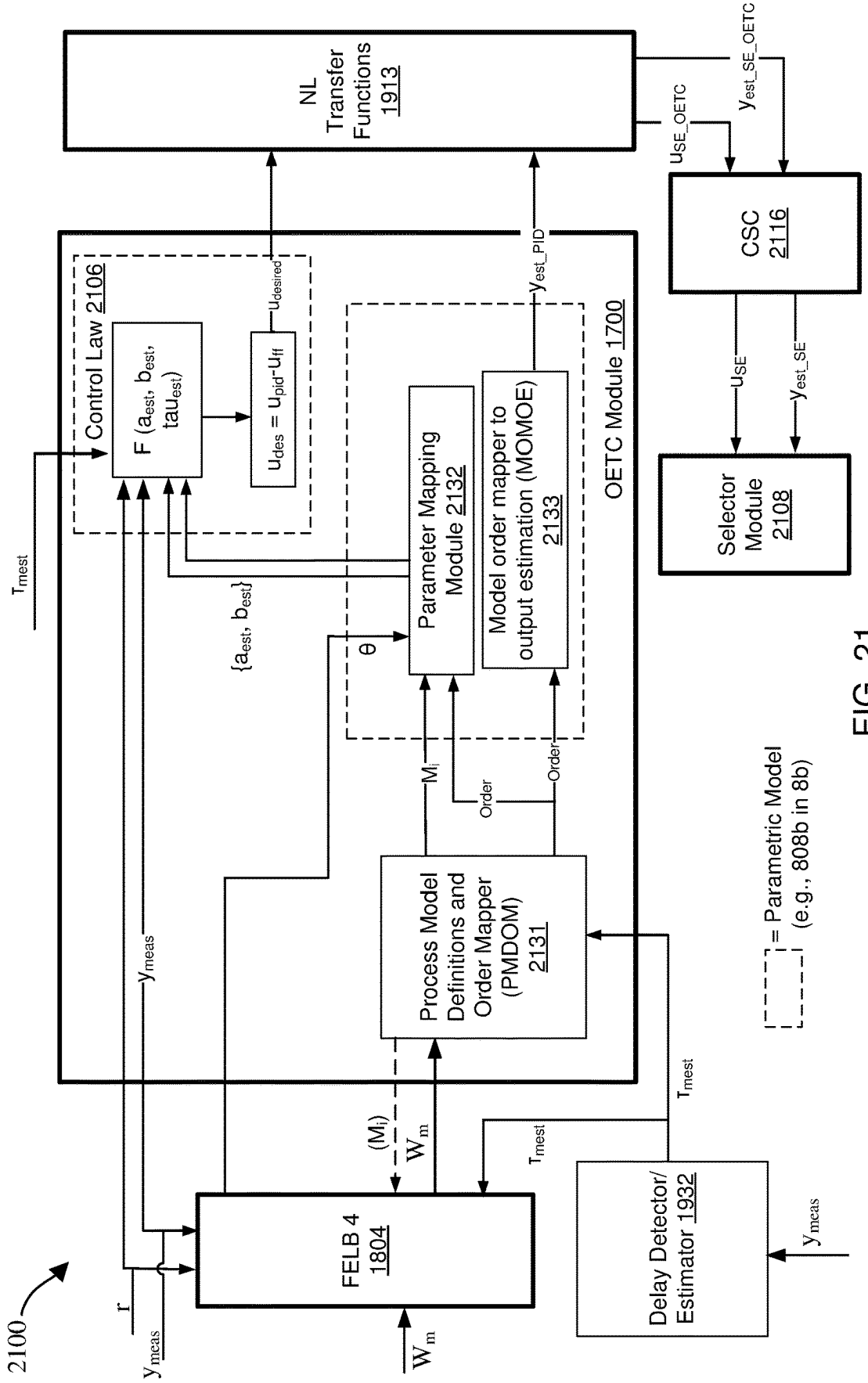
2100
NL Transfer Functions 1913
$y_{est_SE_OETC}$
u_{SE_OETC}
CSC 2116
u_{SE}
y_{est_SE}
Selector Module 2108
y_{est_PID}
OETC Module 1700
Control Law 2106
F (a_{est}, b_{est}, tau_{est})
$u_{desired}$
$u_{des} = u_{pid} - u_{ff}$
τ_{mest}
$\{a_{est}, b_{est}\}$
θ
Parameter Mapping Module 2132
Model order mapper to output estimation (MOMOE) 2133
M_i
Order
Order
Process Model Definitions and Order Mapper (PMDOM) 2131
y_{meas}
(M_i)
W_m
τ_{mest}
τ_{mest}
FELB 4 1804
Delay Detector/ Estimator 1932
y_{meas}
r
y_{meas}
W_m
= Parametric Model (e.g., 808b in 8b)

FIG. 21

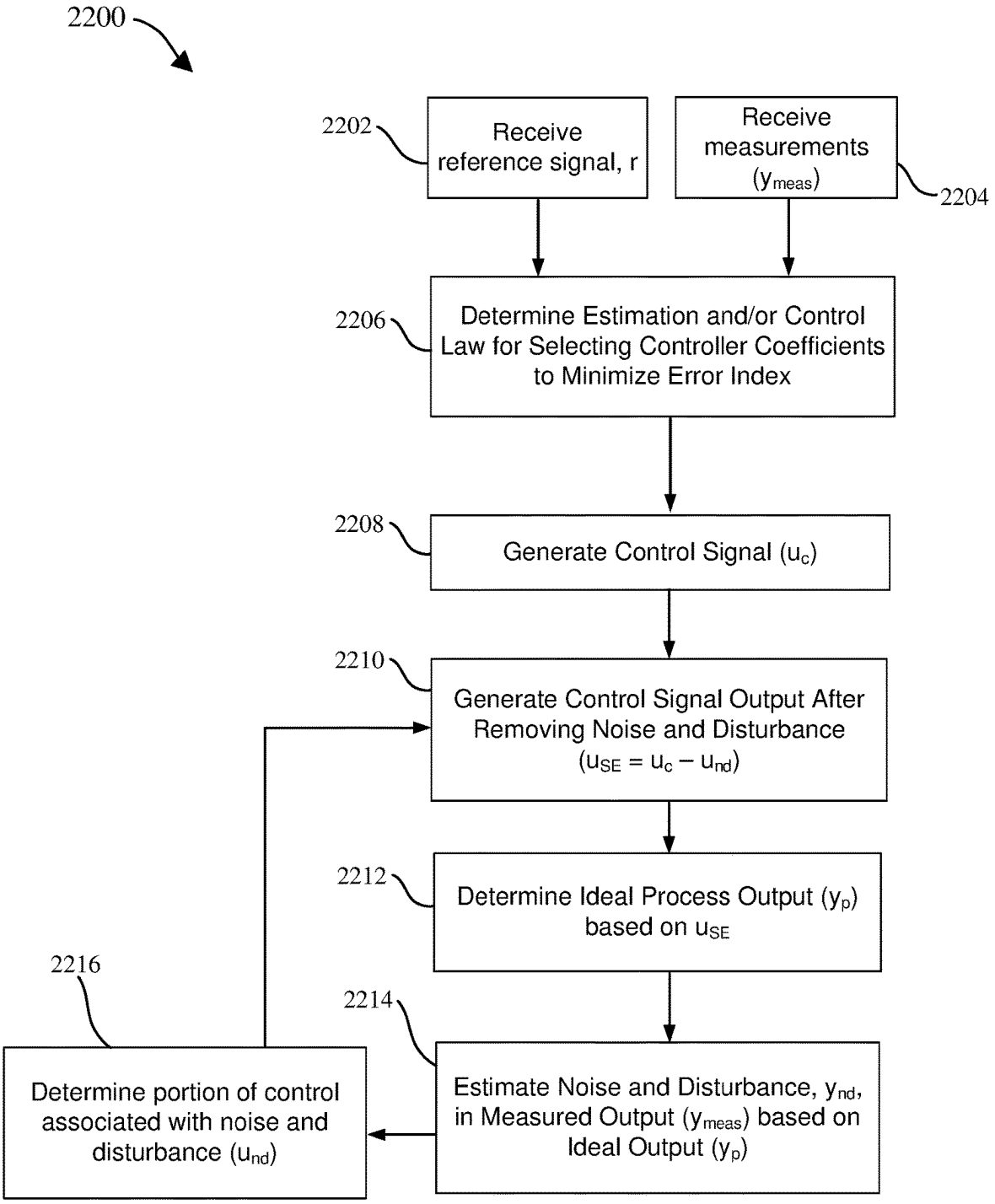
2200
2202
Receive reference signal, r
Receive measurements (y_{meas})
2204
2206
Determine Estimation and/or Control Law for Selecting Controller Coefficients to Minimize Error Index
2208
Generate Control Signal (u_c)
2210
Generate Control Signal Output After Removing Noise and Disturbance ($u_{SE} = u_c - u_{nd}$)
2212
Determine Ideal Process Output (y_p) based on u_{SE}
2216
2214
Determine portion of control associated with noise and disturbance (u_{nd})
Estimate Noise and Disturbance, y_{nd}, in Measured Output (y_{meas}) based on Ideal Output (y_p)

FIG. 22

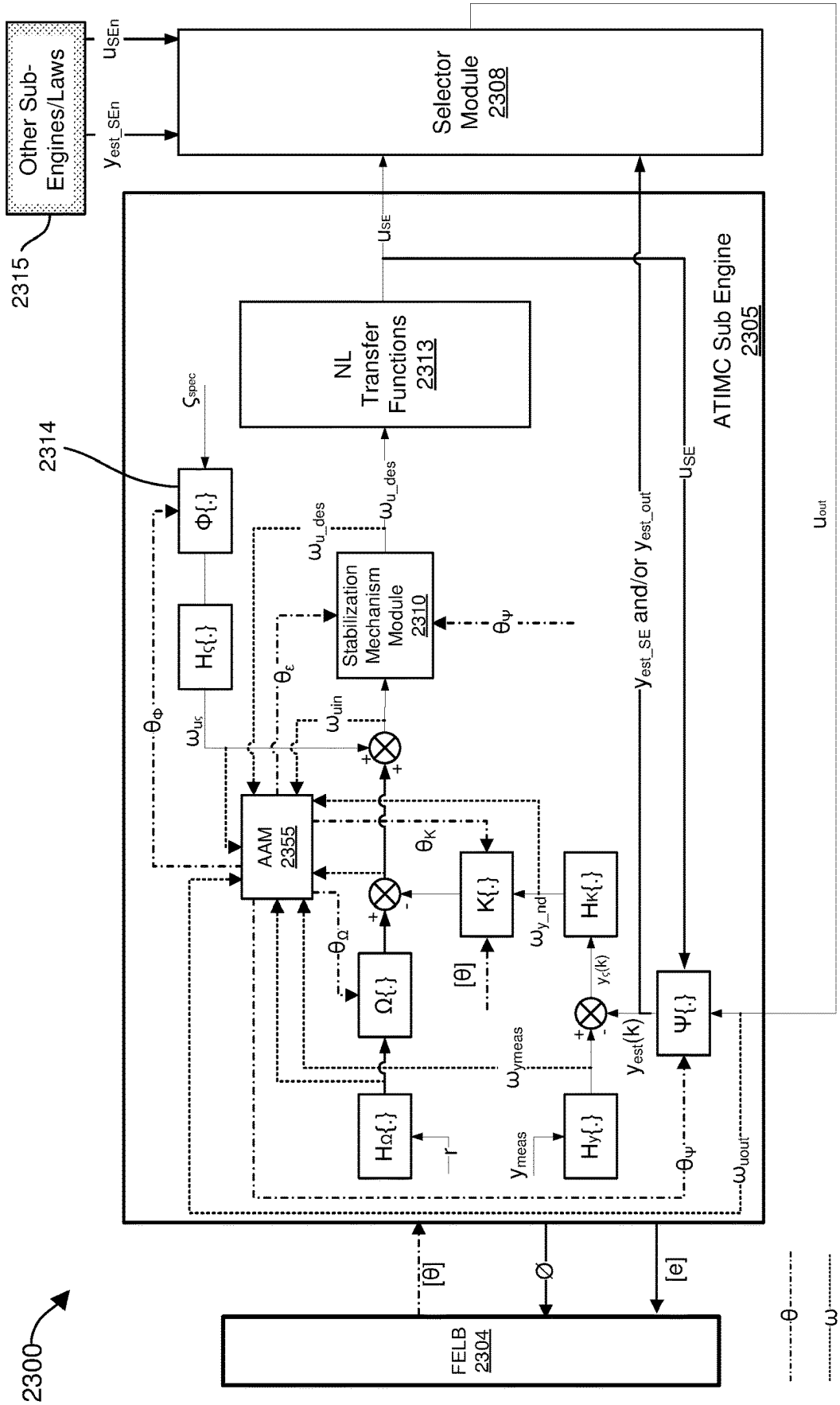
2300
FELB 2304
[θ]
Ø
[e]
θ
ω
2314
2315
Other Sub-Engines/Laws
u_{SEn}
y_{est_SEn}
Selector Module 2308
u_{SE}
NL Transfer Functions 2313
ATIMC Sub Engine 2305
u_{out}
y_{est_SE} and/or y_{est_out}
u_{SE}
ζ_{spec}
Φ{.}
Hζ{.}
ω_{u_des}
ω_{u_des}
Stabilization Mechanism Module 2310
θ_ψ
θ_ζ
θ_Φ
$\omega_{u\zeta}$
ω_{uin}
AAM 2355
θ_K
K{.}
Hκ{.}
ω_{y_nd}
θ_Ω
Ω{.}
[θ]
$y_\zeta(k)$
ω_{ymeas}
$y_{est}(k)$
Ψ{.}
Hω{.}
r
y_{meas}
Hy{.}
θ_ψ
ω_{uout}

FIG. 23

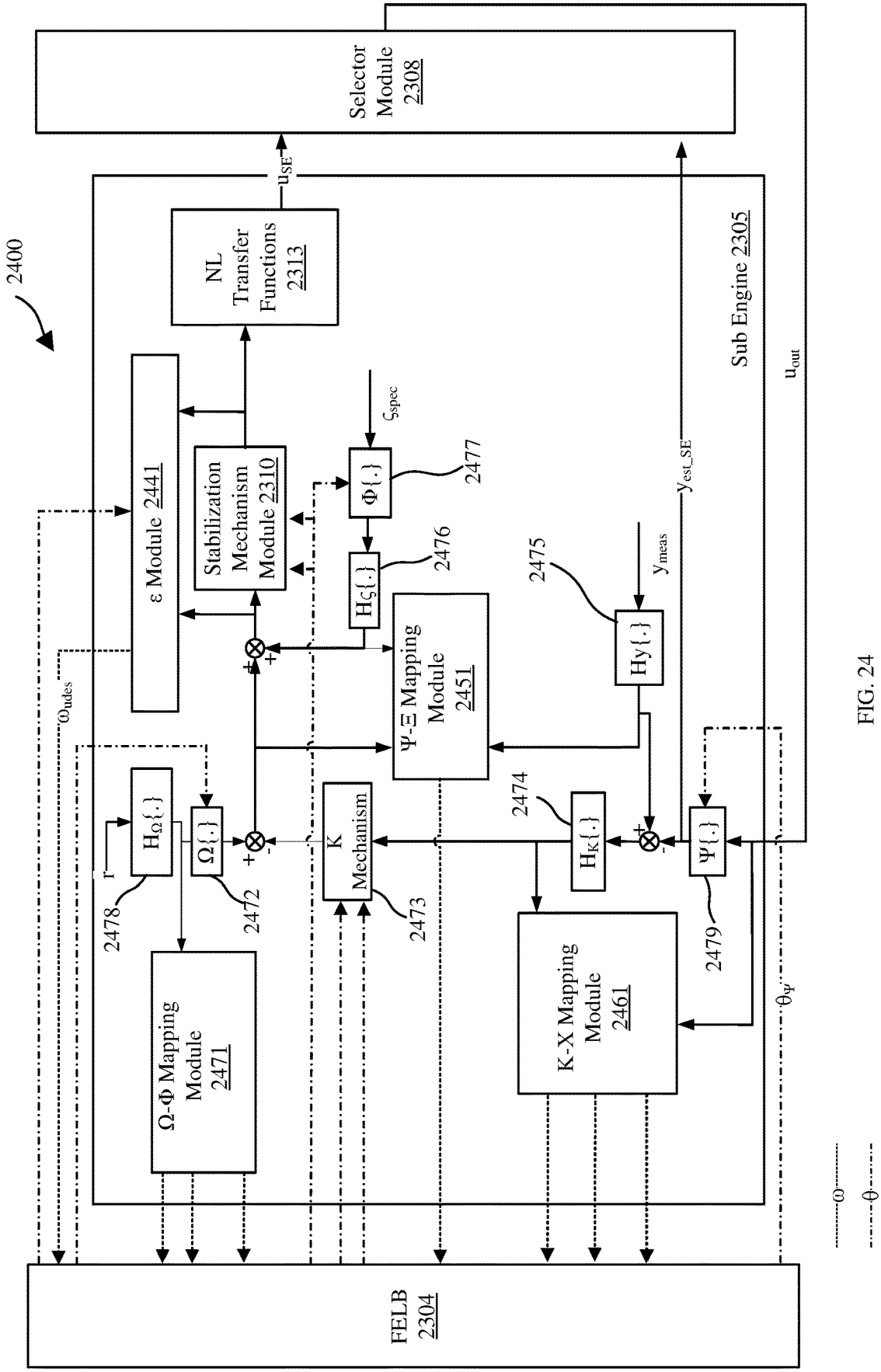
2400
Selector Module 2308
u_{SE}
NL Transfer Functions 2313
ε Module 2441
Stabilization Mechanism Module 2310
ζ_{spec}
Φ{.}
2477
Hζ{.}
2476
Ψ-Ξ Mapping Module 2451
2475
Hy{.}
y_{meas}
y_{est_SE}
Sub Engine 2305
u_{out}
ω_{udes}
HΩ{.}
Ω{.}
2478
2472
K Mechanism
2473
2474
HK{.}
Ψ{.}
2479
Ω-Φ Mapping Module 2471
K-X Mapping Module 2461
θ_Ψ
FELB 2304
ω
θ

FIG. 24

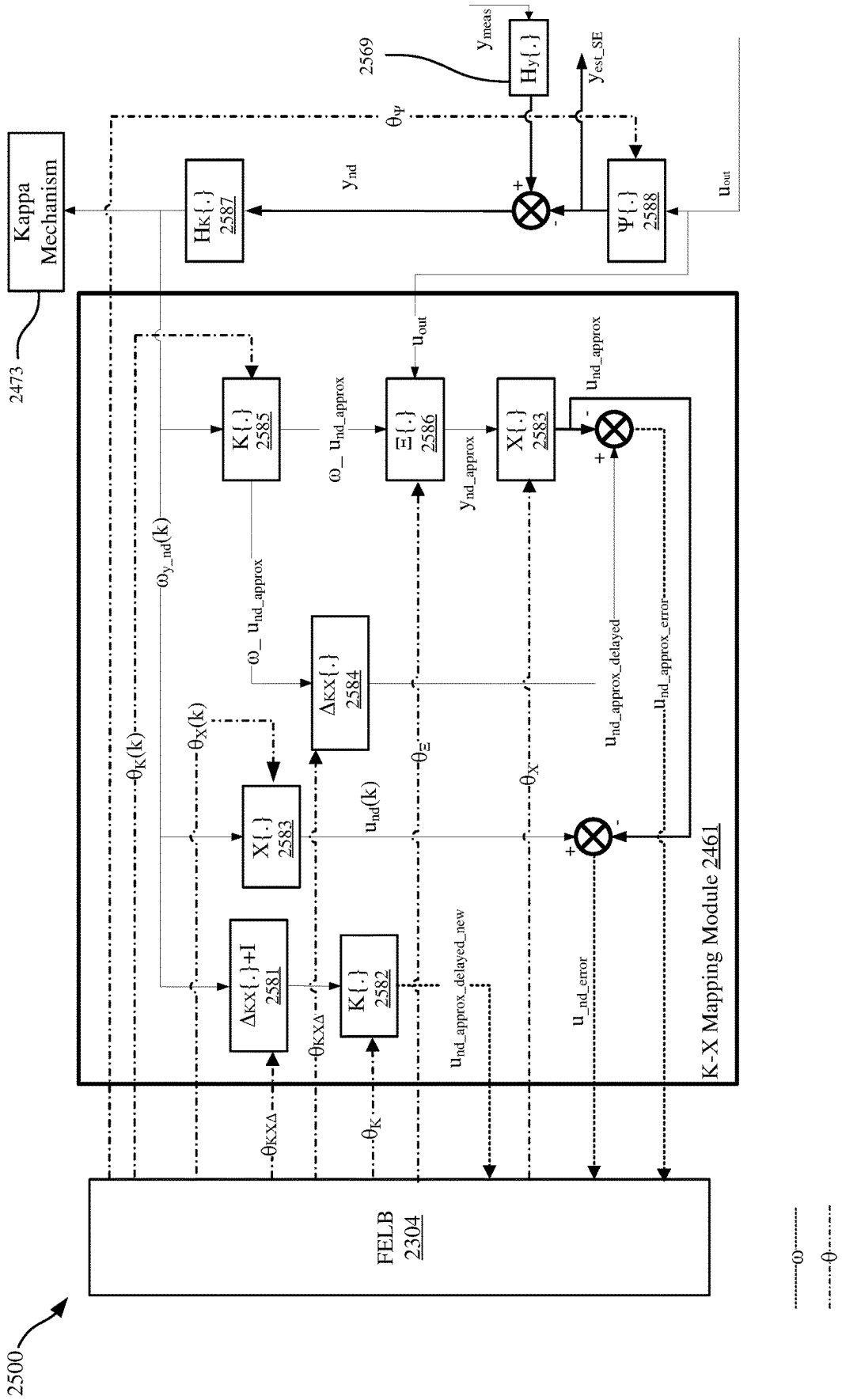
2500
2473
Kappa Mechanism
FELB 2304
K-X Mapping Module 2461
Hκ{.} 2587
Hy{.} 2569
Ψ{.} 2588
K{.} 2585
Ξ{.} 2586
X{.} 2583
ΔKX{.} 2584
ΔKX{.}+I 2581
K{.} 2582
X{.} 2583
ω_ u_nd_approx
y_nd_approx
u_nd_approx
u_nd_approx_delayed
u_nd_approx_error
u_nd_error
u_nd(k)
u_nd_approx_delayed_new
y_nd
y_meas
y_est_SE
u_out
θΨ
θK(k)
θX(k)
ωy_nd(k)
θΞ
θX
θKXΔ
θK
ω
θ

FIG. 25

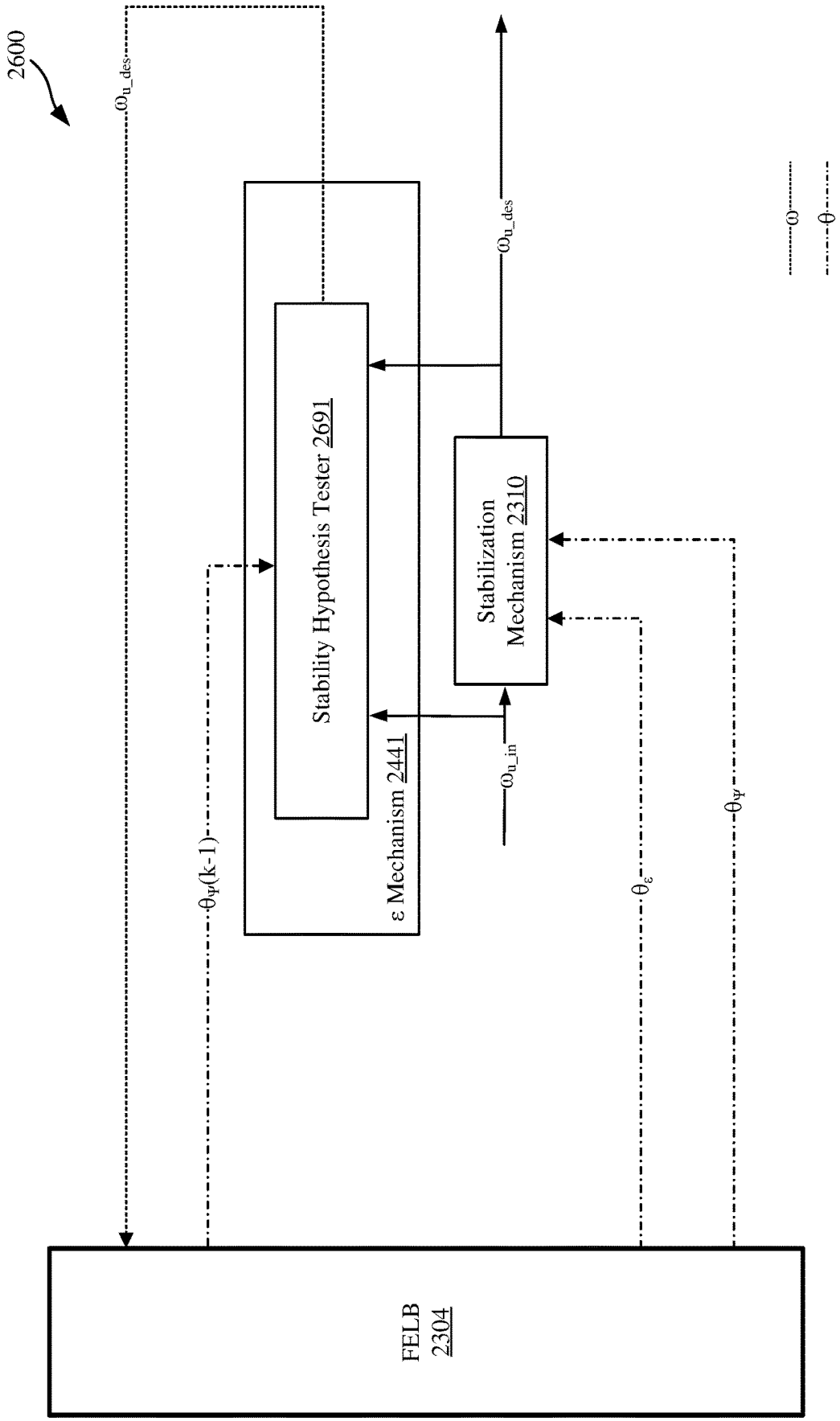
2600
ω_{u_des}
ω_{u_des}
Stability Hypothesis Tester 2691
ε Mechanism 2441
Stabilization Mechanism 2310
ω_{u_in}
$\theta_\Psi(k-1)$
θ_ε
θ_Ψ
FELB 2304
ω
θ

FIG. 26

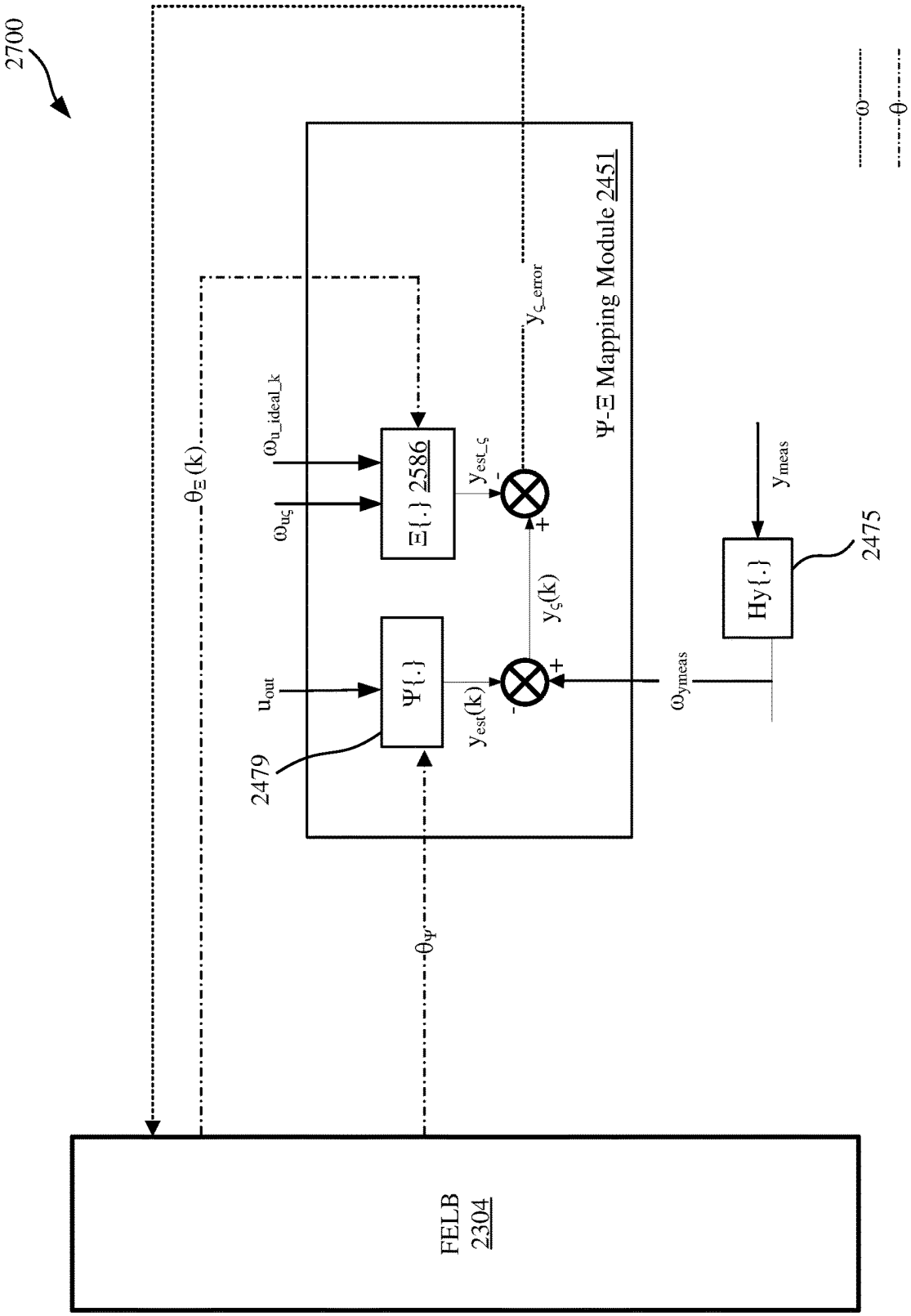
2700
Ψ-Ξ Mapping Module 2451
Ξ{.} 2586
Ψ{.}
2479
Hy{.}
2475
FELB
2304
$\omega_{u_ideal_k}$
$\omega_{u\varsigma}$
u_{out}
$\theta_{\Xi}(k)$
θ_{Ψ}
y_{est_ς}
y_{ς_error}
$y_{\varsigma}(k)$
$y_{est}(k)$
y_{meas}
ω_{ymeas}
ω
θ

FIG. 27

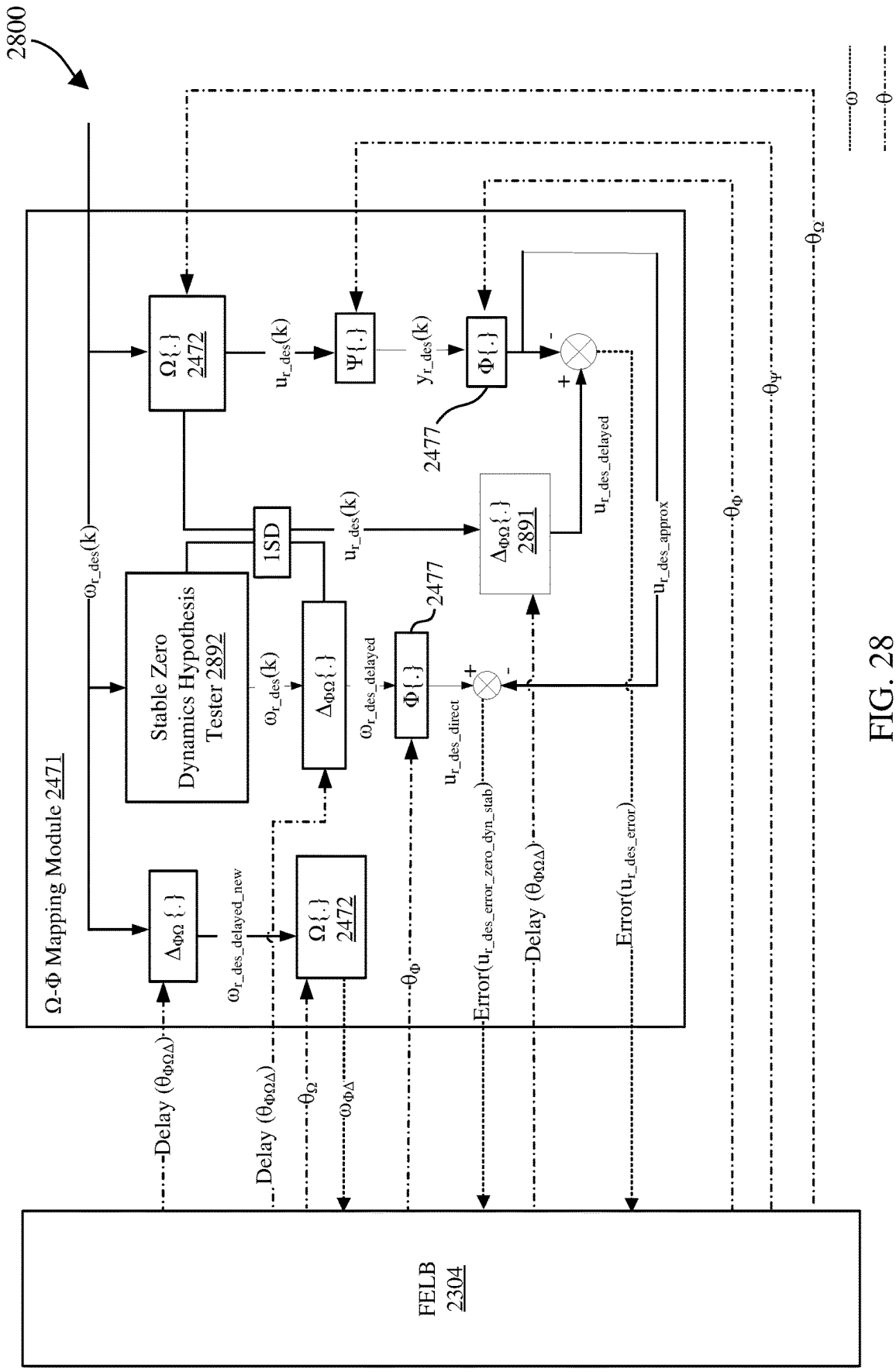
2800
Ω-Φ Mapping Module 2471
Ω{.} 2472
Ψ{.}
Φ{.}
2477
1SD
Stable Zero Dynamics Hypothesis Tester 2892
Δ_ΦΩ{.} 2891
Δ_ΦΩ{.}
Δ_ΦΩ{.}
Ω{.} 2472
ω_r_des(k)
u_r_des(k)
y_r_des(k)
ω_r_des_delayed_new
ω_r_des_delayed
u_r_des_direct
u_r_des_delayed
u_r_des_approx
Delay (θ_ΦΩΔ)
Delay (θ_ΦΩΔ)
θ_Ω
ω_ΦΔ
θ_Φ
Error(u_r_des_error_zero_dyn_stab)
Delay (θ_ΦΩΔ)
Error(u_r_des_error)
θ_Φ
θ_Ψ
θ_Ω
ω
θ
FELB 2304

FIG. 28

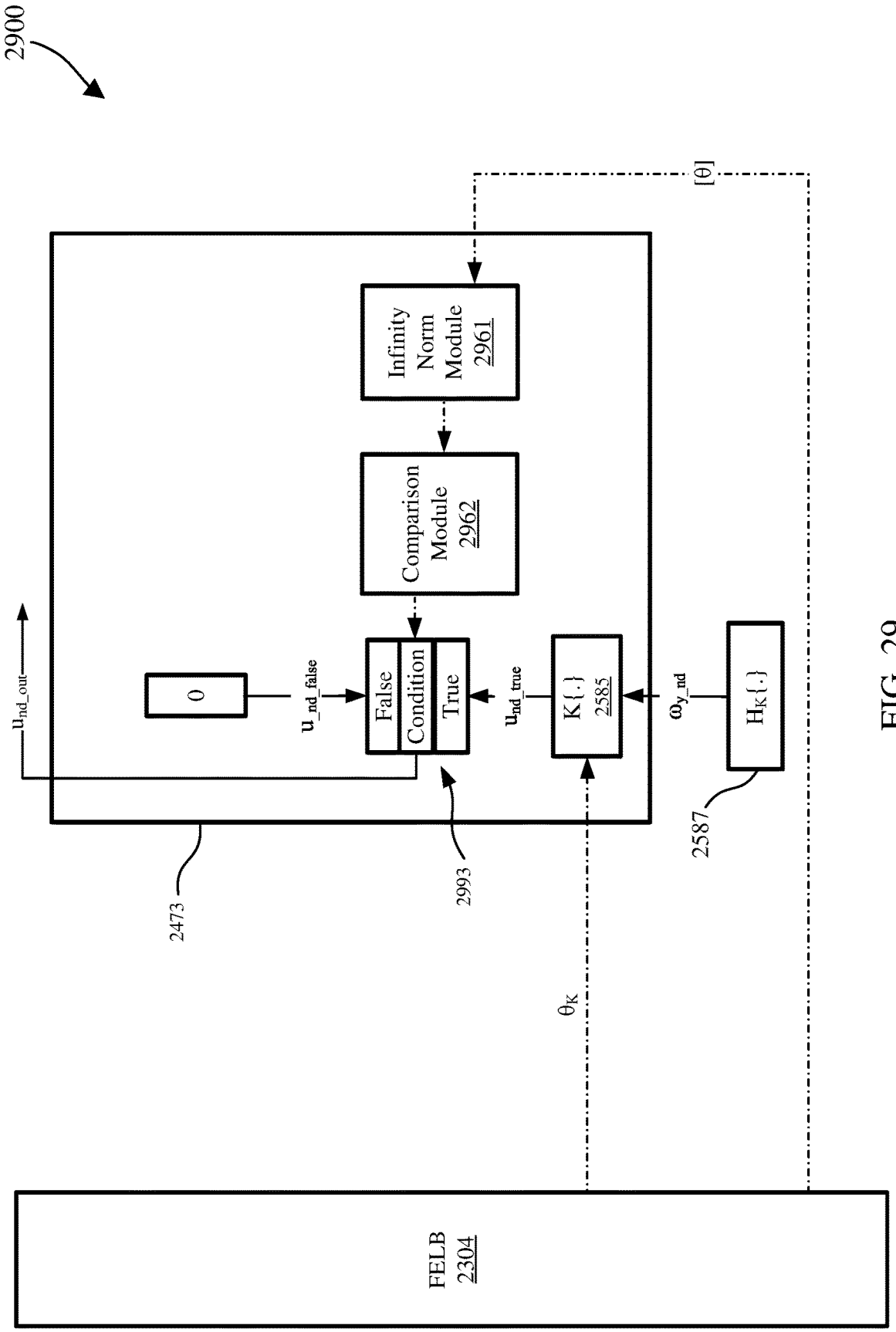
2900
Infinity Norm Module 2961
Comparison Module 2962
False
Condition
True
0
u_{nd_out}
$u_{_nd_false}$
u_{nd_true}
K{.} 2585
ω_{y_nd}
$H_K\{.\}$
2587
2473
2993
θ_K
[θ]
FELB 2304

FIG. 29

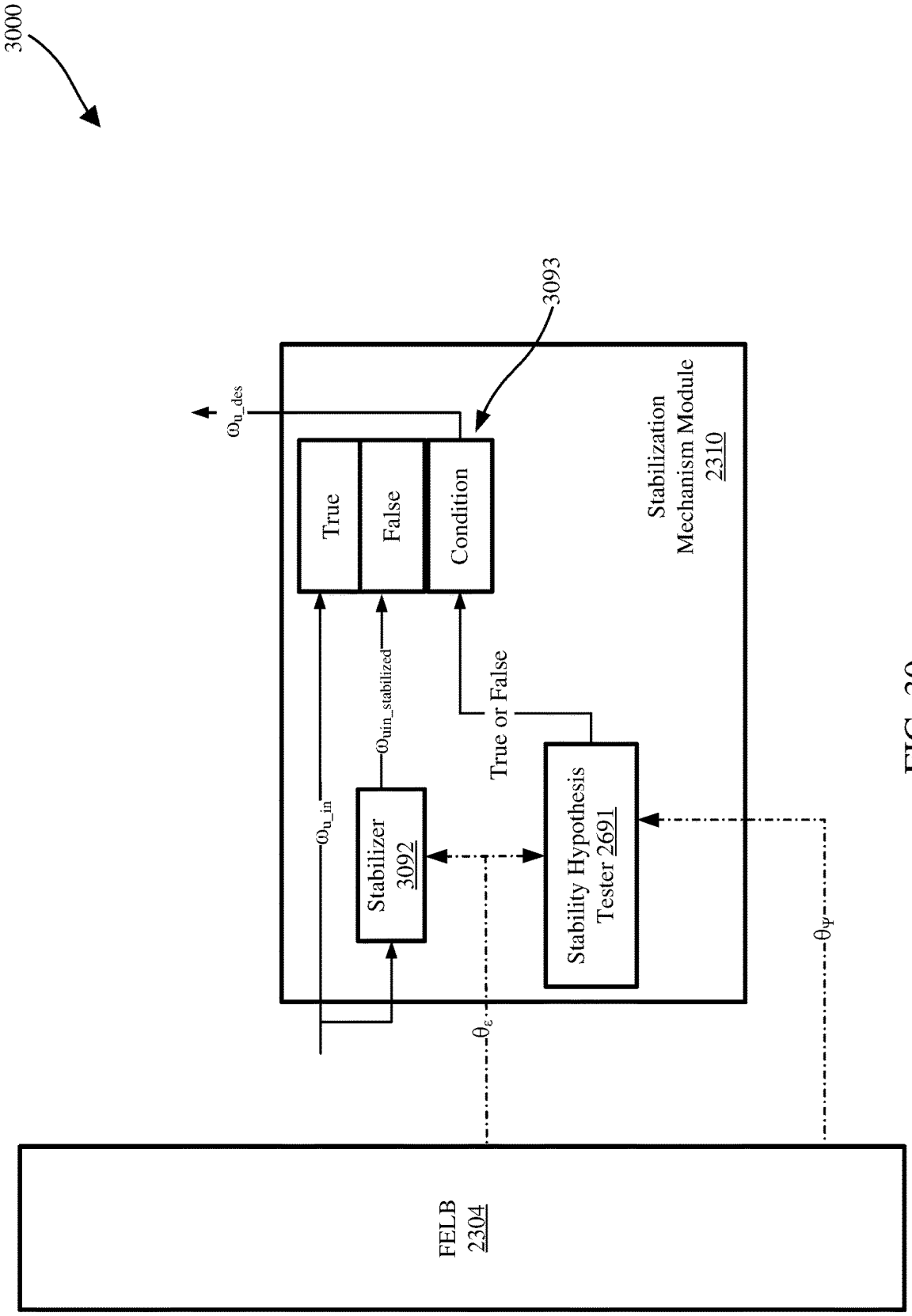
3000
3093
ω_{u_des}
True
False
Condition
Stabilization Mechanism Module 2310
ω_{u_in}
$\omega_{uin_stabilized}$
True or False
Stabilizer 3092
Stability Hypothesis Tester 2691
θ_ε
θ_ψ
FELB 2304

FIG. 30

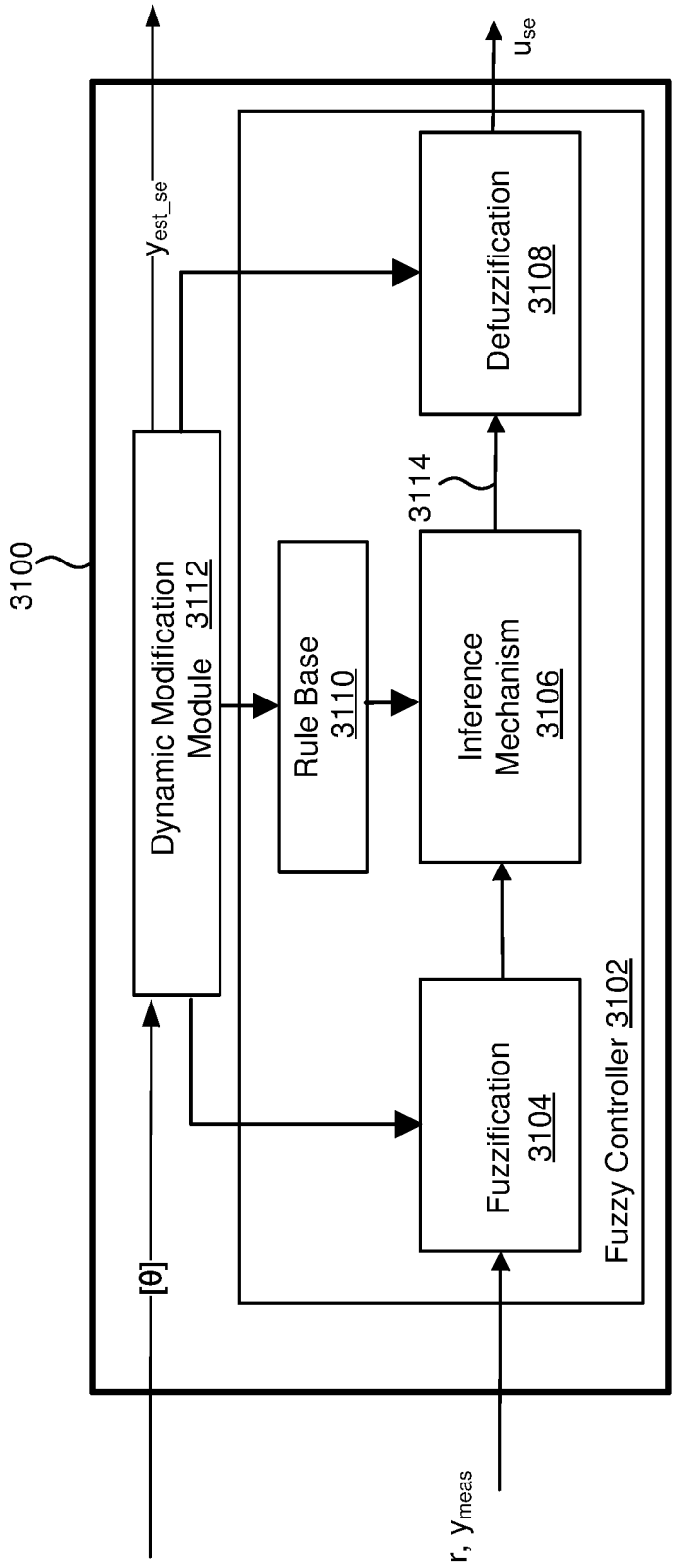
3100
[θ]
Dynamic Modification Module 3112
y_{est_se}
Rule Base 3110
Fuzzification 3104
Inference Mechanism 3106
3114
Defuzzification 3108
u_{se}
Fuzzy Controller 3102
r, y_{meas}

FIG. 31

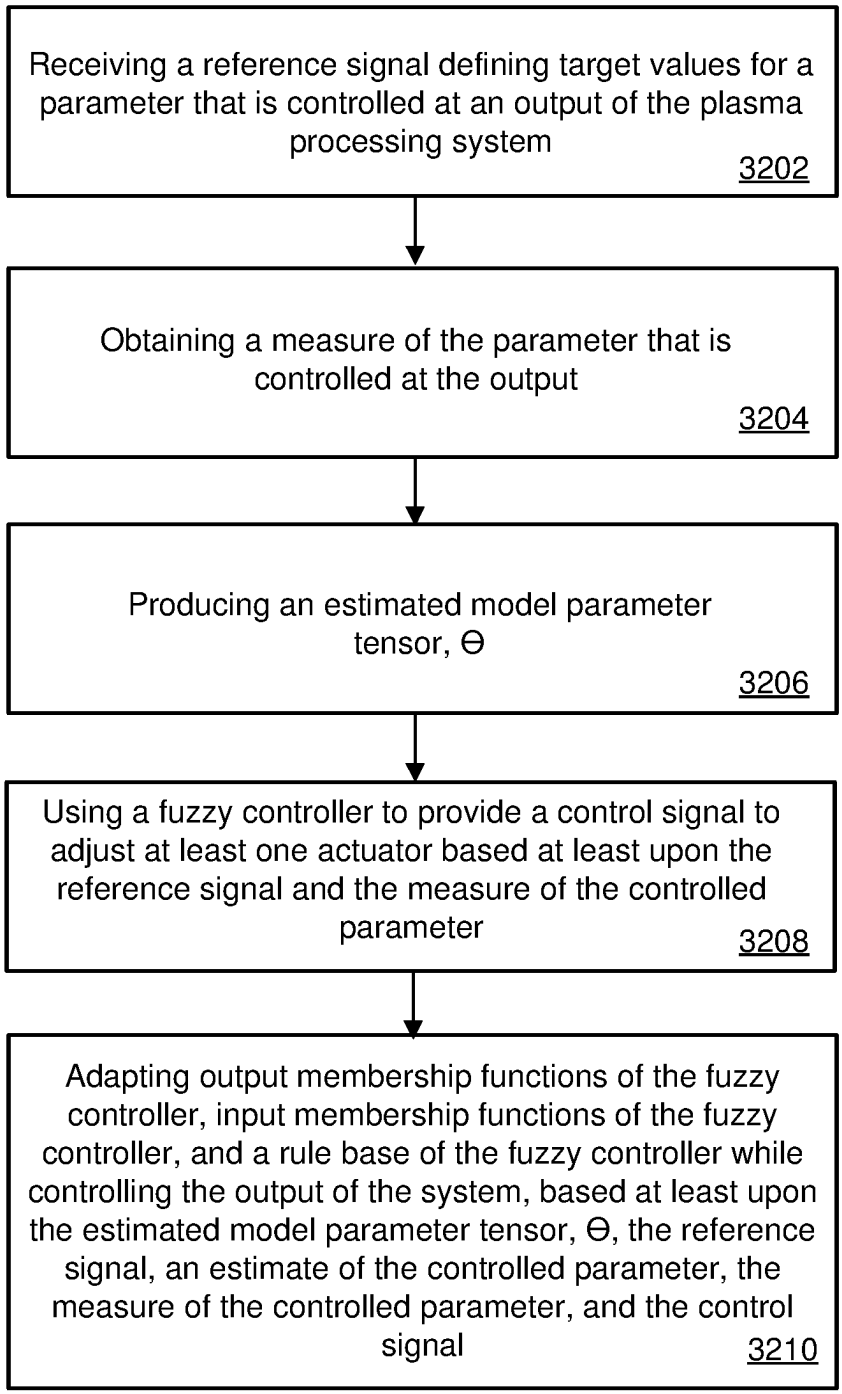
Receiving a reference signal defining target values for a parameter that is controlled at an output of the plasma processing system
3202
Obtaining a measure of the parameter that is controlled at the output
3204
Producing an estimated model parameter tensor, Θ
3206
Using a fuzzy controller to provide a control signal to adjust at least one actuator based at least upon the reference signal and the measure of the controlled parameter
3208
Adapting output membership functions of the fuzzy controller, input membership functions of the fuzzy controller, and a rule base of the fuzzy controller while controlling the output of the system, based at least upon the estimated model parameter tensor, Θ, the reference signal, an estimate of the controlled parameter, the measure of the controlled parameter, and the control signal
3210

FIG. 32

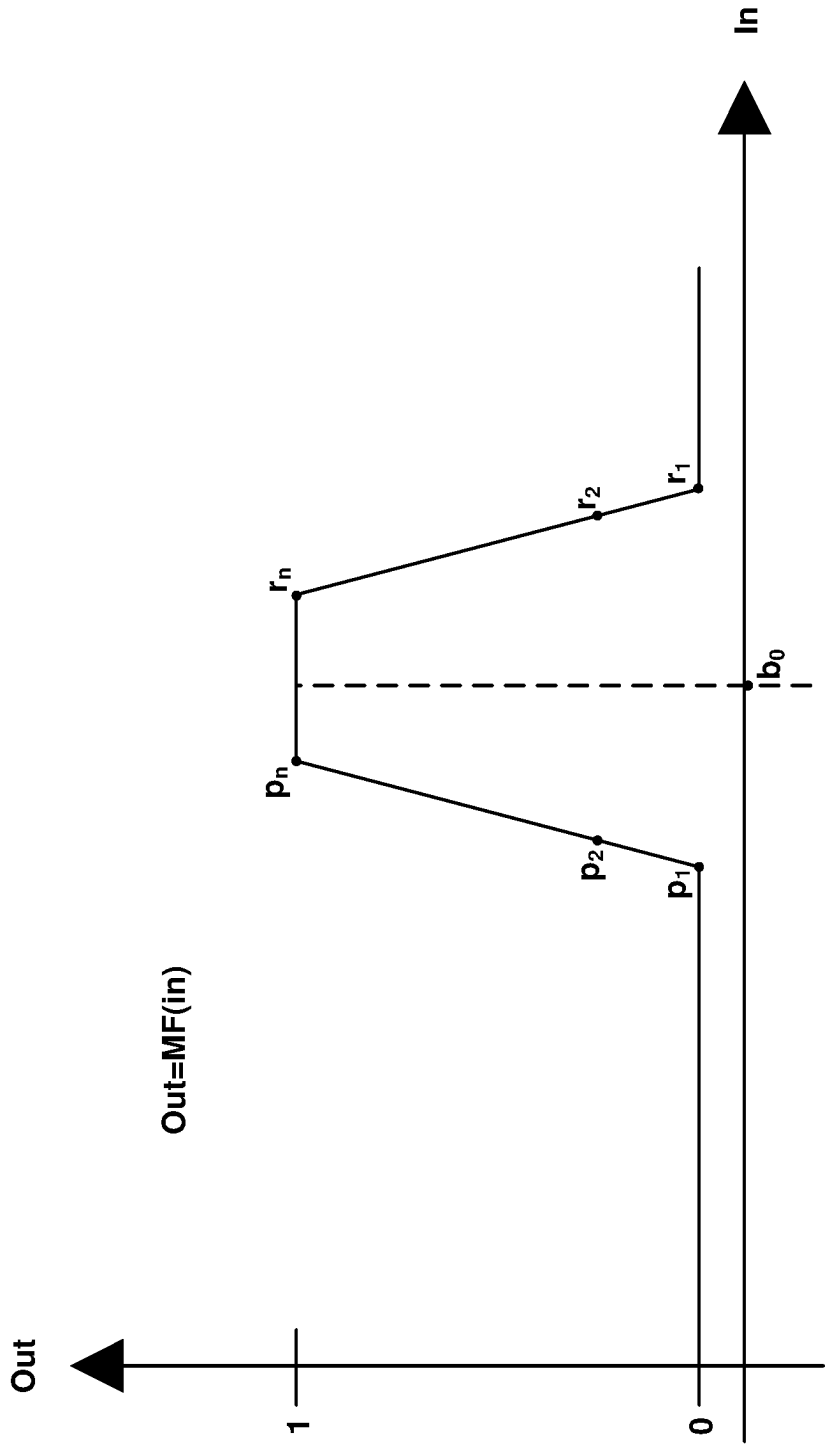

FIG. 33

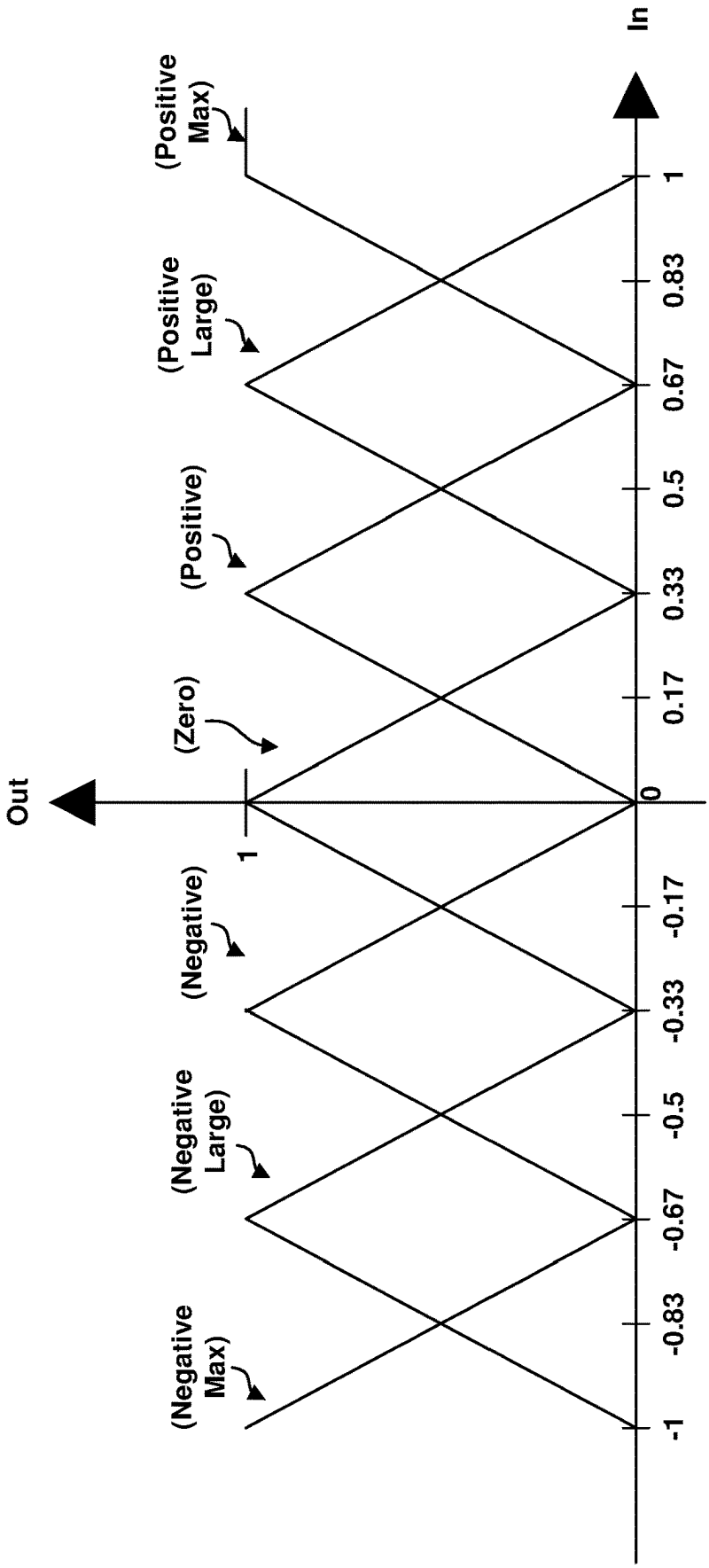
Out
In
(Positive Max)
(Positive Large)
(Positive)
(Zero)
(Negative)
(Negative Large)
(Negative Max)
1
0
-1
-0.83
-0.67
-0.5
-0.33
-0.17
0.17
0.33
0.5
0.67
0.83
1

FIG. 34

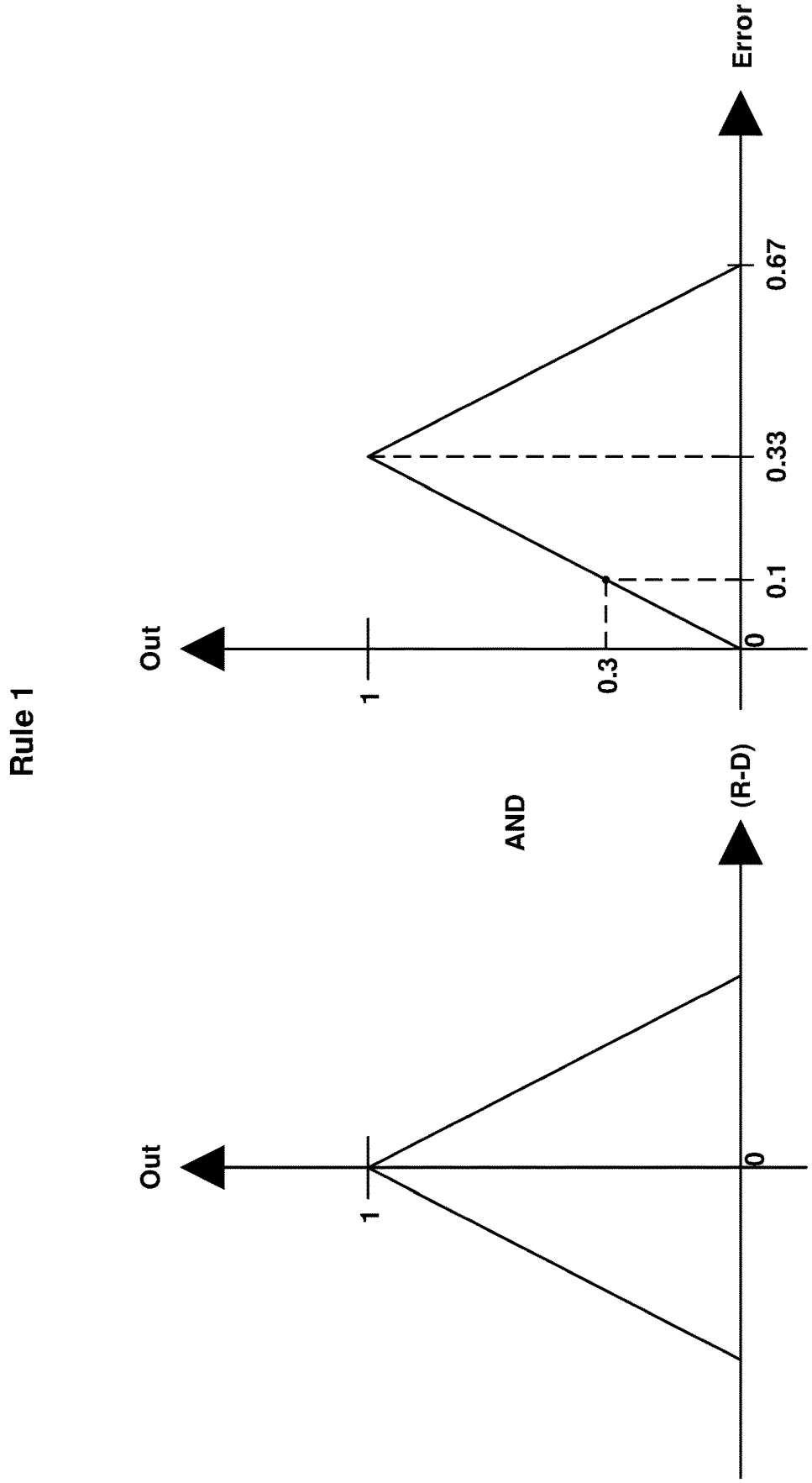

FIG. 35

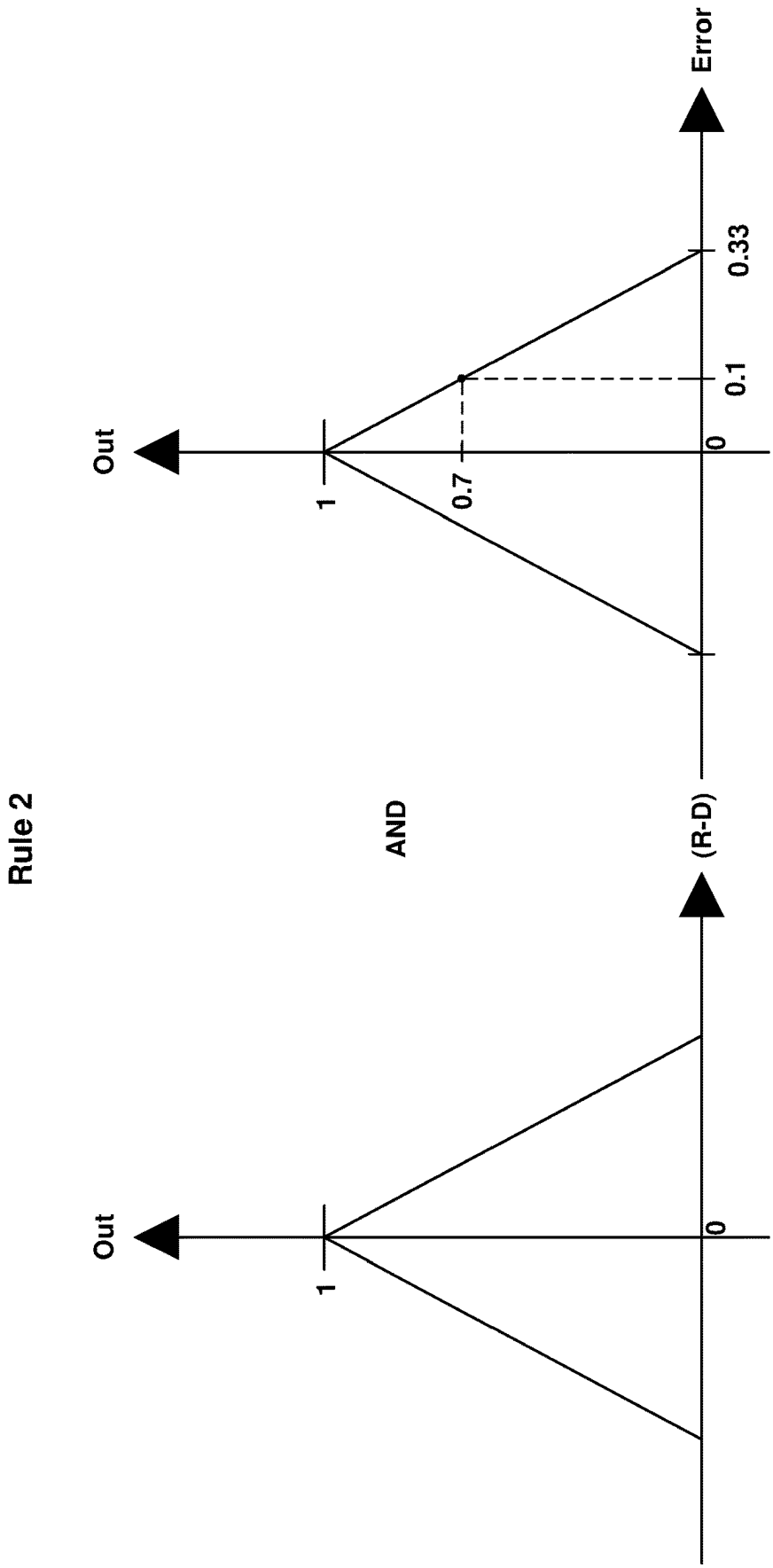

FIG. 36

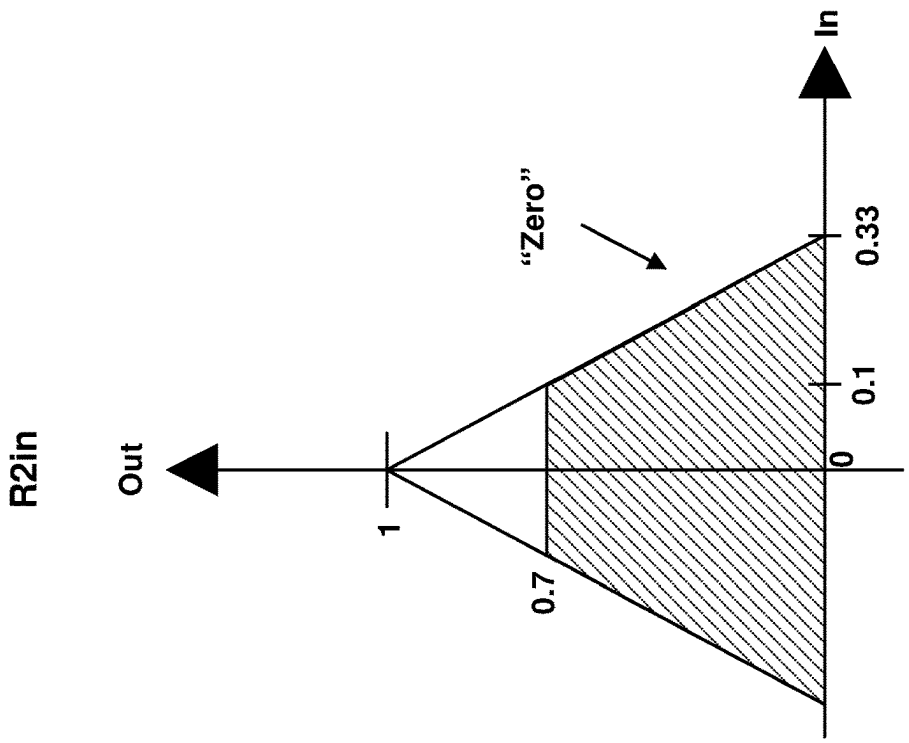

FIG. 38

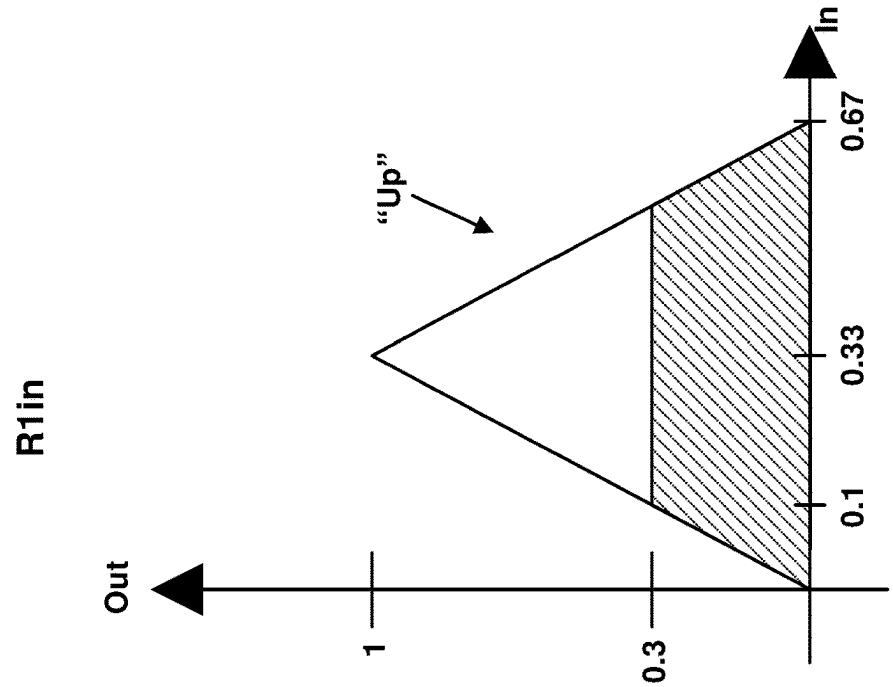

FIG. 37

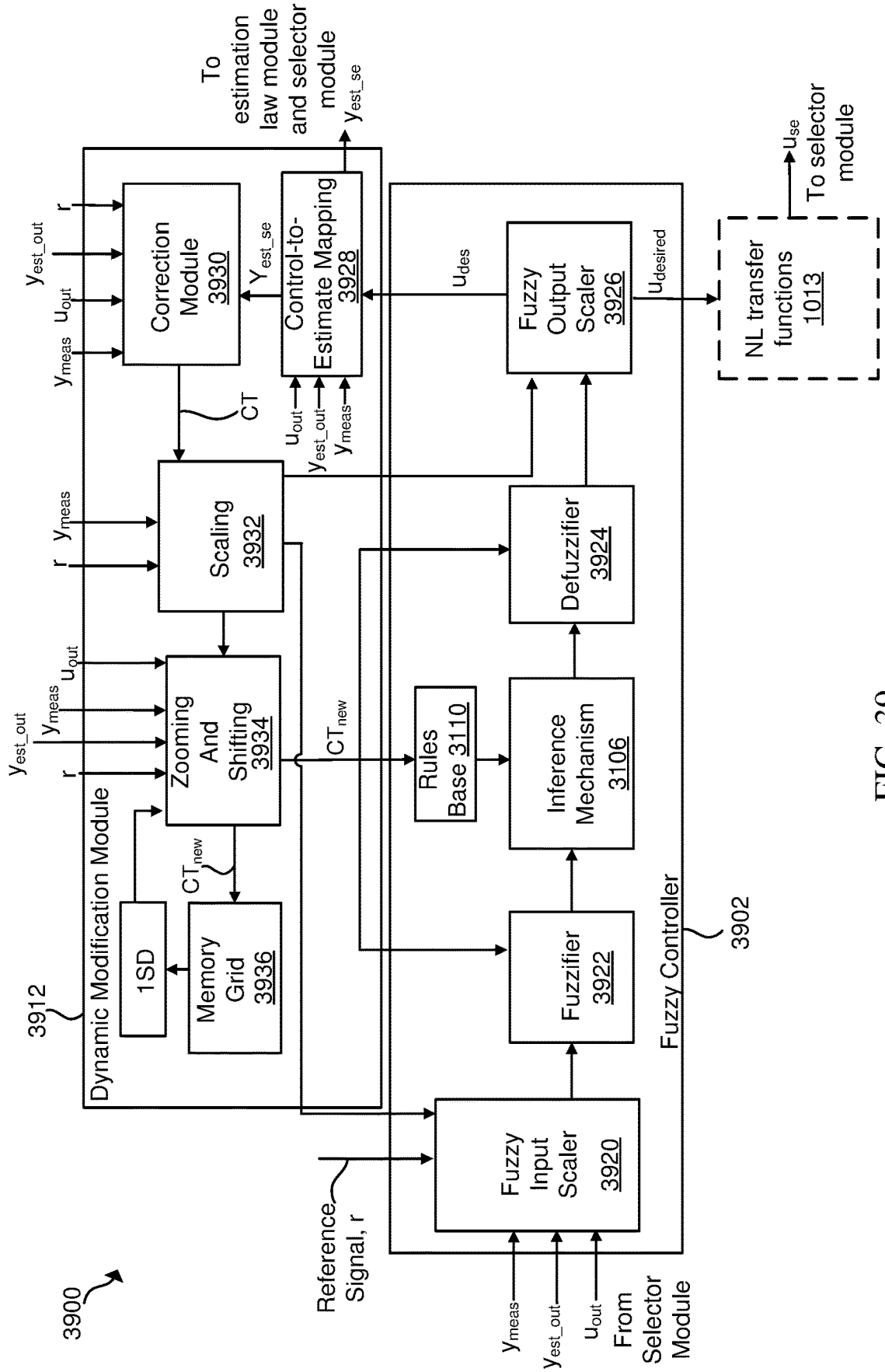
3900
Dynamic Modification Module
3912
1SD
Memory Grid 3936
Zooming And Shifting 3934
Scaling 3932
Correction Module 3930
CT
CT_{new}
y_{est_out}
u_{out}
y_{meas}
r
Y_{est_se}
Control-to-Estimate Mapping 3928
To estimation law module and selector module
y_{est_se}
Rules Base 3110
Inference Mechanism 3106
Defuzzifier 3924
Fuzzifier 3922
Fuzzy Input Scaler 3920
Fuzzy Output Scaler 3926
u_{des}
$u_{desired}$
Fuzzy Controller
3902
NL transfer functions 1013
u_{se}
To selector module
Reference Signal, r
From Selector Module

FIG. 39

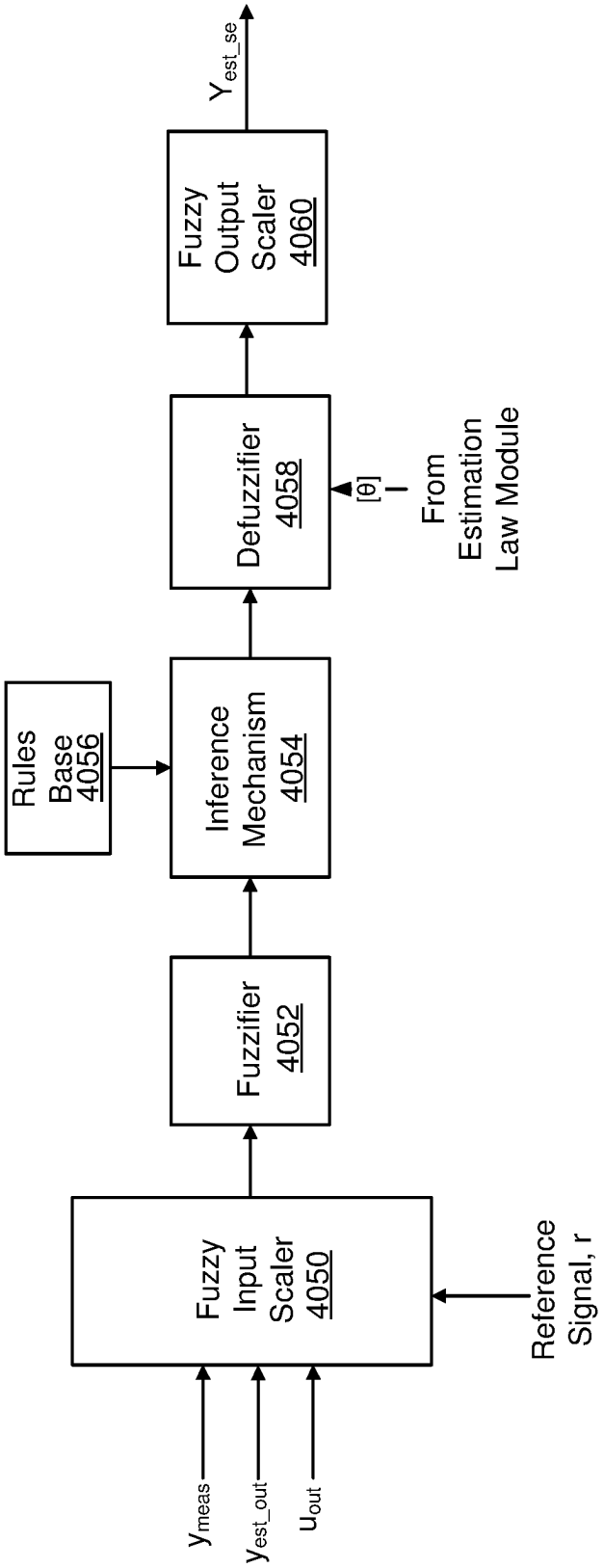
y_{meas}
y_{est_out}
u_{out}
Fuzzy Input Scaler 4050
Reference Signal, r
Fuzzifier 4052
Rules Base 4056
Inference Mechanism 4054
Defuzzifier 4058
[θ]
From Estimation Law Module
Fuzzy Output Scaler 4060
Y_{est_se}

FIG. 40

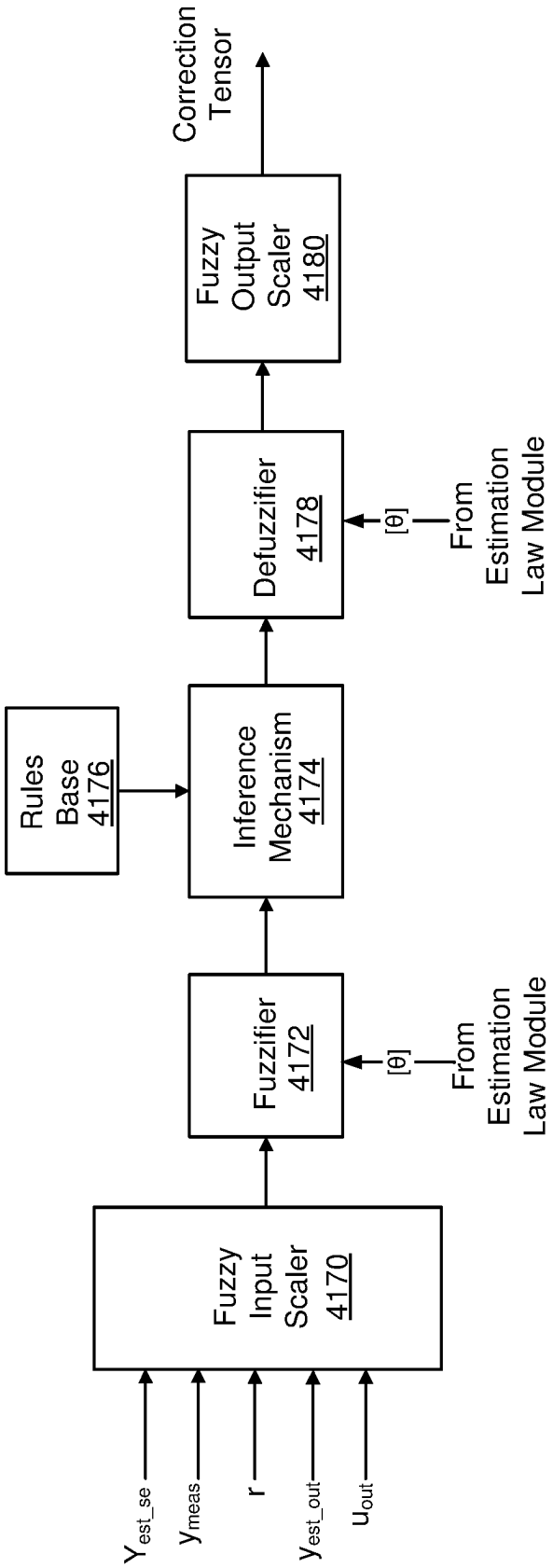
y_{est_se}
y_{meas}
r
y_{est_out}
u_{out}
Fuzzy Input Scaler 4170
Fuzzifier 4172
[θ]
From Estimation Law Module
Rules Base 4176
Inference Mechanism 4174
Defuzzifier 4178
[θ]
From Estimation Law Module
Fuzzy Output Scaler 4180
Correction Tensor

FIG. 41

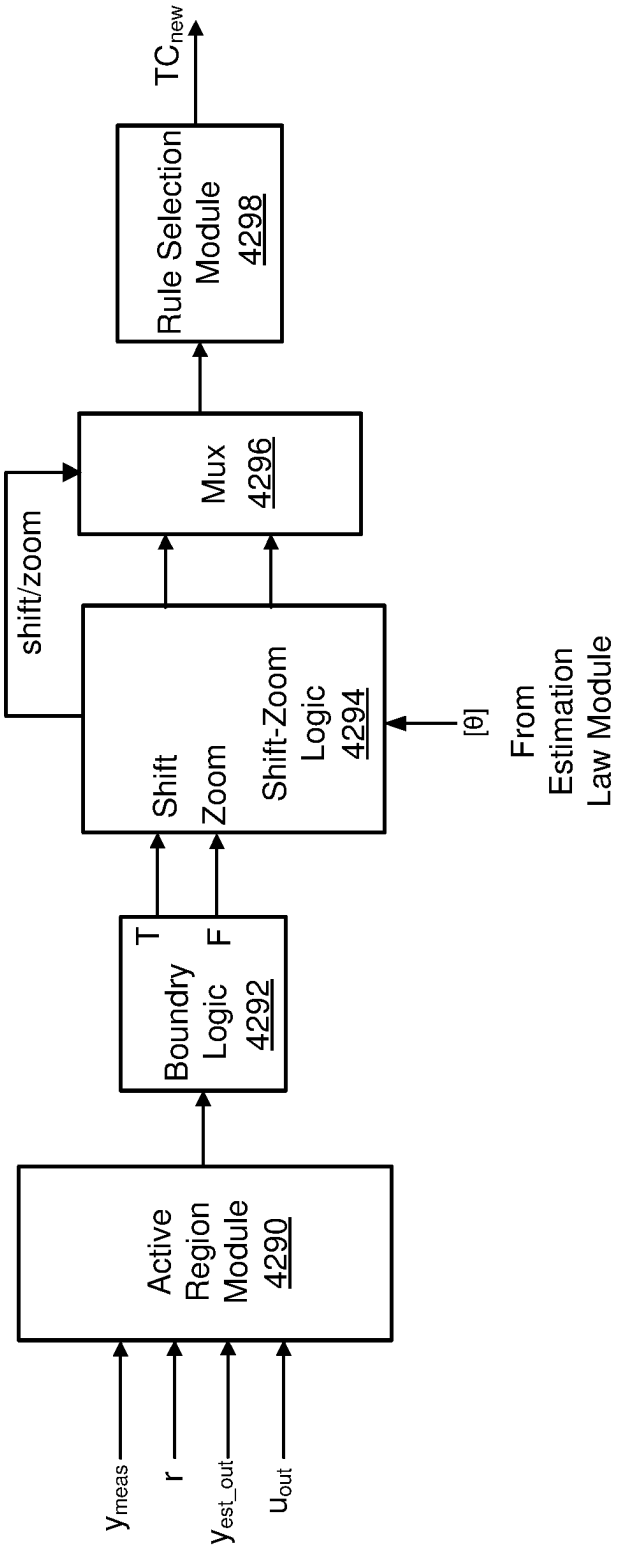
y_{meas}
r
y_{est_out}
u_{out}
Active Region Module 4290
Boundry Logic 4292
T
F
Shift
Zoom
Shift-Zoom Logic 4294
[θ]
From Estimation Law Module
shift/zoom
Mux 4296
Rule Selection Module 4298
TC_{new}

FIG. 42

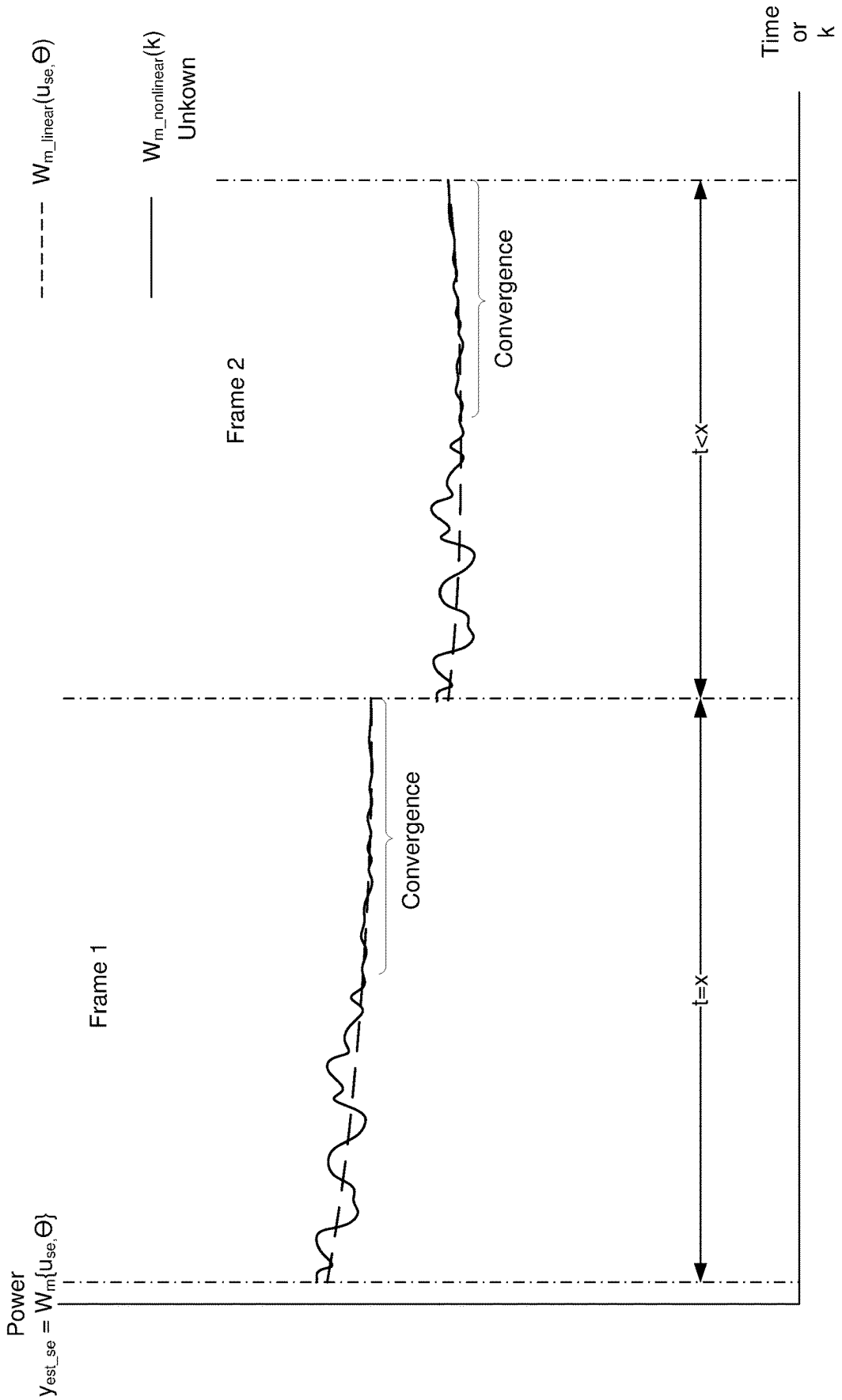
Power
$y_{est_se} = W_m\{u_{se,}\Theta\}$
Frame 1
Convergence
t=x
Frame 2
Convergence
t<x
Time
or
k
$W_{m_linear}(u_{se,}\Theta)$
$W_{m_nonlinear}(k)$
Unkown

FIG. 43

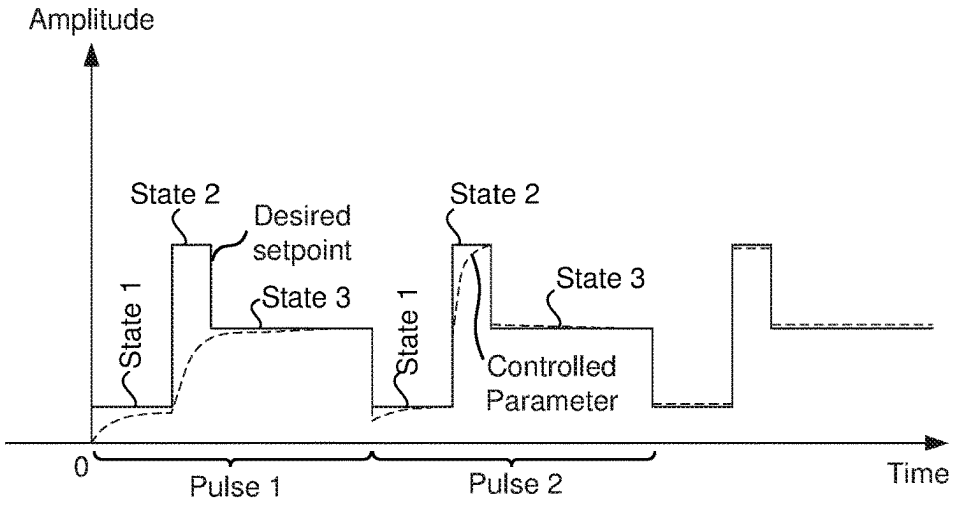

FIG. 44A

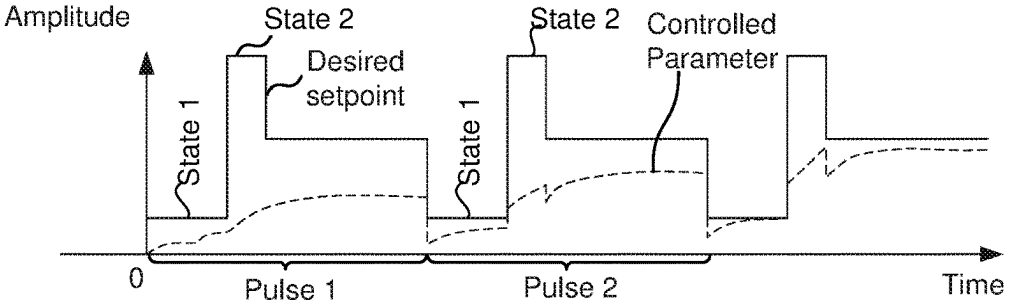

FIG. 44B

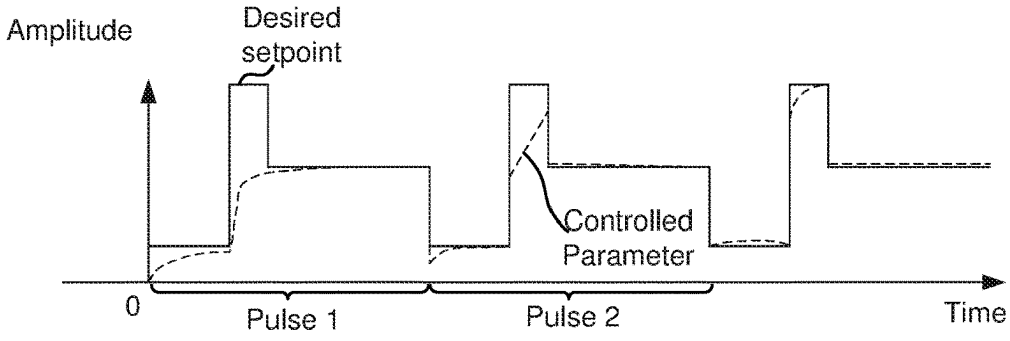

FIG. 44C

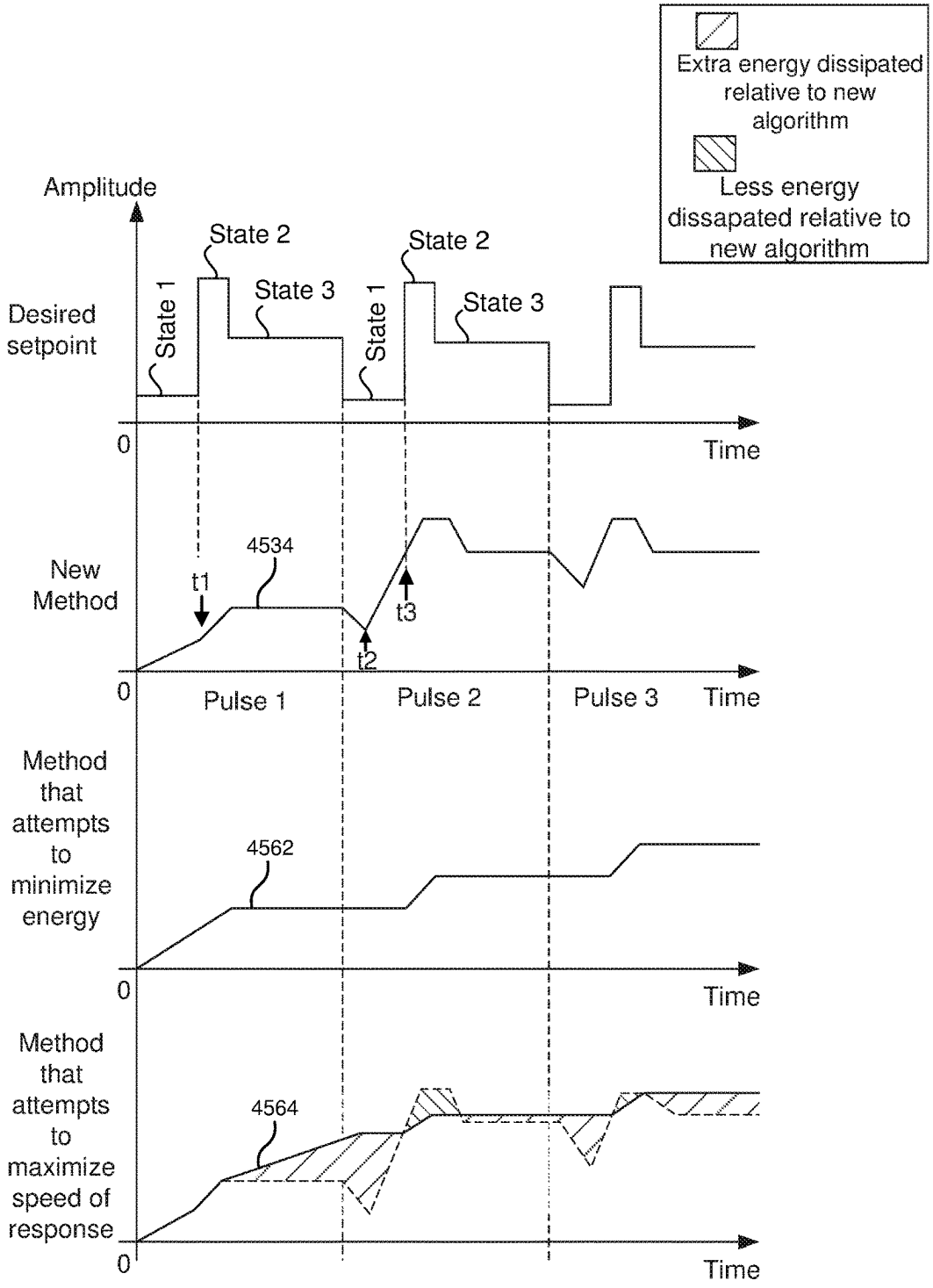
Extra energy dissipated relative to new algorithm
Less energy dissapated relative to new algorithm
Amplitude
Desired setpoint
State 1
State 2
State 3
State 1
State 2
State 3
0
Time
New Method
4534
t1
t2
t3
0
Pulse 1
Pulse 2
Pulse 3
Time
Method that attempts to minimize energy
4562
0
Time
Method that attempts to maximize speed of response
4564
0
Time

FIG. 45

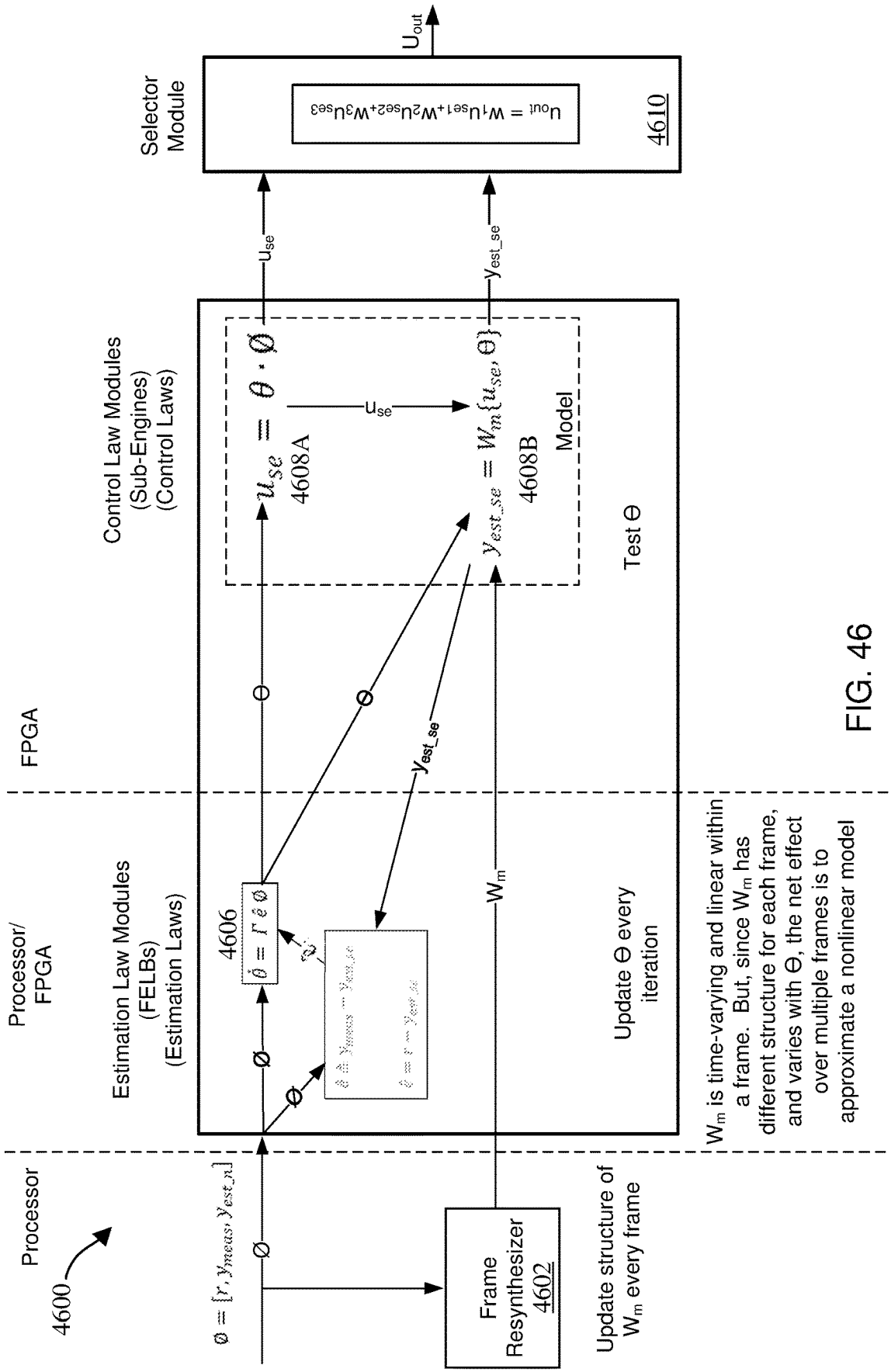
4600
Processor
Processor/ FPGA
FPGA
$\emptyset = [r, y_{meas}, y_{est_n}]$
Frame Resynthesizer 4602
Update structure of W_m every frame
Estimation Law Modules (FELBs) (Estimation Laws)
4606
$\hat{\theta} = \Gamma \hat{e} \emptyset$
$\hat{e} \triangleq y_{meas} - y_{est_se}$
$\hat{e} = r - y_{est_se}$
$\emptyset$
Θ
y_{est_se}
W_m
Control Law Modules (Sub-Engines) (Control Laws)
$u_{se} = \theta \cdot \emptyset$
4608A
u_{se}
$y_{est_se} = W_m\{u_{se}, \Theta\}$
4608B
Model
Test Θ
Update Θ every iteration
W_m is time-varying and linear within a frame. But, since W_m has different structure for each frame, and varies with Θ, the net effect over multiple frames is to approximate a nonlinear model
Selector Module
$u_{out} = W_1 u_{se1} + W_2 u_{se2} + W_3 u_{se3}$
4610
U_{out}

FIG. 46

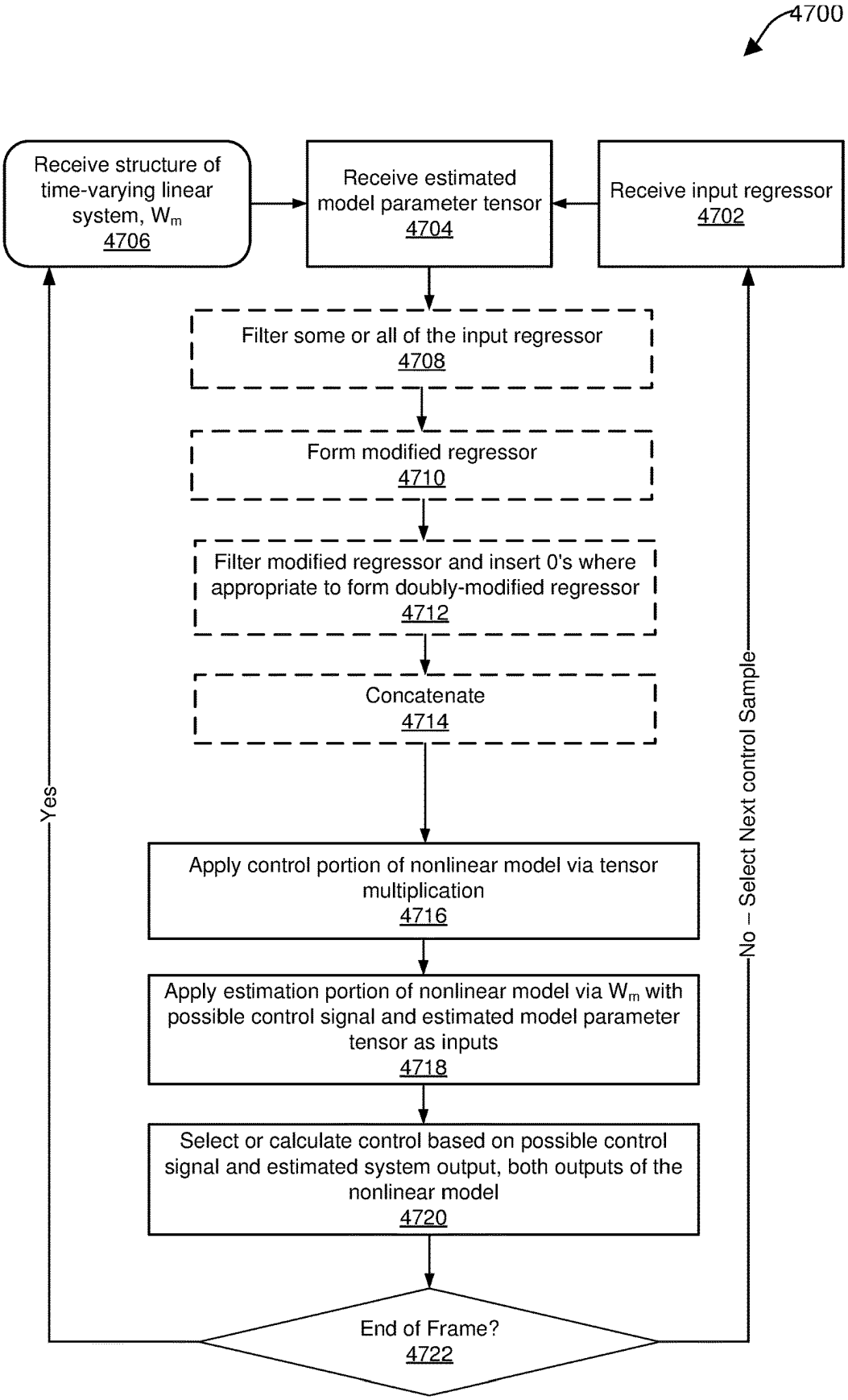
4700
Receive structure of time-varying linear system, W_m
4706
Receive estimated model parameter tensor
4704
Receive input regressor
4702
Filter some or all of the input regressor
4708
Form modified regressor
4710
Filter modified regressor and insert 0's where appropriate to form doubly-modified regressor
4712
Concatenate
4714
Apply control portion of nonlinear model via tensor multiplication
4716
Apply estimation portion of nonlinear model via W_m with possible control signal and estimated model parameter tensor as inputs
4718
Select or calculate control based on possible control signal and estimated system output, both outputs of the nonlinear model
4720
End of Frame?
4722
Yes
No – Select Next control Sample

FIG 47

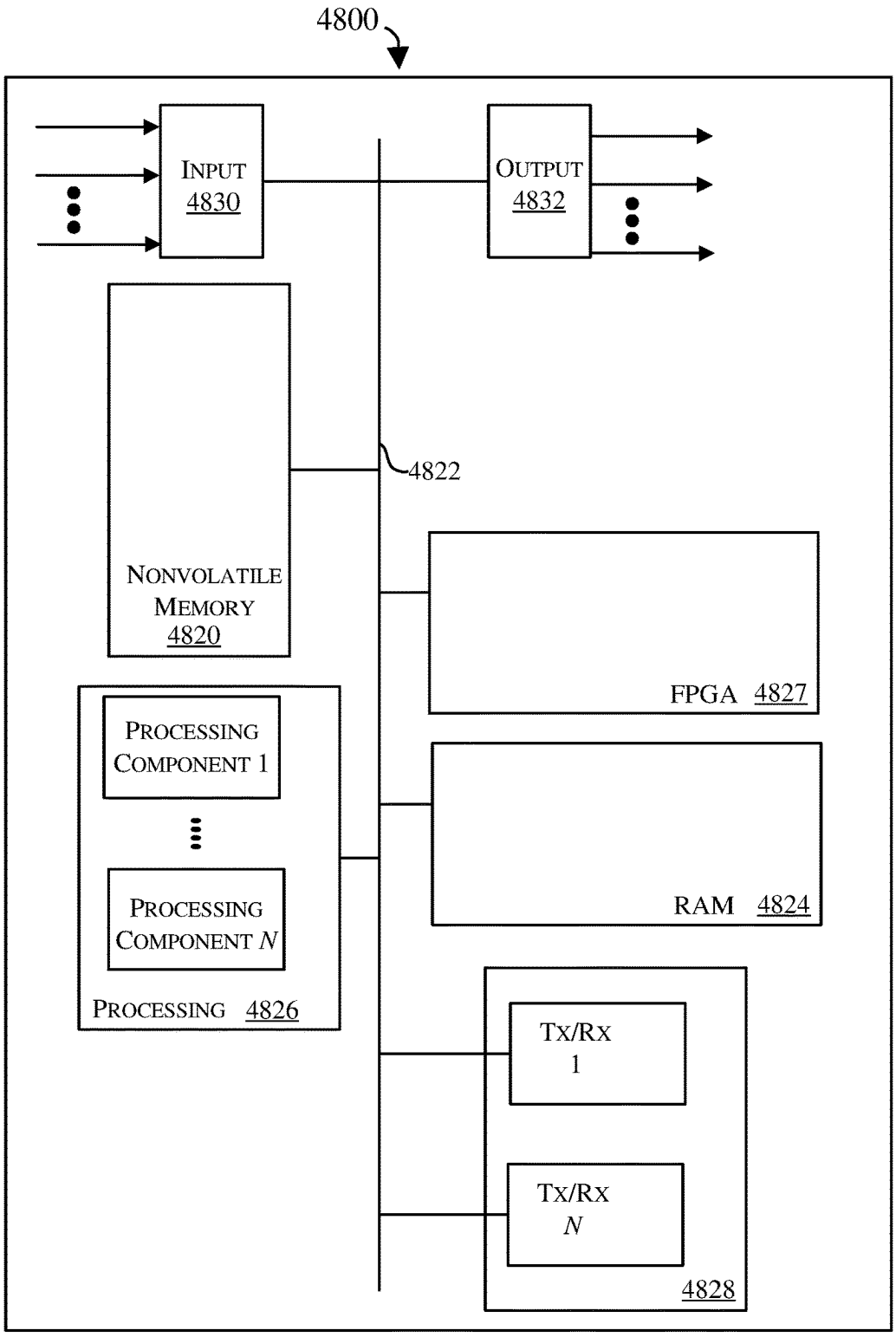
4800
INPUT
4830
OUTPUT
4832
4822
NONVOLATILE
MEMORY
4820
FPGA 4827
PROCESSING
COMPONENT 1
PROCESSING
COMPONENT N
PROCESSING 4826
RAM 4824
TX/RX
1
TX/RX
N
4828

FIG. 48

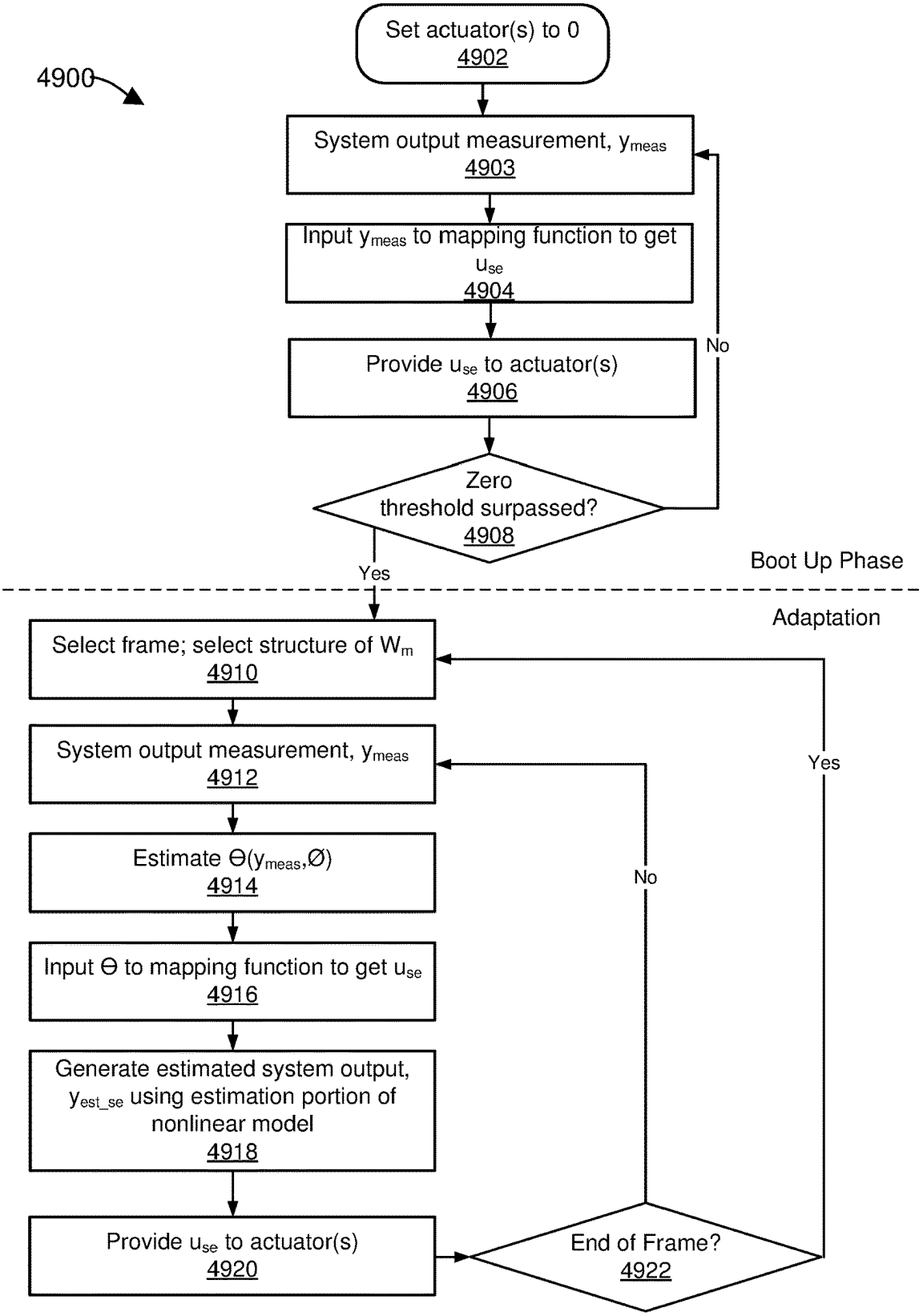
4900
Set actuator(s) to 0
4902
System output measurement, y_{meas}
4903
Input y_{meas} to mapping function to get u_{se}
4904
Provide u_{se} to actuator(s)
4906
Zero threshold surpassed?
4908
No
Yes
Boot Up Phase
Adaptation
Select frame; select structure of W_m
4910
System output measurement, y_{meas}
4912
Estimate $\Theta(y_{meas},\emptyset)$
4914
Input Θ to mapping function to get u_{se}
4916
Generate estimated system output, y_{est_se} using estimation portion of nonlinear model
4918
Provide u_{se} to actuator(s)
4920
End of Frame?
4922
Yes
No

FIG. 49

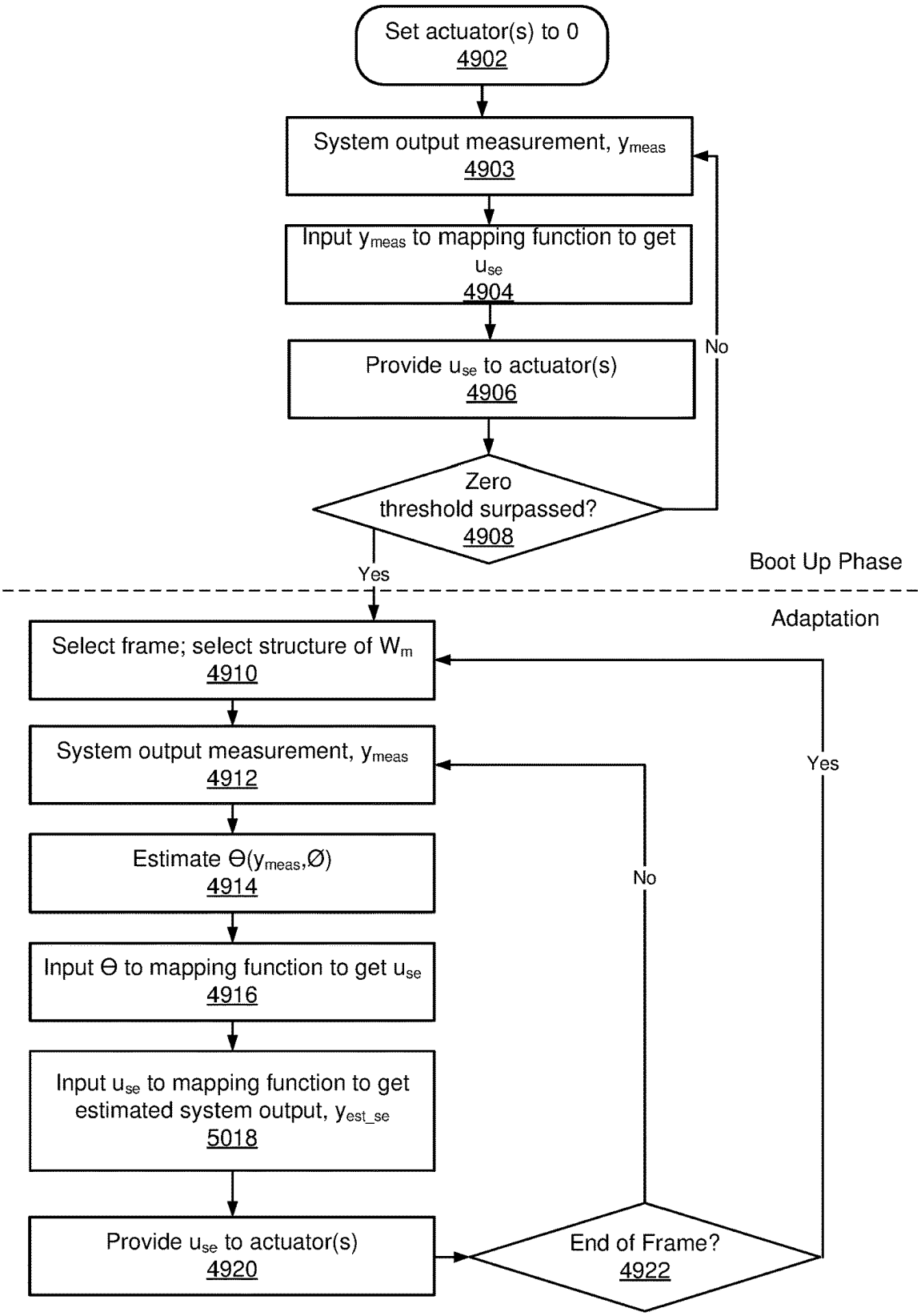
Set actuator(s) to 0
4902
System output measurement, y_{meas}
4903
Input y_{meas} to mapping function to get u_{se}
4904
Provide u_{se} to actuator(s)
4906
Zero threshold surpassed?
4908
No
Yes
Boot Up Phase
Adaptation
Select frame; select structure of W_m
4910
System output measurement, y_{meas}
4912
Estimate $\Theta(y_{meas},\emptyset)$
4914
Input Θ to mapping function to get u_{se}
4916
Input u_{se} to mapping function to get estimated system output, y_{est_se}
5018
Provide u_{se} to actuator(s)
4920
End of Frame?
4922
Yes
No

FIG. 50

Boot Up Phase

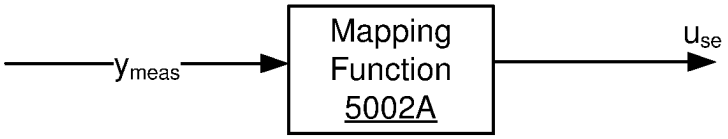

FIG. 51

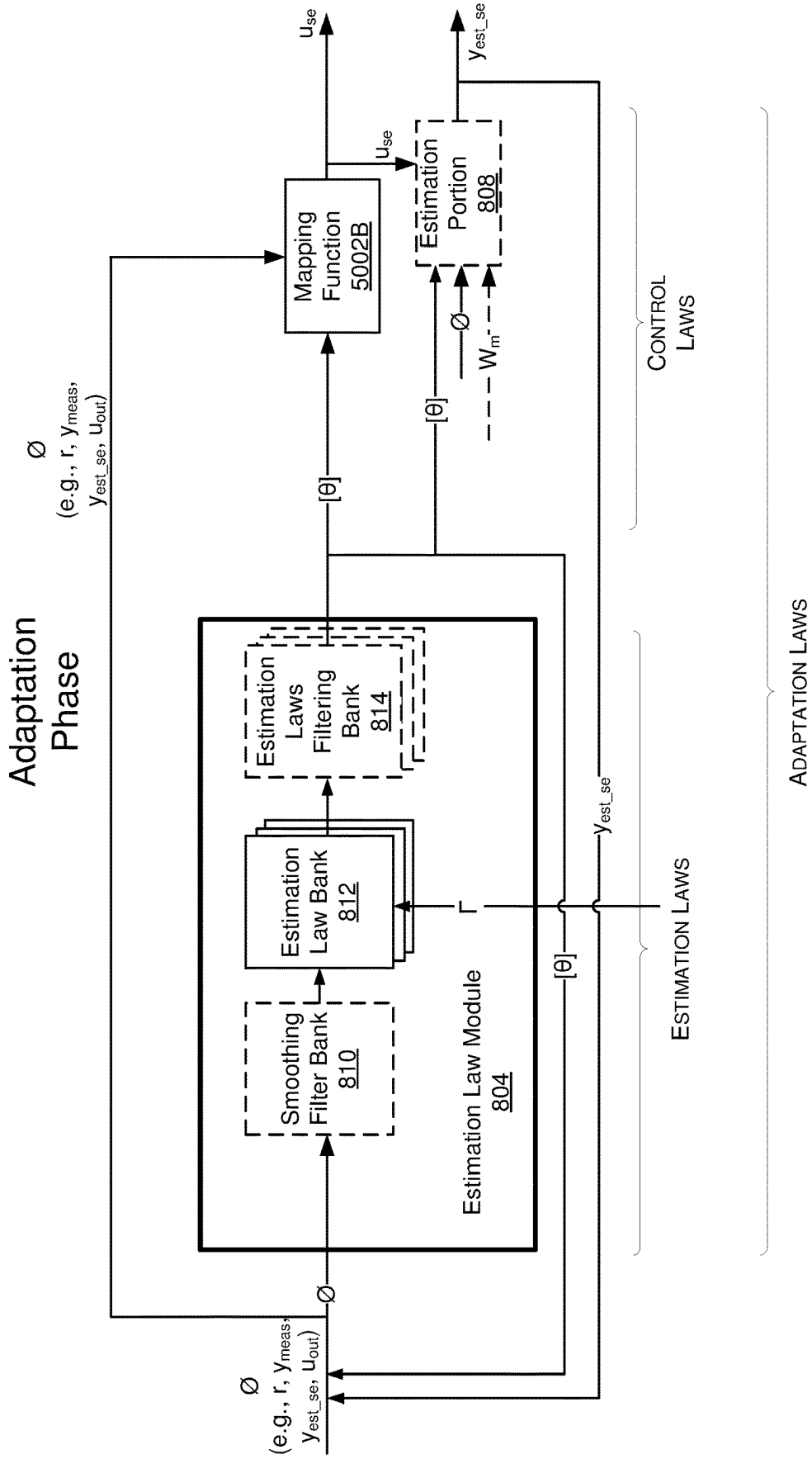
Adaptation Phase
Ø
(e.g., r, y_{meas}, y_{est_se}, u_{out})
Mapping Function 5002B
u_{se}
u_{se}
Estimation Portion 808
y_{est_se}
[θ]
[θ]
Ø
W_m
Estimation Laws Filtering Bank 814
Estimation Law Bank 812
Smoothing Filter Bank 810
Estimation Law Module 804
[θ]
y_{est_se}
Ø
(e.g., r, y_{meas}, y_{est_se}, u_{out})
CONTROL LAWS
ESTIMATION LAWS
ADAPTATION LAWS

FIG. 52

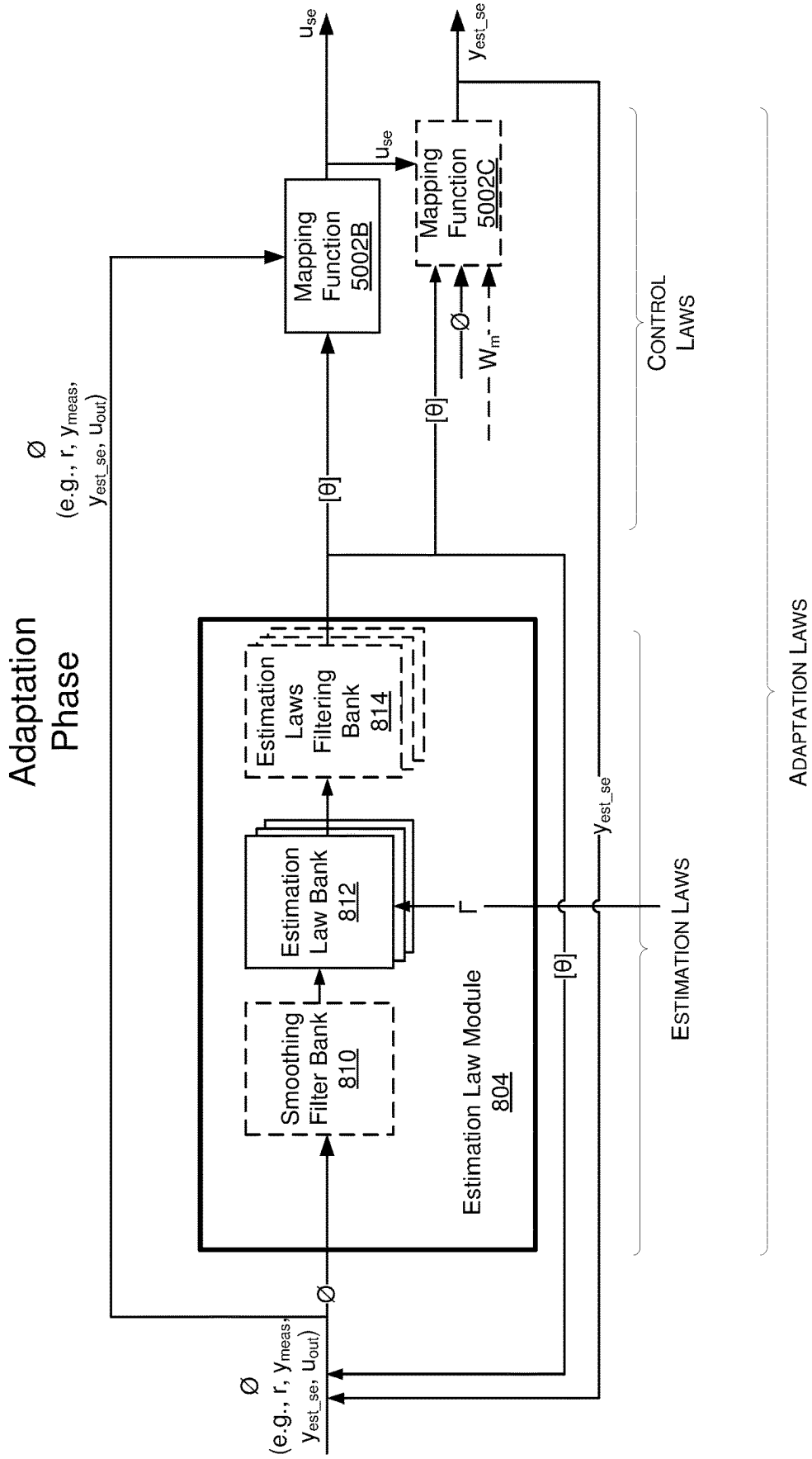
Adaptation Phase
Ø
(e.g., r, y_{meas}, y_{est_se}, u_{out})
Smoothing Filter Bank 810
Estimation Law Bank 812
Estimation Laws Filtering Bank 814
Estimation Law Module 804
[θ]
Mapping Function 5002B
u_{se}
Mapping Function 5002C
W_m
y_{est_se}
Control Laws
Estimation Laws
Adaptation Laws

FIG. 53

ADAPTIVE ENGINE WITH ESTIMATION LAW MODULES FOR PLASMA PROCESSING POWER SYSTEM

FIELD OF THE DISCLOSURE

The present disclosure relates generally to controller design. In particular, but not by way of limitation, the present disclosure relates to systems, methods and apparatuses for designing an adaptive controller.

DESCRIPTION OF RELATED ART

Control systems have important applications in many technology areas, including plasma applications, semiconductor processing and other materials processing, robotics, vehicle control systems for automobiles, aircraft, and spacecraft, and other electronic, manufacturing, and industrial systems. Semiconductor processing and other advanced materials processing rely on increasingly sophisticated plasma processes. Such plasma processes, in turn, require increasingly sophisticated power systems and control systems, to subject inherently unstable and nonlinear plasmas to increasing precision and consistency. Such plasmas are used for processes such as plasma etch processes, plasma-enhanced chemical vapor deposition (CEPVD) processes, plasma-enhanced atomic layer deposition (PEALD) processes, plasma-assisted atomic-layer deposition (PA-ALD), RF sputtering deposition, and other plasma processing applications.

In some plasma processing recipes, it is desirable to provide a pulsed waveform having multiple states (or power levels) as exemplified by the illustrative waveform in FIG. **2**. Each recipe includes a number of pulse cycles (PC), number of pulses per pulse cycle, and a number of states per pulse. Each state has a different target power level. In this example, two pulse cycles are shown, the first pulse cycle having six pulses and each of those pulses having three states. The second pulse cycle has four pulses each having four states. Plasma processing systems comprise many actuators to achieve a desired application of power such as is shown in FIG. **2**. But in many instances, the actuators respond differently to control signals because different actuators inherently have different response times (e.g., some actuators respond much faster than other actuators) and/or the actuators operate in an asynchronous manner. In the context of this disclosure, actuators may include, without limitation, higher-level constructs such as generators, match networks, remote plasma sources, and bias supplies. In addition, actuators may include, without limitation, lower-level constructs such as DC rail supplies, RF amplifiers, variable capacitors, and power supplies within bias supplies and remote plasma source. In today's plasma processing systems, control (e.g., for precision and consistency) over the high-level actuators and low-level actuators is critical in view of the increasing speeds of the actuators and the ever-decreasing dimensions of the resultant processed-workpieces.

As an additional example, an RF generator for providing the pulsed waveform in FIG. **2** may have actuators that include a DC section and a power amplifier where the DC section provides a rail voltage to the power amplifier and the power amplifier provides the desired pulsed waveform (e.g., FIG. **2**) using the rail voltage. The power amplifier is relatively fast (e.g., ~250 ns) compared to changes in the target voltage, but the DC section or the rail, is relatively slow (e.g., ~1 ms). As a consequence, existing control

systems tend to hold the rail at a high level for much of a pulse cycle (e.g., at a highest level needed for a given pulse cycle). However, this can lead to overheating of components and premature system failure and maintenance needs as well as inefficiency since the rail is often far above the level needed at any moment in time (i.e., for a given state within a pulse of a pulse cycle).

Current adaptive controllers do not have inherent stability or the guarantee that they will converge. Further, existing adaptive controllers utilize transfer functions, and are thus difficult to scale to arbitrary waveforms and coupled inputs and outputs (MIMO). They also tend to be limited to a single control law and thus luck adaptability to various situations that may arise even within a given recipe. Further, existing adaptive engines struggle with unstable systems as well as unbounded computed control values as well as modeling uncertainties and input and output bounded disturbances that can be arbitrary. Lastly, they struggle with handling different modeling/parameterizations of the process to be controlled.

SUMMARY OF THE DISCLOSURE

In some aspects, the techniques described herein relate to an adaptive engine configured to receive a series of reference signals and in response provide a control to one or more actuators controlling parameters of a power system, the adaptive engine including: a nonlinear model of the one or more actuators and/or the power system controlled by the one or more actuators; a plurality of estimation law modules each configured to estimate an estimated model parameter tensor, θ, for the nonlinear model, by seeking to minimize an estimation error, $\hat{e}$, or cost function, J, calculated from two or more of (1) measured system output, (2) estimated system output, and (3) a reference signal; a plurality of control law sub-engines each configured to apply one of a plurality of control laws to the estimated parameter tensors, θ, to generate a possible control signal, u_{se}, for each of the estimated parameter tensors, θ; the plurality of estimation law modules or the plurality of control law sub-engines configured to apply the nonlinear model to the possible control signal, u_{se}, from this or a previous iteration, and corresponding ones of the estimated parameter tensors, θ, to estimate estimated system outputs, y_{est_se}; and a selector module configured to: calculate an estimated system error, out, for each of the possible control signals, u_{se}, based on corresponding ones of the estimated system outputs, y_{est_se}, and select a one or combination of the possible control signals, u_{se}, associated with a smallest of the estimated system errors, out, for controlling the one or more actuators.

In some aspects, the techniques described herein relate to an adaptive engine, wherein each of the estimation law modules applies an estimation law to an input regressor and the estimation error, $\hat{e}$, or cost function, J, to estimate the estimated model parameter tensor, θ.

In some aspects, the techniques described herein relate to an adaptive engine, wherein at least two estimation law modules apply two different estimation laws, and wherein one of the at least two estimation laws is a function of an adaptation gain and one of the at least two estimation laws is independent from the adaptation gain.

In some aspects, the techniques described herein relate to an adaptive engine, wherein the estimated model parameter tensor, θ, is part of A, B, and C matrices of a time-varying linear system that is part of the nonlinear model.

In some aspects, the techniques described herein relate to an adaptive engine, wherein the time-varying linear system is a strictly positive real matrix derived from Lyapunov equations.

In some aspects, the techniques described herein relate to an adaptive engine, wherein repeated estimations of the estimated model parameter tensor, θ, by each of the estimation law modules causes the nonlinear model to better approximate nonlinear behavior of the power system, while structures of the A, B, and C matrices of the time-varying linear system remain constant.

In some aspects, the techniques described herein relate to an adaptive engine, wherein structures of matrices of the time-varying linear system remain constant for all control samples of a frame.

In some aspects, the techniques described herein relate to an adaptive engine, wherein repeated estimations of the estimated model parameter tensor, θ, by each of the estimation law modules causes the nonlinear model to better approximate nonlinear behavior of the power system.

In some aspects, the techniques described herein relate to an adaptive engine, wherein the power system is a plasma processing power system.

In some aspects, the techniques described herein relate to an adaptive engine, wherein the one or more actuators are a power and/or frequency of the plasma processing power system and/or components of a match network arranged between the plasma processing power system and a plasma load.

In some aspects, the techniques described herein relate to an adaptive engine configured to receive a series of reference signals and in response provide a control to one or more actuators controlling parameters of a power system, the adaptive engine including: a plurality of estimation law modules each configured to apply estimation laws to an input regressor, Ø, to produce estimated parameter tensors, θ; a plurality of control law sub-engines each configured to apply one of a plurality of control laws to the estimated parameter tensors, θ, to generate possible control signals, u_{se}; a nonlinear model of the one or more actuators and/or the power system controlled by the one or more actuators, the nonlinear model including a time-varying linear system, and wherein the nonlinear model is configured to calculate an estimated system output, y_{est_se}, as a function of the possible control signals, u_{se}, from this or a previous iteration, and the estimated parameter tensors, θ; and a selector module configured to select a control, u_{out}, as a best one, or best combination, of the possible control signals, u_{se}, based on the possible estimated system outputs, y_{est_se}.

In some aspects, the techniques described herein relate to an adaptive engine, wherein each of the estimation law modules applies an estimation law to an input regressor and the estimation error, ê, or cost function, J, to estimate the estimated model parameter tensor, θ.

In some aspects, the techniques described herein relate to an adaptive engine, wherein at least two estimation law modules apply two different estimation laws, and wherein one of the at least two estimation laws is a function of an adaptation gain and one of the at least two estimation laws is independent from the adaptation gain.

In some aspects, the techniques described herein relate to an adaptive engine, wherein the estimated model parameter tensor, θ, is part of A, B, and C matrices of a time-varying linear system that is part of the nonlinear model.

In some aspects, the techniques described herein relate to an adaptive engine, wherein the time-varying linear system is a strictly positive real matrix derived from Lyapunov equations.

In some aspects, the techniques described herein relate to an adaptive engine, wherein repeated estimations of the estimated model parameter tensor, θ, by each of the estimation law modules causes the nonlinear model to better approximate nonlinear behavior of the power system, while structures of the A, B, and C matrices of the time-varying linear system remain constant.

In some aspects, the techniques described herein relate to an adaptive engine, wherein structures of matrices of the time-varying linear system remain constant for all control samples of a frame.

In some aspects, the techniques described herein relate to an adaptive engine, wherein repeated estimations of the estimated model parameter tensor, θ, by each of the estimation law modules causes the nonlinear model to better approximate nonlinear behavior of the power system.

In some aspects, the techniques described herein relate to an adaptive engine, wherein the power system is a plasma processing power system.

In some aspects, the techniques described herein relate to an adaptive engine, wherein the one or more actuators are a power and/or frequency of the plasma processing power system and/or components of a match network arranged between the plasma processing power system and a plasma load.

In some aspects, the techniques described herein relate to an adaptive engine, wherein the selector module finds an estimated system error, out, for each of the possible control signals, u_{se}, and uses the estimated system error, out, to select the control, u_{out}.

BRIEF DESCRIPTION OF THE DRAWINGS

Various objects and advantages and a more complete understanding of the present disclosure are apparent and more readily appreciated by referring to the following detailed description and to the appended claims when taken in conjunction with the accompanying drawings:

FIG. **1** illustrates a plasma processing system;

FIG. **2** illustrates a pulse waveform for the system of FIG. **1**;

FIG. **3** illustrates a method of controlling the system of FIG. **1**;

FIG. **4** Illustrates a plasma processing system having an adaptive engine configured to control one or more actuators;

FIG. **5**A shows an embodiment of an adaptive engine such as the one shown in FIG. **4**;

FIG. **5**B shows an embodiment of an adaptive engine where an estimation portion of the nonlinear model is processed in the estimation law modules;

FIG. **5**C shows an embodiment of an adaptive engine where multiple estimation law modules provide outputs to a single control law module;

FIG. **6** illustrates an alternative adaptive engine that splits control samples, and certain aspects of the nonlinear model, into frames;

FIG. **7** illustrates a method of adaptive control;

FIG. **8**A illustrates further detail of certain embodiments of the estimation law modules and the corresponding estimation laws;

FIG. **8**B illustrates further detail of certain embodiments of the estimation law modules and the corresponding estimation laws;

FIG. **9** illustrates a method of operating the herein disclosed adaptive engine having a bifurcated nonlinear model;

FIG. **10**A shows an embodiment of an adaptive engine focusing on details of a Lyapunov control law module or sub-engine;

FIG. **10**B shows a variation on FIG. **10**A, where a derivative of the estimated model parameter tensor is also calculated and used;

FIG. **11**A depicts an example of an adaptive engine implementing a TARC control law sub-engine, according to various aspects of the disclosure;

FIG. **11**B illustrates a detailed view of an Adaptive Inverse Laws (AIL) control law module of the TARC control law sub-engine in FIG. **11**A, according to various aspects of the disclosure;

FIG. **11**C illustrates an alternate view of an Adaptive Inverse Laws (AIL) control law module of the TARC control law sub-engine in FIG. **11**A, according to various aspects of the disclosure;

FIG. **12** illustrates an example of a method for controlling a nonlinear system using the TAC control law sub-engine, according to various aspects of the disclosure;

FIG. **13**A illustrates a pre-computation block of the ATML module of the TARC control law sub-engine, in accordance with one or more implementations;

FIG. **13**B illustrates a block diagram of the Eigen control laws module of the TARC control law sub-engine, in accordance with one or more implementations;

FIG. **13**C illustrates a block diagram showing the penalty control laws module of the TARC control law sub-engine, in accordance with one or more implementations;

FIG. **14** depicts a block diagram of an adaptive engine showing the details of the TFPA control law sub-engine, in accordance with one or more implementations;

FIG. **15** illustrates an example of a method for controlling a nonlinear system using the TFPA control law sub-engine, in accordance with one or more implementations;

FIG. **16** illustrates a block diagram of an adaptive PID control system, in accordance with one or more implementations;

FIG. **17**A illustrates an example of a method for controlling a nonlinear system using the adaptive PID control system in FIG. **16**, in accordance with one or more implementations;

FIG. **17**B illustrates another example of a method for controlling a nonlinear system using the adaptive PID control system in FIG. **16**, in accordance with one or more implementations;

FIG. **18** illustrates a block diagram of an adaptive engine implementing an adaptive PID control law sub-engine, in accordance with one or more implementations;

FIG. **19** illustrates a block diagram of an adaptive engine showing the details of the CTOE control law module in FIG. **18**, in accordance with one or more implementations;

FIG. **20** depicts a block diagram showing an example of how a control law is implemented in the CTOE control law module in FIG. **18**, according to various aspects of the disclosure;

FIG. **21** depicts a block diagram of an adaptive engine showing a detailed view of the OETC control law module in FIG. **18**, according to various aspects of the disclosure;

FIG. **22** illustrates an example of a method **2200** for controlling a nonlinear system using an ATIMC control law sub-engine, in accordance with one or more implementations;

FIG. **23** illustrates an example of an adaptive engine implementing an ATIMC control law sub-engine, in accordance with one or more implementations;

FIG. **24** illustrates another example of an adaptive engine implementing an ATIMC control law sub-engine, in accordance with one or more implementations;

FIG. **25** illustrates a detailed view of a first mapping module of the ATIMC control law sub-engine in FIG. **24**, in accordance with one or more implementations;

FIG. **26** illustrates a detailed view of a first mechanism implemented in the ATIMC control law sub-engine in FIG. **24**, in accordance with one or more implementations;

FIG. **27** illustrates a detailed view of a second mapping module of the ATIMC control law sub-engine in FIG. **24**, in accordance with one or more implementations;

FIG. **28** illustrates a detailed view of a third mapping module of the ATIMC control law sub-engine in FIG. **24**, in accordance with one or more implementations;

FIG. **29** illustrates a detailed view of a second mechanism implemented in the ATIMC control law sub-engine in FIG. **24**, in accordance with one or more implementations;

FIG. **30** illustrates a detailed view of a fourth mapping module of the ATIMC control law sub-engine in FIG. **24**, in accordance with one or more implementations;

FIG. **31** is a block diagram depicting an adaptive fuzzy controller;

FIG. **32** is a flowchart depicting a method for controlling a plasma processing system with the adaptive fuzzy controller depicted in FIG. **31**;

FIG. **33** is a graphical representation of generic membership functions that may be used in the adaptive fuzzy controller depicted in FIG. **31**;

FIG. **34** is a graphical representation of a specific example of membership functions that may be used in the adaptive fuzzy controller depicted in FIG. **31**;

FIG. **35** is a graphical representation of an example of fuzzification of a rule;

FIG. **36** is a graphical representation of an example of fuzzification of another rule;

FIG. **37** is a graphical representation of an output membership function that results from the fuzzy rule depicted in FIG. **35**;

FIG. **38** is a graphical representation of an output membership function that results from the fuzzy rule depicted in FIG. **36**;

FIG. **39** is a block diagram depicting an example adaptive fuzzy controller that may be used to realize the adaptive fuzzy controller shown in FIG. **31**;

FIG. **40** is a block diagram depicting an example of a control-to-estimate mapping module that may be used to realize the control-to-estimate mapping module depicted in FIG. **39**;

FIG. **41** is a block diagram depicting an example correction module that may be used to realize the correction module depicted in FIG. **39**;

FIG. **42** is a block diagram depicting an example zooming and shifting module that may be used to realize the zooming and shifting module depicted in FIG. **39**;

FIG. **43** shows a plot illustrating the concept of the bifurcated model for the estimation portion;

FIG. **44**A shows a graph of the desired reference signal in FIG. **45**, where a control parameter is closer to the desired reference signal during pulse **2**;

FIG. **44**B shows a graph of the desired reference signal of FIG. **45**, where the controlled parameter achieves the controlled output;

FIG. **44**C shows a graph of the desired reference signal of FIG. **45**, where the controlled parameter achieving the controlled output;

FIG. **45** shows an example of an actuator output that is produced in response to a desired reference signal where the desired reference signal;

FIG. **46** shows an illustrative example of operation of an adaptive engine according to embodiments of this disclosure;

FIG. **47** illustrates a method of operating a sub-engine such as the Lyapunov sub-engine

FIG. **48** shows a block diagram depicting physical components that may be utilized to realize the adaptive engine according to an exemplary embodiment;

FIG. **49** illustrates a method of adaptive control where mappings of the control laws are empirically derived;

FIG. **50** shows another alternative where the mapping function also determines the estimated system output, y_{est_se};

FIG. **51** shows a mapping function as used during a boot up phase of an alternative adaptive engine;

FIG. **52** shows a mapping function as used during an adaptation phase of an alternative adaptive engine; and

FIG. **53** shows a mapping function as used during an adaptation phase of an alternative adaptive engine.

DETAILED DESCRIPTION

A tensor is a multi-dimensional array with a uniform type. In other words, a tensor is an algebraic object that describes a multilinear relationship between sets of algebraic objects related to a vector space. Objects that tensors may map between include vectors and scalars, and even other tensors. An example of a zero-order tensor is a fixed power setpoint, while a first-order tensor is a vector, such as phasor representing the phase shift between two waveforms (e.g., voltage and current). A second-order tensors is a matrix, where two matrices might be used to represent estimated future values of reflected power and load impedance at two future times, and where multiplying those matrices together may be used as a simplified mathematical operation to predict a trajectory of reflected power and load impedance into the future. As can be seen, tensors provide a way to simplify complex sets of data and mathematical operations, which not only helps simplify complex MIMO applications in this disclosure, but also allows for parallel processing and more efficient use of limited processing resources for predicting nonlinear dynamics in power and plasma systems.

The index "k" will be used to specify an iteration, such that a timing of a generalized variable can be described with the addition of k. For instance, the control for a previous iteration may be denoted u_{out_k-1} and u_{out_k} for a current iteration. This exemplary use of iteration index k can be used across all variables to provide clarity when a discussion of multiple iterations of the same variables is needed, but otherwise, generalized versions of variables will not use the iteration index k.

For the purposes of this disclosure, an estimation error, $\hat{e}$, and an estimated system output error, $\hat{e}_{out}$, can each be replaced by a cost function, J or J_{out}, respectively. Accordingly, this disclosure will often only discuss an estimation error e and a system output error $\hat{e}_{out}$, and these references should be understood to also include cost function variations of these errors. It should be noted that the hat symbol over the "e" represents an estimation. An actual system error, $\hat{e}_{out}$, will also be discussed and this should not be confused with the estimated system error, $\hat{e}_{out}$.

Traditional control systems often look at an error, $\hat{e}$, between the reference signal, r, and the measurements of delivered power, y_{meas}, and produce a control, u_{out}, proportional to the error, e. However, such controls can suffer when presented with nonlinearities and unknown disturbances, among other challenges. To address nonlinear systems, nonlinear systems with uncertainty, linear systems with uncertainty, and systems with unknown variations in plant parameters, adaptive controls have been developed. The basic aim of adaptive control is to maintain a consistent performance of a system in the presence of uncertainty or unknown variation in plant parameters, but with changes in the controller parameters, adapting to the changes in the performance of the control system. Hence, there is an adaptation in the controller setting subject to the performance of the closed-loop system. How the controller parameters change is decided by the adaptive laws, which are often designed based on the stability analysis of the adaptive control system.

A number of design methods have been developed for adaptive control. Model Reference Adaptive Control (MRAC) consists of a reference model which produces the desired output, and the difference between the plant output and the reference output is then used to adjust the control parameters and the control input directly. MRAC is often in continuous-time domain, and for deterministic plants. Self-Tuning Control (STC) estimates system parameters and then computes the control input from the estimated parameters. STC is often in discrete-time and for stochastic plants. Furthermore, STC often has a separate identification procedure for estimation of the system parameters, and is referred to as indirect adaptive control, while MRAC adapts to the changes in the controller parameters, and is referred to as direct adaptive control. However, the development of a general robust adaptive controller remains at present an open problem. Martin Guay et al. *Robust and Adaptive Model Predictive Control of Nonlinear Systems, Control, Robotics and Sensors Series* 83, page 76.

This disclosure presents an updated adaptive engine that can combine influences from multiple estimation laws in a manner that addresses certain challenges of an input waveform and/or system to be controlled, such as nonlinear systems, nonlinear systems with uncertainty, linear systems with uncertainty, and systems with unknown variations in plant parameters. Further, changes to the blending of these influences can be adjusted in real-time to cope with the often nearly instant changes seen in nonlinear systems.

Referring to FIG. **4** shown is a block diagram depicting aspects of a predictive and tensorial control approach that may be utilized in connection within a plasma processing system **400** (though systems other than a plasma load can also be controlled by the actuator(s) **408**). Shown in FIG. **4** is an adaptive engine **420**, which is coupled to a user interface **108**, one or more actuator(s) **408**, and sensors **410**. Also coupled to the adaptive engine **420** is a delay/amplitude estimator **404**. As discussed further herein, the delay/amplitude estimator **404** may be further separated into functional subcomponents or consolidated, and the functionality of the delay/amplitude estimator **404** may be carried out in pipelining-type approaches or may be serially effectuated, which one of ordinary skill in the art, in view of this disclosure, will understand.

While referring to FIG. **4**, simultaneous reference is made to FIG. **3**, which is a flow chart depicting steps that may be traversed in connection with embodiments of the disclosure herein. The user interface **108** is configured to receive (Block **302**) a reference signal, r, defining target values (or

reference signals) for one or more controlled parameters that is applied to one or more controlled outputs within the system. In other words, the reference signal, r, can be an n-dimensional entity where n>0. For instance, a one-dimensional reference signal, r, is more typically referred to as a reference signal. In some embodiments, r, can also refer to a series of setpoints or a setpoint stream. The target values may represent multi-level pulsed waveforms or any arbitrary waveform. As shown, the controlled outputs within the system **400** may include a load output **430**, which is a node that is coupled to the nonlinear and/or chaotic load **104**, and/or the controlled outputs may include one or more actuator(s) outputs **432**. In other words, the adaptive engine **420** may be used to control one or more controlled parameters at the load output **430** that may include power-related parameters including, for example and without limitation, DC power, forward power, reflected power, reflection coefficient, frequency, and current. In addition, the adaptive engine **420** may be used to control controlled parameters that are applied at the actuator(s) outputs **432**. The controlled parameters applied to actuator(s) outputs **432** may include the power-related parameters listed above (in connection with the output **430** (load output)) and control-related parameters such as a phase-control signal, frequency control signal, and voltage-control signals. In addition, one or more particular actuator outputs **432** may feed as an input **434** to one or more other actuators **408**. The actuator outputs **432** need not have similar response times, for instance, but not limited to, where one actuator drives a fast power source and a second actuator drives a slower rail voltage.

As shown, at least one sensor **410** is configured to obtain a measure (Block **304**) of the parameters such as the power-related parameters and the control-related parameters listed above. The at least one sensor **410** may include, for example and without limitation, directional couplers, VI sensors, current transducers, and simple voltage sensors. Those of ordinary skill in the art will appreciate that the signals from the at least one sensor **410** may be sampled and converted into digital format for use by the adaptive engine **420**.

A delay/amplitude estimator **404** is configured to calculate a delay (Block **306**) between the target values of the reference signal **405** and corresponding actual parameter values achieved at the controlled output (i.e., measured system outputs). The delay/amplitude estimator **404** is also configured to provide, based upon the delay, a time-shifted amplitude error **452** indicative of an error between the target values and the actual parameter values (Block **308**). According to one aspect, the adaptive engine **420** is beneficially configured to adjust at least one of the actuators **408** (based upon the delay **450** (at Block **306**) and the time-shifted amplitude error **452** (at Block **308**)) in advance of when an actual parameter value is needed (at an actuator output of the at least one actuator **408**) while maintaining the controlled parameter at the controlled output within a threshold range (Block **301**).

Referring briefly to FIG. **45** for example, shown is an example of an actuator output **4534** (e.g., rail voltage, V_{rail}) that is produced (using the adaptive engine **420**) in response to a desired reference signal where the desired reference signal comprises three pulses and each pulse includes three target values (desired at the controlled output for a controlled parameter): state 1, state 2, and state 3. Each state of the desired reference signal corresponds to a target value of a controlled parameter at the output **430** (e.g., forward power). As shown, during pulse **1**, the actuator output **4534** is adjusted, at t_1, in very close connection with a time when it is needed—at the change in the reference signal from state 1 to state 2. But during pulse **2**, the actuator output is adjusted, at t_2, in advance of when the actuator output **4534** needs to be increased to produce the target value of state 2 at the output **430**. As a consequence, the controlled parameter (e.g., forward power) at the controlled output (e.g., load output **430**) will reach the desired reference signal faster than prior control methodologies that attempt to minimize energy dissipation (using actuator output **4562**), and faster than prior methods that attempt to maximize a speed of response (using actuator output **4564**). The predictive functionality of the delay/amplitude estimator **404** enables the adaptive engine **420** to adjust the actuator (e.g., rail voltage) in advance of when it is needed by predicting the effects of adjusting the actuator in advance of when it is needed so that adverse consequences (e.g., reference signal errors or over voltage conditions) are avoided.

Referring to FIGS. **44**A, **44**B, **44**C for example, shown are three graphs, and each of the three graphs depicts the same desired reference signal that is shown in FIG. **45** with the same three desired states per pulse. FIG. **44**A depicts the controlled parameter actually achieved at the controlled output using the predictively produced actuator output **4534**; FIG. **44**B depicts the controlled parameter actually achieved at the controlled output using the actuator output **4562**; and FIG. **44**C depicts the controlled parameter actually achieved at the controlled output using the actuator output **4564**. As shown in FIG. **44**A, the controlled parameter is closer to the desired reference signal during pulse **2** when the controlled actuator is controlled (in advance of when it is needed) to produce the actuator output **4534** as compared to both the controlled parameter values in FIGS. **44**B and **44**C.

As discussed further herein, the delay/amplitude estimator **404** may be implemented with different levels of complexity, but in general, the delay/amplitude estimator **404** is configured to detect a delay **450** between a desired reference signal (from the user interface **108**) and the time when the actual output of one or more actuators **408** reaches the reference signal. As discussed further herein, the reference may be a time varying streaming reference signal (e.g., a reference signal that mirrors the pulses and states in FIG. **2**) and, as discussed further herein, the delay **450** may be determined based upon a cross correlation between the streaming reference signal and the actual time-varying output of one or more actuators **408** in the system. Moreover, as discussed further herein, the delay **450** may be a simple delay (e.g., between a reference signal and an output when the reference signal is achieved) or the delay **450** based on several constituent delay components including delays within an actuator **408** and/or external delays outside of the actuator **408**. With knowledge of the delay **450**, the delay/amplitude estimator **404** may determine a time-shifted amplitude error **452**, which is generally indicative of an error value based upon a difference between the streaming reference signal and the output that is determined after the streaming input waveform and an output waveform are relatively time-shifted (based upon the delay **450**) so that, on an ongoing basis, a portion of the output waveform is aligned with the corresponding portion of the reference signal that effectuated the portion of the output waveform. Once the output waveform is aligned with the streaming reference signal, an error value, represented as the time-shifted amplitude error **452**, may be calculated.

The adaptive engine **420** utilizes the delay **450** and the time-shifted amplitude error **452** to predict how the control signal(s) and or actuator output(s) will react to potential control signal changes—in advance of actually changing the

control signals. By predicting how the actuator outputs will be affected (in advance of actually changing the control signals to the actuators **408**) the adaptive engine **420** may adjust the control signals to achieve desired results. For example, based upon predicted-control-signal outputs, the adaptive engine **420** may adjust the control outputs to: reduce a time it takes to achieve a desired output of the actuator(s); to reduce energy dissipation; to prevent damaging over voltage and/or over current conditions; and/or to achieve any desired balance between speed, accuracy, and energy.

It should be recognized that FIG. **4** is a simplified depiction of what may be implemented on a tensorial level with many reference signals, many control signals, and many actuators **408**. It should also be recognized that the actuators may be higher-level actuators (such as generators, match networks, RF sources, and bias supplies) and lower-level constructs within the higher-level actuators. For example, a DC section and the power amplifier are examples of actuators within a generator that may be controlled (as discussed further herein as a non-limiting example). By way of further example, the voltage of the DC section may be controlled, and a frequency of the power amplifier may be controlled using the adaptive engine **420**.

As another example, the match network **116** is an example of an actuator **408**, which also comprises actuators such as variable capacitors that may be controlled using of the delay estimation and predictive control aspects of the delay/amplitude estimator **404** and the adaptive engine **420**, respectively. It is contemplated, for example, that variable capacitors of the match network **116** may be controlled in isolation (e.g., based upon reflected power) or in connection with a variable frequency drive of the generator **102** using the of the delay/amplitude estimator **404** and adaptive engine **420**. As a further example, the bias supply **120** is an actuator **408**, and the bias supply **120** comprises actuators **408** such as a power supply (e.g., to establish a rail voltage) and a switching-section to establish timing of a periodic asymmetrical voltage waveform. These actuators **408** of a bias supply may be controlled (using the estimation and prediction techniques of the delay/amplitude estimator **404** and adaptive engine, respectively) to control the bias supply **120**. Or other actuators of the bias supply may be controlled in view of other actuators such as the RF source **118** and/or generator **102** to synchronize the bias supply **120**, the RF source **118**, and/or the generator **102** to achieve desired plasma processing recipe results and/or to prevent undesired plasma modulation (e.g., due to intermodulation frequencies).

In more general terms, various aspects of the delay estimation and predictive control, and/or adaptive control, may enable direct, unhindered (or without response delay) control of a parallel multi-actuator or multi-knob nonlinear control system (such as the plasma processing systems **100**, **400**). A controller utilizing the delay estimation, prediction, and/or adaptation, may enable more responsiveness (e.g., maximize dynamic range in real time) and adaptability of a parallel multi-actuator nonlinear and/or chaotic control system. Moreover, the delay estimation and predictive aspects, as well as the adaptation aspects of this disclosure may enable improved controls (e.g., to maximize the speed of the response and achieve the shortest response time to reach a desired reference signal value, while also enabling stability and robustness) of a parallel multi-actuator nonlinear and/or chaotic control system. The delay estimation and predictive aspects and adaptation aspects may also enable all of the above functions and advantages to be achieved even when some of the actuators of the control system are arbitrarily slower than other actuators of the control system.

Another aspect of the delay estimation and predictive and/or adaptive control of this disclosure may enable all of the above functions and advantages to be achieved even when multi-level pulsing with a number of states (going up to an arbitrary number) is desired, and/or arbitrary waveform tracking is required on a nonlinear and/or chaotic dynamic load. Yet another aspect may also enable all of the above functions and advantages to be achieved even while minimizing the control energy expended in the system. As discussed further herein, the delay estimation and predictive control aspects and/or adaptation aspects may also enable all of the above functions and advantages to be achieved while protecting hardware from faults relating to high dissipation, high currents, and/or high voltages. Moreover, another aspect of the delay estimation and predictive control and/or adaptation methodologies may also enable all of the above functions and advantages to be achieved even while making sure all the different actuators work cooperatively together such that no actuator is controlling itself in a manner that hinders, impedes, or interferes with the control of the other actuators in such a way that would cause the system response to become slower, or require more energy to be achieved from any or all of the other actuators.

Adaptive Engine

At a high level, the adaptive engine splits, or bifurcates, adaptive control for highly nonlinear and/or chaotic systems, such as power supplies for plasma processing. The adaptive engine starts with a nonlinear model of one or more actuators and/or a power system controlled by the one or more actuators, and defines two outputs of this nonlinear model: one for control, u_{se}, and one for an estimated system output, y_{est_se}, based on that control, u_{se}. Two parts of the nonlinear model that achieve these outputs can be referred to as a control portion and an estimation portion. There are different ways of expressing these two portions as will be discussed later, but for the purposes of illustration, one form of the control and estimation portions of the nonlinear model can be written as:

$$u_{se}=\theta\cdot\emptyset \text{ (Control Portion of Nonlinear Model)}$$

$$y_{est_se}=W_m\{u_{se}\} \text{ (Estimation Portion of Nonlinear Model)}$$

The control portion is a function of estimated parameter values for the nonlinear model, referred to as an estimated model parameter tensor, θ, as well as an input regressor, Ø, that can include elements such as a reference waveform, r. As seen, the estimation portion is dependent on the answer to the control portion as well as a time-varying linear system, W_m. The time-varying linear system, W_m, is composed of the following system of equations:

$$\begin{cases} \dot{x} = Ax + Bu_{se} \\ y_{est_se} = Cx \end{cases} \text{ (Time-Varying Linear System, } W_m\text{)}$$

Where x is an internal state and where A, B, and C are matrices whose structure defines characteristics of the nonlinear model, and whose elements can include 1, 0, θ, and fixed coefficients. In some cases, the structure may include changing an element from θ to a fixed coefficient, where it is known that adaptation of this element of the estimated model parameter tensor, θ, is not needed or doesn't provide significant improvement. One sees that with knowledge of the A, B, and C matrices, and a value for the possible control

signal, u_{se}, the system can be solved for the estimated system output, y_{est_se}. More specifically:

$$\dot{y}=Ay+Bu_{se}$$

So, $W_m\{u_{se}\}$ leads to y_{est_se} by integrating **9**.

Although C can vary, in some embodiments C can be the identity matrix for improved performance. At the start of each frame, x can take the last value of x from the previous frame.

This disclosure improves on existing nonlinear modeling techniques by bifurcating the time-varying linear system, W_m, into a linear and a nonlinear portion. The nonlinear portion is unknown, and this disclosure's adaptive control seeks to minimize this unknown nonlinear portion via adaptation of the linear portion. Adaptation of the linear portion can also be bifurcated via the use of frames. The reference signal, r, can be split into frames, each potentially having a different number of control samples or iterations, such that each frame allows a time-varying linear approximation of the nonlinear system behavior resulting from the reference signal, r, for that frame. Thus, each frame's length is selected so as to optimize the linear approximation. The time-varying linear approximation, or W_m, has a structure as noted above, that is selected for each frame. This structure, or the structure of the A, B, and C matrices, determines large scale changes or shapes of the model. Yet, the time-varying linear system, W_m, is also a function of the estimated model parameter tensor, θ, which is modified, or adapted, at each control sample or iteration of the adaptive engine. So, while the structure of the time-varying linear system, W_m, remains constant through a frame, θ changes, and thus W_m changes. These changes resulting from adaptation of θ tend to be small compared to the changes resulting from the structure changing. Thus, adaptation of the estimation model parameter tensor, θ, allows small nonlinear variations in system behavior to be modeled and processed in real-time, while larger variations in system behavior are modeled by changes in the W_m structure, which change every frame. Because the structure only changes frame-by-frame, these values can be pre-processed and can use a processing resource with less power than one needed to process the estimated model parameter tensor, θ, adaptation. For instance, the structure of the time-varying linear system, W_m, can be processed on a CPU, while the adaptation of the estimated model parameter tensor, θ, can be processed in real-time on an FPGA.

At the start of each frame, the estimated model parameter tensor, θ, begins with a set of initial conditions, and thus, the time-varying linear system, W_m, and hence the nonlinear model, may form a very rough approximation of the nonlinear system behavior (i.e., outputs of the model may see some error from actual system behavior). However, the adaptive engine guesses and tests values for the estimated parameter tensor, θ, or adapts them, during a plurality of control samples or iterations, and as this occurs, the time-varying linear system, W_m, becomes a better and better approximation of the nonlinear system behavior until the error (or the unknown nonlinear portion of W_m) fall below a threshold at which W_m is considered to have converged and no further adaptation is needed (i.e., no further changes to θ are performed). Said another way, the adaptive engine pre-processes a different nonlinear approximation (dependent on θ) of the system's nonlinear behavior for each frame, and then within each frame, the adaptive engine adjusts the nonlinear approximation via adaptation of the estimated model parameter tensor, θ, to bring the linear approximation into even closer alignment with the system's nonlinear behavior. This bifurcation of calculating the linear approximation (the structure of the A, B, and C matrices) on a frame-by-frame basis, and real-time adaptation of the estimated model parameter tensor, θ, of the time-varying linear approximation, allows different processing resources to be applied to their best functions: slower resources like a CPU can process the structure of the time-varying linear system at a slower pace, and faster resources like an FPGA can process adaptation or modification of the time-varying linear system (via **0**) within each frame at a faster pace. This bifurcation allows faster and more robust convergence on nonlinear behavior than has been possible in existing adaptive controllers.

FIG. **43** shows a plot illustrating the concept of the bifurcated model for the estimation portion. In this plot, the model output is power, and this can be estimated using an estimation portion of the model, which depends on W_m and u_{se}, though other outputs can also be handled by the models of this disclosure. The time-varying linear system, W_m, can be bifurcated into a linear (dashed lines) and a nonlinear part (solid lines). The linear part can be referred to as $W_{m_linear}(u_{se}, \theta)$, and depends on the estimated model parameter tensor, θ, and the possible control signal, u_{se}, both of which vary per control sample or iteration, and where the structure of this linear part changes with each new frame. The unknown nonlinear part can be referred to as $W_{m_non\text{-}linear}(k)$, and oscillates with every control sample or iteration due to adaptation of the estimated model parameter tensor, θ, but whose oscillation becomes smaller as the linear portion is adapted and the nonlinear model becomes a better and better approximation of the actual nonlinear system behavior. As the adaptation improves, the unknown nonlinear portion $W_{m_non\text{-}linear}(k)$ of the time-varying linear system, W_m, becomes small enough to be ignored. In other words, while the structure of the linear portion does not change within a frame, its overall influence on the model output does change as the adaptation of θ brings the linear portion into better alignment with the system's nonlinear behavior. Thus, at the start of each frame, the nonlinear portion is likely large, but as the linear portion is adapted (as the estimated model parameter tensor, θ, is adapted), the linear portion, $W_{m_linear}(u_{se}, \theta)$, becomes a better approximation of actual behavior and the unknown nonlinear portion or error is reduced until it falls below a threshold and the adaption is considered complete for that frame (i.e., convergence). In other words, at some point in each frame the adaptive engine adapts the linear portion $W_{m_linear}(u_{se}, \theta)$ of the time-varying linear system, W_m, to be a very good approximation of W_m, and the unknown nonlinear portion $W_{m_non\text{-}linear}(k)$ is small enough to ignore. Said another way, the net effect of this structural change from frame-to-frame and the adaptation of the linear portion within each frame, allows the overall model ($W_m\{u_{se}, \theta\}$) to quickly converge on nonlinear system behavior since the structure of each frame can be pre-computed (e.g., on a CPU) or empirically derived, and thus only the adaption of the linear portion $W_{m_linear}(u_{se}, \theta)$ is performed with real-time processing resources (e.g., FPGA).

FIG. **9** illustrates a method of operating the herein disclosed adaptive engine having a bifurcated nonlinear model. The method **900** can include providing a system model (or "nonlinear model") with a control portion, for generating possible control signals, u_{se}, and an estimation portion for estimating estimated system outputs, y_{est_se} (Block **902**). The time-varying linear system, W_m, can be bifurcated or split into a sum of a linear and a nonlinear portion and the control timeline can be split into frames of differing lengths (or number of control samples or adaptation iterations) (Block **904**) with some processing of the nonlinear model

occurring on a CPU or other slower resource and real-time aspects of the nonlinear model occurring on an FPGA or other faster resource. A current frame can be supplied with a structure of the time-varying linear system, W_m (Block **906**). As noted relative to FIG. **43**, the nonlinear portion of the time-varying linear system, W_m, is effectively an unknown error and thus not used or considered in the processing (other than in attempt to minimize this error). For this reason, the terms time-varying linear system, W_m, and the linear portion thereof, $W_{m_linear}(u_{se}, \theta)$, will be used interchangeably, with this simplification becoming more accurate as convergence occurs in each frame. The structure of the time-varying linear system, W_m, can be pre-processed, for instance on a CPU, though it can also be accessed from an empirically-derived lookup table. The structure of the time-varying linear system, W_m, remains constant through the current frame. Yet, since the time-varying linear system, W_m, is also dependent on the estimated model parameter tensor, θ, the estimation portion of the nonlinear model adapts within a frame as θ changes (as the adaptive engine modifies θ to minimize an error relative to measured system behavior) (Block **908**). This can involve calculating an estimation error, ê, or cost function, J, based on two or more of (1) measured system outputs, y_{meas}, from a previous iteration, (2) estimated system outputs, y_{est_se}, from a previous iteration, and (3) reference signal, r (Block **912**). Adaption can then involve applying an estimation law to at least the reference signal, r, and the estimation error, ê, or cost function, J, to estimate an estimated model parameter tensor, θ (Block **914**). This adaption (Blocks **912**, **914**, and **918** and Decision **916**) continues through the entirety of the frame, and in turn, W_m, is adapted throughout the frame (or until convergence is achieved). Once a frame is complete (Decision **916**=Yes), the method **900** selects a next frame (Block **910**), and a new structure of the time-varying linear system, W_m, is provided into the model (Block **906**), and adaptation of the estimated model parameter tensor, θ, (Block **908**) is carried out through this next frame until convergence. As noted earlier, the structure of the time-varying linear system, W_m, can include the structure of the A, B, and C matrices that are part of the system of equations making up W_m. This simplified overview of the bifurcated nonlinear model operation will be further detailed with reference to the various FIGURES that follow.

FIG. **5** shows an embodiment of an adaptive engine such as the one shown in FIG. **4**. The adaptive engine **500** is configured to provide an adapted control signal, u_{out}, to one or more actuators (e.g., actuator(s) **408** in FIG. **4**), where the adapted control signal, u_{out}, is configured to converge on a target parameter more quickly, such as a reference signal waveform, than is possible via known controllers. Although the adapted control signal, u_{out}, (hereinafter "control signal" or "control") may have multiple components in a MIMO system (i.e., may be a tensor or may be tensorized), for simplicity it will be referenced in the singular throughout this disclosure, and those of skill in the art will be able to apply the adapted control signal, u_{out}, to situations where one or more control signals are implemented (i.e., to a tensorial adapted control signs, u_{out}). Further, where the system being controlled presents nonlinearities and instabilities, such as found in a plasma control system, the adaptive engine **500** is able to adjust the amount and means of adaptation to avoid instability, even for instance, at the cost of slower convergence. This will be referred to as "adaptation gain".

At the same time, different ones, numbers, and combinations of control laws can be applied to optimize the control signal, u_{out}, for different signals and situations. Similarly, different estimation laws can be used to estimate parameters of a nonlinear model of the actuators and/or system controlled by the actuators. The nonlinear model can be a function of an input regressor, including values such as a reference signal, and can also be a function of the estimated model parameters. Both the input regressor and the estimated model parameters are updated for each iteration, such that the nonlinear model is "adapted" for each iteration. Further, in some embodiments, processing of the nonlinear model can be improved by creating frames of control samples or iterations, providing a different structure for the nonlinear model for each frame, and adapting the estimated model parameters for each iteration within a given frame. In this way, a linear approximation of the nonlinear model can be used for each frame, thereby easing the resource usage of adapting the nonlinear model at each iteration. More specifically, the estimated model parameters can be used in the control laws, each control law applying the nonlinear model in a different way, to determine possible control signals, u_{se}, and predict estimated system outputs, y_{est_se}. In particular, the nonlinear model can include a control portion, or calculation for a possible control signal, u_{se}, and a prediction portion, or prediction of the system output, y_{est_se}. The nonlinear model can take the estimated model parameter tensor, θ, as one of its inputs. The first output, the possible control signal, u_{se}, can be passed from the control portion of the nonlinear model to the prediction portion of the nonlinear model to be used in the prediction of y_{est_se} (the second output of the nonlinear model). The possible control signal, u_{se}, and the estimated system output, y_{est_se}, are then passed to the selector module and used to identify the different ones, numbers, and combinations of control laws (i.e., the possible control signals generated therefrom) to apply to generate the control signal, u_{out}.

In this disclosure, a nonlinear model, and two derivations thereof, seven estimation laws, and eight control laws will be used as examples, but these are in no way limiting of the vast numbers of models, estimation laws, and control laws that can be implemented. More important, is how the models, estimation laws, and control laws work together to generate a control signal, u_{out}, from inputs such as reference signal, system output measurements, and previous control signals, to name a few non-limiting examples.

As just one non-limiting example of how models, estimation laws, and control laws interoperate, at startup, when a system's output is far from a desired reference signal, the adaptive engine **500** may use more aggressive means of adapting the control signal such that speed of convergence is prioritized over stability (i.e., some combinations of estimation laws and control laws may be given greater weight). As the measured signal approaches the reference signal, the adaptive engine **500** may decrease the priority given to rapid convergence, and instead turn more to control that favors stability (i.e., different estimation laws and control laws may be given greater weight). Eventually, those aspects of the adaptive engine **500** that focus on rapid convergence may be almost entirely (or entirely) turned off, such that influence on the control, u_{out}, is almost entirely (or entirely) stability oriented. This is an example of just two priorities that can be balanced with time in the adaptive engine **500**, and as one will see, there are numerous other priorities that can be selected or blended to generate the control signal based on the estimation laws and control laws that are given priority. As a more specific example, when a plasma processing recipe is running, it may start in an operation region that is relatively easy to model and track,

and thus the adaptive engine **500** can primarily rely on estimation laws and control laws geared toward this operating region. However, after a period of time, the recipe may change the chamber gas, chamber pressure, power of the chuck, then the adaptive engine **500** may shift toward different estimation laws and control laws geared toward the new operating region. These adaptations are in addition to the adaptation seen in the estimated model parameter tensor, θ, alone, which will start to see smaller changes from iteration-to-iteration as the nonlinear model approaches the actual behavior of the system. Thus, one sees that there are multiple ways that the adaptation engine **500** can adapt to nonlinear and dynamic system behavior.

In its most basic form, the adaptive engine **500** is a system that receives or accesses from memory, a reference signal, r (or stream of reference signal signals), a measurement, y_{meas} (or stream of measurements) of an output of the system being controlled (e.g., the nonlinear plasma load **104** in FIG. **4**), a control signal, u_{out}, from a previous iteration, and produces a control signal (or "control"), u_{out}, that is most likely to achieve a desired system response correlating to the reference signal, r, rapidly and/or in a robust manner (i.e., without instability). For instance, the adaptive engine **500** could be used to control a plasma processing system **100**, where the reference signal is a desired power being delivered to the plasma, such as 1000 W, and the measurements are measures of power being delivered. The control, u_{out}, may control power of a power supply, or in a MIMO situation, may include the power and frequency of the power supply as well as variable capacitor positions within a match network configured to match impedance of the power supply to a nonlinear plasma load. Again, each of the reference signal, r, measurement, y_{meas}, and control signal, u_{out}, can be a vector or tensor in embodiments with more than one input and output, though for simplicity they will be discussed in the singular throughout this disclosure.

The present disclosure, illustrated at a high level in FIGS. **5**A-C, provides an adaptive engine **500** (or adaptation engine) including an adaptation law selector **502** and a selector module **508**. The adaptation law selector **502** effectively selects a set of adaptation laws, each comprising a different combination of an estimation law and a control law.

Estimation Law Modules

The estimation laws are embodied in and implemented by estimation law modules **504** and the control laws are embodied in and implemented by control law modules **506** (or sub-engines). The estimation law modules **504** take an input regressor Ø and apply an estimation law to the input regressor Ø to produce an estimated model parameter tensor, θ, for a nonlinear model of the actuators and/or system (e.g., a plasma processing system). The estimated model parameter tensor, θ, is determined for most estimation laws using at least a portion of the input regressor, Ø, and an estimation error, ê, or cost function, J, either of which can be written in various forms, but typically comprise some combination of two or more of the measured system output, y_{meas}, an estimated system output for a given control law module, y_{est_se}, and a reference signal, r. Typically, the measured system output, y_{meas}, and the estimated system output, y_{est_se}, are for a previous iteration and thus in some cases can be written as $y_{meas}(k-1)$ and $y_{est_se}(k-1)$. Said another way, each estimation law module estimates an estimated model parameter tensor, θ, that minimizes an estimation error, ê, or cost function, J. This estimation is then used by the nonlinear model in a corresponding control law module to generate a possible control signal, u_{se}, and to estimate an estimated system output, y_{est_se}, both of which are then used by the selector module to select a best one or combination of possible control signals as the control, u_{out}.

The estimated model parameter tensor, θ, is described generally, but will include values that are consistent between the estimation law modules **504** and the control law modules **506**. In other words, the values of 0 at the control law modules **506** will match those values in θ. For instance, a first control law may use r and y_{meas}, so the incident Ø is $[r, y_{meas}]$ and the incoming θ is $[\theta_r, \theta_{y_meas}]$. Another control law may use r, y_{meas}, and y_d (a filtered version of y_{meas}), and thus Ø is $[r, y_{meas}, y_d]$ and the incoming θ is $[\theta_r, \theta_{y_meas}, \theta_{y_d}]$. Further, because θ is a tensor, it can take the form of a 2-dimensional matrix such as the following:

$$\Theta = \begin{bmatrix} \theta_{11} & \dots & \theta_{1n} \\ \vdots & \ddots & \vdots \\ \theta_{m1} & \dots & \theta_{mn} \end{bmatrix}$$

Or Multi-Dimensional Matrices (not Shown).

The controlled system can be the ones shown in FIGS. **1** and **4** or any other system where the adaptive engine **500** provides a control signal, u_{out}, (e.g., **454** in FIG. **4** or output of the control section **112** in FIG. **1**) to one or more actuators. The input regressor Ø can include, for instance, a reference signal, r, a measurement of system output, y_{meas}, an estimated system output for a control law module, y_{est_se}, and a control signal u_{out} from a previous iteration (e.g., $u_{out}(k-1)$). However, other input regressors Ø can also be implemented, for instance excluding the estimated system output y_{est_se}, and the input regressor Ø is typically a tensor. In more detailed discussions of the control law modules **506** that will be seen later, the input regressor Ø may be filtered at times, and the filtered version of Ø can be referred to as ω-though both are an input regressor. Filtering may be advantageous when a control law module (control law) is sensitive to small perturbations, such that a filtered or smoothed input regressor leads to more robust operation.

Control Law Modules

This disclosure now provides great detail surrounding the control law modules **506**. Having calculated estimated model parameter tensors, θ, by applying estimation laws to the input regressor, Ø, the estimation law modules **504** for a given control law module **506**, pass the estimated model parameter tensors, θ, to the corresponding control law module **506**, which then applies the estimated model parameter tensors, θ, to a control law to generate a possible control signal, u_{se}, or sub-engine control signal, for each estimation law (i.e., for each estimation law module **504**). There are typically one or more estimation law modules **504** (or estimation laws) for every control law module **506** (or control law). For instance, if seven estimation law modules **504** are implemented for each of six control law modules **506**, then at least forty-two possible control signals, u_{se}, are generated and passed to the selector module **508**. However, in some control law modules **506**, more than one control law can be implemented (e.g., see the TARC and Adaptive PID control law modules described later). Yet, even where multiple control laws are implemented in a single control law module **506**, a possible control signal, u_{se}, can be generated for each estimation law (i.e., for each estimation law module **504**).

The possible control signals, u_{se}, from the one or more control law modules **506** are passed to a selector module **508** that provides a total system control, or control, u_{out}, as a best of the possible control signals, u_{se}, or a best combination or

blending of two or more of the possible control signals, u_{se} (e.g., a weighted average, multiplication, or summation). This selection can be based on an estimated system error, $\hat{e}_{out}$, or estimated system cost function, J_{out}. The control, u_{out}, is also the output of the adaptive engine **500**. As noted earlier, the control, u_{out}, is typically a tensor for MIMO systems, although a single signal is possible, and in certain embodiments, can be implemented as the control signal(s) **454** seen in FIG. **4**.

The estimation error, ê, which is used by the estimation law modules **504** to calculate the estimated model parameter tensor, θ, can be calculated from two or more of: (1) measured system output, y_{meas}, (2) estimated system output, y_{est_se}, and (3) a reference signal, r. More specifically, the estimation error, ê, and hence θ, can be based on a difference between two or more of these values. Each combination of an estimation law module **504** and a control law module **506** is associated with an estimated system output, y_{est_se}, and the estimated system output, y_{est_se}, is calculated from the nonlinear model with the corresponding possible control signal, u_{se}, and estimated model parameter tensor, θ, as inputs. Thus, each combination of estimation law module **504** and control law module **506** can produce distinct estimation errors, ê, and hence a distinct estimated model parameter tensor, θ. In some determinations of the estimation error, ê, the estimated system output, y_{est_se}, calculated for each adaption law, can be passed to the corresponding estimation law module **504** and used to calculate the estimation error, ê. As an example, the estimated system output, y_{est_se}, could be an estimate of a measured power delivery to a nonlinear plasma load such as **104** (e.g., estimate of signals measured by sensors **410**). As noted earlier, the estimated system output, y_{est_se}, is not limited to power parameters of a plasma processing system, and in other non-limiting examples, could include estimates of noise and disturbance.

As seen, the adaptive engine **500** takes an input regressor, Ø, and produces a control, u_{out}, that is tailored to a given operating region (e.g., fast convergence v. stability; stable v. unstable zero-dynamics) based on selection of a best combination of estimation and control laws—this combination being referred to as an adaptation law. More specifically, the adaptive engine **500** provides a plurality of combinations of estimation law modules **504** and control law modules **506** (i.e., a plurality of adaptation laws) that provide a plurality of possible control signals, u_{se}, where each of these possible control signals, u_{se}, are tailored for different control scenarios, and the selector module **508** then selects a one, or a combination, of the possible control signals, u_{se}, based on an estimated system error, $\hat{e}_{out}$, as the control, u_{out}.

Nonlinear Model

Further details of the nonlinear model are now provided. As described above, the estimation error, ê, is calculated from two or more of (1) measured system output, y_{meas}, (2) estimated system output, y_{est_se}, and (3) a reference signal, r, and where the estimated system output, y_{est_se} is used, the estimation portion of the nonlinear model is used to estimate this value. Although the nonlinear model is not shown in FIG. **5**A, it is a sub-component of each of the control law modules **506**. The location of the nonlinear model is not limiting however, though the location may influence timing and resource usage as well as the iteration of the estimated system output, y_{est_se}, used. For instance, if the estimation portion of the nonlinear model estimates system output, y_{est_se}, in the control law modules, as shown in FIG. **5**A, then the possible control signals, $u_{se}(k)$ (where k represents a value of the iteration), for a current iteration are fed into the estimation portion of the nonlinear model to estimate y_{est_se}. On the other hand, if the estimation portion of the nonlinear model estimated system outputs, y_{est_se}, in the estimation law modules, as shown in FIG. **5**B, then the possible control signals, $u_{se}(k-1)$, for a previous iteration is fed back to the estimation portion of the nonlinear model to estimate y_{est_se}. In either case, the estimated system outputs, y_{est_se}, are used in the estimation law modules **504** to determine the estimation error, ê, and also passed to the selector module **508** to aid in determining which possible control signal, u_{se}, to select, or which combination of possible control signals, u_{se}, to combine and how to combine them (e.g., weighted average, multiplication, summation, etc.). Thus, the only differences between FIGS. **5**A and **5**B are the locations and directions of the estimated system output, y_{est_se}, arrows and the possible control signal, u_{se}, arrows. For instance, the possible control signals, u_{se}, are passed from the control law modules **506** to the estimation law modules **504** in FIG. **5**B so that they can be used in in the estimation portion of the nonlinear models to calculate the estimated system outputs, y_{est_se}. In FIG. **5**A, the possible control signals, u_{se}, are internally provided to the estimation portion of the nonlinear model in the control law modules **506**. FIGS. **8**A and **8**B will provide further details to help illustrate operation of the nonlinear models with **8**A showing use of the current iteration's $u_{se}(k)$ and the nonlinear model in the control law module, and **8**B showing the previous iterations' $u_{se}(k-1)$ and the nonlinear in the estimation law module. Although the estimation portion of the nonlinear model can execute in either the control law modules, the estimation law modules, or elsewhere, the control portion of the nonlinear model is part of the control law modules. For instance, in some embodiments, the operation of the estimation portion of the nonlinear model can occur somewhere within the adaptation law selector **502**, but outside either of the estimation law modules **504** and the control law modules **506**.

In FIGS. **5**A and **5**B there is one estimation law module **504** for each control law module **506**. However, as shown in FIG. **5**C, multiple estimation law modules **504** can provide outputs (e.g., **6**) to a given control law module **506**. Although only a first control law module **506** and its corresponding one or more estimation law modules **504** are explicitly shown in FIG. **5**C. Additional sets of one or more estimation law modules **504** and corresponding control law modules **506** can also be implemented as shown via the "other estimation law modules" and "other control law modules" boxes. Each estimation law module **504** takes in input regressor, Ø, or a subset thereof, including values such as the reference signal, r, and the measured system output, y_{meas}, and an estimated error, ê, and processes these through an estimation law to produce an estimated model parameter tensor, θ, for each estimation law module **504**. Each of the estimated model parameter tensors, θ, is passed to one of a plurality of control law modules **506**, where two or more estimation law modules **504** can feed a single control law module **506**. Each estimation law module **504** applies an estimation law, and each control law module **506** applies a control law, such that every combination of an estimation law module **504** and a control law module **506** effectively implements an "adaptation law" and generates a distinct possible control signal, u_{se}. Although multiple estimation law modules **504** can feed a single control law module **506** as seen in FIG. **5**C, for simplicity, the remainder of this disclosure will extend the description of FIGS. **5**A and **5**B, where one estimation law module **504** feeds one control law module **506**. In light of FIG. **5**C and its description, those of

skill in the art will also be able to implement the remainder of this disclosure as extensions of FIG. **5**C.

Referring to any of FIGS. **5**A-C, a control law module **506** receives an estimated model parameter tensor, θ, from each of one or more estimation law modules **504**, along with the input regressor, Ø, or a subset thereof. It then applies these inputs to a control law to calculate a possible control signal, u_{se}, for each of the estimated model parameter tensors, θ (i.e., for each of its corresponding estimation law modules **504**). The control law takes the form of a control portion of the nonlinear model where each control law uses a different variation of the same basic control law portion of the nonlinear model. For instance, the Control Laws 1-4 described later in this disclosure are all variations of the Model 1. However, these Control Laws can be modified/transformed to operate with other models, such as, but not limited to, Model 2. The possible control signals, u_{se}, are then passed to the selector module **508**.

The input regressor, Ø, and subsets thereof are described generally relative to FIGS. **5**A-**5**C since the estimation law module **504** or the control law module **506**, where the input regressor, Ø, or a subset thereof, is provided, may dictate the values in the input regressor, Ø, or a subset thereof. For instance, the estimation law modules **504** often use two or more of the following, r, y_{est_se}, and y_{meas_out}, to determine the estimation error, ê, which is then used, along with other values depending on the estimation law implemented in a given estimation law module **504**, to determine estimation model parameter tensors, θ. In other words, Ø can be [r, y_{est_se}, y_{meas}] when provided to the estimation law modules **504** in some embodiments, but [u_{out_k-1}, r, y_{meas_out}] when provided to the control law modules **506**. Thus, functionality is roughly the same whether Ø or a subset thereof is provided to the estimation law modules **504** and the control law modules **506**. To better cover the various estimation law modules **504** and control law modules **506**, this disclosure will continue to generalize the inputs to both modules as Ø, and those of skill in the art can easily optimize resources and pipelining by providing more specific subsets thereof to the two distinct sets of modules.

A more detailed understanding of the estimation portion of the nonlinear model will be had through understanding that the control samples can be broken up into groups of frames, where each frame uses a different time-varying linear system, dependent on θ, to approximate nonlinear behavior over the frame. When these different linearized frames are considered as a whole, the net effect is an approximation of nonlinear behavior, but where the adaptive engine **500** can process simpler, linearized versions of a nonlinear model. The time-varying linear system can be denoted by W_m, and represents the solution to the system of equations for $\dot{x}$ and y_{est_se} shown earlier. The structure of the time-varying linear system, W_m, or the structure of the A, B, and C matrices used in the system of equations for $\dot{x}$ and y_{est_se}, can be updated every frame—meaning that the structure is constant within each frame. One illustrative structure of W_m can be written as:

$$W_m = \begin{cases} \dot{x} = Ax + Bu_{se} \\ y_{est_se} = Cx \end{cases} = \begin{cases} \begin{bmatrix} 1 & 0 & \theta_1 \\ 1 & 0 & 0 \\ 0 & \theta_2 & 1 \end{bmatrix} x + \begin{bmatrix} 1 \\ 1 \\ 1 \end{bmatrix} u_{se} \\ \begin{bmatrix} 1 & 0 & 0 \\ 0 & 1 & 0 \\ 0 & 0 & 1 \end{bmatrix} x \end{cases}$$

See a similar form of this system written as Equations 12 and 13 in the TARC control law module discussion. One can see in this example that the C matrix is the identity matrix, that three controls are implemented (since the B matrix is of size 3), and that the A matrix includes two components of the estimated model parameter tensor, θ. Changing the structure of W_m means that the locations of 1, 0, θ, and fixed coefficients (none are seen in the example above) in matrices A and B and optionally C (where the identity matrix is not used) are altered. For instance, if the above example structure was used in a first frame, changing the structure in a second frame could mean that the W_m structure is as follows:

$$W_m = \begin{cases} \begin{bmatrix} 1 & 0 & \theta_1 \\ 0 & 1 & 1 \\ 0 & \theta_2 & 0 \end{bmatrix} x + \begin{bmatrix} 1 \\ 1 \\ 1 \end{bmatrix} u_{se} \\ \begin{bmatrix} 1 & 0 & 0 \\ 0 & 1 & 0 \\ 0 & 0 & 1 \end{bmatrix} x \end{cases}$$

As yet another example of changing the structure of W_m, the adaptive engine may determine that further adaptation of θ_2 does not lead to significant improvement, and thus θ_2 can be replaced with a fixed coefficient (e.g., 0.88 in the below example)—meaning that it will no longer be adapted.

$$W_m = \begin{cases} \begin{bmatrix} 1 & 0 & \theta_1 \\ 0 & 1 & 1 \\ 0 & .88 & 0 \end{bmatrix} x + \begin{bmatrix} 1 \\ 1 \\ 1 \end{bmatrix} u_{se} \\ \begin{bmatrix} 1 & 0 & 0 \\ 0 & 1 & 0 \\ 0 & 0 & 1 \end{bmatrix} x \end{cases}$$

One will appreciate that since θ_1 and θ_2 are adapted or adjusted at each control sample or iteration, the overall effect of W_m sees small adjustments in time. One also can see that when the structure changes, a large change in W_m is seen. Since the nonlinear model depends on the time-varying linear system, W_m, structural changes to W_m at each frame allow large changes in nonlinear behavior to be approximated by the nonlinear model while sample-by-sample changes to the estimated model parameter tensor, θ, allow smaller nonlinearities to be approximated by the nonlinear model.

The time-varying linear system, W_m, can be calculated in a frame resynthesizer (see FIG. **6**) or looked up in a table pre-populated by the controller designer. The time-varying linear system can then be passed to the nonlinear model at the control law modules **506** (FIGS. **5**A and **5**C) or the estimation law modules (FIG. **5**B) at the start of each frame and then held constant through a given frame. In some embodiments, different time-varying linear systems, W_m, can be used for different control law modules **506**, where the differences involve expansions of a fundamental or most general form of the time-varying linear system, W_m. For instance, see the differences between Model 1 and Model 2 later in this disclosure. So, not only will the time-varying linear system, W_m, change from frame to frame, but different combinations of estimation law modules and control law modules can use different forms of the time-varying linear system, W_m, allowing different combinations of estimation and control law modules to achieve differing goals in the linear approximations of the system's nonlinear behavior.

This gives the adaptive engine **500** the ability to develop control signals, u_{out}, for a wider variety of operating regions and conditions.

In the FIGURES, providing the time-varying linear system as well as changes to the structure thereof may both be symbolized by the same W_m.

Although this disclosure often uses Model 1, where the time-varying linear system, W_m, is part of the estimation portion, Model 2 can also be used, and will merely see the time-varying linear system, W_m, used in the control portion instead. Details of both models are discussed later in the disclosure.

Selector Module

The selector module **508** receives one or more possible control signals, u_{se}, from the control law modules **506** and selects one or a combination of these possible control signals, u_{se}, for output as the control, u_{out}. The selector module **508** can use the possible control signals, u_{se}, the estimated system outputs, y_{est_se}, and at least parts of the input regressor Ø including the reference signal, r, and the system output measurement, y_{meas}, in an estimated system error, $\hat{e}_{out}$ or estimated system cost function, J_{out}, to select the possible control signal, u_{se}, or to select a combination of possible control signals, u_{se}, (e.g., a weighted average thereof) that minimizes the error or cost function. For instance, Equation 4 discussed later will present a detailed example of an estimated system cost function, J_{out}, that can be used to select the best possible control signal, u_{se}, or best combination of possible control signals, u_{se}. Where processing resources are more limited, the selector module **508** may select a best possible control signal, u_{se}, rather than a combination of multiple possible control signals, u_{se}. Where additional processing resources are available, the selector module **508** may select a best combination of possible control signals, u_{se} which may include selecting not only different combinations but different ways to combine the possible control signals, u_{se}.

Where a single possible control signal, u_{se}, is selected, this signal is selected as the control, u_{out}. However, where two or more possible control signals, u_{se}, are selected, the control, u_{out}, is formed by a blending of the possible control signals, u_{se}. For instance, multiple possible control signals, u_{se}, can be combined or blended via a "topology" such as, but not limited to, a weighted average, other averages, multiplication, summations, differences, divisions, integrals, derivatives, exponentials, complex functions, logarithms, series, statistical distributions, matrices, tensors, neural networks, nonlinear functions, graphs, maps, transformations, trees, to name a few non-limiting examples, or combinations thereof. For instance, Equation 5 presents a detailed example of a means to combine possible control signals, u_{se}, via a complex weighted average. However formed, the control, u_{out}, is then passed to the one or more actuators (e.g., **308**) and fed back to the adaptation law selector **502** as an input to the estimation law modules **504** and the control law modules **506** to determine a next iteration of the u_{out}. Because the control, u_{out}, is used as feedback for the next iteration, when input to the estimation law modules **504** and the control law modules **506**, it may sometimes be referred to as $u_{out}(k-1)$.

Once the topology is selected, the selector module **508** can also calculate a total estimated system output, y_{est_out}, in the same way that the control, u_{out}, was calculated (e.g., using Equation 7, which is structurally similar to Equation 5). In other words, the total estimated system output, y_{est_out}, can be the estimated system output, y_{est_se}, corresponding to the selected one of the possible control signals, u_{se} (or selected adaptation law). Or where two or more possible control signals, u_{se}, are combined, the corresponding estimated system outputs, y_{est_se}, can be combined in the same fashion to produce the total estimated system output, y_{est_out}.

In some embodiments, one or more memory components (not shown), such as pipeline registers, can be arranged between the control law modules **506** and the selector module **508**, such that possible control signals, u_{se}, and estimated system outputs, y_{est_se}, can be temporarily stored, which either assists in parallelization in the selector module **508** or allows the selector module **508** to pull from previous outputs of the control law modules **506** when the adaptive engine **500** sees repeated input iterations (e.g., the same reference signal waveform repeats).

To carry out the above noted functionality, the selector module **508** may implement an optional control selector and combiner **516** ("CSC") and an optional topology selector and designer **518** ("TSD"). The TSD **518** can look at previous controls (e.g., u_{out_k-1}, u_{out_k-2}, u_{out_k-3}, etc.) and a total estimated system output, y_{est_out}, for various possible topologies, and select a best topology, or the one most likely to, when applied in the selector module **508**, lead to a control, u_{out}, that causes a measured system output, y_{meas}, that is close to the total estimated system output, y_{est_out}, or the reference signal, r. This may involve an error or cost function that compares the measured system output, y_{meas}, for a previous iteration, or the reference signal, r, to the total estimated system outputs, y_{est_out}, calculated for various possible topologies. More specifically, the TSD **518** may analyze a cost function, such as Equation 4, to select an optimal possible control signal, u_{se}, or combination of possible control signals, u_{se} (in the form of a topology for combining the possible control signals). The TSD **518** may provide this selection to the CSC **516**, which then applies this topology to generate the control, u_{out}, based on the topology and the possible control signals, u_{se}. The topology may be embodied as a set of weights to be provided to the CSC **516**, where the weights determine how possible control signals, u_{se}, are combined or blended. In some embodiments, the topology can include averaging, multiplication, summations, differences, divisions, integrals, derivatives, exponentials, complex functions, logarithms, series, statistical distributions, matrices, tensors, neural networks, nonlinear functions, graphs, maps, transformations, trees, to name a few non-limiting examples, or combinations thereof. In other words, the selector module **508** predicts an output of the system that will result from different control signals generated by different topologies, and then selects the topology corresponding to a predicted output that minimizes an error or cost function.

As part of the selection (or topology selection), the CSC **516** can use the estimated system outputs, y_{est_se}, for each possible control signal, u_{se}, (i.e., for each adaptation law) to determine an estimated system error, $\hat{e}_{out}$, based on a measured system output, y_{meas_out}, and use the estimated system error, $\hat{e}_{out}$, to identify the best of the possible control signals, u_{se}, for selection as the control, u_{out}. Alternatively, or at the same time, a total estimated system output, y_{est_out}, can be found for each of various combinations of possible control signals, u_{se}, and the combination providing a total estimated system output, y_{est_out}, with the smallest error from the measured system output, y_{meas}, or the combination providing a smallest error between the reference signal, r, and the measured system output, y_{meas}, can be selected as the topology that the CSC **516** uses to generate the control, u_{out}.

Alternatively, the possible system outputs, y_{est_se} and/or the total estimated system output y_{est_out}, can be provided to

the TSD **518**, which can determine a possible control signal, u_{se}, or combination of possible control signals, u_{se}, that minimizes a cost function relative to the measured system output, y_{meas}, or the reference signal, r. If the TSD **518** selects the best possible control signal, u_{se}, or combination thereof, the TSD **518** can send this selection back to the CSC **516** as a topology or set of weights. In turn, the CSC **516** can return weight-tuning values (w-tuning) to the TSD **518** that can be used to adjust weights in a next iteration of topology selection. Weight tuning can increase the speed of the adaptive engine **500** and/or be used to smooth transitions between control laws. Weight tuning can also be used to smooth transitions between u_{se}.

It should be appreciated that the measured system output, y_{meas}_out, can be n-dimensional and is not limited to a power output from a power supply or match network, or power delivered to a plasma load. Other measured system outputs, y_{meas_out}, can be composites of multiple measured values as well as internal actuator measurements such as power dissipation in a DC section, to name one non-limiting example.

In some embodiments, adaptation or adaptation gain, or the influence of the adaptive engine **500**, can be selected based on the measured system output, y_{meas}, approaching a target value(s) (e.g., reference signal, r, or total estimated system output, y_{est_out}). In other words, the adaptation or adaptation gain, or the influence of the adaptive engine **500**, can be selected based on an actual system error, $\hat{e}_{out}$. In particular, some, but not all estimation laws can include an adaptation gain, Γ, that influences the adaptation from a given estimation law. When the measured system output, y_{meas}, is far from the target value(s), the adaptation gain, Γ, can be large (or increased) and thus the estimation laws in the estimation law modules **504** have a strong influence on the control signal, u_{out}. As the measured system output, y_{meas}, approaches the target value(s), the adaptation gain, Γ, can be decreased, similar to how one pulls back on a boat's throttle when approaching a dock. Said another way, when the actual system error, $\hat{e}_{out}$, is greater than a threshold, the adaptation gain, Γ, can be increased, and when the actual system error, $\hat{e}_{out}$, is less than the threshold, then the adaptation gain, Γ, can remain unchanged. In one embodiment, an optional adaptation influence control **510** can look at the actual system error, $\hat{e}_{out}$, or difference between a reference signal (e.g., r) or reference signal stream and a measured system output (e.g., y_{meas}) and generate the adaptation gain, Γ, based on the actual system error, $\hat{e}_{out}$. Alternatively, the optional adaptation influence control **510** can look at an error or difference between the reference signal, r, and a total estimated system output, y_{est_out} (see Equation 4 for instance). In yet other embodiments, the error or difference can be based on the estimated system output, y_{est}, and the measured system output, y_{meas}. In some embodiments, the adaptation influence control **510** can look at two or more of these errors (e.g., Equation 4 is a cost function that considers two of these errors). The adaptation gain, Γ, can be passed to the estimation law modules **504** and used in certain ones of the estimation laws to determine the estimated parameter tensors, θ. The adaptation gain, Γ, can be positive values ≤1.

Optional initialization **512** can store previous values such as a control, u_{out}, total estimated system output, y_{est_out}, and the adaptation gain, Γ, to name three non-limiting examples. These can be accessed as initial conditions for a subsequent frame when the adaptation law selector **502** returns to the same operating conditions. In an embodiment, the initialization **512** can store these initial conditions in a TSP-RAM. The initialization **512** can pass these values to the adaptation law selector **502** and/or the selector module **508**, and more specifically to the control law modules **506**.

There are at least two feedback loops illustrated in FIGS. **5**A-C. First, the control, u_{out}, can be fed back to the adaptation law selector **502**, for instance, as part of the input regressor, Ø, to aid in generating a next iteration of the estimated model parameter tensors, θ. Second, the estimation portion of the nonlinear model can pass an estimated system output, y_{est_se}, based on the possible control signals, u_{se}, back to the corresponding estimation law modules **504**. Like the control, u_{out}, that is fed back, the estimated system outputs, y_{est_se}, can be used in the estimation law modules **504** to generate the next iteration of estimated model parameters, θ. The estimated system output, y_{est_se}, can also be passed forward to the selector module **508**. An additional optional feedback loop may provide the control, u_{out}, to the optional adaption influence control **510**, along with inputs such as r, y_{meas}, and y_{est_out}. These inputs can be used to generate an adaptation gain, Γ, that influences the strength of adaptation of certain of the estimation laws in the estimation law modules **504**. Yet another optional feedback loop can provide the control, u_{out}, to an initialization **512**, which, as discussed earlier, uses this to provide initial conditions to the control law modules **506** and the selector module **508**.

While most of this disclosure discusses the passing of estimation parameters, δ, to the control law modules, in some embodiments, each estimation law module can also pass derivatives, θ', of the estimation parameters, θ. The derivatives, θ', can be used to increase an accuracy and speed of convergence to a target system behavior. Thus, where [θ] is seen in the FIGURES, this tensor can be replaced by [θ,θ'] in some implementations.

Synthesized Frames

FIG. **6** illustrates an alternative adaptive engine that splits control samples, and certain aspects of the nonlinear model, into frames. The adaptive engine **600** can include details as shown and described, for instance, in any of FIGS. **5**A-C. However, a frame resynthesizer **650** can be arranged to precede the adaptive engine **600** and create synthesized frames from the input regressor, such as, but not limited to including, the reference signal, r, and the measured system output, y_{meas}. Synthesized frames can include blocks of input data that may or may not be repeated in time. For instance, for a triangle wave reference signal waveform, a synthesized frame might capture the rising and falling edges of the triangle wave and might apply filters, such as smoothing filters to make the synthesized frame easier to work with (e.g., smoother or more linearized). More importantly, each frame can correspond to a number of control samples or samples of the reference signal, r. Further, certain operations of the adaptive engine **600** can be preprocessed or only processed once per frame. For instance, a time-varying linear system, W_m, of the nonlinear model can be predetermined or set by a controller designer and stored in a lookup table, such that during operation, the adaptive engine **600** can access a time-varying linear system, W_m, for every frame that is processed in the adaptive engine **600**. Alternatively, the frame resynthesizer **650** can calculate the time-varying linear system, W_m, of the nonlinear model for each frame and the adaptive engine **600** can then use the frame-specific time-varying linear system, W_m, for the lifetime of a frame, and then switch to a new time-varying linear system, W_m, when a new frame begins.

This time-varying linear system, W_m, can also be thought of as the linear approximation of the nonlinear model, and it stays constant throughout a frame, while a nonlinear

portion of the model, as represented by the estimated model parameter tensor, θ, adapts throughout a frame. In other words, the model has a linear and nonlinear portion, and starts each frame with the linear portion known, but adapting the nonlinear portion toward convergence. Thus, adaptation is limited to the small unknown nonlinear portion, and does not need to also adapt to the linear portion. Thus, adaptation is kept smaller than in a non-bifurcated model, and as a result achieves convergence faster and/or with use of loess processing resources.

Application of frames also assists in parallelization within the adaptive engine **600**. A memory **652** can be used in combination with the frame resynthesizer **650** such that when a waveform returns to a previously synthesized frame, the adaptive engine **600** can draw from the synthesized frame in memory rather than requiring the frame resynthesizer **650** to resynthesize the inputs. This not only reduces processing resources, but can also decrease latency since less input processing occurs when frames are accessed from the memory **652**. FIG. **6** helps to illustrate that any of the input regressors, Ø, in FIG. **5**A-C, or anywhere later in this disclosure, can also be implemented by those of skill in the art as synthesized frames.

Finding the time-varying linear system, W_m, not only involves determining a best linear model to approximate a region of the nonlinear model, but also finding a frame (or frame size) that leads to a best linear approximation. More specifically, the frame resynthesizer **650** finds the largest frames that still allow accurate linear approximations of the nonlinear behavior of the system. In other words, the frame resynthesizer **650** approximates the nonlinear system using a set of linear models, but each frame and its linearization, may map to different numbers of control samples. More specifically, the frame resynthesizer **650** carries out an optimization procedure to find the best coefficients that describe the reference signal, r, and system output measurements, y_{meas}, for instance, by Equation 1A:

$$\begin{bmatrix} \dot{r} \\ \dot{x} \end{bmatrix} = \begin{bmatrix} 0 & 1 \\ -\omega_{n_r}^2 & -2\xi_r\omega_{n_r} \end{bmatrix} \begin{bmatrix} r \\ x \end{bmatrix} + \begin{bmatrix} 0 & 0 & \dots & 0 \\ \omega_{n_r}^2 & \omega_{n_r}^2 & \dots & \omega_{n_r}^2 \end{bmatrix} \{u\} \quad \text{(Equation 1A)}$$

For the largest number of samples n_{new} in a frame.

Where:

r is the reference signal;

x is the internal mathematically constructed state to represent a second order linear system;

ω_n is a natural frequency in [rad/s] for the reference signal's linear approximation and is different than the filter input regressor ω used elsewhere in this disclosure;

ξ_r is the damping ratio [unitless] of the reference signal's linear approximation;

ω_n and ξ_r are determined through the reference signal's shape and/or desired user-specified waveform; and

{u} This is the input tensor (control inputs) and is different from the u_{se} and u_{out} discussed elsewhere in the disclosure. In most cases, {u} is a filtered version of the reference signal, r.

The frame resynthesizer **650** can carry out an optimization procedure to find the best coefficients that describe the reference signal, r, and system output measurements, y_{meas}, for instance, by Equation 1B:

$$\begin{bmatrix} \dot{y} \\ \dot{x} \end{bmatrix} = \begin{bmatrix} 0 & 1 \\ -\omega_{n_y}^2 & -2\xi_y\omega_{n_y} \end{bmatrix} \begin{bmatrix} y \\ x \end{bmatrix} + \begin{bmatrix} 0 & 0 & \dots & 0 \\ \omega_{n_y}^2 & \omega_{n_y}^2 & \dots & \omega_{n_y}^2 \end{bmatrix} \{u\} \quad \text{(Equation 1B)}$$

Where:

y is the measured system output (y_{meas} elsewhere in this disclosure);

x is the internal mathematically constructed state to represent a second order linear system;

ω_n is a natural frequency in [rad/s] for the measured system output linear approximation and is different than the filter input regressor ω used elsewhere in this disclosure;

ξ_r is the damping ratio [unitless] of the measured system output linear approximation;

ω_n and ξ_r are determined through the reference signal shape and/or desired user-specified waveform; and

{u} is the input tensor (control inputs) and is different from the u_{se} and u_{out} discussed elsewhere in the disclosure.

Outputs of the frame synthesizer **650** can also include tensors W_m (and its filtered variation Q_m), and the L, A, B, and C matrices. The matrices A, B, and C can be used whenever the system is parametrized by the state equations given by ẋ and x.

The new resynthesized frames will consist of the coefficients in Equation 1A or 1B whose duration is n_{new}, in addition for the reference signal, r, system output measurements, y_{meas}, and controls, u_{out}, over that length of time. This ensures that each frame is a linear region of the process. Thus, all frames will use different time-varying linearized approximations of nonlinear system behavior that closely approximate the nonlinear system behavior. Adaptation in a frame means that the time-varying linear system starts each frame from this linear approximation and adapts toward an approximation of the true nonlinear process model via adaptation of the model parameter tensor, θ. This makes the adaptation much faster and can guarantee convergence (since the adaptation does not have to estimate the linear part, only the nonlinear augmentation). The parameters resulting after adaptation converges within a frame and θ becomes virtually constant, can be stored in a memory, such as memory **652**, to be used whenever the reference signal, r, returns to these resynthesized frames during the reference signal sequence. In other words, the estimated parameter tensor, θ, once convergence is achieved, along with the corresponding structure of the time-varying linear system, can be reused if a similar or identical frame of the reference signal, r, is seen again. Said another way, once adaptation of a frame is complete or converges, the knowledge gained from that adaptation can be used again in subsequent similar frames, thus avoiding the need to perform adaptation again when similar frames are seen.

Although this disclosure often discusses a reference signal, r, it is also feasible for a user to specify more abstract or general desires of the system output. In these cases, the adaptive engine can synthesize the user's specifications into a desired reference waveform, y_{est_se}, and this can replace or be used alongside the reference signals, r. The desired reference waveform, y_{ref}, can be written as:

$$y_{est_se} = W_m(t)u_{se} + \Delta \quad \text{(Equation 2)}$$

Where ||Δ|| is finite and represents the plasma generator/match/chamber nonlinearity or uncertainty beyond any linear representation given by $W_m(t)u_{se}$. The value u_{se} is the state's desired steady state value which in standard plasma generator terminology is referred to as the power state and is a set of values provided by the user. In other words, the adaptive engine can provide at every collocation time or every control sample, a linear model $W_m(t)$ that makes/forms the closest linear model of y_{est_se}. Said another way,

the adaptive engine provides models that are time-varying stable and strictly proper rational linear sample time invariant.

In some embodiments, one or more of a setpoint streaming module, a precomputing engine (e.g., used to determine the A(t), B(t), C(t), K(t), L(t), F(t) matrices/tensors), and a frame synthesizer may be implemented on a Central Processing Unit (CPU). This allows the CPU, rather than an Field Programmable Gate Array (FPGA), to handle the heavy/intensive computations in an offline (or pseudo-offline) manner. On the other hand, the FPGA is better suited for performing simpler calculations in a very rapid manner (e.g., real-time or substantially real-time). The precomputing engine on the CPU sends the A(t), B(t), C(t), K(t), L(t), and/or F(t) matrices/tensors to the adaptive engine running on the FPGA. In some cases, the CPU also stores these matrices/tensors at a frame processor of the FPGA, for instance, in a TSP RAM of the frame processor. This allows the adaptive engine and/or the control law module/sub-engine to access the precomputed matrices in real time or substantially real time. Said another way, the precomputing engine on the CPU generates the structure of the A, B, and C matrices, and hence the time-varying linear system, W_m, for every frame.

FIG. **7** illustrates a method of adaptive control, and in some particular embodiments, of controlling one or more actuators controlling a system (e.g., a plasma processing system and/or power supply for the plasma processing system) via an adaptive engine. The method **700** can start with selection of a new frame and a best linear approximation of the system behavior over the new frame (Block **701**). In other words, a structure of W_m is selected. This structure can be calculated in a frame resynthesizer or accessed from an empirically derived lookup table. The method **700** can include estimating an estimated model parameter tensor, θ, for every control sample of a nonlinear model (Block **702**). The estimating can be based on an estimation law that is a function of an estimated error, ê, or cost function, J, and can be implemented in an estimation law module. The estimated model parameter tensor, θ, comprises estimated parameters of a nonlinear model such as, but not limited to, r, y_{meas}, y_{est_se}, and u_{out}. The method **700** can further generate a possible control signal, u_{se}, using a control portion of the nonlinear model (Block **704**) and generate an estimated system output, y_{est_se}, using an estimation portion of the nonlinear model (Block **706**). These two values can be calculated from a control portion and an estimation portion of the nonlinear model, respectively. Both portions of the nonlinear model are functions of at least the estimated model parameter tensor, and the estimation portion can also be a function of the possible control signal, u_{se}, from the control portion. The control portion can also take the input regressor, Ø, as one of its inputs. The control portion of the nonlinear model can be implemented in a control law and more specifically in a control law module. The estimation portion of the nonlinear model can also be implemented in the control law and the control law module, though it can also be implemented in the estimation law module or outside of both the control law module and the estimation law module. The method **700** can then select (1) a best possible control signal, u_{se}, from a set including the possible control signal, u_{se}, and additional possible control signals, u_{se}, or (2) a best combination of possible control signals, u_{se}, blended from two or more of the set (Block **708**). The blending can be based on a topology that can include averaging, multiplication, summations, differences, divisions, integrals, derivatives, exponentials, complex functions, logarithms, series, statistical distributions, matrices, tensors, neural networks, nonlinear functions, graphs, maps, transformations, trees, to name a few non-limiting examples, or combinations thereof. The topology can be selected based on total estimated system output, y_{est_out}, for each of multiple possible topologies, and then comparing this estimate, y_{est_out}, to the reference signal, r, the measured system output, y_{meas}, or a combination of these (referred to as estimated system error, $\hat{e}_{out}$). For instance, a specific example using all three of these values is shown in Equation 4, where a cost function, J_{out} of two errors is used.

The adaptation of θ described in Blocks **702-708** can be repeated for all iterations or control samples in a frame (repeat **702-708** until Decision **710**=Yes). This adaptation leaves the linear approximation (or structure of W_m) constant through a frame, but adapts θ at each control sample in the frame until the bifurcated nonlinear model converges on the system's nonlinear behavior. At the end of the frame (Decision **710**=Yes), a new linear approximation (structure of W_m) is calculated or accessed, and adaptation of θ again restarts from the baseline of the linear approximation until convergence on the nonlinear system behavior is achieved. The final θ can be stored along with a mapping to the frame and the structure of W_m, such that these values can be recalled should the reference signal underlying the frame be subsequently seen.

Estimation Law Modules

FIGS. **8**A and **8**B can be used to provide further detail of certain embodiments of the estimation law modules and the corresponding estimation laws. At a high level, an estimation law is a means of estimating parameters for a nonlinear portion of a nonlinear model of the system (this model having a linear and a nonlinear portion). Control laws take these estimated parameters and generate possible control signals therefrom, predicted to achieve a desired outcome from the system (e.g., minimize an error between a reference signal and a measured output of the system). The estimated parameters along with the possible control signals can also be used in an estimation portion of the nonlinear model to estimate one or more system outputs predicted to result from the possible control signals.

Both modules **804**, **806** can operate and be described similarly to the corresponding components in FIGS. **5**A-C. Although only one estimation law module **804** and one control law module **806** are shown, multiple estimation law modules **804** and control law modules **806** would be found in a typical adaptation law selector. One or more estimation law modules **804** can be paired with each of the control law modules **806**. Using different combinations of estimation law modules **804** and control law modules **806**, the adaptive engine **500** effectively enables handling a wide variety of controller needs and the ability to quickly switch between combinations of estimation laws and control laws—the combinations being referred to as adaptation laws as shown via brackets in FIGS. **8**A and **8**B.

The estimation law module **804** can include an optional smoothing filter bank **810**, one or more estimation law banks **812**, and optionally one or more estimation laws filtering banks **814**. The optional filters **810**, **814** can provide filtering of the input and outputs from the one or more estimation law banks **812**. Namely, the optional smoothing filter bank **810** can apply $H\{\circ\}$, $L^{-1}\{\circ\}$ and $WL\{\circ\}$ to the input signals/regressors such that derivative terms are not noisy and do not have instantaneous spikes. H is a filtering operator and is designed by the user to achieve the fastest response possible for a given process time constant. For different control entities (e.g., rail, drive, frequency, match network, etc.),

H{°} will generate different filter parameters. It can be implemented as a zero-phase lag filter. This guarantees smoothness and continuity of the inputs/regressors. This filter can be as simple as a biquad, or a first order time constant, though these two examples are not limiting. However, in other filters, adaptive time constant filters can be used based on a cost function. Each filter is designed to be best suited for the corresponding estimation portion **808** in FIG. **8**A or FIG. **8**B.

The one or more estimation law banks **812** can take the input regressor, Ø, or an unfiltered version thereof (e.g., ψ), and apply it to an estimation law to estimate model parameter tensors, θ, of the nonlinear model. Depending on the estimation law, the estimation law bank **812** may also receive the adaptive gain, Γ, and use this in the estimation of the estimated model parameter tensors, θ. The input regressor, Ø, may include components such as r, y_{est_se}, and y_{meas}, and from these an estimation error, ê, can be determined. Depending on design, the estimation error, ê, can be determined from various differences between two of these three values, for instance, the four estimation errors 1-4 described below relative to the Estimation Law 1. In one embodiment, three estimation law modules **804** each having one of three nonlinear models can feed a single control law module **806**. Seven estimation laws can be distributed amongst these three estimation law modules **804** in one example, such that one or more estimation laws are applied to each of the nonlinear models, and the three estimation law modules **804** produce seven estimated model parameter tensors, θ.

One or more estimation laws filtering banks(s) **814**, one for each of the one or more estimation law banks **812**, can be included at an output of the one or more estimation law banks **812**. These optional filters **814** can smooth the resulting estimated model parameter tensors, θ, or create persistent excitations such that the estimated model parameter tensors, θ, converge to their actual values, and/or pass them through a projection operator to make their values bounded and avoid drift. The purpose of this filtering **814** is to ensure that the possible control signal, u_{se}, computed in the corresponding control law module **806**, is sufficiently rich of order N (i.e., contains N/2 distinct frequencies) which enforces the input regressor signal given by:

$$Ø_u = H_{P_e}\{u\} \quad \text{(Equation 3)}$$

Where $Ø=[Ø_u, Ø_y, Ø_{r0}]$ is a tensor of the $Ø_u$, $Ø_y$, $Ø_{r0}$ tensors, and $Ø=H\{\varphi\}$ with $H=[H_u, H_y, H_{r0}]$ and $\varphi=[u, y, r_0]$. Where u is a tensor of all inputs (control) and their derivatives, y is a tensor of all measurements and their derivatives, and r_0 is a tensor of all extraneous entities (exogenous or internal) and their derivatives.

In some embodiments, an estimated model parameter tensor, θ, can be another input to the nonlinear model.

An optional and non-illustrated feature is to select a law combination in the optional one or more estimation law filtering banks **814** that differs from iteration to iteration so as to minimize a cost function, such as a cost function that includes multiple summation operation at least one of which is a function of ê(k).

The control law module **806** passes the possible control signal, u_{se}, to the selector module (e.g., **508**), which determines which possible control signal, u_{se}, or which combination of possible control signals, u_{se}, is used to generate the control, u_{out}. Each estimation law module **804** also passes its estimation model parameter tensor, θ, back to its input, either in real-time or via memory (not shown). This feedback allows the value to used in the next adaptation iteration. The memory can be a pipeline register, such as a TSP-RAM block.

The nonlinear model can be split into a control portion **805** and an estimation portion **808**. The control portion **805** can be found in the control law **818** and the estimation portion **808** can be found in the control law module **806** (in FIG. **8**A) or in the estimation law module **804** (in FIG. **8**B). The estimation portion **808** can be used to generate an estimated system output, y_{est_se}, for each combination of estimation law module **804** and control law module **806** (i.e., for each adaption law). The result can be passed forward to the selector module (not shown) and back as an input to a next iteration of the estimation law module **804**, for instance, as part of the input regressor, Ø. This estimation can occur almost anywhere, and thus FIGS. **8**A and **8**B provide but two examples of where the estimation portion **808** can be used to estimate the estimated system output, y_{est_se} (in the control law module **806** in FIG. **8**A and in the estimation law module **804** in FIG. **8**B). However, this estimation could also take place outside either of these modules. One distinction between FIGS. **8**A and **8**B, is that different iterations of the possible control signal (u_{se_k} versus u_{se_k-1}) are used in the estimation, depending on where it takes place. In FIG. **8**B, where the estimation using the estimation portion **808** occurs in the estimation law module **804**, the possible control signal, u_{se_k-1}, for a previous iteration can be used, whereas in FIG. **8**A, where the estimation using the estimation portion **808** occurs in the control law module **806**, the possible control signal, u_{se_k}, for the current iteration can be used. The possible control signal, u_{se_k} or u_{se_k-1}, can be generated by the control law **818** in the control law module **806** and can be fed back to the estimation portion **808** in real time or via memory. In some variations of the estimation portion, a linear portion of the model, W_m, may be used in the estimation, and this linear portion, W_m, may be precalculated in a frame resynthesizer or access from an empirically derived lookup table. The same linear portion of the model, W_m, is used for all iterations of a given frame, and then changed for a next frame.

Lower latency may be possible, and fewer memory resources used, if the estimation portion **808** is applied to generate the estimated system output, y_{est_se}, in the control law module **806** as shown in FIG. **8**A. In this case, the estimation portion **808** can take the possible control signal, u_{se_k}, for the current iteration and estimate a possible system output, y_{est_se}. In some instances, this may be faster than the variation shown in FIG. **8**B.

While most of this disclosure discusses the passing of estimated model parameter tensors, θ, to the control law modules, in some embodiments, each estimation law module can also pass derivatives, $\dot{\theta}$, of the estimated model parameter tensors, θ. The derivatives, $\dot{\theta}$, can be used to increase an accuracy and speed of convergence to the system behavior. Thus, where [θ] is seen in the FIGURES, this tensor can be replaced by the more effective tensor $[\theta, \dot{\theta}]$ in some implementations.

Exemplary estimation laws 1-6 below show some non-limiting examples of estimation laws that can each be implemented in the estimation law module(s) **804** or **504**. As seen, estimation laws are generally a function of the estimation error, ê, and/or the input regressor, Ø, and produce an estimated model parameter tensor, θ, and optionally its derivative, $\dot{\theta}$. Estimation laws can be implemented in the estimation law banks **812** and can be embodied in software, firmware, physical logic circuits, or a combination of these. For instance, in a simplest case, an estimation law may

involve matrix multiplication of the estimation error, ê, and the input regressor, Ø (e.g., see Estimation Law 1). However, other estimation laws may involve more complicated interactions between these values as well as intermediary steps and decisions en route to generating the estimated model parameter tensor, θ.

Although the estimation law banks **812** can implement any number of estimation laws, below are a few non-limiting examples:

$$\dot{\theta}=\Gamma\hat{e}\emptyset \quad \text{(Estimation Law 1)}$$

Where the estimation error, ê, can be written as any of the following:

$$\hat{e} \stackrel{\Delta}{=} y_{meas} - y_{est_se} \quad \text{(Estimation error 1)}$$

$$\hat{e} = r - y_{est_se} \quad \text{(Estimation error 2)}$$

$$\hat{e} = y_{meas} - y_{est_se} - W_m L\hat{e}_{km} n_s^2 \quad \text{(Estimation error 3)}$$

$$\hat{e} = \frac{y_{meas} - y_{est_se}}{m^2} \quad \text{(Estimation error 4)}$$

In other words, the estimation error, ê, can involve a difference between two of the following three values or tensors: r, y_{meas}, y_{est_se}.

The certainty equivalence principle suggests that unknown parameters in a control design can be replaced by their estimates. A hat above a variable or parameter indicates an estimate of an unknown parameter.

Where m and ns are normalization terms, and the input regressor Ø has been discussed previously and can include values such as, but not limited to, r, y_{meas}, and u_{out}.

Another exemplary estimation law can be written as:

$$\dot{\theta} = -\Gamma(R\theta + Q) \quad \text{(Estimation Law 2)}$$

$$\dot{R} = -\beta Q + \frac{\emptyset\emptyset^T}{m^2} | R(0) = R_0$$

$$\dot{Q} = -\beta Q + \frac{y_{meas}\emptyset}{m^2} | R(0) = Q_0$$

And a third can be written as:

$$\dot{\theta} = P\hat{e}\emptyset \quad \text{(Estimation Law 3)}$$

$$\dot{P} = -P\frac{\emptyset\emptyset^T P}{m^2} | P(0) = P_0$$

$$\text{And } \hat{e} = \frac{y_{meas} - y_{est_se}}{m^2} \text{ or}$$

$$\hat{e} = y_{meas} - y_{est_se} - W_m L\hat{e}_{km-1} n_s^2$$

Where m and n_s are normalization signals.

Another estimation law can be written as:

$$\dot{\theta} = P\hat{e}\emptyset \quad \text{(Estimation Law 4)}$$

$$\dot{P} = -P\frac{\emptyset\emptyset^T P}{m^2} | P \text{ (reset)} = P_0 = \infty I$$

$$\dot{\theta} = P\hat{e}\emptyset \quad \text{(Estimation Law 5)}$$

-continued

$$\dot{P} = \begin{cases} \beta P - P\frac{\emptyset\emptyset^T P}{m^2} & \left| \|P(t)\| \right| \le R_0 \\ 0 & \end{cases}$$

$$\dot{\theta} = \Gamma_1\hat{e}\emptyset signum(r_{est}) \quad \text{(Estimation Law 6)}$$

$$\dot{r} = \Gamma_2\hat{e}\varepsilon$$

$$\dot{\varepsilon} = \theta\emptyset + r_0$$

$$\text{With } \hat{e} = y_{meas} - y_{est_se} - W_m L\hat{e}n_s^2 \text{ or } \hat{e} = \frac{y_{meas} - y_{est_se}}{m^2}$$

Where Γ_1, Γ_2, and Γ_3 are different ones of the adaptation gain, Γ, provided by the adaptive engine where they are generated.

Yet a final non-limiting example of an estimation law can be written as:

$$\dot{\theta}=N(x)\Gamma_1\hat{e}\emptyset \quad \text{(Estimation Law 7)}$$

$$N(x)=x^2\cos(x)$$

$$x=w+r^2\Gamma_2$$

$$\dot{W}_m=\hat{e}^2m^2 | W(0)=W_0$$

$$\dot{r}=N(x)\Gamma_2\hat{e}\varepsilon$$

$$\dot{\varepsilon}=\theta\emptyset+r_0$$

One sees that most of the exemplary estimation laws are written in terms of the derivative of the model estimation parameter tensor, θ, and yet the model estimation parameter tensor, θ, is the output of the estimation law modules. Any estimation law of this sort can be rewritten to give θ by taking the integral of θ and hence the estimation law module output for a given estimation law. In other embodiments, as described earlier, θ and θ can both be generated by the estimation law modules, and hence by the estimation laws. More specifically, the integral of $\hat{\theta}$ is $\theta_{k-1}+\dot{\theta}$, or the sum of θ of the previous iteration and the derivative of θ.

Further, each estimation law, whether one of the examples above, or any other estimation law, may have two versions. In a first version, $m^2=1$ and $n_s=0$ such that no normalization occurs, which has the advantage of faster adaption but less applicability to unstable plants and/or unbounded control signals. In a second version, $m^2=1+n_s^{2>0}$, which leads to slower convergence for stable plants and/or bounded control signals, but will allow control of unstable plants and/or unbounded control signals. The adaptive engine can switch between these two versions of any estimation law in real time to enable faster control.

Estimation laws can be modified to include robustness measures that can be pipelined/resource shared/streamed when implemented in a real-time hardware (e.g., ASIC/FPGA) in a generic way that benefits from oversampling. For instance, all can be processed within a control cycle.

Nonlinear Models

As noted earlier, the nonlinear model takes the estimated model parameter tensor, θ, and an estimation error, ê, or cost function, J, and generates a possible control signal, u_{se}, and an estimated system output, y_{est_se}, estimated to result from the possible control signal, u_{se}. The combination of the nonlinear model, an estimation law, and a control law can be referred to as an adaptation law.

The nonlinear model can be used to provide a possible control signal and an estimated system output (e.g., reflected power, phase offset between delivered and reflected power,

etc.). To this end, the nonlinear model has a control portion and an estimation portion, that in a most general form can be written as:

$$u_{se}=\theta\cdot\emptyset \quad \text{(Control Portion of the Nonlinear Model)}$$

$$y_{est_se}=\theta\cdot\emptyset \text{ or } W_m\{u_{se},\theta\} \quad \text{(Estimation Portion of the Nonlinear Model)}$$

In some cases, both parts are processed in the control law module, and in other cases the estimation portion can be processed outside the control law module (e.g., sees FIGS. **5**A and **8**A). However, in others, the control portion can be processed in the control law modules and the estimation portion can be processed in the estimation law modules (e.g., see FIGS. **5**B and **8**B) or elsewhere in the adaptation engine.

From this generalized from of the model, one sees that both the control portion and the estimation portion are functions of the estimated model parameter tensor, θ, and the input regressor, Ø. The control portion gives a control that a given sub-engine believes is most likely to produce a system behavior most in line with the reference signal, r. The estimation portion is an estimate of the system output should the possible control signal, u_{se}, be provided to the one or more actuators.

However, this generalized form is actually a circular definition because Ø for the control portion takes y_{est_se} as an input, and Ø for the estimation portion takes u_{se} as an input. To avoid this circular definition, there are two solutions: (1) either the control or the estimation portion can be rewritten as a function of inputs from a previous iteration (e.g., θ_{k-1} and $\emptyset_{k-1}$) while the other is based on current iteration inputs (e.g., Ok and Ok); or (2) one of the control or estimation portions can be written in terms of the other portion. More specifically, this second solution may lead to Model 1 being rewritten in terms of the possible control signal, u_{se}, as:

$$y_{est_se}=W_m\cdot\theta\cdot\psi=W_m\{u_{se},\theta\} \quad \text{(Estimation Portion Model 1)}$$

Where this expansion is made possible via knowledge that $u_{se}=\theta\cdot\psi$, and W_m is a time-varying linear system and is a strictly positive real (SPR) that is a solution to the Lyapunov Equations and is a function of the possible control signal, u_{se}, and the estimated model parameter tensor, θ. The time-varying linear system, W_m, can also be thought of as a transfer function or a linear operator. The time-varying linear system, W_m, can have a different structure for different frames such that its global effect is to approximate the nonlinear system, but to do so using different time-varying linear approximations at each frame, where the time-varying linear system, W_m, changes with θ at each control sample or iteration within a frame. For instance, W_m, could be

$$\frac{s+20}{(s+1)(s+2)}$$

for a first frame,

$$\frac{1}{s+5}$$

for a second frame, and

$$\frac{1}{s^2+2s+1}$$

for a third frame. While the time-varying linear system, W_m, has a constant structure for a given frame, it is a function of θ, which adjusts or is adapted at every iteration or control sample. Recalling FIG. **43**, the time-varying linear system, W_m, is adapted as a function of θ during each frame until convergence (where an unknown nonlinear portion of W_m is small enough to be ignored). The structure of this time-varying linear system, W_m, changes from frame to frame. The net effect is a bifurcated nonlinear model that uses a different linear approximation in each different frame to account for large changes in system nonlinear behavior and a nonlinear approximation achieved through adaptation of the estimated model parameter tensor, θ, at each control sample or iteration of a frame to account for small changes in system nonlinear behavior.

For clarity, the control portion of Model 1 is the same as its generalized form noted earlier:

$$u_{se}=\theta\cdot\emptyset \quad \text{(Control Portion of the Model 1)}$$

As noted above, avoiding a circular definition of the generalized model can also be achieve by writing the control portion in terms of the estimation portion:

$$u_{se}=W_m^{-1}\{y_{est_out}\} \quad \text{(Control Portion of the Model 2)}$$

$$y_{est_se}=\theta\cdot\emptyset \quad \text{(Estimation Portion of the Model 2)}$$

The control portion of Model 2 can also be written in terms of y_{meas} instead of the total estimated system output, y_{est_out}. The control portion of Model 2 may use W_m^{-1} as shown or an approximation thereof.

Regardless of whether Model 1 or 2 is used, the time-varying linear system, W_m, is an input to either the estimation portion (Model 1) or the control portion (Model 2).

Expanding on the estimation portion of Model 1, it will be appreciated that u_{se} is an input to the system W_m, and this operation gives the estimated system output, y_{est_se}, based on the dynamic equation:

$$\dot{x}=Ax+Bu_{se}$$

$$y_{est_se}=Cx$$

where C can be the identity matrix for improved performance.

This Means that

$$\dot{y}=Ay_{est_se}+Bu_{se}$$

So, $W_m\{u_{se},\theta\}$ leads to y_{est_se} by integrating $\dot{y}$.

Control Laws (Control Law Modules)

Each control law is implemented as a control law module, and specifically as the control law **818** within that control law module. Each control law module applies the control portion of the nonlinear model, as modified into a distinct control law, to an estimated model parameter tensor, θ, and at least part of the input regressor, Ø, to generate a possible control signal, u_{se}. In some cases, a control law module may be configured to apply more than one control law (e.g., the TARC control law module discussed later can apply adaptive inversion laws, Eigen laws, and Penalty laws) and produce a corresponding number of possible control signals, u_{se}. Alternatively, an optional select control law **816** may be used to select a preferred control law for the control law module to apply such that the number of possible control signals, u_{se}, is the same as seen in other control law modules. The optional select control law **816** is shown as preceding the control law **818**, but could also be arranged after the control law **818** and thereby filter multiple u_{se} into a single u_{se}.

Control laws take the estimated model parameter tensors, θ, estimated by the estimation laws in the estimation law modules, which are variations on the control portion of the nonlinear model, and generate possible control signals, u_{se}, predicted to achieve a desired behavior from the system (e.g., minimize an error between a reference signal and a measured output of the system).

The control law modules, examples of which will be detailed in FIGS. **10-42** (also called sub-engines), implement control laws to generate the possible control signals, u_{se}, that are then passed from all control law modules to the selector module. Each control law module takes one or more estimated model parameter tensors, θ, from one or more estimation law modules, and passes each of the one or more estimated model parameter tensors, θ, through a control law (control portion of the nonlinear model) to give a possible control signal, u_{se}. In other words, each estimation law leads to a at least one possible control signal, u_{se}. These control laws can be implemented in software, firmware, physical logic, or a combination of these. The examples that will be described below and illustrated in FIGS. **10-42** provide functional descriptions of the control laws as implemented in control law modules, and any of this functionality may be coded in software or firmware, fabricated in physical logic, or some combination of these. Further, while the control law modules or sub-engines are described as part of a larger adaptive engine, in some embodiments, the control law modules or sub-engines can operate independently, such that each on its own can control one or more actuators of a power system.

Control Laws 1A and 1B are detailed further in FIGS. **10**A and **10**B. A second exemplary control law for a TARC control law module, can actually be selected from three control laws 2A, 2B, and 2C and they can be written as:

$$u_{se}=[H\{u_{out}\}-\hat{\mathcal{L}}Q_m]H^{-1}\{u_{out}\}-\hat{P}H^{-1}\{e\} \quad \text{(Control Law 2A)}$$

$$u_{se}=H\{Q_m\Omega\} \quad \text{(Control Law 2B)}$$

$$u_{se}=H\{-Q_m\text{pinv}(R)\hat{B}P\hat{e}_{out}\} \quad \text{(Control Law 2C)}$$

In one embodiment, a best of Control Law 2B and 2C can be selected as:

$$\begin{bmatrix} H\{Q_m\Omega\} \\ H\{-Q_m pinv(R)\hat{B}P\hat{e}_{out}\} \end{bmatrix} \quad \text{(Control Law 2B/2C)}$$

And a total control law based on 2A and the combination of 2B and 2C can be written as a selection or combination of:

$$\begin{bmatrix} [H\{u_{out}\}-\hat{\mathcal{L}}Q_m]H^{-1}\{u_{out}\}-\hat{P}H^{-1}\{e\} \\ H\{Q_m\Omega\} \\ H\{-Q_m pinv(R)\hat{B}P\hat{e}_{out}\} \end{bmatrix} \quad \text{(Control Law 2A/B/C)}$$

An augmentation of the above can be written as

(Control Law 2A/B/C Augmented)

$$\begin{bmatrix} [H\{u_{out}\}-\hat{\mathcal{L}}Q_m]H^{-1}\{u_{out}\}-\hat{P}H^{-1}\{e\} \\ H\{Q_m\Omega\} \\ H\{-Q_m pinv(R)\hat{B}P\hat{e}_{out}\} \end{bmatrix}$$

To better appreciate control laws, their influence on the adaptive engine, and the breadth of their variations, six exemplary, but non-limiting, control laws can be written as follows starting with Control Law 1A for a TLMC (or Lyapunov) control module:

$$u_{se}=\theta\omega \quad \text{(Control Law 1A)}$$

Each of these control laws is based on a control portion of the nonlinear model that complements a corresponding estimation portion of the nonlinear model and typically the output of the control portion is an input to the estimation portion (or vice versa).

In Control Law 1A, w overlaps with but is not identical to Ø. In particular, w is a concatenation that can include some form of u_{out_k-1}, y_{meas}, and r (i.e., often components of Ø). For instance, one or more of these values can be filtered before being concatenated into ω. For instance, ω may equal [u_d, y_d, y_{meas}, r] where u_d and y_d are filtered or smoothed versions of u_{out} and y_{meas}, respectively. Where Control Law 1A also makes use of the derivative of θ, it can be written in the alternative as:

$$u_{se}=\theta\omega+\dot{\theta}\chi \quad \text{(Control Law 1B)}$$

$$\text{Where } \chi=\begin{cases} H\{\omega\}=\mathcal{L}^{-1}\{\omega\} & |\dim_{-1}(\theta)>1 \\ 0 & |\dim_{-1}(\theta)=1 \end{cases}$$

Control Laws 2A, 2B, and 2C are detailed further in FIGS. **11**A-**13**.

A third exemplary control law for an L1 control law module can be written as:

$$u_{se}=\theta_{u_{out}}u_{out}+\theta_{y_d}y_d+\theta_{y_{pred}}y_{pred}+\theta_r r \quad \text{(Control Law 3)}$$

And details of this Control Law 3 can be seen in FIGS. **14-15**.

A fourth exemplary control law for an Adaptive PID control law module can be written as:

$$u_{se}=u_{PID_k}-U_{FF_k}=[\theta,\theta_7][\omega,\omega_7] \quad \text{(Control Law 4)}$$

$$\text{Where } \omega_7=H\{u_{n_{k-1}}\}$$

Details of the Control Law 4 can be seen in FIGS. **16-21**.

The input regressor, Ø, and subsets thereof are described generally relative to FIGS. **8**A and **8**B since the estimation law module **804** or the control law module **806**, where the input regressor, Ø, or a subset thereof, is provided, may dictate the values in the input regressor, Ø, or a subset thereof. For instance, the estimation law modules **804** often use two or more of the following, r, y_{est_se}, and y_{meas}, to determine the estimation error, ê, which is then used, along with other values depending on the estimation law implemented in a given estimation law module **804**, to determine estimation model parameter tensors, θ. In other words, Ø can be [r, y_{est_se}, y_{meas}] when provided to the estimation law modules **804** in some embodiments, but [u_{out_k-1}, r, y_{meas}] when provided to the control law modules **806**. Thus,

functionality is roughly the same whether Ø or a subset thereof is provided to the estimation law modules **804** and the control law modules **806**. To better cover the various estimation law modules **804** and control law modules **806**, this disclosure will continue to generalize the inputs to both modules as Ø, and those of skill in the art can easily optimize resources and pipelining by providing more specific subsets thereof to the two distinct sets of modules.

Selection of Topology to Generate the Control

Returning to FIG. **5**A, additional details of the selector module **508** are presented. After the control law modules **506** select possible control signals, u_{se}, the selector module **508** receives the one or more possible control signals, u_{se}, and performs further estimations to select a best one of the possible control signals, u_{se}, or a best combination of the possible control signals, u_{se}, as the control, u_{out}. In particular, the selector module **508** estimates a system output based on different ones of the possible control signals, u_{se}, or different combinations of multiple possible control signals, u_{se}, and resulting error values for each of these estimations relative to a desired system outcome (e.g., minimizing an error between reference signal and measured system output and/or minimizing an error between reference signal and estimated system output). This error is the system output error, $\hat{e}_{out}$, previously referred to. As an example of this estimation and error determination, the selector module **508** can use the possible control signals, u_{se}, the estimated system outputs, y_{est_se}, the reference signal, r, and the system output measurement, y_{meas}, in an error or cost function to select the possible control signal, u_{se}, or to select a combination of possible control signals (e.g., a weighted average thereof) that minimizes the cost error or cost function. For instance, Equation 4 discussed later will present a detailed example of a cost function that can be used to select the best possible control signal, u_{se}, or best combination of possible control signals, u_{se}. Where processing resources are more limited, it may be preferable for the selector module **508** to select a best possible control signal, u_{se}. Where additional processing resources are available, the selector module **508** may select a best combination of possible control signals, u_{se} (which may include selecting not only different combinations but different ways to combine the possible control signals, u_{se}). The combination or blending of multiple possible control signals, u_{se}, can be governed by a topology such as, but not limited to, a weighted average. In an embodiment, Equation 5 presents a detailed example of a means to combine possible control signals, u_{se}, via a complex weighted average. Other forms of combination or blending can include, but are not limited to, other types of averages, multiplication, summations, differences, divisions, integrals, derivatives, exponentials, complex functions, logarithms, series, statistical distributions, matrices, tensors, neural networks, nonlinear functions, graphs, maps, transformations, trees, or combinations thereof.

Whatever topology, or method of combining/blending is used to determine the control, u_{out}, is also used to estimate a total estimated system output, y_{est_out}. Specifically, the selector module **508** determines a number and combination (or blending) of control law module **506** outputs (e.g., u_{se} and/or y_{est_se}) that minimizes the estimated system error, $\hat{e}_{out}$, or estimated system cost function, J_{out}. For instance, in a first iteration, a blending of three out of seven control law module **506** outputs may produce an total estimated system output y_{est_out} (or estimated output) that is closest to the reference signal r (that minimizes the estimated system error, $\hat{e}_{out}$), while in a second iteration, a blending of five out of seven control law module **506** outputs may produce a total estimated system output y_{est_out} that is closest to the reference signal r. Each of these represents a different topology and thus one sees that the selector module **508** may select a different topology for generating the control signal, u_{out}, and estimated system output, y_{est_se}, at each iteration (e.g., using Equation 7, which largely mimics Equation 5).

The selected or blended control, u_{out}, is then passed to the one or more actuators (e.g., **308**) and fed back to the adaptation law selector **502** as an input to the estimation law modules **506** for use in determining a next iteration of the control, u_{out}.

In some embodiments, one or more memory components (not shown), such as pipeline registers, can be arranged between the control law modules **506** and the selector module **508**, such that possible control signals, u_{se}, and estimated system outputs, y_{est_se}, can be temporarily stored, which either assists in parallelization in the selector module **508** or allows the selector module **508** to pull from previous outputs of the control law modules **506** when the adaptive engine **500** sees repeated input iterations (e.g., the same frame or reference signal repeats).

In some implementations, the selector module **508** can distribute the above-noted functionality between an optional control selector and combiner **516** ("CSC") and an optional topology selector and designer **518** ("TSD"). The TSD **518** can look at previous controls, u_{out}, and a total estimated system output, y_{est_out}, for various topologies, and select a best topology, or the one most likely to, when applied in the selector module **508**, lead to a control, u_{out}, that causes a measured system output, y_{meas}, that is close to the total estimated system output, y_{est_out}, or the reference signal, r. For instance, the TSD **518** may analyze an estimated system cost function, J_{out}, such as Equation 4, to select an optimal possible control signal, u_{se}, or combination of possible control signals, u_{se} (in the form of a topology for combining the possible control signals). The TSD **518** may provide this selection to the CSC **516**, which dictates how selected possible control signals, u_{se}, are to be combined or blended in the CSC **516** (also referred to as applying the topology). For instance, the TSD **518** may provide a topology to the CSC **516**, which looks at different topologies for combining or blending the possible control signals, u_{se}, in the CSC **516** (e.g., a weighted average), and determines a best topology. This topology may be embodied as a set of weights to be provided to the CSC **516**, where the weights determine how possible control signals, u_{se}, are combined or blended. In some embodiments, the topology can include averaging, multiplication, summations, differences, divisions, integrals, derivatives, exponentials, complex functions, logarithms, series, statistical distributions, matrices, tensors, neural networks, nonlinear functions, graphs, maps, transformations, trees, to name a few non-limiting examples, or combinations thereof. Equation 5 presents one non-limiting example of applying a topology with weights, w_{nj} and w_{nn}.

The CSC **516** in turn can estimate a total estimated system output, y_{est_out}, based on the topology or weights and the total estimated system outputs, y_{est_se}, and provide this estimate, y_{est_out}, to the TSD **518** for use in determining a next iteration of the topology (e.g., in the cost function of Equation 4). Where the TSD **518** passes weights to the CSC **516**, the CSC **516** can return weight-tuning values, w-tuning, to the TSD **518** that can be used to adjust weights in a next iteration.

Alternatively, these estimates, y_{est_se} and/or y_{est_out}, can be provided to the TSD **518**, which can determine a possible control signal, u_{se}, or combination of possible control signals, that minimizes a cost function relative to the measured

system output, y_{meas}, and/or the reference signal, r. If the TSD **518** selects the best possible control signal, u_{se}, or combination thereof, the TSD **518** can send this selection back to the CSC **516** as a topology or set of weights. In turn, the CSC **516** can return weight-tuning values to the TSD **518** that can be used to adjust weights in a next iteration of topology selection.

In some embodiments, the selector module **508** can optimize the estimated system cost function, J_{out}, associated with topologies of the control laws implemented by the control law modules **506**. It does this by considering the possible control signals, u_{se}, and finding a combination and means of combining them that optimizes the estimated system cost function, J_{out}. For instance, the estimated system cost function, J_{out}, may look at a difference or error between the reference signal, r, and a measured output, y_{meas}, or between the reference signal, r, and a total estimated system output, y_{est_out}. In another instance, the estimated system cost function, J_{out}, can look at both of these errors, for instance, as presented in Equation 4:

$$J_{outk_p} = \begin{bmatrix} \left| r_k - y_{est_out_{k_p}} \right| \\ \left| r_k - y_{meas_k} \right| \end{bmatrix} \quad \text{(Equation 4)}$$

Where k is a value representing the iteration being analyzed, $y_{est_out_k_p}$, is an estimated total output of the controlled system based on a one of p topologies being analyzed, and the estimated system cost function, J_{outk_p}, can be analyzed for each of the p topologies. The one of the p topologies resulting in the minimum estimated system cost function, J_{outk_p}, is selected for generating the control u_{out}.

Each of the p topologies can involve a different weighted input of the estimated output, y_{est_se} from each of the control law modules. In some cases, this can be a weighted average of the control law module outputs, or a more complex mixing, such as multiplication of some outputs and summing of other outputs. The weights can be denoted, w (distinct from ω), and are the ones used in a previous iteration, k−1.

While it is possible to try every permutation of topologies, this would be highly resource-consuming, and thus a preferred method uses an optimization of the weights applied to the different control law module outputs to analyze the cost function of Equation 4.

Given the weights, the selector module **508** can generate a control signal, u_{out}, which in one embodiment, is given by the weighted sum shown in Equation 5:

$$u_{out}=(\Sigma_{n=1}^{N}\Sigma_{j=1}^{N}W_{nj}u_j)+(\Sigma_{n=1}^{N}w_{nn}u_{se_n}) \quad \text{(Equation 5)}$$

Where n is an index for the current possible control signal, u_{se}, and j is an index for all other possible control signal, u_{se}, and where N is a total number of control laws. For instance, N=3 or N=7 in two non-limiting embodiments. Recall that a control law is implemented by each control law module, so another way to describe n and j is that n represents the possible control signal, u_{se}, for a current control law module, and j represents the possible control signals, u_{se}, for all other control law modules. The weights, w_{nj}, and w_n can be selected to minimize at each control sample, an estimated system error, $\hat{e}_{out}$, for instance as calculated via Equation 6:

$$|y_{meas}-y_{est_out}|=|y_{meas}-(\Sigma_{n=1}^{N}\Sigma_{j=1}^{N}w_{nn}y_{est_out})+(\Sigma_{se=1}^{N}w_{nn}y_{est_out_n})) \quad \text{(Equation 6)}$$

Those of skill in the art will appreciate that the estimated system error, $\hat{e}_{out}$ can be calculated in other ways. For instance, y_{meas} can be replaced by r in some embodiments. From Equation 6 it can be seen that the total estimated system output, y_{est_out}, can be given by Equation 7:

$$y_{est_out}=(\Sigma_{n=1}^{N}\Sigma_{j=1}^{N}w_{nj}y_{est_out_j})+(\Sigma_{n=1}^{N}w_{nn}y_{est_out_n}) \quad \text{(Equation 7)}$$

Equation 7 can be seen to nearly mimic Equation 5—in other words the topology applied to the possible control signals, u_{se}, is also applied to the estimates of total system output, y_{est_se}. For both Equations 5 and 7, the weights, w_{nj}, and w_n can be set to 1 for an initial iteration of the selector module **508**, and in subsequent iterations, Equation 6 can be used to narrow in on more effective weights until the cost function in Equation 4 is minimized. Equation 5 can then be used to provide a control signal, u_{out}, from the selector module **508** based on the topology dictated by the optimized weights, w_{nj}, and w_{nn}.

Although not shown, the adaptive engine **500** can further include a CCS engine coupled to the selector module **508** that generates an exogenous signal, that tries to enforce coherency, consensus, and synchronization among the different potential control signals, u_{se}, based on the selected topology. In other words, the CCS engine provides an exogenous signal to the selector module **508** to smooth discontinuities that might arise as it switches between possible control signals, u_{se}. The CCS engine can use the system output measurement, y_{meas}, and aspects of the input regressor, Ø, such as the reference signal, r, to determine the exogenous. It should be appreciated that the exogenous is calculated for and applied to each of the possible control signals, u_{se}. For instance, the exogenous can be a modifier of the weights applied to each possible control signal, u_{se}, when multiple possible control signals, u_{se}, are being combined or blended. For instance, in Equation 5, the weights, ω, can be modified by the exogenous for each possible control signal, u_{se}. In some embodiments, the functionality of the CCS engine and the exogenous can be implemented in the w-tuning.

With a more detailed appreciation of the nonlinear model, the estimation laws, the estimation law modules, control laws and the control law modules, and the selector and combiner, an illustrative representation in FIG. **46** may further help explain these various aspects of the disclosure. FIG. **46** shows an illustrative example of operation of an adaptive engine according to embodiments of this disclosure. The adaptive engine **4600** enables multiple combinations of estimation and control laws to be combined and then a best combination or combinations are selected for use in determining a control signal, u_{se}, for one or more actuators, such as the actuators described in FIG. **4**. Inputs to the adaptive engine **4600** can include a reference signal, r, (e.g., a stream of setpoints), measurements of the system being controlled by the one or more actuators, y_{meas}, and an estimated system output as determined by the adaptive engine **4600** in a previous iteration. These and other inputs can be concatenated or stored in tensor form, as input regressor, Ø. Thus, one sees that the adaptive engine **4600** at the most basic level, takes an input regressor, Ø, and produces a control signal, u_{out}. But the adaptive engine **4600** also achieves this using unique bifurcation of duties such that parallelization is optimized, and certain calculations are pre-processed, or processed at lower speeds, while others are calculated in real-time. For instance, the nonlinear model of the actuator(s) and/or system controlled by the actuator(s) can be difficult to describe in one or even a small series of equations. Instead, the nonlinear model is broken into frames of sample points and for each frame, the nonlinear model is approximated by a time-varying linear system, W_m,

that is based on the estimated model parameter tensor, θ, and is adapted through the frame until the time-varying linear system, W_m, represents an accurate approximation of the nonlinear behavior for that frame (i.e., when Ø becomes constant for multiple control samples or iterations). In this way, the model approximates the nonlinear nature of the actuator(s) and/or system, while easing the processing burden of control by using a linear approximation that is adapted toward the nonlinear system behavior with every iteration of θ. More specifically, for each frame of sample points, a frame resynthesizer **4602**, selects a structure of a time-varying linear system, W_m, (i.e., which elements in a given frame's W_m matrix or matrices are ones and zeros). Alternatively, the structure of the time-varying linear system for each frame can be selected by a designer based on empirical study of the actuator(s) and system. Either way, for the sample points of a given frame, a time-varying linear model is used that approximates the nonlinear behavior while converging on that nonlinear behavior via adaptation of θ. In other words, any unpredicted or averaged out nonlinear behavior is approximated through the "theta" parameter adaptation at every control sample.

The engine **4600** can include various estimation law modules **4606**, though only one is shown in this abbreviated illustration. The estimation law module **4606** applies an estimation law, such as $\dot{\theta}=\Gamma\hat{e}Ø$, to estimate a best value for the parameters (estimated model parameter tensor, θ) of the nonlinear model, or more specifically, the linearized version of the nonlinear model for the given frame. Each estimation law, not just the one shown, is a function of an error, ê, or a cost function, J. Whichever one is used, the error or cost function is a function of two or three of the following: (1) reference signal, r; (2) measured system output, y_{meas}, from a previous iteration or previous control sample; and (3) estimated system output, y_{est_se}, for a previous iteration or previous control sample. Where the estimated system output, y_{est_se}, is used in the error or cost function, this prediction can come from a prediction portion of the model **4608**B. In other words, the estimation law module **4606** adapts the estimated model parameter tensor, θ, every iteration. Since the frame resynthesizer, or the designer, selects a new time-varying linear system of the nonlinear model for every frame, it can be said that the time-varying linear system, W_m, of the model is adapted every frame, and the model is further adapted by changes to the estimated model parameter tensor, θ, for each iteration or control sample. In other words, adaptation of the model is bifurcated into faster and slower portions—fast portion based on adaptation of θ and a slower portion based on adaptation of the time-varying linear system, W_m. The illustrated estimation law is based on the input regressor, Ø, and the adaptation gain, Γ, though other estimation laws can be functions of similar or different values (e.g., not including the adaptation gain, Γ, and/or being a function of a filtered version of the input regressor, Ø).

Integrating the illustrated estimation law gives the estimated model parameter tensor, θ, and once this tensor is estimated, it can be passed to the model **4608**, which has two parts: a control portion for determining u_{se} and an estimation portion for determining y_{est_se}, both of which are functions of the estimated model parameter tensor, θ. Both can also be based on versions of the input regressor or a filtered version thereof, such as, but not limited to, ω and ψ. As shown, the estimation portion of the model **4608**B is also a function of the time-varying linear system, W_m, of the linearized version of the model, however, an alternative sees the control portion depending on the time-varying linear system, W_m. Both portions of the model can be parameterized or parametric. These two portions of the model exhibit duality as they are related through the same model **4608**. The control law module is also referred to earlier in this disclosure as a sub-engine, and various sub-engines present differing uses of the model **4608**, though ultimately, they all rely on similar inputs to those shown in this illustration, and each sub-engine typically produces a possible control signal, u_{se}, and an estimated system output, y_{est_se}.

Both portions or forms of the model **4608**A and **4608**B "test" the estimated model parameter tensor, θ, to see how well the estimate performs. This operation in the control law module also produces (1) the possible control signal, u_{se}, which is passed to the second form of the model **4608**B, and (2) the estimate of the system response/measurement, y_{est_se}, which may use the time-varying linear system, W_m, in some variations, that the frame resynthesizer **4602** or designer has selected for the entire frame.

These two outputs of the model **4608** are passed to the selector module **4610**, which selects a best one or a best combination of u_{se} from the various combinations of estimation law modules and control law modules (only one combination is shown) to produce the control, u_{out}, for the iteration or control sample.

The estimation law module **4606** and control law module loop **4608** in this fashion for a number of iterations or control samples to "adapt" the estimated model parameter tensor, θ (or adapt the linearized form of the model) within the current frame. As the adapted model converges on the nonlinear behavior of the system, the estimated model parameter tensor, θ, will become nearly constant (i.e., see little Δ as additional iterations occur) as will the time-varying linear system, W_m, that depends on the estimated model parameter tensor, θ. At the end of a frame, the frame resynthesizer (or the designer's lookup table) calculates a new structure of the time-varying linear system, W_m, for the linearized form of the nonlinear model, and passes the new structure to the model **4608** to start another series of adaptations of the estimated model parameter, θ.

Operations of the adaptive engine **4600** can also be bifurcated between a processor and an FPGA. In particular, the processor can compute the structure of the time-varying linear system, W_m, once per frame or pre-process various structures for various expected sets of inputs. The FPGA, with its lower latency, can attend to sample-by-sample (real time) calculations of ê, J, θ, u_{se}, and/or y_{est_se}, for each iteration or control sample. In this way, the whole of the adaption engine **4600** can be bifurcated across a processor and an FPGA, or similar components.

Details of Control Law Modules/Sub-Engines

The following sections describe details of various exemplary control law modules or sub-engines, though this list is not limiting. One or more of these sub-engines can be implemented independently from the other sub-engines, and in some embodiments even stand on their own independent from the rest of the adaptive engine. For instance, each sub-engine can be implemented without the herein disclosed estimation law modules or selector module. In other embodiments, less than all of the herein disclosed sub-engines need be implemented. For instance, what will be called a TLMC (or Lyapunov) sub-engine uses the Lyapunov framework which leads to stable outputs in fast dynamic situations and those where large amounts of adaptation are needed. In other words, the TLMC creates a stable control law by ensuring that sensitivity functions do not exhibit abrupt variations and are stable by construction. For these cases, the TLMC sub-engine can be implemented,

selected, or given priority in the blending of possible control signals, u_{se}. However, this TLMC sub-engine can be slow to converge and is not particularly well-suited for unstable zero dynamics. Accordingly, a second sub-engine or TARC, can be implemented, selected, or given priority in the blending of possible control signals, u_{se}, as this sub-engine quickly converges to a target metric and/or optimize an amount of energy used (e.g., a minimum rail voltage to achieve a setpoint). The TARC creates fast and stable control laws by reformulation of the control problem such that some quantities can be pre-computed on a CPU leading to faster and more robust real-time operation. Additionally, the TARC allows a designer to specify the speed and amount of stability desired in addition to characterizing the control actuators that are to do the heavy lifting and the ones that are to do lesser lifting. So, for instance, the selector module may choose between and possibly blend possible control signals, u_{se}, from a TLMC and TARC sub-engine. An embodiment using these two sub-engines would provide some coverage for stable and unstable zero-dynamics without any other sub-engines.

However, the TARC sub-engine can become unstable when the adaptive engine is perturbed and/or increases or decreases of the control, u_{out}, are too granular to achieve performance that has "converged" and thus the control, u_{out}, becomes oscillatory. Examples of perturbations include, but are not limited to, a limiting loop, or a small change in plasma process chemistry). Oscillatory action may happen where the convergence is too large, but the error from a target parameter is too small to merely increase the adaptation gain—the result being an oscillatory control, u_{out}. So, the TARC can be implemented, selected or have the most influence on the control, u_{out}, for stable and un-stable zero-dynamics, and the TLMC can be implemented, selected or have the most influence on the control, u_{out}, when stable adaption is desired (at the sacrifice of convergence speed).

Yet, neither of these sub-engines are well-suited for unstable zero-dynamics, where higher speeds and smaller unknown disturbance rejection is preferred. For these situations, a third sub-engine, the L1 sub-engine, may be implemented, selected or have priority in a blending of possible control signals, u_{se}. The L1 sub-engine is configured to provide a fast and robust possible control signal, u_{se}, without output chattering by using a sliding mode predictor in conjunction with carrying adaptation based on how different the prediction (not the estimate) is from a smoothed system output measurement, y_{meas}.

However, all of the first three sub-engines suffer from slower speeds in situations where expert rules exist (e.g., tricks of the trade picked up through years of trial and error), so a fourth sub-engine, the adaptive proportional-integral-derivative (PID), can be implemented, selected or have the most influence on the control, u_{out}, in these situations using known PID rules. The PID sub-engine generalizes and formats the estimation laws so that PID rules can be applied to the outputs of the estimation law modules.

But, where there is not a-priori knowledge about the system dynamics and where large disturbances exist (e.g., an abrupt change in process chemistry or changing chamber pressure, gas flow, or thermal conditions or anything that would cause a large change in plasma impedance), or where the system is oscillatory, a fifth sub-engine, the ATIMC sub-engine can be implemented, selected or have the most influence on the control, u_{out}. The ATIMC sub-engine creates a control law in different parts by subtracting specific effects of disturbances, nonlinearities, dither, and noise in a compartmentalized manner rather than lumping these together.

However, there are operating regions where none-of-the-above sub-engines are ideal, or outlier cases where superior empirically derived control rules exist, and for these a sixth sub-engine, or ATFC sub-engine can be implemented, selected or given priority in the possible control signals, u_{se}, blending. The ATFC sub-engine uses fuzzy logic design rules that are qualitative rather than quantitative.

One should note that nothing in the literature describes how to carry out any of these sub-engines for MIMO and nonlinear systems or even SISO linear systems in a way that actually fits in real-time (e.g., ≤250 ns) systems with minimal resource consumption.

The TLMC or Lyapunov Sub-Engine

FIG. **10**A shows an embodiment of an adaptive engine focusing on details of a Lyapunov control law module or Lyapunov sub-engine (also called a TLMC control law module or sub-engine). The adaptive engine **1000** includes at least one estimation law module **1002**, a control law module or sub engine **1005**, and a selector module **1008**. As with previous adaptive engines discussed herein, the estimation law module **1002** takes an input regressor, Ø, and estimates a model parameter tensor, θ, for a nonlinear model of the actuators and/or system (e.g., a plasma processing system). The estimated model parameter tensor, θ, is determined for most estimation laws using at least a portion of the input regressor, Ø, and an estimation error, ê, or cost function, J, either of which can be written in various forms, but typically comprise some combination of two or more of the measured system output, y_{meas}, an estimated system output for a given control law module, y_{est_se}, and a reference signal, r. Typically, the measured system output, y_{meas}, and the estimated system output, y_{est_se}, are for a previous iteration and thus in some cases can be written as $y_{meas}(k-1)$ and $y_{est_se}(k-1)$. Said another way, each estimation law module estimates an estimated model parameter tensor, θ, that minimizes an estimation error, ê, or cost function, J.

The estimated model parameter tensor, θ, is then used by the nonlinear model in the Lyapunov sub-engine **1005** to generate a possible control signal, u_{se}, and to estimate an estimated system output, y_{est_se}, both of which are then used by the selector module **1008** to select a best one or best combination of possible control signals as the control, u_{out}. Although only a single estimation law module **1002**, and a single corresponding possible control signal, u_{se}, and estimated system output, y_{est_se}, are shown, the Lyapunov sub-engine **1005** can take estimated model parameter tensors, θ, from multiple estimation law modules **1002**, and produce multiple pairs of u_{se} and y_{est_se} (one for each estimation law module **1002**).

The estimated model parameter tensor, θ, is passed to the control law module or sub engine **1005**, in this case, the Lyapunov sub-engine **1005**, which passes the estimated model parameter tensor, θ, through a nonlinear model of the system and/or actuators to produce a possible control signal, u_{se}, and an estimated system output, y_{est_se}. Specifically, a control portion **1016** of the nonlinear model produces the possible control signal, u_{se}, and an estimation portion **1018** of the nonlinear model produces the estimated system output, y_{est_se}.

More particularly, the Lyapunov sub engine **1005** takes the (1) input regressor, Ø, which may include at least the reference signal, r, and the control from the previous iteration, u_{out}, and (2) the estimated model parameter tensor, θ, and performs a tensor multiplication **1012** on these inputs.

More specifically, the tensor multiplication **1012** implements a version of the first control law where the input regressor, Ø, is not modified before tensor multiplication **1012**:

$$u_{se}=\theta\cdot\text{Ø} \quad \text{(Control Law 1A)}$$

However, and as will be discussed in depth later, the Control Law 1A using ω instead of Ø can be used where the sub-engine **1005** of FIG. **10**B is implemented and some modification of Ø to get ω occurs. More specifically, in Control Law 1A, ω overlaps with but is not identical to Ø. In particular, ω is a concatenation that can include some form of u_{out_k-1}, y_{meas}, and r (i.e., often components of Ø). For instance, one or more of these values can be filtered before being concatenated into ω. For instance, ω may equal $[u_d, y_d, y_{meas}, r]$ where u_d and y_d are filtered or smoothed versions of u_{out} and y_{meas}, respectively. See FIG. **10**B for a more specific implementation of ω replacing Ø.

The input regressor, Ø, can include inputs that correspond to the output parameters to be controlled (and thus the estimated model parameter tensor θ). These inputs can include, but are not limited to, the reference signal, r, the measured system output, y_{meas}, the control from the previous iteration, u_{out}, and in some cases the estimated system output, y_{est_se}, for the Lyapunov sub-engine **1005**. For Model 1, the control portion **1016** multiplies the input regressor, Ø, including the control signal from the previous iteration, u_{out}, and the estimated model parameter tensor, θ. For instance, if the input regressor, Ø, includes r and y_{meas}, then the estimated model parameter tensor, θ, will include θ values for r and y_{meas}. More specifically, if $\text{Ø}=[r, y_{meas}, u_{out}]$, then $\theta=[\theta_r, \theta_{ymeas}, \theta_{uout}]$. Accordingly, for this example, the possible control signal would be $u_{se}=\theta\text{Ø}=[r, y_{meas}, u_{out}]\,[\theta_r, \theta_{ymeas}, \theta_{uout}]=r\theta_r+y_{meas}\theta_{ymeas}+u_{out}\theta_{uout}$ and this matrix multiplication takes place in the tensor multiply **1012**. The estimation portion **1018** multiplies the time-varying linear system, W_m, and the output of the control portion, the possible control signal, u_{se}. Where Model 2 is used, the tensor multiplication **1012** sees the control portion **1016** multiply the time-varying linear system, W_m, by the total estimated system output, y_{est_out}, or the measured system output, y_{meas}. Similarly, the estimation portion **1018** multiplies θ and Ø.

One might recognize that Control Law 1A is the control portion of Model 1 referred to earlier. An example control law is not presented to correspond to Model 2, but it can be said that the Lyapunov sub-engine **1005** can implement Models 1 or 2 without other modifications, whereas subsequent sub-engines may implement either model, but with modifications to achieve different control goals.

Once the control portion **1016** has calculated u_{se}, it can use the possible control signal, u_{se}, to calculate the estimated system output, y_{est_se} via the estimation portion **1018** of the nonlinear model. In this embodiment, the tensor multiply **1012** can be thought of as implementing the two forms of the model (control and estimation forms) to test the guesses for θ, which produces u_{se} and y_{est_se} for this iteration. The resulting u_{se} and y_{est_se} can be passed to the selector module **1008**, that provides a total system control, or control, u_{out}, as a best of the possible control signals, u_{se}, or a best combination or blending of two or more of the possible control signals, u_{se} (e.g., a weighted average, multiplication, or summation). This calculation can be based on the estimated system outputs, y_{est_se}, from the Lyapunov sub-engine **1005** and all other sub-engines. For instance, a total estimated system output y_{est_out} can be calculated for various combinations or topologies of y_{est_se}, and the topology leading to a total estimated system output y_{est_out} that is closest to r or y_{meas} (i.e., a smallest estimated system error, $\hat{e}_{out}$, or estimated system cost function, J_{out}) is used to select or combine possible control signals, u_{se}.

Thus completes a single iteration of sub-engine **1005** operation. The control, u_{out} can be fed back as part of the next input regressor, Ø, and the time-varying linear system, W_m, can be adapted via changing θ over multiple iterations in this manner until W_m converges on the actual nonlinear system behavior (i.e., the unknown nonlinear portion of W_m is minimized). This can continue until a new frame, at which point a new structure of the time-varying linear system, W_m, is provided to the estimation law module **1002** and/or the tensor multiply **1012**, and adaptation of θ within this next frame begins.

Although not explicitly shown, the control signal u_{out} is fed back to the input regressor, Ø, and may be provided to the estimation law module **1002** and/or the sub-engine **1005**. The estimated system output, y_{est_se}, can also be passed back to the estimation law module **1002** for use in determining the next iteration of θ. One or both of these can be stored in memory along the way, such as a TSP-RAM.

Because a generator or match or any other system to be controlled may include nonlinearities, for instance associated with analog to digital conversion or digital to analog conversion (e.g., quantization effects) and hardware actuator nonlinearities (e.g., slew rate, saturation, windup, deadtime, dead zone, hysteresis, etc.), to name just a few examples, the Lyapunov sub-engine **1005** can optionally include a nonlinear transfer function(s) **1013**. When **1013** is implemented, the tensor multiply **1012** can produce what will be called ideal or desired outputs, $u_{desired}$ and y_{est_ideal}, which will then be transformed into use and y_{est_se} in the nonlinear transfer function(s) **1013**. The hardware nonlinearities can be characterized during the design stage and a parameterized dynamic model of these nonlinearities, and their effects can be hardwired or programmed into the nonlinear transfer function(s) **1013**, such that:

$$u_{se}\triangleq(u_{desired}+f(\text{nonlinear}))g(\text{nonlinear}) \quad \text{(Equation 8)}$$

$$y_{est_se}\triangleq(y_{est_ideal}+f(\text{nonlinear}))g(\text{nonlinear}) \quad \text{(Equation 9)}$$

While this embodiment implements both the control and estimation portions of the nonlinear model in the tensor multiply **1012**, in an alternative embodiment, the estimation portion of the nonlinear model can be implemented in the estimation law module **1002**. In this case, y_{est_se} or y_{est_ideal} will be calculated in the estimation law module **1002** based on the input regressor, Ø, the estimated system parameter tensor, θ, and a previous iteration of the possible control signal, u_{se}. The estimated system output, y_{est_se}, is then passed to the selector module **1008** as described above, or the y_{est_ideal} is then passed to the nonlinear transfer function(s) **1013** as shown in FIG. **10**A and as described above. For further details of this variation where the estimation portion of the model is used by the estimation law module **1002**, refer to FIGS. **5**B and **8**B.

To further improve accuracy and the speed of convergence, FIG. **10**B presents a variation of FIG. **10**A where the derivative of the estimated model parameter tensor, θ, is also used. In particular, the control portion of the nonlinear model, or Control Law 1A, can be written in terms of θ and its derivative as Control Law 1B as follows:

$$u_{se}=[\theta,\dot{\theta}][\Omega]=\theta\omega+\dot{\theta}\chi \quad \text{(Control Law 1B)}$$

And the estimation law module **1002** can calculate both the estimated model parameter tensor, θ, and its derivative,

$\dot{\theta}$. These can both be passed to the tensor multiply **1012**. However, instead of the input regressor, Ø, being the other input to the tensor multiply **1012**, tensor Ω is the second input in the tensor multiply **1012**. Said another way, the tensor multiply **1012** performs $u_{se}=[\theta, \dot{\theta}]\cdot\Omega$. To get to Control Law 1B, or the control portion of the nonlinear model, the input regressor, Ø, is split up and the system output measurement, y_{meas}, and the control signal from a previous iteration, u_{out}, are passed through smoothing filters **1020**. The smoothed versions of y_{meas} and u_{out} can be referred to as y_d and u_d. The smoothing filters **1020** can apply, for instance, a minimum group/phase delay persistent excitation, which can produce noise free signals and/or derivatives of the inputs to the filters **1020**. The reference signal, r, and the non-smoothed system output, y_{meas}, can then be passed to a tensor concatenation **1022** along with the smoothed values, y_d and u_d, to produce a concatenated tensor ω (where $\omega=[r, y_{meas}, y_d, u_d]$). The concatenated tensor ω can be passed through another set of smoothing filters **1024** (which can be the same as the smoothing filters **1020** in some embodiments), to obtain χ. The χ tensor can take the filtered value of ω and insert 0's where appropriate. This can be understood as the process having a relative degree when discussing single-in-single-out (SISO) transfer functions. Subsequently, ω and χ can be concatenated in tensor concatenation **1026**, and the tensor multiply **1012** performs the Control Law 1B or $u_{se}=\theta\omega+\dot{\theta}\chi$. In other words, regardless of the relative degree of the system, its nonlinearities, and/or its MIMO status, this use of χ allows generic application. Once the W_m structure is selected for a frame, the χ tensor takes on the filtered values from ω and depending on the relative order, fills out some entries with 0's. The remainder of each iteration is carried out as described relative to FIG. **10**A.

To enhance the use of processing resources, the estimation law module **1002** and parts of the sub-engine **1005** can operate in parallel. For instance, determination of the estimated model parameter tensor and its derivative, $[\theta, \dot{\theta}]$, can be carried out in parallel to determine the ω, χ, and Ω tensors. More specifically, the sub-engine **1005** in a first FPGA cycle can calculate ω, while the estimation law module **1002** begins to determine the estimated model parameter tensor and its derivative, $[\theta, \dot{\theta}]$. In a second FPGA cycle, the sub-engine **1005** can determine χ and Ω while the estimation law module **1002** finishes determining the estimated model parameter tensor and its derivative, $[\theta, \dot{\theta}]$. In a third FPGA cycle, the tensor multiply **1012** can multiply the estimated model parameter tensor and its derivative, $[\theta, \dot{\theta}]$, and Ω to produce the $u_{desired}$ and the y_{est_ideal}. In a fourth FPGA cycle, the nonlinear transfer functions **1013** can convert the $u_{desired}$ and the y_{est_ideal} to the use and the y_{est_se}, and in a fifth FPGA cycle the selector module **1008** can produce the control signal, u_{out}, from the outputs of the multiple sub-engines **1005**. This cycle rate can lead to a 6× oversampling/resource sharing/streaming factor and between 5-25 MHz control rate in some embodiments. However, slower control rates, such as lower than 5 MHz can achieve an 8× to 32× oversampling/resource sharing/streaming factor. These lower control rates and higher oversampling factors can lower hardware usage (e.g., as low as 5% FPGA usage).

FIG. **47** illustrates a method of operating a sub-engine such as the Lyapunov sub-engine. The method **4700** comprises receiving an input regressor, Ø (Block **4702**), and an estimated model parameter tensor, θ (Block **4704**), for a nonlinear model of the one or more actuators and/or the power system controlled by the one or more actuators. The input regressor, Ø, can include inputs that correspond to the output parameters to be controlled (and thus the estimated model parameter tensor θ). These inputs can include, but are not limited to, the reference signal, r, the measured system output, y_{meas}, the control from the previous iteration, u_{out}, and in some cases the estimated system output for the sub-engine, y_{est_se}. The estimated model parameter tensor, θ, may be estimated, for instance by one of the estimation law modules previously discussed, or may be accessed from an empirically derived lookup table. For instance, if the Lyapunov sub-engine operates independently to control one or more actuators, an estimation law module may not be available, in which case, the estimated model parameter tensors, θ, can be found via experimentation and stored in a lookup table that the Lyapunov sub-engine can access based on one or more of a reference signal, r, a control, u_{out}, from a previous iteration, and measurements of the system output, y_{meas}, from a previous iteration. The method **4700** further comprises receiving a structure of a time-varying linear system, W_m (Block **4706**) that is part of a nonlinear model. The time-varying linear system, W_m, can have a structure that is pre-calculated in a frame resynthesizer and then newly passed to the Lyapunov sub-engine every frame or can be accessed from an empirically derived lookup table at every frame. The time-varying linear system, W_m, can depend on the estimated model parameter tensor, θ, and thus can change or adapt every iteration or control sample. However, it can have a structure that remains the same through a given frame, but changes from frame to frame. Thus, the frame-to-frame changes in structure account for large changes in the nonlinear system behavior, while adjustments to θ and hence the time-varying linear system, W_m, within a frame, account for small nonlinear system behaviors. The method **4700** can optionally perform certain filtering operations on one or more components of the input regressor, Ø (optional Block **4708**) and concatenate parts of the input regressor with the new filtered tensors to form a modified regressor, ω (optional Block **4710**). These optional steps can be embodied by the components **1020** and **1022**, respectively, seen in FIG. **10**B. The modified regressor, ω, can optionally be further filtered to form a doubly modified regressor, χ, where 0's can be inserted into χ, where appropriate depending on the relative order of W_m (optional Block **4712**). The modified regressor, ω, and the doubly modified regressor, χ, can be concatenated, to form a final tensor, Ω (optional Block **4714**). These last two optional blocks can be embodied by the components **1024** and **1026**, respectively, see in FIG. **10**B. These optional blocks allow the method **4700** to by applied generically to systems regardless of their relative degree, nonlinearities, and/or MIMO status. To either the input regressor, Ø, or the final tensor, Ω, the method **4700** can apply a control portion of the nonlinear model by tensor multiplication of the estimated model parameter tensor, θ, and the input regressor, Ø (or optionally the final tensor, Ω) (Block **4716**). This calculates a possible control signal, u_{se}. The method **4700** can also apply an estimation portion of the nonlinear model by using the possible control signal, u_{se}, and the estimated model parameter tensor, θ, as inputs to the time-varying linear system, W_m, to estimate an estimated system output, y_{est_se} (Block **4718**). The estimated system output, y_{est_se}, can then be used to determine how the possible control signal, u_{se}, influences a control output, u_{out}, (Block **4720**), which is configured for controlling the one or more actuators and/or the system controlled by the one or more actuators (Block **4722**).

Although not illustrated, the Lyapunov sub-engine can operate as a standalone controller. In such an embodiment, the estimation law modules can be replaced by an empirically derived lookup table for the estimated model parameter tensor, θ. More specifically, a lookup table can be empirically formed as a mapping between (1) y_{meas} and u_{out} from a reference/calibration system and (2) estimated model parameter tensors, θ. During operation of the Lyapunov sub-engine as a standalone controller, a control, u_{out}, can be provided to the one or more actuators, and measurements, y_{meas}, can be taken from the one or more actuators and/or system. These can then be used to select an estimated model parameter tensor, θ, from the lookup table, and then provided to the Lyapunov standalone controller to determine what will be called a control signal, u_{out}. This control signal, u_{out}, can be provided to the one or more actuators. Alternatively, the Lyapunov standalone controller can produce a string of possible control signals, u_{se}, and form a control, u_{out}, as a combination of the string. For instance, a weighted average of the possible control signals, u_{se}, can be used to calculate the control, u_{out}, although other methods of combining the string can also be implemented. In some embodiments, the combination may be based on estimated system outputs, y_{est_se}, for each of the possible control signals, u_{se}, similar to the way in which a topology is selected in the selector and combiner mentioned earlier. These estimated system outputs, y_{est_se}, can be found via an estimation portion of the nonlinear model, for instance, using Model 1:

$$y_{est_se}=W_m\{u_{se},\theta\}$$

Where the estimated model parameter tensor, θ, is found in the lookup table based on the measured system output, y_{meas}, and the control, u_{out}, both from a previous iteration.

The Tensor Adaptive Tracking and Regulation Control (TARC) Sub-Engine

The Lyapunov sub-engine (i.e., the TLMC sub-engine described above) is designed to operate in a multitude of conditions and with relatively large adaptation gains Γ, Γ_1, Γ_2, etc., recalling that Γ is the adaptation gain tensor. In some circumstances, however, the Lyapunov sub-engine may not be the most optimal for adaptive control. For example, the Lyapunov sub-engine may not be the most optimal when the non-linear system being controlled has unstable zero dynamics (e.g., non-minimum phase for a single input single output or SISO linear system). Aspects of the present disclosure are directed to a control law sub-engine (herein referred to as the Tensor Adaptive Tracking and Regulation Control or TARC sub-engine) that is configured to work in conjunction with the Lyapunov control law sub-engine and any of the other control law sub-engines described herein to optimize the control signal(s) provided to the actuator(s) of the non-linear system being controlled. In some embodiments, the TARC sub-engine can also operate independent of any other sub-engines and may therefore be referred to as a TARC controller.

By supporting parallel processing, the TARC control law sub-engine is designed to optimize the use of the Tensor Signal Processing (TSP) hardware resources of the adaptive engine. Additionally, or alternatively, the TARC control law sub-engine also facilitates in the use of internal model control (IMC) principles. Broadly, IMC refers to a control design where the reverted input/output (I/O) model of the process/system being controlled is included within the controller. Said another way, IMC systems are characterized by a control device consisting of the controller and of a simulation of the process being controlled (i.e., the internal model). The internal model computes the difference between the outputs of the process and of the internal model, where the difference represents the effect of disturbances and/or of a mismatch of the internal model. The disclosed TARC control law sub-engine may facilitate in smoother waveforms and/or faster settling times, as compared to the prior art, through the use of an IMC scheme, an adaptive inverse control scheme, or a combination thereof.

In some embodiments, the TARC control sub-engine is configured to manage both desired process performance and efficiency, for instance, when the rail and drive frequency are being controlled simultaneously. In such cases, the TARC control sub-engine is designed to prevent error transmission buildup by incorporating a matrix (or tensor), where the matrix is used to place weights on the control signals whose amplitudes are to be minimized. In some aspects, the TARC control law sub-engine enables the use of weighted control signals in a manner similar to Linear Quadratic Control (LQC) schemes.

In some embodiments, the adaptive engine may be augmented with the TARC and TLMC control law sub-engines, as well as other control law sub-engines described later in the disclosure. In this way, the adaptive engine may select the most optimal control law sub-engine for a particular situation (or the most optimal combination of control law sub-engines). In some examples, the adaptive engine compares the estimated error (or estimation error) associated with the different control law sub-engines to determine which of the control law sub-engines should be used. For instance, the adaptive engine may select the possible control signal produced by one of the plurality of control law sub-engines based on determining that the control law sub-engine is associated with the lowest estimation error (i.e., highest estimation accuracy). Said another way, the adaptive engine (e.g., a selector module) may select a one or combination of possible control signals, u_{se}, that lead to a control, u_{out}, that causes a measured system output, y_{meas}, that is close to the total estimated system output, y_{est_out}, or the reference signal, r. This may involve an error or cost function that compares the measured system output, y_{meas}, for a previous iteration, or the reference signal, r, to the total estimated system outputs, y_{est_out}, calculated for various possible topologies. More specifically, the TSD **518** may analyze a cost function, such as Equation 4, to select an optimal possible control signal, u_{se}, or combination of possible control signals, u_{se} (in the form of a topology for combining the possible control signals).

In the case of stable zero-dynamics, the TARC control law sub-engine attempts to achieve the desired performance in the shortest time possible and/or with minimal control efforts (e.g., minimal/optimized energy use, minimal/optimal use of controller hardware resources, to name two non-limiting examples). In some cases, for instance, when the TARC control law sub-engine is predicted to cause stability issues, the TLMC control law sub-engine (or any other control law sub-engine) may take over. Once the predictions associated with the TARC control law sub-engine stabilize, the adaptive engine may switch from the TLMC back to using the possible control signal(s) provided by the TARC to control the non-linear system.

As described in further detail below, the TARC control law sub-engine allows for a high level of parallelization by deploying multiple control law modules on parallel paths. The TARC control law sub-engine comprises two or more control law modules (e.g., an adaptive inverse laws or AIL control law module, an eigen control law module, a penalty control law module) that can be implemented in parallel, where the parallel implementation enables one or more of

oversampling, resource sharing/streaming, and pipelining. Such a design may serve to optimize hardware resource usage. In some examples, several FPGA clock cycles may be used to collect data which is then passed as a single stream of data, herein referred to as "resource streaming". In some aspects, this serves to reduce the length of the critical path of the system, which may or may not be at the cost of FPGA clock cycles. However, since several FPGA clock cycles can usually be fit within one control clock cycle, such a design has negligible effect on the control output speed.

FIG. **11**A depicts an example of an adaptive engine **1100**, according to various aspects of the disclosure. As seen, the adaptive engine **1100** comprises an estimation law module **1104** (also referred to as FELB **1104**) and a control law sub-engine **1106**, where the control law sub-engine **1106** includes a plurality of control law modules. In this example, the control law sub-engine **1106** comprises an Adaptive Inversion Laws (AIL) module **1114** and an Adaptive Tensor of Matrices Laws (ATML) module **1166**, where the ATML module **1166** comprises an Eigen Laws (EL) module **1124** and a Penalty Laws (PL) module **1134**. It is contemplated that the AIL module **1114**, the EL module **1124**, and the PL module **1134** may be referred to as the control law modules of the control law sub-engine **1106**. The control law sub-engine **1106** further comprises a control selector/combiner (CSC) **1107**, where the CSC **1107** is configured to receive a possible control signal from each of the control law modules and output a final possible control signal (e.g., u_{se}) for the adaptive engine **1100**. The adaptive engine **1100** further includes a selector module **1108**, where the selector module **1108** includes another control selector/combiner (CSC) **1116** and an optional topology selector and designer (TSD) **1118**. The CSC **1116** and the TSD **1118** may be similar or substantially similar to the CSC **516** and the TSD **518** previously described in relation to FIG. **5**.

Similar to some of the other estimation law modules (or FELBs) described herein, the FELB **1104** is configured to receive an input regressor, apply one or more estimation laws to the input regressor, and produce one or more sets of estimated parameter tensors, θ, for a non-linear (NL) model of the one or more actuators and/or the system controlled by the one or more actuators. In some cases, the input regressor comprises one or more of (1) a setpoint stream (also referred to as a reference signal), r, (2) a system output measurement, y_{meas}, and (3) a control output, u_{out_k-1}, from a previous iteration. In some examples, the estimation portion **808** of the nonlinear model (which is a parameterized nonlinear model) is stored and/or executed on the FELB **1104**, as depicted in FIG. **11**B. In other cases, the estimation portion **808** is stored and/or executed at the control law sub-engine. In either case, the estimation portion **808** is configured to produce a plurality of possible estimated system outputs, y_{est_SE}, based upon a control input. The control input(s) used to produce the possible estimated system output(s) may be based in part on the location of the estimation portion **808**. In some instances, the control input fed to the estimation portion **808** includes a previous iteration of the possible control signal, u_{SE_k-1} (or u_{se_k-1}), for the adaptive engine **1100**. In some other cases, the control input fed to the estimation portion **808** includes a current iteration, u_{SE_k}, of the possible control signal. In yet other cases, the control input fed to the estimation portion **808** includes an actual control signal (u_{out_k-1}) for a previous iteration, i.e., the actual/output control signal applied to the one or more actuators and/or the system controlled by the one or more actuators. In some cases, this actual/output control signal is the final control output signal computed by the selector module **1108**.

As seen in FIG. **11**A, the FELB outputs a plurality of estimated parameter tensors [θ], one for each of the AIL module **1114**, the EL module **1124**, and the PL module **1134**. In some examples, the FELB **1104** may output a single estimated parameter tensor that is fed to each of the three control law modules. In some instances, the plurality of estimated parameter tensors [θ] may be stored in tensor memory **1152** of the adaptive engine. The control law modules are configured to output a possible control to the CSC **1107**, which then outputs the possible control signal (u_{SE}) and the estimated system output (y_{est_SE}) corresponding to the adaptive engine **1100** to the selector module **1108**. The selector module **1108** also receives one or more other possible control signals (u_{SE1}, u_{SE2}, etc.) and estimated system outputs (y_{est_SE1}, y_{est_SE2}, etc.) from one or more other control sub-engines (or control law modules). In some cases, the CSC **1107** outputs one of, or a combination of, the possible control signals received from the control modules of the control law sub-engine **1106**. As seen, the CSC **1107** receives a possible control signal (e.g., u_{SE_AIL}, u_{SE_EL}, u_{SE_PL}) and an estimated system output (e.g., $y_{est_SE_AIL}$, $y_{est_SE_PL}$, $y_{est_SE_EL}$) from each of the AIL control law module **1114**, the EL control law module **1124**, and the PL control law module **1134** and outputs a single u_{SE} and y_{est_SE} to the selector module **1108**. In other words, the u_{SE} and y_{est_SE} provided to the selector module **1108** may be one of the possible control signals and estimated system outputs, or alternatively, a combination of the possible control signals and estimated system outputs received by the CSC **1107**.

In an embodiment, the AIL **1114**, the Eigen Laws **1124**, and the Penalty Laws **1134**, can produce the estimated system output (e.g., $y_{est_SE_AIL}$, $y_{est_SE_PL}$, $y_{est_SE_EL}$) using an estimation portion of the nonlinear model. More specifically, the system model or nonlinear model can be provided with a control portion, for generating possible control signals, u_{se}, and an estimation portion for estimating estimated system outputs, y_{est_se}. A time-varying linear system, W_m, can make up a foundation of either the estimation portion or the control portion, and can be bifurcated or split into a sum of a linear and a nonlinear portion and the control timeline can be split into frames of differing lengths (or number of control samples or adaptation iterations) with some processing of the nonlinear model occurring on a CPU or other slower resource and real-time aspects of the nonlinear model occurring on an FPGA or other faster resource. A current frame can be supplied with a structure of the time-varying linear system, W_m. As noted relative to FIG. **43**, the nonlinear portion of the time-varying linear system, W_m, is effectively an unknown error and thus not used or considered in the processing (other than in attempt to minimize this error). The structure of the time-varying linear system, W_m, can be pre-processed, for instance on a CPU, though it can also be accessed from an empirically-derived lookup table. The structure of the time-varying linear system, W_m, remains constant through the current frame. Yet, since the time-varying linear system, W_m, is also dependent on the estimated model parameter tensor, θ, the estimation portion of the nonlinear model adapts within a frame as θ changes in the FELB **1104** (as the adaptive engine modifies θ to minimize an error relative to measured system behavior). This can involve calculating an estimation error, ê, or cost function, J, based on two or more of (1) measured system outputs, y_{meas}, from a previous iteration, (2) estimated system outputs, y_{est_se}, from a previous iteration, and (3)

reference signal, r. Adaption can then involve applying an estimation law to at least the reference signal, r, and the estimation error, ê, or cost function, J, to estimate an estimated model parameter tensor, θ. The estimated model parameter tensors, θ, can then be tested in the AIL **1114**, Eigen Laws **1124**, and the Penalty Laws **1134**, and adaptation can continue through the entirety of the frame, and in turn, W_m, is adapted throughout the frame (or until convergence is achieved). Once a frame is complete the method selects a next frame and a new structure of the time-varying linear system, W_m, is provided into the model and adaptation of the estimated model parameter tensor, θ, is carried out through this next frame until convergence. As noted earlier, the structure of the time-varying linear system, W_m, can include the structure of the A, B, and C matrices that are part of the system of equations making up W_m.

Turning now to FIG. **11**B, which illustrates a detailed view of the AIL control law module **1114**, in accordance with one or more implementations. As seen, the AIL control law module **1114** comprises filters **1181**, where the filters **1181** include smoothing filters **1182** and smoothing inverse filters **1183**. The AIL control law module **1114** further comprises a transformation module **1188** and a tensor multiply module **1112**. In this example, the FELB **1104** comprises the estimation portion **808** (which can implement the time-varying linear system, W_m). As seen, the FELB **1104** is configured to receive an input regressor, where the input regressor includes (1) the setpoint stream, r, (2) the system output measurement, y_{meas}, (3) an error signal, e, where the error signal is based on a difference between the setpoint stream and the system output measurement, and/or (4) a possible control signal, u_{SE_AIL}, for the AIL control law module **1114**. While not necessary, the possible control signal, u_{SE_AIL}, may correspond to a possible control signal from a current control iteration. The FELB **1104** is configured to calculate a first set of estimated parameter tensors, [θ], for the nonlinear model based on applying one or more estimation laws to the input regressor. In this example, the FELB **1104** provides the first set of estimated parameter tensors [θ] to the tensor multiply module **1112**.

The tensor multiply module **1112** is electronically, communicatively, and/or logistically coupled to the filters **1181**, the memory **1152**, the transformation module **1188**, and the FELB **1104**. Further, the tensor multiply module **1112** is configured to receive a tensor (A_{CL}), where the A_{CL} tensor is the tensor of time-varying linear system representation of the desired arbitrary non-linear waveform desired by the user as the output of the non-linear/chaotic generator/match/chamber plasma system. Additionally, or alternatively, the tensor multiply module **1112** also receives an internal model (Q_m), where the internal model, Q_m, represents the desired/reference plasma process performance. In some examples, Q_m may be the filtered version of W_m. In some cases, the tensor multiply module **1112** receives one or more of the A_{CL} and the Q_m from the FELB **1104** (or another component of the adaptive engine **1100**). The smoothing filters **1182** and the smoothing inverse filters **1183** are configured to receive the control output, u_{out_k-1}, from the previous iteration and the error signal, e, respectively. In some cases, the smoothing inverse filters **1183** may also receive the control output, u_{out_k-1}, from the previous iteration, where the previous iteration's control output is received from the selector module **1108**. The smoothing inverse filter **1183** provides an inverse filtered version of the error signal, $H^{-1}\{e\}$, and an inverse filtered version of the previous iteration's control output, $H^{-1}\{u_{out_k-1}\}$, to the tensor multiply module **1112**.

In some examples, the AIL control law module **1114** is configured to form a Matrix Tensor (e.g., a Sylvester matrix tensor) from the first set of estimated model parameter tensors, [θ], received from the FELB **1104**. This Sylvester matrix tensor is then passed through a tensor pseudo-inverse block, which carries the pseudo-inverse operation on every Sylvester matrix in all tensor dimensions. The Sylvester matrices are used to condense the estimated model parameters (θ's) of the Â, P̂ matrices into a 2n×2n matrix for each input and each time sample, leading to a tensor for these matrices. In some other cases, the Sylvester matrices are used to condense the estimated model parameters (θ's) the estimated coefficients (e.g., a_{est} and b_{est}, described later in the disclosure) of the nonlinear model into a 2n×2n matrix for each input and each time sample.

In some cases, the tensor multiply module **1112** applies a tensor multiplication between A_{CL} and the pseudo-inverse of the Sylvester matrices tensor to obtain the tensor of matrices P̂ and L̂. P̂ and L̂ may represent a linear algebraic transformation (also known as diffeomorphism) and may be used to compute the adaptive control law. In one non-limiting example, the tensor multiply module **1112** passes the tensor of Sylvester matrices and A_{CL} to the transformation module **1188**, which then computes the tensor of matrices, P̂ and L̂, and passes them back to the tensor multiply module **1112**.

$$\{\hat{P},\hat{L}\}=T\{\mathrm{pinv}(S)A_{CL}\} \quad \text{(Equation 10)}$$

In equation (10), 'S' is a tensor of Sylvester matrices and 'T' represents a linear algebraic transformation.

After receiving {P̂, L̂} from the transformation module **1188**, the tensor multiply module **1112** carries out a tensor (or matrix) multiplication between P̂ and the inverse filtered error signal, $H^{-1}\{e\}$. Further, the tensor Q_m, which is the internal model representing the desired/reference plasma process, is tensor multiplied with L. In some cases, the tensor Q_m is the filtered variation of the tensor W_m, where W_m is a time-varying linear system used in the nonlinear model, and typically in the estimation portion of the nonlinear model. In some cases, a structure of the time-varying linear system, W_m, may be pre-calculated in a frame resynthesizer or accessed from an empirically-derived lookup table. Further, the same time-varying linear system, W_m, may be used for all iterations of a given frame, and then changed for a next frame. In some examples, the possible control signal, u_{SE_AIL}, produced by the AIL control law module **1114** may be calculated as shown in equation (11) below:

$$u_{SE_AIL}=[H\{u_{out_k-1}\}-\hat{L}Q_m]H^{-1}\{u_{out_k-1}\}-\hat{P}H^{-1}\{e\} \quad \text{(Equation 11)}$$

In some cases, the adaptive engine **1100** also computes one or more of the possible control signals, u_{SE_PL} and u_{SE_EL}, corresponding to the penalty laws module **1134** and the eigen laws module **1124**, respectively. For example, the TARC adaptive engine utilizes the adaptive tensor of matrices laws (ATML) module **1206** to compute an estimated output error, $\hat{e}_{out}$, which is then used to compute the possible control signals for the Eigen and Penalty control laws modules.

FIG. **13**A illustrates a pre-computation block **1300**-*a* of the ATML module **1166**, in accordance with one or more implementations. In some cases, the ATML module **1166** may be similar or substantially similar to the ATML module **1166** previous described in relation to FIG. **11**A. As seen, the pre-computation block **1300**-*a* comprises one or more tensor multiply modules **1312**, a sample delay (e.g., 1 sample delay, shown as 1−sd), and one or more summers.

As noted above, the adaptation and estimation laws module (shown as FELB **1104** in FIG. **11**A) produces a plurality of sets of estimated parameter tensors, θ, based on applying the one or more estimation laws to an input regressor, where the input regressor includes one or more of (1) the estimation error, $\hat{e}_{actual}$, (2) the control output from the previous iteration, u_{out_k-1}, (3) Q_m, (4) time-varying linear system, W_m, (5) reference signal or setpoint stream, r, (6) measured output, y_{meas}, and (7) estimated parameter tensors θ for the previous iteration.

In some cases, the system estimation model may be represented using a linear time varying (LTV) representation (or the time-varying linear system, W_m). The LTV representation of the system estimation model may be updated every time sample, which enables modeling the non-linearities, chaotic and dynamic nature, etc., of the non-linear system being controlled to a high degree of precision. In some cases, Equations (12) and (13) represent the LTV representation of the system estimation model:

$$\dot{\hat{x}}=\hat{A}(t)\hat{x}(t)+\hat{B}(t)u_{out}(t), \quad \text{(Equation 12)}$$

$$\hat{y}(t)=C\hat{x}(t), \quad \text{(Equation 13)}$$

The Initial Condition (IC) in equations (12) and (13) is given as $\hat{x}(\theta)=x_0$.

Further, the matrices $\hat{A}(t)$, $\hat{B}(t)$, and C(t) may be represented (in observer form) as follows:

$$\hat{A}(t)=\begin{bmatrix} \vec{\theta}_{a_1}(t) & \begin{bmatrix} 1 & \dots & 0 \\ \vdots & \ddots & \vdots \\ 0 & \dots & 1 \end{bmatrix} \\ \vec{\theta}_{a_n}(t) & 0 \end{bmatrix} \quad \text{(Equation 14)}$$

$$\hat{B}(t)=[\vec{\theta}_{b_1}(t)\ \ \vec{\theta}_{b_2}(t)\ \ \vec{\theta}_{b_3}(t)\ \ \dots\ \ \vec{\theta}_{b_{m-1}}(t)\ \ \vec{\theta}_{b_m}(t)] \quad \text{(Equation 15)}$$

$$C(t)=I_{n\times n}=\begin{bmatrix} 1 & \dots & 0 \\ \vdots & \ddots & \vdots \\ 0 & \dots & 1 \end{bmatrix} \quad \text{(Equation 16)}$$

In Equations 14-16 above, 'n' is the order of the system representation (e.g., 1st order, 2nd order, 4th order, etc.). Further, 'm' is the number of control inputs/actuators in the non-linear system being controlled. Some non-limiting examples of the control inputs/actuators being controlled include drive, rail, frequency, matching network first configuration/position, matching network second configuration/position, etc. In some cases, 'I' is a n×n identity matrix (or alternatively, an identity tensor). Thus, $\hat{A}(t)$ is a matrix or tensor of dimension "n×n", $\hat{B}(t)$ is a matrix or tensor of dimension "n×m", and C(t) is an identity matrix/tensor of dimension "n×n".

The pre-processing block (i.e., pre-computation block **1300**-*a*) of the ATML module **1166** is configured to map the set of estimated parameter tensors, θ, received from the FELB **1104** for each of the eigen and penalty control laws modules to the matrices $\hat{A}(t)$ and $\hat{B}(t)$ as follows:

$$\theta=[\theta_a,\theta_b]=\theta(t)=[\theta_a(t),\theta_{b_1}(t),\theta_{b_2}(t),\ \dots\ \theta_{b_m}(t)] \quad \text{(Equation 17)}$$

The pre-computation block **1300**-*a* then computes the estimated output error, $\hat{e}_{out}$, for the ATML block as follows:

$$\hat{e}_{out_k}(\hat{A}(t)\hat{e}_{out_{k-1}})+(\hat{A}-A_{CL_E})[C\hat{e}_{out_{k-1}}-(y_{meas}-r)] \quad \text{(Equation 18)}$$

Specifically, the tensor multiply module **1312** tensor multiplies $\hat{A}(t)$ and C(t) with the actual estimation error for the previous iteration, $\hat{e}_{out_{k-1}}$, to produce (1) $\hat{A}(t)\hat{e}_{out_{k-1}}$, and (2) $C(t)\hat{e}_{out_{k-1}}$. Further, the measurement error, e, which corresponds to a difference between the measured output, y_{meas}, and the reference signal, r, is calculated. This measurement error, e, given by $|y_{meas}-r|$ is subtracted from C(t) $\hat{e}_{actual_{k-1}}$ to produce:

$$C(t)\hat{e}_{actual_{k-1}}-(y_{meas}-r) \quad \text{(Equation 19)}$$

Next, the pre-computation block **1300**-*a* computes $\hat{e}_{out}$ (shown in equation 18) based on computing the difference between equations (20) and (21) shown below:

$$\hat{A}(t)\hat{e}_{out_{k-1}} \quad \text{(Equation 20)}$$

$$(\hat{A}-A_{CL_E})[C\hat{e}_{out_{k-1}}-(y_{meas}-r)] \quad \text{(Equation 21)}$$

In the equations 18-21 above, A_{CL_E} represents the observer form tensor of a matrix representation of the Eigenvalues, where the Eigenvalues correspond to the speed of the estimation law module/estimator (i.e., how fast the estimator is designed to be). In some aspects, this design is similar to the filtering time-constants of the smoothing filters H{.}. In some examples, the pre-computation block **1300**-*a* is configured to compute the estimated output error for the tensor of the plurality of estimation law outputs (e.g., if all the estimation laws are being used).

FIG. **13**B illustrates a block diagram **1300**-*b* of the Eigen control laws module **1124**, in accordance with one or more implementations. The Eigen control laws module **1124** (also referred to as the EL module **1124**) comprises an eigen solver **1326**, a tensor multiply module **1112**, smoothing filters **1182**, a sample delay (e.g., 1-sample delay), one or more summers, and a discrete time integrator **1347** (DTI). As seen, the eigen solver **1326** of the EL module **1124** is configured to receive the $\hat{A}(t)$ and $\hat{B}(t)$ matrices, where the $\hat{A}(t)$ and $\hat{B}(t)$ matrices are computed based on the estimated model parameter tensors, θ, for a non-linear model of the one or more actuators and/or the power system controlled by the one or more actuators. The eigen solver **1326** may also receive A_{CL}, where A_{CL} Corresponds to a matrix (or tensor) of a time-varying linear system (LTV) representation of the non-linear waveform desired by the user as the output of the non-linear system (e.g., a plasma system, a plasma processing chamber, a power system, to name a few non-limiting examples). The eigen solver **1326** solves the following matching problem: Eigenvalues $(\hat{A}-\hat{B}\Omega)$=Eigenvalues (A_{CL}). This results in an output tensor, Ω, that is passed to the tensor multiply module **1112**. The tensor multiply module **1112** of the EL module **1124** receives the Ω tensor, which is then tensor multiplied with the tensor Q_m, where Q_m is the same or substantially the same as the Q_m described in relation to FIG. **11**. For example, Q_m may represent an internal model representing the desired/reference plasma process performance. The tensor multiply module **1112** passes $Q_m\Omega$ to the smoothing filters **1182**, where it is smoothed/filtered to produce the possible control signal (U_{SE_EL}) for the EL module **1124**. In other words, the possible control signal, u_{SE_EL}, may be represented as $H\{Q_m\Omega\}$. This possible control signal, u_{SE_EL}, is passed to the CSC **1107**, along with the possible control signals, u_{SE_AIL} and u_{SE_PL}, for the AIL and penalty control laws modules.

In some embodiments, the Eigen control law module **1124** (or alternatively, the FELB **1104**) computes an estimated system output, $y_{est_SE_EL}$ (e.g., via an estimation portion of the nonlinear model and in particular via the time-varying linear system, W_m), for the Eigen control law module **1124** and passes it to one or more of the CSC **1107** and the selector module **1108**. In some examples, the estimated system output, $y_{est_SE_EL}(k)$, may be generated by feeding the possible control signal for the current iteration, $u_{SE_EL}(k)$,

into the estimation portion of the nonlinear model, possibly including the time-varying linear system, W_m, as described above in relation to FIG. **8**B. This estimated system output, $y_{est_SE_EL}(k)$, may also be referred to as possible estimated system output, since it is based on a possible control signal produced by a control law module. In other cases, the estimated system output, $y_{est_SE_EL}(k-1)$ may be generated by applying the estimation portion to the possible control signal, $u_{SE_EL}(k-1)$, for the previous iteration, as discussed in relation to FIG. **8**A.

As seen, in some cases, the FELB **1104** (or the parametric/non-linear model) may receive the previous iteration's control output, u_{out_k-1}, from the selector module **1108**. In such cases, if the non-linear/estimation portion/W_m is in the FELB **1104**, a total estimated system output, $y_{est_out}(k)$, is computed based on applying the control output, u_{out_k-1}, from the previous iteration to the estimation portion of the model. The topology selector and designer (TSD) of the selector module uses this estimated system output (also referred to as an estimated system output for adaptation) for selecting the different weights applied to the different possible control signals to produce the final/actual control output signal, u_{out}, sent from the selector module **1108** to the one or more actuators. In some examples, the adaptive engine **1100** updates the possible estimated system output, $y_{est_SE}(k-1)$, for the previous iteration when the control output, u_{out}, from the previous iteration is different than the possible control signal, $u_{SE}(k-1)$, for the previous iteration. In such cases, the possible estimated system output, $y_{est_SE}(k-1)$, is updated by applying the estimation portion of the nonlinear model to the actual control output, u_{out}, from the previous iteration (k−1). The adaptive engine **1100** may use this updated $y_{est_SE}(k-1)$ to compute the possible estimated system output, $y_{est_SE}(k)$, for the current iteration. For example, the adaptive engine **1100** may compute $y_{est_SE}(k)$ as: $y_{est_SE}(k)$=updated version of $y_{est_SE}(k-1)+\dot{y}_{SE_{est}}(k)$, which corresponds to a corrected integration in the discrete time domain.

In some examples, the selector module **1108** passes a total estimated system output, $y_{est_out}(k)$, to the estimation law module/FELB **1104**. When this total estimated system output, $y_{est_out}(k)$, is received from the selector module **1108**, it may be formed as a selection of the best possible estimated system output, y_{est_se}, received from the different estimation-control law module pairs (i.e., FELB-control law sub-engine pairs), or a combination of the different possible estimated system outputs, y_{est_se}, received from the various estimation-control law module pairs. In some embodiments, the selector module **1108** utilizes the same or similar topology and underlying math used to compute the final/actual control output signal, u_{out}. Said another way, this estimated system output for adaptation, $y_{est_out}(k)$, may be produced (e.g., by the CSC of the selector module) by combining possible estimated system outputs, y_{est_se}, from different estimation-control law module pairs, which may be similar to the way that the total control output, u_{out}, is computed from one of (or a combination of) different possible control signals, use. For instance, see Equation 7.

In some embodiments, the eigen control laws module **1124** is also configured to produce the estimation error, ê, and/or a possible control signal, u_{se_EL}, for the next iteration (or time instant). For example, the tensor multiply module **1112** tensor multiplies $\hat{B}$ with the tensor, Ω, to produce $\hat{B}\Omega$, which is then subtracted from the estimated output error ($\hat{e}_{out}$), as follows:

$$\dot{\hat{e}}=\hat{e}_{out}-\hat{B}\Omega \quad \text{(Equation 22)}$$

The estimation error, ê, may be calculated by passing $\dot{\hat{e}}$ through DTI **1347**. This estimation error, ê, is passed through a 1-sample delay (shown as 1-sd in FIG. **13**A) and fed back to the tensor multiply module **1112**.

FIG. **13**C illustrates a block diagram **1300**-*c* showing the penalty control laws module **1134**, in accordance with one or more implementations. The penalty control laws module **1134** (also referred to as the PL module **1134**) comprises a tensor multiply module **1112**, smoothing filters **1182**, equation solvers **1383**, DTI **1347**, 1-sample delay, and at least one summer. Similar to the eigen control laws module described in relation to FIG. **13**A, the penalty control laws module **1134** uses an equation solver to solve for a tensor, P. Specifically, the equation solver(s) of the PL module **1134** receives a penalty tensor R (or alternatively, a pseudo-inverse (pinv) of the penalty tensor, R), and the $\hat{A}(t)$, $\hat{B}(t)$, and C(t) matrices described above, and determines the tensor, P, where the tensor, P, corresponds to a solution of a continuous time equation. In one non-limiting example, the tensor, P, is a solution of the equation:

$$\hat{A}^TP+P\hat{A}-\text{pinv}(R)P\hat{B}\hat{B}^TP+CC^T=0 \quad \text{(Equation 23)}$$

In some other cases, the tensor, P, may be determined from the discrete-time counterpart of the above equation. In either case, the tensor multiply module **1112** uses the tensor P, the pseudo-inverse of the penalty tensor, pinv(R), and the estimation error, ê, to determine the input to the smoothing filters **1182**. The smoothing filters **1182** are configured to smooth/filter the signal received from the tensor multiply module **1112** and output the possible control signal, u_{SE_PL}, for the PL module **1134** to the CSC **1107**. In one non-limiting example, the smoothing filters **1182** receives as input a signal defined by the equation:

$$-Q_m\text{pinv}(R)\hat{B}P\hat{e} \quad \text{(Equation 24)}$$

In this case, the possible control 'u_{SE_PL}' output from the PL module **1134** may be represented as follows:

$$u_{SE_PL}=H\{-Q_m\text{pinv}(R)\hat{B}P\hat{e}\} \quad \text{(Equation 25)}$$

In some examples, the tensor multiply module **1112** also passes a signal (e.g., given by pinv(R)$\hat{B}$Pê) to a summer, where it is subtracted from the estimated output error, $\hat{e}_{out}$, to determine $\dot{\hat{e}}$. In other words, $\dot{\hat{e}}$ may be represented as follows:

$$\dot{\hat{e}}=\hat{e}_{out}-\text{pinv}(R)\hat{B}P\hat{e} \quad \text{(Equation 26)}$$

As shown, the output, $\dot{\hat{e}}$, of the summer is passed through the discrete time integrator (DTI) **1347** to obtain the estimation error, ê. In some embodiments, the estimation error, ê, is fed back to the tensor multiply module **1112** after passing it through the 1-sample delay (shown as sample delay in FIG. **13**B).

FIG. **12** illustrates an example of a method **1200** for controlling a non-linear system using the TARC sub engine described above in relation to FIGS. **11**A-**11**C and **13**A-**13**C, in accordance with one or more implementations. The operations of method **1200** presented below are intended to be illustrative. In some implementations, method **1200** may be accomplished with one or more additional operations not described, and/or without one or more of the operations discussed. Additionally, the order in which the operations of method **1200** are illustrated in FIG. **12** and described below is not intended to be limiting.

In some implementations, method **1200** may be implemented in one or more processing devices (e.g., a central processing unit or CPU, a digital processor, an analog processor, a digital circuit designed to process information,

an analog circuit designed to process information, a state machine, a field programmable gate array or FPGA, and/or other mechanisms for electronically processing information). The one or more processing devices may include one or more devices executing some or all of the operations of method **1200** in response to instructions stored electronically on an electronic storage medium. The one or more processing devices may include one or more devices configured through hardware, firmware, and/or software to be specifically designed for execution of one or more of the operations of method **1200**.

A first operation **1202** comprises receiving an input regressor and a reference signal, r. In some examples, the input regressor and the reference signal, r, may be received at the estimation law module (also referred to as the estimation law module or the FELB, in some examples) of the adaptive engine. In one non-limiting example, the input regressor and the reference signal are received at the estimation law module/FELB **1104**. The input regressor may comprise a system output measurement, y_{meas}, and a control output, u_{out_k-1}, from a previous iteration. The input regressor may include additional components besides the ones listed above and the examples listed herein are not intended to be limiting. In some examples, the first operation **1202** may be performed by one or more hardware processors configured by machine-readable instructions including a module that is the same as or similar to the estimation law module **1104**, in accordance with one or more implementations.

A second operation **1204** comprises applying one or more estimation laws to the input regressor to estimate two or more sets of estimated model parameter tensors, θ, for a nonlinear model. In some examples, the nonlinear model is a function of the two or more sets of estimated model parameter tensors, θ. Further, each of the two or more sets of estimated model parameter tensors, θ, comprises estimated parameters of the nonlinear model. In some examples, the second operation **1204** may be performed by one or more hardware processors configured by machine-readable instructions including a module that is the same as or similar to the estimation law module **1104**, in accordance with one or more implementations.

A third operation **1206** comprises receiving a possible control signal, u_{SE}, from each of first and second control law modules of a control law sub-engine (e.g., TARC control law module/sub-engine **1106**). More specifically, third operation **1206** comprises receiving two or more possible control signals, u_{SE_k}, each using a corresponding control portion of the nonlinear model, where each control portion is a function of one of the two or more sets of estimated parameter tensors, θ, of the nonlinear model. Some non-limiting examples of the control modules (e.g., first, second control law modules) may include the Adaptive Inverse Laws (AIL) control law module, the penalty control law module, and the Eigen control law module. Further, the two or more possible control signals, u_{SE_k}, may be received by one or more of the estimation law module **1104**, the control selector and combiner (CSC) **1107**, the CSC **1116**, and the selector module **1108**. A control portion of the nonlinear model may be implemented in the control law sub-engine to take the two or more sets of estimated parameter tensors, θ, and produce the possible control signals, u_{SE_k}.

A fourth operation **1208** comprises producing (or generating) two or more possible estimated system outputs, y_{est_SE}, based upon applying the nonlinear model to (1) a previous iteration of the possible control signal, u_{SE_k-1}, from one of the two or more control portions, or (2) the possible control signal, u_{SE_k}, from one of the two or more control portions. Additionally, or alternatively, fourth operation **1208** comprises generating two or more estimated system outputs, y_{est_SE}, each using a corresponding estimation portion of the nonlinear model, where each estimation portion is a function of one of the two or more sets of estimated model parameter tensors, θ. In some examples, each estimation portion is also a function of a structure of the time varying linear system, W_m. Further, each of the one or more estimation laws may be a function of an estimation error, ê, or a cost function, J. In some examples, the fourth operation **1208** may be performed by one or more hardware processors configured by machine-readable instructions including a module that is the same as or similar to the estimation law module **1104**, or a module that is the same as or similar to the control law module/sub-engine **1106**, in accordance with one or more implementations.

A fifth operation **1210** comprises provide one of, or a combination of, the two or more possible control signals, u_{SE}, to a selector module (e.g., selector module **1108**) based at least in part on an estimation/prediction error derived from each of the possible estimated system outputs, y_{est_SE}. In some examples, fifth operation **1210** comprises selecting (1) a best possible control signal, u_{SE}, from a set comprising at least the first possible control signal and the second possible control signal, or (2) a best combination of possible control signals, u_{SE}, blended from two or more of the set. For example, the CSC **1107** may select one of, or a combination of the possible control signals, u_{SE_k}, output from each of the Eigen, Penalty, and Adaptive Inverse Law control law modules **1124**, **1134**, and **1114**, respectively, predicted to minimize error. In some examples, the fifth operation **1210** may be performed by one or more hardware processors configured by machine-readable instructions including a module that is the same as or similar to the CSC **1107** (or CSC **1108**), in accordance with one or more implementations.

Although not illustrated, the TARC sub-engine can operate as a standalone controller. In such an embodiment, the estimation law modules/FELB can be replaced by an empirically derived lookup table for the estimated model parameter tensors, θ. More specifically, a lookup table can be empirically formed as a mapping between (1) y_{meas} and u_{out} from a reference/calibration system and (2) estimated model parameter tensors, θ. During operation of the TARC as a standalone controller, a control, u_{out}, can be provided to the one or more actuators, and measurements, y_{meas}, can be taken from the one or more actuators and/or system. These can then be used to select estimated model parameter tensors, θ, from the lookup table, and then provided to the TARC standalone controller to determine what will be called a control signal, u_{out}. This control signal, u_{out}, can be provided to the one or more actuators. Alternatively, the TARC standalone controller can produce a string of possible control signals, u_{se}, and form a control, u_{out}, as a combination of the string. For instance, a weighted average of the possible control signals, u_{se}, can be used to calculate the control, u_{out}, although other methods of combining the string can also be implemented. In some embodiments, the combination may be based on estimated system outputs, y_{est_se}, for each of the possible control signals, u_{se}, similar to the way in which a topology is selected in the selector and combiner mentioned earlier. These estimated system outputs, y_{est_se}, can be found via an estimation portion of the nonlinear model, for instance, using Model 1:

$$y_{est_se}=W_m\{u_{se},\theta\}$$

Where the estimated model parameter tensor, θ, is found in the lookup table based on the measured system output, y_{meas}, and the control, u_{out}, both from a previous iteration.

The Tensorized Filtered Predictive-Adaptive (TFPA) Sub Engine

As noted above, in some circumstances, the TLMC (Lyapunov) control law module's output (e.g., estimated system output, y_{est_SE}; measured system output, y_{meas}) may not converge to a steady-state behavior, for instance, due to having predicted unstable zero dynamics. In such cases, the TLMC control law module's output may comprise disturbances, dither, and/or noise. In some examples, extra filtering may help mitigate the effects of some of these issues. In most cases, this extra filtering is simply a "band-aid solution/fix", meaning it does not address the underlying cause of the predicted unstable zero dynamics. In other cases, however, the system being controlled may go unstable. To alleviate the risk of the entire non-linear system going unstable, aspects of the present disclosure are directed to a control law sub-engine (herein referred to as the TFPA sub-engine) that is specifically designed to handle unstable zero dynamics predictions. In some examples, the TFPA sub-engine is configured to produce a possible control signal, u_{SE}, that can be provided as another possible control signal input to the selector module. In other words, the selector module of the adaptive engine is configured to receive the possible control signal, u_{SE}, from the TFPA sub-engine, in addition to or in lieu of the possible control signal(s) received from the TLMC sub-engine, the TARC sub-engine, and/or any of the other sub-engines described herein. In some instances, the selector module may utilize the possible control signal provided by the TFPA sub-engine in the case of stable zero dynamics situations, unstable zero dynamics predictions, or a combination thereof. In yet other cases, the TFPA sub-engine can operate as a standalone controller and receive estimated model parameter tensors, θ, from an empirically derived lookup table.

Turning now to FIG. **14**, which depicts a block diagram of an adaptive engine **1400**-*a* with details of the control law module (or control law sub-engine) shown. As seen, the adaptive engine **1400**-*a* includes at least one estimation law module **1404** (also referred to as FELB **1404**), a control law module or sub engine **1405**, and a selector module **1488**. As with other adaptive engines discussed herein, the FELB **1404** is configured to receive one or more of an input regressor, Ø, a structure of the non-linear model, W_m, of the one or more actuators and/or the power system controlled by the one or more actuators, a reference signal, r, a system output measurement, y_{meas}, an estimated system output, y_{est}, a control output, u_{out_k-1}, from a previous iteration, and a possible control signal, u_{SE}, produced by the control law module or sub engine **1405**. In some embodiments, the estimation law module or FELB **1404** estimates a model parameter tensor, θ, for the non-linear model. Further, the control law module/sub-engine **1405** utilizes the estimated model parameter tensor, θ, received from the FELB **1404** to produce a possible control signal, u_{SE}, and optionally, an estimated system output, y_{est_SE} (e.g., via an estimation portion of the nonlinear model and in particular via a time-varying linear system, W_m, whose structure is updated every frame). In other cases, the control law module **1405** provides the possible control signal, u_{SE}, to the FELB **1404**, where it is utilized to produce the estimated system output.

In the example shown, the control law module **1405** comprises one or more filters **1410**, one or more delay filter **1411**, a sliding mode predictor **1409** comprising a non-linear (NL) model **1408** of the system and/or actuators, a NL compensation module **1413**, and an optional tensor synchronization and coherency module **1427** (also referred to as tensor sync module **1427**, for the sake of brevity). In some examples, the control law module **1406** of the control law sub engine **1405** is configured to receive the estimated model parameter tensors, θ, from the FELB **1404**, along with one or more of the control output from the previous iteration, u_{out_k-1}, measured system output, y_{meas}, and the filtered measured system output, y_d. The control law module **1406** uses the estimated model parameter tensors, θ, and one or more of the inputs (e.g., y_d, y_{meas}, u_{out_k-1}) to produce a desired (but unfiltered) possible control signal, which is input to the delay filters **1411**. The delay filters **1411** adjust for delays and outputs a desired and filtered possible control signal, $u_{desired}$. The NL compensation module **1413**, which may be implemented using one or more NL transfer functions, is configured to compensate for non-linearities (if any) in the control signal, $u_{desired}$, and produce the possible control signal, u_{SE}, that is finally sent to the selector module **1488**. In some cases, the sliding mode predictor **1409** is configured to produce an estimated system output, y_{est_SE}, where the estimated system output is based at least in part on the possible control signal and the estimated parameter tensors, θ. For example, the sliding mode predictor **1409** applies the possible control signal to the NL model **1408** of the system, where the NL model **1408** comprises the estimated model parameter tensor, θ, to produce the estimated system output, y_{est_SE} (e.g., via an estimation portion of the nonlinear model and in particular via a time-varying linear system, W_m, whose structure is updated every frame). In some examples, the sliding mode predictor **1409** also receives the control output, u_{out}, from the previous iteration, where the control output is received from one of the selector module **1488** or the tensor sync module **1427**. In this example, the selector module **1488** passes the control output, u_{out}, to the tensor sync module **1427**, where it is processed before forwarding to the NL model **1408**. In some cases, processing the control output comprises applying an exogenous signal (e.g., received from the FELB **1404**, the selector module **1488**, or any other applicable entity) to the control output, which helps smooth transitions between possible control signals (e.g., u_{SE}, u_{SE1}, u_{SE2}, u_{SEn}, etc.) input to the selector module **1488**. In this case, however, the exogenous signal is applied to the control output, u_{out}, from the previous iteration. In such cases, the tensor sync module **1427** uses the exogenous signal to perform an operation (e.g., adding an offset) to reduce/minimize discontinuities due to a mismatch (if any) between the previously used control law and the current control law. Broadly, the tensor sync module **1427** helps ensure smooth, coherent, and/or synchronized transitions when the adaptive engine is switching between different control law sub-engines (e.g., TARC sub-engine, TLMC sub-engine, and any of the other sub-engines described herein) and/or control law modules within the same sub-engine (e.g., adaptive inverse laws module, penalty laws module, and Eigen laws module of the TARC sub-engine).

In some embodiments, the NL model **1408** is configured to produce a possible estimated system output, y_{est_SE}, for the control law sub engine **1405**, based upon applying the possible control signal, u_{SE}, to the non-linear model. The NL model **1408** may also produce a total estimated system output, y_{est_out}, based upon applying the iteration of the control output, u_{out}, to the non-linear model. In some circumstances, the nonlinear model or NL model **1408** may also pass an estimated system output, y_{est_ideal}, to the NL compensation module **1413** where it is transformed to

produce the possible estimated system output, y_{est_SE}. In some cases, y_{est_ideal}, may be produced using the possible control signal, u_{SE}. In some embodiments, the total estimated system output, y_{est_out}, is sent to a summer, where it is subtracted from the filtered system output measurement, y_d, to determine an estimation error ($\hat{e}$). The estimation error, $\hat{e}$, is passed to the estimation law module/FELB **1404**, where it is used (i.e., in addition to the input regressor, Ø) to generate the estimated model parameter tensor, θ.

In some examples, the control law module **1406** of the control law sub-engine also receives the control output, where the control output is received from one of the tensor sync module **1427** (e.g., after passing it through the 1-sample delay) or the selector module **1488**. In some cases, this control output is the control output from the previous iteration (e.g., u_{out_k-1}).

In some examples, the sliding mode predictor **1409** is configured to read (1) an initial linear time varying (LTV) signal (e.g., W_m) received from a setpoint streaming module (not shown), where the setpoint streaming module provides the setpoint stream (also referred to as a series of setpoints, or a reference signal, r), and (2) an internally generated LTV signal derived from the desired arbitrary waveform specified by the user. In some embodiments, the initial LTV signal corresponding to the setpoint stream is used as an initial model for adaptation at a start of each frame, each frame comprising a plurality of samples. As described above, $W_m(t)$ at time instant 'k' is a linear model and indirectly specified by the user/designer. The frame synthesizer (not shown) helps approximate the non-linear behavior of W_m. In some cases, the structure of $W_m(t)$ is provided once for every frame, but the $W_m(t)$ is updated every iteration or control sample and then used to form the closest linear model of the setpoint stream. In some embodiments, the sliding mode predictor **1409** of the control law sub-engine **1405** is further configured to receive one or more LTV signals adapted from the initial LTV signal, where each of the one or more LTV signals are adapted from the initial LTV signal and correspond to one sample of the plurality of samples of a corresponding frame. In this way, the sliding mode predictor **1409** uses the LTV signal(s) to predict how the system/plant may react in a non-linear fashion. Furthermore, due to its sliding mode nature, the prediction output rapidly and robustly converges, which is especially important while dealing with highly non-linear and chaotic systems. As such, the disclosed TFPA sub-engine optimizes control of non-linear systems, such as those having unstable zero dynamics.

In some cases, the sliding mode predictor **1409** (or the control law module **1406**) generates the control law (e.g., similar or substantially similar to Control Law 3 described in the preceding sections) as follows:

$$u_{pred}=\theta_{u_d}u_{out}+\theta_{y_d}y_d+\theta_{y_{pred}}y_{pred}+\theta_r r \quad \text{(Equation 27)}$$

In equation (27), the estimated model parameter tensor, θ, can be written as:

$$\theta=[\theta_{u_d},\theta_{y_d},\theta_{y_{meas}},\theta_r] \quad \text{(Equation 28)}$$

Further, the sliding mode predictor's equations (e.g., in the continuous time domain) may be given as:

$$\dot{x}_{est} = A(t)x_{est} + B(t)u_{pred} - K(y_{est} - y_{meas}) + pinv(L)CFv \quad \text{(Equation 29)}$$

$$\text{where, } v = \begin{cases} \{-\alpha(t, y_{meas}, u_{out})FCpinv\,||FC|| & |FC \neq 0 \\ 0 & |\text{else} \end{cases} \quad \text{(Equation 30)}$$

In equations (29) and (30) above, v is an exogenous signal. Additionally, the A(t) and B(t) matrices are generated in the adaptive engine **1400**-*a* based on the desired arbitrary waveform (e.g., reference signal, r) specified by the user and received from a setpoint streaming module. In some aspects, the A(t) and B(t) matrices represent the dynamics of W_m. Further, K is the gain tensor. In some cases, the gain tensor, K, may be updated whenever the A(t), B(t) and/or C(t) matrices are updated. Further, the output matrix/tensor, C(t), may be used to calculate the estimated system output (e.g., y_{est_SE}, y_{est_out}) as shown in equation (31) below:

$$y_{est}=C(t)x_{est} \quad \text{(Equation 31)}$$

In some cases, the matrix C(t) may be similar or substantially similar to the one described above in relation to the TARC Sub Engine. For instance, C(t) may be an n-by-n identity matrix, in some examples. Furthermore, L in equation (29) may be a tensor of matrices that can be used to solve a Lyapunov equation for every A(t), C(t), K(t), and an optional strictly positive real (SPR) matrix or tensor, Q(t). In one non-limiting example, Q(t) may also be an identity matrix (or identity tensor). In other cases, Q(t), which corresponds to a penalty or gain tensor may not be an identity tensor and may be specified by the user/designer. Specifically, the tensor, L, may be used to solve a Lyapunov equation of the form:

$$[A(t)-K(t)C(t)]L+L[A(t)-K(t)C(t)]^T+Q=0 \quad \text{(Equation 32)}$$

Using equation (32), F(t) (in the sliding mode predictor's equations 29 and 30) can be computed as follows:

$$F(t)=C(t)L(t)B(t)\text{pinv}(CC^T) \quad \text{(Equation 33)}$$

As noted above, the exogenous signal, v, can be written using Equation (30). In equation (30), α, is a tuning coefficient and is a function of time, t, the system output measurement, y_{meas}, and the control output, u_{out}. In some cases, the tuning coefficient, α, follows an optimization law, where the optimization law may be designed offline (e.g., using Pontryagin's minimum principle) or computed online (e.g., when the non-linear system is live/deployed/active). In some other cases, the tuning coefficient, α, is a positive constant.

In some embodiments, one or more of the setpoint streaming module, a precomputing engine (e.g., used to determine the A(t), B(t), C(t), K(t), L(t), F(t) matrices/tensors), and a frame synthesizer may be implemented on a Central Processing Unit (CPU). This allows the CPU, rather than the Field Programmable Gate Array (FPGA), to handle the heavy/intensive computations in an offline (or pseudo-offline) manner. On the other hand, the FPGA is better suited for performing simpler calculations in a very rapid manner (e.g., real-time or substantially real-time). The precomputing engine on the CPU sends the A(t), B(t), C(t), K(t), L(t), and/or F(t) matrices/tensors to the adaptive engine running on the FPGA. In some cases, the CPU also stores these matrices/tensors at a frame processor of the FPGA, for instance, in a TSP RAM of the frame processor. This allows the adaptive engine and/or the control law module/sub-engine to access the precomputed matrices in real time or substantially real time.

In some cases, a setpoint streaming engine/module of the CPU receives the reference signal, r, which may be an arbitrary waveform desired by the user, and creates a plurality of internal values that are based on the reference signal. The precomputing engine receives these internally generated values from the setpoint streaming engine/module and maps them to the matrices/tensors A(t), B(t), C(t), etc.

Thus, some non-limiting examples of the precomputed matrices/tensors (also referred to as frame mapped tensors) include: {A(t), B(t), C(t), K(t), L(t), pinv(L(t)), F(t), pinv(L(t)C(t)), F(t), v}

In an alternate representation (i.e., alternate to equation 28), the estimated model parameter tensor, θ, may be given as follows:

$$\theta=[\theta_{u_{out}},\theta_{y_d},\theta_{y_{est}},\theta_r] \quad \text{(Equation 34)}$$

From equation (34), it can be seen that the estimated model parameter tensor, θ, is a function of the estimation error, ê, since the estimation error, ê, is determined from a difference between the estimated/predicted system output, y_{est}, and the measured system output (after filtering), y_d. In some embodiments, the estimated parameter tensor, θ, computed by the estimation law module may be based on the derivative of the estimated model parameter tensor, $\dot{\theta}$, as described above and elsewhere in the disclosure.

The control law module/sub-engine **1405** then produces the possible control signal, u_{SE}, where u_{SE} is a function of the estimated model parameter tensor θ and the input regressor. Specifically, the possible control signal, u_{SE}, is generated by multiplying different sub-components of the estimated model parameter tensor with corresponding sub-components of the input regressor and then combining them (e.g., adding them) to produce the possible control signal, as follows:

$$u_{se}=\theta_{u_{out}}u_{out}+\theta_{y_d}y_d+\theta_{y_{pred}}y_{pred}+\theta_r r \quad \text{(Control Law 3)}$$

In some examples, this control signal, u_{SE}, is passed through the delay filters **1411**, which help reduce or minimize noise induced during adaptation. In one non-limiting example, the delay filters **1411** comprise minimum lag/delay smoothing filters, but other types of delay filters known in the art are contemplated in different embodiments. In some cases, the smoothing/delay filter **1411** may be Gaussian in nature and implemented as a combination of two bi-quads given by:

$$H(z)=\frac{Y(z)}{X(z)}=\frac{b_0}{[1+a_1z^{-1}+a_2z^{-2}+a_3z^{-3}+a_4z^{-4}} \quad \text{(Equation 35)}$$

In some examples, equation (35) may be a function of a delay, r, which may be based on the desired response speed (e.g., rise time, T_r) specified by the user. For example, r may be written in generalized form as shown in equation (36) below:

$$\tau=\frac{\alpha}{\beta+\gamma} \quad \text{(Equation 36)}$$

In equation (36), α and β may be integers or decimal values, and γ may be a function of T_r, where T_r is the rise time (e.g., on the order of 1 microsecond). In some cases, γ may optionally be a function of the control rate, $T_{control}$. In one non-limiting example, the control rate, $T_{control}$, may be on the order of around 250 ns). While not necessary, in most cases, $T_r>T_{control}$.

The filter then passes the filtered possible control signal, u_{SE}, to the NL compensation module **1413**, which is implemented by way of one or more NL transfer functions. The NL compensation module **1413** compensates for any non-linearities in the control signal received from the filters **1411** before passing the possible control signal, u_{SE}, to the selector module **1488**. The selector module **1488** also receives one or more other possible control signals from one or more other control law modules/sub-engines, sifts through their predictions/estimations, and selects the possible control signal (e.g., one of u_{SE}, u_{SE1}, u_{SE2}, u_{SEn}) predicted to have the lowest estimation error as the control output, u_{out}. This control output, u_{out}, is then applied to the one or more actuators and/or the non-linear system controlled by the one or more actuators to effectuate a change in the measured system output so as to reduce the error between the reference signal, r, and the measured system output, y_{meas}.

FIG. **15** illustrates an example of a method **1500** for controlling a non-linear system using the TFPA sub engine, previously described in relation to FIG. **14**, in accordance with one or more implementations. The operations of method **1500** presented below are intended to be illustrative. In some implementations, method **1500** may be accomplished with one or more additional operations not described, and/or without one or more of the operations discussed. Additionally, the order in which the operations of method **1500** are illustrated in FIG. **15** and described below is not intended to be limiting.

In some implementations, method **1500** may be implemented in one or more processing devices (e.g., a central processing unit or CPU, a digital processor, an analog processor, a digital circuit designed to process information, an analog circuit designed to process information, a state machine, a field programmable gate array or FPGA, and/or other mechanisms for electronically processing information). The one or more processing devices may include one or more devices executing some or all of the operations of method **1500** in response to instructions stored electronically on an electronic storage medium. The one or more processing devices may include one or more devices configured through hardware, firmware, and/or software to be specifically designed for execution of one or more of the operations of method **1500**.

A first operation **1502** comprises receive an input regressor and a reference signal, r. In some examples, the input regressor and the reference signal, r, may be received at the estimation law module (also referred to as the estimation law module or the FELB, in some examples) of the adaptive engine. In one non-limiting example, the input regressor and the reference signal are received at the estimation law module/FELB **1404**. The input regressor may comprise a system output measurement, y_{meas}, and a control output, u_{out_k-1}, from a previous iteration. The input regressor may include additional components besides the ones listed above and the examples listed herein are not intended to be limiting. In some examples, the first operation **1502** may be performed by one or more hardware processors configured by machine-readable instructions including a module that is the same as or similar to the estimation law module **1404**, in accordance with one or more implementations.

A second operation **1504** comprises apply one or more estimation laws to the input regressor to produce one or more estimated parameter tensors, θ, for a nonlinear (NL) model. In some examples, the nonlinear model is a function of the one or more estimated model parameter tensors, θ. Further, each of the one or more estimated model parameter tensors, θ, comprises estimated parameters of the nonlinear model. In some examples, the second operation **1504** may be performed by one or more hardware processors configured by machine-readable instructions including a module that is the same as or similar to the estimation law module **1404**, in accordance with one or more implementations.

A third operation **1506** comprises receive a system output measurement, y_{meas}, a control output from a previous iteration, u_{out_k-1}, and the one or more estimated parameter tensors θ. In some examples, the third operation **1506** may be performed by one or more hardware processors configured by machine-readable instructions including a module that is the same as or similar to the TFPA control law module/sub-engine **1405**, in accordance with one or more implementations.

A fourth operation **1508** comprises receiving (1) an initial LTV signal (e.g., W_m) corresponding to the reference signal, r, and (2) a possible control signal, u_{SE}, or an internal possible control signal, $u_{SE_desired}$. In some examples, the fourth operation **1506** may be performed by one or more hardware processors configured by machine-readable instructions including a module that is the same as or similar to the sliding mode predictor **1409**, in accordance with one or more implementations. As seen in FIG. **14**, in some examples, the sliding mode predictor **1409** comprises the nonlinear model **1408**.

In some examples, the possible control signal, u_{SE}, or the internal possible control signal, $u_{desired}$, are generating using a control portion of the nonlinear model, where the control portion is a function of the one or more estimated parameter tensors, θ, of the nonlinear model. In some cases, the control law module **1406** of the TFPA sub engine **1405** generates the possible control signal, U_{SE}, and/or the internal possible control signal, $u_{desired}$.

A fifth operation **1510** comprises producing (or generating) an internal possible estimated system output, y_{est_ideal}, and a possible estimated system output, y_{est_SE}. Generating the internal possible estimated system output, y_{est_ideal}, is based upon applying the nonlinear model (e.g., the estimation portion of the nonlinear model) to the control output from the previous iteration, u_{out_k-1}, and the system output measurement, y_{meas}. Further, generating the possible estimated system output, y_{est_SE}, is based upon applying the estimation portion of the nonlinear model to (1) the internal possible control signal, $u_{desired}$, (2) the possible control signal for the current iteration, u_{SE_k}, or (3) to the previous iteration of the possible control signal, u_{SE_k-1}. In some examples, each estimation portion is also a function of a structure of the time varying linear system, W_m. Further, each of the one or more estimation laws may be a function of an estimation error, ê, or a cost function, J.

In some examples, the fifth operation **1510** may be performed by one or more hardware processors configured by machine-readable instructions including a module that is the same as or similar to the sliding mode predictor **1409**, or a module that is the same or similar to the estimation law module **1404** (e.g., if the estimation portion of the nonlinear model is in the estimation law module **1404**) in accordance with one or more implementations. As seen in FIG. **14**, in some examples, the sliding mode predictor **1409** comprises the nonlinear model **1408**.

A sixth operation **1512** comprises receiving the possible control signal, u_{SE}, and the possible estimated system output, y_{est_SE}. In some examples, the sixth operation **1512** may be performed by one or more hardware processors configured by machine-readable instructions including a module that is the same as or similar to the selector module **1488**, and/or the CSC **516**, in accordance with one or more implementations. Optionally, the sixth operation **1512** may also be performed by one or more hardware processors configured by machine-readable instructions including a module that is the same as or similar to the estimation law module **1404**.

Although not illustrated, the TFPA sub-engine can operate as a standalone controller. In such an embodiment, the estimation law modules/FELB can be replaced by an empirically derived lookup table for the estimated model parameter tensors, θ. More specifically, a lookup table can be empirically formed as a mapping between (1) y_{meas} and u_{out} from a reference/calibration system and (2) estimated model parameter tensors, θ. During operation of the TFPA standalone controller as a standalone controller, a control, u_{out}, can be provided to the one or more actuators, and measurements, y_{meas}, can be taken from the one or more actuators and/or system. These can then be used to select estimated model parameter tensors, θ, from the lookup table, and then provided to the TFPA standalone controller to determine what will be called a control signal, u_{out}. This control signal, u_{out}, can be provided to the one or more actuators. Alternatively, the TFPA standalone controller can produce a string of possible control signals, u_{se}, and form a control, u_{out}, as a combination of the string. For instance, a weighted average of the possible control signals, u_{se}, can be used to calculate the control, u_{out}, although other methods of combining the string can also be implemented. In some embodiments, the combination may be based on estimated system outputs, y_{est_se}, for each of the possible control signals, u_{se}, similar to the way in which a topology is selected in the selector and combiner mentioned earlier. These estimated system outputs, y_{est_se}, can be found via an estimation portion of the nonlinear model, for instance, using Model 1:

$$y_{est_se}=W_m\{u_{se},\theta\}$$

Where the estimated model parameter tensor, θ, is found in the lookup table based on the measured system output, y_{meas}, and the control, u_{out}, both from a previous iteration.

In an embodiment, the slide mode predictor **1409** can produce the estimated system output, y_{est_SE}. More specifically, the system model or nonlinear model can be provided with a control portion, for generating possible control signals, u_{se}, and an estimation portion for estimating estimated system outputs, y_{est_se}. A time-varying linear system, W_m, can make up a foundation of either the estimation portion or the control portion, and can be bifurcated or split into a sum of a linear and a nonlinear portion and the control timeline can be split into frames of differing lengths (or number of control samples or adaptation iterations) with some processing of the nonlinear model occurring on a CPU or other slower resource and real-time aspects of the nonlinear model occurring on an FPGA or other faster resource. A current frame can be supplied with a structure of the time-varying linear system, W_m. As noted relative to FIG. **43**, the nonlinear portion of the time-varying linear system, W_m, is effectively an unknown error and thus not used or considered in the processing (other than in attempt to minimize this error). The structure of the time-varying linear system, W_m, can be pre-processed, for instance on a CPU, though it can also be accessed from an empirically-derived lookup table. The structure of the time-varying linear system, W_m, remains constant through the current frame. Yet, since the time-varying linear system, W_m, is also dependent on the estimated model parameter tensor, θ, the estimation portion of the nonlinear model adapts within a frame as θ changes in the FELB **1404** (as the adaptive engine modifies θ to minimize an error relative to measured system behavior). This can involve calculating an estimation error, ê, or cost function, J, based on two or more of (1) measured system outputs, y_{meas}, from a previous iteration, (2) estimated system outputs, y_{est_se}, from a previous iteration, and (3) reference signal, r. Adaption can then involve applying an

estimation law to at least the reference signal, r, and the estimation error, ê, or cost function, J, to estimate an estimated model parameter tensor, θ. The estimated model parameter tensors, θ, can then be tested in the TFPA sub-engine **1405**, and adaptation can continue through the entirety of the frame, and in turn, W_m, is adapted throughout the frame (or until convergence is achieved). Once a frame is complete the method selects a next frame and a new structure of the time-varying linear system, W_m, is provided into the model and adaptation of the estimated model parameter tensor, θ, is carried out through this next frame until convergence. As noted earlier, the structure of the time-varying linear system, W_m, can include the structure of the A, B, and C matrices that are part of the system of equations making up W_m.

The Adaptive Proportional Integral Derivative (PID) Sub Engine

As noted above, in some control law modules (e.g., control law modules **506**), more than one control law can be implemented. Some non-limiting examples of which include the TARC control law module/sub-engine and the Adaptive PID control law module. Various aspects of the TARC control law module/sub-engine have been discussed above, including at least in relation to FIGS. **11-13**. The following sections discuss the Adaptive PID control law module/sub-engine, its structure and sub-components, algorithm/methods of operation, and control law(s) implemented in the Adaptive PID sub-engine.

PID controllers can be implemented using various different tuning rules (also known as PID tuning rules) and operator tuning methods. These tuning methods and rules are fairly accurate and powerful when the underlying model characterization they are based on is accurate for the duration of operation of a specific PID control law. Typically, PID control laws are characterized for relatively simple linear systems with delays, rather than the highly non-linear/chaotic systems (e.g., plasma processing chambers) generally discussed in this disclosure. Aspects of the disclosure are directed to an Adaptive PID control law module/sub-engine that is designed to consolidate the use of PID control laws in non-linear systems. This approach, described in further detail below, assumes that at any single time instant (i.e., snapshot of time), the non-linear system being controlled can be modeled by a system model (e.g., a estimation portion, a non-linear model) for which PID tuning control laws are available. In some cases, this assumption may be valid for a sufficient duration of time such that the PID tuning control law is applicable for the whole duration (e.g., for the whole frame) of that system model. Additionally, the adaptive PID control law sub-engine and/or the estimation law module associated with the control law sub-engine is configured to incorporate/model the system's non-linearities in the parametric/linear model, W_m, of the system. In some examples, the dynamic structure of the parametric/linear model may be fixed for the duration of the PID tuning control law. Further, the system's non-linearities are included in the linear model (W_m) through the time varying/changing nature of the plurality of coefficients forming the parametric/linear model. In some embodiments, these time-varying coefficients (e.g., a_{est}, b_{est}) and/or time-varying parameters (e.g., θ) may be adapted, which serves to adaptively change the control output (e.g., possible control signal) produced by the adaptive PID control law module. Such a design helps ensure that the controller reacts to the non-linearities in accordance with the arbitrary waveform (e.g., reference waveform) specified by the user.

FIG. **16** illustrates a block diagram **1601** of an adaptive PID control system, in accordance with one or more implementations. As seen, the adaptive PID control system in FIG. **16** comprises an adaptive PID controller **1606**, a feed forward module **1619**, and a plurality of summers. The adaptive PID control system receives as input the reference waveform (or reference signal), r, and the measured system output, y_{meas}. The adaptive PID control system includes a feedback path (i.e., through which the measured system output is received) and a feedforward path, where the feedforward path includes the feed forward module **1619**. At the first summer (on the left of the page), a measurement error, ê, is calculated based on a difference between the reference signal, r, and the measured system output, y_{meas}. For example, the measurement error (or simply error) is calculated as: $|r-y_{meas}|$. This measurement error, ê, is passed to the PID controller **1606** for further processing. The PID controller **1606** is configured to calculate a first possible control signal (also referred to as a possible PID control signal), u_{PID}, which is then passed to the second summer (on the right of the page). In some cases, the reference waveform/signal is also passed to the feed forward module **1619**, which processes the reference waveform to produce a second possible control signal (or possible feed forward control signal), u_{FF}. This possible feed forward control signal, u_{FF}, is also passed to the second summer, which outputs a possible control signal, u_{SE}, based on computing a difference between u_{PID} and u_{FF}. In other words, the possible control signal, u_{SE}, output by the adaptive PID control law module/sub-engine may be represented using Control Law 4 as follows:

$$u_{se}=u_{PID_k}-u_{FF_k}=[\theta,\theta_7][\omega,\omega_7] \quad \text{(Control Law 4)}$$

FIG. **17**A illustrates an example of a method **1701**-*a* for controlling a non-linear system using an adaptive PID control module. The operations of method **1701**-*a* presented below are intended to be illustrative. In some implementations, method **1701**-*a* may be accomplished with one or more additional operations not described, and/or without one or more of the operations discussed. Additionally, the order in which the operations of method **1701**-*a* are illustrated in FIG. **17**A and described below is not intended to be limiting.

In some implementations, method **1701**-*a* may be implemented in one or more processing devices (e.g., a central processing unit or CPU, a digital processor, an analog processor, a digital circuit designed to process information, an analog circuit designed to process information, a state machine, a field programmable gate array or FPGA, and/or other mechanisms for electronically processing information). The one or more processing devices may include one or more devices executing some or all of the operations of method **1701**-*a* in response to instructions stored electronically on an electronic storage medium. The one or more processing devices may include one or more devices configured through hardware, firmware, and/or software to be specifically designed for execution of one or more of the operations of method **1701**-*a*.

In some embodiments, the PID tuning control law (or simply, PID control law) may be represented as follows:

$$u_k=\theta_1 r_k+\theta_2\Sigma_{j=1}^{k} r_j+\theta_3 H\{r_k\}+\theta_4 y_k+\theta_5\Sigma_{j=1}^{k} y_j+\theta_6 H\{y_k\} \quad \text{(Equation 37)}$$

In Equation (37), r_k is the reference signal/waveform at time 'k', y_{meas} is the measured system output that is feedback to the input at time 'k', and u_{SE} is the possible control signal for the current iteration. This possible control signal, u_{SE}, along with one or more other possible control signals

from one or more other control law sub-engines/modules is passed to the selector module, which then selects one of (or a combination of) the possible control signals as the control output for the current iteration 'k'.

In some examples, equation (37) may be represented in estimator form as:

$$u_k=\theta\omega, \text{ where } \omega=[r_k,\Sigma_{j=1}^{k}r_j,H\{r_k\},y_k,\Sigma_{j=1}^{k}y_j,H\{y_k\}]$$

As described above, the tensor ω is also referred to as the input regressor. It should be noted that, the input regressor tensor, ω, discussed in relation to the adaptive PID sub-engine may be similar or substantially similar to the input regressor tensor, ϕ, discussed in relation to some of the other control law modules/sub-engines.

The adaptive PID controller (e.g., shown as PID controller **1606** in FIG. **16**) implements one or more of the process/non-linear/parametric/linear model of the one or more actuators and/or the non-linear system controlled by the one or more actuators. In some examples, the model parameter tensor, θ, estimated by the estimation module (e.g., estimation module or FELB **1804** in FIG. **18**) may be mapped to the process model and/or the tuning laws of the adaptive PID controller. One non-limiting example of the PID control system structure includes the two-degrees of freedom filtered derivative PID controller described above in relation to FIG. **15**. Other PID control system architectures known or contemplated in the art may be utilized in different embodiments, and the example discussed herein is not intended to be limiting.

In some cases, the possible feed forward control signal, u_{FF}, produced by the feed forward module **1519** may be written using equation (38) shown below:

$$u_{FF_k}=\alpha K_C r_k+\left[\alpha K_C\frac{T_d}{N}+\beta K_C T_d\right]H\{r_k\}-\frac{T_d}{N}H\{u_{FF_{k-1}}\} \quad \text{(Equation 38)}$$

Additionally, the possible PID control signal, u_{PID}, produced by the PID controller **1506** may be calculated using equation (39):

$$u_{PID_k}=\left[K_C+\frac{K_C}{\tau_i}\left(\frac{T_d}{N}\right)\right]e_k+\frac{K_C}{T_i}\sum_{j=1}^{k}e_j+K_C\left(\frac{T_d}{N}\right)(N+1)H\{e_k\}-\frac{T_d}{N}H\{u_{PID_{k-1}}\} \quad \text{(Equation 39)}$$

In some cases, e_k may be represented as the difference between the reference signal/waveform and the measured system output. That is, $e_k=r_k-y_{meas_k}$. Further, the controller parameters (e.g., α, K_c, T_d, N, β, T_i, etc.) may be determined based on PID tuning control law(s). In some embodiments, these PID tuning control law(s) may be synthesized from experiments and stored in memory as a look-up table, or another applicable data structure. In some cases, the controller parameters may be defined using Equations 40-45 shown below:

$$\alpha=f_1(a_{est},b_{est},\tau_m), \quad \text{(Equation 40)}$$

$$K_C=f_2(a_{est},b_{est},\tau_m), \quad \text{(Equation 41)}$$

$$T_d=f_3(a_{est},b_{est},\tau_m), \quad \text{(Equation 42)}$$

$$N=f_4(a_{est},b_{est},\tau_m), \quad \text{(Equation 43)}$$

$$\beta=f_5(a_{est},b_{est},\tau_m), \quad \text{(Equation 44)}$$

$$T_i=f_6(a_{est},b_{est},\tau_m) \quad \text{(Equation 45)}$$

$$\text{Further, } [PID+FF]_{6,n}=f(a_{est},b_{est},\tau_m) \quad \text{(Equation 46)}$$

In Equations 40-45, a_{est} and b_{est} are the estimated coefficients of the non-linear/parametric/process model and τ_m is the process delay. In some examples, the process delay, τ_m, may be detected/estimated as described in co-owned U.S. application Ser. No. 17/685,931, the entire contents of which are incorporated herein by reference in their entirety.

In some embodiments, the plurality of sub-components, θ_1, θ_2, θ_3 . . . θ_7, of the estimated model parameter tensor, [θ], may be written as follows:

$$\theta_1=\left[K_C+\frac{K_C}{T_i}\frac{T_d}{N}\right]-\alpha K_C \quad \text{(Equation 47)}$$

$$\theta_2=\left[\frac{K_C}{T_i}\right] \quad \text{(Equation 48)}$$

$$\theta_3=\left[K_C\frac{T_d}{N}(N+1)\right]-\left[\alpha K_C\frac{T_d}{N}+\beta K_C T_d\right] \quad \text{(Equation 49)}$$

$$\theta_4=-\left[K_C+\frac{K_C}{T_i}\frac{T_d}{N}\right]=\alpha K_C-\theta_1 \quad \text{(Equation 50)}$$

$$\theta_5=-\left[\frac{K_C}{T_i}\right]=-\theta_2 \quad \text{(Equation 51)}$$

$$\theta_6=-\left[K_C\frac{T_d}{N}(N+1)\right] \quad \text{(Equation 52)}$$

$$\theta_7=-\frac{T_d}{N} \quad \text{(Equation 53)}$$

Further, the estimated model parameter tensor [θ] may be represented by the concatenation of its sub-components. That is, the estimated model parameter tensor [θ] produced by the estimation law module **1804** may be represented as [θ_1 . . . θ_7]. In some examples, the possible control signal, u_{SE}, produced by the adaptive PID control law module **1805** may be calculated from the possible PID control signal, u_{PID}, and the possible feed forward control signal, u_{FF}. Similar in line with some of the other sub-engines described herein, the possible control signal, u_{SE}, may be a function of the estimated model parameter tensor [θ] and the input regressor, ω. The input regressor, ω, may also comprise a plurality of subcomponents (e.g., 7 subcomponents, ω_1 . . . ω_7). Further, each sub-component (e.g., θ_1) of the estimated model parameter tensor may be multiplied by a corresponding sub-component (e.g., ω_1) of the input regressor to determine a subcomponent of the possible control signal. In other words, the possible control signal, u_{SE}, may be calculated as: $u_{SE}=[\theta_1 \ldots \theta_7][\omega_1 \ldots \omega_7]$, where $\omega_7=H\{u_{out_k-1}\}$. That is, ω_7 is determined from filtering the control output, u_{out_k-1}, from the previous iteration.

In some examples, the adaptive PID control law module may be implemented using two different mechanisms/schemes. In some examples, the adaptive PID control law module **1805** may comprise a first control law module (e.g., a Control Then Output Estimation or CTOE module) and a second control law module (e.g., an Output Estimation Then Control or OETC module). In some cases, the PID control law module **1805** is made adaptive (e.g., as a result of adapting/changing the estimated model parameter tensor, θ, at each iteration) and integrated into the adaptive engine (e.g., adaptive engine **500** in FIGS. **5A-5C**, adaptive engine **800** in FIGS. **8A-B**). The possible control signals produced by each of the CTOE and OETC control law modules **1600** and **1700**, respectively, may be passed to a control selector and combiner (CSC) **1826** of the sub-engine **1805**, which

selects one of (or a combination of) the control signals as the possible control signal, u_{SE}, for the adaptive PID sub-engine **1805**. In some aspects, the CSC **1826** may be similar or substantially similar to the CSC **1107** of the TARC sub-engine, which is configured to select one of (or a combination of) the possible control signals from the adaptive inverse control laws module **1114**, the eigen control laws module **1124**, and the penalty control laws module **1134**.

Said another way, the adaptive engine (e.g., a selector module) may select one or combination of possible control signals, u_{se}, that lead to a control, u_{out}, that causes a measured system output, y_{meas}, that is close to the total estimated system output, y_{est_out}, or the reference signal, r. This may involve an error or cost function that compares the measured system output, y_{meas}, for a previous iteration, or the reference signal, r, to the total estimated system outputs, y_{est_out}, calculated for various possible topologies. More specifically, the TSD **1818** may analyze a cost function, such as Equation 4, to select an optimal possible control signal, u_{se}, or combination of possible control signals, u_{se} (in the form of a topology for combining the possible control signals)

Returning to FIG. **17**A, which depicts an example of a method flow **1701**-*a* implemented by way of a CTOE control law module **1600**, in accordance with one or more implementations. In some embodiments, the method flow **1701**-*a* (also referred to as the CTOE method **1701**-*a*) is based at least in part on directly estimating the model parameter tensor, θ. Specifically, the CTOE method depicted in FIG. **17**A comprises determining the non-linear/parametric/process model based on PID tuning rules and direct estimation of the subcomponents (e.g., $[\theta_1 \ldots \theta_7]$) of the model parameter tensor, θ.

As seen, a first operation (**1702**) comprises receiving at least one system output measurement, y_{meas}. The system output measurement, y_{meas}, may be received at the estimation law module/FELB **1804**. A second operation (**1704**) comprises accessing one or more previously estimated system output, y_{est_SE}. In some cases, the estimation law module or another component of the adaptive engine accesses 'k−1' previous estimates of the system output. A third operation (**1706**) comprises computing one or more estimation errors or a cost function, where the estimation errors/cost functions are based at least in part on comparing the system output measurement, y_{meas}, with one or more previous estimates of the system output. A fourth operation (**1708**) comprises estimating one or more model parameter tensors, θ, based at least in part on computing the estimation errors at operation (**1706**). A fifth operation (**1710**) comprises estimating a delay, τ_{est}. A sixth operation (**1712**) comprises computing a possible control signal for the CTOE control law module using the one or more estimated model parameter tensors, θ, and an input regressor, ω. A seventh operation (**1714**) comprises mapping the estimated model parameter tensors, θ, to a plurality of controller parameters. The controller parameters may be similar or substantially similar to the ones described in relation to FIGS. **15-21**. An eighth operation (**1716**) comprises mapping the controller parameters to a plurality of coefficients (e.g., a_{est}, b_{est}) of the non-linear/parametric/process model. A ninth operation (**1718**) comprises estimating or adapting the model based at least in part on the mapping **1716**. A tenth operation (**1720**) comprises estimating the system output, y_{est_SE}, for the CTOE control law module **1600** based at least in part on applying the possible control signal, u_{SE}, Computed at **1712** to the estimated process model.

FIG. **17**B illustrates an example of a method **1701**-*b* for controlling a non-linear system using an adaptive PID control module. The operations of method **1701**-*b* presented below are intended to be illustrative. In some implementations, method **1701**-*b* may be accomplished with one or more additional operations not described, and/or without one or more of the operations discussed. Additionally, the order in which the operations of method **1701**-*b* are illustrated in FIG. **17**B and described below is not intended to be limiting.

In some implementations, method **1701**-*b* may be implemented in one or more processing devices (e.g., a central processing unit or CPU, a digital processor, an analog processor, a digital circuit designed to process information, an analog circuit designed to process information, a state machine, a field programmable gate array or FPGA, and/or other mechanisms for electronically processing information). The one or more processing devices may include one or more devices executing some or all of the operations of method **1701**-*b* in response to instructions stored electronically on an electronic storage medium. The one or more processing devices may include one or more devices configured through hardware, firmware, and/or software to be specifically designed for execution of one or more of the operations of method **1701**-*b*.

Broadly, FIG. **17**B depicts an example of a method flow **1701**-*b* implemented by way of a OETC control law module (e.g., OETC control law module **1700** in FIGS. **18** and **20**), in accordance with one or more implementations. As seen, a first operation (**1721**) comprises receiving at least one system output measurement, y_{meas}. The system output measurement, y_{meas}, may be received at the estimation law module/FELB **1804**. A second operation (**1722**) comprises accessing one or more previously estimated system outputs, y_{est_SE}. In some cases, the estimation law module or another component of the adaptive engine accesses 'k−1' previous system output estimates. A third operation (**1723**) comprises computing one or more estimation errors, where the estimation errors are based at least in part on comparing the system output measurement, y_{meas}, with one or more previous estimates of the system output. A fourth operation (**1724**) comprises determining a model order (e.g., 1st order, 2nd order, etc.) corresponding to a lowest estimation error, where determining the model order is further based on the previous estimates of the system output and the system output measurement, y_{meas}. In some cases, determining the model order is also based on an estimate of the delay, τ_{est} (fifth operation **1725**). A sixth operation **1726** comprises estimating one or more model parameter tensors, θ. A seventh operation **1728** comprises estimating a system output, y_{est_SE}, based at least in part on the one or more estimated model parameter tensors, θ. An eighth operation **1727** comprises mapping the one or more estimated model parameter tensors, θ, to one or more coefficients (e.g., a_{est}, b_{est} discussed above) of the non-linear/parametric/process model. Further, a ninth operation **1729** comprises computing the control signals, u_{PID} and u_{FF}, based at least in part on the coefficients of the process model, a_{est}, b_{est}, and the estimated delay, Test. A tenth operation **1730** comprises computing the possible control signal, u_{SE}, from the control signal, u_{PID} and u_{FF}. As described above in relation to FIG. **16**, the possible control signal, u_{SE}, for the adaptive PID sub engine may be calculated from a difference between the control signal (u_{PID}) and the feed forward control signal (u_{FF}). That is, $u_{SE}=u_{PID}-u_{FF}$. In some other cases, the possible control signal, u_{SE}, may be calculated by summing the u_{PID} and u_{FF} control signals. In such cases, $u_{SE}=u_{PID}+u_{FF}$.

FIG. **19** depicts an adaptive engine **1900** showing the details of the CTOE control law module **1600** of the adaptive PID sub-engine, according to various aspects of the disclosure. As seen, the adaptive engine **1800** comprises an estimation law module (or FELB) **1804**, an adaptive PID sub-engine **1901**, and a delay detector/estimator **1932**. Further, the adaptive PID sub-engine **1901** comprises a CTOE control law module **1906**, a tensor mapping module **1902**, an estimated output mapping module **1903**, and an inverse mapping module **1933**. The inverse mapping module **1933** is configured to calculate $F^{-1}(\theta)$ based on the parametric/process model type and/or order (e.g., 1st order, 2nd order, N, order). In some cases, the term "parametric/process model type" implies the presence of a delay in the process model. The adaptive engine **1800** further comprises a NL compensation module **1913** configured to compensate for non-linearities in one or more of the control signal (e.g., $u_{desired}$) and the estimated system output (e.g., y_{est_PID}) received from the adaptive PID sub-engine. In one non-limiting example, the NL compensation module **1913** may be implemented using a plurality of NL transfer functions.

Similar to some of the other adaptive engines described herein, the estimation law module/FELB **1804** is configured to receive an input regressor, where the input regressor comprises at least a reference waveform (also referred to as setpoint stream, reference signal, or a series of set points) denoted as 'r', and a system output measurement, y_{meas}. In some embodiments, the input regressor may additionally comprise one or more of a total estimated system output for a previous iteration, $y_{est_out_k-1}$, an estimated delay, τ_{m_est}, a control output for a previous iteration, u_{out_k-1}, an estimation error, ê, the non-linear model, W_m, and a plurality of coefficients for the non-linear model.

In some examples, the estimation law module **1804** is configured to apply one or more estimation laws to the input regressor, ω, to produce one or more estimated parameter tensors, θ, for a non-linear model of the one or more actuators and/or the system controlled by the one or more actuators. The estimation law module **1804** passes the one or more estimated parameter tensors, θ, to the control law module **1906** of the adaptive PID sub-engine. In some examples, the control law module **1906** also receives at least a portion (e.g., one or more subcomponents) of the input regressor. The control law module **1906** computes a control signal given by $u_{desired}=\theta\omega$. This control signal, $u_{desired}$, is passed to the NL compensation module **1913** where it is further processed to compensate for non-linear effects before being passed to the CSC (e.g., shown as CSC **1826** in FIG. **18**).

In some examples, the estimation law module **1804** may optionally send the estimated model parameter tensors, θ, to the tensor mapping module. The tensor mapping module also receives the estimated process delay, τ_{m_est}, from the delay detector/estimator **1932**. In some examples, the inverse mapping module **1933** receives as input the estimated model parameter tensors, θ, and the estimated process delay, τ_{m_est}, and outputs a tensor comprising the plurality of controller parameters (e.g., α, K_c, T_d, N, β, T_i, etc.) to the tensor mapping module. Specifically, the inverse mapping module **1933** is used to map the estimated model parameter tensors, θ, to the plurality of controller parameters, where the mapping from the estimated model parameter tensors to the controller parameters is based on one or more of the estimation error, ê, and the estimated process delay.

As noted above, each of the plurality of controller parameters may be represented as a function of the estimated coefficients (e.g., a_{est}, b_{est}) of the non-linear/parametric/process model and the estimated process delay. In some cases, the tensor mapping module is configured to map the controller parameters (e.g., received from the inverse mapping module **1933**) to the estimated coefficients of the process model. In some aspects, at least a portion of the non-linear/parametric/process model is estimated at the tensor mapping module, based upon mapping the controller parameters to the coefficients of the process model. The tensor mapping module passes information pertaining to the estimation of the process model, the estimated coefficients of the process model, and any other relevant information to the Estimated Output Mapping Module **1903**. The Estimated Output Mapping Module **1903** is configured to produce a possible estimated system output, y_{est_PID}, for the CTOE control law module, based upon applying (1) a previous iteration of the possible control signal, $u_{SE_k}-1$, or (2) the control signal, $u_{desired}$, to the non-linear/process model. This possible estimated system output, y_{est_PID}, corresponding to the CTOE control law module is passed to the NL transfer functions **1913**, which compensates for any non-linear effects present in the y_{est_PID} signal. After compensating for non-linear effects (if any) in the y_{est_PID} signal, the NL compensation module/transfer functions **1913** passes the possible estimated system output (e.g., $y_{est_SE_CTOE}$) corresponding to the CTOE control module **1600** to the control selector/combiner (e.g., CSC **1826**).

FIG. **20** depicts a block diagram **2000** showing how the control law is implemented for the CTOE method, according to various aspects of the disclosure. As seen, FIG. **20** illustrates a tensor concatenate module **2011** and the CTOE control law module **1906** (previously described in relation to FIG. **19**). The tensor concatenate module **2011** and the CTOE control law module **1906** may be embodied in hardware, software, or a combination thereof. As seen, the tensor concatenate module **2011** is configured to receive the plurality of subcomponents (e.g., θ_1, θ_2, θ_3 . . . θ_7) of the estimated model parameter tensor, θ, from the estimation law module **1804**. In some examples, the tensor concatenate module **2011** also receives the plurality of subcomponents (e.g., ω_1, ω_2, ω_3 . . . ω_7) of the input regressor, ω. The tensor concatenate module **2011** is configured to concatenate the inputs (e.g., $\theta_1 \ldots \theta_7$; $\omega_1 \ldots \omega_7$) and pass them to the CTOE control law module **1906**, which produces the control signal, $u_{desired}=[\theta][\omega]$. In some examples, the control signal, $u_{desired}$, may also be represented as $u_{PID}-u_{FF}$. Alternatively, the control signal, $u_{desired}$, may be calculated as $u_{PID}+u_{FF}$.

As seen, in some examples, one of the subcomponents (ω_7) of the input regressor, corresponding to the control output, u_{out_k-1}, from the previous iteration, is in the feedback path, where the feedback path comprises a 1-sample delay. In such cases, the previous iteration's control output, u_{out_k-1}, is delayed by 1-sample before being passed to the tensor concatenate module **2011**.

FIG. **21** depicts a block diagram of an adaptive engine **2100**, showing a detailed view of the OETC control law module of the adaptive PID sub-engine, according to various aspects of the disclosure. The adaptive engine **2100** in FIG. **21** implements one or more aspects of the adaptive engine **1800** previously described in relation to FIG. **18**. The adaptive engine **2100** comprises an estimation law module/FELB **1804**, an OETC control law module **2121**, a delay detector/estimator **1932**, a NL compensation module **1913** (also referred to as NL transfer functions **1913**), a control selector/combiner or CSC **2116**, and a selector module **2108**. The NL transfer functions **1913**, the CSC **2116**, the delay detector/estimator **1932**, and the selector module **2108** may be similar or substantially similar to the ones described

above in relation to FIGS. **18-20**. While not shown, the selector module **2108** may also comprise a CSC (e.g., shown as CSC **1816** in FIG. **18**) and one or more of a TSD (e.g., TSD **1818**) and a tensor sync and coherency module (e.g., tensor sync module **1827**).

In some embodiments, the OETC control law module comprises a control law **2106** block and a non-linear/estimation portion block (shown by the dashed lines). As seen, the control law **2106** may form a portion of the non-linear/estimation portion, in some examples. The OETC control law module further comprises a process model definitions and order mapper (PMDOM) **2131**, a parameter mapping module **2132**, a model order mapper to output estimation (MOMOE) **2133**.

In the example shown, the estimation law module **1804** receives as input the reference waveform, r, the system output measurement, y_{meas}, the estimated delay, τ_{m_est}, and the non-linear/estimation portion, W_m. The estimation law module **1804** may also receive the model order (M_i) from the PMDOM **2131**. In one non-limiting example, the model order may be equal to or less than 5. It should be noted that, higher model orders (e.g., >5) are contemplated in different embodiments, and the examples listed herein are not intended to be limiting. In some cases, the process model selected may be based on the hardware resources available. For example, a process model having zeros and a delay of less than or equal to order 5 (i.e., a 5th order model), may be utilized, based on the hardware resources available.

In some embodiments, the process models used for the OETC method/scheme for which the estimated model parameters can be translated into PID tunable values (i.e., where the PID tunable values are given as a function of the estimated model parameters) may be represented as follows:

$$M_1:\ y = \left(K_n z^{-k\tau_m}\right)u_{out}, \quad \text{(Equation 55)}$$

$$\text{where } k_{\tau m} = \text{ceiling}\left(\frac{\tau_m}{T_s}\right)$$

$$M_2:\ y = \left(K_n \pm K_n H\{u_{out}\}z^{-k\tau_m}\right. \quad \text{(Equation 56)}$$

$$M_i:\ \dot{x}_{est} = \begin{bmatrix} -a_4 & 1\ldots & 0 \\ \vdots & \ddots & \vdots \\ -a_0 & 0\ldots & 0 \end{bmatrix} x_{est} + \begin{bmatrix} b_4 \\ \vdots \\ b_0 \end{bmatrix} u_{out} z^{-k\tau_m} \quad \text{(Equation 57)}$$

$$y_{est} = \begin{bmatrix} 1 & \ldots & 0 \\ \vdots & \ddots & \vdots \\ 0 & \ldots & 1 \end{bmatrix} x_{est} \quad \text{(Equation 58)}$$

In accordance with aspects of the disclosure, the OETC control law can be implemented in 4 or less reduced instruction set computer (RISC) clock cycles, in some embodiments. This means that, if the control rate (T_s) is ~250 ns and the real-time processor (e.g., FPGA or ASIC) has a clock rate (T_{clock}), where $T_{clock}=T_s/8=31.25$ ns, the controller can be implemented through an oversampling factor of 2, which serves to reduce consumption by a factor of 2, through pipelining, resource sharing and streaming, etc.

In some other cases, if the control rate is set to $T_s=4*T_{clock}=125$ ns, the controller can be twice as fast. In other words, the present disclosure supports the use of a variable control rate (e.g., $Ts=4*T_{clock}$; $Ts=8*T_{clock}$) based on the hardware resources available. In some cases, if the hardware resources are limited, the resource usage can be divided (e.g., by a factor of 2, such that $Ts=8*T_{clock}$), which allows pipelining and sharing of hardware resources.

Although not illustrated, the Adaptive PID sub-engine can operate as a standalone controller. In such an embodiment, the estimation law modules/FELB can be replaced by an empirically derived lookup table for the estimated model parameter tensors, θ. More specifically, a lookup table can be empirically formed as a mapping between (1) y_{meas} and u_{out} from a reference/calibration system and (2) estimated model parameter tensors, θ. During operation of the Adaptive PID standalone controller as a standalone controller, a control, u_{out}, can be provided to the one or more actuators, and measurements, y_{meas}, can be taken from the one or more actuators and/or system. These can then be used to select estimated model parameter tensors, θ, from the lookup table, and then provided to the Adaptive PID standalone controller to determine what will be called a control signal, u_{out}. This control signal, u_{out}, can be provided to the one or more actuators. Alternatively, the Adaptive PID standalone controller can produce a string of possible control signals, u_{se}, and form a control, u_{out}, as a combination of the string. For instance, a weighted average of the possible control signals, u_{se}, can be used to calculate the control, u_{out}, although other methods of combining the string can also be implemented. In some embodiments, the combination may be based on estimated system outputs, y_{est_se}, for each of the possible control signals, u_{se}, similar to the way in which a topology is selected in the selector and combiner mentioned earlier. These estimated system outputs, y_{est_se}, can be found via an estimation portion of the nonlinear model, for instance, using Model 1:

$$y_{est_se}=W_m\{u_{se},\theta\}$$

Where the estimated model parameter tensor, θ, is found in the lookup table based on the measured system output, y_{meas}, and the control, u_{out}, both from a previous iteration.

The Adaptive Tensor Identity Mapping Sub Engine (ATIMC)

As noted above, when there is not a-priori knowledge about the system dynamics and where large disturbances exist (e.g., an abrupt change in process chemistry or changing chamber pressure, gas flow, or thermal conditions or anything that would cause a large change in plasma impedance), or where the system is oscillatory, a fifth sub-engine, the ATIMC sub-engine can be implemented, selected or have the most influence on the control, u_{out}. The ATIMC sub-engine creates a control law in different parts by subtracting specific effects of disturbances, nonlinearities, dither, and noise in a compartmentalized manner rather than lumping these together. In other words, the ATIMC sub engine is configured to separate between disturbance rejection, noise canceling, and the controller itself, while at the same time able to track/follow the reference signal (or setpoint) adaptively and robustly. In some examples, the ATIMC sub engine is designed to support multi-rate signal processing, which allows for faster and more robust adaptation, as compared to the prior art. Additionally, or alternatively, the ATIMC sub engine may also help reduce or minimize control signal noise (e.g., noise associated with the possible control signal, u_{SE}, or the output control signal, u_{out}). The ATIMC sub engine is configured to produce possible control signals, u_{SE}, that can be used for controlling non-linear systems having stable or unstable zero-dynamics. Additionally, the ATIMC sub engine may also be utilized for controlling stable or unstable non-linear systems. In some embodiments, the ATIMC sub engine may be utilized to produce control signals for non-linear multiple input multiple output (MIMO) systems. Additionally, the ATIMC sub engine may be used in conjunction with Artificial Neural Networks (ANN) and/or Fuzzy Logic Mechanisms (FLM), in some embodiments.

The ATIMC sub engine (or ATIMC control law module) is configured to work with one or more of the estimation law modules (or FELBs) described herein. For example, the ATIMC sub engine may be incorporated within an adaptive engine (e.g., adaptive engine **500**), where the adaptive engine provides a plurality of combinations of estimation law modules (also referred to as FELBs) and the ATIMC control law module.

FIG. **23** illustrates an example of an adaptive engine **2300**, in accordance with one or more implementations. As seen, the adaptive engine **2300** comprises an estimation law module **2304** (also referred to as FELB **2304**), an ATIMC sub engine **2305**, and a selector module **2308**. The selector module **2308** may be similar or substantially similar to any of the other selector modules described herein, including at least selector module **508**. As seen, the selector module **2308** receives one or more possible control signals, u_{SE}, from the control law module/sub engine **2305** and the other sub-engines/laws **2315** and selects one or a combination of these possible control signals, u_{SE}, for output as the control, u_{out}. In the example shown, sub engine **2305** comprises a plurality of internal mechanisms/modules, where each internal mechanism or module is configured to compensate for different physical effects, noise, disturbance, etc. For instance, the sub engine **2305** comprises an Adaptive Adjustment Mechanism (AAM) module **2355** that helps determine at every time instant, k, the coefficients of the estimated model parameter tensor, θ, that are relayed to different mechanisms/modules of the sub engine.

In some examples, a tensor, ω, comprising a plurality of subcomponents (e.g., ω_{u_des}, ω_{uin}, $\omega_{u\zeta}$, ω_{uout}, etc.) is received by the AAM module **2355**. The subcomponents of the ω tensor correspond to different physical quantities, signals, physical effects (e.g., noise and disturbance), etc. Here, the ω tensor is being used as the input regressor tensor, Ø, or a filtered variation thereof (e.g., ψ) described in the preceding sections. As shown, the estimation law module/FELB **2304** receives the input regressor tensor, Ø, from the sub engine **2305**. The FELB **2304** also receives one or more error signals (or a tensor of error tensors, [e]) from the sub engine **2305**, generates one or more estimated model parameter tensors, θ, and passes the model parameter tensors, θ, to the sub engine. In some examples, the FELB **2304** also passes a derivative of the estimated model parameter tensors, $\dot{\theta}$, to the sub engine. In FIG. **23**, the notation [θ] is used to indicate the presence of one or more of θ and its derivative $\dot{\theta}$.

The first letter of the subscript (e.g., 'u', 'y', etc.) of an ω variable/signal in FIGS. **23-30** is used to indicate whether the ω variable/signal corresponds to a control signal, a measurement, etc. In some cases, the AAM module **2355** processes the subcomponents of the ω tensor to generate the one or more error tensors, [e], sent to the estimation module **2304**. For instance, as seen in FIG. **23**, the AAM module **2355** receives a plurality of subcomponents (e.g., ω_{u_out}, ω_{y_meas}, ω_{y_nd}, ω_{u_des}, $\omega_{u\zeta}$) of the ω tensor, where some subcomponents (e.g., ω_{u_out}, ω_{u_des}) are associated with control signals, some subcomponents (e.g., ω_{y_meas}, ω_{y_nd}) are associated with system measurements, etc. The sub engine **2305** also includes a plurality of filters, denoted as H{.}, including $H_y\{.\}$, $H_K\{.\}$, $H\zeta\{.\}$, $H_\Omega\{.\}$, etc. Each of these filters receives a signal (e.g., control output, u_{out}; system output measurement, y_{meas}; reference signal, r; etc.) and outputs a corresponding subcomponent of the ω tensor. For instance, the filter represented by $H_y\{.\}$ receives as input the system output measurement, y_{meas}, and outputs a subcomponent (ω_{y_meas}) of the ω tensor. Similarly, the filter represented by $H_K\{.\}$ receives as input a signal, $y_\zeta(k)$, which corresponds to a difference between the system output measurement, y_{meas} (or ω_{y_meas}), and the estimated system output, y_{est}, and outputs a subcomponent (ω_{y_nd}) of the ω tensor. The estimated model parameter tensor [θ] passed from the FELB **2304** also includes a plurality of subcomponents (e.g., θ_Ψ, θ_K, θ_Ω, ω_Φ, θ_ε) that when combined (e.g., tensor multiplied) with different subcomponents of the ω tensor allow different portions of the control signal, u_{SE}, to be estimated. In other words, each mechanism/module/mapping operator in the sub engine **2305** that receives a subcomponent of the [θ] and [ω] tensors generates a portion of the possible control signal (e.g., using control law 1A, where $u_{SE}=\theta\omega$).

FIG. **24** illustrates an example of an adaptive engine **2400**, in accordance with one or more implementations. As seen, the adaptive engine **2400** comprises an estimation law module **2304** (also referred to as FELB **2304**), an ATIMC sub engine **2305**, and a selector module **2308**. The sub engine **2305** in FIG. **24** depicts some examples of the mapping modules, mapping operators, filters, and mechanisms implemented within the ATIMC sub engine, according to various aspects of the disclosure. FIGS. **25-30** discuss these in further detail, but the purpose of the illustration in FIG. **24** is to show them at a higher level. The adaptive engine **2305** comprises a plurality of mapping modules, including an Omega-Phi mapping module **2471**, a Kappa-Aleph mapping module **2461**, a Psi-Big Theta mapping module **2451**, an Epsilon module **2441**, a stabilization mechanism module **2310**, and a Kappa mechanism **2473**. The adaptive engine **2305** further comprises a plurality of mapping operators, including an Omega mapping operator **2472** (Ω{.}), a Psi mapping operator **2479** (Ψ{.}), and a Phi mapping operator **2477** (Φ{.}). The adaptive engine **2305** also includes a plurality of filters, including filter **2474** ($H_K\{.\}$), filter **2475** ($H_y\{.\}$), filter **2476** (Hζ{.}), and filter **2478** ($H_\Omega\{.\}$). As seen, the estimation law module/FELB **2304** and the sub engine **2305** are configured to pass a plurality of signals between each other. For the sake of illustration, the dotted arrows represent subcomponents of the ω tensor that are passed from the different elements of the sub engine to the estimation law module **2304**, while the dash-dot arrows represent subcomponents (e.g., coefficients) of the estimated model parameter tensor, [θ], that are produced by the estimation law module **2304** and passed to the different elements of the sub engine **2305**. In some cases, an element (e.g., mapping operator) of the sub engine may receive a portion (or subcomponent) of both the ω tensor and the estimated model parameter tensor, [θ], and produce a portion (or subcomponent) of the possible control signal, u_{SE}. The various portions/subcomponents of the possible control signal may be combined to produce the possible control signal, u_{SE}, passed to the selector module **2308**, in some examples.

Turning now to FIG. **25**, which illustrates a detailed view of a first mapping module **2461** (i.e., the Kappa-to-Aleph mapping module, or simply K-X mapping module **2461**) of an adaptive engine **2500**, in accordance with one or more implementations. In some examples, the K-X mapping module **2461** serves as a noise and disturbance mapping module and helps generate one or more learned parameters (e.g., estimated parameters or coefficients of the estimated model parameter tensor, θ) for mapping the measured noise and disturbances (e.g., in the system output measurement, y_{meas}) to a control signal component. In other words, the K-X mapping module **2461** helps determine a control signal component of the possible control signal, u_{SE}, or the control

output signal, u_{out}, that may induce/cause the noise and disturbances seen in the measurements. Due to its nature, its contemplated that the K-X mapping module **2461** may also be referred to as a noise-disturbance mapping module **2461**.

As seen, the K-X mapping module **2461** comprises one or more Kappa mapping operator **2585** (shown as K{.}), one or more Aleph mapping operators **2583** (shown as X{.}), one or more delay blocks **2581**, **2584** (shown as $\Delta_{KX}\{.\}+1$, $\Delta_{KX}\{.\}$), and a Big Theta operator **2586** (shown as Ξ{.}). FIG. **25** also depicts one or more mechanisms/operators/modules external to the K-X mapping module **2461** (but within the sub engine **2305**), including a filter **2587** (shown as $H_K\{.\}$), a Psi mapping operator **2588** (shown as Ψ{.}), a system output measurement filter **2569** (shown as Hy{.}), and a Kappa mechanism **2473**.

The K-X mapping module **2461** (i.e., the noise-disturbance mapping module **2461**) is configured to receive a subcomponent, ω_{y_nd}, of the ω tensor, where the subcomponent, ω_{y_nd}, corresponds to the portion of the system output (e.g., measured system output, y_{meas}; estimated system output, y_{est}) associated with noise and/or disturbance. In some embodiments, this noise and disturbance portion of the system output is isolated from the overall system output (e.g., y_{meas}) by subtracting the mapped process output (i.e., generated by passing the control output from the previous iteration, u_{out}, through the Ψ{.} tensor mapping operator **2588**) from the measured output (e.g., y_{meas} or ω_{y_meas}). In some cases, this noise/disturbance portion, y_{nd}, of the system output is passed through the Kappa filter **2587** ($H_K\{.\}$), which serves as the input filter to the Kappa Mechanism **2473** and the K-X mapping module **2461**. The filter **2587** outputs the signal, ω_{y_nd}, and passes it to the mapping module **2461**.

In some cases, after the signal comprising the noise/disturbance subcomponent, ω_{y_nd}, is received at the K-X mapping module **2461**, it is passed through each of the delay block **2581**, the Aleph mapping operator **2583**, and the Kappa mapping operator **2585**. The Kappa mapping operator **2585** maps the noise/disturbance component, ω_{y_nd}, of the measured output to a corresponding noise/disturbance component, ω_{u_nd}, of the control signal. In other words, ω_{u_nd} represents the part of the control signal (e.g., control output signal, u_{out}) that corresponds to the additional noise and disturbance seen in the output of the non-linear system being controlled. As seen, the Kappa operator **2585** receives the coefficients (θ_K) of the model parameter tensor and uses them to map the noise/disturbance component, ω_{y_nd}, of the measured output to an approximation of the noise/disturbance component, $\omega_{u_nd_approx}$, of the control signal. This subcomponent ($\omega_{u_nd_approx}$) of the ω tensor corresponding to an approximate of the noise/disturbance inducing portion in the control signal (e.g., u_{SE} or u_{out}) is passed to the delay block **2584**. The delay block **2584** also receives a delay subcomponent, $\theta_{KX\Delta}$, of the estimated model parameter tensor, θ, where the delay subcomponent, $\theta_{KX\Delta}$, defines the delay increments/decrements to be applied to $\omega_{u_nd_approx}$. Applying Control Law 1A, where the control signal is a function of the estimated model parameter tensor, θ, and the input regressor, ω, the output of the delay block **2584** can be calculated to be a control signal, $u_{nd_approx_delayed}$, which is a delayed version of the approximated noise/disturbance component, $\omega_{u_nd_approx}$, of the control signal.

In some examples, the Big Theta operator **2586** (Ξ{.}) receives the approximated noise/disturbance component in the control signal, $\omega_{u_nd_approx}$, from the Kappa operator **2585**, a portion (θ_Ξ) of the estimated model parameter tensor, θ, from the estimation module **2304**, and the control output from the previous iteration, u_{out}, and produces an approximate of the noise/disturbance component in the measured system output, y_{nd_approx}, and it to the Aleph operator **2583**.

The Aleph operator **2583** is used to produce an approximate of the noise/disturbance component, u_{nd_approx}, in the control signal that corresponds to the approximated noise/disturbances, y_{nd_approx}, in the output of the non-linear system. In some examples, the signals u_{nd_approx} and $u_{nd_approx_delayed}$ are passed to a summer, where the summer subtracts u_{nd_approx} from $u_{nd_approx_delayed}$ to produce an error signal ($u_{nd_approx_error}$) that is passed as one of the error signals to the estimation law module **2304**. The estimation law module **2304** also receives one or more other error signals, including u_{nd_error}, where u_{nd_error} is calculated from a difference between $u_{nd}(k)-u_{nd_approx}$. The error signal, u_{nd_error}, corresponds to an approximation/estimation error. In some cases, u_{nd_k} is produced at the output of the Aleph mapping operator **2583** based on mapping the measured noise/disturbance component, y_{nd}, to a corresponding control signal component, u_{nd}, where the mapping is based on a portion (θ_X) of the estimated model parameter tensor, θ. In some examples, the mapping comprises tensor multiplying the portion, θ_X, of the estimated model parameter tensor, θ, with the portion, $\omega_{y_nd}(k)$, of the ω tensor.

The delay block **2581** ($\Delta_{KX}\{.\}+I$) also receives the signal, $\omega_{y_nd_k}$, and outputs a delayed version of y_{nd_k}. Here, the identity matrix/tensor (i.e., 'I') is used to carry out the preparation of the calculations for the next iteration. In other words, the delay block **2581** is used to compute the value of the new delay increment/decrement (i.e., $\theta_{KX\Delta}$). Further, the output of the delay block **2581**, which is y_{nd_k} (or $\omega_{y_nd_k}$) delayed by the new delay increment/decrement, $\theta_{KX\Delta}$, is passed to the Kappa mapping operator **2582**. The Kappa mapping operator **2582** also receives a subcomponent (θ_K) of the estimated model parameter tensor, θ, which is used to map the y_{nd_k} delayed by the new delay (i.e., $y_{nd_k_delayed_new}$) to a corresponding control signal component (approximate), $u_{nd_approx_delayed_new}$. That is, the Kappa mapping operator **2582** (on the left of the page) outputs a delayed version of the approximated noise/disturbance component in the control signal, u_{nd_approx}, where u_{nd_approx} is also delayed by the new delay increment/decrement, as defined by $\theta_{KX\Delta}$. For example, the Kappa operator **2582** outputs the noise/disturbance portion of the control signal delayed by the new delay as $u_{nd_approx_delayed_new}$ to the estimation law module **2304**.

In some embodiments, the estimation law module **2304** thus receives a plurality of error signals (e.g., u_{nd_error}, $u_{nd_approx_error}$) and an approximated noise/disturbance component, $u_{nd_approx_delayed_new}$, from the K-X mapping module **2461** and outputs at least a portion (e.g., one or more subcomponents) of the estimated model parameter tensor, θ. In this instance, the portions of the estimated model parameter tensor, θ, sent to the K-X mapping module **2461** comprise: one or more delays (e.g., $\theta_{KX\Delta}$) and one or more coefficients (e.g., θ_K, θ_X, θ_Ξ, θ_Ψ) for the various tensorial mapping functions/operators (e.g., K{.} **2582**, X{.} **2583**, Ξ{.} **2586**, Ψ{.} **2588**).

FIG. **26** illustrates a detailed view of the Epsilon mechanism module **2441** of an adaptive engine **2600**, in accordance with one or more implementations. The adaptive engine **2600** may be similar or substantially similar to the adaptive engines **2300-2500** described in relation to FIGS. **23-25**. The adaptive engine **2600** comprises an estimation law module/FELB **2304**, the Epsilon mechanism module **2441**, and the stabilization mechanism module **2310**. As

seen, the Epsilon mechanism module **2441** comprises a stability hypothesis tester **2691** configured to receive a portion (e.g., one or more subcomponents or coefficients, such as θ_Ψ) of the estimated model parameter tensor, θ, and output a subcomponent (e.g., ω_{u_des}) of the ω tensor to the estimation module **2304**. The Epsilon mechanism module **2441** (also referred to as an instability prevention module **2441**) is configured to "tensorially" generate stabilizing controllers, for instance, in the case that the learned coefficient (θ_{Ψ_k}) is unstable, which helps prevent the non-linear system being controlled from going unstable. In other words, the Epsilon mechanism module **2441** helps prevent the learned coefficients, θ_{Ψ_k}, of the estimated model parameter tensor, θ, from going unstable. The module **2441** works in conjunction with the stabilization mechanism module **2310** to test a hypothesis, described in further detail below.

As seen, the stabilization mechanism module **2310** is configured to receive the θ_ε and θ_Ψ coefficients of the estimated model parameter tensor, θ, from the estimation module **2304**, and produce a desired and possible control signal, u_{des} or $\omega_{u_{des}}$. This desired and possible control signal, u_{des} or $\omega_{u_{des}}$, is passed to the NL transfer functions **2313**, which help compensate for a-priori known non-linear effects, and produces a possible control signal, u_{SE}. In some examples, the desired and possible control signal, u_{des} or $\omega_{u_{des}}$, is also passed to the stability hypothesis tester **2691** of the Epsilon mechanism module **2441**. The stability hypothesis tester **2691** also receives the θ_Ψ coefficients from the previous iteration (shown as θ_{Ψ_k-1}) and an input control signal component, $\omega_{u_{in}}$, and determines if a predicted/estimated system output (e.g., y_{est_SE}) is likely to go unstable. That is, the Ow coefficients are first used to map the input control signal component, $\omega_{u_{in}}$, to a predicted/estimated system output, following which the stability hypothesis tester **2691** determines if the predicted/estimated system output will be stable or unstable. If the stability hypothesis tester **2791** determines that the predicted system output will be unstable, the estimation law module/FELB **2304** is used to adaptively determine the θ_ε coefficients such that the predicted/estimated system output will be stable. As shown in FIG. **26**, these adapted θ_ε coefficients/parameters are passed to the stabilization mechanism **2310**, where they may be used by a stabilizer (shown as stabilizer **3092** in FIG. **30**) to stabilize the input control signal component, $\omega_{u_{in}}$. In some embodiments, the stabilization mechanism **2310** is configured to apply the stabilizer (not shown) if the predicted system output from $\omega_{u_{in}}$ is going to be (or likely to be) unstable. Thus, the possible control signal, u_{SE}, produced by applying the NL transfer functions **2313** to the control signal component, u_{des} or $\omega_{u_{des}}$, may be based on one of the original input control signal component, $\omega_{u_{in}}$, or the input control signal component after being passed through a stabilizer, $\omega_{u_{in}_stabilized}$, further described below in relation to FIG. **30**.

FIG. **29** illustrates a block diagram showing the details of the Kappa mechanism module **2473** of an adaptive engine **2900**, in accordance with one or more implementations. The adaptive engine may be similar or substantially similar to the adaptive engines **2300** and/or **2400** previously described in relation to FIGS. **23** and **24**, respectively. The Kappa mechanism module **2473** in the ATIMC sub engine serves as a built-in mechanism to help prevent internal destabilization, for instance, if the adaptation has not converged yet. The H{.} filters (e.g., $H_K\{.\}$ **2587**) of the ATIMC sub engine helps the adaptation achieve rapid convergence by ensuring that persistent excitation signals have minimal to no impact on the measured system output, y_{meas}. In other words, the Kappa mechanism module **2473** may not be employed to reject disturbances until the adaptation has converged, in some examples. In this way, the estimated parameters/coefficients of the estimated model parameter tensor, θ, have minimal to no change. After the adaptation has converged, the Kappa mechanism module **2473** is used to reject noise/disturbances (if any). Such a design facilitates in a stable control output (i.e., a control output that prevents the non-linear system being controlled from going unstable). In some examples, the convergence rate of the signals (e.g., persistent excitation signals) can be selected by the user/designer and input through a user interface. For example, the ATIMC sub engine allows the user to select the actuation rate and/or sensing rate, and the internal fundamental clock rate of the processor, to name two non-limiting examples. As used herein, the term "actuation rate" refers to the control rate (or the rate at which control signals are being generated). On the other hand, the term "sensing rate" refers to the rate at which the measurements are being taken/collected/obtained. In some cases, the actuation rate and the sensing rate may be the same or different. Additionally, in some circumstances, convergence can be reached within a few control/sensing/measurement samples. In some instances, convergence can be reached in just a single control/measurement sample. Typically, the H{.} filters, such as, but not limited to, the $H_K\{.\}$ filter **2587**, do not modify the measured/sensed samples at the time of measurement (e.g., t_k, $t_{k+1} \ldots t_{k+N}$). Further, the control sampling rate (T_s) may be written as shown below:

$$T_S = t_{k+1} - t_k = \frac{t_{k+N} - t_k}{N} \quad \text{(Equation 59)}$$

As noted above, the processor (e.g., FPGA processor, CPU processor) on which the adaptation calculations are executed is usually significantly faster than the control rate. In such cases, there may be multiple processor clock samples (e.g., FPGA and/or CPU clock samples) within a single control sample. In one non-limiting example, there may be ten (10) processor clock samples for each control sample. That is, $T_p=T_s/n=T_s/10$, where T_p is the duration of one processor clock sample. In such cases, for each measurement/control sample, there may be nine (9) iterations with a persistent excitation signal and one (1) with the actual control signal. It should be noted that, this iteration factor (e.g., 9:1) may be considered a design variable and can vary depending on the use case. Additionally, or alternatively, the iteration factor may be selected based on determining an optimal iteration factor needed for a quick and/or robust convergence. In some examples, the optimal iteration factor (e.g., 9:1, 12:1, 4:1, etc.) for the number of persistent excitation signals for each control signal may be determined empirically through experiments. In some cases, the persistently exciting signal may be generated by adding noise, where the noise comprises a spectral power covering the full operating range of the signals in question. That is, the additional noise generated is intended to cover the possible scenarios/situations that the nonlinear system is going to operate in, rather than creating a full noise spectrum. Such a design may enhance one or more of accuracy and speed of noise rejection, in some examples. In some cases, the spectral power of the additional noise may be determined based on the reference signal, r. The spectral characteristics of the added noise signals in question may or may not be known a-priori. In some embodiments, an Additive White Gaussian Noise (AWGN) may be utilized if the spectral

characteristics of the signals in question are not known a-priori. AWGN refers to a basic noise model used in information theory and is used to mimic the effect of random processes occurring in nature. Other types of noise models known and/or contemplated in the art may be utilized in different embodiments, and the examples listed herein are not intended to be limiting.

As seen in FIG. **29**, the Kappa mechanism module **2473** (also referred to as the internal destabilization prevention module **2473**) receives an input tensor, [θ], where the input tensor, [θ], comprises at least the derivative of the estimated model parameter tensor, $\dot{\theta}$. In some cases, the input tensor [θ] also includes the estimated model parameter tensor, θ. The Kappa mechanism module **2473** comprises an infinity norm module **2961** configured to compute an infinity norm of the input tensor (e.g., $\dot{\theta}$ tensor). The infinity norm module **2961** passes the infinity norm to a comparison module **2962**, which compares the infinity norm to a threshold. In one non-limiting example, the comparison module **2962** determines if the infinity norm is less than or equal to the threshold. In some cases, the threshold may be specified by the user/designer and may be based in part on the precision capabilities (or precision characteristics) of the hardware and/or the sensing equipment, to name two non-limiting examples. In some other cases, the threshold may be based on a minimum Signal-to-Noise (SNR) requirement set by a customer or indicated in a product specification. As such, the threshold may correspond to the lowest value of noise that may be allowable based on the desired SNR. The Kappa mechanism module **2473** also comprises a mapping operator **2585** (also referred to as Kappa mapping operator **2585**, or simply K{.} **2585**) that is configured to receive the OK coefficients produced by the estimation law module **2304**. The mapping operator **2585** also receives a noise/disturbance component of the measured signal, ω_{y_nd}, which represents the effects of noise and/or disturbance on the system output measurements, y_{meas}. The mapping operator **2585** outputs a signal, u_{nd_true}, which represents the extra/added noise and disturbance rejection control component, to the conditional block **2993**. The conditional block **2993** also receives another signal, u_{nd_false}, which represents zero (0) noise. The conditional block **2993** takes the output (e.g., Boolean operator, such as True/False) from the comparison module **2962** and outputs a signal, $u_{nd_out}=u_{nd_true}$, if the infinity norm is less than or equal to the threshold, and outputs a signal, $u_{nd_out}=u_{nd_false}$, if the infinity norm is greater than the threshold. Said another way, the noise and disturbance rejection control component, u_{nd_true}, is added to the possible control signal, u_{SE}, or the control output, u_{out}, if the adaptation has converged, in which case the "True" condition is satisfied. However, if the adaptation has not yet converged, the "False" condition is satisfied and u_{nd_false} (e.g., 0, or another value specified by the designer) is utilized, in which case no noise and disturbance rejection may be carried out.

In some cases, the control signal component, und, corresponds to the portion of the control signal (e.g., u_{SE} or u_{out}) that induces the noise/disturbance seen in the measured system output.

FIG. **27** illustrates a block diagram representation of the Psi-Big Theta mapping module **2451**, in accordance with one or more implementations. In some cases, the Psi-Big Theta mapping module **2451** is also referred to as the control-to-measurement mapping module **2451**, since it helps generate the learned coefficients/parameters (e.g., one or more subcomponents of the estimated model parameter tensor, θ) to carry the mapping from the control (e.g., possible control signal, u_{SE}, Control output, u_{out}) to an estimated system output measurement, y_{est}.

In some cases, the Big Theta operator **2586** (shown as Ξ{.}), is also referred to as the sensitivity mapping operator **2586**, and is used to map a sensitivity in the Psi operator **2588** (W{.}) to a change in input, such that:

$$\Xi_k \triangleq \frac{\nabla_T \Psi_k}{\nabla_T u_k},$$

where ∇_T is a tensorial gradient.

The Ξ operator **2586** is also employed to produce the coefficients, θ_Ψ, that are fed to the Psi operator **2588** (W{.}). In some aspects, the Ξ operator **2586** is used to determine the non-linear effects (if any) present around the Ψ operator **2588**. Said another way, the use of the Ξ operator **2586** is similar to performing small signal analysis (e.g., in real time) and the use of the Ψ operator **2588** is similar to performing large signal analysis. In some examples, the Ξ operator **2586** corresponds to a derivative or sensitivity function of the Ψ operator **2588**. In such cases, the Ξ operator **2586** and the Ψ operator **2588** may comprise, or may be associated with, the same coefficients/parameters, but necessarily the same dynamics. In this way, Ξ operator **2586** helps account for small nonlinearities and the Ψ operator **2588** helps account for larger nonlinearities in the process/parametric/nonlinear model behavior. In some embodiments, obtaining the coefficients (θ_Ξ) of the model parameter tensor, θ, may help determine the coefficients (θ_Ψ) of the model parameter tensor, θ. Further, determining the coefficients, θ_Ψ, helps ensure robustness and stability of the non-linear system being controlled, as small changes can often amplify and induce large (undesirable) effects in non-linear systems. As noted above, the coefficients, θ_Ψ, passed to the Psi operator (e.g., Psi operator **2479**, **2588**) may be used to map a control signal (e.g., u_{out}) to an estimated system output (e.g., y_{est}). Thus, accurate determination of the coefficients, θ_Ψ, facilitates in reducing or minimizing the estimation error (e.g., error corresponding to a difference between an estimated system output, y_{est}, and a measured system output, y_{meas}). In some cases, the coefficients θ_Ψ and θ_Ξ of the estimated model parameter tensor, θ, sent to the Ψ operator **2588** and the Ξ operator **2586**, respectively, may be the same or substantially the same. In other words, $\theta_\Psi=\theta_\Xi$, in some examples. However, it should be noted that Ψ{.} may or may not be equal to Ξ{.}.

In some examples, the Psi mapping function/operator **2479** (Ψ{.}), which is an example of a tensorial identity mapping operator, is employed to map a control signal (e.g., control output from a previous iteration, u_{out_k-1}; possible control signal, u_{SE}) to an estimated system output measurement, y_{est}. It should be noted that the estimated system output measurement produced by the Ψ mapping operator **2479** may be based on the control signal that is input to the mapping operator **2479**. For example, if the Ψ mapping operator **2479** receives a control output from a previous iteration, u_{out_k-1}, it produces a total estimated system output, y_{est_out}. If the Ψ mapping operator **2479** receives a possible control signal, u_{SE}, for the ATIMC sub engine, it outputs a possible estimated system output, y_{est_SE}, corresponding to the ATIMC sub engine. Thus, as seen, the estimated system output measurement produced by the Ψ mapping operator **2479** is based on the control input (u_{out} in this example) and a subcomponent (e.g., By coefficients) of the estimated model parameter tensor, θ.

As seen in FIG. **27**, the total estimated system output, y_{est_out}, produced by the Ψ mapping operator **2479** is passed to a summer, where it is subtracted from the system output measurement, y_{meas}, to produce $y_\zeta(k)$, where $y_\zeta(k)$ represents the effects of $\omega_{u\zeta}$ on the output. In some examples, ωu_ζ represents a noise signal added to the control to enhance accuracy and/or convergence of the adaptation. In some examples, the added noise signal, $\omega_{u\zeta}$, is within the specification and/or tolerances specified by the end-user or designer. The noise signal, $\omega_{u\zeta}$, may be determined by mapping the specifications and tolerances, ζ_{spec}, specified by the user to a corresponding control tensor component given by $\omega_{u\zeta}$. As shown in FIG. **23**, this mapping from the user specified specifications/tolerances, ζ_{spec}, to the noise signal, $\omega_{u\zeta}$, is carried out by the mapping operator **2314** (Φ{.}). Thus, the mapping operator **2314** is configured to map a variation or sensitivity in the system measurement outputs, y_{meas}, to an additive control component. Generation of this additive noise signal (or tensor control component), $\omega_{u\zeta}$, helps the ATIMC sub engine converge to the process model in real-time (or substantially real-time) as it reduces the time needed for identification of the non-linearities (e.g., small nonlinearities or chaotic behavior). From a practical standpoint, this means that the mapping operator **2314** (({.}) helps assess how the user specified tolerance affects the control (e.g., possible control signal, u_{SE}, control output, u_{out}, or another applicable control signal). It should be noted that, the additive noise signal used to identify the small nonlinearities/chaotic behavior are within the user specified tolerance (i.e., to ensure that the measured system output, y_{meas}, matches or substantially matches the one desired by the user). In some aspects, this allows determination of the small nonlinearities (i.e., via the added noise), while at the same time having minimal to no effect on the system output, y_{meas}, as seen by the user. In this way, the possible control signal, u_{SE}, output by the ATIMC sub engine facilitates responsiveness (e.g., maximize dynamic range in real time) and adaptability of a parallel multi-actuator nonlinear and/or chaotic control system. Moreover, such a design facilitates in improved controls (e.g., to maximize the speed of the response and achieve the shortest response time to reach a desired reference signal value, while also enabling stability and robustness) of a parallel multi-actuator nonlinear and/or chaotic control system. In some cases, the delay estimation and predictive aspects and adaptation aspects of the ATIMC sub engine may also enable all of the above functions and advantages to be achieved even when some of the actuators of the control system are arbitrarily slower than other actuators of the control system.

Returning now to FIG. **27**, where the noise signal ($\omega_{u\zeta}$) is added to an "ideal" control signal component, $\omega_{u_ideal_k}$. Specifically, the noise signal ($\omega_{u\zeta}$) and the control signal ($\omega_{u_ideal_k}$) are input to the mapping operator **2586** which outputs an estimate y_{est_ζ}, where the estimate, y_{est_ζ}, represents the effects of the noise signal $\omega_{u\zeta}$ on the possible estimated system output, y_{est_SE}. In some aspects, the estimate, y_{est_ζ}, is similar to the estimate, $y_{\zeta(k)}$, in that it represents the effects of the noise signal ($\omega_{u\zeta}$) on the system output. The difference being that y_{est_ζ} represents the effects of the noise signal on the possible estimated system output, y_{est}, while $y_{\zeta(k)}$ represents the effect of the noise signal on the measured system output, y_{meas}. In some cases, the estimates y_{est_ζ} and $y_{\zeta(k)}$ are passed to a summer, which outputs y_{ζ_error} based on subtracting y_{est_ζ} from $y_{\zeta(k)}$. As described above, the estimation law module/FELB **2304** is configured to receive one or more error tensors and output one or more estimated model parameter tensors, θ. As seen in FIG. **27**, the estimation/approximation error signal, y_{ζ_error}, is passed to the estimation law module **2304**. Further, the estimation law module **2304** processes the approximation/estimation error signal, y_{ζ_error}, corresponding to the effects of the noise signal and attempts to find the coefficients (θ_Ξ) of the estimated model parameter tensor, θ, that minimize this error. That is, the estimation law module **2304** produces the coefficients, θ_Ξ, with the goal of making the error, y_{ζ_error}, equal to zero. Once the estimation law module **2304** produces the coefficients, θ_Ξ, it passes them to the ATIMC sub engine **2305** where they are input to the mapping operator **2586**. The estimation law module **2304** also produces the coefficients, θ_Ψ, and passes them to the sub engine **2305** where they are input to the mapping operator **2479**. In some cases, the coefficients θ_Ψ passed to the mapping operator **2479** are equal to the coefficients θ_Ξ passed to the mapping operator **2586**.

In some embodiments, the control signal, $\omega_{u_ideal_k}$, may be generated from the output of the Omega operator **2472** (Q{.}) shown in FIG. **28**. Specifically, ω_{u_nd}, which is the portion of the control signal that corresponds to the additional noise and disturbances seen at the output of the non-linear system is subtracted from the output, $u_{r_des}(k)$, of the Omega operator **2472** to produce the control tensor component, $\omega_{u_ideal_k}$. The control tensor component, $\omega_{u_ideal_k}$, thus corresponds to an "ideal" control signal component (or control tensor) as the noise and/or disturbances in the non-linear system being controlled have been compensated for. In some examples, the control tensor component, $\omega_{u_ideal_k}$, is added to the noise signal, $\omega_{u\zeta}$, to produce a control tensor component, ω_{u_in}, that is input to the stabilization mechanism module **2310** (as shown in FIG. **26**). The stabilization mechanism module **2310** uses the input control tensor component, ω_{u_in}, to produce a control tensor component, ω_{u_des}, which is passed to the NL transfer functions **2313** (also referred to as NL compensator **2313**). The NL transfer functions **2313** produce the possible control signal, U_{SE}, from the control tensor component, ω_{u_des}. As seen in FIG. **23**, the NL transfer functions **2313** pass the possible control signal, U_{SE}, to the selector module **2308**.

As shown in FIG. **27**, the noise signal, $\omega_{u\zeta}$, and the control signal, $\omega_{u_ideal_k}$, are passed to the tensorial mapping operator **2586** (Ξ{.}), where the tensorial mapping operator **2586** also receives the θ_Ξ coefficients of the estimated model parameter tensor, θ, from the estimation law module **2304**. The tensorial mapping operator **2586** outputs, y_{est_ζ}, to a summer, where y_{est_ζ} represents the effects of the noise signal $\omega_{u\zeta}$ on the possible estimated system output, y_{est_SE}. In some examples, the adaptation (e.g., adaptively generating the coefficients, θ_Ψ, θ_Ξ to minimize the error, y_{ζ_error}) in FIG. **27** works based on the difference between the measurements, y_{meas}, and the approximated/estimated system output from the control signal, $\omega_{u_ideal_k}$.

Omega-Phi Mapping Module of the ATIMC Sub Engine

The Omega-Phi Mapping Module (e.g., shown in FIG. **28**) is configured to "tensorially" generate the learned parameters/coefficients for carrying out the mapping from the desired setpoint (ω_{r_des}) to a desired control signal (ω_{u_des}). That is, the Omega-Phi Mapping Module **2471** described in relation to FIG. **28** helps produce the possible control signal, where the possible control signal is based at least in part on adaptively determining the coefficients (θ_Ω) of the estimated model parameter tensor, θ. In some examples, the Omega-Phi mapping module **2471** is also referred to as the reference-to-possible control mapping module **2471**.

In some embodiments, the Omega operator/mechanism/module **2472** (shown as $\Omega\{.\}$) serves as the control law portion of the ATIMC sub engine as it produces the desired control signal, $u_{r_des}(k)$, where the desired control signal is based at least in part on the desired setpoint (i.e., reference signal, r).

As shown in FIG. **28**, the Omega-Phi mapping module **2471** receives a desired setpoint, (ω_{r_des}), where the desired setpoint is passed to a delay block **2891** ($\Delta_{\Phi\Omega}\{.\}$), a stable zero dynamics hypothesis tester **2892**, and a mapping operator **2472** ($\Omega\{.\}$). The delay block **2891** is also configured to receive a delay portion/subcomponent ($\theta_{\Phi\Omega\Delta}$) of the estimated model parameter tensor, θ, from the estimation law module **2304**. In some examples, the delay subcomponent ($\theta_{\Phi\Omega\Delta}$) defines a delay increment/decrement that is applied by the delay block **2891** to the desired setpoint, ω_{r_des}. The delay block **2891** then outputs a delayed version of the desired setpoint, $\omega_{r_des_delayed_new}$, with the new delay (e.g., defined by the delay subcomponent, $\theta_{\Phi\Omega\Delta}$) received from the estimation law module **2304**. In some examples, the delayed version of the desired setpoint, $\omega_{r_des_delayed_new}$, is passed to the Omega mapping operator **2472**. The omega mapping module **2472** (on the left of the page) also receives the coefficients (θ_{Ω}) of the estimated model parameter tensor, θ, and passes a tensor, $\omega_{\Phi\Delta}$, to the estimation law module **2304**, where the tensor, $\omega_{\Phi\Delta}$, corresponds to a delay. Specifically, the estimation law module uses $\omega_{\Phi\Delta}$ to generate the delay subcomponent ($\theta_{\Phi\Omega\Delta}$) that is passed to the delay block **2891**.

Moving on to the stable zero dynamics hypothesis tester **2892** (also referred to as tester **2892**), which is also configured to receive the desired setpoint, ω_{r_des}. The tester **2892** receives the desired setpoint, ω_{r_des}, processes it, and outputs the desired setpoint, ω_{r_des}, along with a True/False hypothesis. In some cases, the tester **2892** is configured to test whether the desired setpoint, ω_{r_des}, has stable or unstable zero dynamics and pass a True/False hypothesis to the delay block **2891** ($\Delta_{\Phi\Omega}\{.\}$). The delay block **2891** applies the delay increment/decrement defined by the delay component, $\theta_{\Phi\Omega\Delta}$, to the desired setpoint, ω_{r_des}, and passes the desired setpoint with the delay, ω_{r_des}_delayed, to the Phi mapping operator **2477** ($\Phi\{.\}$).

The Phi mapping operator **2477** maps the desired setpoint (with the delay), $\omega_{r_des_delayed}$, to a corresponding control signal value, $u_{r_des_direct}$, and passes this control signal value to a summer. In some examples, the summer also receives another control signal value, $u_{r_des_approx}$, which is subtracted from the control signal value, $u_{r_des_direct}$, to produce an error signal, $u_{r_des_error_zero_dyn_stab}$, that is then passed to the estimation law module. This error signal, $u_{r_des_error_zero_dyn_stab}$, corresponds to a difference between an approximated control output, $u_{r_des_approx}$, and the estimated control output, $u_{r_des_direct}$, had the system output measurement, y_{meas}, been equal to the desired setpoint, as further described below.

The goal of the Omega-Phi mapping module **2471** is to find the coefficients (θ_{Ω}) of the estimated model parameter tensor, θ, that correspond to the minimum error between the approximated control output, $u_{r_des_approx}$, and the estimated control output, $u_{r_des_direct}$, had the system output measurement, y_{meas}, been equal to the desired setpoint (ω_{r_des}). Thus, by minimizing the difference (or error) given by $u_{r_des_direct}-u_{r_des_approx}$, the adaptive engine can converge to the coefficients (θ_{Ω}) of the estimated model parameter tensor, θ, from which the possible control signal, u_{SE}, can be determined. In some examples, the estimated control output, $u_{r_des_direct}$, can be obtained by mapping an undisturbed and/or noiseless reference signal (or setpoint) to its corresponding control value. In some cases, this mapping can be achieved through the Phi mapping operator **2477**. The estimation law module **2304** is configured to adaptively find and pass the coefficients θ_{Φ} of the estimated model parameter tensor, θ, to the Phi mapping operator **2477**, where the coefficients θ_{Φ} are determined in real-time by minimizing the error (e.g., for the current iteration 'k') between $u_{r_des_direct}$ and $u_{r_des_approx}$. In some examples, the control signal value, $u_{r_des_approx}$, is produced by mapping (using the mapping operator **2477**), y_{r_des}, to a control signal value. Specifically, the desired setpoint (ω_{r_des}) is mapped to a desired control signal value (u_{r_des}) using the Omega mapping operator **2472** and the coefficients θ_{Ω}. Next, the desired control signal value (u_{r_des}) is mapped to a desired system output (y_{r_des}) using the Psi operator **2479** and the coefficients θ_{Ψ}, where the Psi operator **2479** is similar or substantially similar to the mapping operator **2479** described in relation to FIG. **27**. For example, the mapping operator **2479** is configured to map a control signal value (u) to a system output (y), where the mapping is based at least in part on the coefficients (θ_{Ψ}) received from the estimation law module **2304**. Further, the Phi mapping operator **2477** receives the coefficients (θ_{Φ}) from the estimation law module **2304** and maps the undisturbed and noiseless measurement (y_{r_des}) to a corresponding control signal value ($u_{r_des_approx}$). In some examples, this approximated control signal value ($u_{r_des_approx}$) is passed to a summer, where it is subtracted from the delayed control signal value ($u_{r_des_delayed}$) to produce an error signal ($u_{r_des_error}$), where the error signal ($u_{r_des_error}$) is passed to the estimation law module **2304** in the error tensor 'e' described above.

In some cases, the estimation law module **2304** receives the one or more error signals (e.g., $u_{r_des_error}$, $u_{r_des_error_zero_dyn_stab}$, $\omega_{\Phi\Delta}$) from the Omega-Phi mapping module **2471** and uses them to determine the delay increments/decrements (e.g., $\theta_{\Phi\Omega\Delta}$) and/or the coefficients (e.g., θ_{Φ}, θ_{Ω}, θ_{Ψ}) of the estimated model parameter tensor, θ.

The estimated model parameter tensor, θ, includes θ_{Ω} coefficients/parameters that are determined through adaptation. Further, the Omega operator **2472** ($Q\{.\}$) is a tensorial mapping function/operator that is employed to map a desired reference signal/setpoint (e.g., Ω_{r_des}) to a corresponding control signal value, e.g., u_{r_des}. In some examples, the Omega operator **2472** may be configurable by the end-user or designer and may comprise linear and/or non-linear functions/operators. In one non-limiting example, the Omega operator **2472** ($\Omega\{.\}$) may be implemented by way of an Artificial Neural Network (ANN). In some other cases, the Omega operator **2472** may comprise a gain tensor whose weights/parameters are set using the θ_{Ω} coefficients, where the θ_{Ω} coefficients are adapted in real-time (or substantially real time).

In some examples, the adaptive engine comprising the estimation law module **2304** and the ATIMC sub engine **2305** uses adaptation to determine the total estimated delay (Δ_{Total}). After initializing the total estimated delay (Δ_{Total}), the different mapping mechanisms/modules of the ATIMC sub engine **2305** adapt the delay to further enhance the performance of the adaptive engine (e.g., to bypass unstable zero dynamics if they are present in the non-linear system). The use of "delayed" and "undelayed" versions of various signals helps prevent divergence of the control/adaptation against unstable zero dynamics. In some aspects, the extra delay allows the controller to be conscious of the unstable zero dynamics. An example for unstable zero dynamics may be that a system takes time to charge/build up. In such cases, the addition of the delay helps prevent the controller from

increasing the value of the control signal, u_{out}, applied to an actuator (e.g., if it assumes that the control signal value that it is issuing is not enough). In other words, the addition of the delay helps account for the fact that the non-linear system being controlled may need time (e.g., due to unstable zero dynamics) to respond to such a control output, u_{out}. Thus, the delays described herein assist in the control of non-linear systems having unstable zero dynamics. In some cases, the system of the present disclosure is configured to determine a total delay (Δ_{Total}). The ATIMC sub engine comprises a plurality of mechanism mapping modules, each associated with a slightly different delay. In some cases, the different delays (e.g., $\theta_{\Phi\Omega\Lambda}$, $\theta_{KX\Lambda}$, etc.) passed from the estimation law module **2304** may be added to the total delay (Δ_{Total}) to produce the delay (e.g., $\Delta_{\Phi\Omega}$, Δ_{KX}) for the different mapping modules.

The delays passed from the estimation law module/FELB **2304** may comprise positive or negative integer values, and each additional delay increment/decrement may correspond to one control sample. Such a design facilitates in optimizing the time needed to achieve convergence in the case of unstable zero dynamics. Furthermore, when the non-linear system being controlled has no unstable zero dynamics (i.e., has stable zero dynamics), the adaptive engine **2300**, **2400** comprising the estimation law module/FELB **2304** and the ATIMC sub engine **2305** may not add any delays, which also optimizes the time needed to achieve convergence.

FIG. **30** shows a detailed view of the stabilization mechanism module **2310** of the ATIMC sub engine, in accordance with one or more implementations. The stabilization mechanism module **2310** may be similar or substantially similar to the stabilization mechanism module **2310** previous described in relation to FIG. **26**. The stabilization mechanism module **2310** helps ensure (adaptively) that the process/non-linear system being controlled remains stable, regardless of operating conditions. As seen, the stabilization mechanism module **2310** comprises a stability hypothesis tester **3091**. The stability hypothesis tester **3091** implements one or more aspects of the stability hypothesis tester **2791** described above in relation to FIG. **26**. The stabilization mechanism module **2310** also includes an optional stabilizer **3092**. In some embodiments, the stabilizer **3092** is deployed if the predicted system output measurement for a possible control signal (e.g., determined based on applying the possible control signal to one or more of the estimation laws described throughout the disclosure) is going to be unstable.

As seen, the estimation law module/FELB **2304** is configured to produce one or more estimated parameter tensors, θ, where the one or more estimated parameter tensors comprise one or more subcomponents (also referred to as coefficients), such as, θ_Ψ, θ_ε, etc. In the example shown, the stability hypothesis tester **3091** is configured to receive the coefficients, θ_Ψ and θ_ε, of the estimated model parameter tensor, θ, and output a Boolean response (e.g., True/False) based on predicting if the system output will be unstable. In some cases, the stabilization mechanism module **2310** also receives as input the control tensor component, ω_{u_in}, where the control tensor component, ω_{u_in}, is generated by adding $\omega_{u_ideal_k}$ to the noise signal, $\omega_{u\xi}$, as described above. Next, the stability hypothesis tester **3091** uses one or more of the control tensor component, ω_{u_in}, the θ_Ψ, and the θ_ε parameters/coefficients to predict the stability of the system output. If the predicted system outputs are stable, the stability hypothesis tester **3091** outputs "True" to the conditional block **3093**, in which case the conditional block **3093** passes the control tensor component, ω_{u_in}, as the desired control output, ω_{u_des}, to one or more of the Epsilon mechanism module **2441** and the NL transfer function **2313**. In some other cases, if the predicted system outputs are unstable, the stability hypothesis tester outputs "False" to the conditional block **3093**. In such cases, the optional stabilizer **3092** is used to stabilize the control tensor component, ω_{u_in}. In some examples, the stabilizer **3092** outputs another control tensor component, $\omega_{u_in_stabilized}$, to the conditional block **3093**, which then outputs the stabilized control tensor component, $\omega_{u_in_stabilized}$, as the desired control output, ω_{u_des}. In some examples, the desired control output, ω_{u_des}, is also passed back to the estimation law module/FELB **2304**. The estimation law module **2304** adapts the θ_ε parameters/coefficients, for instance, if the desired control output, ω_{u_des}, is different from the control tensor component, ω_{u_in}, if the stabilizer **3092** was deployed, or a combination thereof. In other words, the θ_ε parameters/coefficients may be adapted (i.e., adaptively determined) such that the predicted system output measurement(s) are stable.

FIG. **22** illustrates an example of a method **2200** for controlling a non-linear system using an ATIMC control law module/sub-engine, in accordance with one or more implementations. The operations of method **2200** presented below are intended to be illustrative. In some implementations, method **2200** may be accomplished with one or more additional operations not described, and/or without one or more of the operations discussed. Additionally, the order in which the operations of method **2200** are illustrated in FIG. **22** and described below is not intended to be limiting.

In some implementations, method **2200** may be implemented in one or more processing devices (e.g., a central processing unit or CPU, a digital processor, an analog processor, a digital circuit designed to process information, an analog circuit designed to process information, a state machine, a field programmable gate array or FPGA, and/or other mechanisms for electronically processing information). The one or more processing devices may include one or more devices executing some or all of the operations of method **2200** in response to instructions stored electronically on an electronic storage medium. The one or more processing devices may include one or more devices configured through hardware, firmware, and/or software to be specifically designed for execution of one or more of the operations of method **2200**.

As seen, a first operation (**2202**) comprises receiving a reference signal, r, where the reference signal, r, may be received at the estimation law module/FELB **2304**. A second operation **2204** comprises receiving at least one system output measurement, y_{meas}. In some embodiments, the system output measurement, y_{meas}, is received at the estimation law module/FELB **2304**. A third operation (**2206**) comprises determining one or more of an estimation law and/or control law for selecting controller coefficients (also referred to as estimated parameter tensor coefficients or estimated model parameter tensor coefficients, such as the coefficients, θ_Ω), where the controller coefficients are predicted to minimize or reduce at least one error index (e.g., corresponding to the various errors passed from the control law module/sub-engine **2305** to the estimation law module **2304**). A fourth operation (**2208**) comprising generating a control signal, u_c (e.g., $\omega_{u_ideal_k}$ in FIG. **27**) based at least in part on determining the control law portion for selecting the controller coefficients. A fifth operation (**2210**) comprises generating a possible control signal, u_{SE}, for the current iteration after removing the effects of noise and/or disturbance (e.g., und, or u_{nd_approx}) from the control signal, u_c. Specifically, the possible control signal, u_{SE}, may be generated as: $u_{SE}=u_c-u_{nd}$.

In some cases, sixth operation (**2212**) comprises determining an ideal process output, y_p. More specifically, the adaptive engine (e.g., adaptive engine **2300**) determines an ideal process output, y_p, by applying the possible control signal, u_{SE}, to the non-linear model (e.g., the estimation portion of the non-linear model).

As described above in relation to FIG. **25**, the control output, u_{out}, may be passed through the mapping operator **2588** to produce the total estimated system output, y_{est_SE} or y_{est_out}. Additionally, the noise/disturbance component (e.g., $\omega_{y_nd}(k)$ or y_{nd}) in the measured system output, y_{meas}, may be calculated from a difference between the ideal system/process output (e.g., y_{est_SE} or y_{est_out}) and the measurement, y_{meas}. Similarly, at operation (**2214**), the method **2200** comprises estimating (or determining) the effects of noise and disturbance, y_{nd}, in the measured system output, y_{meas}. In some examples, the estimation of the noise/disturbance effects, y_{nd}, comprises evaluating a difference between the measured system output, y_{meas}, and the ideal system/process output, y_p. In some cases, the ideal system/process output, y_p, discussed in relation to FIG. **22** may be similar or substantially similar to the total estimated system output (e.g., y_{est_SE} or y_{est_out}) described in other portions of this disclosure.

An eighth operation (**2216**) comprises determining, u_{nd}, where u_{nd} corresponds to the portion of the control signal (e.g., possible control signal, u_{SE}; control output from the previous iteration, u_{out_k-1}) associated with the noise and/or disturbance effects. In some cases, determining the noise/disturbance inducing portion of the control signal, u_{nd}, comprises mapping the measured noise and disturbance component, y_{nd}, to a corresponding control signal value, as described above in relation to FIG. **25**. In some cases, the estimated/approximated u_{nd} (i.e., determined at operation **2216**) is used to generate the control signal output for the next iteration. Furthermore, the adaptive engine is configured to update/adapt the estimated parameter.

Although not illustrated, the ATIMC sub-engine can operate as a standalone controller. In such an embodiment, the estimation law modules/FELB can be replaced by an empirically derived lookup table for the estimated model parameter tensors, θ. More specifically, a lookup table can be empirically formed as a mapping between (1) y_{meas} and u_{out} from a reference/calibration system and (2) estimated model parameter tensors, θ. During operation of the ATIMC standalone controller as a standalone controller, a control, u_{out}, can be provided to the one or more actuators, and measurements, y_{meas}, can be taken from the one or more actuators and/or system. These can then be used to select estimated model parameter tensors, θ, from the lookup table, and then provided to the ATIMC standalone controller to determine what will be called a control signal, u_{out}. This control signal, u_{out}, can be provided to the one or more actuators. Alternatively, the ATIMC standalone controller can produce a string of possible control signals, u_{se}, and form a control, u_{out}, as a combination of the string. For instance, a weighted average of the possible control signals, u_{se}, can be used to calculate the control, u_{out}, although other methods of combining the string can also be implemented. In some embodiments, the combination may be based on estimated system outputs, y_{est_se}, for each of the possible control signals, u_{se}, similar to the way in which a topology is selected in the selector and combiner mentioned earlier. These estimated system outputs, y_{est_se}, can be found via an estimation portion of the nonlinear model, for instance, using Model 1:

$$y_{est_se}=W_m\{u_{se},\theta\}$$

Where the estimated model parameter tensor, θ, is found in the lookup table based on the measured system output, y_{meas}, and the control, u_{out}, both from a previous iteration.

The ATFC Controller and Control Law Module or Sub-Engine

Referring next to FIG. **31**, shown is a block diagram of an adaptive tensorial fuzzy controller (ATFC) **3100** that may be implemented as a stand-alone control law module **506** or it may be implemented among other control law modules **506** in the adaptive engine **500** described with reference to FIGS. **5**A, **5**B, and **5**C. As shown, the ATFC **3100** comprises a fuzzy controller **3102** that includes a fuzzification module **3104**, that is coupled to an inference mechanism **3106**, and the inference mechanism **3106** is coupled to a defuzzification module **3108** and a rule base **3110**. Also shown is a dynamic modification module **3112** that is coupled to the fuzzification module **3104**, the rule base **3110**, and the defuzzification module **3108**. It should be recognized that the depiction of the components that make up the ATFC **3100** is a logical depiction of functional blocks, and each functional block may be combined with other functions or further separated in an actual implementation. For example, the fuzzification module **3104** may be separated into a fuzzy input scaler module and a fuzzifier module and the defuzzification module may be separated into a defuzzifier module and a fuzzy output scaler module as shown in FIG. **39**. As discussed further herein, the depicted functional blocks may be realized by memory, processor executable instructions stored in memory, and a field programmable gate array programmed with instructions stored in memory.

In operation, the fuzzification module **3104** generally operates to transform input variables into fuzzy values that are in a form that the inference mechanism **3106** can handle utilizing input membership functions (MFin). The inference mechanism **3106** then generates a fuzzy output **3114** according the rule base **3110**, and the defuzzification module **3108** transforms, utilizing output membership functions (MFout), the fuzzy output **3114** into a possible control signal, use, that is either used for controlling one or more actuators **408** of the plasma processing system (if the ATFC **3100** is utilized as a stand-alone control law module **506**) or the possible control signal, u_{se}, is provided to the selector module (if the ATFC **3100** is utilized in connection with other control law modules **506**) as described with reference to FIGS. **5**A, **5**B, and **5**C.

In general, the dynamic modification module **3112** is configured to adapt input membership functions, MFin, of the fuzzification module **3104**, output membership functions, MFout, of the defuzzification module **3108**, and the rule base **3110** while controlling an output (e.g., the load output **430**) of a plasma processing system (e.g., plasma processing system **400**). Aspects and variations of the dynamic modification module **3112** are discussed further herein.

While referring to FIG. **31**, simultaneous reference is made to FIG. **32**, which is a flowchart depicting a method for controlling a plasma processing system such as the plasma processing systems **100**, **400** described with reference to FIGS. **1** and **4**. At the outset, it is important to note that the method depicted in FIG. **32** is applicable in the context of tensorial control where there are potentially multiple outputs, multiple controller parameters, and multiple actuators that are utilized to achieve desired parameter values, but FIG. **32** is simplified for purposes of clarity.

As shown, the method includes receiving a reference signal, r, (e.g., reference signal **405**) defining target values for a parameter that is controlled at an output (e.g., at the

load output **430**) of the plasma processing system (Block **3202**). The controlled parameter may be, for example, forward power and the target values may, for example, define states of a multilevel power setpoint (e.g., as shown in FIG. **2**). The method also comprises obtaining a measure, y_{meas}, of the parameter that is controlled at the output (Block **3204**). At least one sensor (e.g., sensor(s) **410**) including, for example and without limitation, directional couplers, VI sensors, current transducers, and simple voltage sensors may be used to obtain the measure, y_{meas}, of the parameter that is controlled at the output. Again, it should be noted that there may be multiple controlled parameters (such as forward power, voltage, current, substrate bias voltage, ion energy, frequency, impedance, etc) and there may be multiple outputs (e.g., one or more of the load output **430** and/or the actuator outputs **432**). Those of ordinary skill in the art will appreciate that the signals from the at least one sensor may be sampled and converted into digital format for use by the adaptive engine **420**.

As shown, the method also includes producing an estimated model parameter tensor, θ (Block **3206**). As previously discussed with reference to FIGS. **5**A, **5**B, and **5**C an estimation law module **504** may take as input regressor, Ø, or a subset thereof, including values such as the reference signal, r, and the measured system output, y_{meas}, and an estimated error, ê, and the estimation law module **504** may process these inputs through an estimation law to produce the estimated model parameter tensor, θ.

As shown, the fuzzy controller **3102** provides a control signal to adjust at least one actuator based at least upon the reference signal and the measure of the controlled parameter (Block **3208**). As discussed above, in the context of an adaptive engine **500** that includes multiple control law modules **506**, the control signal may be a possible control signal, u_{se}. Or the ATFC A**00** may operate as a standalone control law module to provide control, u_{out}, as a signal that is used to control an actuator **408**.

In addition, the dynamic modification module **3112** adapts the output membership functions (MFout) of the fuzzy controller **3102**, input membership functions (MFin) of the fuzzy controller **3102**, and a rule base **3110** of the fuzzy controller **3102** while controlling the output of the system, based at least upon the estimated model parameter tensor, θ, the reference signal, r, the estimate of the controlled parameter, y_{est_se}, the measure of the controlled parameter, y_{meas}, and the control signal (u_{se} or u_{out})(Block **3210**).

Beneficially, the ATFC **3100** is able to extend the regions of operation of the plasma processing system **100**, **400** that is driving a nonlinear and/or chaotic load **104** where (in some embodiments) aspects of the system **100**, **400** can still be controlled at a nanosecond scale at a user's specific specifications.

More specifically, aspects of the ATFC **3100** enable the addition of heuristic, rule-based, case-by-case knowledge to the control mechanism that other control methodologies cannot achieve. In addition, the adaptive aspects of this mechanism enable updating and changing these rules and/or the addition of rules that cover more regions while the system is running so performance and stability are maintained, and if a new process (e.g., for processing a work piece) is added, the rules may be extended to that process.

Standard fuzzy technology suffers from not being able to be implemented to its full extent into real time devices that deal with highly uncertain and nonlinear/chaotic systems. In contrast, embodiments of the ATFC **3100** overcome memory limitations by using tensor signal processing and storage. In addition, by using rule estimation (executed, e.g., by an estimation law module **504**), the rule base **3110** of the fuzzy controller **3102** may be dynamically adjusted at every control sample, Ts, to deal with systems and/or operating conditions that a designer did not consider during the design stage. This dynamic adjustment provides a tremendous advantage over linear adaptation and/or robust control methodologies that need knowledge of the dynamics of the process and quantization of uncertainties which cannot be known a-priori in highly nonlinear/uncertain systems to perform well.

Other "non-fuzzy" control systems (e.g., robust learning control systems) may be superior when the system is operating within predefined, a-priori contemplated, regions because accurate a-priori knowledge is very useful but operating in accurately known a-priori-defined regions is more of an exception rather than the general case. As a consequence, using both robust learning control and adaptive tensorial fuzzy control extends performance, reliability, stability and the operating regions in a complimentary non overlapping way; thus, producing a superior product (e.g., processed workpiece) with very little added costs.

Portions of the ATFC **3100** mechanism may be implemented in real time hardware as discussed further below (e.g., by using TSP RAM, registers, and general tensor signal processing). It should be noted that although some of the terminology used to characterize the ATFC **3100** is similar to terminology used in connection with other machine learning approaches, the machine learning approaches are not the same as the ATFC **3100** mechanisms. For example, machine learning engines may use clustering/batch processing and frames, or pseudo real time and offline processing to carry out its learning with, for example, unscented Kalman filters to develop new rules and adapt in real time as opposed to the approach used in the ATFC **3100**. But it should be recognized that the ATFC **3100** may be used in parallel with machine learning engines.

In addition, the ATFC **3100** is particularly applicable to multiple input multiple output (MIMO) nonlinear, chaotic, and uncertain plasma loads, that can be unstable as well as have unstable zero dynamics. As described further herein, in addition to adaptation of the input and output membership functions (of the fuzzification module **3104** and defuzzification module **3108**, respectively) and adaptation of the rule base **3110**, the dynamic modification module **3112** may also store updates to the rule base **3110** and expand the rule base **3110** through tensorial correction values, zooming and sliding tensorial memory grids, and delay/filtering/averaging operators. Moreover, the dynamic modification module **3112** may also genericize the rule base **3110**, the input and output membership functions, input and output gain, scaling, and tuning.

Before detailing functional aspects of the dynamic modification module **3112**, it is helpful to understand the operation of the fuzzy controller **3102** by way of an example, without loss of generality. In the plasma processing systems **100**, **400**, there may be many inputs and outputs (e.g., rail voltage, drive voltage, generator frequency, match settings, etc.) but taking a MIMO subset as an example, such as rail voltage and drive voltage, provides ease of comprehension. For example, the rule base may include the following rules:

*R*1: IF(Drive is Reference)AND(Error is positive) THEN(Rail is Up);

*R*2: IF(Drive is Reference)AND(Error is zero)THEN (Rail is zero);

. . .

Rn: IF(*Ini* is Condition*i*)AND(Ink is Condition*m*) THEN(Output*p* is Condition*p*).

Again, the ATFC **3100** is a MIMO system capable of effectuating rules that will not only generate a rail voltage, but may also, for example, establish drive frequency, substrate-bias voltage, and match positions for all amplifiers

and match networks. As a consequence, the rule base **3110** is composed of all the "Rn" rules for all the i inputs, all the conditions, and all the outputs.

The fuzzification module **3104** functions to create a "degree of truth" to each statement by mapping how much "Drive is Reference" and how much "Error is Positive" and how much "Error is Zero," which is achieved through the membership functions, MFin, as is known in the art. Due to available processing devices (e.g., CPUs and FPGAs) and to make storage computations easy, the shape of the membership functions (in a generic, normalized form) may be as shown in FIG. **33**. As shown in FIG. **33**, the membership functions may be composed of 2n points with points "pi" and "ri" spaced from a center "bo" in a symmetric manner about bo.

In the ATFC **3100**, adaptation is carried out on {bo, pi, . . . pn, ri, . . . , rn} for all MFin functions. Pn and rn may overlap; thus, making the membership function triangular about bo. It should be noted that the distance between bo and pi and bo and ri does not need to be smaller than "bo and pi−1" and "bo and ri." Only the symmetry of "pi" and "ri" with respect to "bo" is desired, and pi should lie to the left of bo and ri, should lie to the right of bo and pi.

The number of points "n" may be selected based on the hardware. Applying the above definitions to this example and without loss of generality, everything may be normalized between [−1, 1], or alternatively, between [0, 1]. Assuming (as an example only) Reference equals 0.85, Drive=0.85, and Error is 0.1, then the membership functions are depicted in FIG. **34**.

Using "Up" as "Positive" for the rail, "Down" as "Negative," and "Drive" as "Reference" correlated to "(Reference-Drive)==0" it can be seen that there are two laws activated per rule. FIG. **35** depicts Rule 1 (R1) and FIG. **36** depicts Rule 2 (R2).

As a consequence, the fuzzyification mechanism will output:

Rin=1 AND 0.3

R2in=1 AND 0.7.

Depending upon how the "AND" operator is defined, R1in and R2in will take on the corresponding values. For the present example, since the minimum operator is faster and less resource intensive, especially for tensors, as compared to other operations such as multiplication, the fuzzification module A**04** will send to the inference mechanism A**06** the following:

$R1$ in = min (1, 0.3) = 0.3
$R2$ in in = min (1, 0.7) = 0.7
$R3$ in = 0 .
...
Rn in = 0

In turn, the inference mechanism **3106** simply reads these rule values and computes the output membership function resulting from them. As a consequence, we have the membership function depicted in FIG. **37** for R1in and the membership function depicted in FIG. **38** for R2in. Depending on the way the inference mechanism A**06** is implemented, the rule base **3110** can have its fuzzy output inferred differently depending on the membership functions used. The defuzzification module A**08** then converts the inferred decisions into actions. There exist several methods for defuzzification such as center of gravity, center average, scaling, etc.

By way of example only, the center average may be calculated as:

$$v_{rail} = \frac{R_{1out} \times R_{1in} + R_{2\,out} \times R_{2\,in}}{R_{1in} + R_{2in}} = \frac{0.3 \times 1 + 0.7 \times 0}{0.3 + 0.7}$$

$$\boxed{v_{rail} = 0.3}$$

As another example, scaling is calculated as:

$$v_{rail} = \frac{1 \times \left(\frac{0.\bar{6} \times 0.3}{2}\right) + 0 \times \left(\frac{0.\bar{6} \times 0.7}{2}\right)}{\left(\frac{0.\bar{6} \times 0.3}{2}\right) + \left(\frac{0.\bar{6} \times 0.7}{2}\right)} = \frac{0.1 + 0}{(3/30) + (7/30)}$$

$$\boxed{v_{rail} = 0.3}$$

And the center of gravity defuzzification approach may be calculated as:

$$v_{rail} = \frac{0.\bar{3} \times \left[0.\bar{6} \times \left(0.3 - \frac{0.3^2}{2}\right)\right] + 0 \times \left[0.\bar{6} \times \left(0.7 - \frac{0.7^2}{2}\right)\right]}{0.\bar{6} \times \left[\left(0.3 - \frac{0.3^2}{2}\right) + \left(0.7 - \frac{0.7^2}{2}\right)\right]} = \frac{0.\bar{3} \times (17/100) + 0 \times (91/100)}{(17/100) + (91/100)}$$

$$\boxed{v_{rail} = 0.1197}$$

Having gone over the concepts, definitions and a practical example, an example ATFC **3900**, which may be used to realize the ATFC **3100** is described with reference to FIG. **39**. As shown, the ATFC **3900** comprises a fuzzy controller **3902** and a dynamic modification module **3912**. As shown, in implementations where the ATFC **3900** is realized as a control law module **506** among other control law modules **506** (such as is shown in FIGS. **5**A, **5**B, and **5**C), the fuzzy controller **3902** receives the control, u_{out}, from the selector module **508**; the measured system output, y_{meas}; the total estimated system output, y_{est_out}, and the reference signal, r, while the dynamic modification module **3912** receives the measured system output, y_{meas}, and the reference signal, r.

The fuzzy controller **3902** operates in the same way as the fuzzy controller **3102** described with reference to FIG. **31** except that the functions of the fuzzification module **3104** are separated into a fuzzy input scaler module **3920** and a fuzzifier **3922**, and functions of the defuzzification module **3108** are separated into a defuzzifier **3924** and a fuzzy output scaler module **3926**. As shown, the fuzzy input scaler module **3920** receives the measured system output, y_{meas}, the total estimated system output, y_{est_out}, the control, u_{out}, and the reference signal, r, and the fuzzy output scaler

module **3926** outputs $u_{desired}$, which may be processed by the NL transfer functions **1013** to produce the possible control signal, use. The fuzzy input scaler module **3920** may normalize the inputs it receives to values between [−1,1] (or alternatively, between [0,1]), and the fuzzy output scaler may provide signal values that are useful for a particular actuator. In some implementations, the fuzzifier **3922**, inference mechanism **3106**, and the defuzzifier **3924** are realized by an FPGA that is programmed using instructions in hardware description language and the other components depicted in FIG. **39** are realized by processor executable instructions in connection with a processor (e.g., CPU) that processes the instructions.

The dynamic modification module **3912** in this embodiment comprises a control-to-estimate mapping module **3928**, a correction module **3930**, a scaling module **3932**, a zooming and shifting module **3934**, and a memory grid **3936**, that is coupled to the zooming and shifting module **3934** via a one-sample delay, 1SD. In some implementations, these functional components of the dynamic modification module are realized by software executed by a processor (e.g., a CPU).

The control-to-estimate mapping module **3928** generally functions to provide a fuzzy tensorial mapping from the control, u_{out}, to the estimated system output, y_{est_se}. The estimate may be updated at every control sample and is adapted to match the measurements, y_{meas}. The estimated system output, y_{est_se} may be provided to the selector module **508** and the estimation law module **504** as shown in FIGS. **5**A and **5**B.

Referring briefly to FIG. **40**, shown is an embodiment of the control-to-estimate mapping module **3928**. As shown, the control-to-estimate mapping module **3928** includes a fuzzy input scaler module **4050**, a fuzzifier **4052**, an inference mechanism **4054** that is coupled to a rule base **4056**, a defuzzifier **4058**, and a fuzzy output scaler module **4060**. As shown, the fuzzy input scaler module **4050** receives the total estimated system output, y_{est_out}, the control, u_{out}, and the measurements, y_{meas}. In operation, the control-to-estimate mapping module **3928** provides a fuzzy estimate, y_{est_se}, of the controlled output of the system (obtained through defuzzification) and the calculation for y_{est_se} is adapted in real time by having its defuzzification coefficients adapted in real time by the estimated model parameter tensor, θ, to minimize the error between y_{estk-1} which are given by Ok every iteration.

The correction module **3930** functions to provide a tensorial mapping from the measurements, y_{meas}, relative to the reference signal, r, (e.g., streaming setpoints) into a correction tensor, CT, added to the input/output membership function centers and points. As such, the correction module **3930** enables an adaptation at each and every control sample to minimize an error between the measurement and the reference signal.

Referring briefly to FIG. **41**, shown is an embodiment of the correction module **3930**. As shown, the correction module **3930** includes a fuzzy input scaler module **4170**, a fuzzifier **4172**, an inference mechanism **4174** that is coupled to a rule base **4176**, a defuzzifier **4178**, and a fuzzy output scaler module **4180**. As shown, the fuzzy input scaler module **4170** receives the control, u_{out}, the total estimated system output, y_{est_out}, the reference signal, r, the measurements, y_{meas}, and estimated system output, y_{est_se}. As depicted, the estimated model parameter tensor, θ, is utilized by each of the fuzzifier **4172** and the defuzzifier **4178** to different effect. Specifically, θ is utilized to affect the coefficients of the input membership functions (MFin) of the fuzzifier **4172** so as to affect the fuzzy values output by the fuzzifier **4172**. And the estimated model parameter tensor, θ is also utilized to affect the coefficients of the defuzzifier **4178** to, e.g., enable modification of the weights used with the center of gravity method.

As shown, the correction module **3930** produces a correction tensor, CT. In general, the correction tensor, CT, is indicative of an error, and it is generally desirable to minimize the correction, so as a consequence, parameters are adjusted so the CT tends to move to zero.

In addition to this correction tensor, CT, the meaning of the rules may be adjusted by scaling them with the scaling module **3932**. As such, the scalars may autotune themselves so they narrow or extend the inputs so that the normalized range covers these inputs and not a larger in region. The inputs and scaling are considered over timeframes and calculated based upon the reference signal, r, which may be organized into synthesized frames.

The zooming and shifting module **3934** functions to shift the rule set with respect to a fixed grid such that updates are made only inside the active rules and membership functions. So, in other words, the entire rule base is zoomed in to cover only the active rules and shifted outside the original definitions whenever the rules that are active (e.g., corresponding to different operating conditions) are beyond the initial definitions. The power of this zooming-shifting method is twofold: first, because the scaling module **3932** changes the whole rule base meaning, this zooming-shifting method only zooms into the active rules; thus, only affecting the current active rules. Second, this method allows extending the rule base to a different set of conditions (inputs/outputs). So, using the estimated model parameter tensor, θ, the zooming and shifting module **3934** optimizes itself and selects the shifting method to cover solely the current active laws.

Referring to FIG. **42**, shown is an embodiment of the zooming and shifting module **3934**, which includes an active region module **4290**, boundary logic **4292**, shift-zoom logic **4294**, a multiplexor **4296**, and a rules selection module **4298**. The active region module **4290** is configured to divide operational aspects of the system into regions utilizing the measured system output, y_{meas}, the reference, r, the total estimated system output, y_{est_out} and the control, u_{out}, to determine which region is currently active.

In turn, the boundary logic **4292** provides a TRUE signal if the active region is outside of the current active rule set and a FALSE signal if the active region is not outside of the active rule set boundaries. In response to the TRUE signal (indicating the active region is outside of the current active rule set), the shift-zoom logic **4294** will shift the center of the rules. The active region is a region of the rule base around the rules that are currently non-zero. The center of the region is where the measurements lead to a highest rule membership value (e.g., the rule the measurements/inputs fit into by the greatest amount).

In response to a FALSE signal, the shift-zoom logic **4294** will zoom in so as to cover the rules that are available so far. As shown, the shift-zoom logic **4294** receives the estimated model parameter tensor, θ, and based upon θ establishes the amount by which the rule base should be shifted or zoomed into so as to only require one active rule boundary set (e.g., for a single frame period).

The multiplexor **4296** then passes along either the shifted or the zoomed-in value based upon a shift/zoom signal. The rule selection module **4298** then determines a new tensor correction, TCnew, that enables a shift in the rules (relative to TC), so that instead of applying TC to all the rules in the system, TCnew is applied to a subset of rules from the rule

base. In this way, only a subset of the rules (e.g., the rules where the system has been the last few samples) are moved.

As shown, CTnew is fed to the fuzzifier **3922**, the rule base **3110**, and the defuzzifier **3924**. CTnew enables the zooming and shifting (performed by the zooming and shifting module **3934**) to be applied to the fuzzifier **3922**, defuzzifier **3924**, and the rule base **3110** to enable the membership rules (of the fuzzifier **3922** and defuzzifier **3924**) and rule base **3110** to be changed. For example, a center of the membership rules (e.g., bo depicted in FIG. **33**) may be changed. Without the application of the zooming and shifting, the entire rule base **3110** would be changed. But if operation is within a linear system, it is desirable to shift the rule base **3110** around the current region where the system is operating, so the zooming and shifting allows a change to the correction factor, TC, based on the measurements that have been obtained in the region the system has been currently operating. In the context of the rule base **3110**, application of the new tensor correction, TCnew results in adjustment of the rules where they are needed (e.g., based on the measurements). Instead of having a coarse mesh, it is desirable to have the rule base **3110** be very fine within the region of operation.

The memory grid **3936** creates a memory tensor composed of a grid that stores the new correction tensor, CTnew, for all the active laws during a period of time (e.g., during a frame). As such, a next time the same conditions are experienced, the new correction tensor, CTnew, is available and performance (e.g., robustness and reliability) will neither degrade nor change and adaptation need not be restarted.

If the memory grid **3936** requires more resources than are available, instead of using and storing the entire new correction tensor, an adaptation procedure may be used to determine an equivalent correction tensor that (given the amount of memory locations determined from hardware limitations or designed specs) is used for all the rules in a set of coarse memory locations such that it minimizes output error. In this way, an equivalent correction tensor may be adapted based upon the new correction tensor that is used during a frames' length for the most time (e.g., weights of the average may be selected such that r minus y_{est_out} tends as close as possible to zero where the

$$\text{equivalent current tensor}\left[= \sum_{i=1}^{n} \frac{\theta_i CT_{new_i}}{1} \right].$$

Where n is the size of memory cell in terms of the actual rule set (number of fine cells in a coarse cell) and θ is the estimated model parameter tensor.

When the ATFC is implemented as a standalone controller, the estimation law modules/FELB can be replaced by an empirically derived lookup table for the estimated model parameter tensors, θ. More specifically, a lookup table can be empirically formed as a mapping between (1) y_{meas} and u_{out} from a reference/calibration system and (2) estimated model parameter tensors, θ. During operation of the ATFC standalone controller, the control, u_{out}, can be provided to the controlling the one or more actuators **408**, and measurements, y_{meas}, can be taken from the one or more actuators and/or system. These can then be used to select estimated model parameter tensors, θ, from the lookup table, and then provided to the ATFC standalone controller to determine the control signal, u_{out}. This control signal, u_{out}, can be provided to the one or more actuators. Alternatively, the ATFC standalone controller can produce a string of possible control signals, u_{se}, and form the control, u_{out}, as a combination of the string. For instance, a weighted average of the possible control signals, u_{se}, can be used to calculate the control, u_{out}, although other methods of combining the string can also be implemented. In some embodiments, the combination may be based on estimated system outputs, y_{est_se}, for each of the possible control signals, u_{se}, similar to the way in which a topology is selected in the selector and combiner mentioned earlier. These estimated system outputs, y_{est_se}, can be found via an estimation portion of the nonlinear model, for instance, using Model 1:

$$y_{est_se} = W_m\{u_{se}, \theta\}$$

Where the estimated model parameter tensor, θ, is found in the lookup table based on the measured system output, y_{meas}, and the control, u_{out}, both from a previous iteration.

Adaptive Engine with Pre-Processed Control Laws

As previously noted, the control law modules or sub-engines can be processed on an FPGA or similar high-speed resource. However, for legacy systems that do not have such a resource, legacy processing may have difficulty implementing the heretofore mentioned control laws. One possible solution considered was application of gain scheduling-linearizing the system offline and then finding a controller capable of controlling the linearized system for various controls. However, any small parameters changes lead to a failure of this control approach. Another considered solution was to implement a robust controller, but this still led to poor performance, a small region of useful operation, and a lack of repeatability. Yet another proposal looked at interpolating between different controllers tailored to different operating regimes and challenges, yet while this was found to be effective for linear systems, it was found to be ineffective for nonlinear systems such as plasmas.

Eventually, the inventor conceived of developing a series of mappings between empirical data and controls that could be used as a replacement for the control law functionality. Certainly some convergence speed and latency are sacrificed over the adaptive engine as previously discussed, but this solution does prove effective given hardware limitations seen in many legacy power systems.

FIG. **49** illustrates a method of adaptive control where mappings of the control laws are empirically derived. The method **4900** starts by setting one or more actuators controlling a power system to 0 (Block **4902**) in what will be called a boot up phase of the adaptive controller. A system output measurement, y_{meas}, is taken for the system controlled by the one or more actuators (Block **4903**), and this measurement is input to a mapping function (Block **4904**) to get a possible control, u_{se}, that corresponds to the measurement, y_{meas}. The mapping function can be related to and approximate the effects of a nonlinear model through empirical study of the power system. This possible control signal, u_{se}, is provided to the one or more actuators (Block **4906**), and is likely zero or below a zero threshold at least for a first few iterations of the boot up phase (Decision **4908**=No). If this version of the adaptive engine includes a single possible control signal, u_{se}, then $u_{se}=u_{out}$, or where multiple possible control signals, u_{se}, are provided from separate mapping functions, then the best u_{se} or a combines u_{se} can be the u_{out}. Another system output measurement, y_{meas}, is taken (Block **4903**), and again inputted to the mapping function (Block **4904**), which provides another possible control, u_{se}, that corresponds to the second measurement, y_{meas}, and that is provided to the one or more

actuators (Block **4906**). This portion of the boot up phase (Block **4903-4908**) loops until a possible control, u_{se}, greater than the zero threshold occurs (Decision **4908**=Yes), at which point the adaptive engine has reached an end of the boot up phase.

Adaptation can now begin following similar steps to those seen in earlier descriptions (e.g., see similarities between Adaptation phase and FIG. **7**). Control samples can be grouped into frames and a best linear approximation of the system behavior over the new frame can be selected (Block **4910**)—in other words, a structure of a time-varying linear system, W_m, can be selected for the first frame (Block **4910**). This structure can be calculated in a frame resynthesizer or accessed from an empirically-derived lookup table. Another system output measurement, y_{meas}, can be taken (Block **4912**), but this time the measurement can be used in an estimation law module as previously discussed (Block **4914**). In particular the estimation law module can estimate an estimated model parameter tensor, θ, for every control sample of a nonlinear model, where this estimation is at least a function of the system output measurement, y_{meas}, and an input regressor, Ø. The input regressor, Ø, for this first iteration of the Adaptation phase may include a reference signal, r, and the last control from the boot up phase, u_{out}. In subsequent iterations, Ø, may include additional components such as y_{est_se}. The estimating can be based on an estimation law that is a function of an estimated error, ê, or cost function, J. The estimated model parameter tensor, θ, comprises estimated parameters of the nonlinear model such as, but not limited to, r, y_{meas}, y_{est_se}, and u_{out}. These θ values can be elements within the A, B, and C matrices of a system of equations underlying the time-varying linear system, W_m, which is used in the nonlinear model, and in particular, in an estimation portion of the nonlinear model. The estimated model parameter tensor, θ, can be input to the mapping function used in the boot up phase, and via a different mapping in the mapping function, a possible control signal, u_{se} can be extracted from the mapping function based on the θ input (Block **4916**). In other words, the mapping function can have two operations or two sets of mappings: (1) a first that gives u_{se} in terms of y_{meas}, and (2) a second that gives u_{se} in terms of θ. The adaptive engine can then provide the possible control signal, u_{se}, to an estimation portion of the nonlinear model to generate an estimated system output, y_{est_se}(Block **4918**) estimated to result if the possible control signal, u_{se}, is provided to the one or more actuators. The estimation portion of the nonlinear model uses the structure for the time-varying linear system, W_m, selected for the current frame with u_{se} and θ as inputs. Alternatively, an additional realm of the mapping function can give the estimated system output, y_{est_se}, based on an input of the possible control signal, u_{se} (Block **5018** in FIG. **50**). If used, the estimation portion of the nonlinear model is also a function of the estimated model parameter tensor, θ. In some embodiments, the estimation portion of the nonlinear model can be implemented in the estimation law module, though this processing location is not limiting.

The mapping function can also provide the possible control signal, u_{se}, to the one or more actuators (Block **4920**) as the control, u_{out}, assuming no other possible control signals, u_{se}, for this control sample or iteration, are provided by the mapping function or another mapping function. If another possible control signal, u_{se}, is provided (this variation is not shown, but will be familiar from previous discussions of the adaptive engine), the method **4900** can select (1) a best possible control signal, u_{se}, from a set including the possible control signal, u_{se}, from the first mapping function, and additional possible control signals, u_{se}, or (2) a best combination of possible control signals, u_{se}, blended from two or more of the set. The blending can be based on a topology that can include averaging, multiplication, summations, differences, divisions, integrals, derivatives, exponentials, complex functions, logarithms, series, statistical distributions, matrices, tensors, neural networks, nonlinear functions, graphs, maps, transformations, trees, to name a few non-limiting examples, or combinations thereof. The topology can be selected based on a total estimated system output, y_{est_out}, for each of multiple possible topologies, and then based on comparing this total estimated system output, y_{est_out}, to the reference signal, r, the measured system output, y_{meas}, or a combination of these (referred to as estimated system error, $\hat{e}_{out}$). For instance, a specific example using all three of these values is shown in Equation 4, where a cost function, J_{out} of two errors is used. This selection and/or blending can be performed by a selector module, such as the selector modules **508**.

If the current frame has not ended (Decision **4922**=No), then the adaptation of the estimated model parameter tensor, θ, (Blocks **4912-4922**) repeat for all iterations or control samples in the frame (until Decision **4922**=Yes). This adaptation leaves the linear approximation (or structure of the time-varying linear system, W_m) constant through the frame, but adapts the estimated model parameter tensor, θ, at each control sample or iteration in the frame until the bifurcated nonlinear model converges on the system's nonlinear behavior.

At the end of each frame (Decision **4922**=Yes), a new linear approximation (structure of the time-varying linear system, W_m) is calculated or accessed (Block **4910**), and adaptation of the estimated model parameter tensor, θ, again restarts from the baseline of the linear approximation until convergence on the nonlinear system behavior is achieved. The final estimated model parameter tensor, θ, in each frame can be stored along with a mapping to the frame and the structure of the time-varying linear system, W_m, such that these values can be recalled should the reference signal, r, underlying the frame be seen again.

As seen, this alternative adaptive engine operates similarly to those shown in previous aspects of this disclosure, but with a unique boot up phase and unique use of a mapping function rather than the control law module to determine the possible control signal, u_{se}, from the estimated model parameter tensor, θ. Further, FIG. **50** shows another alternative where the mapping function also determines the estimated system output, y_{est_se} based at least on the possible control signal, u_{se}, also found from the mapping function.

In the above description the possible control signal, u_{se}, is effectively the control, u_{out}, previously discussed, since it is provided directly to the actuators. However, in other embodiments, the adaptive engine can include multiple estimation law modules each producing their own estimated model parameter tensors, θ, that can all be fed into the mapping function to produce different possible control signals, u_{se}, and then a selector module can select a best of these possible control signals, u_{se}, or a best combination or blending of two or more of these possible control signals, u_{se}, as the control, u_{out}. In another alternative, multiple estimation law modules can feed multiple mapping functions, each mapping function approximating different ones of the control laws discussed previously, and again, a selector module can select a one or combination of possible control signals, u_{se}, as the control, u_{out}. Where multiple possible control signals, u_{se}, come into play, the estimated system outputs, y_{est_se}, corresponding to each of these, can

be used in the selector module to select the one or a combination of the possible control signals, u_{se}, as the control, u_{out}.

The estimation law module can use any number of estimation laws, such as, but not limited to, Estimation Laws 1-7 previously discussed, though they typically are a function of the estimation error, ê, which can be based on a difference between two or more of r, y_{meas}, and y_{est_se}. The estimation laws are also typically a function of the input regressor, Ø. Some estimation laws may include an adaptation gain, that controls an influence that adaptation has on the control, u_{out}.

Where a single estimation law module and a single mapping function are used, and rather than apply u_{se} as the u_{out}, a string of multiple u_{se} can be combined, for instance in an average, to produce a control u_{out} at each control sample or iteration.

FIGS. **51-53** illustrate components of an adaptive engine implementing a mapping function to enable the adaptive engine to operate on legacy hardware that may have limited processing resources. For instance, where the FPGA previously discussed as processing the control laws (or control portion of the nonlinear model) is not available or has insufficient processing power to perform these functions, FIGS. **51-53** may provide a strong alternative. For instance, FIG. **50** illustrates the mapping function **5002**A as used during the boot up phase discussed relative to FIGS. **49** and **50**. In particular, the mapping function **5002**A can provide a possible control signal, u_{se}, based on a system output measurement of the one or more actuators or a power system controlled by the one or more actuators. This means of generating the possible control signal, u_{se}, which may be provided to the one or more actuators as the control, u_{out}, can be repeated until the possible control signal, u_{se}, exceeds a zero threshold. The mapping function **5002**A can be related to a nonlinear model via an empirical study of the power system. A separate region of the mapping function **5002**B can then operate as part of a larger adaptive engine as shown in FIG. **52** or **53**. Alternatively, the mapping function **5002**B shown in FIGS. **52** and **53** can be a distinct mapping function from the one shown in FIG. **51**. The mapping functions **5002**B and **5002**C can also be related to the nonlinear model via an empirical study of the power system. As seen, these two regions of the mapping function or distinct mapping functions have distinct operation: the first provides u_{se} in terms of y_{meas} and the second provides u_{se} in terms of θ. Where the possible control signal, u_{se}, is provided directly to the one or more actuators, or combined in a string of possible control signals, u_{se}, from the mapping function **5002**B, the estimation portion **808** may not be needed. The estimation portion **808** produces the estimated system output, y_{est_se}, corresponding to each possible control signal, u_{se}, and this output has two functions: (1) to help a selector module in selecting a best or a best combination of possible control signals, u_{se}, as the control, u_{out}; and (2) to aid in calculating an estimation error, ê. However, where a selector module is not needed because the possible control signal, u_{se}, is provided directly to the one or more actuators, and where the estimation error, ê, is found using a form that does not use y_{est_se} (e.g., instead using $|y_{meas}-r|$), then the estimation portion **808** may be superfluous and can be excluded. Similarly, the mapping function **5002**C in FIG. **53** can also be optional for these same reasons.

Aside from the mapping function **5002**B, FIG. **52** operates as described in FIG. **8**A, and thus reference can be made to that figure and the corresponding description for an appreciation of the remainder of FIG. **52**. The alternative shown in FIG. **53** is also very similar to FIG. **8**A, but here replaces the estimation portion **808** of the nonlinear model with an additional region of the mapping function **5002**C (or a distinct mapping function). This mapping function **5002**C provides an estimated system output, y_{est_se}, corresponding to a possible control signal, u_{se}, based on inputs that include the estimated model parameter tensor, θ, the structure of the time-varying linear system, W_m, and optionally the input regressor, Ø. The specific inputs used depend on the form of the nonlinear model being used.

Although FIGS. **51-53** do not use a control law module, the mapping function **5002**A, **5002**B, and optionally **5002**C can still be developed to implement a control law. In fact, the mapping functions **5002**A, **5002**B, and optionally **5002**C can produce virtually the same possible control signals, u_{se}, as the control law modules or sub-engines described earlier in this disclosure, including the TLMC, TARC, L1, Adaptive PID, ATIMC, and ATFC. Admittedly, speed and other parameters will be sacrificed by implementing the control laws in the mapping functions as compared to the control law modules previously described. However, where hardware is limiting, the solutions provided in FIGS. **49-53** still provide a worthy improvement over existing adaptive controllers.

The methods described in connection with the embodiments disclosed herein may be embodied directly in hardware, in processor-executable code encoded in a non-transitory tangible processor readable storage medium, or in a combination of the two. Referring to FIG. **48** for example, shown is a block diagram depicting physical components that may be utilized to realize the adaptive engine according to an exemplary embodiment. As shown, in this embodiment a display portion **4812** and nonvolatile memory **4820** are coupled to a bus **4822** that is also coupled to random access memory ("RAM") **4824**, a processing portion (which includes N processing components) **4826**, an optional field programmable gate array (FPGA) **4827**, and a transceiver component **4828** that includes N transceivers. Although the components depicted in FIG. **48** represent physical components, FIG. **48** is not intended to be a detailed hardware diagram; thus many of the components depicted in FIG. **48** may be realized by common constructs or distributed among additional physical components. Moreover, it is contemplated that other existing and yet-to-be developed physical components and architectures may be utilized to implement the functional components described with reference to FIG. **48**. For instance, while the RAM **4824** may take the form of a TSP-RAM in some instances, other forms of RAM can also be implemented. Further, while the frame resynthesizer may be implemented in the processing portion **4826** (e.g., a CPU) due to hardware limitations in today's FPGAs, future FPGAs or similar-type resources may be able to perform both the functions of the frame resynthesizer, estimation law modules, control law modules, selector module, and the control and estimation portions of the nonlinear model. For instance, future neural networks or quantum computing may enable a neural-network enabled processor or quantum computer to perform all processes of the adaptive engine without splitting functionality between different processing resources. With existing hardware, the processing portion **4826** is likely to process frames and the structure of the time-varying linear system, W_m, and possibly the estimated model parameter tensor, θ, while the FPGA **4827** is like to process the control law modules, the control and estimation portions of the nonlinear model, and the selector module (and in some cases may take on estimation of the estimated model parameter tensor, θ, too).

This display portion **4812** generally operates to provide a user interface for a user, and in several implementations, the display is realized by a touchscreen display. In general, the nonvolatile memory **4820** is non-transitory memory that functions to store (e.g., persistently store) data and processor-executable code (including executable code that is associated with effectuating the methods described herein). In some embodiments for example, the nonvolatile memory **4820** includes bootloader code, operating system code, file system code, and non-transitory processor-executable code to facilitate the execution of methods described with reference to FIGS. **7**, **9**, **32**, **47**, and **49** described further herein. For instance, the non-transitory processor-executable code could facilitate execution of steps used to carry out adaptation of the nonlinear model including steps for identifying frames, selecting a structure of W_m at each frame, and adapting θ at each control sample to produce a control u_{out} that is tailored to specific operating regimes and instability challenges.

In many implementations, the nonvolatile memory **4820** is realized by flash memory (e.g., NAND or ONENAND memory), but it is contemplated that other memory types may be utilized as well. Although it may be possible to execute the code from the nonvolatile memory **4820**, the executable code in the nonvolatile memory is typically loaded into RAM **4824** and executed by one or more of the N processing components in the processing portion **4826**.

The N processing components in connection with RAM **4824** generally operate to execute the instructions stored in nonvolatile memory **4820** to enable adaptation. For example, non-transitory, processor-executable code to effectuate the methods described with reference to FIGS. **7**, **9**, **32**, **47**, and **49** may be persistently stored in nonvolatile memory **4820** and executed by the N processing components in connection with RAM **4824**. As one of ordinarily skill in the art will appreciate, the processing portion **4826** may include a video processor, digital signal processor (DSP), microcontroller, graphics processing unit (GPU), or other hardware processing components or combinations of hardware and software processing components (e.g., an FPGA or an FPGA including digital logic processing portions).

In addition, or in the alternative, the processing portion **4826** may be configured to effectuate one or more aspects of the methodologies described herein (e.g., the methods described with reference to FIGS. **7**, **9**, **32**, **47**, and **49**). For example, non-transitory processor-readable instructions may be stored in the nonvolatile memory **4820** or in RAM **4824** and when executed on the processing portion **4826**, cause the processing portion **4826** to perform adaptation using a bifurcated nonlinear model. Alternatively, non-transitory FPGA-configuration-instructions may be persistently stored in nonvolatile memory **4820** and accessed by the processing portion **4826** (e.g., during boot up) to configure the hardware-configurable portions of the processing portion **4826** to effectuate the functions of the adaptive engine.

The input component **4830** operates to receive signals (e.g., the reference signal, r) that are indicative of one or more aspects of a desired waveform or desired performance of the power system. The signals received at the input component may include, for example, setpoints or power delivery parameters or a plasma processing recipe. The output component generally operates to provide one or more analog or digital signals to effectuate an operational aspect of the adaptive engine. For example, the output portion **4832** may provide the control, u_{out}, to the one or more actuators.

The depicted transceiver component **4828** includes N transceiver chains, which may be used for communicating with external devices via wireless or wireline networks. Each of the N transceiver chains may represent a transceiver associated with a particular communication scheme (e.g., WiFi, Ethernet, Profibus, etc.).

Some portions are presented in terms of algorithms or symbolic representations of operations on data bits or binary digital signals stored within a computing system memory, such as a computer memory. These algorithmic descriptions or representations are examples of techniques used by those of ordinary skill in the data processing arts to convey the substance of their work to others skilled in the art. An algorithm is a self-consistent sequence of operations or similar processing leading to a desired result. In this context, operations or processing involves physical manipulation of physical quantities. Typically, although not necessarily, such quantities may take the form of electrical or magnetic signals capable of being stored, transferred, combined, compared or otherwise manipulated. It has proven convenient at times, principally for reasons of common usage, to refer to such signals as bits, data, values, elements, symbols, characters, terms, numbers, numerals or the like. It should be understood, however, that all of these and similar terms are to be associated with appropriate physical quantities and are merely convenient labels. Unless specifically stated otherwise, it is appreciated that throughout this specification discussions utilizing terms such as "processing," "computing," "calculating," "determining," and "identifying" or the like refer to actions or processes of a computing device, such as one or more computers or a similar electronic computing device or devices, that manipulate or transform data represented as physical electronic or magnetic quantities within memories, registers, or other information storage devices, transmission devices, or display devices of the computing platform.

The terms and expressions employed herein are used as terms and expressions of description and not of limitation, and there is no intention, in the use of such terms and expressions, of excluding any equivalents of the features shown and described or portions thereof. Each of the various elements disclosed herein may be achieved in a variety of manners. This disclosure should be understood to encompass each such variation, be it a variation of an embodiment of any apparatus embodiment, a method or process embodiment, or even merely a variation of any element of these. Particularly, it should be understood that the words for each element may be expressed by equivalent apparatus terms or method terms—even if only the function or result is the same. Such equivalent, broader, or even more generic terms should be considered to be encompassed in the description of each element or action. Such terms can be substituted where desired to make explicit the implicitly broad coverage to which this invention is entitled.

As but one example, it should be understood that all action may be expressed as a means for taking that action or as an element which causes that action. Similarly, each physical element disclosed should be understood to encompass a disclosure of the action which that physical element facilitates. Regarding this last aspect, by way of example only, the disclosure of a "protrusion" should be understood to encompass disclosure of the act of "protruding"—whether explicitly discussed or not—and, conversely, were there only disclosure of the act of "protruding", such a disclosure should be understood to encompass disclosure of a "protrusion". Such changes and alternative terms are to be understood to be explicitly included in the description.

As will be appreciated by one skilled in the art, aspects of the present invention may be embodied as a system, method or computer program product. Accordingly, aspects of the present invention may take the form of an entirely hardware embodiment, an entirely software embodiment (including firmware, resident software, micro-code, etc.) or an embodiment combining software and hardware aspects that may all generally be referred to herein as a "circuit," "module" or "system." Furthermore, aspects of the present invention may take the form of a computer program product embodied in one or more computer readable medium(s) having computer readable program code embodied thereon.

As used herein, the recitation of "at least one of A, B and C" is intended to mean "either A, B, C or any combination of A, B and C." The previous description of the disclosed embodiments is provided to enable any person skilled in the art to make or use the present disclosure. Various modifications to these embodiments will be readily apparent to those skilled in the art, and the generic principles defined herein may be applied to other embodiments without departing from the spirit or scope of the disclosure. Thus, the present disclosure is not intended to be limited to the embodiments shown herein but is to be accorded the widest scope consistent with the principles and novel features disclosed herein.

What is claimed is:

1. An adaptive engine configured to receive a series of reference signals and in response provide a control to one or more actuators controlling parameters of a plasma processing power system and/or a match network, the adaptive engine comprising: a processor; a memory storing instructions that, when executed by the processor, cause the adaptive engine to implement:

a nonlinear model of the one or more actuators, the plasma processing power system, and/or the match network controlled by the one or more actuators;

a plurality of estimation law modules each configured to estimate an estimated model parameter tensor, θ, for the nonlinear model, by seeking to minimize an estimation error, ê, or cost function, J, each calculated from a measured system output and one or more of (1) an estimated system output, and (2) a reference signal;

a plurality of control law sub-engines each configured to apply one of a plurality of control laws to the estimated parameter tensors, θ, to generate a possible control signal, u_{se}, for each of the estimated parameter tensors, θ, wherein the adaptive engine performs multiple iterations, each iteration comprising estimating the estimated model parameter tensor and generating the possible control signal;

the plurality of estimation law modules or the plurality of control law sub-engines configured to apply the nonlinear model to the possible control signal, u_{se}, from a current iteration or a previous iteration, and corresponding ones of the estimated parameter tensors, θ, to estimate estimated system outputs, y_{est_se}; and

a selector module configured to:

calculate an estimated system error, $\hat{e}_{out}$, for each of the possible control signals, u_{se}, based on corresponding ones of the estimated system outputs, y_{est_se}, and select a one or combination of the possible control signals, u_{se}, associated with a smallest of the estimated system errors, $\hat{e}_{out}$, for controlling the one or more actuators;

wherein the one or more actuators are configured to, based on the selected one or a combination of the possible control signals, u_{se}, control power and/or frequency of the plasma processing power system.

2. The adaptive engine of claim **1**, wherein each of the estimation law modules applies an estimation law to an input regressor and the estimation error, ê, or cost function, J, to estimate the estimated model parameter tensor, θ.

3. The adaptive engine of claim **2**, wherein at least two estimation law modules apply two different estimation laws, and wherein one of the at least two estimation laws is a function of an adaptation gain and one of the at least two estimation laws is independent from the adaptation gain.

4. The adaptive engine of claim **1**, wherein the estimated model parameter tensor, θ, is part of A, B, and C matrices of a time-varying linear system that is part of the nonlinear model.

5. The adaptive engine of claim **4**, wherein the time-varying linear system is a strictly positive real matrix derived from Lyapunov equations.

6. The adaptive engine of claim **4**, wherein repeated estimations of the estimated model parameter tensor, θ, by each of the estimation law modules causes the nonlinear model to better approximate nonlinear behavior of the plasma processing power system and/or match network, while structures of the A, B, and C matrices of the time-varying linear system remain constant.

7. The adaptive engine of claim **4**, wherein structures of matrices of the time-varying linear system remain constant for all control samples of a frame.

8. The adaptive engine of claim **1**, wherein repeated estimations of the estimated model parameter tensor, θ, by each of the estimation law modules causes the nonlinear model to better approximate nonlinear behavior of the plasma processing power system and/or match network.

9. The adaptive engine of claim **1**, wherein the match network is arranged between the plasma processing power system and a plasma load.

10. An adaptive engine configured to receive a series of reference signals and in response provide a control to one or more actuators controlling parameters of a plasma processing power system and/or a match network, the adaptive engine comprising: a processor; a memory storing instructions that, when executed by the processor, cause the adaptive engine to implement:

a plurality of estimation law modules each configured to apply estimation laws to an input regressor, Ø, to produce estimated parameter tensors, θ, by minimizing an estimation error, ê, or cost function, J, each calculated from a measured system output and one or more of (1) an estimate system output, and (2) a reference signal;

a plurality of control law sub-engines each configured to apply one of a plurality of control laws to the estimated parameter tensors, θ, to generate possible control signals, u_{se}, wherein the adaptive engine performs multiple iterations, each iteration comprising producing the estimated parameter tensors and generating the possible control signals;

a nonlinear model of the one or more actuators, the plasma processing power system, and/or the match network controlled by the one or more actuators, the nonlinear model comprising a time-varying linear system, and wherein the nonlinear model is configured to calculate estimated system outputs, y_{est_se}, as a function of (1) the possible control signals, u_{se}, from a current iteration or a previous iteration, and (2) the estimated parameter tensors, θ; and

a selector module configured to select a control, u_{out}, as a best one, or best combination, of the possible control signals, u_{se}, based on the possible estimated system outputs, y_{est_se},

wherein the control, u_{out}, is provided to the one or more actuators and the one or more actuators, based on the control, u_{out}, are configured to control power and/or frequency of the plasma processing power system, and/or one or more components of the match network.

11. The adaptive engine of claim **10**, wherein each of the estimation law modules applies an estimation law to an input regressor, Ø and an estimation error, ê, or a cost function, J, to estimate the estimated model parameter tensor, θ.

12. The adaptive engine of claim **11**, wherein at least two estimation law modules apply two different estimation laws, and wherein one of the at least two estimation laws is a function of an adaptation gain and one of the at least two estimation laws is independent from the adaptation gain.

13. The adaptive engine of claim **10**, wherein the estimated model parameter tensor, θ, is part of A, B, and C matrices of a time-varying linear system that is part of the nonlinear model.

14. The adaptive engine of claim **13**, wherein the time-varying linear system is a strictly positive real matrix derived from Lyapunov equations.

15. The adaptive engine of claim **13**, wherein repeated estimations of the estimated model parameter tensor, θ, by each of the estimation law modules causes the nonlinear model to better approximate nonlinear behavior of the plasma processing power system and/or the match network, while structures of the A, B, and C matrices of the time-varying linear system remain constant.

16. The adaptive engine of claim **13**, wherein structures of matrices of the time-varying linear system remain constant for all control samples of a frame.

17. The adaptive engine of claim **10**, wherein repeated estimations of the estimated model parameter tensor, θ, by each of the estimation law modules causes the nonlinear model to better approximate nonlinear behavior of the plasma processing power system and/or the match network.

18. The adaptive engine of claim **10**, wherein the one or more actuators are a power and/or frequency of the plasma processing power system and/or components of the match network arranged between the plasma processing power system and a plasma load.

19. The adaptive engine of claim **10**, wherein the selector module finds an estimated system error, $\hat{e}_{out}$, for each of the possible control signals, u_{se}, and uses the estimated system error, $\hat{e}_{out}$, to select the control, u_{out}.

* * * * *