US 20250261943A1

(19) United States
(12) Patent Application Publication
Shelton, IV et al.
(10) Pub. No.: US 2025/0261943 A1
(43) Pub. Date: Aug. 21, 2025

(54) **SURGICAL TOOL COMPRISING A FIRING BEAM WITH AN ARM**

(71) Applicant: **Cilag GmbH International**, Zug (CH)

(72) Inventors: **Frederick E. Shelton, IV**, Hillsboro, OH (US); **Jerome R. Morgan**, Cincinnati, OH (US)

(21) Appl. No.: **19/029,025**

(22) Filed: **Jan. 17, 2025**

Related U.S. Application Data

(63) Continuation of application No. 18/659,609, filed on May 9, 2024, which is a continuation of application No. 17/032,279, filed on Sep. 25, 2020, now Pat. No. 12,059,154, which is a continuation of application No. 15/796,257, filed on Oct. 27, 2017, now Pat. No. 11,129,616, which is a continuation of application No. 14/725,181, filed on May 29, 2015, now Pat. No. 10,130,366, which is a continuation of application No. 13/118,241, filed on May 27, 2011, now Pat. No. 9,072,535.

Publication Classification

(51) **Int. Cl.**

A61B 17/10	(2006.01)
A61B 17/00	(2006.01)
A61B 17/068	(2006.01)
A61B 17/072	(2006.01)
A61B 34/00	(2016.01)
A61B 34/30	(2016.01)
A61B 34/35	(2016.01)
A61B 34/37	(2016.01)

(52) **U.S. Cl.**

CPC ***A61B 17/105*** (2013.01); ***A61B 17/068*** (2013.01); ***A61B 17/072*** (2013.01); ***A61B 17/07207*** (2013.01); ***A61B 34/30*** (2016.02); ***A61B 34/35*** (2016.02); ***A61B 34/37*** (2016.02); *A61B 2017/00115* (2013.01); *A61B 2017/00398* (2013.01); *A61B 2017/00473* (2013.01); *A61B 2017/00477* (2013.01); *A61B 2017/07214* (2013.01); *A61B 2017/07257* (2013.01); *A61B 2017/07271* (2013.01); *A61B 2017/07278* (2013.01); *A61B 2017/07285* (2013.01); *A61B 34/71* (2016.02); *A61B 34/76* (2016.02); *Y10T 29/53404* (2015.01); *Y10T 29/53417* (2015.01); *Y10T 29/53687* (2015.01)

(57) **ABSTRACT**

A surgical stapling instrument. Various embodiments include an actuation system for selectively generating a plurality of control motions. A surgical end effector is operably coupled to the actuation system. The actuation system interfaces with an actuation member configured to operably engage rotatable camming members to fire staples within the end effector into forming contact with an anvil portion of the end effector.

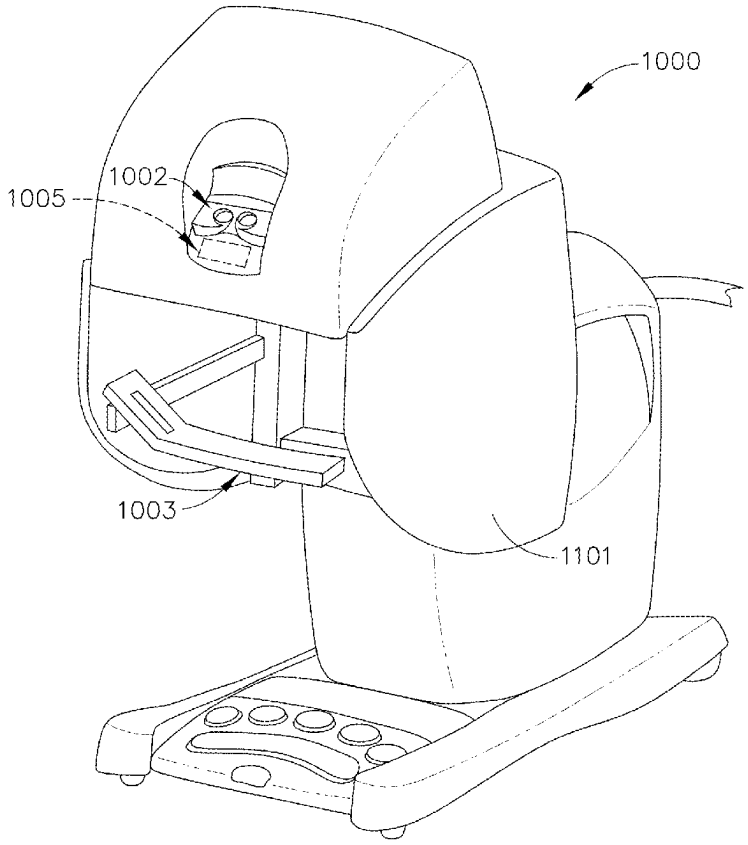

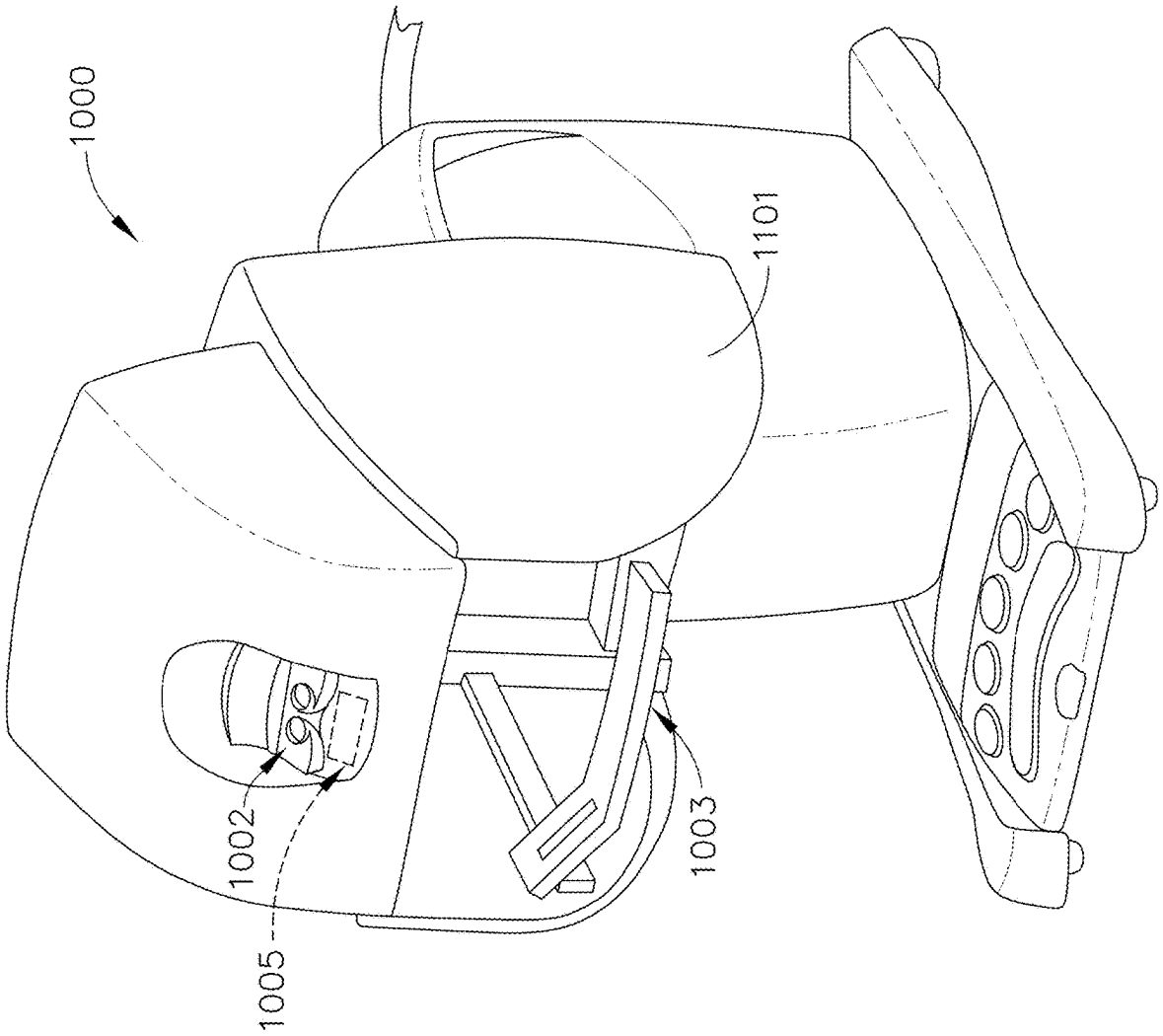

FIG. 1

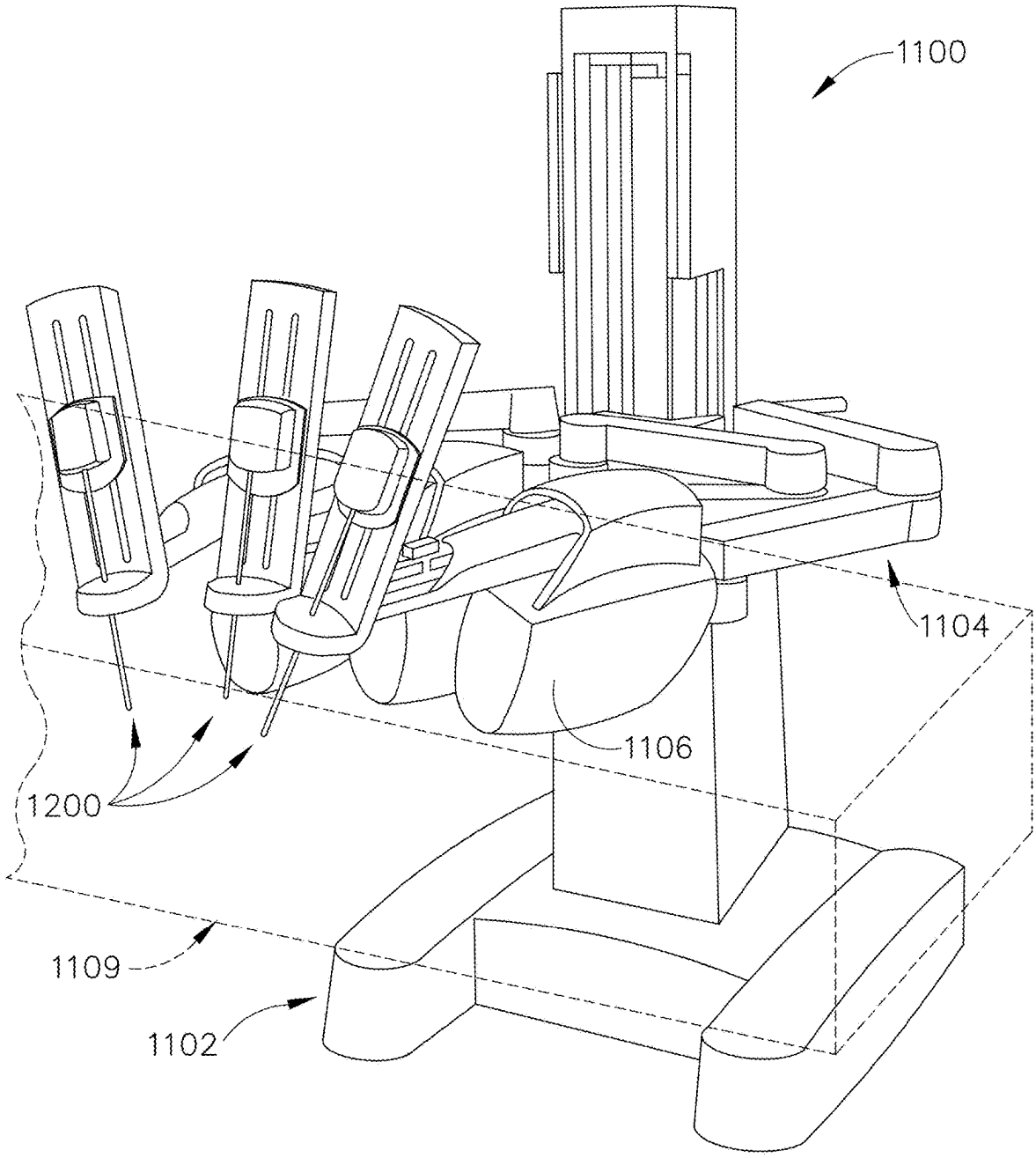

FIG. 2

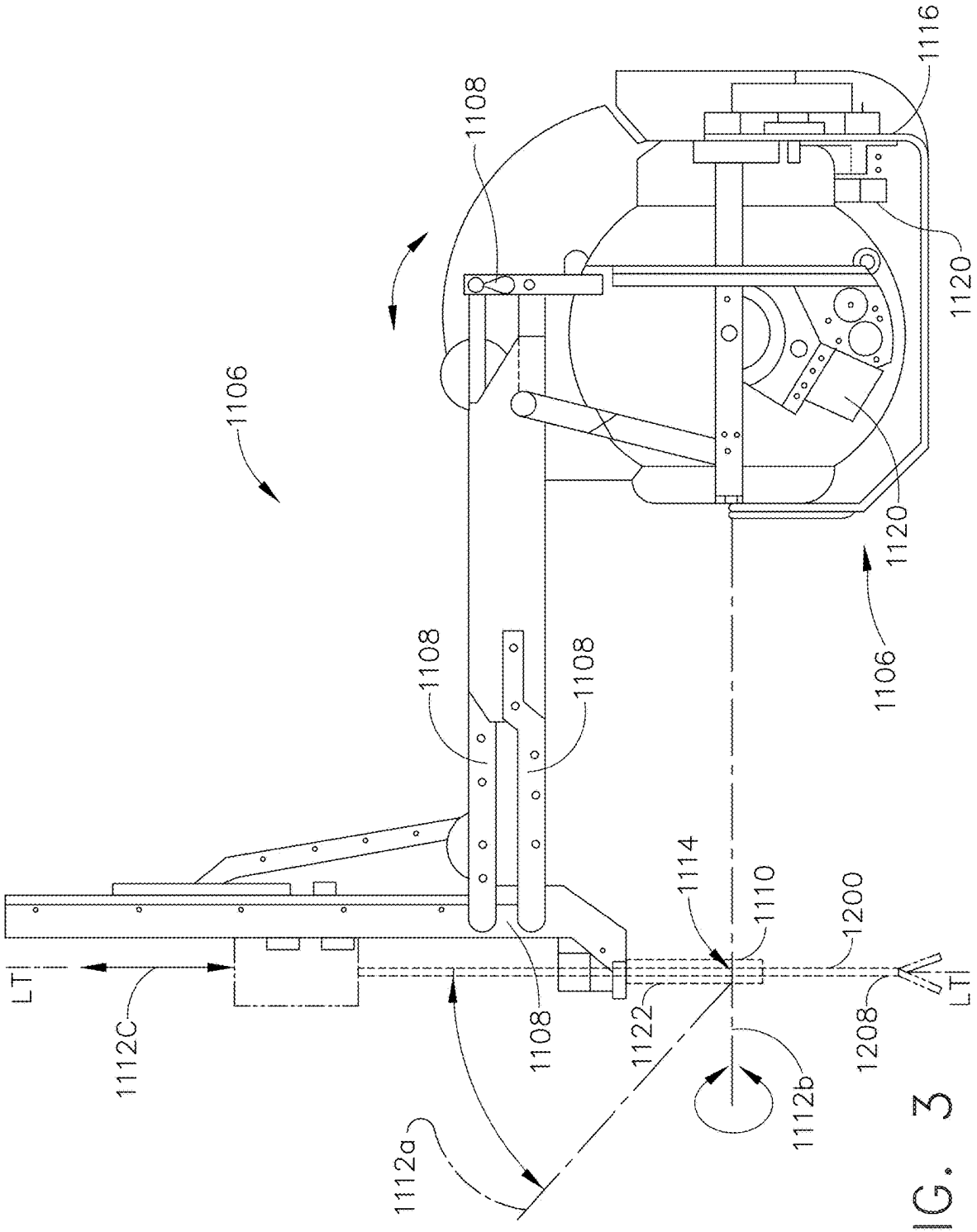
1106
1108
1108
1108
1108
1116
1120
1120
1106
1114
1110
1200
1122
1208
LT
LT
1112C
1112a
1112b

FIG. 3

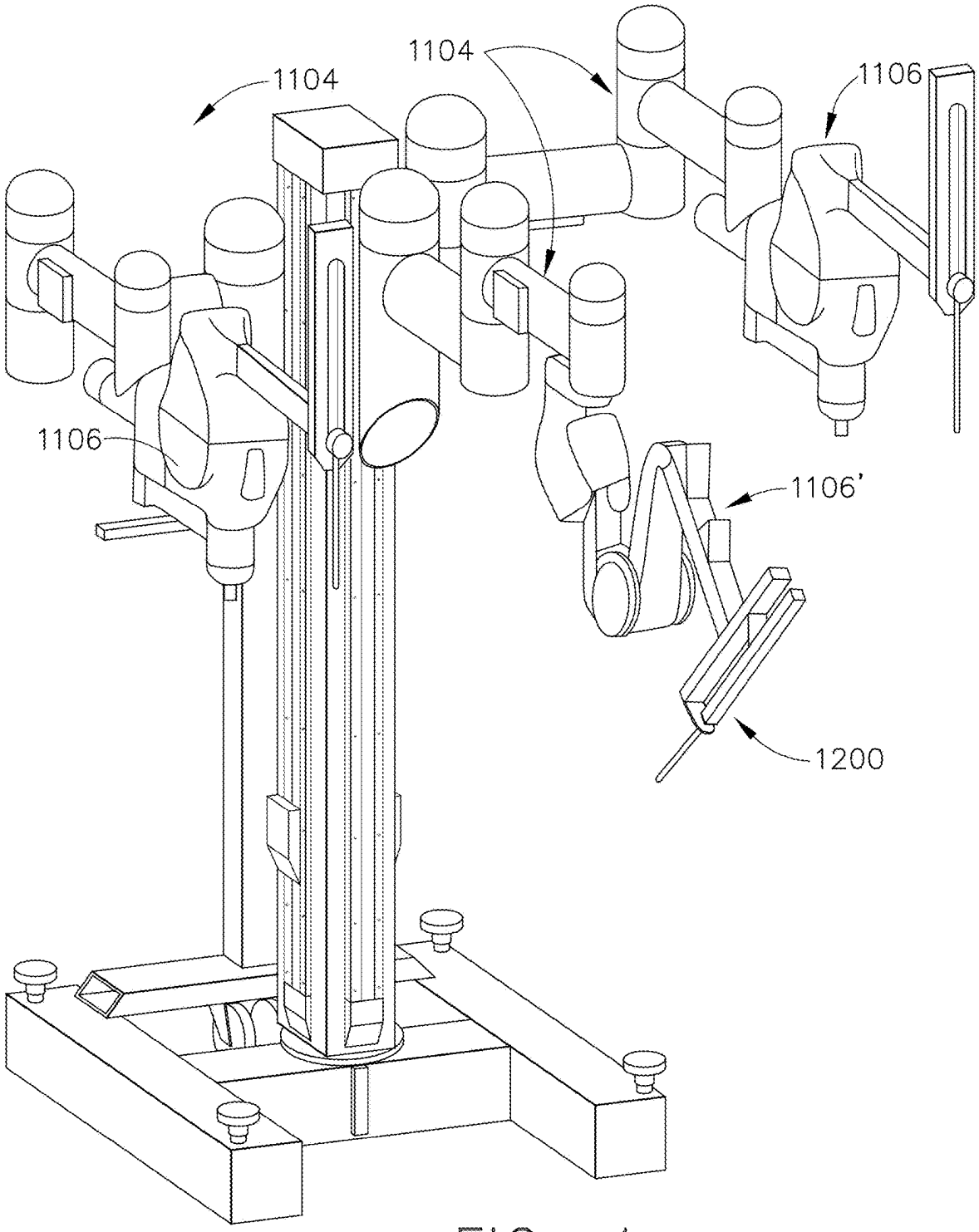

FIG. 4

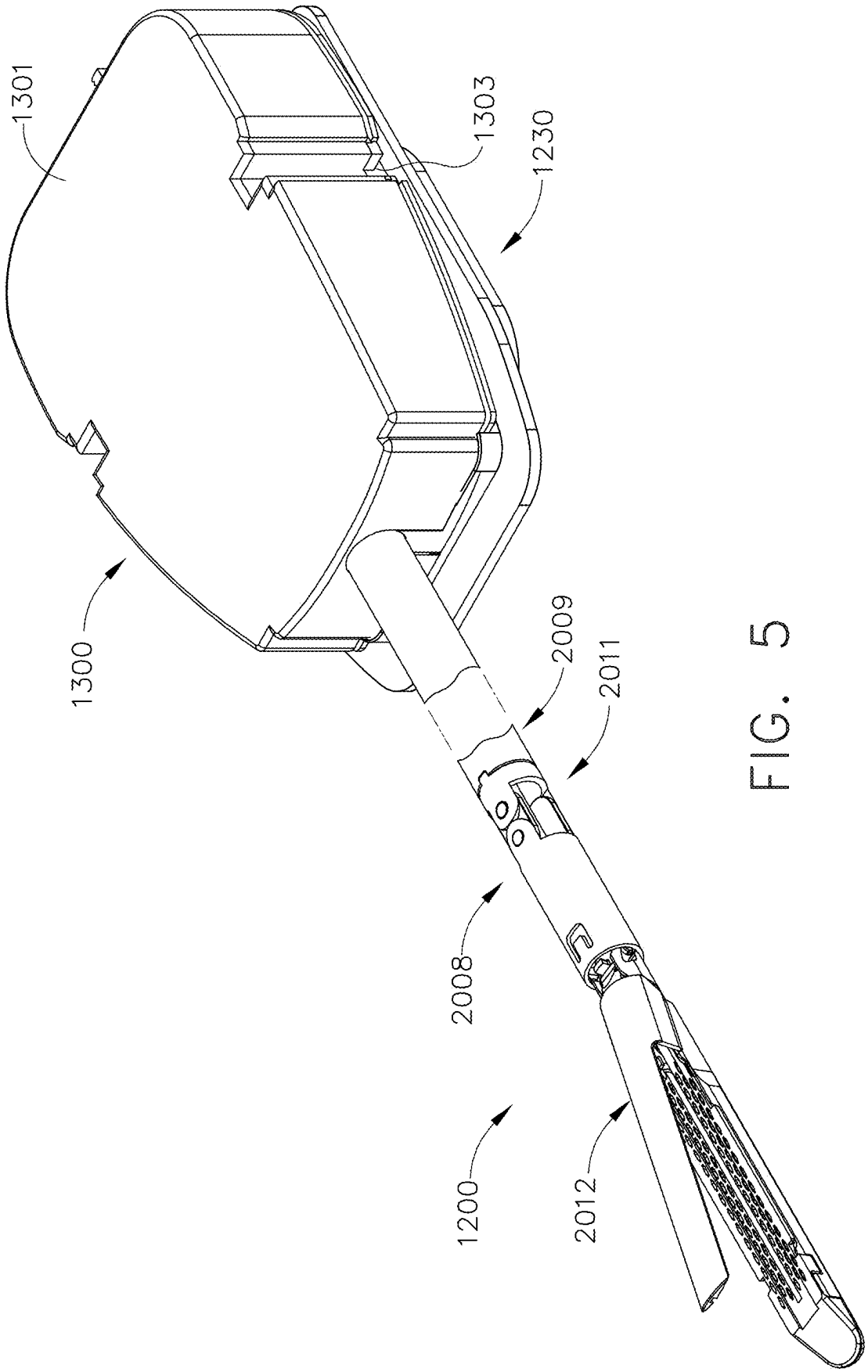

FIG. 5

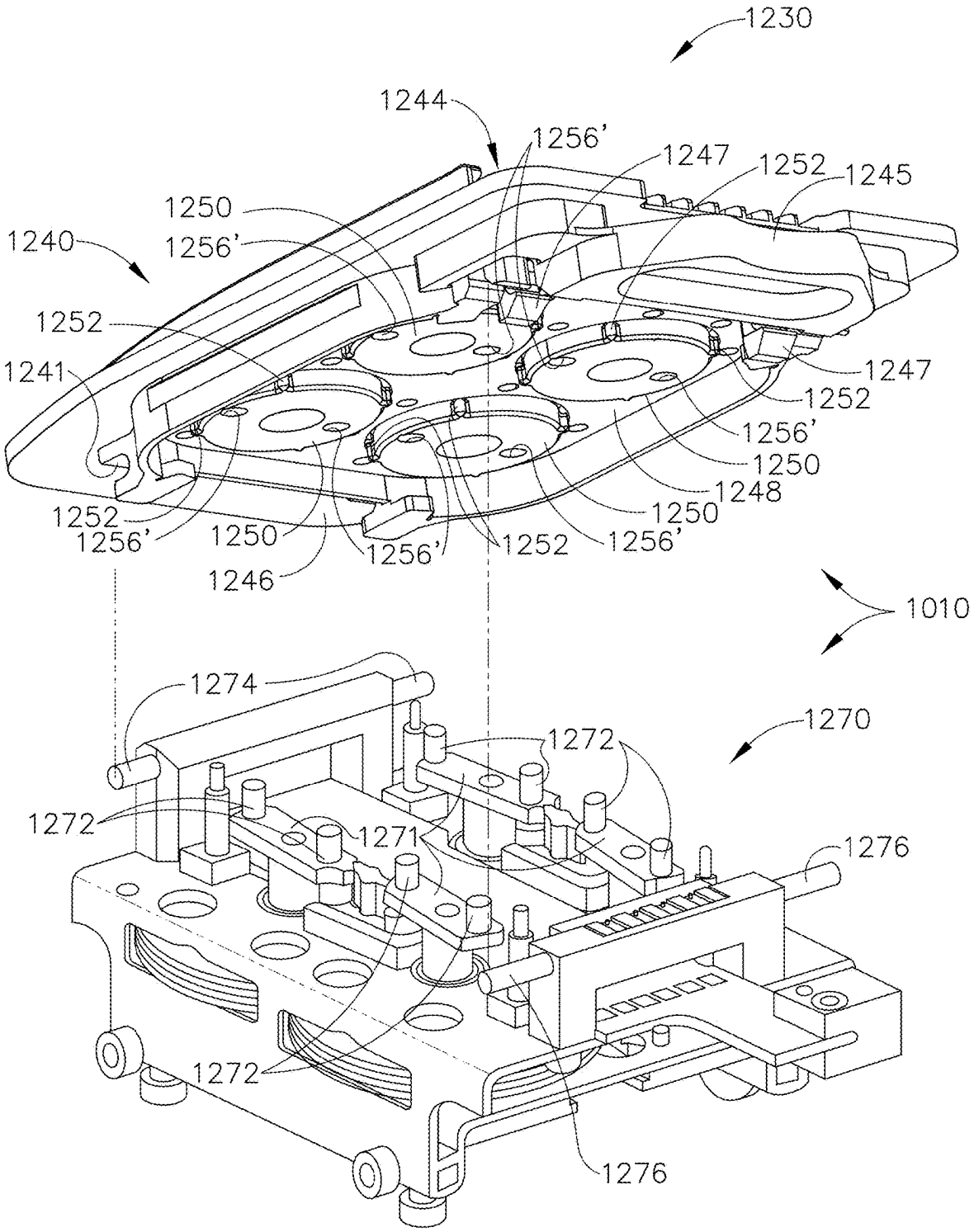
1230
1244
1256'
1247
1252
1245
1250
1240
1256'
1252
1241
1247
1252
1256'
1250
1248
1250
1252
1256'
1250
1256'
1252
1256'
1246
1010
1274
1270
1272
1272
1271
1276
1272
1276

FIG. 6

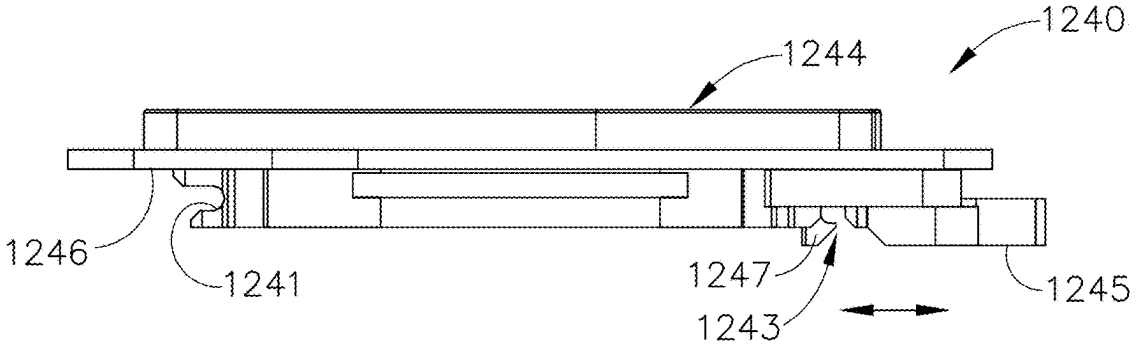
1240
1244
1246
1241
1247
1243
1245

FIG. 7

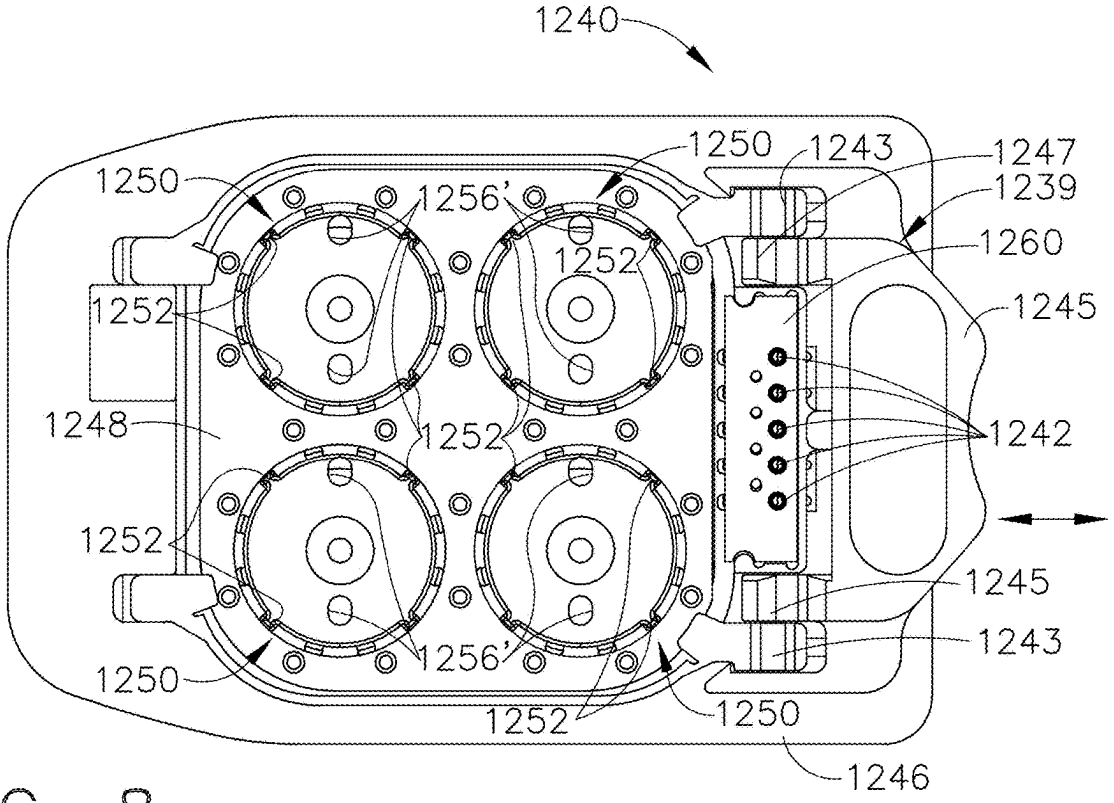
1240
1250
1243
1247
1239
1250
1256'
1260
1252
1252
1245
1248
1252
1242
1252
1245
1243
1250
1256'
1252
1250
1246

FIG. 8

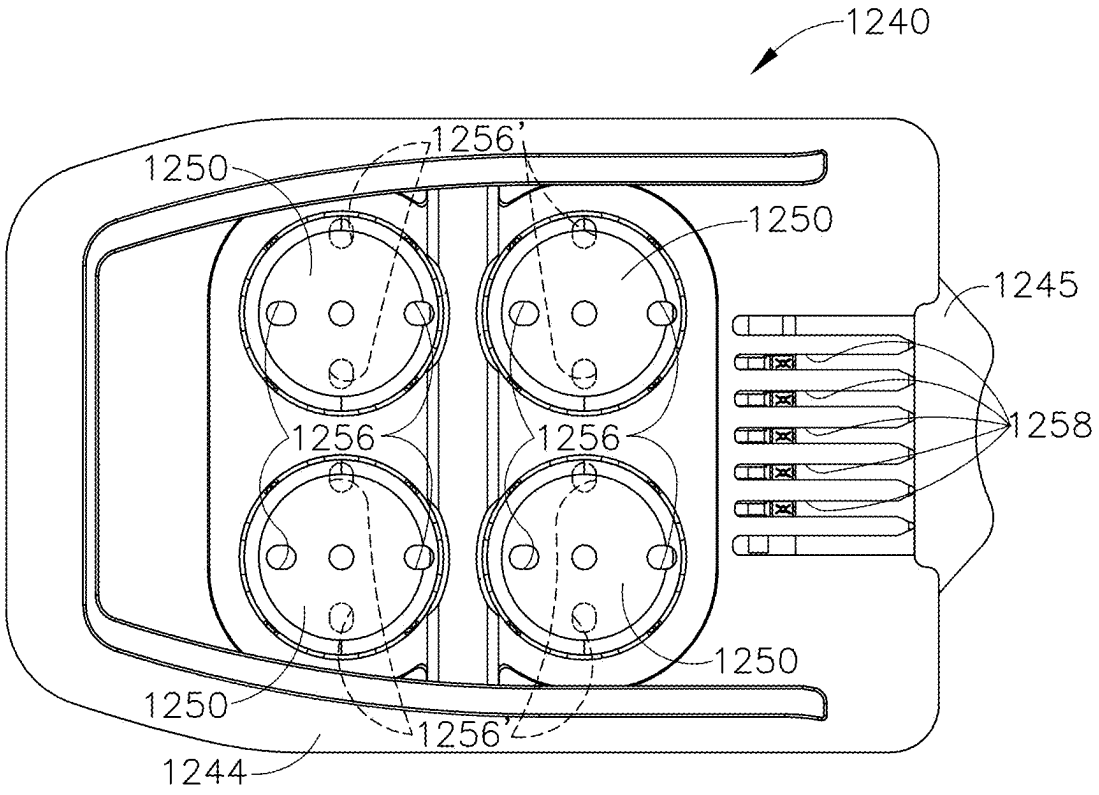

FIG. 9

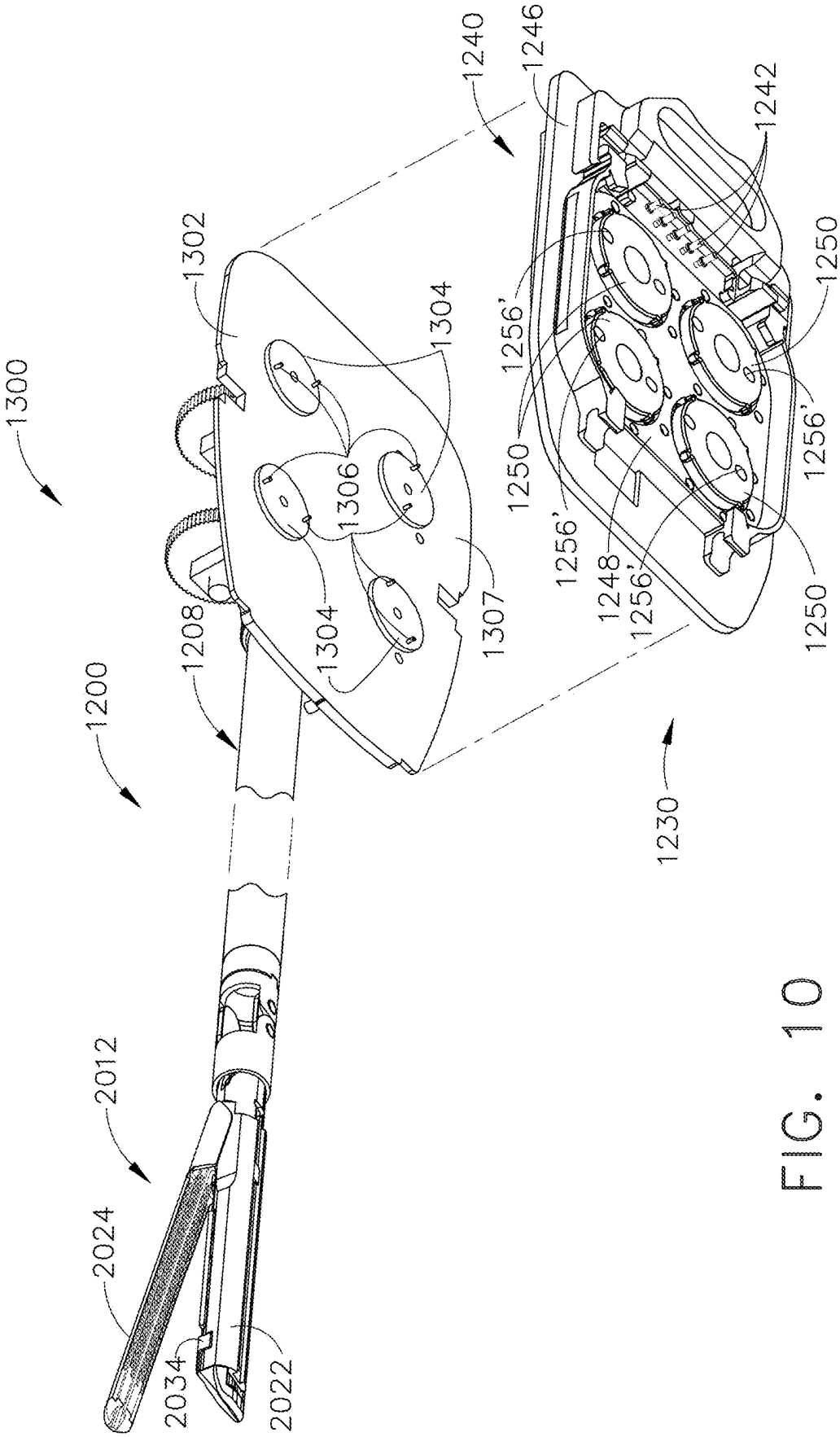
1300
1302
1304
1306
1304
1307
1208
1200
1240
1246
1242
1250
1256'
1250
1256'
1248
1256'
1250
1230
2012
2024
2034
2022

FIG. 10

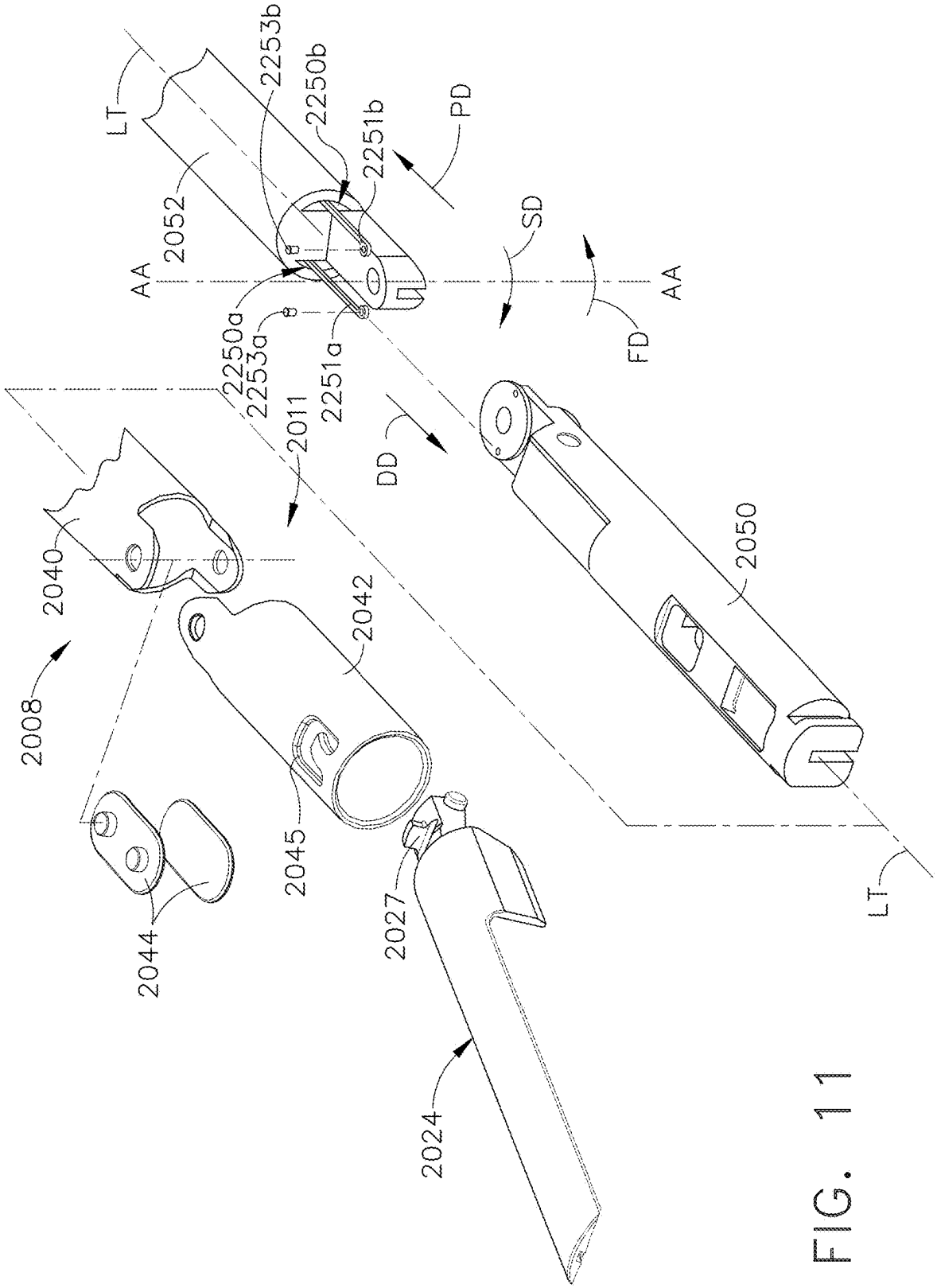
LT
2052
AA
2253b
2250b
2251b
PD
SD
AA
FD
2250a
2253a
2251a
2011
DD
2040
2008
2042
2050
2045
2044
2027
2024
LT

FIG. 11

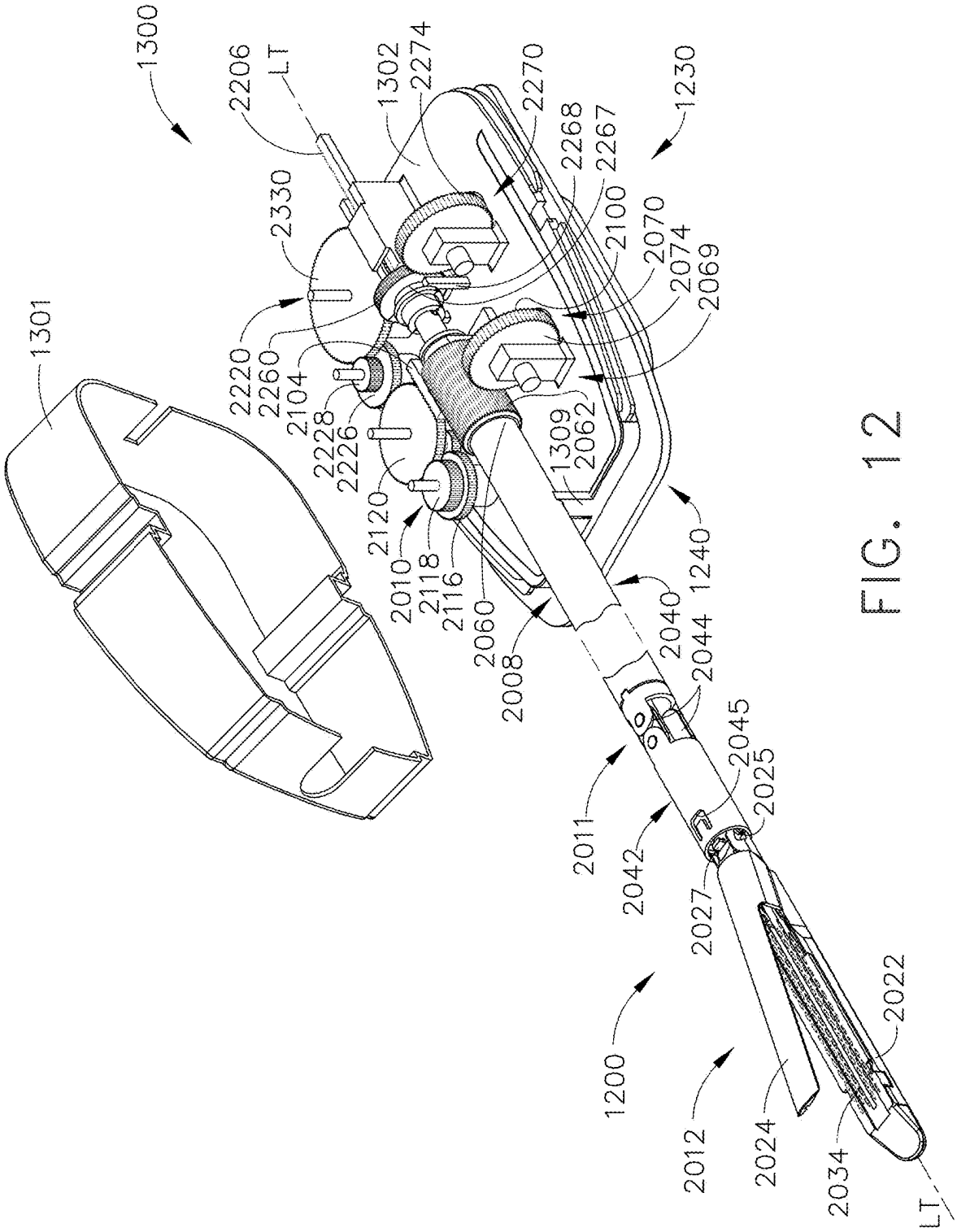
1300
2206
LT
1302
2274
2270
1230
2268
2267
2330
2100
2070
2074
2069
1301
2220
2260
2104
2228
2226
1309
2062
2120
2010
2118
2116
2060
2008
1240
2040
2044
2045
2025
2011
2042
2027
2022
1200
2012
2024
2034
LT

FIG. 12

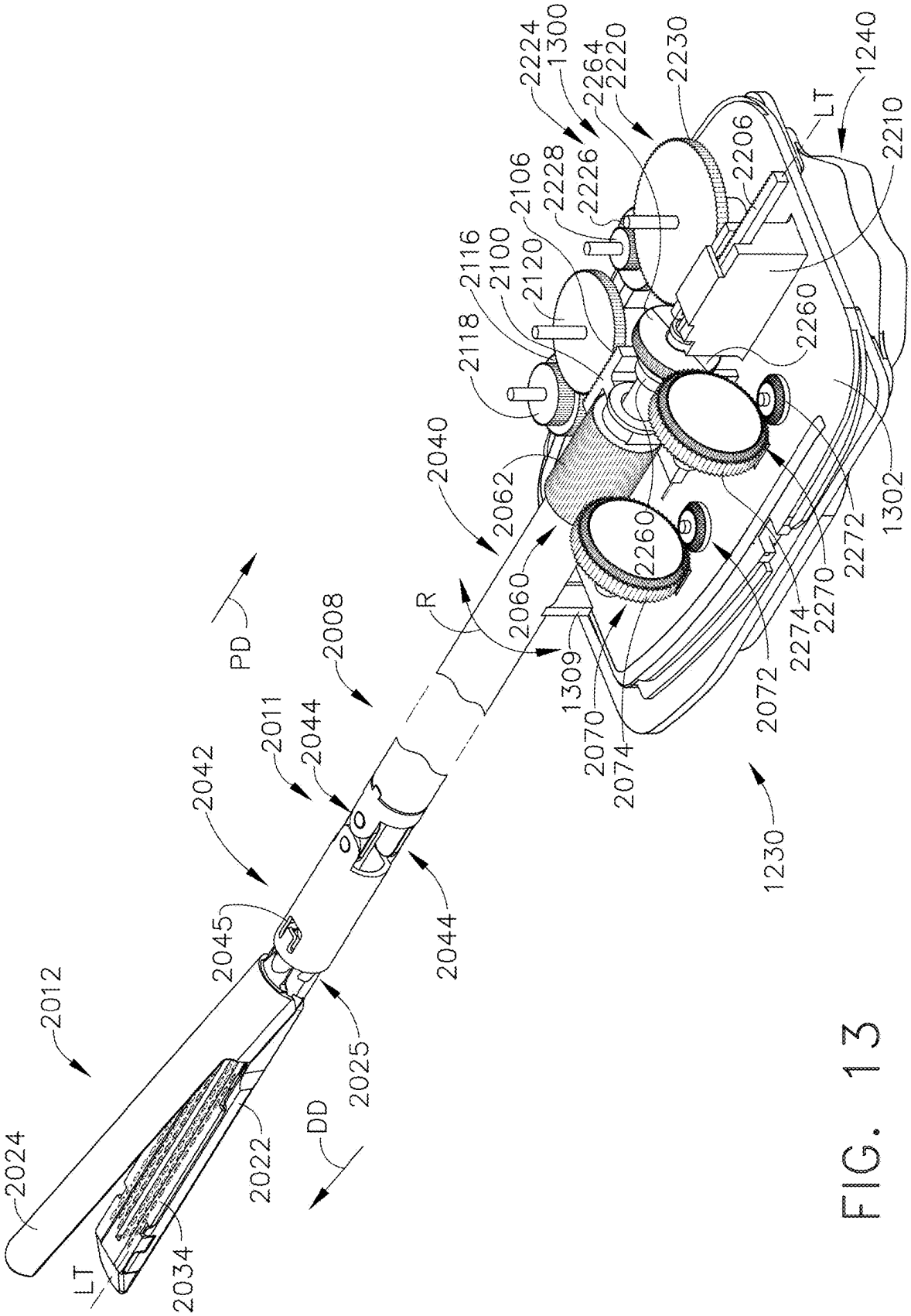
2024
2012
LT
2034
2022
DD
2025
2045
2042
2011
2044
2008
PD
2044
R
2040
2062
2060
2118
2116
2100
2120
2106
2228
2226
2224
1300
2264
2220
2230
2260
2260
1309
2070
2074
2206
LT
1240
2210
2272
2270
2274
2072
1302
1230

FIG. 13

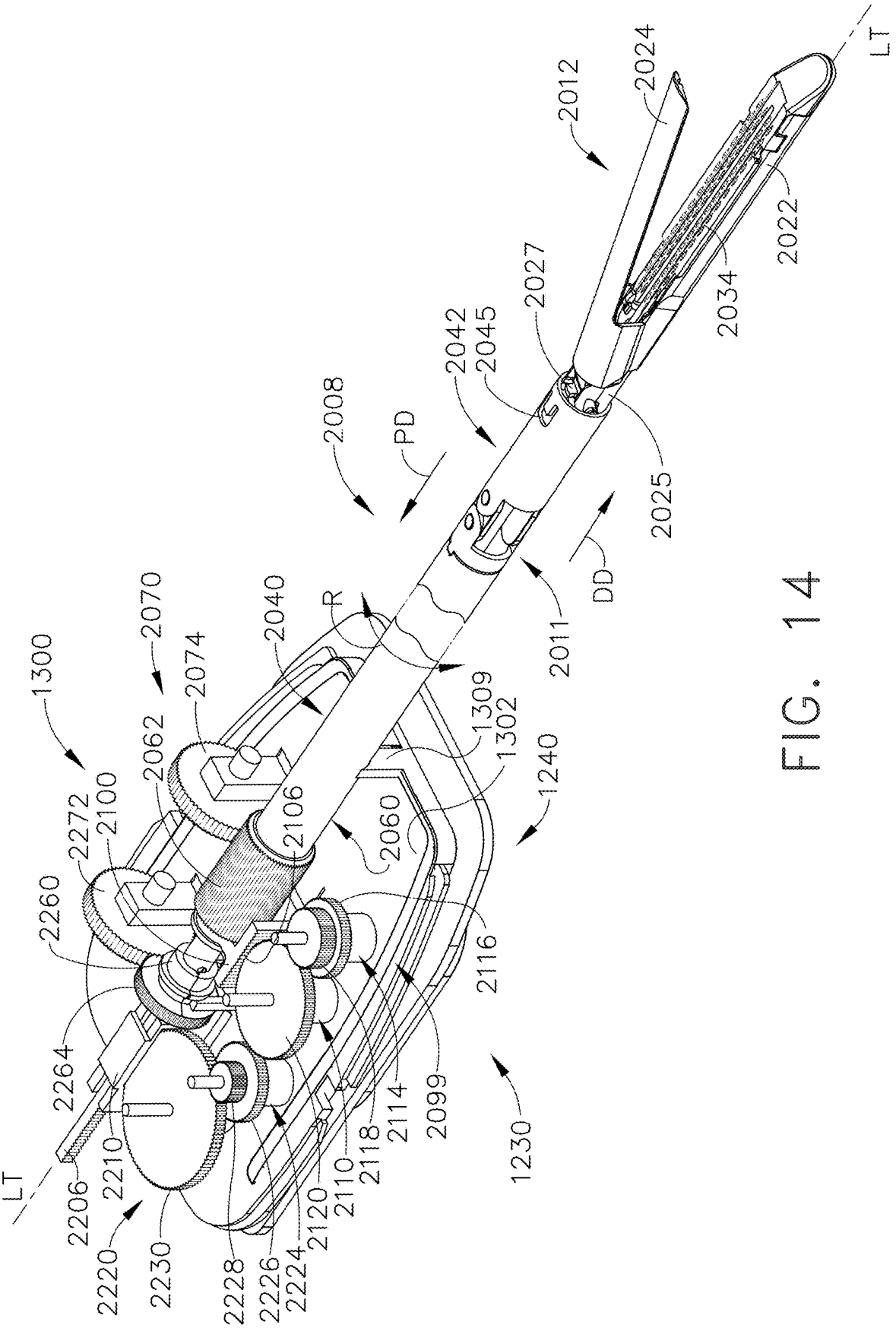
LT
2012
2024
2022
2034
2027
2042
2045
2025
2008
PD
DD
2011
2040
R
2070
2074
1300
2062
2100
2272
2260
2106
2060
1309
1302
1240
2116
2264
2210
2206
2220
2230
2228
2226
2224
2120
2110
2118
2114
2099
1230

FIG. 14

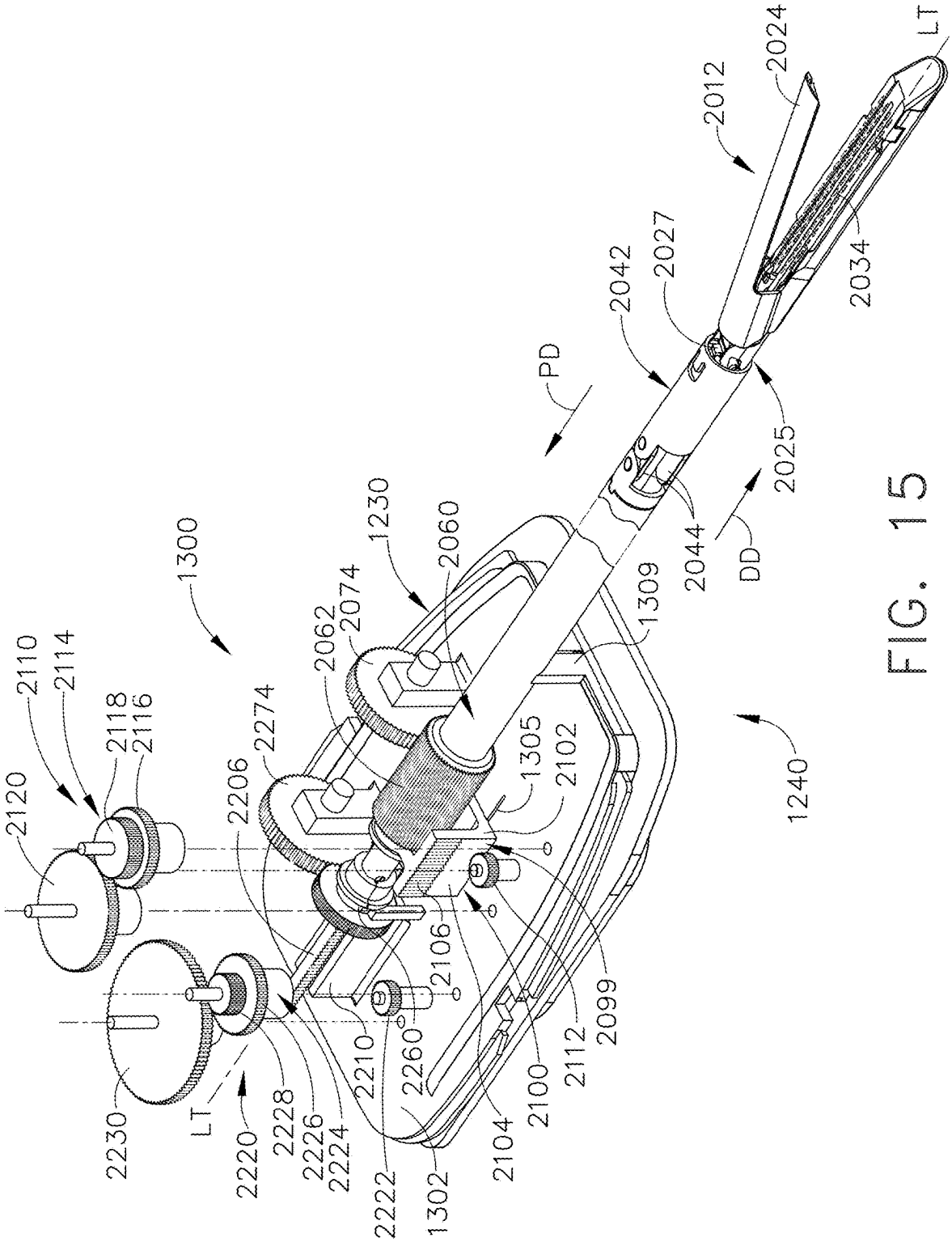
2120
2110
2114
2118
2116
2230
LT
2220
2228
2226
2224
2222
1302
2104
2100
2112
2099
2260
2210
2106
2206
2274
1300
2062
2074
1230
2060
1305
2102
1309
PD
2042
2027
2012
2024
LT
2034
2025
2044
DD
1240

FIG. 15

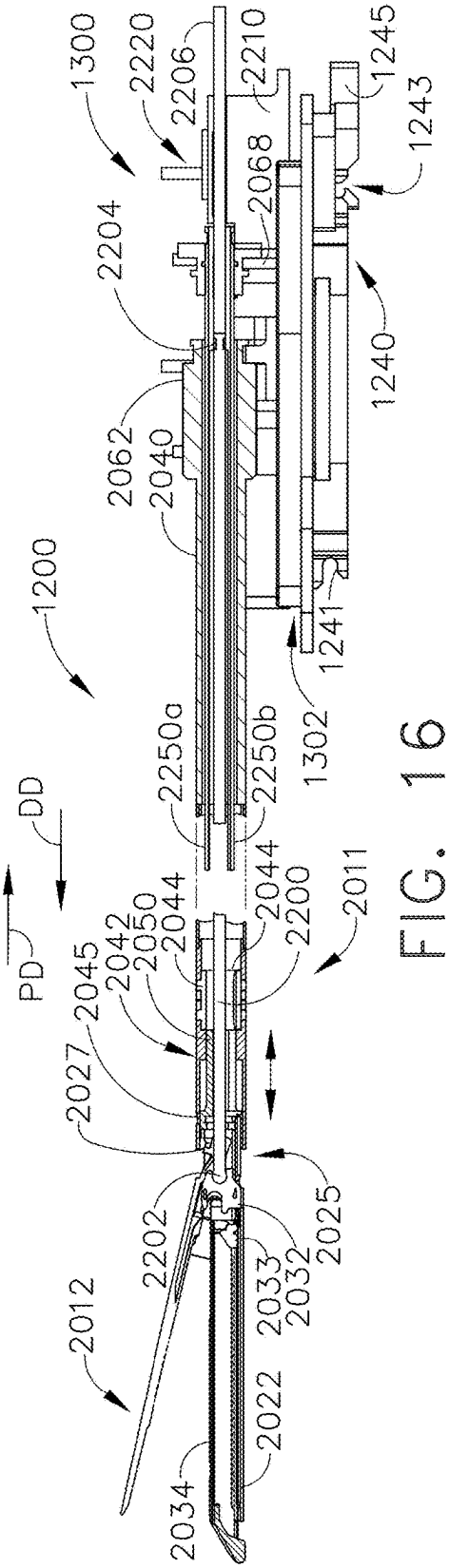
1300
2220
2206
2210
1245
1243
2068
2204
1240
2062
2040
1200
1241
1302
2250a
2250b
DD
PD
2044
2200
2011
2042
2050
2045
2027
2025
2202
2033
2032
2012
2022
2034

FIG. 16

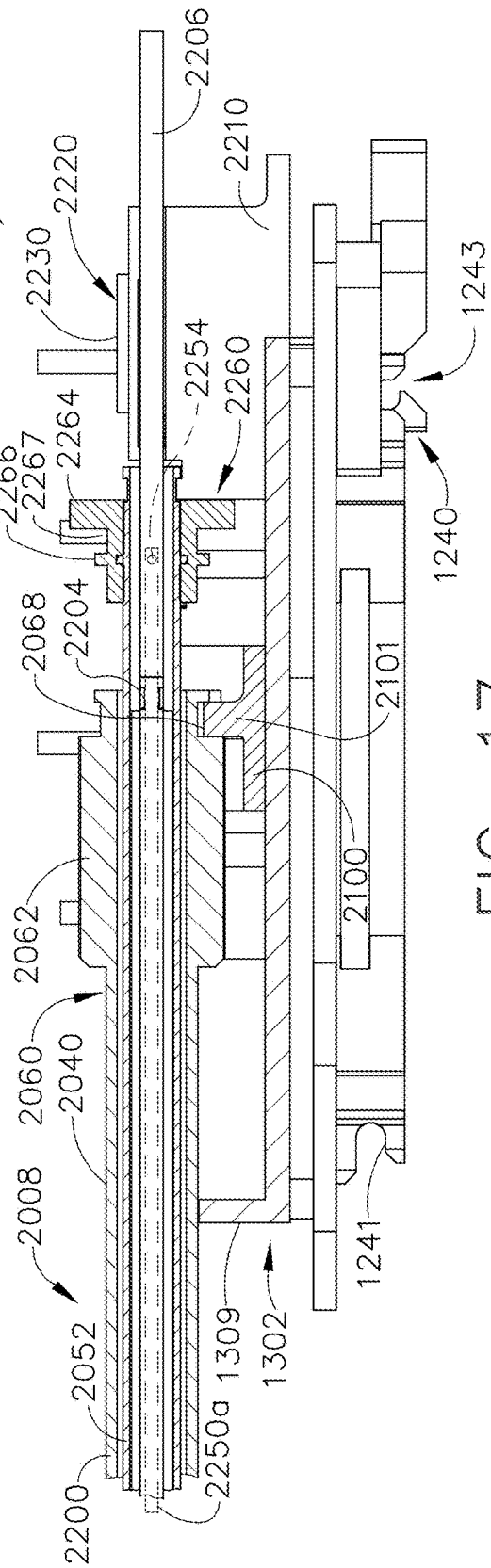
2206
1300
2210
2220
2230
1243
2254
2260
2264
2266
2267
1240
2068
2204
2101
2100
2062
2060
2040
2008
1241
1309
1302
2052
2250a
2200

FIG. 17

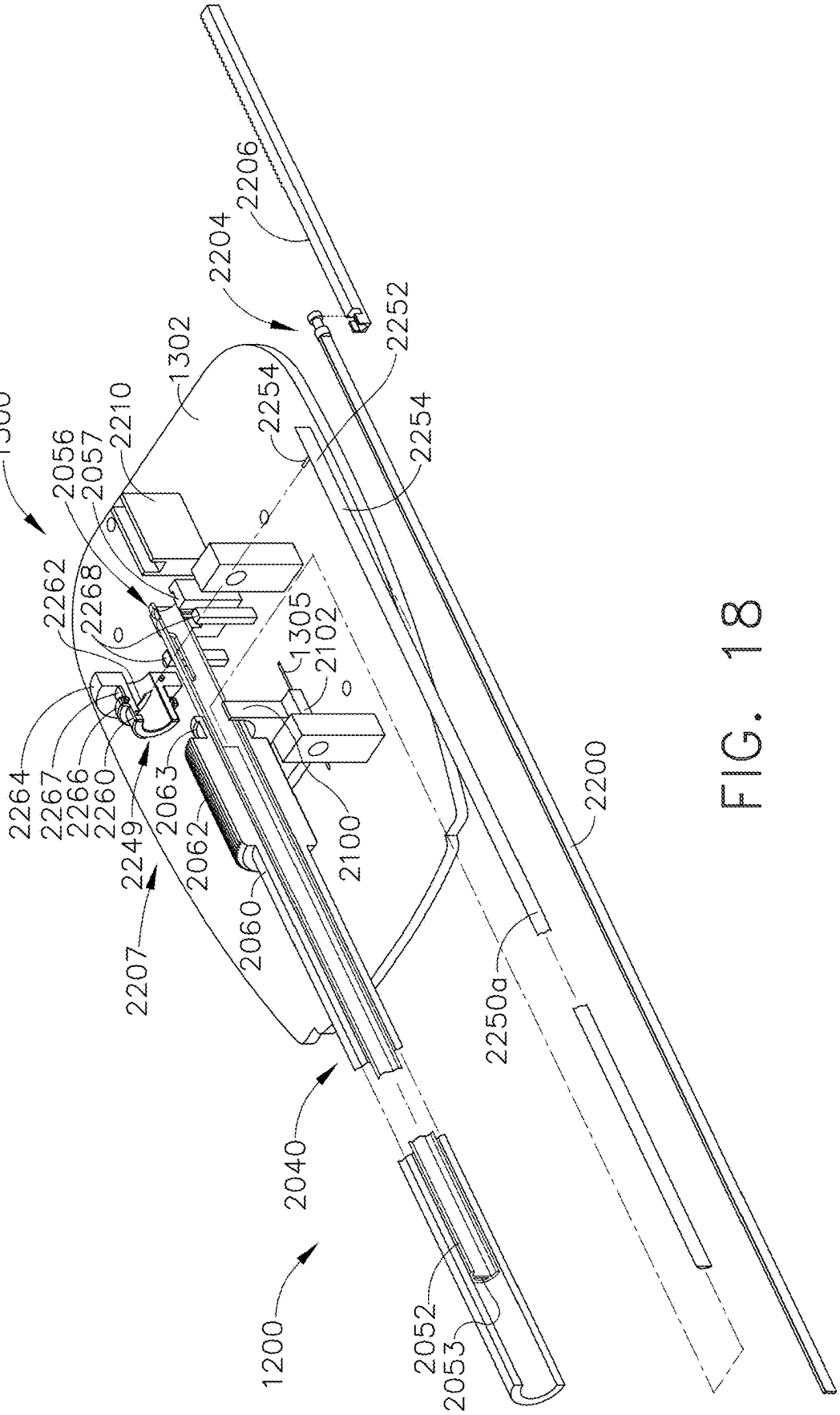
1300
2056
2057
2210
1302
2204
2206
2252
2254
2254
2262
2268
1305
2102
2264
2267
2266
2260
2249
2063
2062
2060
2100
2200
2207
2250a
2040
1200
2052
2053

FIG. 18

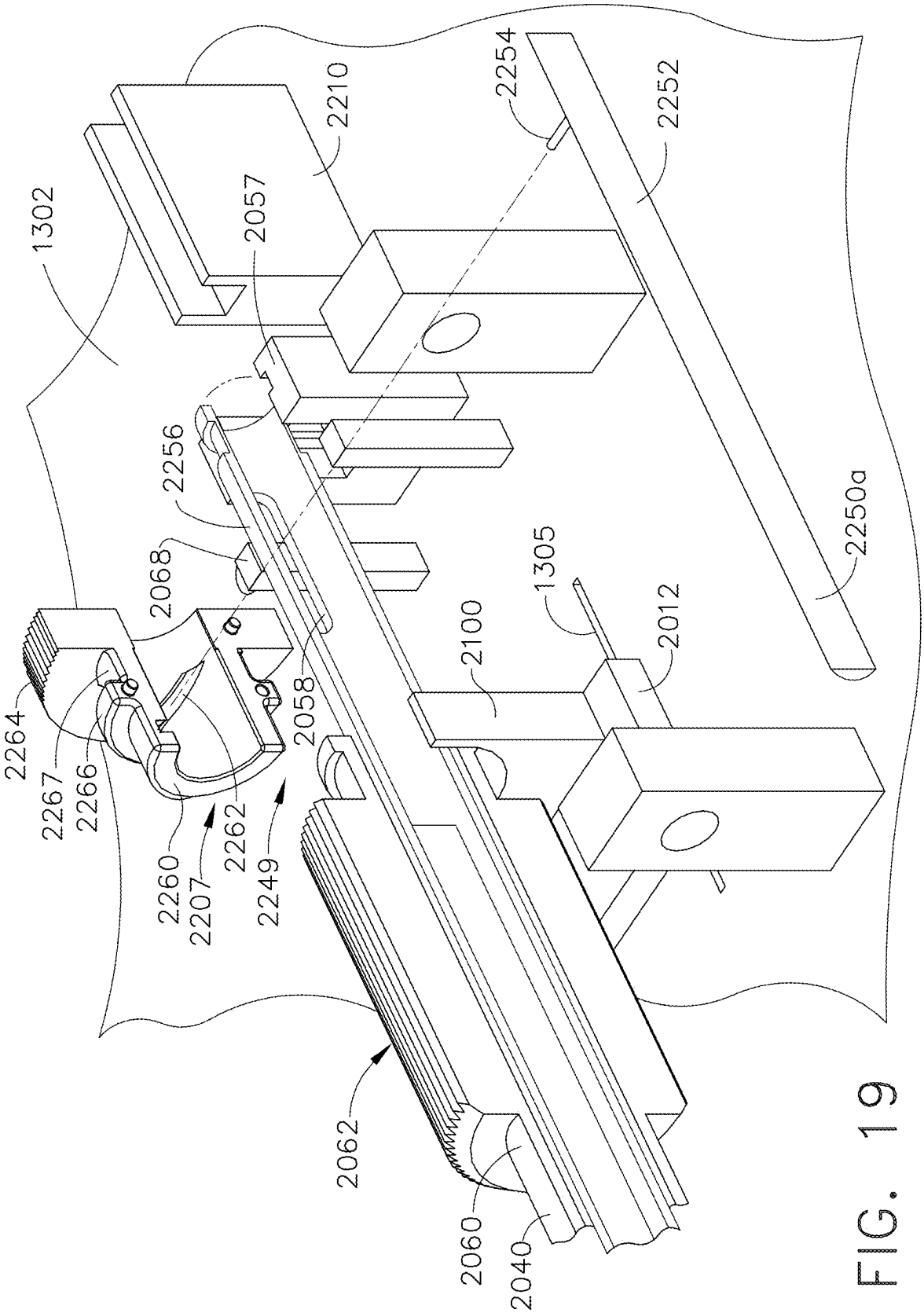
1302
2210
2254
2252
2057
2256
2068
2250a
1305
2012
2100
2058
2264
2267
2266
2260
2207
2262
2249
2062
2060
2040

FIG. 19

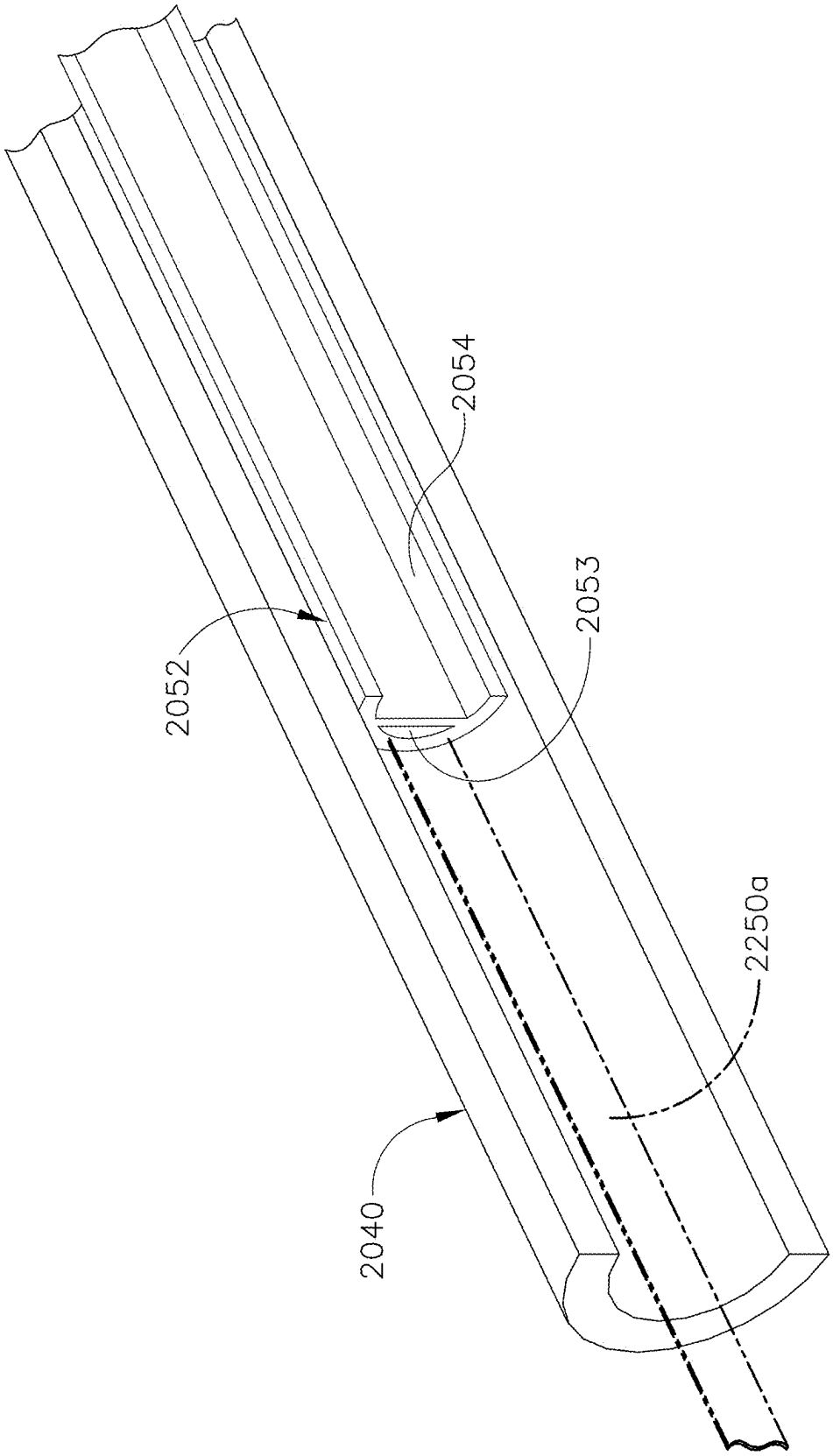

FIG. 20

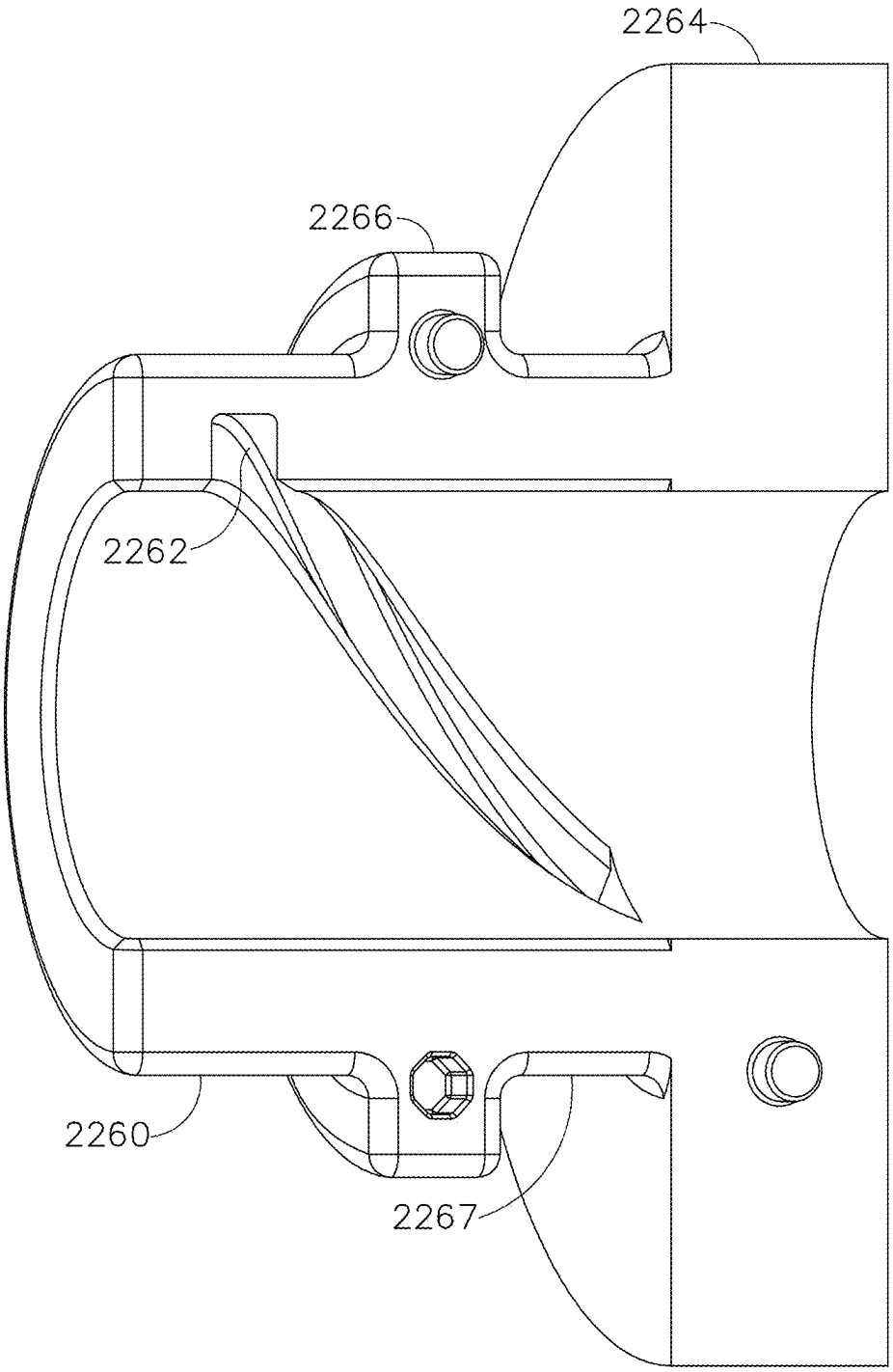

FIG. 21

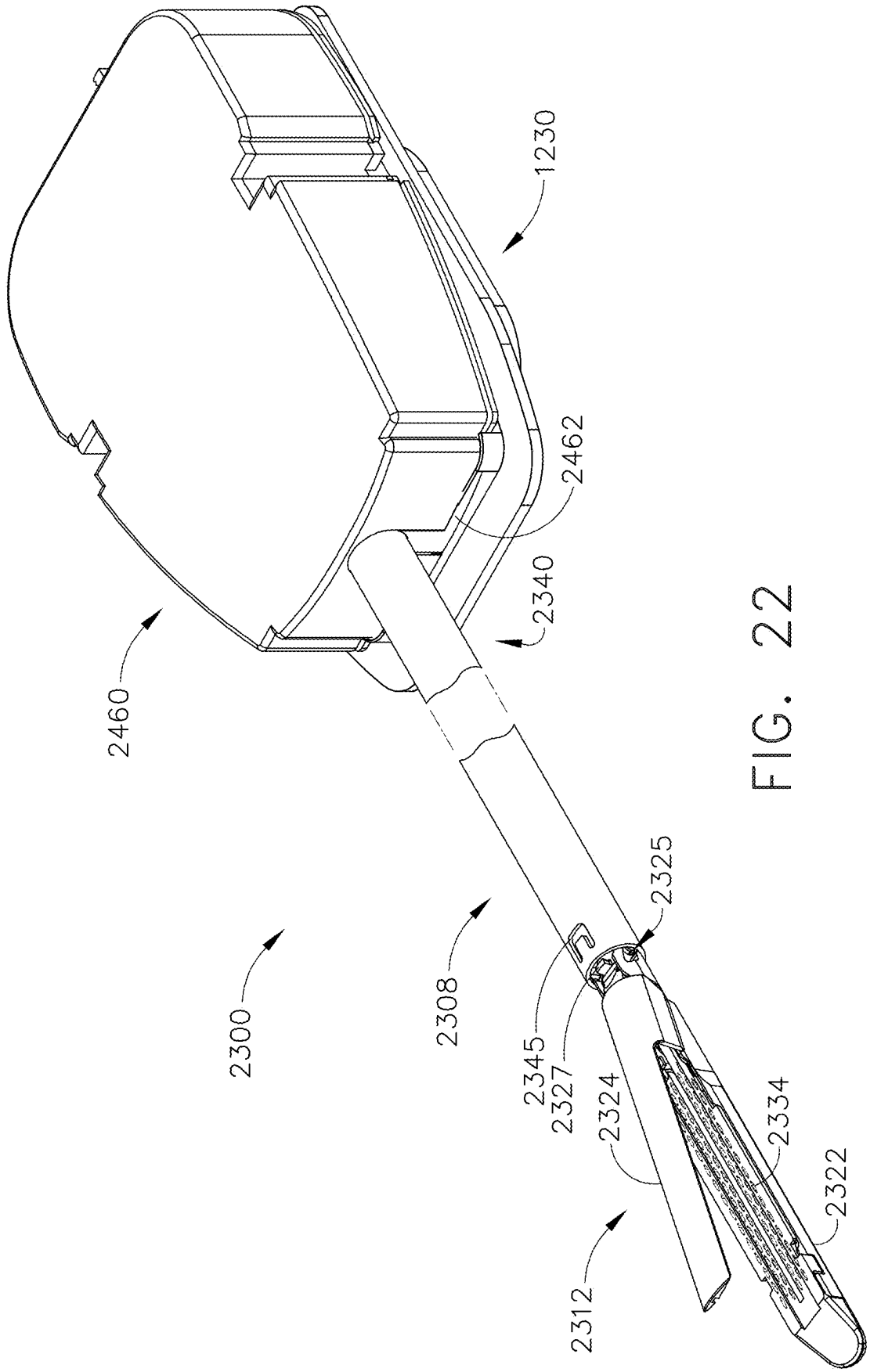
1230
2462
2340
2460
2325
2300
2308
2345
2327
2324
2334
2322
2312

FIG. 22

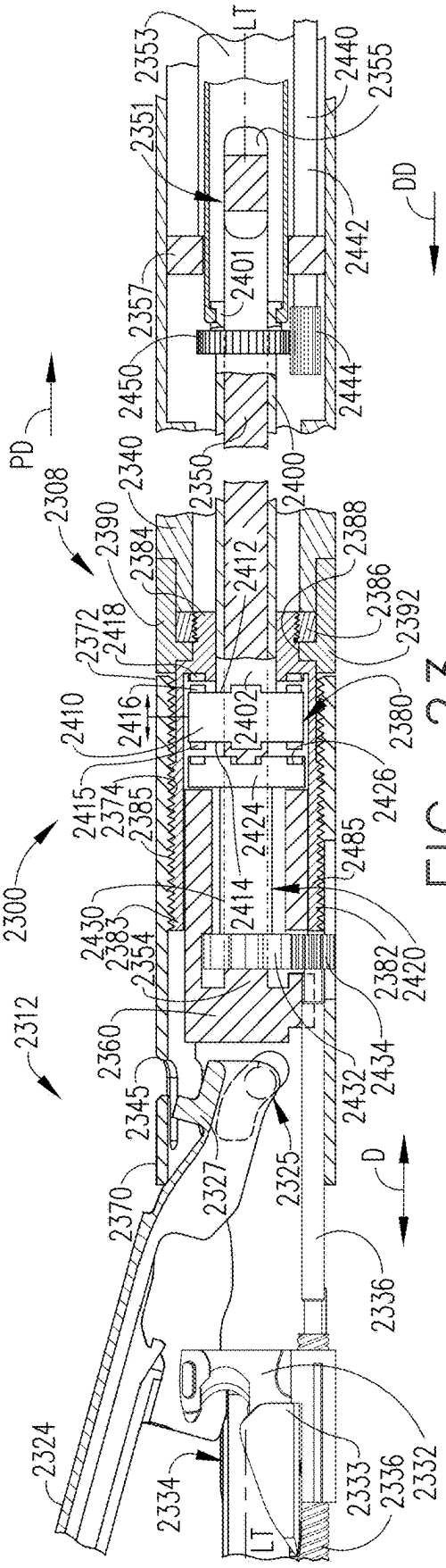
2353
LT
2440
2355
2351
2442
DD
2401
2357
2444
2450
PD
2308
2340
2350
2400
2390
2384
2412
2388
2386
2372
2418
2392
2410
2416
2402
2380
2415
2374
2385
2424
2426
2485
2414
2430
2383
2354
2382
2420
2312
2360
2345
2432
2434
2327
2325
2370
D
2336
2324
2334
2333
2332

FIG. 23

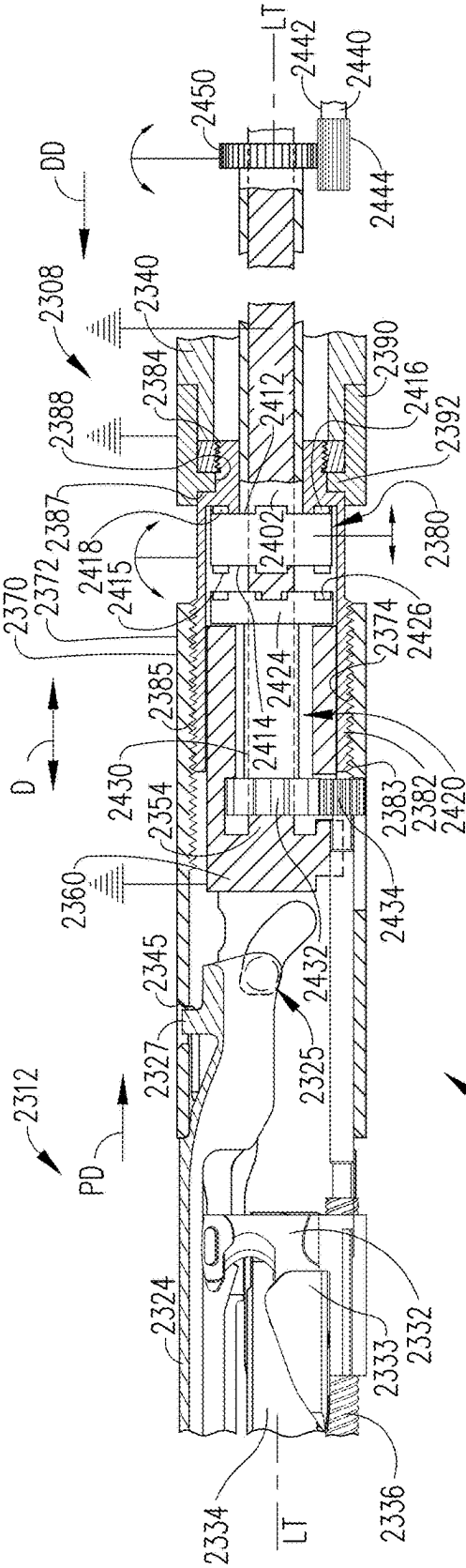
LT
2442
2440
2450
2444
DD
2308
2340
2390
2384
2416
2412
2388
2392
2387
2402
2380
2418
2415
2370
2372
2374
2426
2385
2424
2414
D
2430
2354
2383
2382
2420
2360
2434
2345
2432
2327
2325
2312
PD
2300
2324
2333
2332
2334
LT
2336

FIG. 24

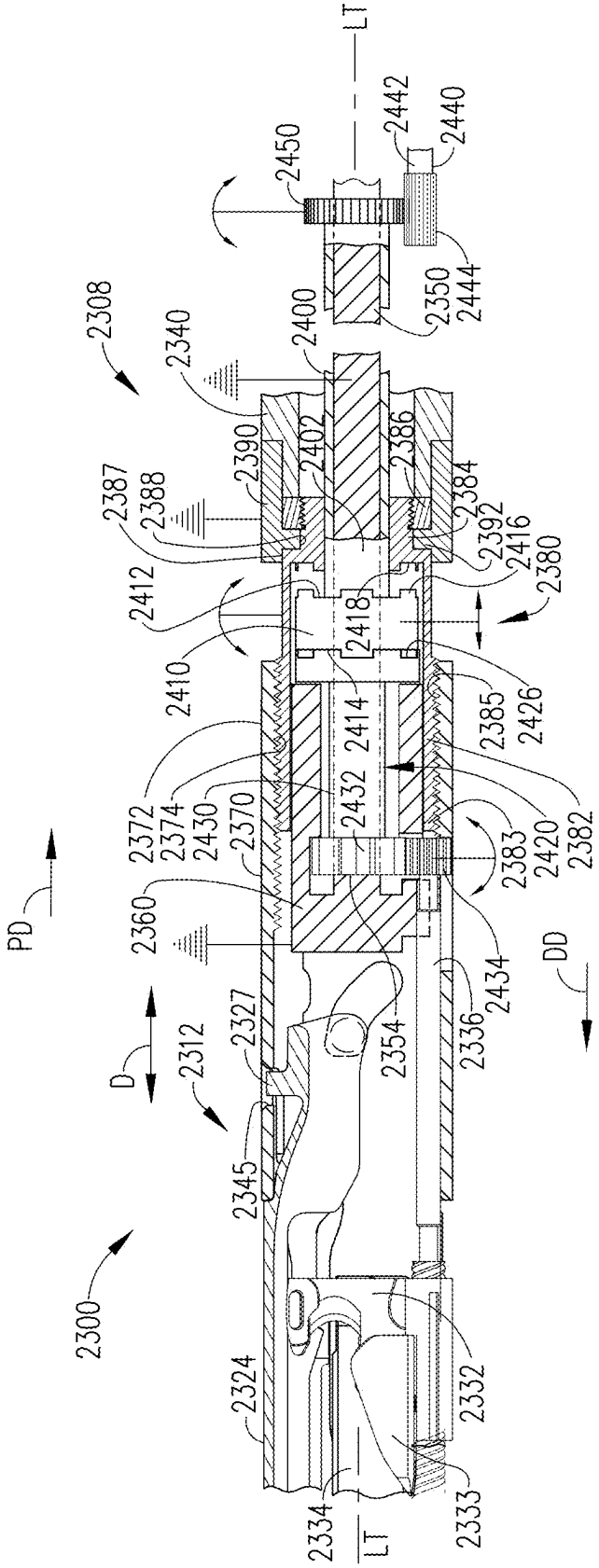
LT
2442
2440
2450
2350
2444
2400
2308
2340
2402
2386
2390
2387
2388
2384
2392
2416
2380
2412
2418
2410
2414
2385
2426
2372
2374
2430
2370
2432
2383
2420
2382
2360
2434
2336
2354
2327
2312
2345
2300
2324
2332
2333
2334
LT
PD
D
DD

FIG. 25

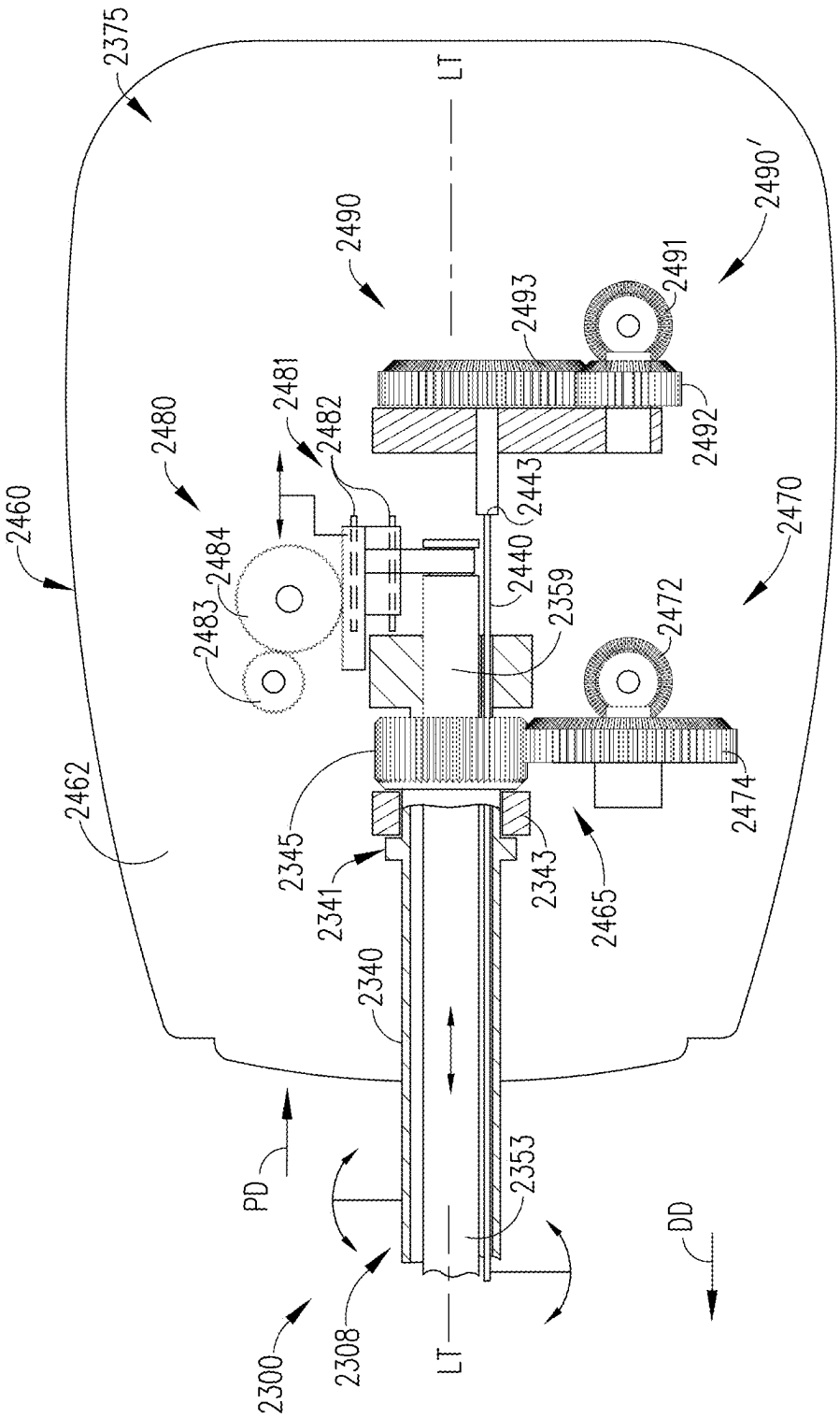
2375
2460
2462
2480
2481
2482
2483
2484
2490
2490'
2491
2492
2493
2443
2440
2359
2470
2472
2474
2465
2345
2341
2343
2340
2353
2300
2308
PD
DD
LT
LT

FIG. 26

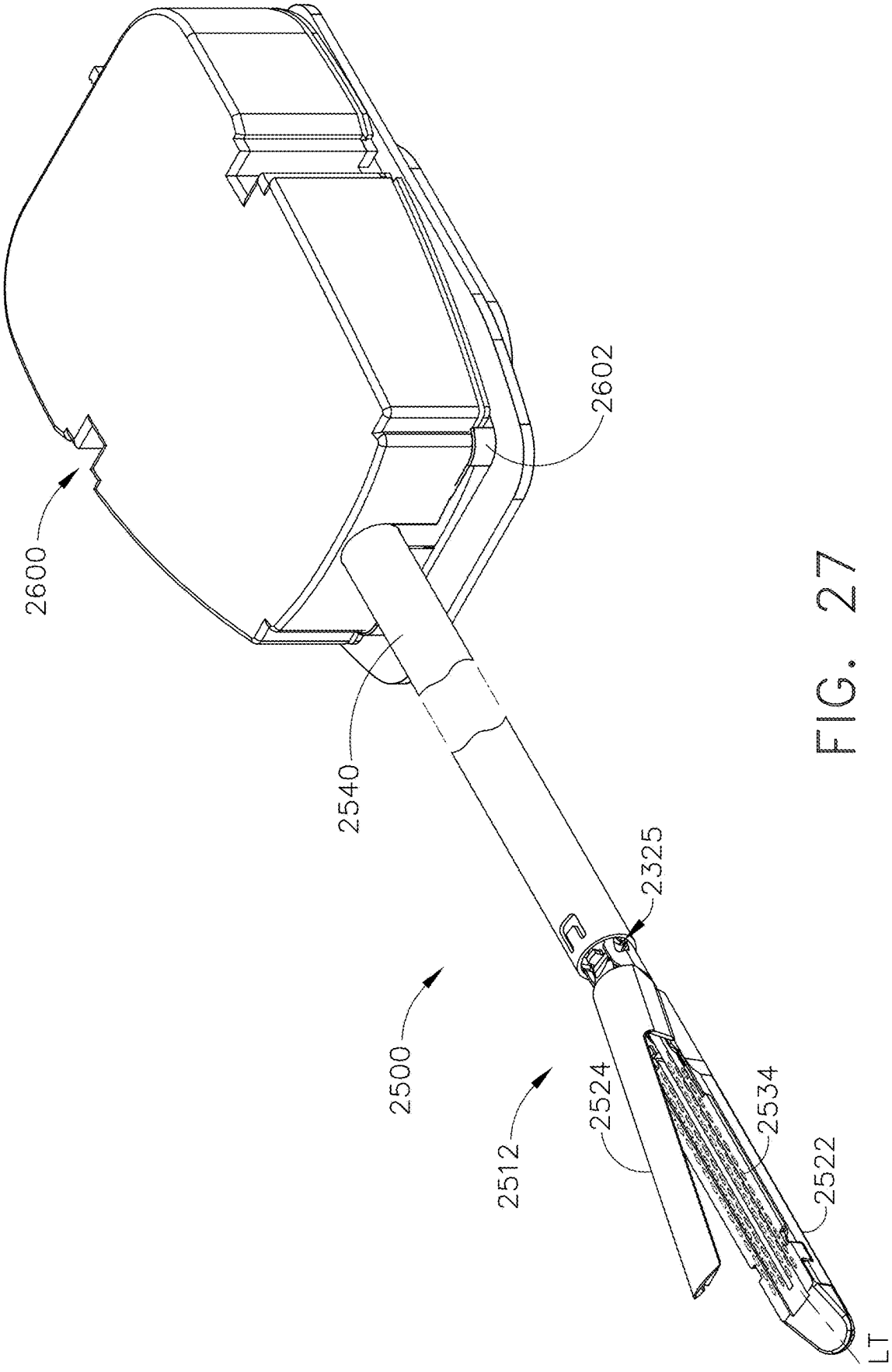

FIG. 27

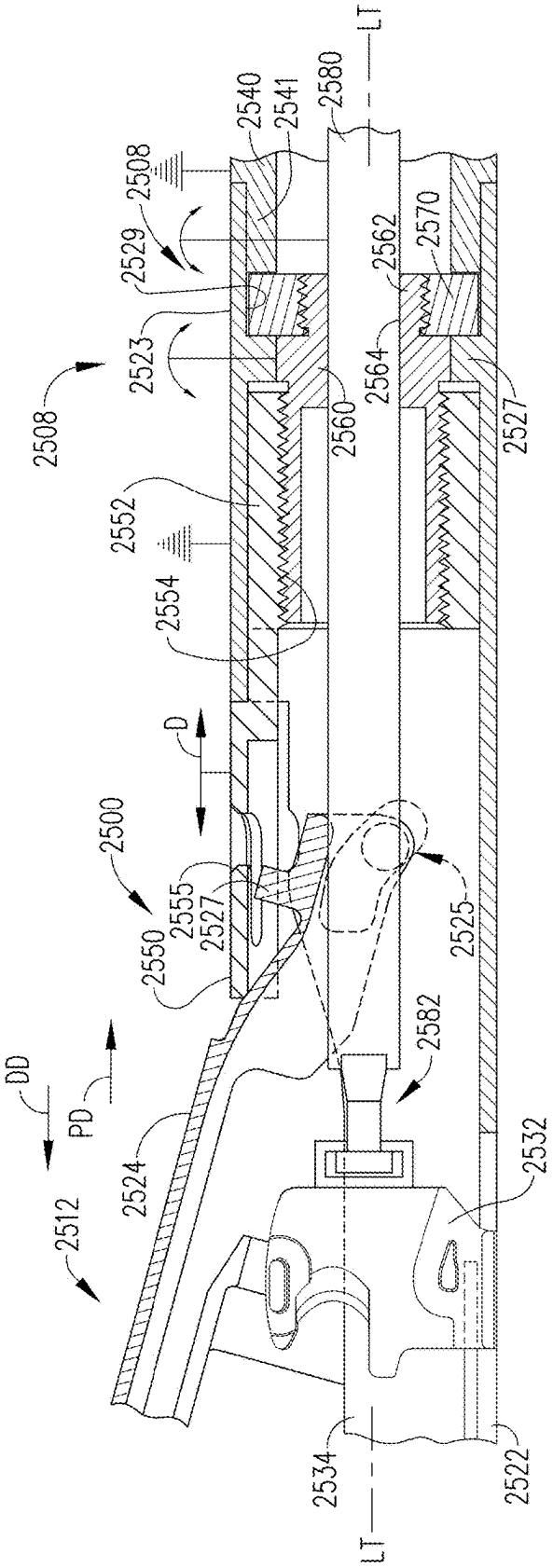
2508
2529
2523
2508
2552
2554
2500
2550
2555
2527
2540
2541
2580
LT
2562
2570
2564
2560
2527
D
2525
2582
DD
PD
2524
2512
2532
2534
2522
LT

FIG. 28

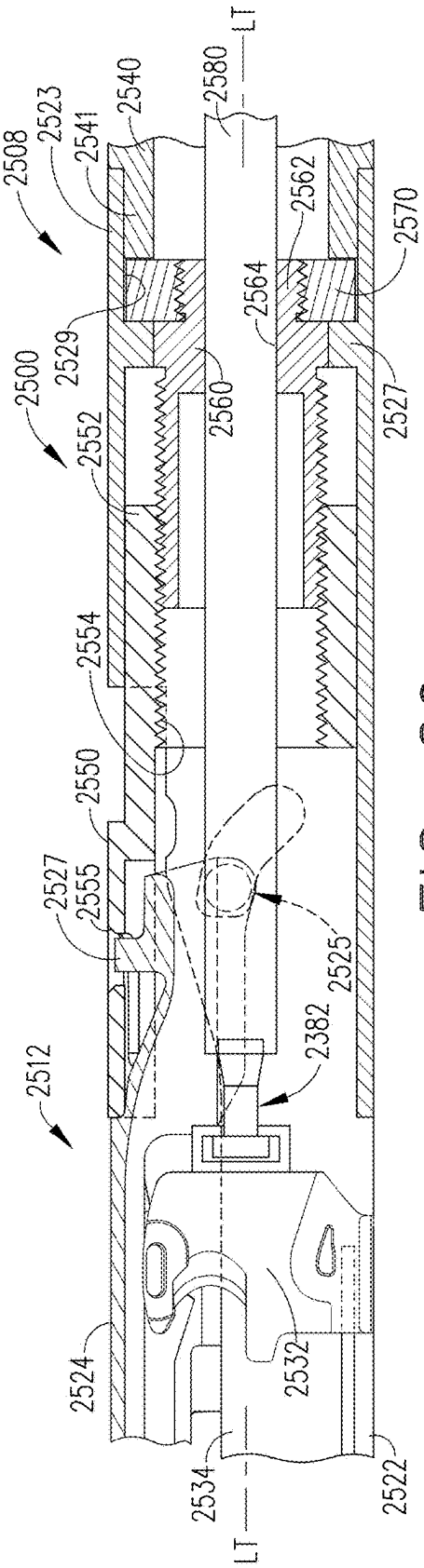
2508
2523
2541
2540
2580
LT
2562
2570
2564
2529
2500
2552
2560
2527
2554
2550
2527
2555
2525
2382
2512
2524
2532
2534
2522
LT

FIG. 29

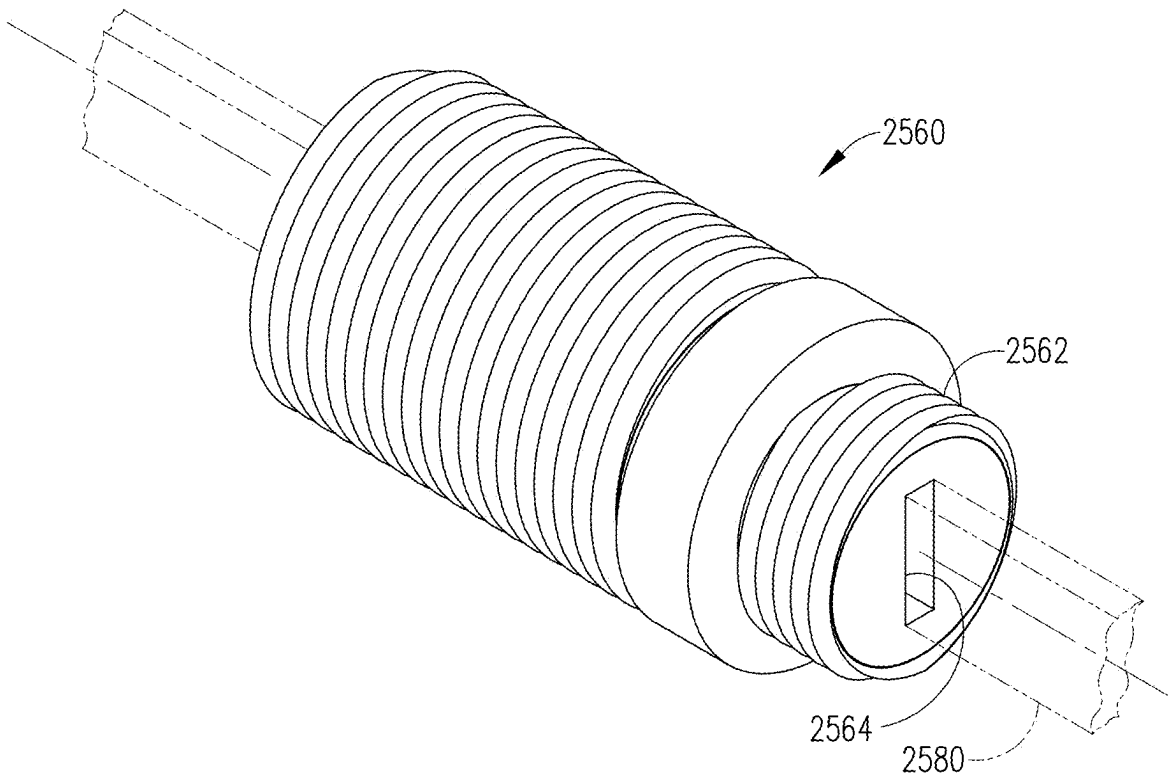

FIG. 30

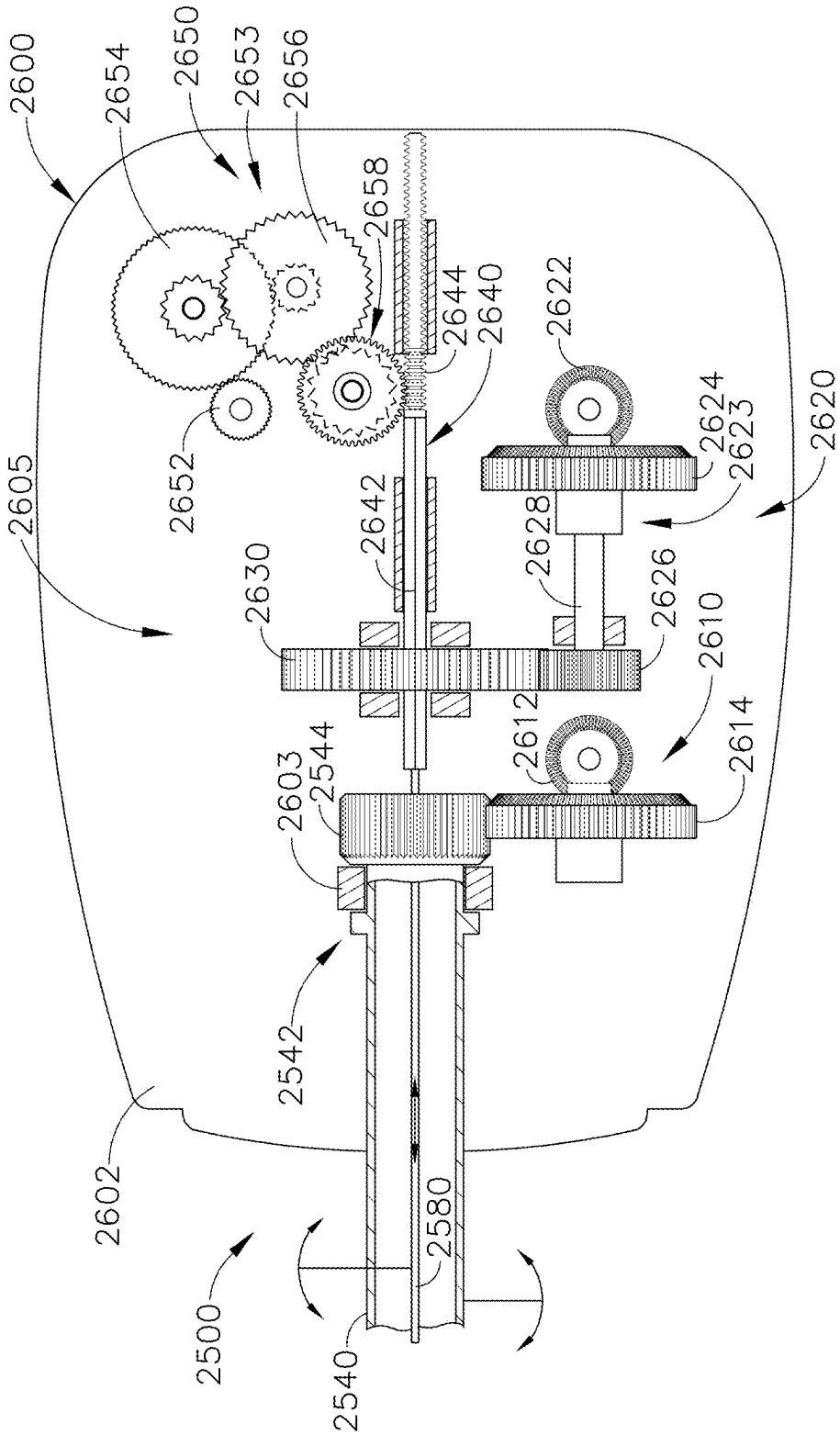
2600
2654
2650
2653
2656
2658
2644
2640
2622
2624
2623
2620
2652
2605
2642
2628
2626
2630
2610
2612
2614
2603
2544
2542
2602
2580
2500
2540

FIG. 31

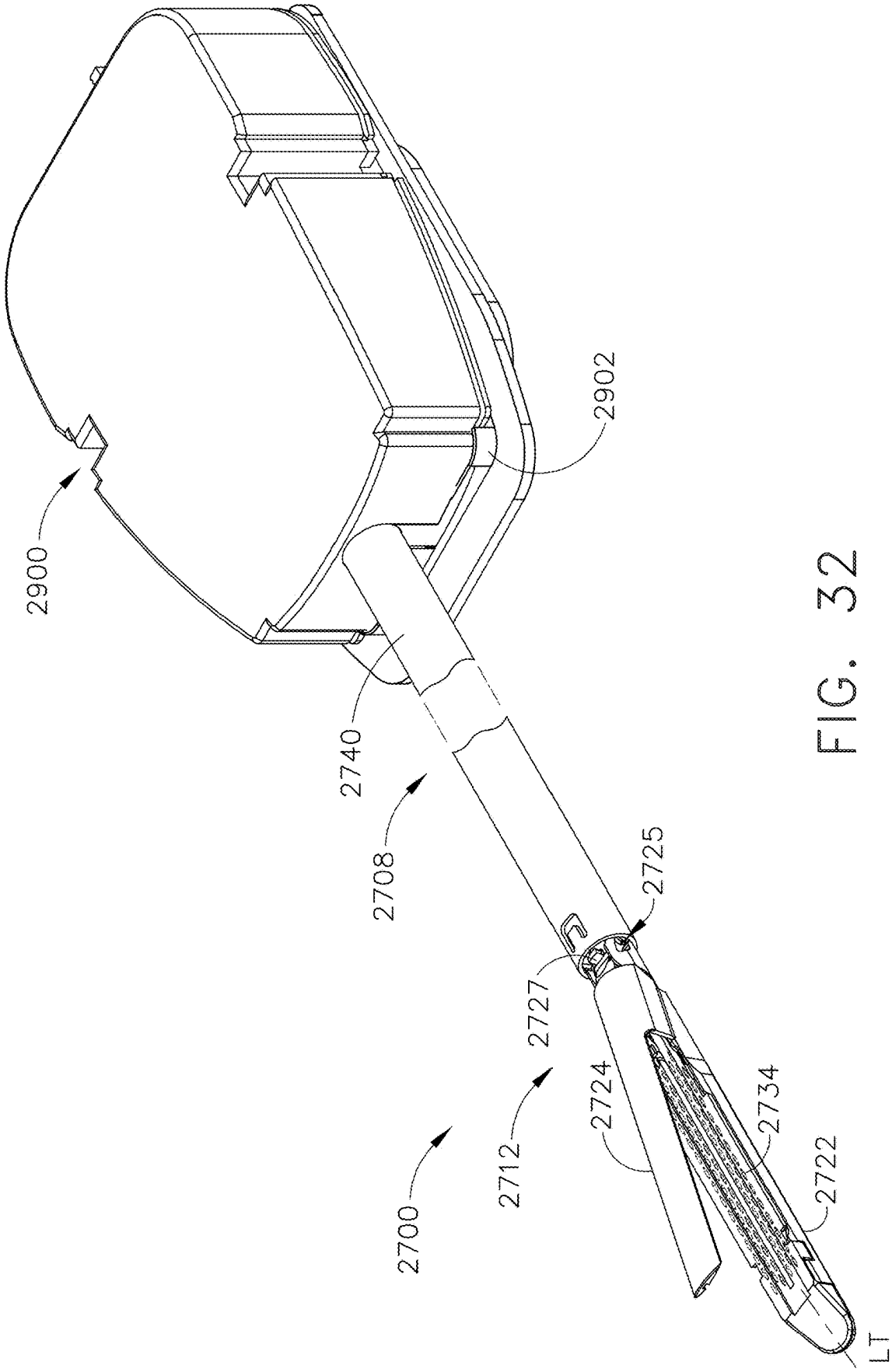

FIG. 32

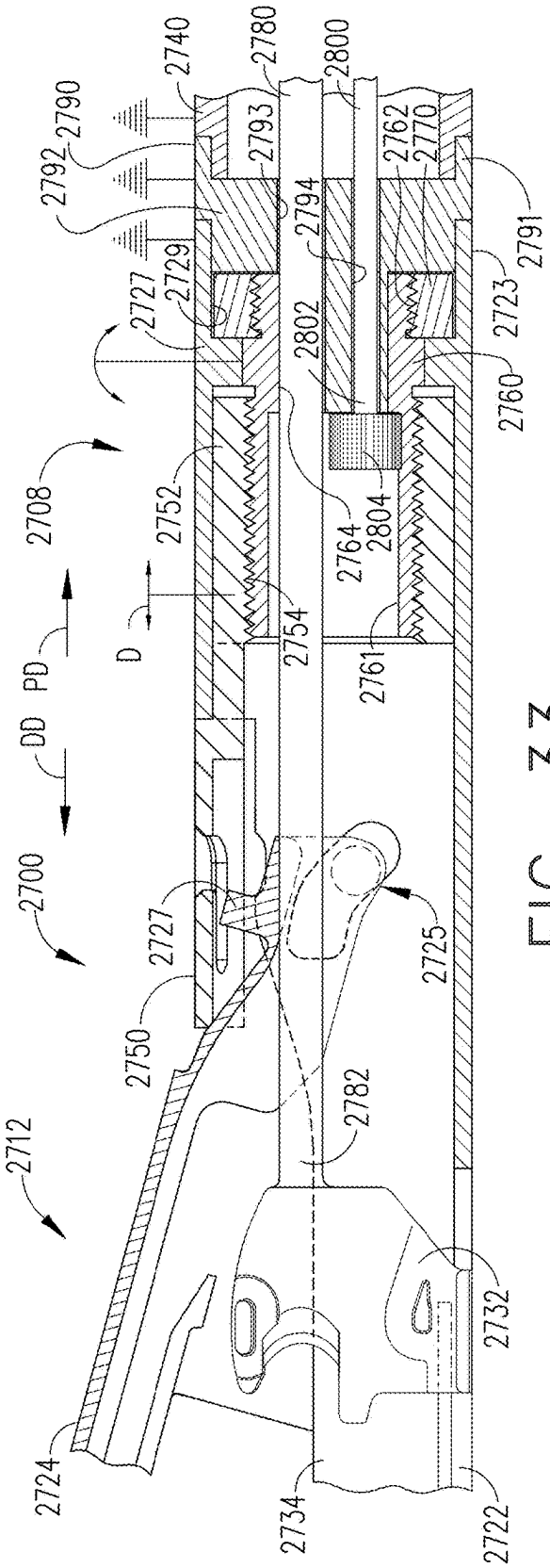
2740
2780
2800
2790
2792
2793
2762
2770
2791
2794
2729
2727
2723
2802
2760
2708
2752
2764
2804
PD
D
2754
2761
DD
2700
2727
2725
2750
2782
2712
2732
2724
2734
2722

FIG. 33

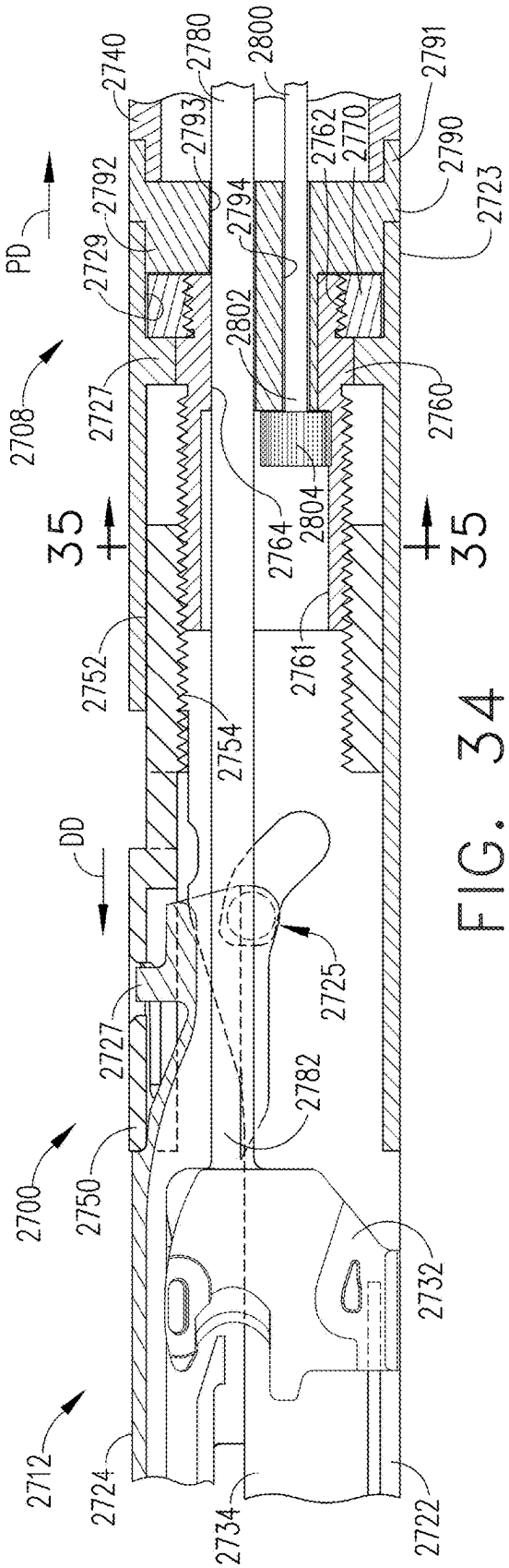
2740
2780
2800
2791
2793
2762
2770
2790
2792
2794
2723
PD
2729
2802
2727
2760
2708
2764
2804
35
35
2752
2754
2761
DD
2725
2727
2782
2700
2750
2732
2712
2724
2734
2722

FIG. 34

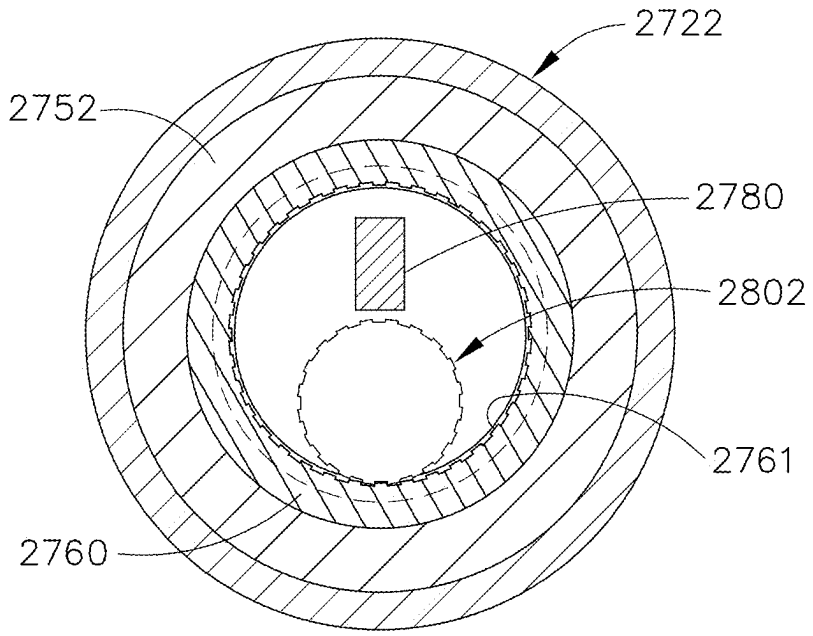

FIG. 35

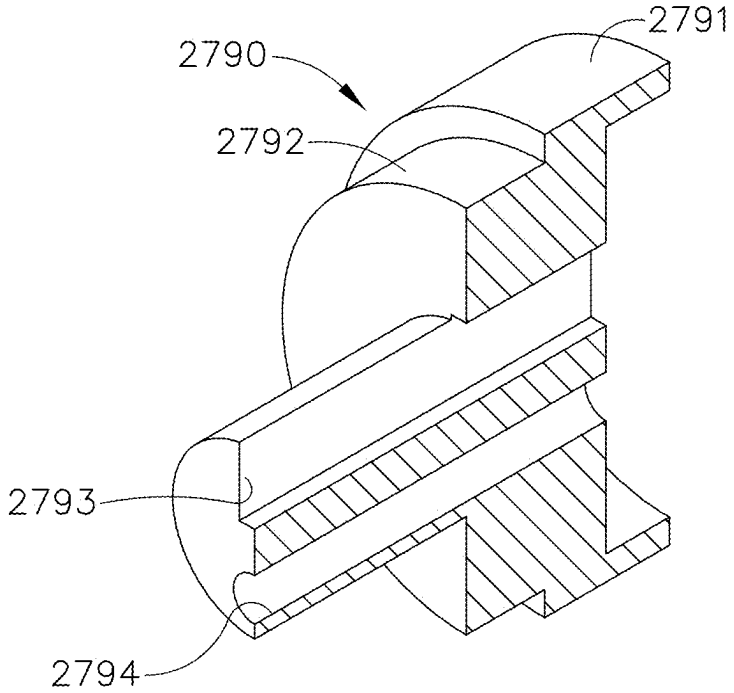

FIG. 36

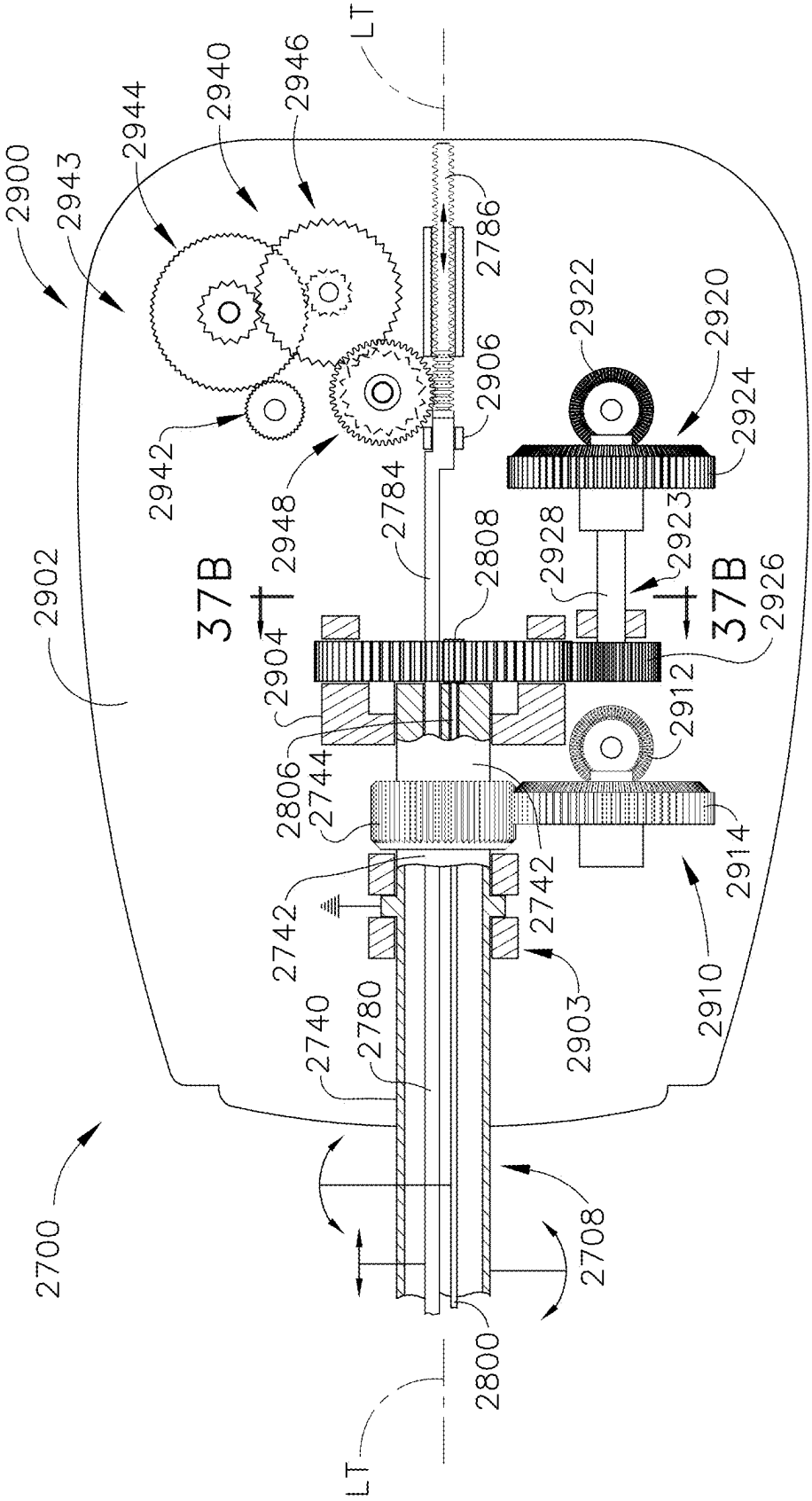
2900
2943
2944
2940
2946
LT
2786
2922
2920
2906
2924
2942
2948
2784
2923
2808
2928
37B
2902
2904
2926
37B
2912
2806
2744
2914
2742
2742
2903
2910
2740
2780
2700
2708
2800
LT

FIG. 37

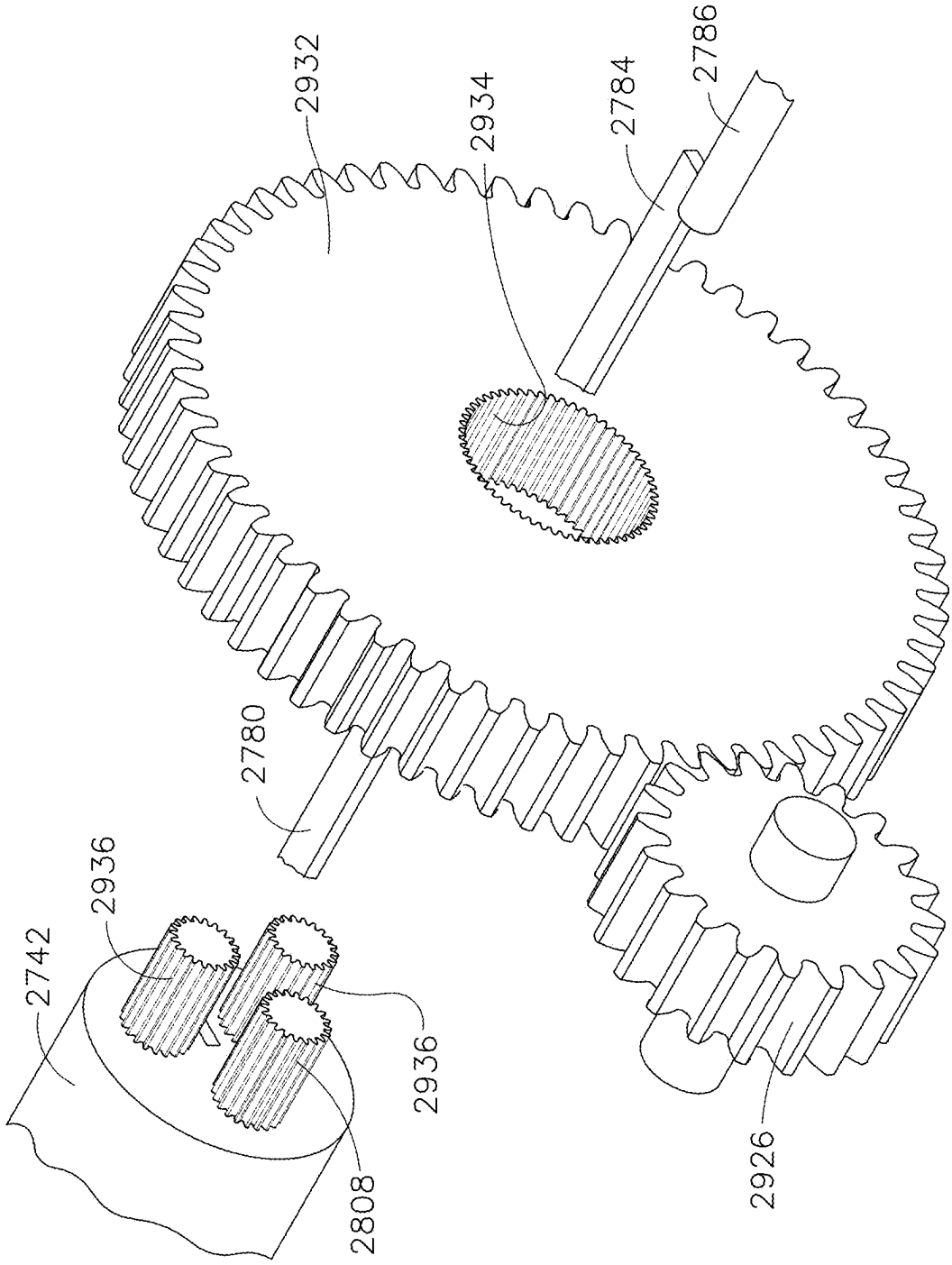

FIG. 37A

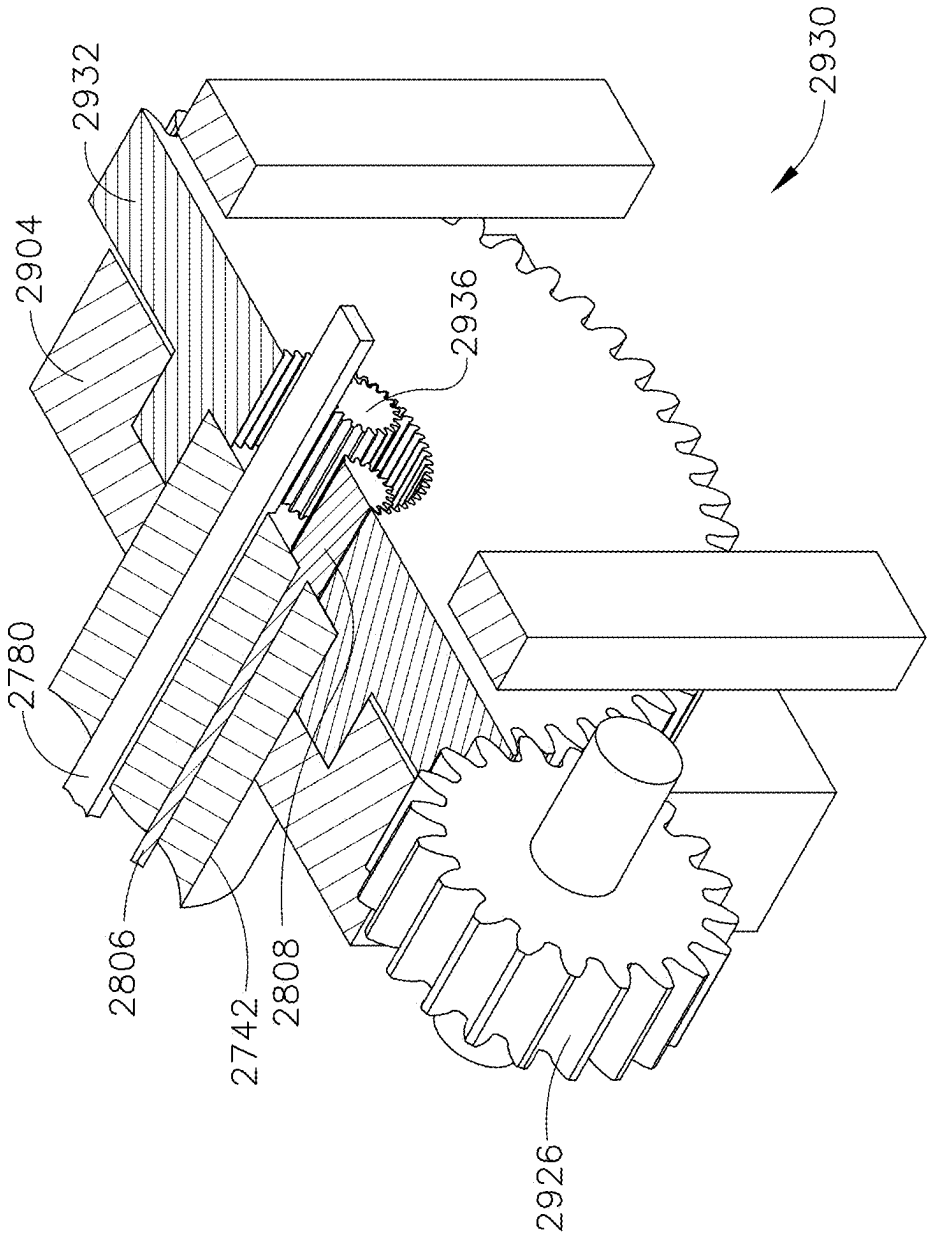

FIG. 37B

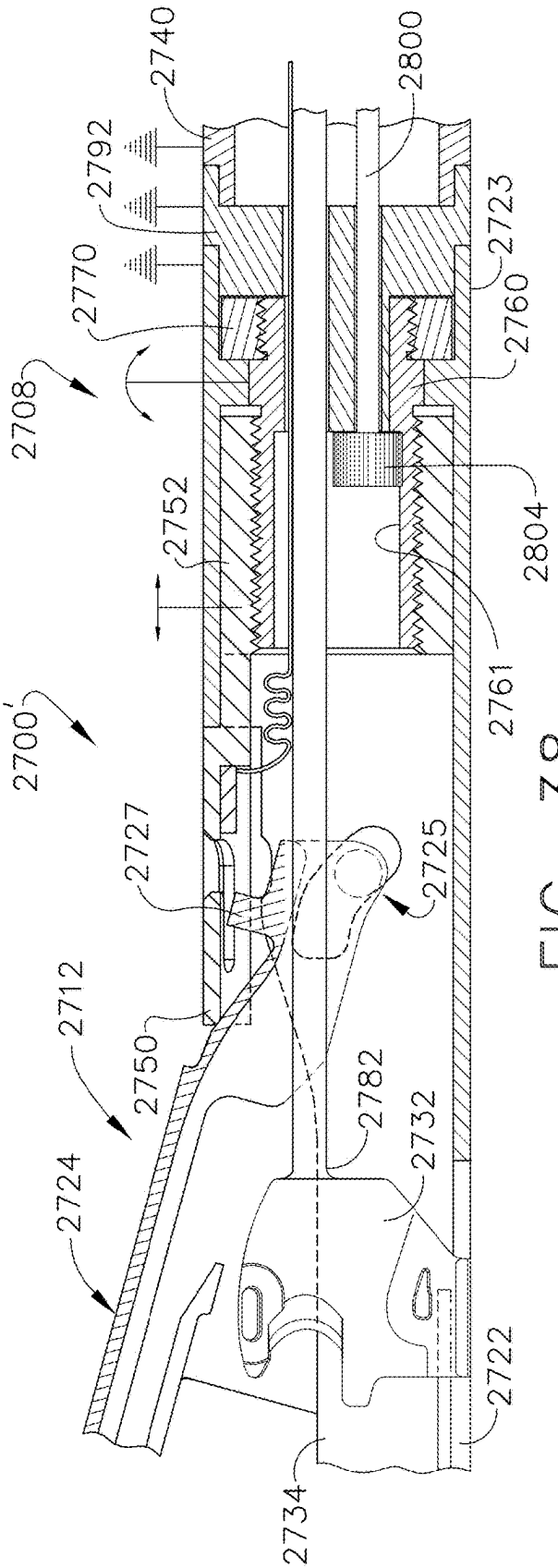
2740
2792
2770
2708
2752
2700'
2727
2712
2750
2724
2734
2722
2732
2782
2725
2761
2804
2760
2723
2800

FIG. 38

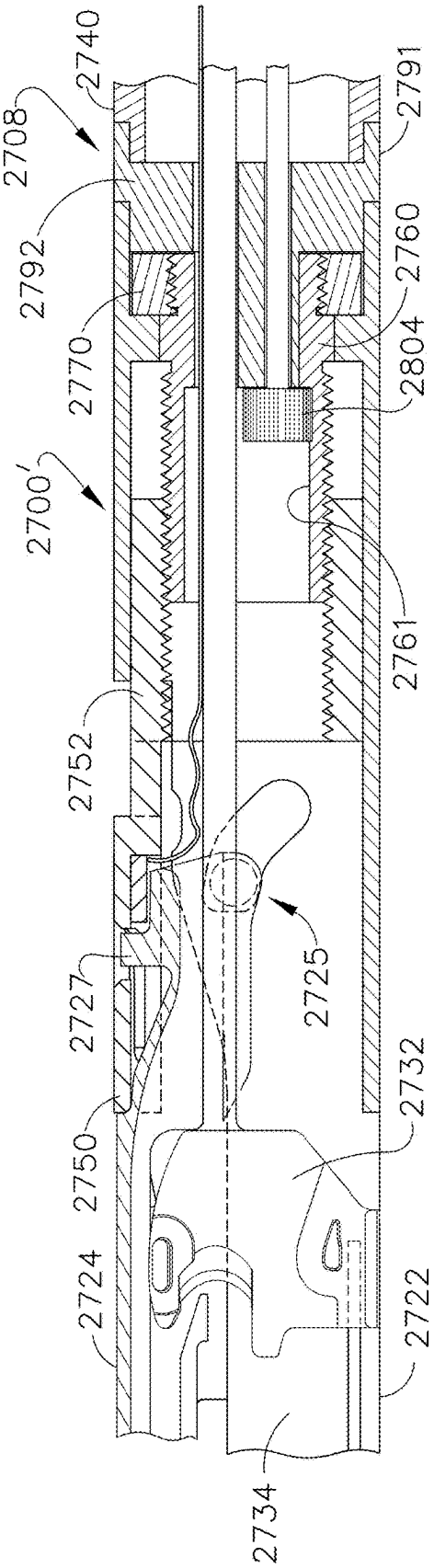
2740
2708
2792
2770
2700'
2752
2727
2750
2724
2734
2722
2732
2725
2761
2804
2760
2791

FIG. 39

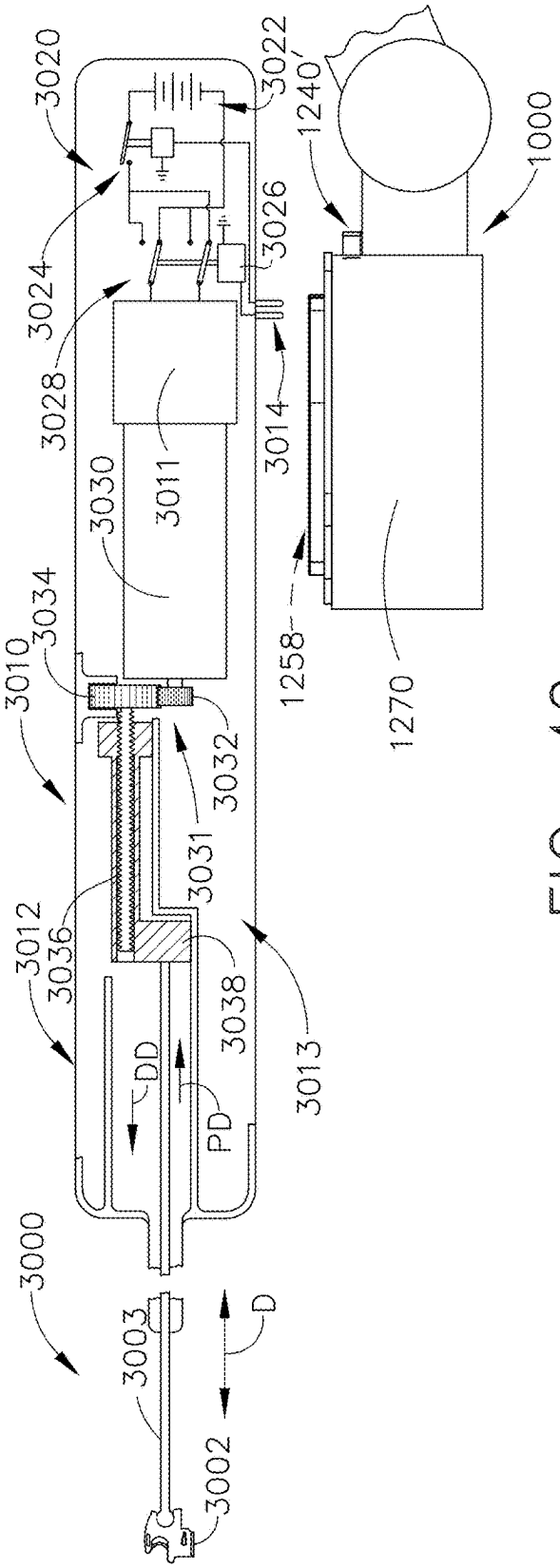
3020
3022
1240'
1000
3024
3026
3028
3014
3011
3030
3034
3010
3032
1258
1270
3031
3012
3036
3038
3013
DD
PD
3000
3003
D
3002

FIG. 40

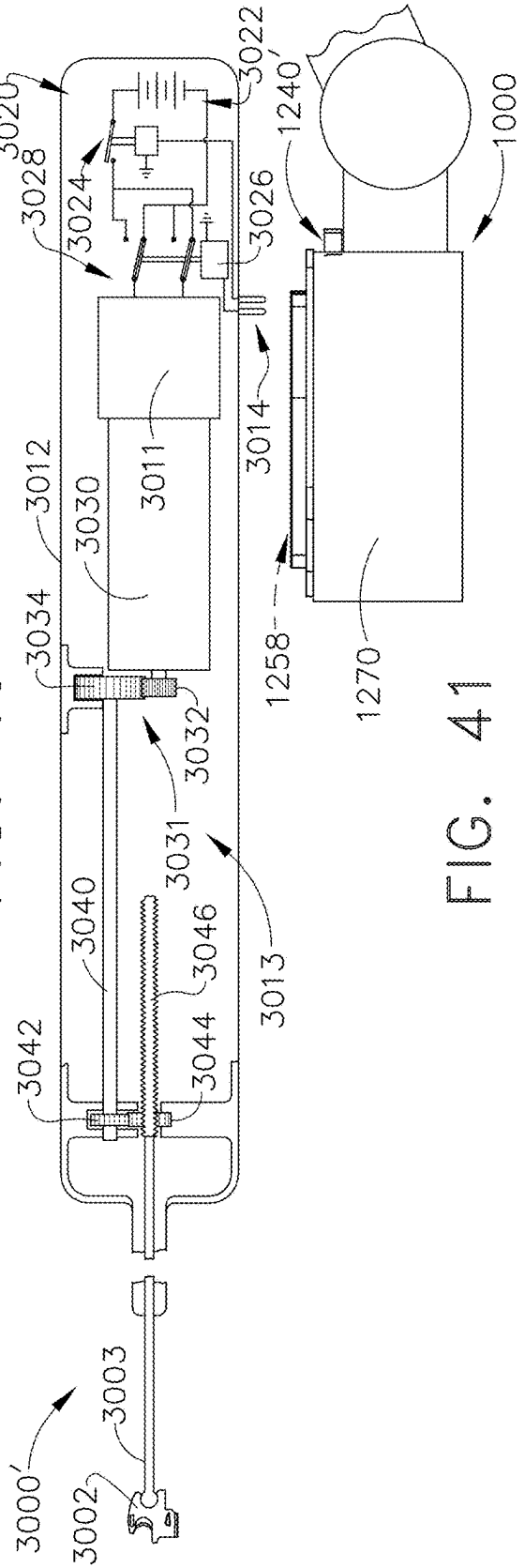
3020
3022
1240'
1000
3028
3024
3026
3014
3012
3011
3030
3034
1258
1270
3032
3031
3040
3046
3013
3042
3044
3000'
3003
3002

FIG. 41

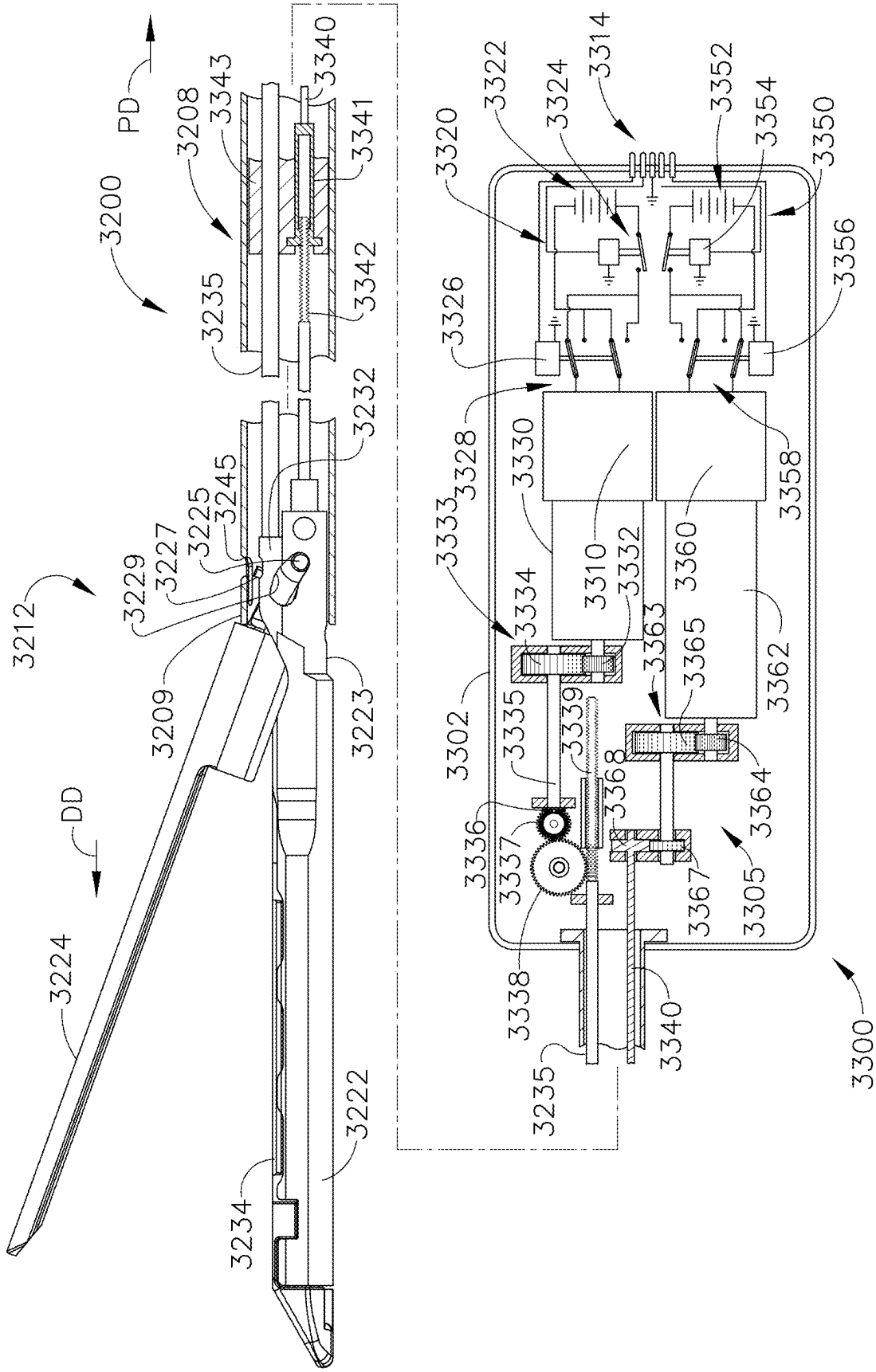
PD
3200
3208
3343
3340
3341
3342
3235
3232
3245
3225
3227
3229
3212
3209
3223
DD
3224
3222
3234
3320
3322
3324
3314
3352
3354
3350
3326
3356
3328
3330
3358
3333
3310
3332
3360
3334
3363
3365
3362
3302
3335
3339
3368
3364
3336
3337
3367
3305
3338
3340
3235
3300

FIG. 42

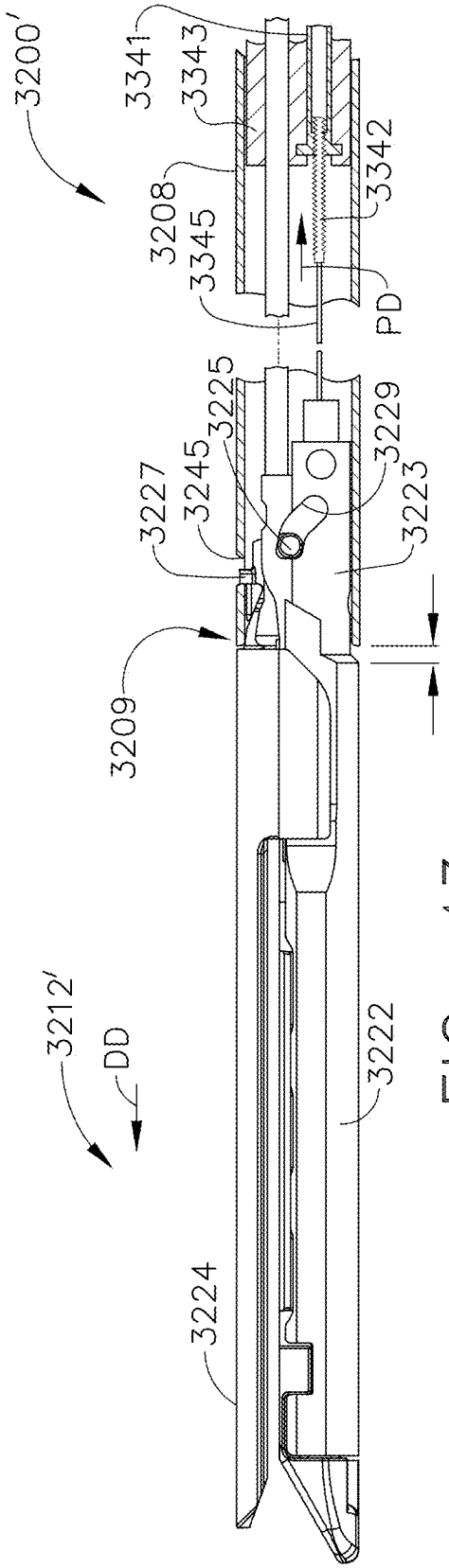
3200'
3341
3343
3342
3208
3345
PD
3225
3229
3227
3245
3223
3209
3212'
DD
3222
3224

FIG. 43

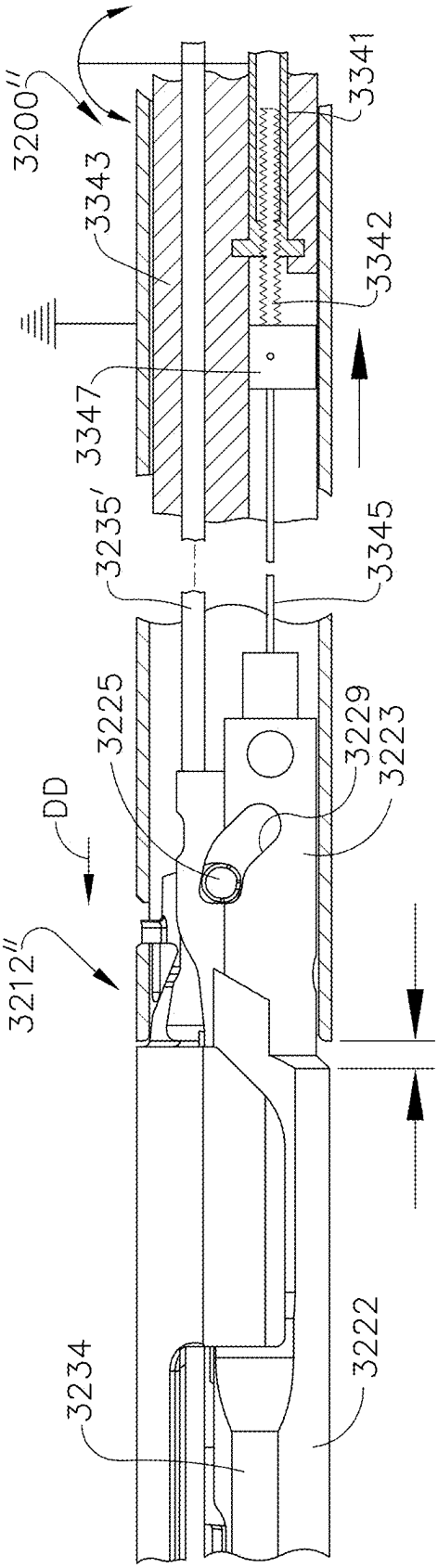
3200''
3341
3343
3342
3347
3235'
3345
3225
3229
3223
DD
3212''
3234
3222

FIG. 44

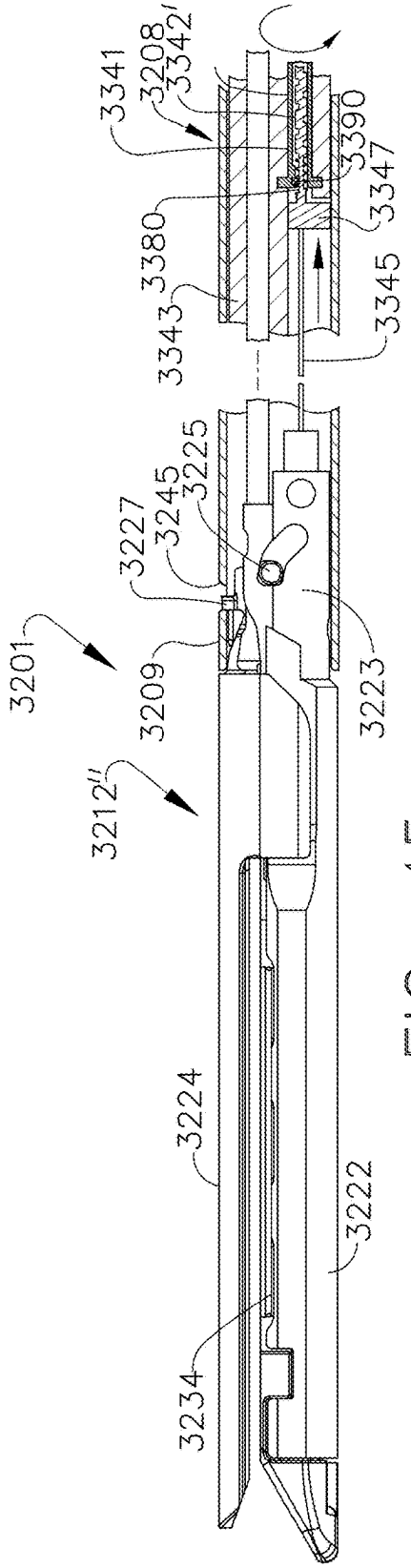

FIG. 45

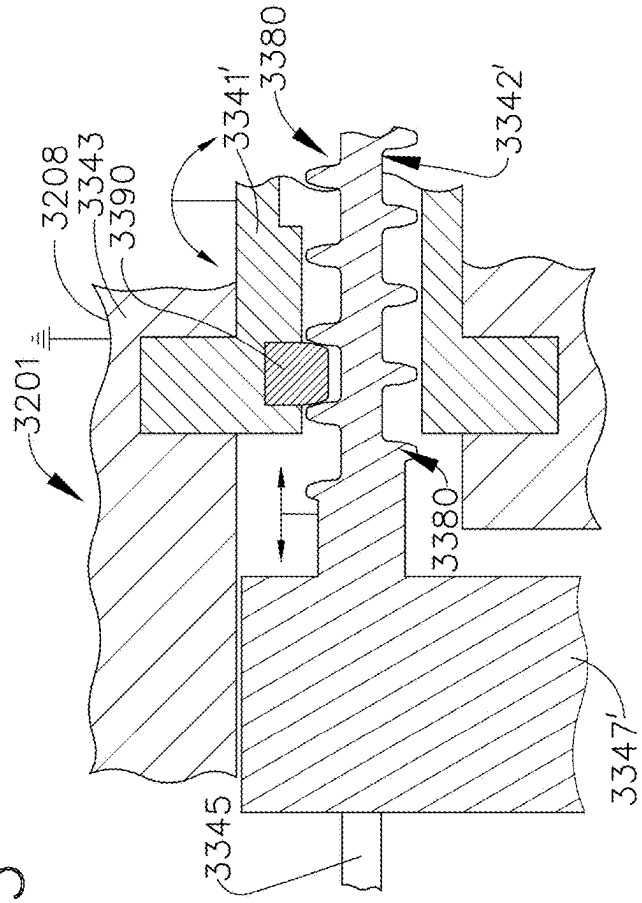

FIG. 47

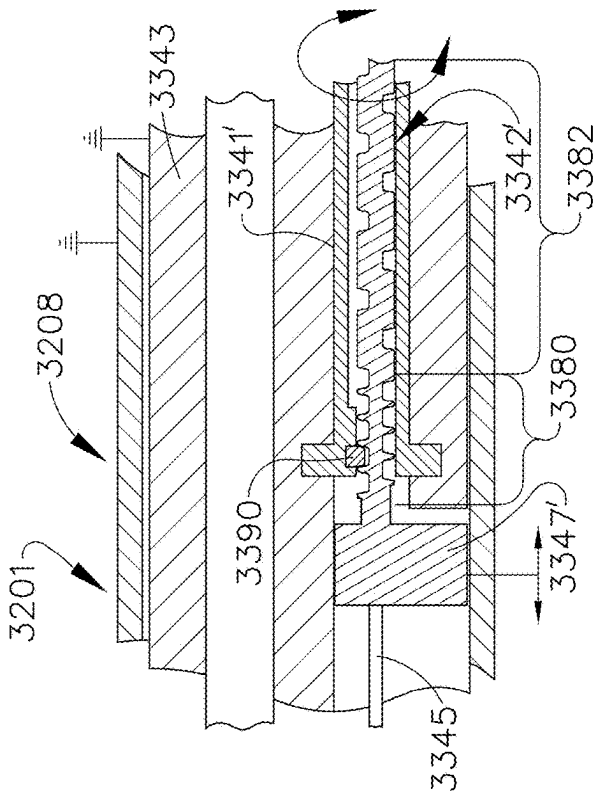

FIG. 46

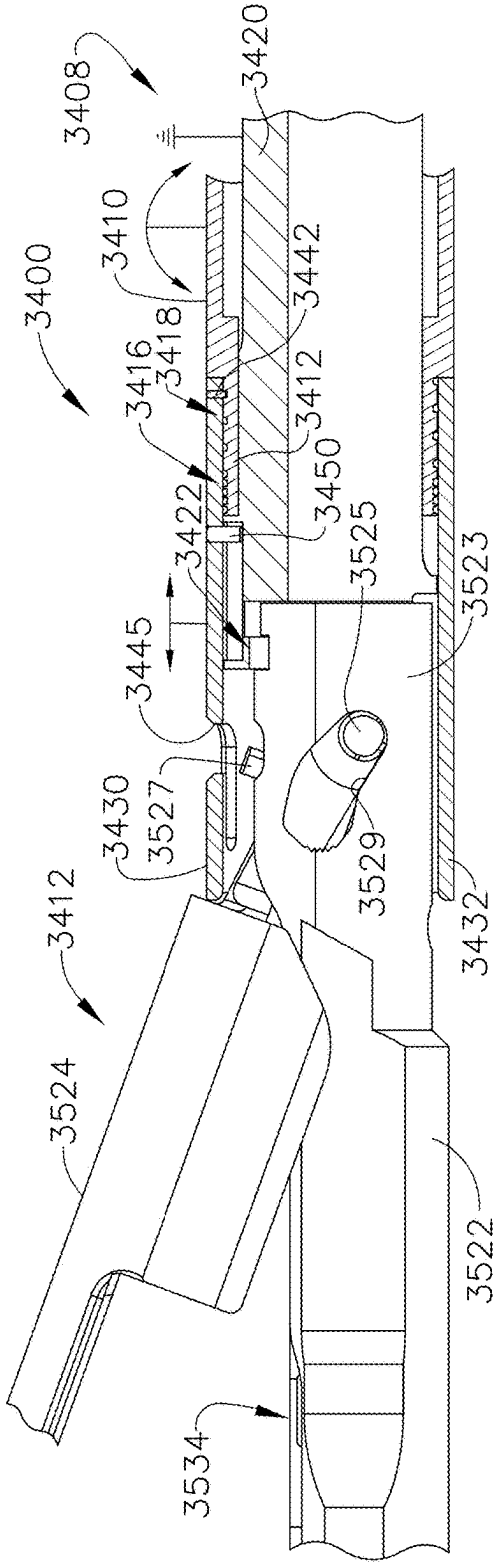
3408
3420
3410
3400
3442
3418
3416
3412
3450
3422
3525
3523
3445
3430
3527
3529
3432
3412
3524
3522
3534

FIG. 48

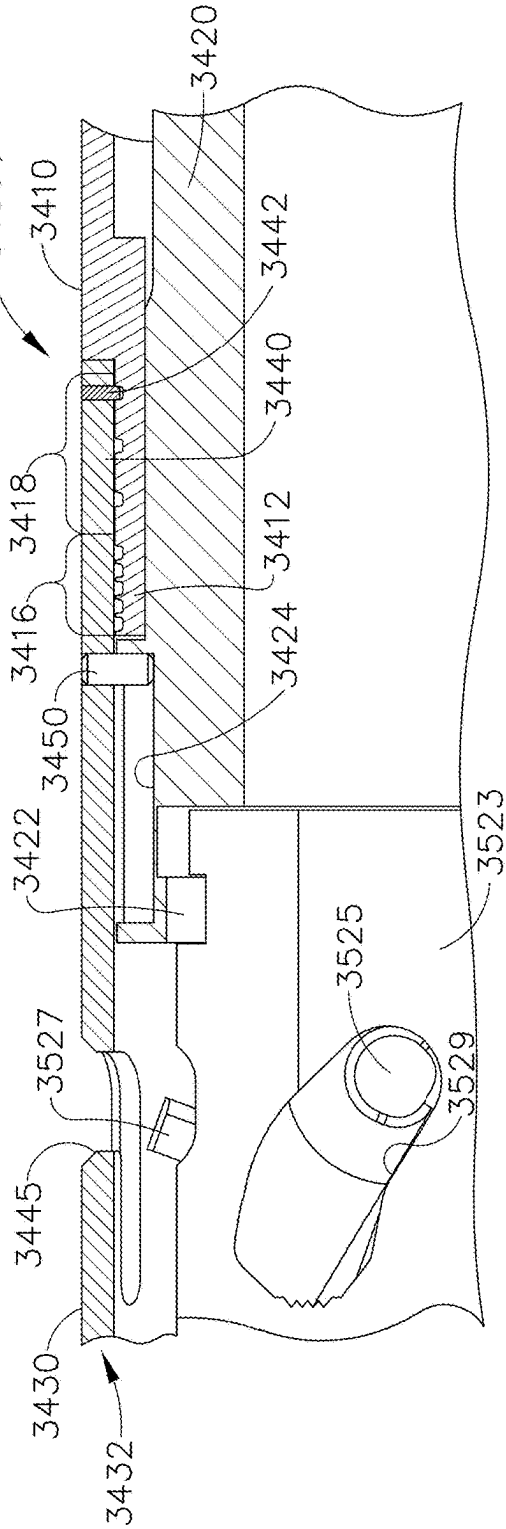
3408
3420
3400
3410
3442
3440
3418
3412
3416
3424
3450
3422
3523
3525
3527
3529
3445
3430
3432

FIG. 49

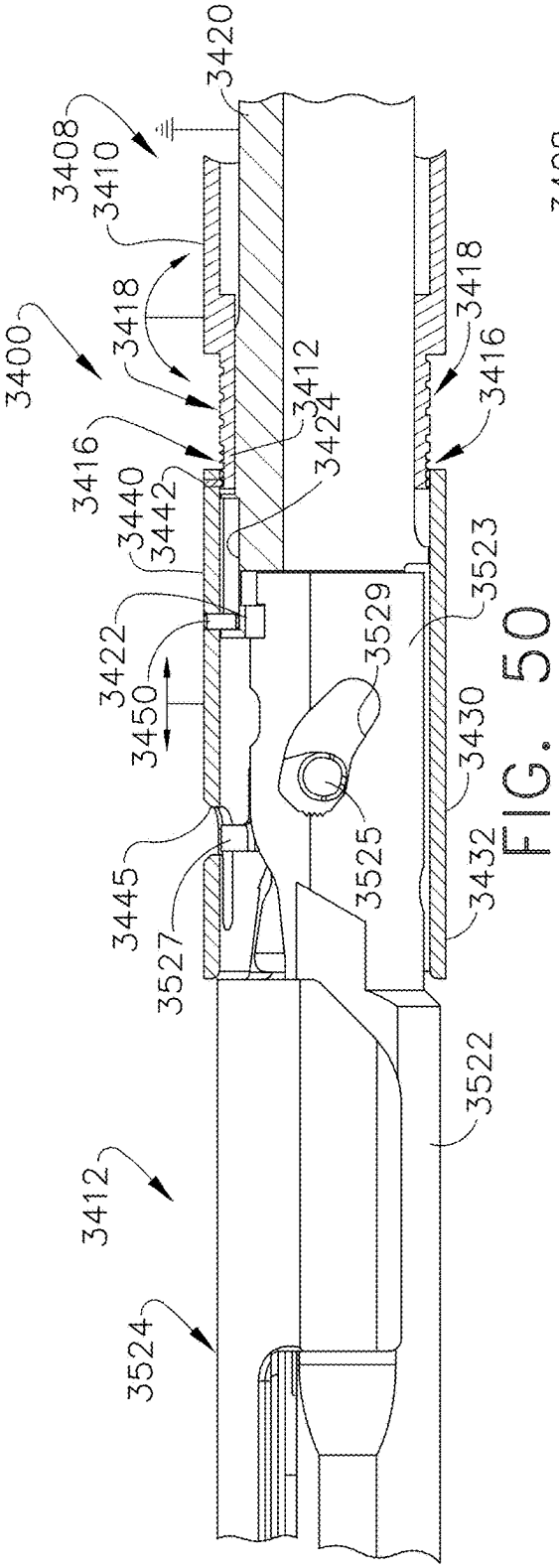
3420
3408
3410
3418
3400
3418
3416
3412
3424
3416
3440
3442
3523
3422
3529
3450
3430
3525
3445
3432
3527
3522
3412
3524

FIG. 50

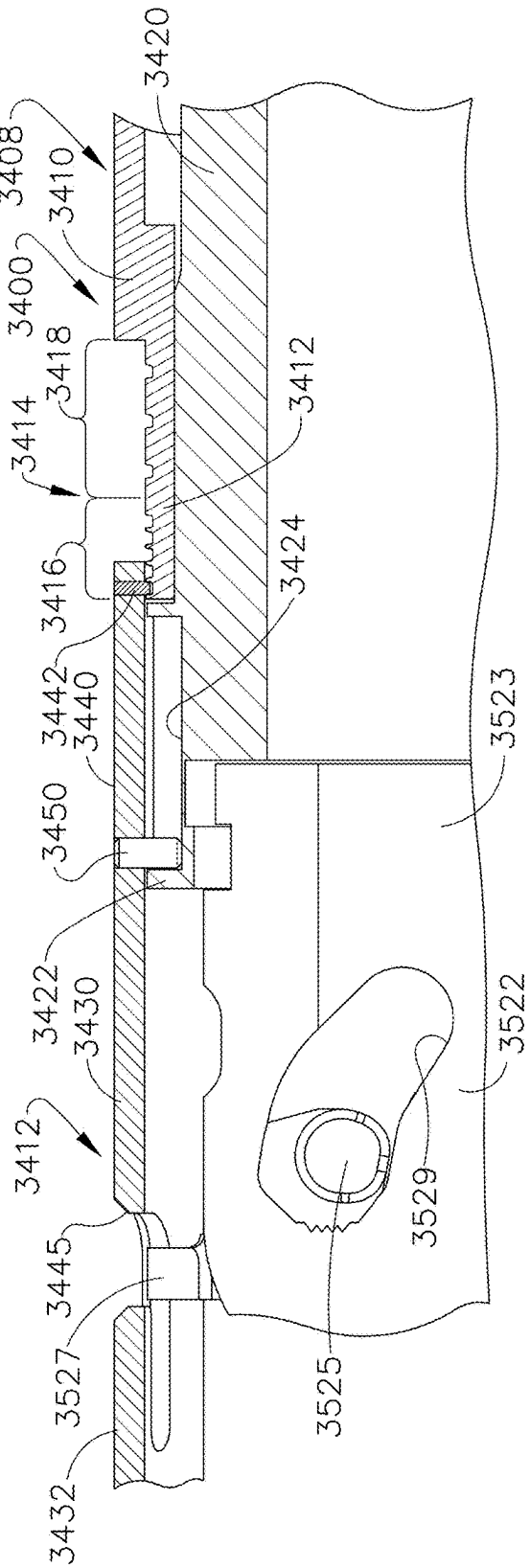
3420
3408
3410
3400
3418
3412
3414
3424
3416
3442
3440
3523
3450
3422
3430
3522
3412
3529
3445
3527
3525
3432

FIG. 51

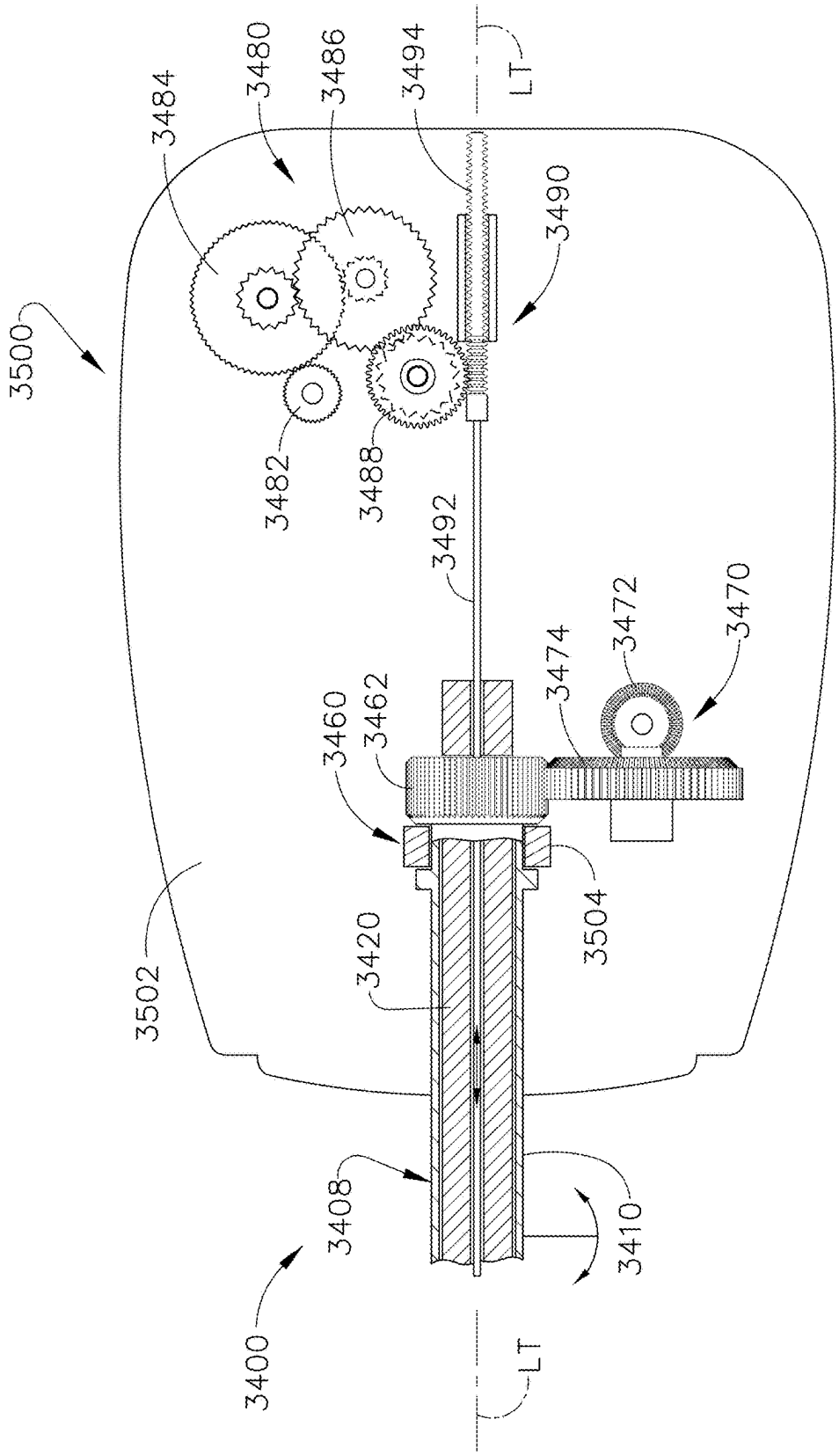
3500
3484
3480
3486
3494
LT
3490
3482
3488
3492
3472
3470
3474
3460
3462
3504
3420
3502
3408
3410
3400
LT

FIG. 52

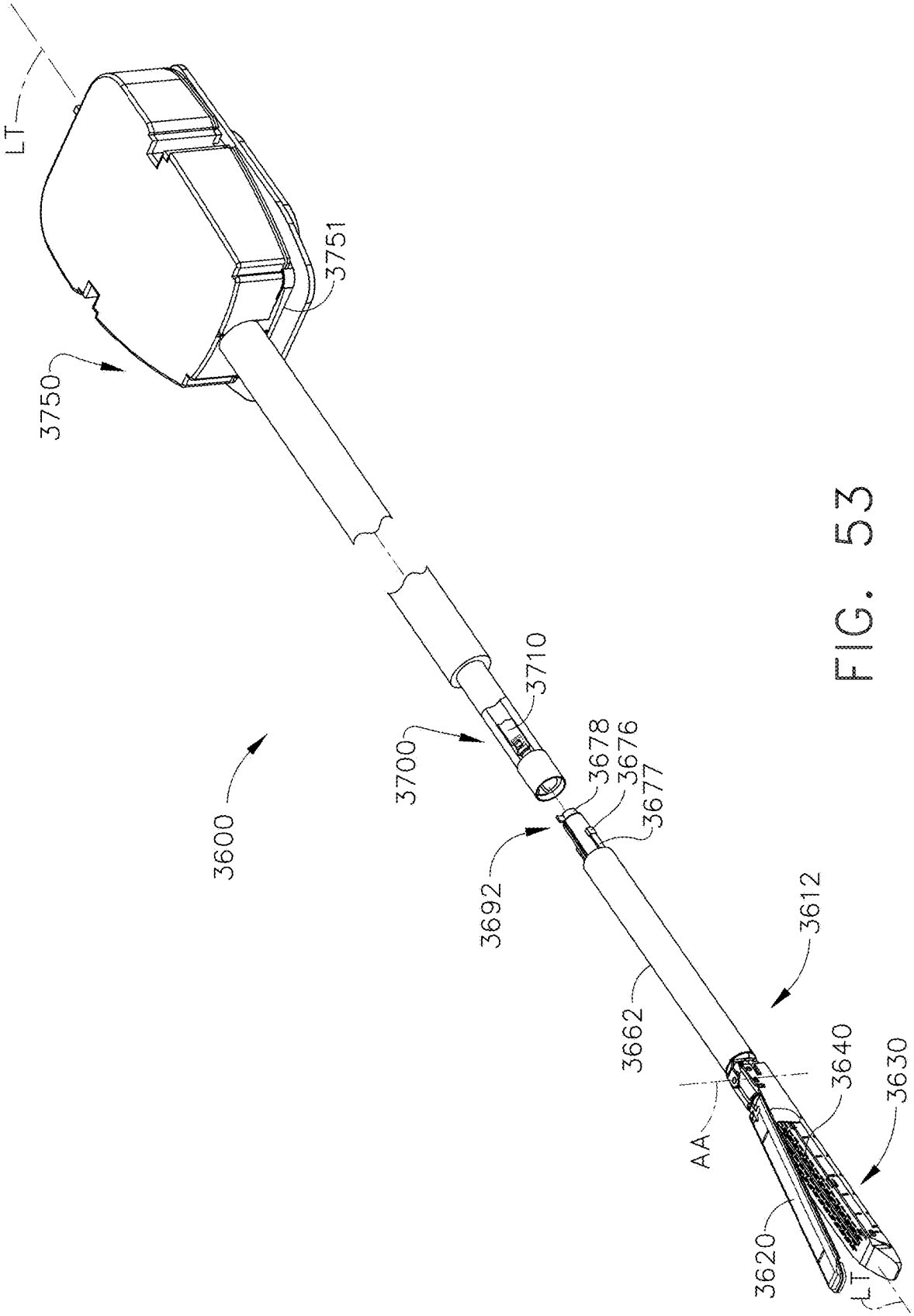
LT
3751
3750
3710
3700
3678
3676
3677
3600
3692
3612
3662
3640
3630
AA
3620
LT

FIG. 53

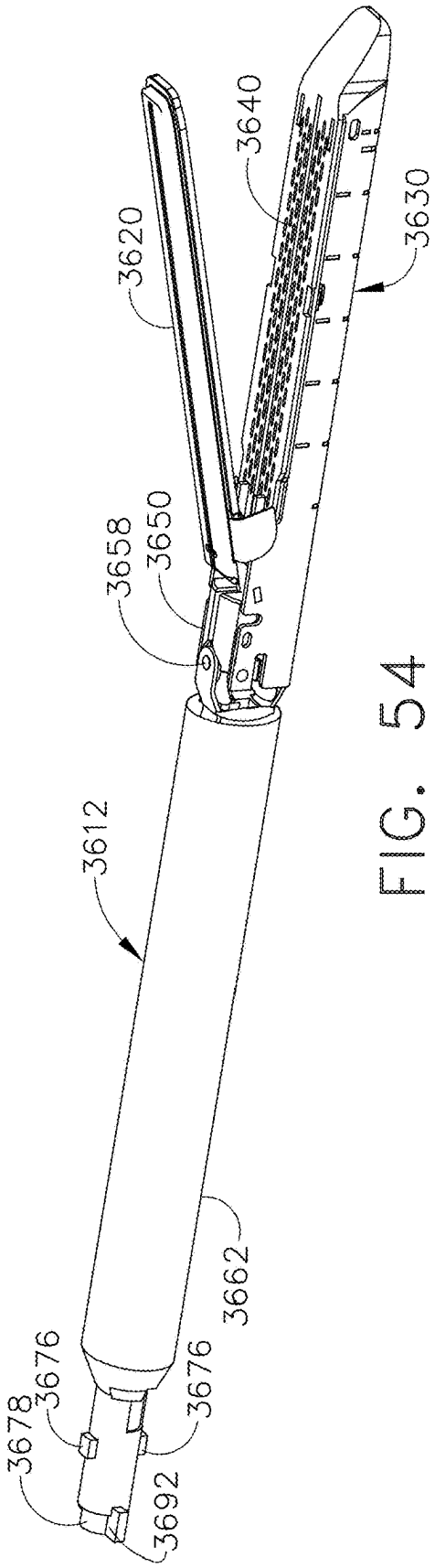
3620
3640
3630
3658
3650
3612
3662
3676
3678
3692

FIG. 54

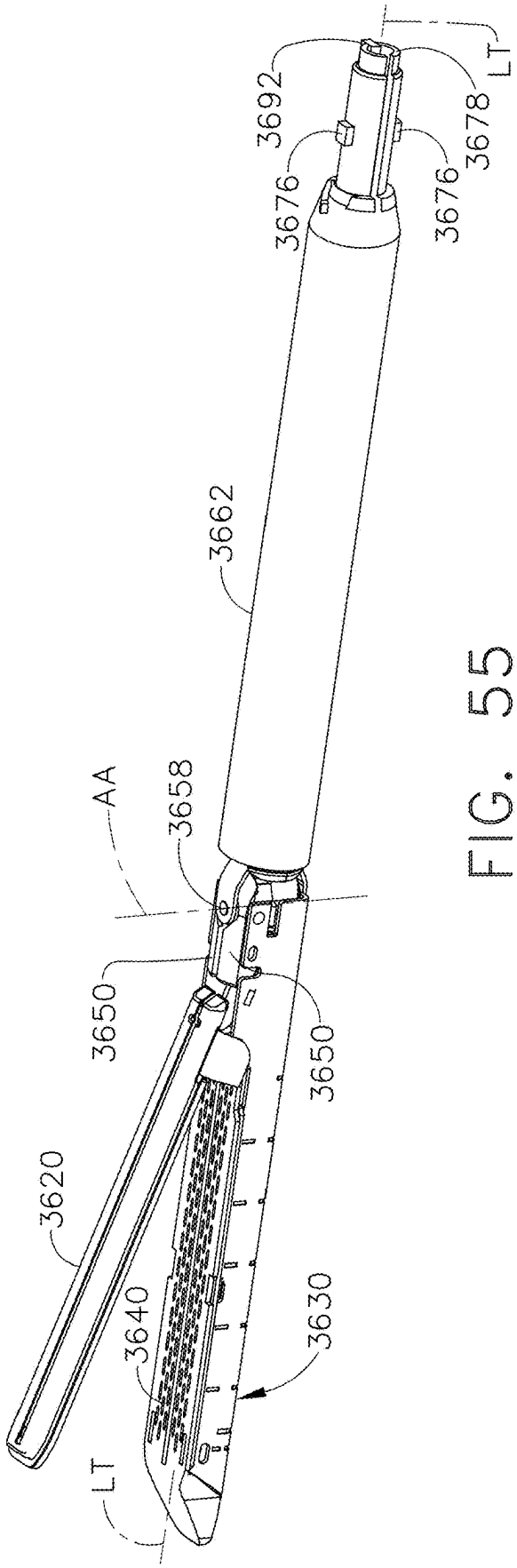
3692
3676
3678
LT
3662
AA
3658
3650
3620
3640
3630

FIG. 55

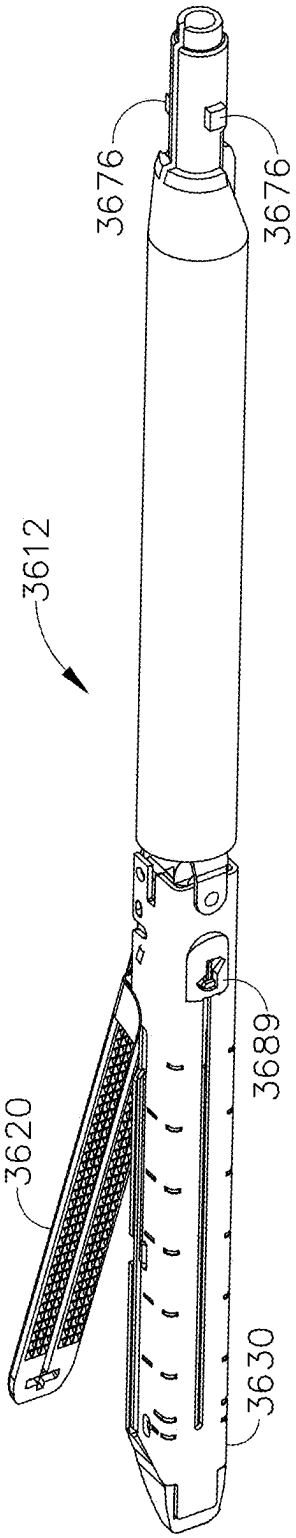
3612
3676
3676
3620
3689
3630

FIG. 56

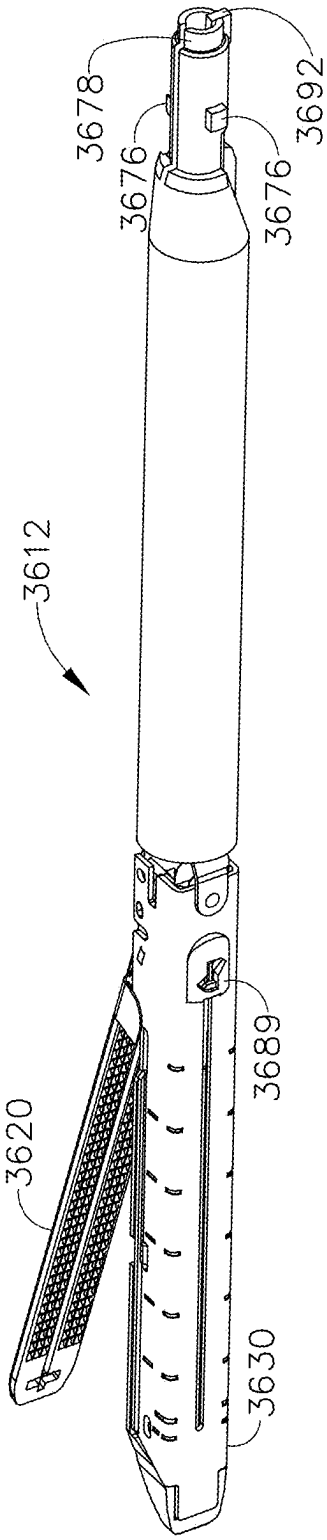
3612
3678
3676
3676
3692
3620
3689
3630

FIG. 57

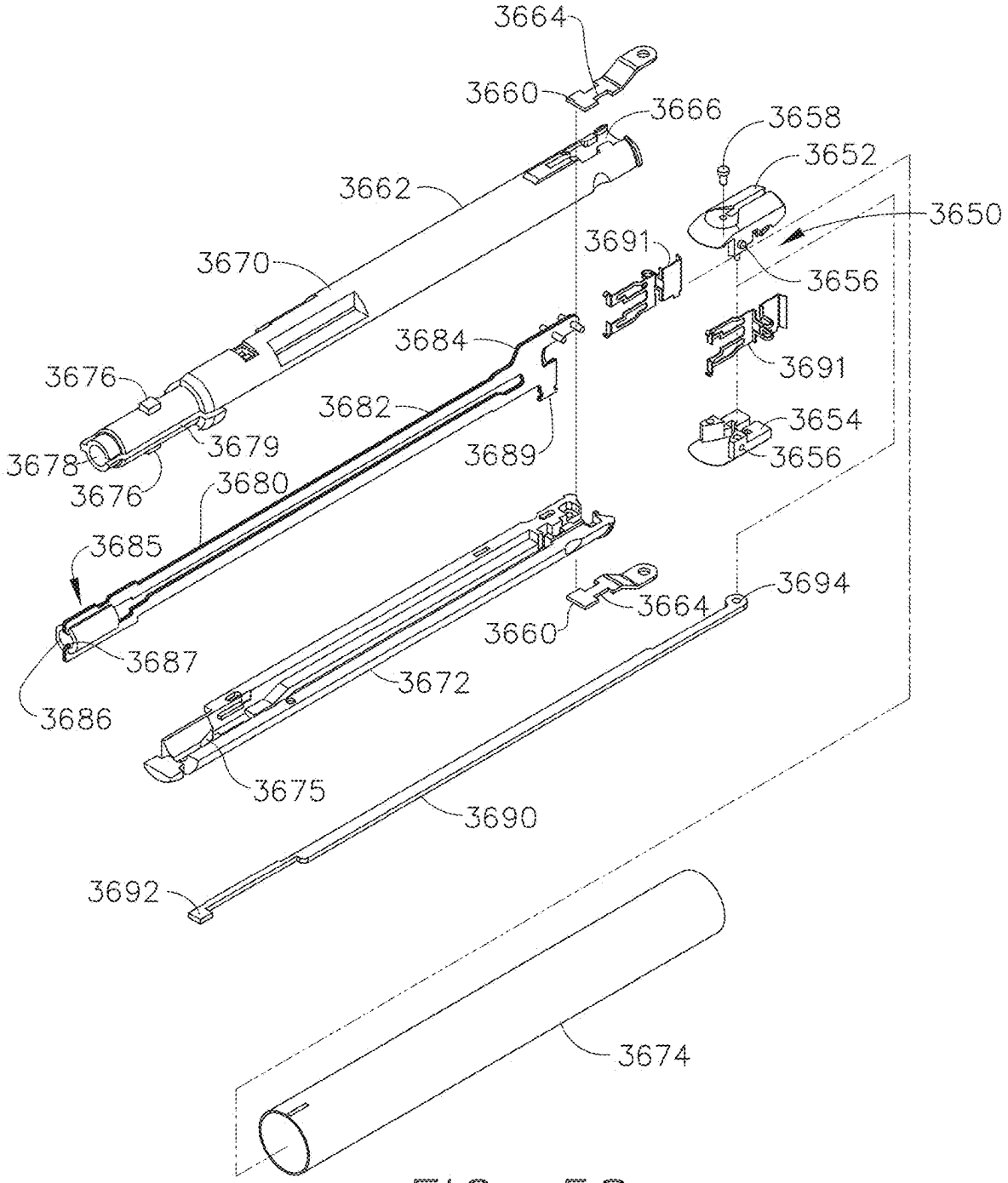
3664
3660
3666
3658
3652
3650
3662
3691
3670
3656
3684
3691
3676
3682
3654
3679
3689
3656
3678
3676
3680
3685
3664
3694
3660
3687
3672
3686
3675
3690
3692
3674

FIG. 58

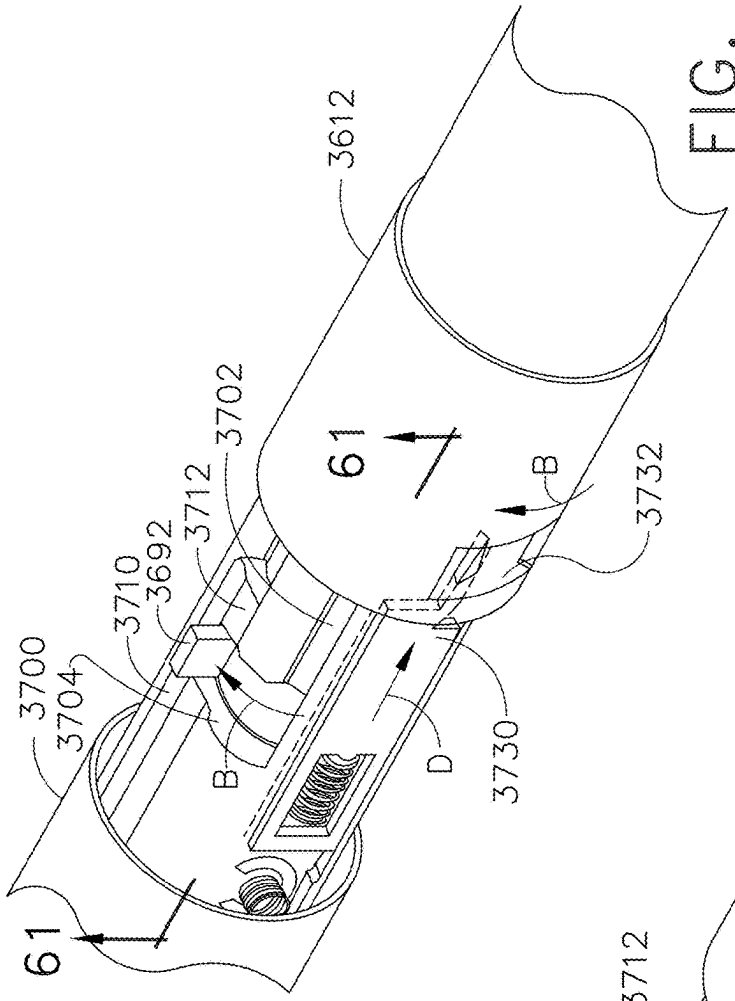
3612
3702
3712
3692
3710
3700
3704
61
61
B
B
D
3730
3732

FIG. 59

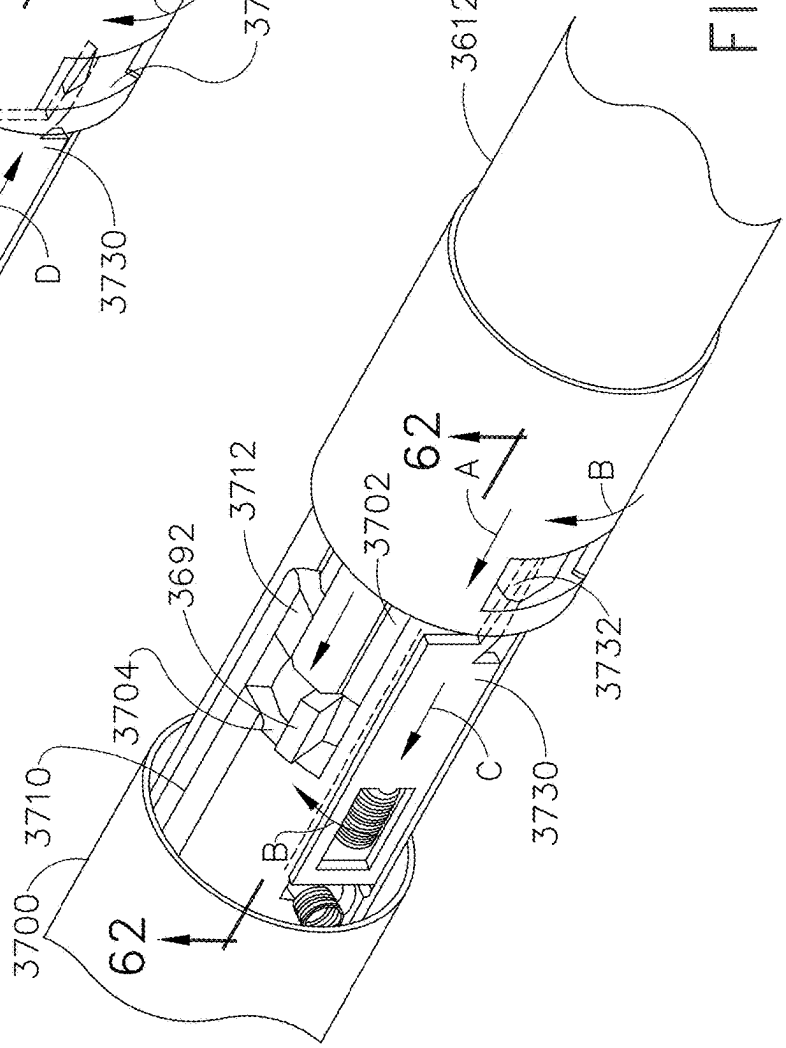
3612
3712
3702
3692
3704
3710
3700
62
62
A
B
B
C
3730
3732

FIG. 60

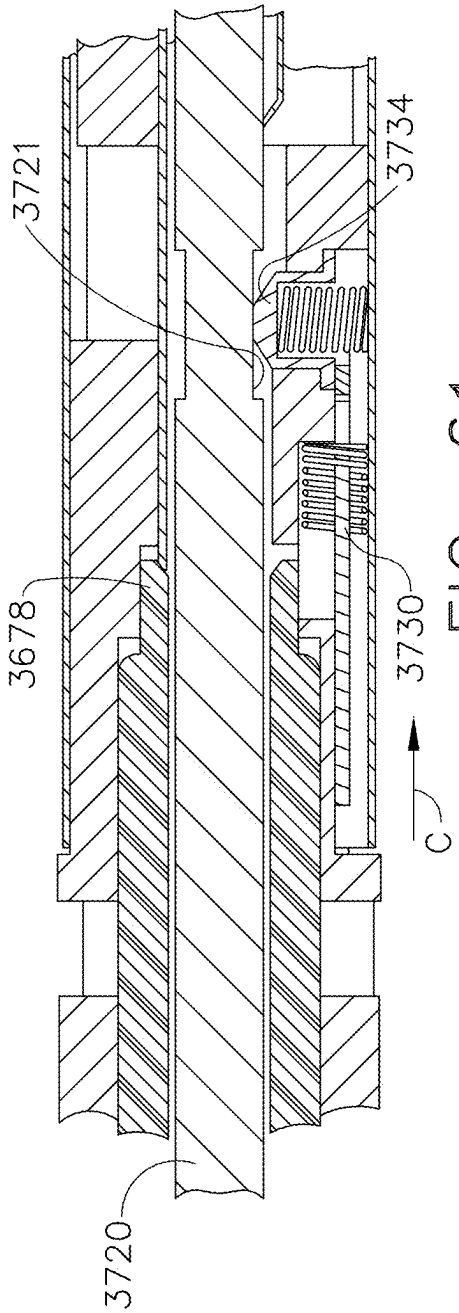
3721
3734
3678
3730
C
3720

FIG. 61

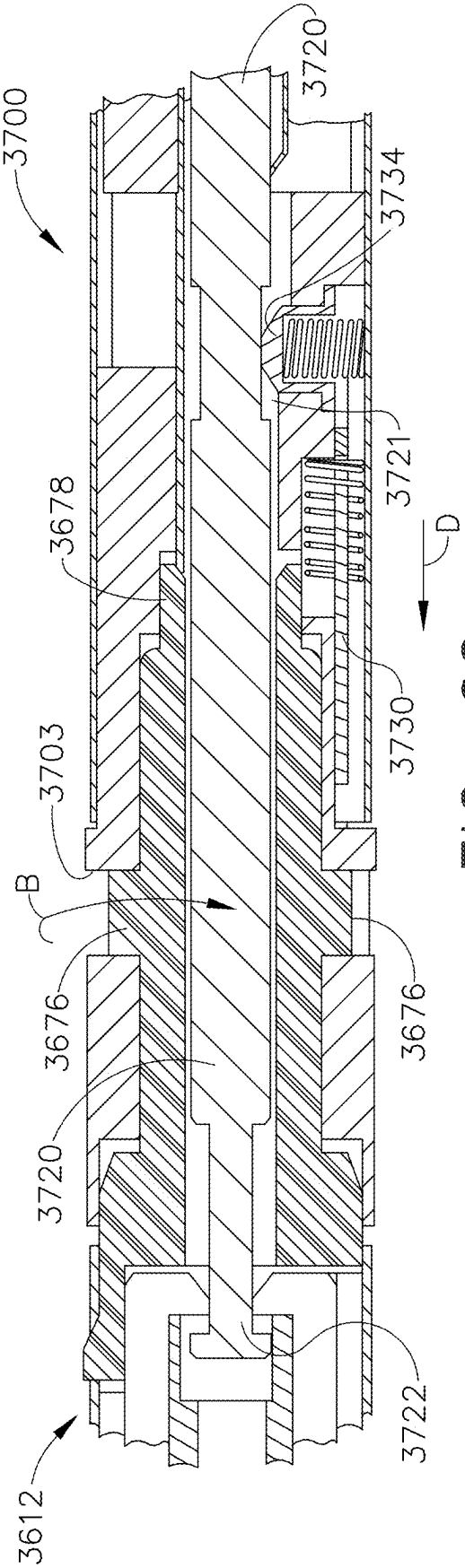
3700
3720
3734
3721
3678
D
3730
3703
B
3676
3676
3720
3722
3612

FIG. 62

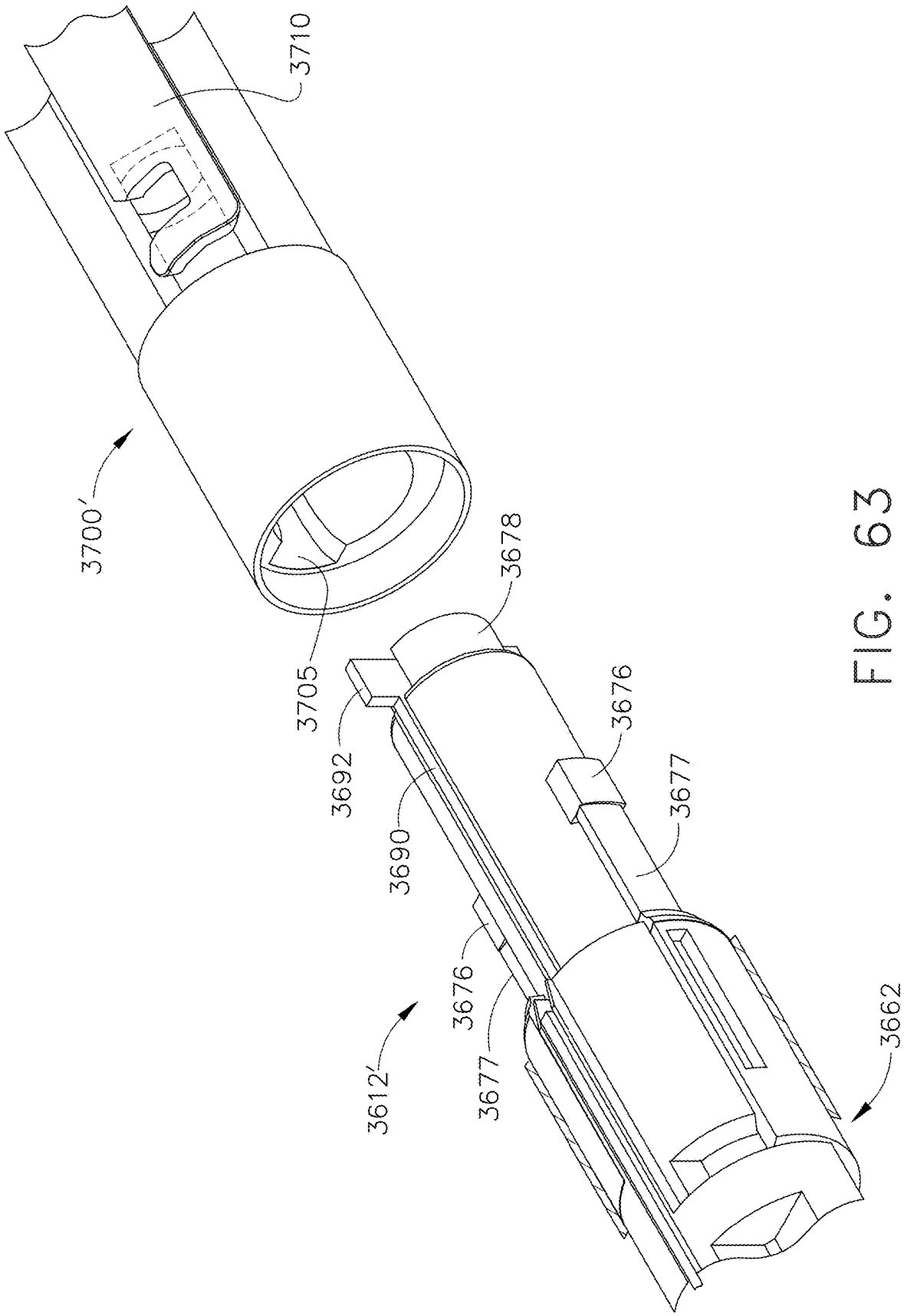

FIG. 63

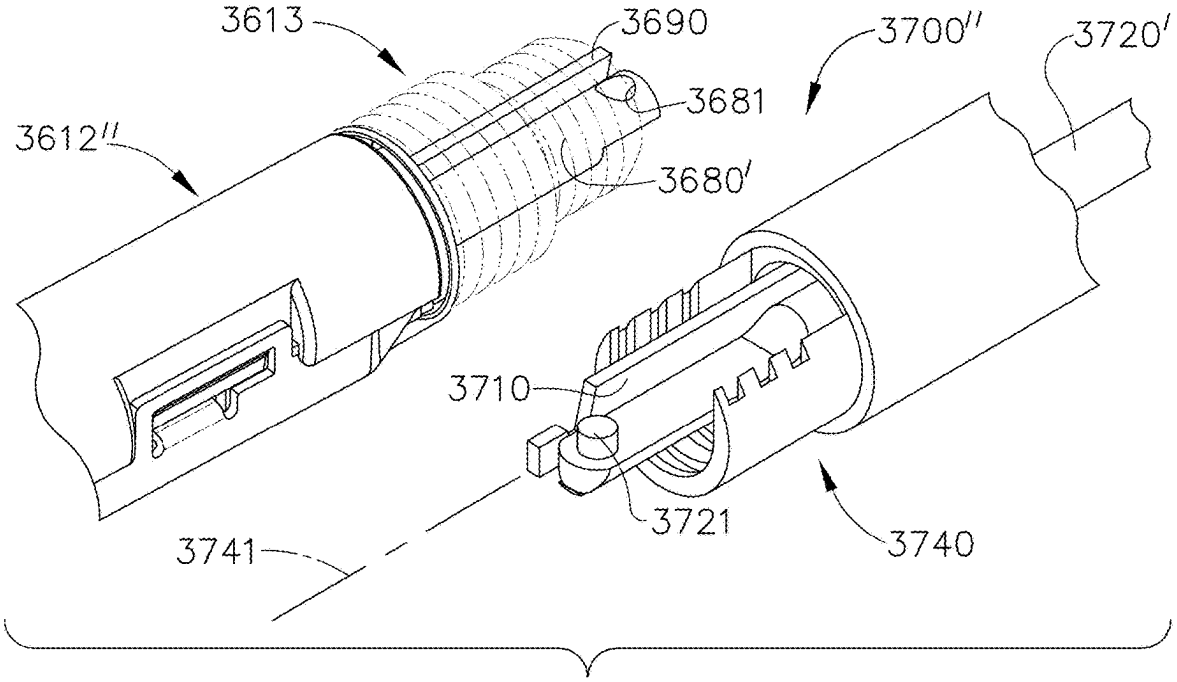
3613
3690
3700''
3720'
3681
3612''
3680'
3710
3721
3741
3740

FIG. 64

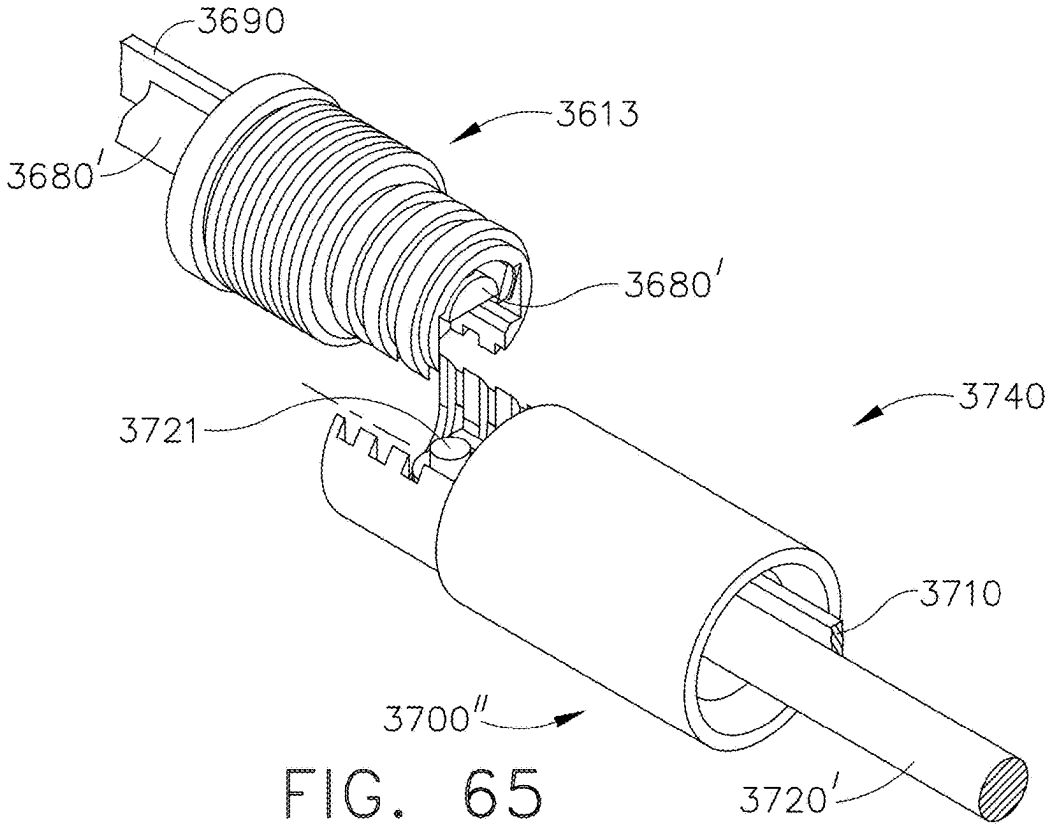
3690
3613
3680'
3680'
3740
3721
3710
3700''
3720'

FIG. 65

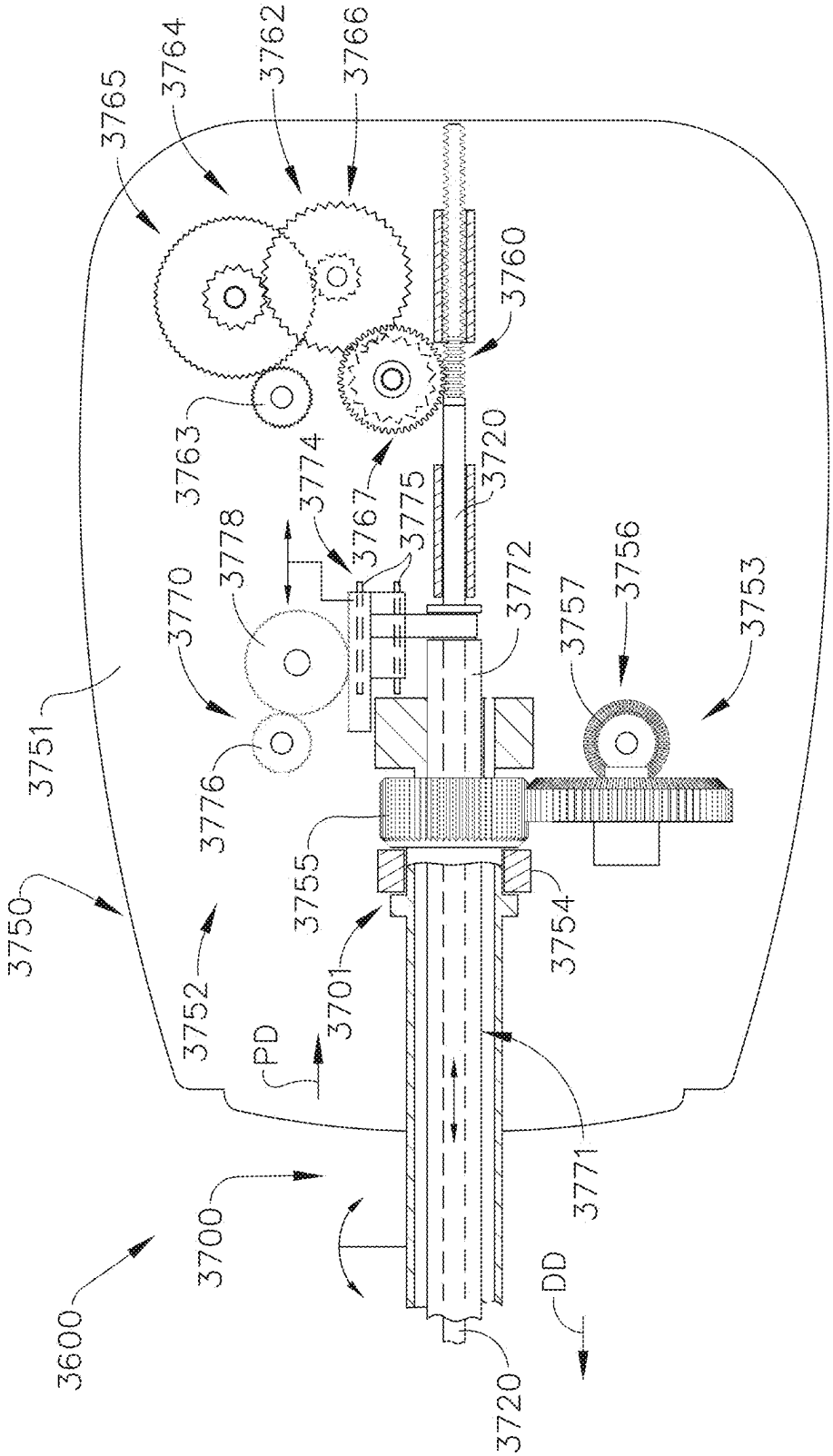
3765
3764
3762
3766
3760
3763
3774
3767
3775
3720
3778
3770
3772
3757
3756
3753
3751
3776
3755
3754
3750
3752
3701
PD
3771
3700
3600
DD
3720

FIG. 66

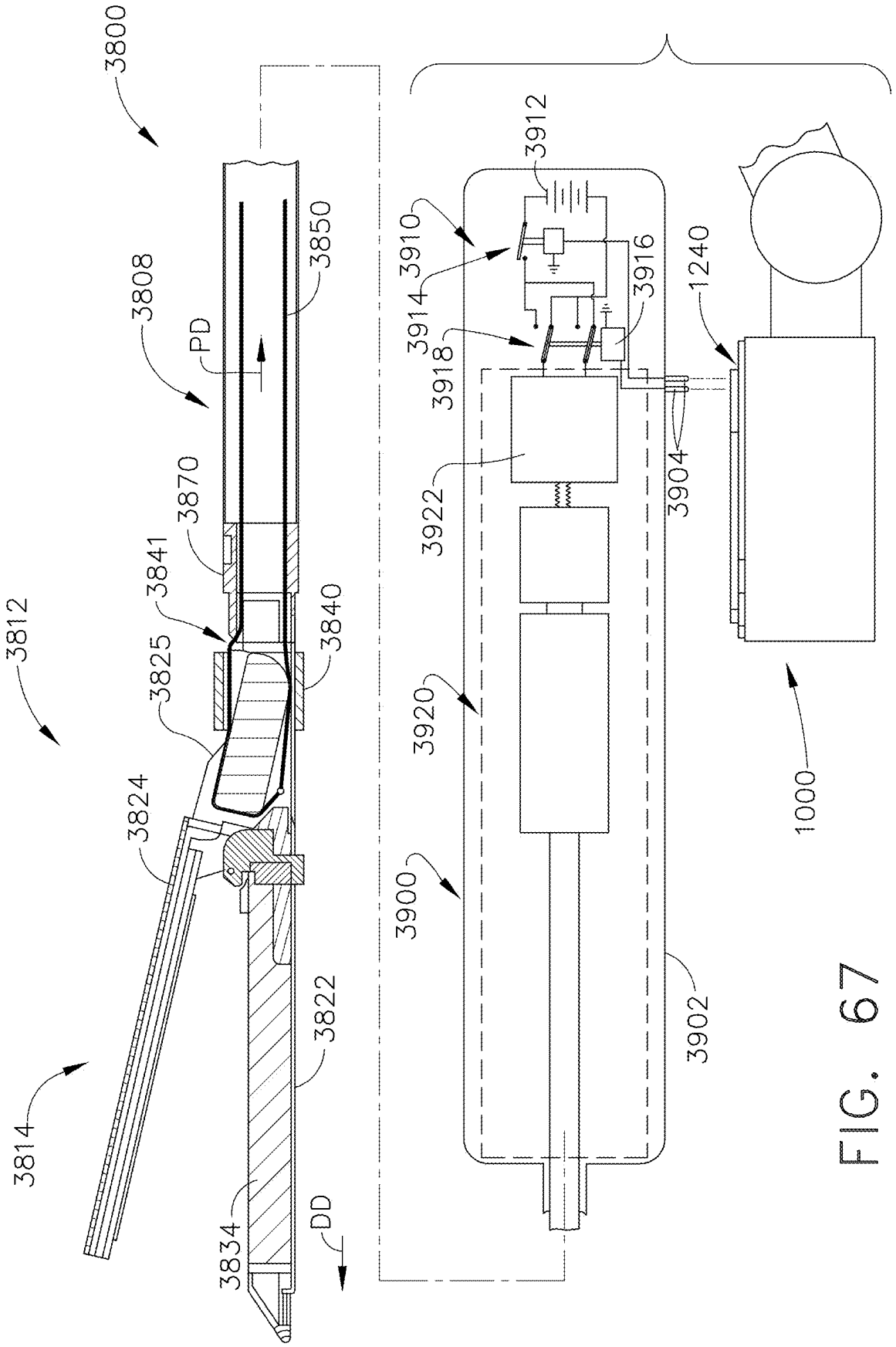
3800
3808
PD
3850
3870
3841
3840
3812
3825
3824
3814
3822
3834
DD
3912
3910
3914
3916
3918
3922
3920
3900
3904
3902
1240
1000

FIG. 67

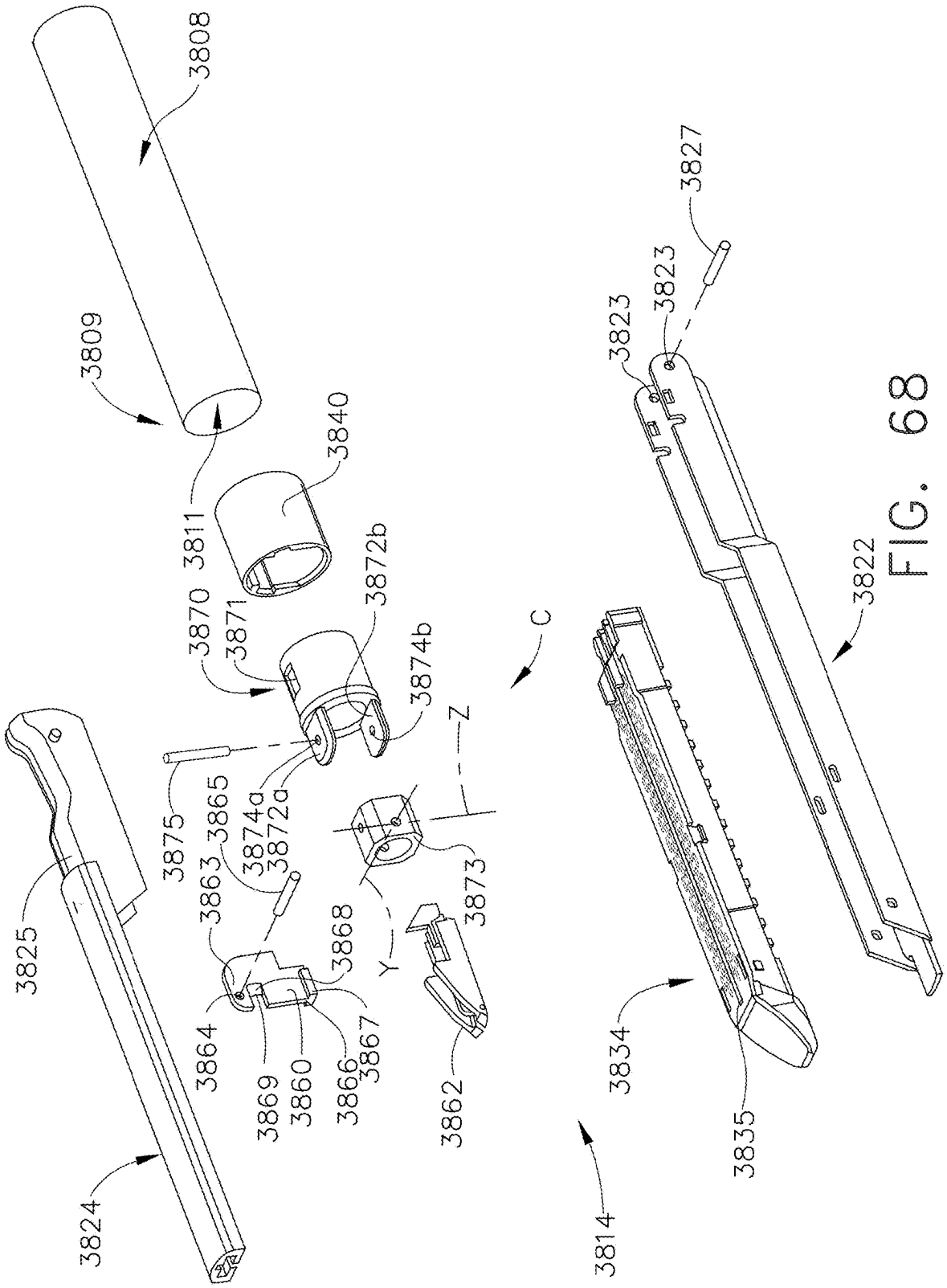
3808
3809
3811
3840
3870
3871
3872b
3874b
C
Z
3875
3865
3874a
3872a
3863
3868
Y
3873
3825
3864
3869
3860
3866
3867
3862
3824
3814
3834
3835
3823
3823
3827
3822

FIG. 68

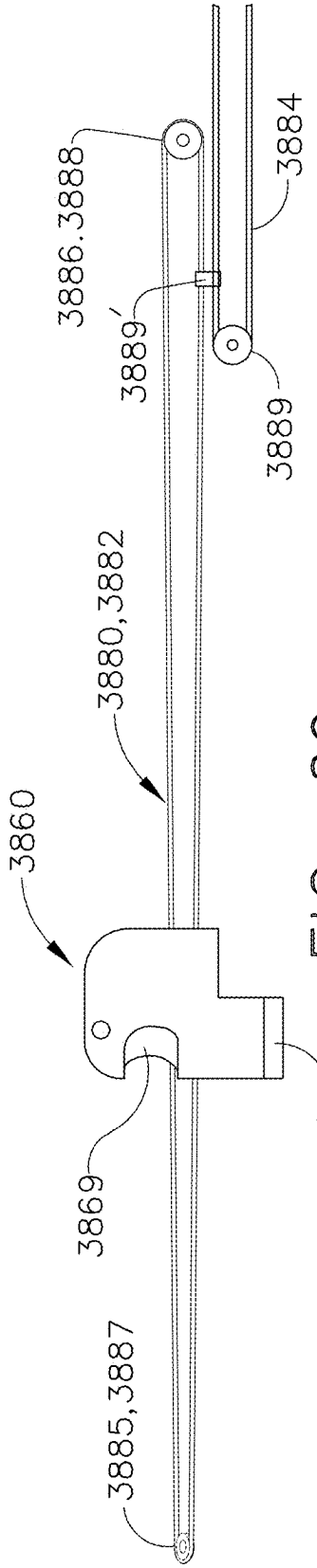
3886.3888
3889'
3884
3889
3880,3882
3860
3869
3887
3885,3887

FIG. 69

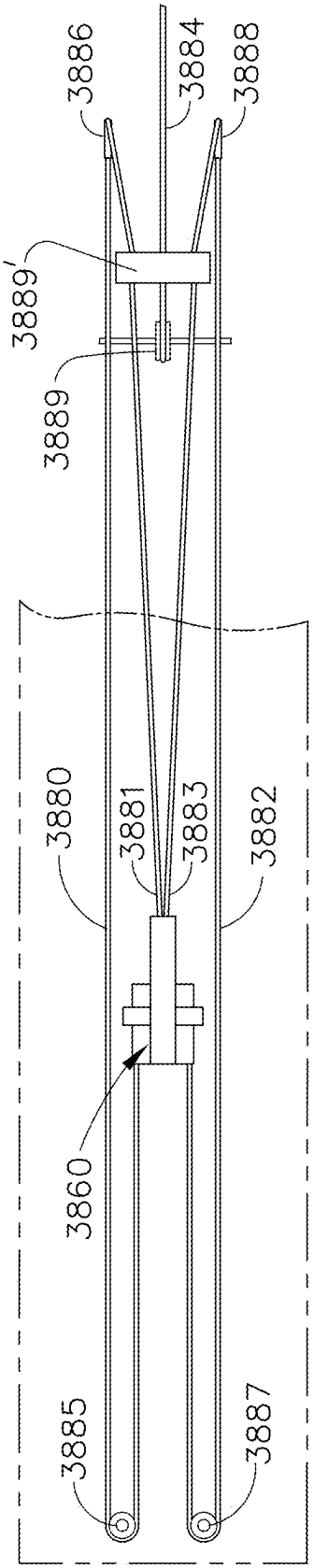
3886
3884
3888
3889'
3889
3880
3881
3883
3882
3860
3885
3887

FIG. 70

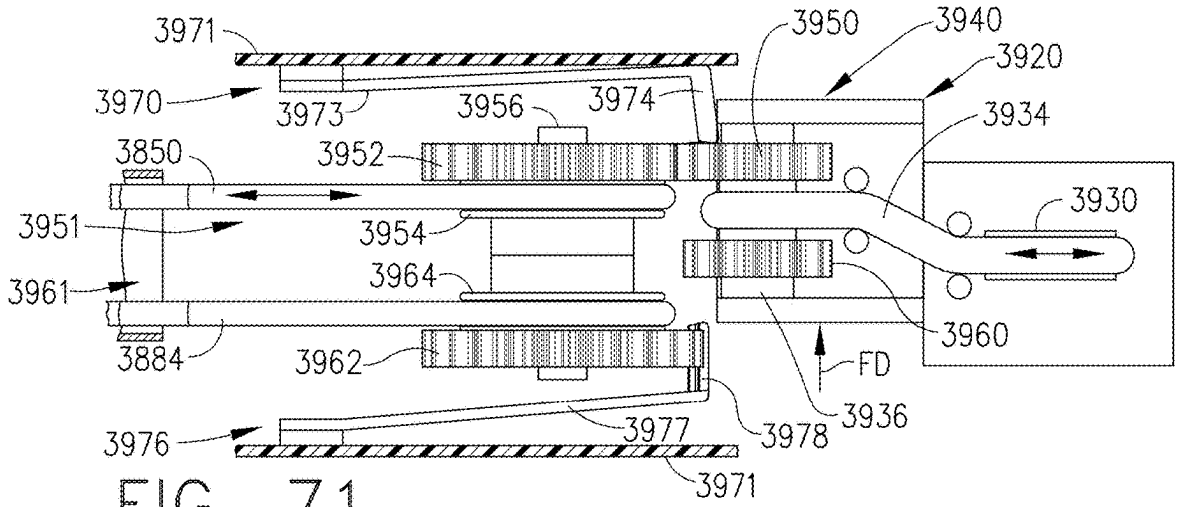

FIG. 71

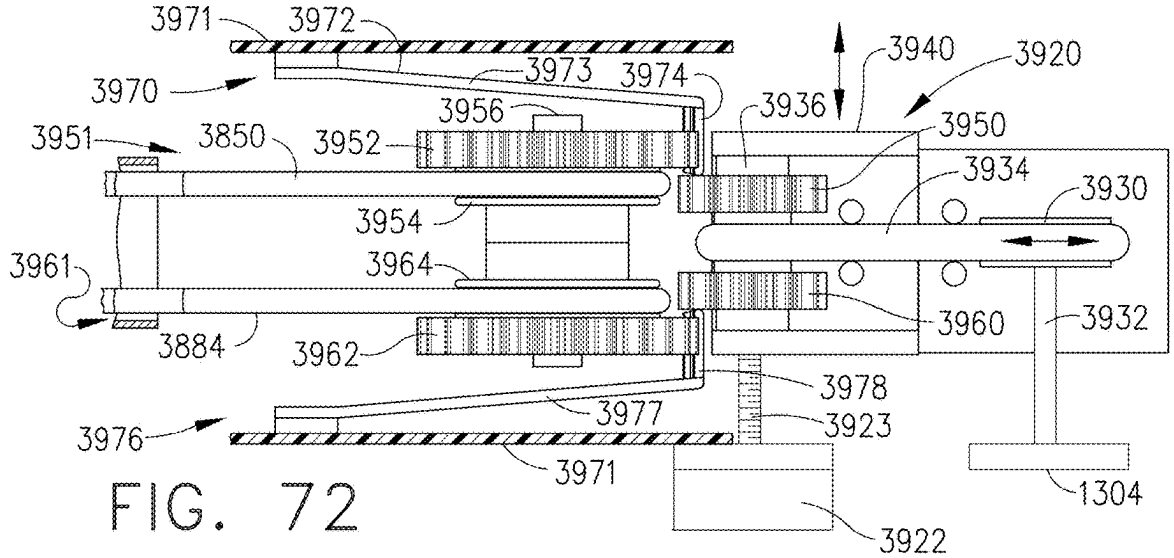

FIG. 72

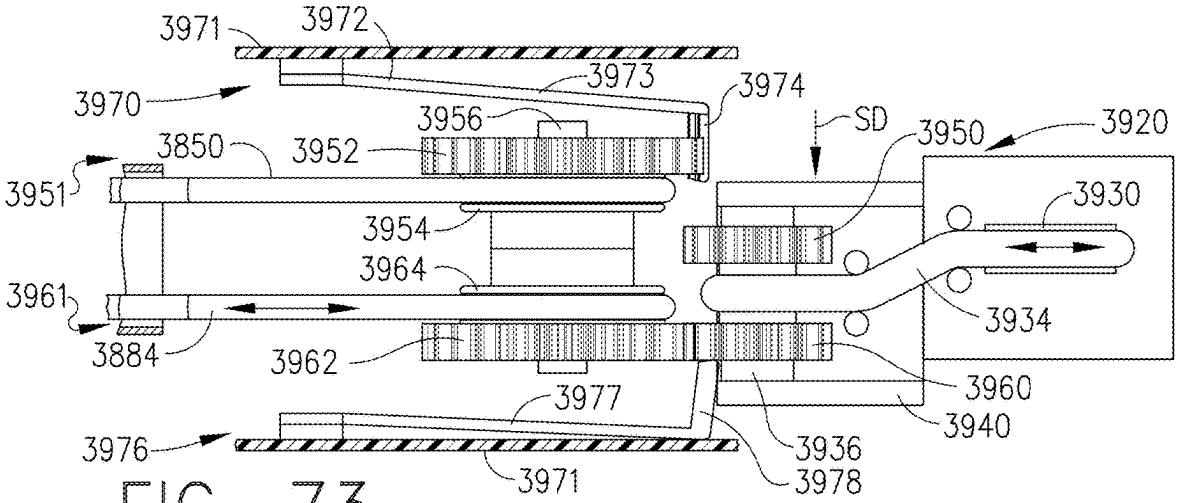

FIG. 73

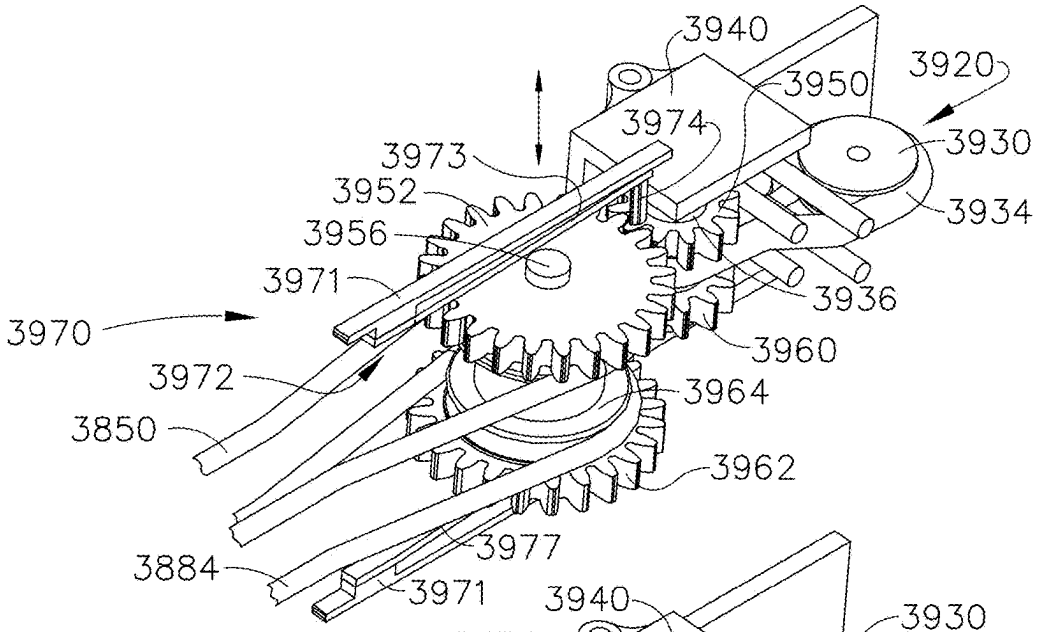

FIG. 74

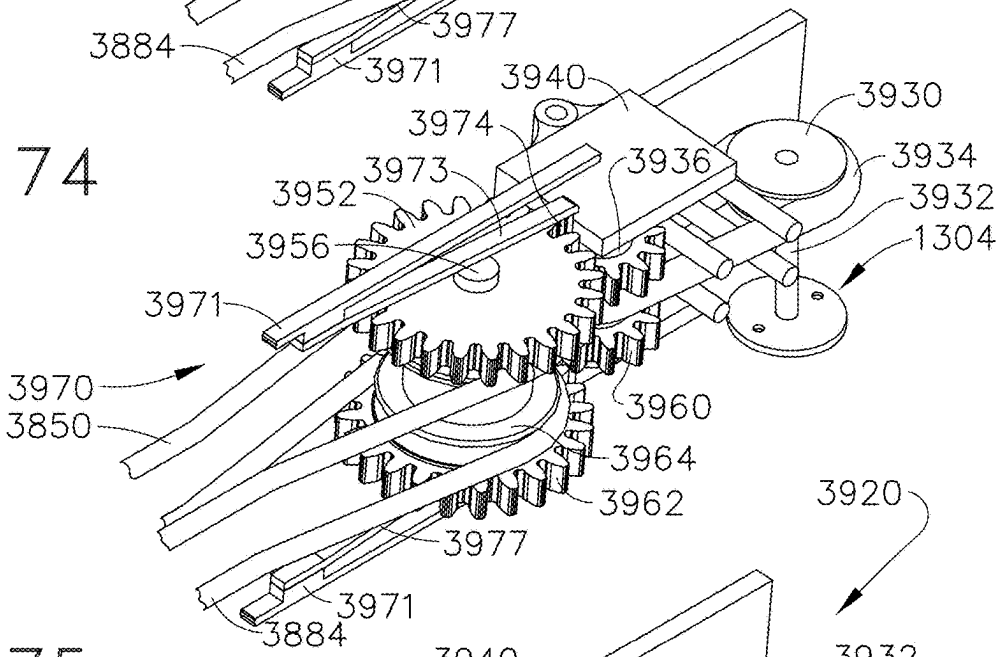

FIG. 75

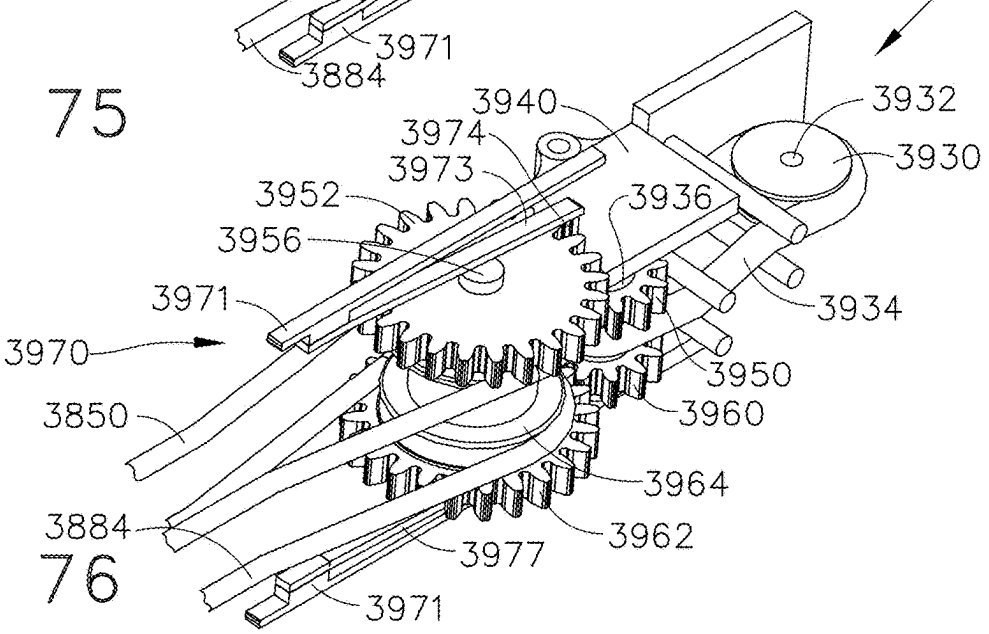

FIG. 76

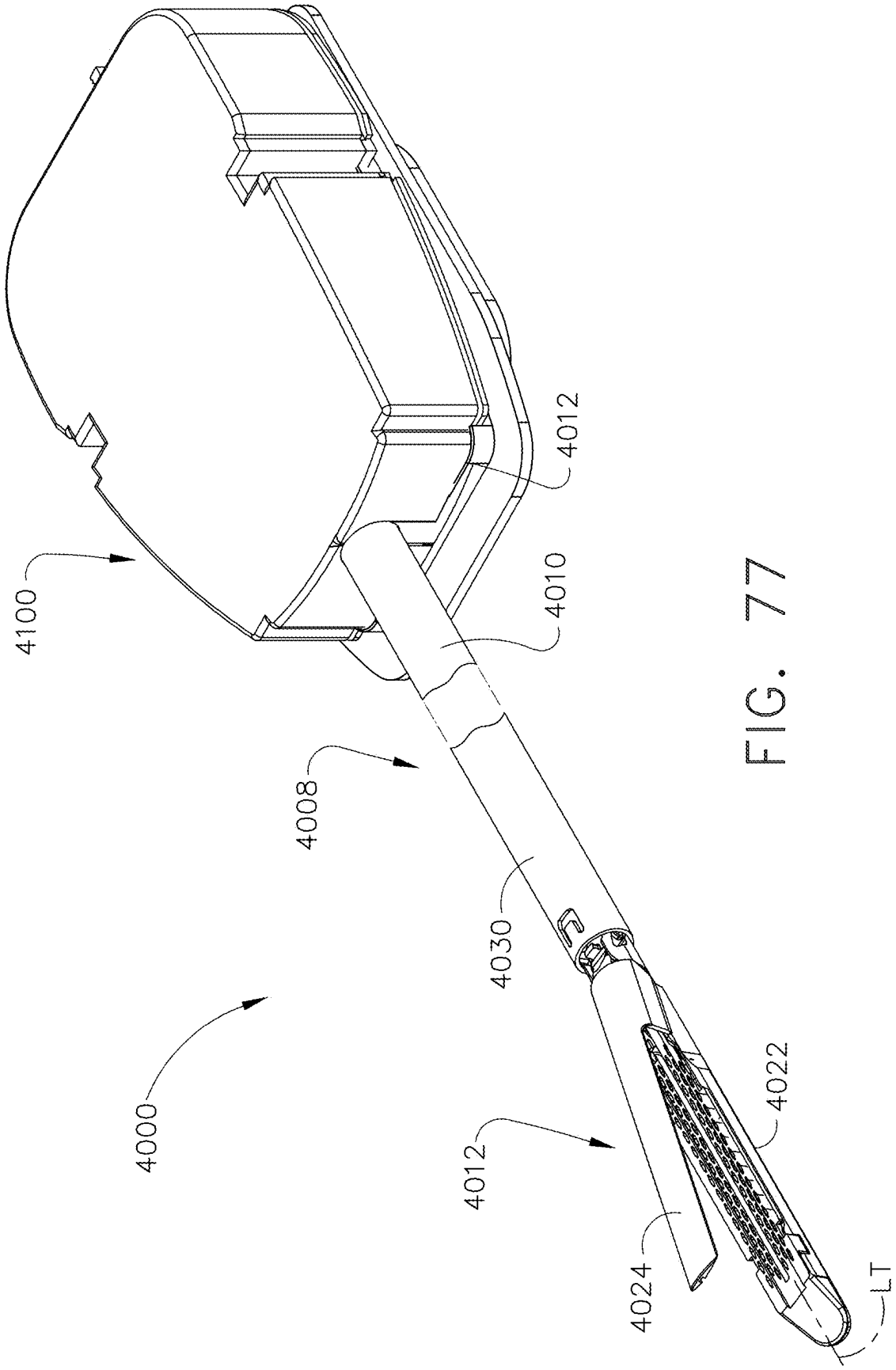

FIG. 77

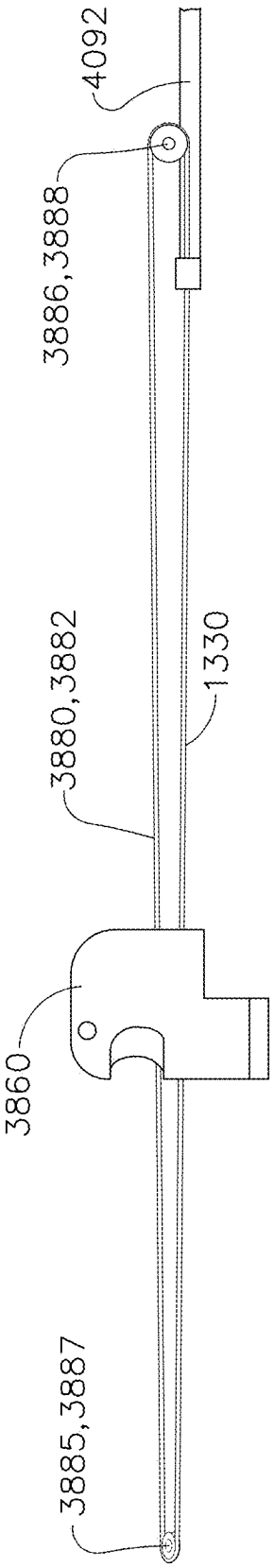
4092
3886,3888
3880,3882
1330
3860
3885,3887

FIG. 78

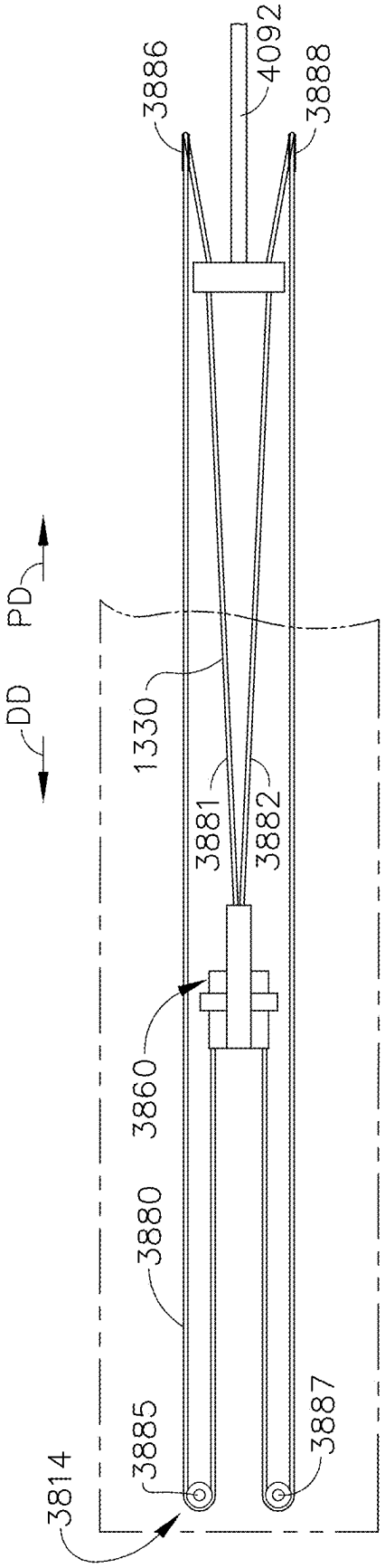
3886
4092
3888
PD
DD
1330
3881
3882
3860
3880
3885
3887
3814

FIG. 79

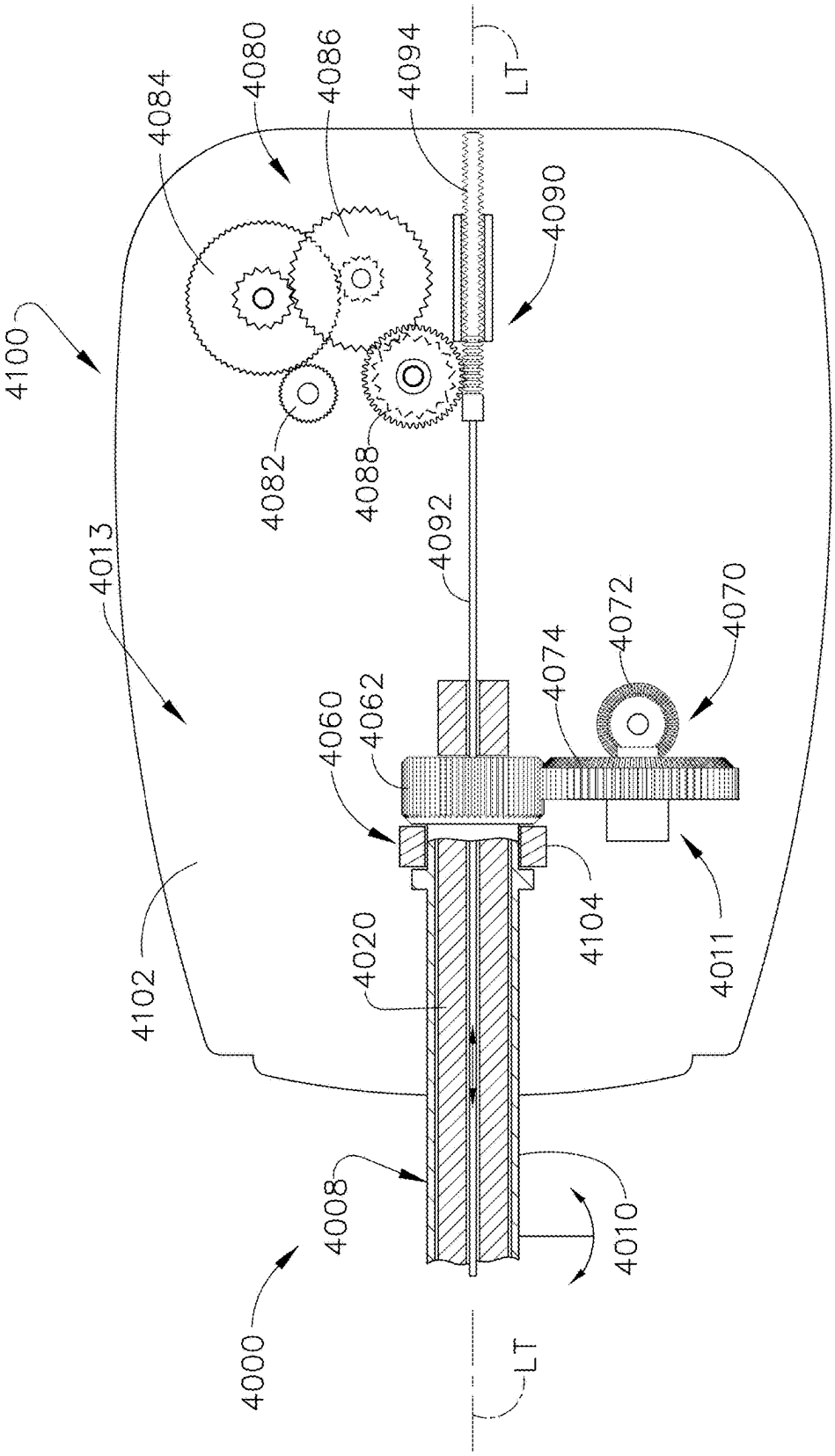
4100
4084
4080
4086
4094
LT
4090
4082
4088
4013
4092
4072
4070
4074
4060
4062
4104
4011
4102
4020
4008
4010
4000
LT

FIG. 80

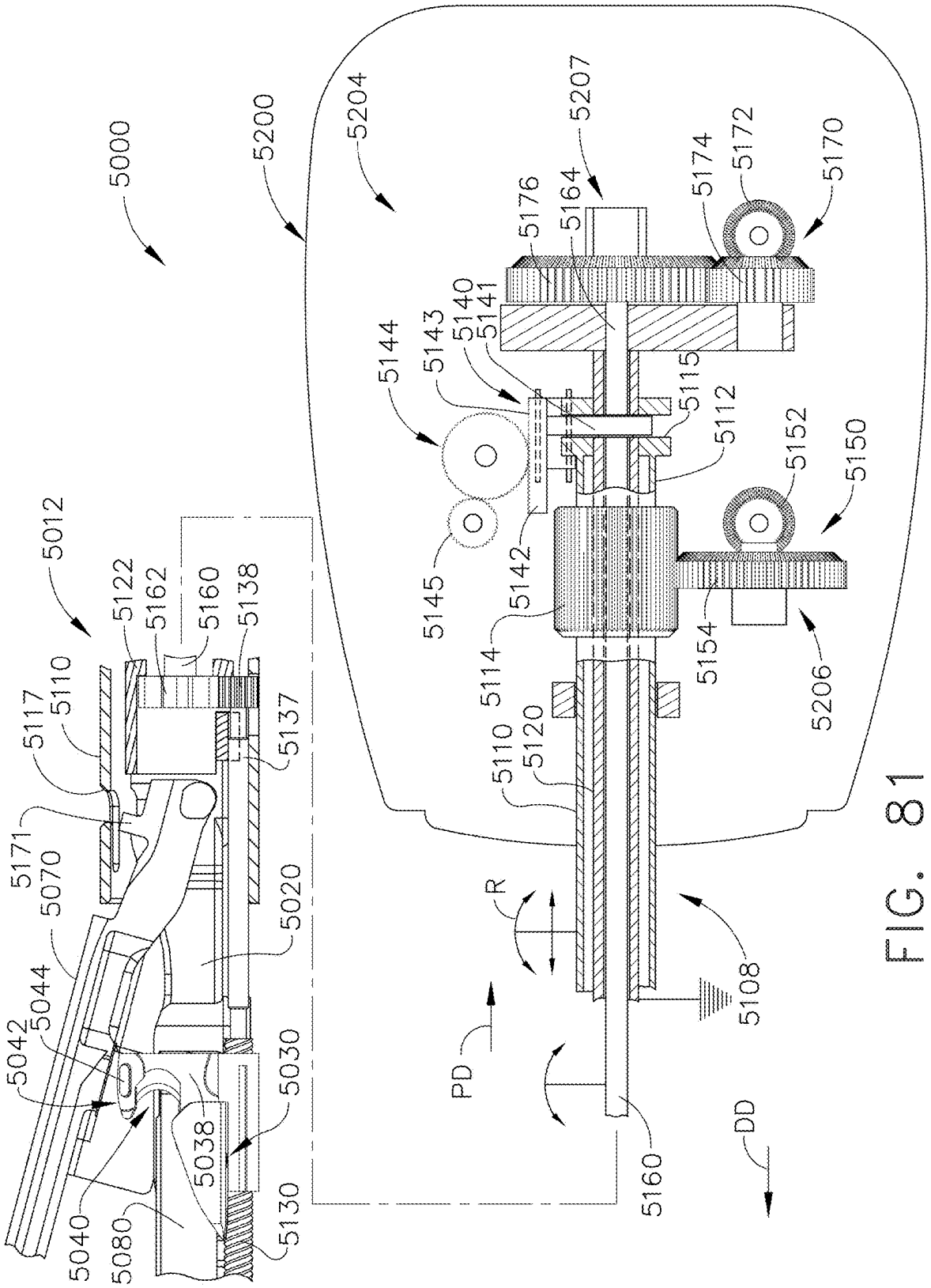
5000
5200
5204
5207
5176
5164
5174
5172
5170
5140
5141
5143
5144
5115
5112
5152
5150
5145
5142
5154
5206
5114
5120
5110
5108
R
PD
DD
5160
5012
5122
5162
5160
5138
5137
5117
5110
5171
5070
5020
5044
5042
5030
5038
5040
5080
5130

FIG. 81

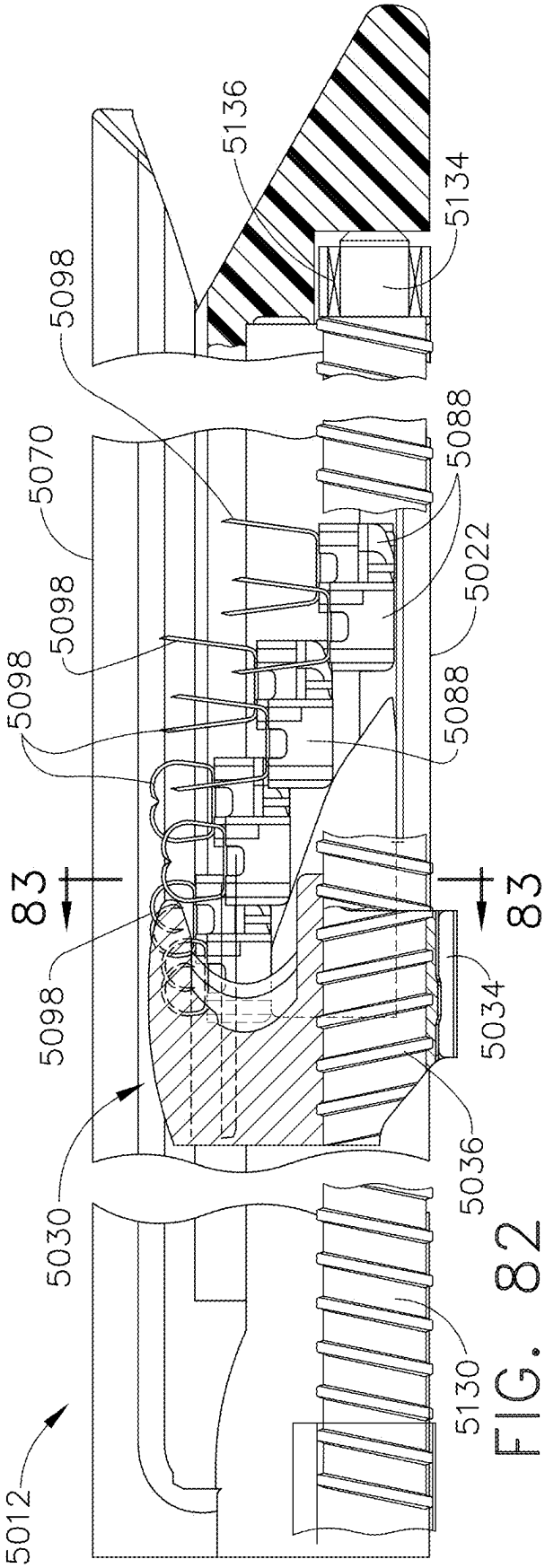
5136
5134
5098
5070
5088
5022
5098
5098
5088
83
83
5098
5034
5036
5030
5130
5012

FIG. 82

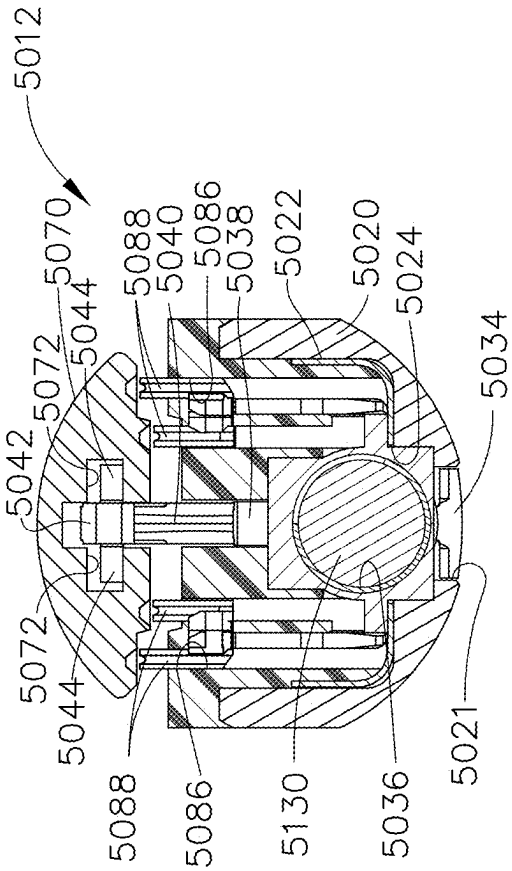
5012
5070
5088
5040
5086
5038
5022
5020
5024
5044
5072
5034
5042
5072
5044
5088
5086
5130
5036
5021

FIG. 83

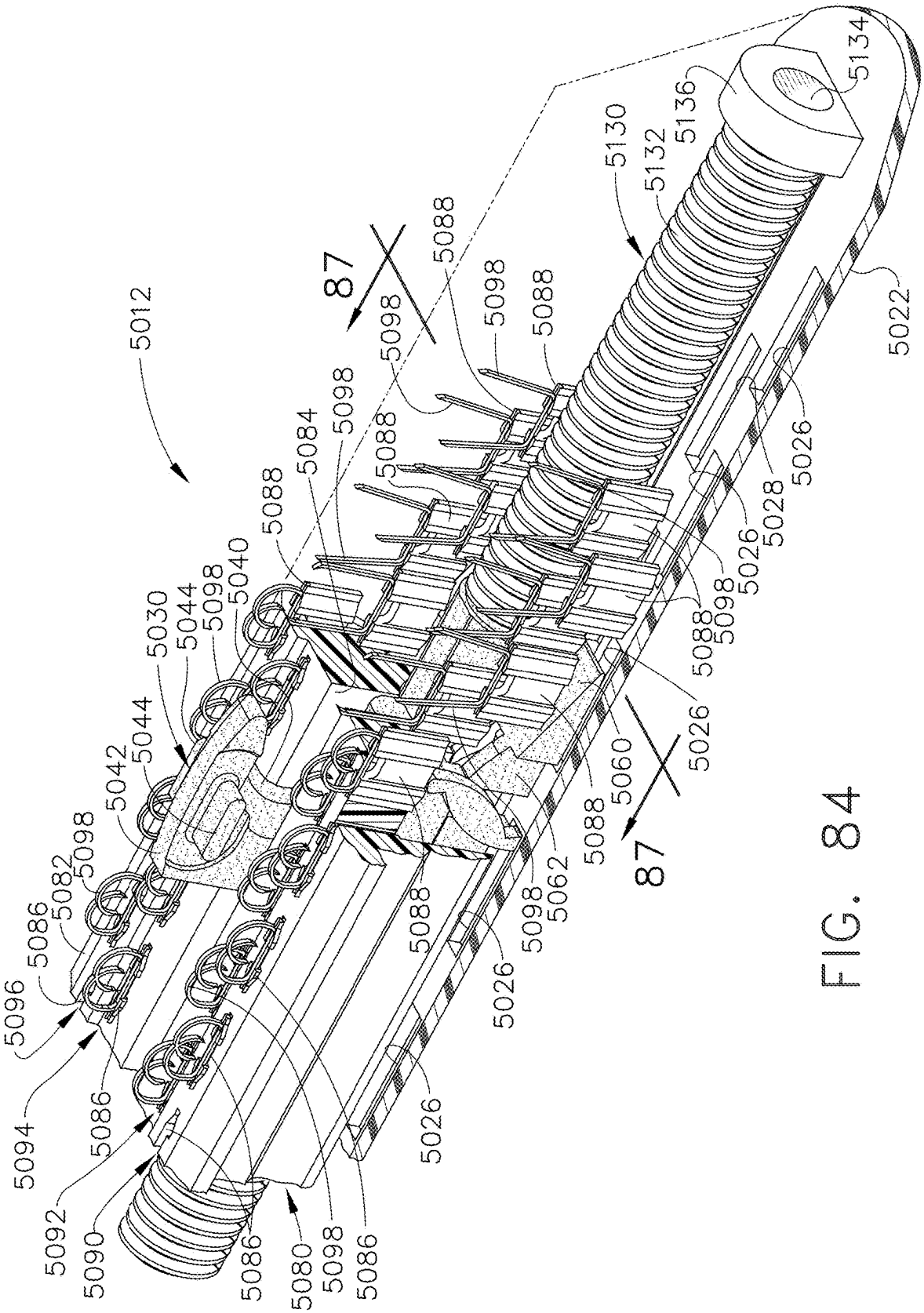
5012
5134
5136
5130
5132
5022
5088
5098
87
5026
5028
5084
5040
5030
5044
5042
5082
5086
5096
5094
5092
5090
5080
5060
5062

FIG. 84

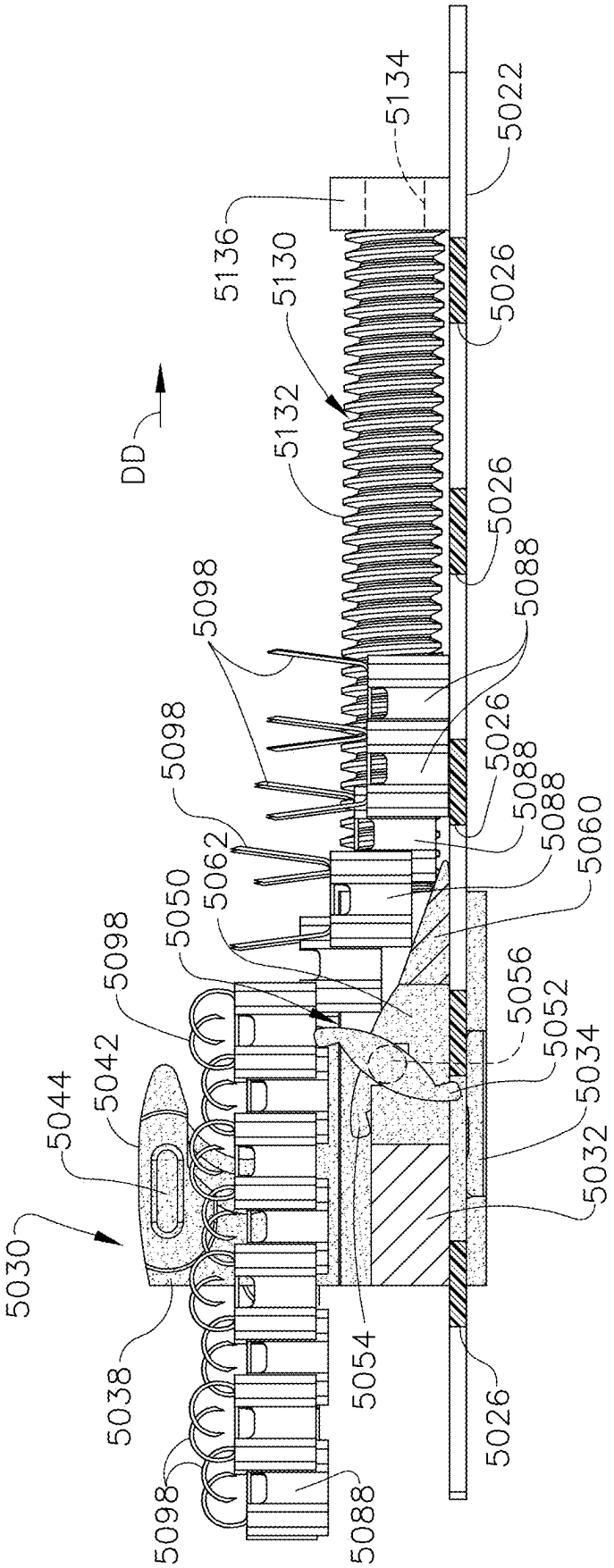
5134
5022
5136
5130
5026
DD
5132
5026
5088
5098
5026
5098
5088
5088
5062
5060
5050
5098
5056
5052
5042
5034
5044
5032
5030
5054
5038
5026
5098
5088

FIG. 85

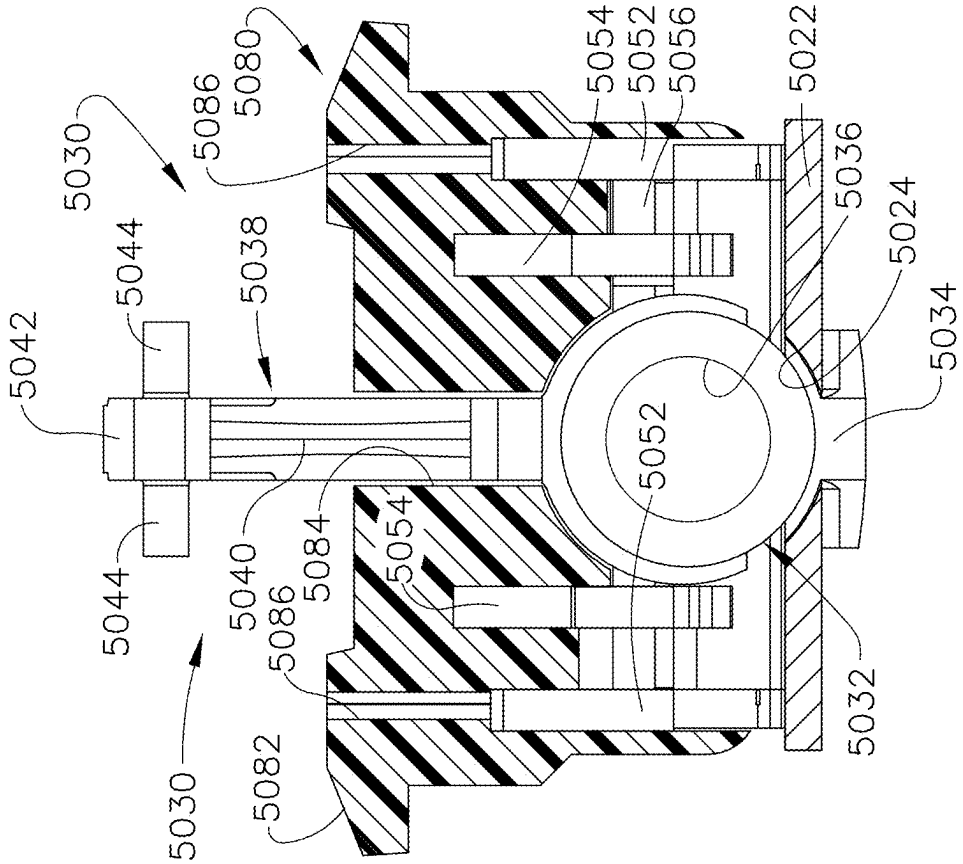
5030
5086
5080
5054
5052
5056
5022
5036
5024
5034
5032
5052
5042
5044
5038
5040
5084
5054
5086
5082
5030
5044

FIG. 87

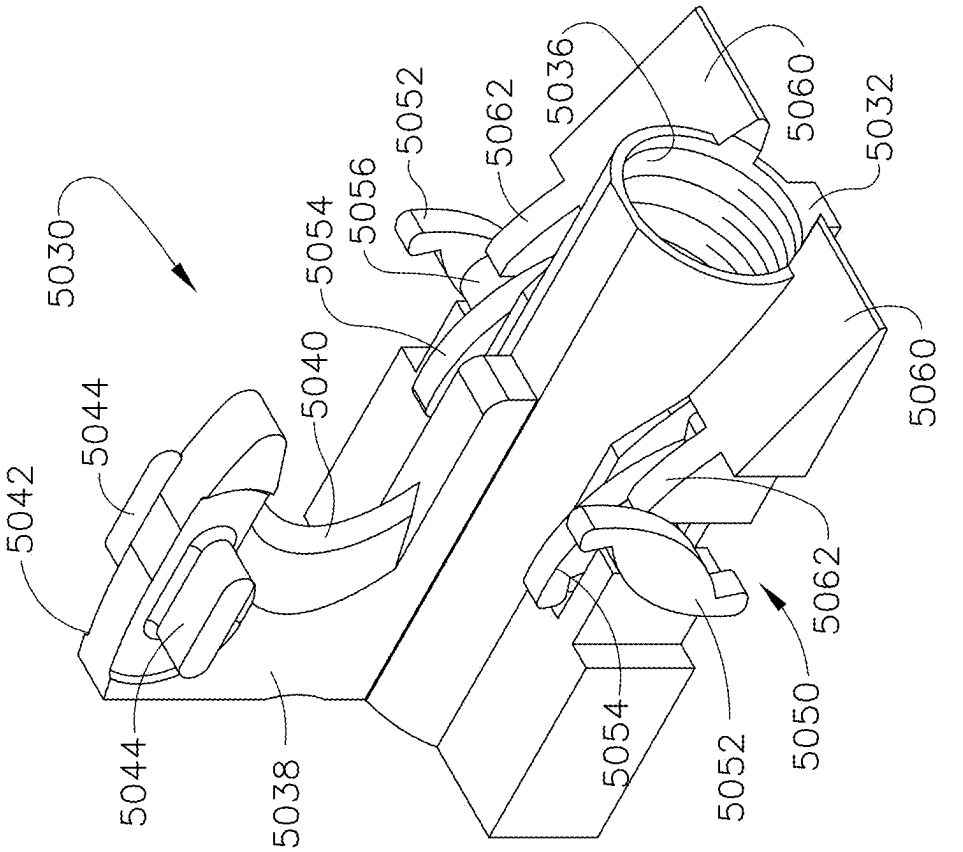
5030
5042
5044
5040
5054
5056
5052
5062
5036
5060
5032
5060
5062
5050
5052
5054
5044
5038

FIG. 86

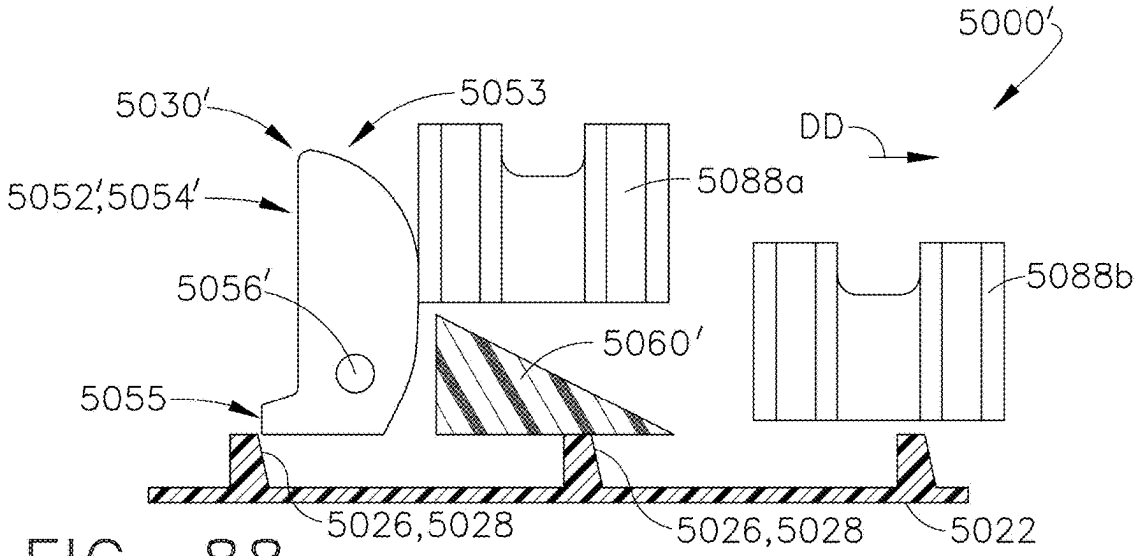

FIG. 88

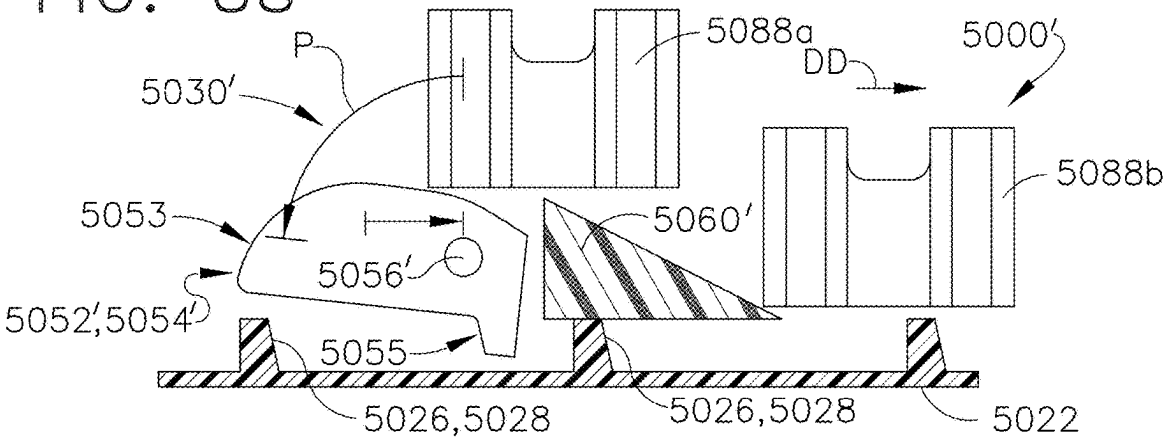

FIG. 89

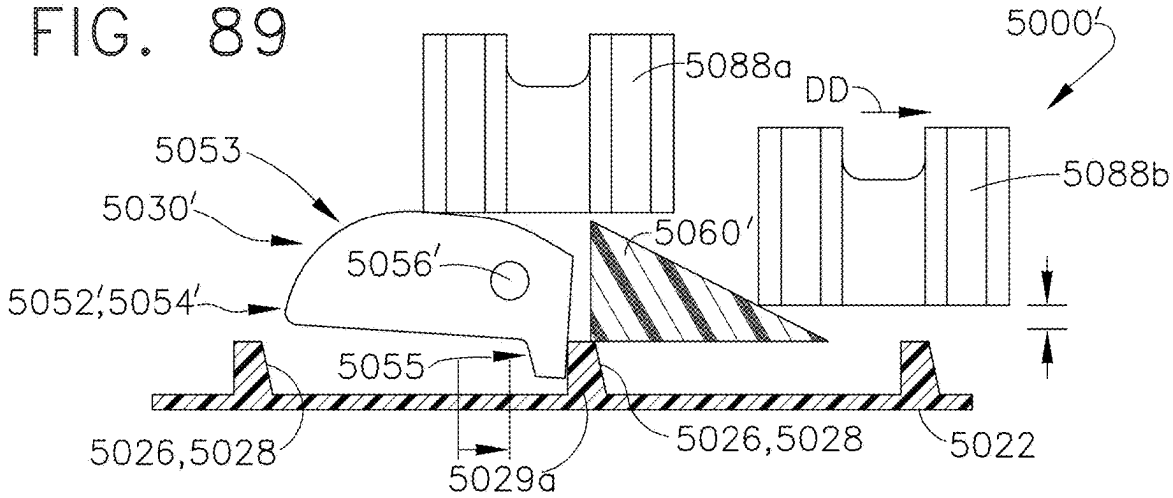

FIG. 90

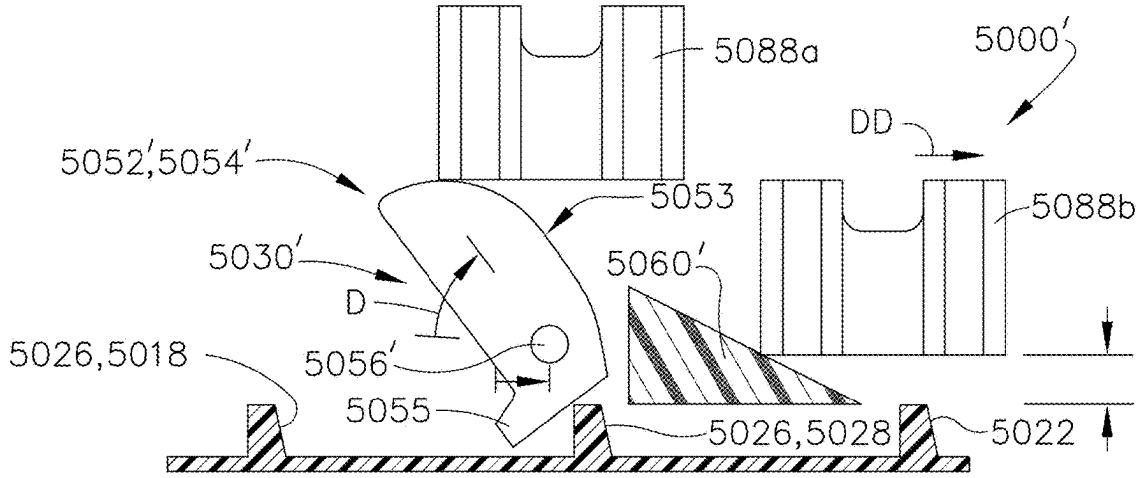

FIG. 91

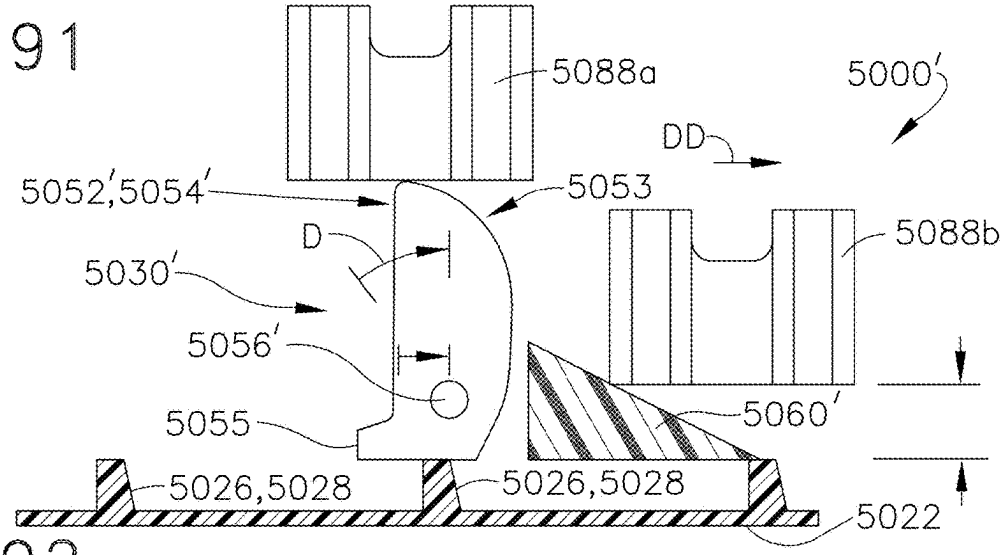

FIG. 92

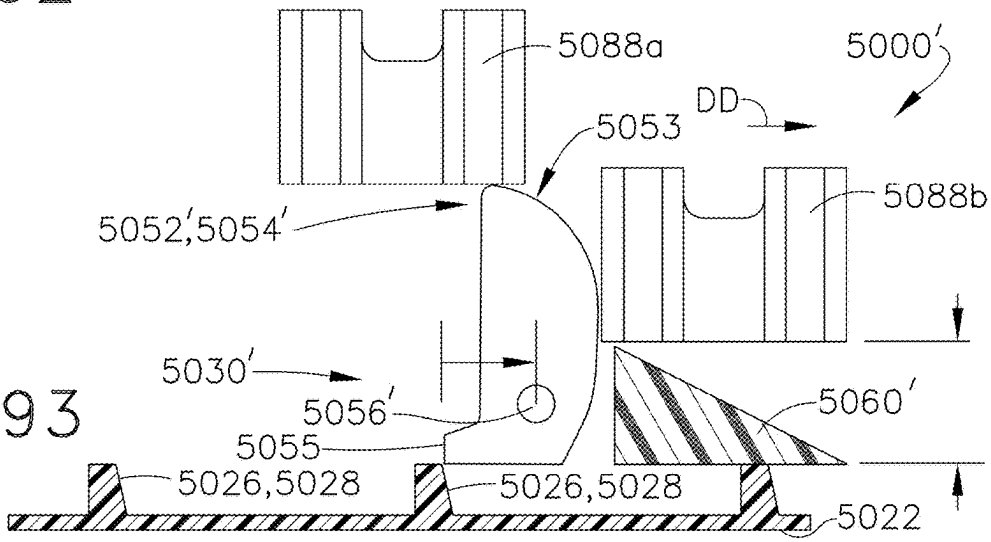

FIG. 93

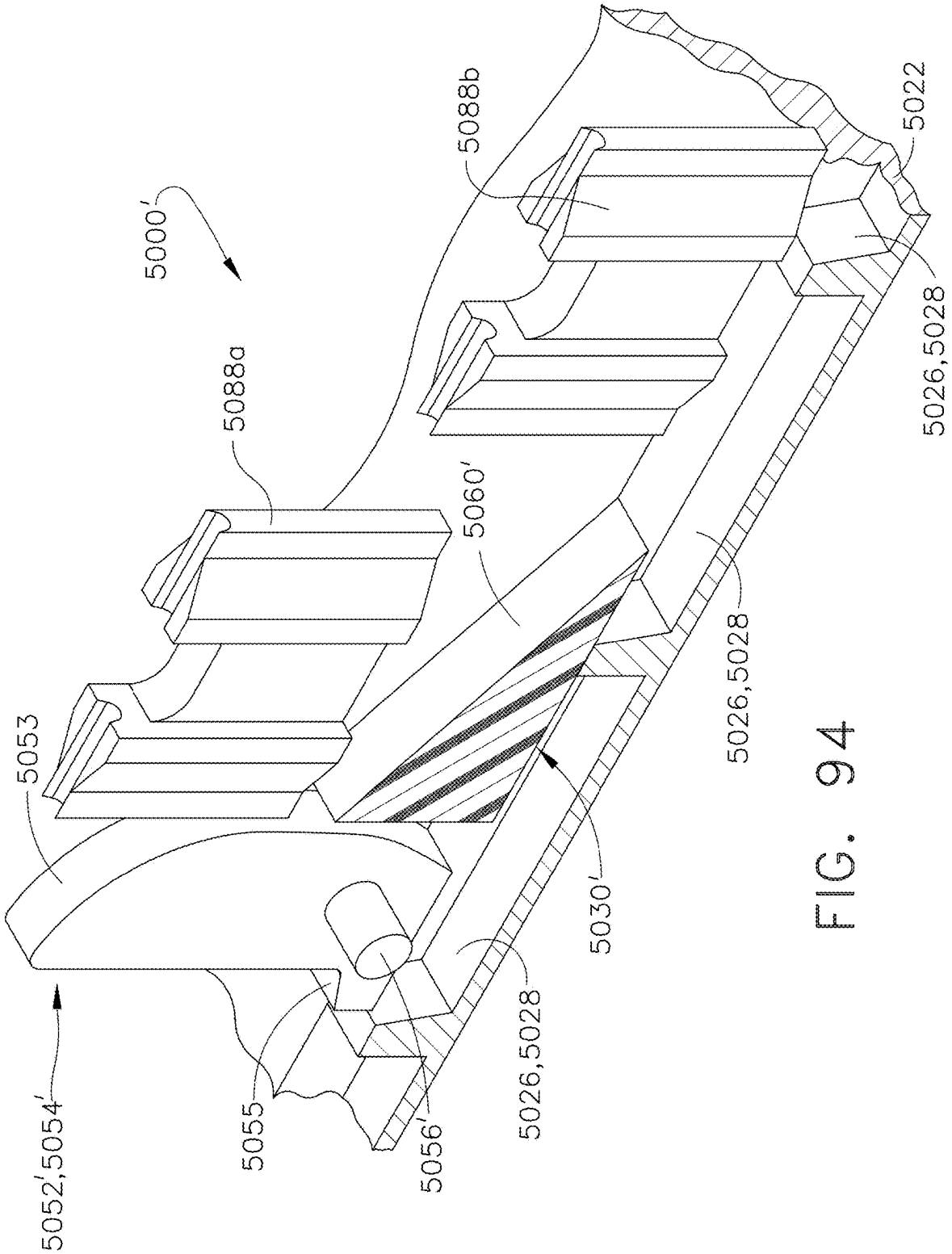
5000'
5088b
5022
5026,5028
5088a
5060'
5026,5028
5053
5030'
5052',5054'
5055
5056'
5026,5028

FIG. 94

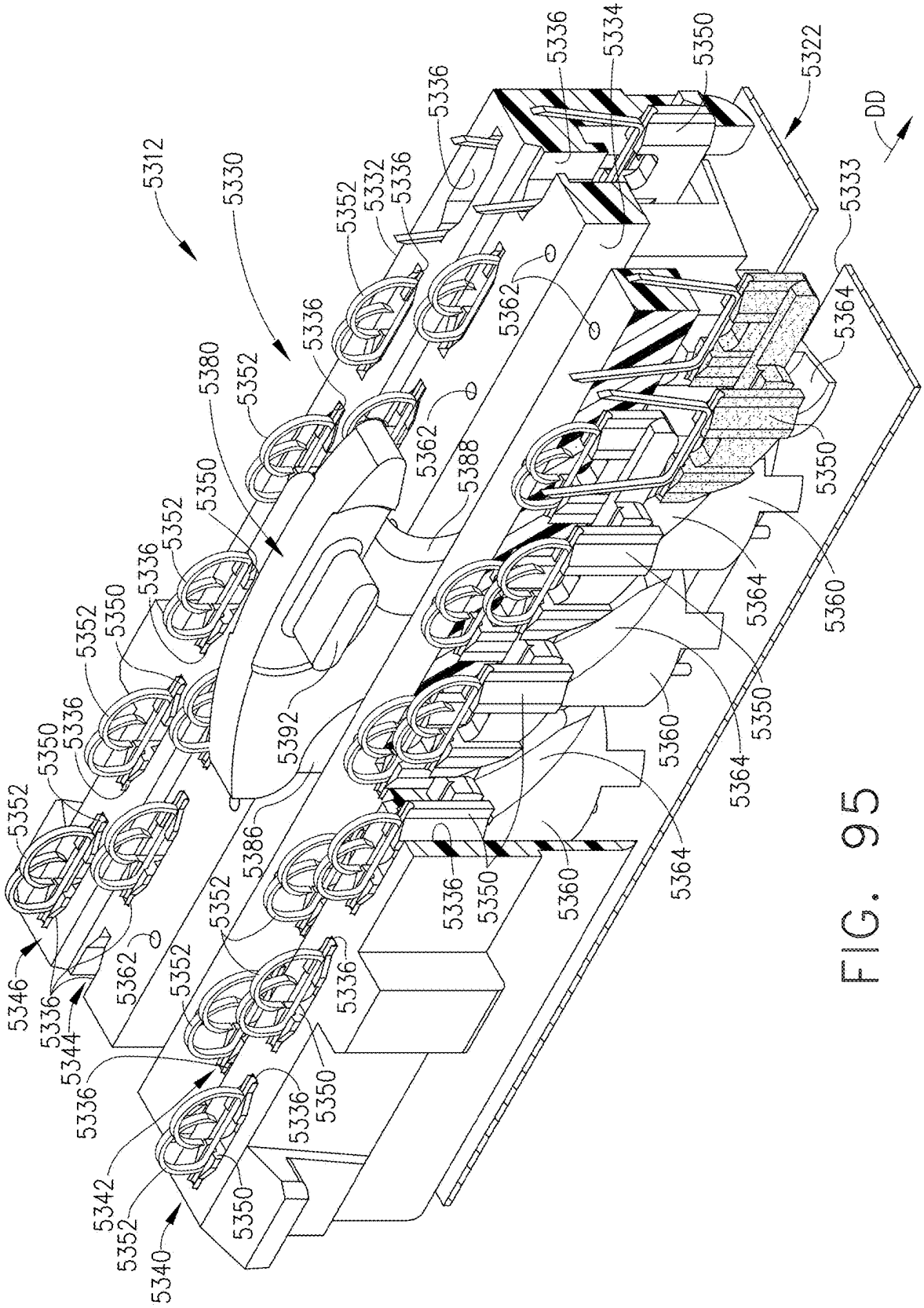
5312
5330
5322
5333
DD
5336
5334
5350
5332
5352
5362
5364
5380
5388
5360
5392
5386
5346
5344
5342
5340

FIG. 95

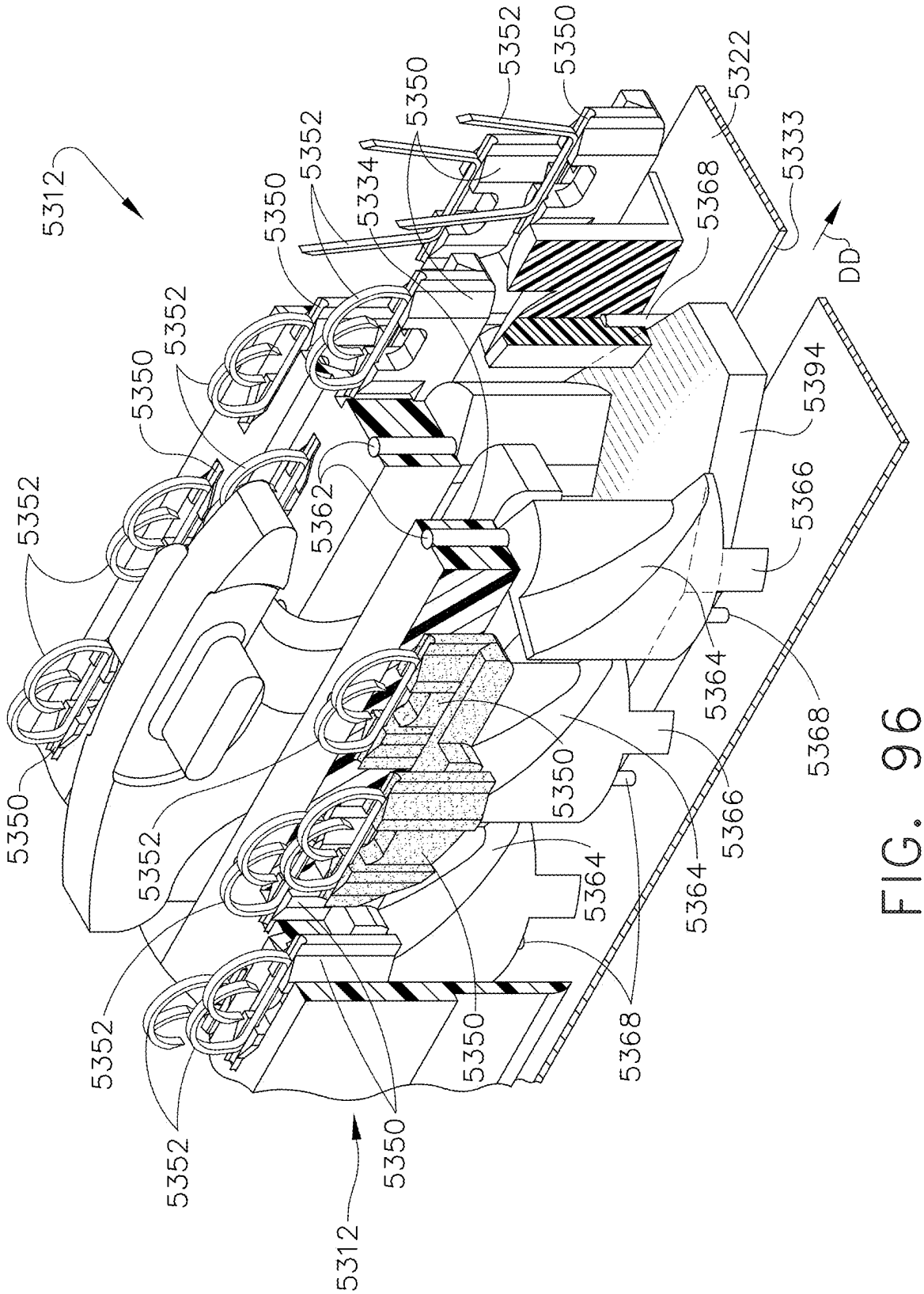

FIG. 96

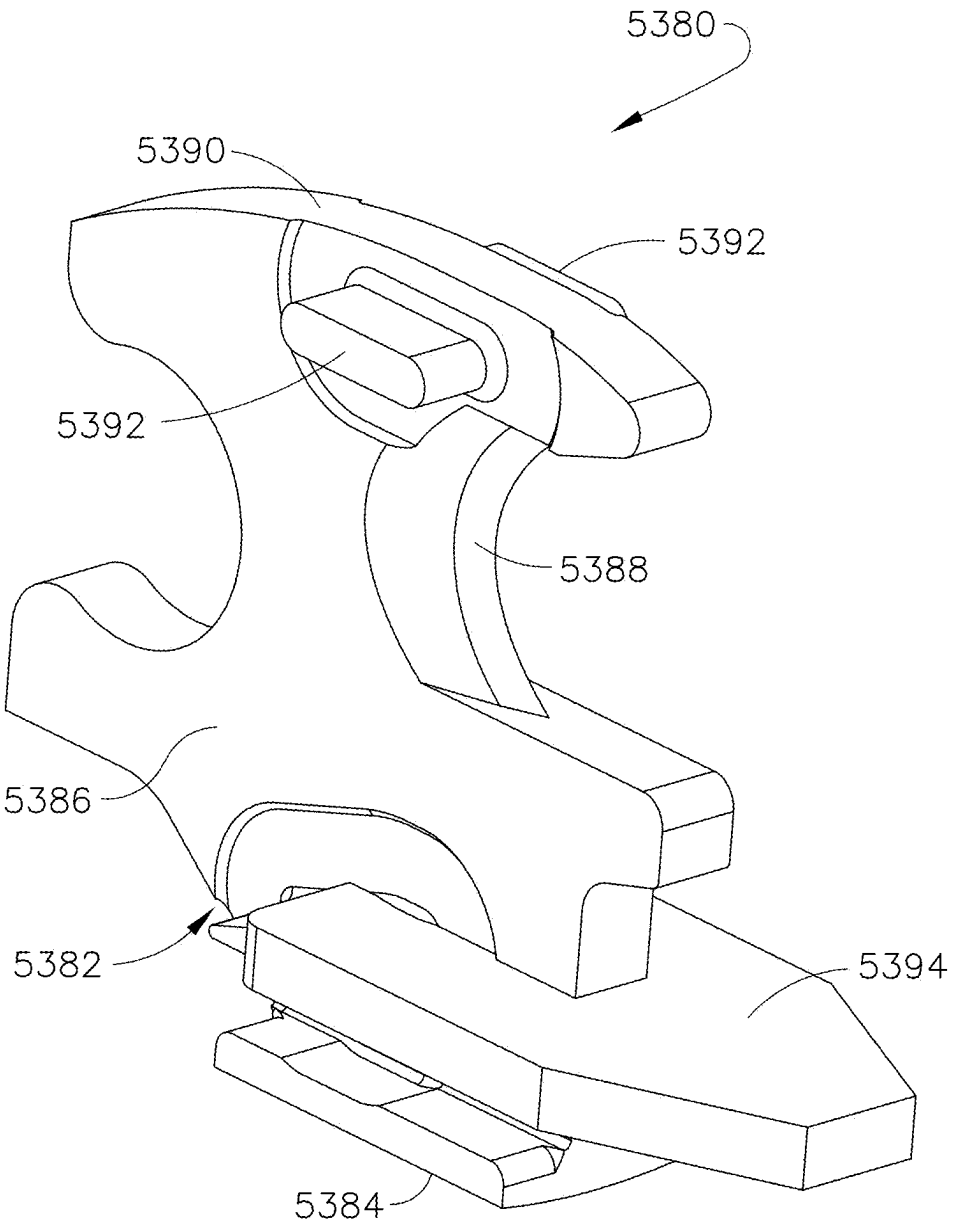

FIG. 97

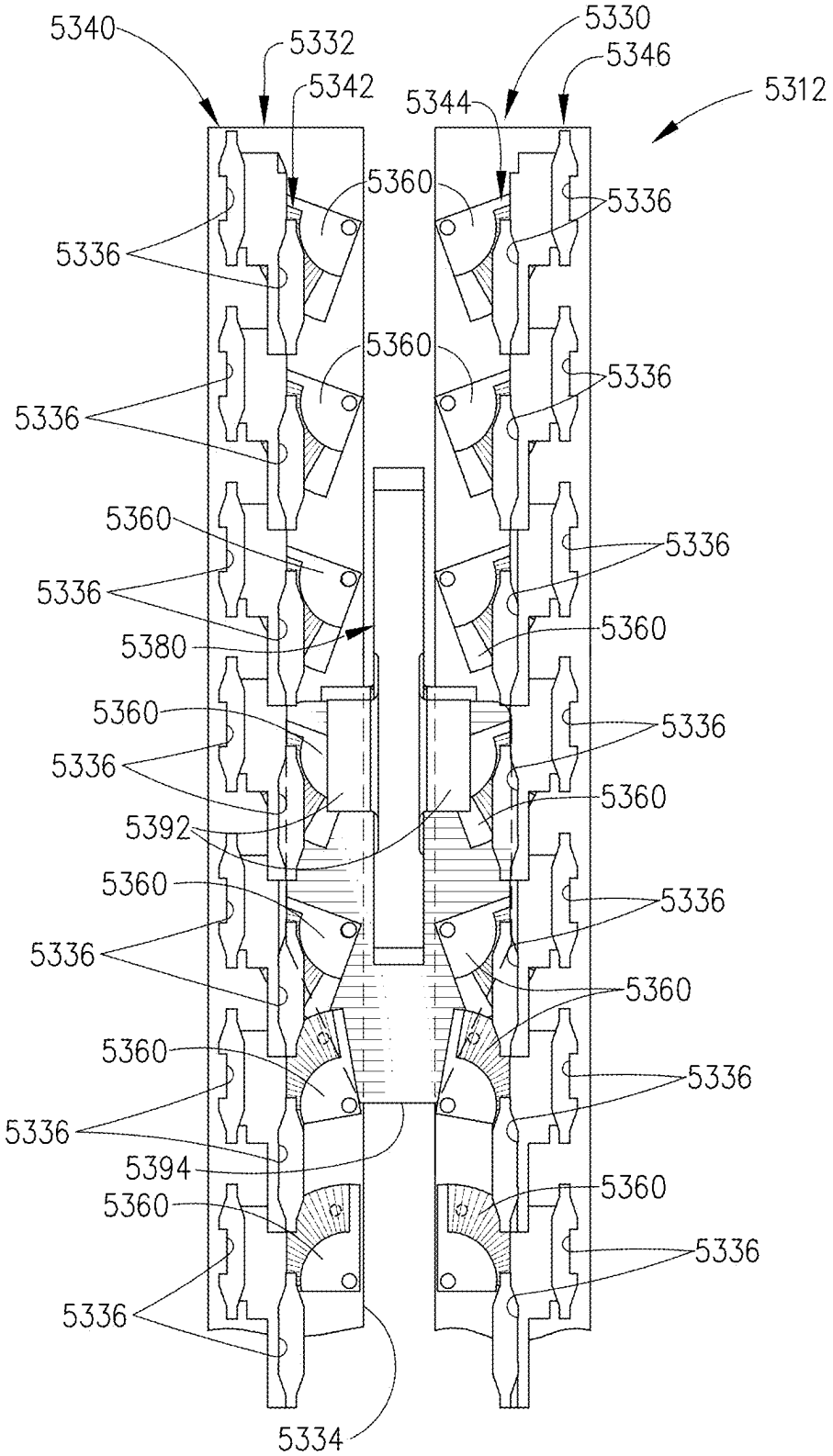
5340
5332
5342
5330
5346
5344
5312
5360
5336
5380
5392
5394
5334

FIG. 98

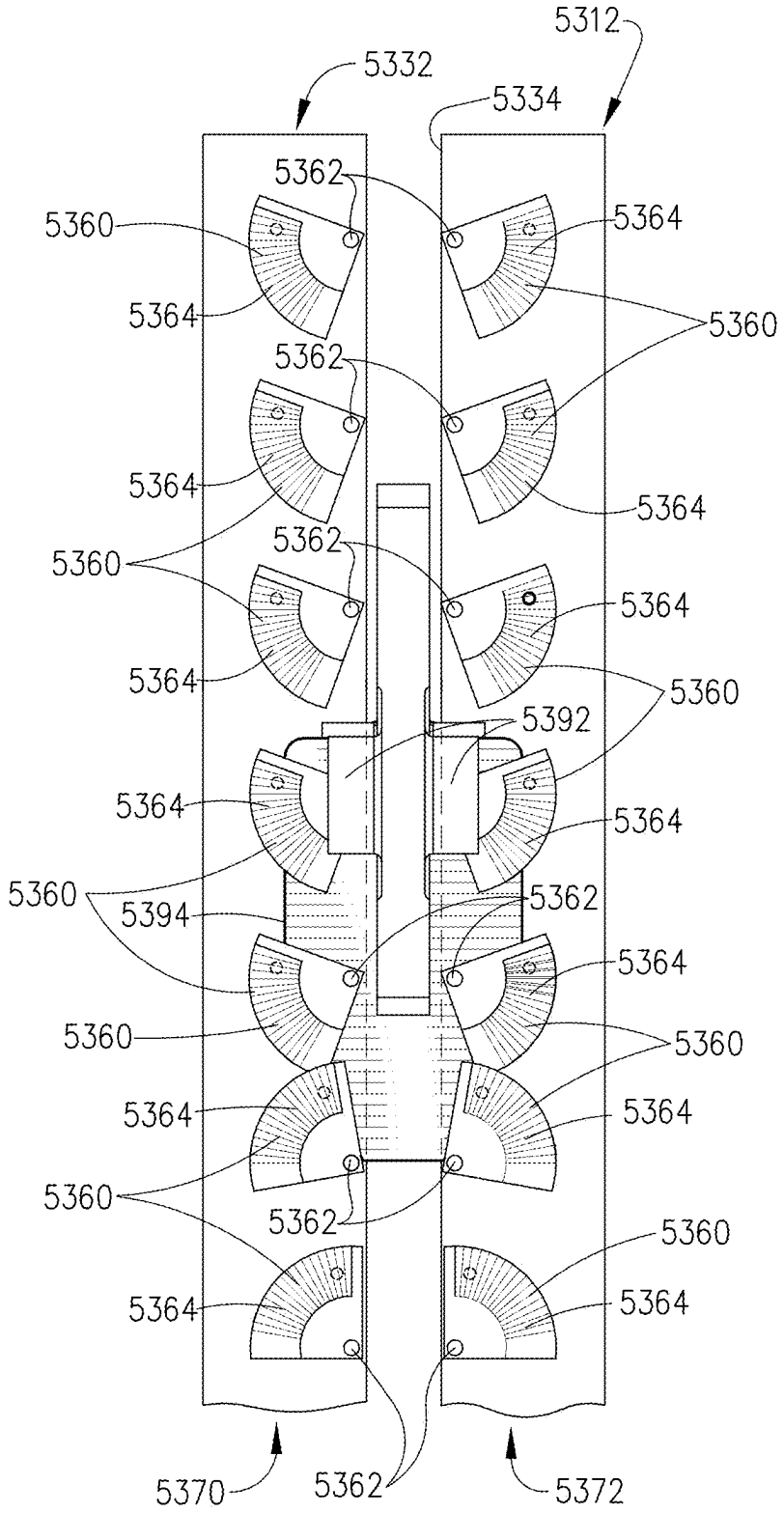
5312
5332
5334
5362
5360
5364
5360
5362
5364
5364
5360
5362
5364
5364
5360
5392
5364
5364
5360
5394
5362
5364
5360
5360
5364
5364
5360
5362
5360
5364
5364
5370
5362
5372

FIG. 99

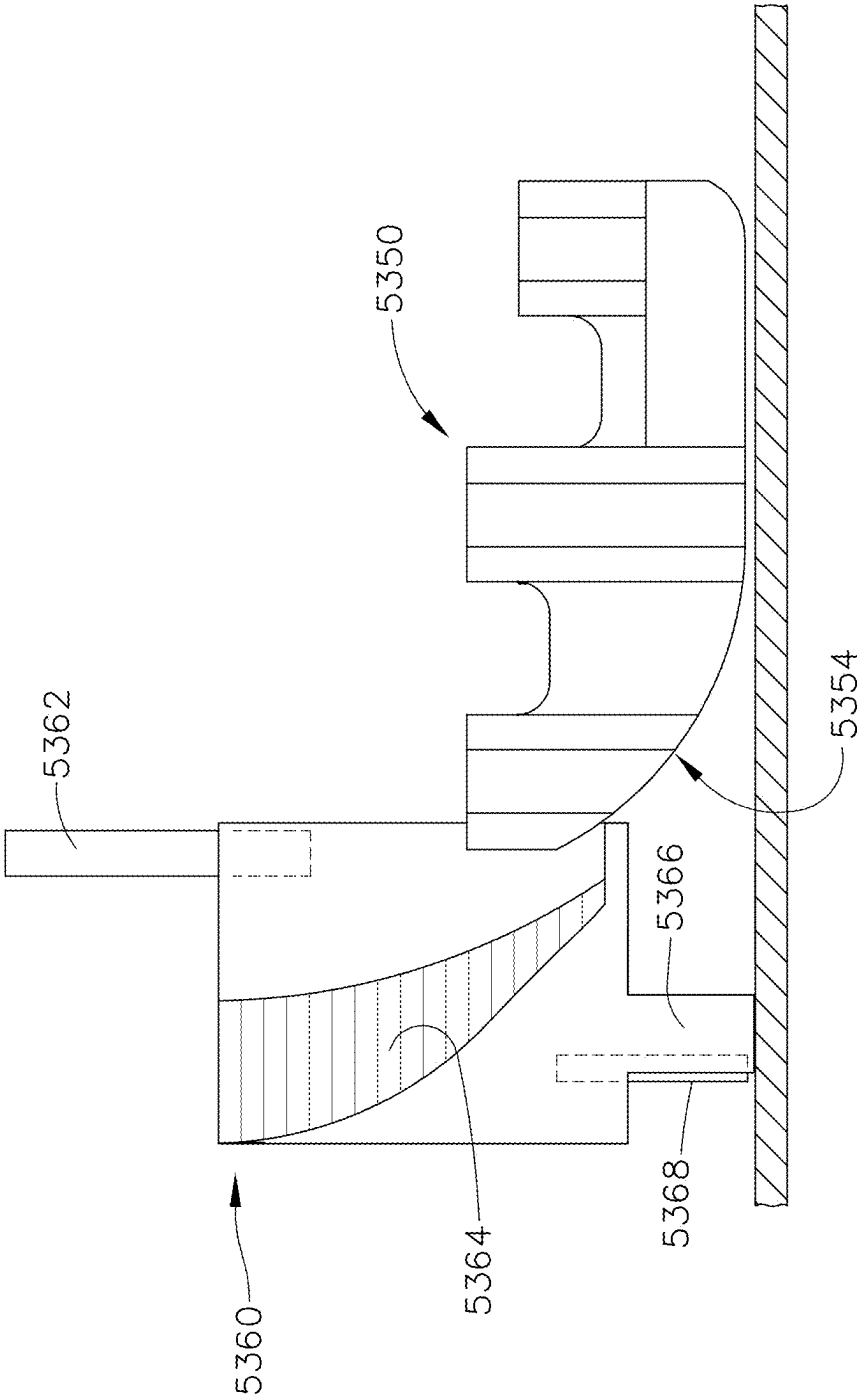

FIG. 100

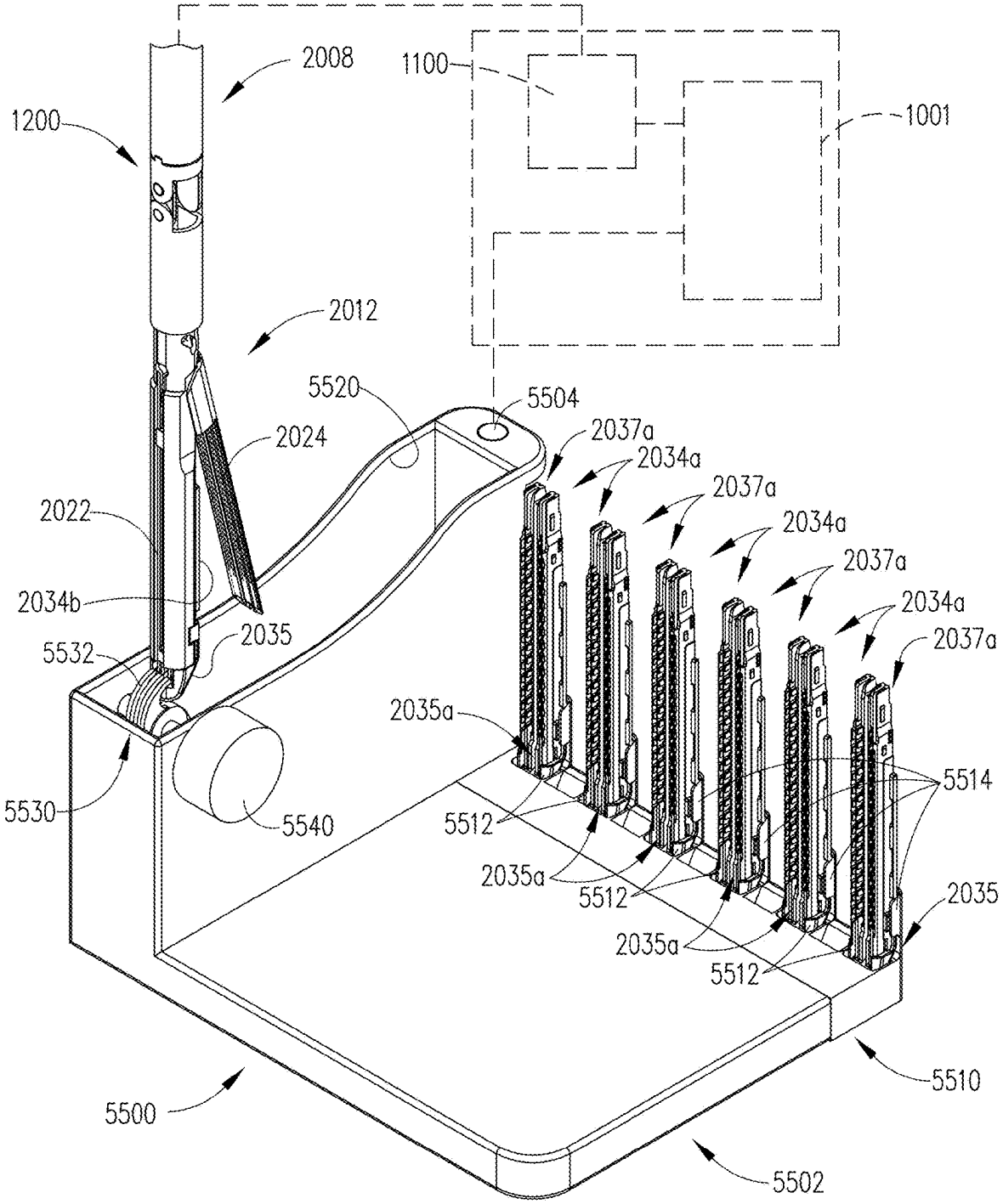
2008
1100
1001
1200
2012
5520
5504
2024
2037a
2034a
2037a
2022
2034a
2037a
2034b
2035
2034a
5532
2037a
2035a
5514
5530
5540
5512
2035a
5512
2035
2035a
5512
5510
5500
5502

FIG. 101

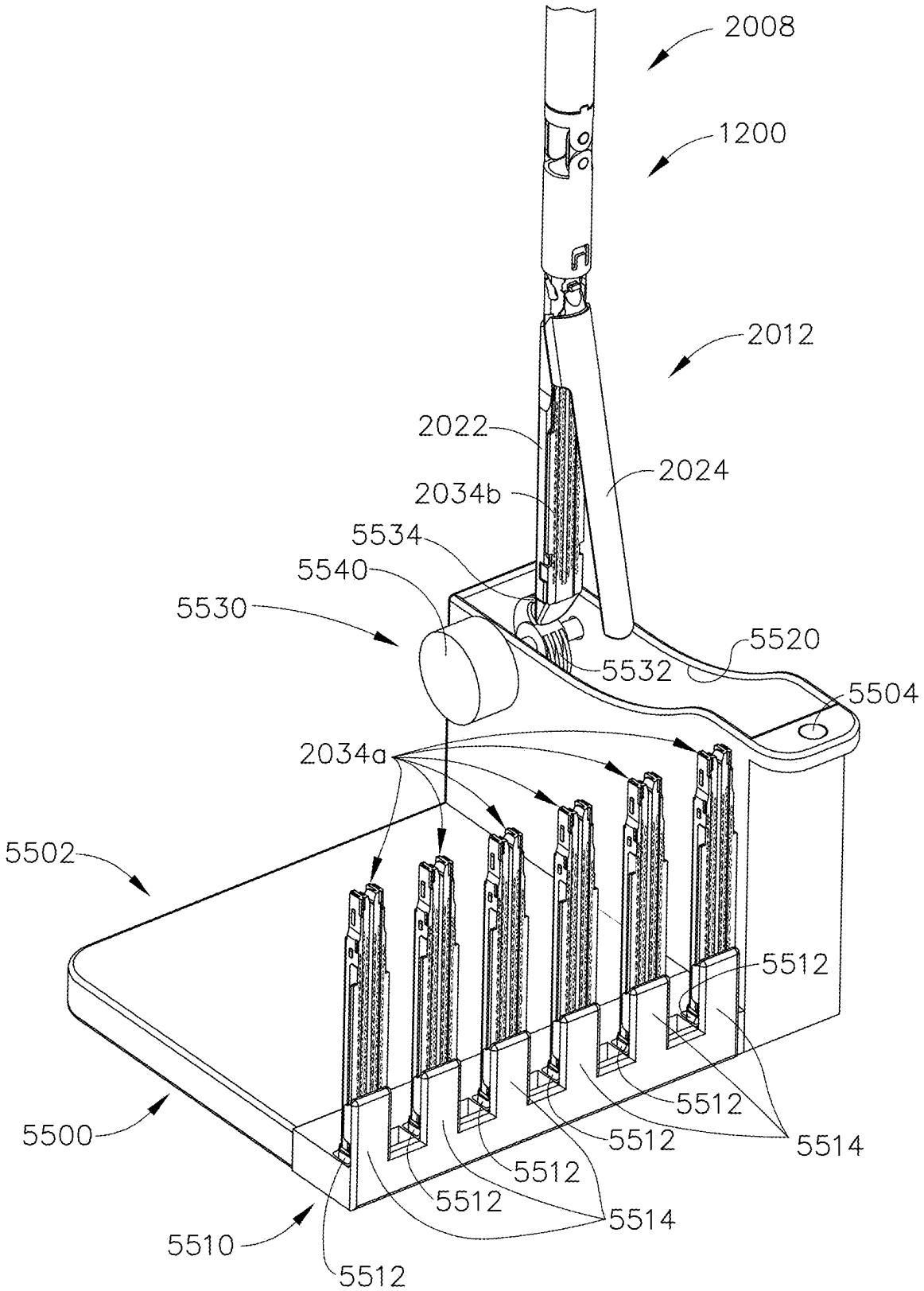
2008
1200
2012
2022
2024
2034b
5534
5540
5530
5520
5532
5504
2034a
5502
5512
5512
5500
5512
5514
5512
5512
5514
5510
5512

FIG. 102

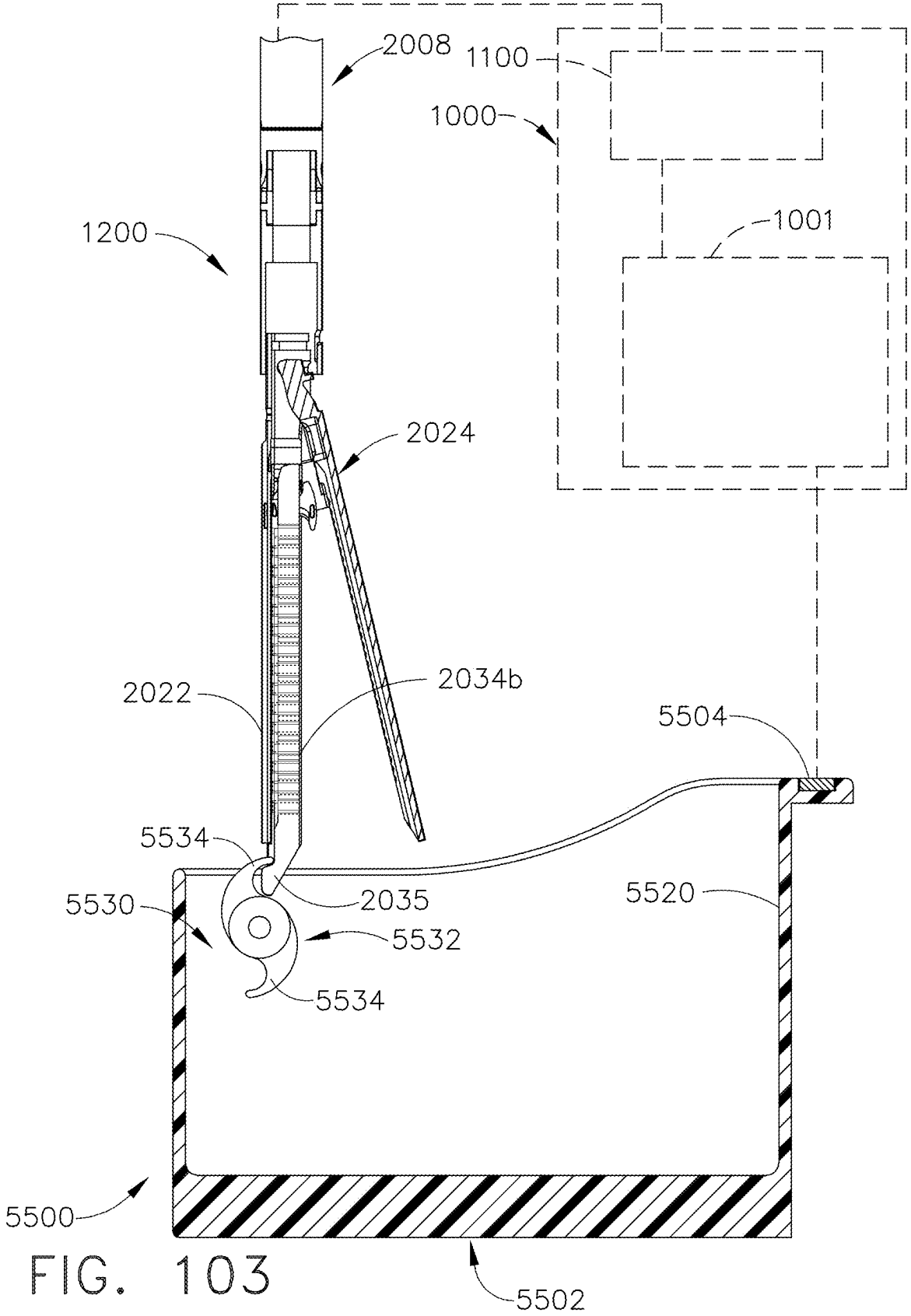
2008
1100
1000
1001
1200
2024
2022
2034b
5504
5534
2035
5520
5530
5532
5534
5500
5502

FIG. 103

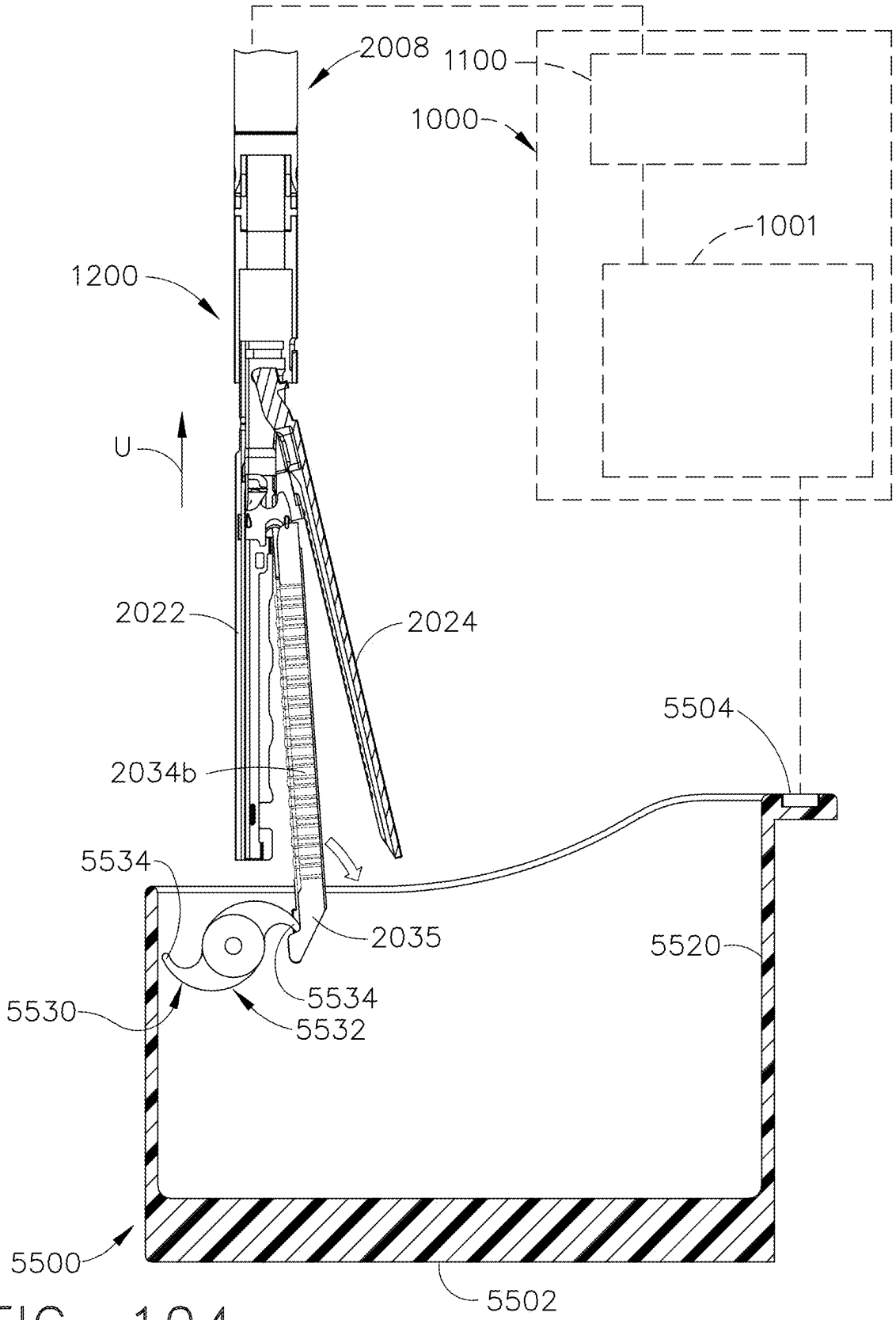
2008
1100
1000
1001
1200
U
2022
2024
5504
2034b
5534
2035
5520
5534
5530
5532
5500
5502

FIG. 104

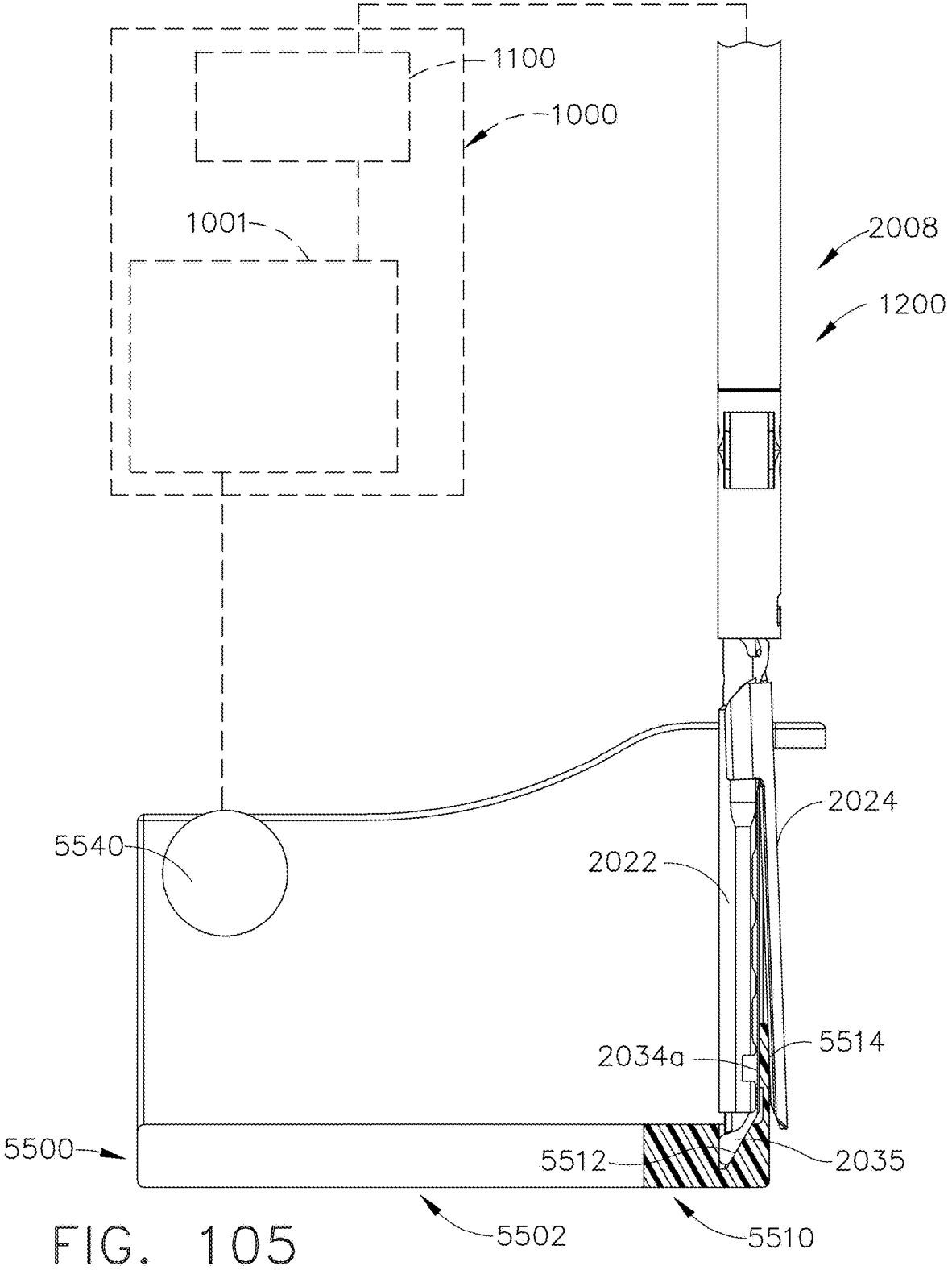
1100
1000
1001
2008
1200
2024
5540
2022
5514
2034a
5500
5512
2035
5502
5510

FIG. 105

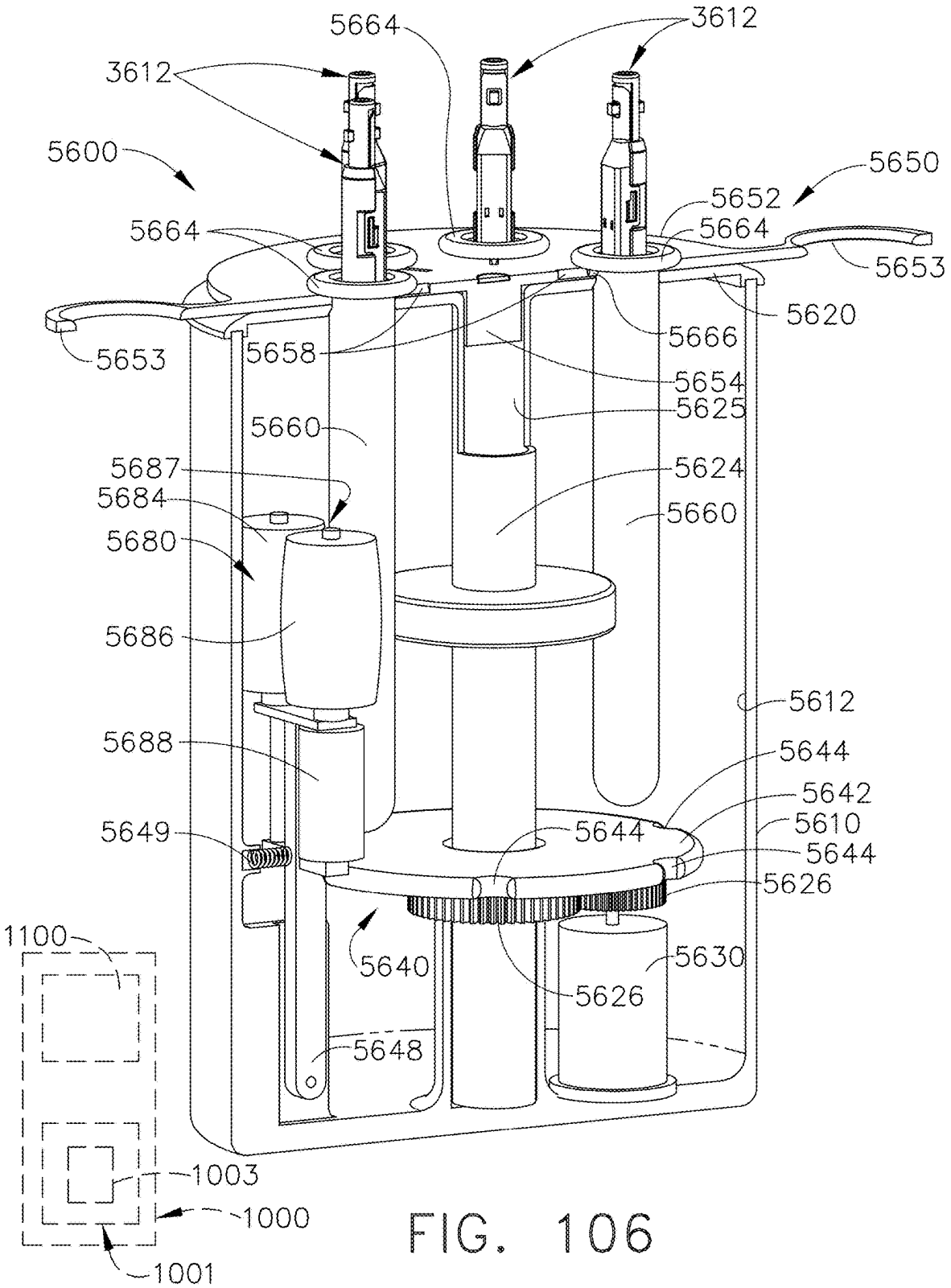
5664
3612
3612
5600
5650
5652
5664
5664
5653
5620
5653
5658
5666
5654
5625
5660
5687
5624
5684
5660
5680
5686
5612
5688
5644
5642
5649
5644
5610
5644
5626
1100
5640
5630
5626
5648
1003
1000
1001

FIG. 106

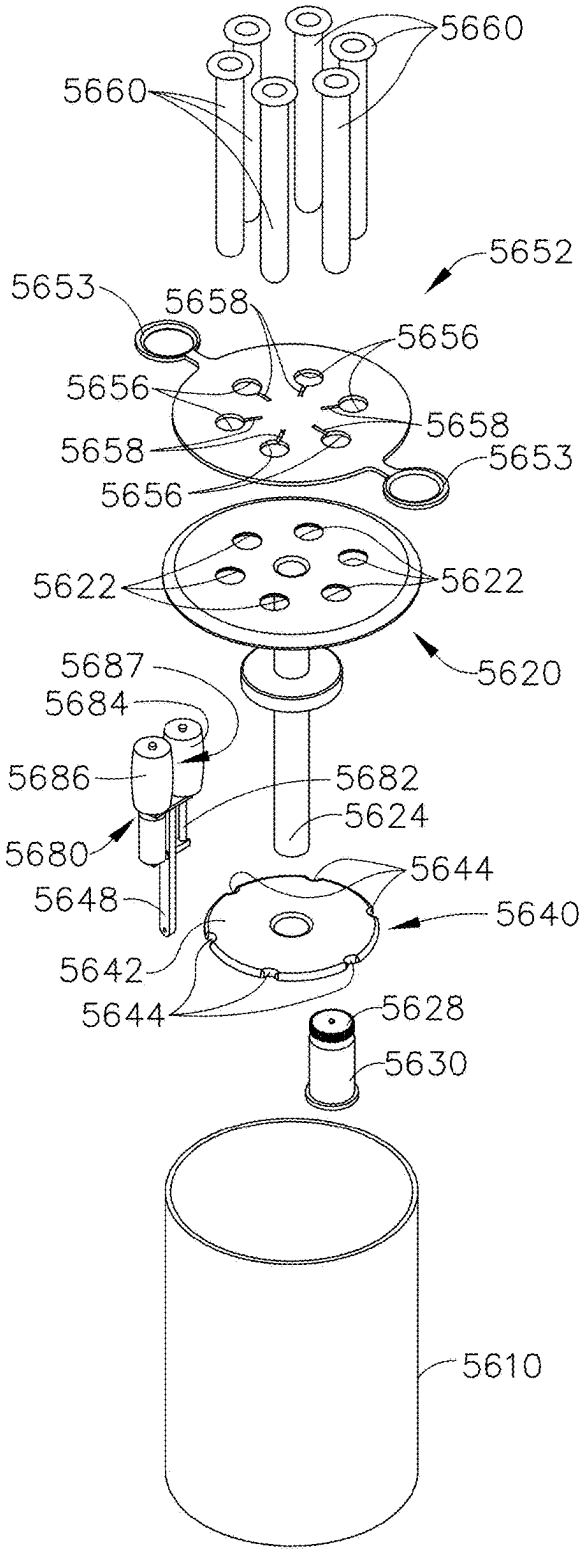

FIG. 107

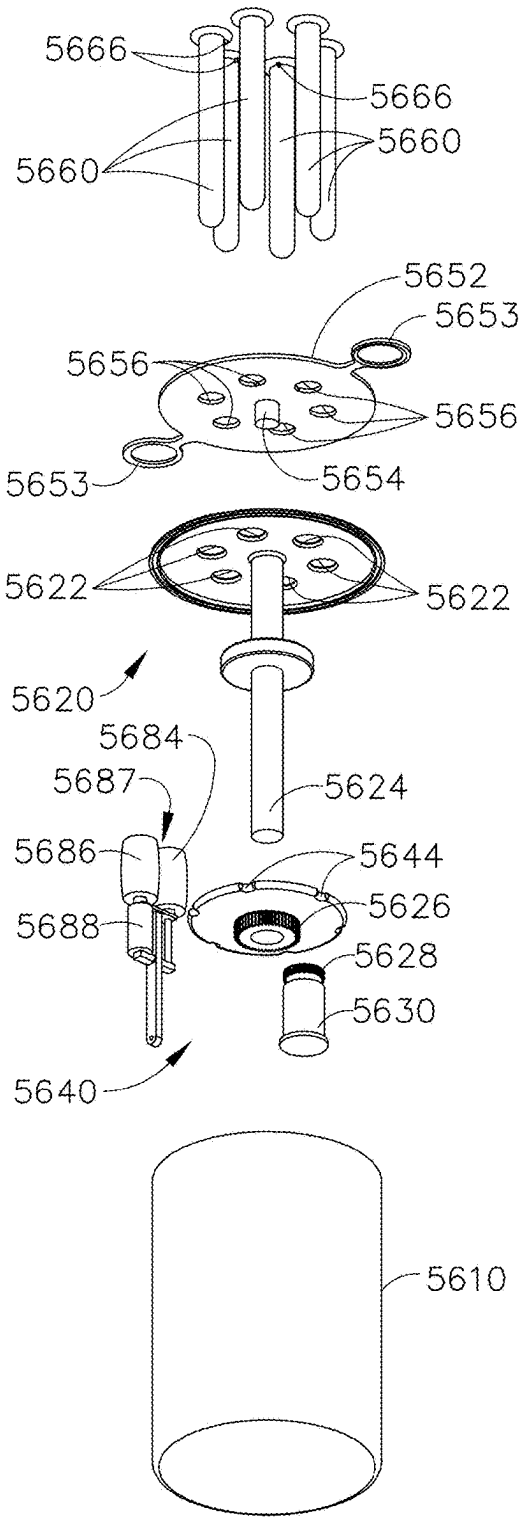

FIG. 108

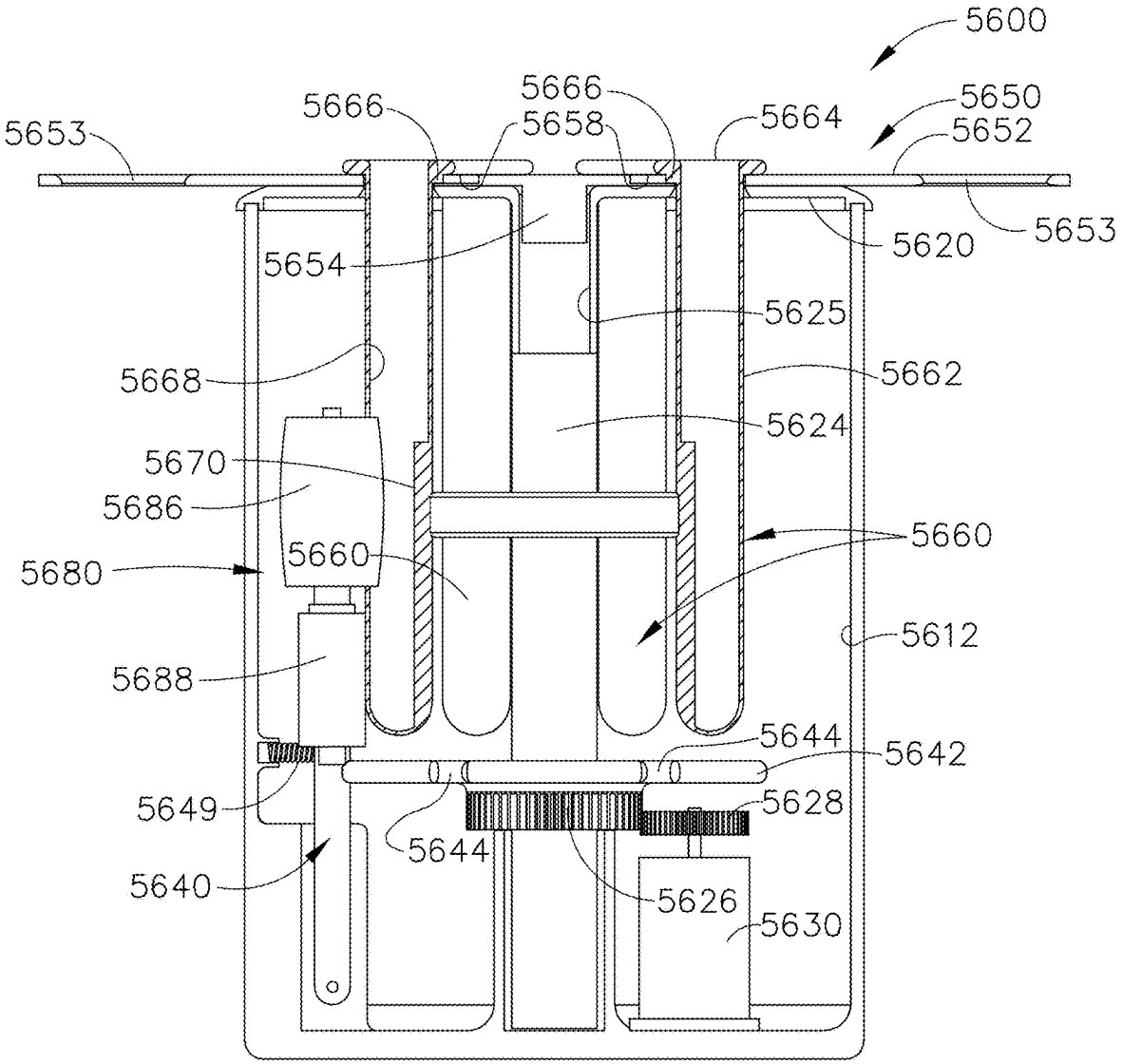
5600
5650
5652
5653
5653
5666
5666
5658
5664
5620
5654
5625
5668
5662
5624
5670
5686
5660
5660
5680
5612
5688
5644
5642
5649
5628
5644
5640
5626
5630

FIG. 109

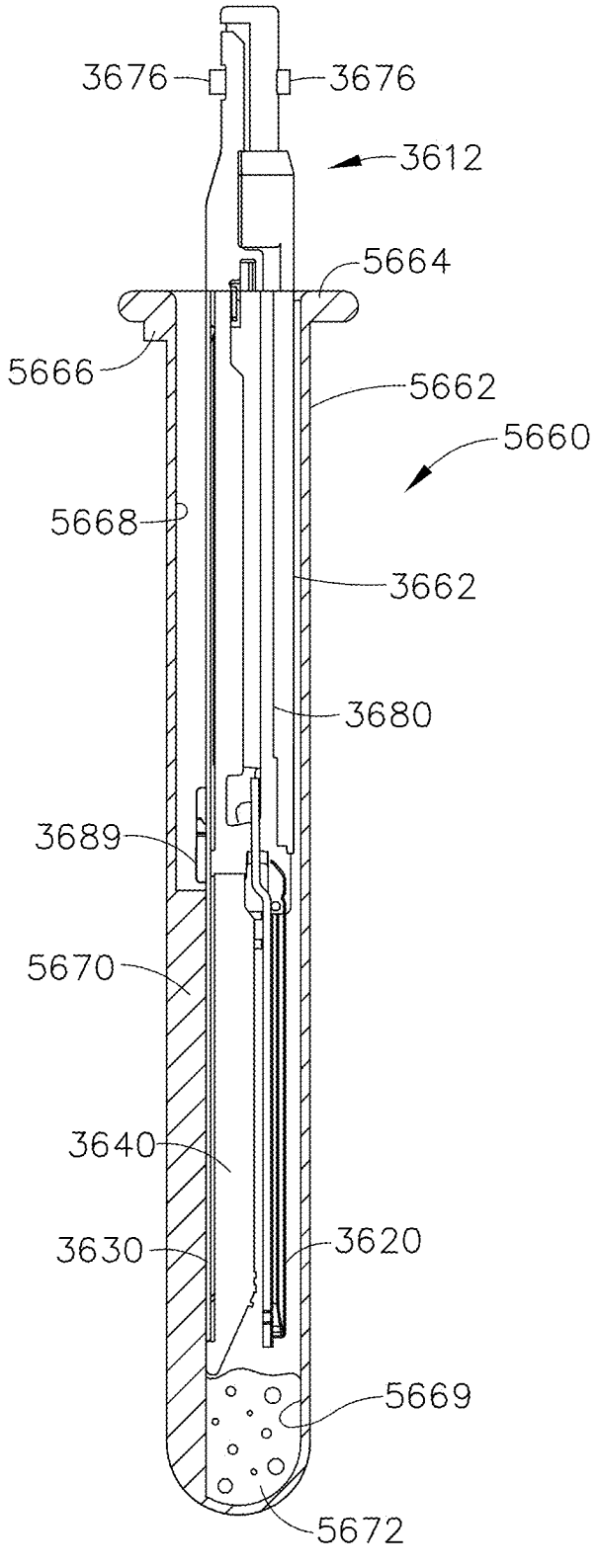
3676
3676
3612
5664
5666
5662
5660
5668
3662
3680
3689
5670
3640
3630
3620
5669
5672

FIG. 110

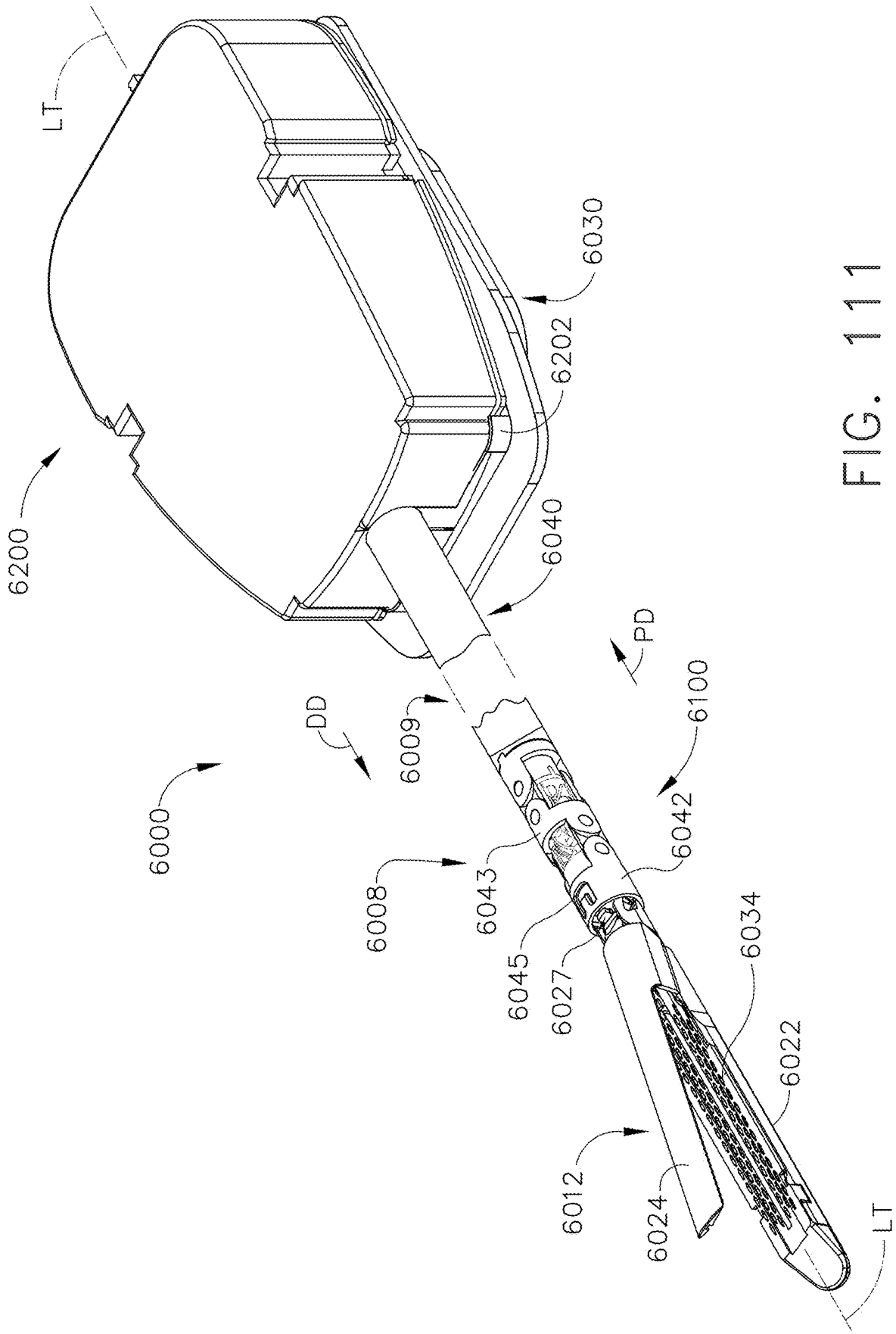
LT
6200
6030
6202
6040
PD
6100
DD
6009
6000
6008
6043
6042
6045
6027
6034
6022
6012
6024
LT

FIG. 111

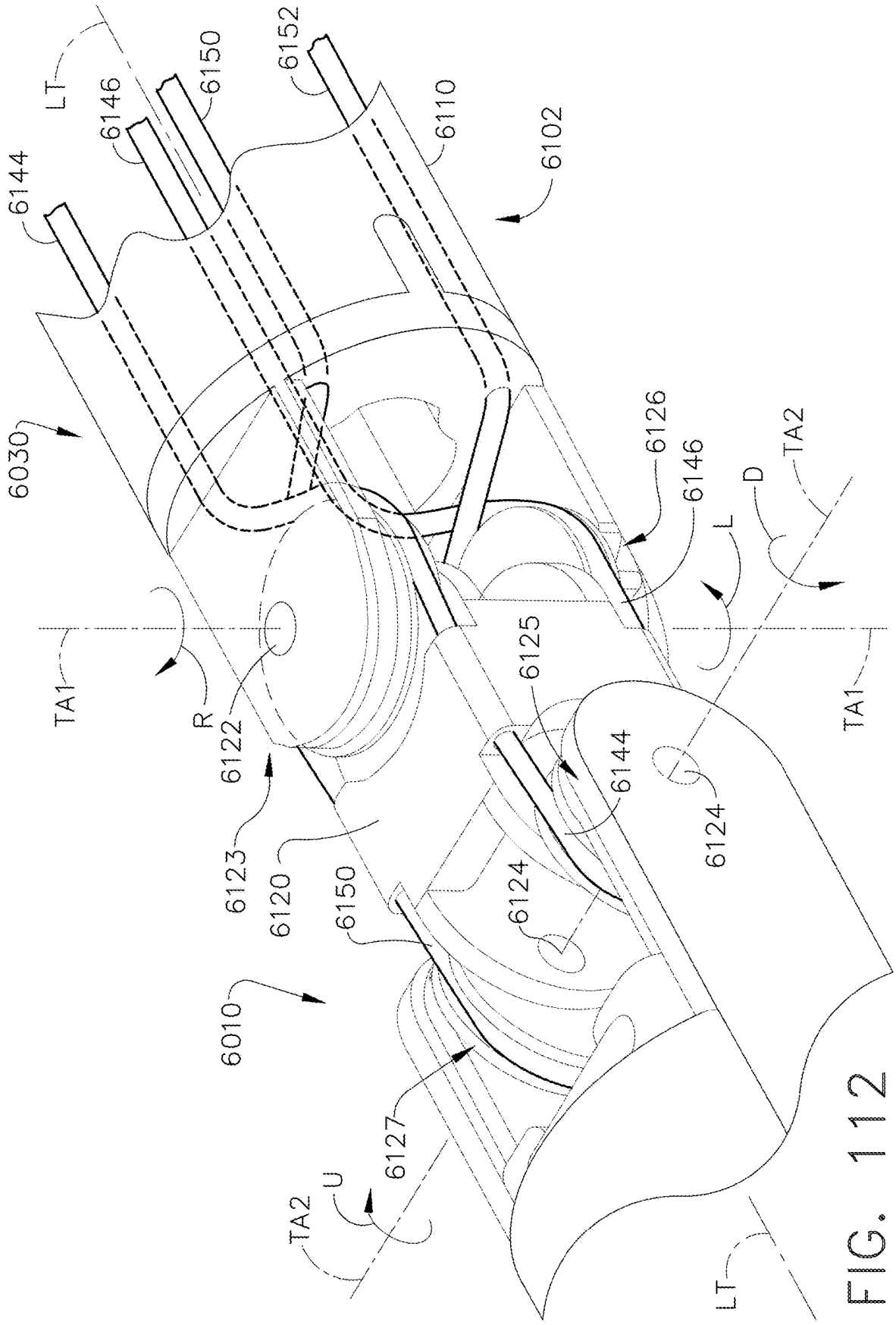
6144
6146
6150
6152
LT
6110
6102
6030
6126
6146
TA2
D
L
TA1
R
6122
6125
6144
6124
TA1
6123
6120
6150
6124
6010
6127
U
TA2
LT

FIG. 112

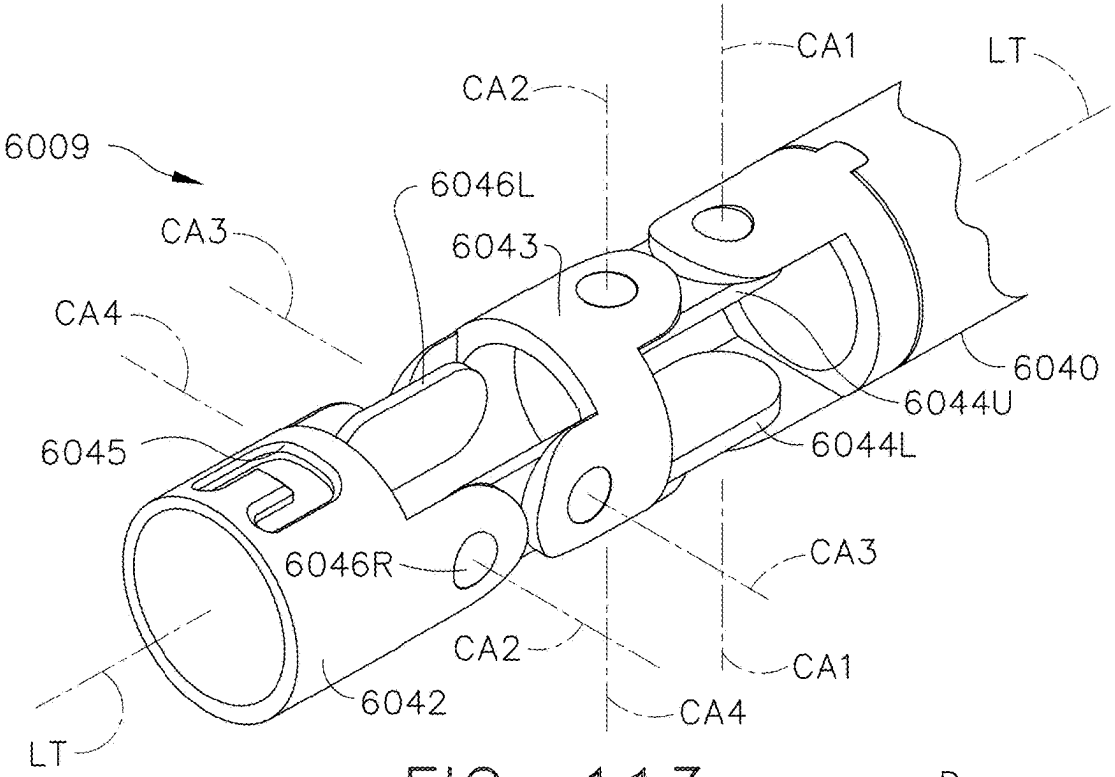

FIG. 113

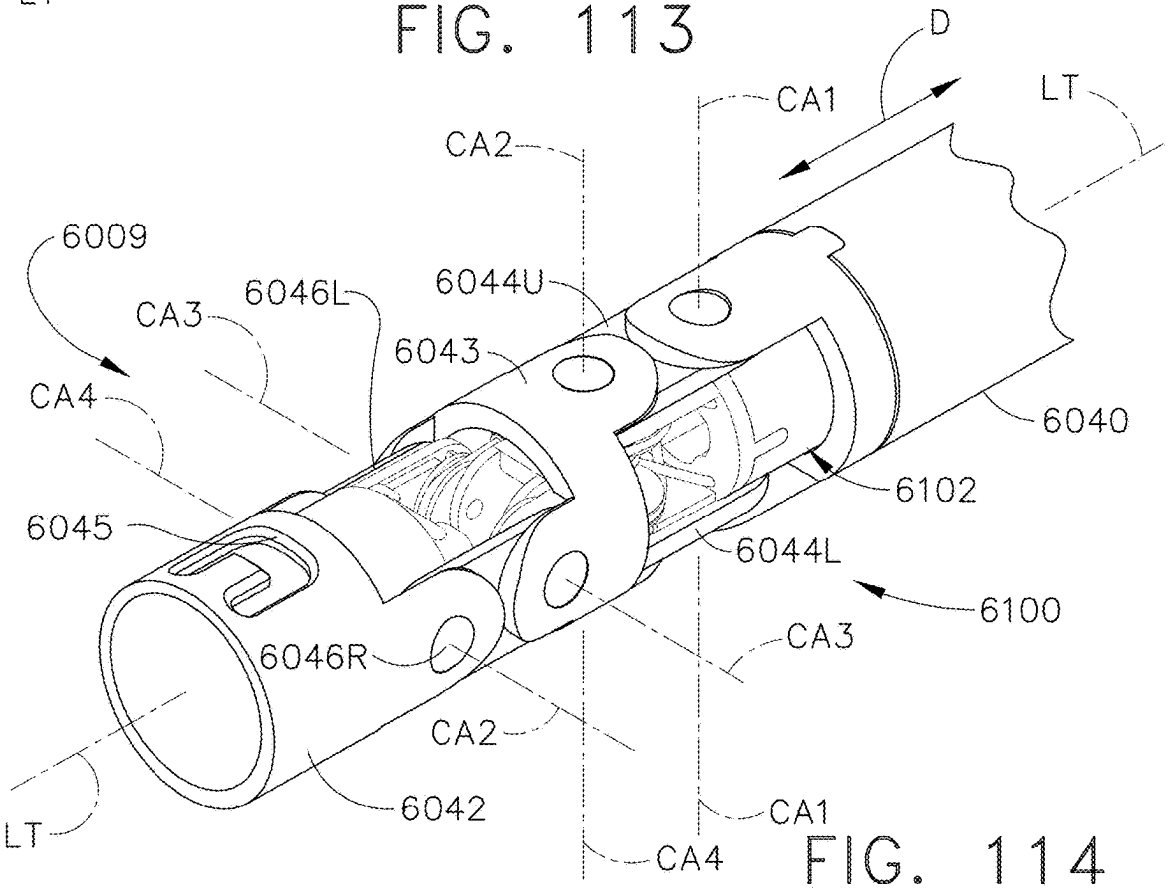

FIG. 114

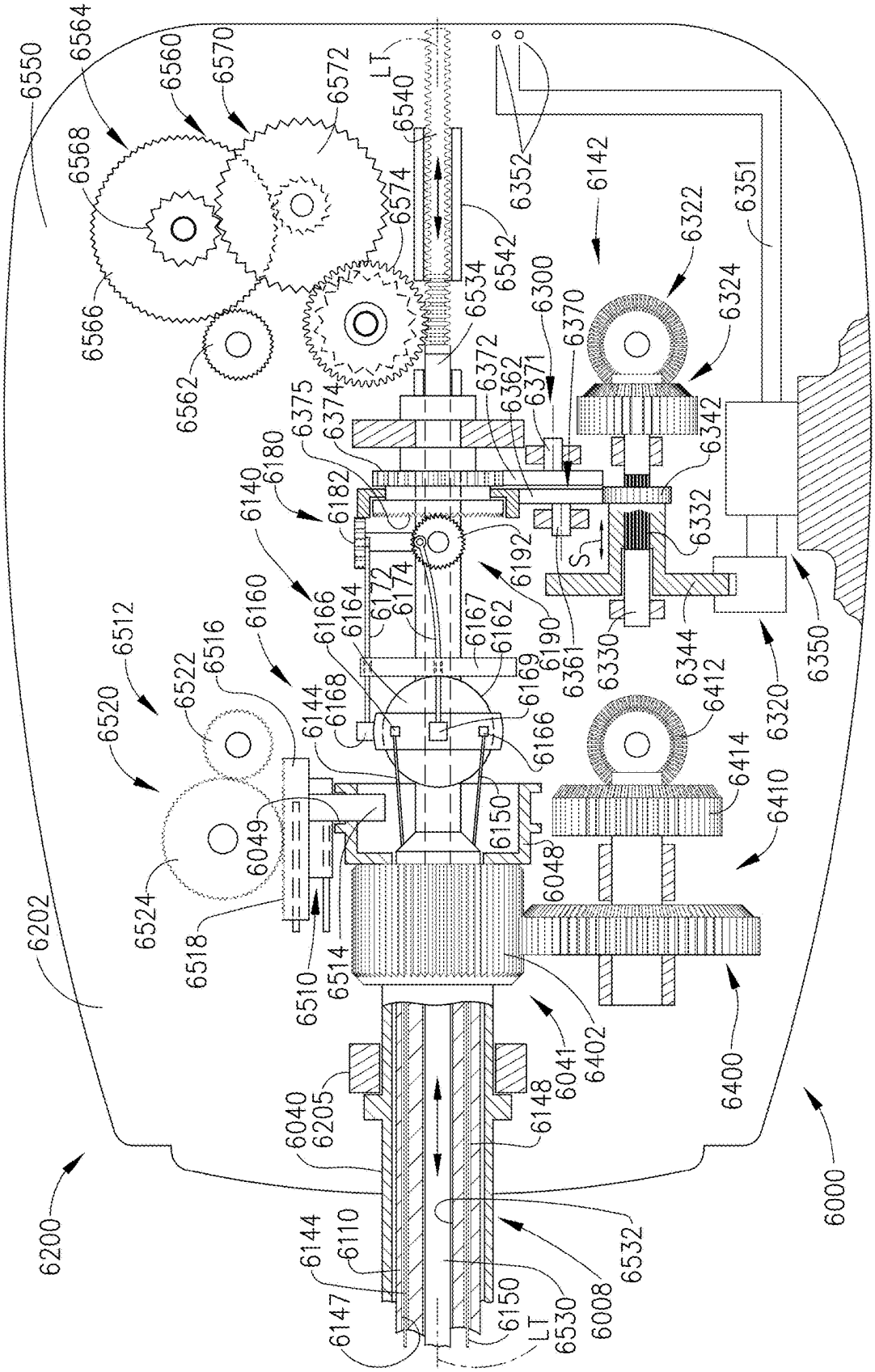
6550
6564
6560
6570
6572
6568
6566
6562
6540
LT
6574
6534
6542
6352
6142
6322
6351
6324
6300
6370
6372
6362
6371
6375
6374
6342
6180
6140
6182
6332
6192
6160
6172
6174
6166
6164
6167
6162
6190
6361
6330
6344
6350
6320
6412
6512
6516
6522
6520
6144
6168
6169
6166
6414
6410
6150
6049
6048
6524
6518
6510
6514
6202
6041
6402
6400
6040
6205
6148
6200
6000
6144
6110
6532
6147
6150
6530
6008
LT

FIG. 115

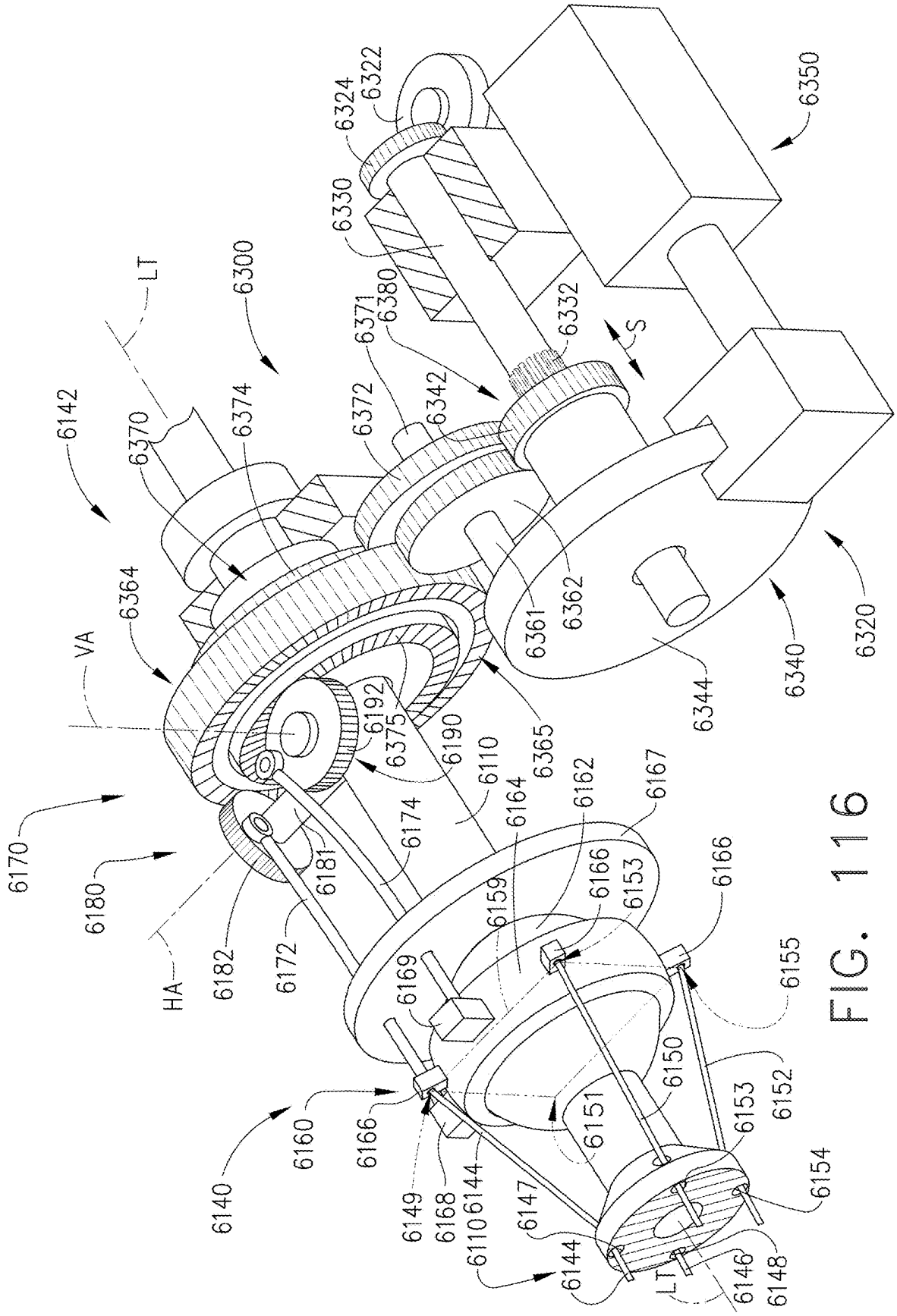
6350
6322
6324
6330
6300
LT
6380
6371
6332
S
6142
6374
6370
6372
6342
6364
VA
6361
6362
6340
6320
6344
6192
6375
6190
6365
6110
6170
6174
6164
6162
6167
6180
6181
6166
6153
6159
6166
HA
6182
6172
6169
6155
6150
6152
6160
6166
6151
6153
6140
6149
6168
6144
6147
6154
6110
6144
LT
6146
6148

FIG. 116

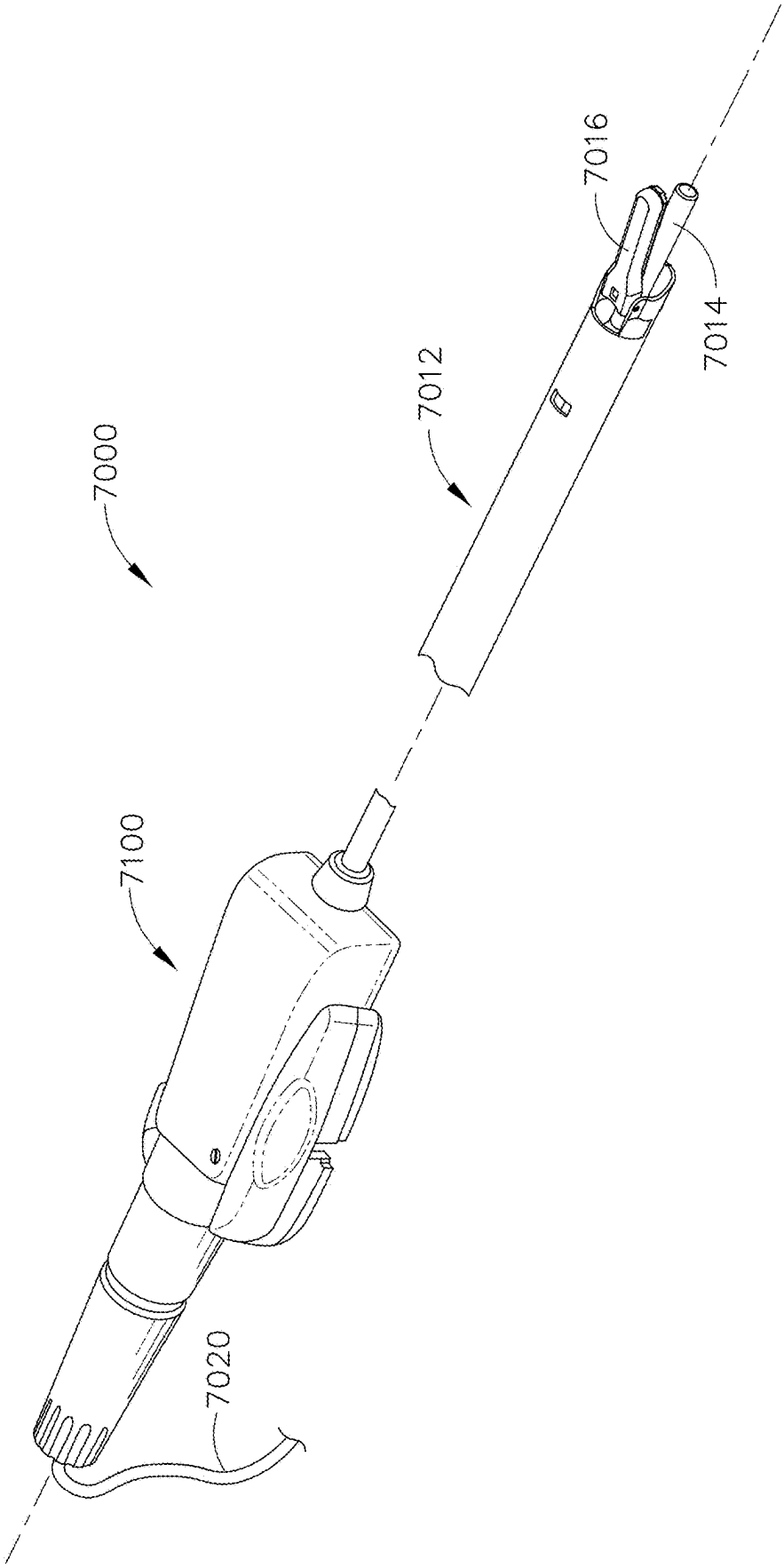

FIG. 117

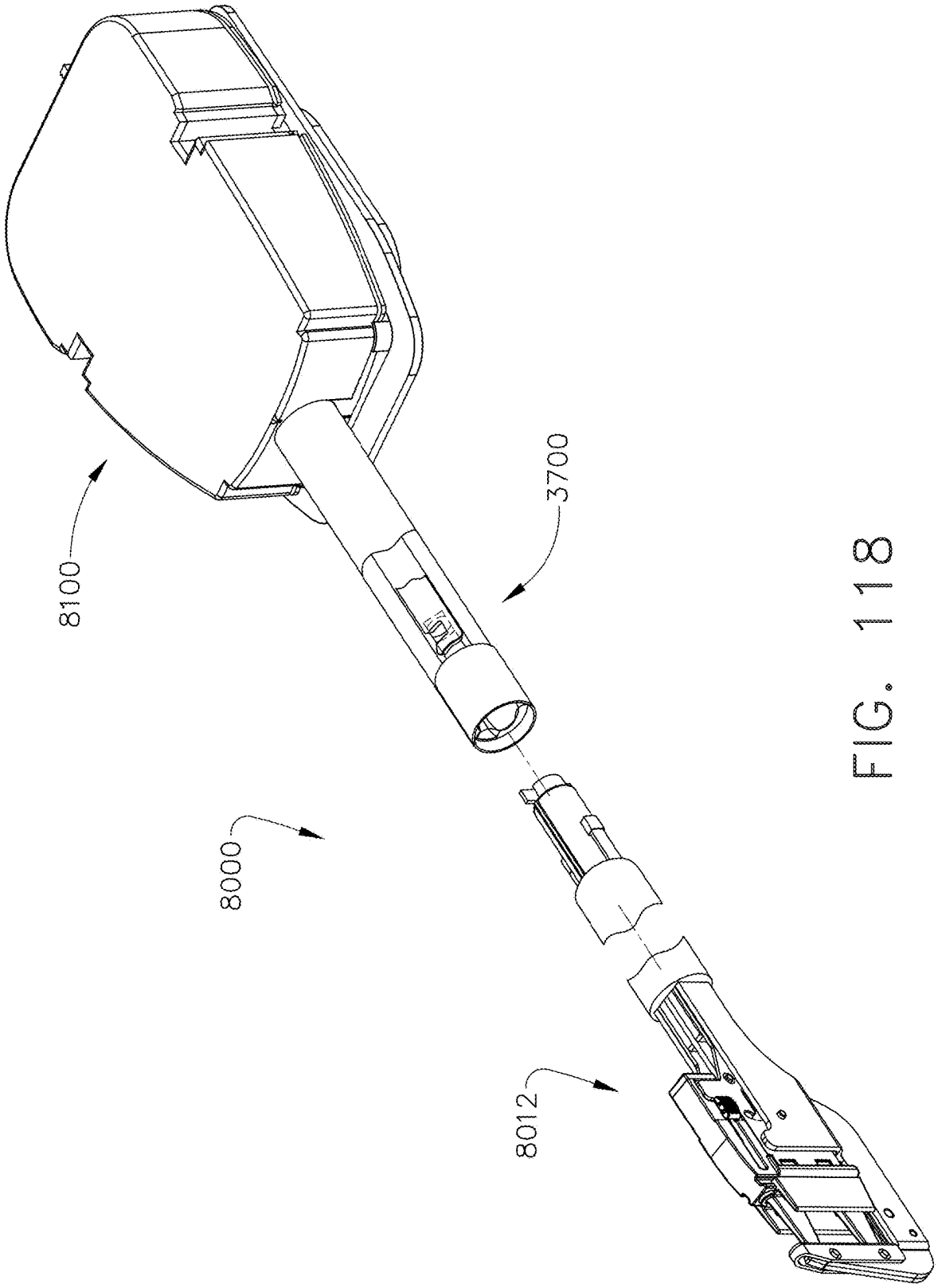

FIG. 118

SURGICAL TOOL COMPRISING A FIRING BEAM WITH AN ARM

CROSS-REFERENCE TO RELATED APPLICATIONS

[0001] This application is a continuation application claiming priority under 35 U.S.C. § 120 to U.S. patent application Ser. No. 18/659,609, entitled SURGICAL STAPLING INSTRUMENT WITH DETACHABLE MOTOR CONTROL UNIT, filed May 9, 2024, now U.S. Patent Application Publication No. 2024/0350139, which is a continuation application claiming priority under 35 U.S.C. § 120 to U.S. patent application Ser. No. 17/032,279, entitled SURGICAL INSTRUMENT WITH DETACHABLE MOTOR CONTROL UNIT, filed Sep. 25, 2020, which issued on Aug. 13, 2024 as U.S. Pat. No. 12,059,154, which is a continuation application claiming priority under 35 U.S.C. § 120 to U.S. patent application Ser. No. 15/796,257, entitled SURGICAL STAPLING SYSTEM, filed Oct. 27, 2017, which issued on Sep. 28, 2021 as U.S. Pat. No. 11,129,616, which is a continuation application claiming priority under 35 U.S.C. § 120 to U.S. patent application Ser. No. 14/725,181, entitled AUTOMATED RELOADING DEVICES FOR REPLACING USED END EFFECTORS ON ROBOTIC SURGICAL SYSTEMS, filed May 29, 2015, which issued on Nov. 20, 2018 as U.S. Pat. No. 10,130,366, which is a continuation application claiming priority under 35 U.S.C. § 120 to U.S. patent application Ser. No. 13/118,241, entitled SURGICAL STAPLING INSTRUMENTS WITH ROTATABLE STAPLE DEPLOYMENT ARRANGEMENTS, filed May 27, 2011, which issued on Jul. 7, 2015 as U.S. Pat. No. 9,072,535, the entire disclosures of which are hereby incorporated by reference herein.

BACKGROUND

[0002] Over the years a variety of minimally invasive robotic (or "telesurgical") systems have been developed to increase surgical dexterity as well as to permit a surgeon to operate on a patient in an intuitive manner. Many of such systems are disclosed in the following U.S. patents which are each herein incorporated by reference in their respective entirety: U.S. Pat. No. 5,792,135, entitled ARTICULATED SURGICAL INSTRUMENT FOR PERFORMING MINIMALLY INVASIVE SURGERY WITH ENHANCED DEXTERITY AND SENSITIVITY, U.S. Pat. No. 6,231,565, entitled ROBOTIC ARM DLUS FOR PERFORMING SURGICAL TASKS, U.S. Pat. No. 6,783,524, entitled ROBOTIC SURGICAL TOOL WITH ULTRASOUND CAUTERIZING AND CUTTING INSTRUMENT, U.S. Pat. No. 6,364,888, entitled ALIGNMENT OF MASTER AND SLAVE IN A MINIMALLY INVASIVE SURGICAL APPARATUS, U.S. Pat. No. 7,524,320, entitled MECHANICAL ACTUATOR INTERFACE SYSTEM FOR ROBOTIC SURGICAL TOOLS, U.S. Pat. No. 7,691,098, entitled PLATFORM LINK WRIST MECHANISM, U.S. Pat. No. 7,806,891, entitled REPOSITIONING AND REORIENTATION OF MASTER/SLAVE RELATIONSHIP IN MINIMALLY INVASIVE TELESURGERY, and U.S. Pat. No. 7,824,401, entitled SURGICAL TOOL WITH WRITED MONOPOLAR ELECTROSURGICAL END EFFECTORS. Many of such systems, however, have in the past been unable to generate the magnitude of forces required to effectively cut and fasten tissue.

SUMMARY

[0003] According to general aspects of various embodiments of the present invention, there is provided a surgical stapling instrument that includes an actuation system for selectively generating a plurality of control motions. A surgical end effector is operably coupled to the actuation system. In various embodiments, the surgical end effector comprises a surgical staple cartridge that operably supports a plurality of surgical staples that are arranged in at least two spaced staple lines. An actuation member operably interfaces with the actuation system such that upon application of the control motions thereto, the actuation member is axially driven within the surgical staple cartridge between a starting position and an ending position. The actuation member has rotatable staple camming members thereon that correspond to each one of the at least two staple lines such that as the actuation member is driven from the starting to the ending position, each rotatable camming member is rotated into camming driving engagement with the surgical staples in the corresponding staple lines.

[0004] In accordance with other general aspects of various embodiments of the present invention, there is provided a surgical stapling instrument that includes an actuation system for selectively generating a plurality of control motions. A surgical end effector is operably coupled to the actuation system. In various embodiments, the surgical end effector comprises an anvil that is movable between an open position and a closed position in response to closure motions applied thereto by the actuation system. The instrument further includes a surgical staple cartridge that operably supports a plurality of linearly arranged pusher members therein. Each pusher member operably supports at least one unformed surgical staple thereon. The instrument also comprises a plurality of linearly arranged staple drivers that correspond to the plurality of linearly arranged pusher members. Each staple driver is rotatably supported within the end effector. An actuation member operably interfaces with the actuation system such that upon application of firing control motions thereto, the actuation member is axially driven within the surgical staple cartridge between a starting position and an ending position. In various embodiments, the actuation member is configured to move each staple driver into rotatable camming engagement with each corresponding pusher member to drive at least one surgical staple supported thereon into forming contact with the anvil as the actuator is driven from the starting position to the ending position.

[0005] In accordance with still other general aspects, various embodiments of the present invention are directed to a surgical stapling instrument that comprises an actuation system for selectively generating a plurality of control motions. A surgical end effector is operably coupled to the actuation system. In various embodiments, the surgical end effector comprises an anvil that is movable between an open position and a closed position in response to closure motions applied thereto by the actuation system. The instrument further comprises a surgical staple cartridge that operably supports a plurality of linearly arranged pusher members therein. Each pusher member operably supports at least one unformed surgical staple thereon. The instrument also comprises an actuation member that operably interfaces with the actuation system such that upon application of the control motions thereto, the actuation member is axially driven within the surgical staple cartridge between a starting position and an ending position. Camming means also interfaces

with the actuation member such that as the actuation member is driven from the starting to ending position, the camming means are moved into rotatable camming engagement with each surgical pusher member to drive at least one surgical staple supported thereon into forming contact with the anvil when the anvil is in the closed position.

FIGURES

[0006] Various embodiments of the present invention are described herein by way of example in conjunction with the following Figures wherein:

[0007] FIG. **1** is a perspective view of one robotic controller embodiment;

[0008] FIG. **2** is a perspective view of one robotic surgical arm cart/manipulator of a robotic system operably supporting a plurality of surgical tool embodiments of the present invention;

[0009] FIG. **3** is a side view of the robotic surgical arm cart/manipulator depicted in FIG. **2**;

[0010] FIG. **4** is a perspective view of an exemplary cart structure with positioning linkages for operably supporting robotic manipulators that may be used with various surgical tool embodiments of the present invention;

[0011] FIG. **5** is a perspective view of a surgical tool embodiment of the present invention;

[0012] FIG. **6** is an exploded assembly view of an adapter and tool holder arrangement for attaching various surgical tool embodiments to a robotic system;

[0013] FIG. **7** is a side view of the adapter shown in FIG. **6**;

[0014] FIG. **8** is a bottom view of the adapter shown in FIG. **6**;

[0015] FIG. **9** is a top view of the adapter of FIGS. **6** and **7**;

[0016] FIG. **10** is a partial bottom perspective view of the surgical tool embodiment of FIG. **5**;

[0017] FIG. **11** is a partial exploded view of a portion of an articulatable surgical end effector embodiment of the present invention;

[0018] FIG. **12** is a perspective view of the surgical tool embodiment of FIG. **10** with the tool mounting housing removed;

[0019] FIG. **13** is a rear perspective view of the surgical tool embodiment of FIG. **10** with the tool mounting housing removed;

[0020] FIG. **14** is a front perspective view of the surgical tool embodiment of FIG. **10** with the tool mounting housing removed;

[0021] FIG. **15** is a partial exploded perspective view of the surgical tool embodiment of FIG. **14**;

[0022] FIG. **16** is a partial cross-sectional side view of the surgical tool embodiment of FIG. **10**;

[0023] FIG. **17** is an enlarged cross-sectional view of a portion of the surgical tool depicted in FIG. **16**;

[0024] FIG. **18** is an exploded perspective view of a portion of the tool mounting portion of the surgical tool embodiment depicted in FIG. **10**;

[0025] FIG. **19** is an enlarged exploded perspective view of a portion of the tool mounting portion of FIG. **18**;

[0026] FIG. **20** is a partial cross-sectional view of a portion of the elongated shaft assembly of the surgical tool of FIG. **10**;

[0027] FIG. **21** is a side view of a half portion of a closure nut embodiment of a surgical tool embodiment of the present invention;

[0028] FIG. **22** is a perspective view of another surgical tool embodiment of the present invention;

[0029] FIG. **23** is a cross-sectional side view of a portion of the surgical end effector and elongated shaft assembly of the surgical tool embodiment of FIG. **22** with the anvil in the open position and the closure clutch assembly in a neutral position;

[0030] FIG. **24** is another cross-sectional side view of the surgical end effector and elongated shaft assembly shown in FIG. **23** with the clutch assembly engaged in a closure position;

[0031] FIG. **25** is another cross-sectional side view of the surgical end effector and elongated shaft assembly shown in FIG. **23** with the clutch assembly engaged in a firing position;

[0032] FIG. **26** is a top view of a portion of a tool mounting portion embodiment of the present invention;

[0033] FIG. **27** is a perspective view of another surgical tool embodiment of the present invention;

[0034] FIG. **28** is a cross-sectional side view of a portion of the surgical end effector and elongated shaft assembly of the surgical tool embodiment of FIG. **27** with the anvil in the open position;

[0035] FIG. **29** is another cross-sectional side view of a portion of the surgical end effector and elongated shaft assembly of the surgical tool embodiment of FIG. **27** with the anvil in the closed position;

[0036] FIG. **30** is a perspective view of a closure drive nut and portion of a knife bar embodiment of the present invention;

[0037] FIG. **31** is a top view of another tool mounting portion embodiment of the present invention;

[0038] FIG. **32** is a perspective view of another surgical tool embodiment of the present invention;

[0039] FIG. **33** is a cross-sectional side view of a portion of the surgical end effector and elongated shaft assembly of the surgical tool embodiment of FIG. **32** with the anvil in the open position;

[0040] FIG. **34** is another cross-sectional side view of a portion of the surgical end effector and elongated shaft assembly of the surgical tool embodiment of FIG. **33** with the anvil in the closed position;

[0041] FIG. **35** is a cross-sectional view of a mounting collar embodiment of a surgical tool embodiment of the present invention showing the knife bar and distal end portion of the closure drive shaft;

[0042] FIG. **36** is a cross-sectional view of the mounting collar embodiment of FIG. **35**;

[0043] FIG. **37** is a top view of another tool mounting portion embodiment of another surgical tool embodiment of the present invention;

[0044] FIG. **37**A is an exploded perspective view of a portion of a gear arrangement of another surgical tool embodiment of the present invention;

[0045] FIG. **37**B is a cross-sectional perspective view of the gear arrangement shown in FIG. **37**A;

[0046] FIG. **38** is a cross-sectional side view of a portion of a surgical end effector and elongated shaft assembly of another surgical tool embodiment of the present invention employing a pressure sensor arrangement with the anvil in the open position;

[0047] FIG. **39** is another cross-sectional side view of a portion of the surgical end effector and elongated shaft assembly of the surgical tool embodiment of FIG. **38** with the anvil in the closed position;

[0048] FIG. **40** is a side view of a portion of another surgical tool embodiment of the present invention in relation to a tool holder portion of a robotic system with some of the components thereof shown in cross-section;

[0049] FIG. **41** is a side view of a portion of another surgical tool embodiment of the present invention in relation to a tool holder portion of a robotic system with some of the components thereof shown in cross-section;

[0050] FIG. **42** is a side view of a portion of another surgical tool embodiment of the present invention with some of the components thereof shown in cross-section;

[0051] FIG. **43** is a side view of a portion of another surgical end effector embodiment of a portion of a surgical tool embodiment of the present invention with some components thereof shown in cross-section;

[0052] FIG. **44** is a side view of a portion of another surgical end effector embodiment of a portion of a surgical tool embodiment of the present invention with some components thereof shown in cross-section;

[0053] FIG. **45** is a side view of a portion of another surgical end effector embodiment of a portion of a surgical tool embodiment of the present invention with some components thereof shown in cross-section;

[0054] FIG. **46** is an enlarged cross-sectional view of a portion of the end effector of FIG. **45**;

[0055] FIG. **47** is another cross-sectional view of a portion of the end effector of FIGS. **45** and **46**;

[0056] FIG. **48** is a cross-sectional side view of a portion of a surgical end effector and elongated shaft assembly of another surgical tool embodiment of the present invention with the anvil in the open position;

[0057] FIG. **49** is an enlarged cross-sectional side view of a portion of the surgical end effector and elongated shaft assembly of the surgical tool embodiment of FIG. **48**;

[0058] FIG. **50** is another cross-sectional side view of a portion of the surgical end effector and elongated shaft assembly of FIGS. **48** and **49** with the anvil thereof in the closed position;

[0059] FIG. **51** is an enlarged cross-sectional side view of a portion of the surgical end effector and elongated shaft assembly of the surgical tool embodiment of FIGS. **48-50**;

[0060] FIG. **52** is a top view of a tool mounting portion embodiment of a surgical tool embodiment of the present invention;

[0061] FIG. **53** is a perspective assembly view of another surgical tool embodiment of the present invention;

[0062] FIG. **54** is a front perspective view of a disposable loading unit arrangement that may be employed with various surgical tool embodiments of the present invention;

[0063] FIG. **55** is a rear perspective view of the disposable loading unit of FIG. **54**;

[0064] FIG. **56** is a bottom perspective view of the disposable loading unit of FIGS. **54** and **55**;

[0065] FIG. **57** is a bottom perspective view of another disposable loading unit embodiment that may be employed with various surgical tool embodiments of the present invention;

[0066] FIG. **58** is an exploded perspective view of a mounting portion of a disposable loading unit depicted in FIGS. **54-56**;

[0067] FIG. **59** is a perspective view of a portion of a disposable loading unit and an elongated shaft assembly embodiment of a surgical tool embodiment of the present invention with the disposable loading unit in a first position;

[0068] FIG. **60** is another perspective view of a portion of the disposable loading unit and elongated shaft assembly of FIG. **59** with the disposable loading unit in a second position;

[0069] FIG. **61** is a cross-sectional view of a portion of the disposable loading unit and elongated shaft assembly embodiment depicted in FIGS. **59** and **60**;

[0070] FIG. **62** is another cross-sectional view of the disposable loading unit and elongated shaft assembly embodiment depicted in FIGS. **59-61**;

[0071] FIG. **63** is a partial exploded perspective view of a portion of another disposable loading unit embodiment and an elongated shaft assembly embodiment of a surgical tool embodiment of the present invention;

[0072] FIG. **64** is a partial exploded perspective view of a portion of another disposable loading unit embodiment and an elongated shaft assembly embodiment of a surgical tool embodiment of the present invention;

[0073] FIG. **65** is another partial exploded perspective view of the disposable loading unit embodiment and an elongated shaft assembly embodiment of FIG. **64**;

[0074] FIG. **66** is a top view of another tool mounting portion embodiment of a surgical tool embodiment of the present invention;

[0075] FIG. **67** is a side view of another surgical tool embodiment of the present invention with some of the components thereof shown in cross-section and in relation to a robotic tool holder of a robotic system;

[0076] FIG. **68** is an exploded assembly view of a surgical end effector embodiment that may be used in connection with various surgical tool embodiments of the present invention;

[0077] FIG. **69** is a side view of a portion of a cable-driven system for driving a cutting instrument employed in various surgical end effector embodiments of the present invention;

[0078] FIG. **70** is a top view of the cable-driven system and cutting instrument of FIG. **69**;

[0079] FIG. **71** is a top view of a cable drive transmission embodiment of the present invention in a closure position;

[0080] FIG. **72** is another top view of the cable drive transmission embodiment of FIG. **71** in a neutral position;

[0081] FIG. **73** is another top view of the cable drive transmission embodiment of FIGS. **71** and **72** in a firing position;

[0082] FIG. **74** is a perspective view of the cable drive transmission embodiment in the position depicted in FIG. **71**;

[0083] FIG. **75** is a perspective view of the cable drive transmission embodiment in the position depicted in FIG. **72**;

[0084] FIG. **76** is a perspective view of the cable drive transmission embodiment in the position depicted in FIG. **73**;

[0085] FIG. **77** is a perspective view of another surgical tool embodiment of the present invention;

[0086] FIG. **78** is a side view of a portion of another cable-driven system embodiment for driving a cutting instrument employed in various surgical end effector embodiments of the present invention;

[0087] FIG. **79** is a top view of the cable-driven system embodiment of FIG. **78**;

[0088] FIG. **80** is a top view of a tool mounting portion embodiment of another surgical tool embodiment of the present invention;

[0089] FIG. **81** is a top cross-sectional view of another surgical tool embodiment of the present invention;

[0090] FIG. **82** is a cross-sectional view of a portion of a surgical end effector embodiment of a surgical tool embodiment of the present invention;

[0091] FIG. **83** is a cross-sectional end view of the surgical end effector of FIG. **82** taken along line **83-83** in FIG. **82**;

[0092] FIG. **84** is a perspective view of the surgical end effector of FIGS. **82** and **83** with portions thereof shown in cross-section;

[0093] FIG. **85** is a side view of a portion of the surgical end effector of FIGS. **82-84**;

[0094] FIG. **86** is a perspective view of a sled assembly embodiment of various surgical tool embodiments of the present invention;

[0095] FIG. **87** is a cross-sectional view of the sled assembly embodiment of FIG. **86** and a portion of the elongated channel of FIG. **85**;

[0096] FIGS. **88-93** diagrammatically depict the sequential firing of staples in a surgical tool embodiment of the present invention;

[0097] FIG. **94** is a partial perspective view of a portion of a surgical end effector embodiment of the present invention;

[0098] FIG. **95** is a partial cross-sectional perspective view of a portion of a surgical end effector embodiment of a surgical tool embodiment of the present invention;

[0099] FIG. **96** is another partial cross-sectional perspective view of the surgical end effector embodiment of FIG. **95** with a sled assembly axially advancing therethrough;

[0100] FIG. **97** is a perspective view of another sled assembly embodiment of another surgical tool embodiment of the present invention;

[0101] FIG. **98** is a partial top view of a portion of the surgical end effector embodiment depicted in FIGS. **95** and **96** with the sled assembly axially advancing therethrough;

[0102] FIG. **99** is another partial top view of the surgical end effector embodiment of FIG. **98** with the top surface of the surgical staple cartridge omitted for clarity;

[0103] FIG. **100** is a partial cross-sectional side view of a rotary driver embodiment and staple pusher embodiment of the surgical end effector depicted in FIGS. **95** and **97**;

[0104] FIG. **101** is a perspective view of an automated reloading system embodiment of the present invention with a surgical end effector in extractive engagement with the extraction system thereof;

[0105] FIG. **102** is another perspective view of the automated reloading system embodiment depicted in FIG. **101**;

[0106] FIG. **103** is a cross-sectional elevational view of the automated reloading system embodiment depicted in FIGS. **101** and **102**;

[0107] FIG. **104** is another cross-sectional elevational view of the automated reloading system embodiment depicted in FIGS. **101-103** with the extraction system thereof removing a spent surgical staple cartridge from the surgical end effector;

[0108] FIG. **105** is another cross-sectional elevational view of the automated reloading system embodiment depicted in FIGS. **101-104** illustrating the loading of a new surgical staple cartridge into a surgical end effector;

[0109] FIG. **106** is a perspective view of another automated reloading system embodiment of the present invention with some components shown in cross-section;

[0110] FIG. **107** is an exploded perspective view of a portion of the automated reloading system embodiment of FIG. **106**;

[0111] FIG. **108** is another exploded perspective view of the portion of the automated reloading system embodiment depicted in FIG. **107**;

[0112] FIG. **109** is a cross-sectional elevational view of the automated reloading system embodiment of FIGS. **106-108**;

[0113] FIG. **110** is a cross-sectional view of an orientation tube embodiment supporting a disposable loading unit therein;

[0114] FIG. **111** is a perspective view of another surgical tool embodiment of the present invention;

[0115] FIG. **112** is a partial perspective view of an articulation joint embodiment of a surgical tool embodiment of the present invention;

[0116] FIG. **113** is a perspective view of a closure tube embodiment of a surgical tool embodiment of the present invention;

[0117] FIG. **114** is a perspective view of the closure tube embodiment of FIG. **113** assembled on the articulation joint embodiment of FIG. **112**;

[0118] FIG. **115** is a top view of a portion of a tool mounting portion embodiment of a surgical tool embodiment of the present invention;

[0119] FIG. **116** is a perspective view of an articulation drive assembly embodiment employed in the tool mounting portion embodiment of FIG. **115**;

[0120] FIG. **117** is a perspective view of another surgical tool embodiment of the present invention; and

[0121] FIG. **118** is a perspective view of another surgical tool embodiment of the present invention.

DETAILED DESCRIPTION

[0122] Applicant of the present application also owns the following patent applications that have been filed on May 27, 2011 and which are each herein incorporated by reference in their respective entireties:

[0123] U.S. patent application Ser. No. 13/118,259, entitled SURGICAL INSTRUMENT WITH WIRELESS COMMUNICATION BETWEEN A CONTROL UNIT OF A ROBOTIC SYSTEM AND REMOTE SENSOR, now U.S. Pat. No. 8,684,253;

[0124] U.S. patent application Ser. No. 13/118,210, entitled ROBOTICALLY-CONTROLLED DISPOSABLE MOTOR DRIVEN LOADING UNIT, now U.S. Pat. No. 8,752,749;

[0125] U.S. patent application Ser. No. 13/118,194, entitled ROBOTICALLY-CONTROLLED ENDOSCOPIC ACCESSORY CHANNEL, now U.S. Pat. No. 8,992,422;

[0126] U.S. patent application Ser. No. 13/118,253, entitled ROBOTICALLY-CONTROLLED MOTORIZED SURGICAL INSTRUMENT, now U.S. Pat. No. 9,386,983;

[0127] U.S. patent application Ser. No. 13/118,278, entitled ROBOTICALLY-CONTROLLED SURGICAL STAPLING DEVICES THAT PRODUCE FORMED STAPLES HAVING DIFFERENT LENGTHS, now U.S. Pat. No. 9,237,891;

[0128] U.S. patent application Ser. No. 13/118,190, entitled ROBOTICALLY-CONTROLLED MOTORIZED CUTTING AND FASTENING INSTRUMENT, now U.S. Pat. No. 9,179,912;

[0129] U.S. patent application Ser. No. 13/118,223, entitled ROBOTICALLY-CONTROLLED SHAFT BASED ROTARY DRIVE SYSTEMS FOR SURGICAL INSTRUMENTS, now U.S. Pat. No. 8,931,682;

[0130] U.S. patent application Ser. No. 13/118,263, entitled ROBOTICALLY-CONTROLLED SURGICAL INSTRUMENT HAVING RECORDING CAPABILITIES, now U.S. Patent Application Publication No. 2011/0295295;

[0131] U.S. patent application Ser. No. 13/118,272, entitled ROBOTICALLY-CONTROLLED SURGICAL INSTRUMENT WITH FORCE FEEDBACK CAPABILITIES, now U.S. Patent Application Publication No. 2011/0290856; and

[0132] U.S. patent application Ser. No. 13/118,246, entitled ROBOTICALLY-DRIVEN SURGICAL INSTRUMENT WITH E-BEAM DRIVER, now U.S. Pat. No. 9,060,770.

[0133] Certain exemplary embodiments will now be described to provide an overall understanding of the principles of the structure, function, manufacture, and use of the devices and methods disclosed herein. One or more examples of these embodiments are illustrated in the accompanying drawings. Those of ordinary skill in the art will understand that the devices and methods specifically described herein and illustrated in the accompanying drawings are non-limiting exemplary embodiments and that the scope of the various embodiments of the present invention is defined solely by the claims. The features illustrated or described in connection with one exemplary embodiment may be combined with the features of other embodiments. Such modifications and variations are intended to be included within the scope of the present invention.

[0134] Uses of the phrases "in various embodiments," "in some embodiments," "in one embodiment", or "in an embodiment", or the like, throughout the specification are not necessarily all referring to the same embodiment. Furthermore, the particular features, structures, or characteristics of one or more embodiments may be combined in any suitable manner in one or more other embodiments. Such modifications and variations are intended to be included within the scope of the present invention.

[0135] FIG. **1** depicts one version of a master controller **1001** that may be used in connection with a robotic arm slave cart **1100** of the type depicted in FIG. **2**. Master controller **1001** and robotic arm slave cart **1100**, as well as their respective components and control systems are collectively referred to herein as a robotic system **1000**. Examples of such systems and devices are disclosed in U.S. Pat. No. 7,524,320 which has been herein incorporated by reference. Thus, various details of such devices will not be described in detail herein beyond that which may be necessary to understand various embodiments and forms of the present invention. As is known, the master controller **1001** generally includes master controllers (generally represented as **1003** in FIG. **1**) which are grasped by the surgeon and manipulated in space while the surgeon views the procedure via a stereo display **1002**. The master controllers **1001** generally comprise manual input devices which preferably move with multiple degrees of freedom, and which often further have an actuatable handle for actuating tools (for example, for closing grasping saws, applying an electrical potential to an electrode, or the like).

[0136] As can be seen in FIG. **2**, in one form, the robotic arm cart **1100** is configured to actuate a plurality of surgical tools, generally designated as **1200**. Various robotic surgery systems and methods employing master controller and robotic arm cart arrangements are disclosed in U.S. Pat. No. 6,132,368, entitled MULTI-COMPONENT TELEPRESENCE SYSTEM AND METHOD, the full disclosure of which is incorporated herein by reference. In various forms, the robotic arm cart **1100** includes a base **1002** from which, in the illustrated embodiment, three surgical tools **1200** are supported. In various forms, the surgical tools **1200** are each supported by a series of manually articulatable linkages, generally referred to as set-up joints **1104**, and a robotic manipulator **1106**. These structures are herein illustrated with protective covers extending over much of the robotic linkage. These protective covers may be optional, and may be limited in size or entirely eliminated in some embodiments to minimize the inertia that is encountered by the servo mechanisms used to manipulate such devices, to limit the volume of moving components so as to avoid collisions, and to limit the overall weight of the cart **1100**. Cart **1100** will generally have dimensions suitable for transporting the cart **1100** between operating rooms. The cart **1100** may be configured to typically fit through standard operating room doors and onto standard hospital elevators. In various forms, the cart **1100** would preferably have a weight and include a wheel (or other transportation) system that allows the cart **1100** to be positioned adjacent an operating table by a single attendant.

[0137] Referring now to FIG. **3**, in at least one form, robotic manipulators **1106** may include a linkage **1108** that constrains movement of the surgical tool **1200**. In various embodiments, linkage **1108** includes rigid links coupled together by rotational joints in a parallelogram arrangement so that the surgical tool **1200** rotates around a point in space **1110**, as more fully described in issued U.S. Pat. No. 5,817,084, the full disclosure of which is herein incorporated by reference. The parallelogram arrangement constrains rotation to pivoting about an axis **1112***a*, sometimes called the pitch axis. The links supporting the parallelogram linkage are pivotally mounted to set-up joints **1104** (FIG. **2**) so that the surgical tool **1200** further rotates about an axis **1112***b*, sometimes called the yaw axis. The pitch and yaw axes **1112***a*, **1112***b* intersect at the remote center **1114**, which is aligned along a shaft **1208** of the surgical tool **1200**. The surgical tool **1200** may have further degrees of driven freedom as supported by manipulator **1106**, including sliding motion of the surgical tool **1200** along the longitudinal tool axis "LT-LT". As the surgical tool **1200** slides along the tool axis LT-LT relative to manipulator **1106** (arrow **1112***c*), remote center **1114** remains fixed relative to base **1116** of manipulator **1106**. Hence, the entire manipulator is generally moved to re-position remote center **1114**. Linkage **1108** of manipulator **1106** is driven by a series of motors **1120**. These motors actively move linkage **1108** in response to commands from a processor of a control system. As will be discussed in further detail below, motors **1120** are also employed to manipulate the surgical tool **1200**.

[0138] An alternative set-up joint structure is illustrated in FIG. **4**. In this embodiment, a surgical tool **1200** is supported by an alternative manipulator structure **1106'** between two

tissue manipulation tools. Those of ordinary skill in the art will appreciate that various embodiments of the present invention may incorporate a wide variety of alternative robotic structures, including those described in U.S. Pat. No. 5,878,193, entitled AUTOMATED ENDOSCOPE SYSTEM FOR OPTIMAL POSITIONING, the full disclosure of which is incorporated herein by reference. Additionally, while the data communication between a robotic component and the processor of the robotic surgical system is primarily described herein with reference to communication between the surgical tool **1200** and the master controller **1001**, it should be understood that similar communication may take place between circuitry of a manipulator, a set-up joint, an endoscope or other image capture device, or the like, and the processor of the robotic surgical system for component compatibility verification, component-type identification, component calibration (such as off-set or the like) communication, confirmation of coupling of the component to the robotic surgical system, or the like.

[0139] An exemplary non-limiting surgical tool **1200** that is well-adapted for use with a robotic system **1000** that has a tool drive assembly **1010** (FIG. **6**) that is operatively coupled to a master controller **1001** that is operable by inputs from an operator (i.e., a surgeon) is depicted in FIG. **5**. As can be seen in that Figure, the surgical tool **1200** includes a surgical end effector **2012** that comprises an endocutter. In at least one form, the surgical tool **1200** generally includes an elongated shaft assembly **2008** that has a proximal closure tube **2040** and a distal closure tube **2042** that are coupled together by an articulation joint **2011**. The surgical tool **1200** is operably coupled to the manipulator by a tool mounting portion, generally designated as **1300**. The surgical tool **1200** further includes an interface **1230** which mechanically and electrically couples the tool mounting portion **1300** to the manipulator. One form of interface **1230** is illustrated in FIGS. **6-10**. In various embodiments, the tool mounting portion **1300** includes a tool mounting plate **1302** that operably supports a plurality of (four are shown in FIG. **10**) rotatable body portions, driven discs or elements **1304**, that each include a pair of pins **1306** that extend from a surface of the driven element **1304**. One pin **1306** is closer to an axis of rotation of each driven elements **1304** than the other pin **1306** on the same driven element **1304**, which helps to ensure positive angular alignment of the driven element **1304**. Interface **1230** includes an adaptor portion **1240** that is configured to mountingly engage the mounting plate **1302** as will be further discussed below. The adaptor portion **1240** may include an array of electrical connecting pins **1242** (FIG. **8**) which may be coupled to a memory structure by a circuit board within the tool mounting portion **1300**. While interface **1230** is described herein with reference to mechanical, electrical, and magnetic coupling elements, it should be understood that a wide variety of telemetry modalities might be used, including infrared, inductive coupling, or the like.

[0140] As can be seen in FIGS. **6-9**, the adapter portion **1240** generally includes a tool side **1244** and a holder side **1246**. In various forms, a plurality of rotatable bodies **1250** are mounted to a floating plate **1248** which has a limited range of movement relative to the surrounding adaptor structure normal to the major surfaces of the adaptor **1240**. Axial movement of the floating plate **1248** helps decouple the rotatable bodies **1250** from the tool mounting portion **1300** when the levers **1303** along the sides of the tool mounting portion housing **1301** are actuated (See FIG. **5**). Other mechanisms/arrangements may be employed for releasably coupling the tool mounting portion **1300** to the adaptor **1240**. In at least one form, rotatable bodies **1250** are resiliently mounted to floating plate **1248** by resilient radial members which extend into a circumferential indentation about the rotatable bodies **1250**. The rotatable bodies **1250** can move axially relative to plate **1248** by deflection of these resilient structures. When disposed in a first axial position (toward tool side **1244**) the rotatable bodies **1250** are free to rotate without angular limitation. However, as the rotatable bodies **1250** move axially toward tool side **1244**, tabs **1252** (extending radially from the rotatable bodies **1250**) laterally engage detents on the floating plates so as to limit angular rotation of the rotatable bodies **1250** about their axes. This limited rotation can be used to help drivingly engage the rotatable bodies **1250** with drive pins **1272** of a corresponding tool holder portion **1270** of the robotic system **1000**, as the drive pins **1272** will push the rotatable bodies **1250** into the limited rotation position until the pins **1234** are aligned with (and slide into) openings **1256'**. Openings **1256** on the tool side **1244** and openings **1256'** on the holder side **1246** of rotatable bodies **1250** are configured to accurately align the driven elements **1304** (FIG. **10**) of the tool mounting portion **1300** with the drive elements **1271** of the tool holder **1270**. As described above regarding inner and outer pins **1306** of driven elements **1304**, the openings **1256**, **1256'** are at differing distances from the axis of rotation on their respective rotatable bodies **1250** so as to ensure that the alignment is not 180 degrees from its intended position. Additionally, each of the openings **1256** is slightly radially elongated so as to fittingly receive the pins **1306** in the circumferential orientation. This allows the pins **1306** to slide radially within the openings **1256**, **1256'** and accommodate some axial misalignment between the tool **1200** and tool holder **1270**, while minimizing any angular misalignment and backlash between the drive and driven elements. Openings **1256** on the tool side **1244** are offset by about 90 degrees from the openings **1256'** (shown in broken lines) on the holder side **1246**, as can be seen most clearly in FIG. **9**.

[0141] Various embodiments may further include an array of electrical connector pins **1242** located on holder side **1246** of adaptor **1240**, and the tool side **1244** of the adaptor **1240** may include slots **1258** (FIG. **9**) for receiving a pin array (not shown) from the tool mounting portion **1300**. In addition to transmitting electrical signals between the surgical tool **1200** and the tool holder **1270**, at least some of these electrical connections may be coupled to an adaptor memory device **1260** (FIG. **8**) by a circuit board of the adaptor **1240**.

[0142] A detachable latch arrangement **1239** may be employed to releasably affix the adaptor **1240** to the tool holder **1270**. As used herein, the term "tool drive assembly" when used in the context of the robotic system **1000**, at least encompasses various embodiments of the adapter **1240** and tool holder **1270** and which has been generally designated as **1010** in FIG. **6**. For example, as can be seen in FIG. **6**, the tool holder **1270** may include a first latch pin arrangement **1274** that is sized to be received in corresponding clevis slots **1241** provided in the adaptor **1240**. In addition, the tool holder **1270** may further have second latch pins **1276** that are sized to be retained in corresponding latch clevises **1243** in the adaptor **1240**. See FIG. **29**. In at least one form, a latch assembly **1245** is movably supported on the adapter **1240** and is biasable between a first latched position wherein the

latch pins **1276** are retained within their respective latch clevis **1243** and an unlatched position wherein the second latch pins **1276** may be into or removed from the latch clevises **1243**. A spring or springs (not shown) are employed to bias the latch assembly into the latched position. A lip on the tool side **1244** of adaptor **1240** may slidably receive laterally extending tabs of tool mounting housing **1301**.

[0143] Turning next to FIGS. **10-17**, in at least one embodiment, the surgical tool **1200** includes a surgical end effector **2012** that comprises in this example, among other things, at least one component **2024** that is selectively movable between first and second positions relative to at least one other component **2022** in response to various control motions applied thereto as will be discussed in further detail below. In various embodiments, component **2022** comprises an elongated channel **2022** configured to operably support a surgical staple cartridge **2034** therein and component **2024** comprises a pivotally translatable clamping member, such as an anvil **2024**. Various embodiments of the surgical end effector **2012** are configured to maintain the anvil **2024** and elongated channel **2022** at a spacing that assures effective stapling and severing of tissue clamped in the surgical end effector **2012**. As can be seen in FIG. **16**, the surgical end effector **2012** further includes a cutting instrument **2032** and a sled **2033**. The cutting instrument **2032** may be, for example, a knife. The surgical staple cartridge **2034** operably houses a plurality of surgical staples (not show) therein that are supported on movable staple drivers (not shown). As the cutting instrument **2032** is driven distally through a centrally-disposed slot (not shown) in the surgical staple cartridge **2034**, it forces the sled **2033** distally as well. As the sled **2033** is driven distally, its "wedge-shaped" configuration contacts the movable staple drivers and drives them vertically toward the closed anvil **2024**. The surgical staples are formed as they are driven into the forming surface located on the underside of the anvil **2024**. The sled **2033** may be part of the surgical staple cartridge **2034**, such that when the cutting instrument **2032** is retracted following the cutting operation, the sled **2033** does not retract. The anvil **2024** may be pivotably opened and closed at a pivot point **2025** located at the proximal end of the elongated channel **2022**. The anvil **2024** may also include a tab **2027** at its proximal end that interacts with a component of the mechanical closure system (described further below) to facilitate the opening of the anvil **2024**. The elongated channel **2022** and the anvil **2024** may be made of an electrically conductive material (such as metal) so that they may serve as part of an antenna that communicates with sensor(s) in the end effector, as described above. The surgical staple cartridge **2034** could be made of a nonconductive material (such as plastic) and the sensor may be connected to or disposed in the surgical staple cartridge **2034**, as was also described above.

[0144] As can be seen in FIGS. **10-17**, the surgical end effector **2012** is attached to the tool mounting portion **1300** by an elongated shaft assembly **2008** according to various embodiments. As shown in the illustrated embodiment, the shaft assembly **2008** includes an articulation joint generally indicated as **2011** that enables the surgical end effector **2012** to be selectively articulated about an articulation axis AA-AA that is substantially transverse to a longitudinal tool axis LT-LT. See FIG. **11**. In other embodiments, the articulation joint is omitted. In various embodiments, the shaft assembly **2008** may include a closure tube assembly **2009** that comprises a proximal closure tube **2040** and a distal closure tube **2042** that are pivotably linked by a pivot links **2044** and operably supported on a spine assembly generally depicted as **2049**. In the illustrated embodiment, the spine assembly **2049** comprises a distal spine portion **2050** that is attached to the elongated channel **2022** and is pivotally coupled to the proximal spine portion **2052**. The closure tube assembly **2009** is configured to axially slide on the spine assembly **2049** in response to actuation motions applied thereto. The distal closure tube **2042** includes an opening **2045** into which the tab **2027** on the anvil **2024** is inserted in order to facilitate opening of the anvil **2024** as the distal closure tube **2042** is moved axially in the proximal direction "PD". The closure tubes **2040**, **2042** may be made of electrically conductive material (such as metal) so that they may serve as part of the antenna, as described above. Components of the main drive shaft assembly (e.g., the drive shafts **2048**, **2050**) may be made of a nonconductive material (such as plastic).

[0145] In use, it may be desirable to rotate the surgical end effector **2012** about the longitudinal tool axis LT-LT. In at least one embodiment, the tool mounting portion **1300** includes a rotational transmission assembly **2069** that is configured to receive a corresponding rotary output motion from the tool drive assembly **1010** of the robotic system **1000** and convert that rotary output motion to a rotary control motion for rotating the elongated shaft assembly **2008** (and surgical end effector **2012**) about the longitudinal tool axis LT-LT. In various embodiments, for example, the proximal end **2060** of the proximal closure tube **2040** is rotatably supported on the tool mounting plate **1302** of the tool mounting portion **1300** by a forward support cradle **1309** and a closure sled **2100** that is also movably supported on the tool mounting plate **1302**. In at least one form, the rotational transmission assembly **2069** includes a tube gear segment **2062** that is formed on (or attached to) the proximal end **2060** of the proximal closure tube **2040** for operable engagement by a rotational gear assembly **2070** that is operably supported on the tool mounting plate **1302**. As can be seen in FIG. **13**, the rotational gear assembly **2070**, in at least one embodiment, comprises a rotation drive gear **2072** that is coupled to a corresponding first one of the driven discs or elements **1304** on the adapter side **1307** of the tool mounting plate **1302** when the tool mounting portion **1300** is coupled to the tool drive assembly **1010**. See FIG. **10**. The rotational gear assembly **2070** further comprises a rotary driven gear **2074** that is rotatably supported on the tool mounting plate **1302** in meshing engagement with the tube gear segment **2062** and the rotation drive gear **2072**. Application of a first rotary output motion from the tool drive assembly **1010** of the robotic system **1000** to the corresponding driven element **1304** will thereby cause rotation of the rotation drive gear **2072**. Rotation of the rotation drive gear **2072** ultimately results in the rotation of the elongated shaft assembly **2008** (and the surgical end effector **2012**) about the longitudinal tool axis LT-LT (represented by arrow "R" in FIG. **13**). It will be appreciated that the application of a rotary output motion from the tool drive assembly **1010** in one direction will result in the rotation of the elongated shaft assembly **2008** and surgical end effector **2012** about the longitudinal tool axis LT-LT in a first direction and an application of the rotary output motion in an opposite direction will result in the rotation of the elongated shaft

assembly **2008** and surgical end effector **2012** in a second direction that is opposite to the first direction.

[0146] In at least one embodiment, the closure of the anvil **2024** relative to the staple cartridge **2034** is accomplished by axially moving the closure tube assembly **2009** in the distal direction "DD" on the spine assembly **2049**. As indicated above, in various embodiments, the proximal end **2060** of the proximal closure tube **2040** is supported by the closure sled **2100** which comprises a portion of a closure transmission, generally depicted as **2099**. In at least one form, the closure sled **2100** is configured to support the closure tube **2009** on the tool mounting plate **1320** such that the proximal closure tube **2040** can rotate relative to the closure sled **2100**, yet travel axially with the closure sled **2100**. In particular, as can be seen in FIG. **18**, the closure sled **2100** has an upstanding tab **2101** that extends into a radial groove **2063** in the proximal end portion of the proximal closure tube **2040**. In addition, as can be seen in FIGS. **15** and **18**, the closure sled **2100** has a tab portion **2102** that extends through a slot **1305** in the tool mounting plate **1302**. The tab portion **2102** is configured to retain the closure sled **2100** in sliding engagement with the tool mounting plate **1302**. In various embodiments, the closure sled **2100** has an upstanding portion **2104** that has a closure rack gear **2106** formed thereon. The closure rack gear **2106** is configured for driving engagement with a closure gear assembly **2110**. See FIG. **15**.

[0147] In various forms, the closure gear assembly **2110** includes a closure spur gear **2112** that is coupled to a corresponding second one of the driven discs or elements **1304** on the adapter side **1307** of the tool mounting plate **1302**. See FIG. **10**. Thus, application of a second rotary output motion from the tool drive assembly **1010** of the robotic system **1000** to the corresponding second driven element **1304** will cause rotation of the closure spur gear **2112** when the tool mounting portion **1300** is coupled to the tool drive assembly **1010**. The closure gear assembly **2110** further includes a closure reduction gear set **2114** that is supported in meshing engagement with the closure spur gear **2112**. As can be seen in FIGS. **14** and **15**, the closure reduction gear set **2114** includes a driven gear **2116** that is rotatably supported in meshing engagement with the closure spur gear **2112**. The closure reduction gear set **2114** further includes a first closure drive gear **2118** that is in meshing engagement with a second closure drive gear **2120** that is rotatably supported on the tool mounting plate **1302** in meshing engagement with the closure rack gear **2106**. Thus, application of a second rotary output motion from the tool drive assembly **1010** of the robotic system **1000** to the corresponding second driven element **1304** will cause rotation of the closure spur gear **2112** and the closure transmission **2110** and ultimately drive the closure sled **2100** and closure tube assembly **2009** axially. The axial direction in which the closure tube assembly **2009** moves ultimately depends upon the direction in which the second driven element **1304** is rotated. For example, in response to one rotary output motion received from the tool drive assembly **1010** of the robotic system **1000**, the closure sled **2100** will be driven in the distal direction "DD" and ultimately drive the closure tube assembly **1009** in the distal direction. As the distal closure tube **2042** is driven distally, the end of the closure tube segment **2042** will engage a portion of the anvil **2024** and cause the anvil **2024** to pivot to a closed position. Upon application of an "opening" out put motion from the tool drive assembly **1010** of the robotic system **1000**, the closure sled **2100** and shaft assembly **2008** will be driven in the proximal direction "PD". As the distal closure tube **2042** is driven in the proximal direction, the opening **2045** therein interacts with the tab **2027** on the anvil **2024** to facilitate the opening thereof. In various embodiments, a spring (not shown) may be employed to bias the anvil to the open position when the distal closure tube **2042** has been moved to its starting position. In various embodiments, the various gears of the closure gear assembly **2110** are sized to generate the necessary closure forces needed to satisfactorily close the anvil **2024** onto the tissue to be cut and stapled by the surgical end effector **2012**. For example, the gears of the closure transmission **2110** may be sized to generate approximately 70-120 pounds.

[0148] In various embodiments, the cutting instrument **2032** is driven through the surgical end effector **2012** by a knife bar **2200**. See FIGS. **16** and **18**. In at least one form, the knife bar **2200** may be fabricated from, for example, stainless steel or other similar material and has a substantially rectangular cross-sectional shape. Such knife bar configuration is sufficiently rigid to push the cutting instrument **2032** through tissue clamped in the surgical end effector **2012**, while still being flexible enough to enable the surgical end effector **2012** to articulate relative to the proximal closure tube **2040** and the proximal spine portion **2052** about the articulation axis AA-AA as will be discussed in further detail below. As can be seen in FIGS. **19** and **20**, the proximal spine portion **2052** has a rectangular-shaped passage **2054** extending therethrough to provide support to the knife bar **2200** as it is axially pushed therethrough. The proximal spine portion **2052** has a proximal end **2056** that is rotatably mounted to a spine mounting bracket **2057** attached to the tool mounting plate **1032**. See FIG. **18**. Such arrangement permits the proximal spine portion **2052** to rotate, but not move axially, within the proximal closure tube **2040**.

[0149] As shown in FIG. **16**, the distal end **2202** of the knife bar **2200** is attached to the cutting instrument **2032**. The proximal end **2204** of the knife bar **2200** is rotatably affixed to a knife rack gear **2206** such that the knife bar **2200** is free to rotate relative to the knife rack gear **2206**. See FIG. **18**. As can be seen in FIGS. **12-17**, the knife rack gear **2206** is slidably supported within a rack housing **2210** that is attached to the tool mounting plate **1302** such that the knife rack gear **2206** is retained in meshing engagement with a knife gear assembly **2220**. More specifically and with reference to FIG. **15**, in at least one embodiment, the knife gear assembly **2220** includes a knife spur gear **2222** that is coupled to a corresponding third one of the driven discs or elements **1304** on the adapter side **1307** of the tool mounting plate **1302**. See FIG. **10**. Thus, application of another rotary output motion from the robotic system **1000** through the tool drive assembly **1010** to the corresponding third driven element **1304** will cause rotation of the knife spur gear **2222**. The knife gear assembly **2220** further includes a knife gear reduction set **2224** that includes a first knife driven gear **2226** and a second knife drive gear **2228**. The knife gear reduction set **2224** is rotatably mounted to the tool mounting plate **1302** such that the firs knife driven gear **2226** is in meshing engagement with the knife spur gear **2222**. Likewise, the second knife drive gear **2228** is in meshing engagement with a third knife drive gear **2230** that is rotatably supported on the tool mounting plate **1302** in meshing engagement with the knife rack gear **2206**. In

various embodiments, the gears of the knife gear assembly **2220** are sized to generate the forces needed to drive the cutting element **2032** through the tissue clamped in the surgical end effector **2012** and actuate the staples therein. For example, the gears of the knife drive assembly **2230** may be sized to generate approximately 40 to 100 pounds. It will be appreciated that the application of a rotary output motion from the tool drive assembly **1010** in one direction will result in the axial movement of the cutting instrument **2032** in a distal direction and application of the rotary output motion in an opposite direction will result in the axial travel of the cutting instrument **2032** in a proximal direction.

[0150] In various embodiments, the surgical tool **1200** employs and articulation system **2007** that includes an articulation joint **2011** that enables the surgical end effector **2012** to be articulated about an articulation axis AA-AA that is substantially transverse to the longitudinal tool axis LT-LT. In at least one embodiment, the surgical tool **1200** includes first and second articulation bars **2250***a*, **2250***b* that are slidably supported within corresponding passages **2053** provided through the proximal spine portion **2052**. See FIGS. **18** and **20**. In at least one form, the first and second articulation bars **2250***a*, **2250***b* are actuated by an articulation transmission generally designated as **2249** that is operably supported on the tool mounting plate **1032**. Each of the articulation bars **2250***a*, **2250***b* has a proximal end **2252** that has a guide rod protruding therefrom which extend laterally through a corresponding slot in the proximal end portion of the proximal spine portion **2052** and into a corresponding arcuate slot in an articulation nut **2260** which comprises a portion of the articulation transmission. FIG. **19** illustrates articulation bar **2250***a*. It will be understood that articulation bar **2250***b* is similarly constructed. As can be seen in FIG. **19**, for example, the articulation bar **2250***a* has a guide rod **2254** which extends laterally through a corresponding slot **2058** in the proximal end portion **2056** of the distal spine portion **2050** and into a corresponding arcuate slot **2262** in the articulation nut **2260**. In addition, the articulation bar **2250***a* has a distal end **2251***a* that is pivotally coupled to the distal spine portion **2050** by, for example, a pin **2253***a* and articulation bar **2250***b* has a distal end **2251***b* that is pivotally coupled to the distal spine portion **2050** by, for example, a pin **2253***b*. In particular, the articulation bar **2250***a* is laterally offset in a first lateral direction from the longitudinal tool axis LT-LT and the articulation bar **2250***b* is laterally offset in a second lateral direction from the longitudinal tool axis LT-LT. Thus, axial movement of the articulation bars **2250***a* and **2250***b* in opposing directions will result in the articulation of the distal spine portion **2050** as well as the surgical end effector **2012** attached thereto about the articulation axis AA-AA as will be discussed in further detail below.

[0151] Articulation of the surgical end effector **2012** is controlled by rotating the articulation nut **2260** about the longitudinal tool axis LT-LT. The articulation nut **2260** is rotatably journaled on the proximal end portion **2056** of the distal spine portion **2050** and is rotatably driven thereon by an articulation gear assembly **2270**. More specifically and with reference to FIG. **13**, in at least one embodiment, the articulation gear assembly **2270** includes an articulation spur gear **2272** that is coupled to a corresponding fourth one of the driven discs or elements **1304** on the adapter side **1307** of the tool mounting plate **1302**. See FIG. **10**. Thus, application of another rotary input motion from the robotic system **1000** through the tool drive assembly **1010** to the corresponding fourth driven element **1304** will cause rotation of the articulation spur gear **2272** when the interface **1230** is coupled to the tool holder **1270**. An articulation drive gear **2274** is rotatably supported on the tool mounting plate **1302** in meshing engagement with the articulation spur gear **2272** and a gear portion **2264** of the articulation nut **2260** as shown. As can be seen in FIGS. **18** and **19**, the articulation nut **2260** has a shoulder **2266** formed thereon that defines an annular groove **2267** for receiving retaining posts **2268** therein. Retaining posts **2268** are attached to the tool mounting plate **1302** and serve to prevent the articulation nut **2260** from moving axially on the proximal spine portion **2052** while maintaining the ability to be rotated relative thereto. Thus, rotation of the articulation nut **2260** in a first direction, will result in the axial movement of the articulation bar **2250***a* in a distal direction "DD" and the axial movement of the articulation bar **2250***b* in a proximal direction "PD" because of the interaction of the guide rods **2254** with the spiral slots **2262** in the articulation gear **2260**. Similarly, rotation of the articulation nut **2260** in a second direction that is opposite to the first direction will result in the axial movement of the articulation bar **2250***a* in the proximal direction "PD" as well as cause articulation bar **2250***b* to axially move in the distal direction "DD". Thus, the surgical end effector **2012** may be selectively articulated about articulation axis "AA-AA" in a first direction "FD" by simultaneously moving the articulation bar **2250***a* in the distal direction "DD" and the articulation bar **2250***b* in the proximal direction "PD". Likewise, the surgical end effector **2012** may be selectively articulated about the articulation axis "AA-AA" in a second direction "SD" by simultaneously moving the articulation bar **2250***a* in the proximal direction "PD" and the articulation bar **2250***b* in the distal direction "DD." See FIG. **11**.

[0152] The tool embodiment described above employs an interface arrangement that is particularly well-suited for mounting the robotically controllable medical tool onto at least one form of robotic arm arrangement that generates at least four different rotary control motions. Those of ordinary skill in the art will appreciate that such rotary output motions may be selectively controlled through the programmable control systems employed by the robotic system/controller. For example, the tool arrangement described above may be well-suited for use with those robotic systems manufactured by Intuitive Surgical, Inc. of Sunnyvale, California, U.S.A., many of which may be described in detail in various patents incorporated herein by reference. The unique and novel aspects of various embodiments of the present invention serve to utilize the rotary output motions supplied by the robotic system to generate specific control motions having sufficient magnitudes that enable end effectors to cut and staple tissue. Thus, the unique arrangements and principles of various embodiments of the present invention may enable a variety of different forms of the tool systems disclosed and claimed herein to be effectively employed in connection with other types and forms of robotic systems that supply programmed rotary or other output motions. In addition, as will become further apparent as the present Detailed Description proceeds, various end effector embodiments of the present invention that require other forms of actuation motions may also be effectively actuated utilizing one or more of the control motions generated by the robotic system.

[0153] FIGS. **22-26** illustrate yet another surgical tool **2300** that may be effectively employed in connection with the robotic system **1000** that has a tool drive assembly that is operably coupled to a controller of the robotic system that is operable by inputs from an operator and which is configured to provide at least one rotary output motion to at least one rotatable body portion supported on the tool drive assembly. In various forms, the surgical tool **2300** includes a surgical end effector **2312** that includes an elongated channel **2322** and a pivotally translatable clamping member, such as an anvil **2324**, which are maintained at a spacing that assures effective stapling and severing of tissue clamped in the surgical end effector **2312**. As shown in the illustrated embodiment, the surgical end effector **2312** may include, in addition to the previously-mentioned elongated channel **2322** and anvil **2324**, a cutting instrument **2332** that has a sled portion **2333** formed thereon, a surgical staple cartridge **2334** that is seated in the elongated channel **2322**, and a rotary end effector drive shaft **2336** that has a helical screw thread formed thereon. The cutting instrument **2332** may be, for example, a knife. As will be discussed in further detail below, rotation of the end effector drive shaft **2336** will cause the cutting instrument **2332** and sled portion **2333** to axially travel through the surgical staple cartridge **2334** to move between a starting position and an ending position. The direction of axial travel of the cutting instrument **2332** depends upon the direction in which the end effector drive shaft **2336** is rotated. The anvil **2324** may be pivotably opened and closed at a pivot point **2325** connected to the proximate end of the elongated channel **2322**. The anvil **2324** may also include a tab **2327** at its proximate end that operably interfaces with a component of the mechanical closure system (described further below) to open and close the anvil **2324**. When the end effector drive shaft **2336** is rotated, the cutting instrument **2332** and sled **2333** will travel longitudinally through the surgical staple cartridge **2334** from the starting position to the ending position, thereby cutting tissue clamped within the surgical end effector **2312**. The movement of the sled **2333** through the surgical staple cartridge **2334** causes the staples therein to be driven through the severed tissue and against the closed anvil **2324**, which turns the staples to fasten the severed tissue. In one form, the elongated channel **2322** and the anvil **2324** may be made of an electrically conductive material (such as metal) so that they may serve as part of the antenna that communicates with sensor(s) in the end effector, as described above. The surgical staple cartridge **2334** could be made of a nonconductive material (such as plastic) and the sensor may be connected to or disposed in the surgical staple cartridge **2334**, as described above.

[0154] It should be noted that although the embodiments of the surgical tool **2300** described herein employ a surgical end effector **2312** that staples the severed tissue, in other embodiments different techniques for fastening or sealing the severed tissue may be used. For example, end effectors that use RF energy or adhesives to fasten the severed tissue may also be used. U.S. Pat. No. 5,709,680, entitled ELECTROSURGICAL HEMOSTATIC DEVICE, and U.S. Pat. No. 5,688,270, entitled ELECTROSURGICAL HEMOSTATIC DEVICE WITH RECESSED AND/OR OFFSET ELECTRODES, which are incorporated herein by reference, discloses cutting instruments that use RF energy to fasten the severed tissue. U.S. patent application Ser. No. 11/267,811, now U.S. Pat. No. 7,673,783 and U.S. patent application Ser. No. 11/267,383, now U.S. Pat. No. 7,607,557, which are also incorporated herein by reference, disclose cutting instruments that use adhesives to fasten the severed tissue. Accordingly, although the description herein refers to cutting/stapling operations and the like, it should be recognized that this is an exemplary embodiment and is not meant to be limiting. Other tissue-fastening techniques may also be used.

[0155] In the illustrated embodiment, the surgical end effector **2312** is coupled to an elongated shaft assembly **2308** that is coupled to a tool mounting portion **2460** and defines a longitudinal tool axis LT-LT. In this embodiment, the elongated shaft assembly **2308** does not include an articulation joint. Those of ordinary skill in the art will understand that other embodiments may have an articulation joint therein. In at least one embodiment, the elongated shaft assembly **2308** comprises a hollow outer tube **2340** that is rotatably supported on a tool mounting plate **2462** of a tool mounting portion **2460** as will be discussed in further detail below. In various embodiments, the elongated shaft assembly **2308** further includes a distal spine shaft **2350**. Distal spine shaft **2350** has a distal end portion **2354** that is coupled to, or otherwise integrally formed with, a distal stationary base portion **2360** that is non-movably coupled to the channel **2322**. See FIGS. **23-25**.

[0156] As shown in FIG. **23**, the distal spine shaft **2350** has a proximal end portion **2351** that is slidably received within a slot **2355** in a proximal spine shaft **2353** that is non-movably supported within the hollow outer tube **2340** by at least one support collar **2357**. As can be further seen in FIGS. **23** and **24**, the surgical tool **2300** includes a closure tube **2370** that is constrained to only move axially relative to the distal stationary base portion **2360**. The closure tube **2370** has a proximal end **2372** that has an internal thread **2374** formed therein that is in threaded engagement with a transmission arrangement, generally depicted as **2375** that is operably supported on the tool mounting plate **2462**. In various forms, the transmission arrangement **2375** includes a rotary drive shaft assembly, generally designated as **2381**. When rotated, the rotary drive shaft assembly **2381** will cause the closure tube **2370** to move axially as will be describe in further detail below. In at least one form, the rotary drive shaft assembly **2381** includes a closure drive nut **2382** of a closure clutch assembly generally designated as **2380**. More specifically, the closure drive nut **2382** has a proximal end portion **2384** that is rotatably supported relative to the outer tube **2340** and is in threaded engagement with the closure tube **2370**. For assembly purposes, the proximal end portion **2384** may be threadably attached to a retention ring **2386**. Retention ring **2386**, in cooperation with an end **2387** of the closure drive nut **2382**, defines an annular slot **2388** into which a shoulder **2392** of a locking collar **2390** extends. The locking collar **2390** is non-movably attached (e.g., welded, glued, etc.) to the end of the outer tube **2340**. Such arrangement serves to affix the closure drive nut **2382** to the outer tube **2340** while enabling the closure drive nut **2382** to rotate relative to the outer tube **2340**. The closure drive nut **2382** further has a distal end **2383** that has a threaded portion **2385** that threadably engages the internal thread **2374** of the closure tube **2370**. Thus, rotation of the closure drive nut **2382** will cause the closure tube **2370** to move axially as represented by arrow "D" in FIG. **24**.

[0157] Closure of the anvil **2324** and actuation of the cutting instrument **2332** are accomplished by control

motions that are transmitted by a hollow drive sleeve **2400**. As can be seen in FIGS. **23** and **24**, the hollow drive sleeve **2400** is rotatably and slidably received on the distal spine shaft **2350**. The drive sleeve **2400** has a proximal end portion **2401** that is rotatably mounted to the proximal spine shaft **2353** that protrudes from the tool mounting portion **2460** such that the drive sleeve **2400** may rotate relative thereto. See FIG. **23**. As can also be seen in FIGS. **23-25**, the drive sleeve **2400** is rotated about the longitudinal tool axis "LT-LT" by a drive shaft **2440**. The drive shaft **2440** has a drive gear **2444** that is attached to its distal end **2442** and is in meshing engagement with a driven gear **2450** that is attached to the drive sleeve **2400**.

[0158] The drive sleeve **2400** further has a distal end portion **2402** that is coupled to a closure clutch **2410** portion of the closure clutch assembly **2380** that has a proximal face **2412** and a distal face **2414**. The proximal face **2412** has a series of proximal teeth **2416** formed thereon that are adapted for selective engagement with corresponding proximal teeth cavities **2418** formed in the proximal end portion **2384** of the closure drive nut **2382**. Thus, when the proximal teeth **2416** are in meshing engagement with the proximal teeth cavities **2418** in the closure drive nut **2382**, rotation of the drive sleeve **2400** will result in rotation of the closure drive nut **2382** and ultimately cause the closure tube **2370** to move axially as will be discussed in further detail below.

[0159] As can be most particularly seen in FIGS. **23** and **24**, the distal face **2414** of the drive clutch portion **2410** has a series of distal teeth **2415** formed thereon that are adapted for selective engagement with corresponding distal teeth cavities **2426** formed in a face plate portion **2424** of a knife drive shaft assembly **2420**. In various embodiments, the knife drive shaft assembly **2420** comprises a hollow knife shaft segment **2430** that is rotatably received on a corresponding portion of the distal spine shaft **2350** that is attached to or protrudes from the stationary base **2360**. When the distal teeth **2415** of the closure clutch portion **2410** are in meshing engagement with the distal teeth cavities **2426** in the face plate portion **2424**, rotation of the drive sleeve **2400** will result in rotation of the drive shaft segment **2430** about the stationary shaft **2350**. As can be seen in FIGS. **23-25**, a knife drive gear **2432** is attached to the drive shaft segment **2430** and is meshing engagement with a drive knife gear **2434** that is attached to the end effector drive shaft **2336**. Thus, rotation of the drive shaft segment **2430** will result in the rotation of the end effector drive shaft **2336** to drive the cutting instrument **2332** and sled **2333** distally through the surgical staple cartridge **2334** to cut and staple tissue clamped within the surgical end effector **2312**. The sled **2333** may be made of, for example, plastic, and may have a sloped distal surface. As the sled **2333** traverses the elongated channel **2322**, the sloped forward surface of the sled **2333** pushes up or "drive" the staples in the surgical staple cartridge **2334** through the clamped tissue and against the anvil **2324**. The anvil **2324** turns or "forms" the staples, thereby stapling the severed tissue. As used herein, the term "fire" refers to the initiation of actions required to drive the cutting instrument and sled portion in a distal direction through the surgical staple cartridge to cut the tissue clamped in the surgical end effector and drive the staples through the severed tissue.

[0160] In use, it may be desirable to rotate the surgical end effector **2312** about the longitudinal tool axis LT-LT. In at least one embodiment, the transmission arrangement **2375** includes a rotational transmission assembly **2465** that is configured to receive a corresponding rotary output motion from the tool drive assembly **1010** of the robotic system **1000** and convert that rotary output motion to a rotary control motion for rotating the elongated shaft assembly **2308** (and surgical end effector **2312**) about the longitudinal tool axis LT-LT. As can be seen in FIG. **26**, a proximal end **2341** of the outer tube **2340** is rotatably supported within a cradle arrangement **2343** attached to the tool mounting plate **2462** of the tool mounting portion **2460**. A rotation gear **2345** is formed on or attached to the proximal end **2341** of the outer tube **2340** of the elongated shaft assembly **2308** for meshing engagement with a rotation gear assembly **2470** operably supported on the tool mounting plate **2462**. In at least one embodiment, a rotation drive gear **2472** is coupled to a corresponding first one of the driven discs or elements **1304** on the adapter side of the tool mounting plate **2462** when the tool mounting portion **2460** is coupled to the tool drive assembly **1010**. See FIGS. **10** and **26**. The rotation drive assembly **2470** further comprises a rotary driven gear **2474** that is rotatably supported on the tool mounting plate **2462** in meshing engagement with the rotation gear **2345** and the rotation drive gear **2472**. Application of a first rotary output motion from the robotic system **1000** through the tool drive assembly **1010** to the corresponding driven element **1304** will thereby cause rotation of the rotation drive gear **2472** by virtue of being operably coupled thereto. Rotation of the rotation drive gear **2472** ultimately results in the rotation of the elongated shaft assembly **2308** (and the end effector **2312**) about the longitudinal tool axis LT-LT (primary rotary motion).

[0161] Closure of the anvil **2324** relative to the staple cartridge **2034** is accomplished by axially moving the closure tube **2370** in the distal direction "DD". Axial movement of the closure tube **2370** in the distal direction "DD" is accomplished by applying a rotary control motion to the closure drive nut **2382**. To apply the rotary control motion to the closure drive nut **2382**, the closure clutch **2410** must first be brought into meshing engagement with the proximal end portion **2384** of the closure drive nut **2382**. In various embodiments, the transmission arrangement **2375** further includes a shifter drive assembly **2480** that is operably supported on the tool mounting plate **2462**. More specifically and with reference to FIG. **26**, it can be seen that a proximal end portion **2359** of the proximal spine portion **2353** extends through the rotation gear **2345** and is rotatably coupled to a shifter gear rack **2481** that is slidably affixed to the tool mounting plate **2462** through slots **2482**. The shifter drive assembly **2480** further comprises a shifter drive gear **2483** that is coupled to a corresponding second one of the driven discs or elements **1304** on the adapter side of the tool mounting plate **2462** when the tool mounting portion **2460** is coupled to the tool holder **1270**. See FIGS. **10** and **26**. The shifter drive assembly **2480** further comprises a shifter driven gear **2478** that is rotatably supported on the tool mounting plate **2462** in meshing engagement with the shifter drive gear **2483** and the shifter rack gear **2482**. Application of a second rotary output motion from the robotic system **1000** through the tool drive assembly **1010** to the corresponding driven element **1304** will thereby cause rotation of the shifter drive gear **2483** by virtue of being operably coupled thereto. Rotation of the shifter drive gear **2483** ultimately results in the axial movement of the shifter gear rack **2482** and the proximal spine portion **2353** as well as the

drive sleeve **2400** and the closure clutch **2410** attached thereto. The direction of axial travel of the closure clutch **2410** depends upon the direction in which the shifter drive gear **2483** is rotated by the robotic system **1000**. Thus, rotation of the shifter drive gear **2483** in a first rotary direction will result in the axial movement of the closure clutch **2410** in the proximal direction "PD" to bring the proximal teeth **2416** into meshing engagement with the proximal teeth cavities **2418** in the closure drive nut **2382**. Conversely, rotation of the shifter drive gear **2483** in a second rotary direction (opposite to the first rotary direction) will result in the axial movement of the closure clutch **2410** in the distal direction "DD" to bring the distal teeth **2415** into meshing engagement with corresponding distal teeth cavities **2426** formed in the face plate portion **2424** of the knife drive shaft assembly **2420**.

[0162] Once the closure clutch **2410** has been brought into meshing engagement with the closure drive nut **2382**, the closure drive nut **2382** is rotated by rotating the closure clutch **2410**. Rotation of the closure clutch **2410** is controlled by applying rotary output motions to a rotary drive transmission portion **2490** of transmission arrangement **2375** that is operably supported on the tool mounting plate **2462** as shown in FIG. **26**. In at least one embodiment, the rotary drive transmission **2490** includes a rotary drive assembly **2490'** that includes a gear **2491** that is coupled to a corresponding third one of the driven discs or elements **1304** on the adapter side of the tool mounting plate **2462** when the tool mounting portion **2460** is coupled to the tool holder **1270**. See FIGS. **10** and **26**. The rotary drive transmission **2490** further comprises a first rotary driven gear **2492** that is rotatably supported on the tool mounting plate **2462** in meshing engagement with a second rotary driven gear **2493** and the rotary drive gear **2491**. The second rotary driven gear **2493** is coupled to a proximal end portion **2443** of the drive shaft **2440**.

[0163] Rotation of the rotary drive gear **2491** in a first rotary direction will result in the rotation of the drive shaft **2440** in a first direction. Conversely, rotation of the rotary drive gear **2491** in a second rotary direction (opposite to the first rotary direction) will cause the drive shaft **2440** to rotate in a second direction. As indicated above, the drive shaft **2440** has a drive gear **2444** that is attached to its distal end **2442** and is in meshing engagement with a driven gear **2450** that is attached to the drive sleeve **2400**. Thus, rotation of the drive shaft **2440** results in rotation of the drive sleeve **2400**.

[0164] A method of operating the surgical tool **2300** will now be described. Once the tool mounting portion **2462** has been operably coupled to the tool holder **1270** of the robotic system **1000** and oriented into position adjacent the target tissue to be cut and stapled, if the anvil **2334** is not already in the open position (FIG. **23**), the robotic system **1000** may apply the first rotary output motion to the shifter drive gear **2483** which results in the axial movement of the closure clutch **2410** into meshing engagement with the closure drive nut **2382** (if it is not already in meshing engagement therewith). See FIG. **24**. Once the controller **1001** of the robotic system **1000** has confirmed that the closure clutch **2410** is meshing engagement with the closure drive nut **2382** (e.g., by means of sensor(s)) in the surgical end effector **2312** that are in communication with the robotic control system), the robotic controller **1001** may then apply a second rotary output motion to the rotary drive gear **2492** which, as was described above, ultimately results in the rotation of the rotary drive nut **2382** in the first direction which results in the axial travel of the closure tube **2370** in the distal direction "DD". As the closure tube **2370** moved in the distal direction, it contacts a portion of the anvil **2323** and causes the anvil **2324** to pivot to the closed position to clamp the target tissue between the anvil **2324** and the surgical staple cartridge **2334**. Once the robotic controller **1001** determines that the anvil **2334** has been pivoted to the closed position by corresponding sensor(s) in the surgical end effector **2312** in communication therewith, the robotic system **1000** discontinues the application of the second rotary output motion to the rotary drive gear **2491**. The robotic controller **1001** may also provide the surgeon with an indication that the anvil **2334** has been fully closed. The surgeon may then initiate the firing procedure. In alternative embodiments, the firing procedure may be automatically initiated by the robotic controller **1001**. The robotic controller **1001** then applies the primary rotary control motion **2483** to the shifter drive gear **2483** which results in the axial movement of the closure clutch **2410** into meshing engagement with the face plate portion **2424** of the knife drive shaft assembly **2420**. See FIG. **25**. Once the controller **1001** of the robotic system **1000** has confirmed that the closure clutch **2410** is meshing engagement with the face plate portion **2424** (by means of sensor(s)) in the end effector **2312** that are in communication with the robotic controller **1001**), the robotic controller **1001** may then apply the second rotary output motion to the rotary drive gear **2492** which, as was described above, ultimately results in the axial movement of the cutting instrument **2332** and sled portion **2333** in the distal direction "DD" through the surgical staple cartridge **2334**. As the cutting instrument **2332** moves distally through the surgical staple cartridge **2334**, the tissue clamped therein is severed. As the sled portion **2333** is driven distally, it causes the staples within the surgical staple cartridge to be driven through the severed tissue into forming contact with the anvil **2324**. Once the robotic controller **1001** has determined that the cutting instrument **2324** has reached the end position within the surgical staple cartridge **2334** (by means of sensor(s)) in the end effector **2312** that are in communication with the robotic controller **1001**), the robotic controller **1001** discontinues the application of the second rotary output motion to the rotary drive gear **2491**. Thereafter, the robotic controller **1001** applies the secondary rotary output motion to the rotary drive gear **2491** which ultimately results in the axial travel of the cutting instrument **2332** and sled portion **2333** in the proximal direction "PD" to the starting position. Once the robotic controller **1001** has determined that the cutting instrument **2324** has reached the starting position by means of sensor(s) in the surgical end effector **2312** that are in communication with the robotic controller **1001**, the robotic controller **1001** discontinues the application of the secondary rotary output motion to the rotary drive gear **2491**. Thereafter, the robotic controller **1001** applies the primary rotary output motion to the shifter drive gear **2483** to cause the closure clutch **2410** to move into engagement with the rotary drive nut **2382**. Once the closure clutch **2410** has been moved into meshing engagement with the rotary drive nut **2382**, the robotic controller **1001** then applies the secondary output motion to the rotary drive gear **2491** which ultimately results in the rotation of the rotary drive nut **2382** in the second direction to cause the closure tube **2370** to move in the proximal direction "PD". As can be seen in FIGS. **23-25**, the closure tube **2370** has an opening **2345** therein that

engages the tab **2327** on the anvil **2324** to cause the anvil **2324** to pivot to the open position. In alternative embodiments, a spring may also be employed to pivot the anvil **2324** to the open position when the closure tube **2370** has been returned to the starting position (FIG. **23**).

[0165] FIGS. **27-31** illustrate yet another surgical tool **2500** that may be effectively employed in connection with the robotic system **1000**. In various forms, the surgical tool **2500** includes a surgical end effector **2512** that includes a "first portion" in the form of an elongated channel **2522** and a "second movable portion" in the form of a pivotally translatable clamping member, such as an anvil **2524**, which are maintained at a spacing that assures effective stapling and severing of tissue clamped in the surgical end effector **2512**. As shown in the illustrated embodiment, the surgical end effector **2512** may include, in addition to the previously-mentioned elongated channel **2522** and anvil **2524**, a "third movable portion" in the form of a cutting instrument **2532**, a sled (not shown), and a surgical staple cartridge **2534** that is removably seated in the elongated channel **2522**. The cutting instrument **2532** may be, for example, a knife. The anvil **2524** may be pivotably opened and closed at a pivot point **2525** connected to the proximate end of the elongated channel **2522**. The anvil **2524** may also include a tab **2527** at its proximate end that is configured to operably interface with a component of the mechanical closure system (described further below) to open and close the anvil **2524**. When actuated, the knife **2532** and sled travel longitudinally along the elongated channel **2522**, thereby cutting tissue clamped within the surgical end effector **2512**. The movement of the sled along the elongated channel **2522** causes the staples of the surgical staple cartridge **2534** to be driven through the severed tissue and against the closed anvil **2524**, which turns the staples to fasten the severed tissue. In one form, the elongated channel **2522** and the anvil **2524** may be made of an electrically conductive material (such as metal) so that they may serve as part of the antenna that communicates with sensor(s) in the surgical end effector, as described above. The surgical staple cartridge **2534** could be made of a nonconductive material (such as plastic) and the sensor may be connected to or disposed in the surgical staple cartridge **2534**, as described above.

[0166] It should be noted that although the embodiments of the surgical tool **2500** described herein employ a surgical end effector **2512** that staples the severed tissue, in other embodiments different techniques for fastening or sealing the severed tissue may be used. For example, end effectors that use RF energy or adhesives to fasten the severed tissue may also be used. U.S. Pat. No. 5,709,680, entitled ELECTROSURGICAL HEMOSTATIC DEVICE, and U.S. Pat. No. 5,688,270, entitled ELECTROSURGICAL HEMOSTATIC DEVICE WITH RECESSED AND/OR OFFSET ELECTRODES, which are incorporated herein by reference, discloses cutting instruments that use RF energy to fasten the severed tissue. U.S. patent application Ser. No. 11/267,811, now U.S. Pat. No. 7,673,783 and U.S. patent application Ser. No. 11/267,383, now U.S. Pat. No. 7,607,557, which are also incorporated herein by reference, disclose cutting instruments that use adhesives to fasten the severed tissue. Accordingly, although the description herein refers to cutting/stapling operations and the like, it should be recognized that this is an exemplary embodiment and is not meant to be limiting. Other tissue-fastening techniques may also be used.

[0167] In the illustrated embodiment, the elongated channel **2522** of the surgical end effector **2512** is coupled to an elongated shaft assembly **2508** that is coupled to a tool mounting portion **2600**. As shown in FIG. **27**, the elongated shaft assembly **2508** may include an articulation joint **2511** of the type and construction described herein to permit the surgical end effector **2512** to be selectively articulated about an axis that is substantially transverse to the tool axis LT-LT. Other embodiments, however, may lack an articulation joint arrangement. In at least one embodiment, the elongated shaft assembly **2508** comprises a hollow spine tube **2540** that is non-movably coupled to a tool mounting plate **2602** of the tool mounting portion **2600**. As can be seen in FIGS. **28** and **29**, the proximal end **2523** of the elongated channel **2522** comprises a hollow tubular structure configured to be attached to the distal end **2541** of the spine tube **2540**. In one embodiment, for example, the proximal end **2523** of the elongated channel **2522** is welded or glued to the distal end of the spine tube **2540**.

[0168] As can be further seen in FIGS. **28** and **29**, in at least one non-limiting embodiment, the surgical tool **2500** further includes an axially movable actuation member in the form of a closure tube **2550** that is constrained to move axially relative to the elongated channel **2522** and the spine tube **1540**. The closure tube **2550** has a proximal end **2552** that has an internal thread **2554** formed therein that is in threaded engagement with a rotatably movable portion in the form of a closure drive nut **2560**. More specifically, the closure drive nut **2560** has a proximal end portion **2562** that is rotatably supported relative to the elongated channel **2522** and the spine tube **2540**. For assembly purposes, the proximal end portion **2562** is threadably attached to a retention ring **2570**. The retention ring **2570** is received in a groove **2529** formed between a shoulder **2527** on the proximal end **2523** of the elongated channel **2522** and the distal end **2541** of the spine tube **1540**. Such arrangement serves to rotatably support the closure drive nut **2560** within the elongated channel **2522**. Rotation of the closure drive nut **2560** will cause the closure tube **2550** to move axially as represented by arrow "D" in FIG. **28**.

[0169] Extending through the spine tube **2540** and the closure drive nut **2560** is a drive member which, in at least one embodiment, comprises a knife bar **2580** that has a distal end portion **2582** that is rotatably coupled to the cutting instrument **2532** such that the knife bar **2580** may rotate relative to the cutting instrument **2582**. As can be seen in FIG. **49-51**, the closure drive nut **2560** has a slot **2564** therein through which the knife bar **2580** can slidably extend. Such arrangement permits the knife bar **2580** to move axially relative to the closure drive nut **2560**. However, rotation of the knife bar **2580** about the longitudinal tool axis LT-LT will also result in the rotation of the closure drive nut **2560**. The axial direction in which the closure tube **2550** moves ultimately depends upon the direction in which the knife bar **2580** and the closure drive nut **2560** are rotated. As the closure tube **2550** is driven distally, the distal end thereof will contact the anvil **2524** and cause the anvil **2524** to pivot to a closed position. Upon application of an opening rotary output motion from the robotic system **1000**, the closure tube **2550** will be driven in the proximal direction "PD" and pivot the anvil **2524** to the open position by virtue of the engagement of the tab **2527** with the opening **2555** in the closure tube **2550**.

[0170] In use, it may be desirable to rotate the surgical end effector **2512** about the longitudinal tool axis LT-LT. In at least one embodiment, the tool mounting portion **2600** is configured to receive a corresponding first rotary output motion from the robotic system **1000** and convert that first rotary output motion to a rotary control motion for rotating the elongated shaft assembly **2508** about the longitudinal tool axis LT-LT. As can be seen in FIG. **26**, a proximal end **2542** of the hollow spine tube **2540** is rotatably supported within a cradle arrangement **2603** attached to a tool mounting plate **2602** of the tool mounting portion **2600**. Various embodiments of the surgical tool **2500** further include a transmission arrangement, generally depicted as **2605**, that is operably supported on the tool mounting plate **2602**. In various forms the transmission arrangement **2605** include a rotation gear **2544** that is formed on or attached to the proximal end **2542** of the spine tube **2540** for meshing engagement with a rotation drive assembly **2610** that is operably supported on the tool mounting plate **2602**. In at least one embodiment, a rotation drive gear **2612** is coupled to a corresponding first one of the rotational bodies, driven discs or elements **1304** on the adapter side of the tool mounting plate **2602** when the tool mounting portion **2600** is coupled to the tool holder **1270**. See FIGS. **10** and **31**. The rotation drive assembly **2610** further comprises a rotary driven gear **2614** that is rotatably supported on the tool mounting plate **2602** in meshing engagement with the rotation gear **2544** and the rotation drive gear **2612**. Application of a first rotary output motion from the robotic system **1000** through the tool drive assembly **1010** to the corresponding driven rotational body **1304** will thereby cause rotation of the rotation drive gear **2612** by virtue of being operably coupled thereto. Rotation of the rotation drive gear **2612** ultimately results in the rotation of the elongated shaft assembly **2508** (and the end effector **2512**) about the longitudinal tool axis LT-LT.

[0171] Closure of the anvil **2524** relative to the surgical staple cartridge **2534** is accomplished by axially moving the closure tube **2550** in the distal direction "DD". Axial movement of the closure tube **2550** in the distal direction "DD" is accomplished by applying a rotary control motion to the closure drive nut **2382**. In various embodiments, the closure drive nut **2560** is rotated by applying a rotary output motion to the knife bar **2580**. Rotation of the knife bar **2580** is controlled by applying rotary output motions to a rotary closure system **2620** that is operably supported on the tool mounting plate **2602** as shown in FIG. **31**. In at least one embodiment, the rotary closure system **2620** includes a closure drive gear **2622** that is coupled to a corresponding second one of the driven rotatable body portions discs or elements **1304** on the adapter side of the tool mounting plate **2462** when the tool mounting portion **2600** is coupled to the tool holder **1270**. See FIGS. **10** and **31**. The closure drive gear **2622**, in at least one embodiment, is in meshing driving engagement with a closure gear train, generally depicted as **2623**. The closure gear drive rain **2623** comprises a first driven closure gear **2624** that is rotatably supported on the tool mounting plate **2602**. The first closure driven gear **2624** is attached to a second closure driven gear **2626** by a drive shaft **2628**. The second closure driven gear **2626** is in meshing engagement with a third closure driven gear **2630** that is rotatably supported on the tool mounting plate **2602**. Rotation of the closure drive gear **2622** in a second rotary direction will result in the rotation of the third closure driven gear **2630** in a second direction. Conversely, rotation of the closure drive gear **2483** in a secondary rotary direction (opposite to the second rotary direction) will cause the third closure driven gear **2630** to rotate in a secondary direction.

[0172] As can be seen in FIG. **31**, a drive shaft assembly **2640** is coupled to a proximal end of the knife bar **2580**. In various embodiments, the drive shaft assembly **2640** includes a proximal portion **2642** that has a square cross-sectional shape. The proximal portion **2642** is configured to slideably engage a correspondingly shaped aperture in the third driven gear **2630**. Such arrangement results in the rotation of the drive shaft assembly **2640** (and knife bar **2580**) when the third driven gear **2630** is rotated. The drive shaft assembly **2640** is axially advanced in the distal and proximal directions by a knife drive assembly **2650**. One form of the knife drive assembly **2650** comprises a rotary drive gear **2652** that is coupled to a corresponding third one of the driven rotatable body portions, discs or elements **1304** on the adapter side of the tool mounting plate **2462** when the tool mounting portion **2600** is coupled to the tool holder **1270**. See FIGS. **10** and **31**. The rotary driven gear **2652** is in meshing driving engagement with a gear train, generally depicted as **2653**. In at least one form, the gear train **2653** further comprises a first rotary driven gear assembly **2654** that is rotatably supported on the tool mounting plate **2602**. The first rotary driven gear assembly **2654** is in meshing engagement with a third rotary driven gear assembly **2656** that is rotatably supported on the tool mounting plate **2602** and which is in meshing engagement with a fourth rotary driven gear assembly **2658** that is in meshing engagement with a threaded portion **2644** of the drive shaft assembly **2640**. Rotation of the rotary drive gear **2652** in a third rotary direction will result in the axial advancement of the drive shaft assembly **2640** and knife bar **2580** in the distal direction "DD". Conversely, rotation of the rotary drive gear **2652** in a tertiary rotary direction (opposite to the third rotary direction) will cause the drive shaft assembly **2640** and the knife bar **2580** to move in the proximal direction.

[0173] A method of operating the surgical tool **2500** will now be described. Once the tool mounting portion **2600** has been operably coupled to the tool holder **1270** of the robotic system **1000**, the robotic system **1000** can orient the surgical end effector **2512** in position adjacent the target tissue to be cut and stapled. If the anvil **2524** is not already in the open position (FIG. **49**), the robotic system **1000** may apply the second rotary output motion to the closure drive gear **2622** which results in the rotation of the knife bar **2580** in a second direction. Rotation of the knife bar **2580** in the second direction results in the rotation of the closure drive nut **2560** in a second direction. As the closure drive nut **2560** rotates in the second direction, the closure tube **2550** moves in the proximal direction "PD". As the closure tube **2550** moves in the proximal direction "PD", the tab **2527** on the anvil **2524** interfaces with the opening **2555** in the closure tube **2550** and causes the anvil **2524** to pivot to the open position. In addition or in alternative embodiments, a spring (not shown) may be employed to pivot the anvil **2354** to the open position when the closure tube **2550** has been returned to the starting position (FIG. **28**). The opened surgical end effector **2512** may then be manipulated by the robotic system **1000** to position the target tissue between the open anvil **2524** and the surgical staple cartridge **2534**. Thereafter, the surgeon may initiate the closure process by activating the robotic control system **1000** to apply the second rotary output

motion to the closure drive gear **2622** which, as was described above, ultimately results in the rotation of the closure drive nut **2382** in the second direction which results in the axial travel of the closure tube **2250** in the distal direction "DD". As the closure tube **2550** moves in the distal direction, it contacts a portion of the anvil **2524** and causes the anvil **2524** to pivot to the closed position to clamp the target tissue between the anvil **2524** and the staple cartridge **2534**. Once the robotic controller **1001** determines that the anvil **2524** has been pivoted to the closed position by corresponding sensor(s) in the end effector **2512** that are in communication therewith, the robotic controller **1001** discontinues the application of the second rotary output motion to the closure drive gear **2622**. The robotic controller **1001** may also provide the surgeon with an indication that the anvil **2524** has been fully closed. The surgeon may then initiate the firing procedure. In alternative embodiments, the firing procedure may be automatically initiated by the robotic controller **1001**.

[0174] After the robotic controller **1001** has determined that the anvil **2524** is in the closed position, the robotic controller **1001** then applies the third rotary output motion to the rotary drive gear **2652** which results in the axial movement of the drive shaft assembly **2640** and knife bar **2580** in the distal direction "DD". As the cutting instrument **2532** moves distally through the surgical staple cartridge **2534**, the tissue clamped therein is severed. As the sled portion (not shown) is driven distally, it causes the staples within the surgical staple cartridge **2534** to be driven through the severed tissue into forming contact with the anvil **2524**. Once the robotic controller **1001** has determined that the cutting instrument **2532** has reached the end position within the surgical staple cartridge **2534** by means of sensor(s) in the surgical end effector **2512** that are in communication with the robotic controller **1001**, the robotic controller **1001** discontinues the application of the second rotary output motion to the rotary drive gear **2652**. Thereafter, the robotic controller **1001** applies the secondary rotary control motion to the rotary drive gear **2652** which ultimately results in the axial travel of the cutting instrument **2532** and sled portion in the proximal direction "PD" to the starting position. Once the robotic controller **1001** has determined that the cutting instrument **2524** has reached the starting position by means of sensor(s) in the end effector **2512** that are in communication with the robotic controller **1001**, the robotic controller **1001** discontinues the application of the secondary rotary output motion to the rotary drive gear **2652**. Thereafter, the robotic controller **1001** may apply the secondary rotary output motion to the closure drive gear **2622** which results in the rotation of the knife bar **2580** in a secondary direction. Rotation of the knife bar **2580** in the secondary direction results in the rotation of the closure drive nut **2560** in a secondary direction. As the closure drive nut **2560** rotates in the secondary direction, the closure tube **2550** moves in the proximal direction "PD" to the open position.

[0175] FIGS. **32-37**B illustrate yet another surgical tool **2700** that may be effectively employed in connection with the robotic system **1000**. In various forms, the surgical tool **2700** includes a surgical end effector **2712** that includes a "first portion" in the form of an elongated channel **2722** and a "second movable portion" in on form comprising a pivotally translatable clamping member, such as an anvil **2724**, which are maintained at a spacing that assures effective stapling and severing of tissue clamped in the surgical end effector **2712**. As shown in the illustrated embodiment, the surgical end effector **2712** may include, in addition to the previously-mentioned channel **2722** and anvil **2724**, a "third movable portion" in the form of a cutting instrument **2732**, a sled (not shown), and a surgical staple cartridge **2734** that is removably seated in the elongated channel **2722**. The cutting instrument **2732** may be, for example, a knife. The anvil **2724** may be pivotably opened and closed at a pivot point **2725** connected to the proximal end of the elongated channel **2722**. The anvil **2724** may also include a tab **2727** at its proximal end that interfaces with a component of the mechanical closure system (described further below) to open and close the anvil **2724**. When actuated, the knife **2732** and sled to travel longitudinally along the elongated channel **2722**, thereby cutting tissue clamped within the surgical end effector **2712**. The movement of the sled along the elongated channel **2722** causes the staples of the surgical staple cartridge **2734** to be driven through the severed tissue and against the closed anvil **2724**, which turns the staples to fasten the severed tissue. In one form, the elongated channel **2722** and the anvil **2724** may be made of an electrically conductive material (such as metal) so that they may serve as part of the antenna that communicates with sensor(s) in the surgical end effector, as described above. The surgical staple cartridge **2734** could be made of a nonconductive material (such as plastic) and the sensor may be connected to or disposed in the surgical staple cartridge **2734**, as described above.

[0176] It should be noted that although the embodiments of the surgical tool **2500** described herein employ a surgical end effector **2712** that staples the severed tissue, in other embodiments different techniques for fastening or sealing the severed tissue may be used. For example, end effectors that use RF energy or adhesives to fasten the severed tissue may also be used. U.S. Pat. No. 5,709,680, entitled ELECTROSURGICAL HEMOSTATIC DEVICE, and U.S. Pat. No. 5,688,270, entitled ELECTROSURGICAL HEMOSTATIC DEVICE WITH RECESSED AND/OR OFFSET ELECTRODES, which are incorporated herein by reference, discloses cutting instruments that use RF energy to fasten the severed tissue. U.S. patent application Ser. No. 11/267,811, now U.S. Pat. No. 7,673,783, and U.S. patent application Ser. No. 11/267,383, now U.S. Pat. No. 7,607,557, which are also incorporated herein by reference, disclose cutting instruments that use adhesives to fasten the severed tissue. Accordingly, although the description herein refers to cutting/stapling operations and the like, it should be recognized that this is an exemplary embodiment and is not meant to be limiting. Other tissue-fastening techniques may also be used.

[0177] In the illustrated embodiment, the elongated channel **2722** of the surgical end effector **2712** is coupled to an elongated shaft assembly **2708** that is coupled to a tool mounting portion **2900**. Although not shown, the elongated shaft assembly **2708** may include an articulation joint to permit the surgical end effector **2712** to be selectively articulated about an axis that is substantially transverse to the tool axis LT-LT. In at least one embodiment, the elongated shaft assembly **2708** comprises a hollow spine tube **2740** that is non-movably coupled to a tool mounting plate **2902** of the tool mounting portion **2900**. As can be seen in FIGS. **33** and **34**, the proximal end **2723** of the elongated channel **2722** comprises a hollow tubular structure that is attached to the spine tube **2740** by means of a mounting

collar **2790**. A cross-sectional view of the mounting collar **2790** is shown in FIG. **35**. In various embodiments, the mounting collar **2790** has a proximal flanged end **2791** that is configured for attachment to the distal end of the spine tube **2740**. In at least one embodiment, for example, the proximal flanged end **2791** of the mounting collar **2790** is welded or glued to the distal end of the spine tube **2740**. As can be further seen in FIGS. **33** and **34**, the mounting collar **2790** further has a mounting hub portion **2792** that is sized to receive the proximal end **2723** of the elongated channel **2722** thereon. The proximal end **2723** of the elongated channel **2722** is non-movably attached to the mounting hub portion **2792** by, for example, welding, adhesive, etc.

[0178] As can be further seen in FIGS. **33** and **34**, the surgical tool **2700** further includes an axially movable actuation member in the form of a closure tube **2750** that is constrained to move axially relative to the elongated channel **2722**. The closure tube **2750** has a proximal end **2752** that has an internal thread **2754** formed therein that is in threaded engagement with a rotatably movable portion in the form of a closure drive nut **2760**. More specifically, the closure drive nut **2760** has a proximal end portion **2762** that is rotatably supported relative to the elongated channel **2722** and the spine tube **2740**. For assembly purposes, the proximal end portion **2762** is threadably attached to a retention ring **2770**. The retention ring **2770** is received in a groove **2729** formed between a shoulder **2727** on the proximal end **2723** of the channel **2722** and the mounting hub **2729** of the mounting collar **2790**. Such arrangement serves to rotatably support the closure drive nut **2760** within the channel **2722**. Rotation of the closure drive nut **2760** will cause the closure tube **2750** to move axially as represented by arrow "D" in FIG. **33**.

[0179] Extending through the spine tube **2740**, the mounting collar **2790**, and the closure drive nut **2760** is a drive member, which in at least one embodiment, comprises a knife bar **2780** that has a distal end portion **2782** that is coupled to the cutting instrument **2732**. As can be seen in FIGS. **33** and **34**, the mounting collar **2790** has a passage **2793** therethrough for permitting the knife bar **2780** to slidably pass therethrough. Similarly, the closure drive nut **2760** has a slot **2764** therein through which the knife bar **2780** can slidably extend. Such arrangement permits the knife bar **2780** to move axially relative to the closure drive nut **2760**.

[0180] Actuation of the anvil **2724** is controlled by a rotary driven closure shaft **2800**. As can be seen in FIGS. **33** and **34**, a distal end portion **2802** of the closure drive shaft **2800** extends through a passage **2794** in the mounting collar **2790** and a closure gear **2804** is attached thereto. The closure gear **2804** is configured for driving engagement with the inner surface **2761** of the closure drive nut **2760**. Thus, rotation of the closure shaft **2800** will also result in the rotation of the closure drive nut **2760**. The axial direction in which the closure tube **2750** moves ultimately depends upon the direction in which the closure shaft **2800** and the closure drive nut **2760** are rotated. For example, in response to one rotary closure motion received from the robotic system **1000**, the closure tube **2750** will be driven in the distal direction "DD". As the closure tube **2750** is driven distally, the opening **2745** will engage the tab **2727** on the anvil **2724** and cause the anvil **2724** to pivot to a closed position. Upon application of an opening rotary motion from the robotic system **1000**, the closure tube **2750** will be driven in the proximal direction "PD" and pivot the anvil **2724** to the open position. In various embodiments, a spring (not shown) may be employed to bias the anvil **2724** to the open position (FIG. **33**).

[0181] In use, it may be desirable to rotate the surgical end effector **2712** about the longitudinal tool axis LT-LT. In at least one embodiment, the tool mounting portion **2900** is configured to receive a corresponding first rotary output motion from the robotic system **1000** for rotating the elongated shaft assembly **2708** about the tool axis LT-LT. As can be seen in FIG. **37**, a proximal end **2742** of the hollow spine tube **2740** is rotatably supported within a cradle arrangement **2903** and a bearing assembly **2904** that are attached to a tool mounting plate **2902** of the tool mounting portion **2900**. A rotation gear **2744** is formed on or attached to the proximal end **2742** of the spine tube **2740** for meshing engagement with a rotation drive assembly **2910** that is operably supported on the tool mounting plate **2902**. In at least one embodiment, a rotation drive gear **2912** is coupled to a corresponding first one of the driven discs or elements **1304** on the adapter side of the tool mounting plate **2602** when the tool mounting portion **2600** is coupled to the tool holder **1270**. See FIGS. **10** and **37**. The rotation drive assembly **2910** further comprises a rotary driven gear **2914** that is rotatably supported on the tool mounting plate **2902** in meshing engagement with the rotation gear **2744** and the rotation drive gear **2912**. Application of a first rotary control motion from the robotic system **1000** through the tool holder **1270** and the adapter **1240** to the corresponding driven element **1304** will thereby cause rotation of the rotation drive gear **2912** by virtue of being operably coupled thereto. Rotation of the rotation drive gear **2912** ultimately results in the rotation of the elongated shaft assembly **2708** (and the end effector **2712**) about the longitudinal tool axis LT-LT (primary rotary motion).

[0182] Closure of the anvil **2724** relative to the staple cartridge **2734** is accomplished by axially moving the closure tube **2750** in the distal direction "DD". Axial movement of the closure tube **2750** in the distal direction "DD" is accomplished by applying a rotary control motion to the closure drive nut **2760**. In various embodiments, the closure drive nut **2760** is rotated by applying a rotary output motion to the closure drive shaft **2800**. As can be seen in FIG. **37**, a proximal end portion **2806** of the closure drive shaft **2800** has a driven gear **2808** thereon that is in meshing engagement with a closure drive assembly **2920**. In various embodiments, the closure drive system **2920** includes a closure drive gear **2922** that is coupled to a corresponding second one of the driven rotational bodies or elements **1304** on the adapter side of the tool mounting plate **2462** when the tool mounting portion **2900** is coupled to the tool holder **1270**. See FIGS. **10** and **37**. The closure drive gear **2922** is supported in meshing engagement with a closure gear train, generally depicted as **2923**. In at least one form, the closure gear rain **2923** comprises a first driven closure gear **2924** that is rotatably supported on the tool mounting plate **2902**. The first closure driven gear **2924** is attached to a second closure driven gear **2926** by a drive shaft **2928**. The second closure driven gear **2926** is in meshing engagement with a planetary gear assembly **2930**. In various embodiments, the planetary gear assembly **2930** includes a driven planetary closure gear **2932** that is rotatably supported within the bearing assembly **2904** that is mounted on tool mounting plate **2902**. As can be seen in FIGS. **37** and **37**B, the proximal end portion **2806**

of the closure drive shaft **2800** is rotatably supported within the proximal end portion **2742** of the spine tube **2740** such that the driven gear **2808** is in meshing engagement with central gear teeth **2934** formed on the planetary gear **2932**. As can also be seen in FIG. **37**A, two additional support gears **2936** are attached to or rotatably supported relative to the proximal end portion **2742** of the spine tube **2740** to provide bearing support thereto. Such arrangement with the planetary gear assembly **2930** serves to accommodate rotation of the spine shaft **2740** by the rotation drive assembly **2910** while permitting the closure driven gear **2808** to remain in meshing engagement with the closure drive system **2920**. In addition, rotation of the closure drive gear **2922** in a first direction will ultimately result in the rotation of the closure drive shaft **2800** and closure drive nut **2760** which will ultimately result in the closure of the anvil **2724** as described above. Conversely, rotation of the closure drive gear **2922** in a second opposite direction will ultimately result in the rotation of the closure drive nut **2760** in an opposite direction which results in the opening of the anvil **2724**.

[0183] As can be seen in FIG. **31**, the proximal end **2784** of the knife bar **2780** has a threaded shaft portion **2786** attached thereto which is in driving engagement with a knife drive assembly **2940**. In various embodiments, the threaded shaft portion **2786** is rotatably supported by a bearing **2906** attached to the tool mounting plate **2902**. Such arrangement permits the threaded shaft portion **2786** to rotate and move axially relative to the tool mounting plate **2902**. The knife bar **2780** is axially advanced in the distal and proximal directions by the knife drive assembly **2940**. One form of the knife drive assembly **2940** comprises a rotary drive gear **2942** that is coupled to a corresponding third one of the rotatable bodies, driven discs or elements **1304** on the adapter side of the tool mounting plate **2902** when the tool mounting portion **2900** is coupled to the tool holder **1270**. See FIGS. **10** and **37**. The rotary drive gear **2942** is in meshing engagement with a knife gear train, generally depicted as **2943**. In various embodiments, the knife gear train **2943** comprises a first rotary driven gear assembly **2944** that is rotatably supported on the tool mounting plate **2902**. The first rotary driven gear assembly **2944** is in meshing engagement with a third rotary driven gear assembly **2946** that is rotatably supported on the tool mounting plate **2902** and which is in meshing engagement with a fourth rotary driven gear assembly **2948** that is in meshing engagement with the threaded portion **2786** of the knife bar **2780**. Rotation of the rotary drive gear **2942** in one direction will result in the axial advancement of the knife bar **2780** in the distal direction "DD". Conversely, rotation of the rotary drive gear **2942** in an opposite direction will cause the knife bar **2780** to move in the proximal direction. Tool **2700** may otherwise be used as described above.

[0184] FIGS. **38** and **39** illustrate a surgical tool embodiment **2700** that is substantially identical to tool **2700** that was described in detail above. However tool **2700'** includes a pressure sensor **2950** that is configured to provide feedback to the robotic controller **1001** concerning the amount of clamping pressure experienced by the anvil **2724**. In various embodiments, for example, the pressure sensor may comprise a spring biased contact switch. For a continuous signal, it would use either a cantilever beam with a strain gage on it or a dome button top with a strain gage on the inside. Another version may comprise an off switch that contacts only at a known desired load. Such arrangement would include a dome on the based wherein the dome is one electrical pole and the base is the other electrical pole. Such arrangement permits the robotic controller **1001** to adjust the amount of clamping pressure being applied to the tissue within the surgical end effector **2712** by adjusting the amount of closing pressure applied to the anvil **2724**. Those of ordinary skill in the art will understand that such pressure sensor arrangement may be effectively employed with several of the surgical tool embodiments described herein as well as their equivalent structures.

[0185] FIG. **40** illustrates a portion of another surgical tool **3000** that may be effectively used in connection with a robotic system **1000**. The surgical tool **3003** employs onboard motor(s) for powering various components of a surgical end effector cutting instrument. In at least one nonlimiting embodiment for example, the surgical tool **3000** includes a surgical end effector in the form of an endocutter (not shown) that has an anvil (not shown) and surgical staple cartridge arrangement (not shown) of the types and constructions described above. The surgical tool **3000** also includes an elongated shaft (not shown) and anvil closure arrangement (not shown) of the types described above. Thus, this portion of the Detailed Description will not repeat the description of those components beyond that which is necessary to appreciate the unique and novel attributes of the various embodiments of surgical tool **3000**.

[0186] In the depicted embodiment, the end effector includes a cutting instrument **3002** that is coupled to a knife bar **3003**. As can be seen in FIG. **40**, the surgical tool **3000** includes a tool mounting portion **3010** that includes a tool mounting plate **3012** that is configured to mountingly interface with the adaptor portion **1240'** which is coupled to the robotic system **1000** in the various manners described above. The tool mounting portion **3010** is configured to operably support a transmission arrangement **3013** thereon. In at least one embodiment, the adaptor portion **1240'** may be identical to the adaptor portion **1240** described in detail above without the powered rotation bodies and disc members employed by adapter **1240**. In other embodiments, the adaptor portion **1240'** may be identical to adaptor portion **1240**. Still other modifications which are considered to be within the spirit and scope of the various forms of the present invention may employ one or more of the mechanical motions (i.e., rotary motion(s)) from the tool holder portion **1270** (as described hereinabove) to power/actuate the transmission arrangement **3013** while also employing one or more motors within the tool mounting portion **3010** to power one or more other components of the surgical end effector. In addition, while the end effector of the depicted embodiment comprises an endocutter, those of ordinary skill in the art will understand that the unique and novel attributes of the depicted embodiment may be effectively employed in connection with other types of surgical end effectors without departing from the spirit and scope of various forms of the present invention.

[0187] In various embodiments, the tool mounting plate **3012** is configured to at least house a first firing motor **3011** for supplying firing and retraction motions to the knife bar **3003** which is coupled to or otherwise operably interfaces with the cutting instrument **3002**. The tool mounting plate **3012** has an array of electrical connecting pins **3014** which are configured to interface with the slots **1258** (FIG. **9**) in the adapter **1240'**. Such arrangement permits the controller **1001**

of the robotic system **1000** to provide control signals to the electronic control circuit **3020** of the surgical tool **3000**. While the interface is described herein with reference to mechanical, electrical, and magnetic coupling elements, it should be understood that a wide variety of telemetry modalities might be used, including infrared, inductive coupling, or the like.

[0188] Control circuit **3020** is shown in schematic form in FIG. **40**. In one form or embodiment, the control circuit **3020** includes a power supply in the form of a battery **3022** that is coupled to an on-off solenoid powered switch **3024**. Control circuit **3020** further includes an on/off firing solenoid **3026** that is coupled to a double pole switch **3028** for controlling the rotational direction of the motor **3011**. Thus, when the controller **1001** of the robotic system **1000** supplies an appropriate control signal, switch **3024** will permit battery **3022** to supply power to the double pole switch **3028**. The controller **1001** of the robotic system **1000** will also supply an appropriate signal to the double pole switch **3028** to supply power to the motor **3011**. When it is desired to fire the surgical end effector (i.e., drive the cutting instrument **3002** distally through tissue clamped in the surgical end effector, the double pole switch **3028** will be in a first position. When it is desired to retract the cutting instrument **3002** to the starting position, the double pole switch **3028** will be moved to the second position by the controller **1001**.

[0189] Various embodiments of the surgical tool **3000** also employ a gear box **3030** that is sized, in cooperation with a firing gear train **3031** that, in at least one non-limiting embodiment, comprises a firing drive gear **3032** that is in meshing engagement with a firing driven gear **3034** for generating a desired amount of driving force necessary to drive the cutting instrument **3002** through tissue and to drive and form staples in the various manners described herein. In the embodiment depicted in FIG. **40**, the driven gear **3034** is coupled to a screw shaft **3036** that is in threaded engagement with a screw nut arrangement **3038** that is constrained to move axially (represented by arrow "D"). The screw nut arrangement **3038** is attached to the firing bar **3003**. Thus, by rotating the screw shaft **3036** in a first direction, the cutting instrument **3002** is driven in the distal direction "DD" and rotating the screw shaft in an opposite second direction, the cutting instrument **3002** may be retracted in the proximal direction "PD".

[0190] FIG. **41** illustrates a portion of another surgical tool **3000'** that is substantially identical to tool **3000** described above, except that the driven gear **3034** is attached to a drive shaft **3040**. The drive shaft **3040** is attached to a second driver gear **3042** that is in meshing engagement with a third driven gear **3044** that is in meshing engagement with a screw **3046** coupled to the firing bar **3003**.

[0191] FIG. **42** illustrates another surgical tool **3200** that may be effectively used in connection with a robotic system **1000**. In this embodiment, the surgical tool **3200** includes a surgical end effector **3212** that in one non-limiting form, comprises a component portion that is selectively movable between first and second positions relative to at least one other end effector component portion. As will be discussed in further detail below, the surgical tool **3200** employs on-board motors for powering various components of a transmission arrangement **3305**. The surgical end effector **3212** includes an elongated channel **3222** that operably supports a surgical staple cartridge **3234**. The elongated channel **3222** has a proximal end **3223** that slidably extends into a hollow elongated shaft assembly **3208** that is coupled to a tool mounting portion **3300**. In addition, the surgical end effector **3212** includes an anvil **3224** that is pivotally coupled to the elongated channel **3222** by a pair of trunnions **3225** that are received within corresponding openings **3229** in the elongated channel **3222**. A distal end portion **3209** of the shaft assembly **3208** includes an opening **3245** into which a tab **3227** on the anvil **3224** is inserted in order to open the anvil **3224** as the elongated channel **3222** is moved axially in the proximal direction "PD" relative to the distal end portion **3209** of the shaft assembly **3208**. In various embodiments, a spring (not shown) may be employed to bias the anvil **3224** to the open position.

[0192] As indicated above, the surgical tool **3200** includes a tool mounting portion **3300** that includes a tool mounting plate **3302** that is configured to operably support the transmission arrangement **3305** and to mountingly interface with the adaptor portion **1240'** which is coupled to the robotic system **1000** in the various manners described above. In at least one embodiment, the adaptor portion **1240'** may be identical to the adaptor portion **1240** described in detail above without the powered disc members employed by adapter **1240**. In other embodiments, the adaptor portion **1240'** may be identical to adaptor portion **1240**. However, in such embodiments, because the various components of the surgical end effector **3212** are all powered by motor(s) in the tool mounting portion **3300**, the surgical tool **3200** will not employ or require any of the mechanical (i.e., non-electrical) actuation motions from the tool holder portion **1270** to power the surgical end effector **3200** components. Still other modifications which are considered to be within the spirit and scope of the various forms of the present invention may employ one or more of the mechanical motions from the tool holder portion **1270** (as described hereinabove) to power/actuate one or more of the surgical end effector components while also employing one or more motors within the tool mounting portion to power one or more other components of the surgical end effector.

[0193] In various embodiments, the tool mounting plate **3302** is configured to support a first firing motor **3310** for supplying firing and retraction motions to the transmission arrangement **3305** to drive a knife bar **3335** that is coupled to a cutting instrument **3332** of the type described above. As can be seen in FIG. **42**, the tool mounting plate **3212** has an array of electrical connecting pins **3014** which are configured to interface with the slots **1258** (FIG. **9**) in the adapter **1240'**. Such arrangement permits the controller **1001** of the robotic system **1000** to provide control signals to the electronic control circuits **3320**, **3340** of the surgical tool **3200**. While the interface is described herein with reference to mechanical, electrical, and magnetic coupling elements, it should be understood that a wide variety of telemetry modalities might be used, including infrared, inductive coupling, or the like.

[0194] In one form or embodiment, the first control circuit **3320** includes a first power supply in the form of a first battery **3322** that is coupled to a first on-off solenoid powered switch **3324**. The first firing control circuit **3320** further includes a first on/off firing solenoid **3326** that is coupled to a first double pole switch **3328** for controlling the rotational direction of the first firing motor **3310**. Thus, when the robotic controller **1001** supplies an appropriate control signal, the first switch **3324** will permit the first battery **3322**

to supply power to the first double pole switch **3328**. The robotic controller **1001** will also supply an appropriate signal to the first double pole switch **3328** to supply power to the first firing motor **3310**. When it is desired to fire the surgical end effector (i.e., drive the cutting instrument **3232** distally through tissue clamped in the surgical end effector **3212**, the first switch **3328** will be positioned in a first position by the robotic controller **1001**. When it is desired to retract the cutting instrument **3232** to the starting position, the robotic controller **1001** will send the appropriate control signal to move the first switch **3328** to the second position.

[0195] Various embodiments of the surgical tool **3200** also employ a first gear box **3330** that is sized, in cooperation with a firing drive gear **3332** coupled thereto that operably interfaces with a firing gear train **3333**. In at least one non-limiting embodiment, the firing gear train **333** comprises a firing driven gear **3334** that is in meshing engagement with drive gear **3332**, for generating a desired amount of driving force necessary to drive the cutting instrument **3232** through tissue and to drive and form staples in the various manners described herein. In the embodiment depicted in FIG. **41**, the driven gear **3334** is coupled to a drive shaft **3335** that has a second driven gear **3336** coupled thereto. The second driven gear **3336** is supported in meshing engagement with a third driven gear **3337** that is in meshing engagement with a fourth driven gear **3338**. The fourth driven gear **3338** is in meshing engagement with a threaded proximal portion **3339** of the knife bar **3235** that is constrained to move axially. Thus, by rotating the drive shaft **3335** in a first direction, the cutting instrument **3232** is driven in the distal direction "DD" and rotating the drive shaft **3335** in an opposite second direction, the cutting instrument **3232** may be retracted in the proximal direction "PD".

[0196] As indicated above, the opening and closing of the anvil **3224** is controlled by axially moving the elongated channel **3222** relative to the elongated shaft assembly **3208**. The axial movement of the elongated channel **3222** is controlled by a closure control system **3339**. In various embodiments, the closure control system **3339** includes a closure shaft **3340** which has a hollow threaded end portion **3341** that threadably engages a threaded closure rod **3342**. The threaded end portion **3341** is rotatably supported in a spine shaft **3343** that operably interfaces with the tool mounting portion **3300** and extends through a portion of the shaft assembly **3208** as shown. The closure system **3339** further comprises a closure control circuit **3350** that includes a second power supply in the form of a second battery **3352** that is coupled to a second on-off solenoid powered switch **3354**. Closure control circuit **3350** further includes a second on/off firing solenoid **3356** that is coupled to a second double pole switch **3358** for controlling the rotation of a second closure motor **3360**. Thus, when the robotic controller **1001** supplies an appropriate control signal, the second switch **3354** will permit the second battery **3352** to supply power to the second double pole switch **3354**. The robotic controller **1001** will also supply an appropriate signal to the second double pole switch **3358** to supply power to the second motor **3360**. When it is desired to close the anvil **3224**, the second switch **3348** will be in a first position. When it is desired to open the anvil **3224**, the second switch **3348** will be moved to a second position.

[0197] Various embodiments of tool mounting portion **3300** also employ a second gear box **3362** that is coupled to a closure drive gear **3364**. The closure drive gear **3364** is in meshing engagement with a closure gear train **3363**. In various non-limiting forms, the closure gear train **3363** includes a closure driven gear **3365** that is attached to a closure drive shaft **3366**. Also attached to the closure drive shaft **3366** is a closure drive gear **3367** that is in meshing engagement with a closure shaft gear **3360** attached to the closure shaft **3340**. FIG. **42** depicts the end effector **3212** in the open position. As indicated above, when the threaded closure rod **3342** is in the position depicted in FIG. **42**, a spring (not shown) biases the anvil **3224** to the open position. When it is desired to close the anvil **3224**, the robotic controller **1001** will activate the second motor **3360** to rotate the closure shaft **3340** to draw the threaded closure rod **3342** and the channel **3222** in the proximal direction 'PD'. As the anvil **3224** contacts the distal end portion **3209** of the shaft **3208**, the anvil **3224** is pivoted to the closed position.

[0198] A method of operating the surgical tool **3200** will now be described. Once the tool mounting portion **3302** has be operably coupled to the tool holder **1270** of the robotic system **1000**, the robotic system **1000** can orient the end effector **3212** in position adjacent the target tissue to be cut and stapled. If the anvil **3224** is not already in the open position, the robotic controller **1001** may activate the second closure motor **3360** to drive the channel **3222** in the distal direction to the position depicted in FIG. **42**. Once the robotic controller **1001** determines that the surgical end effector **3212** is in the open position by sensor(s) in the and effector and/or the tool mounting portion **3300**, the robotic controller **1001** may provide the surgeon with a signal to inform the surgeon that the anvil **3224** may then be closed. Once the target tissue is positioned between the open anvil **3224** and the surgical staple cartridge **3234**, the surgeon may then commence the closure process by activating the robotic controller **1001** to apply a closure control signal to the second closure motor **3360**. The second closure motor **3360** applies a rotary motion to the closure shaft **3340** to draw the channel **3222** in the proximal direction "PD" until the anvil **3224** has been pivoted to the closed position. Once the robotic controller **1001** determines that the anvil **3224** has been moved to the closed position by sensor(s) in the surgical end effector **3212** and/or in the tool mounting portion **3300** that are in communication with the robotic control system, the motor **3360** may be deactivated. Thereafter, the firing process may be commenced either manually by the surgeon activating a trigger, button, etc. on the controller **1001** or the controller **1001** may automatically commence the firing process.

[0199] To commence the firing process, the robotic controller **1001** activates the firing motor **3310** to drive the firing bar **3235** and the cutting instrument **3232** in the distal direction "DD". Once robotic controller **1001** has determined that the cutting instrument **3232** has moved to the ending position within the surgical staple cartridge **3234** by means of sensors in the surgical end effector **3212** and/or the motor drive portion **3300**, the robotic controller **1001** may provide the surgeon with an indication signal. Thereafter the surgeon may manually activate the first motor **3310** to retract the cutting instrument **3232** to the starting position or the robotic controller **1001** may automatically activate the first motor **3310** to retract the cutting element **3232**.

[0200] The embodiment depicted in FIG. **42** does not include an articulation joint. FIGS. **64** and **65** illustrate

surgical tools **3200'** and **3200"** that have end effectors **3212'**, **3212"**, respectively that may be employed with an elongated shaft embodiment that has an articulation joint of the various types disclosed herein. For example, as can be seen in FIG. **64**, a threaded closure shaft **3342** is coupled to the proximal end **3223** of the elongated channel **3222** by a flexible cable or other flexible member **3345**. The location of an articulation joint (not shown) within the elongated shaft assembly **3208** will coincide with the flexible member **3345** to enable the flexible member **3345** to accommodate such articulation. In addition, in the above-described embodiment, the flexible member **33345** is rotatably affixed to the proximal end portion **3223** of the elongated channel **3222** to enable the flexible member **3345** to rotate relative thereto to prevent the flexible member **3229** from "winding up" relative to the channel **3222**. Although not shown, the cutting element may be driven in one of the above described manners by a knife bar that can also accommodate articulation of the elongated shaft assembly. FIG. **44** depicts a surgical end effector **3212"** that is substantially identical to the surgical end effector **3212** described above, except that the threaded closure rod **3342** is attached to a closure nut **3347** that is constrained to only move axially within the elongated shaft assembly **3208**. The flexible member **3345** is attached to the closure nut **3347**. Such arrangement also prevents the threaded closure rod **3342** from winding-up the flexible member **3345**. A flexible knife bar **3235'** may be employed to facilitate articulation of the surgical end effector **3212"**.

[0201] The surgical tools **3200**, **3200'**, and **3200"** described above may also employ anyone of the cutting instrument embodiments described herein. As described above, the anvil of each of the end effectors of these tools is closed by drawing the elongated channel into contact with the distal end of the elongated shaft assembly. Thus, once the target tissue has been located between the staple cartridge **3234** and the anvil **3224**, the robotic controller **1001** can start to draw the channel **3222** inward into the shaft assembly **3208**. In various embodiments, however, to prevent the end effector **3212**, **3212'**, **3212"** from moving the target tissue with the end effector during this closing process, the controller **1001** may simultaneously move the tool holder and ultimately the tool such to compensate for the movement of the elongated channel **3222** so that, in effect, the target tissue is clamped between the anvil and the elongated channel without being otherwise moved.

[0202] FIGS. **45-47** depict another surgical tool embodiment **3201** that is substantially identical to surgical tool **3200"** described above, except for the differences discussed below. In this embodiment, the threaded closure rod **3342'** has variable pitched grooves. More specifically, as can be seen in FIG. **46**, the closure rod **3342'** has a distal groove section **3380** and a proximal groove section **3382**. The distal and proximal groove sections **3380**, **3382** are configured for engagement with a lug **3390** supported within the hollow threaded end portion **3341'**. As can be seen in FIG. **46**, the distal groove section **3380** has a finer pitch than the groove section **3382**. Thus, such variable pitch arrangement permits the elongated channel **3222** to be drawn into the shaft **3208** at a first speed or rate by virtue of the engagement between the lug **3390** and the proximal groove segment **3382**. When the lug **3390** engages the distal groove segment, the channel **3222** will be drawn into the shaft **3208** at a second speed or rate. Because the proximal groove segment **3382** is coarser than the distal groove segment **3380**, the first speed will be greater than the second speed. Such arrangement serves to speed up the initial closing of the end effector for tissue manipulation and then after the tissue has been properly positioned therein, generate the amount of closure forces to properly clamp the tissue for cutting and sealing. Thus, the anvil **3234** initially closes fast with a lower force and then applies a higher closing force as the anvil closes more slowly.

[0203] The surgical end effector opening and closing motions are employed to enable the user to use the end effector to grasp and manipulate tissue prior to fully clamping it in the desired location for cutting and sealing. The user may, for example, open and close the surgical end effector numerous times during this process to orient the end effector in a proper position which enables the tissue to be held in a desired location. Thus, in at least some embodiments, to produce the high loading for firing, the fine thread may require as many as 5-10 full rotations to generate the necessary load. In some cases, for example, this action could take as long as 2-5 seconds. If it also took an equally long time to open and close the end effector each time during the positioning/tissue manipulation process, just positioning the end effector may take an undesirably long time. If that happens, it is possible that a user may abandon such use of the end effector for use of a conventional grasper device. Use of graspers, etc. may undesirably increase the costs associated with completing the surgical procedure.

[0204] The above-described embodiments employ a battery or batteries to power the motors used to drive the end effector components. Activation of the motors is controlled by the robotic system **1000**. In alternative embodiments, the power supply may comprise alternating current "AC" that is supplied to the motors by the robotic system **1000**. That is, the AC power would be supplied from the system powering the robotic system **1000** through the tool holder and adapter. In still other embodiments, a power cord or tether may be attached to the tool mounting portion **3300** to supply the requisite power from a separate source of alternating or direct current.

[0205] In use, the controller **1001** may apply an initial rotary motion to the closure shaft **3340** (FIG. **42**) to draw the elongated channel **3222** axially inwardly into the elongated shaft assembly **3208** and move the anvil from a first position to an intermediate position at a first rate that corresponds with the point wherein the distal groove section **3380** transitions to the proximal groove section **3382**. Further application of rotary motion to the closure shaft **3340** will cause the anvil to move from the intermediate position to the closed position relative to the surgical staple cartridge. When in the closed position, the tissue to be cut and stapled is properly clamped between the anvil and the surgical staple cartridge.

[0206] FIGS. **48-52** illustrate another surgical tool embodiment **3400** of the present invention. This embodiment includes an elongated shaft assembly **3408** that extends from a tool mounting portion **3500**. The elongated shaft assembly **3408** includes a rotatable proximal closure tube segment **3410** that is rotatably journaled on a proximal spine member **3420** that is rigidly coupled to a tool mounting plate **3502** of the tool mounting portion **3500**. The proximal spine member **3420** has a distal end **3422** that is coupled to an elongated channel portion **3522** of a surgical end effector **3412**. For example, in at least one embodiment, the elongated channel portion **3522** has a distal end portion **3523** that

"hookingly engages" the distal end **3422** of the spine member **3420**. The elongated channel **3522** is configured to support a surgical staple cartridge **3534** therein. This embodiment may employ one of the various cutting instrument embodiments disclosed herein to sever tissue that is clamped in the surgical end effector **3412** and fire the staples in the staple cartridge **3534** into the severed tissue.

[0207] Surgical end effector **3412** has an anvil **3524** that is pivotally coupled to the elongated channel **3522** by a pair of trunnions **3525** that are received in corresponding openings **3529** in the elongated channel **3522**. The anvil **3524** is moved between the open (FIG. **48**) and closed positions (FIGS. **49-51**) by a distal closure tube segment **3430**. A distal end portion **3432** of the distal closure tube segment **3430** includes an opening **3445** into which a tab **3527** on the anvil **3524** is inserted in order to open and close the anvil **3524** as the distal closure tube segment **3430** moves axially relative thereto. In various embodiments, the opening **3445** is shaped such that as the closure tube segment **3430** is moved in the proximal direction, the closure tube segment **3430** causes the anvil **3524** to pivot to an open position. In addition or in the alternative, a spring (not shown) may be employed to bias the anvil **3524** to the open position.

[0208] As can be seen in FIGS. **48-51**, the distal closure tube segment **3430** includes a lug **3442** that extends from its distal end **3440** into threaded engagement with a variable pitch groove/thread **3414** formed in the distal end **3412** of the rotatable proximal closure tube segment **3410**. The variable pitch groove/thread **3414** has a distal section **3416** and a proximal section **3418**. The pitch of the distal groove/thread section **3416** is finer than the pitch of the proximal groove/thread section **3418**. As can also be seen in FIGS. **48-51**, the distal closure tube segment **3430** is constrained for axial movement relative to the spine member **3420** by an axial retainer pin **3450** that is received in an axial slot **3424** in the distal end of the spine member **3420**.

[0209] As indicated above, the anvil **2524** is open and closed by rotating the proximal closure tube segment **3410**. The variable pitch thread arrangement permits the distal closure tube segment **3430** to be driven in the distal direction "DD" at a first speed or rate by virtue of the engagement between the lug **3442** and the proximal groove/thread section **3418**. When the lug **3442** engages the distal groove/thread section **3416**, the distal closure tube segment **3430** will be driven in the distal direction at a second speed or rate. Because the proximal groove/thread section **3418** is coarser than the distal groove/thread segment **3416**, the first speed will be greater than the second speed.

[0210] In at least one embodiment, the tool mounting portion **3500** is configured to receive a corresponding first rotary motion from the robotic controller **1001** and convert that first rotary motion to a primary rotary motion for rotating the rotatable proximal closure tube segment **3410** about a longitudinal tool axis LT-LT. As can be seen in FIG. **52**, a proximal end **3460** of the proximal closure tube segment **3410** is rotatably supported within a cradle arrangement **3504** attached to a tool mounting plate **3502** of the tool mounting portion **3500**. A rotation gear **3462** is formed on or attached to the proximal end **3460** of the closure tube segment **3410** for meshing engagement with a rotation drive assembly **3470** that is operably supported on the tool mounting plate **3502**. In at least one embodiment, a rotation drive gear **3472** is coupled to a corresponding first one of the driven discs or elements **1304** on the adapter side of the tool mounting plate **3502** when the tool mounting portion **3500** is coupled to the tool holder **1270**. See FIGS. **10** and **52**. The rotation drive assembly **3470** further comprises a rotary driven gear **3474** that is rotatably supported on the tool mounting plate **3502** in meshing engagement with the rotation gear **3462** and the rotation drive gear **3472**. Application of a first rotary control motion from the robotic controller **1001** through the tool holder **1270** and the adapter **1240** to the corresponding driven element **1304** will thereby cause rotation of the rotation drive gear **3472** by virtue of being operably coupled thereto. Rotation of the rotation drive gear **3472** ultimately results in the rotation of the closure tube segment **3410** to open and close the anvil **3524** as described above.

[0211] As indicated above, the surgical end effector **3412** employs a cutting instrument of the type and constructions described above. FIG. **52** illustrates one form of knife drive assembly **3480** for axially advancing a knife bar **3492** that is attached to such cutting instrument. One form of the knife drive assembly **3480** comprises a rotary drive gear **3482** that is coupled to a corresponding third one of the driven discs or elements **1304** on the adapter side of the tool mounting plate **3502** when the tool drive portion **3500** is coupled to the tool holder **1270**. See FIGS. **10** and **52**. The knife drive assembly **3480** further comprises a first rotary driven gear assembly **3484** that is rotatably supported on the tool mounting plate **5200**. The first rotary driven gear assembly **3484** is in meshing engagement with a third rotary driven gear assembly **3486** that is rotatably supported on the tool mounting plate **3502** and which is in meshing engagement with a fourth rotary driven gear assembly **3488** that is in meshing engagement with a threaded portion **3494** of drive shaft assembly **3490** that is coupled to the knife bar **3492**. Rotation of the rotary drive gear **3482** in a second rotary direction will result in the axial advancement of the drive shaft assembly **3490** and knife bar **3492** in the distal direction "DD". Conversely, rotation of the rotary drive gear **3482** in a secondary rotary direction (opposite to the second rotary direction) will cause the drive shaft assembly **3490** and the knife bar **3492** to move in the proximal direction.

[0212] FIGS. **53-62** illustrate another surgical tool **3600** embodiment of the present invention that may be employed in connection with a robotic system **1000**. As can be seen in FIG. **53**, the tool **3600** includes an end effector in the form of a disposable loading unit **3612**. Various forms of disposable loading units that may be employed in connection with tool **3600** are disclosed, for example, in U.S. Patent Application Publication No. 2009/0206131, entitled END EFFECTOR ARRANGEMENTS FOR A SURGICAL CUTTING AND STAPLING INSTRUMENT, the disclosure of which is herein incorporated by reference in its entirety.

[0213] In at least one form, the disposable loading unit **3612** includes an anvil assembly **3620** that is supported for pivotal travel relative to a carrier **3630** that operably supports a staple cartridge **3640** therein. A mounting assembly **3650** is pivotally coupled to the cartridge carrier **3630** to enable the carrier **3630** to pivot about an articulation axis AA-AA relative to a longitudinal tool axis LT-LT. Referring to FIG. **58**, mounting assembly **3650** includes upper and lower mounting portions **3652** and **3654**. Each mounting portion includes a threaded bore **3656** on each side thereof dimensioned to receive threaded bolts (not shown) for securing the proximal end of carrier **3630** thereto. A pair of centrally located pivot members **3658** extends between

upper and lower mounting portions via a pair of coupling members **3660** which engage a distal end of a housing portion **3662**. Coupling members **3660** each include an interlocking proximal portion **3664** configured to be received in grooves **3666** formed in the proximal end of housing portion **3662** to retain mounting assembly **3650** and housing portion **3662** in a longitudinally fixed position in relation thereto.

[0214] In various forms, housing portion **3662** of disposable loading unit **3614** includes an upper housing half **3670** and a lower housing half **3672** contained within an outer casing **3674**. The proximal end of housing half **3670** includes engagement nubs **3676** for releasably engaging an elongated shaft **3700** and an insertion tip **3678**. Nubs **3676** form a bayonet-type coupling with the distal end of the elongated shaft **3700** which will be discussed in further detail below. Housing halves **3670**, **3672** define a channel **3675** for slidably receiving axial drive assembly **3680**. A second articulation link **3690** is dimensioned to be slidably positioned within a slot **3679** formed between housing halves **3670**, **3672**. A pair of blow out plates **3691** are positioned adjacent the distal end of housing portion **3662** adjacent the distal end of axial drive assembly **3680** to prevent outward bulging of drive assembly **3680** during articulation of carrier **3630**.

[0215] In various embodiments, the second articulation link **3690** includes at least one elongated metallic plate. Preferably, two or more metallic plates are stacked to form link **3690**. The proximal end of articulation link **3690** includes a hook portion **3692** configured to engage first articulation link **3710** extending through the elongated shaft **3700**. The distal end of the second articulation link **3690** includes a loop **3694** dimensioned to engage a projection formed on mounting assembly **3650**. The projection is laterally offset from pivot pin **3658** such that linear movement of second articulation link **3690** causes mounting assembly **3650** to pivot about pivot pins **3658** to articulate the carrier **3630**.

[0216] In various forms, axial drive assembly **3680** includes an elongated drive beam **3682** including a distal working head **3684** and a proximal engagement section **3685**. Drive beam **3682** may be constructed from a single sheet of material or, preferably, multiple stacked sheets. Engagement section **3685** includes a pair of engagement fingers which are dimensioned and configured to mountingly engage a pair of corresponding retention slots formed in drive member **3686**. Drive member **3686** includes a proximal porthole **3687** configured to receive the distal end **3722** of control rod **3720** (See FIG. **62**) when the proximal end of disposable loading unit **3614** is engaged with elongated shaft **3700** of surgical tool **3600**.

[0217] Referring to FIGS. **53** and **60-62**, to use the surgical tool **3600**, a disposable loading unit **3612** is first secured to the distal end of elongated shaft **3700**. It will be appreciated that the surgical tool **3600** may include an articulating or a non-articulating disposable loading unit. To secure the disposable loading unit **3612** to the elongated shaft **3700**, the distal end **3722** of control rod **3720** is inserted into insertion tip **3678** of disposable loading unit **3612**, and insertion tip **3678** is slid longitudinally into the distal end of the elongated shaft **3700** in the direction indicated by arrow "A" in FIG. **60** such that hook portion **3692** of second articulation link **3690** slides within a channel **3702** in the elongated shaft **3700**. Nubs **3676** will each be aligned in a respective channel (not shown) in elongated shaft **3700**. When hook portion **3692** engages the proximal wall **3704** of channel **3702**, disposable loading unit **3612** is rotated in the direction indicated by arrow "B" in FIGS. **59** and **62** to move hook portion **3692** of second articulation link **3690** into engagement with finger **3712** of first articulation link **3710**. Nubs **3676** also form a "bayonet-type" coupling within annular channel **3703** in the elongated shaft **3700**. During rotation of loading unit **3612**, nubs **3676** engage cam surface **3732** (FIG. **60**) of block plate **3730** to initially move plate **3730** in the direction indicated by arrow "C" in FIG. **60** to lock engagement member **3734** in recess **3721** of control rod **3720** to prevent longitudinal movement of control rod **3720** during attachment of disposable loading unit **3612**. During the final degree of rotation, nubs **3676** disengage from cam surface **3732** to allow blocking plate **3730** to move in the direction indicated by arrow "D" in FIGS. **59** and **62** from behind engagement member **3734** to once again permit longitudinal movement of control rod **3720**. While the above-described attachment method reflects that the disposable loading unit **3612** is manipulated relative to the elongated shaft **3700**, the person of ordinary skill in the art will appreciate that the disposable loading unit **3612** may be supported in a stationary position and the robotic system **1000** may manipulate the elongated shaft portion **3700** relative to the disposable loading unit **3612** to accomplish the above-described coupling procedure.

[0218] FIG. **63** illustrates another disposable loading unit **3612'** that is attachable in a bayonet-type arrangement with the elongated shaft **3700'** that is substantially identical to shaft **3700** except for the differences discussed below. As can be seen in FIG. **63**, the elongated shaft **3700'** has slots **3705** that extend for at least a portion thereof and which are configured to receive nubs **3676** therein. In various embodiments, the disposable loading unit **3612'** includes arms **3677** extending therefrom which, prior to the rotation of disposable loading unit **3612'**, can be aligned, or at least substantially aligned, with nubs **3676** extending from housing portion **3662**. In at least one embodiment, arms **3677** and nubs **3676** can be inserted into slots **3705** in elongated shaft **3700'**, for example, when disposable loading unit **3612'** is inserted into elongated shaft **3700'**. When disposable loading unit **3612'** is rotated, arms **3677** can be sufficiently confined within slots **3705** such that slots **3705** can hold them in position, whereas nubs **3676** can be positioned such that they are not confined within slots **3705** and can be rotated relative to arms **3677**. When rotated, the hook portion **3692** of the articulation link **3690** is engaged with the first articulation link **3710** extending through the elongated shaft **3700'**.

[0219] Other methods of coupling the disposable loading units to the end of the elongated shaft may be employed. For example, as shown in FIGS. **64** and **65**, disposable loading unit **3612"** can include connector portion **3613** which can be configured to be engaged with connector portion **3740** of the elongated shaft **3700"**. In at least one embodiment, connector portion **3613** can include at least one projection and/or groove which can be mated with at least one projection and/or groove of connector portion **3740**. In at least one such embodiment, the connector portions can include co-operating dovetail portions. In various embodiments, the connector portions can be configured to interlock with one another and prevent, or at least inhibit, distal and/or proximal movement of disposable loading unit **3612"** along axis **3741**. In at least one embodiment, the distal end of the axial drive assembly

3680' can include aperture **3681** which can be configured to receive projection **3721** extending from control rod **3720'**. In various embodiments, such an arrangement can allow disposable loading unit **3612"** to be assembled to elongated shaft **3700** in a direction which is not collinear with or parallel to axis **3741**. Although not illustrated, axial drive assembly **3680'** and control rod **3720** can include any other suitable arrangement of projections and apertures to operably connect them to each other. Also in this embodiment, the first articulation link **3710** which can be operably engaged with second articulation link **3690**.

[0220] As can be seen in FIGS. **53** and **66**, the surgical tool **3600** includes a tool mounting portion **3750**. The tool mounting portion **3750** includes a tool mounting plate **3751** that is configured for attachment to the tool drive assembly **1010**. The tool mounting portion operably supported a transmission arrangement **3752** thereon. In use, it may be desirable to rotate the disposable loading unit **3612** about the longitudinal tool axis defined by the elongated shaft **3700**. In at least one embodiment, the transmission arrangement **3752** includes a rotational transmission assembly **3753** that is configured to receive a corresponding rotary output motion from the tool drive assembly **1010** of the robotic system **1000** and convert that rotary output motion to a rotary control motion for rotating the elongated shaft **3700** (and the disposable loading unit **3612**) about the longitudinal tool axis LT-LT. As can be seen in FIG. **66**, a proximal end **3701** of the elongated shaft **3700** is rotatably supported within a cradle arrangement **3754** that is attached to the tool mounting plate **3751** of the tool mounting portion **3750**. A rotation gear **3755** is formed on or attached to the proximal end **3701** of the elongated shaft **3700** for meshing engagement with a rotation gear assembly **3756** operably supported on the tool mounting plate **3751**. In at least one embodiment, a rotation drive gear **3757** drivingly coupled to a corresponding first one of the driven discs or elements **1304** on the adapter side of the tool mounting plate **3751** when the tool mounting portion **3750** is coupled to the tool drive assembly **1010**. The rotation transmission assembly **3753** further comprises a rotary driven gear **3758** that is rotatably supported on the tool mounting plate **3751** in meshing engagement with the rotation gear **3755** and the rotation drive gear **3757**. Application of a first rotary output motion from the robotic system **1000** through the tool drive assembly **1010** to the corresponding driven element **1304** will thereby cause rotation of the rotation drive gear **3757** by virtue of being operably coupled thereto. Rotation of the rotation drive gear **3757** ultimately results in the rotation of the elongated shaft **3700** (and the disposable loading unit **3612**) about the longitudinal tool axis LT-LT (primary rotary motion).

[0221] As can be seen in FIG. **66**, a drive shaft assembly **3760** is coupled to a proximal end of the control rod **3720**. In various embodiments, the control rod **3720** is axially advanced in the distal and proximal directions by a knife/closure drive transmission **3762**. One form of the knife/closure drive assembly **3762** comprises a rotary drive gear **3763** that is coupled to a corresponding second one of the driven rotatable body portions, discs or elements **1304** on the adapter side of the tool mounting plate **3751** when the tool mounting portion **3750** is coupled to the tool holder **1270**. The rotary driven gear **3763** is in meshing driving engagement with a gear train, generally depicted as **3764**. In at least one form, the gear train **3764** further comprises a first rotary driven gear assembly **3765** that is rotatably supported on the tool mounting plate **3751**. The first rotary driven gear assembly **3765** is in meshing engagement with a second rotary driven gear assembly **3766** that is rotatably supported on the tool mounting plate **3751** and which is in meshing engagement with a third rotary driven gear assembly **3767** that is in meshing engagement with a threaded portion **3768** of the drive shaft assembly **3760**. Rotation of the rotary drive gear **3763** in a second rotary direction will result in the axial advancement of the drive shaft assembly **3760** and control rod **3720** in the distal direction "DD". Conversely, rotation of the rotary drive gear **3763** in a secondary rotary direction which is opposite to the second rotary direction will cause the drive shaft assembly **3760** and the control rod **3720** to move in the proximal direction. When the control rod **3720** moves in the distal direction, it drives the drive beam **3682** and the working head **3684** thereof distally through the surgical staple cartridge **3640**. As the working head **3684** is driven distally, it operably engages the anvil **3620** to pivot it to a closed position.

[0222] The cartridge carrier **3630** may be selectively articulated about articulation axis AA-AA by applying axial articulation control motions to the first and second articulation links **3710** and **3690**. In various embodiments, the transmission arrangement **3752** further includes an articulation drive **3770** that is operably supported on the tool mounting plate **3751**. More specifically and with reference to FIG. **66**, it can be seen that a proximal end portion **3772** of an articulation drive shaft **3771** configured to operably engage with the first articulation link **3710** extends through the rotation gear **3755** and is rotatably coupled to a shifter rack gear **3774** that is slidably affixed to the tool mounting plate **3751** through slots **3775**. The articulation drive **3770** further comprises a shifter drive gear **3776** that is coupled to a corresponding third one of the driven discs or elements **1304** on the adapter side of the tool mounting plate **3751** when the tool mounting portion **3750** is coupled to the tool holder **1270**. The articulation drive assembly **3770** further comprises a shifter driven gear **3778** that is rotatably supported on the tool mounting plate **3751** in meshing engagement with the shifter drive gear **3776** and the shifter rack gear **3774**. Application of a third rotary output motion from the robotic system **1000** through the tool drive assembly **1010** to the corresponding driven element **1304** will thereby cause rotation of the shifter drive gear **3776** by virtue of being operably coupled thereto. Rotation of the shifter drive gear **3776** ultimately results in the axial movement of the shifter gear rack **3774** and the articulation drive shaft **3771**. The direction of axial travel of the articulation drive shaft **3771** depends upon the direction in which the shifter drive gear **3776** is rotated by the robotic system **1000**. Thus, rotation of the shifter drive gear **3776** in a first rotary direction will result in the axial movement of the articulation drive shaft **3771** in the proximal direction "PD" and cause the cartridge carrier **3630** to pivot in a first direction about articulation axis AA-AA. Conversely, rotation of the shifter drive gear **3776** in a second rotary direction (opposite to the first rotary direction) will result in the axial movement of the articulation drive shaft **3771** in the distal direction "DD" to thereby cause the cartridge carrier **3630** to pivot about articulation axis AA-AA in an opposite direction.

[0223] FIG. **67** illustrates yet another surgical tool **3800** embodiment of the present invention that may be employed with a robotic system **1000**. As can be seen in FIG. **67**, the surgical tool **3800** includes a surgical end effector **3812** in

the form of an endocutter **3814** that employs various cable-driven components. Various forms of cable driven endocutters are disclosed, for example, in U.S. Pat. No. 7,726,537, entitled SURGICAL STAPLER WITH UNIVERSAL ARTICULATION AND TISSUE PRE-CLAMP and U.S. Patent Application Publication No. 2008/0308603, entitled CABLE DRIVEN SURGICAL STAPLING AND CUTTING INSTRUMENT WITH IMPROVED CABLE ATTACHMENT ARRANGEMENTS, the disclosures of each are herein incorporated by reference in their respective entireties. Such endocutters **3814** may be referred to as a "disposable loading unit" because they are designed to be disposed of after a single use. However, the various unique and novel arrangements of various embodiments of the present invention may also be employed in connection with cable driven end effectors that are reusable.

[0224] As can be seen in FIG. **67**, in at least one form, the endocutter **3814** includes an elongated channel **3822** that operably supports a surgical staple cartridge **3834** therein. An anvil **3824** is pivotally supported for movement relative to the surgical staple cartridge **3834**. The anvil **3824** has a cam surface **3825** that is configured for interaction with a preclamping collar **3840** that is supported for axial movement relative thereto. The end effector **3814** is coupled to an elongated shaft assembly **3808** that is attached to a tool mounting portion **3900**. In various embodiments, a closure cable **3850** is employed to move pre-clamping collar **3840** distally onto and over cam surface **3825** to close the anvil **3824** relative to the surgical staple cartridge **3834** and compress the tissue therebetween. Preferably, closure cable **3850** attaches to the pre-clamping collar **3840** at or near point **3841** and is fed through a passageway in anvil **3824** (or under a proximal portion of anvil **3824**) and fed proximally through shaft **3808**. Actuation of closure cable **3850** in the proximal direction "PD" forces pre-clamping collar **3840** distally against cam surface **3825** to close anvil **3824** relative to staple cartridge assembly **3834**. A return mechanism, e.g., a spring, cable system or the like, may be employed to return pre-clamping collar **3840** to a pre-clamping orientation which re-opens the anvil **3824**.

[0225] The elongated shaft assembly **3808** may be cylindrical in shape and define a channel **3811** which may be dimensioned to receive a tube adapter **3870**. See FIG. **68**. In various embodiments, the tube adapter **3870** may be slidingly received in friction-fit engagement with the internal channel of elongated shaft **3808**. The outer surface of the tube adapter **3870** may further include at least one mechanical interface, e.g., a cutout or notch **3871**, oriented to mate with a corresponding mechanical interface, e.g., a radially inwardly extending protrusion or detent (not shown), disposed on the inner periphery of internal channel **3811** to lock the tube adapter **3870** to the elongated shaft **3808**. In various embodiments, the distal end of tube adapter **3870** may include a pair of opposing flanges **3872***a* and **3872***b* which define a cavity for pivotably receiving a pivot block **3873** therein. Each flange **3872***a* and **3872***b* may include an aperture **3874***a* and **3874***b* that is oriented to receive a pivot pin **3875** that extends through an aperture in pivot block **3873** to allow pivotable movement of pivot block **3873** about an axis that is perpendicular to longitudinal tool axis "LT-LT". The channel **3822** may be formed with two upwardly extending flanges **3823***a*, **3823***b* that have apertures therein, which are dimensioned to receive a pivot pin **3827**. In turn, pivot pin **3875** mounts through apertures in pivot block **3873** to permit rotation of the surgical end effector **3814** about the "Y" axis as needed during a given surgical procedure. Rotation of pivot block **3873** about pin **3875** along "Z" axis rotates the surgical end effector **3814** about the "Z" axis. See FIG. **68**. Other methods of fastening the elongated channel **3822** to the pivot block **3873** may be effectively employed without departing from the spirit and scope of the present invention.

[0226] The surgical staple cartridge **3834** can be assembled and mounted within the elongated channel **3822** during the manufacturing or assembly process and sold as part of the surgical end effector **3812**, or the surgical staple cartridge **3834** may be designed for selective mounting within the elongated channel **3822** as needed and sold separately, e.g., as a single use replacement, replaceable or disposable staple cartridge assembly. It is within the scope of this disclosure that the surgical end effector **3812** may be pivotally, operatively, or integrally attached, for example, to distal end **3809** of the elongated shaft assembly **3808** of a disposable surgical stapler. As is known, a used or spent disposable loading unit **3814** can be removed from the elongated shaft assembly **3808** and replaced with an unused disposable unit. The endocutter **3814** may also preferably include an actuator, preferably a dynamic clamping member **3860**, a sled **3862**, as well as staple pushers (not shown) and staples (not shown) once an unspent or unused cartridge **3834** is mounted in the elongated channel **3822**. See FIG. **68**.

[0227] In various embodiments, the dynamic clamping member **3860** is associated with, e.g., mounted on and rides on, or with or is connected to or integral with and/or rides behind sled **3862**. It is envisioned that dynamic clamping member **3860** can have cam wedges or cam surfaces attached or integrally formed or be pushed by a leading distal surface thereof. In various embodiments, dynamic clamping member **3860** may include an upper portion **3863** having a transverse aperture **3864** with a pin **3865** mountable or mounted therein, a central support or upward extension **3866** and substantially T-shaped bottom flange **3867** which cooperate to slidingly retain dynamic clamping member **3860** along an ideal cutting path during longitudinal, distal movement of sled **3862**. The leading cutting edge **3868**, here, knife blade **3869**, is dimensioned to ride within slot **3835** of staple cartridge assembly **3834** and separate tissue once stapled. As used herein, the term "knife assembly" may include the aforementioned dynamic clamping member **3860**, knife **3869**, and sled **3862** or other knife/beam/sled drive arrangements and cutting instrument arrangements. In addition, the various embodiments of the present invention may be employed with knife assembly/cutting instrument arrangements that may be entirely supported in the staple cartridge **3834** or partially supported in the staple cartridge **3834** and elongated channel **3822** or entirely supported within the elongated channel **3822**.

[0228] In various embodiments, the dynamic clamping member **3860** may be driven in the proximal and distal directions by a cable drive assembly **3870**. In one non-limiting form, the cable drive assembly comprises a pair of advance cables **3880**, **3882** and a firing cable **3884**. FIGS. **90** and **91** illustrate the cables **3880**, **3882**, **3884** in diagrammatic form. As can be seen in those Figures, a first advance cable **3880** is operably supported on a first distal cable transition support **3885** which may comprise, for example, a pulley, rod, capstan, etc. that is attached to the distal end of the elongated channel **3822** and a first proximal cable

transition support **3886** which may comprise, for example, a pulley, rod, capstan, etc. that is operably supported by the elongated channel **3822**. A distal end **3881** of the first advance cable **3880** is affixed to the dynamic clamping assembly **3860**. The second advance cable **3882** is operably supported on a second distal cable transition support **3887** which may, for example, comprise a pulley, rod, capstan etc. that is mounted to the distal end of the elongated channel **3822** and a second proximal cable transition support **3888** which may, for example, comprise a pulley, rod, capstan, etc. mounted to the proximal end of the elongated channel **3822**. The proximal end **3883** of the second advance cable **3882** may be attached to the dynamic clamping assembly **3860**. Also in these embodiments, an endless firing cable **3884** is employed and journaled on a support **3889** that may comprise a pulley, rod, capstan, etc. mounted within the elongated shaft **3808**. In one embodiment, the retract cable **3884** may be formed in a loop and coupled to a connector **3889'** that is fixedly attached to the first and second advance cables **3880**, **3882**.

[0229] Various non-limiting embodiments of the present invention include a cable drive transmission **3920** that is operably supported on a tool mounting plate **3902** of the tool mounting portion **3900**. The tool mounting portion **3900** has an array of electrical connecting pins **3904** which are configured to interface with the slots **1258** (FIG. **9**) in the adapter **1240'**. Such arrangement permits the robotic system **1000** to provide control signals to a control circuit **3910** of the tool **3800**. While the interface is described herein with reference to mechanical, electrical, and magnetic coupling elements, it should be understood that a wide variety of telemetry modalities might be used, including infrared, inductive coupling, or the like.

[0230] Control circuit **3910** is shown in schematic form in FIG. **67**. In one form or embodiment, the control circuit **3910** includes a power supply in the form of a battery **3912** that is coupled to an on-off solenoid powered switch **3914**. In other embodiments, however, the power supply may comprise a source of alternating current. Control circuit **3910** further includes an on/off solenoid **3916** that is coupled to a double pole switch **3918** for controlling motor rotation direction. Thus, when the robotic system **1000** supplies an appropriate control signal, switch **3914** will permit battery **3912** to supply power to the double pole switch **3918**. The robotic system **1000** will also supply an appropriate signal to the double pole switch **3918** to supply power to a shifter motor **3922**.

[0231] Turning to FIGS. **71-76**, at least one embodiment of the cable drive transmission **3920** comprises a drive pulley **3930** that is operably mounted to a drive shaft **3932** that is attached to a driven element **1304** of the type and construction described above that is designed to interface with a corresponding drive element **1250** of the adapter **1240**. See FIGS. **9** and **74**. Thus, when the tool mounting portion **3900** is operably coupled to the tool holder **1270**, the robot system **1000** can apply rotary motion to the drive pulley **3930** in a desired direction. A first drive member or belt **3934** drivingly engages the drive pulley **3930** and a second drive shaft **3936** that is rotatably supported on a shifter yoke **3940**. The shifter yoke **3940** is operably coupled to the shifter motor **3922** such that rotation of the shaft **3923** of the shifter motor **3922** in a first direction will shift the shifter yoke in a first direction "FD" and rotation of the shifter motor shaft **3923** in a second direction will shift the shifter yoke **3940** in a second direction "SD". Other embodiments of the present invention may employ a shifter solenoid arrangement for shifting the shifter yoke in said first and second directions.

[0232] As can be seen in FIGS. **71-74**, a closure drive gear **3950** mounted to a second drive shaft **3936** and is configured to selectively mesh with a closure drive assembly, generally designated as **3951**. Likewise a firing drive gear **3960** is also mounted to the second drive shaft **3936** and is configured to selectively mesh with a firing drive assembly generally designated as **3961**. Rotation of the second drive shaft **3936** causes the closure drive gear **3950** and the firing drive gear **3960** to rotate. In one non-limiting embodiment, the closure drive assembly **3951** comprises a closure driven gear **3952** that is coupled to a first closure pulley **3954** that is rotatably supported on a third drive shaft **3956**. The closure cable **3850** is drivingly received on the first closure pulley **3954** such that rotation of the closure driven gear **3952** will drive the closure cable **3850**. Likewise, the firing drive assembly **3961** comprises a firing driven gear **3962** that is coupled to a first firing pulley **3964** that is rotatably supported on the third drive shaft **3956**. The first and second driving pulleys **3954** and **3964** are independently rotatable on the third drive shaft **3956**. The firing cable **3884** is drivingly received on the first firing pulley **3964** such that rotation of the firing driven gear **3962** will drive the firing cable **3884**.

[0233] Also in various embodiments, the cable drive transmission **3920** further includes a braking assembly **3970**. In at least one embodiment, for example, the braking assembly **3970** includes a closure brake **3972** that comprises a spring arm **3973** that is attached to a portion of the transmission housing **3971**. The closure brake **3972** has a gear lug **3974** that is sized to engage the teeth of the closure driven gear **3952** as will be discussed in further detail below. The braking assembly **3970** further includes a firing brake **3976** that comprises a spring arm **3977** that is attached to another portion of the transmission housing **3971**. The firing brake **3976** has a gear lug **3978** that is sized to engage the teeth of the firing driven gear **3962**.

[0234] At least one embodiment of the surgical tool **3800** may be used as follows. The tool mounting portion **3900** is operably coupled to the interface **1240** of the robotic system **1000**. The controller or control unit of the robotic system is operated to locate the tissue to be cut and stapled between the open anvil **3824** and the staple cartridge **3834**. When in that initial position, the braking assembly **3970** has locked the closure driven gear **3952** and the firing driven gear **3962** such that they cannot rotate. That is, as shown in FIG. **72**, the gear lug **3974** is in locking engagement with the closure driven gear **3952** and the gear lug **3978** is in locking engagement with the firing driven gear **3962**. Once the surgical end effector **3814** has been properly located, the controller **1001** of the robotic system **1000** will provide a control signal to the shifter motor **3922** (or shifter solenoid) to move the shifter yoke **3940** in the first direction. As the shifter yoke **3940** is moved in the first direction, the closure drive gear **3950** moves the gear lug **3974** out of engagement with the closure driven gear **3952** as it moves into meshing engagement with the closure driven gear **3952**. As can be seen in FIG. **71**, when in that position, the gear lug **3978** remains in locking engagement with the firing driven gear **3962** to prevent actuation of the firing system. Thereafter, the robotic controller **1001** provides a first rotary actuation motion to the drive pulley **3930** through the interface

between the driven element **1304** and the corresponding components of the tool holder **1240**. As the drive pulley **3930** is rotated in the first direction, the closure cable **3850** is rotated to drive the preclamping collar **3840** into closing engagement with the cam surface **3825** of the anvil **3824** to move it to the closed position thereby clamping the target tissue between the anvil **3824** and the staple cartridge **3834**. See FIG. **67**. Once the anvil **3824** has been moved to the closed position, the robotic controller **1001** stops the application of the first rotary motion to the drive pulley **3930**. Thereafter, the robotic controller **1001** may commence the firing process by sending another control signal to the shifter motor **3922** (or shifter solenoid) to cause the shifter yoke to move in the second direction "SD" as shown in FIG. **94**. As the shifter yoke **3940** is moved in the second direction, the firing drive gear **3960** moves the gear lug **3978** out of engagement with the firing driven gear **3962** as it moves into meshing engagement with the firing driven gear **3962**. As can be seen in FIG. **73**, when in that position, the gear lug **3974** remains in locking engagement with the closure driven gear **3952** to prevent actuation of the closure system. Thereafter, the robotic controller **1001** is activated to provide the first rotary actuation motion to the drive pulley **3930** through the interface between the driven element **1304** and the corresponding components of the tool holder **1240**. As the drive pulley **3930** is rotated in the first direction, the firing cable **3884** is rotated to drive the dynamic clamping member **3860** in the distal direction "DD" thereby firing the stapes and cutting the tissue clamped in the end effector **3814**. Once the robotic system **1000** determines that the dynamic clamping member **3860** has reached its distal most position-either through sensors or through monitoring the amount of rotary input applied to the drive pulley **3930**, the controller **1001** may then apply a second rotary motion to the drive pulley **3930** to rotate the closure cable **3850** in an opposite direction to cause the dynamic clamping member **3860** to be retracted in the proximal direction "PD". Once the dynamic clamping member has been retracted to the starting position, the application of the second rotary motion to the drive pulley **3930** is discontinued. Thereafter, the shifter motor **3922** (or shifter solenoid) is powered to move the shifter yoke **3940** to the closure position (FIG. **71**). Once the closure drive gear **3950** is in meshing engagement with the closure driven gear **3952**, the robotic controller **1001** may once again apply the second rotary motion to the drive pulley **3930**. Rotation of the drive pulley **3930** in the second direction causes the closure cable **3850** to retract the preclamping collar **3840** out of engagement with the cam surface **3825** of the anvil **3824** to permit the anvil **3824** to move to an open position (by a spring or other means) to release the stapled tissue from the surgical end effector **3814**.

[0235] FIG. **77** illustrates a surgical tool **4000** that employs a gear driven firing bar **4092** as shown in FIGS. **78-80**. This embodiment includes an elongated shaft assembly **4008** that extends from a tool mounting portion **4100**. The tool mounting portion **4100** includes a tool mounting plate **4102** that operable supports a transmission arrangement **4103** thereon. The elongated shaft assembly **4008** includes a rotatable proximal closure tube **4010** that is rotatably journaled on a proximal spine member **4020** that is rigidly coupled to the tool mounting plate **4102**. The proximal spine member **4020** has a distal end that is coupled to an elongated channel portion **4022** of a surgical end effector **4012**. The surgical effector **4012** may be substantially similar to surgical end effector **3412** described above. In addition, the anvil **4024** of the surgical end effector **4012** may be opened and closed by a distal closure tube **4030** that operably interfaces with the proximal closure tube **4010**. Distal closure tube **4030** is identical to distal closure tube **3430** described above. Similarly, proximal closure tube **4010** is identical to proximal closure tube segment **3410** described above.

[0236] Anvil **4024** is opened and closed by rotating the proximal closure tube **4010** in manner described above with respect to distal closure tube **3410**. In at least one embodiment, the transmission arrangement comprises a closure transmission, generally designated as **4011**. As will be further discussed below, the closure transmission **4011** is configured to receive a corresponding first rotary motion from the robotic system **1000** and convert that first rotary motion to a primary rotary motion for rotating the rotatable proximal closure tube **4010** about the longitudinal tool axis LT-LT. As can be seen in FIG. **80**, a proximal end **4060** of the proximal closure tube **4010** is rotatably supported within a cradle arrangement **4104** that is attached to a tool mounting plate **4102** of the tool mounting portion **4100**. A rotation gear **4062** is formed on or attached to the proximal end **4060** of the closure tube segment **4010** for meshing engagement with a rotation drive assembly **4070** that is operably supported on the tool mounting plate **4102**. In at least one embodiment, a rotation drive gear **4072** is coupled to a corresponding first one of the driven discs or elements **1304** on the adapter side of the tool mounting plate **4102** when the tool mounting portion **4100** is coupled to the tool holder **1270**. See FIGS. **10** and **80**. The rotation drive assembly **4070** further comprises a rotary driven gear **4074** that is rotatably supported on the tool mounting plate **4102** in meshing engagement with the rotation gear **4062** and the rotation drive gear **4072**. Application of a first rotary control motion from the robotic system **1000** through the tool holder **1270** and the adapter **1240** to the corresponding driven element **1304** will thereby cause rotation of the rotation drive gear **4072** by virtue of being operably coupled thereto. Rotation of the rotation drive gear **4072** ultimately results in the rotation of the closure tube segment **4010** to open and close the anvil **4024** as described above.

[0237] As indicated above, the end effector **4012** employs a cutting element **3860** as shown in FIGS. **78** and **79**. In at least one non-limiting embodiment, the transmission arrangement **4103** further comprises a knife drive transmission that includes a knife drive assembly **4080**. FIG. **80** illustrates one form of knife drive assembly **4080** for axially advancing the knife bar **4092** that is attached to such cutting element using cables as described above with respect to surgical tool **3800**. In particular, the knife bar **4092** replaces the firing cable **3884** employed in an embodiment of surgical tool **3800**. One form of the knife drive assembly **4080** comprises a rotary drive gear **4082** that is coupled to a corresponding second one of the driven discs or elements **1304** on the adapter side of the tool mounting plate **4102** when the tool mounting portion **4100** is coupled to the tool holder **1270**. See FIGS. **10** and **80**. The knife drive assembly **4080** further comprises a first rotary driven gear assembly **4084** that is rotatably supported on the tool mounting plate **4102**. The first rotary driven gear assembly **4084** is in meshing engagement with a third rotary driven gear assembly **4086** that is rotatably supported on the tool mounting plate **4102** and which is in meshing engagement with a

fourth rotary driven gear assembly **4088** that is in meshing engagement with a threaded portion **4094** of drive shaft assembly **4090** that is coupled to the knife bar **4092**. Rotation of the rotary drive gear **4082** in a second rotary direction will result in the axial advancement of the drive shaft assembly **4090** and knife bar **4092** in the distal direction "DD". Conversely, rotation of the rotary drive gear **4082** in a secondary rotary direction (opposite to the second rotary direction) will cause the drive shaft assembly **4090** and the knife bar **4092** to move in the proximal direction. Movement of the firing bar **4092** in the proximal direction "PD" will drive the cutting element **3860** in the distal direction "DD". Conversely, movement of the firing bar **4092** in the distal direction "DD" will result in the movement of the cutting element **3860** in the proximal direction "PD".

[0238] FIGS. **81-87** illustrate yet another surgical tool **5000** that may be effectively employed in connection with a robotic system **1000**. In various forms, the surgical tool **5000** includes a surgical end effector **5012** in the form of a surgical stapling instrument that includes an elongated channel **5020** and a pivotally translatable clamping member, such as an anvil **5070**, which are maintained at a spacing that assures effective stapling and severing of tissue clamped in the surgical end effector **5012**. As can be seen in FIG. **83**, the elongated channel **5020** may be substantially U-shaped in cross-section and be fabricated from, for example, titanium, 203 stainless steel, 304 stainless steel, 416 stainless steel, 17-4 stainless steel, 17-7 stainless steel, 6061 or 7075 aluminum, chromium steel, ceramic, etc. A substantially U-shaped metal channel pan **5022** may be supported in the bottom of the elongated channel **5020** as shown.

[0239] Various embodiments include an actuation member in the form of a sled assembly **5030** that is operably supported within the surgical end effector **5012** and axially movable therein between a starting position and an ending position in response to control motions applied thereto. In some forms, the metal channel pan **5022** has a centrally-disposed slot **5024** therein to movably accommodate a base portion **5032** of the sled assembly **5030**. The base portion **5032** includes a foot portion **5034** that is sized to be slidably received in a slot **5021** in the elongated channel **5020**. See FIG. **104**. As can be seen in FIGS. **82**, **83**, **86**, and **87**, the base portion **5032** of sled assembly **5030** includes an axially extending threaded bore **5036** that is configured to be threadedly received on a threaded drive shaft **5130** as will be discussed in further detail below. In addition, the sled assembly **5030** includes an upstanding support portion **5038** that supports a tissue cutting blade or tissue cutting instrument **5040**. The upstanding support portion **5038** terminates in a top portion **5042** that has a pair of laterally extending retaining fins **5044** protruding therefrom. As shown in FIG. **83**, the fins **5044** are positioned to be received within corresponding slots **5072** in anvil **5070**. The fins **5044** and the foot **5034** serve to retain the anvil **5070** in a desired spaced closed position as the sled assembly **5030** is driven distally through the tissue clamped within the surgical end effector **5014**. As can also be seen in FIGS. **85** and **87**, the sled assembly **5030** further includes a reciprocatably or sequentially activatable drive assembly **5050** for driving staple pushers toward the closed anvil **5070**.

[0240] More specifically and with reference to FIGS. **83** and **84**, the elongated channel **5020** is configured to operably support a surgical staple cartridge **5080** therein. In at least one form, the surgical staple cartridge **5080** comprises a body portion **5082** that may be fabricated from, for example, Vectra, Nylon (6/6 or 6/12) and include a centrally disposed slot **5084** for accommodating the upstanding support portion **5038** of the sled assembly **5030**. See FIG. **83**. These materials could also be filled with glass, carbon, or mineral fill of 10%-40%. The surgical staple cartridge **5080** further includes a plurality of cavities **5086** for movably supporting lines or rows of staple-supporting pushers **5088** therein. The cavities **5086** may be arranged in spaced longitudinally extending lines or rows **5090**, **5092**, **5094**, **5096**. For example, the rows **5090** may be referred to herein as first outboard rows. The rows **5092** may be referred to herein as first inboard rows. The rows **5094** may be referred to as second inboard rows and the rows **5096** may be referred to as second outboard rows. The first inboard row **5090** and the first outboard row **5092** are located on a first lateral side of the longitudinal slot **5084** and the second inboard row **5094** and the second outboard row **5096** are located on a second lateral side of the longitudinal slot **5084**. The first staple pushers **5088** in the first inboard row **5092** are staggered in relationship to the first staple pushers **5088** in the first outboard row **5090**. Similarly, the second staple pushers **5088** in the second outboard row **5096** are staggered in relationship to the second pushers **5088** in the second inboard row **5094**. Each pusher **5088** operably supports a surgical staple **5098** thereon.

[0241] In various embodiments, the sequentially-activatable or reciprocatably-activatable drive assembly **5050** includes a pair of outboard drivers **5052** and a pair of inboard drivers **5054** that are each attached to a common shaft **5056** that is rotatably mounted within the base **5032** of the sled assembly **5030**. The outboard drivers **5052** are oriented to sequentially or reciprocatingly engage a corresponding plurality of outboard activation cavities **5026** provided in the channel pan **5022**. Likewise, the inboard drivers **5054** are oriented to sequentially or reciprocatingly engage a corresponding plurality of inboard activation cavities **5028** provided in the channel pan **5022**. The inboard activation cavities **5028** are arranged in a staggered relationship relative to the adjacent outboard activation cavities **5026**. See FIG. **84**. As can also be seen in FIGS. **84** and **86**, in at least one embodiment, the sled assembly **5030** further includes distal wedge segments **5060** and intermediate wedge segments **5062** located on each side of the bore **5036** to engage the pushers **5088** as the sled assembly **5030** is driven distally in the distal direction "DD". As indicated above, the sled assembly **5030** is threadedly received on a threaded portion **5132** of a drive shaft **5130** that is rotatably supported within the end effector **5012**. In various embodiments, for example, the drive shaft **5130** has a distal end **5134** that is supported in a distal bearing **5136** mounted in the surgical end effector **5012**. See FIGS. **83** and **84**.

[0242] In various embodiments, the surgical end effector **5012** is coupled to a tool mounting portion **5200** by an elongated shaft assembly **5108**. In at least one embodiment, the tool mounting portion **5200** operably supports a transmission arrangement generally designated as **5204** that is configured to receive rotary output motions from the robotic system. The elongated shaft assembly **5108** includes an outer closure tube **5110** that is rotatable and axially movable on a spine member **5120** that is rigidly coupled to a tool mounting plate **5201** of the tool mounting portion **5200**. The

spine member **5120** also has a distal end **5122** that is coupled to the elongated channel portion **5020** of the surgical end effector **5012**.

[0243] In use, it may be desirable to rotate the surgical end effector **5012** about a longitudinal tool axis LT-LT defined by the elongated shaft assembly **5008**. In various embodiments, the outer closure tube **5110** has a proximal end **5112** that is rotatably supported on the tool mounting plate **5201** of the tool drive portion **5200** by a forward support cradle **5203**. The proximal end **5112** of the outer closure tube **5110** is configured to operably interface with a rotation transmission portion **5206** of the transmission arrangement **5204**. In various embodiments, the proximal end **5112** of the outer closure tube **5110** is also supported on a closure sled **5140** that is also movably supported on the tool mounting plate **5201**. A closure tube gear segment **5114** is formed on the proximal end **5112** of the outer closure tube **5110** for meshing engagement with a rotation drive assembly **5150** of the rotation transmission **5206**. As can be seen in FIG. **102**, the rotation drive assembly **5150**, in at least one embodiment, comprises a rotation drive gear **5152** that is coupled to a corresponding first one of the driven discs or elements **1304** on the adapter side **1307** of the tool mounting plate **5201** when the tool drive portion **5200** is coupled to the tool holder **1270**. The rotation drive assembly **5150** further comprises a rotary driven gear **5154** that is rotatably supported on the tool mounting plate **5201** in meshing engagement with the closure tube gear segment **5114** and the rotation drive gear **5152**. Application of a first rotary control motion from the robotic system **1000** through the tool holder **1270** and the adapter **1240** to the corresponding driven element **1304** will thereby cause rotation of the rotation drive gear **5152**. Rotation of the rotation drive gear **5152** ultimately results in the rotation of the elongated shaft assembly **5108** (and the end effector **5012**) about the longitudinal tool axis LT-LT (represented by arrow "R" in FIG. **81**).

[0244] Closure of the anvil **5070** relative to the surgical staple cartridge **5080** is accomplished by axially moving the outer closure tube **5110** in the distal direction "DD". Such axial movement of the outer closure tube **5110** may be accomplished by a closure transmission portion **5144** of the transmission arrangement **5204**. As indicated above, in various embodiments, the proximal end **5112** of the outer closure tube **5110** is supported by the closure sled **5140** which enables the proximal end **5112** to rotate relative thereto, yet travel axially with the closure sled **5140**. In particular, as can be seen in FIG. **81**, the closure sled **5140** has an upstanding tab **5141** that extends into a radial groove **5115** in the proximal end portion **5112** of the outer closure tube **5110**. In addition, as was described above, the closure sled **5140** is slidably mounted to the tool mounting plate **5201**. In various embodiments, the closure sled **5140** has an upstanding portion **5142** that has a closure rack gear **5143** formed thereon. The closure rack gear **5143** is configured for driving engagement with the closure transmission **5144**.

[0245] In various forms, the closure transmission **5144** includes a closure spur gear **5145** that is coupled to a corresponding second one of the driven discs or elements **1304** on the adapter side **1307** of the tool mounting plate **5201**. Thus, application of a second rotary control motion from the robotic system **1000** through the tool holder **1270** and the adapter **1240** to the corresponding second driven element **1304** will cause rotation of the closure spur gear **5145** when the interface **1230** is coupled to the tool mounting portion **5200**. The closure transmission **5144** further includes a driven closure gear set **5146** that is supported in meshing engagement with the closure spur gear **5145** and the closure rack gear **5143**. Thus, application of a second rotary control motion from the robotic system **1000** through the tool holder **1270** and the adapter **1240** to the corresponding second driven element **1304** will cause rotation of the closure spur gear **5145** and ultimately drive the closure sled **5140** and the outer closure tube **5110** axially. The axial direction in which the closure tube **5110** moves ultimately depends upon the direction in which the second driven element **1304** is rotated. For example, in response to one rotary closure motion received from the robotic system **1000**, the closure sled **5140** will be driven in the distal direction "DD" and ultimately the outer closure tube **5110** will be driven in the distal direction as well. The outer closure tube **5110** has an opening **5117** in the distal end **5116** that is configured for engagement with a tab **5071** on the anvil **5070** in the manners described above. As the outer closure tube **5110** is driven distally, the proximal end **5116** of the closure tube **5110** will contact the anvil **5070** and pivot it closed. Upon application of an "opening" rotary motion from the robotic system **1000**, the closure sled **5140** and outer closure tube **5110** will be driven in the proximal direction "PD" and pivot the anvil **5070** to the open position in the manners described above.

[0246] In at least one embodiment, the drive shaft **5130** has a proximal end **5137** that has a proximal shaft gear **5138** attached thereto. The proximal shaft gear **5138** is supported in meshing engagement with a distal drive gear **5162** attached to a rotary drive bar **5160** that is rotatably supported with spine member **5120**. Rotation of the rotary drive bar **5160** and ultimately rotary drive shaft **5130** is controlled by a rotary knife transmission **5207** which comprises a portion of the transmission arrangement **5204** supported on the tool mounting plate **5210**. In various embodiments, the rotary knife transmission **5207** comprises a rotary knife drive system **5170** that is operably supported on the tool mounting plate **5201**. In various embodiments, the knife drive system **5170** includes a rotary drive gear **5172** that is coupled to a corresponding third one of the driven discs or elements **1304** on the adapter side of the tool mounting plate **5201** when the tool drive portion **5200** is coupled to the tool holder **1270**. The knife drive system **5170** further comprises a first rotary driven gear **5174** that is rotatably supported on the tool mounting plate **5201** in meshing engagement with a second rotary driven gear **5176** and the rotary drive gear **5172**. The second rotary driven gear **5176** is coupled to a proximal end portion **5164** of the rotary drive bar **5160**.

[0247] Rotation of the rotary drive gear **5172** in a first rotary direction will result in the rotation of the rotary drive bar **5160** and rotary drive shaft **5130** in a first direction. Conversely, rotation of the rotary drive gear **5172** in a second rotary direction (opposite to the first rotary direction) will cause the rotary drive bar **5160** and rotary drive shaft **5130** to rotate in a second direction. **2400**. Thus, rotation of the drive shaft **2440** results in rotation of the drive sleeve **2400**.

[0248] One method of operating the surgical tool **5000** will now be described. The tool drive **5200** is operably coupled to the interface **1240** of the robotic system **1000**. The controller **1001** of the robotic system **1000** is operated to locate the tissue to be cut and stapled between the open

anvil **5070** and the surgical staple cartridge **5080**. Once the surgical end effector **5012** has been positioned by the robot system **1000** such that the target tissue is located between the anvil **5070** and the surgical staple cartridge **5080**, the controller **1001** of the robotic system **1000** may be activated to apply the second rotary output motion to the second driven element **1304** coupled to the closure spur gear **5145** to drive the closure sled **5140** and the outer closure tube **5110** axially in the distal direction to pivot the anvil **5070** closed in the manner described above. Once the robotic controller **1001** determines that the anvil **5070** has been closed by, for example, sensors in the surgical end effector **5012** and/or the tool drive portion **5200**, the robotic controller **1001** system may provide the surgeon with an indication that signifies the closure of the anvil. Such indication may be, for example, in the form of a light and/or audible sound, tactile feedback on the control members, etc. Then the surgeon may initiate the firing process. In alternative embodiments, however, the robotic controller **1001** may automatically commence the firing process.

[0249] To commence the firing process, the robotic controller applies a third rotary output motion to the third driven disc or element **1304** coupled to the rotary drive gear **5172**. Rotation of the rotary drive gear **5172** results in the rotation of the rotary drive bar **5160** and rotary drive shaft **5130** in the manner described above. Firing and formation of the surgical staples **5098** can be best understood from reference to FIGS. **82**, **84**, and **85**. As the sled assembly **5030** is driven in the distal direction "DD" through the surgical staple cartridge **5080**, the distal wedge segments **5060** first contact the staple pushers **5088** and start to move them toward the closed anvil **5070**. As the sled assembly **5030** continues to move distally, the outboard drivers **5052** will drop into the corresponding activation cavity **5026** in the channel pan **5022**. The opposite end of each outboard driver **5052** will then contact the corresponding outboard pusher **5088** that has moved up the distal and intermediate wedge segments **5060**, **5062**. Further distal movement of the sled assembly **5030** causes the outboard drivers **5052** to rotate and drive the corresponding pushers **5088** toward the anvil **5070** to cause the staples **5098** supported thereon to be formed as they are driven into the anvil **5070**. It will be understood that as the sled assembly **5030** moves distally, the knife blade **5040** cuts through the tissue that is clamped between the anvil and the staple cartridge. Because the inboard drivers **5054** and outboard drivers **5052** are attached to the same shaft **5056** and the inboard drivers **5054** are radially offset from the outboard drivers **5052** on the shaft **5056**, as the outboard drivers **5052** are driving their corresponding pushers **5088** toward the anvil **5070**, the inboard drivers **5054** drop into their next corresponding activation cavity **5028** to cause them to rotatably or reciprocatingly drive the corresponding inboard pushers **5088** towards the closed anvil **5070** in the same manner. Thus, the laterally corresponding outboard staples **5098** on each side of the centrally disposed slot **5084** are simultaneously formed together and the laterally corresponding inboard staples **5098** on each side of the slot **5084** are simultaneously formed together as the sled assembly **5030** is driven distally. Once the robotic controller **1001** determines that the sled assembly **5030** has reached its distal most position-either through sensors or through monitoring the amount of rotary input applied to the drive shaft **5130** and/or the rotary drive bar **5160**, the controller **1001** may then apply a third rotary output motion to the drive shaft **5130** to rotate the drive shaft **5130** in an opposite direction to retract the sled assembly **5030** back to its starting position. Once the sled assembly **5030** has been retracted to the starting position (as signaled by sensors in the end effector **5012** and/or the tool drive portion **5200**), the application of the second rotary motion to the drive shaft **5130** is discontinued. Thereafter, the surgeon may manually activate the anvil opening process or it may be automatically commenced by the robotic controller **1001**. To open the anvil **5070**, the second rotary output motion is applied to the closure spur gear **5145** to drive the closure sled **5140** and the outer closure tube **5110** axially in the proximal direction. As the closure tube **5110** moves proximally, the opening **5117** in the distal end **5116** of the closure tube **5110** contacts the tab **5071** on the anvil **5070** to pivot the anvil **5070** to the open position. A spring may also be employed to bias the anvil **5070** to the open position when the closure tube **5116** has been returned to the starting position. Again, sensors in the surgical end effector **5012** and/or the tool mounting portion **5200** may provide the robotic controller **1001** with a signal indicating that the anvil **5070** is now open. Thereafter, the surgical end effector **5012** may be withdrawn from the surgical site.

[0250] FIGS. **88-93** diagrammatically depict the sequential firing of staples in a surgical tool assembly **5000'** that is substantially similar to the surgical tool assembly **5000** described above. In this embodiment, the inboard and outboard drivers **5052'**, **5054'** have a cam-like shape with a cam surface **5053** and an actuator protrusion **5055** as shown in FIGS. **88-94**. The drivers **5052'**, **5054'** are journaled on the same shaft **5056'** that is rotatably supported by the sled assembly **5030'**. In this embodiment, the sled assembly **5030'** has distal wedge segments **5060'** for engaging the pushers **5088**. FIG. **88** illustrates an initial position of two inboard or outboard drivers **5052'**, **5054'** as the sled assembly **5030'** is driven in the distal direction "DD". As can be seen in that Figure, the pusher **5088*a*** has advanced up the wedge segment **5060'** and has contacted the driver **5052'**, **5054'**. Further travel of the sled assembly **5030'** in the distal direction causes the driver **5052'**, **5054'** to pivot in the "P" direction (FIG. **89**) until the actuator portion **5055** contacts the end wall **5029*a*** of the activation cavity **5026**, **5028** as shown in FIG. **90**. Continued advancement of the sled assembly **5030'** in the distal direction "DD" causes the driver **5052'**, **5054'** to rotate in the "D" direction as shown in FIG. **91**. As the driver **5052'**, **5054'** rotates, the pusher **5088*a*** rides up the cam surface **5053** to the final vertical position shown in FIG. **113**. When the pusher **5088*a*** reaches the final vertical position shown in FIGS. **92** and **93**, the staple (not shown) supported thereon has been driven into the staple forming surface of the anvil to form the staple.

[0251] FIGS. **95-100** illustrate a surgical end effector **5312** that may be employed for example, in connection with the tool mounting portion **1300** and shaft **2008** described in detail above. In various forms, the surgical end effector **5312** includes an elongated channel **5322** that is constructed as described above for supporting a surgical staple cartridge **5330** therein. The surgical staple cartridge **5330** comprises a body portion **5332** that includes a centrally disposed slot **5334** for accommodating an upstanding support portion **5386** of a sled assembly **5380**. See FIGS. **95-97**. The surgical staple cartridge body portion **5332** further includes a plurality of cavities **5336** for movably supporting staple-supporting pushers **5350** therein. The cavities **5336** may be

arranged in spaced longitudinally extending rows **5340**, **5342**, **5344**, **5346**. The rows **5340**, **5342** are located on one lateral side of the longitudinal slot **5334** and the rows **5344**, **5346** are located on the other side of longitudinal slot **5334**. In at least one embodiment, the pushers **5350** are configured to support two surgical staples **5352** thereon. In particular, each pusher **5350** located on one side of the elongated slot **5334** supports one staple **5352** in row **5340** and one staple **5352** in row **5342** in a staggered orientation. Likewise, each pusher **5350** located on the other side of the elongated slot **5334** supports one surgical staple **5352** in row **5344** and another surgical staple **5352** in row **5346** in a staggered orientation. Thus, every pusher **5350** supports two surgical staples **5352**.

[0252] As can be further seen in FIGS. **95**, **96**, the surgical staple cartridge **5330** includes a plurality of rotary drivers **5360**. More particularly, the rotary drivers **5360** on one side of the elongated slot **5334** are arranged in a single line **5370** and correspond to the pushers **5350** in lines **5340**, **5342**. In addition, the rotary drivers **5360** on the other side of the elongated slot **5334** are arranged in a single line **5372** and correspond to the pushers **5350** in lines **5344**, **5346**. As can be seen in FIG. **95**, each rotary driver **5360** is rotatably supported within the staple cartridge body **5332**. More particularly, each rotary driver **5360** is rotatably received on a corresponding driver shaft **5362**. Each driver **5360** has an arcuate ramp portion **5364** formed thereon that is configured to engage an arcuate lower surface **5354** formed on each pusher **5350**. See FIG. **100**. In addition, each driver **5360** has a lower support portion **5366** extend therefrom to slidably support the pusher **5360** on the channel **5322**. Each driver **5360** has a downwardly extending actuation rod **5368** that is configured for engagement with a sled assembly **5380**.

[0253] As can be seen in FIG. **97**, in at least one embodiment, the sled assembly **5380** includes a base portion **5382** that has a foot portion **5384** that is sized to be slidably received in a slot **5333** in the channel **5322**. See FIG. **95**. The sled assembly **5380** includes an upstanding support portion **5386** that supports a tissue cutting blade or tissue cutting instrument **5388**. The upstanding support portion **5386** terminates in a top portion **5390** that has a pair of laterally extending retaining fins **5392** protruding therefrom. The fins **5392** are positioned to be received within corresponding slots (not shown) in the anvil (not shown). As with the above-described embodiments, the fins **5392** and the foot portion **5384** serve to retain the anvil (not shown) in a desired spaced closed position as the sled assembly **5380** is driven distally through the tissue clamped within the surgical end effector **5312**. The upstanding support portion **5386** is configured for attachment to a knife bar **2200** (FIG. **16**). The sled assembly **5380** further has a horizontally-extending actuator plate **5394** that is shaped for actuating engagement with each of the actuation rods **5368** on the pushers **5360**.

[0254] Operation of the surgical end effector **5312** will now be explained with reference to FIGS. **95** and **96**. As the sled assembly **5380** is driven in the distal direction "DD" through the staple cartridge **5330**, the actuator plate **5394** sequentially contacts the actuation rods **5368** on the pushers **5360**. As the sled assembly **5380** continues to move distally, the actuator plate **5394** sequentially contacts the actuator rods **5368** of the drivers **5360** on each side of the elongated slot **5334**. Such action causes the drivers **5360** to rotate from a first unactuated position to an actuated portion wherein the pushers **5350** are driven towards the closed anvil. As the pushers **5350** are driven toward the anvil, the surgical staples **5352** thereon are driven into forming contact with the underside of the anvil. Once the robotic system **1000** determines that the sled assembly **5080** has reached its distal most position through sensors or other means, the control system of the robotic system **1000** may then retract the knife bar and sled assembly **5380** back to the starting position. Thereafter, the robotic control system may then activate the procedure for returning the anvil to the open position to release the stapled tissue.

[0255] FIGS. **101-105** depict one form of an automated reloading system embodiment of the present invention, generally designated as **5500**. In one form, the automated reloading system **5500** is configured to replace a "spent" surgical end effector component in a manipulatable surgical tool portion of a robotic surgical system with a "new" surgical end effector component. As used herein, the term "surgical end effector component" may comprise, for example, a surgical staple cartridge, a disposable loading unit or other end effector components that, when used, are spent and must be replaced with a new component. Furthermore, the term "spent" means that the end effector component has been activated and is no longer useable for its intended purpose in its present state. For example, in the context of a surgical staple cartridge or disposable loading unit, the term "spent" means that at least some of the unformed staples that were previously supported therein have been "fired" therefrom. As used herein, the term "new" surgical end effector component refers to an end effector component that is in condition for its intended use. In the context of a surgical staple cartridge or disposable loading unit, for example, the term "new" refers to such a component that has unformed staples therein and which is otherwise ready for use.

[0256] In various embodiments, the automated reloading system **5500** includes a base portion **5502** that may be strategically located within a work envelope **1109** of a robotic arm cart **1100** (FIG. **2**) of a robotic system **1000**. As used herein, the term "manipulatable surgical tool portion" collectively refers to a surgical tool of the various types disclosed herein and other forms of surgical robotically-actuated tools that are operably attached to, for example, a robotic arm cart **1100** or similar device that is configured to automatically manipulate and actuate the surgical tool. The term "work envelope" as used herein refers to the range of movement of the manipulatable surgical tool portion of the robotic system. FIG. **2** generally depicts an area that may comprise a work envelope of the robotic arm cart **1100**. Those of ordinary skill in the art will understand that the shape and size of the work envelope depicted therein is merely illustrative. The ultimate size, shape and location of a work envelope will ultimately depend upon the construction, range of travel limitations, and location of the manipulatable surgical tool portion. Thus, the term "work envelope" as used herein is intended to cover a variety of different sizes and shapes of work envelopes and should not be limited to the specific size and shape of the sample work envelope depicted in FIG. **2**.

[0257] As can be seen in FIG. **101**, the base portion **5502** includes a new component support section or arrangement **5510** that is configured to operably support at least one new surgical end effector component in a "loading orientation". As used herein, the term "loading orientation" means that the new end effector component is supported in such away

so as to permit the corresponding component support portion of the manipulatable surgical tool portion to be brought into loading engagement with (i.e., operably seated or operably attached to) the new end effector component (or the new end effector component to be brought into loading engagement with the corresponding component support portion of the manipulatable surgical tool portion) without human intervention beyond that which may be necessary to actuate the robotic system. As will be further appreciated as the present Detailed Description proceeds, in at least one embodiment, the preparation nurse will load the new component support section before the surgery with the appropriate length and color cartridges (some surgical staple cartridges may support certain sizes of staples the size of which may be indicated by the color of the cartridge body) required for completing the surgical procedure. However, no direct human interaction is necessary during the surgery to reload the robotic endocutter. In one form, the surgical end effector component comprises a staple cartridge **2034** that is configured to be operably seated within a component support portion (elongated channel) of any of the various other end effector arrangements described above. For explanation purposes, new (unused) cartridges will be designated as "**2034***a*" and spent cartridges will be designated as "**2034***b*". The Figures depict cartridges **2034***a*, **2034***b* designed for use with a surgical end effector **2012** that includes a channel **2022** and an anvil **2024**, the construction and operation of which were discussed in detail above. Cartridges **2034***a*, **2034***b* are identical to cartridges **2034** described above. In various embodiments, the cartridges **2034***a*, **2034***b* are configured to be snappingly retained (i.e., loading engagement) within the channel **2022** of a surgical end effector **2012**. As the present Detailed Description proceeds, however, those of ordinary skill in the art will appreciate that the unique and novel features of the automated cartridge reloading system **5500** may be effectively employed in connection with the automated removal and installation of other cartridge arrangements without departing from the spirit and scope of the present invention.

[0258] In the depicted embodiment, the term "loading orientation" means that the distal tip portion **2035***a* of the a new surgical staple cartridge **2034***a* is inserted into a corresponding support cavity **5512** in the new cartridge support section **5510** such that the proximal end portion **2037***a* of the new surgical staple cartridge **2034***a* is located in a convenient orientation for enabling the arm cart **1100** to manipulate the surgical end effector **2012** into a position wherein the new cartridge **2034***a* may be automatically loaded into the channel **2022** of the surgical end effector **2012**. In various embodiments, the base **5502** includes at least one sensor **5504** which communicates with the control system **1003** of the robotic controller **1001** to provide the control system **1003** with the location of the base **5502** and/or the reload length and color doe each staged or new cartridge **2034***a*.

[0259] As can also be seen in the Figures, the base **5502** further includes a collection receptacle **5520** that is configured to collect spent cartridges **2034***b* that have been removed or disengaged from the surgical end effector **2012** that is operably attached to the robotic system **1000**. In addition, in one form, the automated reloading system **5500** includes an extraction system **5530** for automatically removing the spent end effector component from the corresponding support portion of the end effector or manipulatable surgical tool portion without specific human intervention beyond that which may be necessary to activate the robotic system. In various embodiments, the extraction system **5530** includes an extraction hook member **5532**. In one form, for example, the extraction hook member **5532** is rigidly supported on the base portion **5502**. In one embodiment, the extraction hook member has at least one hook **5534** formed thereon that is configured to hookingly engage the distal end **2035** of a spent cartridge **2034***b* when it is supported in the elongated channel **2022** of the surgical end effector **2012**. In various forms, the extraction hook member **5532** is conveniently located within a portion of the collection receptacle **5520** such that when the spent end effector component (cartridge **2034***b*) is brought into extractive engagement with the extraction hook member **5532**, the spent end effector component (cartridge **2034***b*) is dislodged from the corresponding component support portion (elongated channel **2022**), and falls into the collection receptacle **5020**. Thus, to use this embodiment, the manipulatable surgical tool portion manipulates the end effector attached thereto to bring the distal end **2035** of the spent cartridge **2034***b* therein into hooking engagement with the hook **5534** and then moves the end effector in such a way to dislodge the spent cartridge **2034***b* from the elongated channel **2022**.

[0260] In other arrangements, the extraction hook member **5532** comprises a rotatable wheel configuration that has a pair of diametrically-opposed hooks **5334** protruding therefrom. See FIGS. **101** and **104**. The extraction hook member **5532** is rotatably supported within the collection receptacle **5520** and is coupled to an extraction motor **5540** that is controlled by the controller **1001** of the robotic system. This form of the automated reloading system **5500** may be used as follows. FIG. **103** illustrates the introduction of the surgical end effector **2012** that is operably attached to the manipulatable surgical tool portion **1200**. As can be seen in that Figure, the arm cart **1100** of the robotic system **1000** locates the surgical end effector **2012** in the shown position wherein the hook end **5534** of the extraction member **5532** hookingly engages the distal end **2035** of the spent cartridge **2034***b* in the surgical end effector **2012**. The anvil **2024** of the surgical end effector **2012** is in the open position. After the distal end **2035** of the spent cartridge **2034***b* is engaged with the hook end **5532**, the extraction motor **5540** is actuated to rotate the extraction wheel **5532** to disengage the spent cartridge **2034***b* from the channel **2022**. To assist with the disengagement of the spent cartridge **2034***b* from the channel **2022** (or if the extraction member **5530** is stationary), the robotic system **1000** may move the surgical end effector **2012** in an upward direction (arrow "U" in FIG. **104**). As the spent cartridge **2034***b* is dislodged from the channel **2022**, the spent cartridge **2034***b* falls into the collection receptacle **5520**. Once the spent cartridge **2034***b* has been removed from the surgical end effector **2012**, the robotic system **1000** moves the surgical end effector **2012** to the position shown in FIG. **105**.

[0261] In various embodiments, a sensor arrangement **5533** is located adjacent to the extraction member **5532** that is in communication with the controller **1001** of the robotic system **1000**. The sensor arrangement **5533** may comprise a sensor that is configured to sense the presence of the surgical end effector **2012** and, more particularly the tip **2035***b* of the spent surgical staple cartridge **2034***b* thereof as the distal tip portion **2035***b* is brought into engagement with the extraction member **5532**. In some embodiments, the sensor arrangement **5533** may comprise, for example, a light cur-

tain arrangement. However, other forms of proximity sensors may be employed. In such arrangement, when the surgical end effector **2012** with the spent surgical staple cartridge **2034***b* is brought into extractive engagement with the extraction member **5532**, the sensor senses the distal tip **2035***b* of the surgical staple cartridge **2034***b* (e.g., the light curtain is broken). When the extraction member **5532** spins and pops the surgical staple cartridge **2034***b* loose and it falls into the collection receptacle **5520**, the light curtain is again unbroken. Because the surgical end effector **2012** was not moved during this procedure, the robotic controller **1001** is assured that the spent surgical staple cartridge **2034***b* has been removed therefrom. Other sensor arrangements may also be successfully employed to provide the robotic controller **1001** with an indication that the spent surgical staple cartridge **2034***b* has been removed from the surgical end effector **2012**.

[0262] As can be seen in FIG. **105**, the surgical end effector **2012** is positioned to grasp a new surgical staple cartridge **2034***a* between the channel **2022** and the anvil **2024**. More specifically, as shown in FIGS. **102** and **105**, each cavity **5512** has a corresponding upstanding pressure pad **5514** associated with it. The surgical end effector **2012** is located such that the pressure pad **5514** is located between the new cartridge **2034***a* and the anvil **2024**. Once in that position, the robotic system **1000** closes the anvil **2024** onto the pressure pad **5514** which serves to push the new cartridge **2034***a* into snapping engagement with the channel **2022** of the surgical end effector **2012**. Once the new cartridge **2034***a* has been snapped into position within the elongated channel **2022**, the robotic system **1000** then withdraws the surgical end effector **2012** from the automated cartridge reloading system **5500** for use in connection with performing another surgical procedure.

[0263] FIGS. **106-110** depict another automated reloading system **5600** that may be used to remove a spent disposable loading unit **3612** from a manipulatable surgical tool arrangement **3600** (FIGS. **53-66**) that is operably attached to an arm cart **1100** or other portion of a robotic system **1000** and reload a new disposable loading unit **3612** therein. As can be seen in FIGS. **106** and **107**, one form of the automated reloading system **5600** includes a housing **5610** that has a movable support assembly in the form of a rotary carrousel top plate **5620** supported thereon which cooperates with the housing **5610** to form a hollow enclosed area **5612**. The automated reloading system **5600** is configured to be operably supported within the work envelop of the manipulatable surgical tool portion of a robotic system as was described above. In various embodiments, the rotary carrousel plate **5620** has a plurality of holes **5622** for supporting a plurality of orientation tubes **5660** therein. As can be seen in FIGS. **107** and **108**, the rotary carrousel plate **5620** is affixed to a spindle shaft **5624**. The spindle shaft **5624** is centrally disposed within the enclosed area **5612** and has a spindle gear **5626** attached thereto. The spindle gear **5626** is in meshing engagement with a carrousel drive gear **5628** that is coupled to a carrousel drive motor **5630** that is in operative communication with the robotic controller **1001** of the robotic system **1000**.

[0264] Various embodiments of the automated reloading system **5600** may also include a carrousel locking assembly, generally designated as **5640**. In various forms, the carrousel locking assembly **5640** includes a cam disc **5642** that is affixed to the spindle shaft **5624**. The spindle gear **5626** may be attached to the underside of the cam disc **5642** and the cam disc **5642** may be keyed onto the spindle shaft **5624**. In alternative arrangements, the spindle gear **5626** and the cam disc **5642** may be independently non-rotatably affixed to the spindle shaft **5624**. As can be seen in FIGS. **107** and **108**, a plurality of notches **5644** are spaced around the perimeter of the cam disc **5642**. A locking arm **5648** is pivotally mounted within the housing **5610** and is biased into engagement with the perimeter of the cam disc **5642** by a locking spring **5649**. As can be seen in FIG. **106**, the outer perimeter of the cam disc **5642** is rounded to facilitate rotation of the cam disc **5642** relative to the locking arm **5648**. The edges of each notch **5644** are also rounded such that when the cam disc **5642** is rotated, the locking arm **5648** is cammed out of engagement with the notches **5644** by the perimeter of the cam disc **5642**.

[0265] Various forms of the automated reloading system **5600** are configured to support a portable/replaceable tray assembly **5650** that is configured to support a plurality of disposable loading units **3612** in individual orientation tubes **5660**. More specifically and with reference to FIGS. **107** and **108**, the replaceable tray assembly **5650** comprises a tray **5652** that has a centrally-disposed locator spindle **5654** protruding from the underside thereof. The locator spindle **5654** is sized to be received within a hollow end **5625** of spindle shaft **5624**. The tray **5652** has a plurality of holes **5656** therein that are configured to support an orientation tube **5660** therein. Each orientation tube **5660** is oriented within a corresponding hole **5656** in the replaceable tray assembly **5650** in a desired orientation by a locating fin **5666** on the orientation tube **5660** that is designed to be received within a corresponding locating slot **5658** in the tray assembly **5650**. In at least one embodiment, the locating fin **5666** has a substantially V-shaped cross-sectional shape that is sized to fit within a V-shaped locating slot **5658**. Such arrangement serves to orient the orientation tube **5660** in a desired starting position while enabling it to rotate within the hole **5656** when a rotary motion is applied thereto. That is, when a rotary motion is applied to the orientation tube **5660** the V-shaped locating fin **5666** will pop out of its corresponding locating slot enabling the tube **5660** to rotate relative to the tray **5652** as will be discussed in further detail below. As can also be seen in FIGS. **106-108**, the replaceable tray **5652** may be provided with one or more handle portions **5653** to facilitate transport of the tray assembly **5652** when loaded with orientation tubes **5660**.

[0266] As can be seen in FIG. **110**, each orientation tube **5660** comprises a body portion **5662** that has a flanged open end **5664**. The body portion **5662** defines a cavity **5668** that is sized to receive a portion of a disposable loading unit **3612** therein. To properly orient the disposable loading unit **3612** within the orientation tube **5660**, the cavity **5668** has a flat locating surface **5670** formed therein. As can be seen in FIG. **110**, the flat locating surface **5670** is configured to facilitate the insertion of the disposable loading unit into the cavity **5668** in a desired or predetermined non-rotatable orientation. In addition, the end **5669** of the cavity **5668** may include a foam or cushion material **5672** that is designed to cushion the distal end of the disposable loading unit **3612** within the cavity **5668**. Also, the length of the locating surface may cooperate with a sliding support member **3689** of the axial drive assembly **3680** of the disposable loading unit **3612** to further locate the disposable loading unit **3612** at a desired position within the orientation tube **5660**.

[0267] The orientation tubes **5660** may be fabricated from Nylon, polycarbonate, polyethylene, liquid crystal polymer, 6061 or 7075 aluminum, titanium, 300 or 400 series stainless steel, coated or painted steel, plated steel, etc. and, when loaded in the replaceable tray **5662** and the locator spindle **5654** is inserted into the hollow end **5625** of spindle shaft **5624**, the orientation tubes **5660** extend through corresponding holes **5662** in the carrousel top plate **5620**. Each replaceable tray **5662** is equipped with a location sensor **5663** that communicates with the control system **1003** of the controller **1001** of the robotic system **1000**. The sensor **5663** serves to identify the location of the reload system, and the number, length, color and fired status of each reload housed in the tray. In addition, an optical sensor or sensors **5665** that communicate with the robotic controller **1001** may be employed to sense the type/size/length of disposable loading units that are loaded within the tray **5662**.

[0268] Various embodiments of the automated reloading system **5600** further include a drive assembly **5680** for applying a rotary motion to the orientation tube **5660** holding the disposable loading unit **3612** to be attached to the shaft **3700** of the surgical tool **3600** (collectively the "manipulatable surgical tool portion") that is operably coupled to the robotic system. The drive assembly **5680** includes a support yoke **5682** that is attached to the locking arm **5648**. Thus, the support yoke **5682** pivots with the locking arm **5648**. The support yoke **5682** rotatably supports a tube idler wheel **5684** and a tube drive wheel **5686** that is driven by a tube motor **5688** attached thereto. Tube motor **5688** communicates with the control system **1003** and is controlled thereby. The tube idler wheel **5684** and tube drive wheel **5686** are fabricated from, for example, natural rubber, sanoprene, isoplast, etc. such that the outer surfaces thereof create sufficient amount of friction to result in the rotation of an orientation tube **5660** in contact therewith upon activation of the tube motor **5688**. The idler wheel **5684** and tube drive wheel **5686** are oriented relative to each other to create a cradle area **5687** therebetween for receiving an orientation tube **5060** in driving engagement therein.

[0269] In use, one or more of the orientation tubes **5660** loaded in the automated reloading system **5600** are left empty, while the other orientation tubes **5660** may operably support a corresponding new disposable loading unit **3612** therein. As will be discussed in further detail below, the empty orientation tubes **5660** are employed to receive a spent disposable loading unit **3612** therein.

[0270] The automated reloading system **5600** may be employed as follows after the system **5600** is located within the work envelope of the manipulatable surgical tool portion of a robotic system. If the manipulatable surgical tool portion has a spent disposable loading unit **3612** operably coupled thereto, one of the orientation tubes **5660** that are supported on the replaceable tray **5662** is left empty to receive the spent disposable loading unit **3612** therein. If, however, the manipulatable surgical tool portion does not have a disposable loading unit **3612** operably coupled thereto, each of the orientation tubes **5660** may be provided with a properly oriented new disposable loading unit **3612**.

[0271] As described hereinabove, the disposable loading unit **3612** employs a rotary "bayonet-type" coupling arrangement for operably coupling the disposable loading unit **3612** to a corresponding portion of the manipulatable surgical tool portion. That is, to attach a disposable loading unit **3612** to the corresponding portion of the manipulatable surgical tool portion (**3700**—see FIG. **59**, **60**), a rotary installation motion must be applied to the disposable loading unit **3612** and/or the corresponding portion of the manipulatable surgical tool portion when those components have been moved into loading engagement with each other. Such installation motions are collectively referred to herein as "loading motions". Likewise, to decouple a spent disposable loading unit **3612** from the corresponding portion of the manipulatable surgical tool, a rotary decoupling motion must be applied to the spent disposable loading unit **3612** and/or the corresponding portion of the manipulatable surgical tool portion while simultaneously moving the spent disposable loading unit and the corresponding portion of the manipulatable surgical tool away from each other. Such decoupling motions are collectively referred to herein as "extraction motions".

[0272] To commence the loading process, the robotic system **1000** is activated to manipulate the manipulatable surgical tool portion and/or the automated reloading system **5600** to bring the manipulatable surgical tool portion into loading engagement with the new disposable loading unit **3612** that is supported in the orientation tube **5660** that is in driving engagement with the drive assembly **5680**. Once the robotic controller **1001** (FIG. **1**) of the robotic control system **1000** has located the manipulatable surgical tool portion in loading engagement with the new disposable loading unit **3612**, the robotic controller **1001** activates the drive assembly **5680** to apply a rotary loading motion to the orientation tube **5660** in which the new disposable loading unit **3612** is supported and/or applies another rotary loading motion to the corresponding portion of the manipulatable surgical tool portion. Upon application of such rotary loading motions(s), the robotic controller **1001** also causes the corresponding portion of the manipulatable surgical tool portion to be moved towards the new disposable loading unit **3612** into loading engagement therewith. Once the disposable loading unit **3612** is in loading engagement with the corresponding portion of the manipulatable tool portion, the loading motions are discontinued and the manipulatable surgical tool portion may be moved away from the automated reloading system **5600** carrying with it the new disposable loading unit **3612** that has been operably coupled thereto.

[0273] To decouple a spent disposable loading unit **3612** from a corresponding manipulatable surgical tool portion, the robotic controller **1001** of the robotic system manipulates the manipulatable surgical tool portion so as to insert the distal end of the spent disposable loading unit **3612** into the empty orientation tube **5660** that remains in driving engagement with the drive assembly **5680**. Thereafter, the robotic controller **1001** activates the drive assembly **5680** to apply a rotary extraction motion to the orientation tube **5660** in which the spent disposable loading unit **3612** is supported and/or applies a rotary extraction motion to the corresponding portion of the manipulatable surgical tool portion. The robotic controller **1001** also causes the manipulatable surgical tool portion to withdraw away from the spent rotary disposable loading unit **3612**. Thereafter the rotary extraction motion(s) are discontinued.

[0274] After the spent disposable loading unit **3612** has been removed from the manipulatable surgical tool portion, the robotic controller **1001** may activate the carrousel drive motor **5630** to index the carrousel top plate **5620** to bring another orientation tube **5660** that supports a new disposable

loading unit **3612** therein into driving engagement with the drive assembly **5680**. Thereafter, the loading process may be repeated to attach the new disposable loading unit **3612** therein to the portion of the manipulatable surgical tool portion. The robotic controller **1001** may record the number of disposable loading units that have been used from a particular replaceable tray **5652**. Once the controller **1001** determines that all of the new disposable loading units **3612** have been used from that tray, the controller **1001** may provide the surgeon with a signal (visual and/or audible) indicating that the tray **5652** supporting all of the spent disposable loading units **3612** must be replaced with a new tray **5652** containing new disposable loading units **3612**.

[0275] FIGS. **111-116** depict another non-limiting embodiment of a surgical tool **6000** of the present invention that is well-adapted for use with a robotic system **1000** that has a tool drive assembly **1010** (FIG. **6**) that is operatively coupled to a master controller **1001** that is operable by inputs from an operator (i.e., a surgeon). As can be seen in FIG. **111**, the surgical tool **6000** includes a surgical end effector **6012** that comprises an endocutter. In at least one form, the surgical tool **6000** generally includes an elongated shaft assembly **6008** that has a proximal closure tube **6040** and a distal closure tube **6042** that are coupled together by an articulation joint **6100**. The surgical tool **6000** is operably coupled to the manipulator by a tool mounting portion, generally designated as **6200**. The surgical tool **6000** further includes an interface **6030** which may mechanically and electrically couple the tool mounting portion **6200** to the manipulator in the various manners described in detail above.

[0276] In at least one embodiment, the surgical tool **6000** includes a surgical end effector **6012** that comprises, among other things, at least one component **6024** that is selectively movable between first and second positions relative to at least one other component **6022** in response to various control motions applied to component **6024** as will be discussed in further detail below to perform a surgical procedure. In various embodiments, component **6022** comprises an elongated channel **6022** configured to operably support a surgical staple cartridge **6034** therein and component **6024** comprises a pivotally translatable clamping member, such as an anvil **6024**. Various embodiments of the surgical end effector **6012** are configured to maintain the anvil **6024** and elongated channel **6022** at a spacing that assures effective stapling and severing of tissue clamped in the surgical end effector **6012**. Unless otherwise stated, the end effector **6012** is similar to the surgical end effector **2012** described above and includes a cutting instrument (not shown) and a sled (not shown). The anvil **6024** may include a tab **6027** at its proximal end that interacts with a component of the mechanical closure system (described further below) to facilitate the opening of the anvil **6024**. The elongated channel **6022** and the anvil **6024** may be made of an electrically conductive material (such as metal) so that they may serve as part of an antenna that communicates with sensor(s) in the end effector, as described above. The surgical staple cartridge **6034** could be made of a nonconductive material (such as plastic) and the sensor may be connected to or disposed in the surgical staple cartridge **6034**, as was also described above.

[0277] As can be seen in FIG. **111**, the surgical end effector **6012** is attached to the tool mounting portion **6200** by the elongated shaft assembly **6008** according to various embodiments. As shown in the illustrated embodiment, the elongated shaft assembly **6008** includes an articulation joint generally designated as **6100** that enables the surgical end effector **6012** to be selectively articulated about a first tool articulation axis AA**1**-AA**1** that is substantially transverse to a longitudinal tool axis LT-LT and a second tool articulation axis AA**2**-AA**2** that is substantially transverse to the longitudinal tool axis LT-LT as well as the first articulation axis AA**1**-AA**1**. See FIG. **112**. In various embodiments, the elongated shaft assembly **6008** includes a closure tube assembly **6009** that comprises a proximal closure tube **6040** and a distal closure tube **6042** that are pivotably linked by a pivot links **6044** and **6046**. The closure tube assembly **6009** is movably supported on a spine assembly generally designated as **6102**.

[0278] As can be seen in FIG. **113**, the proximal closure tube **6040** is pivotally linked to an intermediate closure tube joint **6043** by an upper pivot link **6044**U and a lower pivot link **6044**L such that the intermediate closure tube joint **6043** is pivotable relative to the proximal closure tube **6040** about a first closure axis CA**1**-CA**1** and a second closure axis CA**2**-CA**2**. In various embodiments, the first closure axis CA**1**-CA**1** is substantially parallel to the second closure axis CA**2**-CA**2** and both closure axes CA**1**-CA**1**, CA**2**-CA**2** are substantially transverse to the longitudinal tool axis LT-LT. As can be further seen in FIG. **134**, the intermediate closure tube joint **6043** is pivotally linked to the distal closure tube **6042** by a left pivot link **6046**L and a right pivot link **6046**R such that the intermediate closure tube joint **6043** is pivotable relative to the distal closure tube **6042** about a third closure axis CA**3**-CA**3** and a fourth closure axis CA**4**-CA**4**. In various embodiments, the third closure axis CA**3**-CA**3** is substantially parallel to the fourth closure axis CA**4**-CA**4** and both closure axes CA**3**-CA**3**, CA**4**-CA**4** are substantially transverse to the first and second closure axes CA**1**-CA**1**, CA**2**-CA**2** as well as to longitudinal tool axis LT-LT.

[0279] The closure tube assembly **6009** is configured to axially slide on the spine assembly **6102** in response to actuation motions applied thereto. The distal closure tube **6042** includes an opening **6045** which interfaces with the tab **6027** on the anvil **6024** to facilitate opening of the anvil **6024** as the distal closure tube **6042** is moved axially in the proximal direction "PD". The closure tubes **6040**, **6042** may be made of electrically conductive material (such as metal) so that they may serve as part of the antenna, as described above. Components of the spine assembly **6102** may be made of a nonconductive material (such as plastic).

[0280] As indicated above, the surgical tool **6000** includes a tool mounting portion **6200** that is configured for operable attachment to the tool mounting assembly **1010** of the robotic system **1000** in the various manners described in detail above. As can be seen in FIG. **115**, the tool mounting portion **6200** comprises a tool mounting plate **6202** that operably supports a transmission arrangement **6204** thereon. In various embodiments, the transmission arrangement **6204** includes an articulation transmission **6142** that comprises a portion of an articulation system **6140** for articulating the surgical end effector **6012** about a first tool articulation axis TA**1**-TA**1** and a second tool articulation axis TA**2**-TA**2**. The first tool articulation axis TA**1**-TA**1** is substantially transverse to the second tool articulation axis TA**2**-TA**2** and both of the first and second tool articulation axes are substantially transverse to the longitudinal tool axis LT-LT. See FIG. **112**.

[0281] To facilitate selective articulation of the surgical end effector **6012** about the first and second tool articulation axes TA**1**-TA**1**, TA**2**-TA**2**, the spine assembly **6102** comprises a proximal spine portion **6110** that is pivotally coupled to a distal spine portion **6120** by pivot pins **6122** for selective pivotal travel about TA**1**-TA**1**. Similarly, the distal spine portion **6120** is pivotally attached to the elongated channel **6022** of the surgical end effector **6012** by pivot pins **6124** to enable the surgical end effector **6012** to selectively pivot about the second tool axis TA**2**-TA**2** relative to the distal spine portion **6120**.

[0282] In various embodiments, the articulation system **6140** further includes a plurality of articulation elements that operably interface with the surgical end effector **6012** and an articulation control arrangement **6160** that is operably supported in the tool mounting member **6200** as will described in further detail below. In at least one embodiment, the articulation elements comprise a first pair of first articulation cables **6144** and **6146**. The first articulation cables are located on a first or right side of the longitudinal tool axis. Thus, the first articulation cables are referred to herein as a right upper cable **6144** and a right lower cable **6146**. The right upper cable **6144** and the right lower cable **6146** extend through corresponding passages **6147**, **6148**, respectively along the right side of the proximal spine portion **6110**. See FIG. **137**. The articulation system **6140** further includes a second pair of second articulation cables **6150**, **6152**. The second articulation cables are located on a second or left side of the longitudinal tool axis. Thus, the second articulation cables are referred to herein as a left upper articulation cable **6150** and a left articulation cable **6152**. The left upper articulation cable **6150** and the left lower articulation cable **6152** extend through passages **6153**, **6154**, respectively in the proximal spine portion **6110**.

[0283] As can be seen in FIG. **112**, the right upper cable **6144** extends around an upper pivot joint **6123** and is attached to a left upper side of the elongated channel **6022** at a left pivot joint **6125**. The right lower cable **6146** extends around a lower pivot joint **6126** and is attached to a left lower side of the elongated channel **6022** at left pivot joint **6125**. The left upper cable **6150** extends around the upper pivot joint **6123** and is attached to a right upper side of the elongated channel **6022** at a right pivot joint **6127**. The left lower cable **6152** extends around the lower pivot joint **6126** and is attached to a right lower side of the elongated channel **6022** at right pivot joint **6127**. Thus, to pivot the surgical end effector **6012** about the first tool articulation axis TA**1**-TA**1** to the left (arrow "L"), the right upper cable **6144** and the right lower cable **6146** must be pulled in the proximal direction "PD". To articulate the surgical end effector **6012** to the right (arrow "R") about the first tool articulation axis TA**1**-TA**1**, the left upper cable **6150** and the left lower cable **6152** must be pulled in the proximal direction "PD". To articulate the surgical end effector **6012** about the second tool articulation axis TA**2**-TA**2**, in an upward direction (arrow "U"), the right upper cable **6144** and the left upper cable **6150** must be pulled in the proximal direction "PD". To articulate the surgical end effector **6012** in the downward direction (arrow "DW") about the second tool articulation axis TA**2**-TA**2**, the right lower cable **6146** and the left lower cable **6152** must be pulled in the proximal direction "PD".

[0284] The proximal ends of the articulation cables **6144**, **6146**, **6150**, **6152** are coupled to the articulation control arrangement **6160** which comprises a ball joint assembly that is a part of the articulation transmission **6142**. More specifically and with reference to FIG. **116**, the ball joint assembly **6160** includes a ball-shaped member **6162** that is formed on a proximal portion of the proximal spine **6110**. Movably supported on the ball-shaped member **6162** is an articulation control ring **6164**. As can be further seen in FIG. **116**, the proximal ends of the articulation cables **6144**, **6146**, **6150**, **6152** are coupled to the articulation control ring **6164** by corresponding ball joint arrangements **6166**. The articulation control ring **6164** is controlled by an articulation drive assembly **6170**. As can be most particularly seen in FIG. **116**, the proximal ends of the first articulation cables **6144**, **6146** are attached to the articulation control ring **6164** at corresponding spaced first points **6149**, **6151** that are located on plane **6159**. Likewise, the proximal ends of the second articulation cables **6150**, **6152** are attached to the articulation control ring **6164** at corresponding spaced second points **6153**, **6155** that are also located along plane **6159**. As the present Detailed Description proceeds, those of ordinary skill in the art will appreciate that such cable attachment configuration on the articulation control ring **6164** facilitates the desired range of articulation motions as the articulation control ring **6164** is manipulated by the articulation drive assembly **6170**.

[0285] In various forms, the articulation drive assembly **6170** comprises a horizontal articulation assembly generally designated as **6171**. In at least one form, the horizontal articulation assembly **6171** comprises a horizontal push cable **6172** that is attached to a horizontal gear arrangement **6180**. The articulation drive assembly **6170** further comprises a vertically articulation assembly generally designated as **6173**. In at least one form, the vertical articulation assembly **6173** comprises a vertical push cable **6174** that is attached to a vertical gear arrangement **6190**. As can be seen in FIGS. **115** and **116**, the horizontal push cable **6172** extends through a support plate **6167** that is attached to the proximal spine portion **6110**. The distal end of the horizontal push cable **6174** is attached to the articulation control ring **6164** by a corresponding ball/pivot joint **6168**. The vertical push cable **6174** extends through the support plate **6167** and the distal end thereof is attached to the articulation control ring **6164** by a corresponding ball/pivot joint **6169**.

[0286] The horizontal gear arrangement **6180** includes a horizontal driven gear **6182** that is pivotally mounted on a horizontal shaft **6181** that is attached to a proximal portion of the proximal spine portion **6110**. The proximal end of the horizontal push cable **6172** is pivotally attached to the horizontal driven gear **6182** such that, as the horizontal driven gear **6172** is rotated about horizontal pivot axis HA, the horizontal push cable **6172** applies a first pivot motion to the articulation control ring **6164**. Likewise, the vertical gear arrangement **6190** includes a vertical driven gear **6192** that is pivotally supported on a vertical shaft **6191** attached to the proximal portion of the proximal spine portion **6110** for pivotal travel about a vertical pivot axis VA. The proximal end of the vertical push cable **6174** is pivotally attached to the vertical driven gear **6192** such that as the vertical driven gear **6192** is rotated about vertical pivot axis VA, the vertical push cable **6174** applies a second pivot motion to the articulation control ring **6164**.

[0287] The horizontal driven gear **6182** and the vertical driven gear **6192** are driven by an articulation gear train **6300** that operably interfaces with an articulation shifter assembly **6320**. In at least one form, the articulation shifter

assembly comprises an articulation drive gear **6322** that is coupled to a corresponding one of the driven discs or elements **1304** on the adapter side **1307** of the tool mounting plate **6202**. See FIG. **10**. Thus, application of a rotary input motion from the robotic system **1000** through the tool drive assembly **1010** to the corresponding driven element **1304** will cause rotation of the articulation drive gear **6322** when the interface **1230** is coupled to the tool holder **1270**. An articulation driven gear **6324** is attached to a splined shifter shaft **6330** that is rotatably supported on the tool mounting plate **6202**. The articulation driven gear **6324** is in meshing engagement with the articulation drive gear **6322** as shown. Thus, rotation of the articulation drive gear **6322** will result in the rotation of the shaft **6330**. In various forms, a shifter driven gear assembly **6340** is movably supported on the splined portion **6332** of the shifter shaft **6330**.

[0288] In various embodiments, the shifter driven gear assembly **6340** includes a driven shifter gear **6342** that is attached to a shifter plate **6344**. The shifter plate **6344** operably interfaces with a shifter solenoid assembly **6350**. The shifter solenoid assembly **6350** is coupled to corresponding pins **6352** by conductors **6352**. See FIG. **115**. Pins **6352** are oriented to electrically communicate with slots **1258** (FIG. **9**) on the tool side **1244** of the adaptor **1240**. Such arrangement serves to electrically couple the shifter solenoid assembly **6350** to the robotic controller **1001**. Thus, activation of the shifter solenoid **6350** will shift the shifter driven gear assembly **6340** on the splined portion **6332** of the shifter shaft **6330** as represented by arrow "S" in FIGS. **115** and **116**. Various embodiments of the articulation gear train **6300** further include a horizontal gear assembly **6360** that includes a first horizontal drive gear **6362** that is mounted on a shaft **6361** that is rotatably attached to the tool mounting plate **6202**. The first horizontal drive gear **6362** is supported in meshing engagement with a second horizontal drive gear **6364**. As can be seen in FIG. **116**, the horizontal driven gear **6182** is in meshing engagement with the distal face portion **6365** of the second horizontal driven gear **6364**.

[0289] Various embodiments of the articulation gear train **6300** further include a vertical gear assembly **6370** that includes a first vertical drive gear **6372** that is mounted on a shaft **6371** that is rotatably supported on the tool mounting plate **6202**. The first vertical drive gear **6372** is supported in meshing engagement with a second vertical drive gear **6374** that is concentrically supported with the second horizontal drive gear **6364**. The second vertical drive gear **6374** is rotatably supported on the proximal spine portion **6110** for travel therearound. The second horizontal drive gear **6364** is rotatably supported on a portion of said second vertical drive gear **6374** for independent rotatable travel thereon. As can be seen in FIG. **116**, the vertical driven gear **6192** is in meshing engagement with the distal face portion **6375** of the second vertical driven gear **6374**.

[0290] In various forms, the first horizontal drive gear **6362** has a first diameter and the first vertical drive gear **6372** has a second diameter. As can be seen in FIGS. **115** and **116**, the shaft **6361** is not on a common axis with shaft **6371**. That is, the first horizontal driven gear **6362** and the first vertical driven gear **6372** do not rotate about a common axis. Thus, when the shifter gear **6342** is positioned in a center "locking" position such that the shifter gear **6342** is in meshing engagement with both the first horizontal driven gear **6362** and the first vertical drive gear **6372**, the components of the articulation system **6140** are locked in position. Thus, the shiftable shifter gear **6342** and the arrangement of first horizontal and vertical drive gears **6362**, **6372** as well as the articulation shifter assembly **6320** collectively may be referred to as an articulation locking system, generally designated as **6380**.

[0291] In use, the robotic controller **1001** of the robotic system **1000** may control the articulation system **6140** as follows. To articulate the end effector **6012** to the left about the first tool articulation axis TA**1**-TA**1**, the robotic controller **1001** activates the shifter solenoid assembly **6350** to bring the shifter gear **6342** into meshing engagement with the first horizontal drive gear **6362**. Thereafter, the controller **1001** causes a first rotary output motion to be applied to the articulation drive gear **6322** to drive the shifter gear in a first direction to ultimately drive the horizontal driven gear **6182** in another first direction. The horizontal driven gear **6182** is driven to pivot the articulation ring **6164** on the ball-shaped portion **6162** to thereby pull right upper cable **6144** and the right lower cable **6146** in the proximal direction "PD". To articulate the end effector **6012** to the right about the first tool articulation axis TA**1**-TA**1**, the robotic controller **1001** activates the shifter solenoid assembly **6350** to bring the shifter gear **6342** into meshing engagement with the first horizontal drive gear **6362**. Thereafter, the controller **1001** causes the first rotary output motion in an opposite direction to be applied to the articulation drive gear **6322** to drive the shifter gear **6342** in a second direction to ultimately drive the horizontal driven gear **6182** in another second direction. Such actions result in the articulation control ring **6164** moving in such a manner as to pull the left upper cable **6150** and the left lower cable **6152** in the proximal direction "PD". In various embodiments the gear ratios and frictional forces generated between the gears of the vertical gear assembly **6370** serve to prevent rotation of the vertical driven gear **6192** as the horizontal gear assembly **6360** is actuated.

[0292] To articulate the end effector **6012** in the upper direction about the second tool articulation axis TA**2**-TA**2**, the robotic controller **1001** activates the shifter solenoid assembly **6350** to bring the shifter gear **6342** into meshing engagement with the first vertical drive gear **6372**. Thereafter, the controller **1001** causes the first rotary output motion to be applied to the articulation drive gear **6322** to drive the shifter gear **6342** in a first direction to ultimately drive the vertical driven gear **6192** in another first direction. The vertical driven gear **6192** is driven to pivot the articulation ring **6164** on the ball-shaped portion **6162** of the proximal spine portion **6110** to thereby pull right upper cable **6144** and the left upper cable **6150** in the proximal direction "PD". To articulate the end effector **6012** in the downward direction about the second tool articulation axis TA**2**-TA**2**, the robotic controller **1001** activates the shifter solenoid assembly **6350** to bring the shifter gear **6342** into meshing engagement with the first vertical drive gear **6372**. Thereafter, the controller **1001** causes the first rotary output motion to be applied in an opposite direction to the articulation drive gear **6322** to drive the shifter gear **6342** in a second direction to ultimately drive the vertical driven gear **6192** in another second direction. Such actions thereby cause the articulation control ring **6164** to pull the right lower cable **6146** and the left lower cable **6152** in the proximal direction "PD". In various embodiments, the gear ratios and frictional forces generated between the gears of

the horizontal gear assembly **6360** serve to prevent rotation of the horizontal driven gear **6182** as the vertical gear assembly **6370** is actuated.

[0293] In various embodiments, a variety of sensors may communicate with the robotic controller **1001** to determine the articulated position of the end effector **6012**. Such sensors may interface with, for example, the articulation joint **6100** or be located within the tool mounting portion **6200**. For example, sensors may be employed to detect the position of the articulation control ring **6164** on the ball-shaped portion **6162** of the proximal spine portion **6110**. Such feedback from the sensors to the controller **1001** permits the controller **1001** to adjust the amount of rotation and the direction of the rotary output to the articulation drive gear **6322**. Further, as indicated above, when the shifter drive gear **6342** is centrally positioned in meshing engagement with the first horizontal drive gear **6362** and the first vertical drive gear **6372**, the end effector **6012** is locked in the articulated position. Thus, after the desired amount of articulation has been attained, the controller **1001** may activate the shifter solenoid assembly **6350** to bring the shifter gear **6342** into meshing engagement with the first horizontal drive gear **6362** and the first vertical drive gear **6372**. In alternative embodiments, the shifter solenoid assembly **6350** may be spring activated to the central locked position.

[0294] In use, it may be desirable to rotate the surgical end effector **6012** about the longitudinal tool axis LT-LT. In at least one embodiment, the transmission arrangement **6204** on the tool mounting portion includes a rotational transmission assembly **6400** that is configured to receive a corresponding rotary output motion from the tool drive assembly **1010** of the robotic system **1000** and convert that rotary output motion to a rotary control motion for rotating the elongated shaft assembly **6008** (and surgical end effector **6012**) about the longitudinal tool axis LT-LT. In various embodiments, for example, a proximal end portion **6041** of the proximal closure tube **6040** is rotatably supported on the tool mounting plate **6202** of the tool mounting portion **6200** by a forward support cradle **6205** and a closure sled **6510** that is also movably supported on the tool mounting plate **6202**. In at least one form, the rotational transmission assembly **6400** includes a tube gear segment **6402** that is formed on (or attached to) the proximal end **6041** of the proximal closure tube **6040** for operable engagement by a rotational gear assembly **6410** that is operably supported on the tool mounting plate **6202**. As can be seen in FIG. **115**, the rotational gear assembly **6410**, in at least one embodiment, comprises a rotation drive gear **6412** that is coupled to a corresponding second one of the driven discs or elements **1304** on the adapter side **1307** of the tool mounting plate **6202** when the tool mounting portion **6200** is coupled to the tool drive assembly **1010**. See FIG. **10**. The rotational gear assembly **6410** further comprises a first rotary driven gear **6414** that is rotatably supported on the tool mounting plate **6202** in meshing engagement with the rotation drive gear **6412**. The first rotary driven gear **6414** is attached to a drive shaft **6416** that is rotatably supported on the tool mounting plate **6202**. A second rotary driven gear **6418** is attached to the drive shaft **6416** and is in meshing engagement with tube gear segment **6402** on the proximal closure tube **6040**. Application of a second rotary output motion from the tool drive assembly **1010** of the robotic system **1000** to the corresponding driven element **1304** will thereby cause rotation of the rotation drive gear **6412**. Rotation of the rotation drive gear **6412** ultimately results in the rotation of the elongated shaft assembly **6008** (and the surgical end effector **6012**) about the longitudinal tool axis LT-LT. It will be appreciated that the application of a rotary output motion from the tool drive assembly **1010** in one direction will result in the rotation of the elongated shaft assembly **6008** and surgical end effector **6012** about the longitudinal tool axis LT-LT in a first direction and an application of the rotary output motion in an opposite direction will result in the rotation of the elongated shaft assembly **6008** and surgical end effector **6012** in a second direction that is opposite to the first direction.

[0295] In at least one embodiment, the closure of the anvil **2024** relative to the staple cartridge **2034** is accomplished by axially moving a closure portion of the elongated shaft assembly **2008** in the distal direction "DD" on the spine assembly **2049**. As indicated above, in various embodiments, the proximal end portion **6041** of the proximal closure tube **6040** is supported by the closure sled **6510** which comprises a portion of a closure transmission, generally depicted as **6512**. As can be seen in FIG. **115**, the proximal end portion **6041** of the proximal closure tube portion **6040** has a collar **6048** formed thereon. The closure sled **6510** is coupled to the collar **6048** by a yoke **6514** that engages an annular groove **6049** in the collar **6048**. Such arrangement serves to enable the collar **6048** to rotate about the longitudinal tool axis LT-LT while still being coupled to the closure transmission **6512**. In various embodiments, the closure sled **6510** has an upstanding portion **6516** that has a closure rack gear **6518** formed thereon. The closure rack gear **6518** is configured for driving engagement with a closure gear assembly **6520**. See FIG. **115**.

[0296] In various forms, the closure gear assembly **6520** includes a closure spur gear **6522** that is coupled to a corresponding second one of the driven discs or elements **1304** on the adapter side **1307** of the tool mounting plate **6202**. See FIG. **10**. Thus, application of a third rotary output motion from the tool drive assembly **1010** of the robotic system **1000** to the corresponding second driven element **1304** will cause rotation of the closure spur gear **6522** when the tool mounting portion **6202** is coupled to the tool drive assembly **1010**. The closure gear assembly **6520** further includes a closure reduction gear set **6524** that is supported in meshing engagement with the closure spur gear **6522** and the closure rack gear **2106**. Thus, application of a third rotary output motion from the tool drive assembly **1010** of the robotic system **1000** to the corresponding second driven element **1304** will cause rotation of the closure spur gear **6522** and the closure transmission **6512** and ultimately drive the closure sled **6510** and the proximal closure tube **6040** axially on the proximal spine portion **6110**. The axial direction in which the proximal closure tube **6040** moves ultimately depends upon the direction in which the third driven element **1304** is rotated. For example, in response to one rotary output motion received from the tool drive assembly **1010** of the robotic system **1000**, the closure sled **6510** will be driven in the distal direction "DD" and ultimately drive the proximal closure tube **6040** in the distal direction "DD". As the proximal closure tube **6040** is driven distally, the distal closure tube **6042** is also driven distally by virtue of it connection with the proximal closure tube **6040**. As the distal closure tube **6042** is driven distally, the end of the closure tube **6042** will engage a portion of the anvil **6024**

and cause the anvil **6024** to pivot to a closed position. Upon application of an "opening" out put motion from the tool drive assembly **1010** of the robotic system **1000**, the closure sled **6510** and the proximal closure tube **6040** will be driven in the proximal direction "PD" on the proximal spine portion **6110**. As the proximal closure tube **6040** is driven in the proximal direction "PD", the distal closure tube **6042** will also be driven in the proximal direction "PD". As the distal closure tube **6042** is driven in the proximal direction "PD", the opening **6045** therein interacts with the tab **6027** on the anvil **6024** to facilitate the opening thereof. In various embodiments, a spring (not shown) may be employed to bias the anvil **6024** to the open position when the distal closure tube **6042** has been moved to its starting position. In various embodiments, the various gears of the closure gear assembly **6520** are sized to generate the necessary closure forces needed to satisfactorily close the anvil **6024** onto the tissue to be cut and stapled by the surgical end effector **6012**. For example, the gears of the closure transmission **6520** may be sized to generate approximately 70-120 pounds of closure forces.

[0297] In various embodiments, the cutting instrument is driven through the surgical end effector **6012** by a knife bar **6530**. See FIG. **115**. In at least one form, the knife bar **6530** is fabricated with a joint arrangement (not shown) and/or is fabricated from material that can accommodate the articulation of the surgical end effector **6102** about the first and second tool articulation axes while remaining sufficiently rigid so as to push the cutting instrument through tissue clamped in the surgical end effector **6012**. The knife bar **6530** extends through a hollow passage **6532** in the proximal spine portion **6110**.

[0298] In various embodiments, a proximal end **6534** of the knife bar **6530** is rotatably affixed to a knife rack gear **6540** such that the knife bar **6530** is free to rotate relative to the knife rack gear **6540**. The distal end of the knife bar **6530** is attached to the cutting instrument in the various manners described above. As can be seen in FIG. **115**, the knife rack gear **6540** is slidably supported within a rack housing **6542** that is attached to the tool mounting plate **6202** such that the knife rack gear **6540** is retained in meshing engagement with a knife drive transmission portion **6550** of the transmission arrangement **6204**. In various embodiments, the knife drive transmission portion **6550** comprises a knife gear assembly **6560**. More specifically and with reference to FIG. **115**, in at least one embodiment, the knife gear assembly **6560** includes a knife spur gear **6562** that is coupled to a corresponding fourth one of the driven discs or elements **1304** on the adapter side **1307** of the tool mounting plate **6202**. See FIG. **10**. Thus, application of another rotary output motion from the robotic system **1000** through the tool drive assembly **1010** to the corresponding fourth driven element **1304** will cause rotation of the knife spur gear **6562**. The knife gear assembly **6560** further includes a knife gear reduction set **6564** that includes a first knife driven gear **6566** and a second knife drive gear **6568**. The knife gear reduction set **6564** is rotatably mounted to the tool mounting plate **6202** such that the firs knife driven gear **6566** is in meshing engagement with the knife spur gear **6562**. Likewise, the second knife drive gear **6568** is in meshing engagement with a third knife drive gear assembly **6570**. As shown in FIG. **115**, the second knife driven gear **6568** is in meshing engagement with a fourth knife driven gear **6572** of the third knife drive gear assembly **6570**. The fourth knife driven gear **6572** is in meshing engagement with a fifth knife driven gear assembly **6574** that is in meshing engagement with the knife rack gear **6540**. In various embodiments, the gears of the knife gear assembly **6560** are sized to generate the forces needed to drive the cutting instrument through the tissue clamped in the surgical end effector **6012** and actuate the staples therein. For example, the gears of the knife gear assembly **6560** may be sized to generate approximately 40 to 100 pounds of driving force. It will be appreciated that the application of a rotary output motion from the tool drive assembly **1010** in one direction will result in the axial movement of the cutting instrument in a distal direction and application of the rotary output motion in an opposite direction will result in the axial travel of the cutting instrument in a proximal direction.

[0299] As can be appreciated from the foregoing description, the surgical tool **6000** represents a vast improvement over prior robotic tool arrangements. The unique and novel transmission arrangement employed by the surgical tool **6000** enables the tool to be operably coupled to a tool holder portion **1010** of a robotic system that only has four rotary output bodies, yet obtain the rotary output motions therefrom to: (i) articulate the end effector about two different articulation axes that are substantially transverse to each other as well as the longitudinal tool axis; (ii) rotate the end effector **6012** about the longitudinal tool axis; (iii) close the anvil **6024** relative to the surgical staple cartridge **6034** to varying degrees to enable the end effector **6012** to be used to manipulate tissue and then clamp it into position for cutting and stapling; and (iv) firing the cutting instrument to cut through the tissue clamped within the end effector **6012**. The unique and novel shifter arrangements of various embodiments of the present invention described above enable two different articulation actions to be powered from a single rotatable body portion of the robotic system.

[0300] The various embodiments of the present invention have been described above in connection with cutting-type surgical instruments. It should be noted, however, that in other embodiments, the inventive surgical instrument disclosed herein need not be a cutting-type surgical instrument, but rather could be used in any type of surgical instrument including remote sensor transponders. For example, it could be a non-cutting endoscopic instrument, a grasper, a stapler, a clip applier, an access device, a drug/gene therapy delivery device, an energy device using ultrasound, RF, laser, etc. In addition, the present invention may be in laparoscopic instruments, for example. The present invention also has application in conventional endoscopic and open surgical instrumentation as well as robotic-assisted surgery.

[0301] FIG. **117** depicts use of various aspects of certain embodiments of the present invention in connection with a surgical tool **7000** that has an ultrasonically powered end effector **7012**. The end effector **7012** is operably attached to a tool mounting portion **7100** by an elongated shaft assembly **7008**. The tool mounting portion **7100** may be substantially similar to the various tool mounting portions described hereinabove. In one embodiment, the end effector **7012** includes an ultrasonically powered jaw portion **7014** that is powered by alternating current or direct current in a known manner. Such ultrasonically-powered devices are disclosed, for example, in U.S. Pat. No. 6,783,524, entitled ROBOTIC SURGICAL TOOL WITH ULTRASOUND CAUTERIZING AND CUTTING INSTRUMENT, the entire disclosure of which is herein incorporated by reference. In the illus-

trated embodiment, a separate power cord **7020** is shown. It will be understood, however, that the power may be supplied thereto from the robotic controller **1001** through the tool mounting portion **7100**. The surgical end effector **7012** further includes a movable jaw **7016** that may be used to clamp tissue onto the ultrasonic jaw portion **7014**. The movable jaw portion **7016** may be selectively actuated by the robotic controller **1001** through the tool mounting portion **7100** in anyone of the various manners herein described.

[0302] FIG. **118** illustrates use of various aspects of certain embodiments of the present invention in connection with a surgical tool **8000** that has an end effector **8012** that comprises a linear stapling device. The end effector **8012** is operably attached to a tool mounting portion **8100** by an elongated shaft assembly **3700** of the type and construction describe above. However, the end effector **8012** may be attached to the tool mounting portion **8100** by a variety of other elongated shaft assemblies described herein. In one embodiment, the tool mounting portion **8100** may be substantially similar to tool mounting portion **3750**. However, various other tool mounting portions and their respective transmission arrangements describe in detail herein may also be employed. Such linear stapling head portions are also disclosed, for example, in U.S. Pat. No. 7,673,781, entitled SURGICAL STAPLING DEVICE WITH STAPLE DRIVER THAT SUPPORTS MULTIPLE WIRE DIAMETER STAPLES, the entire disclosure of which is herein incorporated by reference.

[0303] Various sensor embodiments described in U.S. Patent Application Publication No. 2011/0062212, now U.S. Pat. No. 8,167,185, the disclosure of which is herein incorporated by reference in its entirety, may be employed with many of the surgical tool embodiments disclosed herein. As was indicated above, the master controller **1001** generally includes master controllers (generally represented by **1003**) which are grasped by the surgeon and manipulated in space while the surgeon views the procedure via a stereo display **1002**. See FIG. **1**. The master controllers **1001** are manual input devices which preferably move with multiple degrees of freedom, and which often further have an actuatable handle for actuating the surgical tools. Some of the surgical tool embodiments disclosed herein employ a motor or motors in their tool drive portion to supply various control motions to the tool's end effector. Such embodiments may also obtain additional control motion(s) from the motor arrangement employed in the robotic system components. Other embodiments disclosed herein obtain all of the control motions from motor arrangements within the robotic system.

[0304] Such motor powered arrangements may employ various sensor arrangements that are disclosed in the published U.S. patent application cited above to provide the surgeon with a variety of forms of feedback without departing from the spirit and scope of the present invention. For example, those master controller arrangements **1003** that employ a manually actuatable firing trigger can employ run motor sensor(s) to provide the surgeon with feedback relating to the amount of force applied to or being experienced by the cutting member. The run motor sensor(s) may be configured for communication with the firing trigger portion to detect when the firing trigger portion has been actuated to commence the cutting/stapling operation by the end effector. The run motor sensor may be a proportional sensor such as, for example, a rheostat or variable resistor. When the firing trigger is drawn in, the sensor detects the movement, and sends an electrical signal indicative of the voltage (or power) to be supplied to the corresponding motor. When the sensor is a variable resistor or the like, the rotation of the motor may be generally proportional to the amount of movement of the firing trigger. That is, if the operator only draws or closes the firing trigger in a small amount, the rotation of the motor is relatively low. When the firing trigger is fully drawn in (or in the fully closed position), the rotation of the motor is at its maximum. In other words, the harder the surgeon pulls on the firing trigger, the more voltage is applied to the motor causing greater rates of rotation. Other arrangements may provide the surgeon with a feed back meter **1005** that may be viewed through the display **1002** and provide the surgeon with a visual indication of the amount of force being applied to the cutting instrument or dynamic clamping member. Other sensor arrangements may be employed to provide the master controller **1001** with an indication as to whether a staple cartridge has been loaded into the end effector, whether the anvil has been moved to a closed position prior to firing, etc.

[0305] In alternative embodiments, a motor-controlled interface may be employed in connection with the controller **1001** that limit the maximum trigger pull based on the amount of loading (e.g., clamping force, cutting force, etc.) experienced by the surgical end effector. For example, the harder it is to drive the cutting instrument through the tissue clamped within the end effector, the harder it would be to pull/actuate the activation trigger. In still other embodiments, the trigger on the controller **1001** is arranged such that the trigger pull location is proportionate to the end effector-location/condition. For example, the trigger is only fully depressed when the end effector is fully fired.

[0306] The devices disclosed herein can be designed to be disposed of after a single use, or they can be designed to be used multiple times. In either case, however, the device can be reconditioned for reuse after at least one use. Reconditioning can include any combination of the steps of disassembly of the device, followed by cleaning or replacement of particular pieces, and subsequent reassembly. In particular, the device can be disassembled, and any number of the particular pieces or parts of the device can be selectively replaced or removed in any combination. Upon cleaning and/or replacement of particular parts, the device can be reassembled for subsequent use either at a reconditioning facility, or by a surgical team immediately prior to a surgical procedure. Those skilled in the art will appreciate that reconditioning of a device can utilize a variety of techniques for disassembly, cleaning/replacement, and reassembly. Use of such techniques, and the resulting reconditioned device, are all within the scope of the present application.

[0307] Although the present invention has been described herein in connection with certain disclosed embodiments, many modifications and variations to those embodiments may be implemented. For example, different types of end effectors may be employed. Also, where materials are disclosed for certain components, other materials may be used. The foregoing description and following claims are intended to cover all such modification and variations.

[0308] Any patent, publication, or other disclosure material, in whole or in part, that is said to be incorporated by reference herein is incorporated herein only to the extent that the incorporated materials does not conflict with existing definitions, statements, or other disclosure material set forth in this disclosure. As such, and to the extent necessary, the

disclosure as explicitly set forth herein supersedes any conflicting material incorporated herein by reference. Any material, or portion thereof, that is said to be incorporated by reference herein, but which conflicts with existing definitions, statements, or other disclosure material set forth herein will only be incorporated to the extent that no conflict arises between that incorporated material and the existing disclosure material.

1-20. (canceled)

21. A surgical tool, comprising:

an end effector movable between an open configuration and a closed configuration, wherein the end effector comprises:

an elongate channel, wherein a cavity is defined in the elongate channel; and

an anvil;

a firing beam movable through the end effector during a staple firing motion, wherein the firing beam comprises:

a web;

a first cam extending from the web, wherein the first cam is positioned and structured to engage the elongate channel;

a second cam extending from the web, wherein the second cam is positioned and structured to engage the anvil; and

an arm mounted to the firing beam, wherein the arm is movable with the firing beam during the staple firing motion and is selectively movable into the cavity.

22. The surgical tool of claim **21**, wherein the arm is selectively pivotable into the cavity.

23. The surgical tool of claim **22**, wherein the arm is pivotable about a fixed pivot.

24. The surgical tool of claim **21**, wherein the arm comprises a distal-facing surface positionable to engage the cavity.

25. The surgical tool of claim **24**, wherein the cavity comprises an end wall positioned to exert a force on the distal-facing surface when the arm is positioned in the cavity and the firing beam is being advanced distally.

26. The surgical tool of claim **24**, wherein the arm comprises a first arm, wherein the firing beam further comprises a second arm, and wherein the first arm and the second arm are movable independently.

27. The surgical tool of claim **21**, wherein the firing beam further comprises a knife.

28. The surgical tool of claim **21**, wherein the firing beam further comprises a distal wedge.

29. The surgical tool of claim **21**, wherein the firing beam further defines an internally-threaded longitudinal bore.

30. A surgical tool, comprising:

an end effector movable between an open configuration and a closed configuration, wherein the end effector comprises:

a first jaw, wherein a cavity is defined in the first jaw; and

a second jaw;

an actuator movable through the end effector during a staple firing motion, wherein the actuator comprises:

a body;

a first cam extending from the body, wherein the first cam is positioned and structured to engage the first jaw;

a second cam extending from the body, wherein the second cam is positioned and structured to engage the second jaw; and

an arm movably mounted to the actuator, wherein the arm is movable with the actuator during the staple firing motion, and wherein at least a portion of the arm is selectively movable into the cavity.

31. The surgical tool of claim **30**, wherein at least the portion of the arm is selectively movable relative to the actuator about a pivot.

32. The surgical tool of claim **31**, wherein the pivot comprises a fixed pivot.

33. The surgical tool of claim **30**, wherein the arm comprises a distal-facing surface positionable to engage the cavity, and wherein the body further comprises a distal-facing knife edge.

34. The surgical tool of claim **33**, wherein the cavity comprises an end wall positioned to exert a force on the distal-facing surface when at least the portion of the arm is positioned in the cavity and the actuator is being advanced distally.

35. The surgical tool of claim **31**, wherein the actuator further comprises a distal wedge and an internally-threaded longitudinal bore.

36. A surgical tool, comprising:

an end effector movable between an open configuration and a closed configuration, wherein the end effector comprises:

an elongate channel, wherein a cavity is defined in the elongate channel; and

an anvil;

a firing beam movable through the end effector during a staple firing motion, wherein the firing beam comprises:

a web;

a first cam extending from the web, wherein the first cam is positioned and structured to engage the elongate channel;

a second cam extending from the web, wherein the second cam is positioned and structured to engage the anvil; and

an arm mounted to the firing beam, wherein the arm is movable longitudinally with the firing beam during the staple firing motion, and wherein at least a portion of the arm is selectively rotatable into the cavity.

37. The surgical tool of claim **36**, wherein the arm is selectively pivotable relative to the firing beam about a pivot.

38. The surgical tool of claim **37**, wherein the pivot comprises a fixed pivot.

39. The surgical tool of claim **36**, wherein the cavity comprises an end wall, and wherein the end wall exerts a force on the arm when at least the portion of the arm is positioned in the cavity and the firing beam is being advanced distally.

40. The surgical tool of claim **37**, wherein the firing beam further comprises a knife.

* * * * *