US012390609B2

(12) **United States Patent**
**Bearne et al.**

(10) **Patent No.: US 12,390,609 B2**
(45) **Date of Patent: *Aug. 19, 2025**

(54) **INTERFACE COMPRISING A NASAL SEALING PORTION**

(71) Applicant: **Fisher & Paykel Healthcare Limited**, Auckland (NZ)

(72) Inventors: **Peter David Alexander Bearne**, Auckland (NZ); **Roheet Patel**, Auckland (NZ); **Kirstin Elizabeth Middelkoop**, Auckland (NZ); **Michael John Henri Cox**, Auckland (NZ); **Fadi Mashal**, Auckland (NZ); **Gregory James Olsen**, Auckland (NZ); **Isaac Tristram Tane Mason**, Auckland (NZ); **Matthew Roger Stephenson**, Auckland (NZ)

(73) Assignee: **Fisher & Paykel Healthcare Limited**, Auckland (NZ)

( * ) Notice: Subject to any disclaimer, the term of this patent is extended or adjusted under 35 U.S.C. 154(b) by 319 days.

This patent is subject to a terminal disclaimer.

(21) Appl. No.: **18/057,096**

(22) Filed: **Nov. 18, 2022**

(65) **Prior Publication Data**

US 2023/0173211 A1 Jun. 8, 2023

**Related U.S. Application Data**

(63) Continuation of application No. 16/789,308, filed on Feb. 12, 2020, now Pat. No. 11,559,647, which is a (Continued)

(51) **Int. Cl.**
***A61M 16/00*** (2006.01)
***A61M 16/06*** (2006.01)
(Continued)

(52) **U.S. Cl.**
CPC .... ***A61M 16/0616*** (2014.02); ***A61M 16/0611*** (2014.02); ***A61M 16/0666*** (2013.01); (Continued)

(58) **Field of Classification Search**
None
See application file for complete search history.

(56) **References Cited**

U.S. PATENT DOCUMENTS

301,111 A 7/1884 Genese
443,191 A 12/1890 Illing
(Continued)

FOREIGN PATENT DOCUMENTS

AU 744593 2/2002
AU 2003246441 12/2003
(Continued)

OTHER PUBLICATIONS

Chinese Examination Report; dated Sep. 3, 2014; Application No. 201080061122.1; 7 pages.
(Continued)

*Primary Examiner* — Margaret M Luarca
*Assistant Examiner* — Sarah B Lederer
(74) *Attorney, Agent, or Firm* — VIA LLP

(57) **ABSTRACT**

An interface for positive pressure therapy includes a mask assembly and a headgear assembly. The mask assembly comprises a mask seal that is adapted to underlie the nose. The mask seal extends up the lateral sides of the nose. The mask seal has a primary seal below the nose and a secondary seal alongside the nose.

**30 Claims, 103 Drawing Sheets**

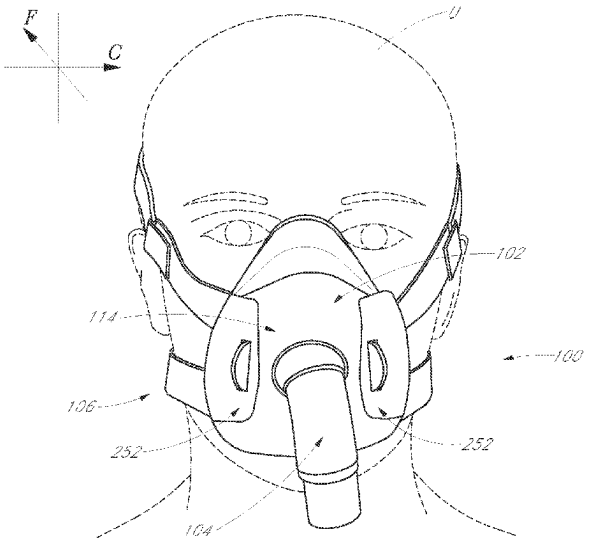

**Related U.S. Application Data**

continuation of application No. 14/354,550, filed as application No. PCT/NZ2012/000199 on Oct. 31, 2012, now Pat. No. 10,603,456, said application No. 14/354,550 is a continuation-in-part of application No. 14/111,739, filed as application No. PCT/IB2012/000858 on Apr. 13, 2012, now Pat. No. 10,220,171.

(60) Provisional application No. 61/553,872, filed on Oct. 31, 2011, provisional application No. 61/715,214, filed on Oct. 17, 2012, provisional application No. 61/476,188, filed on Apr. 15, 2011, provisional application No. 61/504,295, filed on Jul. 4, 2011, provisional application No. 61/553,067, filed on Oct. 28, 2011.

(51) **Int. Cl.**
***A61M 16/08*** (2006.01)
***A61M 16/20*** (2006.01)

(52) **U.S. Cl.**
CPC .... ***A61M 16/0683*** (2013.01); ***A61M 16/0825*** (2014.02); ***A61M 16/208*** (2013.01); *A61M 2210/0618* (2013.01); *A61M 2210/0625* (2013.01)

(56) **References Cited**

U.S. PATENT DOCUMENTS

472,238 A 4/1892 Van Orden
577,926 A 3/1897 Miller
687,973 A 12/1901 Bohn
718,470 A 1/1903 Jones
751,091 A 2/1904 Moran
770,013 A 9/1904 Linn
804,272 A 11/1905 Schwarz
1,229,050 A 6/1917 Donald
1,359,073 A 11/1920 King
1,445,010 A 2/1923 William
1,635,545 A 7/1927 Drager
1,710,160 A 4/1929 Gibbs
2,126,755 A 8/1938 Dreyfus
2,228,218 A 1/1941 Schwartz
2,296,150 A 9/1942 Dockson et al.
2,353,643 A 7/1944 Bulbulian
2,359,506 A 10/1944 Battley et al.
2,376,871 A 5/1945 Fink
2,381,444 A 8/1945 Hansell
2,388,604 A 11/1945 Eisenbud
2,403,046 A 7/1946 Bulbulian
2,414,405 A 1/1947 Beckwith et al.
2,415,846 A 2/1947 Francis
2,444,417 A 7/1948 Bierman
2,452,845 A 11/1948 Fisher
2,508,050 A 5/1950 Valente
2,540,567 A 2/1951 Ray
2,693,800 A 11/1954 Caldwell
2,706,983 A 4/1955 Matheson et al.
2,738,788 A 3/1956 Matheson et al.
2,843,121 A 7/1958 Hudson
2,858,828 A 11/1958 Matheson
2,859,748 A 11/1958 Hudson
2,874,693 A 2/1959 Matheson
2,875,759 A 3/1959 Galleher
2,881,444 A 4/1959 Fresh et al.
2,893,387 A 7/1959 Gongoll et al.
2,931,356 A 4/1960 Schwartz
2,939,458 A 6/1960 Lundquist
2,999,498 A 9/1961 Matheson
3,027,617 A 4/1962 Gray
3,037,501 A 6/1962 Miller
3,040,741 A 6/1962 Carolan
3,092,105 A 6/1963 Gabb
3,117,574 A 1/1964 Replogle
3,234,939 A 2/1966 Morton
3,234,940 A 2/1966 Morton
3,292,618 A 12/1966 Davis et al.
3,295,529 A 1/1967 Corrigall et al.
3,315,674 A 4/1967 Bloom et al.
3,330,273 A 7/1967 Bennett
3,330,274 A 7/1967 Bennett
3,424,633 A 1/1969 Corrigall et al.
3,490,452 A 1/1970 Greenfield
3,530,031 A 9/1970 Leow
3,545,436 A 12/1970 Holloway
3,599,635 A 8/1971 Kenneth
3,752,157 A 8/1973 Malmin
3,850,171 A 11/1974 Ball et al.
3,890,966 A 6/1975 Aspelin et al.
3,936,914 A 2/1976 Mancini
3,969,991 A 7/1976 Comstock et al.
3,972,321 A 8/1976 Proctor
3,977,432 A 8/1976 Vidal
3,982,532 A 9/1976 Halldin et al.
3,992,720 A 11/1976 Nicolinas
4,062,357 A 12/1977 Laerdal
4,069,516 A 1/1978 Watkins, Jr.
4,090,510 A 5/1978 Segersten
D250,047 S 10/1978 Lewis et al.
D250,131 S 10/1978 Lewis et al.
4,141,118 A 2/1979 Gudell
4,150,464 A 4/1979 Tracy
D252,322 S 7/1979 Johnson
4,167,185 A 9/1979 Lewis
4,201,205 A 5/1980 Bartholomew
4,258,710 A 3/1981 Reber
4,263,908 A 4/1981 Mizerak
4,266,540 A 5/1981 Panzik et al.
4,278,082 A 7/1981 Blackmer
4,354,488 A 10/1982 Bartos
4,367,735 A 1/1983 Dali
4,378,011 A 3/1983 Wamcke et al.
4,384,577 A 5/1983 Huber et al.
4,437,462 A 3/1984 Piljay
4,454,880 A 6/1984 Muto et al.
4,470,413 A 9/1984 Warncke
4,603,602 A 8/1986 Montesi
4,621,632 A 11/1986 Bartels et al.
4,641,379 A 2/1987 Martin
4,675,919 A 6/1987 Heine et al.
4,676,241 A 6/1987 Webb et al.
4,706,683 A 11/1987 Chilton et al.
D293,613 S 1/1988 Wingler
4,739,755 A 4/1988 White et al.
4,753,233 A 6/1988 Grimes
4,764,989 A 8/1988 Bourgeois
4,770,169 A 9/1988 Schmoegner et al.
4,782,832 A 11/1988 Trimble et al.
4,836,200 A 6/1989 Clark et al.
4,856,508 A 8/1989 Tayebi
4,907,584 A 3/1990 McGinnis
4,915,104 A 4/1990 Marcy
4,915,105 A 4/1990 Lee
4,919,128 A 4/1990 Kopala et al.
4,938,209 A 7/1990 Fry
4,941,467 A 7/1990 Takata
4,944,310 A 7/1990 Sullivan
4,947,488 A 8/1990 Ashinoff
D310,431 S 9/1990 Bellm
4,960,121 A 10/1990 Nelson et al.
4,971,051 A 11/1990 Toffolon
4,974,586 A 12/1990 Wandel et al.
4,986,269 A 1/1991 Hakkinen
5,005,571 A 4/1991 Dietz
5,010,925 A 4/1991 Atkinson et al.
5,016,625 A 5/1991 Hsu et al.
5,031,261 A 7/1991 Fenner
5,042,478 A 8/1991 Kopala et al.
D320,677 S 10/1991 Kumagai et al.
D321,419 S 11/1991 Wallace
5,062,421 A 11/1991 Burns et al.
5,065,756 A 11/1991 Rapoport
D322,318 S 12/1991 Sullivan

(56) **References Cited**

U.S. PATENT DOCUMENTS

5,074,297 A 12/1991 Venegas
5,094,236 A 3/1992 Tayebi
5,113,857 A 5/1992 Dickerman et al.
5,120,300 A 6/1992 Shaw
5,121,745 A 6/1992 Israel
5,148,802 A 9/1992 Sanders et al.
5,164,652 A 11/1992 Johnson et al.
5,231,979 A 8/1993 Rose et al.
5,243,971 A 9/1993 Sullivan et al.
5,245,995 A 9/1993 Sullivan et al.
D340,317 S 10/1993 Cole
5,259,377 A 11/1993 Schroeder
5,269,296 A 12/1993 Landis
5,305,742 A 4/1994 Styers et al.
5,323,516 A 6/1994 Hartmann
5,349,949 A 9/1994 Schegerin
5,353,789 A 10/1994 Schlobohm
5,355,878 A 10/1994 Griffiths et al.
5,366,805 A 11/1994 Fujiki et al.
D354,128 S 1/1995 Rinehart
D355,484 S 2/1995 Rinehart
5,400,776 A 3/1995 Bartholomew
5,429,683 A 7/1995 Le Mitouard
5,438,981 A 8/1995 Starr et al.
5,441,046 A 8/1995 Starr et al.
5,449,206 A 9/1995 Lockwood
5,449,234 A 9/1995 Gipp et al.
5,458,202 A 10/1995 Fellows et al.
5,477,852 A 12/1995 Landis et al.
5,513,634 A 5/1996 Jackson
5,517,986 A 5/1996 Starr et al.
5,518,802 A 5/1996 Colvin et al.
5,533,506 A 7/1996 Wood
5,540,223 A 7/1996 Starr et al.
5,542,128 A 8/1996 Lomas
5,551,419 A 9/1996 Froehlich et al.
5,558,090 A 9/1996 James
5,560,354 A 10/1996 Berthon-Jones et al.
5,570,689 A 11/1996 Starr et al.
5,588,423 A 12/1996 Smith
5,595,174 A 1/1997 Gwaltney
5,601,078 A 2/1997 Schaller et al.
D378,610 S 3/1997 Reischel et al.
5,647,355 A 7/1997 Starr et al.
5,649,532 A 7/1997 Griffiths
5,657,752 A 8/1997 Landis et al.
5,662,101 A 9/1997 Ogden et al.
5,664,566 A 9/1997 Mcdonald et al.
5,690,097 A 11/1997 Howard et al.
5,697,363 A 12/1997 Hart
5,724,965 A 3/1998 Handke et al.
5,746,201 A 5/1998 Kidd
5,752,510 A 5/1998 Goldstein
5,755,578 A 5/1998 Contant et al.
5,758,642 A 6/1998 Choi
5,806,727 A 9/1998 Joseph
5,842,470 A 12/1998 Ruben
5,857,460 A 1/1999 Popitz
5,878,743 A 3/1999 Zdrojkowski et al.
5,884,624 A 3/1999 Barnett et al.
5,896,857 A 4/1999 Hely et al.
5,904,278 A 5/1999 Barlow et al.
5,921,239 A 7/1999 McCall et al.
5,937,851 A 8/1999 Serowski
5,941,245 A 8/1999 Hannah et al.
5,943,473 A 8/1999 Levine
5,953,763 A 9/1999 Gouget
5,966,745 A 10/1999 Schwartz et al.
6,006,748 A 12/1999 Hollis
6,016,804 A 1/2000 Gleason et al.
6,017,315 A 1/2000 Starr et al.
6,019,101 A 2/2000 Cotner et al.
6,021,528 A 2/2000 Jurga
6,039,044 A 3/2000 Sullivan
6,050,260 A 4/2000 Daniell et al.
6,050,294 A 4/2000 Makowan
6,112,746 A 9/2000 Kwok et al.
6,116,235 A 9/2000 Walters et al.
6,119,693 A 9/2000 Kwok et al.
6,119,694 A 9/2000 Correa et al.
6,123,071 A 9/2000 Berthon-Jones et al.
6,135,109 A 10/2000 Blasdell et al.
6,135,432 A 10/2000 Hebblewhite et al.
6,192,886 B1 2/2001 Rudolph
6,196,223 B1 3/2001 Seifer
D440,302 S 4/2001 Wolfe
6,269,814 B1 8/2001 Blaszczykiewicz et al.
6,272,933 B1 8/2001 Gradon et al.
6,292,985 B1 9/2001 Grunberger
6,298,850 B1 10/2001 Argraves
6,302,105 B1 10/2001 Wickham et al.
D453,247 S 1/2002 Lee
6,338,342 B1 1/2002 Fecteau et al.
6,341,382 B1 1/2002 Ryvin et al.
6,341,606 B1 1/2002 Bordewick et al.
6,347,631 B1 2/2002 Hansen et al.
6,355,878 B1 3/2002 Kim
D455,891 S 4/2002 Biedrzycki
6,371,110 B1 4/2002 Peterson et al.
6,374,826 B1 4/2002 Gunaratnam et al.
6,398,197 B1 6/2002 Dickinson et al.
6,412,487 B1 7/2002 Gunaratnam et al.
6,412,488 B1 7/2002 Barnett et al.
6,418,928 B1 7/2002 Bordewick et al.
6,422,238 B1 7/2002 Lithgow
6,427,694 B1 8/2002 Hecker et al.
6,431,172 B1 8/2002 Bordewick
6,435,181 B1 8/2002 Jones, Jr. et al.
6,439,234 B1 8/2002 Curti et al.
6,457,473 B1 10/2002 Brostrom et al.
6,460,539 B1 10/2002 Japuntich et al.
6,467,483 B1 10/2002 Kopacko et al.
6,470,886 B1 10/2002 Kopacko
6,478,026 B1 11/2002 Wood
6,484,725 B1 11/2002 Chi et al.
6,488,664 B1 12/2002 Solomon et al.
6,491,034 B1 12/2002 Gunaratnam et al.
6,513,526 B2 2/2003 Kwok et al.
6,526,978 B2 3/2003 Dominguez
6,530,373 B1 3/2003 Patron
6,557,555 B1 5/2003 Hollis
6,561,188 B1 5/2003 Ellis
6,561,190 B1 5/2003 Kwok
6,561,191 B1 5/2003 Kwok
6,581,594 B1 6/2003 Drew et al.
6,581,601 B2 6/2003 Ziaee
6,581,602 B2 6/2003 Kwok et al.
6,584,975 B1 7/2003 Taylor
6,584,977 B1 7/2003 Serowski
6,588,424 B2 7/2003 Bardel
6,595,214 B1 7/2003 Hecker et al.
6,598,271 B2 7/2003 Nire
6,598,272 B2 7/2003 Nire
6,606,767 B2 8/2003 Wong
6,615,832 B1 9/2003 Chen
6,629,531 B2 10/2003 Gleason et al.
6,631,718 B1 10/2003 Lovell
6,634,357 B1 10/2003 Hamilton
6,634,358 B2 10/2003 Kwok et al.
6,637,434 B2 10/2003 Noble
6,644,315 B2 11/2003 Ziaee
6,644,316 B2 11/2003 Bowman et al.
6,647,597 B2 11/2003 Reiter
6,651,658 B1 11/2003 Hill et al.
6,651,663 B2 11/2003 Barnett et al.
6,659,102 B1 12/2003 Sico
6,662,803 B2 12/2003 Gradon et al.
6,668,828 B1 12/2003 Figley et al.
6,679,257 B1 1/2004 Robertson et al.
6,679,265 B2 1/2004 Strickland et al.
6,691,707 B1 2/2004 Gunaratnam et al.
6,712,072 B1 3/2004 Lang
D488,600 S 4/2004 Pecci
6,729,333 B2 5/2004 Barnett et al.

(56) **References Cited**

U.S. PATENT DOCUMENTS


| | | | |
|---|---|---|---|
| 6,736,139 | B1 | 5/2004 | Wix |
| D490,950 | S | 6/2004 | Pecci |
| 6,772,761 | B1 | 8/2004 | Rucker, Jr. |
| 6,796,308 | B2 | 9/2004 | Gunaratnam et al. |
| 6,817,362 | B2 | 11/2004 | Gelinas et al. |
| 6,823,869 | B2 | 11/2004 | Raje et al. |
| 6,851,425 | B2 | 2/2005 | Jaffre et al. |
| 6,851,428 | B2 | 2/2005 | Dennis |
| 6,883,177 | B1 | 4/2005 | Ouellette et al. |
| 6,889,692 | B2 | 5/2005 | Hollis |
| 6,892,729 | B2 | 5/2005 | Smith et al. |
| 6,895,965 | B2 | 5/2005 | Scarberry et al. |
| 6,907,882 | B2 | 6/2005 | Ging et al. |
| 6,918,390 | B2 | 7/2005 | Lithgow et al. |
| 6,951,218 | B2 | 10/2005 | Gradon et al. |
| 6,953,354 | B2 | 10/2005 | Edirisuriya et al. |
| 6,990,691 | B2 | 1/2006 | Klotz et al. |
| 7,004,165 | B1 | 2/2006 | Salcido |
| 7,007,696 | B2 | 3/2006 | Palkon et al. |
| 7,021,311 | B2 | 4/2006 | Gunaratnam et al. |
| D520,140 | S | 5/2006 | Chaggares |
| 7,066,178 | B2 | 6/2006 | Gunaratnam et al. |
| 7,066,179 | B2 | 6/2006 | Eaton et al. |
| 7,077,126 | B2 | 7/2006 | Kummer et al. |
| D526,094 | S | 8/2006 | Chen |
| 7,089,939 | B2 | 8/2006 | Walker et al. |
| 7,096,864 | B1 | 8/2006 | Mayer et al. |
| 7,100,610 | B2 | 9/2006 | Biener et al. |
| 7,111,624 | B2 | 9/2006 | Thudor et al. |
| D533,269 | S | 12/2006 | McAuley et al. |
| 7,152,602 | B2 | 12/2006 | Bateman et al. |
| 7,174,893 | B2 | 2/2007 | Walker et al. |
| 7,178,525 | B2 | 2/2007 | Matula |
| 7,178,528 | B2 | 2/2007 | Lau |
| 7,185,652 | B2 | 3/2007 | Gunaratnam et al. |
| 7,201,169 | B2 | 4/2007 | Wilkie et al. |
| 7,207,333 | B2 | 4/2007 | Tohara |
| 7,210,481 | B1 | 5/2007 | Lovell et al. |
| 7,219,669 | B1 | 5/2007 | Lovell et al. |
| 7,225,811 | B2 | 6/2007 | Ruiz et al. |
| 7,255,106 | B2 | 8/2007 | Gallem et al. |
| 7,260,440 | B2 | 8/2007 | Selim et al. |
| 7,287,528 | B2 | 10/2007 | Ho et al. |
| 7,290,546 | B2 | 11/2007 | Sprinkle et al. |
| 7,296,575 | B1 | 11/2007 | Radney |
| 7,318,437 | B2 | 1/2008 | Gunaratnam et al. |
| 7,320,323 | B2 | 1/2008 | Lang et al. |
| D567,366 | S | 4/2008 | Betz et al. |
| 7,353,826 | B2 | 4/2008 | Sleeper et al. |
| 7,353,827 | B2 | 4/2008 | Geist |
| 7,406,966 | B2 | 8/2008 | Wondka et al. |
| 7,448,386 | B2 | 11/2008 | Ho et al. |
| D582,546 | S | 12/2008 | Fujiura et al. |
| D586,906 | S | 2/2009 | Stallard et al. |
| 7,487,772 | B2 | 2/2009 | Ging et al. |
| 7,509,958 | B2 | 3/2009 | Amarasinghe et al. |
| 7,523,754 | B2 | 4/2009 | Lithgow et al. |
| 7,533,906 | B2 | 5/2009 | Luettgen et al. |
| D595,841 | S | 7/2009 | McAuley et al. |
| 7,556,043 | B2 | 7/2009 | Ho et al. |
| 7,562,658 | B2 | 7/2009 | Madaus et al. |
| 7,568,482 | B2 | 8/2009 | Jaffre et al. |
| 7,597,100 | B2 | 10/2009 | Ging et al. |
| 7,658,189 | B2 | 2/2010 | Davidson et al. |
| 7,665,464 | B2 | 2/2010 | Kopacko et al. |
| 7,681,575 | B2 | 3/2010 | Wixey et al. |
| 7,694,677 | B2 | 4/2010 | Tang |
| 7,708,017 | B2 | 5/2010 | Davidson et al. |
| 7,721,737 | B2 | 5/2010 | Radney |
| 7,753,051 | B2 | 7/2010 | Burrow et al. |
| 7,779,832 | B1 | 8/2010 | Ho |
| 7,793,987 | B1 | 9/2010 | Busch et al. |
| 7,810,497 | B2 | 10/2010 | Pittman et al. |
| 7,814,911 | B2 | 10/2010 | Bordewick et al. |
| 7,827,990 | B1 | 11/2010 | Melidis et al. |
| 7,877,817 | B1 | 2/2011 | Ho |
| 7,896,003 | B2 | 3/2011 | Matula et al. |
| D635,661 | S | 4/2011 | Stallard et al. |
| 7,931,024 | B2 | 4/2011 | Ho et al. |
| 7,931,025 | B2 | 4/2011 | Eaton et al. |
| 7,934,501 | B2 | 5/2011 | Fu |
| 7,942,148 | B2 | 5/2011 | Davidson et al. |
| D639,420 | S | 6/2011 | D'Souza et al. |
| 7,958,893 | B2 | 6/2011 | Lithgow et al. |
| 7,971,590 | B2 | 7/2011 | Frater et al. |
| 7,975,694 | B2 | 7/2011 | Ho |
| 7,992,560 | B2 | 8/2011 | Burton et al. |
| 8,028,699 | B2 | 10/2011 | Ho et al. |
| 8,042,538 | B2 | 10/2011 | Ging et al. |
| 8,042,539 | B2 | 10/2011 | Chandran et al. |
| 8,042,542 | B2 | 10/2011 | Ging et al. |
| D652,914 | S | 1/2012 | D'Souza et al. |
| 8,091,547 | B2 | 1/2012 | Thudor et al. |
| 8,127,764 | B2 | 3/2012 | Ho et al. |
| 8,132,270 | B2 | 3/2012 | Lang et al. |
| 8,136,523 | B2 | 3/2012 | Rudolph |
| 8,136,524 | B2 | 3/2012 | Ging et al. |
| 8,136,525 | B2 | 3/2012 | Lubke et al. |
| 8,146,595 | B2 | 4/2012 | Sherman |
| 8,146,596 | B2 | 4/2012 | Smith et al. |
| 8,146,597 | B2 | 4/2012 | Kwok et al. |
| 8,171,933 | B2 | 5/2012 | Xue et al. |
| 8,186,345 | B2 | 5/2012 | Payton et al. |
| D661,796 | S | 6/2012 | Andrews et al. |
| 8,196,583 | B2 | 6/2012 | Radney |
| 8,245,711 | B2 | 8/2012 | Matula et al. |
| 8,251,066 | B1 | 8/2012 | Ho et al. |
| 8,254,637 | B2 | 8/2012 | Abourizk et al. |
| 8,261,417 | B2 | 9/2012 | Yoshiguchi |
| 8,261,745 | B2 | 9/2012 | Chandran et al. |
| 8,267,089 | B2 | 9/2012 | Ho et al. |
| D668,408 | S | 10/2012 | Kim et al. |
| 8,276,588 | B1 | 10/2012 | Connor et al. |
| 8,286,636 | B2 | 10/2012 | Gunaratnam et al. |
| 8,291,906 | B2 | 10/2012 | Kooij et al. |
| 8,297,285 | B2 | 10/2012 | Henry et al. |
| 8,342,181 | B2 | 1/2013 | Selvarajan et al. |
| 8,353,293 | B1 | 1/2013 | Fuhrman |
| 8,353,294 | B2 | 1/2013 | Frater et al. |
| 8,371,302 | B2 | 2/2013 | Ging et al. |
| 8,397,727 | B2 | 3/2013 | Ng et al. |
| 8,397,728 | B2 | 3/2013 | D'Souza et al. |
| D681,192 | S | 4/2013 | D'Souza et al. |
| 8,439,035 | B2 | 5/2013 | Dantanarayana et al. |
| 8,443,807 | B2 | 5/2013 | McAuley et al. |
| 8,453,641 | B2 | 6/2013 | Payton et al. |
| D686,313 | S | 7/2013 | Matula et al. |
| 8,479,726 | B2 | 7/2013 | McAuley |
| 8,479,736 | B2 | 7/2013 | Ging et al. |
| 8,479,741 | B2 | 7/2013 | McAuley et al. |
| 8,490,623 | B2 | 7/2013 | Jones et al. |
| 8,490,624 | B2 | 7/2013 | Ho et al. |
| 8,517,023 | B2 | 8/2013 | Henry |
| 8,517,024 | B2 | 8/2013 | Selvarajan et al. |
| 8,550,072 | B2 | 10/2013 | Thudor et al. |
| 8,550,084 | B2 | 10/2013 | Ng et al. |
| 8,567,404 | B2 | 10/2013 | Davidson et al. |
| D693,461 | S | 11/2013 | Rothermel |
| 8,573,212 | B2 | 11/2013 | Lynch et al. |
| 8,596,271 | B2 | 12/2013 | Matula et al. |
| 8,596,274 | B2 | 12/2013 | Hieber et al. |
| 8,596,276 | B2 | 12/2013 | Omura et al. |
| 8,616,211 | B2 | 12/2013 | Davidson et al. |
| 8,622,057 | B2 | 1/2014 | Ujhazy et al. |
| 8,631,793 | B2 | 1/2014 | Omura et al. |
| 8,636,005 | B2 | 1/2014 | Gradon et al. |
| 8,636,007 | B2 | 1/2014 | Rummery et al. |
| 8,646,449 | B2 | 2/2014 | Bowsher |
| 8,684,004 | B2 | 4/2014 | Eifler |
| 8,701,667 | B1 | 4/2014 | Ho et al. |
| 8,714,157 | B2 | 5/2014 | McAuley et al. |
| 8,720,444 | B2 | 5/2014 | Chang |
| 8,733,358 | B2 | 5/2014 | Lithgow et al. |
| 8,752,254 | B2 | 6/2014 | Perner |

(56) **References Cited**

U.S. PATENT DOCUMENTS

| | | | |
|---|---|---|---|
| 8,757,157 | B2 | 6/2014 | Price et al. |
| 8,770,190 | B2 | 7/2014 | Doherty et al. |
| 8,783,257 | B2 | 7/2014 | McAuley et al. |
| 8,800,563 | B2 | 8/2014 | Doherty et al. |
| 8,807,134 | B2 | 8/2014 | Ho et al. |
| D716,440 | S | 10/2014 | D'Souza et al. |
| 8,856,975 | B2 | 10/2014 | Lang et al. |
| 8,857,435 | B2 | 10/2014 | Matula et al. |
| 8,869,797 | B2 | 10/2014 | Davidson et al. |
| 8,869,798 | B2 | 10/2014 | Wells et al. |
| 8,875,709 | B2 | 11/2014 | Davidson et al. |
| 8,887,728 | B2 | 11/2014 | Boussignac et al. |
| 8,910,626 | B2 | 12/2014 | Matula et al. |
| 8,931,484 | B2 | 1/2015 | Melidis et al. |
| 8,944,061 | B2 | 2/2015 | D'souza et al. |
| 8,950,404 | B2 | 2/2015 | Formica et al. |
| 8,960,196 | B2 | 2/2015 | Henry |
| D724,282 | S | 3/2015 | Irfan |
| 8,978,653 | B2 | 3/2015 | Frater et al. |
| 8,985,117 | B2 | 3/2015 | Gunaratnam et al. |
| 8,997,742 | B2 | 4/2015 | Moore et al. |
| 9,010,330 | B2 | 4/2015 | Barlow et al. |
| 9,010,331 | B2 | 4/2015 | Lang et al. |
| 9,027,556 | B2 | 5/2015 | Ng et al. |
| 9,032,955 | B2 | 5/2015 | Lubke et al. |
| 9,032,956 | B2 | 5/2015 | Scheiner et al. |
| 9,044,564 | B2 | 6/2015 | Dravitzki et al. |
| 9,056,177 | B2 | 6/2015 | Ho |
| 9,067,033 | B2 | 6/2015 | Davidson et al. |
| 9,072,852 | B2 | 7/2015 | McAuley et al. |
| 9,095,673 | B2 | 8/2015 | Barlow et al. |
| 9,119,929 | B2 | 9/2015 | McAuley et al. |
| 9,119,931 | B2 | 9/2015 | D'Souza et al. |
| 9,132,256 | B2 | 9/2015 | Gunaratnam et al. |
| 9,138,555 | B2 | 9/2015 | McAuley et al. |
| 9,144,655 | B2 | 9/2015 | McAuley et al. |
| 9,149,593 | B2 | 10/2015 | Dravitzki et al. |
| 9,149,594 | B2 | 10/2015 | Kooij et al. |
| 9,149,596 | B2 | 10/2015 | Valcic et al. |
| 9,155,857 | B2 | 10/2015 | Lalonde |
| 9,186,474 | B1 | 11/2015 | Rollins |
| 9,211,388 | B2 | 12/2015 | Swift et al. |
| 9,220,860 | B2 | 12/2015 | Davidson et al. |
| 9,242,062 | B2 | 1/2016 | Melidis et al. |
| 9,265,902 | B2 | 2/2016 | Payton et al. |
| 9,265,909 | B2 | 2/2016 | Ho et al. |
| 9,272,109 | B2 | 3/2016 | Rothermel et al. |
| 9,292,799 | B2 | 3/2016 | McAuley et al. |
| 9,295,799 | B2 | 3/2016 | McAuley et al. |
| D753,813 | S | 4/2016 | Ozolins |
| 9,320,566 | B1 | 4/2016 | Alston, Jr. et al. |
| 9,320,866 | B2 | 4/2016 | McAuley et al. |
| 9,333,315 | B2 | 5/2016 | McAuley et al. |
| 9,339,621 | B2 | 5/2016 | McAuley et al. |
| 9,339,622 | B2 | 5/2016 | McAuley et al. |
| 9,339,624 | B2 | 5/2016 | McAuley et al. |
| 9,375,545 | B2 | 6/2016 | Darkin et al. |
| 9,381,316 | B2 | 7/2016 | Ng et al. |
| 9,387,302 | B2 | 7/2016 | Dravitzki et al. |
| D767,755 | S | 9/2016 | D'Souza et al. |
| 9,439,405 | B2 | 9/2016 | Brüggemann |
| 9,457,162 | B2 | 10/2016 | Ging et al. |
| 9,486,601 | B2 | 11/2016 | Stallard et al. |
| 9,517,317 | B2 | 12/2016 | McAuley et al. |
| 9,522,246 | B2 | 12/2016 | Frater et al. |
| 9,539,405 | B2 | 1/2017 | McAuley et al. |
| 9,550,038 | B2 | 1/2017 | McAuley et al. |
| 9,561,338 | B2 | 2/2017 | McAuley et al. |
| 9,561,339 | B2 | 2/2017 | McAuley et al. |
| D784,516 | S | 4/2017 | Prentice et al. |
| 9,757,533 | B2 | 9/2017 | Ng et al. |
| 9,764,107 | B2 | 9/2017 | Grashow et al. |
| 9,770,568 | B2 | 9/2017 | Ng et al. |
| 9,884,160 | B2 | 2/2018 | McAuley et al. |
| 9,901,699 | B2 | 2/2018 | Veliss et al. |
| 9,907,922 | B2 | 3/2018 | Stephenson et al. |
| 9,907,923 | B2 | 3/2018 | Stephenson et al. |
| 9,950,130 | B2 | 4/2018 | Stephenson et al. |
| 9,981,102 | B2 | 5/2018 | Veliss et al. |
| 9,993,606 | B2 | 6/2018 | Gibson et al. |
| 10,201,678 | B2 | 2/2019 | Guney et al. |
| 10,258,757 | B2 | 4/2019 | Allan et al. |
| 10,265,488 | B2 | 4/2019 | Melidis et al. |
| 10,265,492 | B2 | 4/2019 | Amarasinghe et al. |
| 10,518,054 | B2 | 12/2019 | Grashow et al. |
| 10,603,456 | B2 | 3/2020 | Bearne et al. |
| 10,828,440 | B2 | 11/2020 | Olsen et al. |
| 10,828,441 | B2 | 11/2020 | Olsen et al. |
| 10,828,442 | B2 | 11/2020 | Olsen et al. |
| 10,828,443 | B2 | 11/2020 | Olsen et al. |
| 10,828,449 | B2 | 11/2020 | Higgins et al. |
| 10,835,697 | B2 | 11/2020 | Olsen et al. |
| 10,842,955 | B2 | 11/2020 | Olsen et al. |
| 10,946,155 | B2 | 3/2021 | Stephenson et al. |
| 11,065,406 | B2 | 7/2021 | Olsen et al. |
| 11,065,412 | B2 | 7/2021 | Stephenson et al. |
| 11,305,084 | B2 | 4/2022 | Olsen et al. |
| 11,559,647 | B2 | 1/2023 | Bearne et al. |
| 2001/0017134 | A1 | 8/2001 | Bahr |
| 2001/0020474 | A1 | 9/2001 | Hecker et al. |
| 2001/0029952 | A1 | 10/2001 | Curran |
| 2002/0014241 | A1 | 2/2002 | Gradon et al. |
| 2002/0020416 | A1 | 2/2002 | Namey |
| 2002/0026934 | A1 | 3/2002 | Lithgow et al. |
| 2002/0029780 | A1 | 3/2002 | Frater |
| 2002/0043265 | A1 | 4/2002 | Barnett et al. |
| 2002/0046755 | A1 | 4/2002 | Voss |
| 2002/0053347 | A1 | 5/2002 | Ziaee |
| 2002/0059935 | A1 | 5/2002 | Wood |
| 2002/0096178 | A1 | 7/2002 | Ziaee |
| 2002/0100479 | A1 | 8/2002 | Scarberry et al. |
| 2002/0108613 | A1 | 8/2002 | Gunaratnam et al. |
| 2002/0195108 | A1 | 12/2002 | Mittelstadt et al. |
| 2003/0005509 | A1 | 1/2003 | Kelzer |
| 2003/0005931 | A1 | 1/2003 | Jaffre et al. |
| 2003/0005933 | A1 | 1/2003 | Izuchukwu |
| 2003/0019495 | A1 | 1/2003 | Palkon et al. |
| 2003/0019496 | A1 | 1/2003 | Kopacko et al. |
| 2003/0029454 | A1 | 2/2003 | Gelinas et al. |
| 2003/0037788 | A1 | 2/2003 | Gallem et al. |
| 2003/0047185 | A1 | 3/2003 | Olsen et al. |
| 2003/0051732 | A1 | 3/2003 | Smith et al. |
| 2003/0075180 | A1 | 4/2003 | Raje et al. |
| 2003/0075182 | A1 | 4/2003 | Heidmann et al. |
| 2003/0079749 | A1 | 5/2003 | Strickland et al. |
| 2003/0089373 | A1 | 5/2003 | Gradon et al. |
| 2003/0094177 | A1 | 5/2003 | Smith et al. |
| 2003/0121519 | A1 | 7/2003 | Estes et al. |
| 2003/0127101 | A1 | 7/2003 | Carnell |
| 2003/0149384 | A1 | 8/2003 | Davis et al. |
| 2003/0164170 | A1 | 9/2003 | Drew et al. |
| 2003/0172936 | A1 | 9/2003 | Wilkie et al. |
| 2003/0196655 | A1 | 10/2003 | Ging et al. |
| 2003/0196656 | A1 | 10/2003 | Moore |
| 2003/0196658 | A1 | 10/2003 | Ging et al. |
| 2003/0196659 | A1 | 10/2003 | Gradon et al. |
| 2003/0196664 | A1 | 10/2003 | Jacobson |
| 2003/0200970 | A1 | 10/2003 | Stenzler et al. |
| 2003/0217746 | A1 | 11/2003 | Gradon et al. |
| 2003/0226564 | A1 | 12/2003 | Liland |
| 2003/0236015 | A1 | 12/2003 | Edirisuriya et al. |
| 2004/0025882 | A1 | 2/2004 | Madaus et al. |
| 2004/0035427 | A1 | 2/2004 | Bordewick et al. |
| 2004/0065328 | A1 | 4/2004 | Amarasinghe et al. |
| 2004/0067333 | A1 | 4/2004 | Amarasinghe |
| 2004/0094157 | A1 | 5/2004 | Dantanarayana et al. |
| 2004/0107547 | A1 | 6/2004 | Chung |
| 2004/0107968 | A1 | 6/2004 | Griffiths |
| 2004/0112377 | A1 | 6/2004 | Amarasinghe et al. |
| 2004/0112384 | A1 | 6/2004 | Lithgow et al. |
| 2004/0112385 | A1 | 6/2004 | Drew |
| 2004/0118406 | A1 | 6/2004 | Lithgow et al. |
| 2004/0118412 | A1 | 6/2004 | Piletti-Reyes |
| 2004/0134497 | A1 | 7/2004 | Gunaratnam et al. |

(56) **References Cited**

U.S. PATENT DOCUMENTS

2004/0139973 A1 7/2004 Wright
2004/0149280 A1 8/2004 Semeniuk
2004/0182396 A1 9/2004 Dennis
2004/0182398 A1 9/2004 Sprinkle et al.
2004/0211425 A1 10/2004 Wang
2004/0211427 A1 10/2004 Jones et al.
2004/0226566 A1 11/2004 Gunaratnam et al.
2004/0255949 A1 12/2004 Lang
2005/0011524 A1 1/2005 Thomlinson et al.
2005/0016532 A1 1/2005 Farrell
2005/0022820 A1 2/2005 Kwok
2005/0028822 A1 2/2005 Sleeper et al.
2005/0033247 A1 2/2005 Thompson
2005/0045182 A1 3/2005 Wood et al.
2005/0051177 A1 3/2005 Wood
2005/0066976 A1 3/2005 Wondka
2005/0076913 A1 4/2005 Ho et al.
2005/0092327 A1 5/2005 Fini et al.
2005/0098183 A1 5/2005 Nash et al.
2005/0121037 A1 6/2005 Wood
2005/0133038 A1 6/2005 Rutter
2005/0150497 A1 7/2005 Eifler et al.
2005/0155603 A1 7/2005 Frerichs et al.
2005/0155604 A1 7/2005 Ging et al.
2005/0199239 A1 9/2005 Lang et al.
2005/0199242 A1 9/2005 Matula et al.
2005/0205096 A1 9/2005 Matula
2005/0235999 A1 10/2005 Wood et al.
2005/0241644 A1 11/2005 Guney et al.
2006/0032504 A1 2/2006 Burton et al.
2006/0042629 A1 3/2006 Geist
2006/0042632 A1 3/2006 Bishop et al.
2006/0060200 A1 3/2006 Ho et al.
2006/0076019 A1 4/2006 Ho
2006/0081248 A1 4/2006 McDonald et al.
2006/0081256 A1 4/2006 Palmer
2006/0096596 A1 5/2006 Occhialini et al.
2006/0096598 A1 5/2006 Ho et al.
2006/0107958 A1 5/2006 Sleeper
2006/0118117 A1 6/2006 Berthon-Jones et al.
2006/0124131 A1 6/2006 Chandran et al.
2006/0130844 A1 6/2006 Ho et al.
2006/0137690 A1 6/2006 Gunaratnam et al.
2006/0169286 A1 8/2006 Eifler et al.
2006/0174887 A1 8/2006 Chandran et al.
2006/0174892 A1 8/2006 Leksutin et al.
2006/0196511 A1 9/2006 Lau et al.
2006/0201514 A1 9/2006 Jones et al.
2006/0207599 A1 9/2006 Busch et al.
2006/0219236 A1 10/2006 Formosa
2006/0219246 A1 10/2006 Dennis
2006/0237017 A1 10/2006 Davidson et al.
2006/0237018 A1 10/2006 McAuley et al.
2006/0249159 A1 11/2006 Ho
2006/0254593 A1 11/2006 Chang
2006/0266361 A1 11/2006 Hernandez
2006/0266365 A1 11/2006 Stallard
2006/0283459 A1 12/2006 Geiselhart et al.
2006/0283461 A1 12/2006 Lubke et al.
2007/0000492 A1 1/2007 Hansel et al.
2007/0006879 A1 1/2007 Thornton
2007/0010786 A1 1/2007 Casey et al.
2007/0044804 A1 3/2007 Matula, Jr. et al.
2007/0089749 A1 4/2007 Ho et al.
2007/0107733 A1 5/2007 Ho
2007/0125385 A1 6/2007 Ho et al.
2007/0125387 A1 6/2007 Zollinger et al.
2007/0137653 A1 6/2007 Wood
2007/0142785 A1 6/2007 Lundgaard et al.
2007/0144525 A1 6/2007 Davidson et al.
2007/0157353 A1 7/2007 Guney et al.
2007/0163600 A1 7/2007 Hoffman
2007/0174952 A1 8/2007 Jacob
2007/0175480 A1 8/2007 Gradon et al.
2007/0209663 A1 9/2007 Marque et al.
2007/0215161 A1 9/2007 Frater et al.
2007/0221226 A1 9/2007 Hansen et al.
2007/0221227 A1 9/2007 Van Ho
2007/0227541 A1 10/2007 Den
2007/0246043 A1 10/2007 Kwok et al.
2007/0250109 A1 10/2007 Kerstein et al.
2007/0267017 A1 11/2007 McAuley et al.
2007/0272169 A1 11/2007 Barney
2007/0295335 A1 12/2007 Nashed
2008/0032036 A1 2/2008 Ito
2008/0035152 A1 2/2008 Ho et al.
2008/0041373 A1 2/2008 Doshi et al.
2008/0041388 A1 2/2008 McAuley et al.
2008/0041393 A1 2/2008 Bracken
2008/0047560 A1 2/2008 Veliss et al.
2008/0060648 A1 3/2008 Thornton et al.
2008/0060653 A1 3/2008 Hallett et al.
2008/0060657 A1* 3/2008 McAuley ..... A61M 16/024
128/207.18
2008/0083412 A1 4/2008 Henry et al.
2008/0099024 A1 5/2008 Gunaratnam et al.
2008/0105257 A1 5/2008 Klasek et al.
2008/0110464 A1 5/2008 Davidson et al.
2008/0142019 A1 6/2008 Lewis
2008/0171737 A1 7/2008 Fensome
2008/0178875 A1 7/2008 Henry
2008/0178886 A1 7/2008 Lieberman et al.
2008/0190432 A1 8/2008 Blochlinger et al.
2008/0190436 A1 8/2008 Jaffe et al.
2008/0196728 A1 8/2008 Ho
2008/0210241 A1 9/2008 Schulz et al.
2008/0223370 A1 9/2008 Kim
2008/0223373 A1 9/2008 Chang
2008/0230068 A1 9/2008 Rudolph
2008/0236586 A1 10/2008 Mcdonald et al.
2008/0257354 A1* 10/2008 Davidson ..... A61M 16/06
128/206.24
2008/0264422 A1 10/2008 Fishman
2008/0271739 A1 11/2008 Facer et al.
2008/0302366 A1 12/2008 McGinnis et al.
2008/0314388 A1 12/2008 Brambilla et al.
2008/0319334 A1 12/2008 Yamamori
2009/0000623 A1* 1/2009 Lynch ..... A61M 16/0622
128/206.24
2009/0014007 A1 1/2009 Brambilla et al.
2009/0014008 A1 1/2009 Takishita et al.
2009/0032024 A1 2/2009 Burz et al.
2009/0038619 A1 2/2009 Ho et al.
2009/0044808 A1 2/2009 Guney et al.
2009/0050156 A1 2/2009 Ng et al.
2009/0065729 A1 3/2009 Worboys et al.
2009/0078267 A1 3/2009 Burz et al.
2009/0095301 A1 4/2009 Hitchcock et al.
2009/0107504 A1 4/2009 McAuley et al.
2009/0110141 A1 4/2009 Ging et al.
2009/0114227 A1 5/2009 Gunaratnam et al.
2009/0114229 A1 5/2009 Frater et al.
2009/0120442 A1 5/2009 Ho
2009/0126739 A1 5/2009 Ng et al.
2009/0133697 A1 5/2009 Kwok et al.
2009/0139526 A1 6/2009 Melidis et al.
2009/0139527 A1 6/2009 Ng et al.
2009/0151729 A1 6/2009 Judson et al.
2009/0173349 A1 7/2009 Hernandez et al.
2009/0178679 A1 7/2009 Lithgow et al.
2009/0183734 A1 7/2009 Kwok et al.
2009/0183739 A1 7/2009 Wondka
2009/0188505 A1 7/2009 Smart et al.
2009/0223519 A1 9/2009 Eifler et al.
2009/0223521 A1 9/2009 Howard
2009/0272380 A1 11/2009 Jaffre et al.
2009/0277452 A1 11/2009 Lubke et al.
2010/0000538 A1 1/2010 Edwards et al.
2010/0000543 A1 1/2010 Berthon-Jones et al.
2010/0000544 A1 1/2010 Blaszczykiewicz et al.
2010/0043798 A1 2/2010 Sullivan et al.
2010/0051031 A1 3/2010 Lustenberger et al.
2010/0051034 A1 3/2010 Howard et al.
2010/0083961 A1 4/2010 McAuley et al.

(56) **References Cited**

U.S. PATENT DOCUMENTS

2010/0108072 A1 5/2010 D'Souza et al.
2010/0132717 A1 6/2010 Davidson et al.
2010/0154798 A1 6/2010 Henry et al.
2010/0170516 A1 7/2010 Grane
2010/0192955 A1 8/2010 Biener et al.
2010/0199992 A1 8/2010 Ho
2010/0218768 A1 9/2010 Radney
2010/0229868 A1 9/2010 Rummery et al.
2010/0229872 A1 9/2010 Ho
2010/0258132 A1 10/2010 Moore
2010/0258136 A1 10/2010 Doherty et al.
2010/0282265 A1 11/2010 Melidis et al.
2010/0294281 A1 11/2010 Ho
2010/0307502 A1 12/2010 Rummery et al.
2010/0313532 A1 12/2010 Stjernfelt et al.
2010/0313891 A1 12/2010 Veliss et al.
2010/0319700 A1 12/2010 Ng et al.
2010/0326445 A1 12/2010 Veliss et al.
2011/0000492 A1 1/2011 Veliss et al.
2011/0005524 A1 1/2011 Veliss
2011/0048425 A1 3/2011 Chang
2011/0067704 A1 3/2011 Kooij et al.
2011/0072553 A1 3/2011 Ho
2011/0088699 A1 4/2011 Skipper
2011/0146684 A1 6/2011 Wells et al.
2011/0146685 A1 6/2011 Allan et al.
2011/0162654 A1 7/2011 Carroll et al.
2011/0197341 A1 8/2011 Formica et al.
2011/0220112 A1 9/2011 Connor
2011/0247625 A1 10/2011 Boussignac et al.
2011/0253143 A1 10/2011 Ho et al.
2011/0265796 A1 11/2011 Amarasinghe et al.
2011/0290253 A1 12/2011 McAuley
2011/0308520 A1 12/2011 McAuley et al.
2011/0308526 A1 12/2011 Ho et al.
2011/0315143 A1 12/2011 Frater
2012/0067349 A1 3/2012 Barlow et al.
2012/0080035 A1 4/2012 Guney et al.
2012/0103340 A1 5/2012 Chu et al.
2012/0125339 A1 5/2012 Ho et al.
2012/0132208 A1 5/2012 Judson et al.
2012/0132209 A1 5/2012 Rummery
2012/0138060 A1 6/2012 Barlow
2012/0138061 A1 6/2012 Dravitzki et al.
2012/0138063 A1 6/2012 Eves et al.
2012/0152255 A1 6/2012 Barlow et al.
2012/0167892 A1 7/2012 Matula, Jr.
2012/0190998 A1 7/2012 Armitstead et al.
2012/0204879 A1 8/2012 Cariola et al.
2012/0216819 A1 8/2012 Raje et al.
2012/0222680 A1 9/2012 Eves et al.
2012/0234326 A1 9/2012 Mazzone et al.
2012/0285452 A1 11/2012 Amirav et al.
2012/0285457 A1 11/2012 Mansour et al.
2012/0285469 A1 11/2012 Ho et al.
2012/0304999 A1 12/2012 Swift et al.
2012/0318265 A1 12/2012 Amirav et al.
2012/0318270 A1 12/2012 McAuley et al.
2012/0325219 A1 12/2012 Smith
2013/0000648 A1 1/2013 Madaus et al.
2013/0008446 A1 1/2013 Carroll et al.
2013/0008449 A1 1/2013 Busch et al.
2013/0037033 A1 2/2013 Hitchcock et al.
2013/0068230 A1 3/2013 Jablonski
2013/0092169 A1 4/2013 Frater et al.
2013/0133659 A1 5/2013 Ng et al.
2013/0133664 A1 5/2013 Startare
2013/0139822 A1 6/2013 Gibson et al.
2013/0152918 A1 6/2013 Rummery et al.
2013/0160769 A1 6/2013 Ng et al.
2013/0186404 A1 7/2013 Chien
2013/0199537 A1 8/2013 Formica et al.
2013/0213400 A1 8/2013 Barlow et al.
2013/0220327 A1 8/2013 Barlow et al.
2013/0228173 A1 9/2013 Busch
2013/0263858 A1 10/2013 Ho et al.
2013/0306066 A1 11/2013 Selvarajan et al.
2013/0306077 A1 11/2013 Greenberg
2013/0319422 A1 12/2013 Ho et al.
2013/0327336 A1 12/2013 Burnham et al.
2014/0000615 A1 1/2014 Wanderer
2014/0026888 A1 1/2014 Matula et al.
2014/0034057 A1 2/2014 Todd et al.
2014/0041664 A1 2/2014 Lynch et al.
2014/0060544 A1 3/2014 Matula et al.
2014/0069433 A1 3/2014 Walker et al.
2014/0083428 A1 3/2014 Rothermel et al.
2014/0083430 A1 3/2014 Matula, Jr. et al.
2014/0094669 A1 4/2014 Jaffe et al.
2014/0096774 A1 4/2014 Olsen et al.
2014/0137870 A1 5/2014 Barlow et al.
2014/0158136 A1 6/2014 Romagnoli et al.
2014/0166018 A1 6/2014 Dravitzki et al.
2014/0166019 A1 6/2014 Ho et al.
2014/0174444 A1 6/2014 Darkin et al.
2014/0174446 A1 6/2014 Prentice et al.
2014/0174447 A1 6/2014 Ho et al.
2014/0190486 A1 7/2014 Dunn et al.
2014/0202464 A1 7/2014 Lithgow et al.
2014/0209098 A1 7/2014 Dunn et al.
2014/0216452 A1 8/2014 Miller et al.
2014/0216462 A1 8/2014 Law et al.
2014/0224253 A1 8/2014 Law et al.
2014/0261412 A1 9/2014 Guney et al.
2014/0261432 A1 9/2014 Eves et al.
2014/0261434 A1 9/2014 Ng et al.
2014/0261435 A1 9/2014 Rothermel
2014/0261440 A1 9/2014 Chodkowski
2014/0283822 A1 9/2014 Price et al.
2014/0283826 A1 9/2014 Murray et al.
2014/0283831 A1 9/2014 Foote et al.
2014/0283841 A1 9/2014 Chodkowski et al.
2014/0283843 A1 9/2014 Eves et al.
2014/0305433 A1 10/2014 Rothermel
2014/0305439 A1 10/2014 Chodkowski et al.
2014/0311492 A1 10/2014 Stuebiger et al.
2014/0311494 A1 10/2014 Gibson et al.
2014/0311496 A1 10/2014 Rothermel
2014/0326243 A1 11/2014 Nikolayevich et al.
2014/0326246 A1 11/2014 Chodkowski et al.
2014/0338671 A1 11/2014 Chodkowski et al.
2014/0338672 A1 11/2014 D'Souza et al.
2014/0352134 A1 12/2014 Ho
2014/0360503 A1 12/2014 Franklin et al.
2014/0366886 A1 12/2014 Chodkowski et al.
2015/0013678 A1 1/2015 McAuley
2015/0013682 A1 1/2015 Hendriks et al.
2015/0033457 A1 2/2015 Tryner et al.
2015/0040911 A1 2/2015 Davidson et al.
2015/0047640 A1 2/2015 McCaslin
2015/0059759 A1 3/2015 Frater et al.
2015/0083124 A1 3/2015 Chodkowski et al.
2015/0090266 A1 4/2015 Melidis et al.
2015/0105590 A1 4/2015 Xiao
2015/0128952 A1 5/2015 Matula et al.
2015/0128953 A1 5/2015 Formica et al.
2015/0174435 A1 6/2015 Jones
2015/0182719 A1 7/2015 Grashow et al.
2015/0193650 A1 7/2015 Ho et al.
2015/0196726 A1 7/2015 Skipper et al.
2015/0246198 A1 9/2015 Bearne et al.
2015/0246199 A1 9/2015 Matula et al.
2015/0335846 A1 11/2015 Romagnoli et al.
2015/0352308 A1 12/2015 Cullen et al.
2015/0367095 A1 12/2015 Lang et al.
2015/0374944 A1 12/2015 Edwards et al.
2016/0001028 A1 1/2016 McAuley et al.
2016/0001029 A1 1/2016 Bayer et al.
2016/0008558 A1 1/2016 Huddart et al.
2016/0015922 A1 1/2016 Chodkowski et al.
2016/0022944 A1 1/2016 Chodkowski et al.
2016/0038707 A1 2/2016 Allan et al.
2016/0051786 A1 2/2016 McAuley et al.
2016/0067437 A1 3/2016 Zollinger et al.

(56) **References Cited**

U.S. PATENT DOCUMENTS

| | | | |
|---|---|---|---|
| 2016/0067442 | A1 | 3/2016 | Salmon et al. |
| 2016/0074613 | A1 | 3/2016 | Davidson et al. |
| 2016/0082214 | A1 | 3/2016 | Barlow et al. |
| 2016/0106942 | A1 | 4/2016 | Melidis et al. |
| 2016/0106944 | A1 | 4/2016 | McAuley et al. |
| 2016/0129210 | A1 | 5/2016 | Matula, Jr. et al. |
| 2016/0151596 | A1 | 6/2016 | Slight et al. |
| 2016/0166792 | A1 | 6/2016 | Allan et al. |
| 2016/0206843 | A1 | 7/2016 | Hitchcock et al. |
| 2016/0213873 | A1 | 7/2016 | McAuley et al. |
| 2016/0213874 | A1 | 7/2016 | Davidson et al. |
| 2016/0296720 | A1 | 10/2016 | Henry et al. |
| 2016/0310687 | A1 | 10/2016 | McAuley et al. |
| 2017/0000964 | A1 | 1/2017 | Shafer |
| 2017/0028148 | A1 | 2/2017 | McAuley et al. |
| 2017/0065786 | A1 | 3/2017 | Stephenson et al. |
| 2017/0072155 | A1 | 3/2017 | Allan et al. |
| 2017/0119988 | A1 | 5/2017 | Allan et al. |
| 2017/0136200 | A1 | 5/2017 | Matula |
| 2017/0143925 | A1 | 5/2017 | McAuley et al. |
| 2017/0182273 | A1 | 6/2017 | Ho |
| 2017/0239438 | A1 | 8/2017 | McAuley et al. |
| 2017/0246411 | A1 | 8/2017 | Mashal et al. |
| 2017/0266403 | A1 | 9/2017 | Prentice et al. |
| 2017/0296768 | A1 | 10/2017 | Guney et al. |
| 2017/0304574 | A1 | 10/2017 | McAuley et al. |
| 2017/0326324 | A1 | 11/2017 | McAuley et al. |
| 2017/0326325 | A1 | 11/2017 | Allan et al. |
| 2017/0361048 | A1 | 12/2017 | Moiler et al. |
| 2017/0368286 | A1 | 12/2017 | Grashow et al. |
| 2017/0368288 | A1 | 12/2017 | Stephens et al. |
| 2018/0001044 | A1 | 1/2018 | Stephens et al. |
| 2018/0099113 | A1 | 4/2018 | Bell et al. |
| 2018/0169367 | A1 | 6/2018 | Chodkowski et al. |
| 2018/0250483 | A1 | 9/2018 | Olsen et al. |
| 2018/0256844 | A1 | 9/2018 | Galgali et al. |
| 2018/0280738 | A1 | 10/2018 | Gabriel |
| 2019/0001095 | A1 | 1/2019 | Rose et al. |
| 2020/0230341 | A1 | 7/2020 | Bearne et al. |
| 2021/0016032 | A1 | 1/2021 | Olsen et al. |
| 2021/0106780 | A1 | 4/2021 | Nelson |
| 2022/0193359 | A1 | 6/2022 | Olsen et al. |

FOREIGN PATENT DOCUMENTS

| | | | |
|---|---|---|---|
| AU | 2003257274 | | 3/2004 |
| AU | 2004201337 | | 10/2005 |
| AU | 2008906390 | | 12/2008 |
| AU | 2009900327 | | 1/2009 |
| AU | 2009902731 | | 6/2009 |
| AU | 2009904236 | | 9/2009 |
| AU | 2014202233 | A1 | 5/2014 |
| CA | 1311662 | | 12/1992 |
| CA | 2440431 | | 3/2004 |
| CN | 2172538 | | 7/1994 |
| CN | 2737381 | | 11/2005 |
| CN | 1784250 | | 6/2006 |
| CN | 101378810 | A | 3/2009 |
| CN | 101450239 | | 6/2009 |
| CN | 101547619 | | 9/2009 |
| CN | 101951984 | A | 1/2011 |
| CN | 202666149 | | 1/2013 |
| CN | 202822396 | U | 3/2013 |
| DE | 895692 | | 11/1953 |
| DE | 1226422 | | 10/1966 |
| DE | 3026375 | | 2/1982 |
| DE | 3719009 | | 12/1988 |
| DE | 4004157 | | 4/1991 |
| DE | 19603949 | | 8/1997 |
| DE | 29723101 | U1 | 7/1998 |
| DE | 200 17 940 | | 2/2001 |
| DE | 19962515 | | 7/2001 |
| DE | 10312881 | B3 | 5/2004 |
| DE | 102006011151 | | 9/2007 |
| DE | 20 2010 011334 | | 10/2010 |
| EP | 0 427 474 | | 11/1990 |
| EP | 0427474 | A2 | 5/1991 |
| EP | 0303090 | B1 | 4/1992 |
| EP | 0 602 424 | | 6/1994 |
| EP | 0602424 | A1 | 6/1994 |
| EP | 0 747 078 | | 12/1996 |
| EP | 0830180 | | 3/1998 |
| EP | 0982042 | | 3/2000 |
| EP | 1099452 | | 5/2001 |
| EP | 1 116 492 | | 7/2001 |
| EP | 1116492 | A2 | 7/2001 |
| EP | 1152787 | A1 | 11/2001 |
| EP | 1245250 | | 10/2002 |
| EP | 1 258 266 | | 11/2002 |
| EP | 1 582 231 | | 10/2005 |
| EP | 1 632 262 | | 3/2006 |
| EP | 1 259 279 | | 11/2007 |
| EP | 2 054 114 | | 5/2009 |
| EP | 1 488 820 | | 9/2009 |
| EP | 2 130 563 | | 12/2009 |
| EP | 2 145 645 | | 1/2010 |
| EP | 2 417 994 | | 2/2012 |
| EP | 2 451 518 | | 5/2012 |
| EP | 2 452 716 | | 5/2012 |
| EP | 2 474 335 | | 7/2012 |
| EP | 2 281 596 | | 10/2012 |
| EP | 2 510 968 | | 10/2012 |
| EP | 2 060 294 | | 7/2013 |
| EP | 2 668 971 | | 12/2013 |
| EP | 2 749 176 | | 7/2014 |
| EP | 2 818 194 | | 12/2014 |
| EP | 1 646 910 | | 8/2015 |
| EP | 2 954 920 | | 12/2015 |
| EP | 2303378 | A4 | 6/2016 |
| EP | 1 152 787 | | 8/2016 |
| EP | 3 254 721 | | 12/2017 |
| EP | 2 624 902 | | 9/2018 |
| FR | 1299470 | | 7/1962 |
| FR | 2390116 | | 12/1978 |
| FR | 2658725 | | 8/1991 |
| FR | 2749176 | | 12/1997 |
| GB | 190224431 | | 12/1902 |
| GB | 309770 | | 4/1929 |
| GB | 761263 | | 11/1956 |
| GB | 823887 | | 11/1959 |
| GB | 823897 | | 11/1959 |
| GB | 880824 | | 10/1961 |
| GB | 960115 | | 6/1964 |
| GB | 979357 | | 1/1965 |
| GB | 1072741 | | 6/1967 |
| GB | 1467828 | | 3/1977 |
| GB | 2133275 | | 7/1984 |
| GB | 2173274 | | 10/1986 |
| GB | 2186801 | | 8/1987 |
| GB | 2343722 | | 5/2002 |
| GB | 2393126 | | 11/2004 |
| GB | 2385533 | | 8/2005 |
| GB | 2426711 | | 12/2006 |
| JP | 47-002239 | Y1 | 1/1972 |
| JP | 48-8995 | | 1/1973 |
| JP | 49-47495 | | 4/1974 |
| JP | 49-85895 | | 7/1974 |
| JP | 52-87095 | | 6/1977 |
| JP | 57-182456 | | 11/1982 |
| JP | 61-156943 | | 9/1986 |
| JP | 61-185446 | | 11/1986 |
| JP | 01-165052 | | 11/1989 |
| JP | 02-126665 | | 10/1990 |
| JP | 04-51928 | | 5/1992 |
| JP | 09-010311 | | 1/1997 |
| JP | 63-184062 | | 11/1998 |
| JP | 11-000397 | | 1/1999 |
| JP | H11397 | A | 1/1999 |
| JP | 2000-325481 | | 11/2000 |
| JP | 2004-016488 | | 1/2004 |
| JP | 2005-529687 | | 10/2005 |
| JP | 2007-516750 | | 6/2007 |
| JP | 2007-527271 | | 9/2007 |
| JP | 2008-526393 | | 7/2008 |

(56) **References Cited**

FOREIGN PATENT DOCUMENTS

| | | | |
|---|---|---|---|
| JP | 2009-125306 | 6/2009 | |
| JP | 3160631 U | 7/2010 | |
| JP | 2016161136 | 9/2016 | |
| JP | 2016161139 | 9/2016 | |
| KR | 10-2011-0028950 | 3/2011 | |
| NZ | 528029 | 3/2005 | |
| NZ | 573196 | 7/2010 | |
| NZ | 556198 | 10/2010 | |
| NZ | 556043 | 1/2011 | |
| NZ | 551715 | 2/2011 | |
| NZ | 608551 | 10/2014 | |
| RU | 2186597 | 8/2002 | |
| SU | 726692 | 9/1981 | |
| WO | WO 82/003548 | 10/1982 | |
| WO | WO 94/002190 | 2/1994 | |
| WO | WO 95/12432 | 5/1995 | |
| WO | WO 98/004310 | 2/1998 | |
| WO | WO 98/04311 | 2/1998 | |
| WO | WO 98/018514 | 5/1998 | |
| WO | WO 98/024499 | 6/1998 | |
| WO | WO 98/048878 | 11/1998 | |
| WO | WO 98/57691 | 12/1998 | |
| WO | WO 99/04842 | 2/1999 | |
| WO | WO 99/006116 | 2/1999 | |
| WO | WO 99/021618 | 5/1999 | |
| WO | WO 99/43375 | 9/1999 | |
| WO | WO 99/058181 | 11/1999 | |
| WO | WO 99/058198 | 11/1999 | |
| WO | WO 00/050122 | 8/2000 | |
| WO | WO 00/057942 | 10/2000 | |
| WO | WO 00/069497 | 11/2000 | |
| WO | WO 00/074758 | 12/2000 | |
| WO | WO 00/78381 | 12/2000 | |
| WO | WO 00/078384 | 12/2000 | |
| WO | WO 01/000266 | 1/2001 | |
| WO | WO 01/32250 | 5/2001 | |
| WO | WO 01/041854 | 6/2001 | |
| WO | WO 01/058293 | 8/2001 | |
| WO | WO 01/062326 | 8/2001 | |
| WO | WO 01/62326 | 8/2001 | |
| WO | WO 01/97892 | 12/2001 | |
| WO | WO 01/097893 | 12/2001 | |
| WO | WO 02/005883 | 1/2002 | |
| WO | WO 02/007806 | 1/2002 | |
| WO | WO 02/011804 | 2/2002 | |
| WO | WO 02/047749 | 6/2002 | |
| WO | WO 02/074372 | 9/2002 | |
| WO | WO 03/013657 | 2/2003 | |
| WO | WO 03/035156 | 5/2003 | |
| WO | WO 03/076020 | 9/2003 | |
| WO | WO 03/090827 | 11/2003 | |
| WO | WO 03/092755 | 11/2003 | |
| WO | WO 04/007010 | 1/2004 | |
| WO | WO 04/021960 | 3/2004 | |
| WO | WO 04/022146 | 3/2004 | |
| WO | WO 04/022147 | 3/2004 | |
| WO | WO 04/030736 | 4/2004 | |
| WO | WO 04/041341 | 5/2004 | |
| WO | WO 04/041342 | 5/2004 | |
| WO | WO 04/071565 | 8/2004 | |
| WO | WO 04/073777 | 9/2004 | |
| WO | WO 04/073778 | 9/2004 | |
| WO | WO 05/009521 | 2/2005 | |
| WO | WO 05/018523 | 3/2005 | |
| WO | WO 05/021075 | 3/2005 | |
| WO | WO 05/032634 | 4/2005 | |
| WO | WO 05/051468 | 6/2005 | |
| WO | WO 05/063328 | 7/2005 | |
| WO | WO 05/068002 | 7/2005 | |
| WO | WO 05/076874 | 8/2005 | |
| WO | WO 05/079726 | 9/2005 | |
| WO | WO 05/086943 | 9/2005 | |
| WO | WO 05/097247 | 10/2005 | |
| WO | WO 05/118040 | 12/2005 | |
| WO | WO 05/118042 | 12/2005 | |
| WO | WO 05/123166 | 12/2005 | |
| WO | WO 06/000046 | 1/2006 | |
| WO | WO 06/050559 | 5/2006 | |
| WO | WO 06/069415 | 7/2006 | |
| WO | WO 06/074513 | 7/2006 | |
| WO | WO 06/074514 | 7/2006 | |
| WO | WO 06/074515 | 7/2006 | |
| WO | WO 06/096924 | 9/2006 | |
| WO | WO 06/130903 | 12/2006 | |
| WO | WO 06/138416 | 12/2006 | |
| WO | WO 07/006089 | 1/2007 | |
| WO | WO 07/009182 | 1/2007 | |
| WO | WO 07/021777 | 2/2007 | |
| WO | WO 07/022562 | 3/2007 | |
| WO | WO 07/041751 | 4/2007 | |
| WO | WO 07/041786 | 4/2007 | |
| WO | WO 07/045008 | 4/2007 | |
| WO | WO 07/048174 | 5/2007 | |
| WO | WO 07/050557 | 5/2007 | |
| WO | WO 07/053878 | 5/2007 | |
| WO | WO 07/059504 | 5/2007 | |
| WO | WO 07/139531 | 12/2007 | |
| WO | WO 07/147088 | 12/2007 | |
| WO | WO 08/003081 | 1/2008 | |
| WO | WO 08/007985 | 1/2008 | |
| WO | WO 08/030831 | 3/2008 | |
| WO | WO 08/037031 | 4/2008 | |
| WO | WO 08/040050 | 4/2008 | |
| WO | WO-2008040050 A1 * | 4/2008 | ..... A61M 16/06 |
| WO | WO 08/060295 | 5/2008 | |
| WO | WO 08/063923 | 5/2008 | |
| WO | WO 08/068966 | 6/2008 | |
| WO | WO 08/070929 | 6/2008 | |
| WO | WO 08/106716 | 9/2008 | |
| WO | WO 08/148086 | 12/2008 | |
| WO | WO 09/002608 | 12/2008 | |
| WO | WO 09/026627 | 3/2009 | |
| WO | WO 09/052560 | 4/2009 | |
| WO | WO 09/059353 | 5/2009 | |
| WO | WO 09/065368 | 5/2009 | |
| WO | WO 09/092057 | 7/2009 | |
| WO | WO 09/108995 | 9/2009 | |
| WO | WO 09/143586 | 12/2009 | |
| WO | WO 10/009877 | 1/2010 | |
| WO | WO 10/066004 | 6/2010 | |
| WO | WO 10/067237 | 6/2010 | |
| WO | WO 10/071453 | 6/2010 | |
| WO | WO 10/073138 | 7/2010 | |
| WO | WO 10/073142 | 7/2010 | |
| WO | WO 10/131189 | 11/2010 | |
| WO | WO 10/135785 | 12/2010 | |
| WO | WO 10/148453 | 12/2010 | |
| WO | WO 11/014931 | 2/2011 | |
| WO | WO 11/022751 | 3/2011 | |
| WO | WO 11/059346 | 5/2011 | |
| WO | WO 11/060479 | 5/2011 | |
| WO | WO 11/077254 | 6/2011 | |
| WO | WO 11/078703 | 6/2011 | |
| WO | WO 12/020359 | 2/2012 | |
| WO | WO 12/025843 | 3/2012 | |
| WO | WO 12/040791 | 4/2012 | |
| WO | WO 12/045127 | 4/2012 | |
| WO | WO 12/052902 | 4/2012 | |
| WO | WO 12/055886 | 5/2012 | |
| WO | WO 12/140514 | 10/2012 | |
| WO | WO 13/006899 | 1/2013 | |
| WO | WO 13/056389 | 4/2013 | |
| WO | WO 13/061260 | 5/2013 | |
| WO | WO 13/064950 | 5/2013 | |
| WO | WO 13/066195 | 5/2013 | |
| WO | WO 13/084110 | 6/2013 | |
| WO | WO 13/168041 | 11/2013 | |
| WO | WO 13/170290 | 11/2013 | |
| WO | WO 13/175409 | 11/2013 | |
| WO | WO 13/186654 | 12/2013 | |
| WO | WO 14/020468 | 2/2014 | |
| WO | WO 14/020481 | 2/2014 | |
| WO | WO 14/031673 | 2/2014 | |
| WO | WO 14/038959 | 3/2014 | |

(56) **References Cited**

FOREIGN PATENT DOCUMENTS

| | | |
|---|---|---|
| WO | WO 14/045245 | 3/2014 |
| WO | WO 14/062070 | 4/2014 |
| WO | WO 14/077708 | 5/2014 |
| WO | WO 14/109749 | 7/2014 |
| WO | WO 14/110622 | 7/2014 |
| WO | WO 14/129913 | 8/2014 |
| WO | WO 14/141029 | 9/2014 |
| WO | WO 14/165906 | 10/2014 |
| WO | WO 14/175753 | 10/2014 |
| WO | WO 14/181214 | 11/2014 |
| WO | WO 14/183167 | 11/2014 |
| WO | WO 15/006826 | 1/2015 |
| WO | WO 15/022629 | 2/2015 |
| WO | WO 15/033287 | 3/2015 |
| WO | WO 15/057087 | 4/2015 |
| WO | WO 15/068067 | 5/2015 |
| WO | WO 15/092621 | 6/2015 |
| WO | WO 15/161345 | 10/2015 |
| WO | WO 15/187986 | 12/2015 |
| WO | WO 16/000040 | 1/2016 |
| WO | WO 16/009393 | 1/2016 |
| WO | WO 16/032343 | 3/2016 |
| WO | WO 16/033857 | 3/2016 |
| WO | WO 16/041008 | 3/2016 |
| WO | WO 16/041019 | 3/2016 |
| WO | WO 16/075658 | 5/2016 |
| WO | WO 16/149769 | 9/2016 |
| WO | WO 17/049356 | 3/2017 |
| WO | WO 17/049357 | 3/2017 |
| WO | WO 17/049361 | 3/2017 |
| WO | WO 17/103724 | 6/2017 |
| WO | WO 17/120643 | 7/2017 |
| WO | WO 17/124152 | 7/2017 |
| WO | WO 18/007966 | 1/2018 |
| WO | WO 18/064712 | 4/2018 |
| WO | WO 18/177794 | 10/2018 |

OTHER PUBLICATIONS

Chinese first office action dated Aug. 27, 2018 in patent application No. 201710012119.4.
Chinese First Office Action dated Dec. 5, 2017 in patent application No. 201610517383.9. 5 pages.
Chinese first office action dated Jan. 24, 2018 in patent application No. 201610563348.0, 6 pp.
Chinese First Office Action dated May 3, 2016 in patent application No. 201280029072.8.
Chinese first office action dated Nov. 1, 2017 in patent application No. 201610516220.9, 6 pp.
Chinese First Office Action dated Nov. 29, 2017 in patent application No. 201610563516.6.
Chinese first office action dated Sep. 29, 2018 in patent application No. 201710012030.8, 7 pp.
Chinese fourth office action dated Sep. 24, 2020 in patent application No. 201710012091.4, 8 pp.
Chinese office action dated Aug. 1, 2019 in patent application No. 201710012091.4, 15 pp.
Chinese office action dated Sep. 29, 2018 in patent application No. 201710012091.4, 3 pp.
Chinese Office Action in patent application No. 201610116121.1, dated Sep. 28, 2017, 5 pages.
Chinese Second Office Action dated Aug. 13, 2018 in patent application No. 201610563516.6. 12 pages.
Chinese second office action dated Aug. 2, 2019 in patent application No. 201710012030.8, 8 pp.
Chinese Second Office Action dated Aug. 29, 2019 in patent application No. 201611078802. 17 pages.
Chinese Second Office Action dated Oct. 16, 2018 in patent application No. 201610517383.9. 3 pages.
Chinese Second Office Action dated Sep. 21, 2018 in patent application No. 201610516220.9. 3 pages.
Chinese Second Office Action; dated Jan. 19, 2015; Application No. 201080028029.0; 30 pages.
Chinese Third Office Action dated Mar. 25, 2019 in patent application No. 201610563516.6. 5 pages.
European examination report dated Nov. 11, 2019 in patent application No. 13835529.1.
European examination report dated Oct. 11, 2018 in patent application No. 13825539.1.
European examination report dated Oct. 29, 2020 in patent application No. 13835539.1, 4 pp.
European Examination Report in patent application No., 09746823.5, dated Apr. 3, 2017, 2 pages.
European Extended Search Report for Patent Application No. 12770681.0, dated Oct. 15, 2014, 6 pages.
European Extended Search Report in patent application No. 10830251.4, dated Sep. 4, 2015, 7 pages.
European extended search report in patent application No. 11834691.5, dated Apr. 3, 2017, 9 pp.
European Extended Search Report in patent application No. 17179765.7, dated Dec. 11, 2017, 8 pages.
European Extended Search Report; dated Apr. 2, 2014; Application No. 09819444.2; 8 pages.
European Search Report and Written Opinion in patent application No. 09746823.5, dated May 12, 2016, 12 pages.
European Search Report for European Patent Application No. 20166100.6, dated Sep. 10, 2020 in 4 pages.
European Search Report in patent application No. 11830981.4, dated Aug. 24, 2015; 6 pages.
European Summons to Attend Oral Proceedings and Written Opinion in patent application No. 09746823.5, dated Dec. 13, 2017, 7 pages.
Examination Report for Australian Application No. 2016227361; dated Oct. 8, 2019; 6 pages.
Extended European Search Report dated Oct. 9, 2019 in patent application No. 19174593.4. 7 pages.
Extended European Search Report, Application No. 15836317.6, dated Mar. 5, 2018, 7 pages.
Extended Search Report; European Application No. 10774623.2; dated Sep. 8, 2015; 7 pages.
German examination report dated Sep. 15, 2017 in patent application No. 112012007301.0. 8 pages.
German examination report dated Sep. 21, 2017 in patent application No. 112012007303.7. 4 pages.
German examination report dated Sep. 23, 2016 in patent application No. 112012007303.7. 27 pages.
German examination report dated Sep. 29, 2016 in patent application No. 112012007301.0. 17 pages.
German examination report dated Sep. 30, 2016 in patent application No. 112012007300.2. 18 pages.
Great Britain combined search and examination report dated Jan. 19, 2021 in patent application No. GB2019664.8.
Great Britain Combined Search and Examination Report dated Mar. 9, 2016 in GB patent application No. GB1603272.4, 6 pp.
Great Britain Combined Search and Examination Report dated Mar. 9, 2016 in GB patent application No. GB1603273.2, 5 pp.
Great Britain Combined Search and Examination Report dated Mar. 9, 2016 in patent application No. GB1603268.2 6 pp.
Great Britain Combined Search and Examination Report in patent application No. GB1406401.8, dated May 7, 2014, 4 pages.
Great Britain Combined Search and Examination Report in patent application No. GB1406402.6, dated May 7, 2014, 6 pages.
Great Britain examination report dated Feb. 26, 2020 in patent application No. GB1713194.7. 2 pages.
Great Britain examination report dated Jul. 8, 2020 in patent application No. GB1702508.1. 2 pages.
Great Britain examination report dated Nov. 5, 2020 in patent application No. GB2015110.6.
Australian examination report dated May 8, 2019 in patent application No. 2018267634, 5 pages.
Australian Examination Report for Patent Application No. 2012265597 dated Dec. 19, 2013, in 5 pages.
Australian Examination Report in patent application No., 2010241390, dated Jan. 9, 2015, 4 pages.

(56) **References Cited**

OTHER PUBLICATIONS

Australian Examination Report in patent application No., 2015201920, dated Jul. 20, 2015, 3 pages.
Australian examination report in patent application No., 2016202801, dated Jun. 20, 2016, 2 pages.
Australian Examination Report in patent application No. 2010241390, dated Sep. 28, 2016, 4 pages.
Australian Examination Report in patent application No. 2010246985, dated Mar. 4, 2014, 5 pages.
Australian Examination Report in patent application No. 2015202814, dated Aug. 14, 2015, 8 pages.
Australian Examination Report in patent application No. 2016202799, dated May 31, 2016, 2 pages.
Australian examination report in patent application No. 2016203303, dated Jan. 18, 2017, 4 pp.
Australian examination report in patent application No. 2016222390, dated Jul. 3, 2017, 3 pp.
Australian Examination Report in patent application No. 2018204754, dated Dec. 14, 2018, 3 pages.
Australian examination report No. 1 dated Feb. 27, 2020 for patent application No. 2020201273, 2 pp.
Australian examination report No. 1 dated Jul. 1, 2016 for patent application No. 2016203864, 2 pp.
Australian examination report No. 1 dated Jul. 1, 2016 for patent application No. 2016203907, 2 pp.
Australian examination report No. 1 dated Jul. 4, 2016 for patent application No. 2016203857, 2 pp.
Australian examination report No. 1 dated Jul. 4, 2016 for patent application No. 2016203910, 2 pp.
Australian examination report No. 1 dated Jul. 5, 2016 for patent application No. 2016203868, 2 pp.
Australian examination report No. 1 dated Jun. 28, 2016 for patent application No. 2016203087, 2 pp.
Australian examination report No. 1 dated Mar. 17, 2020 in patent application No. 2015307325. 4 pages.
Australian examination report No. 1 dated Nov. 24, 2020 for patent application No. 2020267199, 3 pp.
Australian examination report No. 1 dated Nov. 27, 2017 for patent application No. 2017204094, 5 pp.
Australian examination report No. 2 dated Apr. 28, 2020 in patent application No. 2018267634, 4 pages.
Australian examination report No. 2 dated Feb. 19, 2021 in patent application No. 2015307325.
Australian examination report No. 2 dated Sep. 5, 2016 for patent application No. 2016203857, 3 pp.
Australian Examination Report; Application No. 2007273324; dated May 22, 2012; 4 pages.
Canadian Examination Report dated Apr. 29, 2019 in patent application No. 2,852,636. 6 pages.
Canadian examination report dated Jan. 8, 2019 in patent application No. 3,000,923, 3 pp.
Canadian examination report dated Jun. 12, 2020 in patent application No. 3,000,923, 5 pp.
Canadian examination report dated Nov. 6, 2020 in patent application No. 3,049,400,35 pp.
Canadian examination report dated Nov. 7, 2019 in patent application No. 3,000,923, 4 pp.
Canadian Examination Report dated Oct. 2, 2017 in patent application No. 2,833,106, 3 pp.
Canadian Examination Report for Application No. 2655839 dated Oct. 4, 2013, in 2 pages.
Canadian Examination Report in patent application No. 2780310, dated Jul. 26, 2016, 4 pages.
Canadian Examination Report in patent application No. 2918167, dated Oct. 3, 2016, 4 pages.
Canadian examination report in patent application No. 2764382, dated Feb. 2, 2016, 3 pp.
Canadian Examination Report in patent application No. 2780310, dated Apr. 18, 2017, 3 pp.
Canadian examination report in patent application No. 2814601, dated Aug. 8, 2017, 5 pp.
Canadian Examination Report in patent application No. 2890556, dated Nov. 28, 2016, 4 pages.
Chinese Decision of Rejection dated Apr. 13, 2020 in patent application No. 201611078802.X. 10 pages.
Chinese Examination Report in patent application No., 201080028029.0, dated Mar. 27, 2014, 16 pages.
Chinese Examination Report in patent application No. 2007800266164, dated Feb. 17, 2011, 18 pages.
Chinese Examination Report in patent application No. 201080061122.1, dated Jul. 17, 2015, 10 pages.
Chinese examination report in patent application No. 201180059469.7, dated May 15, 2017, 5 pp. (English translation).
Chinese examination report in patent application No. 201210080441,8, dated Dec. 1, 2014, 1 pp. (English translation).
Chinese examination report in patent application No. 201210080441.8, dated Mar. 4, 2014, 11 pp. (English translation).
Chinese examination report in patent application No. 201610261300.4, dated Dec. 5, 2017, 22 pp. (English translation).
Chinese Examination Report, Application No. 201580045964.0, dated Jan. 17, 2019 in 8 pages.
Chinese Examination Report, Application No. 201580045964.0, dated Oct. 10, 2019. 16 pages.
Chinese Examination Report; dated Sep. 14, 2015; Application No. 201080028029.0; 3 pages.
Great Britain examination report dated Nov. 6, 2020 in patent application No. GB702508.1. 4 pages.
Great Britain examination report dated Oct. 22, 2020 in patent application No. GB1713194.7. 2 pages.
Great Britain Examination Report in patent application No. GB1119385.1, dated May 9, 2013, 4 pages.
Great Britain examination report in patent application No. GB1501499.6, dated Jun. 1, 2017, in 8 pages.
International Preliminary Report on Patentability (IPRP), International application No. PCT/NZ2009/000219, dated Apr. 12, 2011,9 pages.
International Preliminary Report on Patentability and Written Opinion of the ISA; International Application No. PCT/ NZ2010/000229; dated May 22, 2012; 14 pages.
International Preliminary Report on Patentability in PCT/NZ2015/050068, dated Nov. 29, 2016.
International Search Report and Written Opinion for International Application No. PCT/NZ2013/000155, dated Dec. 6, 2013.
International Search Report and Written Opinion for PCT/IB/2015/055412, dated Oct. 12, 2015. 13 pages.
International Search Report and Written Opinion in application No. PCT/IB2012/000858, dated Aug. 13, 2012.
International Search Report and Written Opinion received for PCT Patent Application No. PCT/NZ2009/000072, mailed on Jul. 28, 2009, 12 pages.
International Search Report for application No. PCT/NZ2005/000062 dated May 27, 2005. 3 pages.
International Search Report for International Application No. PCT/IB2016/051212, dated Jun. 8, 2016 in 10 pages.
International Search Report for International Application No. PCT/NZ2007/000185, dated Oct. 31, 2007 in 3 pages.
International Search Report in PCT/NZ2014/000021, dated May 20, 2014, 10 pp.
International Search Report in PCT/NZ2015/050068, dated Oct. 29, 2015, 7 pp.
International Search Report, Application No. PCT/IB2016/054365, dated Oct. 5, 2016, in 7 pages.
International Search Report, Application No. PCT/IB2016/054539; 6 pages; Dec. 6, 2016.
International Search Report, International Application No. PCT/NZ2009/000219, mailed Feb. 2, 2010, 3 pages.
International Search Report, PCT/NZ2010/000229, dated Mar. 18, 2011,8 pages.
International Search Report, PCT/NZ2011/000211, dated Feb. 17, 2012, 4 pages.
International Search Report, PCT/NZ2015/050119, dated Nov. 20, 2015 in 6 pages.

(56) **References Cited**

OTHER PUBLICATIONS

International Search Report; Application No. PCT-NZ2013-000138; dated Dec. 4, 2013; 7 pages.
International Search Report; PCT/NZ2012/000199; dated Jan. 21, 2013; 4 pages.
Japanese Decision for Final Rejection dated Oct. 17, 2016 in patent application No. 2014-504405, 2 pp.
Japanese Examination Report dated Jul. 22, 2020 in patent application No. 2019-120695.
Japanese Examination Report dated Jun. 2, 2020 in patent application No. 2017-511715.
Japanese Examination Report in patent application No. 2012-510418, dated Feb. 10, 2014, 4 pages.
Japanese Examination Report in patent application No. 2012-538784, dated Aug. 25, 2014, 7 pages.
Japanese Examination Report in patent application No. 2015-098324, dated Jul. 22, 2015, 8 pages.
Japanese notification of reason for rejection in patent application No. 2012-538784, dated Aug. 5, 2015, 10 pp.
Japanese Notification of Reason for Rejection in patent application No. 2015-526496, dated Apr. 24, 2017, 13 pp.
Japanese Notification of Reason for Rejection in patent application No. 2016-166028, dated Jun. 19, 2017, 7 pp.
Japanese Notification of Reasons for Rejection dated Jun. 21, 2016 in patent application No. 2016-161136, 1 p.
Japanese Notification of Reasons for Rejection dated Jun. 21, 2017 in patent application No. 2016-161139. 1 page.
Japanese Notification of Reasons for Rejection dated Oct. 17, 2016 in patent application No. 2016-161136. 5 pp.
Japanese Office Action dated Jun. 1, 2019 in patent application No. 2017-511715.
Japanese Office Action dated Sep. 1, 2019 in patent application No. 2018-192390. 4 pages.
Japanese Office Action; Application No. 2012-538784; dated Jul. 25, 2016; 4 pages.
Office Action in corresponding Indian Patent Application No. 5250/KOLNP/2008, dated May 23, 2017, in 8 pages.
Office Action; Canadian Application No. 2890556; dated Jan. 27, 2016; 3 pages.
Office Action; European Application No. 07808683.2; dated Jul. 8, 2015; 8 pages.
Partial Supplementary Search Report from European Patent Application No. 07860972.4, dated Sep. 20, 2017, in 15 pages.
Third Office Action; Chinese Application No. 201080061122.1; dated Apr. 1, 2016; 5 pages.
UK Search and Examination Report; Mar. 14, 2013; Application No. GB1210075.6; 2 pages.
Written Opinion of the International Searching Authority dated Aug. 13, 2012; for Application No. PCT/IB2012/000858 filed Apr. 13, 2012. 7 pages.
Written Opinion of the international Searching Authority, PCT/NZ2013/000139, dated Nov. 1, 2013. 5 pages.
Written Opinion of the International Searching Authority; PCT/NZ2012/000199; dated Jan. 21, 2013; 4 pages.
Written Opinion, PCT/NZ2011/00021, dated Feb. 17, 2012, 7 pages.
Fisher & Paykel Healthcare Limited, Simplus Full Face Mask, 185048005 REVA, 2012.
Fisher & Paykel Healthcare, FlexiFit® 431 Full Face Mask instructions, 2010, 4 pp.
Fisher & Paykel Healthcare, FlexiFit™ 431 Full Face Mask, specification sheet, 2004, 2 pp.
Fisher & Paykel Healthcare, Interface Solutions Product Profile, 2006, 12 pp.
Fisher & Paykel MR810 Manual, Rev. C, 2004, 43 pp.
HomeDepot.com—Ring Nut Sales Page (Retrieved Oct. 16, 2015 from http://www.homedepot.com/p/Everbilt-1-2-in-Galvanized-HexNut-804076/20464-7893), 4 pp.
Malloy, 1994, Plastic Part Design for Injection Molding, Hanser Gardner Publications, Inc, Cincinnati, OH, 14 pp.
Merriam-Webster's Collegiate Dictionary, Eleventh Edition, 2004, pp. 703, 905, 1074, 1184.
Philips Respironics 'System One Heated Humidifier—User Manual', 2011, pp. 1-16, [retrieved on Nov. 25, 2013] from the internet: URL: http://www.cpapxchange.com/cpap-machines-biap-machines/system-one-60-seri- es-cpap-humidifier-manual.pdf front cover, pp. 3-4 and 6.
ResMed Exhibit, FlexiFit™ 431, product brochure, web pages (Wayback Machine), 2006, 23 pp.
ResMed Origins Brochure (Retrieved Apr. 17, 2016 from http://www.resmed.com/us/dam/documents/articles/resmedorigins.pdf), 64 pp.
ResMed Ultra Mirage™ Full Face Mask, product brochure, 2004, 2 pp.
ResMed Ultra Mirage™ Full Face Mask, product brochure, web pages (Wayback Machine), 2006, 9 pp.
ResMed, Jun. 29, 1997, Mask Frames (Source: Wayback Machine Internet Archive); http://web.archive.org/web/19970629053430/http://www.resmed.com- /maskframes/mask.htm, 2 pp.
ResMed, Mirage Swift™ Nasal Pillows System from ResMed, product brochure, 2004, 6 pp.
ResMed, Mirage Swift™ Nasal Pillows System: User's Guide, product brochure, 2004, 11 pp.
ResMed, Mirage Vista™ Nasal Mask: Components Card, product brochure, 2005, 1 p.
The American Heritage Dictionary of the English Language, Fourth Edition, 2006, pp. 1501, 1502, 1650.
WeddingBands.com—Men's Wedding Ring Shopping Page (Retrieved Oct. 16, 2015 from http://www.weddingbands.com/ProductPop.sub.--wedding.sub.--band- s.sub.--metal/48214W.html), 3 pp.
International Standard ISO 17510-2 Sleep apnoea breathing therapy—Part 2: Masks and application accessories.
U.S. Appl. No. 60/842,741, dated Sep. 7, 2006, 30 pp.
U.S. Appl. No. 61/064,406, 34 pages, copy provided by USPTO on Feb. 23, 2009.
U.S. Appl. No. 61/071,893, 43 pages, copy provided by USPTO on Feb. 23, 2009.
U.S. Appl. No. 61/136,617, 82 pages, copy provided by USPTO on Feb. 23, 2009.
Petition for Inter Partes Review of U.S. Pat. No. 8,479,741 Pursuant to 35 U.S.C. §§ 311-19, 37 C.F.R. § 42, IPR2016-01714, dated Sep. 7, 2016.
Patent Owner Preliminary Response to Petition for Inter Partes Review of U.S. Pat. No. 8,479,741, IPR2016-01714, filed Dec. 14, 2016.
Decision Denying Institution of Inter Partes Review of U.S. Pat. No. 8,479,741 Pursuant to 37 C.F.R. § 42.108, IPR2016-01714, entered Mar. 10, 2017.
Declaration of Dr. John Izuchukwu, Ph.D., P.E., U.S. Pat. No. 8,443,807, IPR Nos. 2016-1726 & 2016-1734, dated Sep. 7, 2016, 232 pages.
Declaration of Dr. John Izuchukwu, Ph.D., P.E., U.S. Pat. No. 8,479,741, IPR Nos. 2016-1714 & 2016-1718, dated Sep. 7, 2016, 155 pages.
Petition for Inter Partes Review of U.S. Pat. No. 8,479,741 Pursuant to 35 U.S.C. §§ 311-19, 37 C.F.R. § 42, IPR2016-01718, dated Sep. 7, 2016.
Patent Owner Preliminary Response to Petition for Inter Partes Review of U.S. Pat. No. 8,479,741, IPR2016-01718, filed Dec. 16, 2016.
Decision Denying Institution of Inter Partes Review of U.S. Pat. No. 8,479,741 Pursuant to 37 C.F.R. § 42.108, IPR2016-01718, entered Mar. 13, 2017.
Petition for Inter Partes Review of U.S. Pat. No. 8,443,807 Pursuant to 35 U.S.C. §§ 311-19, 37 C.F.R. § 42, IPR2016-01726, dated Sep. 7, 2016.
Patent Owner Preliminary Response to Petition for Inter Partes Review of U.S. Pat. No. 8,443,807, IPR2016-01726, filed Dec. 13, 2016.
Decision Denying Institution of Inter Partes Review of U.S. Pat. No. 8,443,807 Pursuant to 37 C.F.R. § 42.108, IPR2016-01726, entered Mar. 6, 2017.

(56) **References Cited**

OTHER PUBLICATIONS

Petition for Inter Partes Review of U.S. Pat. No. 8,443,807 Pursuant to 35 U.S.C. §§ 311-19, 37 C.F.R. § 42, IPR2016-01734, dated Sep. 7, 2016.
Patent Owner Preliminary Response to Petition for Inter Partes Review of U.S. Pat. No. 8,443,807, IPR2016-01734, filed Dec. 22, 2016.
Decision Denying Institution of Inter Partes Review of U.S. Pat. No. 8,443,807 Pursuant to 37 C.F.R. § 42.108, IPR2016-01734, entered Mar. 13, 2017.
File History of U.S. Pat. No. 8,479,741 to McAuley et al., published Oct. 1, 2009.
File History of U.S. Pat. No. 8,443,807 to McAuley et al., published Jan. 7, 2010.
Patent Owner's Complaint for *Fisher & Paykel Healthcare Ltd*. v. *ResMed Corp*., Case No. 2:16-cv- 06099-R-AJW (C.D. Cal.), dated Aug. 15, 2016.
Patent Owner's Notice of Voluntary Dismissal Without Prejudice for *Fisher & Paykel Healthcare Ltd*. V. *ResMed Corp*., Case No. 2:16-cv-06099-R-AJW (C.D. Cal.), dated Aug. 16, 2016.
Patent Owner's Complaint for *Fisher & Paykel Healthcare Ltd*. v. *ResMed Corp*., Case No. 3:16-cv-02068-GPC-WVG (S.D. Cal.), dated Aug. 16, 2016.
Petitioners' Complaint for *ResMed Inc., et al*. v. *Fisher & Paykel Healthcare Corp. Ltd., et al*., Case No. 3:16-cv-02072-JAH-MDD (S.D. Cal.), dated Aug. 16, 2016.
Petitioners' Notice of Voluntary Dismissal Without Prejudice for *ResMed Inc., et al*. v. *Fisher & Paykel Healthcare Corp. Ltd., et al*., Case No. 3:16-cv-02072-JAH-MDD (S.D. Cal.) , dated Aug. 18, 2016.
Fisher & Paykel HC200 Series Nasal CPAP Blower & Heated Humidifier User Manual, 17 pp., May 1998.

* cited by examiner

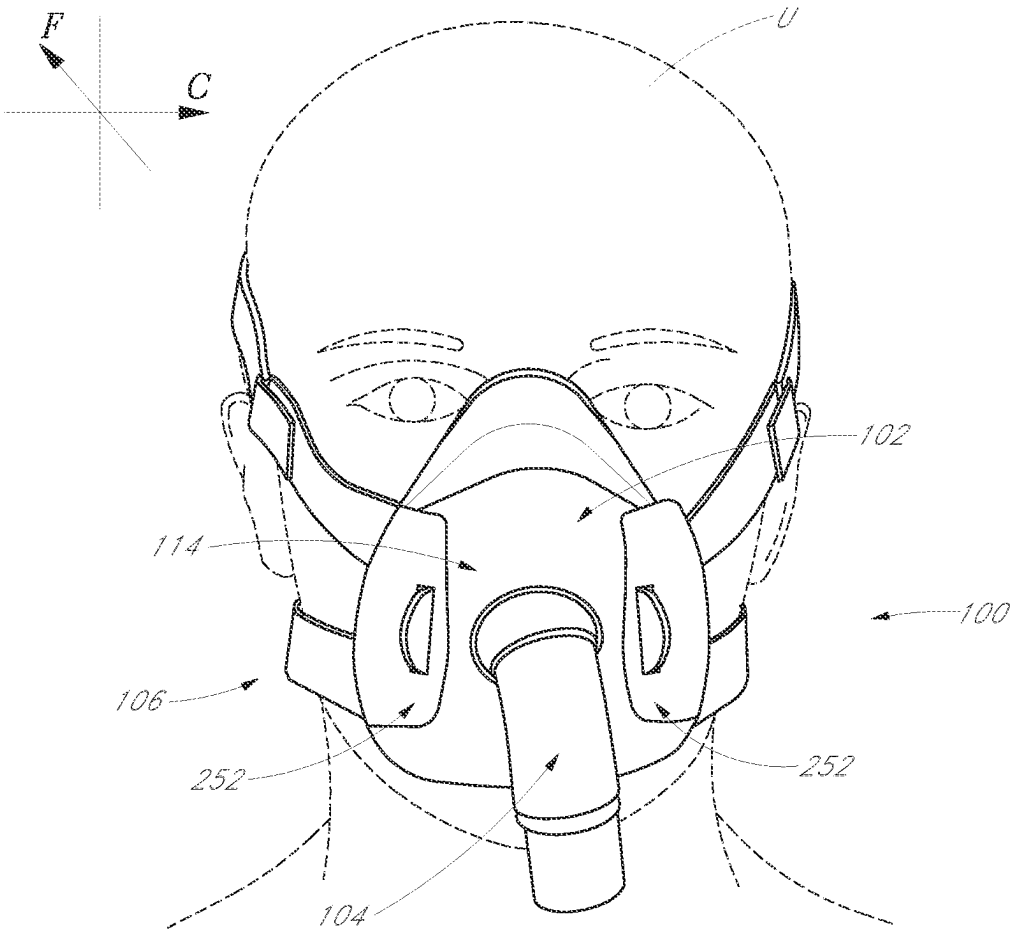


FIG. 1

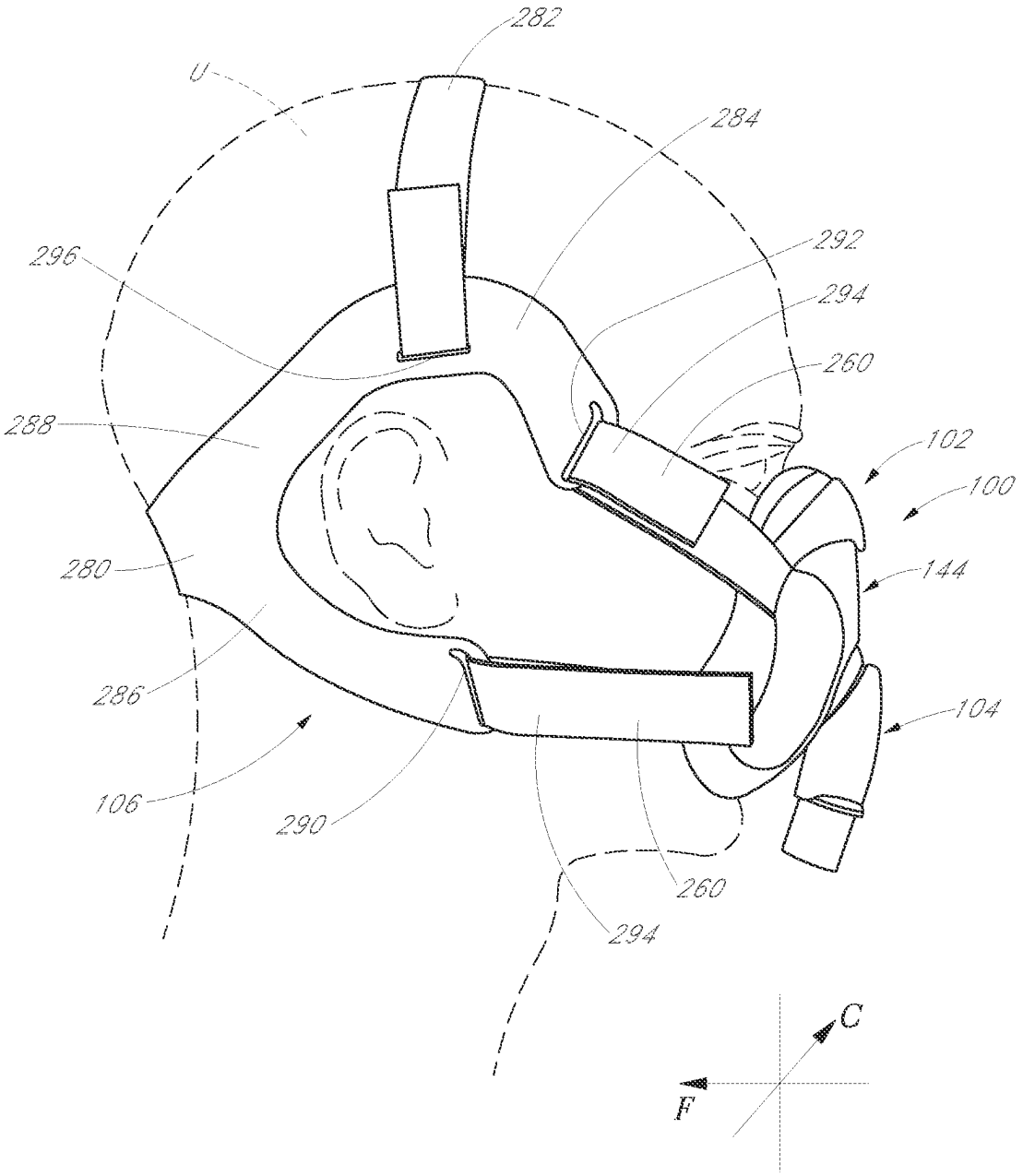
282
U
284
292
296
294
260
288
102
100
280
144
286
104
106
290
260
294
C
F

FIG. 2

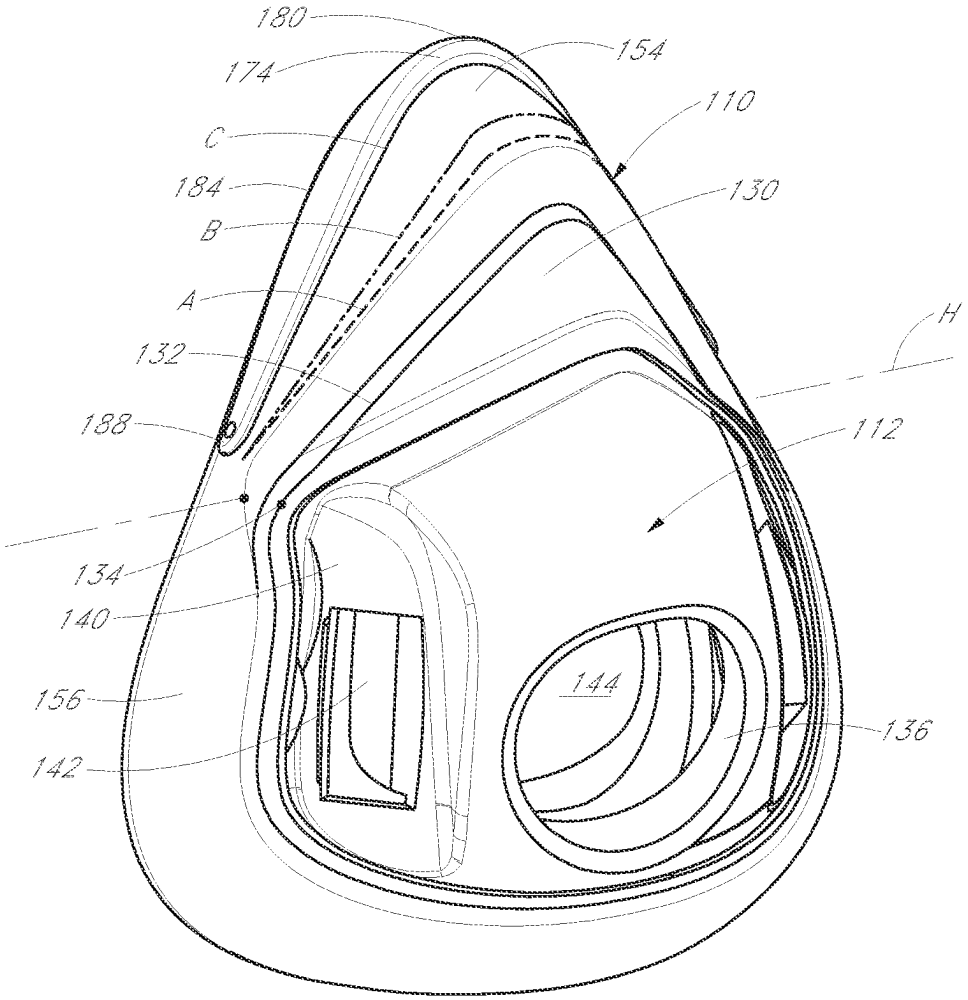


FIG. 3

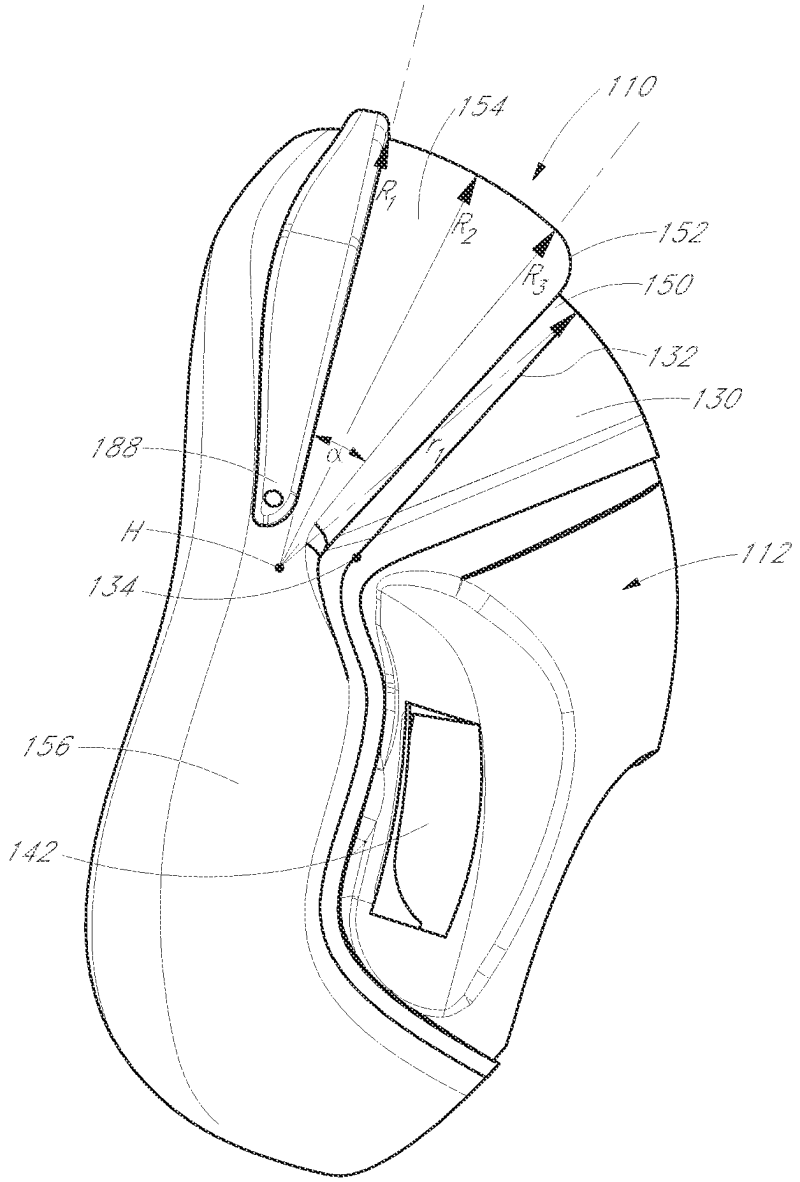


FIG. 4

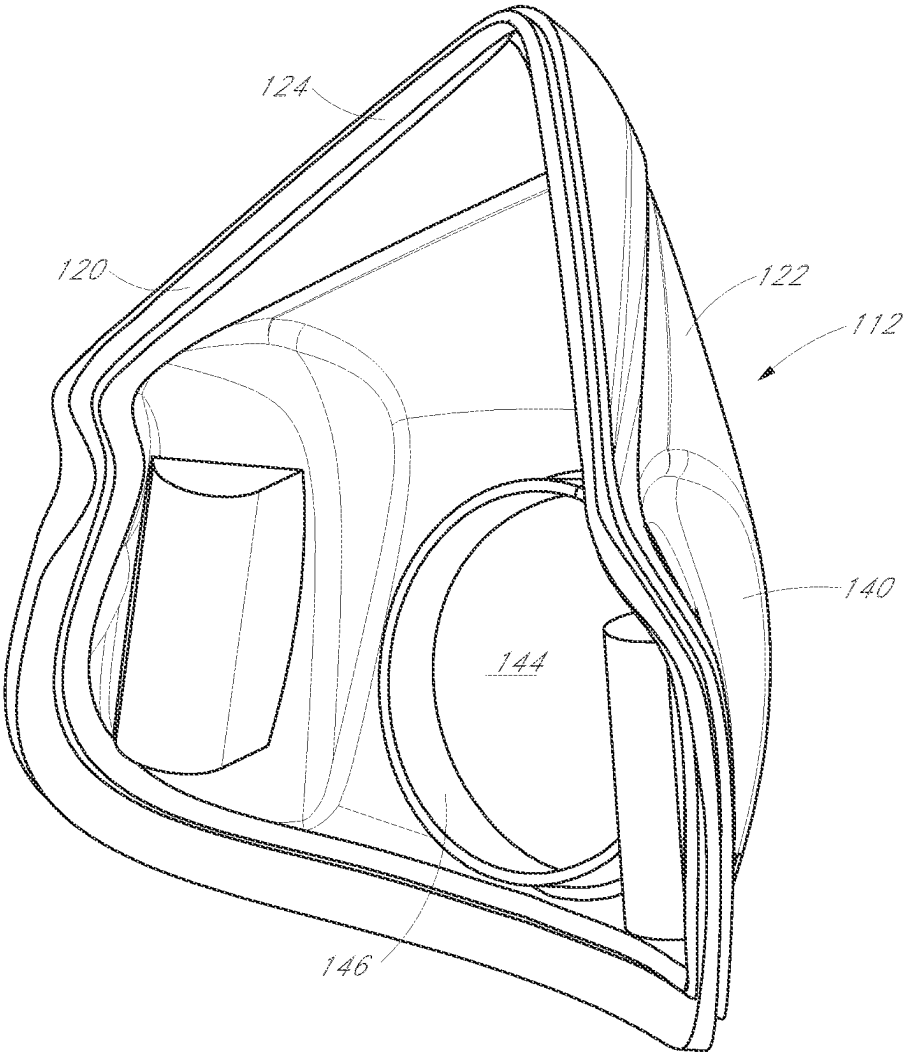


FIG. 5

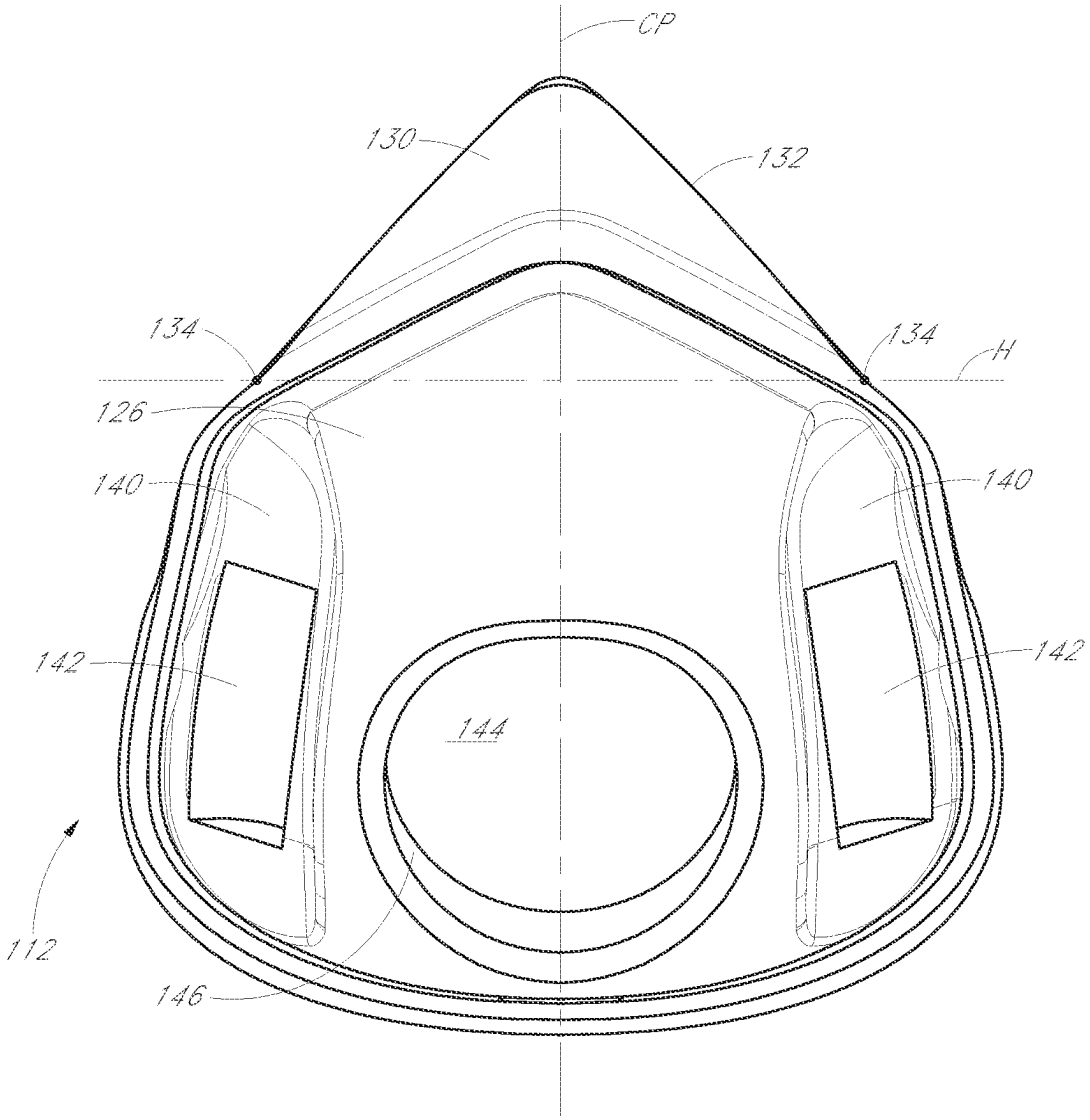


FIG. 6

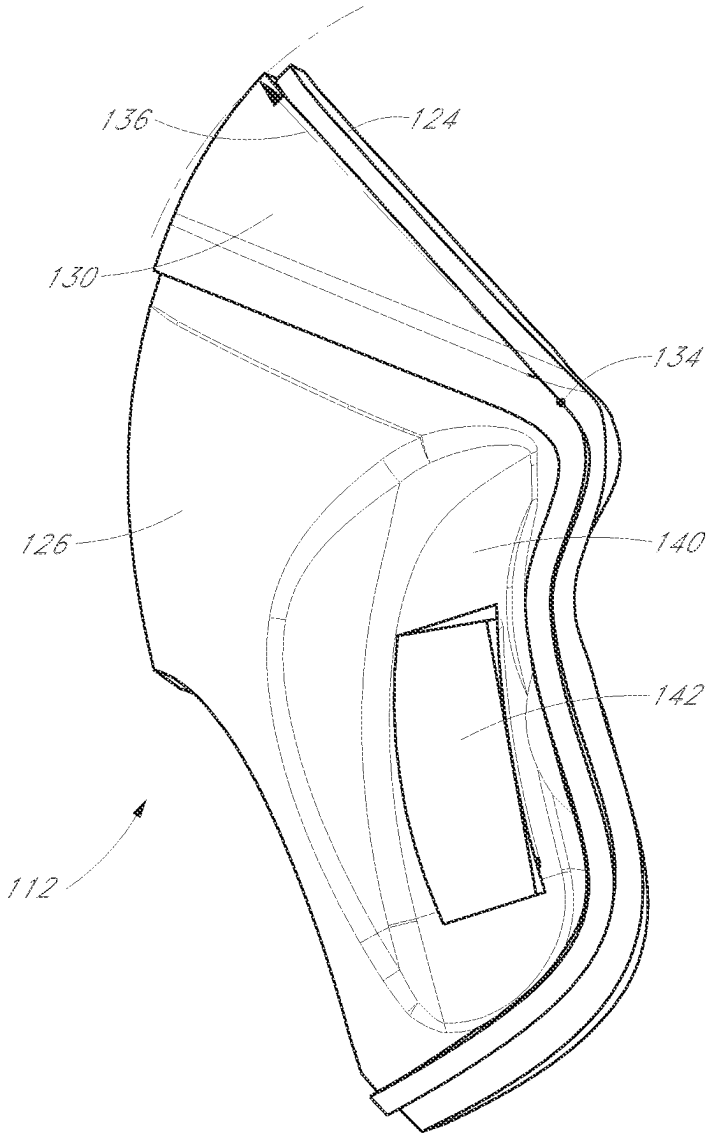


FIG. 7

FIG. 8

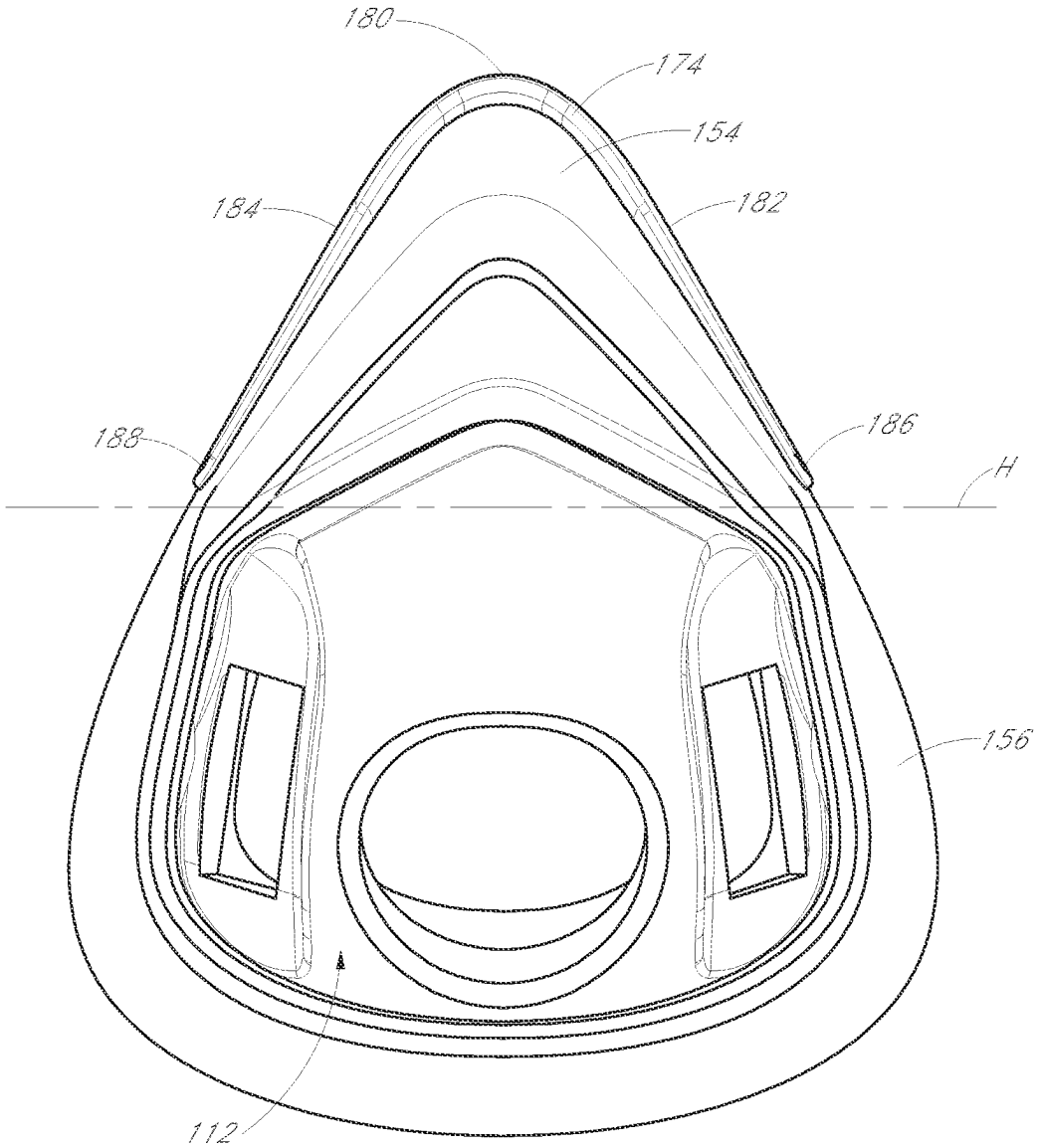


FIG. 9

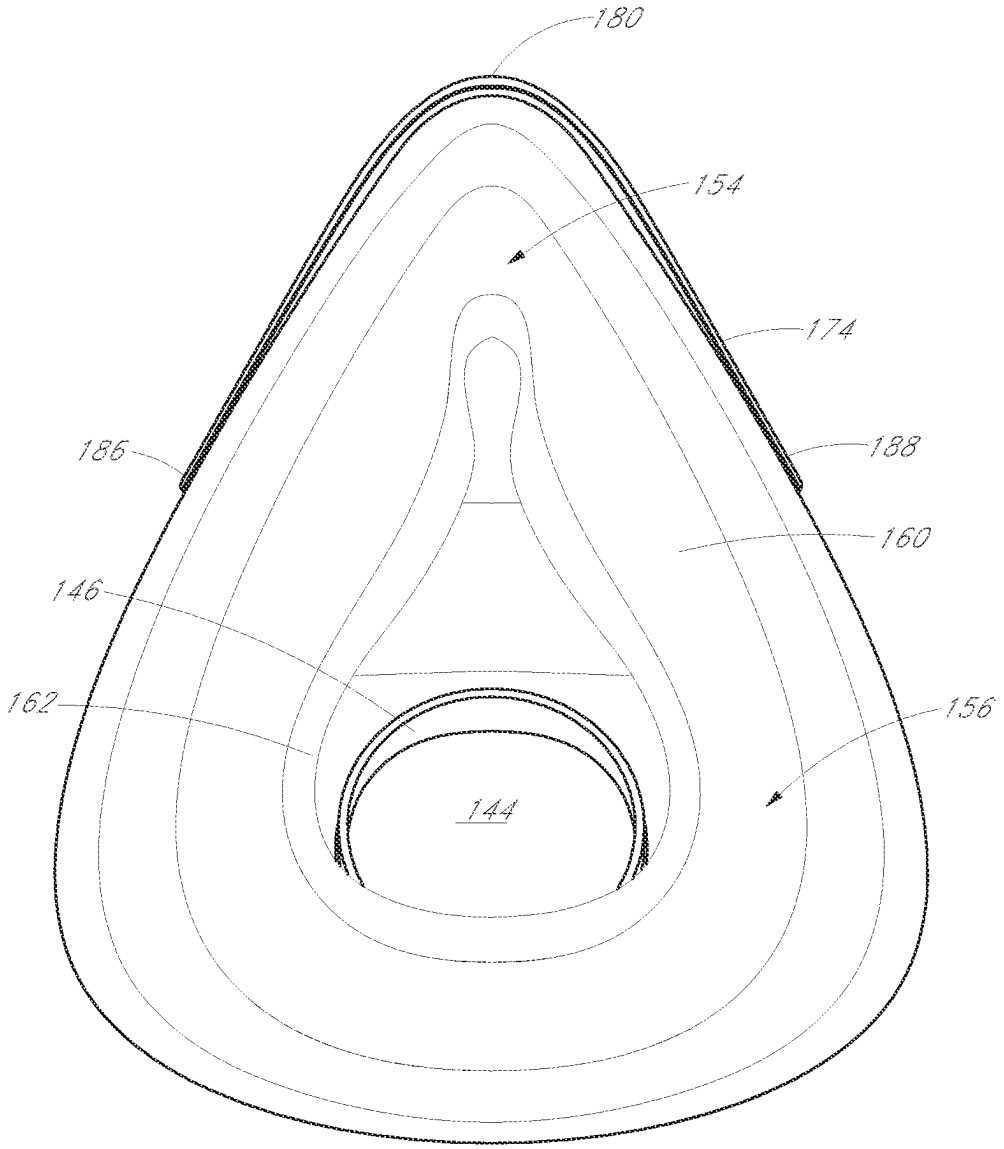


FIG. 10

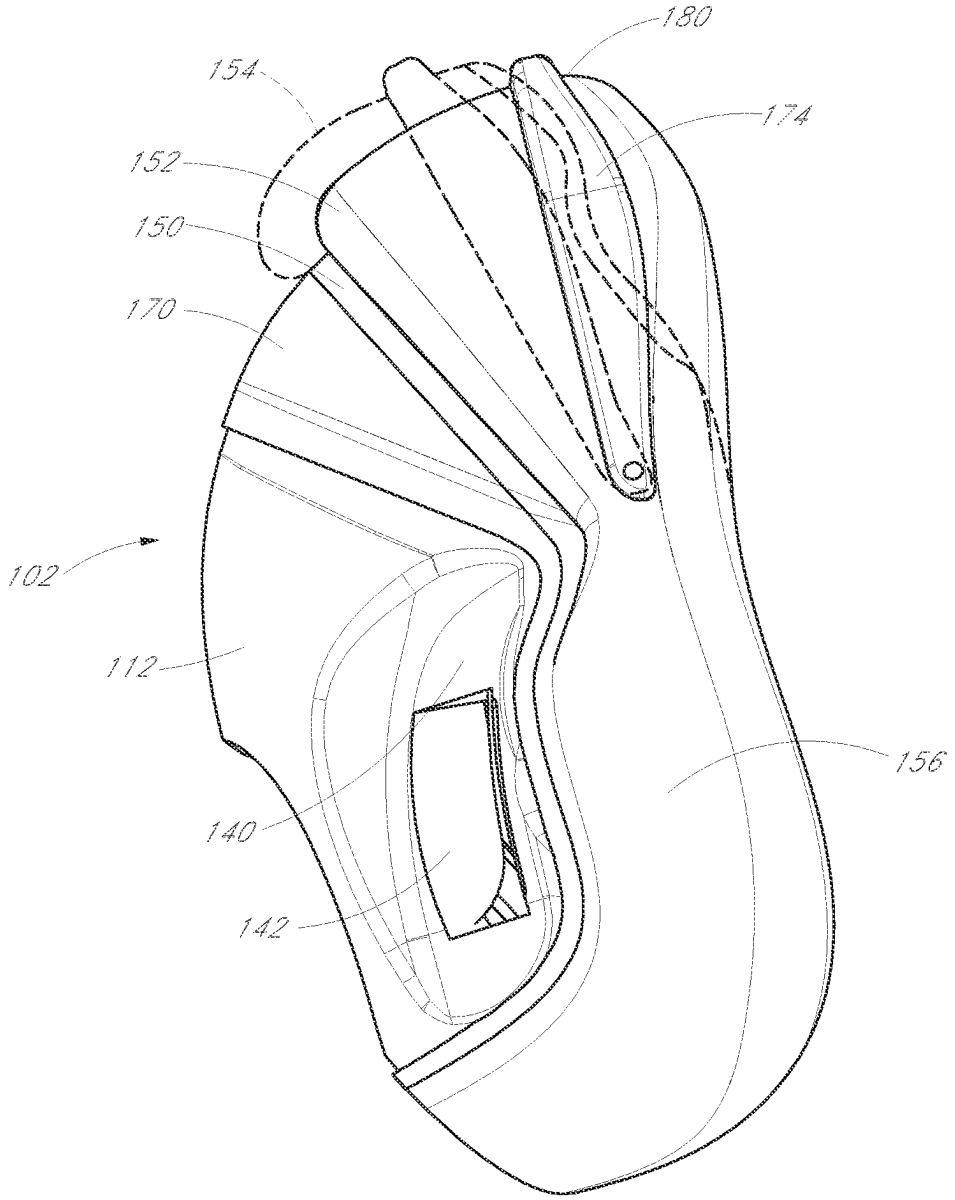


FIG. 11

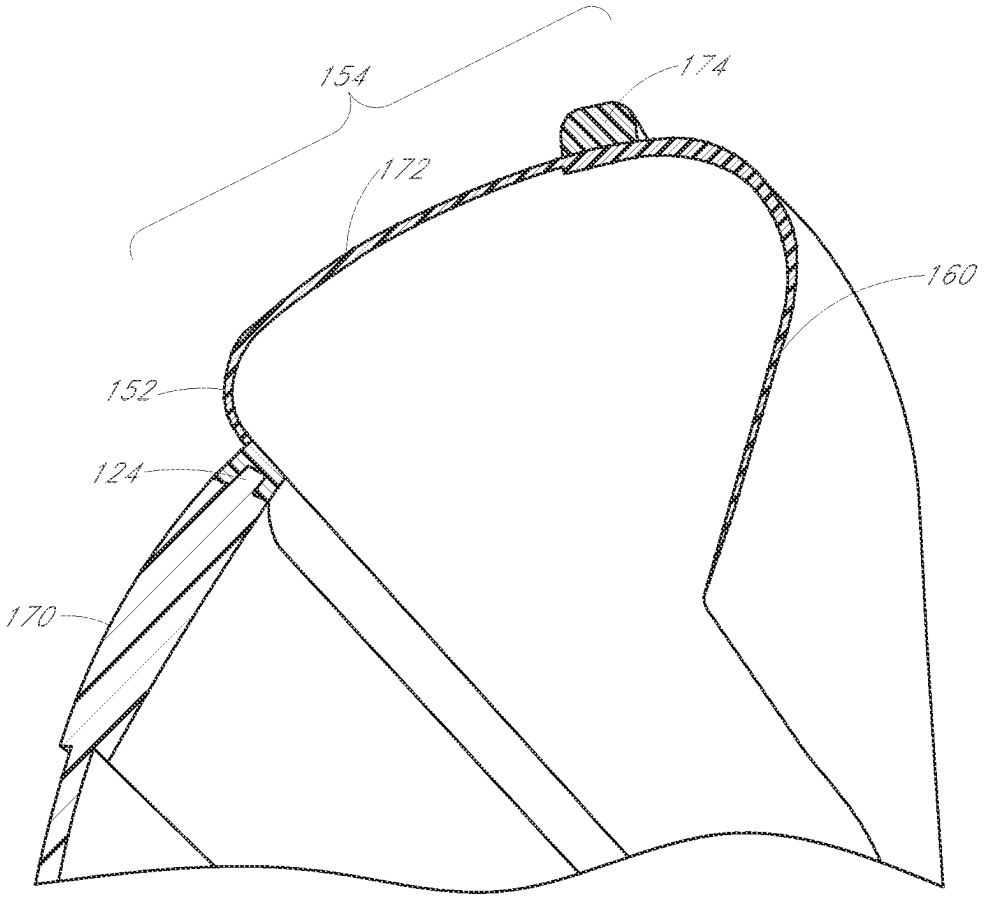


FIG. 12A

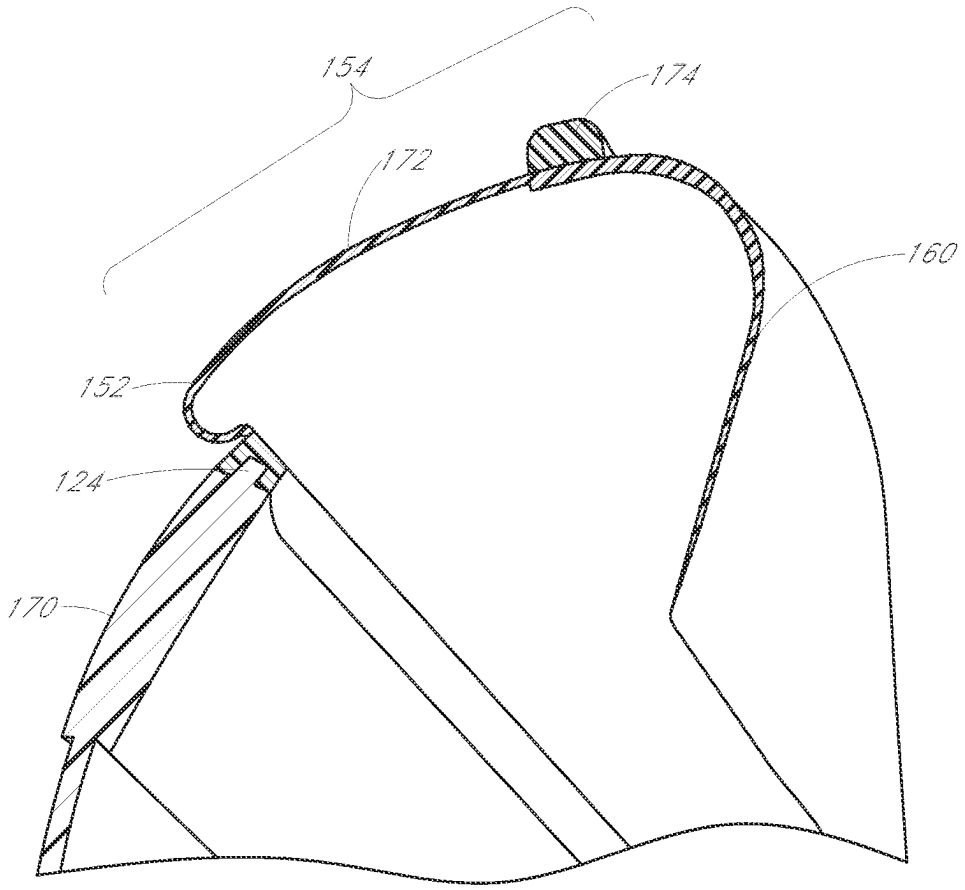


FIG. 12B

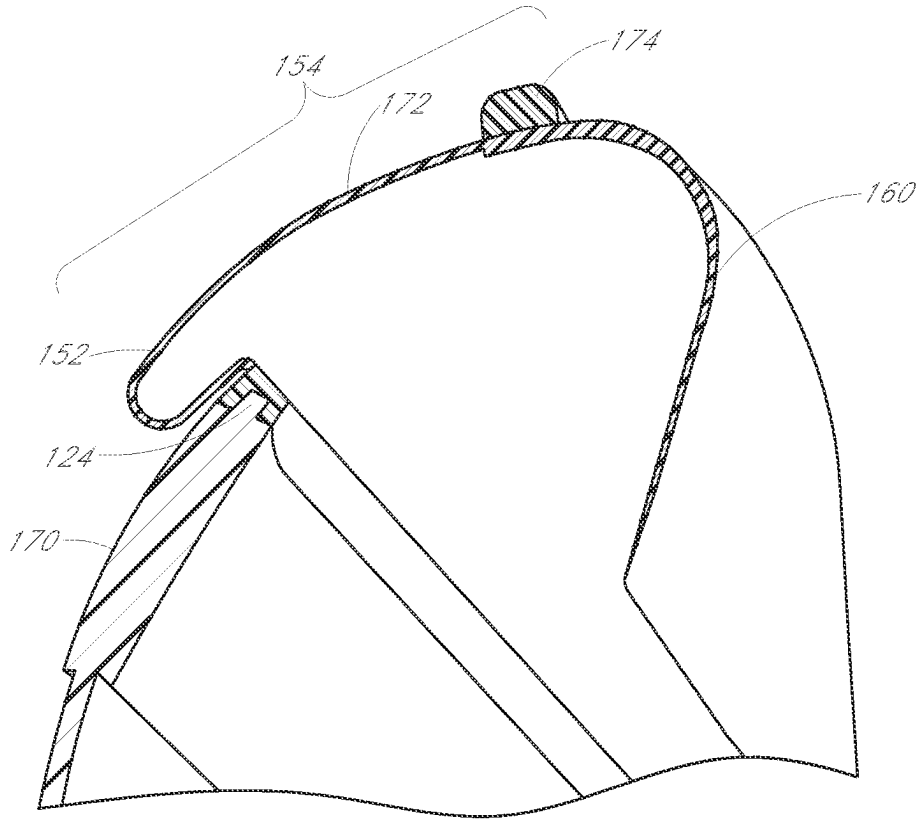


FIG. 12C

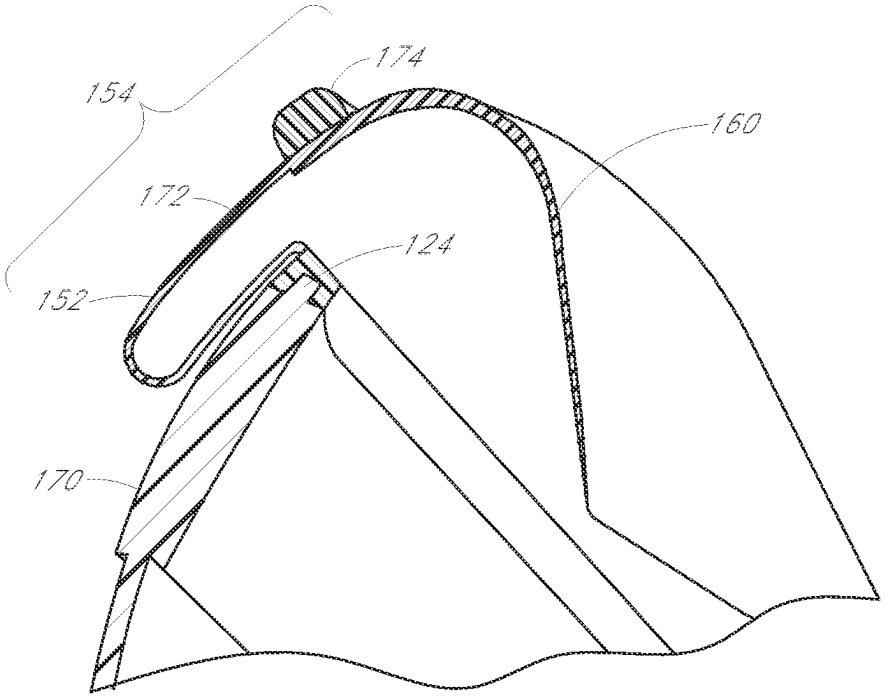


FIG. 12D

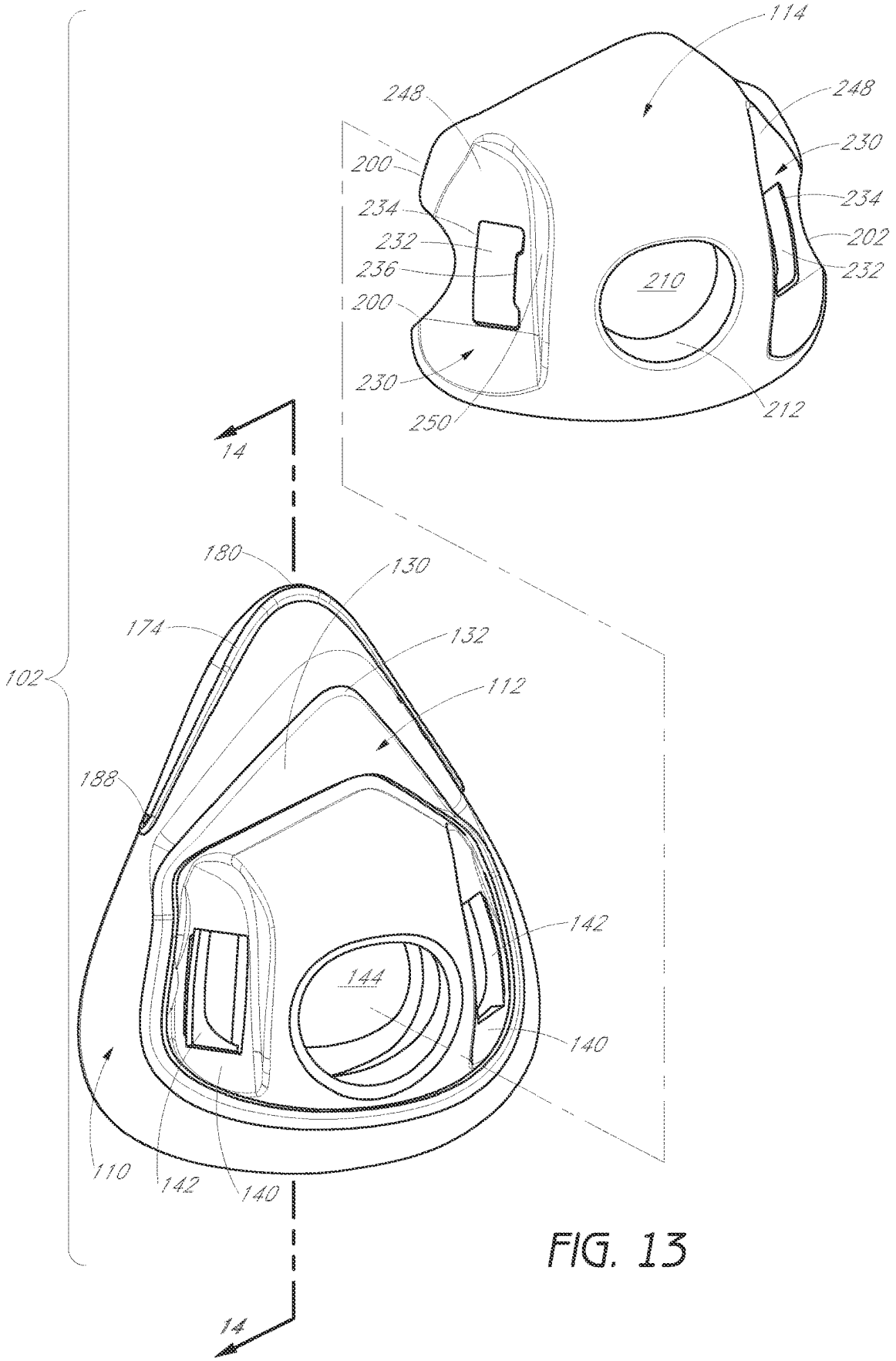
114
248
248
230
200
234
234
232
202
236
232
210
200
230
212
250
14
180
130
174
132
102
112
188
142
144
140
110
142
140
14

FIG. 13

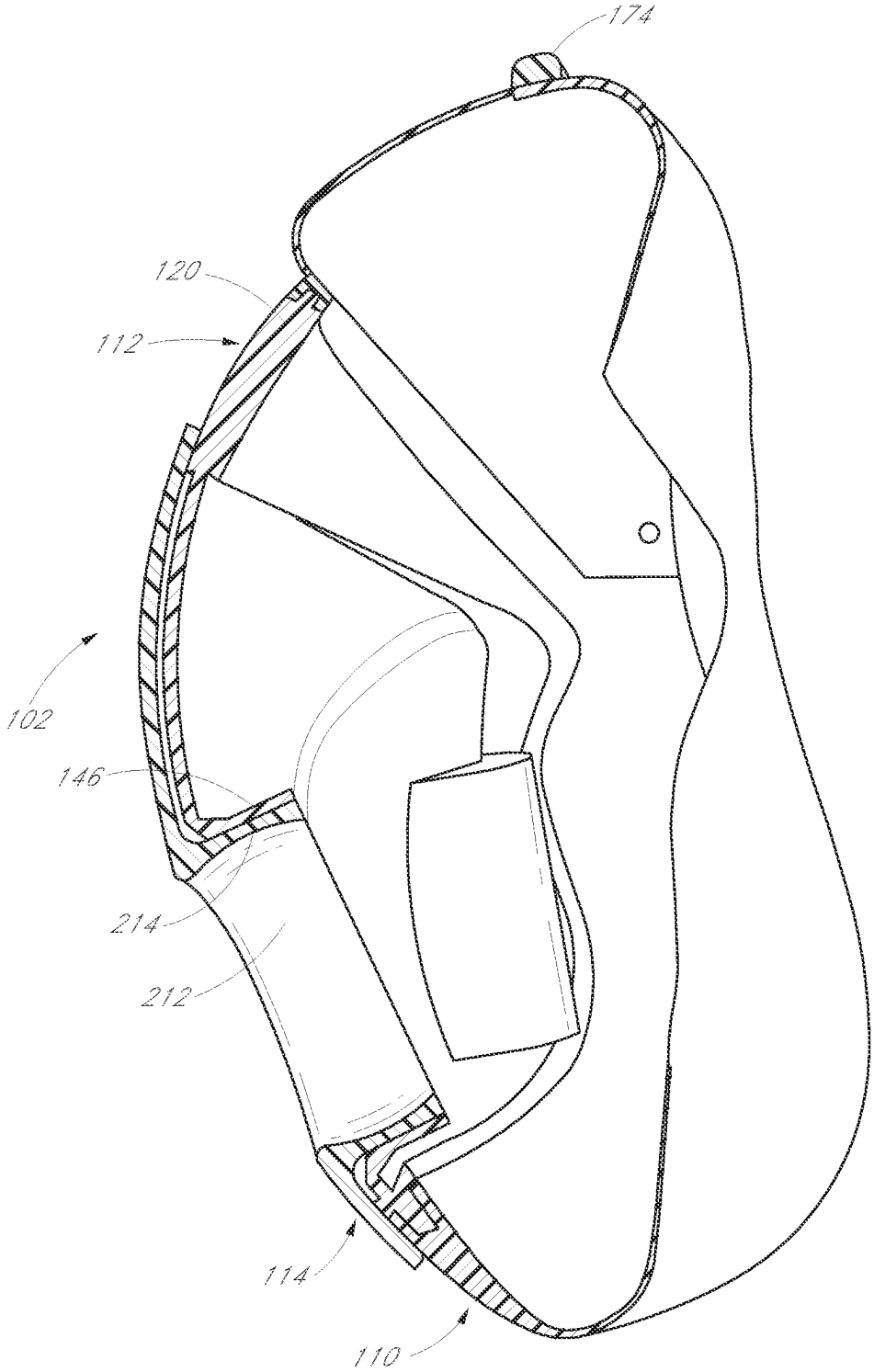


FIG. 14

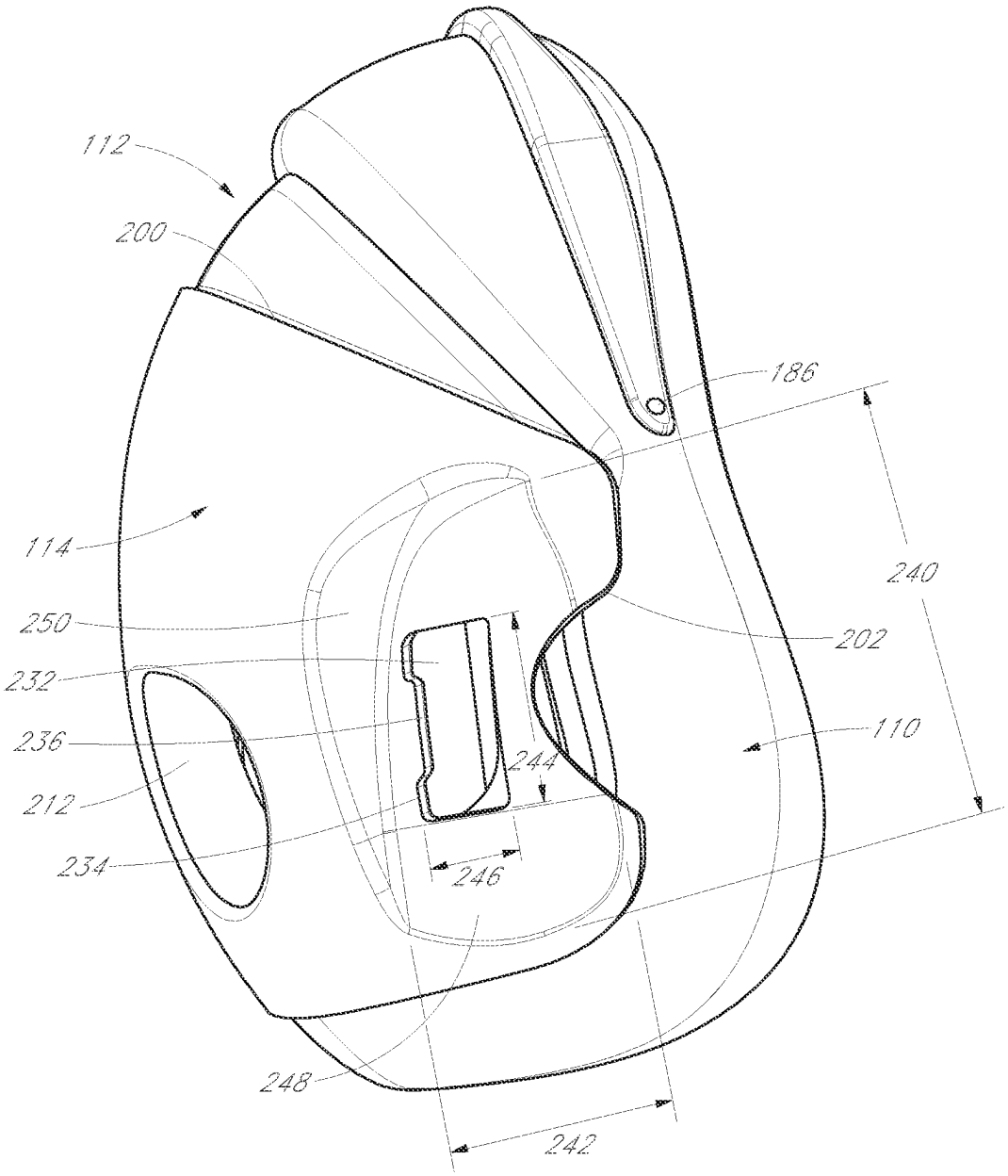


FIG. 15

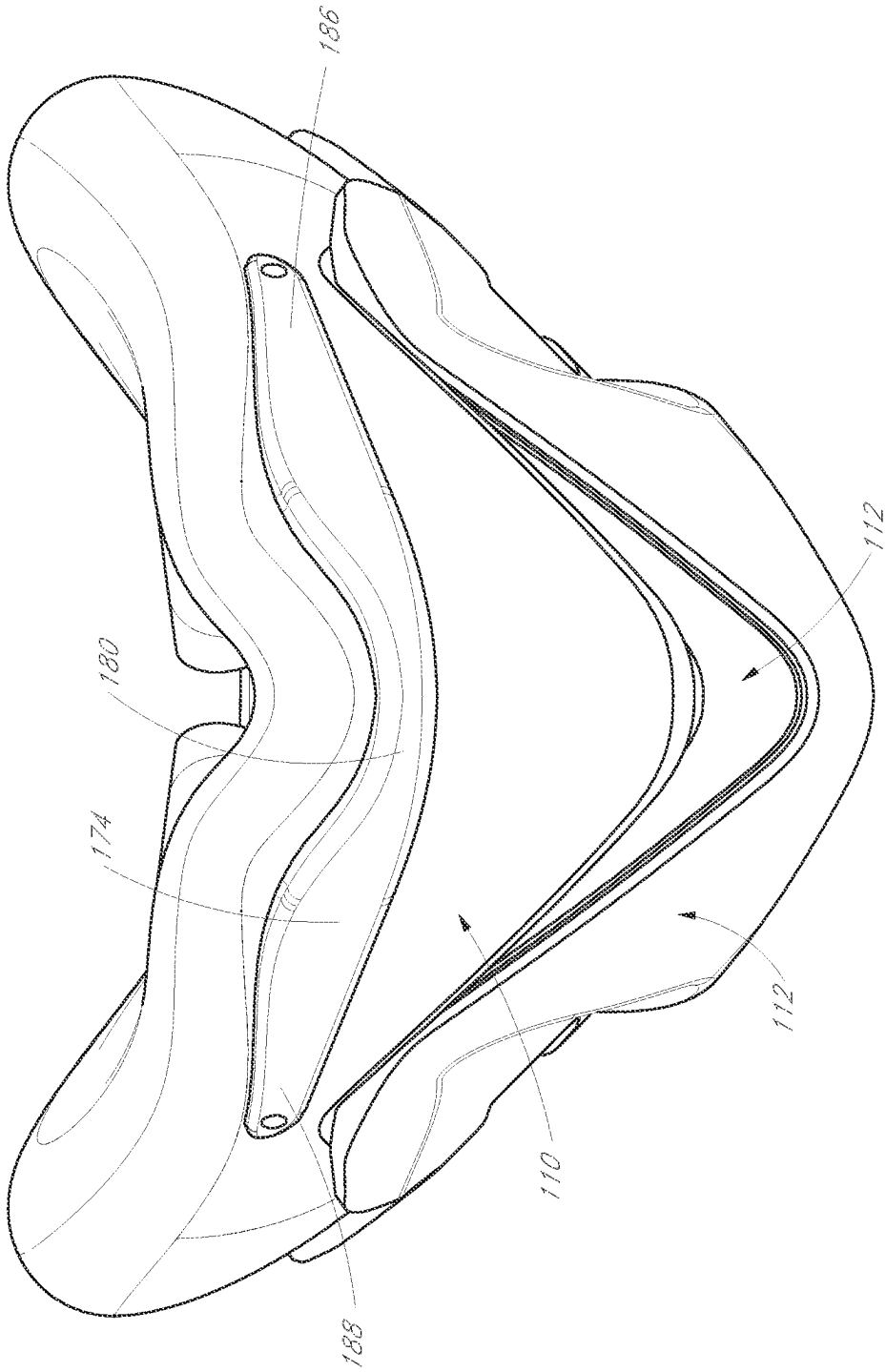


FIG. 16

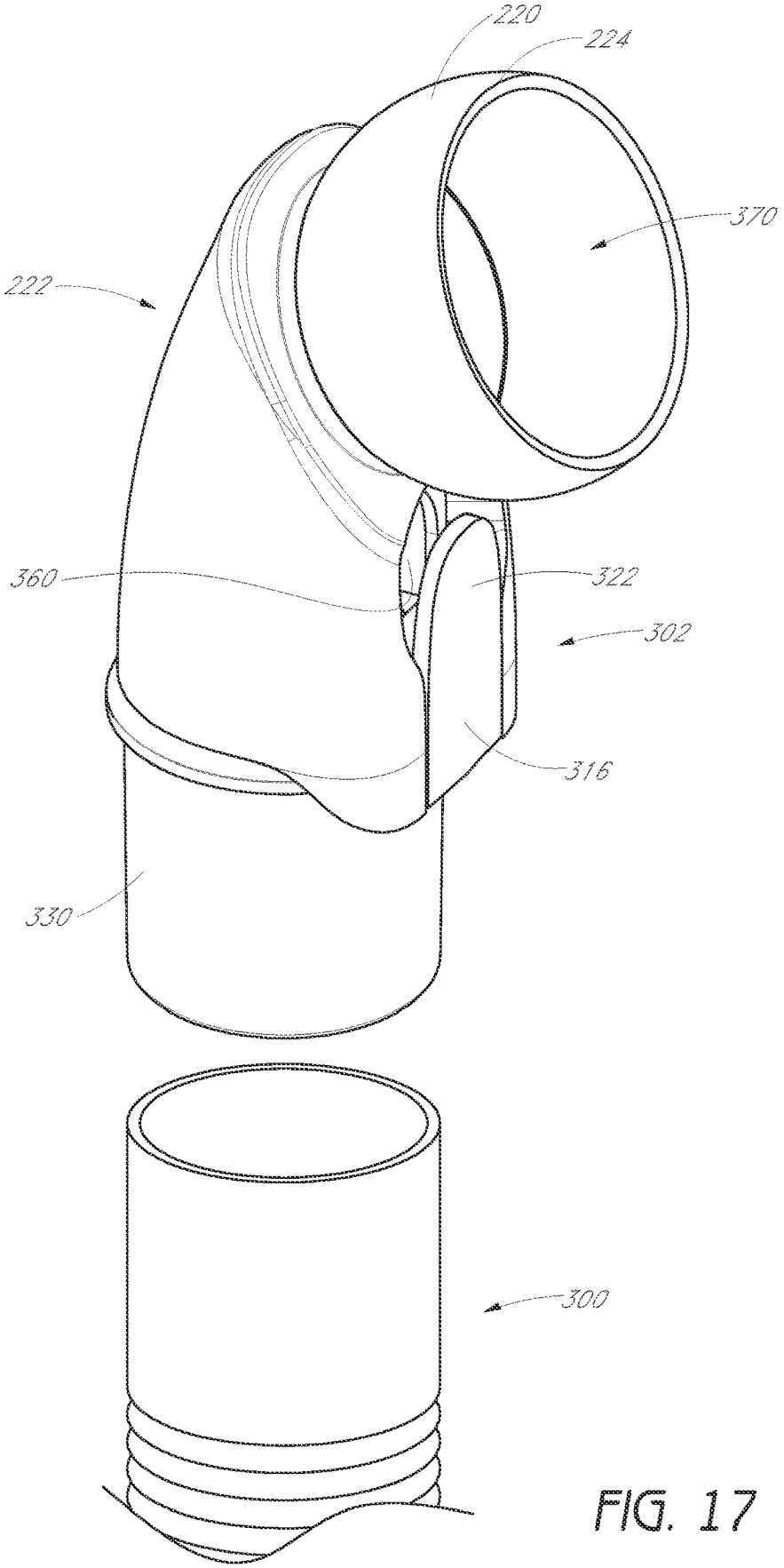


FIG. 17

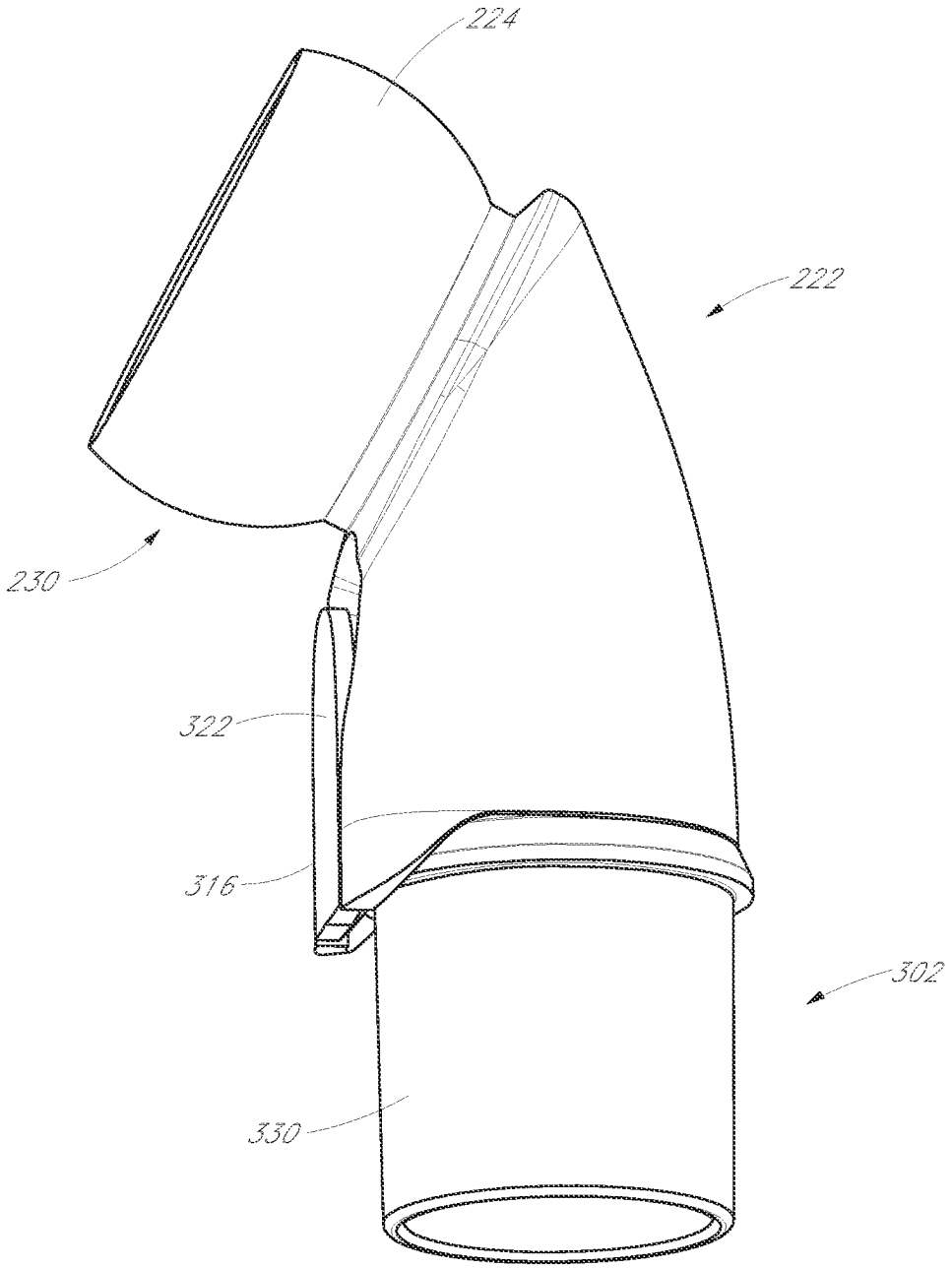


FIG. 18

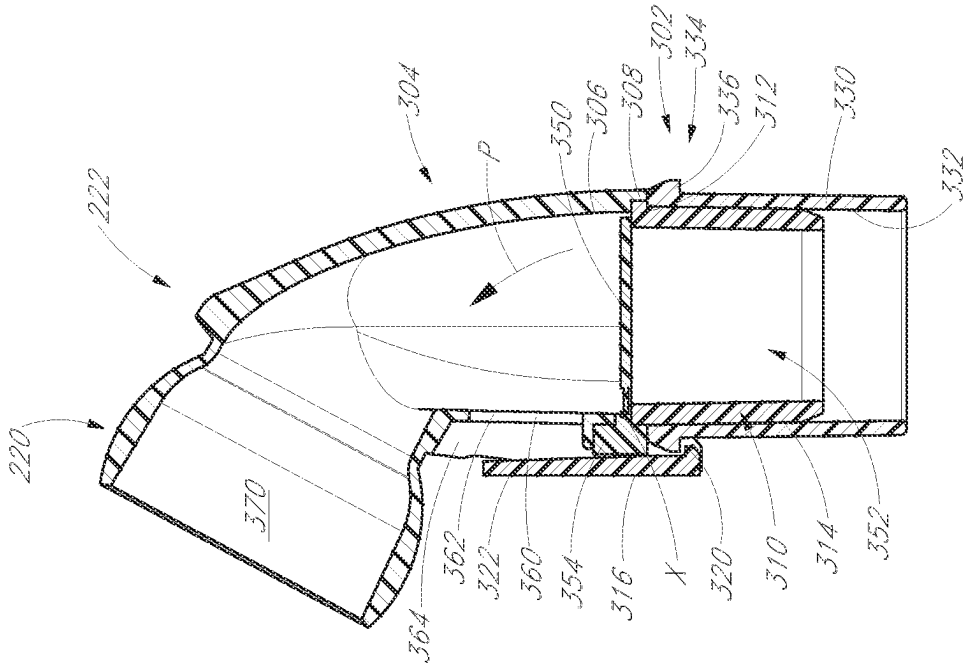
220
222
304
P
350
306
308
302
334
336
312
330
332
370
362
322
360
354
316
X
320
310
314
352
364

FIG. 20

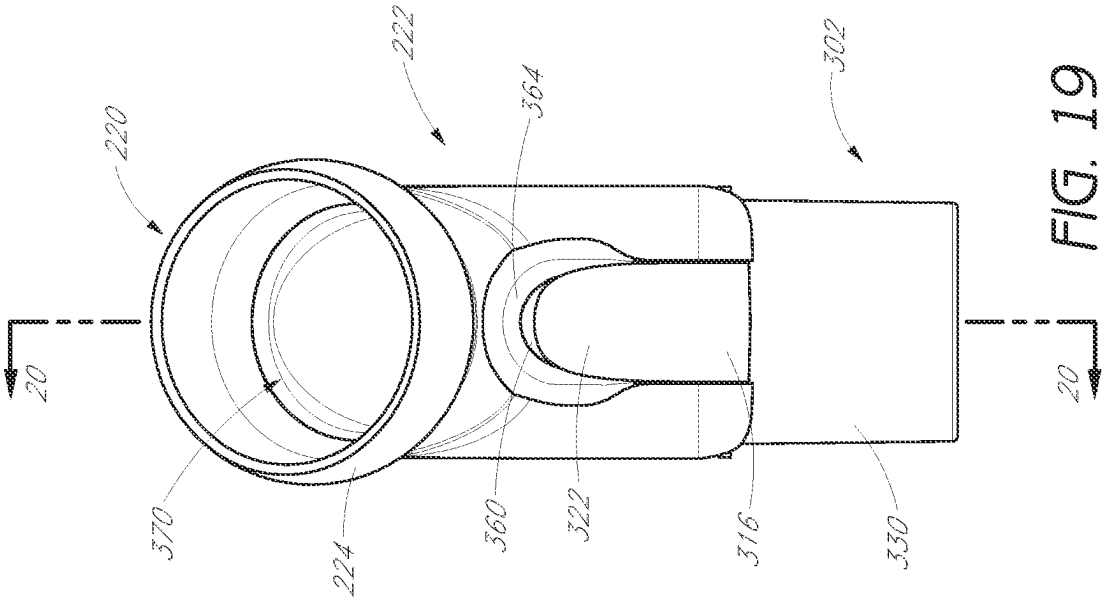
220
222
364
302
20
20
370
224
360
322
316
330

FIG. 19

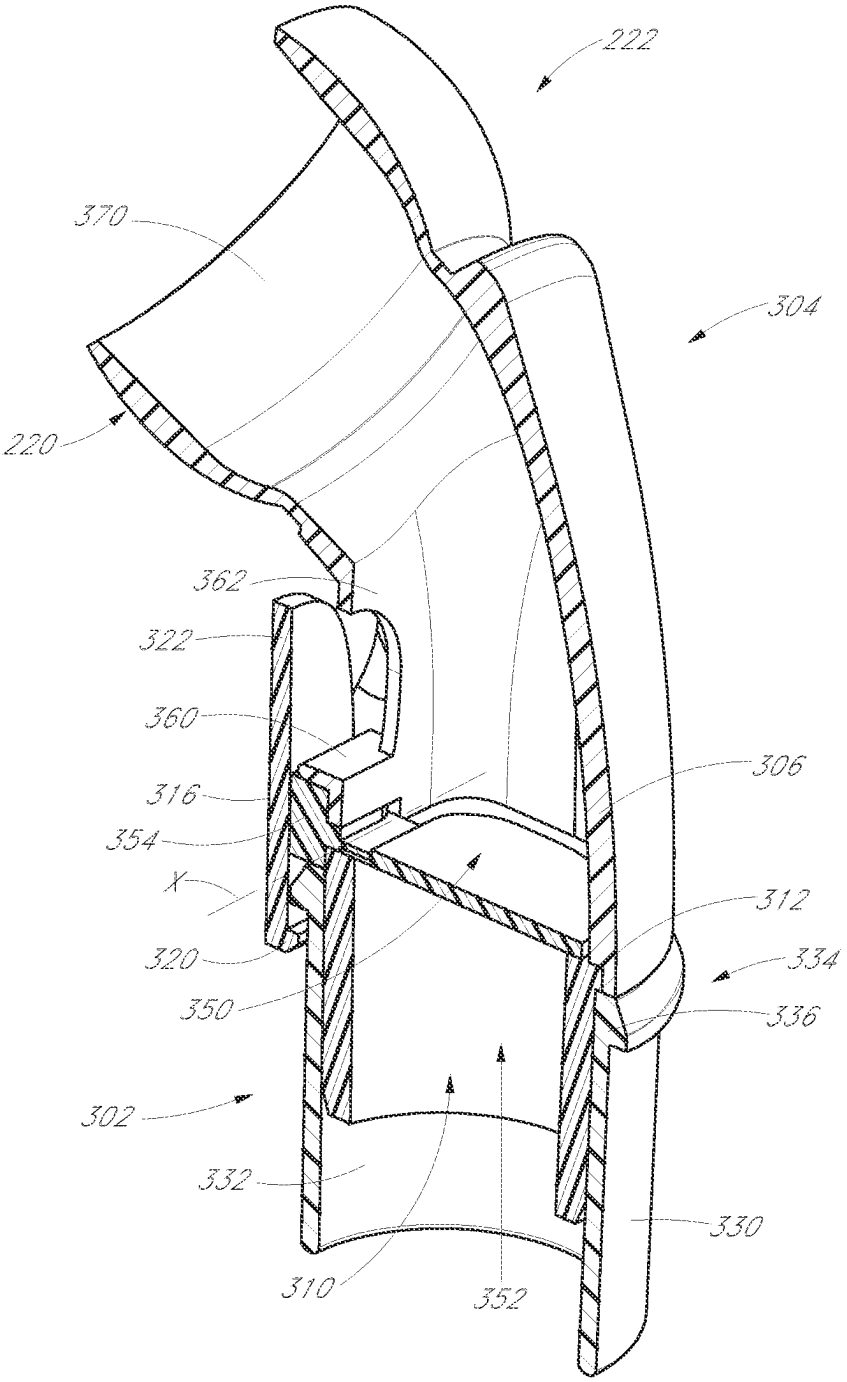
222
370
304
220
362
322
360
306
316
354
X
312
320
334
350
336
302
332
330
310
352

FIG. 21

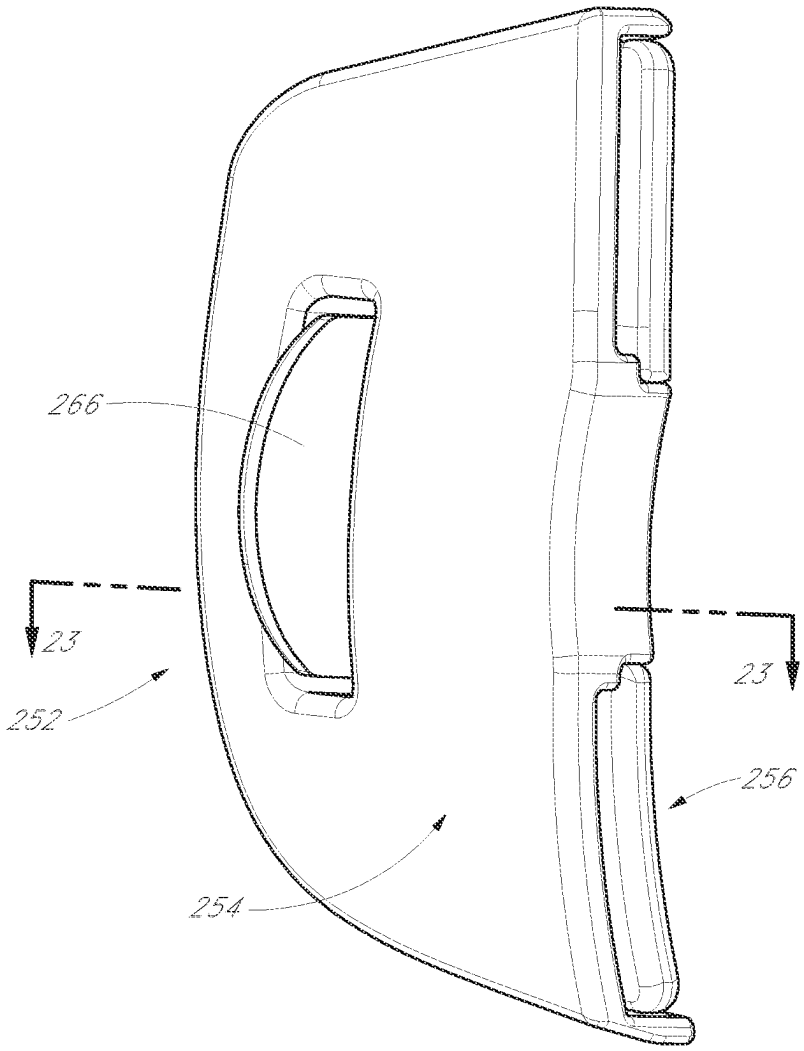


FIG. 22

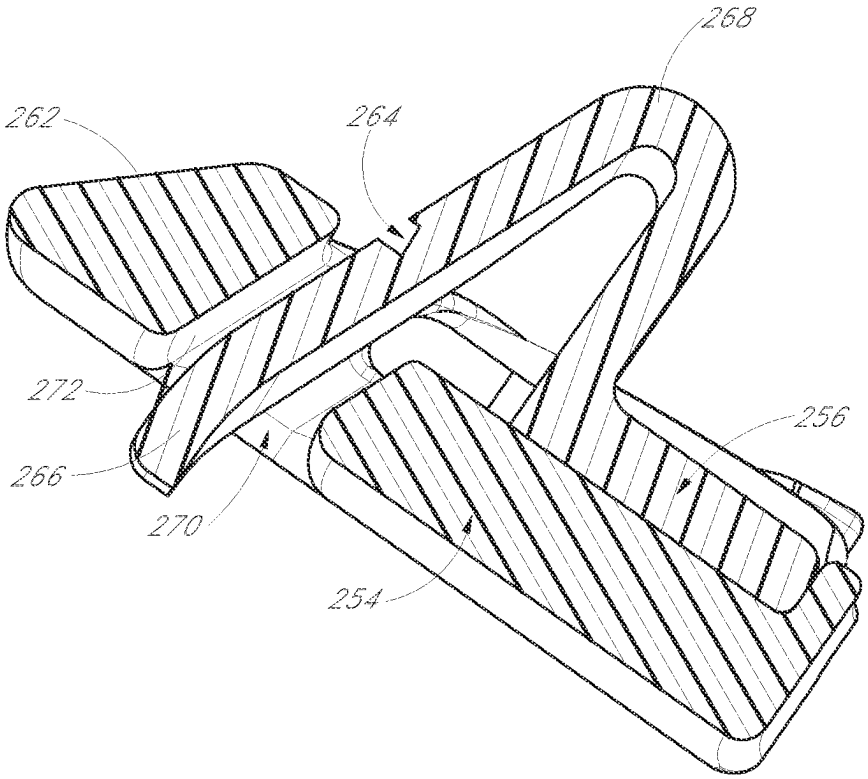


FIG. 23

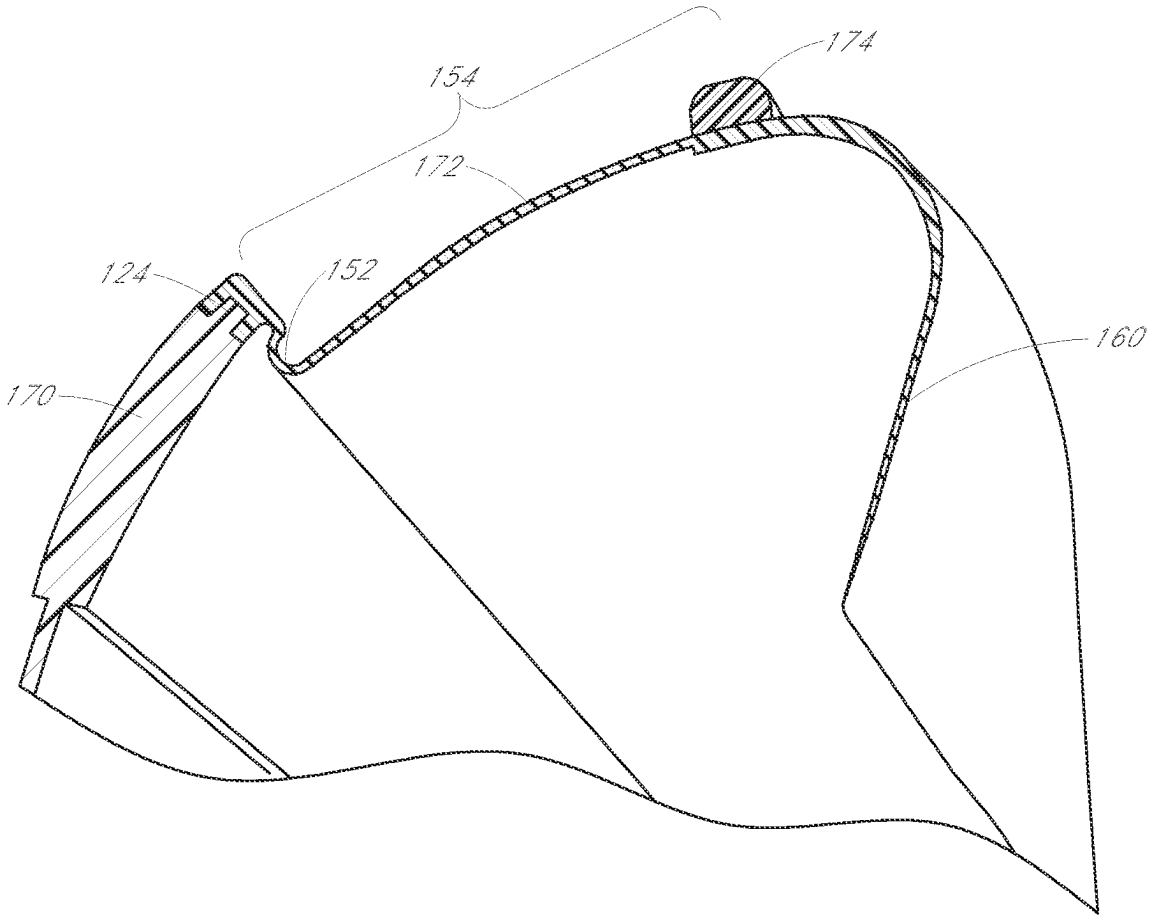


FIG. 24

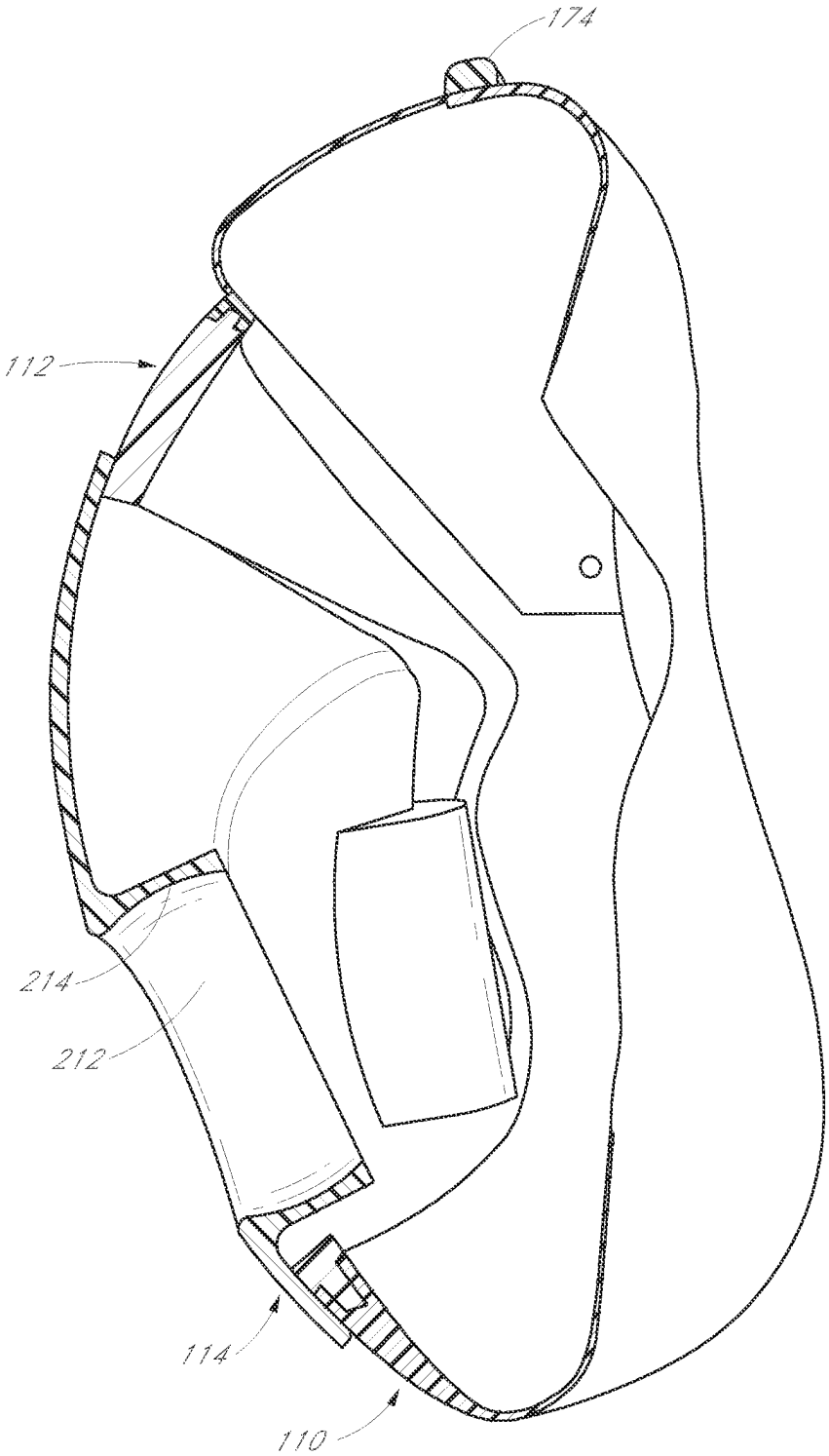


FIG. 25

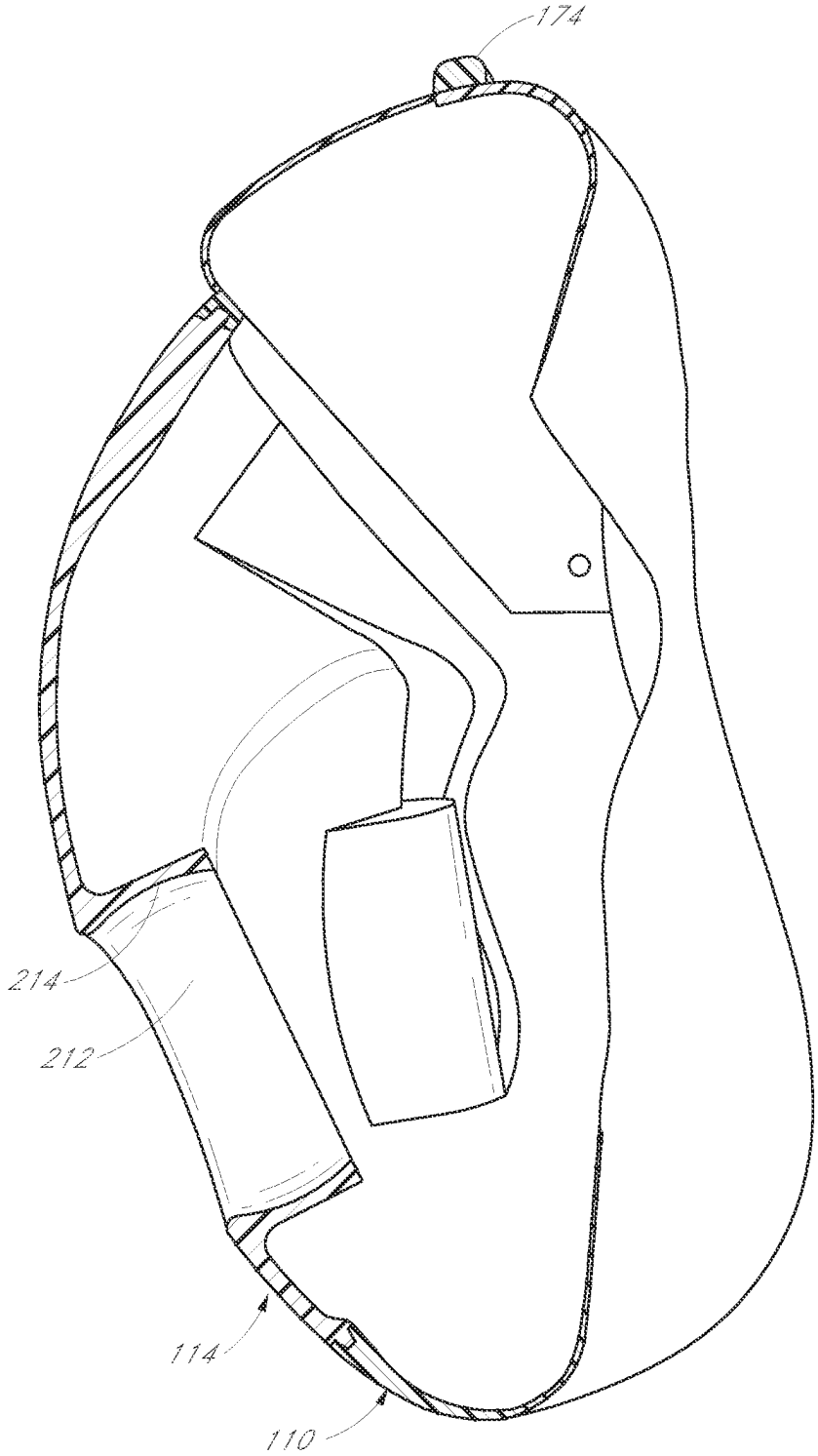


FIG. 26

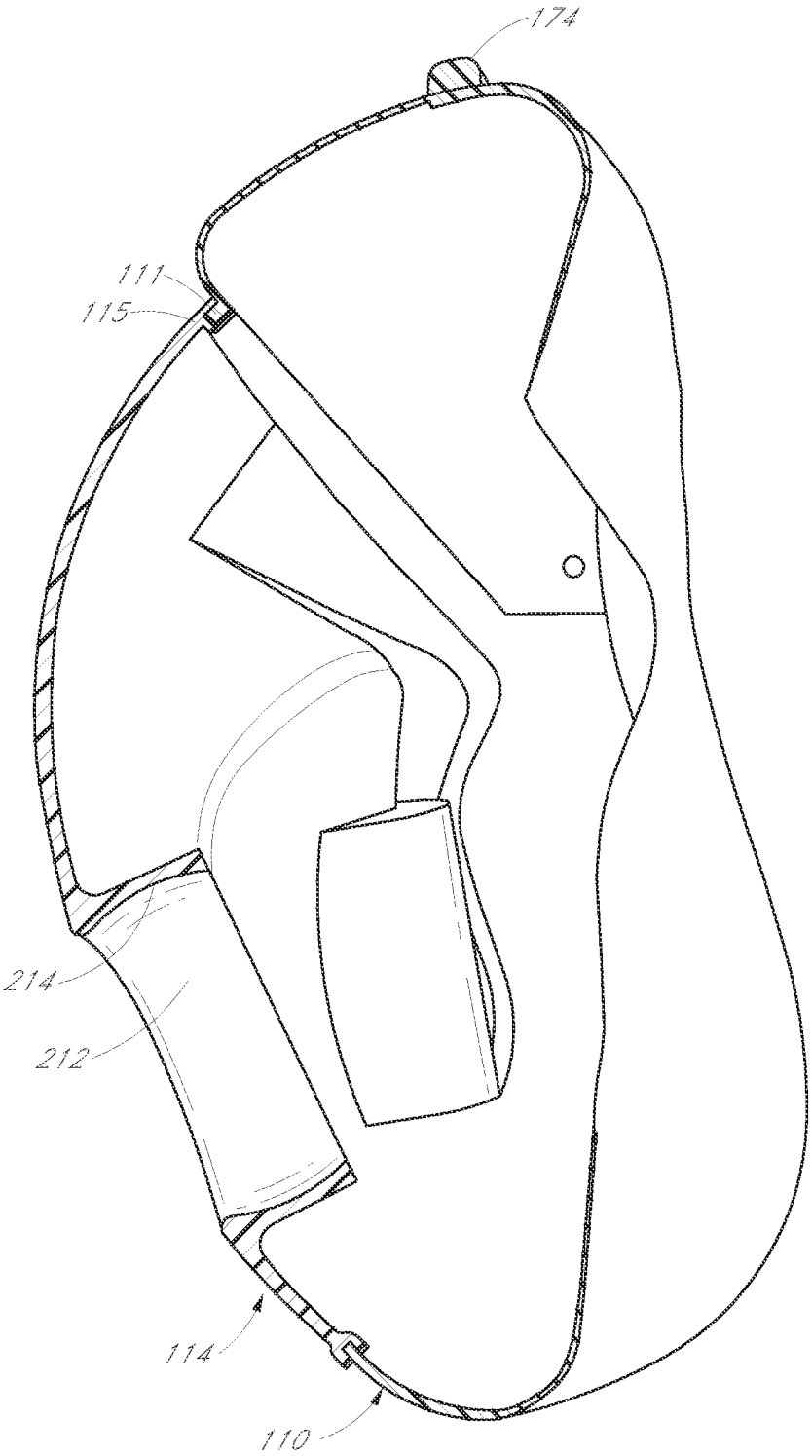


FIG. 27

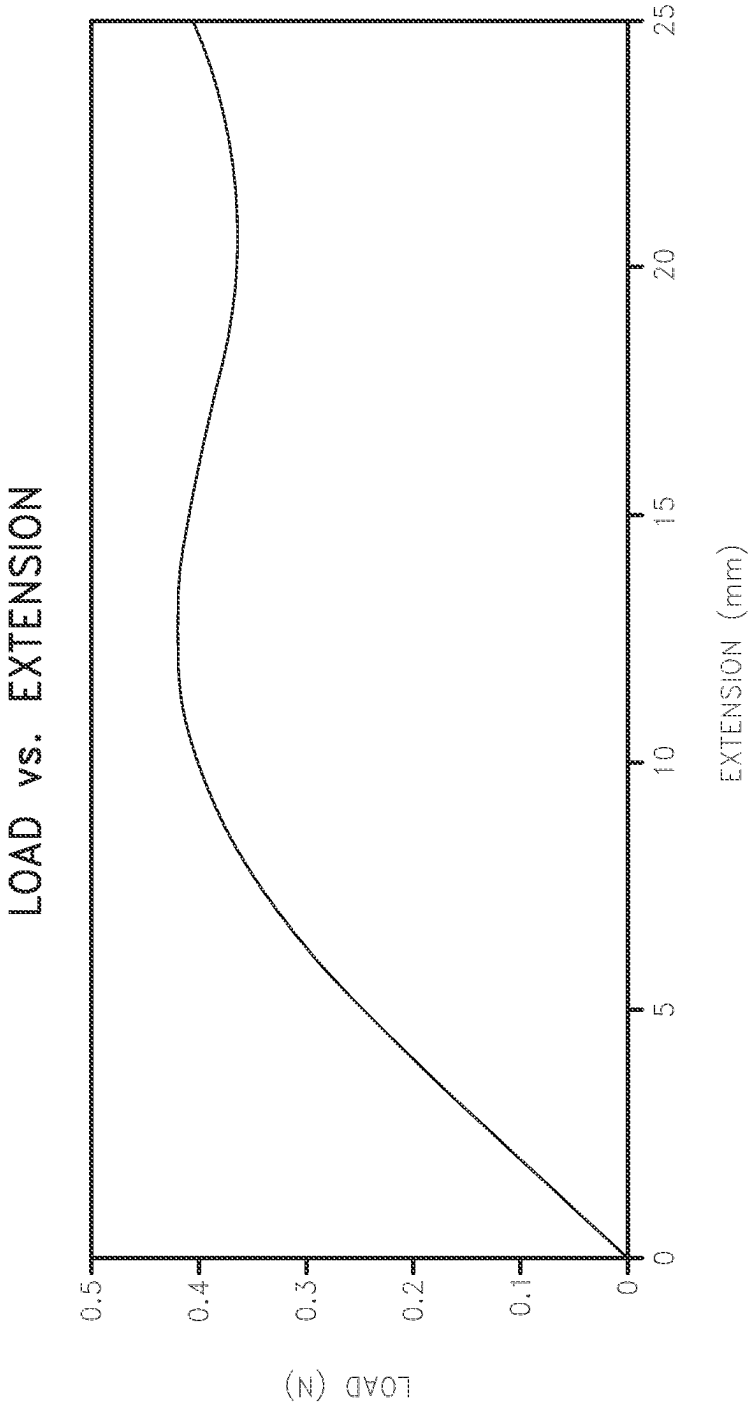
LOAD vs. EXTENSION
LOAD (N)
0.5
0.4
0.3
0.2
0.1
0
0
5
10
15
20
25
EXTENSION (mm)

FIG. 28

FIG. 29

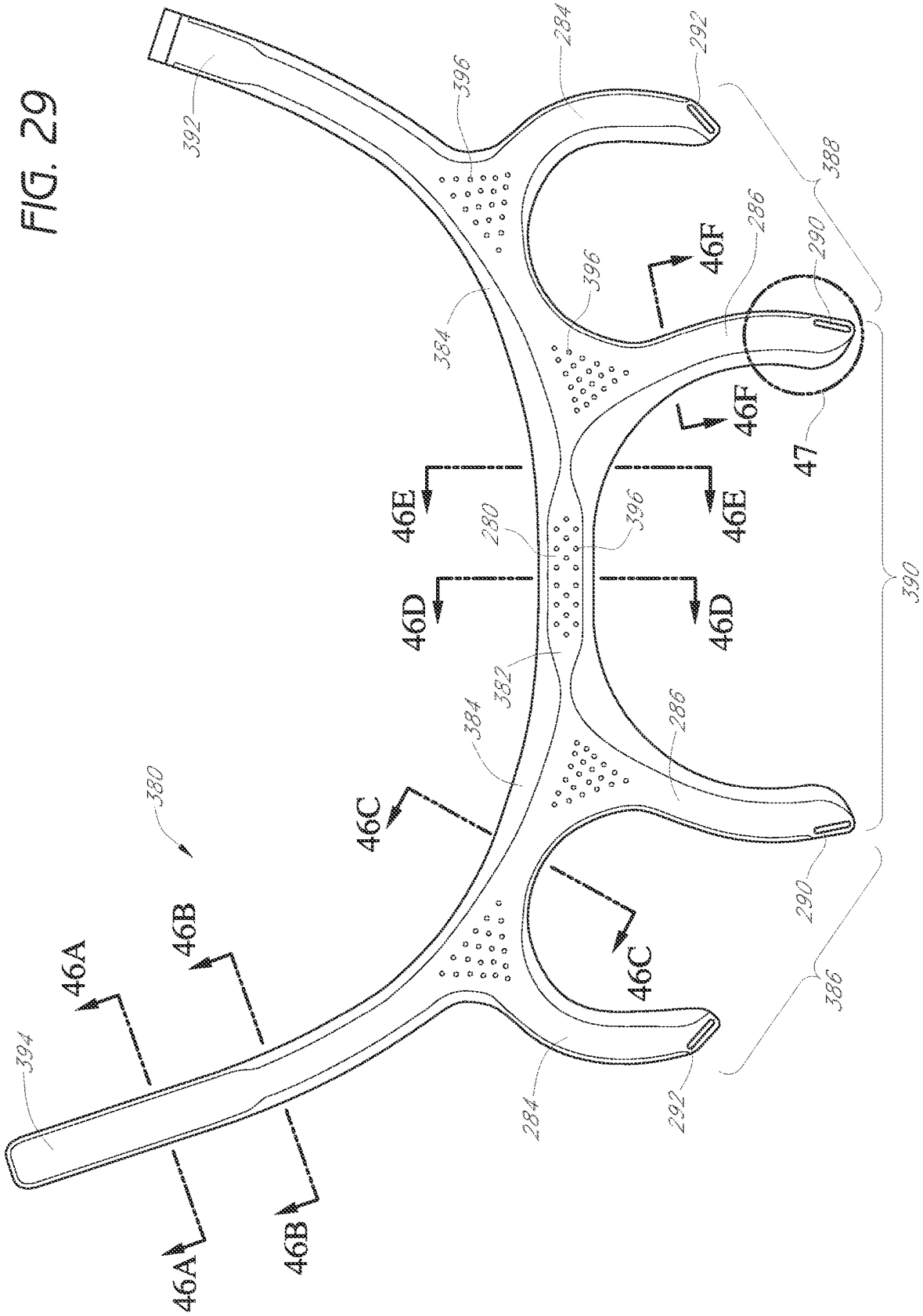
380
382
384
386
388
390
392
394
396
280
284
286
290
292
47
46A
46B
46C
46D
46E
46F

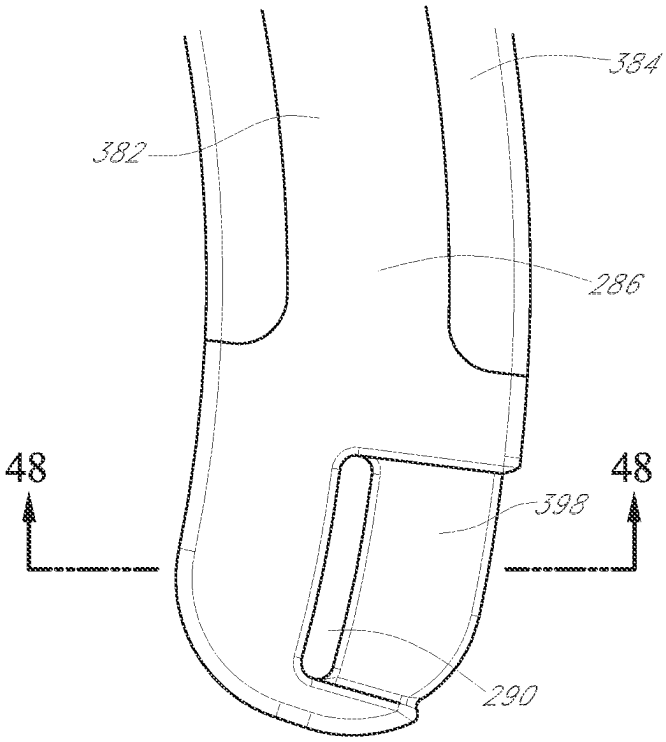


FIG. 30

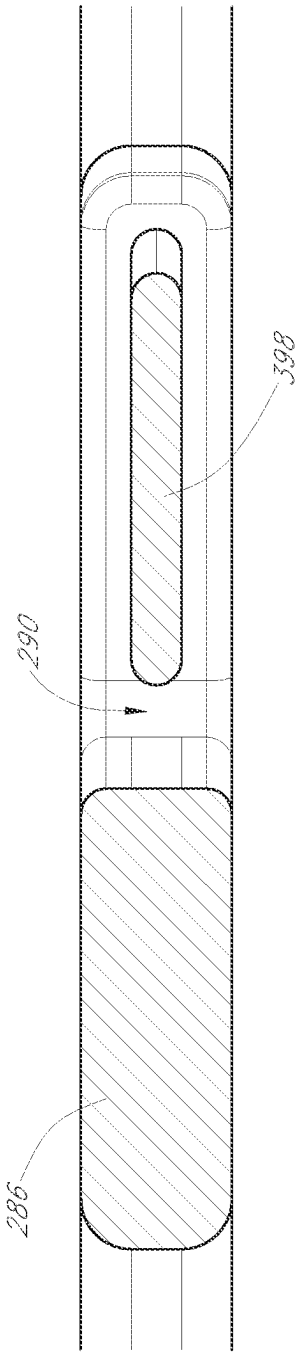


FIG. 31

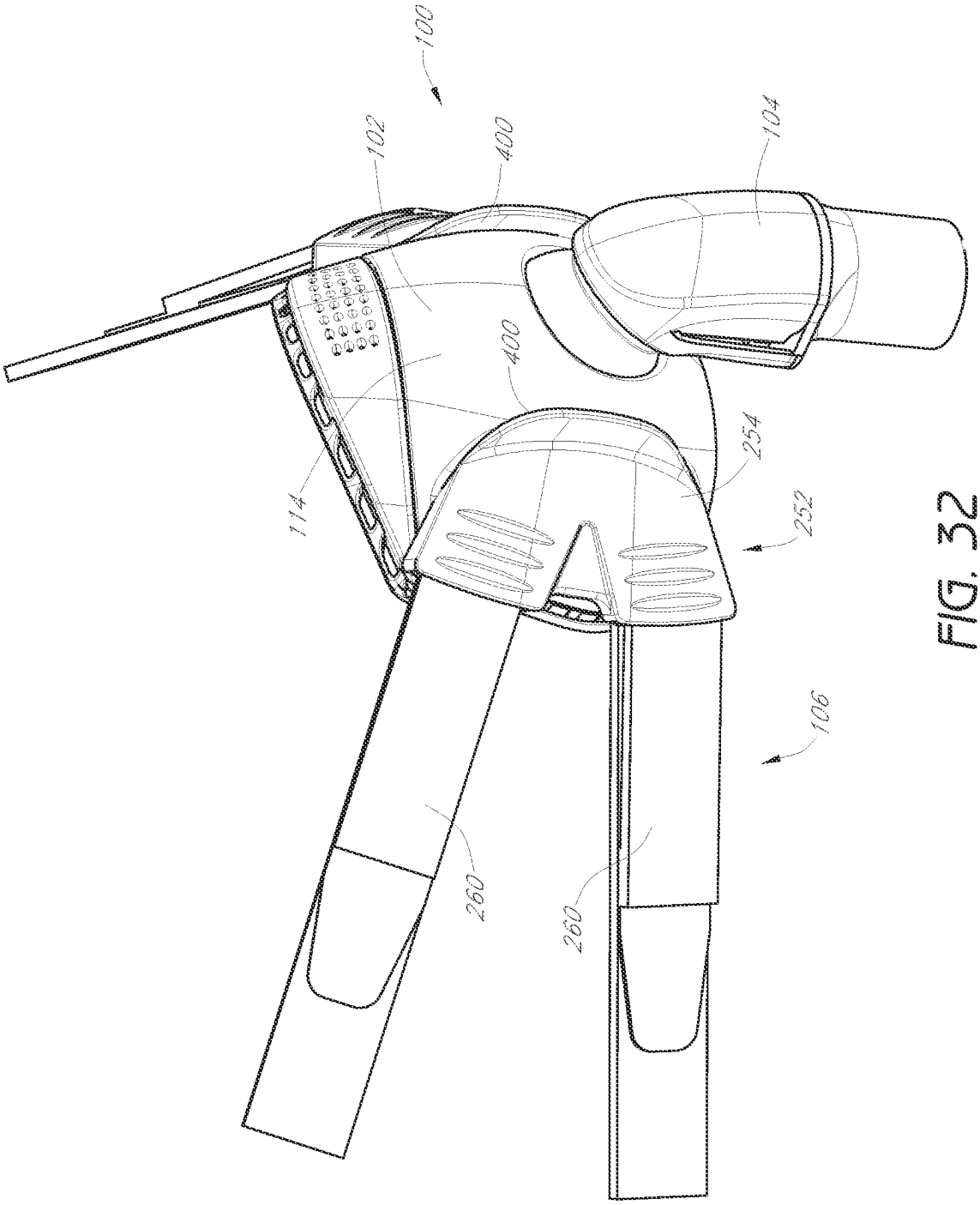


FIG. 32

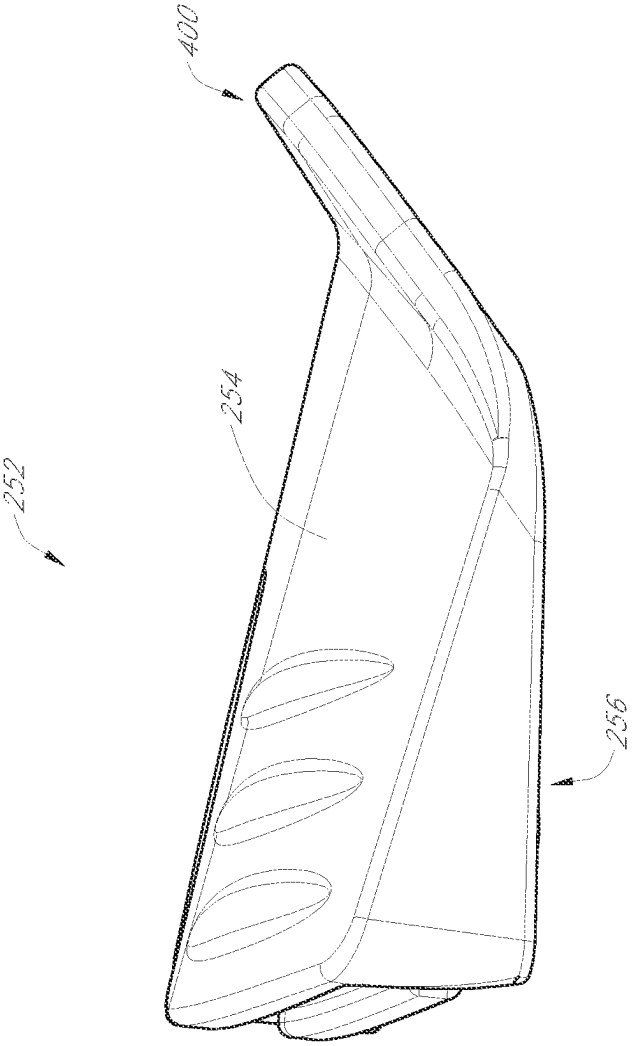


FIG. 33

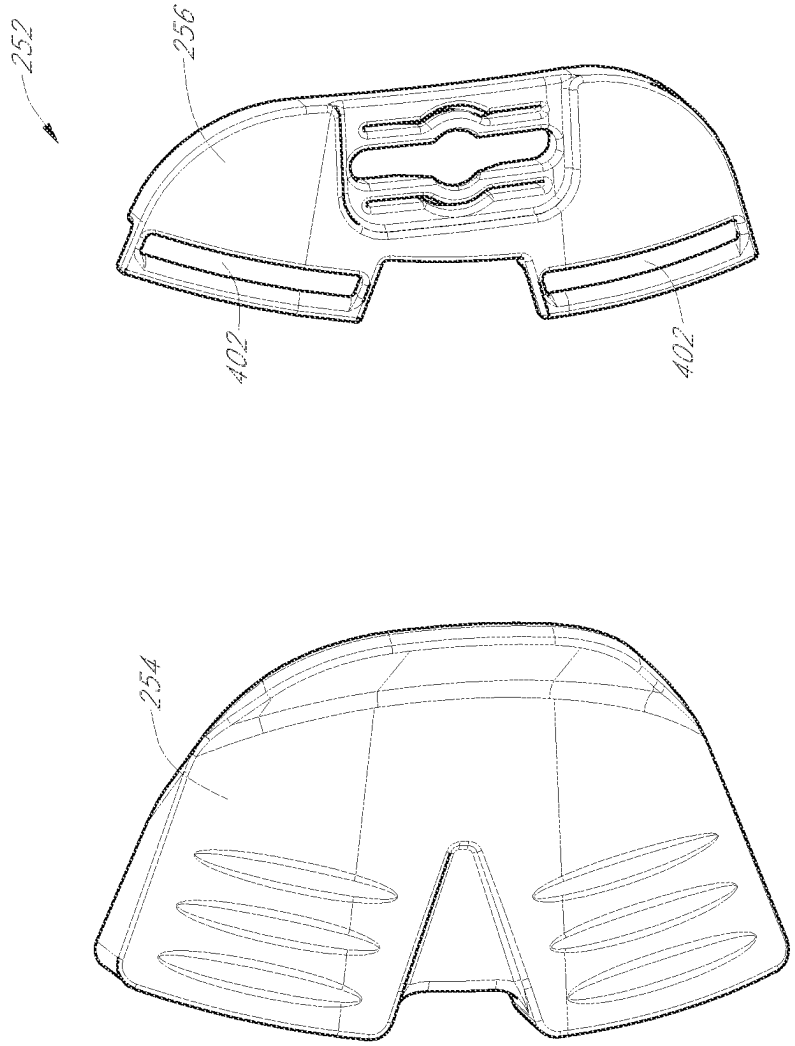


FIG. 34

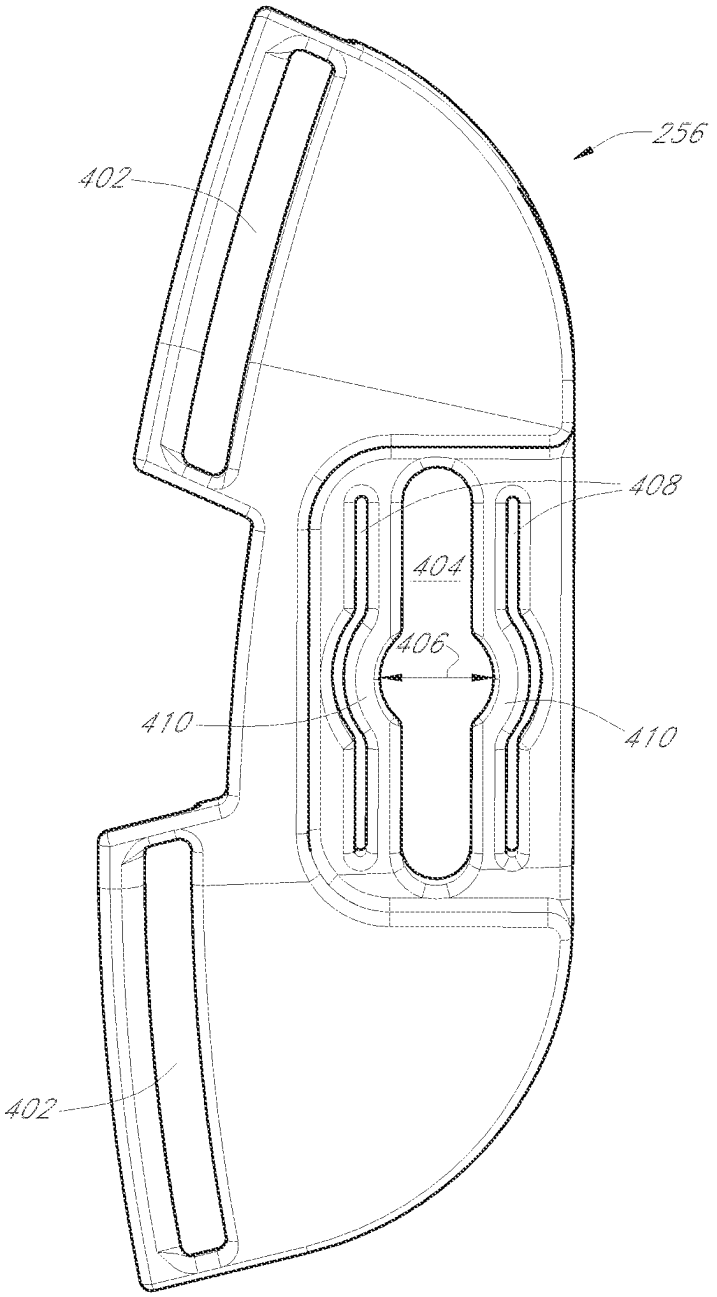


FIG. 35

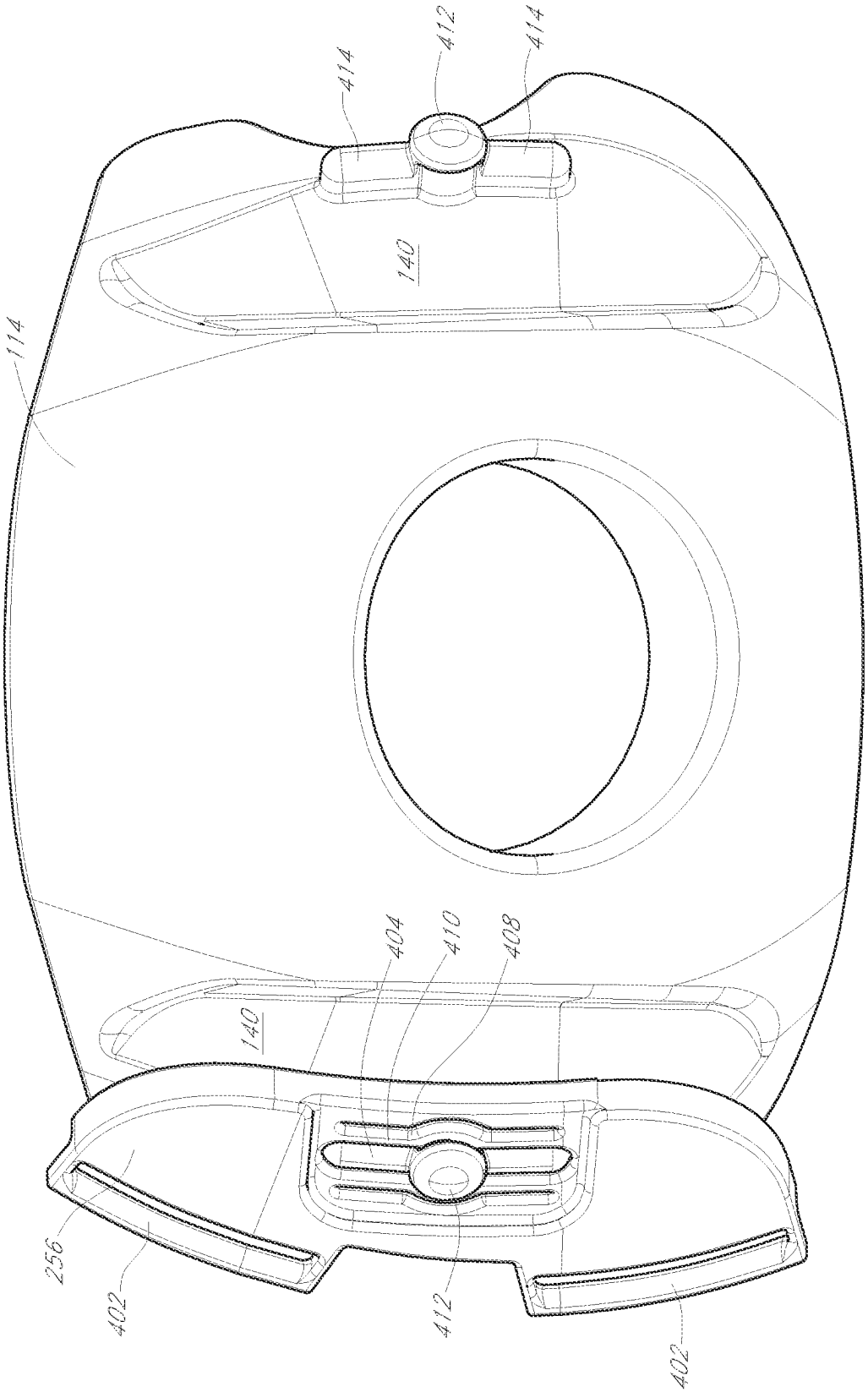


FIG. 36

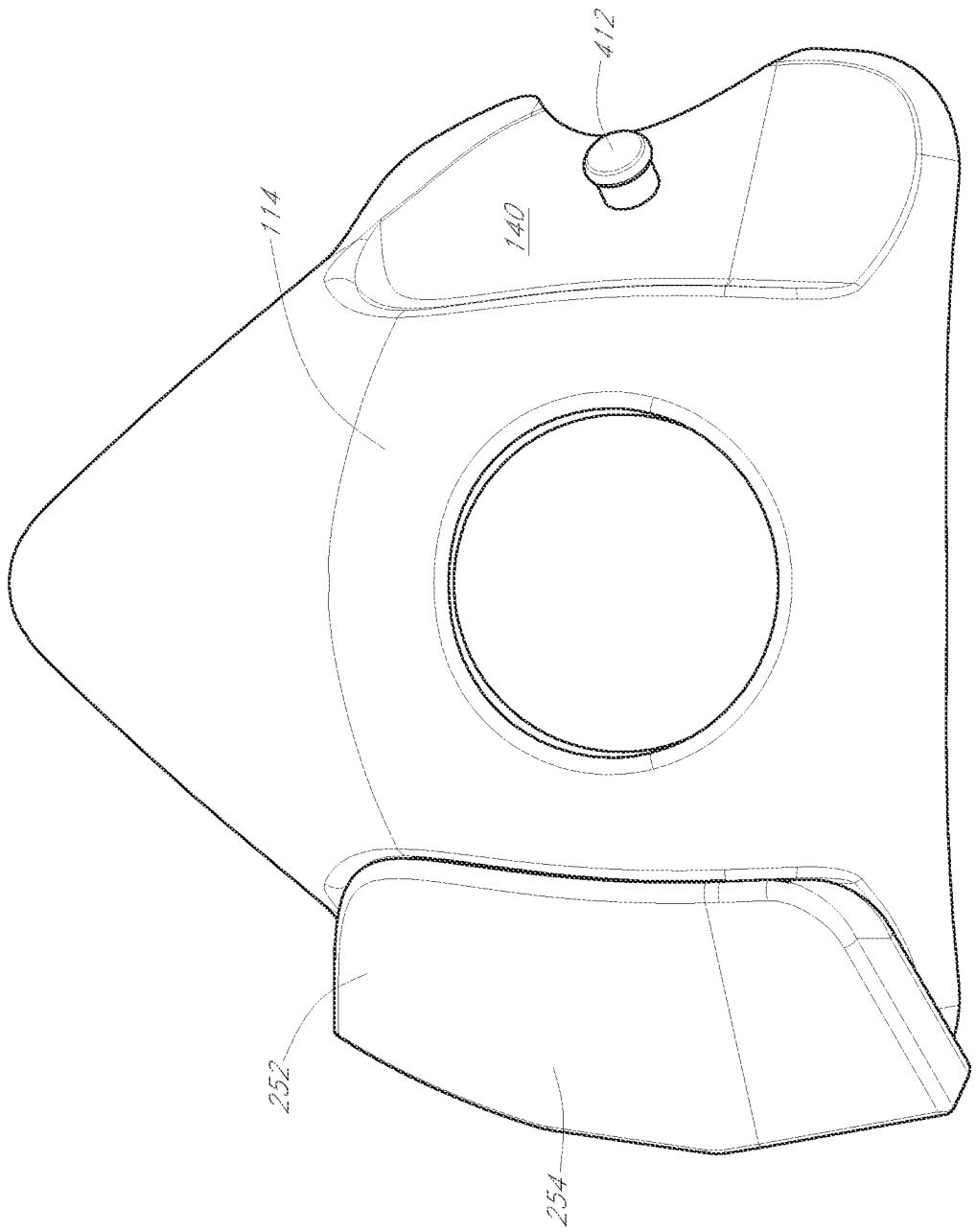


FIG. 37

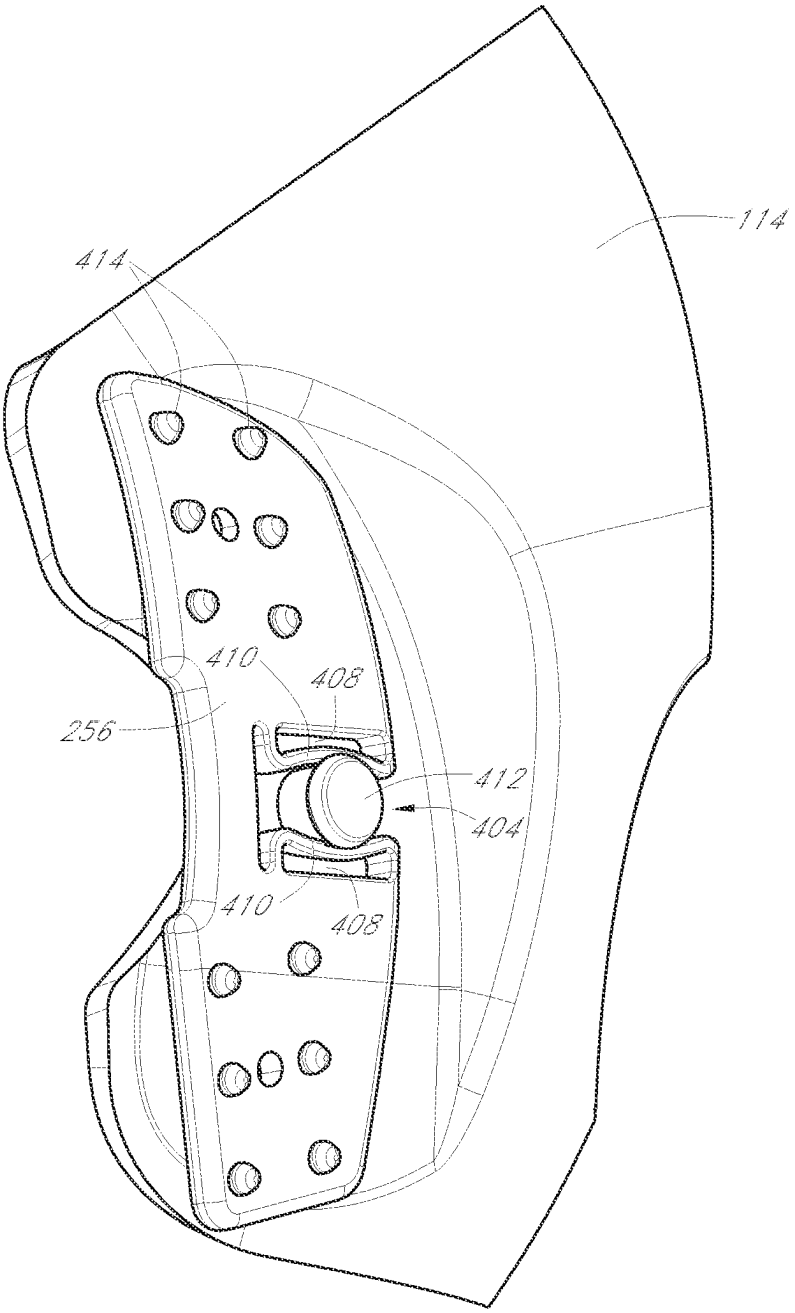


FIG. 38

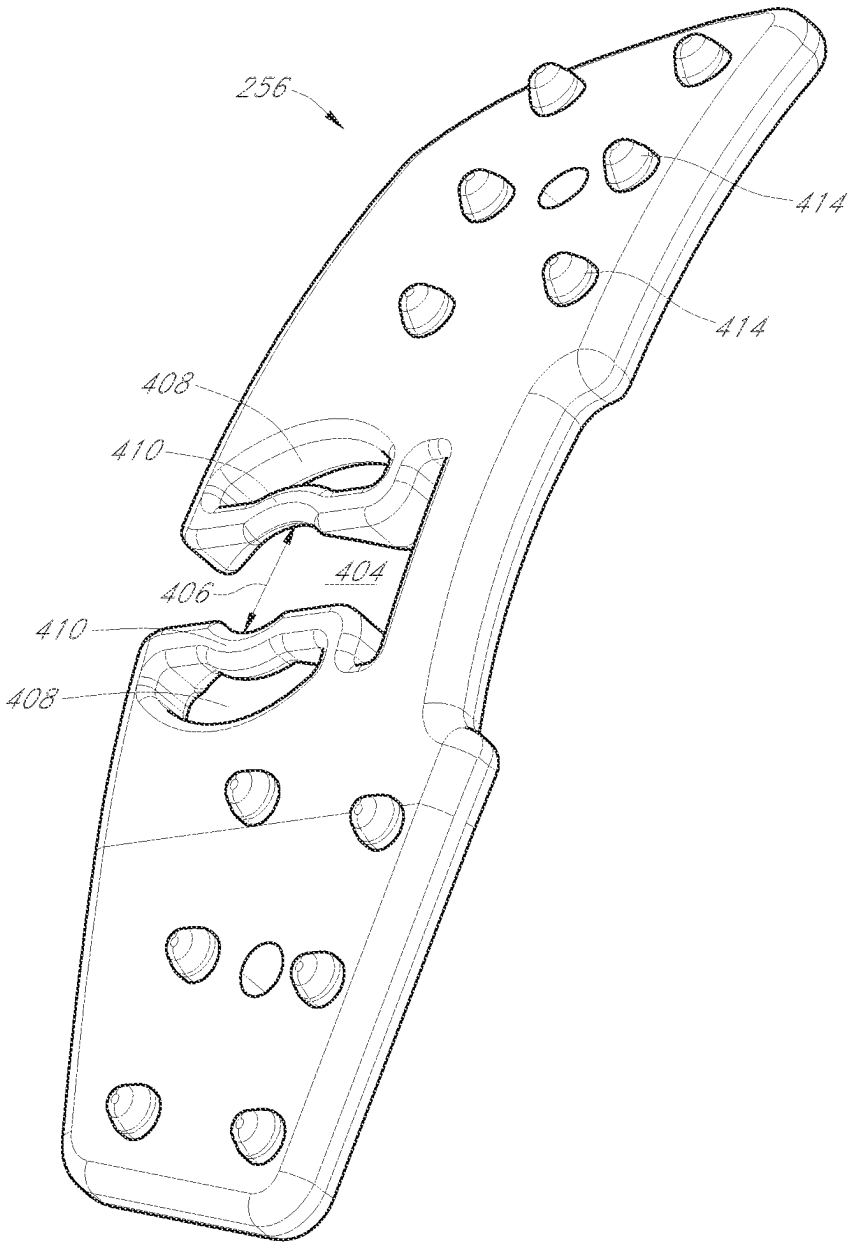


FIG. 39

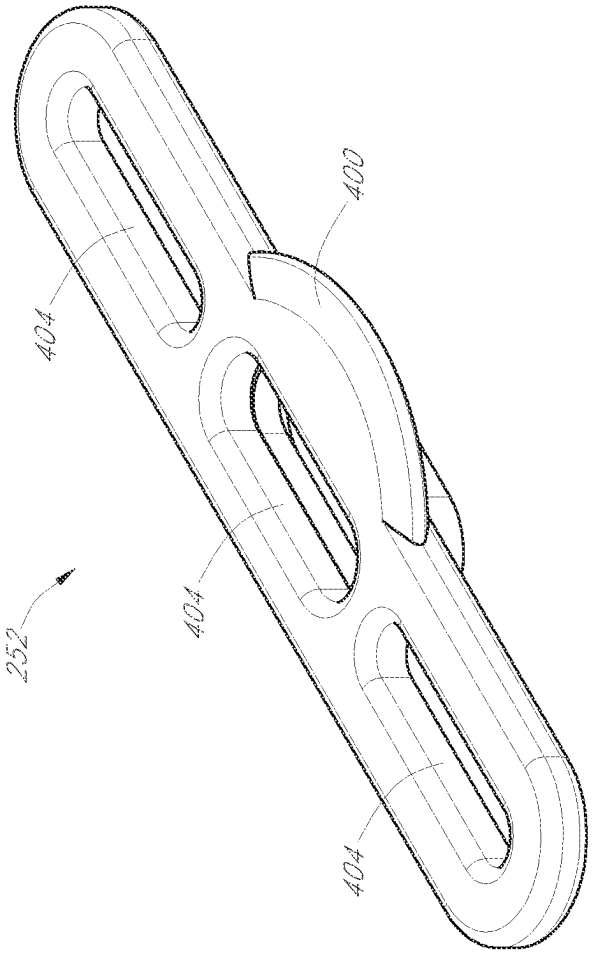


FIG. 40

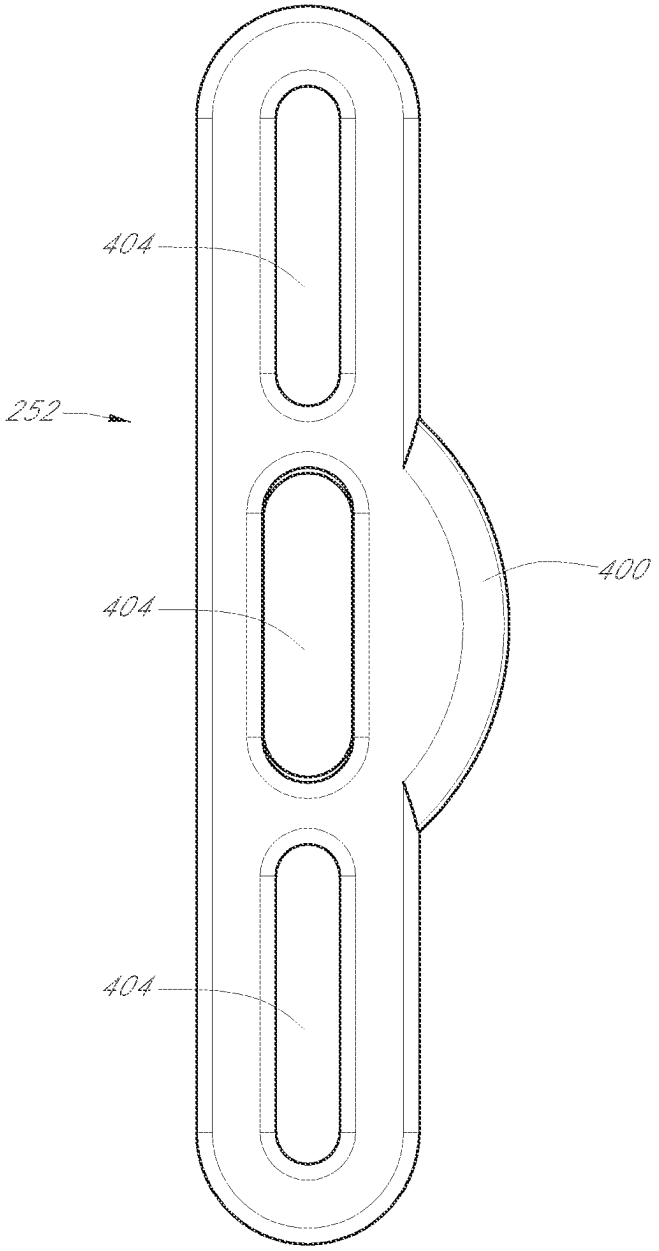


FIG. 41

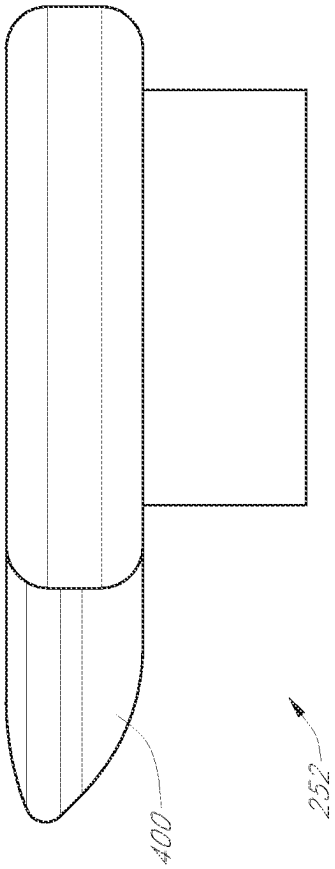


FIG. 42

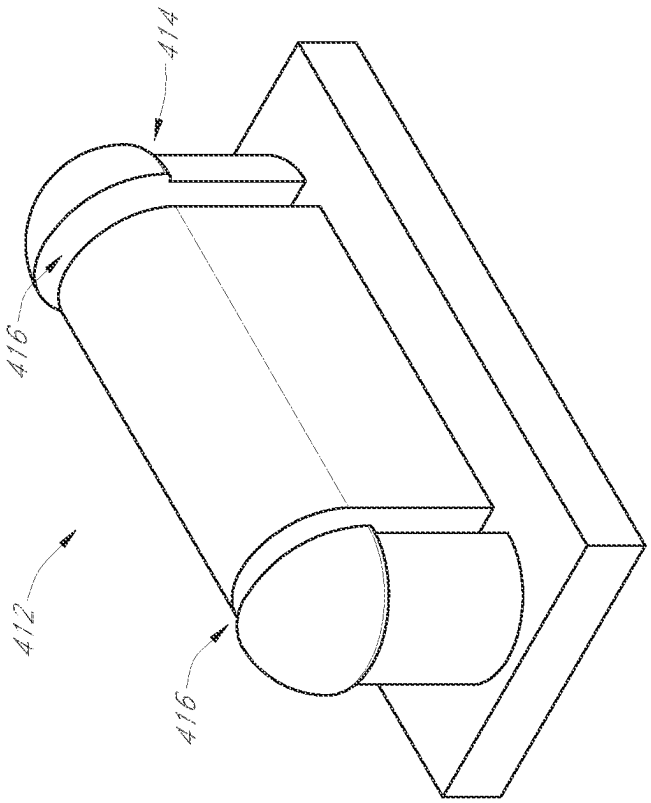


FIG. 43

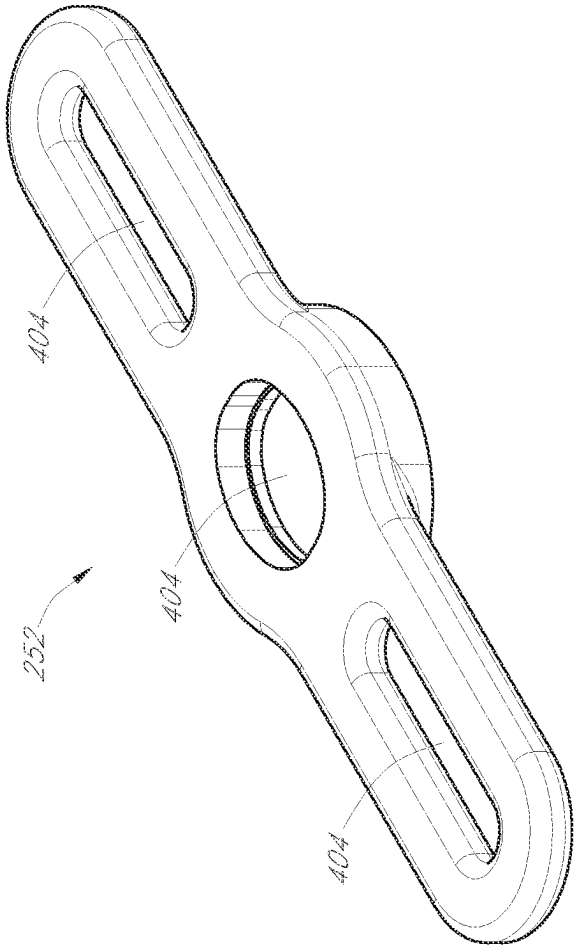


FIG. 44

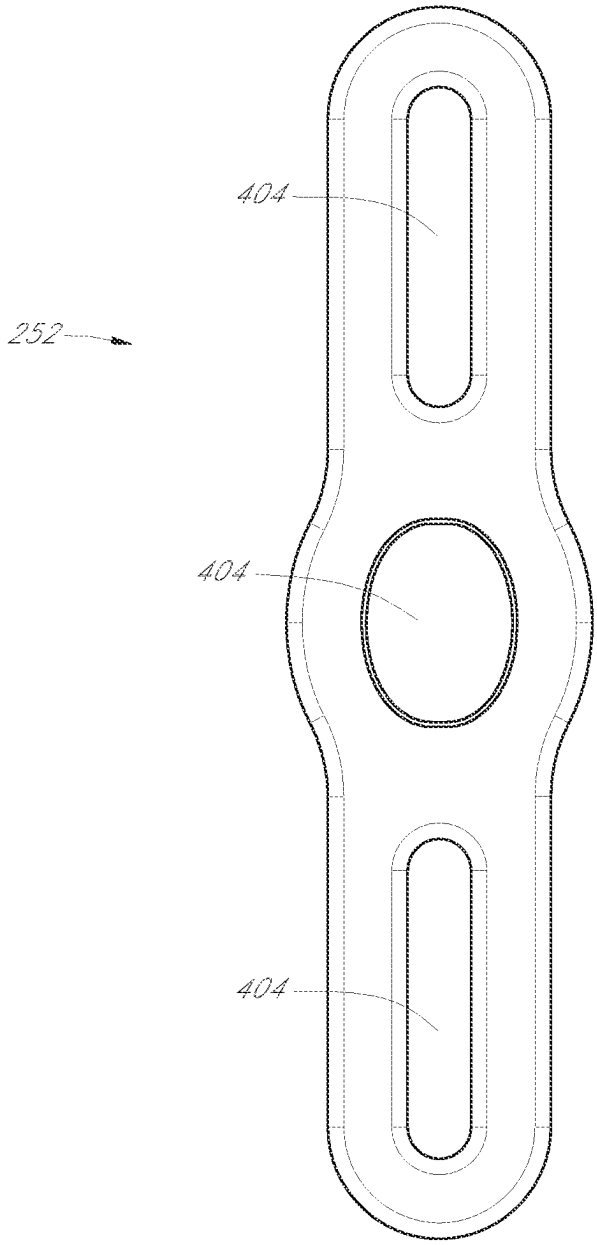


FIG. 45

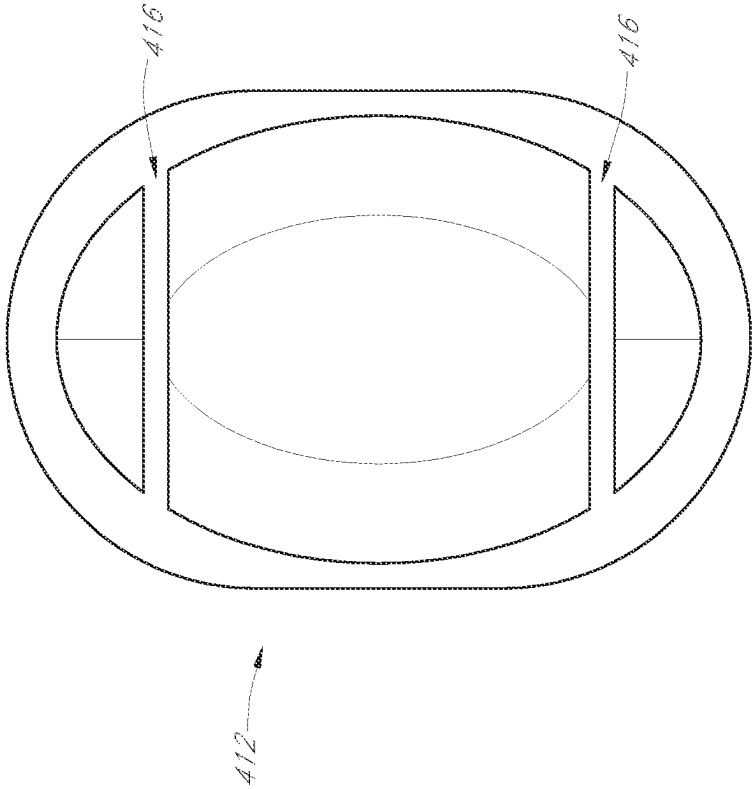


FIG. 47

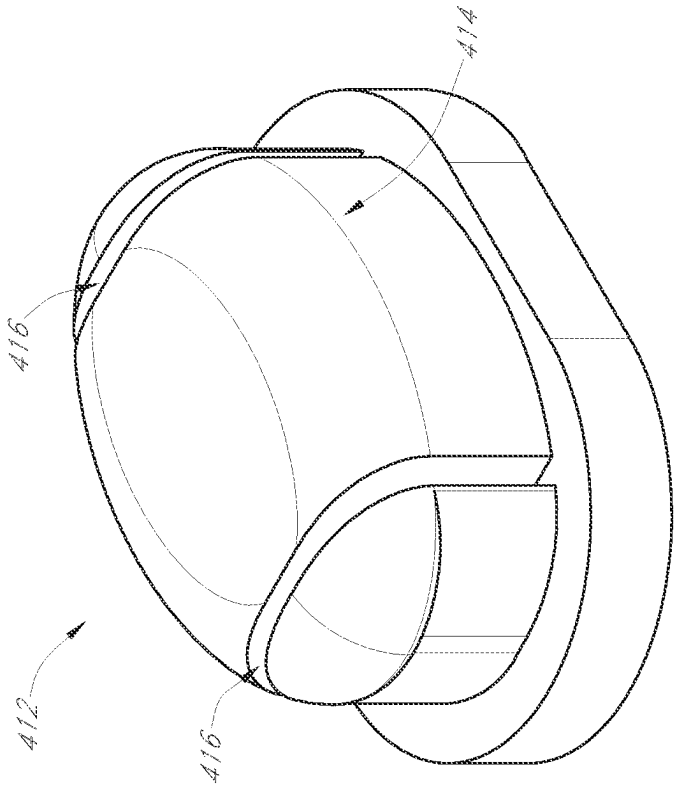


FIG. 46

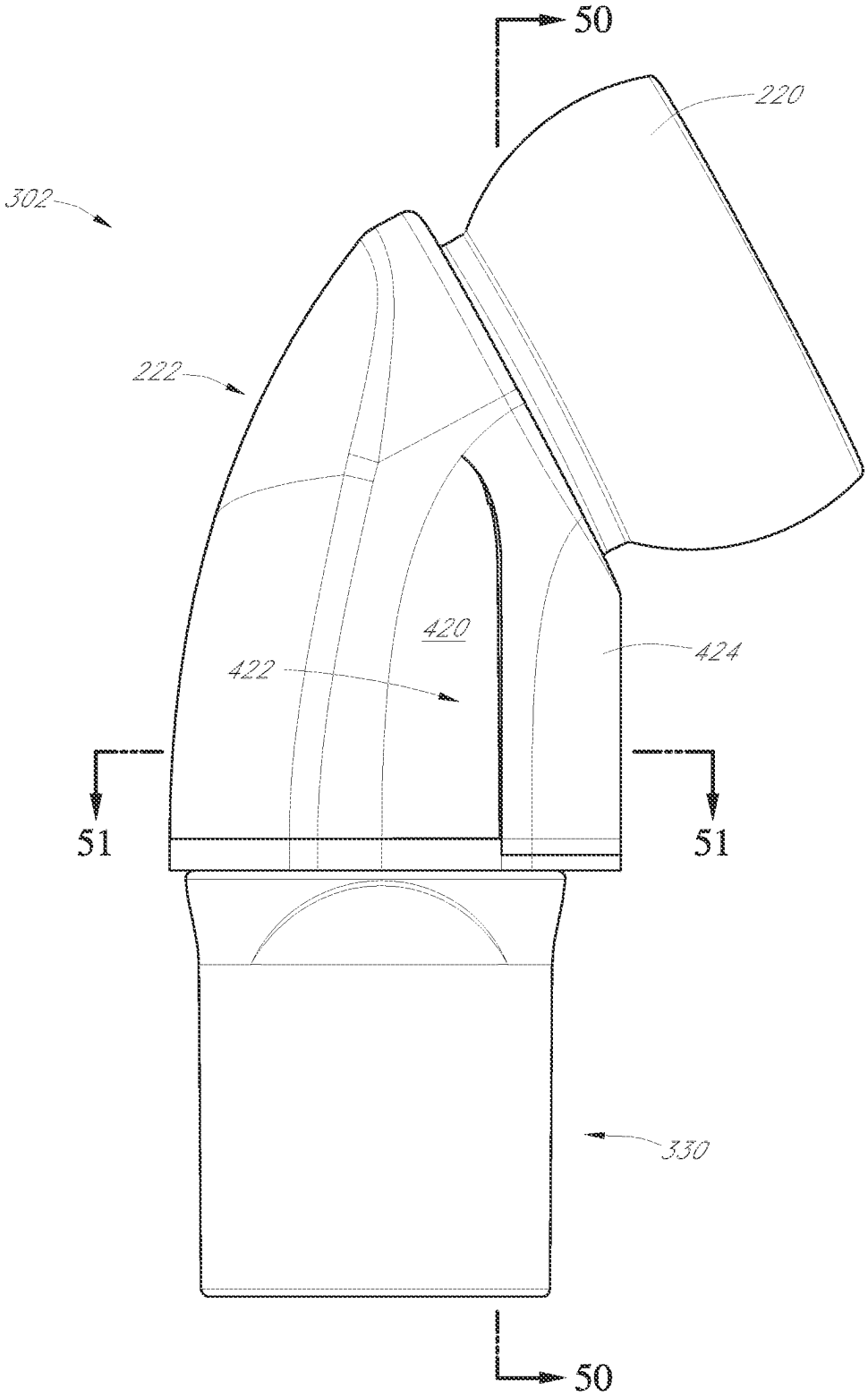


FIG. 48

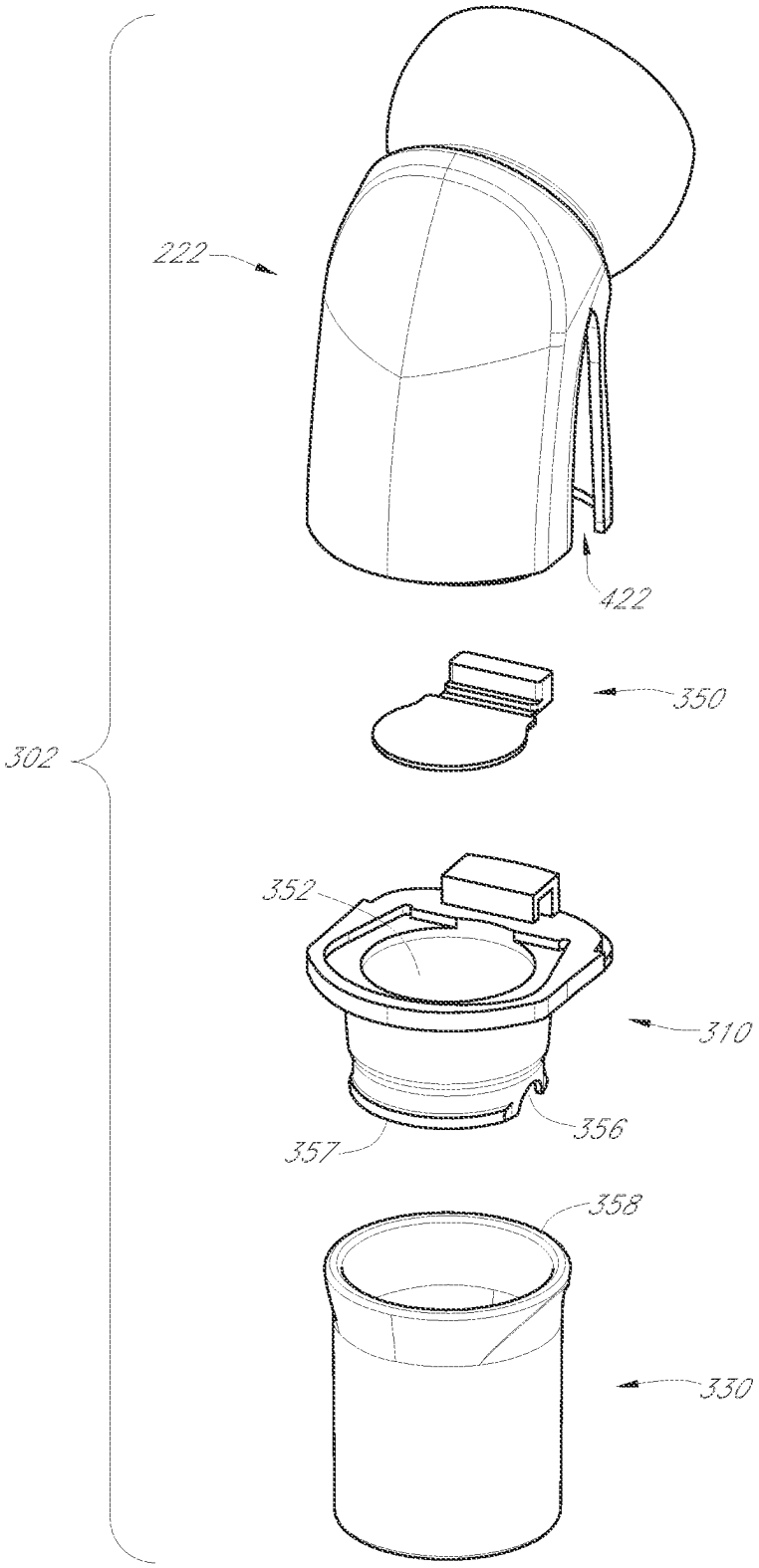


FIG. 49

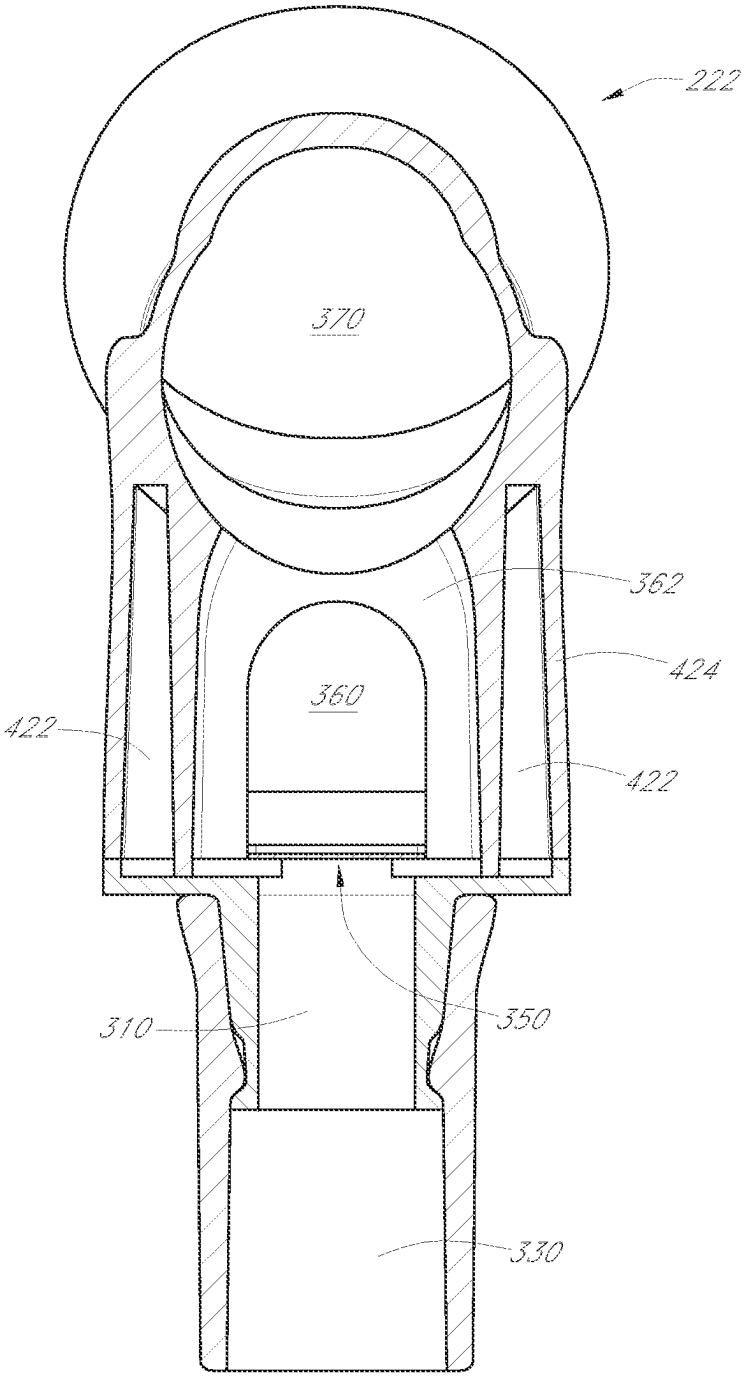


FIG. 50

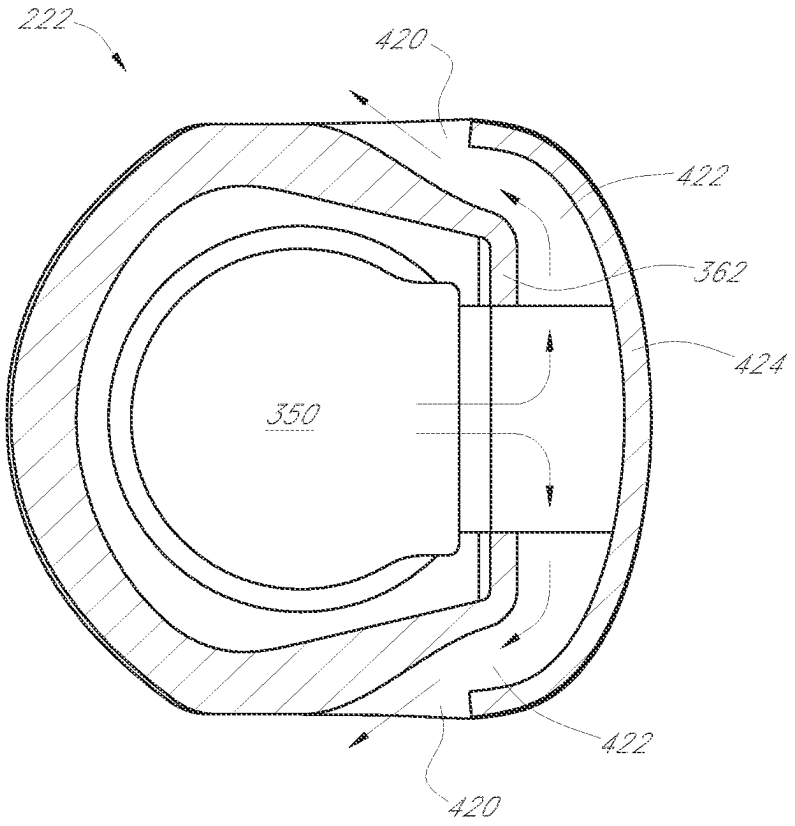


FIG. 51

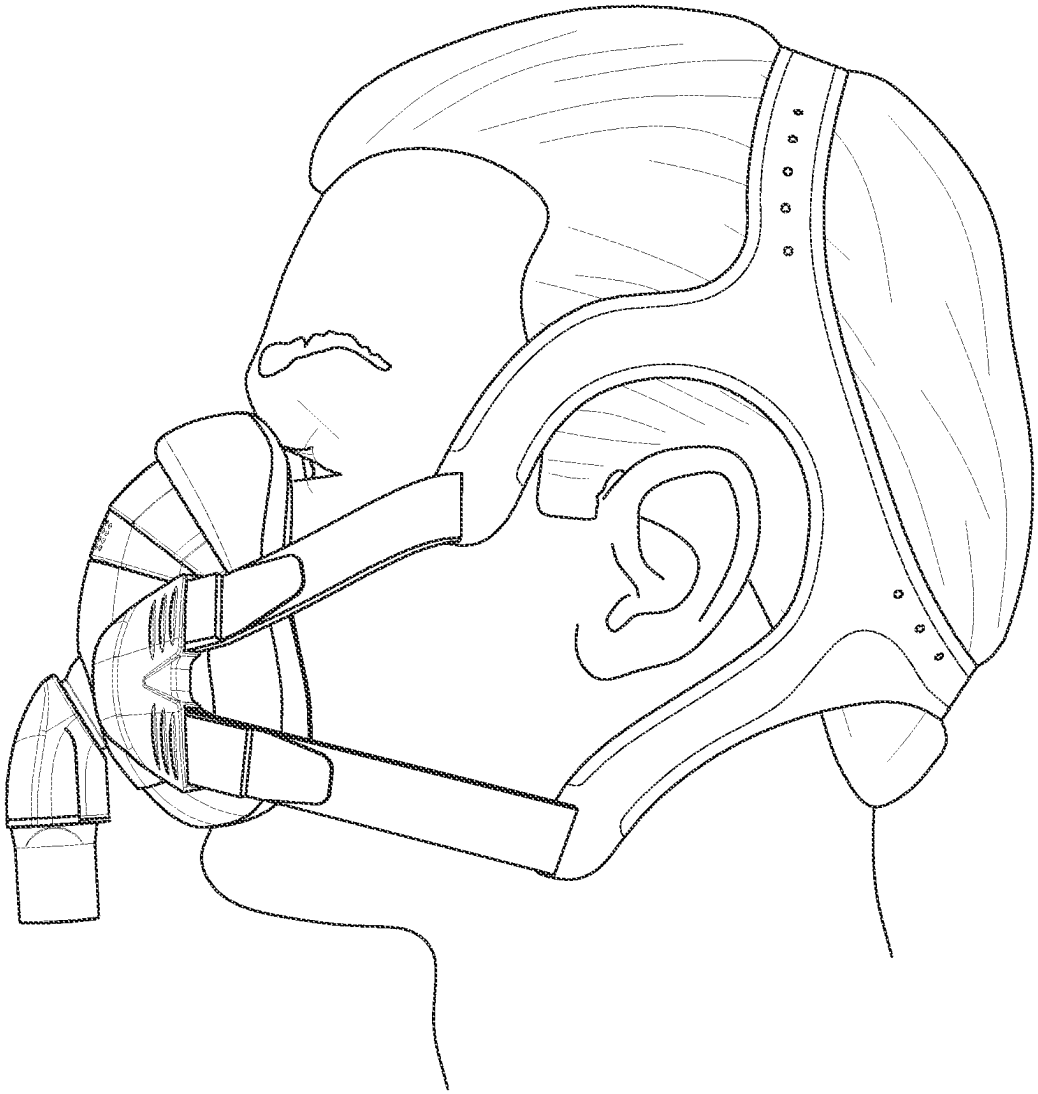

FIG. 52

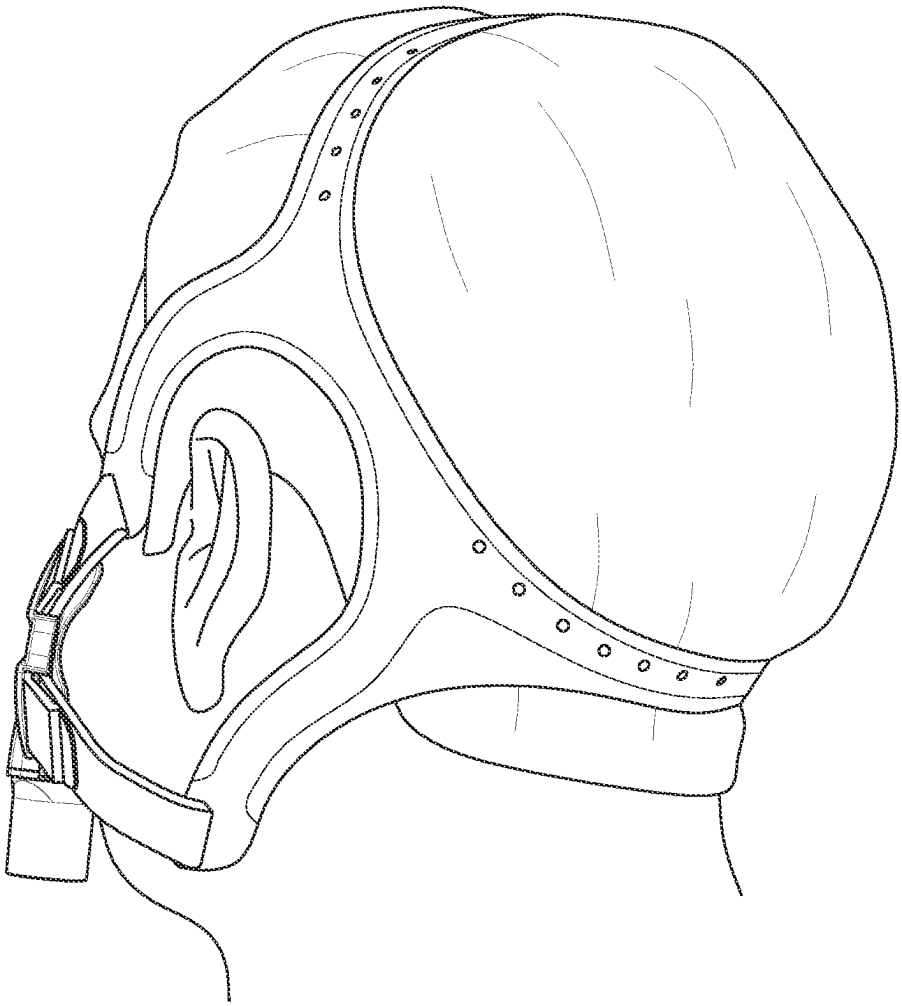

FIG. 53

FIG. 54

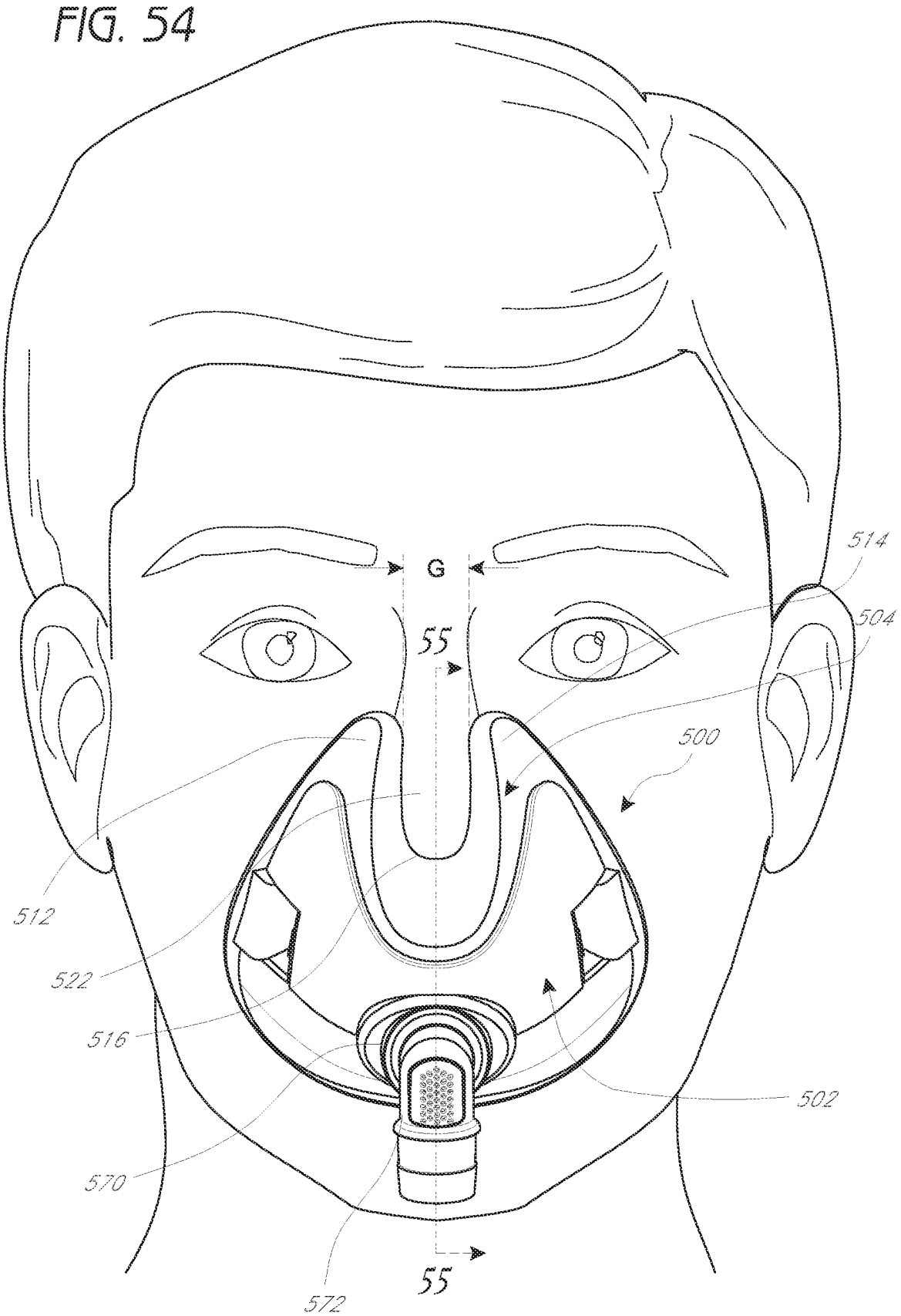

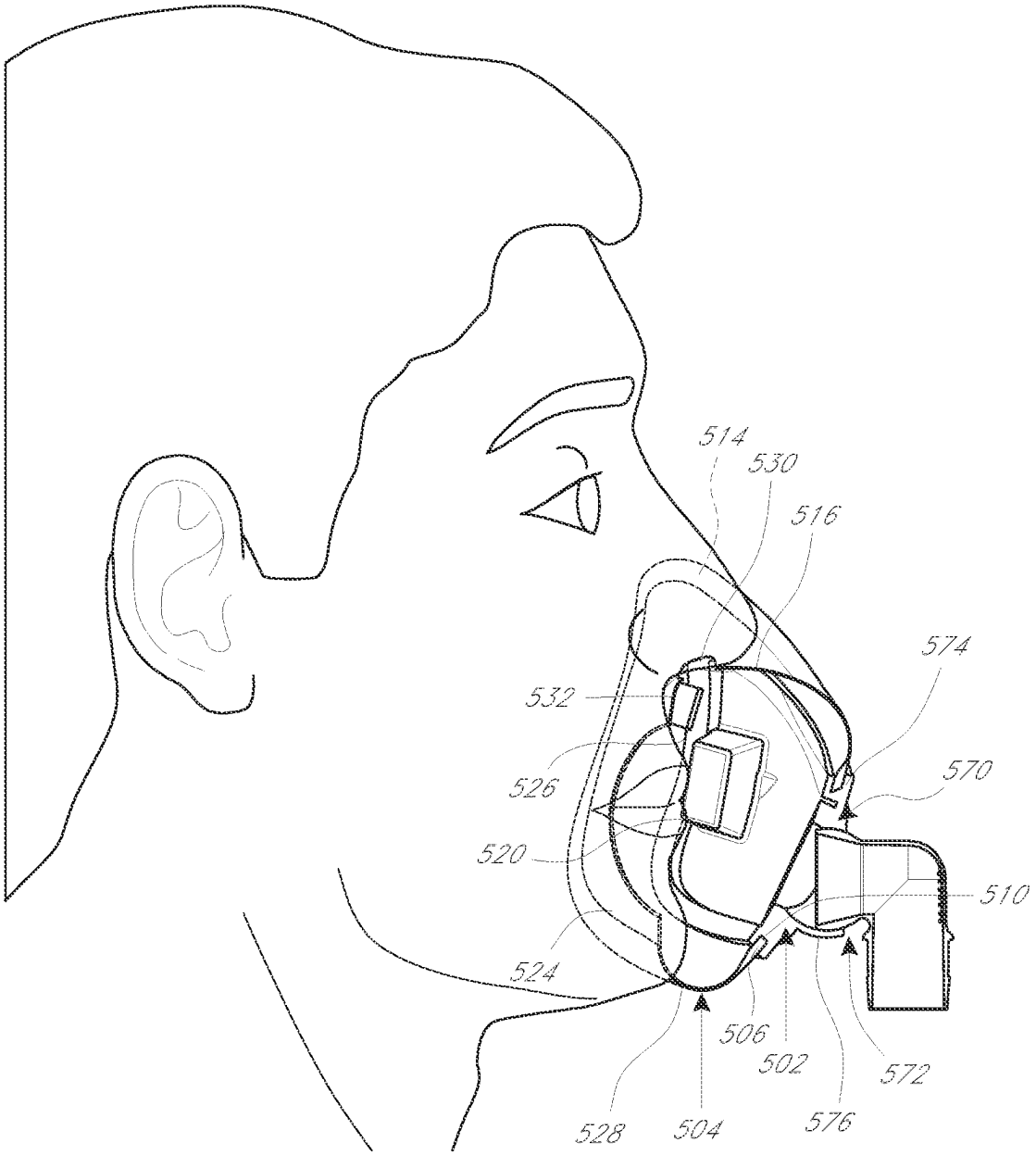


FIG. 55

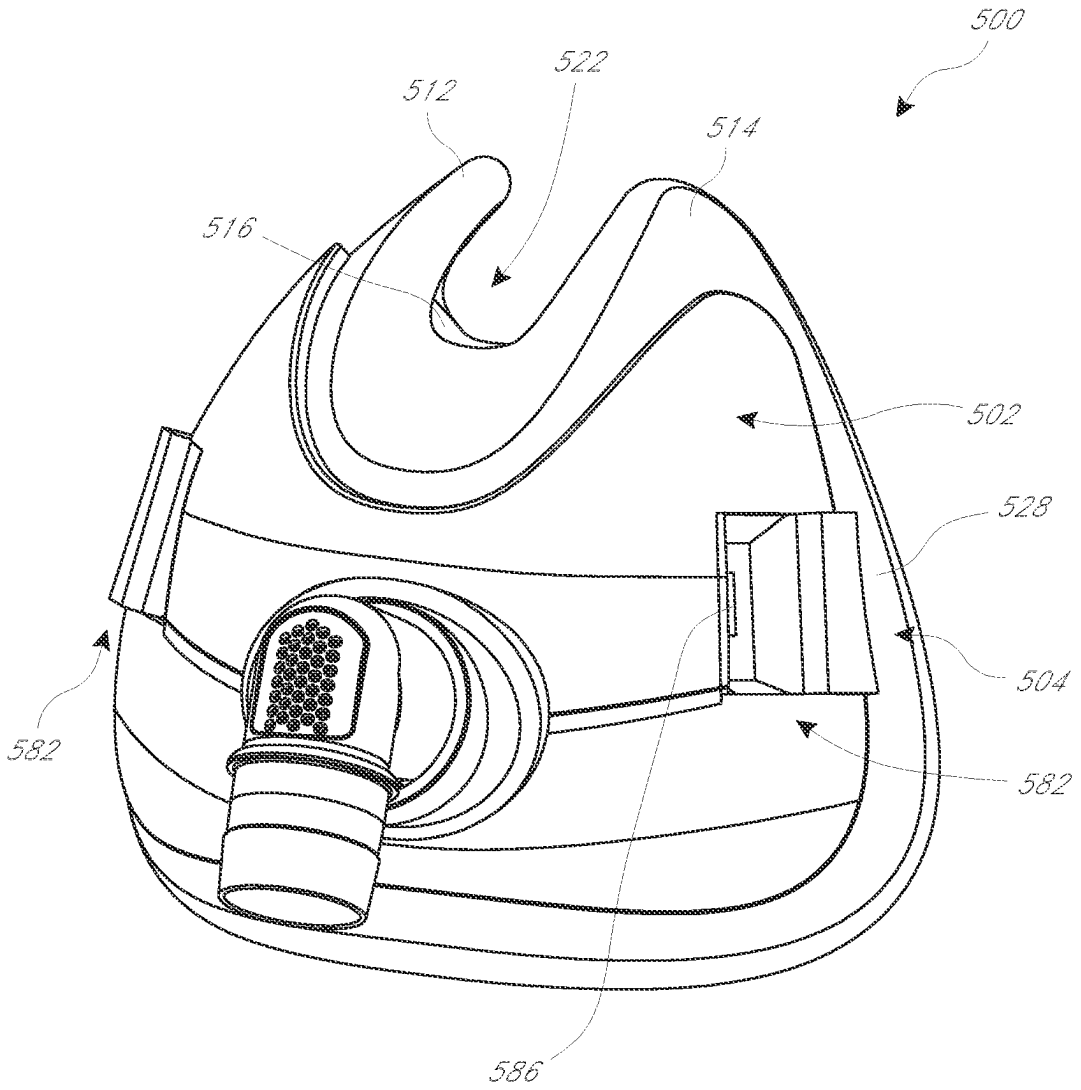


FIG. 56

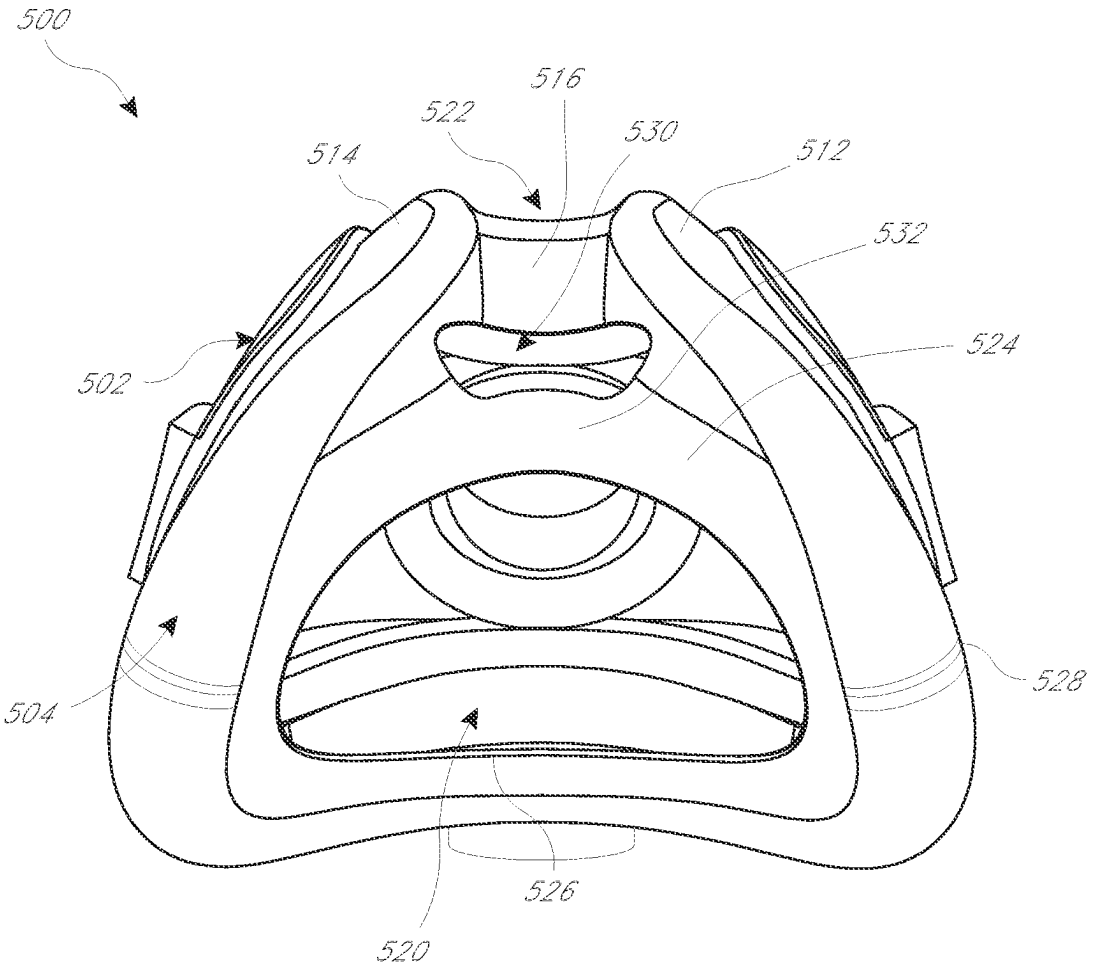


FIG. 57

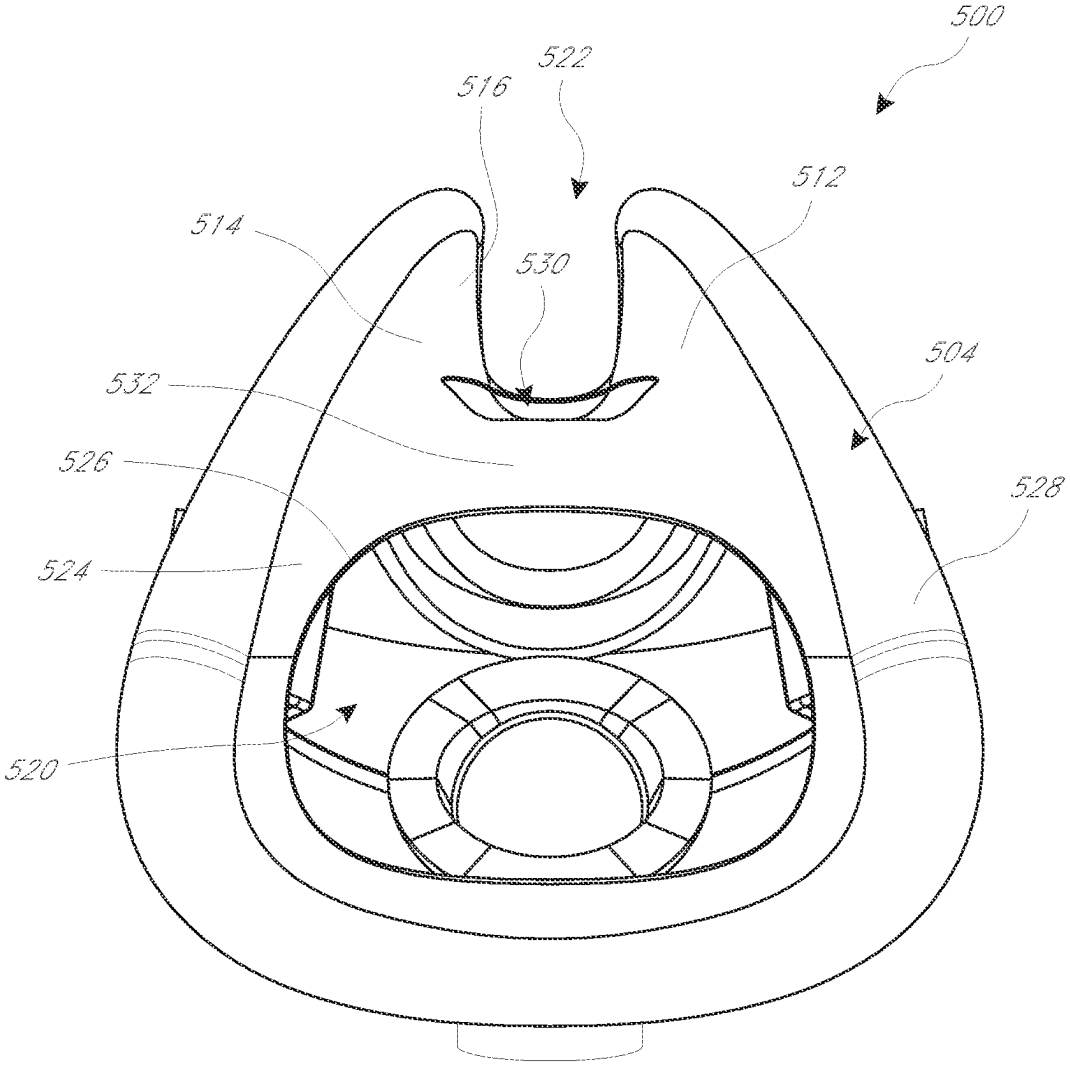


FIG. 58

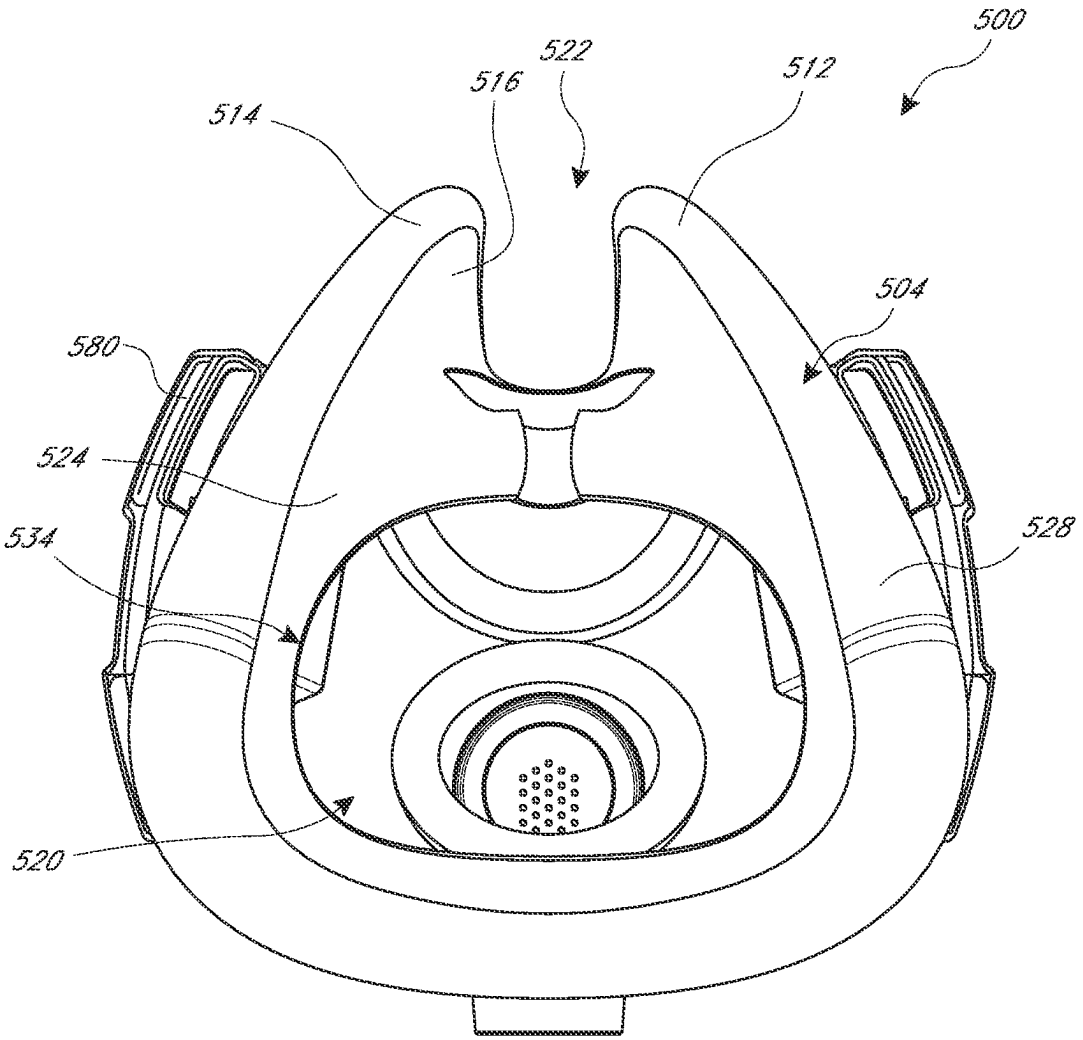


FIG. 59

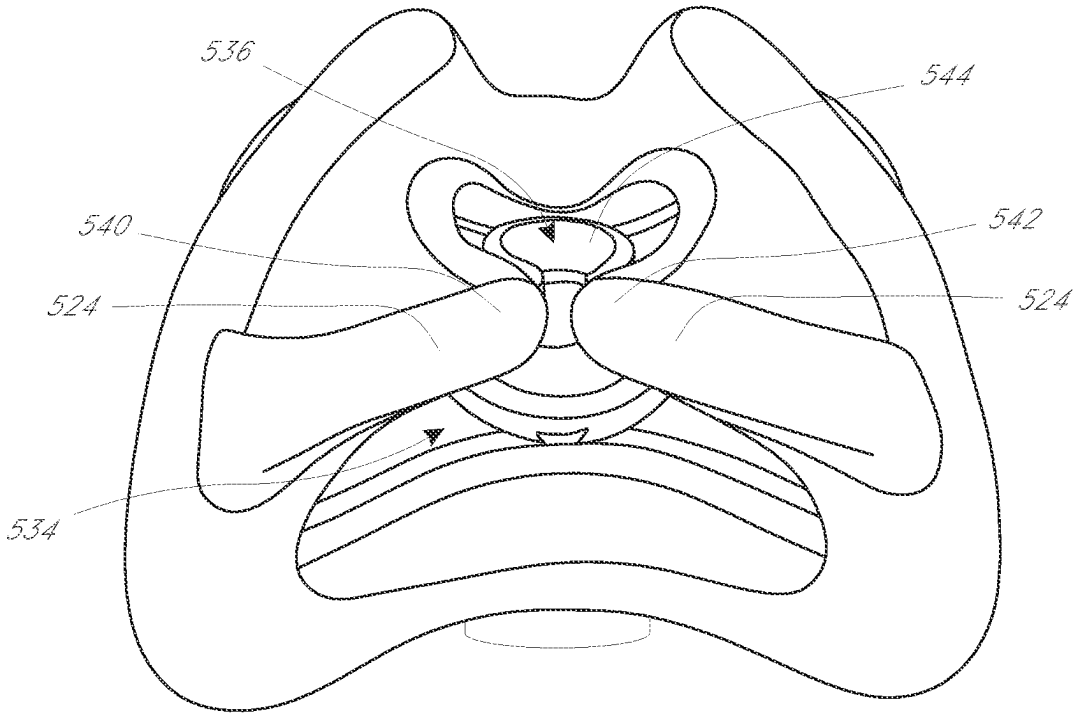


FIG. 60

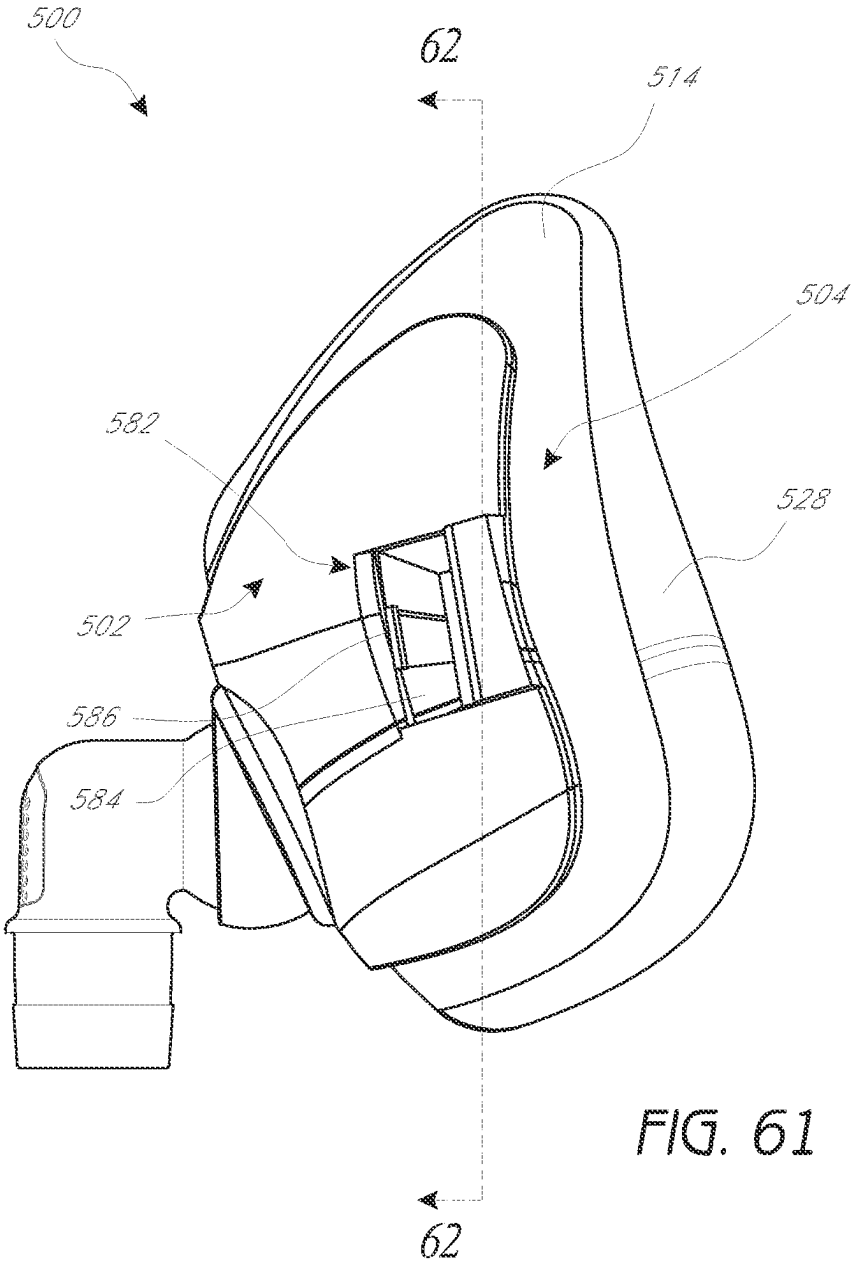


FIG. 61

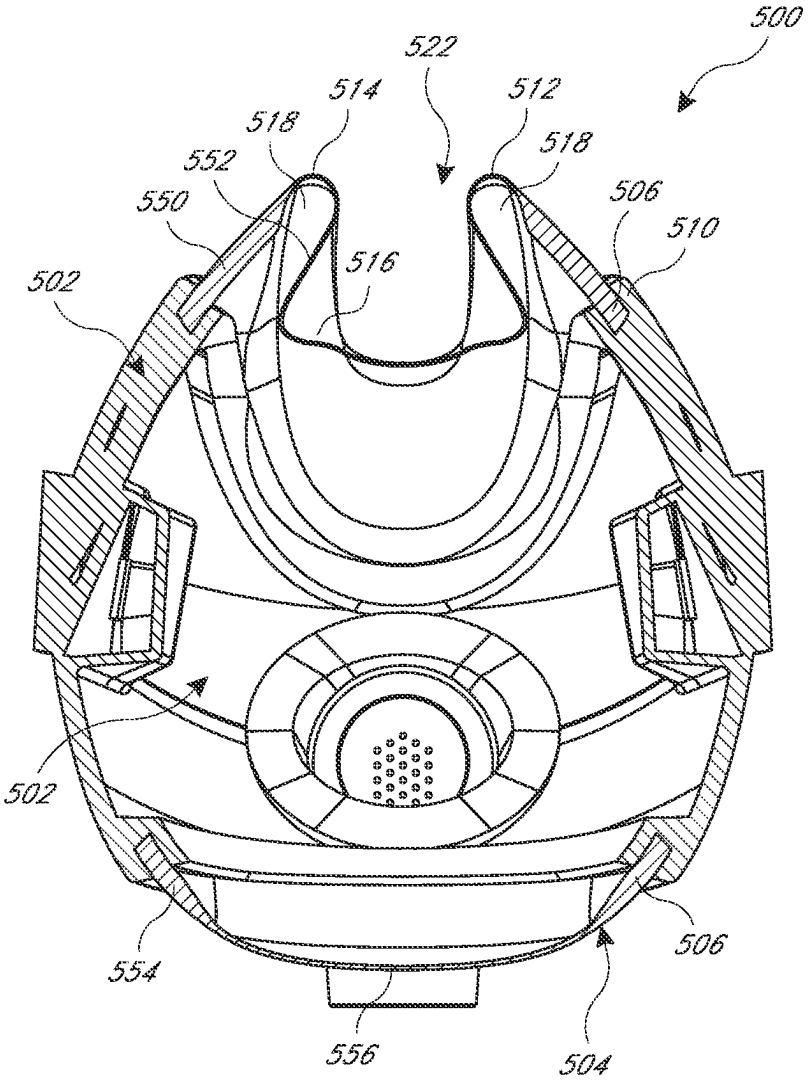
500
522
514
512
518
518
552
550
506
510
516
502
502
554
506
556
504

FIG. 62

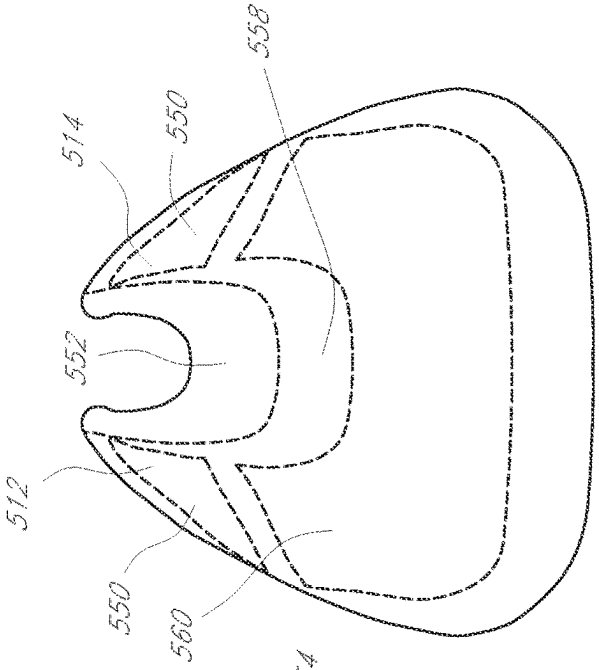


FIG. 65

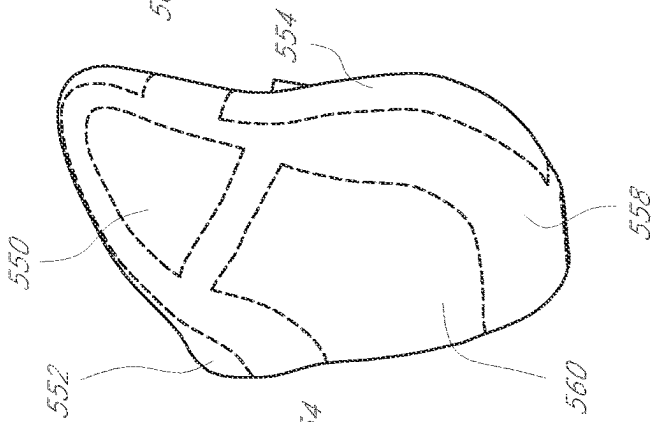


FIG. 64

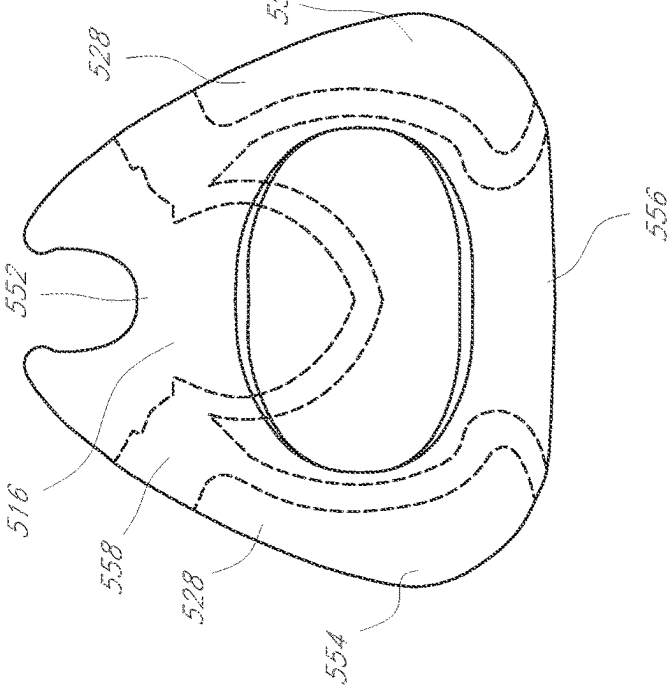


FIG. 63

FIG. 66

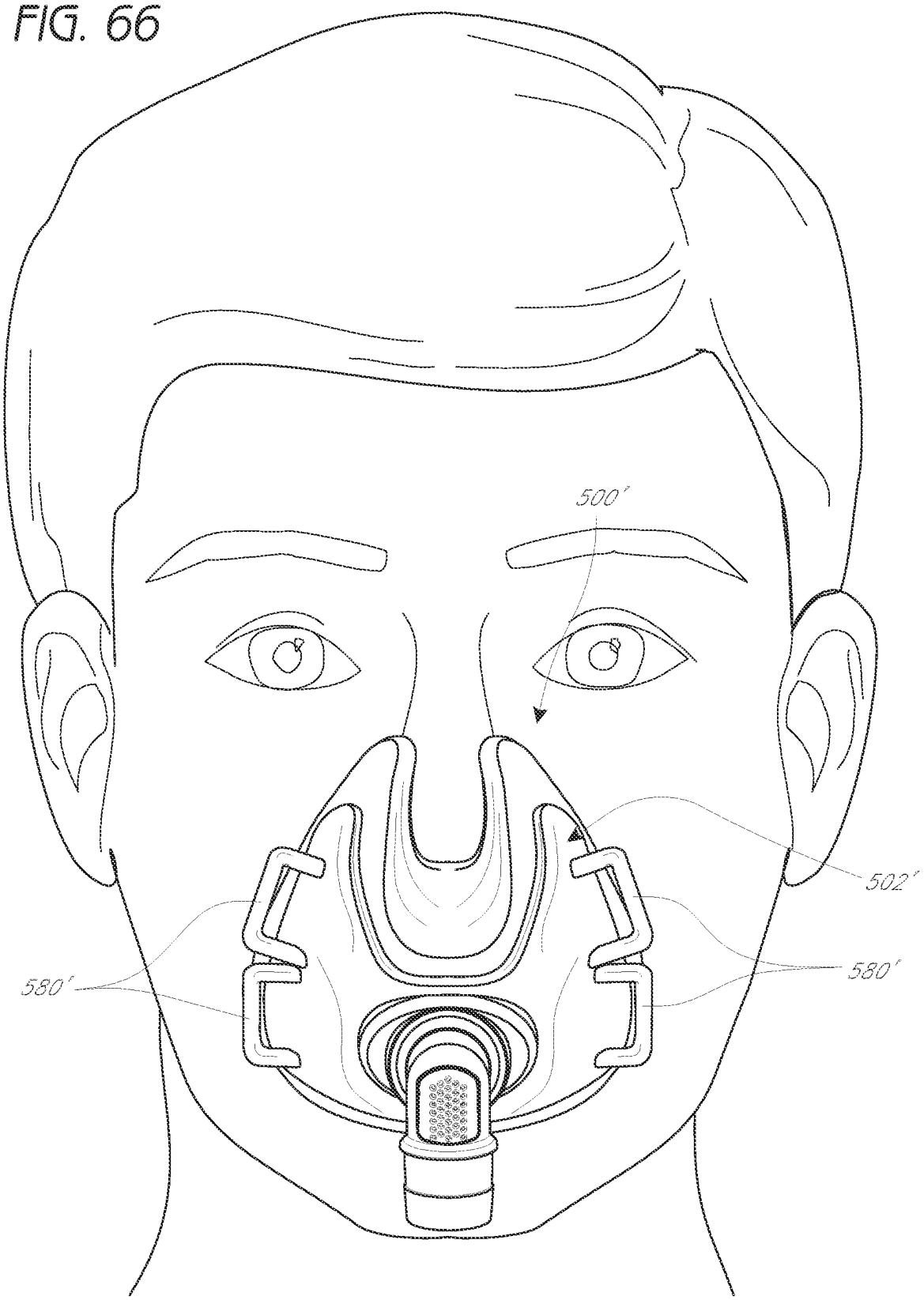

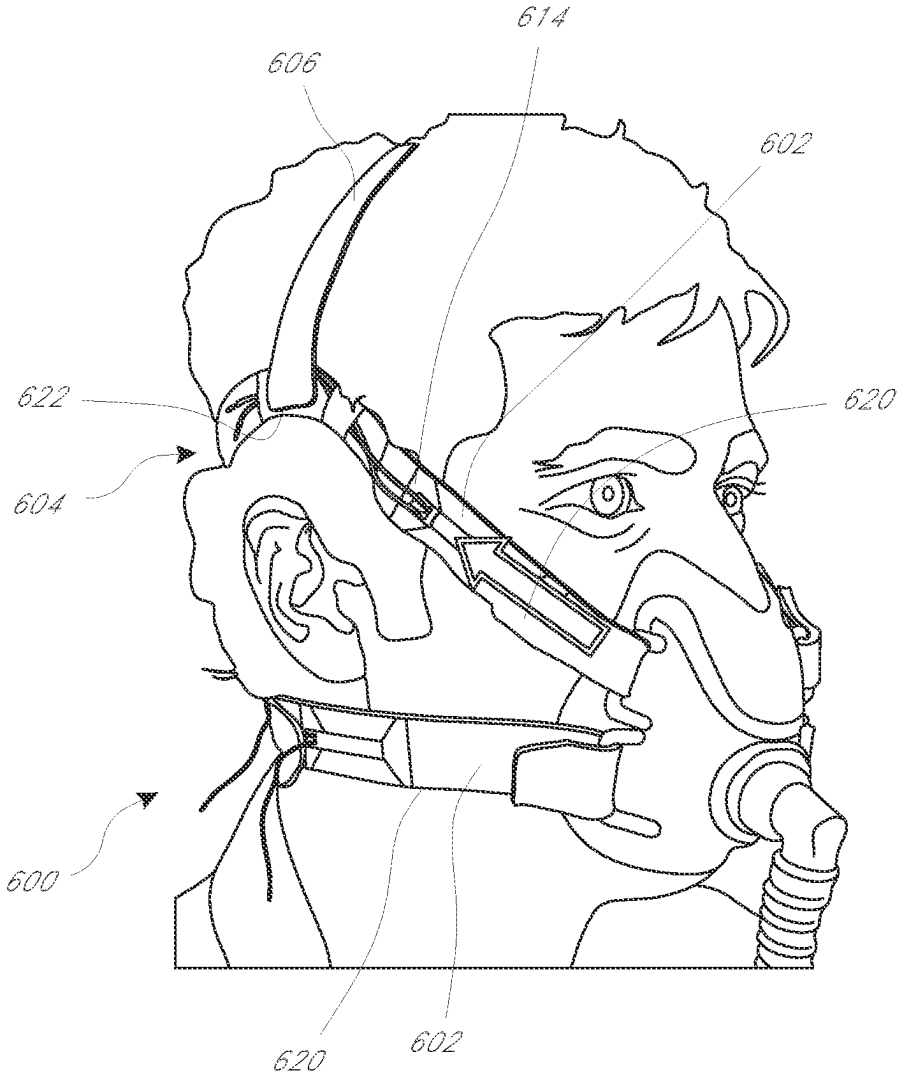


FIG. 67

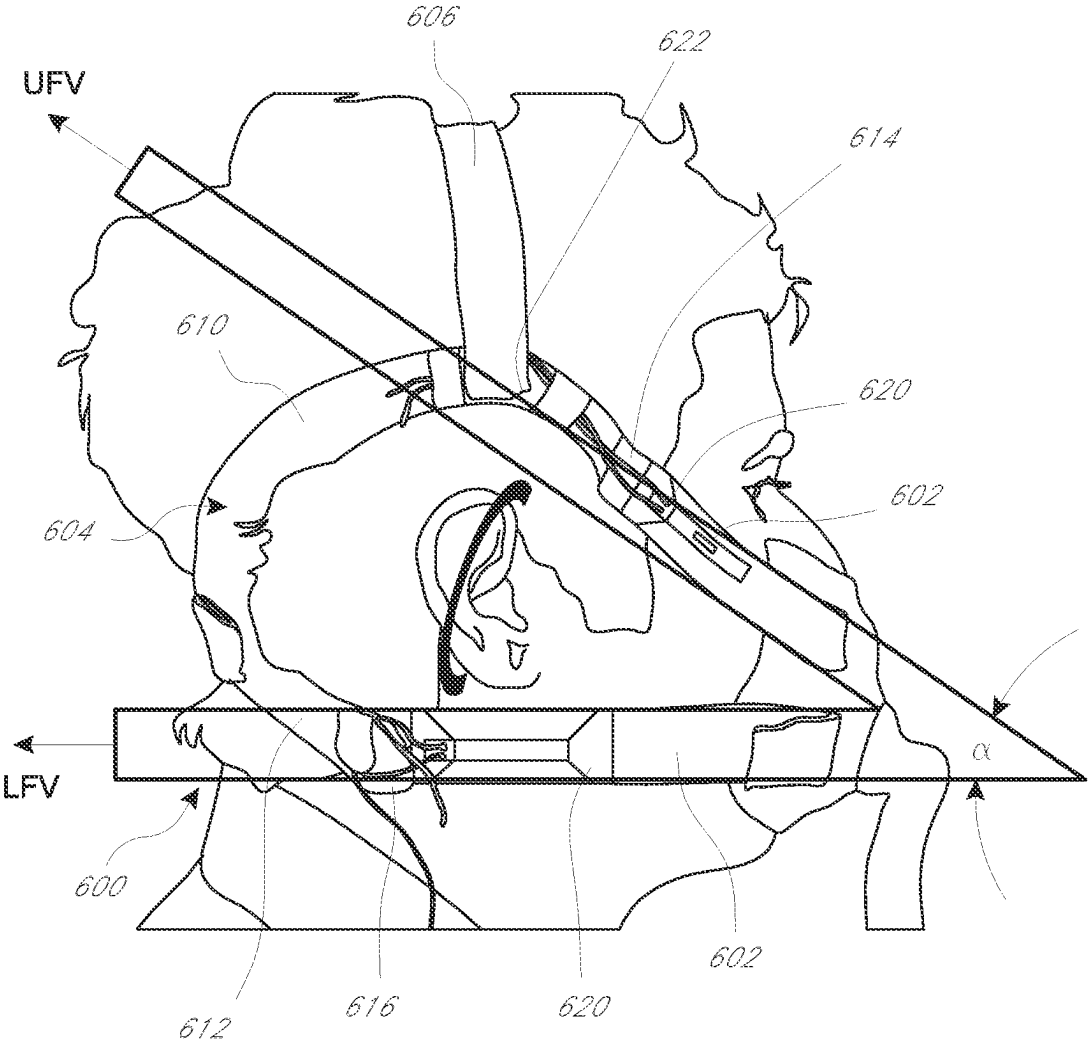


FIG. 68

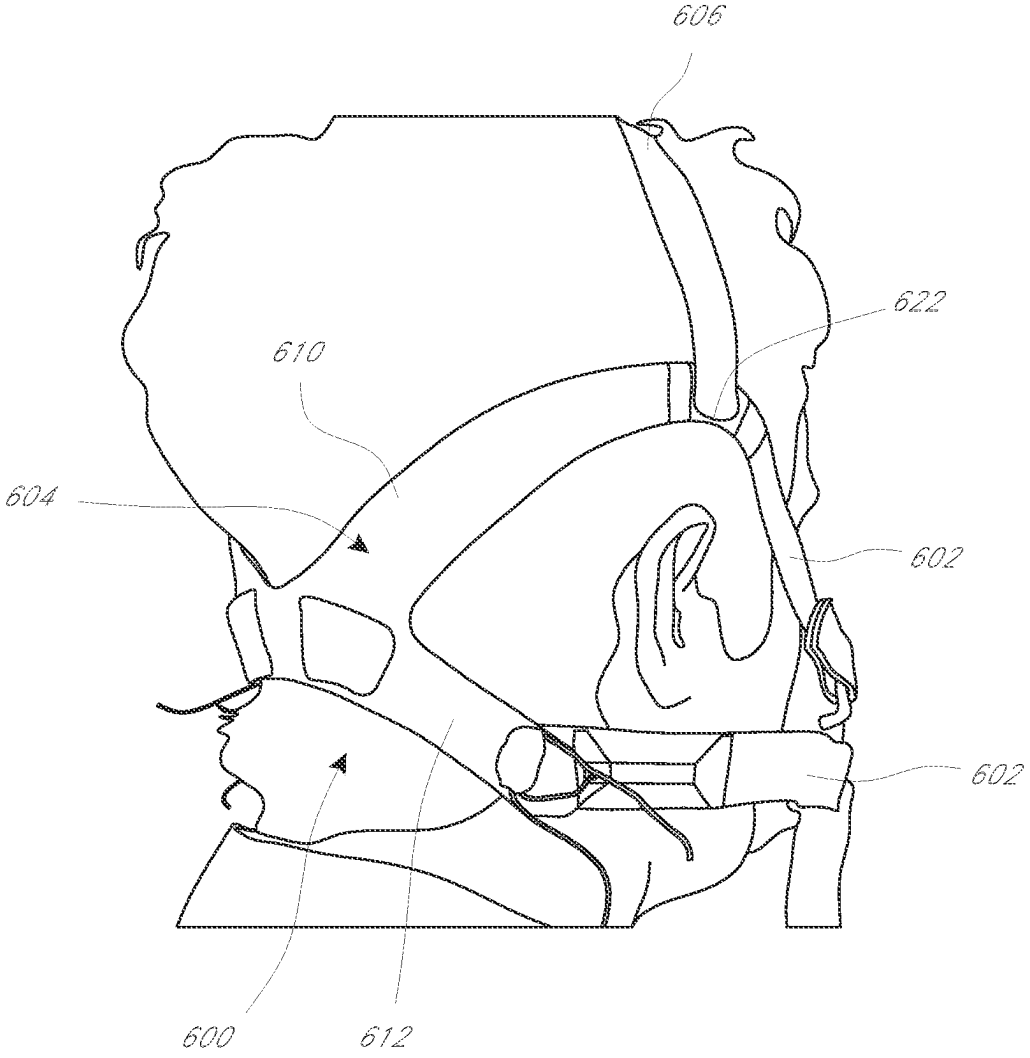


FIG. 69

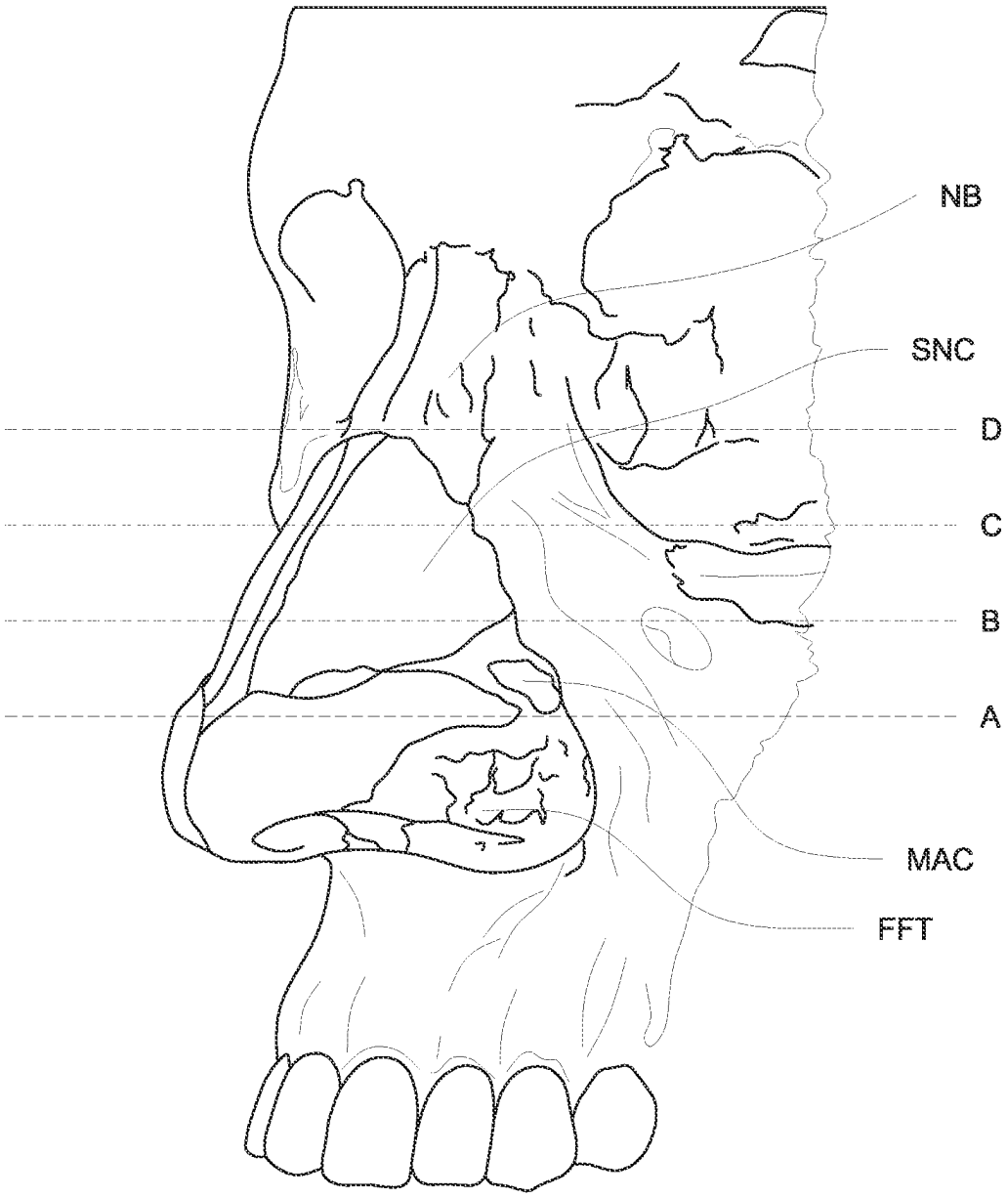


FIG. 70

FIG. 71

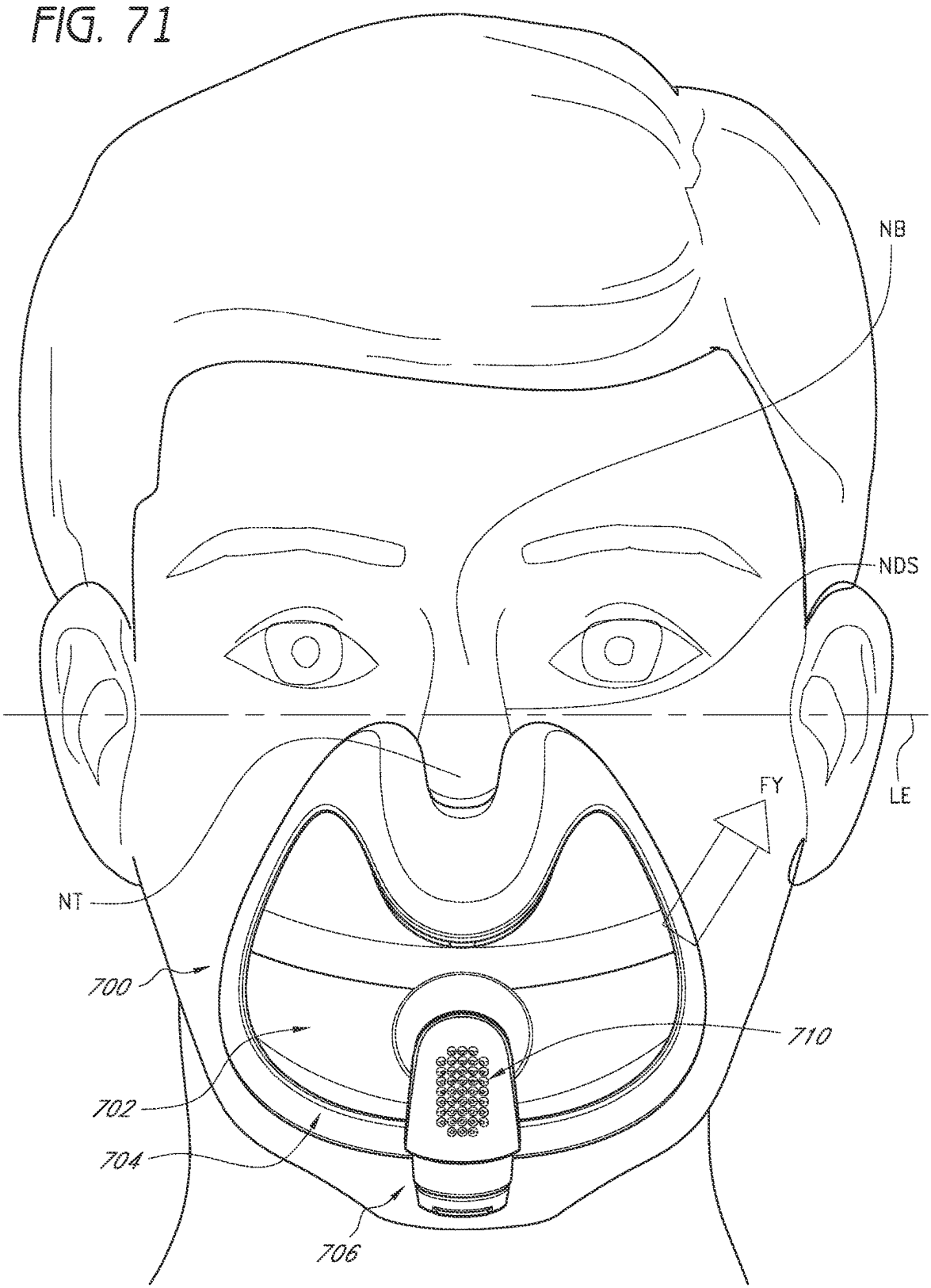

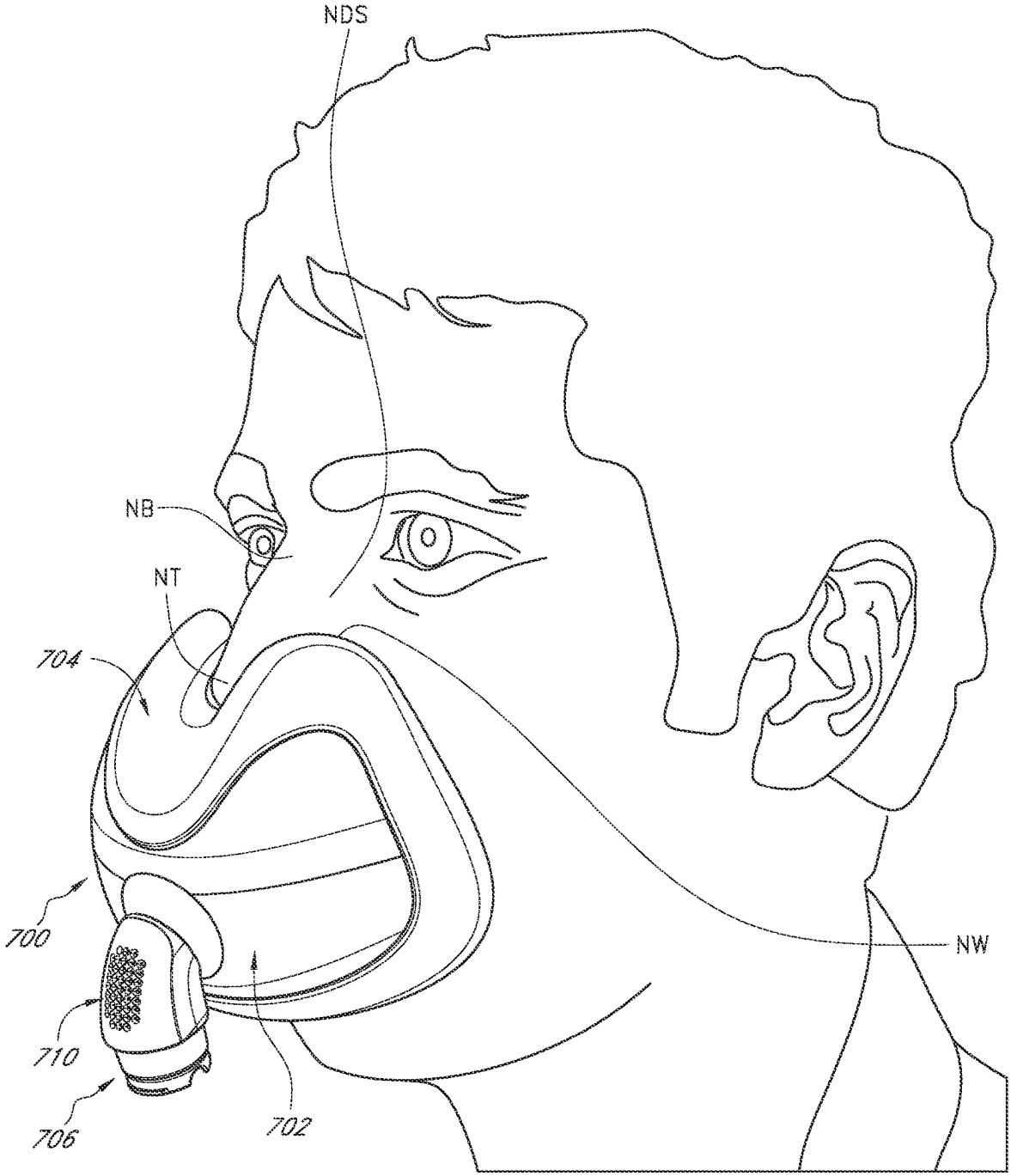


FIG. 72

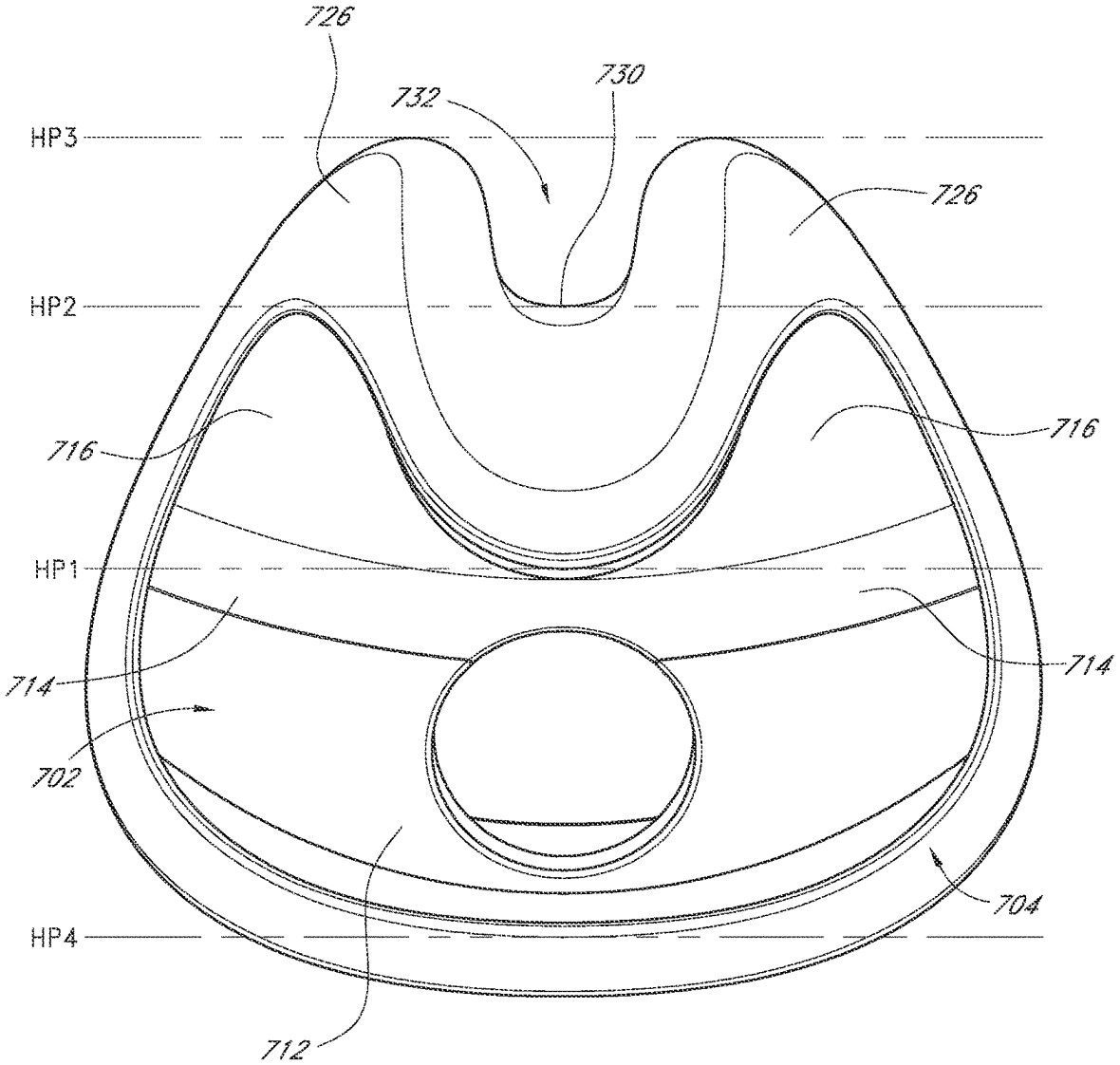


FIG. 73

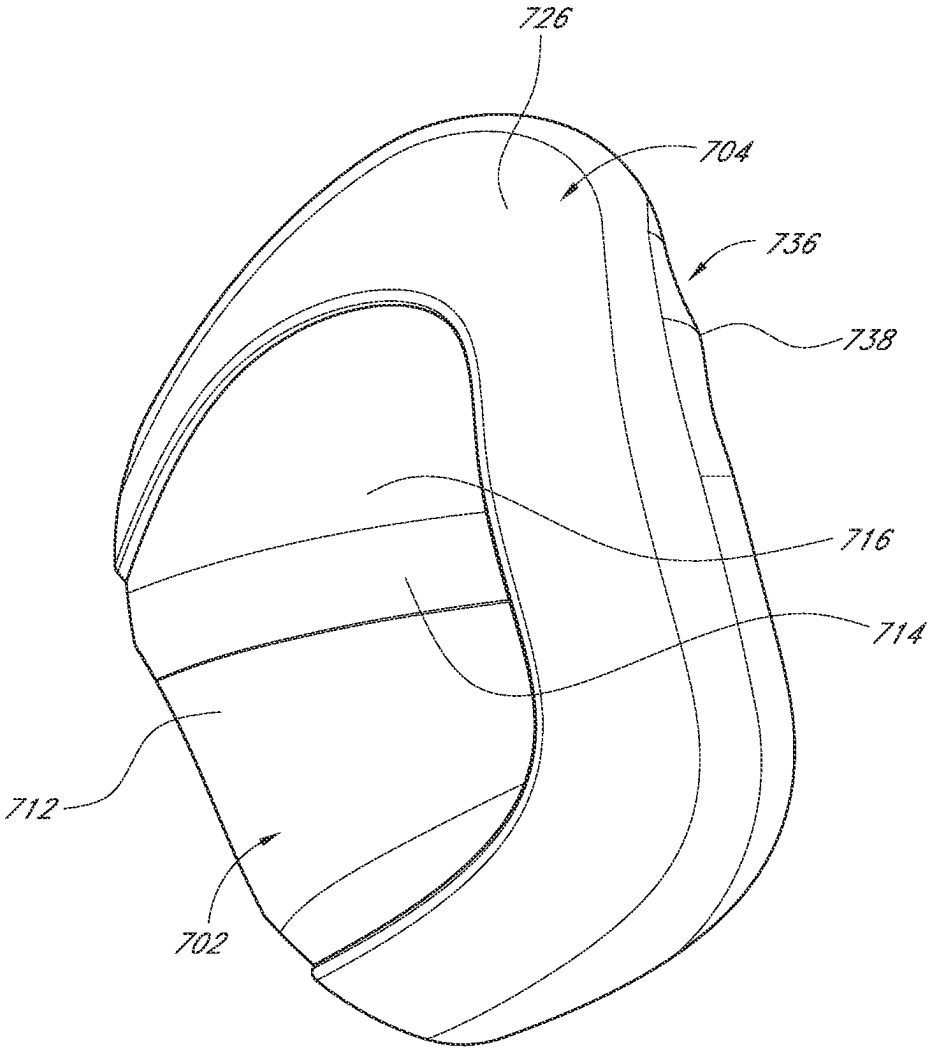


FIG. 74

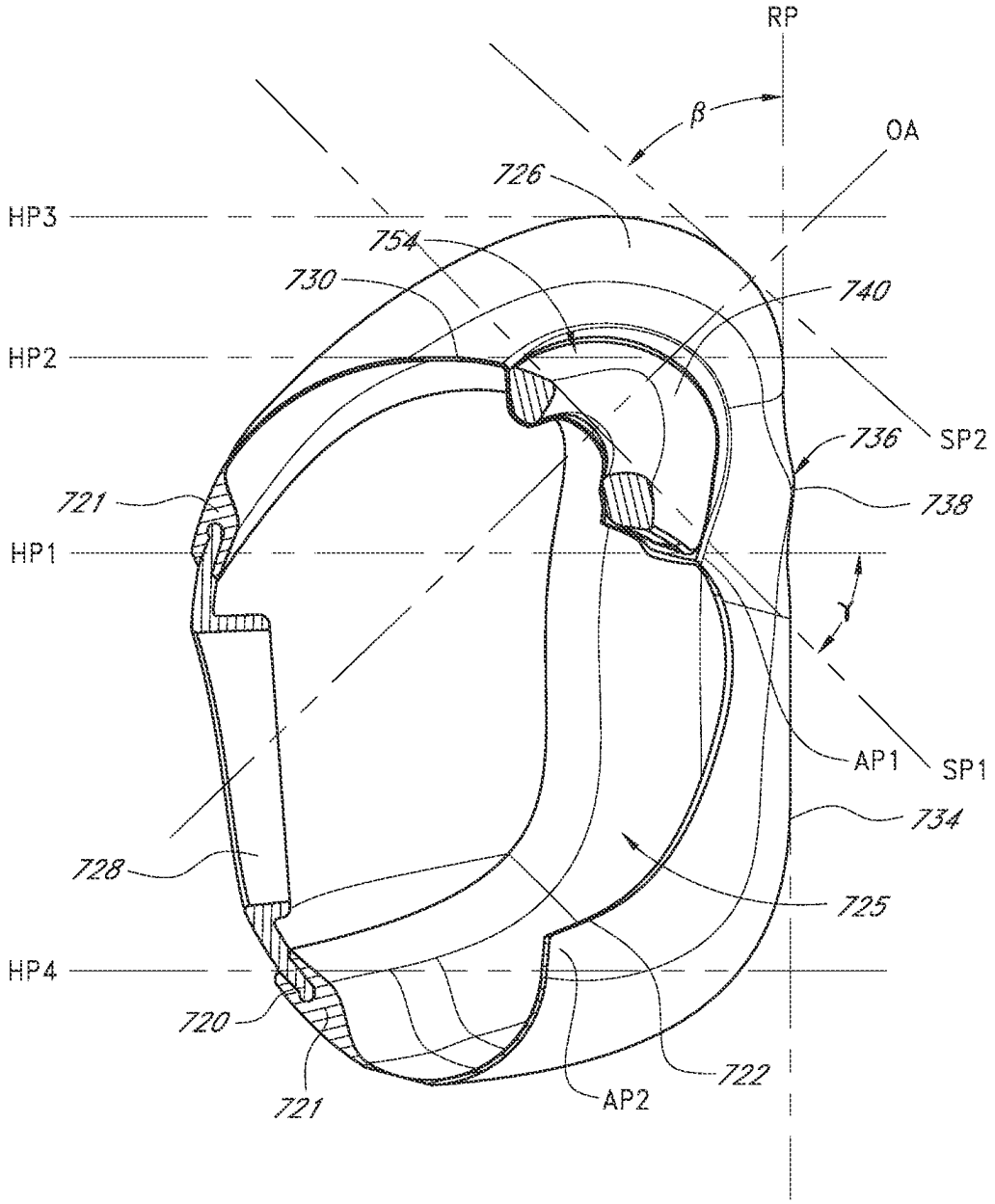
RP
β
OA
726
HP3
754
730
740
HP2
736
SP2
721
738
HP1
γ
AP1
SP1
734
728
725
HP4
720
722
721
AP2

FIG. 75

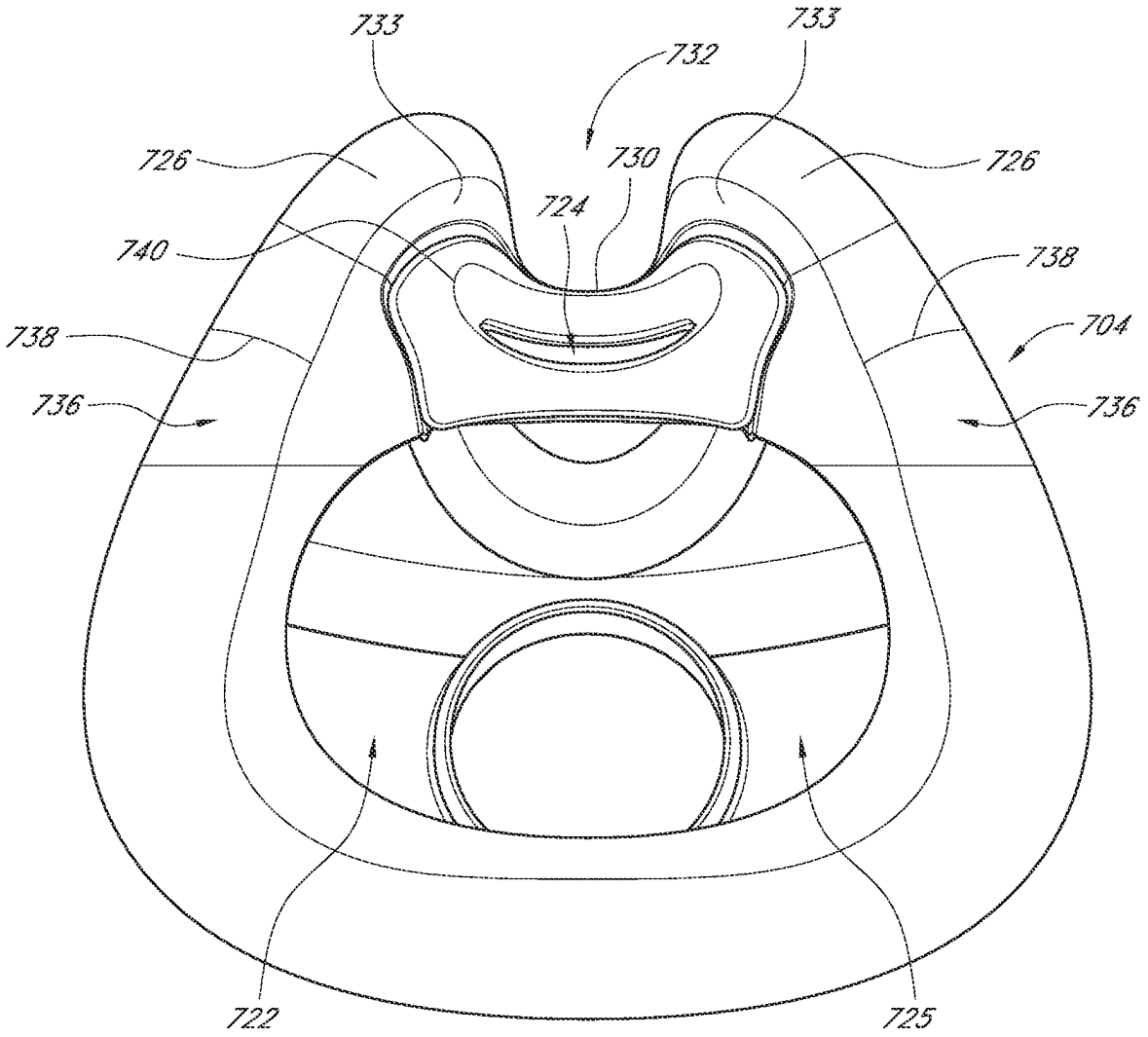


FIG. 76

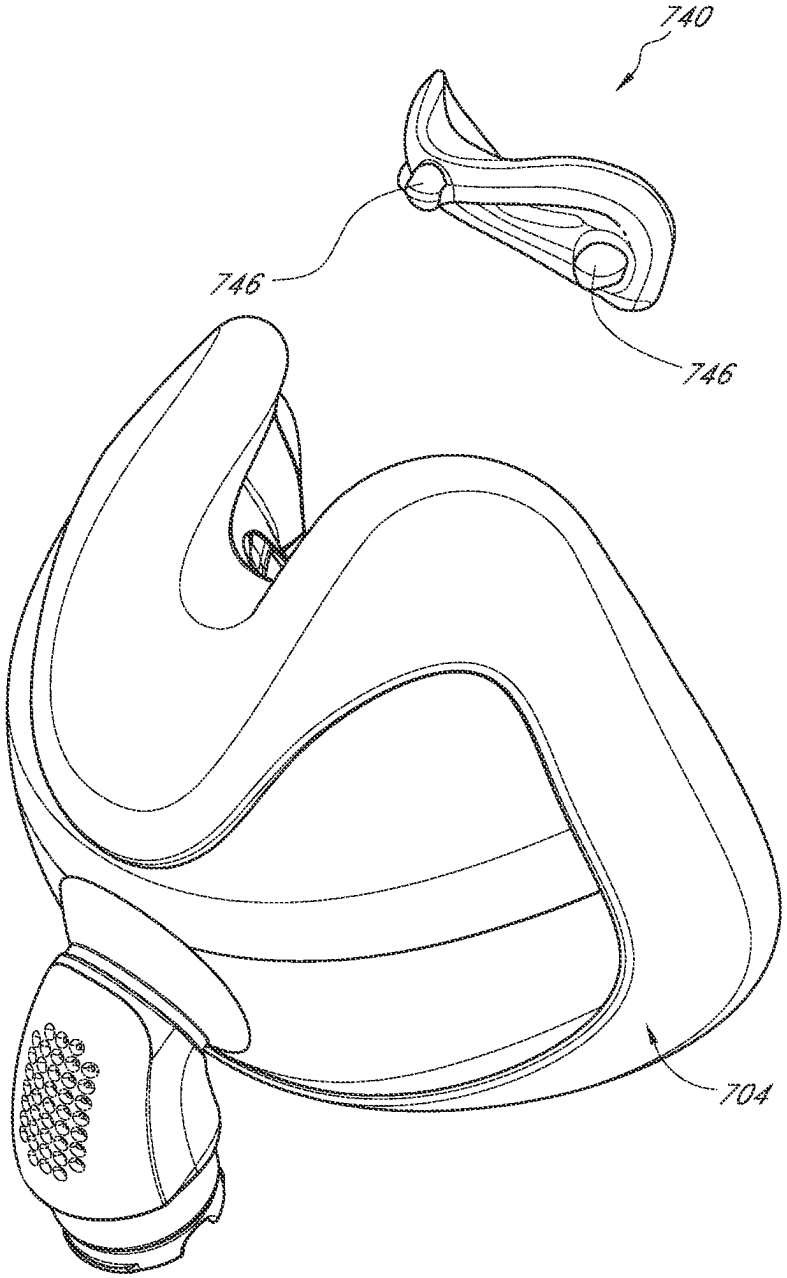


FIG. 77

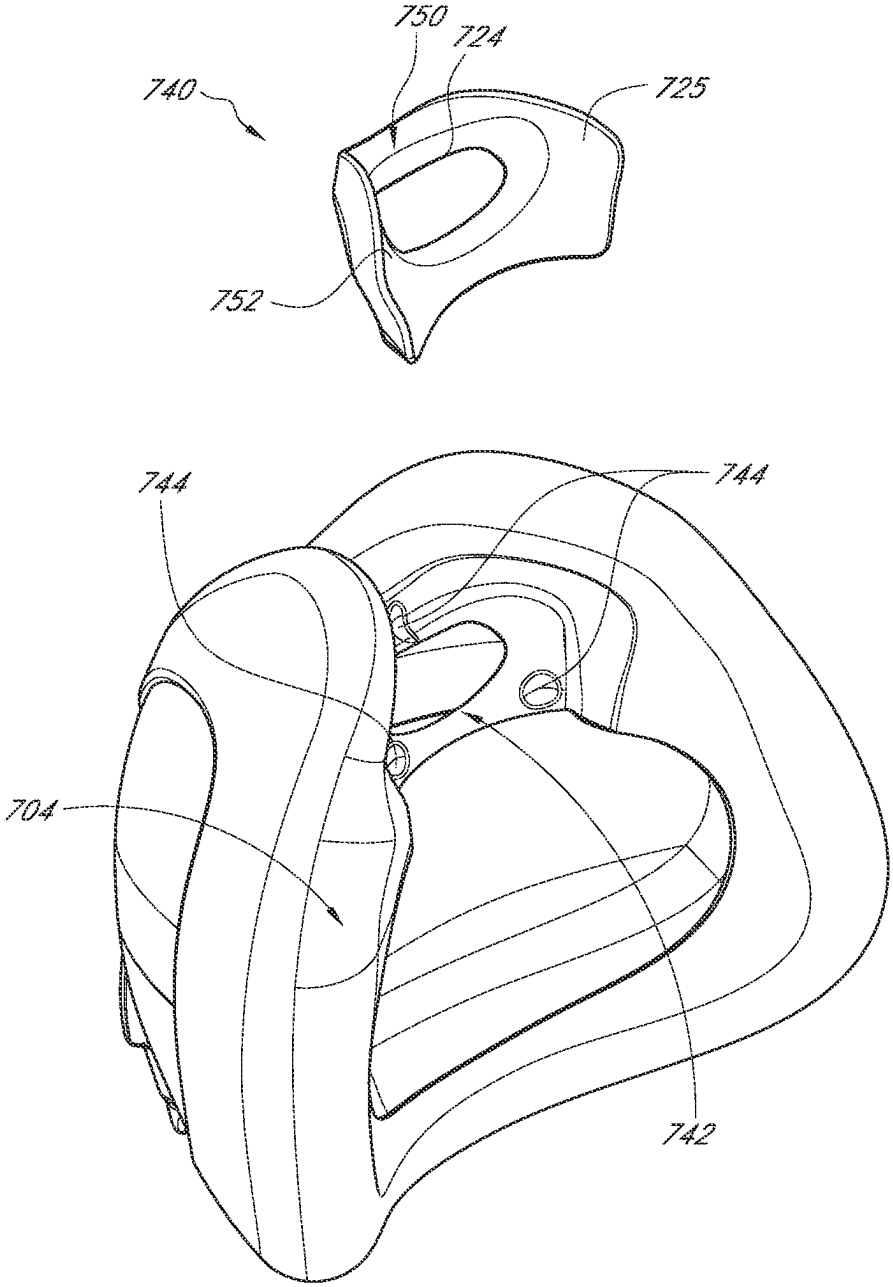


FIG. 78

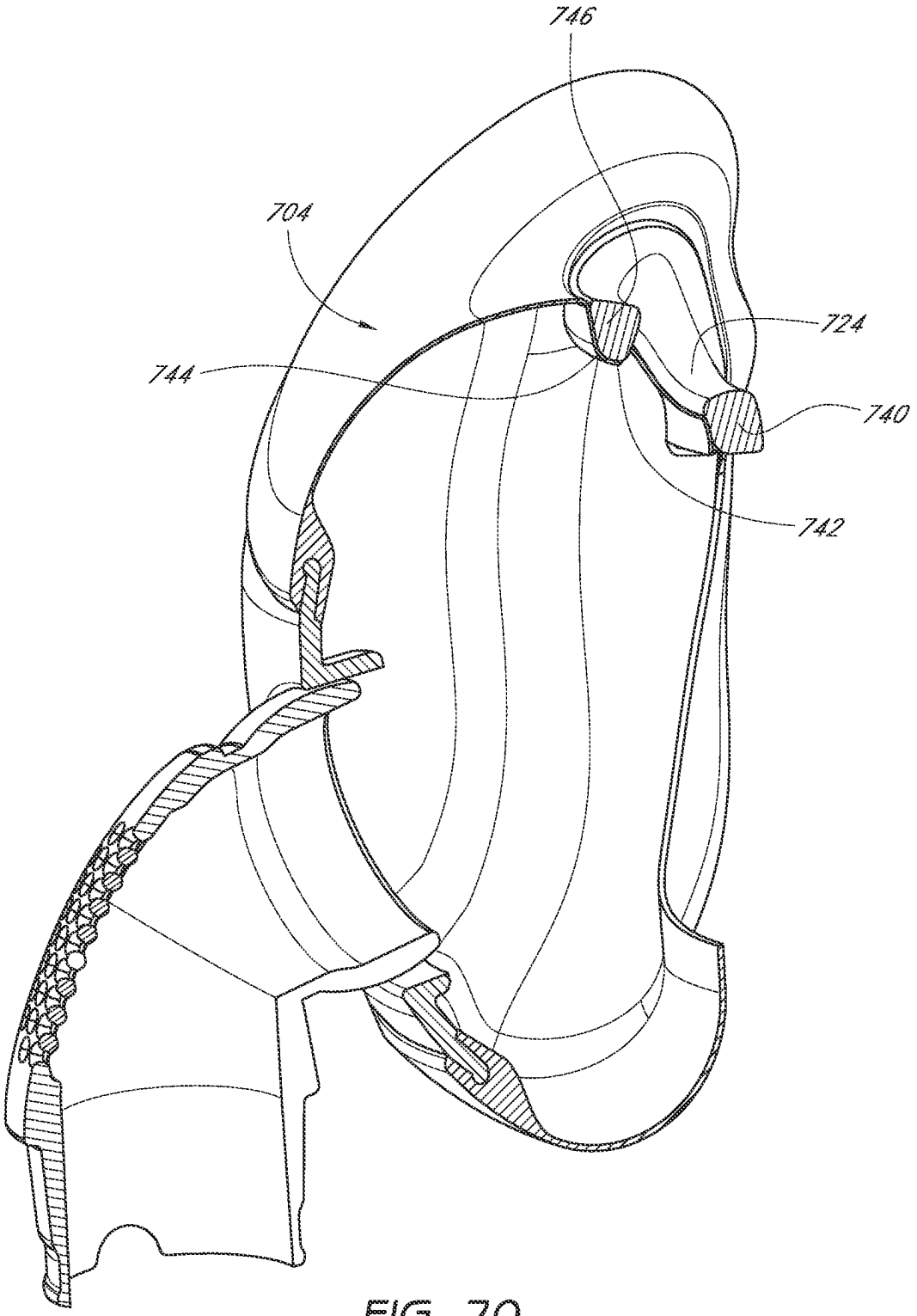


FIG. 79

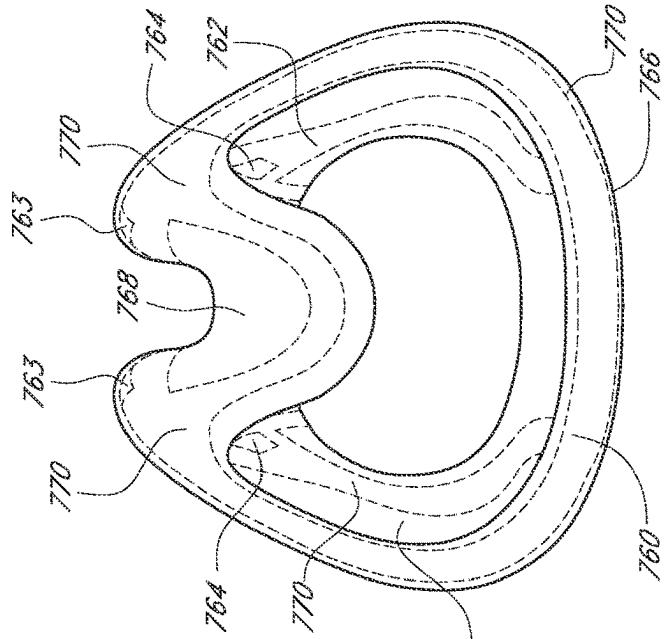


FIG. 80

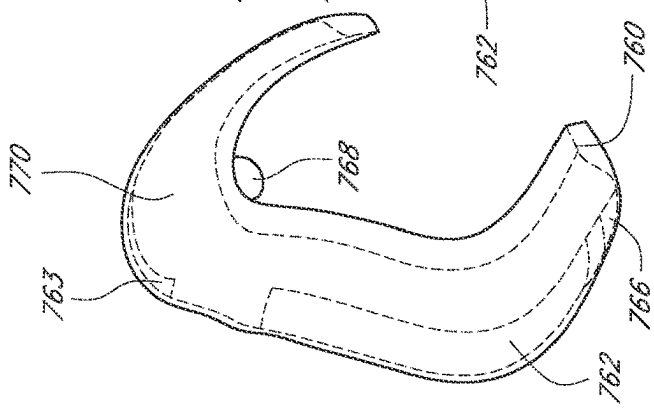


FIG. 82

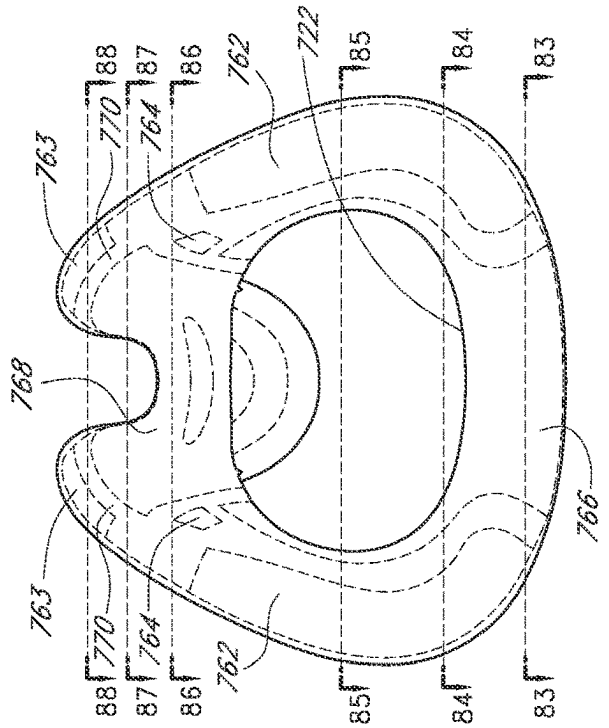


FIG. 81

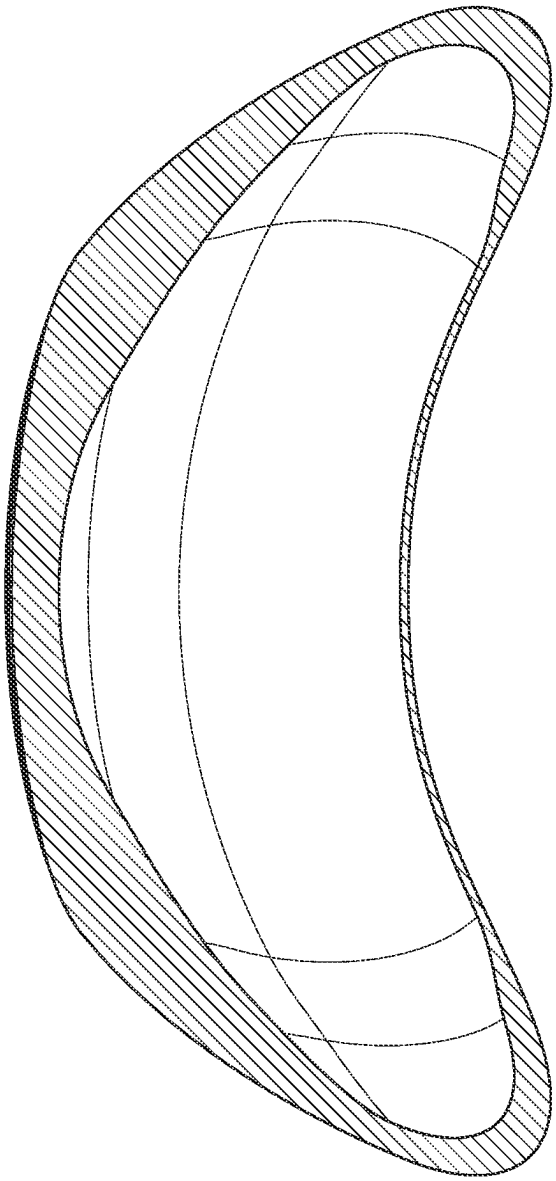

FIG. 83

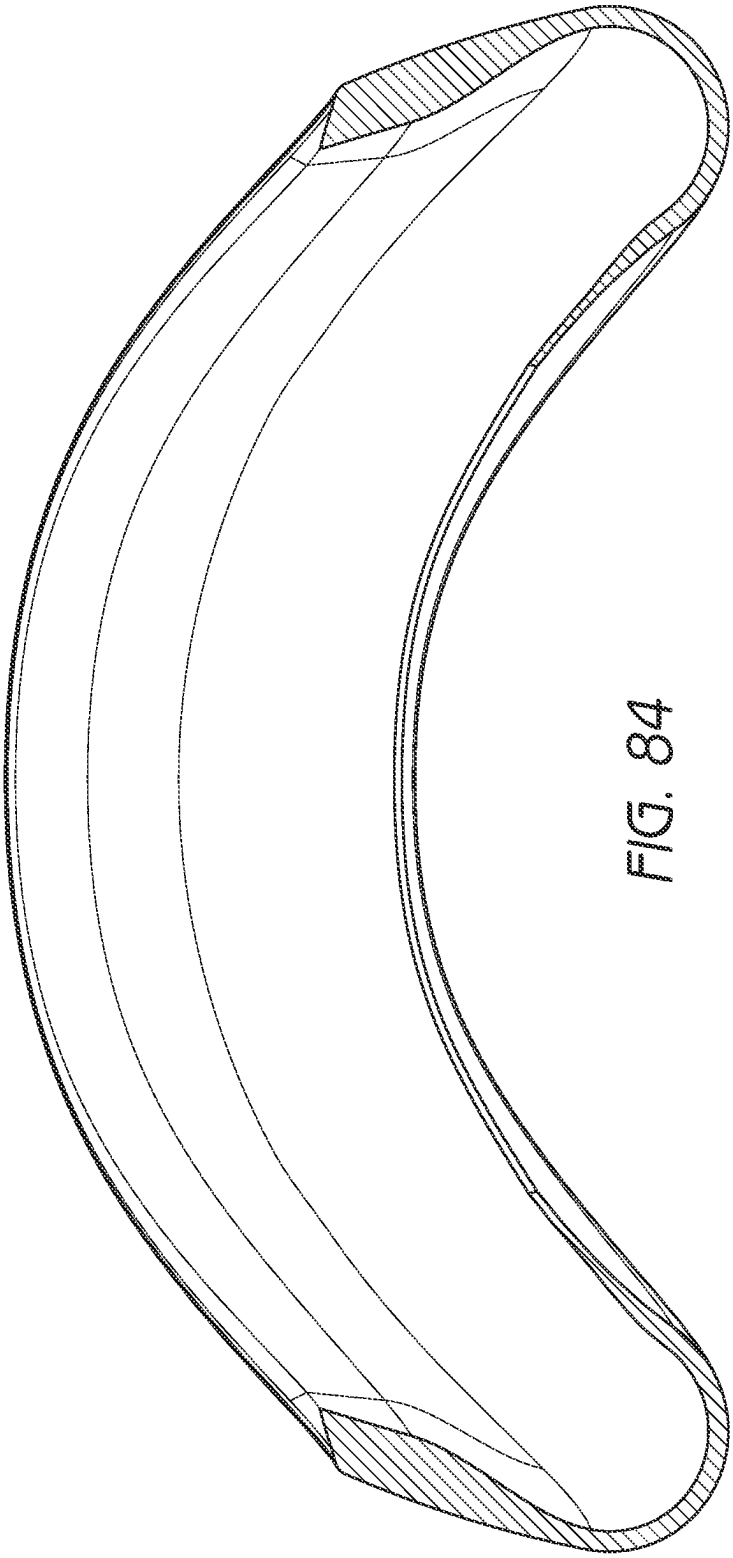

FIG. 84

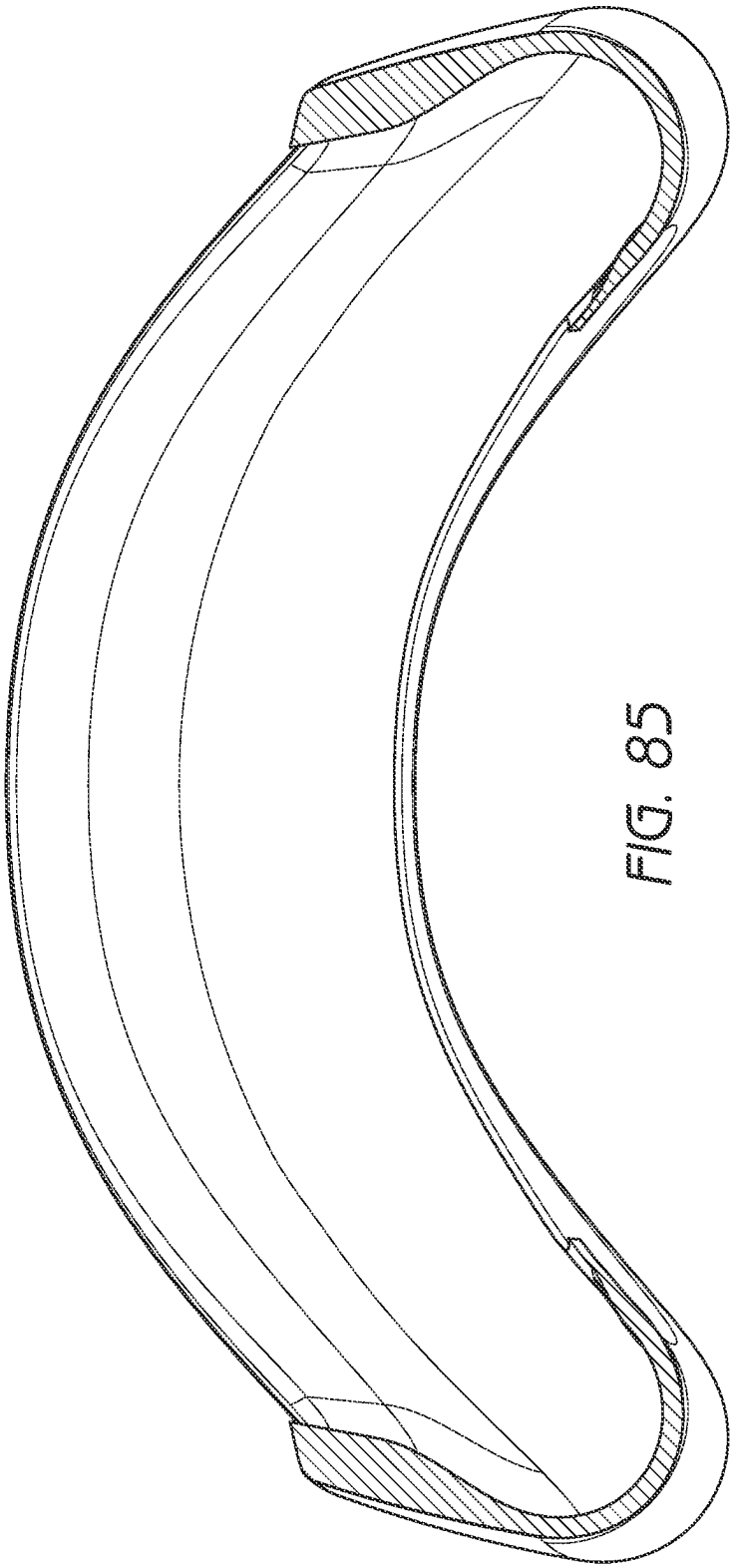

FIG. 85

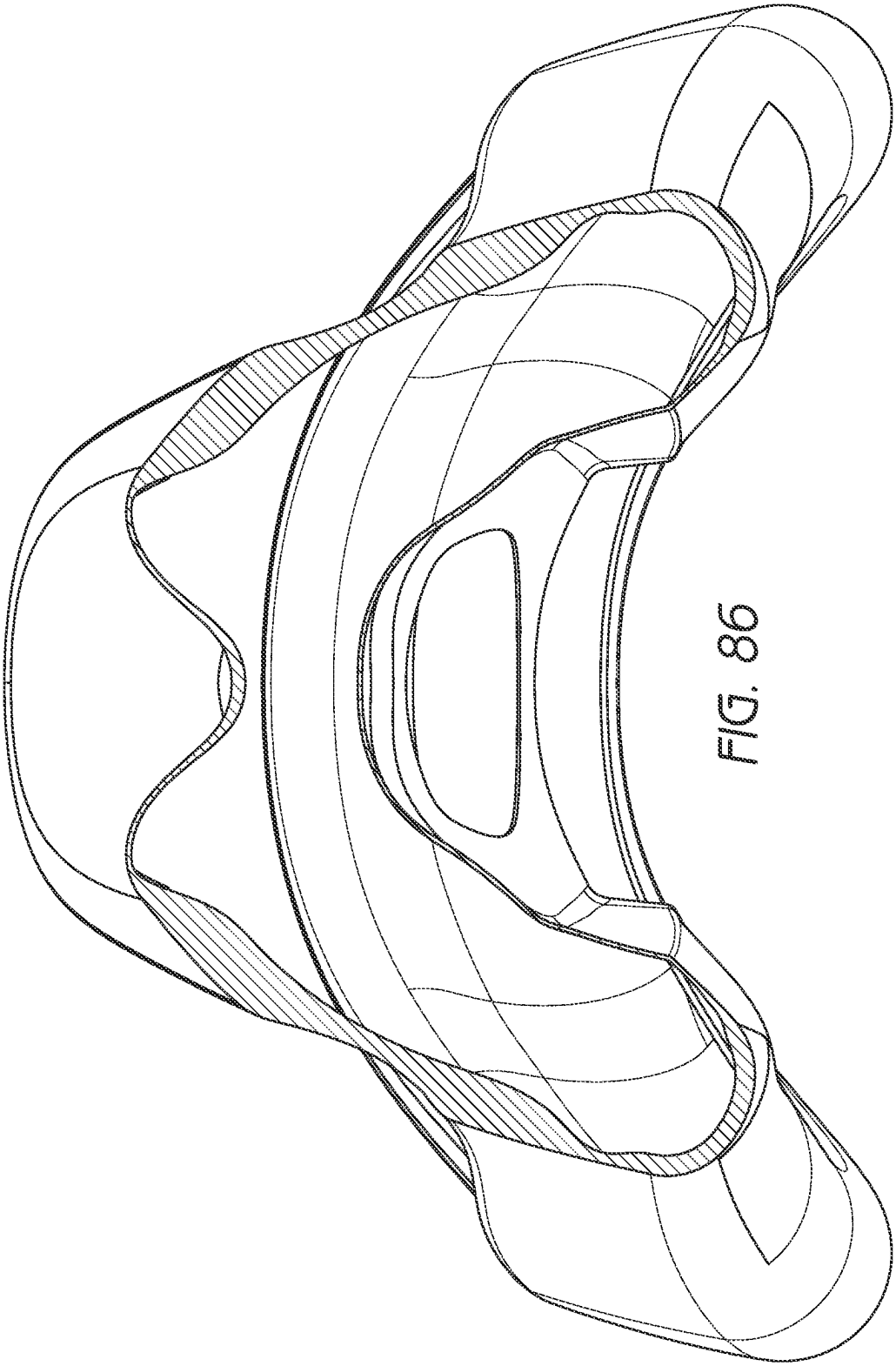

FIG. 86

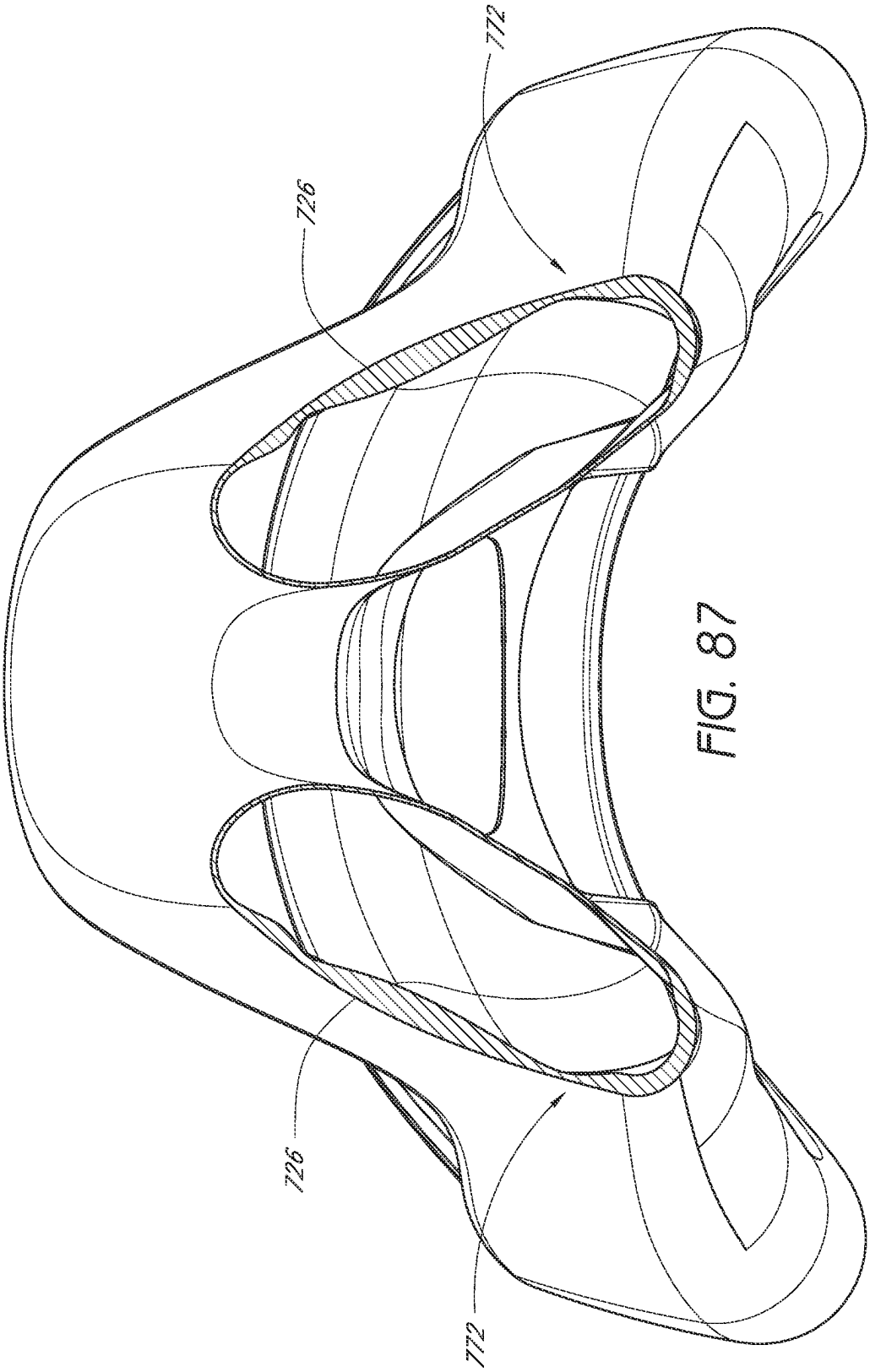


FIG. 87

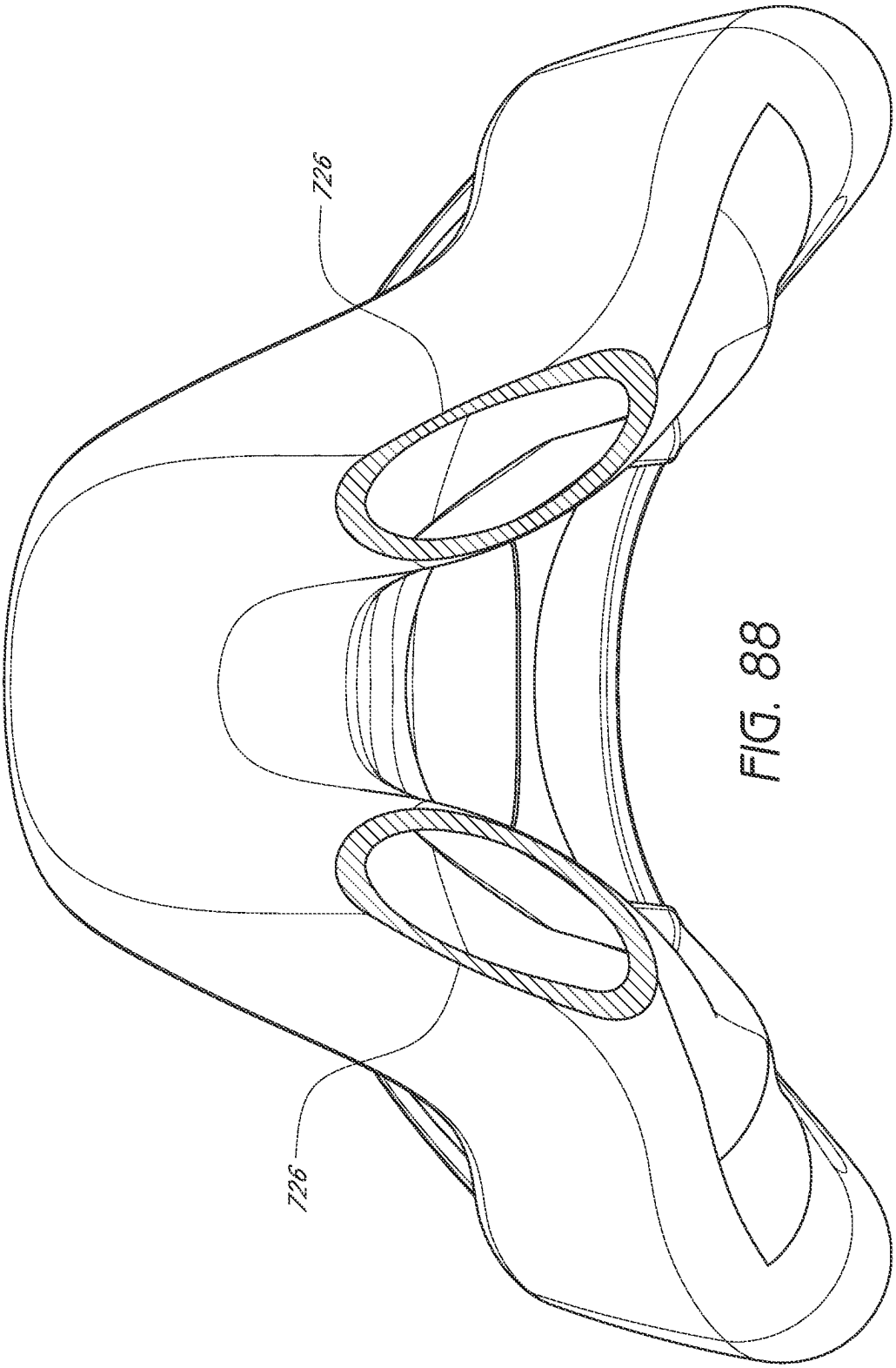


FIG. 88

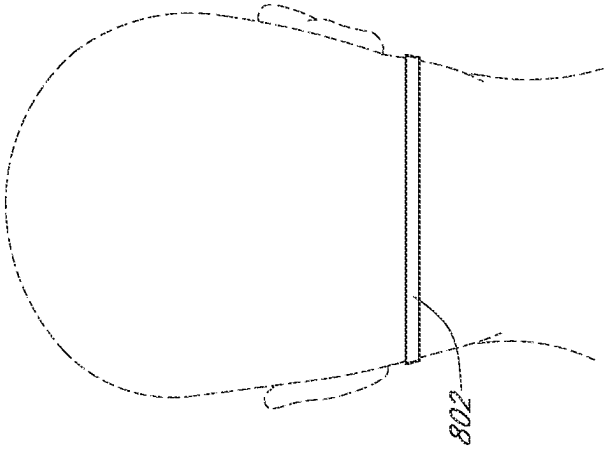


FIG. 91

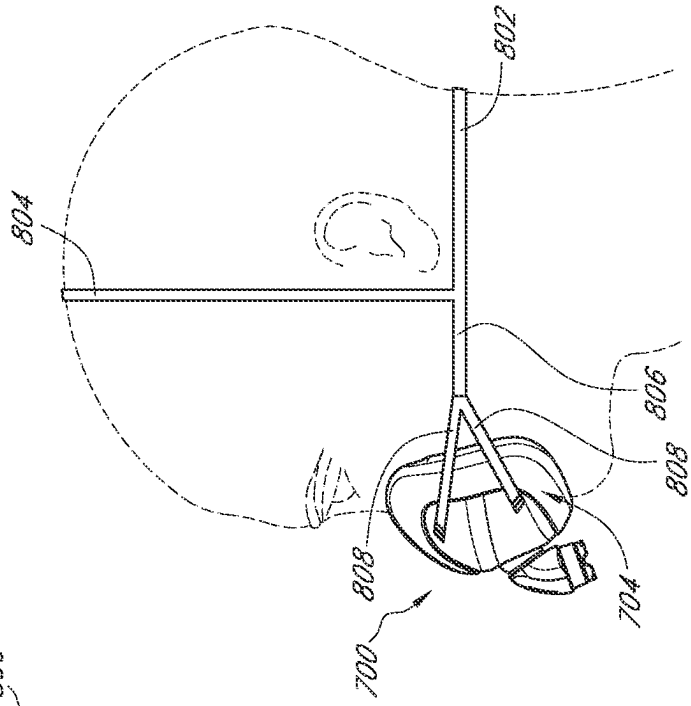


FIG. 90

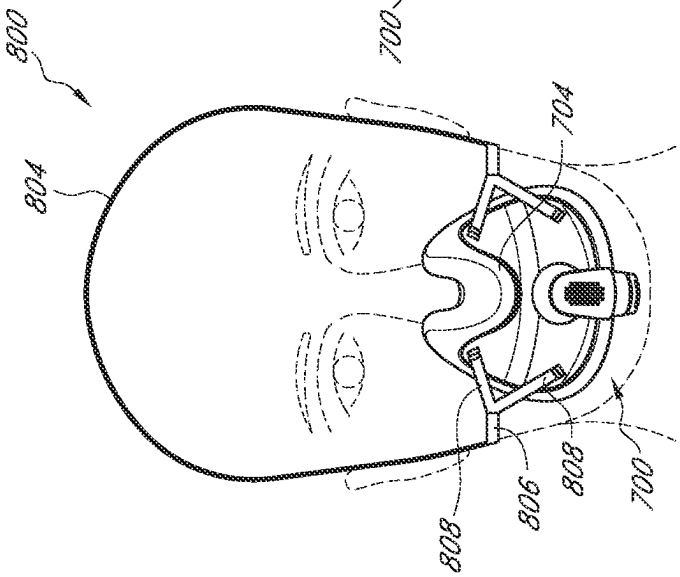


FIG. 89

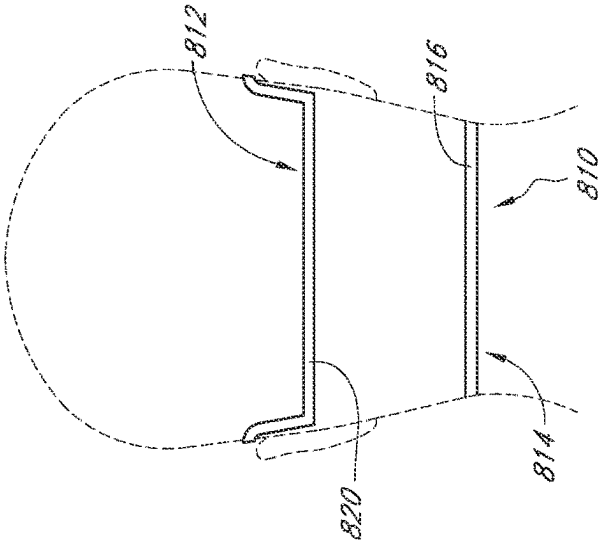


FIG. 94

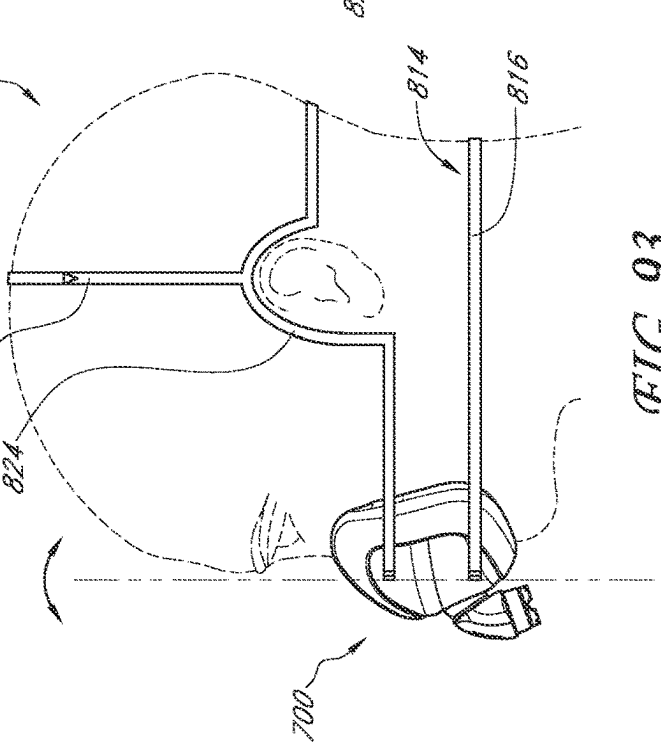


FIG. 93

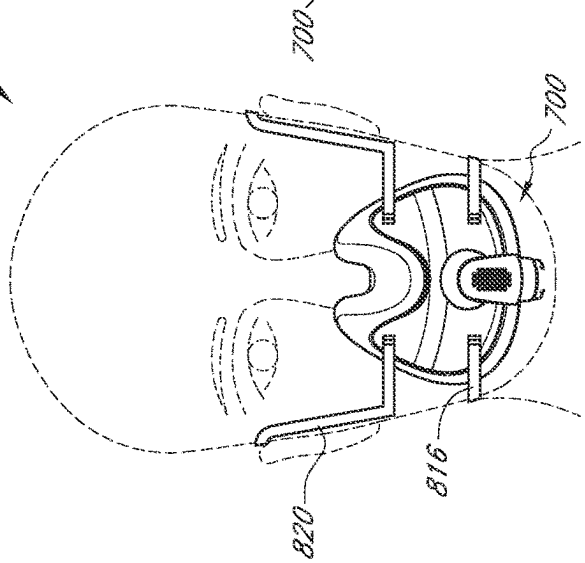


FIG. 92

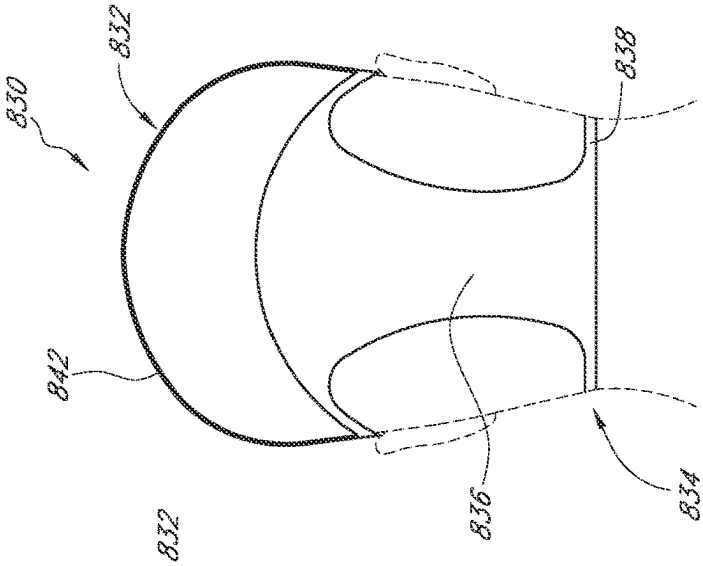


FIG. 97

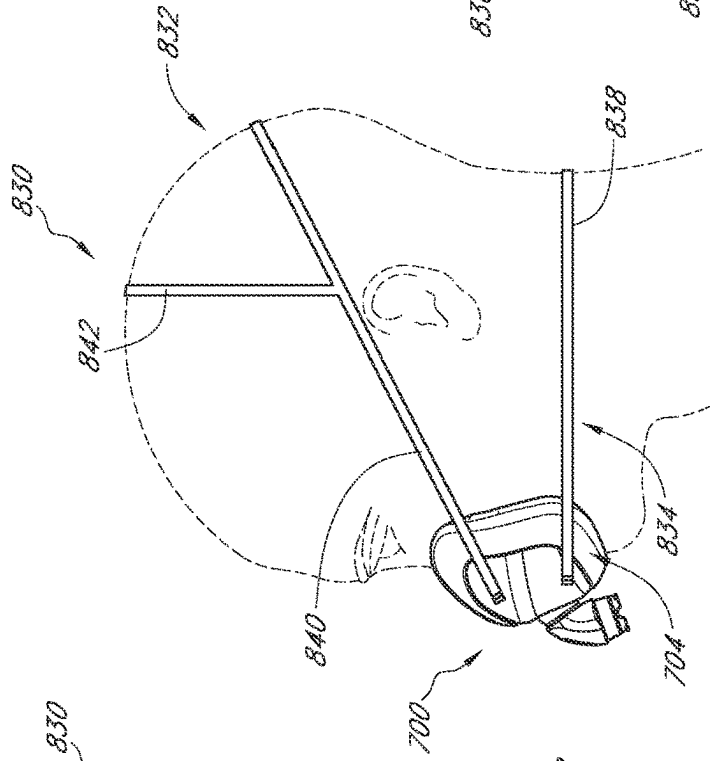


FIG. 96

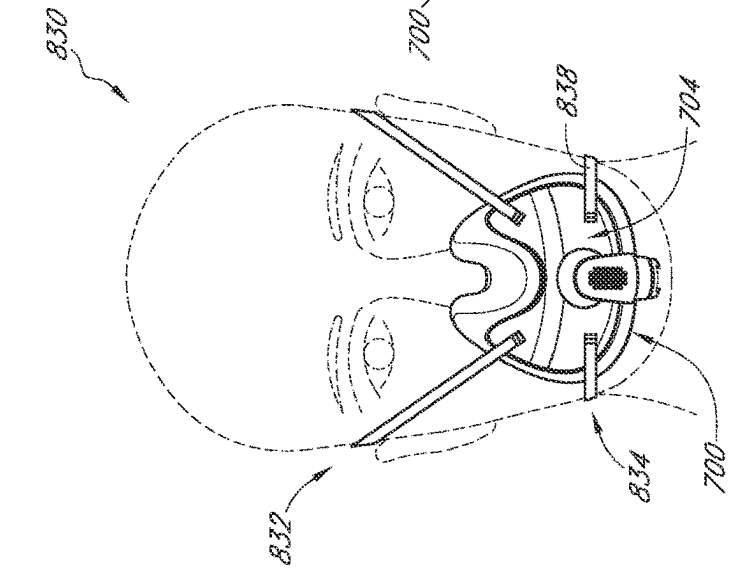


FIG. 95

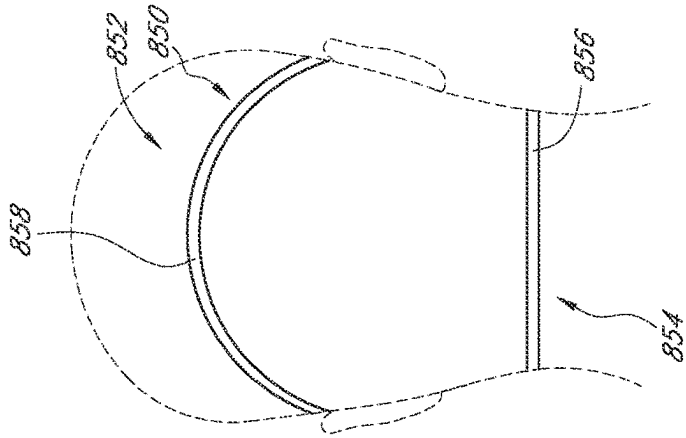


FIG. 100

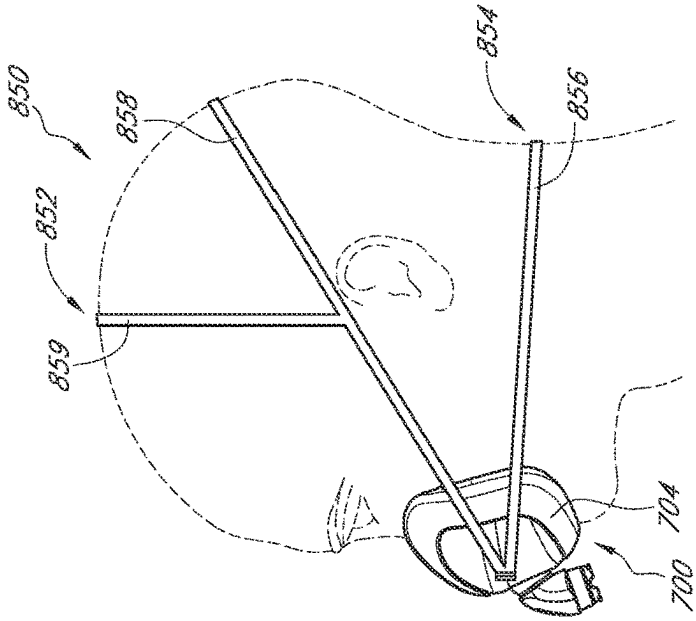


FIG. 99

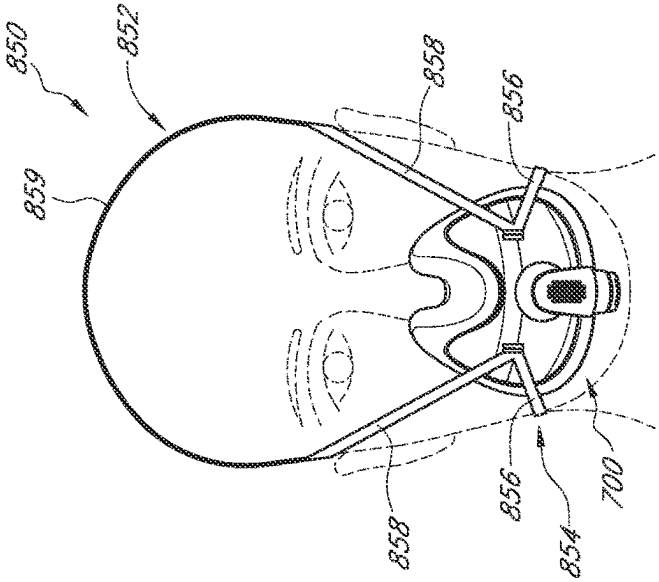


FIG. 98

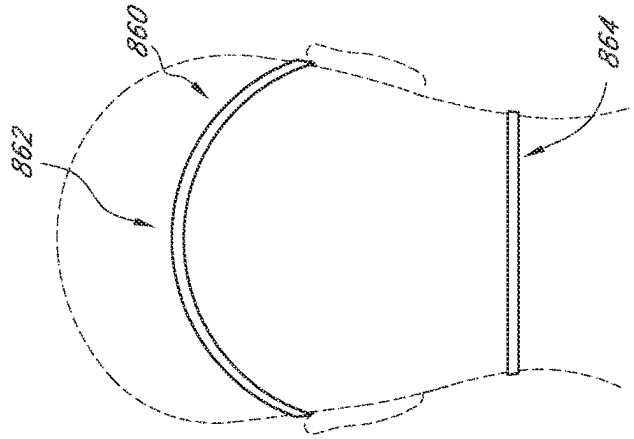


FIG. 103

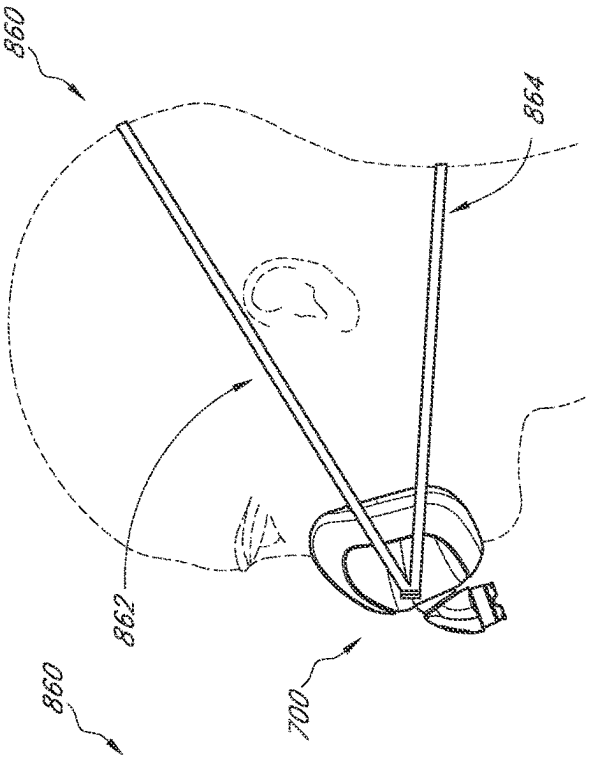


FIG. 102

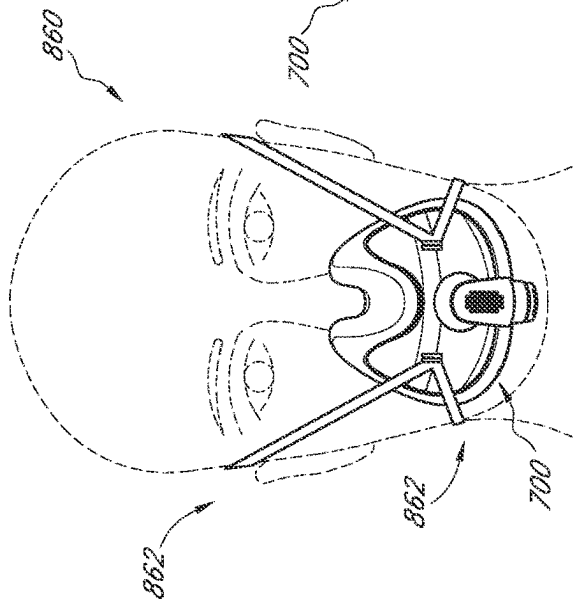


FIG. 101

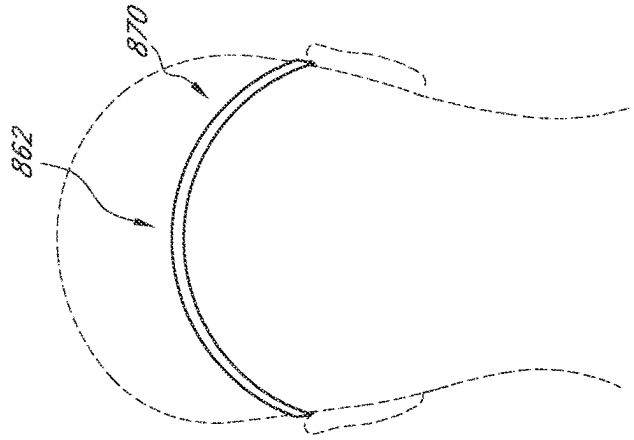


FIG. 106

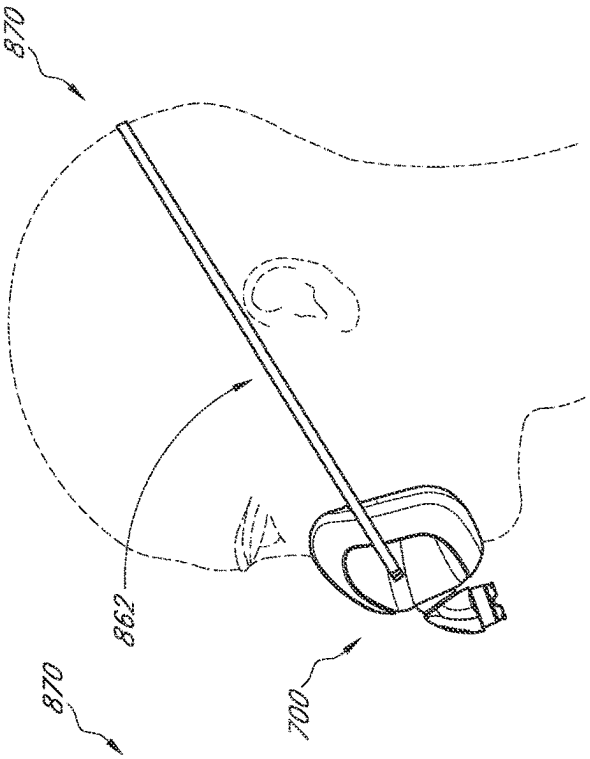


FIG. 105

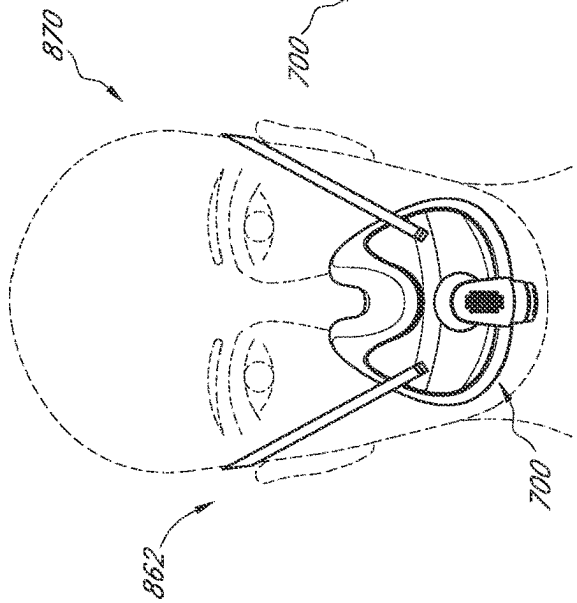


FIG. 104

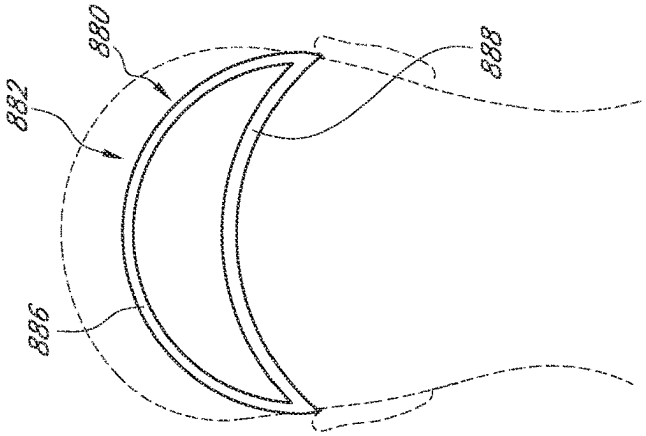


FIG. 109

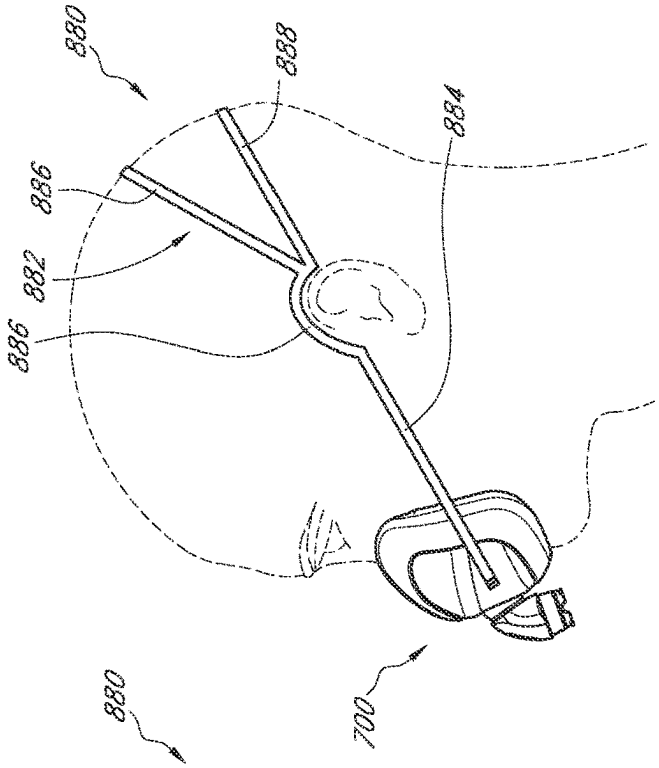


FIG. 108

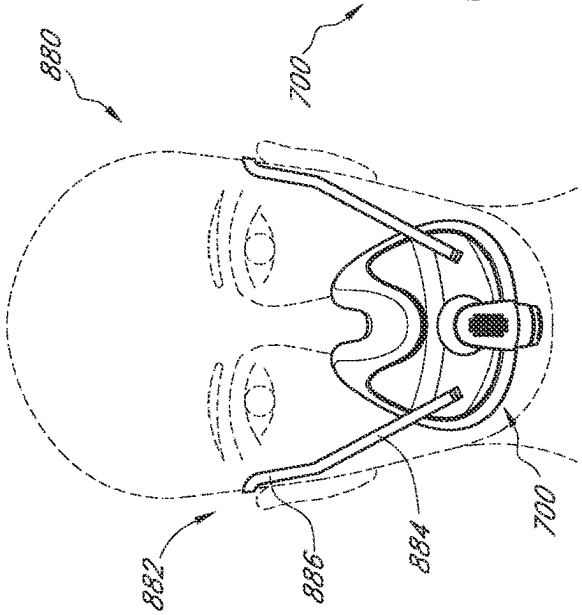


FIG. 107

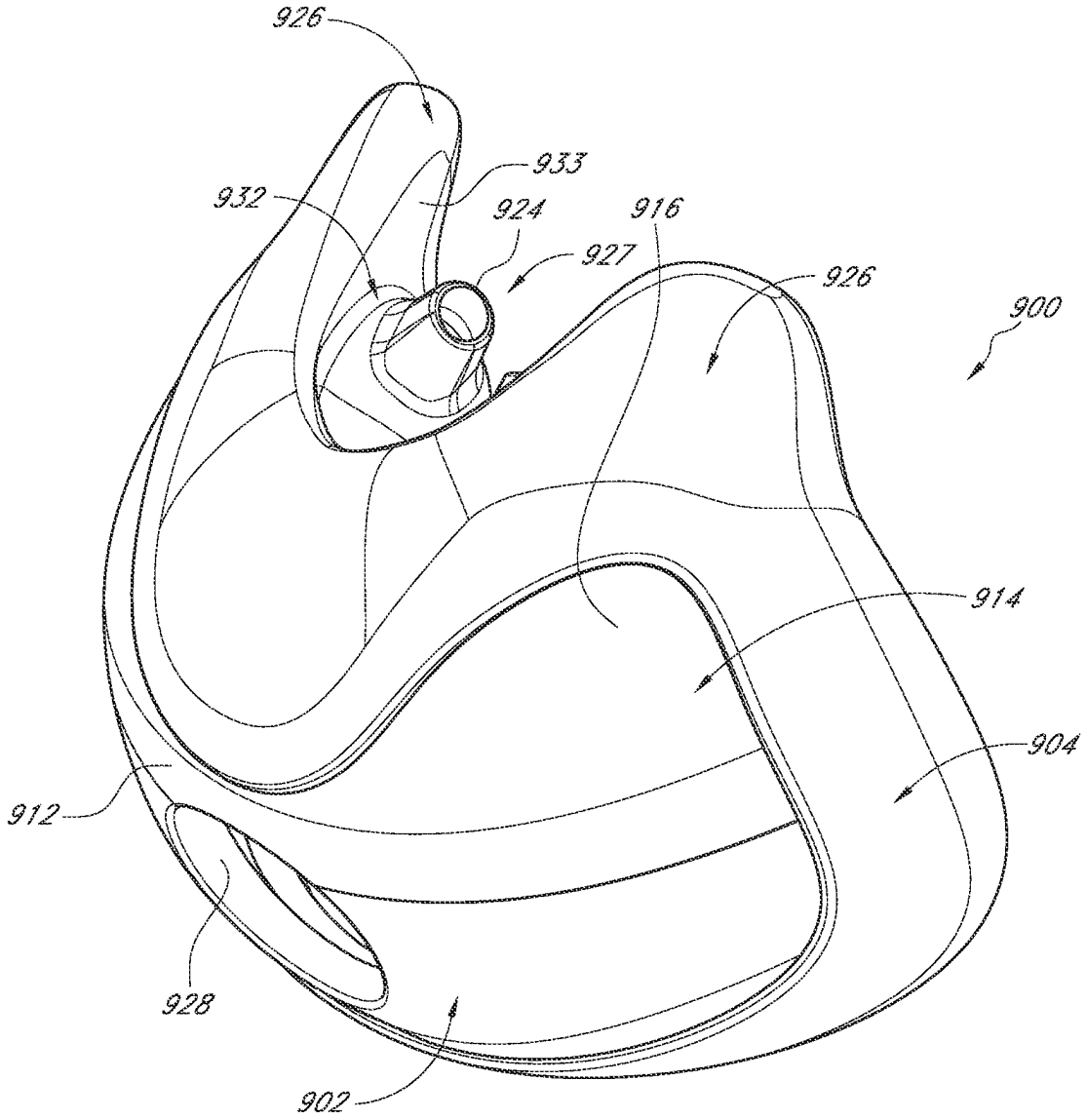


FIG. 110

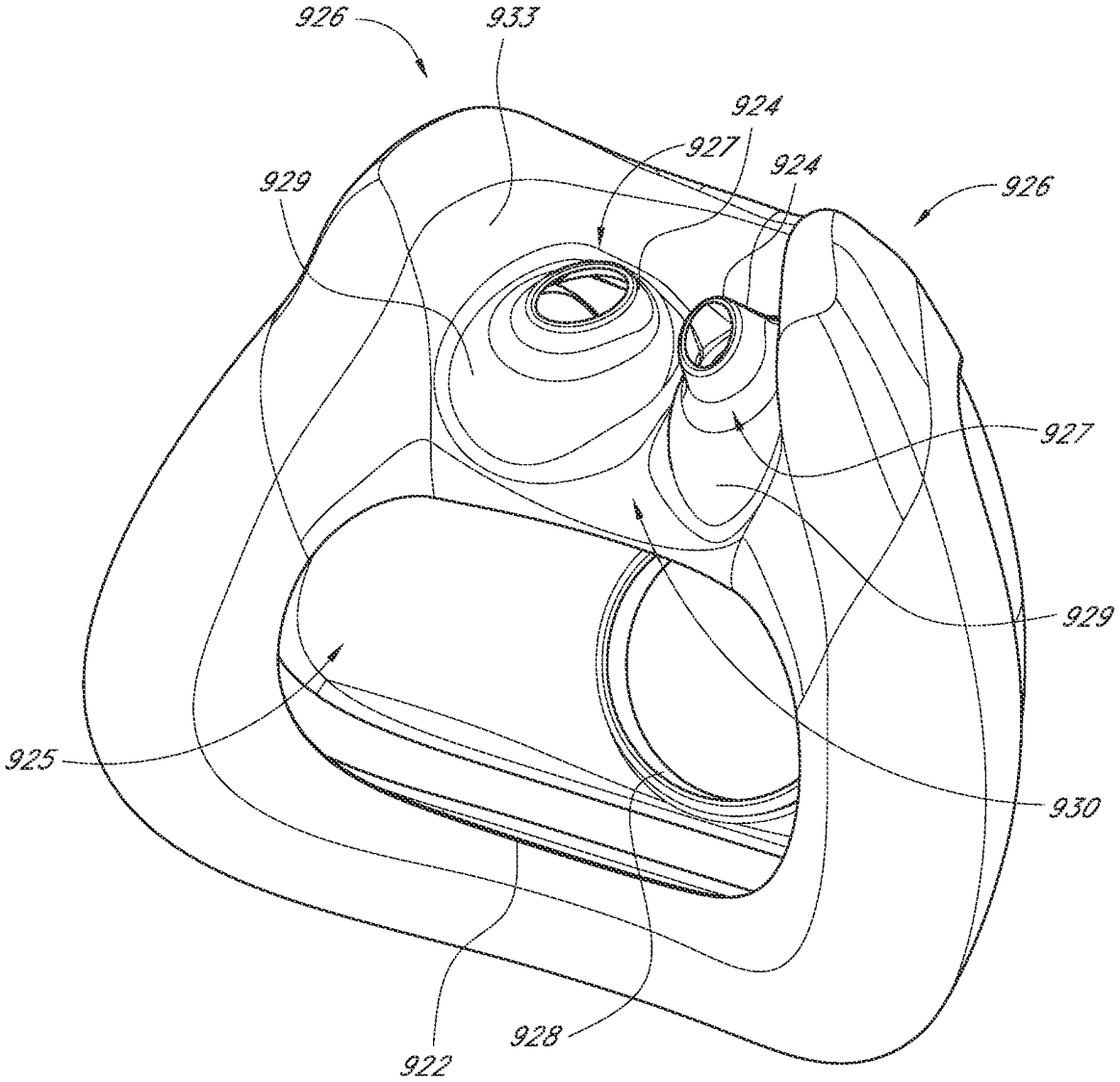


FIG. 111

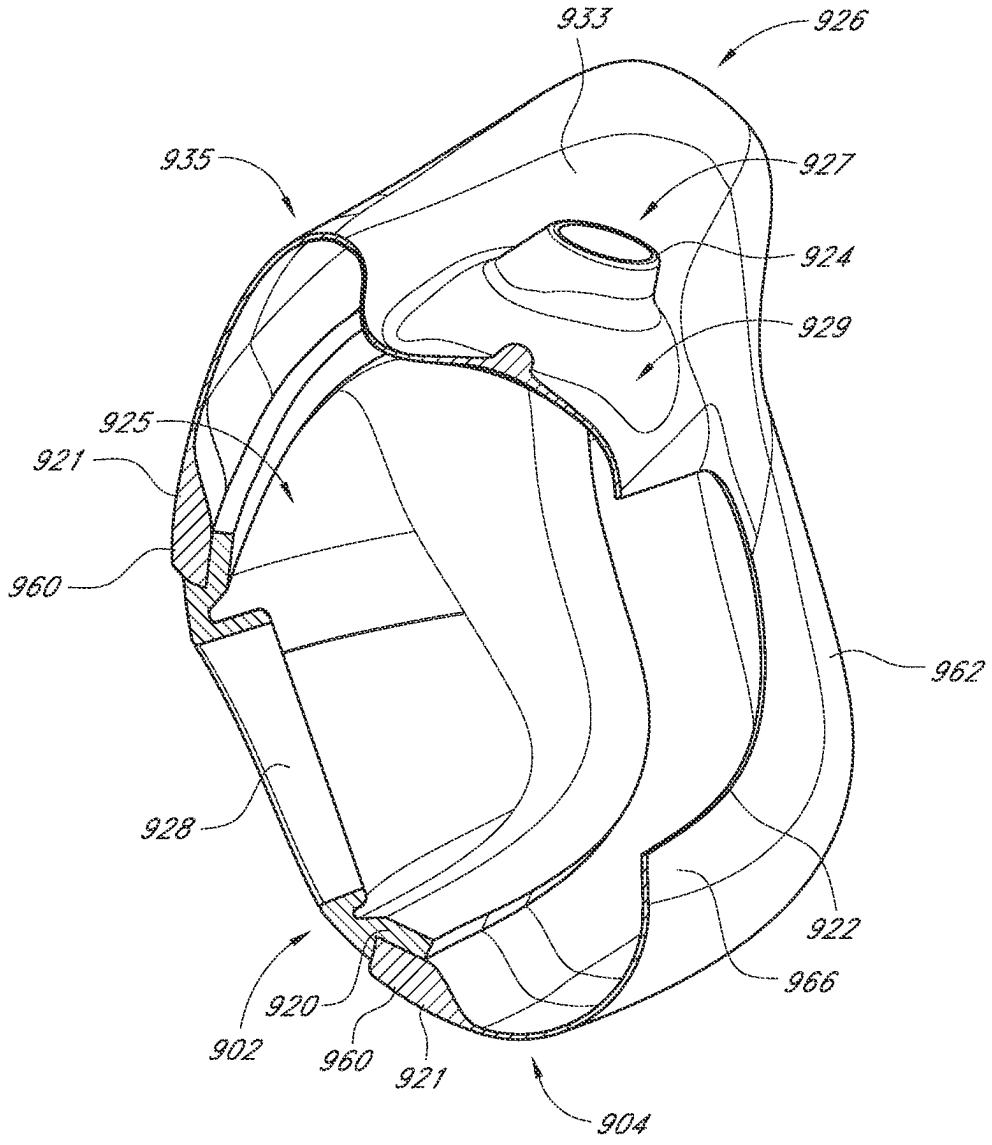
933
926
935
927
924
929
925
921
960
962
928
922
966
920
902
960
921
904

FIG. 112

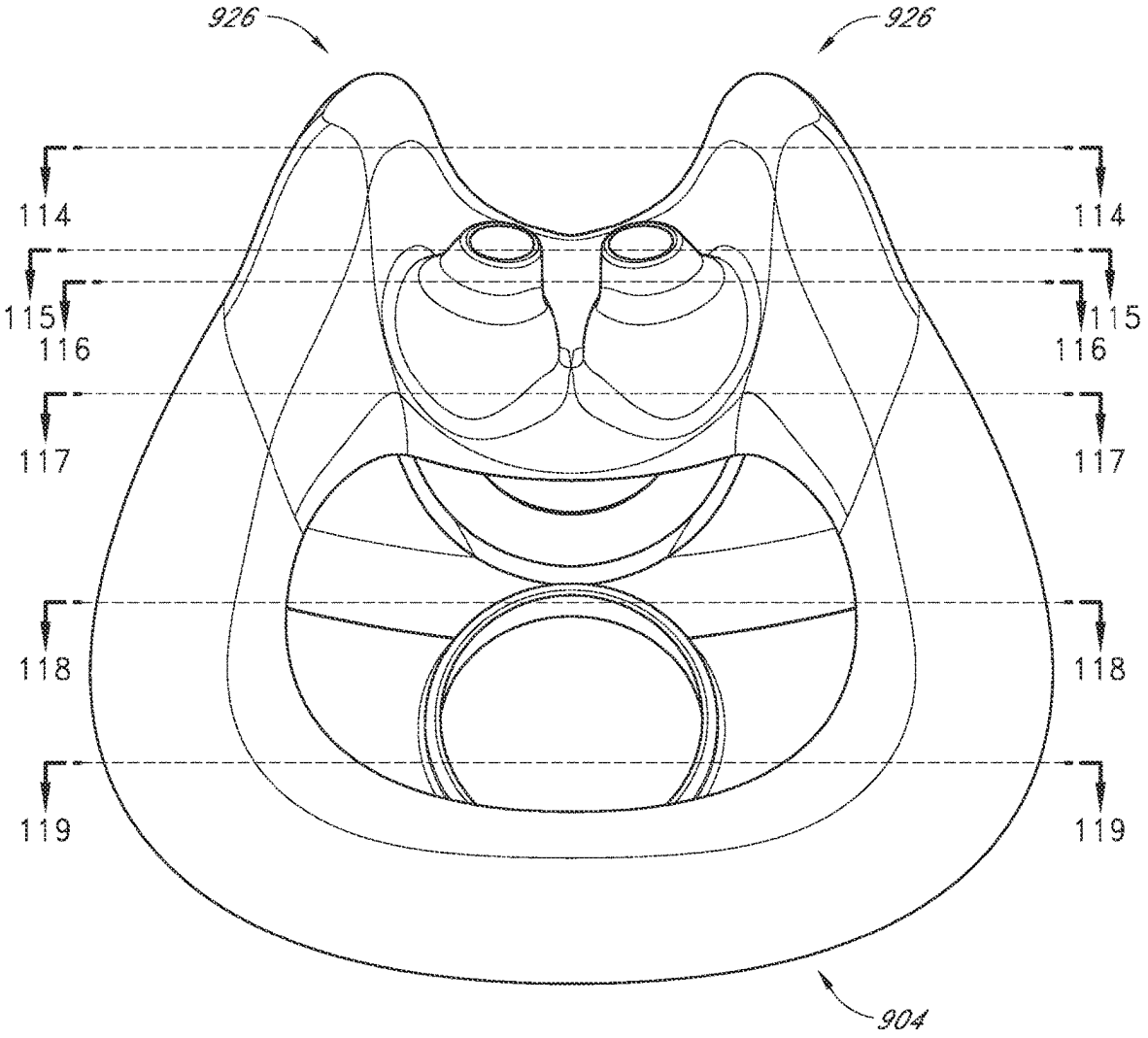


FIG. 113

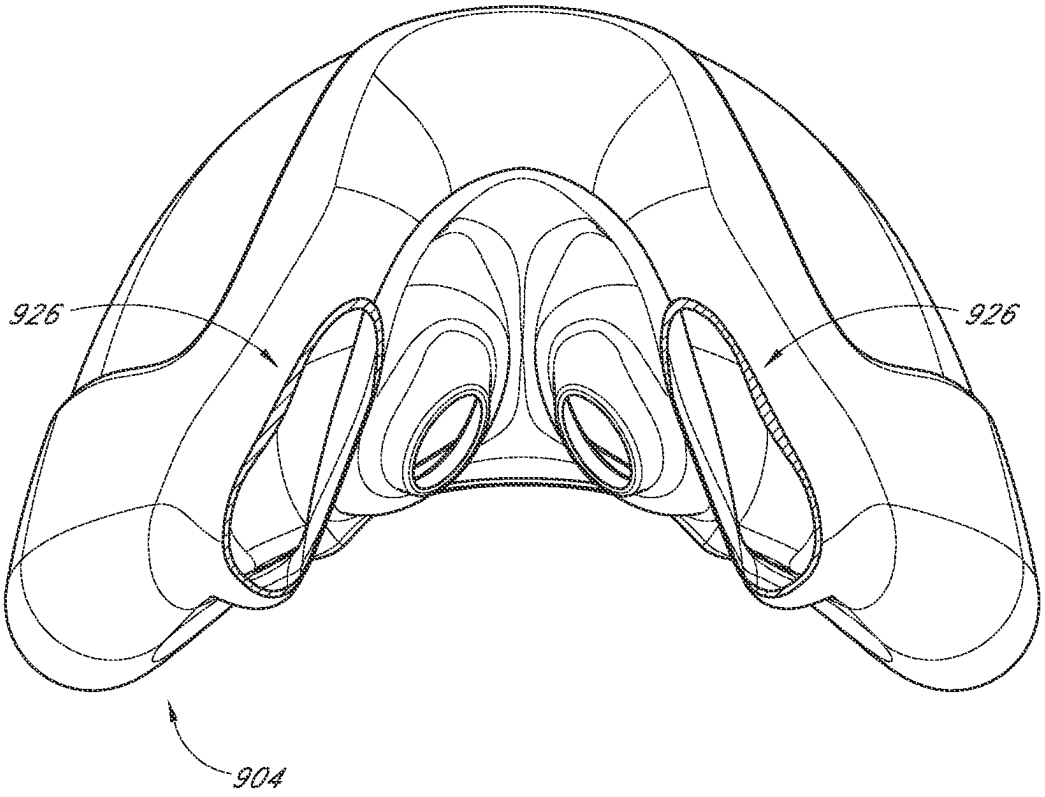


FIG. 114

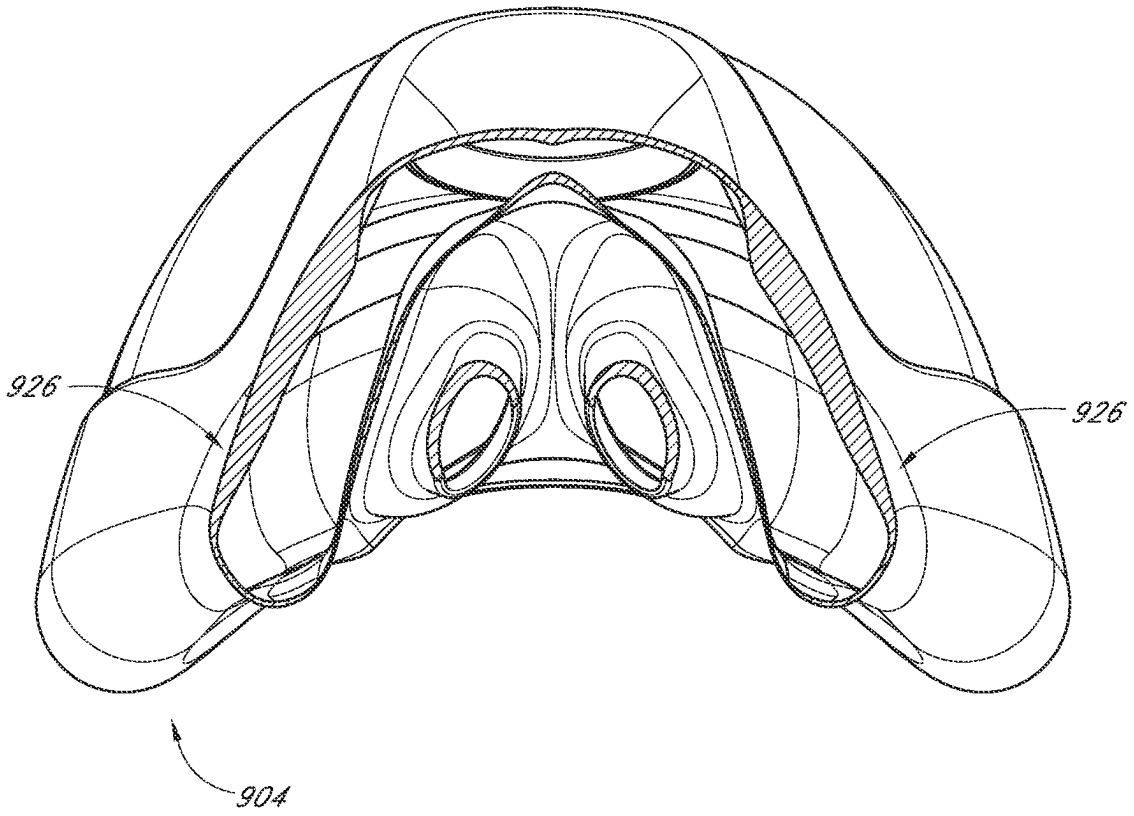


FIG. 115

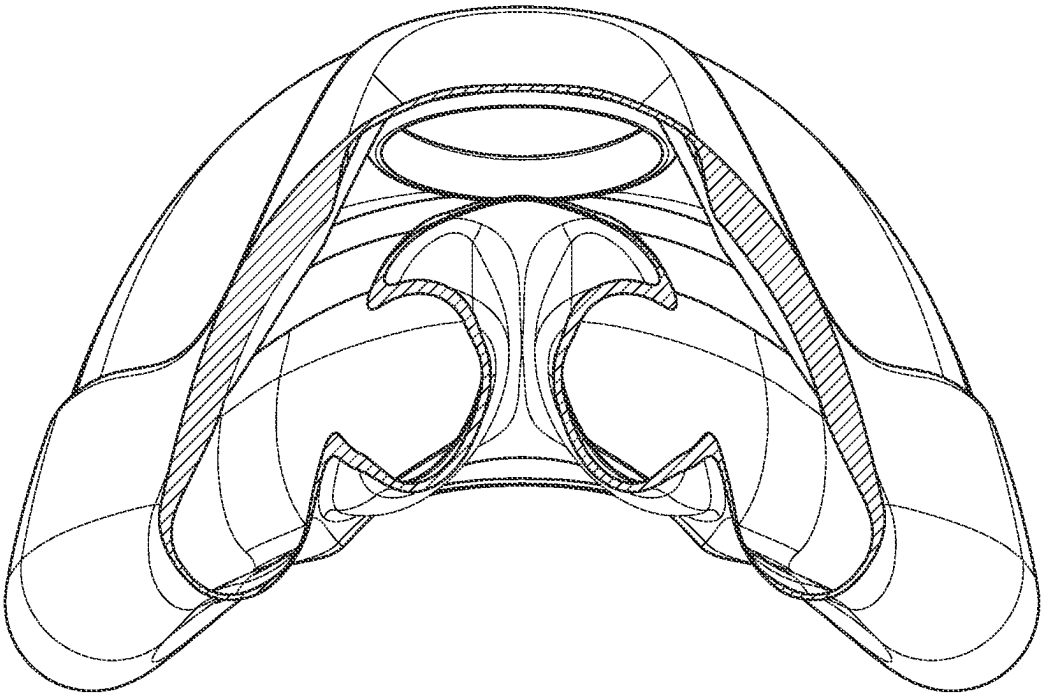

FIG. 116

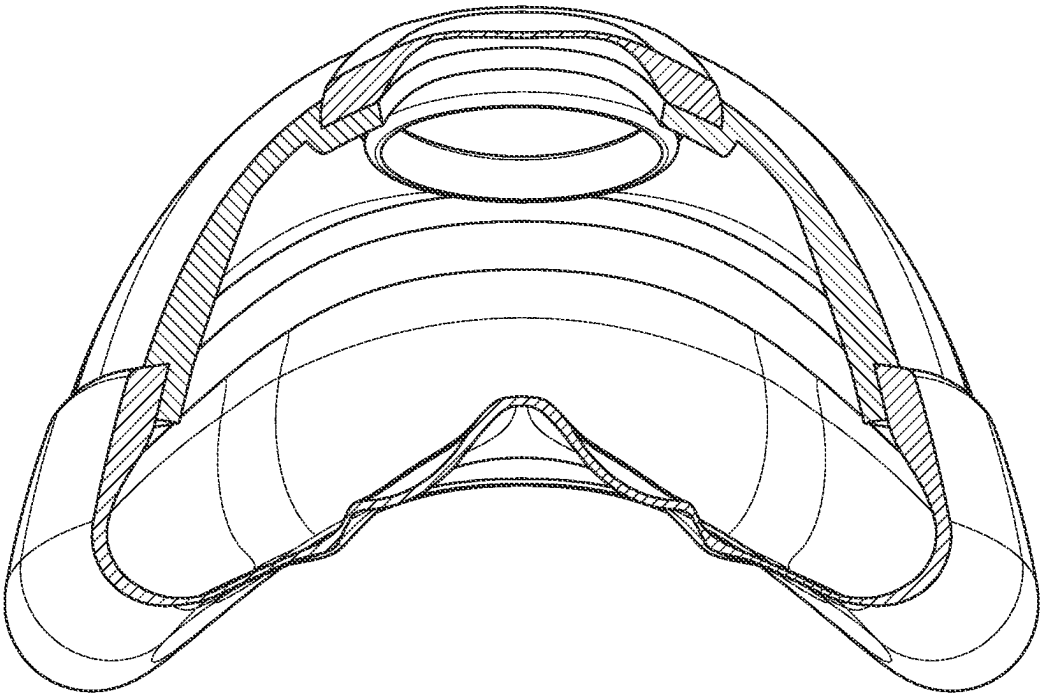

FIG. 117

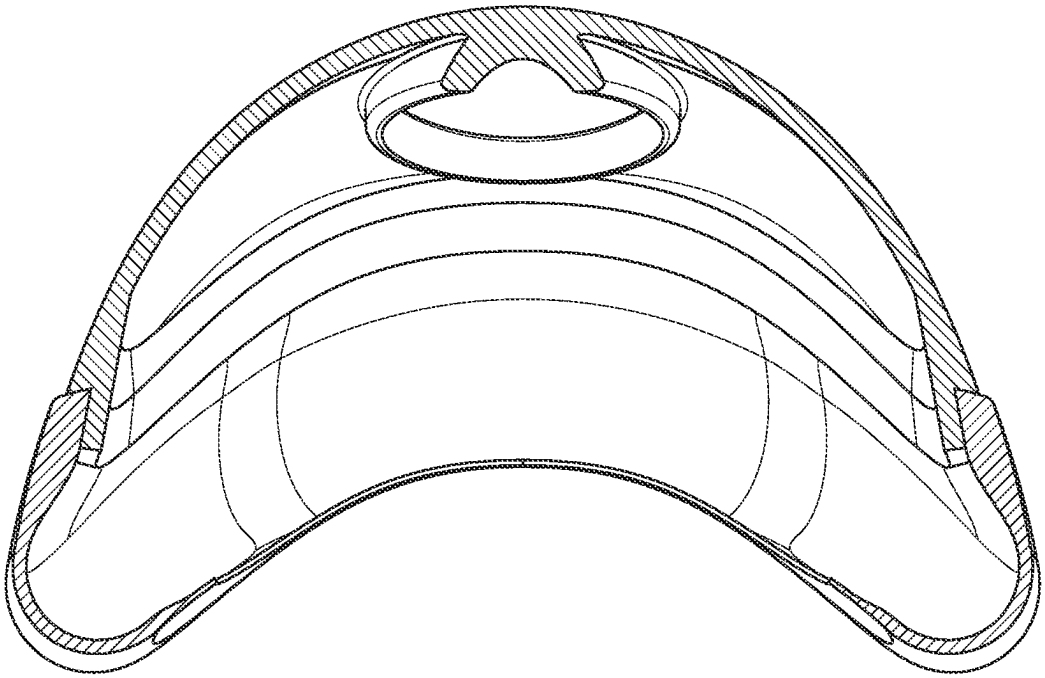

FIG. 118

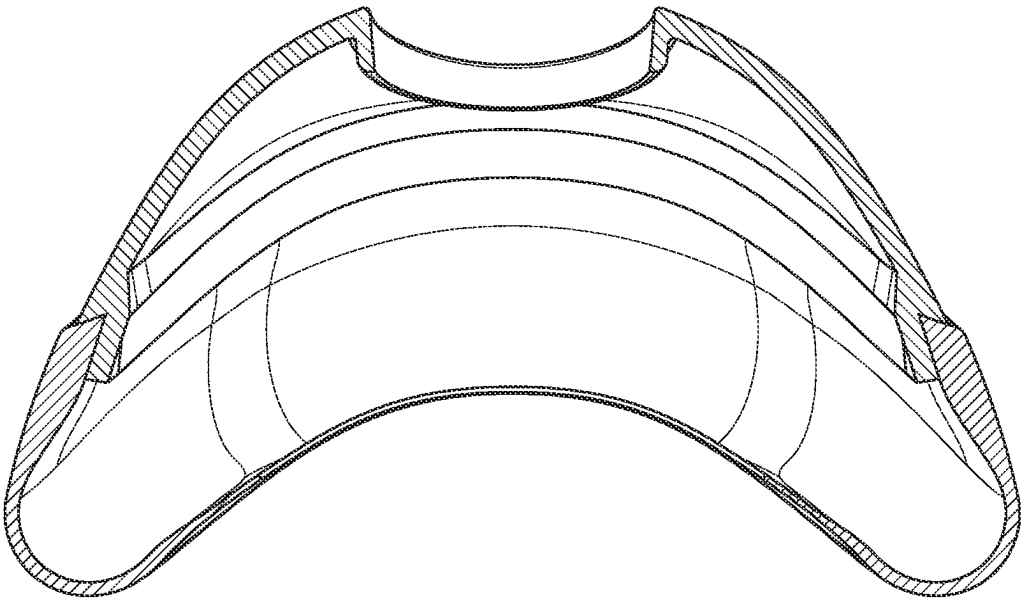

FIG. 119

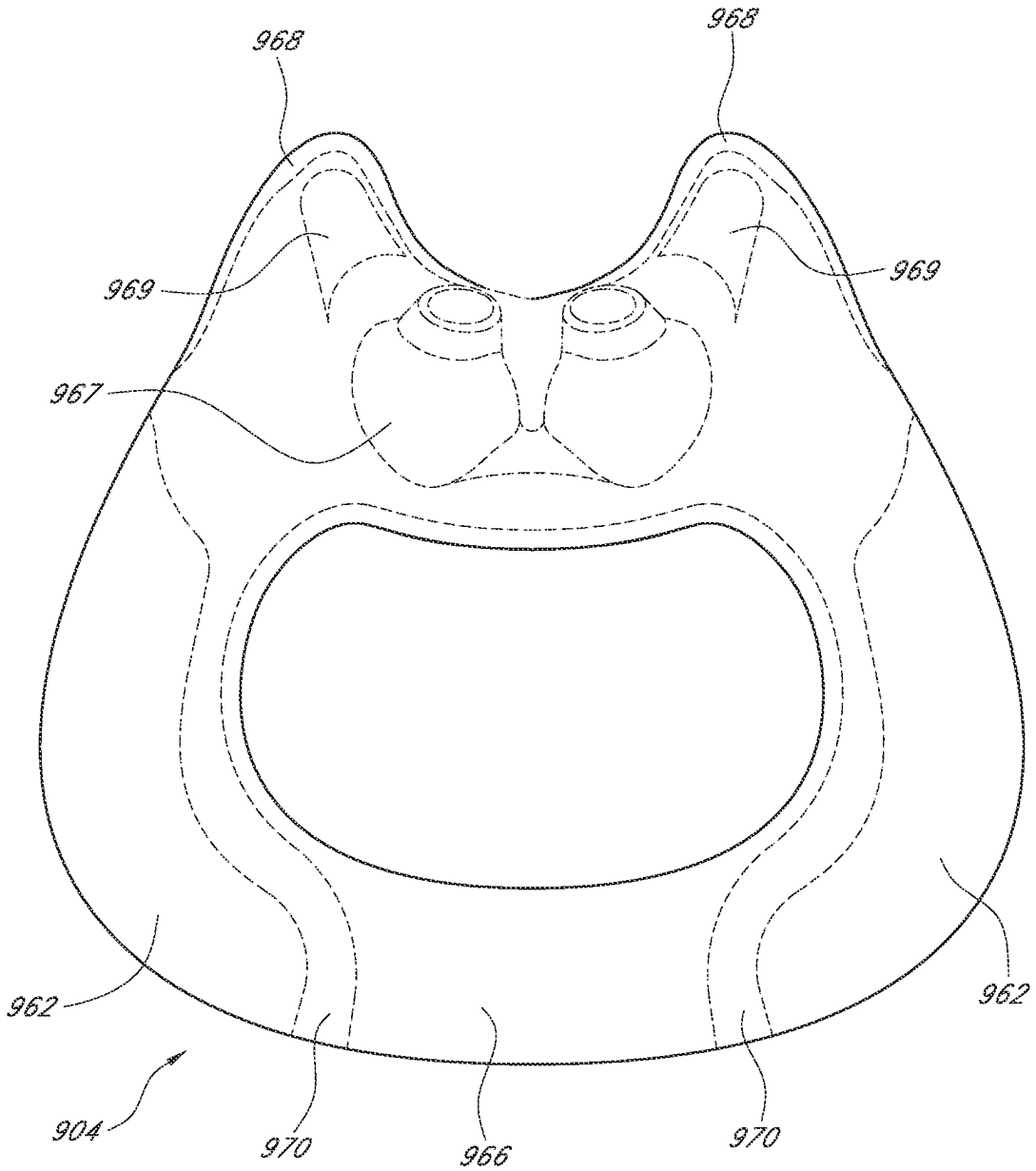


FIG. 120

# INTERFACE COMPRISING A NASAL SEALING PORTION

## CROSS-REFERENCE TO RELATED APPLICATIONS

The present application is a continuation of U.S. patent application Ser. No. 16/789,308, filed Feb. 12, 2020, which is a continuation of U.S. patent Ser. No. 14/354,550, filed Apr. 25, 2014, which is a national phase under 35 U.S.C. § 371 of PCT/NZ2012/000199, filed Oct. 31, 2012, which claims the priority benefit of U.S. Provisional Patent Application No. 61/553,872, filed on Oct. 31, 2011 and U.S. Provisional Patent Application No. 61/715,214, filed on Oct. 17, 2012, each of which is hereby incorporated by reference in its entirety. U.S. patent Ser. No. 14/354,550 also is a continuation-in-part of U.S. application Ser. No. 14/111,739, filed on Oct. 14, 2013, which is a national phase under 35 U.S.C. § 371 of PCT/IB2012/000858, filed on Apr. 13, 2012, which claims the priority benefit of U.S. Provisional Patent Application No. 61/476,188, filed on Apr. 15, 2011, U.S. Provisional Patent Application No. 61/504,295, filed on Jul. 4, 2011 and U.S. Provisional Patent Application No. 61/553,067, filed on Oct. 28, 2011, each of which is hereby incorporated by reference in its entirety.

## BACKGROUND OF THE INVENTION

### Field of the Invention

The present invention generally relates to face masks that cover at least one of a nose and a mouth of a user to supply respiratory gas under positive pressure. More particularly, certain aspects of the present invention relate to such masks that have an improved nasal seal portion.

### Description of the Related Art

Face masks can be used to provide respiratory gases to a user under positive pressure. In configurations in which both a mouth and a nose of a user are covered, the full face mask typically will overlie a bridge of the nose. Generally, a single seal will circumscribe the nose and the mouth of the user. Such a seal passes over a bridge of the user's nose.

Such full face masks commonly are secured to a head of the user with headgear. In order to sufficiently reduce leakage, the headgear typically is tightened, which results in an elevated pressure being exerted on a bridge of a user's nose. In other words, as the headgear is tightened, the silicone seal typically applies a progressively increasing load on the bridge of the nose. The pressure can be a source of discomfort and, in some circumstances, can lead to pressure sores over time.

## SUMMARY OF THE INVENTION

It is an object of the present disclosure to provide one or more constructions and/or methods that will at least go some way towards improving on the above or that will at least provide the public or the medical profession with a useful choice.

Accordingly, an interface is provided for use in providing positive pressure respiratory therapy. The interface comprises a mask assembly. The mask assembly comprises a mask seal and a mask base that is removably connected to the mask seal. The mask seal comprises a mask seal clip that is more rigid than at least a portion of the mask seal. The



mask seal clip is generally cup-shaped in configuration with an open proximal end and a generally closed distal end. A generally pentagonal lip extends around the proximal end. The mask seal clip comprises an arcuate upper portion with an outer surface. A mask seal clip arc length is defined along the outer surface adjacent an upper extremity of the upper portion between a pair of hinge points. A hinge axis extends laterally across the mask assembly between the hinge points and at least a portion of the upper portion of the mask seal clip is positioned vertically higher than the hinge axis. The mask seal clip upper portion comprises a support surface. A generally central passage extends through the mask clip into a chamber defined by the mask seal. The mask seal comprises a flexible upper portion that is configured to be positioned over a nasal region of a user. The mask seal upper portion is positioned vertically higher than the hinge axis. The mask seal upper portion comprises a region of reduced stiffness located between two regions of increased stiffness. The region of reduced stiffness is capable of rolling to allow pivoting of the mask seal upper portion relative to the mask seal clip. One of the two regions of increased stiffness is positioned adjacent to a small radius bend and the other of the two regions of increased stiffness is position adjacent to a reinforcing component. The small radius bend and the reinforcing component define boundaries between which the upper portion of the mask exhibits rolling during pivoting of the upper portion about the pivot axis. The mask seal upper portion has a first curve length adjacent to the small radius bend and a second curve length adjacent to the reinforcing band. The first curve length being smaller than the second curve length. The curve length increases as a measured location moves away from the mask seal clip. The mask base overlies at least a portion of the mask seal clip. The mask base comprises a first pocket and a second pocket. The first and second pockets are positioned symmetrically relative to a center plane that substantially bisects the mask base. Each of the first pocket and the second pocket comprises a vertical dimension that is larger than a transverse dimension. The mask base also comprises a wall that defines a central opening. The wall extends into the generally central passage of the mask seal clip. A connection port assembly comprises an elbow terminating in a ball shaped member. The ball shaped member is sized and configured to be held by the wall that defines the central opening. The connection port assembly also comprises a removable swivel member. The removable swivel member is secured by a lever. The lever overlies a port. The port is selectively coverable with a flap. The flap also is capable of closing a central passage within the elbow. The port opening is in a general direction of the mask when the elbow is connected to the mask. A headgear assembly comprises a pair of upper straps and a pair of lower straps. One of the pair of upper straps and one of the pair of lower straps is connected to a first clip. Another of the pair of upper straps and another of the pair of lower straps is connected to a second clip. The first clip and the second clip are securable within the pockets of the mask base such that the clips are brought into engagement within the pockets by moving in a direction substantially normal to a strap tensile force direction.

In some configurations, the mask seal is a full face mask.

In some configurations, the mask seal clip is integrated into the mask seal such that the mask seal clip is non-separable from the mask seal.

In some configurations, the mask base is removably connected to the mask seal.

In some configurations, an outer surface of the upper portion rolls onto the support surface of the mask seal clip

and the support surface defines an outer surface of the upper portion of the mask seal clip.

In some configurations, the region of reduced stiffness comprises a region of reduced thickness compared to the regions of increased stiffness.

In some configurations, the upper portion of the mask seal comprises an apex defined by a first wall and a second wall and the reinforcing component extends along at least a portion of the first wall and along at least a portion of the second wall. Preferably, the reinforcing component extends over the apex of the upper portion of the mask seal.

In some configurations, the reinforcing component ends at both ends in a location generally vertically higher than the hinge points.

A mask assembly can comprise a mask seal. The mask seal comprises an upper portion and a lower portion. The upper portion is pivotable relative to the lower portion. The upper portion comprises a region of reduced stiffness that is positioned between a first boundary and a second boundary. The first boundary is defined by a stiffness greater than that in the region of reduced stiffness. The second boundary is defined by a stiffness greater than that in the region of reduced stiffness. When the first boundary is moved toward the second boundary, the region of reduced stiffness buckles in a single direction to define a roll of material that changes in size as the first boundary continues to move toward the second boundary.

In some configurations, the region of reduced stiffness facilitates movement of the upper portion of the seal member relative to the lower portion of the seal member. Preferably, the upper portion comprises a nasal bridge portion of the mask and movement of the first boundary toward the second boundary facilitates movement of the nasal bridge portion of the mask relative to the lower portion of the mask.

In some configurations, the second boundary is positioned between the upper portion and the lower portion. Preferably, the mask further comprises a mask seal clip that has an increased rigidity relative to the mask seal and the second boundary is positioned along an end of the mask seal clip. More preferably, the roll of material overlies at least a portion of the mask seal clip.

In some configurations, the first boundary is defined along a reinforcing component. Preferably, the reinforcing component comprises a plastic band.

In some configurations, the region of reduced stiffness is defined with a reduced thickness relative to the first boundary.

In some configurations, the second boundary is defined by a corner having a small radius.

In some configurations, the roll extends over at least a portion of the mask seal.

In some configurations, the roll overlies at least a portion of the mask seal clip when the first boundary is moved fully toward the second boundary.

A mask assembly can comprise a mask seal. The mask seal comprises a nasal region and an oral region. The nasal region and the oral region are integrally formed. The nasal region is movable relative to the oral region such that forces exerted by the nasal region in multiple positions remain substantially constant while forces exerted by the oral region increase.

A mask assembly comprises a mask seal connected to a headgear assembly. The mask seal is configured to encircle a nasal bridge region and an oral region of a user. The mask seal comprises nonpleated means for applying a substantially constant force to the nasal bridge region while applying increasing forces to an oral region when the headgear assembly is tightened.

A mask assembly comprises a seal. The seal comprises a flange that engages a face of a user. The seal is removably connected to a mask base. The mask base comprises a first opening and a second opening. The first opening and the second opening receive a first clip and a second clip from an associated headgear assembly. The mask base further comprises a passageway positioned generally between the first opening and the second opening. The passageway is adapted to receive a breathing tube connector.

In some configurations, the mask assembly further comprises a mask seal clip that is connected to the mask seal and that is removably connected to the mask base. Preferably, the mask base overlies a substantial portion of the mask seal clip. More preferably, the mask base comprises a peripheral edge and at least one recess is defined along the peripheral edge of the mask base at a location that overlies the mask seal clip.

A mask assembly comprises a mask seal. The mask seal comprises a proximal flange adapted to contact a face of a user. The mask seal comprises a distal facing surface. A mask base comprises a peripheral edge and a cover surface extends from the peripheral edge. The mask base cover surface overlies at least a portion of the distal facing surface of the mask seal such that the mask base cover surface is spaced apart in a distal direction from the mask seal distal facing surface whereby the mask base cover surface and the mask seal distal facing surface provide an insulating effect to the mask assembly that reduces humidity rainout.

An interface for providing positive pressure air flow to a user can comprise a mask base and a mask seal removably connected to the mask base. The mask seal comprises a first sealing surface that is adapted to underlie a nose of a user and a second sealing surface that is adapted to extend over at least a fibro-fatty tissue of one or more alar of the nose of the user without wrapping over a tip of the nose of the user.

In some configurations, the first sealing surface is defined by an upper surface. A chamber can be defined within the seal member and an opening through the upper surface can be generally flush with the upper surface.

In some configurations, the second sealing surface comprises a first paddle and a second paddle. The first paddle and the second paddle extend vertically higher than the upper surface and a valley is defined by the first paddle, the upper surface and the second paddle. The valley is adapted such that a tip of the nose of the user is not covered by the mask seal.

In some configurations, the first paddle and the second paddle each comprises an inner pocket that is in fluid communication with the chamber defined within the seal member. Lateral portions of the inner pockets extend vertically higher than the upper surface of the mask seal.

In some configurations, the mask seal further comprises a lip that depends downward from the upper surface and that is adapted to define at least a portion of an oral opening. The oral opening is separated from the opening in the upper surface.

In some configurations, the mask seal further comprises a lip that generally encircles an oral portion of an integrated oral-nasal opening defined in the mask seal.

In some configurations, the interface further includes a clip that connects a first side of the integrated oral-nasal opening to a second side of the integrated oral-nasal opening.

In some configurations, the mask seal comprises a forward facing surface and a rearward facing surface that are connected by a sidewall.

In some configurations, a portion of the rearward facing surface in the first and second paddles has a thickness that is less than a portion of the forward facing surface in the first and second paddles.

In some configurations, a portion of the rearward facing surface in a central chin region of the mask has a thickness that is less than a thickness of a portion of the rearward facing surface laterally outward of the central chin region.

An interface for providing positive pressure air flow to a user comprises a mask base and a mask seal removably connected to the mask base. The mask seal comprises a first paddle and a second paddle that are connected to a first sealing surface. The first paddle and the second paddle define a secondary sealing structure. The first paddle and the second paddle can be movable from a first position in which a first gap is defined between upper portions of the first and second paddles to a second position in which a second gap is defined between the upper portions of the first and second paddles. The first gap is larger than the second gap.

In some configurations, downward movement of the upper surface from a first position to a second position causes movement of the first and second paddles from the first position to the second position.

In some configurations, the mask seal comprises a forward facing surface and a rearward facing surface that are connected by a sidewall.

In some configurations, a portion of the rearward facing surface in the first and second paddles has a thickness that is less than a portion of the forward facing surface in the first and second paddles.

In some configurations, a portion of the rearward facing surface in a central chin region of the mask has a thickness that is less than a thickness of a portion of the rearward facing surface laterally outward of the central chin region.

In some configurations, an interface is provided for use in providing positive pressure respiratory therapy. The interface comprises a mask assembly comprising a mask seal and a mask base. The mask assembly is configured to be fully positioned lower than a bridge of a nose of a face of a user and the mask assembly is configured to provide an exposed tip of the nose of the user. The mask base comprises a central portion and a pair of wings sweeping rearwardly of the central portion. The wings have a greater vertical expanse than the central portion. An opening for a connector is formed on the mask base in the central portion. The mask seal is connected to the mask base. The mask seal comprises a thickened region adjacent to the mask base. The mask seal comprises at least one oral opening on a lower portion and at least one nasal opening on an upper portion. The at least one oral opening is positioned opposite of the opening for the connector and the at least one nasal opening is positioned between the opening for the connector and the oral opening in a front to back direction. The mask seal comprises a first paddle and a second paddle. An upper surface is positioned between the first paddle and the second paddle such that an upwardly-open valley is defined by the first paddle, the upper support surface and the second paddle. At least a portion of the at least one nasal opening is positioned on the upper surface within the valley. The first paddle comprises a first pocket and the second paddle comprises a second pocket. The first and second pockets are in fluid communication with a chamber defined within the mask assembly.

In some configurations, the mask seal is adapted to seal under the nose of the user, along a portion of a face of the user adjacent to the nose and around a mouth of the user.

In some configurations, the mask assembly is configured to not cover any forward facing portion of the nose of the user.

In some configurations, the upper surface is hammocked between inner portions of the first and second paddles.

In some configurations, downward pressure on the upper surface causes the first and second paddles to deflect toward each other.

In some configurations, the seal member comprises a rear surface that is adapted to contact the face of the user and the rear surface comprises a first protrusion and a second protrusion.

In some configurations, at least a portion of the first protrusion and at least a portion of the second protrusion are positioned vertically between the upper surface and an uppermost portion of the at least one oral opening.

In some configurations, the portion of the first protrusion comprises a first peak and wherein the portion of the second protrusion comprises a second peak.

In some configurations, the first peak and the second peak are positioned vertically between a portion of the at least one nasal opening and the at least one oral opening.

In some configurations, the first peak and the second peak are positioned vertically closer to the at least one nasal opening than to the at least one oral opening.

In some configurations, the mask seal is adapted to anchor on two locations of the face.

In some configurations, the mask seal is configured to anchor below the lower lip and below the nose.

In some configurations, the mask seal is configured to anchor below the lower lip but above the chin and below the nose.

In some configurations, the two locations are lower than the bottom of the nose but the mask seal extends upward beyond the bottom of the nose.

In some configurations, the mask seal is adapted to seal against the face in locations vertically above the uppermost anchoring location.

In some configurations, the upper surface slopes downward and rearward in the region surrounding the at least one nasal opening.

In some configurations, the at least one nasal opening comprises a nasal pad insert.

In some configurations, the nasal pad insert is formed of a material different from the mask seal.

In some configurations, the nasal pad insert is secured to the mask seal at a recessed pad support region.

In some configurations, the nasal pad insert and the mask seal comprise correlated keying features.

In some configurations, the nasal pad insert and the mask seal have a sealed interface generally surrounding the at least one nasal opening.

In some configurations, the nasal pad insert comprises a recessed central portion.

In some configurations, the recessed central portion is positioned generally forward of the at least one nasal opening.

In some configurations, outer peripheral portions have an increased rigidity relative to inwardly facing portions of the first paddle and the second paddle.

In some configurations, the outer peripheral portions have an increased thickness relative to the inwardly facing portions of the first paddle and the second paddle.

In some configurations, the first paddle comprises a first ridge positioned between an outwardly facing surface and an inwardly facing surface and the second paddle comprises a second ridge positioned between an outwardly facing surface and an inwardly facing surface, the first and second ridge having an increased rigidity relative to the inwardly facing surface.

In some configurations, the first paddle comprises a first ridge positioned between an outwardly facing surface and an inwardly facing surface and the second paddle comprises a second ridge positioned between an outwardly facing surface and an inwardly facing surface, the first and second ridge having an increased thickness relative to the inwardly facing surface.

In some configurations, the interface comprises a headgear assembly adapted to provide a slightly upward force application between the mask assembly and the face of the user.

In some configurations, the headgear assembly is configured to adjust an angle of the mask assembly.

In some configurations, the headgear does not include a T-piece.

In some configurations, the mask assembly and the headgear assembly are configured such that no portion of the mask assembly or the headgear assembly will contact the face of the user at any location vertically above the eyes at a location horizontally between the outsides of the eyes.

In some configurations, the mask assembly comprises at least one nasal prong.

In some configurations, the at least one nasal prong is inclined toward a medial vertical plane of the mask assembly.

## BRIEF DESCRIPTION OF THE DRAWINGS

These and other features, aspects and advantages of embodiments of the present invention will be described with reference to the following drawings.

FIG. **1** is front view of a user wearing an interface that is arranged and configured in accordance with certain features, aspects and advantages of the present invention.

FIG. **2** is a side view of a user wearing the interface of FIG. **1**.

FIG. **3** is a perspective view of a mask seal and mask seal clip of the interface of FIG. **1**.

FIG. **4** is a side view of the mask seal and mask seal clip of FIG. **3**.

FIG. **5** is a rear perspective view of the mask seal clip of FIG. **3**.

FIG. **6** is a rear elevation view of the mask seal clip of FIG. **3**.

FIG. **7** is a side elevation view of the mask seal clip of FIG. **3**.

FIG. **8** is a top plan view of the mask seal clip of FIG. **3**.

FIG. **9** is a front elevation view of the mask seal and mask seal clip of FIG. **3**.

FIG. **10** is a rear elevation view of the mask seal and mask seal clip of FIG. **3**.

FIG. **11** is a side elevation view of the mask seal and mask seal clip of FIG. **3**.

FIGS. **12**A-**12**D are enlarged section views of a portion of the mask seal and mask seal clip of FIG. **3**.

FIG. **13** is an exploded front perspective view of the mask seal, mask seal clip and mask base of the interface of FIG. **1**.

FIG. **14** is a section view of the mask seal, mask seal clip and mask base of FIG. **13**.

FIG. **15** is a side elevation view of the mask seal, mask seal clip and mask base of FIG. **13**.

FIG. **16** is a top plan view of the mask seal, mask seal clip and mask base of FIG. **13**.

FIG. **17** is a perspective view of the connection port assembly of FIG. **1**.

FIG. **18** is a side elevation view of the connection port assembly of FIG. **17**.

FIG. **19** is a rear elevation view of the connection port assembly of FIG. **17**.

FIG. **20** is a sectioned side elevation view of the connection port assembly of FIG. **17**.

FIG. **21** is a sectioned perspective view of the connection port assembly of FIG. **17**.

FIG. **22** is a perspective view of the clip assembly of FIG. **1**.

FIG. **23** is a sectioned view of the clip assembly of FIG. **22**.

FIG. **24** is a sectioned view similar to the sectioned view of FIG. **12** showing a mask seal configured to roll under a portion of a mask seal clip **112**.

FIG. **25** is a sectioned view similar to the sectioned view of FIG. **14**, wherein the mask seal clip has a reduced dimension.

FIG. **26** is a sectioned view similar to the sectioned view of FIG. **14**, wherein the mask seal clip is omitted.

FIG. **27** is a further sectioned view similar to the sectioned view of FIG. **14**, wherein the mask seal clip is omitted.

FIG. **28** is a graphical depiction illustrating a relationship between load (or force) on a user's body as a function of mask extension.

FIG. **29** is a perspective view a backbone compatible with the headgear assembly of FIGS. **1** and **2**.

FIG. **30** is an enlarged view of the end region of a lower arm of FIG. **29**.

FIG. **31** is an enlarged cross-sectional view of the end region of FIG. **30**.

FIG. **32** is a perspective view of a mask assembly comprising a mask, clips, and straps.

FIG. **33** is a side view of one of the two clips of FIG. **32**.

FIG. **34** is an exploded view of the clip of FIG. **33**.

FIG. **35** is a top view of the inner catch of the clip of FIG. **33**.

FIG. **36** is a front view of a mask base having two mounting posts, and one inner catch of a clip mounted to the left mounting post.

FIG. **37** is a front view of another configuration of a mask base having two mounting posts, and another configuration of a clip mounted to the mask base's left mounting post.

FIGS. **38**-**47** are additional configurations of clips and associated masks and mounting posts.

FIG. **48** is a side view of another configuration of a swivel assembly.

FIG. **49** is an exploded view of the swivel assembly of FIG. **48**.

FIG. **50** is a cross-sectional view taken along line **50**-**50** of FIG. **48**.

FIG. **51** is a cross-sectional view taken along line **51**-**51** of FIG. **48**.

FIG. **52** is a side view of the backbone of FIG. **29** attached to a user's head.

FIG. **53** is a rear perspective view of the backbone of FIG. **29** attached to a user's head.

FIG. **54** is a front elevation view of a mask configuration positioned on a face of a user.

FIG. **55** is a sectioned view of the mask configuration taken along the line **55**-**55** in FIG. **54**.

FIG. **56** is a perspective view of the mask configuration of FIG. **54**.

FIG. **57** is a rear perspective view of the mask configuration of FIG. **54**.

FIG. **58** is a rear view of the mask configuration of FIG. **54**.

FIG. **59** is a rear view of a mask configuration having a different mask seal relative to the mask configuration of FIG. **54**.

FIG. **60** is a rear perspective view of another mask configuration having a different mask seal relative to the mask configurations of FIGS. **54** and **59**.

FIG. **61** is a side elevation view of the mask configuration of FIG. **54**.

FIG. **62** is a section taken along the line **62-62** in FIG. **61**.

FIG. **63** is a rear view of a mask seal of the mask configuration of FIG. **54**.

FIG. **64** is a side view of the mask seal of the mask configuration of FIG. **54**.

FIG. **65** is a front view of the mask seal of the mask configuration of FIG. **54**.

FIG. **66** is a front view of another mask configuration.

FIG. **67** is a perspective view of the mask configuration of FIG. **66** with a headgear assembly attached.

FIG. **68** is a side view of the mask configuration and headgear assembly of FIG. **67**.

FIG. **69** is a rear perspective view of the mask configuration and headgear assembly of FIG. **69**.

FIG. **70** is a perspective view of a face of a user.

FIG. **71** is front view of mask configuration shown in position on a user.

FIG. **72** is a perspective view of the mask configuration shown in position on a user.

FIG. **73** is a front view of the mask configuration of FIG. **71**, shown without a connector.

FIG. **74** is s side view of the mask configuration of FIG. **71**, shown without a connector.

FIG. **75** is a side sectioned view of the mask configuration of FIG. **71**.

FIG. **76** is a rear view of the mask configuration of FIG. **71**.

FIG. **77** is a partially exploded front perspective view of the mask configuration of FIG. **71**.

FIG. **78** is a partially exploded rear perspective view of the mask configuration of FIG. **71**.

FIG. **79** is a sectioned view of the mask configuration of FIG. **71**.

FIG. **80** is a front view of the mask seal of the mask configuration of FIG. **71** showing different regions of thickness.

FIG. **81** is a rear view of the mask seal of the mask configuration of FIG. **71** showing different regions of thickness.

FIG. **82** is a side view of the mask configuration of FIG. **71** showing different regions of thickness.

FIGS. **83-88** are cross sections taken through the mask configuration of FIG. **71** at the elevations shown on the mask seal in FIG. **81**.

FIGS. **89-109** are illustrations of different headgear assemblies that can be used with the mask assembly of FIG. **71**.

FIG. **110** is a front perspective view of another mask configuration.

FIG. **111** is a rear perspective view of the mask configuration of FIG. **110**.

FIG. **112** is a sectioned side view of the mask configuration of FIG. **110**.

FIG. **113** is a rear perspective view of the mask configuration of FIG. **110**.

FIGS. **114-119** are sectioned views taken along the lines indicated in FIG. **113**.

FIG. **120** is a rear view of the mask configuration of FIG. **110** with different regions of thickness indicated.

## DETAILED DESCRIPTION OF THE PREFERRED EMBODIMENT

With reference initially to FIGS. **1** and **2**, an interface **100** is shown in position on a user U. The interface **100** comprises an interface that can be used in the field of respiratory therapy. The interface **100** has particular utility with forms of positive pressure respiratory therapy. For example, the interface **100** can be used for administering continuous positive airway pressure ("CPAP") treatments. In addition, the interface **100** can be used with variable positive airway pressure ("VPAP") treatments and bi-level positive airway pressure ("BiPAP") treatments. The interface can be used with any suitable CPAP system.

The interface **100** can comprise any suitable mask configuration. For example, certain features, aspects and advantages of the present invention can find utility with nasal masks, full face masks, oronasal masks or any other positive pressure mask. The mask illustrated in FIG. **1** is a full face mask. The illustrated interface **100** generally comprises a mask assembly **102**, a connection port assembly **104** and a headgear assembly **106**.

With reference to FIG. **13**, the mask assembly **102** generally comprises a mask seal **110**, which can include a mask seal clip **112**, and a mask base **114**. As will be described, the mask seal clip **112** preferably connects the mask seal **110** to the mask base **114**. While the illustrated mask seal **110** and mask seal clip **112** are formed separately and secured together, in some configurations, the mask seal **110** and the mask seal clip **112** can be integrated into a single component. In some configurations, the mask seal **110** is overmolded onto the mask seal clip **112**.

With reference to FIG. **3**, the mask seal clip **112** is relatively more rigid, stiffer or more inflexible than the mask seal **110**. In some configurations, the mask seal clip **112** is formed of a polycarbonate material. In some configurations, at least a portion of the mask seal clip **112** is formed of a polycarbonate or other rigid or semi-rigid material. In some configurations, the mask seal clip **112** is formed at least partially of silicone or another suitable material. In such configurations, at least the silicone portion of the mask seal clip **112** may be formed to be relatively thicker compared to the more flexible portions of the mask seal **110**. The mask seal clip **112** provides structural support to the mask seal **110** in the illustrated configuration.

As shown in FIG. **14**, the mask seal clip **112** can define a large portion of the mask assembly **102**. As shown, the illustrated mask base **114** overlies a significant portion of the mask seal clip **112**. With reference to FIGS. **25-27**, the mask assembly **102** can be configured with differing constructions, as desired. For example, with reference to FIG. **25**, the mask seal clip **112** extends a limited amount from the interface with the mask seal **110**. In the configuration illustrated in FIG. **25**, the mask base **114** overlies at least a portion of the mask seal clip **112** while the mask seal clip **112** defines a very limited rim-shaped configuration about a portion of the mask seal **110**.

With reference to FIG. **26**, the mask seal clip is omitted in its entirety and the mask seal **110** is overmolded directly onto the mask base **114**. In some configurations, however,

the mask seal **110** and the mask base **114** can be configured such that the two components can be separated. For example, as shown in FIG. **27**, the mask seal **110** can comprise a peripheral flange **111** while the mask base **114** can comprise a peripheral channel **115** that receives the peripheral flange **111** such that the mask seal **110** can be removably secured to the mask base **114**. In some configurations, other suitable manners can be used to secure the mask seal **110** to the mask base **114**. Moreover, the illustrated configuration of FIG. **27** shows an embodiment without a mask seal clip **112**; the mask seal clip **112** and the mask base **114** have been combined into the mask base **114**.

With reference to FIG. **5**, the illustrated mask seal clip **112** comprises a substantially cup-shaped configuration. A proximal end **120** defines an open end of the illustrated mask seal clip **112** while a distal end **122** defines a generally closed end of the illustrated mask seal clip **112**. In the illustrated configuration, the proximal end **120** is generally circumscribed by a lip **124**. The lip **124** is generally pentagonal when viewed from the back (see FIG. **5**). As shown in FIG. **7**, a wall **126** generally sweeps forward in an arcuate manner. The arcuate shape to the wall **126** provides a three dimensional configuration to the illustrated mask seal clip **112**.

With continued reference to FIG. **7**, an upper portion **130** of the illustrated mask seal clip **112** is generally arcuate in configuration. In addition, the generally arcuate configuration of the illustrated mask seal clip **112** is configured to accommodate larger noses while not extending upward over the nose to as great an extent as the mask seal **110**, as shown in FIGS. **1** and **2**.

With initial reference to FIG. **3**, the upper portion **130** of the illustrated mask seal clip **112** preferably comprises two arcuate dimensions. First, an arc length **132** can be defined along an upper extremity of the upper portion **130** of the illustrated mask seal clip **112**. The arc length **132** can be defined between inflection points **134** found along a perimeter of the illustrated mask seal clip **112**.

As shown in FIG. **7**, the upper portion **130** of the illustrated mask seal clip **112** also comprises a side profile radius **136**. As shown, the upper portion **130** can have a slightly increasing side profile radius **136** such that the radius increases slightly as a distance from the upper end increases. In some configurations, the upper portion **130** can comprise a substantially constant side profile radius **136** or a decreasing side profile radius. Advantageously, the slightly increasing side profile radius **136** provides an increased volume in the mask **100** proximate the user's nose.

With reference to FIG. **3** and FIG. **6**, the mask seal clip **112** preferably comprises at least two recesses **140**. In the illustrated configuration, the mask seal clip **112** comprises two recesses **140** that are disposed on two lateral sides of a generally vertical center plane CP (see FIG. **6**). The generally vertical center plane CP preferably corresponds to a mid-sagittal plane of the user and splits the illustrated mask seal clip **112** into substantially mirror-image halves. The two recesses **140** define two generally enclosed pockets in the illustrated mask seal clip **112**. The illustrated recesses **140** comprise further recesses **142** that are used to provide adequate clearance for reasons that will be discussed below while limiting an amount of encroachment into a nasal region of a chamber defined by the mask assembly **102**.

The illustrated mask seal also comprises a generally central passage **144** that is defined by a wall **146**. In the illustrated configuration, the wall **146** generally encloses the passage **144**. Preferably, the wall **146** is generally cylindrical in configuration and extends through the wall **126**. Other configurations are possible.

With reference to FIG. **14**, the mask seal **110** comprises a flexible portion that extends away from the proximal end **120** of the mask seal clip **112**. In the illustrated configuration, the mask seal **110** is overmolded onto the mask seal clip **112** such that the mask seal **110** and the mask seal clip **112** combine to form an integrated and preferably non-separable assembly. In some configurations, attempts to separate the mask seal **110** and the mask seal clip **112** result in the destruction of the interface between the components and/or destruction of one or both of the mask seal **110** and the mask seal clip **112**. As described above, other assemblies also can be used to connect the mask seal clip **112** to the mask seal **110**. The illustrated configuration, however, advantageously results in a construction that is easy to clean and maintain.

With reference to FIG. **4**, the mask seal clip **112** preferably is arranged such that it is generally flush with an inner rim **150** of the mask seal **110**. In the illustrated configuration, the mask seal **110** comprises a relatively small radius portion **152** that joins an upper portion **154**. The upper portion **154** of the mask seal **110** is configured to extend over a nasal region of the user. In some configurations, the upper portion **154** is configured to extend over a nasal bridge region of the user U.

The upper portion **154** is connected with a lower portion **156** of the mask seal **110**. The lower portion **156** extends laterally outward from the mask seal clip **112** as shown in FIG. **9**. In addition, the lower portion **156** wraps rearward and inward, as shown in FIGS. **4** and **10** respectively. Together, on a proximal side of the full face mask assembly **102**, the upper portion **154** and the lower portion **156** combine to define a face contacting flange **160**, which is shown in FIG. **10**. The face contacting flange **160** is configured to underlie a lower lip of the user, extend along the outside of the mouth, extend upward along the cheekbones and extend across the bridge of the nose of the user. Thus, the illustrated face contacting flange **160** defines a generally tear-drop shaped opening **162**. When the mask assembly **102** is seated on the face of the user, the flange **160** will lie flat over the bridge of the nose, the cheekbones, the outside of the mouth and below the lower lip of the user. With a supply of positive pressure air, the mask seal **110** will balloon and seal against the face of the user to reduce or eliminate the likelihood of leakage between the flange **160** and the face of the user.

As shown by the dashed lines in FIG. **11**, the upper portion **154** of the mask seal **110** is designed to roll over onto an outer surface **170** of the mask assembly **102**. In the illustrated configuration, the outer surface of the mask seal **110** smoothly rolls into abutment with the outer surface of the mask seal clip **112** such that the outer surface of the mask seal clip **112** forms a support surface. In some configurations, the outer surface **170** onto which the upper portion **154** rolls comprises at least a portion of the outer surface of the mask seal clip **112**. In some configurations, the outer surface **170** onto which the upper portion **154** rolls comprises almost exclusively the outer surface of the mask seal clip **112**. In some configurations, the upper portion **154** rolls onto another portion of the mask seal **110**. In some configurations, the upper portion **154** rolls onto the mask seal base **114**.

With reference to FIG. **12**, to assist with the rolling of the upper portion **154**, the upper portion **154** can have a varying thickness or a varying stiffness. In the configuration shown in FIG. **12**, the upper portion **154** comprises a thick/thin/thick configuration. In other words, to induce the upper portion **154** to roll in a region between the face contacting flange **160** and the small radius **152** proximate the mask seal

clip **112**, a reduced stiffness region **172** can be incorporated. In the illustrated configuration, the reduced stiffness region **172** is incorporated into the mask seal **110**. The reduced stiffness region **172** reduces or eliminates the likelihood of the mask seal **110** buckling or adversely deforming in a region other than the desired region for rolling.

While the illustrated configuration uses a region of reduced thickness, other means for providing the reduced stiffness region **172** also can be used to induce rolling of the seal member **110**. For example, the material of the seal member **110** can be configured to have a reduced stiffness through material selection or material properties. In addition, a composite of materials can be used to provide a region of reduced stiffness or rigidity. Moreover, a combination of any suitable techniques can be used. Nevertheless, the illustrated region **172**, which is configured with reduced thickness, provides a simple manner of achieving the region of reduced stiffness **172**. In addition, by adjusting the stiffness of the reduced stiffness region **172**, the force required to induce rolling of the region **172** can be controlled, which controls the force applied against the nose of the user. For example, by varying the stiffness, movement can become increasingly or decreasingly resisted over the range of movement.

When the upper portion **154** comprises the region of reduced stiffness **172**, the upper portion **154** of the mask seal **110** tends to balloon outward under internal pressures, such as those encountered during positive pressure therapy regimens, which ballooning is believed to be caused by the region of reduced stiffness **172** that defines a large area of silicone without significant structure. With reference to FIG. **4** and FIG. **12**, to reduce the prevalence of ballooning in the upper portion **154** and to provide enhanced structure in the upper portion **154**, a reinforcing component or components, such as a band **174**, can be positioned along at least a portion of the upper portion **154**. The band **174** can be a component formed of a material that is more rigid than, or that features increased stiffness relative to, the silicone or other material forming the mask seal **110**. For example, a region of significantly increased thickness relative to the region of reduced stiffness **172**, where the region is formed of the same material forming the mask seal **110**, can be used to increase the stiffness of the reinforcing component or components.

In some configurations, the band **174** can be a separately formed component that is at least partially encased by the material of the mask seal **110**. In the illustrated configuration, the band **174** can be a comolded plastic component or the mask seal **110** can be overmolded onto the band **174**. In some configurations, the band **174** can be defined by a portion of the upper portion **154** that has enhanced stiffness relative to surrounding regions. For example, but without limitation, the band **174** can be defined by a portion of increased thickness, a portion of differing materials or material properties that result in increased stiffness or the like.

With reference to FIG. **9**, the band **174** extends along at least a portion of the upper portion **154** of the mask seal **110**. The upper portion **154** of the mask comprises an apex **180** when viewed from the front. The apex **180** can be defined as a tip, a top and an angular summit of the mask seal **110**, which apex **180** is positioned in proximity to the nose of the user when in use. A first wall **182** and a second wall **184** converge at the apex **180** in the illustrated configuration.

In some configurations, at least a portion of the first wall **182** and at least a portion of the second wall **184** are reinforced by one or more components or structures, such as the band **174**. In the illustrated configuration, the reinforcing component or components, such as the band **174** for example, reinforces at least a portion of the first wall **182** and at least a portion of the second wall **184**. In some configurations, the reinforcing component or components, such as the band **174** for example, reinforces at least a portion of the first wall **182**, at least a portion of the second wall **184** and the apex **180**.

With continued reference to FIG. **9**, the illustrated band **174** has a first end **186** and a second end **188** that is opposite to the first end **186**. In some configurations, the band **174** can be formed separate of the mask seal clip **112** and attached to the mask seal clip **112** by one or more flexible components. In some configurations, the band **174** can be connected by a mechanical hinge structure to the mask seal clip **112**. In the illustrated configuration, the first end **186** and the second end **188** are positioned on the same side of the hinge axis H as the apex **180**. Preferably, the first end **186** and the second end **188** are spaced away from the hinge axis H toward the apex **180**.

As shown in FIG. **12**, the bend **152** and the stiffer region (e.g., region of thicker cross section) adjacent to the region of reduced stiffness **172** help to initiate rolling of the region of reduced stiffness **172**. In other words, a controlled buckling of the region of reduced stiffness **172** occurs with the assistance of the adjacent stiffer portions. In addition, positioning an edge of the relatively more rigid mask seal clip **112** adjacent to the bend **152** further helps to induce rolling in the reduced stiffness region **172**. In some configurations, the region of reduced stiffness **172** is bounded by a first boundary and a second boundary, wherein the first boundary and the second boundary have an increased stiffness relative to the region of reduced stiffness. In the illustrated configuration, for example, the first boundary is defined by or alongside the band **174** while the second boundary is defined by or alongside the bend **152**. In some configurations, the second boundary can be defined by or alongside an edge of the more rigid mask seal clip **112**. In some configurations, the second boundary can be defined along a portion of the mask seal **110** positioned between the mask seal clip **112** and the region of reduced stiffness **172**.

As the upper portion **154** of the mask seal **110** is displaced about the hinge axis H, the roll increases in size. In other words, as the first boundary initially moves toward the second boundary, a roll is formed in the mask seal **110**. As the first boundary continues to move toward the second boundary, the roll continues to increase in size. Thus, in the illustrated configuration of FIG. **11**, the roll defined in the upper portion **154** starts at nothing and progressively increases during displacement of the upper portion **154** as shown in dashed lines. Preferably, the rolling between the first boundary and the second boundary creates a single bend or inflection between the first boundary and the second boundary. The single bend results in legs approaching the bend location that increase in size as the first boundary moves toward the second boundary. In other words, the rolling created by movement of the first boundary toward the second boundary preferably does not result in a fan-folding appearance, such as a pleated configuration.

With reference again to FIG. **3**, the mask seal **110** can have a geometry that helps facilitate continued rolling of the region of reduced stiffness **172** following the initiation of the rolling. Arc lengths can be defined in general from a first intersection of the hinge axis H with the mask seal **110**, up and over the upper portion **154** of the mask seal **110**, and back down to a second intersection of the hinge axis H with the mask seal **110**.

As shown in FIG. **3**, the illustrated mask seal **110** comprises at least a first arc length A (shown in dashed line), a second arc length B (shown in dash-dot chain line) and a third arc length C (shown along a base of the band **174**). The first arc length A preferably is longer than the arc length of the mask seal clip **112** directly adjacent to the first mask arc length A. The second arc length B is positioned between the first arc length A and the third arc length C and the second arc length B preferably is shorter than the third arc length C and longer than the first arc length A. In some embodiments, the arc lengths steadily increase from the bend **152**, or another region close to the outer surface **170**, proximal toward the band **174**. In other words, as an angle α (see FIG. **4**) increases from the first arc length A, the arc length generally increases. In some configurations, the arc lengths can be substantially constant from front to rear (i.e., as the angle α increases); however, by increasing the arc lengths away from the portion that initiates the roll, further movement of the apex **180** in a distal direction results in continued rolling of the mask seal **110** over itself and over the outer surface **170**, as shown in FIG. **11**.

With reference again to FIG. **4**, the upper portion **154** of the illustrated mask seal **110** also comprises a variable radius when viewed from the side profile. As shown, R**1**>R**2**>R**3**. Thus, in the illustrated mask seal **110**, the radius decreases from proximal to distal as the angle increases. In some configurations, the radius need not decrease in this manner; however, the decreasing radius is believed to aid in rolling of the mask seal **110**.

Moreover, a radius r**1** of the mask seal clip **112** from the hinge point H preferably is smaller than the radius R**3** of the mask seal **110**. Given the pliant nature of the mask seal **110**, however, it is possible for the radius r**1** and the radius R**3** to be substantially the same while still providing for the mask seal **110** to roll over the mask seal clip **112**. In the illustrated configuration, however, the difference between the radius r**1** and the radius R**3** results in an offset. The offset provides an ability to slightly increase the side profile radius **136**, as described above, without significantly impacting the ability of the mask seal **110** to roll over the mask seal clip **112**. If the offset were not provided, the ability to increase the side profile radius **136** would be very limited.

As discussed above, the flange **160** encircles the generally tear-drop shaped opening **162**. As is known, hoop stress can be defined as circumferential stress in a cylindrically shaped part as a result of internal pressure. Thus, hoop stress increases as a ring attempts to expand. It is believed that hoop stress resulting from seating a respiratory mask can be a source of some discomfort to the user, especially in the region of the bridge of the nose. The lower portion **156** of the illustrated mask assembly **102** generally is secured in position while the nasal or upper portion **154** moves relative to the nose of the user. Because of the rolling action described above, the illustrated full face mask assembly **102** acts to roll away from the nose, which decreases the incidence of increasing hoop stress, especially around the bridge of nose. Thus, the rolling mask configuration provides a means for maintaining or reducing hoop stress during seating of the mask.

As discussed above and as shown in FIG. **11**, the upper portion **154** of the illustrated mask seal **110** rolls over the outer surface **170** in the illustrated configuration. The rolling over an external mask surface makes use of the positive pressure present within the full face mask assembly because the increased air pressure enhances the ability of the mask seal to roll on itself (i.e., the air pressure decreases a surface tension between the two surfaces of the mask seal that slide relative to each other during rolling) and the slight ballooning effect helps to reduce the likelihood of buckling, creasing or undesired folding of the mask seal **110**. Furthermore, in some configurations, the external roll over can provide a visual cue of the degree or angle of displacement of the upper portion **154** of the mask seal **110** relative to the lower portion **156** of the mask seal **110**.

In order to provide an enhanced indication to the user of the extent to which the upper portion **154** of the mask has rolled, it is possible to employ a visual indicator. For example, in some configurations, a scale can be imprinted, embossed or otherwise arranged on or near the reduced stiffness region **172**. In some configurations, a scale can be positioned along a portion of the mask **100** over which the reduced stiffness region **172** will roll. For increased fidelity, the scale preferably is positioned in a central location such that the extent to which the reduced stiffness region **172** rolls can be maximized. The scale can be a numerical scale or a color gradient scale, for example but without limitation.

In some configurations, a ratchet or lock mechanism can be integrated with the mask such that the reduced stiffness region **172** can be set at a desired roll point. For example, a ratchet mechanism with a series of teeth that engage a closure member (e.g., ziptie locking ratchets) can be used. When the upper portion **154** of the mask is displaced about the hinge point, the lock mechanism enables the upper portion **154** to be retained in position when the mask **100** is removed from the face of the user U. Preferably, the lock mechanism allows that locked position to be released easily as desired such that, if the mask is moved too far, the upper portion can be relaxed into a better fitting position. Thus, the user can set the extent to which the upper portion **154** rolls once and each subsequent use would result in the same level of roll.

By rolling, the upper portion **154** (i.e., the portion of the seal member that contacts the bridge of the nose) moves as increasing pressure is applied by the flange **160** of the mask against the face of the user. As a result of the movement, the force exerted by the upper portion **154** upon the bridge of the nose is substantially constant over a wide range of pressures exerted by the lower portion **156** against the rest of the face of the user. Similarly, the force required to cause the upper portion **154** to move is substantially constant. As shown in FIG. **28**, the illustrated configuration results in a full 25 mm change in position of the upper portion with an increase of less than about 0.5 N of force associated with that range of movement. Because the force applied to the nose is generally constant over a range of angles and associated upper portion displacement, the force applied to the bridge of the nose does not vary significantly at various headgear tension levels. Again, such a result is shown in FIG. **28**, wherein the total change in force over the range of 5 mm to 25 mm of movement at the apex **180** results in a force change of about 0.2 N. In addition, because the force applied to the nose is generally constant over a range of angles, the mask can be adjusted to improve fitting to a variety of facial geometries while limiting the pressure exerted against the sensitive bridge of the nose region.

When compared to constructions featuring pleated geometries, the use of a rolling configuration provides marked improvement. First, external rolling rather than pleating reduced or eliminates the likelihood of the material of the mask seal encroaching into the chamber designed to contain the nose of the user. Thus, external rolling reduces the likelihood of contact with the nose of the user inside the chamber during movement of the upper portion **154** relative to the lower portion **156**. Second, external rolling instead of

pleating provides a clean appearance and decreases the number of external cavities, which is believe to improve the user's perception of the full face mask assembly when compared to pleated assemblies.

With reference to FIG. **24**, while the illustrated mask seal **110** rolls over the outer surface **170**, the mask seal can be configured to roll inside the mask assembly. In other words, an internal roll over can be used in some configurations. The internal roll over is less desirable relative to the external roll over because the positive pressure tends to hinder rolling and because the rolling action tends to encroach into the chamber that receives the nose. On the other hand, the internal roll over provides a cleaner appearance relative to the external roll over because any ballooning of the seal member is contained within the mask seal clip.

With reference now to FIGS. **1** and **2**, the mask assembly **102** includes the mask base **114**, which is more rigid than the mask seal **110**. The mask base **114** can be formed of any suitable material. In some configurations, the mask base **114** is formed of a polycarbonate material such that it is capable of flexing for connection with the mask seal **110** and/or the mask seal clip **112**.

With reference now to FIG. **14**, the mask assembly **102** is shown with the mask base **114** secured to the mask seal **110**. More particularly, in the illustrated configuration, the mask base **114** is secured to the mask seal clip **112** that is attached to the mask seal **110** in any suitable manner. In some configurations, the mask base **114** and the mask seal **110** or mask seal clip **112** are removably connected. In some configurations, the mask base **114** snaps together with one or both of the mask seal **110** and the mask seal clip **112**. Preferably, the mask seal **110** and the mask seal clip **112** can be removed from the mask base **114** and a snap connection secures the mask seal clip **112** to the mask base **114**.

With reference to FIGS. **14** and **15**, the illustrated mask base **114** overlies at least a portion of the mask seal clip **112**. In some configurations, the mask base **114** almost entirely covers the mask seal clip **112**. In some configurations, the mask base **114** extends over more than half of the mask seal clip **112**. When the mask base **114** overlies a substantial portion of the mask seal clip **112** or the mask seal **110**, a double layer effect is created (e.g., the mask seal clip **112** and the mask base **114**). The double layer effect provides increased insulation when a significant portion of the mask base **114** overlaps a significant portion of the mask seal clip **112** or the mask seal **110**. The increased insulation provides a warmer inner portion (e.g., mask seal **110** and/or mask seal clip **112**), which results in less rain out of humidity during use. Preferably, at least a portion of the mask seal clip **112** is exposed from under the mask base **114** such that the mask base **114** can be more easily separated from the mask seal clip **112**. As shown in FIG. **15**, to aid in the separation of the mask base **114** from the underlying mask seal **110** and/or mask seal clip **112**, the illustrated mask base **114** comprises a peripheral surface **200** on the proximal end. The mask base **114** is concave on the inside to accommodate the underlying components. In other words, the mask base **114** is bowl shaped in a distal direction relative to the proximal peripheral surface **200**.

The peripheral surface **200** comprises one or more recessed portions **202**. Preferably, the recessed portions **202** comprise at least two recessed portions **202** that are positioned on opposite sides of the mask base **114** from each other. The recessed portions **202** are configured to receive a thumb and a finger such that the mask base **114** can be more easily removed from the front of the underlying mask seal clip **112**. While the recessed portions **202** can define means for grasping the assembly underlying the mask base **114** for removal of the mask base, other configurations can be used, such as outwardly extending tabs, protruding portions and the like, for example but without limitation. In addition, while the illustrated recessed portions **202** are disposed on opposing lateral sides of the mask base **114**, the recessed portions **202** can be positioned on the top and bottom or on other regions as desired.

As shown in FIG. **13**, the mask base **114** preferably comprises an opening **210** that is defined by a wall **212**. With reference to FIG. **14** (which is a section through the mask seal **110**, the mask seal clip **112**, and the mask base **114**), the wall **212** that defines the opening **210** through the mask base **114** preferably fits within the wall **146** that defines the passage **144** through the mask seal clip **112**. As shown in FIG. **14**, the wall **212** can be axially coextensive with the wall **146**. In addition, the dimensions and shapes of the walls **146**, **212** can be such that the walls interact with each other to reduce relative slippage between the walls **146**, **212** and to reduce the likelihood of the mask seal base **114** inadvertently separating from the mask seal clip **112**. In some configurations, the walls **146**, **212** fit together and reduce the likelihood of leakage through the interface between the walls. Preferably, a taper lock secures the walls **146**, **212** together.

With reference still to FIG. **14**, the wall **212** comprises a contoured inner surface **214**. The contoured surface **214** can be radiused to receive a ball end **220** of a swiveling elbow **222**, such as that shown in FIG. **17**. As better shown in FIG. **18**, the ball end **220** has a contoured surface **224** that can be snap fit into the contoured surface **214** formed in the mask base **114**. The connection between the two contoured surfaces **214**, **224** allows the surfaces to slide relatively freely with each other such that the position of the swiveling elbow **222** can be easily changed. In some configurations, the elbow **222** could be configured for rotation or swiveling without having a ball-joint configuration.

With reference again to FIG. **13**, the mask base **114** also comprises at least two pockets **230**. The illustrated mask base **114** comprises two pockets **230**. The pockets **230** recede into the mask base **114** and protrude rearward from the mask base **114**. The pockets **230** are received within the recesses **140** of the mask seal clip **112**. Overlying the further recesses **142** formed in the mask seal clip **112** are openings **232** that are defined by a surrounding wall **234**.

The illustrated pockets **230** are formed such that one pocket **230** is formed on each lateral side of the mask base **114**. The pockets **230** can be positioned to be symmetrical relative to the central plane CP, which plane substantially bisects the mask base **114**. In some configurations, as shown in FIG. **15**, the pockets **230** have an enlarged vertical dimension **240** relative to a transverse dimension **242**. Similarly, as shown in FIG. **15**, the openings **232** have an enlarged vertical dimension **244** relative to a transverse dimension **246**.

In the illustrated mask base **114**, the laterally inward portion of each pocket **230** comprises a support wall **250**. The support wall **250** is positioned toward the center plane CP relative to normal to a base surface **248** of the pocket **230**. Each of the pockets **230** is configured to receive a clip **252** (see FIG. **22**). Once the clip **252** is installed within the pocket **230**, the support wall **250** helps to limit rotation of the clip **252** relative to the pocket **230**. Moreover, the large vertical dimension helps users to locate the pocket **230** with the clip **252** during installation.

With reference to FIG. **22**, the clip **252** can have a two part construction: an outer cover **254** and an inner catch **256**.

Straps **260** can be secured to each clip **252** in any suitable manner. One suitable configuration is illustrated in FIG. **2**. In some configurations, the straps **260** can be sandwiched between the outer cover **254** and the inner catch **256**. In some configurations, loops or openings or holes could be provided on the clips **252** through which the straps **260** are threaded. Preferably, one clip **252** can be connected to both an upper strap and a lower strap of the headgear assembly **106**. Such a configuration facilitates easy connection of the headgear assembly **106** to the full face mask assembly **102** and easy disconnection of the headgear assembly **106** from the full face mask assembly **102**.

As shown in FIG. **23**, the clip **252** comprises a sloping surface **262**. The sloping surface **262** can be positioned on the outer cover **254**. The sloping surface **262** cooperates with the support wall **250** to help orient the clip **252** relative to the pocket **203** of the mask base **114**.

The clip **252** includes an interlock feature **264**. The interlock feature **264** is configured for insertion into the opening **232** defined in the pocket **230** of the mask base **114**. The interlock feature **264** can engage in a snap-fit manner with a tab **236** defined along the wall **234** that defines the opening **232** in the mask base **114**, as shown in FIG. **13**. Other manners of interlocking the clip **252** with the pocket **230** also can be used.

Referring to FIG. **23**, the interlock feature **264** of the illustrated clip **252** comprises a U-shaped component **268** that terminates in a release lever **266**. The U-shaped end **268** protrudes a sufficient distance to allow the connection with the tab **236** but does not protrude so far as to allow the bottom of the further recess **142** in the mask seal clip **112** to stop proper insertion of the interlock feature **264** into the opening **232**. The U-shaped end **268** initially makes contact with a wall of the opening **232** during connection of the clip **252** to the mask base **114**. In the illustrated configuration, the U-shaped end **268** contacts the wall **234** of the opening **232** during insertion and the wall **234** guides the clip **252** into position within the pocket **230**. The opening **232**, or one or more surfaces that define the opening **232**, generally align the clip **252** relative to the mask base **114** during connection of the clip **252** to the mask base **114**.

The end of the release lever **266** protrudes through an opening **270** defined by a wall **272**. Preferably, the end of the release lever **266** protrudes through the opening **270** a sufficient distance to allow easy manipulation of the release lever **266**. Moving the release lever **266** in manner that closes the U-shape of the interlock feature **264** allows the interlock feature **264** to be removed from engagement with the tab **236** in the wall **234** that defines the opening **232** in the mask base **112**.

FIGS. **32-39** illustrate additional configurations of clip assemblies **252** that are configured to secure a mask assembly **102** to a user's head. The clip **252** of FIGS. **32** and **33**, for example has a raised edge **400** (sometimes referred to as a finger tab **400**) that enables the user to easily detach the headgear **106** from the mask assembly **102**. The raised edges **400** are oriented such that the user may merely pull them rearwardly to pop the clips **252** off of the mask base **114**. Removing one or more clips **252** from the mask base **114** allows the mask assembly **102** to be easily removed from the user's head. The raised edge **400** provides a grasping point during attachment and removal of the headgear **106** with respect to the mask assembly **102**. For example, the user's thumb and index finger may be placed on opposite sides of the raised edge **400** during removal of the clip **252** from the mask assembly **102**. In addition, the user may grip the clip **252** and maintain the grip throughout the mask fitting process. This eliminates the need to grasp blindly for the straps **260** during assembly. It also allows the user to attach the clip **252**, remove it, and re-attach it while maintaining a grip on the raised edge **400**.

FIG. **34** shows an exploded view of the clip **252** of FIGS. **32** and **33**. The clip **252** includes an outer cover **254** and an inner catch **256**. The inner catch **256** includes one or more slots **402** to receive the distal end of the headgear straps **260**. The inner catch **256** can also include several pressure bumps, such as those shown in connection with the configuration of FIGS. **38** and **39**. The pressure bumps provide additional pressure against the outer cover **254** and inner catch **256**, so that they are secured to one another. In one configuration, the headgear straps **260** are removable from the assembled clip **252**.

The inner catch **256** includes an elongated slot **404**, as shown in FIG. **38**. The slot **404** includes a circular opening **406** having a diameter larger than the width of the slot **404**. The slot **404** and circular opening **406** can include chamfered recesses to help align the clip **252** to the mask assembly **102**. The circular opening **406** facilitates attachment and removal of the clip **252** to the mask assembly **102**, as will be discussed in greater detail below. Two channels **408** extend parallel to the sides of the slot **404**, thereby defining slot walls **410** (sometimes referred to as clip levers) on either side of the slot **404**. The channels **408** are sized to permit adequate flexing of the slot walls **410** during attachment and removal of the clip **252** from the mask assembly **102**. In addition, the slot walls **410** extend along the longest dimension of the inner catch **256**, towards top and bottom, which allows longer slot walls **410** to be employed. Longer slot walls **410** reduces the level of stress on the slot walls when fitting the clip over the mounting post.

One configuration of a mask base **114** suitable for use with the clip **252** of FIGS. **32-35** is illustrated in FIG. **36**. The mask base **114** includes two recesses **140** symmetrically positioned on opposite sides of the mask base **114**. A mounting post **412** extends from the body of the mask base **114** within each recess **140**. The mounting post **412** may be integrally formed with the mask base **114**, or separately formed and secured to the mask base **114**. The mounting post **412** can have a mushroom-shaped configuration to secure the clip **256** to the mask base **114** once the user snaps the clip **256** in place. The rounded top of the bulbous mushrooms-shaped post **412** helps locate and orient the central hole **406**. As the clip **252** is pressed onto the post **412**, the slot walls **410** deflect outwardly, away from the post **412**. Once the head of the post **412** clears the edge of the slot wall **410**, the slot walls **410** snap back to their original position, thereby providing tactile, and sometimes audible feedback, that the clip **252** is properly attached to the mask assembly **102**.

The mounting post **412** can also comprise an elongated, elliptical, elevated portion **414** (sometimes referred to as a lug or wing) that is sized to mate with the elongated slot **404** of the inner catch **256**. The elongated, elevated portion **414** comprises a chamfered edge to help properly align the head gear **106** with respect to the mask assembly **102**. The portion **414** also prevents the clip **252** from rotating with respect to the mask assembly **102**. This helps assure constant tension on the headgear straps **260** while the user sleeps.

FIG. **37** illustrates a partial assembly of yet another configuration to secure a clip **252** to a mask base **114** of a mask assembly. The clip **252** sits within a recess **140** of the mask base **114**. A cylindrical, button-head post **412** extends from the surface of the mask base **114** within the recess **140**. The post **412** allows slight rotation of the clip **252** when attached thereto due to its cylindrical configuration. How-

ever, as shown in FIGS. **38** and **39**, the slot **404**, channels **408** and slot walls **410** extend along the shorter planar direction of the inner catch **256**, towards its front and back ends.

The inner catch **256** also includes several pressure bumps **414**. As discussed above, the pressure bumps provide additional pressure against the outer cover **254** and inner catch **256**, so that they are secured to one another.

Additional configurations of a clip **252** are illustrated in FIGS. **40-47**. The clip **252** of FIG. **40** includes three elongated, elliptical slots **404** and a finger tab **400**. The finger tab **400** is used to create a lever to release the clip **252** from a mask assembly **102**. The central slot **404** is sized to receive a mounting post **412** that extends from the outside surface of the mask body. One such suitable mounting post **412** is illustrated in FIG. **43**. The mounting post **412** includes a ridge **414** and two slots **416**. As the clip **252** is pressed onto the mounting post **412**, the outer portions of the post **412** flex towards each other due to the spacing provided by the slots **416**. Once the ridge **414** clears the upper surface of the clip **252**, the mounting post **412** snaps back to its original position, and the ridge **414** locks the clip **252** in place.

A similar configuration is shown in FIGS. **44-47**. The clip **252** of FIG. **45** does not include a finger tab and its central opening **404** has a rounder, more elliptical shape than the elongated slots of FIGS. **40-44**.

All of the foregoing configurations simplify the procedure for securing the mask assembly **102** to the user's head. For example, the clips **252** allow the headgear **106** to open up so that it is not a closed loop. By opening up, the headgear **106** may be swung around the head rather than forcing the user to pull his head through it.

With reference to FIG. **2**, in addition to the straps **260**, the headgear assembly **106** also comprises a back strap **280** and a top strap **282**. Other head gear assemblies also can be used. The back strap **280** extends around the back of the head of the user U at a location generally above a nape of the neck but generally below the occipital protuberance. At a location rearward of the ear of the user, the back strap **280** forks into an upper arm **284** and a lower arm **286**. The upper arm **284** arcs upward to a location above the ear of the user and then arcs downward to a location generally forward of the ear of the user. The lower arm **286** arcs downward to a location generally below the ear of the user and extends slightly forward of the ear.

The straps **260** can be connected to the back strap **280** in any suitable manner. In the illustrated configuration, the straps **260** connect to the upper arm **284** and the lower arm **286** respectively. Preferably, the upper arm **284** and the lower arm **286** are more rigid than the straps **260** such that the arms **284**, **286** generally maintain shape as the headgear assembly **106** is being donned. In some configurations, each of the upper arm **284** and the lower arm **286** supports its own weight. In some configurations, each of the upper arm **284** and the lower arm **286** is structured to be tangle-free during donning. For example, the arms **284**, **286** have sufficient torsion stiffness to reduce the likelihood of twisting when being put on.

Preferably, the straps **260** connect to at least one of the upper arm **284** and the lower arm **286** at a location forward of the ear. Such a configuration helps the user to locate the straps **260** without much difficulty. In addition, because the straps **260** in the illustrated configuration are embedded into the clips **252**, the ends of the upper arms **284** and the lower arms **286** can comprise slots **290**, **292** such that the straps **260** can be threaded through the slots **290**, **292**. In addition, the straps **260** can comprise an adjustment mechanism **294**, such as a Velcro or buckle configuration. The adjustment mechanism **294** allows a force between the mask seal **110** and the face of the user U to be adjusted. Any suitable adjustment mechanism **294** can be used.

As shown in FIG. **2**, the top strap **282** preferably is flexible and has an adjustable length. The top strap **282** connects to the upper arms **284** through a slot **296** and reduces the likelihood of the upper arms **284** sliding down the head of the user and contacting the ears of the user. Preferably, the top strap **282** connects to the upper arms **284** at a location generally above the ears of the user.

Advantageously, as shown in FIGS. **1** and **2**, the straps **260** exert a force in the direction of the arrow F while they connect to the mask base **114** by movement in the direction C, which direction is generally normal to the direction of the force F. In other words, the straps **360** are tensioned by pulling forward and the clips **252** are connected to the mask base **114** by movement in a direction normal to the forward pull. Such a configuration eases securement of the interface **100** on the face of the user.

In another configuration, the headgear assembly **106** includes a semi-rigid headgear **380** (as shown in FIG. **29**) to secure the mask assembly **102** to the user's head. The semi-rigid headgear **380** is formed as a composite structure comprising a semi-rigid strap **382** that is joined to a soft edging **384**. For example, the soft edging **384** can be bonded to the semi-rigid strap **382** by plastic overmolding or by use of an adhesive. As shown in FIG. **29**, the soft edging **384** can be butt-joined to the semi-rigid strap **382**, without the soft edging **384** overlapping the semi-rigid strap **382**, to maintain the continuous profile of the semi-rigid headgear **380**. The semi-rigid strap **382** defines and maintains the semi-rigid headgear shape as tension is applied from the straps **260** to pull the mask assembly **102** towards the user's head. In other words, the semi-rigid strap **382** is sufficiently rigid along its planar axis to prevent its upper and lower arms **284**, **286** from overly deforming under tension. The semi-rigid strap **382** can be made from a variety of rigid or semi-rigid materials, including plastic or metal. In some configurations, the semi-rigid strap **382** is made from PVC.

Especially in connection with a semi-rigid headgear assembly, it has been found that the shape holding, or self-supporting nature, can result in an overall assembly that is intuitive to fit. In particular, where the connection and/or headgear members are self-supporting such that they maintain a three-dimensional form, the headgear can be fitted in the correct orientation with very little if any instruction. In a self-supporting arrangement, the tendency of the straps to not tangle also reduces the time taken to fit the overall assembly.

As used herein, the term "semi-rigid" is used to denote that the headgear assembly is sufficiently stiff such that the headgear assembly **380** can assume a three-dimensional shape with dimensions approximating the head of the patient for which the headgear is designed to fit while also being sufficiently flexible to generally conform to the anatomy of the patient. For example, some of the other components (e.g., arms or straps) of the headgear assembly **380** may also be partially or wholly "semi-rigid" such that the components are capable of holding a three-dimensional form that is substantially self-supporting. A "semi-rigid" headgear assembly is not intended to mean that each and every component of the headgear assembly is necessarily semi-rigid. For example, the substantially three-dimensional form that the self-supporting headgear assembly **380** may assume may relate primarily to the rear and top portions of the headgear assembly **380**. In addition, the semi-rigid headgear

assembly **380** may include semi-rigid regions that extend forward of the ears and above the ears when placed on the head of the patient.

The left and right upper and lower arms **284**, **286** may be formed of a semi-rigid material, as well. Where used herein, the semi-rigid materials may include molded plastic or sheet materials that include but are not limited to homogeneous plastic materials and bonded non-woven fiber materials.

In some configurations, one or more of arms or straps are formed of a substantially inelastic material. The arms or straps can be formed of a semi-rigid, self-supporting material such that the semi-rigid headgear assembly **380** can assume a substantially three-dimensional shape and generally does not tangle. In some configurations, the material can comprise a laminate structure of both conformable and semi-rigid portions, for example but without limitation. The semi-rigid strap **382** may be of a self-supporting, resilient, substantially inelastic material, such as Santoprene, polyolefin, polypropylene, polyethylene, foamed polyolefin, nylon or non-woven polymer material for example but without limitation. In some configurations, the semi-rigid strap **382** is formed from the polyethylene or polypropylene families. The material can be a low density polyethylene such as Dowlex 2517, which is a linear low density polyethylene that has a yield tensile strength of 9.65 MPa, a break tensile strength of 8.96 MPa, and a flexural modulus—2% secant of 234 MPa. The semi-rigid strap **382** preferably is formed of a material such that the semi-rigid headgear **380** is substantially shape-sustaining under its own weight regardless of its orientation. In some configurations, the semi-rigid strap **382** does not stretch more than approximately 6 mm under a 30 N tensile load. In some configurations, the semi-rigid strap **382** does not stretch more than approximately 3 mm under a 30 N tensile load.

In some configurations, the semi-rigid strap **382** is formed from non-woven polyolefin (NWP), which is bonded (e.g., overmolded or laminated) with a polyolefin. In such configurations, the overmolded polyolefin material provides the principle shape sustaining properties. In addition, the softer NWP material is adapted to contact the skin and provide a desired comfort level. Furthermore, the NWP material may assist in providing the desired load bearing properties, such as the desired tensile load bearing properties.

The semi-rigid headgear **380** is generally formed of a semi-rigid material. Where used herein, the semi-rigid materials may include molded plastic or sheet materials that include but are not limited to homogeneous plastic materials and bonded non-woven fiber materials. The upper and lower arms **284**, **286** also include such semi-rigid materials, as the arms **284**, **286** are formed integrally with and are portions of the semi-rigid headgear **380**. Preferably, the right and left lower arms **286** are formed as an integrated component that, in use, will extend around the back of the head and above the neck of the patient.

A soft edging **384** covers or attaches to at least a portion of the periphery of the semi-rigid strap **382**. In one configuration, the soft edging **384** does not cover the front or rear faces of the semi-rigid strap **382**. For example, the thicknesses of the soft edging **384** and semi-rigid strap **382** can be the same at the location where they are joined together.

The soft edging **384** provides a soft, comfortable interface between the periphery of the semi-rigid strap **382** and the user's skin. The soft edging **384** can be made from a variety of soft materials, including but not limited to a plastic, an elastomer, silicone or thermoplastic polyurethane (TPU) plastic. The soft edging **384** can have a Shore hardness in the range of 10-80 Shore A.

As used herein with respect to headgear and straps, "soft" is used to describe a hand of the material, which means the quality of the material assessed by the reaction obtained from the sense touch. In addition, as used herein with respect to headgear and straps, "conformable" is used to describe the ability of the material to conform to the anatomical features of the patient (e.g., around a facial feature). In particular, a strap including at least an element of "soft" and/or "conformable" material also may be "semi-rigid" and/or axially inelastic.

The soft edging **384** can have a uniform thickness, or in some configurations, an uneven thickness. For example, in some configurations the soft edging **384** is the same thickness as the semi-rigid strap **382**. In other configurations, the soft edging **384** is thinner than the semi-rigid strap **382**, forms a bulbous end to the semi-rigid strap **382**, or is simply thicker than the semi-rigid strap **382**. A variety of cross-sectional views of the semi-rigid headgear **380** are shown in FIG. **29**. Each cross-sectional view (A-A' through F-F') shows one possible configuration of semi-rigid strap **382** and soft edging **384** thicknesses, which may be combined as desired. For example, any one particular soft edging **384** thickness and shape could apply to a portion or the entire semi-rigid strap **382**, or may be combined with any other particular covering thickness and shape shown in FIG. **29**.

Many other thickness configurations may be provided, as well. In addition, material thickness may be symmetrically or asymmetrically applied to the semi-rigid strap **382**. For example, cross-sectional views C-C' and F-F' are shown as asymmetric; however, in other configurations the thickness of either end the soft edging **384** is symmetrically applied to the semi-rigid strap **382**. In some configurations the semi-rigid strap **382** is selectively thickened to provide extra rigidity and support. For example, the second of the two configurations illustrated as cross-sectional view F-F' has such a thickening. Finally, in some configurations, venting through-holes **396** are provided throughout the semi-rigid headgear **380** (such as on the semi-rigid strap **382**, as shown in FIG. **29**, or on soft edging **384**) to provide ventilation and sweat management.

When laid flat, as shown in FIG. **29**, the semi-rigid headgear **380** defines three C-shaped, arcuate regions **386**, **388**, **390**. Two ear-surrounding regions **386**, **388** are defined by upper and lower arms **284**, **286**, and a rear region **390** is defined by lower arms **286** and the back strap portion **280**. The semi-rigid headgear **380** is flexible enough to bend to adapt to the shape of the user's head, such that the ear-surrounding regions **386**, **388** at least partially surround or encircle the user's ears, and the rear region **390** at least partially surrounds or encircles the back of the user's head, above the neck.

The curvature of each arm **280**, **284**, **286** can be selected to provide a comfortable fit and to facilitate application and removal of the semi-rigid headgear **380** from the user's head. For example, in the illustrated configuration, the upper arms **284** have a concave curvature and the lower arms **286** have a convex curvature with respect to the opening in the upper ear surrounding arcuate regions **386**, **388**. The back strap portion **280** and the lower arms **286** all have a concave curvature with respect to opening in the neck surrounding arcuate region **390**. These curvatures facilitate application and removal of the semi-rigid headgear **380** from the user's head by, for example, providing openings to the arcuate regions sized and oriented to easily fit over a user's neck and ears.

The configuration of FIG. **29** utilizes integrated crown straps comprising first and second crown arms **392**, **394** to

secure the semi-rigid headgear **380** to the user's head. Once the semi-rigid headgear **380** is positioned to partially surround the user's head, the first and second crown arms **392**, **394** are brought into contact with one another to secure the semi-rigid headgear **380** in place. Any of a variety of mechanisms can be provided with the first and second crown arms **392**, **394** to enable them to attach to one another. For example, in some configurations, a hook-and-loop fabric (e.g., Velcro), or one or more snaps or clips can be used to attach the first and second crown arms **392**, **394** to one another.

The crown straps extend laterally over the top of the skull in line with the ears. When the crown straps extend in this manner and the arcuate regions **386**, **388** are positioned to partially encircle the user's ears, the back strap **280** of the semi-rigid headgear **380** should locate on or below the inion. The user's inion is the most prominent projection of the occipital bone at the posteroinferior portion of the skull. In other words, the inion is the highest point of the external occipital protuberance. The semi-rigid headgear **380** can be positioned on the user's head according to any of the configurations described in the applications set forth in the Cross-Reference to Related Applications, each of which forms an integral part of the present disclosure and is hereby incorporated by reference in its entirety.

For example, the back strap portion **280** is adapted to engage with the rear of head of the user. Preferably, the back strap portion **280** is adapted to engage with the head at a location on or below the external occipital protuberance. The back strap portion **280** spans the distance around the back of the head and extends to each side of the head. In some configurations, the back strap portion **280** comprises a longitudinal center that is adapted to be located about 25 degrees below a horizontal plane that extends through the ear canal of the patient.

On either side of the head, the semi-rigid headgear **380** extends upward and downward into left and right side regions that form arcuate regions **386**, **388**. The side regions are adapted to extend behind the ears of the patient. Preferably, the side regions also are adapted to extend behind the mastoid processes of the patient. Each of the left and right side regions of the semi-rigid headgear **380** extends into or comprises an arched portion **386**, **388**. The arched portions **386**, **388** bend forward. The arched portions **386**, **388** are adapted to extend around the respective ears of the patient. Preferably, each of the arched portions **386**, **388** terminates at a respective termination portion. The termination portions preferably are adapted to be located forward of the ears of the patient. In some configurations, the side regions and the arched portions **386**, **388** of the semi-rigid headgear **380** do not include a soft inner padding portion but may comprise a self-supporting, resilient material that is in direct contact with the head/hair of the patient.

The top portion of the semi-rigid headgear **380** connects the arched portions **386**, **388** together. The top portion can be positioned forward of the ears in some configurations. Preferably, the top portion is positioned generally vertical from the ears. More preferably, a longitudinal center of the top portion is adapted to be spaced more than 13 mm, preferably between 13-100 mm, rearward of a vertical plane that intersects the ear canals. In some configurations, the top portion comprises a first segment **392** and a second segment **394** with the first segment **392** and the second segment **394** combining to form the top portion. The first segment **394** extends upward from an apex of the left arched portion **386** while the second segment **392** extends upward from an apex of the right arched portion **388**. Preferably, the top portion is formed of a self-supporting and semi-rigid material. In some configurations, the top portion does not include any backing, including a soft padded backing layer.

Each of the upper and lower arms **284**, **286** comprises a slot **292**, **290** near each arm end. Each slot is configured to receive straps **260** from the mask assembly **102**, as shown in FIG. **2**. In addition, the portion **398** of the semi-rigid headgear **380** covered by straps **260** is thinner than the corresponding arm **284**, **286** in order to accommodate the thickness of the strap **260**. For example, as shown in FIGS. **30** and **31**, the semi-rigid headgear portion **398** is thinner than the arm **286**. The portion **398** is dimensioned such that when the strap **260** is inserted into the slot **290** and tensioned, its thickness will not extend beyond the arm **286**. By maintaining the strap **260** and portion **398** thickness less than the arm **286** thickness, the strap **260** does not irritate the user when worn.

In addition, the upper arms **284** are configured to extend downward from a location above the user's ear such that the adjustable top straps **260** extend no closer than about 10 mm to the user's eye when worn. The lower arm **286** is configured to be located off of the user's neck when the head is tilted up and down, and the termination point of the lower arm **286** is located generally below the user's ears so that the lower strap as attached to the lower arm **286** angles upwards from the termination point **290** to the mask assembly **120**. In such a configuration, as illustrated in FIGS. **52** and **53**, the lower straps and the upper straps form a triangle, and the space between the lower straps and the upper straps on the mask is smaller than the space between the lower straps and the upper straps on the headgear, thereby stabilizing the mask assembly **120** against upward and downward movements.

With reference again to FIG. **17**, the elbow **222** connects to a conduit **300** through a disconnectable swivel assembly **302**. As shown in the section view of FIG. **20**, the elbow **222** comprises a stem **304** that comprises an inner wall **306** at the base. The inner wall **306** comprises a recess **308**.

A sleeve **310** comprises a flange **312** that is received within the recess **308**. The sleeve **310** can be secured into position within the elbow **222** using any suitable technique. The sleeve **310** comprises a generally cylindrical outer wall **314**. The flange **312** comprises a section that extends outward to connect to a lever **316**. Preferably, the flange **312** and the lever **316** are integrally formed. With reference to FIG. **21**, the lever **316** includes a lower inwardly extending catch **320** and is capable of pivoting about the section that connects the lever **316** to the flange **312**. Thus, pressing inward on an upper portion **322** of the lever **316** results in the catch **320** moving away from the generally cylindrical outer wall **314** of the sleeve **310**.

A swivel **330** comprises a generally cylindrical inner wall **332**. The inner wall **332** slides over the outer wall **314** of the sleeve **310** such that a sliding fit results between the swivel **330** and the sleeve **310**. An upper portion **334** comprises a shoulder **336**. The catch **320** of the lever **316** can secure the swivel **330** in axial position on the sleeve **310** by engaging with the shoulder **336**. When the upper portion **322** of the lever **316** is depressed, the catch **320** moves away from the shoulder **336**, which allows the swivel **330** to be removed from the sleeve **310**.

A flap **350** can be mounted between the stem **304** and the sleeve **310**. In the illustrated configuration, the flap **350** extends into a flow channel **352** from a base **354** that is sandwiched between the stem **304** and the sleeve **310**. The flap **350** can pivot upward (as shown in FIG. **20**, see arrow P) about an axis X (see FIG. **21**) away from the sleeve **310**

such that flow from a positive pressure generator can continue generally unobstructed to the user through the interface **100**. The flap **350** pivots downward into contact with the sleeve **310** to seal the flow channel **352** in the event that the positive pressure source stops providing a pressurized flow of air. In some configurations, the flap **350** will not fully contact the sleeve **310**. In some configurations, the flap **350** will not seal the channel **352** when in the down position.

With reference to FIG. **21**, a port **360** is defined through the elbow **222** at a location above the flap **350**. The port **360** preferably is positioned along a portion of the elbow **222** that is in the vicinity of the axis X. In some configurations, the port **360** is positioned to be substantially shielded by the flap **350** from an inspiratory flow of air. In other words, as the air pivots the flap **350** away from the sleeve **310**, the flap **350** is moved into a position that at least partially or completely covers the port **360**.

In some configurations, the port **360** extends through a wall of the elbow **222** that comprises a generally planar inner wall **362**. The generally planar inner wall **362** helps the flap **350** to generally seal the port **360** when the flap is moved upward away from the flange **312** of the sleeve **310**.

In some configurations, the lever **316** overlies a majority of the port **360** such that the port **360** is generally obscured from view. As shown in FIG. **20**, however, a gap **364** preferably surrounds at least a portion of the lever **316** such that a relatively free flow of air can pass through the port **360** when the flap **350** does not overly the port **360**. In addition, in some configurations, the port **360** and the lever **316** are positioned on a same side of the elbow **222** as an opening **370** defined within the ball end **220**, which opening is positioned within the mask assembly **102** when the connection port assembly **104** is assembled to the mask assembly **102**. Advantageously, such a positioning places the port **360** in a position on the elbow **222** that faces the user. Such a location further obscures the port **360** from view during use, which results in a more aesthetically pleasing configuration. Moreover, because flow through the port **360** will be very infrequent, having the port **360** disposed toward the user will not cause any significant discomfort for the user.

While not shown, the elbow **222** also can comprise one or more bias flow vent holes. The bias flow vent holes preferably are positioned in a forwardly directed orientation such that any bias flow does not directly impinge upon the user.

Another configuration of an elbow assembly **302** is illustrated in FIGS. **48-51**. The elbow assembly **302** comprises an elbow **222**, a sleeve, **310**, and/or a swivel **330**, as shown in FIG. **49**. In some configurations, the elbow assembly **302** only includes the elbow **222** and sleeve and omits the swivel **330**. The swivel may be permanently or removably attached to the sleeve **310** and elbow **222**; in some configuration, the swivel **330** is integrally formed with the end of the delivery conduit. A flap **350** is positioned over the sleeve **310** such that it at least partially obstructs the sleeve's flow channel **352**. The elbow assembly **302** functions similarly to the elbow assembly **302** of FIGS. **17-21**; however, the elbow assembly **302** of FIGS. **48-51** provides the additional benefit of directing gases away from the patient when the flap **350** drops to its closed position (as shown in FIGS. **50** and **51**).

With reference to FIG. **49**, the sleeve **310** preferably comprises two or more cut out regions or recesses **356**. The recesses **356** can have any suitable shape and, in the illustrated configuration, the recesses **356** comprise a semicircular configuration that extends upward into the sleeve **310**. The sleeve **310** also comprises at least one bump **357**, and preferably two or more bumps **357**. Preferably, each of the bumps **357** extends around an arc of about 70 degrees. More preferably, each of the bumps **357** is generally centered between two recesses **356** and each of the bumps **357** extends about 70 degrees around an outer surface of the sleeve **310**.

The swivel **330** preferably is generally cylindrical in configuration. As shown in FIG. **49**, the swivel **330** has an inwardly extending ridge **358**. The ridge **358** preferably encircles the entire inner surface. In some configurations, the ridge **358** can be interrupted. Preferably, however, the ridge **358** does not have any interruptions large enough to accommodate the entire bump **357** such that the ridge **358** and the bump **357** can cooperate to keep the swivel **330** mounted over the sleeve **310**. When assembling the swivel **330** to the sleeve **310**, the recesses **216** allow the bumps **220** to deflect inward such that the bumps **357** can slide over the ridge **358** and then snap back outward to secure the bumps **357** under the ridge **358**.

The elbow **222** comprises openings **420** at its sides that are in fluid communication with an air venting channel **422**. The air venting channel **422** is formed by the spacing between the elbow's inner and outer walls **362**, **424**, as shown in FIGS. **50** and **51**.

When the flap **350** drops to its closed position, as shown in FIGS. **50** and **51**, air exhaled from the user enters opening **370** of the elbow **222**. The exhalation flows through the port **360** in the elbow's inner wall **362**, and through the venting channel **422** until it exits the elbow **222** via the opening **420**.

The configuration of FIGS. **48-51** provides a reduced overall length and improves product aesthetic by eliminating an unsightly hole positioned at the front of the elbow **222**. In addition, the configuration of FIGS. **48-51** and improves patient comfort by preventing air from being directed towards the user. Instead, openings **420** direct air flow out of the sides of the elbow **222** and away from the patient.

FIG. **54** illustrates a further mask configuration **500**. The mask configuration **500** illustrated in FIG. **54** has been shown without any accompanying headgear assembly for clarity. Any suitable headgear assembly can be used with the mask configuration **500**. For example but without limitation, any headgear assembly disclosed within this specification can be used with the mask configuration **500**.

With continued reference to FIG. **54**, the illustrated mask configuration **500** generally comprises a mask base **502** and a mask seal **504**. The mask base **502** preferably is more rigid that the mask seal **504**. For example, in one configuration, the mask base **502** is formed of a polycarbonate material while the mask seal **504** is formed of a silicone material. Other suitable materials also can be used for each of the mask base **502** and the mask seal **504**.

The mask seal **504** can be secured to the mask base **502** in any suitable manner, including but not limited to any of those disclosed within this specification. For example but without limitation, with reference to FIG. **55**, a flange **506** of the mask seal **504** can be inserted into a groove **510** provided along a periphery of the mask base **502**. In some configurations, at least a portion of the mask seal **504** can underlie at least a portion of the mask base **502**. In some configurations, a more rigid member, such as a clip for example but without limitation, or a more rigid portion can be integrally formed with the mask seal **504** and the more rigid member or portion can be used to connect the mask seal **504** with the mask base **502**.

As shown in FIG. **54**, the mask seal **504** preferably comprises a first paddle or wing **512** and a second paddle or wing **514**. Preferably, the first paddle **512** and the second paddle **514** are hollow. As shown in FIG. **62**, for example but without limitation, a pocket **518** can be defined within each

of the first paddle **512** and the second paddle **514**. The pockets **518** are in fluid communication with a chamber **520** defined by the mask seal **504**. Accordingly, pressure within the chamber **520** defined by the mask seal **504** can be used to inflate the pockets **518** of the first and second paddles **512**, **514**.

With reference to FIG. **55**, which is a section through the mask assembly **500** taken along the line **55-55** in FIG. **54**, the mask seal **504** also preferably comprises an upper surface **516**. The paddles **512**, **514** extend generally upward from the upper surface **516**. Preferably, the pockets **518** defined within the paddles **512**, **514** extend above the upper surface **516**. More preferably, the pockets **518** are defined on lateral portions such that the pockets **518** extend upward along the lateral sides of the nose. By extending the pockets **518** above the upper surface **516** and along the lateral sides of the nose, a ballooning effect can be used to greatly improve an inwardly-directed ballooning effect to provide an enhanced seal against an outer surface of the nose. Together, the upper surface **516** and the paddles **512**, **514** enable an improved seal with a nose to reduce or eliminate the occurrence of pressure-related skin problems. More particularly, because the illustrated configuration does not traverse from left to right the nose in a nasal bridge region, the illustrated mask configuration **500** eliminates the occurrence of pressure-related skin problems along the bridge of the nose.

With reference again to FIG. **54**, the first and second paddles **512**, **514** together with the upper surface **516** define a valley **522**. The valley **522** preferably defines a forwardly disposed opening. In other words, the illustrated valley **522** defines a passage that extends from front to rear of the illustrated mask seal **504**. Moreover, the valley **522** preferably accommodates a full size range of users because the nose is received in a region that is generally open from front to rear such that at least a tip of the nose can protrude through the forward opening defined by the valley **522**.

As illustrated in FIG. **54** and FIG. **55**, the valley **522** preferably accommodates at least a tip of a nose of the user such that the upper surface **516** underlies the nose. Preferably, when viewed from the front, a gap G of between about 5 mm and about 30 mm is defined between the paddles **512**, **514**. More preferably, the gap G between the paddles **512**, **514** is between about 10 mm and about 25 mm. In one configuration, the gap G is about 15 mm. The upper surface **516**, by underlying the nose, defines a primary seal between the mask configuration **500** and the face of the user.

The paddles **512**, **514** preferably extend upward to some extent along the lateral sides of the nose. In some configurations, the paddles **512**, **514** extend upward to a greater extent than does the sealing upper surface **516**. The paddles **512**, **514** can be shorter than illustrated or can be longer than illustrated. By extending upward above the upper surface **516** and by extending upward alongside the nose, the paddles **512**, **514** create a secondary seal with the face of the user. Preferably, the paddles **512**, **514** are adapted to extend upward to at least the fibro-fatty tissue FFT of the alar of the nose, which is represented in FIG. **70** by line A. More preferably, the paddles **512**, **514** are adapted to extend upward beyond the fibro-fatty tissue FFT into the region of the minor alar cartilage MAC, which is represented in FIG. **70** by line B. Even more preferably, the paddles **512**, **514** are adapted to extend upward beyond the minor alar cartilage MAC into the region of the lateral processes of the septal nasal cartilage SNC, which is represented in FIG. **70** by line C. In some configurations, the paddles **512**, **514** extend upward with at least a portion of the paddles **512**, **514** extending upward beyond the nasal bone NB (i.e., the bridge) of the nose of the user, which is represented in FIG. **70** by line D. In some configurations, the paddles **512**, **514** are adapted to extend along lateral portions of the lateral margins of the nose.

The paddles **512**, **514** preferably are configured to extend along a surface of the face generally adjacent to the nose. As shown in FIG. **55**, when viewed from the side, the paddles **512**, **514**, in some configurations, are generally triangular, or fin-shaped. Such a configuration provides a large surface area for sealing the paddles **512**, **514** against the side of the nose while also having a reduced side profile to reduce the likelihood of the paddles **512**, **514** being forced away from the nose by contact during sleeping, such as when rolling from side to side. While the illustrated configuration comprises two distinct paddles **512**, **514**, the paddles **512**, **514** can be connected together to generally enclose at least a portion of the nose.

As shown in FIGS. **55** and **57**, the upper surface **516** extends rearward (i.e., toward the face of the user or away from the mask base **502**) to a lip **524**. The upper surface **516**, in the vicinity of the lip **524**, underlies the nose and preferably seals against the nose while the lip **524** can seal against the upper lip region of the face just above the vermilion border.

As described above, the upper surface **516** of the mask seal **504** extends rearward to connect with or to define the lip **524**. With reference to FIG. **57**, the lip **524** preferably encircles an opening **526** into the chamber **520** defined within the mask seal **504** and connects with or defines a portion of a sidewall **528** of the mask seal **504**.

As shown in FIG. **57**, the upper surface **516** comprises at least a portion of one or more nasal opening **530**. The nasal opening **530** can be positioned laterally between the paddles **512**, **514** and can be defined through the upper surface **516** to provide communication with the chamber **520** of the mask seal. The nasal opening **530** preferably opens in a substantially upward direction while the oral opening **526** preferably opens in a substantially rearward direction. In the illustrated configuration, the mask seal **504** comprises the oral opening **526** and the separate nasal opening **530**. While other configurations having combined nasal and oral openings (e.g., as shown in FIG. **59**), the separate openings **526**, **530** as shown in FIG. **58** can be helpful and instructive to users in learning how to properly wear the illustrated mask configuration **500**.

The upper surface **516** preferably is substantially flat and generally does not protrude upward into the nasal cavities. Preferably, the nasal opening **530** does not extend up into the nasal vestibule, which is the most anterior part of the nasal cavity of the user. More preferably, the nasal opening **530** extends under, but not up into, the nasal vestibule. The nasal opening **530** preferably is generally flush with the upper surface rather than extending upward into some other superstructure. In some configurations, the upper surface **516** could comprise one or more nasal prong, one or more nasal pillow or the like. In the illustrated configuration, the upper surface **516** is supported by the paddles **512**, **514** and defines a somewhat arched link to the top ends of the paddles **512**, **514**. The arched link supports the upper surface **516** by suspending it from a higher pivot point, which allows the nasal sealing surface defined along the upper surface **516**, along with the surrounding geometry, to stretch, move and/or contort to noses having differing widths, depths and other geometrical features.

As illustrated in FIG. **57**, the lip **524** can define a band **532** that is disposed between the oral opening **526** and the nasal

opening **530**. As shown by comparing the embodiment shown in FIG. **58** with the embodiment shown in FIG. **59**, it is possible to omit the band **532** and a portion of the upper surface **516** that extends between the band **532** and the nasal opening **530** such that the oral opening **524** and the nasal opening **530** merge into a combined oral nasal opening **534**.

As shown in FIG. **60**, in some configurations featuring the combined oral-nasal opening **534**, the two sides of the lip **524** can be interconnected with a clip **536**. The illustrated clip **536** generally comprises a shape like an omega (Q). As illustrated in FIG. **60**, the clip **536** can comprise a first foot **540** and a second foot **542** that are interconnected by a body **544** of the clip **536**. The body **544** can have any suitable shape and configuration. For example but without limitation, while the illustrated body **544** comprises a U-shape or C-shape, the body **544** could be V-shaped or the like. In some configurations, the clip can be formed of Silicone or any other suitable material.

With reference again to FIG. **57**, the sidewall **528** can extend vertically higher than the upper surface **516**. Preferably, the sidewall **528** connects to the lip **524**, generally encircles the oral opening **526** and extends up to the sides of the nose of the user in the region of the first and second paddles **512**, **514**. The sidewall **528**, because it extends upward beyond the band **532** in the illustrated configuration, provides a taller platform when the mask configuration **500** is viewed from the side (e.g., FIG. **61**), which enhances the balancing of the mask seal **504** and which reduces rolling movement of the mask configuration **500** about a generally horizontal axis.

The band **532**, as shown in FIG. **57**, extends between the oral opening **526** and the nasal opening **530**. Thus, the illustrated band **532** connects the sidewall **528** at a location between the two openings **526**, **530**. In some configurations, the clip **536** connects the sidewall **528** at a location between the two portions that define the combined oral-nasal opening **534**. In other configurations, any suitable connecting structure can be used that generally connects the sidewall **528** from opposing sides of the openings **526**, **530** or opening **534**. The location of the connecting structure can be between an upper extreme and a lower extreme of the openings **524**, **530** or the opening **534**. In other words, in some configurations, a first lateral side of the sidewall **528** is connected to a second lateral side of the sidewall **528** in a region that bridges the combined opening **534**.

By connecting the lateral portions of the sidewall **528**, the lateral portions of the sidewall **528** effectively are tethered together. Tethering together the lateral portions of the sidewall **528** improves the stability of the mask seal **504** during sleeping, for example, when the user may roll from one sleeping position to another (e.g., from back to side), which can cause lateral movement of the mask configuration **500** due to the mask being pulled by the CPAP tube or due to contact with the pillow. Moreover, due to the flexibility of the tether (e.g., the band **532** or the clip **536**), a wider range of facial profiles can be accommodated. For example, flatter face profiles can be accommodated while still allowing the seal to self-adjust to the more protruded face profiled prevalent in European populations.

The tethering provided by the band **532** or the clip **536**, for example, also can help with rolling of the sidewall **528**. With reference to FIG. **57**, because the band **532** extends laterally and connects to the sidewall **528**, forward depression of the band **532** will cause inward rolling of the sidewall **528**, which enhances the conformability of the mask seal **504** to a variety of facial geometries. In addition, as the upper surface **516** is depressed downwards, the first and second paddles **512**, **514** pivot inwards such that the gap G at the top of the paddles **512**, **514** decreases relative to the gap G at the base of the paddles **512**, **514**.

With reference now to FIGS. **62-65**, the illustrated mask seal **504** comprises a variety of rigidities or variety of degrees of flexibility to further enhance the conformability of the mask seal **504**, which enhanced conformability helps to reduce leaks when the mask configuration **500** is used in positive pressure applications.

An upper portion of the illustrated mask seal **504** comprise a more rigid support region **550** and ballooning or flexing regions **552**. In the illustrated configuration, the support region **550** is more rigid because of thicker cross-sections while the ballooning or flexing regions **552** are less rigid because of thinner cross-sections. Other techniques also can be used to vary the rigidity or flexibility. For example, material choices, material blends or the like can be adjusted to adjust the rigidity or flexibility of different regions of the mask seal **504**. By way of further example, some regions can be supported by the mask base **502** or other components to stiffen the region as desired.

The illustrated more rigid support region **550**, which is best illustrated in FIG. **64**, can be located on a forward-facing surface of the first and second paddles **512**, **514**. The more rigid support region **550** also is a portion that includes the flange **506** of the mask seal **504** that connects to the groove **510** of the mask base **502**. The support regions **550** overlie the ballooning or flexing regions **552** in the illustrated configuration. The illustrated configuration is desired to help control the ballooning and flexing of the ballooning or flexing regions **552** such that the ballooning action can be better directed toward the user.

With continued reference to FIGS. **63-65**, in addition to the support regions **550** and the ballooning or flexing regions **552**, the illustrated mask seal **504** also comprises lower corner reinforcements **554** and a flexing chin region **556**. As with the support regions **550** and the ballooning or flexing regions **552**, the corner reinforcements **554** are stiffer than the flexing chin region **556**. The stiffer corner reinforcements **554** help control and/or direct ballooning of regions of the mask seal **504** while the more flexible chin region **556** can more easily deform to accommodate users having a wide variety of facial geometries.

As illustrated, the lower corner reinforcements **554** extend downward at or just below the vertical location of the upper surface **516** and the lower corner reinforcements wrap inward toward a generally vertical center plane that generally bisects the mask seal **504**. In addition, in the illustrated configuration, the lower corner reinforcements are positioned along the sidewall **528** of the mask seal **504**.

The illustrated chin region **556** is positioned between the lower corner reinforcements. Preferably, the chin region **556** also wraps over at least a portion of the sidewall **528**. Moreover, the flexible chin region **556** preferably extends upward and around at least a portion of the lip **524** that defines the opening **526** into the chamber **520** of the mask seal **504**. In the illustrated configuration, the flexible chin region **556** extends vertically upward to substantially the same extent as the lower corner reinforcements **554**. In this manner, the lower corner reinforcements **554** can reinforce the lateral portions of the flexible chin region **556**.

Further, in the illustrated configuration, the mask seal **504** comprises a forward-facing stiffener panel **560**. The stiffener panel **560** generally encircles a region that will mate with the mask base **502**. Because the stiffener panel **560** encircles the mating region, the connection to the mask base **502** can be made more stable.

In some embodiments, the thicknesses are related to each other as follows: the flexing regions **550**<the chin region **556**<lower corner reinforcements **554**<stiffener panel **556**<support region **550**. In some embodiments, the flexing region **550** has a thickness of between about 0.3 mm and about 1.25 mm, and preferably about 0.8 mm, the chin region **556** has a thickness of about 0.5 mm, the lower corner reinforcements have a thickness of about 1.25 mm, the stiffener panel **560** has a thickness of about 2.0 mm and the support region **550** has a thickness of about 2.5 mm. Preferably, the thicker portions (e.g., the support regions **550**) of the mask seal **504** oppose the portions having the thinner thicknesses (e.g., the flexing regions **552**). In some configurations, at least a portion of the thickest portion (e.g., the support region **550**) overlies at least a portion of the thinnest portion (e.g., the flexing regions **552**). Such configurations enable ballooning in a desired direction (i.e., toward the face of the user). Preferably, a transitional framework **558** connects the various regions **550**, **552**, **554**, **556**.

The thinner cross sections of the flexing region **552** and the chin region **556** provide soft and flexible surfaces that are adapted to contact the face of the user. Advantageously, the thinner cross section of the flexing region **552** allows that shape defined by the valley **522** to stretch, move and deform such that a larger portion of the population can use the same mask. Preferably, the stretching, moving and deforming accommodates a large range of nose widths. Similarly, the thinner cross section of the flexing region **552** allows the shape of the chin cup region of the mask seal **504** to stretch, move and deform. In other words, the thinner cross sections of one or more of the flexing region **552** and the chin region **556** enable the mask seal **504** to conform to a very wide variety of facial geometries.

As described above and with reference again to FIG. **55**, the mask base **502** features a groove **510** that preferably is secured to the flange **506** of the mask seal **504**. In some configurations, the mask base **502** can overlie at least a portion of the thicker stiffener panel **560** and/or at least a portion of the support regions **550**. By overlying those portions of the mask seal **504**, the mask base **502** can reinforce those regions.

With reference still to FIG. **55**, the mask base **502** comprises a central opening **570** that receives a connector **572**. The connector **572** and the central opening **570** can have any suitable configuration, including but not limited to any configuration described within this specification. Only a portion of the connector **572** is shown in FIG. **54**. Other styles of connectors **572** also can be used.

The central opening **570** can be defined by a wall **574** that comprises a contoured inner surface. The contoured surface of the wall **574** can be radiused to receive a ball end **576** of the connector **572**, which can comprise a swiveling elbow. The ball end **576** has a contoured surface that can be snap fit into the contoured surface defined by the wall **574**. The connection between the two contoured surfaces allows the surfaces to slide relatively freely with each other such that the position of the swiveling connector **572** can be easily changed relative to the mask base **502**. In some configurations, the swiveling connector **572** could be configured for rotation or swiveling without having a ball-joint configuration.

The illustrated mask base **502** also comprises one or more strap connections **580** (see FIG. **59**). The strap connections **580** can have any suitable configuration, including but not limited to any structures that connect to clips or the like described within this specification. For example, the illustrated mask base **502** comprises at least two pockets **582**.

The pockets **582** recede into the mask base **502** and protrude rearward from the mask base **502**, as shown in FIG. **56**. The illustrated pockets **582** are formed such that one pocket **582** is formed on each lateral side of the mask base **502**. The pockets **582** can be positioned to be symmetrical relative to the central generally vertical plane, which plane substantially bisects the mask base **502**. In some configurations, as shown in FIG. **56**, the pockets **582** have an enlarged vertical dimension relative to a transverse or lateral dimension.

In the illustrated mask base **502**, the laterally inward portion of each pocket **582** comprises a support wall **584**, which is best shown in FIG. **61**. The support wall **584** is positioned toward the center plane. Each of the pockets **582** is configured to receive a clip such as the clip **252** that is shown in FIG. **22**, for example but without limitation. Once the clip **252** is installed within the pocket **582**, the support wall **584** helps to limit rotation of the clip **252** relative to the pocket **582**. Moreover, the large vertical dimension helps users to locate the pocket **582** with the clip **252** during installation.

With continued reference to FIG. **61**, each of the pockets **582** preferably comprises a tab **586** that can engage with the interlock feature **264** of the associated clip **252**. Other manners of interlocking the clip **252** with the pocket **582** also can be used. Moreover, any other suitable manner of securing the mask base **502** or the mask seal **504** to a headgear assembly **600** (see FIGS. **67-69**) can be used.

With reference now to FIG. **66**, a further mask configuration **500'** shows another style of strap connection but otherwise is the same as the mask configuration **500** shown and described with reference to FIGS. **54-65**. The illustrated mask base **502'** comprises four strap connections **580'**. As shown in FIG. **66**, in the illustrated configuration, the strap connections **580'** have two connections **580'** positioned on each lateral side of the mask configuration **500'**. The illustrated strap connections **580'** comprise loops through which straps **602** from any suitable headgear assembly **600** can be threaded and/or to which the straps **602** can be secured.

With reference to FIGS. **67-69**, in addition to the straps **602**, the headgear assembly **600** also comprises a back strap assembly **604** and a top strap **606**. While the headgear assembly **600** can be used, any other suitable head gear assemblies also can be used, including but not limited to any construction disclosed herein.

The back strap **604** extends around a back of the head of the user at a location generally above a nape of the neck but generally below the occipital protuberance. Accordingly, the back strap **604** preferably arcs upward to reduce or eliminate the likelihood of the back strap **604** contacting the nape of the neck of the user. At a location rearward of the ear of the user, the back strap **604** forks into an upper arm **610** and a lower arm **612**.

The upper arm **610** arcs upward to a location above the ear of the user and then arcs downward to a location generally forward of the ear of the user. The downward arc, when combined with the more rigid material of the upper arm **610**, enables the attachment point between the upper arm **610** and the strap **602** to be lowered such that the strap **602** can provide a desired force vector UFV to the mask configuration **500'**. If the attachment point is too high, then the headgear assembly **600** would provide too much upwards force to the mask configuration **500'**, which would weaken the stability of the mask configuration **500'**. Moreover, as shown in FIG. **68**, the lowered attachment point results in the

strap **602** being positioned generally lower than the eye of the user, which improves the field of vision for the user and improves comfort for the user.

As shown in FIG. **68**, the lower arm **612** extends downward and forward to a location slightly rearward of the ear. When combined with the more rigid material of the lower arm **612**, the location lower than and slightly rearward of the ear results in the lower arm **612** resting relatively flat alongside the upper neck region of the user, which improves comfort for the user. When connected with the lower arm **612**, the strap **602** can provide a desired lower force vector LFV to the mask configuration **500'**.

The straps **602** can be connected to the back strap assembly **604** in any suitable manner. In the illustrated configuration, the straps **602** connect to the upper arm **610** and the lower arm **612** respectively. Preferably, the upper arm **610** and the lower arm **612** are more rigid than the straps **604** such that the arms **610**, **612** generally maintain shape as the headgear assembly **600** is being donned. In some configurations, each of the upper arm **610** and the lower arm **612** supports its own weight. In some configurations, each of the upper arm **610** and the lower arm **612** is structured to be tangle-free during donning. For example, the arms **610**, **612** have sufficient torsion stiffness to reduce the likelihood of twisting when being put on.

Preferably, the straps **602** connect to at least one of the upper arm **610** and the lower arm **612** at a location forward of the ear. Such a configuration helps the user to locate the straps **602** without much difficulty. In addition, the ends of the upper arms **610** and the lower arms **612** can comprise respective slots **614**, **616** such that the straps **602** can be threaded through the slots **614**, **616**. In addition, the straps **602** can comprise an adjustment mechanism **620**, such as a Velcro or buckle configuration. The adjustment mechanism **620** allows a force between the mask seal **504** and the face of the user to be adjusted. Any suitable adjustment mechanism **620** can be used.

With reference to FIG. **68**, the top strap **606** can extend upward and over the top of the head of the user. Preferably, the top strap **606** is flexible and has an adjustable length. The top strap **606** can connect to the upper arms **610** through a slot **622** and reduces the likelihood of the upper arms **610** sliding down the head of the user and contacting the ears of the user. Preferably, the top strap **606** connects to the upper arms **610** at a location generally above the ears of the user.

With reference to FIG. **68**, an angle $\alpha$ defined between the upper force vector UFV and the lower force vector LFV can be within the range of about 25 degrees and about 70 degrees. Preferably, the angle $\alpha$ can be within the range of about 30 degrees and about 60 degrees. More preferably, the angle $\alpha$ can be within the range of about 35 degrees and about 50 degrees. In some embodiments, the angle $\alpha$ can be about 40 degrees.

Advantageously, relatively small adjustments to the tension of the strap **602** that is connected to the upper arm **610** of the headgear assembly **600** (i.e., adjustment to the tension along the upper force vector UFV), when used with the mask configurations **500**, **500'** that include the paddles **512**, **514** can greatly reduce or eliminate leakage into the eye region of the user. In other words, with the paddles **512**, **514** and the upper surface **516**, as the upper strap **602** is tightened, the mask configuration **500'** is pulled upwards against the bottom of the nose of the user, which depresses the upper surface **516** of the mask seal **504**, which in turn causes the paddles **512**, **514** to pivot inwards toward the nose of the user. Thus, the upwardly directed force can help to increase the force provided by the paddles **512**, **514** against the face of the user in the vicinity of the eyes. Early testing has indicated that about 75% of the force required to achieve a desired sealing level is provided by the lower straps **602** with the upper straps **602** being adjustable to minimize or eliminate leakage into the region of the eyes.

With reference now to FIGS. **71** and **72**, a further mask assembly **700** is illustrated in position on a face of a user. The illustrated mask assembly **700** is a combined oral and nasal mask. The illustrated mask assembly **700** is designed to seal under the nose of the user, along a portion of the face extending lateral to the nose, as well as around the mouth of the user.

The mask assembly **700** advantageously does not require contact with the bridge NB of the nose of the user. In the illustrated configuration, the mask assembly **700** does not extend over the bridge NB of the nose of the user. More particularly, the illustrated mask assembly **700** does not contact the bridge of the nose of the user. Even more particularly, the illustrated assembly **700** does not contact a forward facing portion of the bridge of the nose of the user. In some configurations, the assembly **700** does not contact the face in a region vertically higher than a generally horizontal plane LE extending along the lower edges of the eyes of the user.

In the illustrated configuration, the mask assembly **700** does not extend over the tip NT of the nose of the user. In some configurations, the illustrated mask assembly **700** preferably does not enshroud the tip NT of the nose of the user. In some configurations, the tip NT of the nose of the user extends over the adjoining portion of the mask assembly **700**. In some configurations, the mask assembly **700** covers the tip of the nose. In some configurations, the seal of the mask assembly covers the tip of the nose.

As illustrated, the mask assembly **700** preferably is adapted to extend around and seal over the wing NW or alar of the nose, which flares out to form a rounded eminence around the nostril. The illustrated mask assembly **700** is adapted to seal around the surfaces that define the opening to the nostril, including the fleshy external end of the nasal septum, sometimes called the columella. In some configurations, the mask assembly **700** is adapted to extend upwardly to seal along at least a portion of the left and right dorsal side walls NDS of the nose of the user. In some configurations, the mask assembly **700** is adapted to extend upwardly along at least a portion of the left and right dorsal side walls NDS without extending upwardly to the region of the bridge NB of the nose of the user.

As illustrated, the mask assembly **700** comprises a mask base **702**, a mask seal **704** attached to the mask base **702** and a connector **706** also attached to the mask base **702**. The connector **706** can be connected to the base **702** in any suitable manner, including but not limited to any manner discussed elsewhere within this application. For example, but without limitation, the connector **706** can be connected to the base **702** such that the connector **706** can swivel, pivot and rotate relative to the base **702**. In some configurations, the connector **706** can define a portion of a ball joint with the mask base **702**, for example but without limitation, defining the other portion. The ball joint can have any suitable configuration and can be configured in accordance with the descriptions of ball and socket arrangements discussed elsewhere within this application. The connector **706** facilitates connection to a supply conduit or the like for the supply of pressurized breathing gases. Any suitable connector **706** can be used.

In the illustrated configuration, the connector **706** comprises an elbow, such as a polycarbonate elbow for example

but without limitation, that contains bias flow holes **710**. The bias flow holes **710** are a collection of orifices that are configured to circulate air and to reduce the likelihood of rebreathing expired carbon dioxide by the user. While the bias flow holes **710** are shown exclusively on the connector **706**, in some configurations, the bias flow holes **710** can be provided on the mask base **702**, on the mask seal **704** or on any combination of the connector **706**, the base **702** and the seal **704**. The bias flow holes **710** can have any suitable cross-section and can be cylindrical, hour-glass shaped, tapered in either direction, fully or partially tapered, fully or partially cylindrical, contoured to vary in cross-section or the like.

With reference to FIG. **73**, the mask base **702** will be described in greater detail. The mask base **702** provides a support structure of sorts for the mask assembly **700** in general and for the mask seal **704** more specifically. The mask base **702** can be formed from any suitable material. In some configurations, the mask base **702** is formed from a fairly rigid material. In some configurations, the mask base **702** is formed from a plastic material, such as a polycarbonate material. In some configurations, as with the configuration of FIG. **13** above, the mask assembly **700** can comprises a mask seal that includes a mask seal clip that is separate from but attachable to a mask base. In such a configuration, the mask seal clip would connect the mask seal **704** to the mask base **702**. In such configurations, the mask seal and mask seal clip can be formed separately and secured together or the mask seal and the mask seal clip can be integrated into a single component. In some configurations, the mask seal can be overmolded onto the mask seal clip and, in some configurations, the mask seal can be overmolded directly onto the mask base.

With reference to FIGS. **73** and **74**, in the illustrated configuration, the mask base **702** sweeps rearward from a central portion **712** with a pair of wings **714**. As illustrated, the wings **714** can extend rearward and upward relative to the central portion **712** of the mask base **702**. Accordingly, the illustrated wings **714** include upwardly projecting portions **716**. The mask base **702** generally, and the upwardly projecting portions **716** of the wings **714** as an example, can provide reinforcement to the lateral portions of the mask seal **704**.

The central portion **712** can have a vertical expanse that is lower than the height of the upwardly projecting portions **716** of the wings **714**. Thus, with reference to FIG. **73**, when viewed from the front, the mask base **702** comprises an edge having a generally M-shaped appearance. In addition, when viewed from the front, an upper edge of a central area of the mask base **702** comprises a generally U-shaped appearance. By incorporating the recessed central portion **712** between the pair of wings **714**, the mask base **702** can provide desired support to the mask seal **704** while providing adequate clearance for the nose of the user.

The mask base **702** and the mask seal **704** can be connected in any suitable manner. In the configuration illustrated in FIG. **75**, the mask base **702** comprises a generally circumscribing flange **720** and the mask seal **704** can be overmolded onto the flange **720** of the mask base **702**. Any other suitable technique can be used to form the junction between the mask seal **704** and the mask base **702**.

In some configurations, the mask seal **704** can be formed to allow removal from the mask base **702**. For example, the mask seal **704** can include a groove and the mask base **702** can include a flange, or any other cooperating structures, such that the mask seal **704** can be removably connected to the mask base **702**.

As shown in FIG. **75**, the illustrated mask seal **704** comprises a thickened region **721**, which is thicker in cross-section, adjacent the juncture with the mask base **702**. Such a configuration improves service life of the mask seal **704** as well as improves the integrity of the connection between the mask seal **704** and the mask base **702**. In some configurations, the thickest region of the mask seal **704** is the thickened region **721**.

The mask seal **704** is designed to seal against the face of the user. The mask seal **704** preferably is formed of a soft material, such as silicone, for example but without limitation. In some configurations, at least portions of the mask seal **704** can be textured to improve comfort to the user. For example, in some configurations, at least portions of the mold used to form the illustrated mask seal **704** can be bead blasted to provide a surface texture in at least the regions of the mask seal **704** that will contact the skin of the user. Other techniques for texturing one or more surface of the mask seal **704** can be used.

As shown in FIG. **76**, the illustrated mask seal **704** comprises an oral-nasal mask seal and, therefore, comprises at least one oral opening **722** and at least one nasal opening **724**. In some configurations, the mask seal **704** can comprise a combined oral-nasal opening. In some configurations, the mask seal **704** can comprise more than one nasal opening **724**. In some configurations, the mask seal **704** can comprise nasal openings **724** defined within superstructures, such as pillows, prongs or the like.

The at least one oral opening **722** and the at least one nasal opening **724** preferably communicate with a single chamber **725** that is defined within the mask assembly **700**. The chamber **725** of the illustrated mask assembly **700** is at least partially defined by the mask base **702** and the mask seal **704**. The at least one oral opening **722** is substantially opposed to the opening **728** that receives the connector **706**. The at least one nasal opening **724** can be vertically above the at least one oral opening **722**. The at least one nasal opening **724** can be positioned between the opening **728** for the connector **706** and the at least one oral opening **722**. The at least one oral opening can have an axis OA that is inclined relative to vertical and that generally extends through the opening **728** for the connector **706**.

With reference again to FIG. **73**, the mask seal **704** preferably comprises a pair of paddles **726** that extend upward above an upper surface **730**. The paddles **726** are configured to extend upward alongside, and in some configurations above, the nares. In some configurations, the paddles **726** each comprise an air pocket that is in direct fluid communication with the air path through the mask assembly from the connector to the at least one nasal opening and the at least one oral opening. Preferably, as shown in FIG. **76**, the upper surface **730** is hammocked between inner portions **733** of the paddles **726**. In such a configuration, downward pressure applied to the upper surface **730** can cause the paddles **726** to pivot inwardly at the top. Accordingly, increasing force between the nose of the user and the upper surface **730** can result in increasing sealing force being applied between the sides of the nose of the user and the paddles **726**. The degree to which the pivoting action results in increasing force can be varied by construction. In other words, longer paddles **726** display increased degrees of pivoting compared to shorter paddles **726**. On the other hand, shorter paddles **726** are capable of accommodating greater variations in nasal geometries compared to longer paddles **726** and result in the mask assembly **700** being easier to put onto the face.

With reference to FIG. **75**, four different planes HP**1**, HP**2**, HP**3**, HP**4** are illustrated. The planes HP**1**, HP**2**, HP**3**, HP**4** are shown extending generally parallel to each other and extending generally normal to a plane RP defined along a rearmost region **734** of the mask seal **704** (e.g., the rearmost region **734** could correspond to a plane such as a table top that would support the mask seal **704** if the mask seal **704** were resting on a table). In some configurations, an angle is defined between at least one of the four planes HP**1**, HP**2**, HP**3**, HP**4** and the rear plane RP that is between about 80 degrees and 100 degrees. In some configurations, the angle R is between about 85 degrees and about 95 degrees. In the illustrated configuration, the angle R is about 90 degrees.

As illustrated, the first plane HP**1** extends through a forwardmost region or lowermost region of the upper portion of the mask base **702**, the second plane HP**2** extends through uppermost portion of the upper surface **730** of the mask seal **704** the third plane HP**3** extends along the uppermost portion of the paddles **726**, and the fourth plane HP**4** extends along a lowermost portion of a face contacting surface of the mask seal **704**. In the illustrated configuration, the second plane HP**2** also extends through the uppermost portions of the upwardly projecting portions **716** of the wings **714**. In some configurations, the upwardly projecting portions **716** may extend above the upper surface **730** and, in some configurations, the upwardly projecting portions **716** of the mask base **702** may not extend as far upward as the upper surface **730**. In the illustrated configurations, the planes have the following order from top to bottom: HP**3**, HP**2**, HP**1** and HP**4**. Preferably, HP**2** is positioned between HP**1** and HP**3**. In some configurations, the distance between the plane HP**2** and the plane HP**3** is between about 10 mm and about 25 mm. In some configurations, the distance between the plane HP**2** and the plane HP**3** is between about 15 mm and about 22 mm. In some configurations, the distance between the plane HP**2** and the plane HP**3** is about 17 mm.

The paddles **726** and the upper surface **730** define a valley **732**. The valley **732** can be adapted to receive the tip of the nose of the user, as shown in FIGS. **71** and **72**. The valley **732** in the illustrated configuration is open in an upwardly direction. In other words, the region of the illustrated mask assembly **700** that accommodates the nose is not enclosed from the top and is configured to rest under the nose. In the illustrated configuration, the valley is positioned vertically higher than the plane HP**1**, which extends through the highest portion of the central portion **712** of the mask base **702**. In the illustrated configuration, the valley **732** can extend downward into the region of the second plane HP**2**, which extends along the uppermost portions of the mask base **702**. In some configurations, the valley **732** extends downward to a location just vertically lower than the second plane HP**2**. In some configurations, the valley **732** extends downward to a location just vertically higher than the second plane HP**2**. In some configurations, the distance between the valley and the second plane HP**2** is between about −5 mm and about 5 mm.

With reference to FIG. **75**, the rearmost portion **734** of the mask seal **704** preferably comprises at least two protrusions **736**. The protrusions **736** can be integrally formed with the surrounding portions of the mask seal **704** or can be separate components that are secured to the surrounding portions of the mask seal **704**. In the illustrated configuration, the protrusions **736** are formed in an integrated molding with the surrounding portions of the mask seal **704**, which improves the service life of the mask seal and simplifies manufacture. In some configurations, the protrusions **736** can be formed of a softer material, such as a softer grade of silicone, for comfort. In some configurations, the protrusions **736** can be formed to have a thinner cross-section. In the illustrated configuration, however, the protrusions have a cross-sectional thickness that is substantially consistent with the surrounding portions of the mask seal **704**. In some configurations, the protrusions **736** can be formed of a harder material, such as a harder grade of silicone, for better sealing. In some configurations, the protrusions **736** can be formed to have a thicker cross-section than the surrounding region, which increases the perceived hardness or rigidity.

The protrusions **736** are configured to improve sealing with the face of the user by helping to fill pockets generally encountered adjacent to the nose on the face (e.g., recesses defined by the maxilla just below the infraorbital foramen) and, as such, the protrusions **736** form means for sealing with facial contours in a region adjacent a nose of a user. The protrusions **736** extend rearward (i.e., toward the user) from the surrounding portions of the mask seal **704**. The protrusions **736** can have a height (i.e., can extend away from the immediately surrounding portions by a distance) of between about 0 mm and about 5 mm relative to the surrounding portions of the mask seal **704**. In some configurations, the protrusions **736** can have a height of between about 1.0 mm and about 3.0 mm. In some configurations, the protrusions **736** can have a height of about 2.0 mm.

At least a portion of each of the protrusions **736** can be positioned vertically between the plane HP**2** and the plane HP**1**. In some configurations, at least a portion of the protrusions **736** is positioned vertically between the upper surface **730** (at least the uppermost extent) and the uppermost portion of the oral opening **722**. In some configurations, each of the protrusions **736** has one or more peak **738** and the peak **738** is positioned vertically between the upper surface **730** (at least the uppermost extent) and the uppermost portion of the oral opening **722**. In some configurations, the peak **738** is positioned vertically between a portion of the nasal opening **724** and a portion of the oral opening **722**. In some configurations, the peak **738** is positioned closer to the nasal opening **724** than to the oral opening **722**.

The illustrated mask seal **704** is designed to anchor on two locations of the face of the user: under the nose and below the lower lip. In some configurations, the mask seal **704** is configured to anchor below the nose and between the lower lip and the chin. In the illustrated configuration, the mask seal **704** is designed to anchor proximate the second and fourth planes HP**2**, HP**4**. In some configurations, both anchor points are positioned between the second and fourth planes HP**2**, HP**4**. In some configurations, an upper anchor point AP**1** and a lower anchor point AP**2** are vertically separated from each other by a gap of between about 40 mm and about 65 mm. In some configurations, the upper anchor point AP**1** and the lower anchor point AP**2** are separated by a gap of less than about 65 mm. In some configurations, the upper anchor point AP**1** and the lower anchor point AP**2** are separated by less than about 60 mm. In the illustrated configuration, the mask seal **704** also extends above the second plane HP**2** with the paddles **726**. In some configurations, the mask is designed to seal off airflow through the mask assembly **700** by sealing against the face of the user at locations higher than all of the anchor points. Thus, at least some sealing portions of the illustrated mask seal **704** are positioned vertically higher than the anchor points.

The mask seal **704** can have different sizes for use with faces having different sizes and/or geometries. In some configurations, different portions of the mask seal **704** can be

sized and configured to accommodate users having different sizes and/or geometries. For example, portions of the mask seal **704** can extend upward to different degrees for different users. With reference to FIG. **75**, a sloping plane SP**2** that extends generally parallel to the plane SP**1** can extend along an outer edge of the paddles **726**. In some configurations, the sloping plane SP**2** can be spaced apart from the plane SP**1** by between about 10 mm and about 30 mm. In some configurations, the sloping plane SP**2** can be spaced apart from the plane SP**1** by between about 15 mm and about 25 mm. In some configurations, the sloping plane SP**2** can be spaced apart from the plane SP**1** by about 21 mm. The distance between the planes is related to the vertical extent of contact with the face. In some configurations, a single size mask seal **704** can be provided for all face sizes and geometries.

In some configurations, the mask seal **704** comprises multiple components formed of differing materials and/or differing shore hardnesses. For example, in some configurations, some components of the mask seal **704** can be formed of silicone, while other components are formed of foam, gels, cloth or other suitably compliant materials. For example, in the illustrated configuration, the mask seal **704** comprises a nasal pad insert **740**, which is formed from a differing materials and/or differing shore hardness.

The nasal pad insert **740** is shown exploded from the mask seal **704** in FIGS. **77** and **78**. The nasal pad insert **740** can be formed from a different grade of silicone relative to other portions of the mask seal **704**. In some configurations, the nasal pad insert **740** can be formed from a softer grade of silicone relative to other face contacting portions of the mask seal **704**.

Moreover, in some configurations, the nasal pad insert **740** have a portion that is thicker in cross-section than any other face-contacting portion of the mask seal **704**. In some configurations, the nasal pad insert **740** has a maximum thickness that is thicker than any portion of the mask seal **704** that surrounds the nasal pad insert **740**. In some configurations, the nasal pad inset **740** has a minimum thickness that is thicker than any portion of the mask seal **704** that surrounds the nasal pad insert. In some configurations, the nasal pad insert **740** has a maximum thickness that is thicker than any other portion of the mask seal **704**. With regard to thickness, as thickness increases, a perceived hardness is believed to increase even if the nasal pad inset **740** is formed of a softer grade silicone. Thus, in some configurations, the face contacting portions of the nasal pad insert **740** have a thickness of between about 1.0 mm and about 8.0 mm, or between about 2.0 mm and about 5.0 mm, especially when formed from silicone. In some configurations, the nasal pad insert has a region with a thinner cross-section for comfort. In some configurations, at least a portion of the nasal pad insert can have a thickness that is sufficiently small to allow inflation of that portion of the nasal pad insert. In some configurations, the nasal pad insert can have at least a portion that is less than about 0.3 mm thick. In some configurations, the nasal pad insert can have at least a portion that is less than about 0.2 mm thick. In some configurations, the nasal pad insert comprises variable thickness over at least a portion of the nasal pad insert.

The mask seal **704** can comprise a pad support region **742** that connects with the nasal pad insert **740**. The pad support region **742** can be recessed or not. In the illustrated configuration, the pad support region **742** is recessed to help orient, locate and/or secure the nasal pad insert **740** in position.

The nasal pad insert **740** can be secured to the mask seal **704** in any suitable manner. In the illustrated configuration, the nasal pad insert **740** can be secured to the pad support region **742** in any suitable manner. For example, the nasal pad insert **740** can be comolded, overmolded, adhered, cohered or mechanically coupled to the mask seal, or a portion of the mask seal **704** such as the pad support region **742**.

With reference to FIG. **78**, the mask seal **704** and the nasal pad insert **740** can include features that key the location of the nasal pad insert **740** to the mask nasal seal **704**. For example, at least one keying recess **744** can be provided along a portion of the pad support region **742**, for example but without limitation. In the illustrated configuration, three recesses **744** are provided that are formed in a generally triangular pattern. The illustrated generally triangular pattern is arranged such that the pattern generally overlies the at least one nasal opening **724**. In some configurations, the at least one nasal opening **724** is centrally positioned within the pattern. With reference to FIG. **77**, the nasal pad insert **740** can comprises protrusions **746** that mate with the recesses **744**. In some configurations, the protrusions **746** can comprise posts. The protrusions **744** can be integrally formed with the nasal pad insert **740** or can be formed separately and attached to the nasal pad insert **740**. Any other suitable mating or keying features can be used to locate the nasal pad insert **740** relative to the mask seal **704**.

In the illustrated configuration, the recess **744** are closed on the bottom such that the nasal pad insert **740** need not fully seal any openings. In other words, if the recesses comprised an opening, then the nasal pad insert **740** would have to seal over those openings to reduce the likelihood of leaks. In some configurations, however, the recesses **744** can comprise an opening. In some such configurations, the nasal pad insert **740** can be secured in position by sandwiching at least a portion of the mask seal **704** between the nasal pad insert **740** and a member on the other side of the mask seal **704** relative to the nasal pad insert **740**. For example, the member on the other side can be secured to the protrusions **744**. In any event, the interface between the nasal pad insert **740** and the mask seal **704** preferably is sealed. More particularly, in the region surrounding any opening, such as the nasal opening **724**, the interface between the nasal pad insert **740** and the mask seal **704** preferably is sealed.

With reference again to FIG. **78**, the nasal pad insert **740** preferably is sized, shaped and configured to improve comfort of the user. For example but without limitation, the illustrated nasal pad insert **740** can comprise a sculpted axially central portion **750**. The sculpted axially central portion **750** is recessed below the laterally outward edges **752**. By sculpting the axially central portion **750** such that it is recessed, the nasal pad insert **740** is adapted to better cradle the more sensitive septum region of the user. In some configurations, the sculpting of the recessed region is predominately forward of the at least one nasal opening **724**. In some configurations, the central portion **750** has a more pronounced recess in the portion forward of the at least one opening **724** compared to the portion rearward of the at least one opening. In some configurations, the recessed central portion **750** has a reduced thickness in the recessed regions.

In some configurations, the nasal pad insert **740** can be removable or replaceable. In some configurations, the nasal pad insert **740** can be replaceable to alter the mask assembly **700** to include a single nasal opening, a pair of nasal openings, more than a pair of nasal openings, a single or multiple nasal prongs, a single or multiple nasal pillows or any other suitable interface configuration. In some configu-

rations, a kit can be provided that includes a mask base, a mask seal and a plurality of nasal pad inserts to allow experimentation to determine the most desired or effective configuration for any particular user. In some configurations, the nasal pad insert **740** is not removable or replaceable without damaging the mask seal **704** yet different nasal pad inserts **704** (e.g., any of the configurations described in the preceding sentence) can be provided to simply and easily vary the style of interface while using many of the same underlying components. For example, while a prongless and pillowless configuration may be desired by some for comfort, a prong can improve the ability to properly locate the mask assembly **700** on the face of the user while a pillow can further improve the ability to both locate the mask assembly **700** on the face of the user while also sealing in the nare of the user.

With reference to FIG. **75**, a nose contacting portion **754** (which can include or comprise the nasal pad insert **740**) that generally or substantially encircles the nasal opening **724** slopes downward in a rearward direction from the second plane HP**2** to the first plane HP**1**. In some configurations, an angle γ is defined between a nose contacting plane SP**1** and the plane HP**1**. In some configurations, the angle γ is between about 5 degrees and about 50 degrees. In some configurations, the angle γ is between about 15 degrees and about 40 degrees. In one configuration, the angle γ is about 30 degrees. In some configurations, it is possible for the nose contacting portion that generally or substantially encircles the nasal opening to be generally normal to the rear plane, to be generally horizontal in use, or to slope in the opposite direction from that shown in FIG. **75**.

A second sloping plane SP**2** extends generally parallel to the first sloping plane SP**1**. In some configurations, the second sloping plane SP**2** and the first sloping plane SP**1** are separated by a distance of between about 10 mm and about 30 mm. In some configurations, the second sloping plane SP**2** and the first sloping plane SP**1** are separated by a distance of between about 15 mm and about 25 mm. In some configurations, the second sloping plane SP**2** and the first sloping plane SP**1** are separated by about 21 mm. In such a manner, the vertical and horizontal extents of the paddles **726** can be determined and the appropriate size paddles can be derived for a particular facial geometry.

The illustrated mask seal **704** of the mask assembly **700** comprises a fairly complex range and configuration of thicknesses. The thicknesses are varied to take advantage of different characteristics in different regions of the illustrated mask seal **704**. For example, with reference to FIGS. **80** and **82**, the mask seal **704** illustrates a connecting region **760** that generally corresponds to the thickened portion **721**. The connecting region **760** generally encircles an opening that receives the mask base **702**. The connecting region **760** can be the thickest portion of the seal member **704** in some configurations. The connecting region **760** joins the mask seal **704** to the mask base **702**. Accordingly, the connecting region **760** preferably has sufficient thickness to provide sufficient rigidity for connection and to provide sufficient thickness for durability. In some configurations, the thickness of the connecting region is between about 2 mm and about 5 mm. In the illustrated configuration, the thickness is between about 3 and about 3.5 mm.

To reduce the incidence of wrinkling of the face contacting regions of the mask seal **704** during use, it has been found that the outer peripheral portions **762**, which are generally adjacent to the face contacting portions of the mask seal **704**, should be fairly rigid. With reference to FIGS. **81** and **82**, the illustrated lower outer peripheral portions **762** extend along the generally vertically extending portions on the rear of the mask seal **704** and wrap slightly inward at a bottom of the rear of the mask seal **704**. In addition, the lower outer peripheral portions **762** wrap from a rear facing side of the mask seal around to at least a portion of a laterally facing side of the mask seal **704**. In some configurations, the thickness of the outer peripheral portions can be between about 1.0 mm and about 1.5 mm. In the illustrated configuration, the outer peripheral portions **762** have a thickness less than that of the connecting region **760**, and preferably have a thickness of about 1.25 mm. The upper outer peripheral portions **763** can be separated from the lower peripheral portions **762** and can have a different thickness. In some configurations, the upper outer peripheral portions **763** have a smaller thickness than the lower outer peripheral portions **762**. In some configurations, the upper outer peripheral portions **763** can have a thickness of between about 0.5 mm and about 1.25 mm. In the illustrated configuration, the upper outer peripheral portions **763** can have a thickness of about 0.8 mm.

With reference to FIG. **81**, the illustrated mask seal **704** also has protruding portions **764**, which generally correspond to the protrusions **736**, including the peaks **738**. The protruding portions **764**, as discussed above, can be the same thickness or can be thicker or thinner than the surrounding portions. In the illustrated configuration, the protruding portions **764** have a thickness that is less than the outer peripheral portions **762**. In some configurations, the protruding portions have a thickness of between about 0.2 mm and about 1.5 mm. In the illustrated configuration, the protruding portion has a thickness of about 0.7 mm.

With reference to FIG. **81**, the illustrated mask seal **704** also comprises an oral region **766**. The oral region **766** in the illustrated mask seal **704** extends along at least a portion of the oral opening **722**. In the illustrated configuration, the oral region **766** extends along at least a lower portion of the oral opening **722**. In the illustrated configuration, the oral region **766** extends along at least the sides and the bottom of the oral opening **722**. The oral region **766** provides a softer region that contacts the face. Accordingly, the oral region **766** can have a thinner cross-section. For example, in some configurations, the oral region **766** has a thickness less than that of the outer peripheral portions **762** and, in some configurations, has a thickness of between about 0.2 mm and about 1.0 mm. In the illustrated configuration, the thickness of the oral region is about 0.5 mm.

With reference to FIGS. **80** and **81**, a nasal region **768** can wrap from the rear of the mask seal **704** toward the front. The nasal region **768** can include or underlie the nasal pad insert **740**. Preferably, however, the nasal region **768** underlies the nasal pad insert **740** and includes the pad support region **742**. Given a desire to gently seal against the lower portion of the nose, the nasal region **768** in the illustrated configuration has a fairly small thickness. In some configurations, the nasal region **768** has the smallest thickness of the mask seal **704**. In the illustrated configuration, the nasal region **768** has a smaller thickness than the oral region **766**. In some configurations, the thickness of the nasal region **768** is between about 0.1 mm and about 0.5 mm. In some configurations, the thickness of the nasal region **768** is about 0.3 mm.

With continued reference to FIGS. **80-82**, a transitional portion **770** having a transitioning thickness can be defined between the nasal region **768** and the outer peripheral portions **762**, between the nasal region **768** and the connecting region **760**, between the nasal region **768** and the oral region **766**, between the oral region **766** and the outer

peripheral portions **764**, between the oral region **766** and the connecting region **760**, between the outer peripheral portions **764** and the connecting region **760** and the like. In the illustrated configuration, the protruding portions **764** are generally surrounded by the transitional portion **770**. Other configurations also are possible.

With reference to FIG. **81** and FIGS. **83-88**, various sections through the mask seal **704** shown in FIG. **81** are presented. These sections help to illustrate the various transitions occurring within the mask seal **704** that is illustrated in FIGS. **80-82**.

With reference to FIGS. **87** and **88**, the paddles as shown in cross section. As illustrated therein, the paddles **726** can have a relatively thin cross section. In some configurations, the paddles can be formed at least in part with a cross section sufficiently thin to allow controlled inflation or controlled expansion at typical treatment pressures (e.g., about 3 to about 25 cm H2O). In some configurations, such a thickness might be lower than about 0.3 mm or lower than about 0.2 mm depending upon the material used. In some configurations, the portion of the paddles **726** that will contact the face comprises a generally constant cross-section.

In one configuration, the paddles have a thickened cross-section along the ridge that joins the laterally outer portion and the laterally inner portion. Thus, the paddles **726** can have a thicker section at a radiused portion that joins the inner portion and the outer portion. In some configurations, that thickened region can be between about 0.3 mm and about 1.25 mm. In some configurations, that thickened region is about 0.5 mm or about 1.0 mm. That thickened region helps to reduce the likelihood of wrinkling or creasing of the face contacting portions of the paddles **726** during use while allowing the laterally inner portions to be as thin as desired.

In some configurations, the paddles **726** comprise a thicker cross-section on the laterally outer portions with a thinner cross-section on the laterally inner portions. As shown in FIG. **87**, the laterally outside wall **772** of the paddles **726** can comprise a thicker cross-section that the remained of the paddle **726** at the same elevation. The thicker portion of the paddle **726** provides reinforcement to support the shape of the paddle **726** and to control the shape of the paddle **726** in use. Other techniques also can be used; however, using the thicker cross section has the advantage of providing a sufficiently soft structure with sufficient reinforcement for structural performance.

With reference now to FIGS. **89-109**, several styles of headgear that can be used with the mask assembly **700**, or with any of the mask assemblies described herein, will be described. With reference to FIG. **71**, the mask assembly **700** preferably is secured using headgear such that a force vector is generated on the mask assembly **700** that is upward, rearward, or a combination of upward and rearward. Because the mask assembly **700** is configured to anchor under the nose, and because a sealing force of the paddles **726** increases with upward pressure of the mask assembly **700** against to the bottom of the nose, the mask assembly is quite unique in the force vector most suited to the mask assembly **700**. Nevertheless, in some configurations, the mask assembly can be used with headgear generating other directions of force vectors.

As will be apparent with reference to FIGS. **89-109**, the illustrated headgear depicted in those figures advantageously does not feature a T-piece or any other component that extends upward over the bridge of the nose (or higher) from the associated mask assembly **700**. In some configurations, neither the mask assembly nor the headgear assembly will contact the face of the user vertically higher than the eyes or horizontally between the outer edges of the eyes. Because of the construction of the mask assembly **700**, the headgear used with the mask assembly need not contact the facial region of the use at all. In some configurations, the headgear does not connect the face of the user. In some configurations, the mask assembly **700** anchors onto the face in locations below the bridge of the nose. In some configurations, the mask assembly **700** anchors onto the face in locations lower than the lowermost surfaces of the nose. In some configurations, the mask assembly **700** only anchors onto the face in locations lower than the lowermost surfaces of the nose and the headgear assembly does not contact the face of the user. In some configurations, the mask assembly **700** anchors on the mandible and the nose along the maxilla and the headgear does not contact the face in a region vertically higher than the lowermost portion of the nose. In some configurations, the mask assembly **700** anchors on the mandible and the nose along the maxilla and the headgear does not contact the face in a region vertically higher than the bottom of the ear. In some configurations, the mask assembly **700** anchors on the mandible and the nose along the maxilla and the headgear does not contact the face in a region vertically higher than the eyes. In some configurations, the mask assembly **700** anchors in at least two locations vertically lower than the nose and the headgear does not contact the face in a region defined directly vertically above the mask assembly **700**. In some configurations, the mask assembly **700** is secured against upward movement by a facial feature of the user and the headgear assembly applies an upwardly directed force to the mask assembly **700**. In some such configurations, the facial feature is the lower portion of the nose. In some such configurations, the lower portion of the nose includes the nasal septum.

With reference initially to FIGS. **89-91**, a headgear assembly **800** is shown connected to the mask assembly **700**. The headgear assembly **800** generally comprises a rear strap **802** and a top strap **804**. The rear strap **802** and/or the top strap **804** can be adjustable in length. In some configurations, at least one of the rear strap **802** and the top strap **804** can be fixed in length. In the illustrated configuration, the rear strap **802** is configured to pass around the back of the head at a location generally below the ear of the user while the top strap is configured to pass over the top of the head at a location generally forward of the ear. Other locations and configurations are possible. Moreover, in the illustrated configuration, the rear strap **802** and the top strap **804** can be integrally formed. In some configurations, the straps **802**, **804** are separately formed and attached together using buckles or another other suitable configuration.

With continued reference to FIGS. **89-91**, an extension **806** connects to one or both of the rear strap **802** and the top strap **804**. Two arms **808** connect the extension **806** to the mask assembly **700** in the illustrated configuration. In some configurations, the two arms **808** are formed from a single strap. In some configurations, the two arms **808** are formed from two straps. Advantageously, the two arms **808** in the illustrated configuration can be separately adjusted in length and, as such, preferably are formed from two separate straps. Nevertheless, it is possible to have both arms **808** formed from a single component with each of the arms **808** being separately adjustable. By being separately adjustable, the arms **808** enable the illustrated headgear assembly **800** to adjust the angle of the mask. In other words, the mask assembly **700** can be tilted into a desired angular orientation using the arms **808**. In addition, because the arms **808** are

separately adjustable, the fit of the lower portion of the seal **704** can be adjusted separately from the fit of the upper portion of the seal **704**.

With reference now to FIGS. **92-94**, another headgear assembly **810** is illustrated therein. The illustrated headgear assembly **810** comprises an upper portion **812** and a lower portion **814**. While the illustrated upper portion **812** is separate from the lower portion **814**, in some configurations, the upper portion **812** and the lower portion **814** can be joined together. For example, in some configurations, straps can connect the upper and lower portions **812**, **814** to form a single integrated headgear assembly **810**. In some such configurations, the interconnecting straps can be positioned such that they would be positioned rearward of the ears or just forward of the ears. Other configurations are possible.

In the illustrated configuration, the lower portion **814** comprises a member **816** that connects to the mask assembly **700** in any suitable manner. In some configurations, the member **816** connects with hooks, snaps or other suitable types of connectors. In some configurations, the member **816** extends through loops and is secured back upon itself. In the illustrated configuration, the member **816** is a single component. In some configurations, the member **816** may comprise multiple components. Preferably, the member **816** passes around the back of the head at a location that is generally below the ear of the user.

With reference still to FIGS. **92-94**, the upper portion **812** generally comprises a member **820** and a top member **822**. The member **820** and/or the top member **822** can be adjustable in length. In some configurations, at least one of the member **820** and the top member **822** can be fixed in length. In the illustrated configuration, the member **820** is configured to pass around the back of the head at a location that would generally intersect at least a portion of the ear of the user while the top member **822** is configured to pass over the top of the head at a location that also would generally intersect vertically over the ear. As illustrated, the member **820** can have a portion **824** that is configured to wrap up and over the ear. Other locations and configurations are possible. Moreover, in the illustrated configuration, the member **820** and the top member **822** can be integrally formed and can meet at a location generally above the ear of the user. In some configurations, the member **820**, **822** are separately formed and attached together using buckles or another other suitable configuration.

The headgear assembly **810** enables separate adjustment of the upper portion **812** and the lower portion **814**. As described above, by being separately adjustable, the upper portion **812** and the lower portion **814** enable the illustrated headgear assembly **810** to adjust the angle of the mask assembly **700** as shown in FIG. **93**. In other words, the mask assembly **700** can be tilted into a desired angular orientation using the separately adjustable upper and lower portions **812**, **814**. In addition, because the upper and lower portions **812**, **814** are separately adjustable, the fit of the lower portion of the seal **704** can be adjusted separately from the fit of the upper portion of the seal **704**.

With reference now to FIGS. **95-97**, a further headgear assembly **830** is illustrated. The headgear assembly **830** is shown connected to the mask assembly **700**. The illustrated headgear assembly **830** comprises an upper portion **832** and a lower portion **834**. As shown in FIG. **97**, at least one interconnecting member **836** connects the upper portion **832** to the lower portion **834**. The at least one interconnecting member **836** in the illustrated configuration comprises a back panel that joins the upper portion **832** to the lower portion **834** in the region of the back of the head of the user. The illustrated interconnecting member **836** is generally hour-glass in shape. Other configurations are possible.

In the illustrated configuration, the lower portion **834** comprises at least one member **838** that connects to the mask assembly **700** in any suitable manner. In some configurations, the at least one member **838** connects with hooks, snaps or other suitable types of connectors. In some configurations, the at least one member **838** extends through loops and is secured back upon itself. In the illustrated configuration, the at least one member **838** is a single component. In some configurations, the at least one member **838** may comprise multiple components. For example, two components may extend forward from the interconnecting member **836**. Preferably, the at least one member **838** extends from the mask assembly **700** toward the back of the head at a location that is generally below the ear of the user.

With reference still to FIGS. **95-97**, the upper portion **832** generally comprises at least one member **840** and a top member **842**. The at least one member **840** and/or the top member **842** can be adjustable in length. In some configurations, at least one of the at least one member **840** and the top member **842** can be fixed in length. In the illustrated configuration, the at least one member **840** is configured to pass around the back of the head at a location that would generally pass directly from the mask assembly **700** along a location vertically above the ear of the user to the back of the head while the top member **842** is configured to pass over the top of the head at a location that would generally intersect vertically over the ear. Other locations and configurations are possible. Moreover, in the illustrated configuration, the member **840** and the top member **842** can be integrally formed and can meet at a location generally above the ear of the user. In some configurations, the member **840**, **842** are separately formed and attached together using buckles or another other suitable configuration.

The headgear assembly **830** enables separate adjustment of the upper portion **832** and the lower portion **834**. As described above, by being separately adjustable, the upper portion **832** and the lower portion **834** enable the illustrated headgear assembly **830** to adjust the angle of the mask assembly **700**. In other words, the mask assembly **700** can be tilted into a desired angular orientation using the separately adjustable upper and lower portions **832**, **834**. In addition, because the upper and lower portions **832**, **834** are separately adjustable, the fit of the lower portion of the seal **704** can be adjusted separately from the fit of the upper portion of the seal **704**.

With reference now to FIG. **98-100**, a further headgear assembly **850** is illustrated. The headgear assembly **850** is shown connected to the mask assembly **700**. The illustrated headgear assembly **850** comprises an upper portion **852** and a lower portion **854**. In general, the headgear assembly **850** of FIGS. **98-100** is similar to the headgear **830** of FIGS. **95-97** with the exception of having no interconnecting member. Accordingly, the details described above with respect to the headgear **830** of FIGS. **95-97** generally applies equally to the headgear **830** of FIGS. **99-100**.

In the illustrated configuration of FIGS. **98-100**, the upper portion **852** and the lower portion **854** of the headgear assembly **850** can be formed of a single integrated component. In some configurations, a first member **856** and a second member **858** can be formed of a single component. For example, a single loop of material can extend through loops or the like on the mask to define both the first member **856** and the second member **858**. In some configurations, a separate top member **859** can be separate from the single component that defines the first member **856** and the second

member **858** or can be integrally formed as part of the single component. Any suitable components can be used.

With reference now to FIGS. **101-103**, a further headgear assembly **860** is illustrated. The headgear assembly **860** is shown connected to the mask assembly **700**. As will be apparent from a comparison of FIGS. **98-100** and FIGS. **101-103**, the headgear assembly **860** shown in FIGS. **101-103** is generally the same as the headgear assembly **850** shown in FIGS. **98-100** with the exception of the headgear assembly **860** comprising an upper portion **862** that is lacking a top member. The headgear assembly **860**, as such, also comprises a lower portion **864** that is generally the same as the lower portion **854** of the headgear assembly **850** shown in FIGS. **98-100**.

With reference now to FIGS. **104-106**, a further headgear assembly **870** is illustrated. The headgear assembly **860** is shown connected to the mask assembly **700**. As will be apparent from a comparison of FIGS. **101-103** and FIGS. **104-106**, the headgear assembly **870** shown in FIGS. **104-106** is generally the same as the headgear assembly **860** shown in FIGS. **101-103** (including having an upper portion **862**) with the exception of the headgear assembly **870** lacking a lower portion.

With reference now to FIGS. **107-109**, a further headgear assembly **880** is illustrated. The headgear assembly **860** is shown connected to the mask assembly **700**. Similar to the headgear **870** shown in FIGS. **104-106**, the headgear **880** shown in FIGS. **107-109** comprises an upper portion **882** without including a lower portion. The upper portion **882** in the illustrated configuration comprises a member **884** that extends upwardly and rearwardly from the mask assembly **700**. The member **884** can include an ear accommodation feature **886**. The ear accommodation feature **886** is adapted to transfer forces from in front of the ear of the user to the rear of the ear of the user. Accordingly, the ear accommodation feature **886** enables the member **884** to sit lower on the head of the user such that, without the ear accommodation feature **886**, the member **884** would intersect the ear of the user.

With reference to FIGS. **108** and **109**, in the illustrated configuration, the member **884** bifurcates into an upper member **886** and a lower member **888** at a location just rearward of the ear of the user. In the illustrated configuration, the bifurcation location is adapted to be vertically higher than the ear of the user. Bifurcation of the member **884** into at least the upper member **886** and the lower member **888** can improve stability. Other configurations also can be used, including but not limited to using a wide strap instead of the at least two members **886**, **888**, incorporating a panel between the upper member **886** and the lower member **888**, and the like. In addition, in the configuration illustrated in FIGS. **108** and **109**, the connection point between the headgear and the mask assembly is lower than the configuration illustrated in FIGS. **104-106**.

A variety of headgear assemblies have been described through the present disclosure. In each of the headgear assemblies, it is possible to have one or more straps, members, components or the like formed to be more flexible than others within the same headgear assembly. For example but without limitation, in some configurations, the portion of the headgear assembly that extends around the back of the head can be more elastic or flexible than the portion of the headgear assembly that extends forward of the ears. In some configurations, the portion of the headgear assembly that extends forward of the ears can be more elastic or flexible than the portion of the headgear assembly that extends rearward of the ears. In some configurations, the more elastic, more flexible or more stretchable portion of the headgear assembly has a portion that overlaps with the less elastic, less flexible or less stretchable portion.

With reference now to FIG. **110**, an additional mask assembly **900** is illustrated. The illustrated mask assembly **900** is a combined oral nasal mask and is designed to seal below the nose (and/or within the nose) of the user, along a portion of the face extending lateral to the nose, as well as around the mouth of the user. In some configurations, the mask assembly **900** can be designed to go over the tip of the nose and, in such configurations, may seal in regions other than below the nose, within the nose, along a portion of the face extending lateral to the nose and around the mouth of the user.

As with the mask assembly **700**, which is shown in FIG. **71**, the mask assembly **900** advantageously does not require contact with the bridge of the nose of the user. In the illustrated configuration, the mask assembly **900** does not extend over the bridge of the nose of the user. More particularly, the illustrated mask assembly **900** does not contact the bridge of the nose of the user. Even more particularly, the illustrated assembly **900** does not contact a forward facing portion of the bridge of the nose of the user. In some configurations, the assembly **900** does not contact the face in a region vertically higher than a generally horizontal plane LE extending along the lower edges of the eyes of the user.

In some configurations, the mask assembly **900** does not extend over the tip of the nose of the user. In some configurations, the mask assembly **900** preferably does not enshroud the tip of the nose of the user. In some configurations, the tip of the nose of the user extends over the adjoining portion of the mask assembly **900**. In some configurations, the mask assembly **900** can be designed to go over the tip of the nose. In some configurations, the mask assembly **900** can be designed to enshroud the tip of the nose.

The mask assembly **900** preferably is adapted to extend around and seal over the wing or alar of the nose, which flares out to form a rounded eminence around the nostril. The mask assembly **900** can be adapted to seal within and around the surfaces that define the opening to the nostril, including the fleshy external end of the nasal septum, sometimes called the columella. In some configurations, the mask assembly **900** is adapted to extend upwardly to seal along at least a portion of the left and right dorsal side walls of the nose of the user. In some configurations, the mask assembly **900** is adapted to extend upwardly along at least a portion of the left and right dorsal side walls without extending upwardly to the region of the bridge of the nose of the user. As compared to the mask assembly **700** shown in FIG. **71**, the mask assembly **900** shown in FIG. **110** can extend into the nasal air passageways and seal along the nasal air passageways as desired.

As illustrated, the mask assembly **900** comprises a mask base **902**, a mask seal **904** attached to the mask base **902** and, while not shown, a connector can be attached to the mask base **902**. The connector can be connected to the base **902** in any suitable manner, including but not limited to any manner discussed elsewhere within this application. For example, but without limitation, the connector can be connected to the base **902** such that the connector can swivel, pivot and rotate relative to the base **902**. In some configurations, the connector can define a portion of a ball joint with the mask base **902**, for example but without limitation, defining the other portion. The ball joint can have any suitable configuration and can be configured in accordance with the descriptions of

ball and socket arrangements discussed elsewhere within this application. The connector facilitates connection to a supply conduit or the like for the supply of pressurized breathing gases. Any suitable connector can be used.

With reference to FIG. **110**, the mask base **902** will be described in greater detail. The mask base **902** provides a support structure of sorts for the mask assembly **900** in general and for the mask seal **904** more specifically. The mask base **902** can be formed from any suitable material. In some configurations, the mask base **902** is formed from a fairly rigid material. In some configurations, the mask base **902** is formed from a plastic material, such as a polycarbonate material.

With reference to FIG. **110**, in the illustrated configuration, the mask base **902** sweeps rearward from a central portion **912** with a pair of wings **914**. As illustrated, the wings **914** can extend rearward and upward relative to the central portion **912** of the mask base **902**. Accordingly, the illustrated wings **914** include upwardly projecting portions **916**. The mask base **902** generally, and the upwardly projecting portions **916** of the wings **914** as an example, can provide reinforcement to the lateral portions of the mask seal **904**.

The central portion **912** can have a vertical expanse that is lower than the height of the upwardly projecting portions **916** of the wings **914**. Thus, when viewed from the front, the mask base **902** comprises an edge having a generally M-shaped appearance. In addition, when viewed from the front, an upper edge of a central area of the mask base **902** comprises a generally U-shaped appearance. By incorporating the recessed central portion **912** between the pair of wings **914**, the mask base **902** can provide desired support to the mask seal **904** while providing adequate clearance for the nose of the user.

The mask base **902** and the mask seal **904** can be connected in any suitable manner. With reference to FIG. **112**, the mask base **902** comprises a generally circumscribing flange **920** and the mask seal **904** can be overmolded onto the flange **920** of the mask base **902**. Any other suitable technique can be used to form the junction between the mask seal **904** and the mask base **902**. In some configurations, the mask seal **904** can be formed to allow removal from the mask base **902**. For example but without limitation, the mask seal **904** can include a groove and the mask base **902** can include a flange, or any other cooperating structures, such that the mask seal **904** can be removably connected to the mask base **902**.

As shown in FIG. **112**, the illustrated mask seal **904** comprises a thickened region **921**, which is thicker in cross-section, adjacent the juncture with the mask base **902**. Such a configuration improves service life of the mask seal **904** as well as improves the integrity of the connection between the mask seal **904** and the mask base **902**. In some configurations, the thickest region of the mask seal **904** is the thickened region **921**.

The mask seal **904** is designed to seal against the face of the user. The mask seal **904** preferably is formed of a soft material, such as silicone, for example but without limitation. In some configurations, at least portions of the mask seal **904** can be textured to improve comfort to the user. For example, in some configurations, at least portions of the mold used to form the illustrated mask seal **904** can be bead blasted to provide a surface texture in at least the regions of the mask seal **904** that will contact the skin of the user. Other techniques for texturing one or more surface of the mask seal **904** can be used.

As shown in FIG. **110**, the illustrated mask seal **904** comprises an oral-nasal mask seal and, therefore, comprises at least one oral opening **922** and at least one nasal opening **924**. In some configurations, the mask seal **904** can comprise a combined oral-nasal opening. In some configurations, such as the illustrated embodiment, the mask seal **904** can comprise more than one nasal opening **924**. In the illustrated configuration, the mask seal **904** comprises nasal openings **924** defined within superstructures, such as pillows, prongs or the like. The illustrated configuration comprises prongs **927**. In some configurations, a single prong (or other superstructure) can be used. In other applications, two or more prongs (or superstructures) can be used. The prong or prongs (or other superstructures) enable the mask seal **904** to be more easily positioned as desired on the face of the user. In addition, through the user of a superstructure, such as a prong, for example but without limitation, the mask is easier to seal (e.g., the superstructure can seal within the nare rather than sealing under the nare or along the face) and the mask seal **904** is less likely to have the at least one opening **924** occluded partially or fully by the facial features of the user.

Any suitable prong **927** configuration can be used. In the illustrated configuration, the prong **927** generally tapers in an upwardly direction from a bulbous base **929** to the small opening **924**. The opening **924** can be generally elliptical or ovular in shape. In addition, the transition from the bottom to the top of the prong **927** can be shaped to provide improved sealing for many different nasal opening geometries. As such, each prong **927** may be inclined toward a generally vertical central plane (e.g., a plane corresponding to a medial sagittal plane of the user). In addition, the prong **927** may have a shape that increases in outer dimension in a non-uniform manner as best shown in FIG. **114**. In other words, the base **929** may grow in size from front to back more than from side to side. In addition, the base **929** may increase in dimension greater to the rear than to the front. Other configurations are possible.

The at least one oral opening **922** and the at least one nasal opening **924** preferably communicate with a single chamber **925** that is defined within the mask assembly **900**. The chamber **925** of the illustrated mask assembly **900** is at least partially defined by the mask base **902** and the mask seal **904**. The at least one oral opening **922** is substantially opposed to an opening **928** that receives the connector. The at least one nasal opening **924** can be vertically above the at least one oral opening **922**. The at least one nasal opening **924** can be positioned between the opening **928** for the connector and the at least one oral opening **922**.

With reference again to FIG. **110**, the mask seal **904** preferably comprises a pair of paddles **926** that extend upward above an upper surface **930**. The paddles **926** are configured to extend upward alongside, and in some configurations above, the nares. Preferably, as shown in FIG. **111**, the upper surface **930** is hammocked between inner portions **933** of the paddles **926**. In such a configuration, downward pressure applied to the upper surface **930** can cause the paddles **926** to pivot inwardly at the top. Accordingly, increasing force between the nose of the user and the upper surface **930** can result in increasing sealing force being applied between the sides of the nose of the user and the paddles **926**. The degree to which the pivoting action results in increasing force can be varied by construction. In other words, longer paddles **926** display increased degrees of pivoting compared to shorter paddles **926**. On the other hand, shorter paddles **926** are capable of accommodating

greater variations in nasal geometries compared to longer paddles **926** and result in the mask assembly **900** being easier to put onto the face.

The paddles **926** and the upper surface **930** define a valley **932**. The valley **932** can be adapted to receive the tip of the nose of the user. The valley **932** in the illustrated configuration is open in an upwardly direction. In other words, the region of the illustrated mask assembly **900** that accommodates the nose is not enclosed from the top and is configured to rest under the nose.

In the illustrated configuration, as shown in FIG. **112**, the prongs **927** are positioned such that the at least one nasal opening **924** is positioned vertically lower than the uppermost extent of the thickened region **921**. In some configurations, the prongs **927** can be positioned such that the at least one nasal opening **924** is positioned vertically higher than or at the same height as the uppermost extent of the thickened region **921**.

As illustrated, forward of the prongs **927**, the mask seal **904** tapers and curls downward toward the prongs **927** to define the upper surface **930** and the valley **932**. The tapering and curling forms a deflection region **935**. The deflection region **935** can be sufficiently thin and/or elastic that the mask seal **904** can inflate in the nasal region at least in the deflection region **935**. In some configurations, both at least a portion of the inner portions **933** and the deflection region **935** are sufficiently thin to allow inflation around the nasal region of the user. In some configurations, the material is less than about 0.3 mm thick and more preferably less than about 0.2 mm thick. The deflection region **935** can also be sufficiently thicker and/or more rigid such that the mask seal **904** can retain its shape in the nasal region at least in the deflection region **935**. In some configurations, both at least a portion of the inner portions **933** and the deflection region **935** are sufficiently thick for shape-retaining. In some configurations, the material is less than about 0.7 mm thick and more preferably less than about 0.5 mm thick.

As with the mask seal **700** described above and as shown in FIGS. **112-120**, the illustrated mask seal **904** of the mask assembly **900** comprises a fairly complex range and configuration of thicknesses. The thicknesses are varied to take advantage of different characteristics in different regions of the illustrated mask seal **904**. For example, with reference to FIGS. **112**, the mask seal **904** illustrates a connecting region **960** that generally corresponds to the thickened portion **921**. The connecting region **960** generally encircles an opening that receives the mask base **902**. The connecting region **960** can be the thickest portion of the seal member **904** in some configurations. The connecting region **960** joins the mask seal **904** to the mask base **902**. Accordingly, the connecting region **960** preferably has sufficient thickness to provide sufficient rigidity for connection and to provide sufficient thickness for durability. In some configurations, the thickness of the connecting region is between about 2 mm and about 4 mm. In the illustrated configuration, the thickness is between about 3.3 mm and about 3.5 mm.

With reference primarily to FIG. **120**, outer peripheral portions **962**, which are generally adjacent to the face contacting portions of the mask seal **904**, can be fairly rigid. The outer peripheral portions **962** can extend from a lower corner of the face contacting portion surrounding the oral opening **922** upward to a region just below the start of the paddles **926**. Thus, the outer peripheral portions **962** extend along the generally vertically extending portions on the rear of the mask seal **904** and wrap slightly inward at a bottom of the rear of the mask seal **904**. The outer peripheral portions **962**, however, terminate short of the ultimate central portion of the lower portion of the mask, which is softer to accommodate varied contours created by differing facial geometries of the users. The outer peripheral portions **962** also can wrap from a rear facing side of the mask seal around to at least a portion of a laterally facing side of the mask seal **904**. In some configurations, the thickness of the outer peripheral portions can be between about 0.8 mm and about 1.5 mm. In the illustrated configuration, the outer peripheral portions **962** have a thickness less than that of the connecting region **960**, and preferably have a thickness of about 1.2 mm to about 1.3 mm.

The mask seal **904** also comprises an oral region **966**. The oral region **966** in the illustrated mask seal **904** extends along at least a portion of the oral opening **922**. In the illustrated configuration, the oral region **966** extends along at least a lower portion of the oral opening **922**. In the illustrated configuration, the oral region **966** extends along at least the sides and the bottom of the oral opening **922**. The oral region **966** provides a softer region that contacts the face. Accordingly, the oral region **966** can have a thinner cross-section. For example, in some configurations, the oral region **966** has a thickness less than that of the outer peripheral portions **962** and, in some configurations, has a thickness of between about 0.3 mm and about 1.0 mm. In the illustrated configuration, the thickness of the oral region is about 0.5 mm.

The nasal prongs **927** can be formed within an interfacing region **967**. The interfacing region **967** preferably has sufficient rigidity to locate within the nares of the user while remaining soft and deformable enough to be comfortable for the user over a night of use, for example. In the illustrated configuration, the interfacing region includes both of the prongs **927** as well as the immediately adjacent regions. In some configurations, the thickness of the interfacing region **967** is between about 1.5 mm and about 0.5 mm. In the illustrated configuration, the thickness is between about 0.8 mm and about 0.5 mm.

With reference to FIG. **120**, a paddle region **968** can wrap over the upper portions of the paddles **926**. The paddle region **968** can generally surround the valley **932**. The paddle region **926** preferably is very conformable and, as such, has a thickness of between about 0.3 mm and about 1.2 mm. In the illustrated configuration, the paddle region **968** has a thickness of about 0.5 mm.

Between the paddle region **968** and the prongs **927** is a flexible zone **969**. The flexible zone **969** preferably is formed along the inner portions **933** of the paddles **926**. In some configurations, the flexible zone **969** is on each lateral side of the prongs **927**. In some configurations, the flexible zone **969** extends on both lateral sides of the prongs **927** and wraps around to a location generally forward of the prongs **927**. The flexible zone **969** overlies pockets defined within the paddles **926**, which pockets are in fluid communication with the chamber **925**. As such, pressure from within the chamber **925** can somewhat inflate, or cause bulging of, the flexible zones **969** to improve sealing with the nose of the user. The flexible zones preferably have a thickness of less than about 0.5 mm. In some configurations, the inflation zones **969** can have a thickness of between about 0.2 mm and about 0.7 mm. In the illustrated configuration, the inflation zones **969** have a thickness of about 0.2 mm.

With continued reference to FIG. **120**, a transitional portion **970** having a transitioning thickness can be defined between each of the regions described above. Other configurations also are possible.

With reference to FIGS. **113-119**, various sections through the mask seal **904** shown in FIG. **110** are presented.

These sections help to illustrate the various transitions occurring within the mask seal **904**.

With reference to FIGS. **114** and **115**, the paddles **926** as shown in cross section. As illustrated therein, the paddles **926** can have a relatively thin cross section on an inner portion while have a significantly thicker outer portion. The thicker outer portion can help provide structure and shape while the inner portion remains sufficiently thin to allow controlled inflation or controlled expansion at typical treatment pressures (e.g., about 3 cm H2O to about 25 cm H2O). In some configurations, the portion of the paddles **926** that will contact the face comprises a generally constant cross-section. In the illustrated configuration, in the upper portions of the paddles **926** (see FIG. **114**), the transition between the thicker cross section and the thinner cross section occurs prior to the radius defined between the inner portion and the outer portion. Such a configuration improves the conformance of the paddles **926** to the facial geometry of the user. In the illustrated configuration, in the lower portions of the paddles **926** (see FIG. **115**), the transition between the thicker cross section and the thinner cross section occurs along a portion that will contact the face of the user such that greater control over deformation in the pocket between the nose and the cheek can be attained. Other configurations are possible.

The illustrated mask seal **904** is designed to anchor on two locations of the face of the user: under/within the nose and below the lower lip. In some configurations, the mask seal **904** is configured to anchor below the nose (or within the nostrils) and between the lower lip and the chin. In some configurations, the mask is designed to seal off airflow through the mask assembly **900** by sealing against the face of the user at locations higher than all of the anchor points. Thus, at least some sealing portions of the illustrated mask seal **904** are positioned vertically higher than the anchor points.

The mask seal **904** can have different sizes for use with faces having different sizes and/or geometries. In some configurations, different portions of the mask seal **904** can be sized and configured to accommodate users having different sizes and/or geometries. For example, portions of the mask seal **904** can extend upward to different degrees for different users. In some configurations, a single size mask seal **904** can be provided for all face sizes and geometries.

In some configurations, the mask seal **904** comprises multiple components formed of differing materials and/or differing shore hardnesses. For example, in some configurations, some components of the mask seal **904** can be formed of silicone, while other components are formed of foam, gels, cloth or other suitably compliant materials. In the illustrated configuration, however, the mask seal **904** is formed of a uniform material, such as silicone for example but without limitation.

Although the present invention has been described in terms of a certain embodiment, other embodiments apparent to those of ordinary skill in the art also are within the scope of this invention. Thus, various changes and modifications may be made without departing from the spirit and scope of the invention. For instance, various components may be repositioned as desired. Moreover, not all of the features, aspects and advantages are necessarily required to practice the present invention. Accordingly, the scope of the present invention is intended to be defined only by the claims that follow.

What is claimed is:

**1**. A mask assembly for use in providing positive pressure respiratory therapy, the mask assembly comprising:

a mask base comprising an inlet opening and a rear peripheral region,

a mask seal comprising:

a front peripheral region configured to be secured to the rear peripheral region of the mask base;

a lip configured to seal against an upper lip region, the lip encircling an oral opening;

an upper portion of the mask seal comprising support regions and a flexing region, the support regions being more rigid than the flexing region;

a flexing chin region positioned between lower corner reinforcements, the lower corner reinforcements extending from lower corners of the mask seal and inwardly toward the flexing chin region, wherein the lower corner reinforcements are more rigid than the flexing chin region; and

a first paddle and a second paddle, the first paddle and the second paddle extend generally upward from an upper surface of the mask seal and configured to extend along lateral sides of the nose, in use, the first paddle and the second paddle together with the upper surface defining a valley for accommodating a nose such that the upper surface underlies the nose, the upper surface comprising at least one nasal opening and configured to seal against a lower portion of the nose of the user, in use and around the at least one nasal opening.

**2**. The mask assembly of claim **1**, wherein the mask base comprises a polycarbonate material, and wherein the mask seal comprises a silicone material.

**3**. The mask assembly of claim **1**, wherein the mask base comprises a groove provided along the rear peripheral region of the mask base, and wherein the mask seal comprises a flange along the front peripheral region of the mask seal, the flange configured to be inserted in the groove.

**4**. The mask assembly of claim **1**, wherein the support regions have a thicker cross-section than the flexing region.

**5**. The mask assembly of claim **1**, wherein the support regions are located on a forward-facing surface of the first paddle and the second paddle.

**6**. The mask assembly of claim **1**, wherein the flexing region is positioned to provide a seal against an outer surface of the nose.

**7**. The mask assembly of claim **1**, wherein the lower corner reinforcements are positioned along a sidewall of the mask seal and wrap inward toward the lip.

**8**. The mask assembly of claim **1**, wherein the lower corner reinforcements are thicker than the flexing chin region.

**9**. The mask assembly of claim **1**, wherein the mask seal comprises a forward-facing stiffener panel, the stiffener panel adjacent the front peripheral region of the mask base.

**10**. The mask assembly of claim **9**, wherein the stiffener panel is thicker than the lower corner reinforcements.

**11**. The mask assembly of claim **1**, wherein the inlet opening of the mask base is defined by a wall comprising a contoured inner surface configured to form a snap-fit with a connector configured to facilitate connection to a supply conduit for pressurized breathing gases.

**12**. A mask assembly for use in providing positive pressure respiratory therapy, the mask assembly comprising:

a chamber at least partially defined by a mask base and a mask seal;

the mask base comprising an inlet opening and a rear peripheral region, the inlet opening configured to be attached to a connector for supply of pressurized breathing gases;

the mask seal comprising:

a connecting region configured to join with the rear peripheral region of the mask base;

an oral opening on a rear-facing side of the mask seal;

an upper portion of the mask seal comprising upper peripheral portions and a nasal region, the nasal region configured to seal against a lower portion of a nose, the upper peripheral portions being more rigid than the nasal region;

an oral region extending along at least a bottom of the oral opening, the oral region positioned between lower peripheral portions, the lower peripheral portions extend along a generally vertically extending portions of the rear-facing side of the mask seal and wrap inward at a bottom of the rear-facing side of the mask seal, the lower peripheral portions being more rigid than the oral region; and

the upper portion further comprising a pair of paddles extending generally upward from an upper surface of the mask seal, the pair of paddles together with the upper surface defining a valley for accommodating the nose such that the upper surface underlies the nose, the upper surface comprising at least one nasal opening and configured to seal against a lower part of the nose of the user, in use, and around the at least one nasal opening.

**13**. The mask assembly of claim **12**, wherein the mask base comprises bias flow holes.

**14**. The mask assembly of claim **12**, wherein the mask base comprises a rigid plastic material.

**15**. The mask assembly of claim **12**, wherein the mask seal is overmolded onto the mask base.

**16**. The mask assembly of claim **12**, wherein the rear peripheral region of the mask base comprises a flange and the mask seal overlies the flange.

**17**. The mask assembly of claim **12**, wherein the rear peripheral region of the mask base comprises a flange and the mask seal comprises a groove configured to receive the flange.

**18**. The mask assembly of claim **12**, wherein the mask seal comprises a clip attachable to the mask base.

**19**. The mask assembly of claim **12**, wherein the mask seal comprises a thickened region adjacent a juncture with the mask base.

**20**. The mask assembly of claim **12**, wherein each of the paddles comprises a laterally outer portion and a laterally inner portion, the laterally outer portion being thicker than the laterally inner portion.

**21**. The mask assembly of claim **12**, wherein a thickness of the nasal region is less than a thickness of the upper peripheral portions.

**22**. The mask assembly of claim **12**, wherein the lower peripheral portions extend along the rear-facing side of the mask seal and at least a portion of a lateral facing side of the mask seal.

**23**. A mask assembly for use in providing positive pressure respiratory therapy, the mask assembly comprising:

a mask seal comprising:

an upper portion including a flexing region having an upper surface configured to underlie a nose of a user, in use, and one or more nasal openings in the flexing region;

first and second lower corner portions;

a flexing chin region positioned between the first and second lower corner portions; and

first and second lower corner reinforcement regions extending from the first and second lower corner portions, respectively, and inwardly toward flexing chin region, wherein first and second lower corner reinforcement regions and are stiffer than the flexing chin region.

**24**. The mask assembly of claim **23**, wherein the upper surface is configured to seal with a lower surface the nose of the user, in use, around the at least one nasal opening.

**25**. The mask assembly of claim **23**, wherein the mask seal comprises a lower portion connecting the first and second lower corner portions, wherein the first and second lower corner reinforcement regions extend from the first and second lower corner portions, respectively, inwardly along the lower portion.

**26**. The mask assembly of claim **23**, wherein the lower corner reinforcements are positioned along a sidewall of the mask seal and wrap inward toward an oral opening of the mask seal.

**27**. The mask assembly of claim **23**, wherein the lower corner reinforcements extend from upper lateral portions of the mask seal, downwardly and wrap around the first and second lower corner portions.

**28**. The mask assembly of claim **23**, wherein the flexing chin region wraps over at least a portion of a sidewall of the seal.

**29**. The mask assembly of claim **23**, wherein the first and second lower corner reinforcement regions are positioned along a sidewall of the seal.

**30**. The mask assembly of claim **23**, wherein lowermost portions of the first and second lower corner reinforcement regions extend toward a generally vertical central plane that bisects the mask seal.

* * * * *