US 20250258128A1

(19) **United States**

(12) **Patent Application Publication** (10) **Pub. No.: US 2025/0258128 A1**

WATANABE et al. (43) **Pub. Date: Aug. 14, 2025**

(54) **GAS SENSOR AND CONCENTRATION MEASUREMENT METHOD USING GAS SENSOR**

(71) Applicant: **NGK INSULATORS, LTD.**, Nagoya-shi (JP)

(72) Inventors: **Yusuke WATANABE**, Nagoya-shi (JP); **Daichi ICHIKAWA**, Nagoya-shi (JP)

(21) Appl. No.: **19/098,013**

(22) Filed: **Apr. 2, 2025**

Related U.S. Application Data

(63) Continuation of application No. PCT/JP2023/030302, filed on Aug. 23, 2023.

(30) **Foreign Application Priority Data**

Oct. 6, 2022 (JP) 2022-161651

Publication Classification

(51) **Int. Cl.**

G01N 27/407 (2006.01)
G01N 27/27 (2006.01)
G01N 27/30 (2006.01)
G01N 27/60 (2006.01)

(52) **U.S. Cl.**

CPC ***G01N 27/407*** (2013.01); ***G01N 27/27*** (2013.01); ***G01N 27/301*** (2013.01); ***G01N 27/605*** (2013.01)

(57) **ABSTRACT**

An adjustment pump cell performs first pumping-out operation to pump out oxygen so that all H_2O and CO_2 in a measurement gas introduced into a first chamber are reduced, a first measurement pump cell selectively oxidizes H_2 in a second chamber, a second measurement pump cell oxidizes CO in a third chamber, a concentration of H_2O and CO_2 are identified based on currents generated in respective oxidization, the adjustment pump cell can further perform second pumping-out operation to pump out oxygen from the first chamber to the extent that H_2O and CO_2 are not reduced in the middle of the first pumping-out operation, and reduction of H_2O and CO_2 in the first chamber is interrupted upon start of the second pumping-out operation, so that H_2O and CO_2 generated in the second chamber or the third chamber are emitted outside an element.

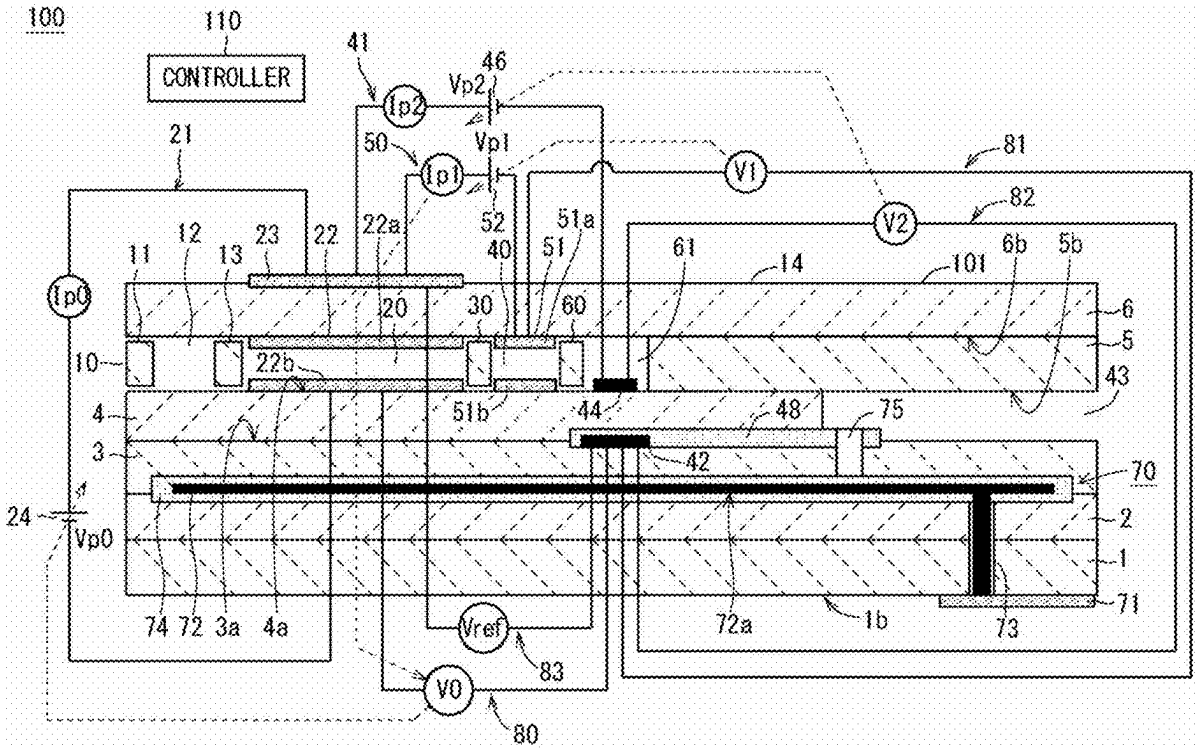

F I G. 1

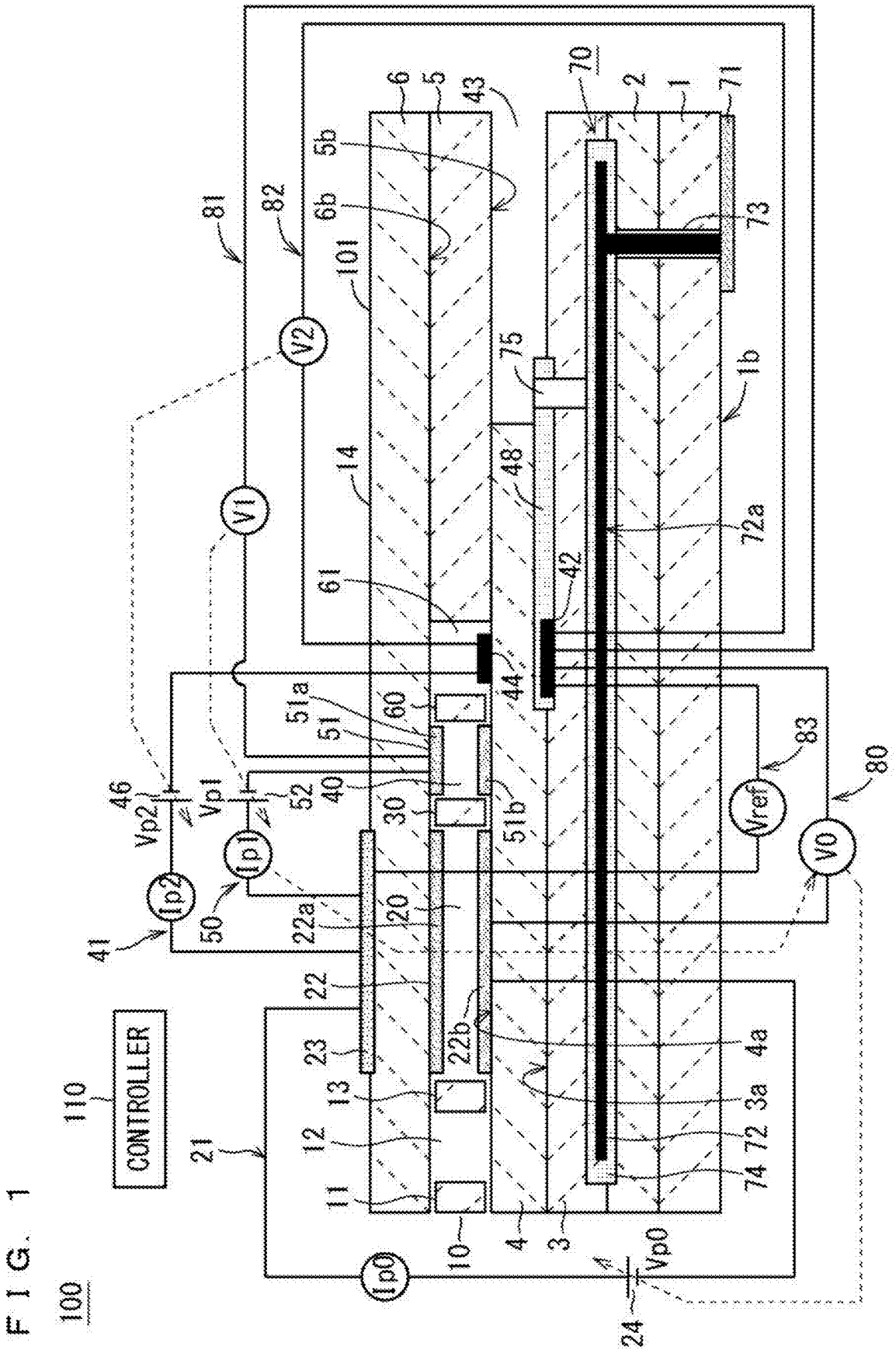
100
CONTROLLER
110
Ip0
Ip1
Ip2
Vp0
Vp1
Vp2
V0
V1
V2
Vref
1
1b
2
3
3a
4
4a
5
5b
6
6b
10
11
12
13
14
20
21
22
22a
22b
23
24
30
40
41
42
43
44
46
48
50
51
51a
51b
52
60
61
70
71
72
72a
73
74
75
80
81
82
83
101

FIG. 2

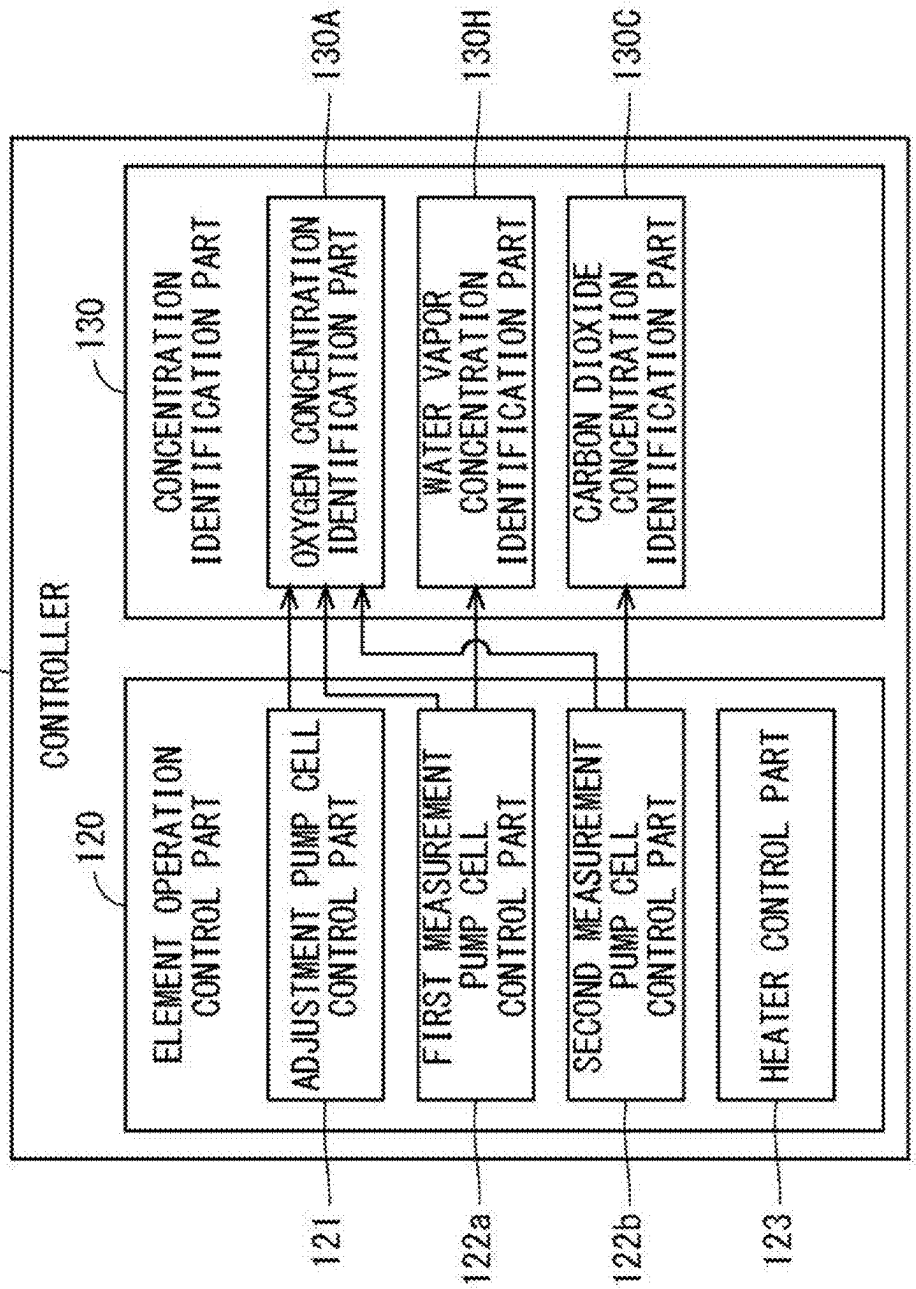
110
CONTROLLER
120
ELEMENT OPERATION CONTROL PART
ADJUSTMENT PUMP CELL CONTROL PART
FIRST MEASUREMENT PUMP CELL CONTROL PART
SECOND MEASUREMENT PUMP CELL CONTROL PART
HEATER CONTROL PART
130
CONCENTRATION IDENTIFICATION PART
OXYGEN CONCENTRATION IDENTIFICATION PART
WATER VAPOR CONCENTRATION IDENTIFICATION PART
CARBON DIOXIDE CONCENTRATION IDENTIFICATION PART
130A
130H
130C
121
122a
122b
123

FIG. 3

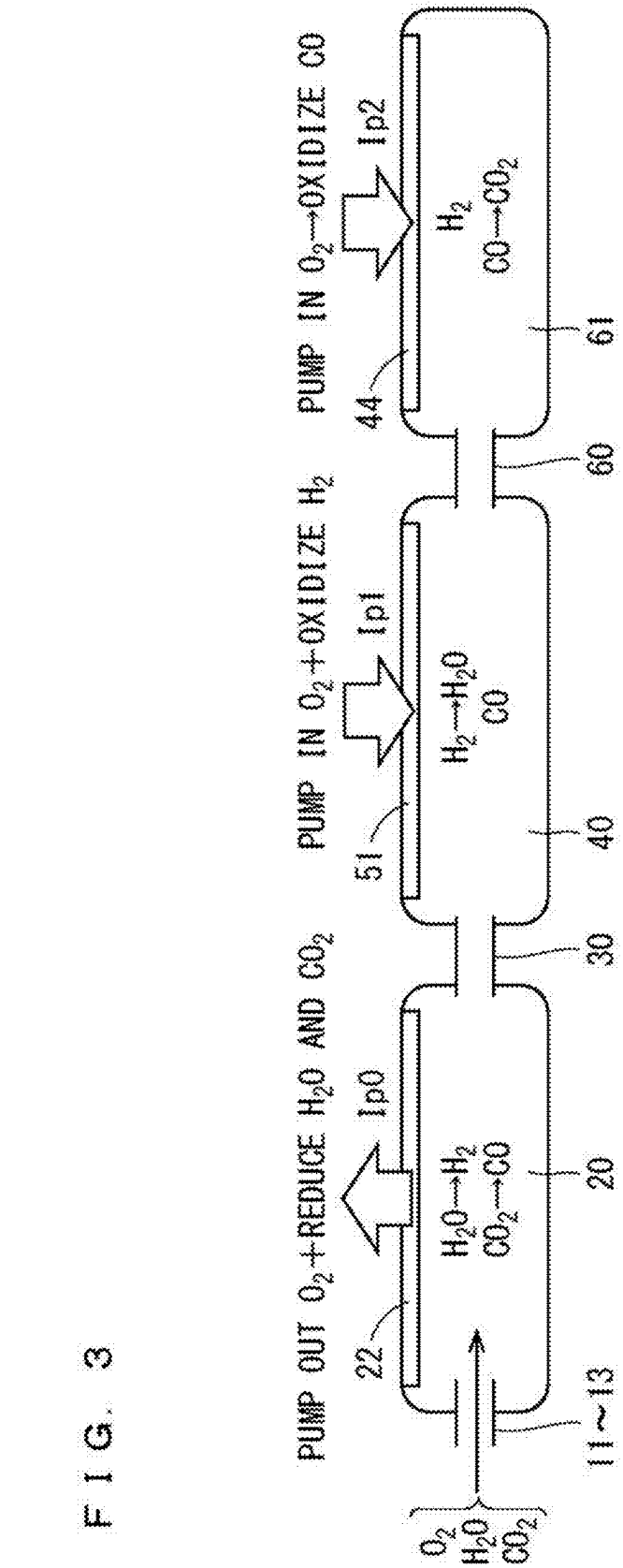
PUMP OUT O_2+REDUCE H_2O AND CO_2
Ip0
22
$H_2O \rightarrow H_2$
$CO_2 \rightarrow CO$
20
11~13
O_2
H_2O
CO_2
30
PUMP IN O_2+OXIDIZE H_2
Ip1
51
$H_2 \rightarrow H_2O$
CO
40
PUMP IN O_2→OXIDIZE CO
Ip2
44
H_2
$CO \rightarrow CO_2$
60
61

FIG. 4

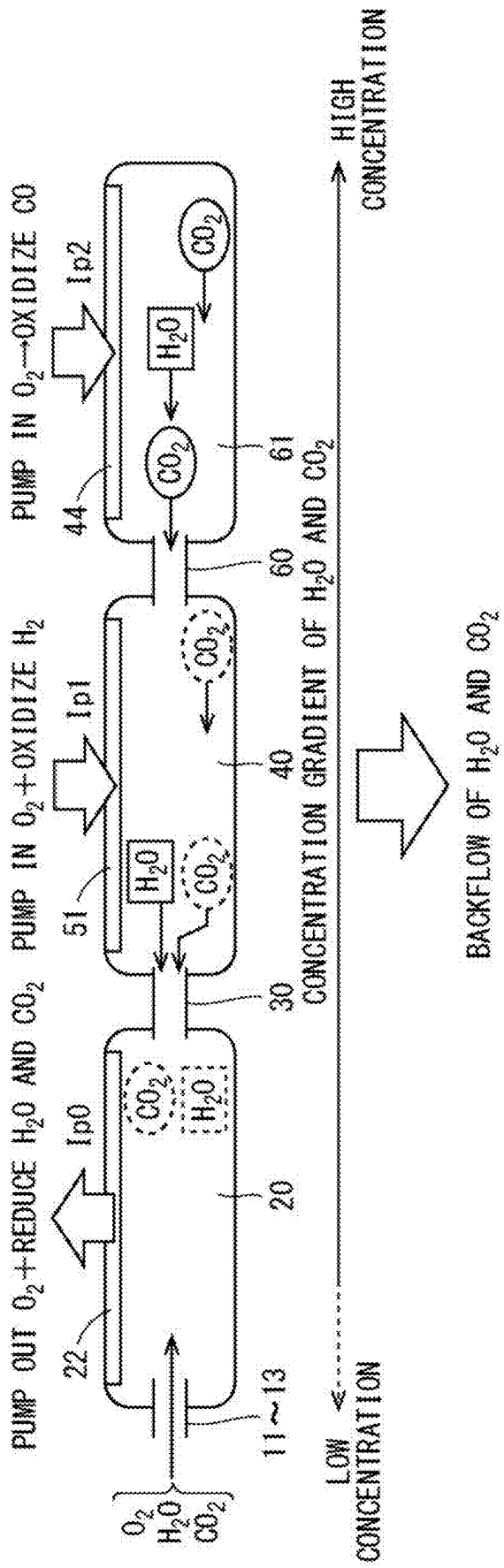
PUMP OUT O_2+REDUCE H_2O AND CO_2
Ip0
CO_2
H_2O
22
20
11~13
O_2
H_2O
CO_2
PUMP IN O_2+OXIDIZE H_2
Ip1
H_2O
CO_2
51
40
30
PUMP IN O_2→OXIDIZE CO
Ip2
H_2O
CO_2
44
61
60
CONCENTRATION GRADIENT OF H_2O AND CO_2
HIGH CONCENTRATION
LOW CONCENTRATION
BACKFLOW OF H_2O AND CO_2

FIG. 5

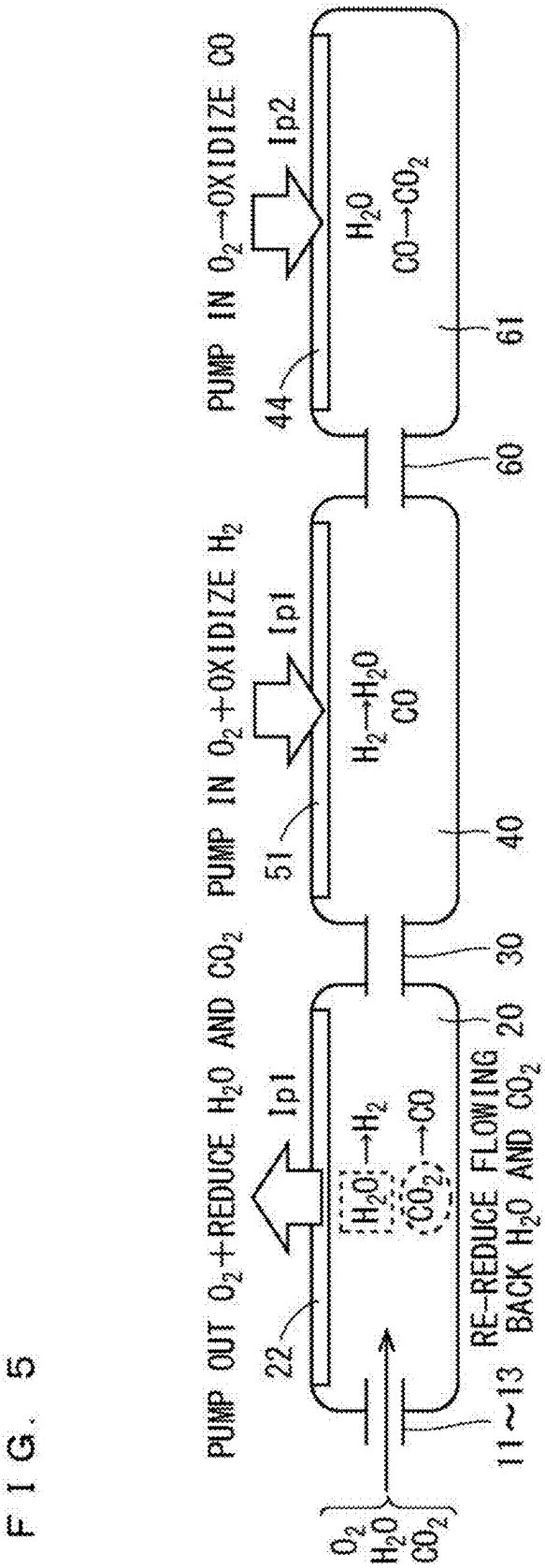
PUMP OUT O_2+REDUCE H_2O AND CO_2
PUMP IN O_2+OXIDIZE H_2
PUMP IN O_2→OXIDIZE CO
Ip1
Ip1
Ip2
22
51
44
H_2O→H_2
CO_2→CO
H_2→H_2O
CO
H_2O
CO→CO_2
RE-REDUCE FLOWING BACK H_2O AND CO_2
11~13
20
30
40
60
61
O_2
H_2O
CO_2

FIG. 6A

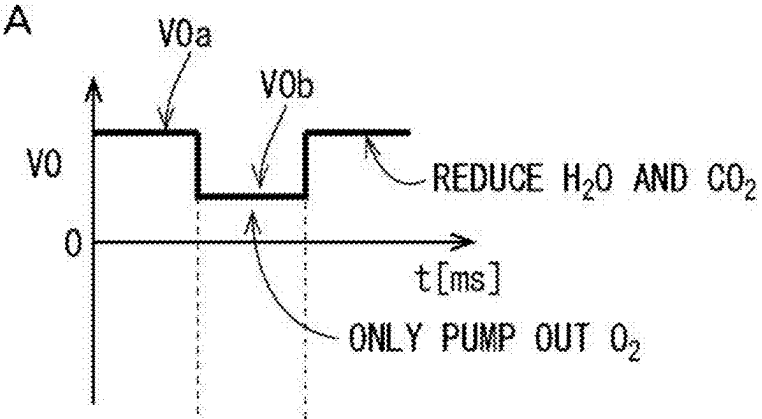
V0a
V0b
V0
0
REDUCE H_2O AND CO_2
t[ms]
ONLY PUMP OUT O_2

FIG. 6B

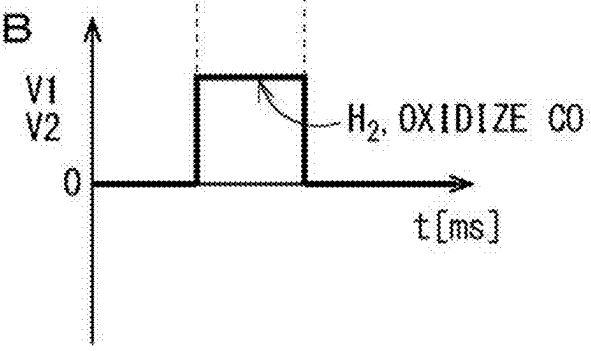
V1
V2
0
H_2, OXIDIZE CO
t[ms]

FIG. 7

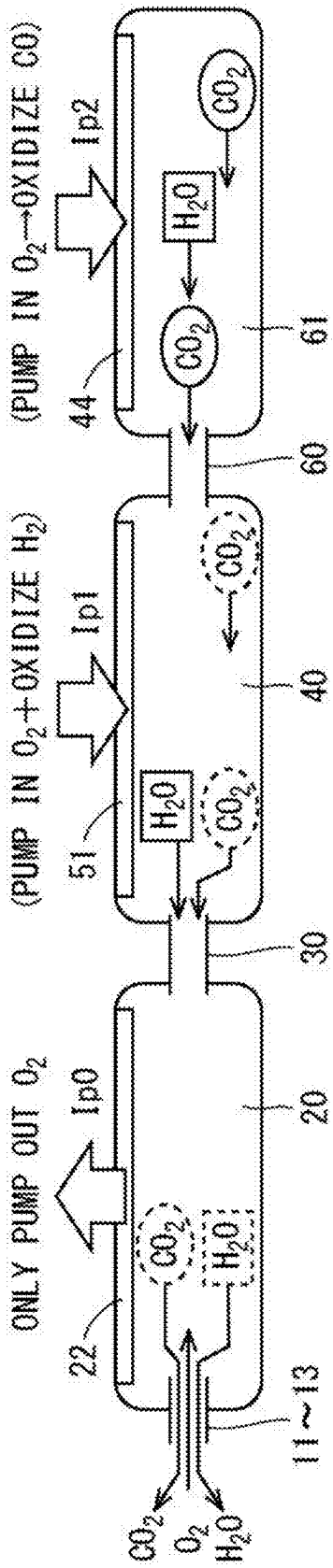
(PUMP IN O_2→OXIDIZE CO)
Ip2
CO_2
H_2O
CO_2
44
61
60
(PUMP IN O_2+OXIDIZE H_2)
Ip1
CO_2
40
51
H_2O
CO_2
30
ONLY PUMP OUT O_2
Ip0
20
CO_2
H_2O
22
11~13
CO_2
O_2
H_2O

FIG. 8A

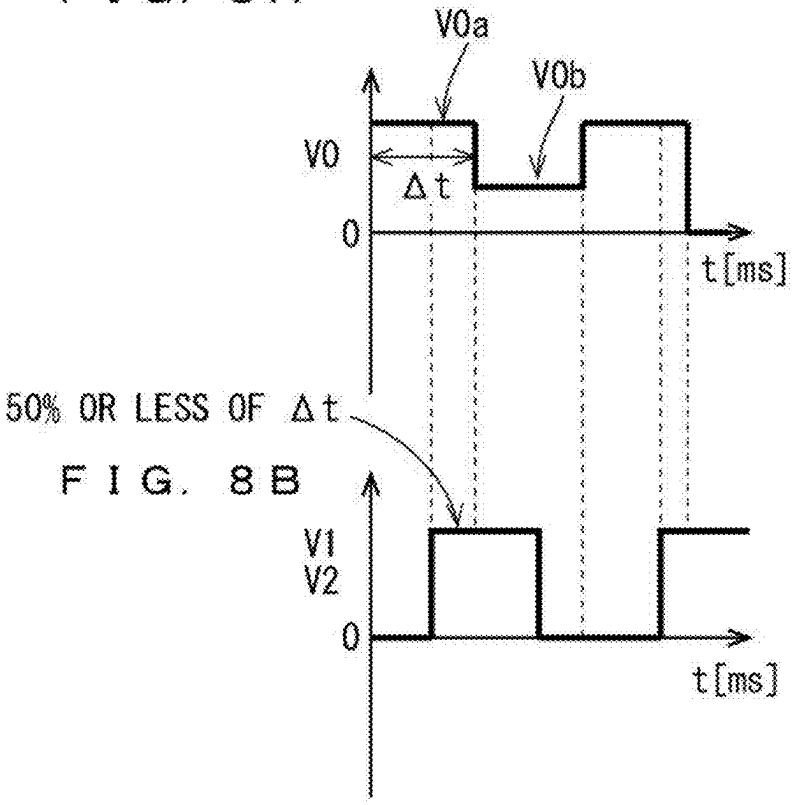

FIG. 8B

GAS SENSOR AND CONCENTRATION MEASUREMENT METHOD USING GAS SENSOR

CROSS-REFERENCE TO RELATED APPLICATION

[0001] This application is a continuation application of PCT/JP2023/030302, filed on Aug. 23, 2023, which claims the benefit of priority of Japanese Patent Application No. JP2022-161651, filed on Oct. 6, 2022, the entire contents of which are incorporated herein by reference.

BACKGROUND

Technical Field

[0002] The present invention relates to a multi-gas sensor capable of sensing a plurality of types of sensing target gas components and measuring concentrations thereof.

Description of the Background Art

[0003] In measurement for managing the amount of an emitted exhaust gas from a vehicle, technology of measuring concentrations of water vapor (H_2O) and carbon dioxide (CO_2) has already been known (see Japanese Patent No. 5918177, No. 6469464, and No. 6469462, for example). In each of gas sensors disclosed in Japanese Patent No. 5918177 and No. 6469464, a water vapor (H_2O) component and a carbon dioxide (CO_2) component can be measured in parallel. As for a gas sensor disclosed in Japanese Patent No. 6469462, a water vapor (H_2O) component can accurately be measured even when a measurement gas contains carbon dioxide (CO_2).

[0004] A carbon dioxide detection device in which an air-fuel ratio detection electrode and a carbon dioxide detection electrode are arranged in parallel and which can measure a concentration of carbon dioxide while making a correction taking into account the influence of an air-fuel ratio using currents flowing between the respective electrodes and a reference electrode and can further make a correction taking into account the influence of a concentration of water has also already been known (see Japanese Patent Application Laid-Open No. 2020-67432, for example).

[0005] In the gas sensor disclosed in Japanese Patent No. 5918177 having a three-chamber configuration, firstly, a main pump cell as a pump cell for a first internal space operates to pump out O_2 contained in a measurement gas introduced into the first internal space and to reduce all H_2O and CO_2 similarly contained in the measurement gas once to generate H_2 and CO. The measurement gas containing these H_2 and CO is introduced into a second internal space and further into a third internal space. A first measurement pump cell as a pump cell for the second internal space then pumps in O_2 to selectively oxidize H_2 to generate H_2O, and, further, a second measurement pump cell as a pump cell for the third internal space pumps in O_2 to oxidize CO to generate CO_2. Concentrations of H_2O and CO_2 in the measurement gas are respectively measured based on magnitudes of pump currents flowing through the first measurement pump cell and the second measurement pump cell when H_2 and CO are oxidized.

[0006] Generated H_2O and CO_2 basically reside in the second internal space and the third internal space. However, it has been found that, as measurement is continued, H_2O and CO_2 can flow back to the first internal space and be reduced again, and H_2 and CO generated by re-reduction can be oxidized again by pumping of oxygen into the second internal space and the third internal space by the first measurement pump cell and the second measurement pump cell.

[0007] Such a phenomenon is not preferable because currents associated with re-oxidation are superimposed onto pump currents flowing through the first measurement pump cell and the second measurement pump cell depending on the amount of H_2O and CO_2 contained in the measurement gas, so that measurement accuracy of the gas sensor according to Japanese Patent No. 5918177 in which the concentrations of H_2O and CO_2 are measured based on magnitudes of the pump currents is reduced.

[0008] In a gas sensor disclosed in Japanese Patent Application Laid-Open No. 2020-67432, carbon dioxide is decomposed into carbon and oxygen by a carbon dioxide detection cell, while electromotive force in an air-fuel ratio detection cell is controlled to have a constant value in accordance with an oxygen concentration of an exhaust gas, but, in the gas sensor, CO and oxygen generated by the carbon dioxide detection cell might react in the air-fuel ratio detection cell, which adjusts the oxygen concentration, to generate CO_2, and CO_2 might be repeatedly sensed by the carbon dioxide detection cell to reduce measurement accuracy.

SUMMARY

[0009] The present invention relates to a multi-gas sensor capable of sensing a plurality of types of sensing target gas components and measuring concentrations thereof.

[0010] According to the present invention, a gas sensor capable of measuring concentrations of a plurality of sensing target gas components contained in a measurement gas, the measurement gas at least containing water vapor and carbon dioxide, the gas sensor includes: a sensor element having a structure formed of an oxygen-ion conductive solid electrolyte; and a controller controlling operation of the gas sensor, wherein the sensor element includes: a gas inlet through which the measurement gas is introduced; a plurality of chambers communicating sequentially from the gas inlet via different diffusion control parts; and a heater heating the sensor element, two of the plurality of chambers are a first measurement chamber and a second measurement chamber, the second measurement chamber being one of the plurality of chambers farthest from the gas inlet, the first measurement chamber being a chamber next to the second measurement chamber, the sensor element further includes: an oxygen pumping-out means capable of performing first pumping-out operation to pump out oxygen contained in the measurement gas so that substantially all water vapor and carbon dioxide contained in the measurement gas are reduced before the measurement gas introduced through the gas inlet reaches the first measurement chamber; a first measurement pump cell including a first measurement electrode formed to face the first measurement chamber, an out-of-space pump electrode provided at a location other than a location in the plurality of chambers, and a portion of the solid electrolyte present between the first measurement electrode and the out-of-space pump electrode; and a second measurement pump cell including a second measurement electrode formed to face the second measurement chamber,

the out-of-space pump electrode, and a portion of the solid electrolyte present between the second measurement electrode and the out-of-space pump electrode, the first measurement pump cell is capable of pumping oxygen into the first measurement chamber to selectively oxidize, in the first measurement chamber, hydrogen generated by reduction of water vapor associated with the first pumping-out operation and contained in the measurement gas introduced into the first measurement chamber, the second measurement pump cell is capable of pumping oxygen into the second measurement chamber to oxidize, in the second measurement chamber, carbon monoxide generated by reduction of carbon dioxide associated with the first pumping-out operation and contained in the measurement gas introduced into the second measurement chamber, the controller identifies: a concentration of water vapor contained in the measurement gas based on a magnitude of a current flowing between the first measurement electrode and the out-of-space pump electrode when oxygen is pumped into the first measurement chamber by the first measurement pump cell; and a concentration of carbon dioxide contained in the measurement gas based on a magnitude of a current flowing between the second measurement electrode and the out-of-space pump electrode when oxygen is pumped into the second measurement chamber by the second measurement pump cell, the oxygen pumping-out means is further capable of performing second pumping-out operation for a predetermined time period in the middle of the first pumping-out operation, the second pumping-out operation being operation to pump out oxygen contained in the measurement gas to the extent that water vapor and carbon dioxide contained in the measurement gas before reaching the first measurement chamber are not reduced, and reduction of water vapor and carbon dioxide by the oxygen pumping-out means is interrupted upon start of the second pumping-out operation, so that water vapor generated in the first measurement chamber and carbon dioxide generated in the second measurement chamber are emitted outside the sensor element.

[0011] Another aspect of the present invention is a concentration measurement method of measuring concentrations of a plurality of sensing target gas components contained in a measurement gas using a gas sensor, the measurement gas at least containing water vapor and carbon dioxide, wherein the gas sensor includes a sensor element having a structure formed of an oxygen-ion conductive solid electrolyte, the sensor element includes: a gas inlet through which the measurement gas is introduced; a plurality of chambers communicating sequentially from the gas inlet via different diffusion control parts; and a heater heating the sensor element, two of the plurality of chambers are a first measurement chamber and a second measurement chamber, the second measurement chamber being one of the plurality of chambers farthest from the gas inlet, the first measurement chamber being a chamber next to the second measurement chamber, the sensor element further includes: an oxygen pumping-out means capable of performing first pumping-out operation to pump out oxygen contained in the measurement gas so that substantially all water vapor and carbon dioxide contained in the measurement gas are reduced before the measurement gas introduced through the gas inlet reaches the first measurement chamber; a first measurement pump cell including a first measurement electrode formed to face the first measurement chamber, an out-of-space pump electrode provided at a location other than a location in the plurality of chambers, and a portion of the solid electrolyte present between the first measurement electrode and the out-of-space pump electrode; and a second measurement pump cell including a second measurement electrode formed to face the second measurement chamber, the out-of-space pump electrode, and a portion of the solid electrolyte present between the second measurement electrode and the out-of-space pump electrode, the concentration measurement method using the gas sensor includes: a) performing the first pumping-out operation using the oxygen pumping-out means; b) pumping, using the first measurement pump cell, oxygen into the first measurement chamber to selectively oxidize, in the first measurement chamber, hydrogen generated by reduction of water vapor associated with the first pumping-out operation and contained in the measurement gas introduced into the first measurement chamber; c) pumping, using the second measurement pump cell, oxygen into the second measurement chamber to oxidize, in the second measurement chamber, carbon monoxide generated by reduction of carbon dioxide associated with the first pumping-out operation and contained in the measurement gas introduced into the second measurement chamber; d) identifying a concentration of water vapor contained in the measurement gas based on a magnitude of a current flowing between the first measurement electrode and the out-of-space pump electrode when oxygen is pumped into the first measurement chamber using the first measurement pump cell; and e) identifying a concentration of carbon dioxide contained in the measurement gas based on a magnitude of a current flowing between the second measurement electrode and the out-of-space pump electrode when oxygen is pumped into the second measurement chamber using the second measurement pump cell, the oxygen pumping-out means performs second pumping-out operation to pump out oxygen contained in the measurement gas to the extent that water vapor and carbon dioxide contained in the measurement gas before reaching the first measurement chamber are not reduced for a predetermined time period in the middle of the step a) to interrupt reduction of water vapor and carbon dioxide using the oxygen pumping-out means, so that water vapor generated in the first measurement chamber and carbon dioxide generated in the second measurement chamber are emitted outside the sensor element.

[0012] According to the present invention, reduction in measurement accuracy of a gas sensor attributable to re-reduction of water vapor and carbon dioxide generated by oxidation of hydrogen and carbon monoxide is suitably suppressed.

[0013] It is therefore an object of the present invention to provide a gas sensor suitably suppressing reduction in measurement accuracy attributable to the presence of a substance generated upon concentration measurement.

BRIEF DESCRIPTION OF DRAWINGS

[0014] FIG. **1** is a diagram schematically showing one example of a configuration of a gas sensor **100**.

[0015] FIG. **2** is a block diagram showing functional components implemented by a controller **110**.

[0016] FIG. **3** is a schematic diagram illustrating basic entry and exit of gases into and from three chambers comprised in a sensor element **101** of the gas sensor **100**.

[0017] FIG. **4** is a diagram for describing a failure occurring when the gas sensor **100** continuously performs measurement based on basic operation.

[0018] FIG. **5** is a diagram for describing the failure occurring when the gas sensor **100** continuously performs measurement based on the basic operation.

[0019] FIGS. **6**A and **6**B are diagrams showing changes in target values of electromotive forces V**0**, V**1**, and V**2** over time in generated gas emission operation.

[0020] FIG. **7** is a schematic diagram illustrating entry and exit of gases into and from three chambers during the generated gas emission operation.

[0021] FIGS. **8**A and **8**B are diagrams showing yet another example of the generated gas emission operation.

DESCRIPTION OF THE PREFERRED EMBODIMENTS

<Configuration of Gas Sensor>

[0022] FIG. **1** is a diagram schematically showing one example of a configuration of a gas sensor **100** according to the present embodiment. The gas sensor **100** is a multi-gas sensor sensing a plurality of types of gas components and measuring concentrations thereof using a sensor element **101**. Assume that at least water vapor (H_2O) and carbon dioxide (CO_2) are main sensing target gas components of the gas sensor **100** in the present embodiment. The gas sensor **100** is attached to an exhaust path of an internal combustion engine, such as an engine of a vehicle, and is used with an exhaust gas flowing along the exhaust path as a measurement gas, for example. FIG. **1** includes a vertical cross-sectional view taken along a longitudinal direction of the sensor element **101**.

[0023] The sensor element **101** includes an elongated planar structure (base part) **14** formed of an oxygen-ion conductive solid electrolyte, a first diffusion control part **11** doubling a gas inlet **10** which is formed in one end portion (a left end portion in the figure) of the structure **14** and through which the measurement gas is introduced, and a buffer space **12**, a first chamber **20**, a second chamber **40**, and a third chamber **61** formed in the structure **14** and communicating sequentially from the gas inlet **10** (first diffusion control part **11**). The buffer space **12** communicates with the gas inlet **10** (first diffusion control part **11**). The first chamber **20** communicates with the buffer space **12** via a second diffusion control part **13**. The second chamber **40** communicates with the first chamber **20** via a third diffusion control part **30**. The third chamber **61** communicates with the second chamber **40** via a fourth diffusion control part **60**.

[0024] The structure **14** is formed by laminating a plurality of substrates of ceramics, for example. Specifically, the structure **14** has a configuration in which six layers including a first substrate **1**, a second substrate **2**, a third substrate **3**, a first solid electrolyte layer **4**, a spacer layer **5**, and a second solid electrolyte layer **6** are sequentially laminated from the bottom. Each layer is formed of an oxygen-ion conductive solid electrolyte, such as zirconia (ZrO_2).

[0025] The first diffusion control part **11** doubling as the gas inlet **10**, the buffer space **12**, the second diffusion control part **13**, the first chamber **20**, the third diffusion control part **30**, the second chamber **40**, the fourth diffusion control part **60**, and the third chamber **61** are formed in this order between a lower surface **6***b* of the second solid electrolyte layer **6** and an upper surface **4***a* of the first solid electrolyte layer **4** on a side of the one end portion of the structure **14**. A part extending from the gas inlet **10** to the third chamber **61** is also referred to as a gas distribution part.

[0026] The buffer space **12**, the first chamber **20**, the second chamber **40**, and the third chamber **61** are formed to penetrate the spacer layer **5** in a thickness direction. The lower surface **6***b* of the second solid electrolyte layer **6** is exposed in upper portions in the figure of these chambers and the like, and the upper surface **4***a* of the first solid electrolyte layer **4** is exposed in lower portions in the figure of these chambers and the like. Side portions of these chambers and the like are each defined by the spacer layer **5** or any of the diffusion control parts. The first chamber **20**, the second chamber **40**, and the third chamber **61** each have a length (size in the longitudinal direction of the element) of 0.3 mm to 1.0 mm, for example, a width (size in a transverse direction of the element) of 0.5 mm to 30 mm, for example, and a height (size in a thickness direction of the element) of 50 μm to 200 μm, for example. These chambers, however, are not required to have the same size and may have different sizes.

[0027] The gas inlet **10** may similarly be formed to penetrate the spacer layer **5** in the thickness direction separately from the first diffusion control part **11**. In this case, the first diffusion control part **11** is to be formed inside and adjacent to the gas inlet **10**.

[0028] The first diffusion control part **11**, the second diffusion control part **13**, the third diffusion control part **30**, and the fourth diffusion control part **60** each include two horizontally long slits. That is to say, they each have openings elongated in a direction perpendicular to the page of the figure in an upper portion and a lower portion in the figure thereof. The slits each have a length (size in the longitudinal direction of the element) of 0.2 mm to 1.0 mm, for example, a width of an opening (size in the transverse direction of the element) of 0.5 mm to 30 mm, for example, and a height of the opening (size in the thickness direction of the element) of 5 μm to 30 μm, for example.

[0029] The sensor element **101** includes a reference gas introduction space **43** in the other end portion (a right end portion in the figure) opposite the one end portion in which the gas inlet **10** is provided. The reference gas introduction space **43** is formed between an upper surface **3***a* of the third substrate **3** and a lower surface **5***b* of the spacer layer **5**. A side portion of the reference gas introduction space **43** is defined by a side surface of the first solid electrolyte layer **4**. Oxygen (O_2) and air are introduced into the reference gas introduction space **43** as reference gases, for example.

[0030] The gas inlet **10** (first diffusion control part **11**) is a part opening to an external space, and the measurement gas is taken from the external space into the sensor element **101** through the gas inlet **10**.

[0031] The first diffusion control part **11** is a part providing predetermined diffusion resistance to the taken measurement gas.

[0032] The buffer space **12** is provided to cancel concentration fluctuations of the measurement gas caused by pressure fluctuations of the measurement gas in the external space. Pulsation of exhaust pressure of the exhaust gas of the vehicle is taken as an example of such pressure fluctuations of the measurement gas, for example.

[0033] The second diffusion control part **13** is a part providing predetermined diffusion resistance to the measurement gas introduced from the buffer space **12** into the first chamber **20**.

[0034] The first chamber **20** is provided as a space to pump oxygen out of the measurement gas introduced through the second diffusion control part **13** and further reduce (decompose) H_2O and CO_2 upon pumping-out to generate hydrogen (H_2) and carbon monoxide (CO), so that the measurement gas does not substantially contain oxygen, H_2O, and CO_2. Pumping-out of oxygen is implemented by operation of an adjustment pump cell **21**.

[0035] The adjustment pump cell **21** is an electrochemical pump cell including an inner pump electrode (adjustment electrode) **22**, an outer pump electrode (out-of-space pump electrode) **23**, and a solid electrolyte present in a portion of the structure **14** sandwiched between these electrodes.

[0036] In the adjustment pump cell **21**, a voltage Vp**0** is applied across the inner pump electrode **22** and the outer pump electrode **23** from a variable power supply **24** disposed outside the sensor element **101** to generate an oxygen pump current (oxygen ion current) Ip**0**. Oxygen in the first chamber **20** can thereby be pumped out to the external space. Assume that a direction of the oxygen pump current Ip**0** when oxygen is pumped out from the first chamber **20** is a positive direction of the oxygen pump current Ip**0** in the present embodiment.

[0037] The inner pump electrode **22** is provided on substantially the entire portions of the lower surface **6***b* of the second solid electrolyte layer **6** and the upper surface **4***a* of the first solid electrolyte layer **4** defining the first chamber **20** respectively as a ceiling electrode portion **22***a* and a bottom electrode portion **22***b*. The ceiling electrode portion **22***a* and the bottom electrode portion **22***b* are connected by an unillustrated conducting portion.

[0038] The inner pump electrode **22** is provided as a porous cermet electrode containing at least one of platinum and rhodium (Rh) as a metal component and being rectangular in plan view.

[0039] The outer pump electrode **23** is provided, with platinum or an alloy (a Pt—Au alloy) of platinum and gold as a metal component, as a porous cermet electrode containing platinum or the Pt—Au alloy and zirconia and being rectangular in plan view, for example.

[0040] In the sensor element **101**, the inner pump electrode **22**, a reference electrode **42**, and a solid electrolyte present in a portion of the structure **14** sandwiched between these electrodes constitute a first chamber sensor cell **80**. The first chamber sensor cell **80** is an electrochemical sensor cell to grasp oxygen partial pressure in an atmosphere in the first chamber **20**.

[0041] The reference electrode **42** is an electrode formed between the first solid electrolyte layer **4** and the third substrate **3** and is provided as a porous cermet electrode containing platinum and zirconia and being rectangular in plan view, for example.

[0042] A reference gas introduction layer **48** formed of porous alumina and leading to the reference gas introduction space **43** is provided around the reference electrode **42**. A reference gas in the reference gas introduction space **43** is introduced into a surface of the reference electrode **42** via the reference gas introduction layer **48**. That is to say, the reference electrode **42** is always in contact with the reference gas.

[0043] In the first chamber sensor cell **80**, electromotive force (Nernst electromotive force) V**0** is generated between the inner pump electrode **22** and the reference electrode **42**. The electromotive force V**0** has a value in accordance with a difference between an oxygen concentration (oxygen partial pressure) in the first chamber **20** and an oxygen concentration (oxygen partial pressure) of the reference gas. The oxygen concentration (oxygen partial pressure) of the reference gas is basically constant, so that the electromotive force V**0** has a value in accordance with the oxygen concentration (oxygen partial pressure) in the first chamber **20**.

[0044] The third diffusion control part **30** is a part providing predetermined diffusion resistance to the measurement gas introduced from the first chamber **20** into the second chamber **40** and substantially not containing oxygen, H_2O and CO_2.

[0045] The second chamber **40** is provided as a space to selectively oxidize all of H_2 from among H_2 and CO contained in the measurement gas introduced through the third diffusion control part **30** to generate H_2O again. Generation of H_2O by oxidation of H_2 is implemented by operation of a first measurement pump cell **50**.

[0046] The first measurement pump cell **50** is an electrochemical pump cell including a first measurement electrode **51**, the outer pump electrode **23**, and a solid electrolyte present in a portion of the structure **14** sandwiched between these electrodes.

[0047] In the first measurement pump cell **50**, a voltage Vp**1** is applied across the first measurement electrode **51** and the outer pump electrode **23** from a variable power supply **52** disposed outside the sensor element **101** to generate an oxygen pump current (oxygen ion current) Ip**1**. Oxygen can thereby be pumped into the second chamber **40** from the external space. Assume that a direction of the oxygen pump current Ip**1** when oxygen is pumped out from the second chamber **40** is a positive direction of the oxygen pump current Ip**1** in the present embodiment.

[0048] The first measurement electrode **51** is provided on substantially the entire portions of the lower surface **6***b* of the second solid electrolyte layer **6** and the upper surface **4***a* of the first solid electrolyte layer **4** defining the second chamber **40** respectively as a ceiling electrode portion **51***a* and a bottom electrode portion **51***b*. The ceiling electrode portion **51***a* and the bottom electrode portion **51***b* are connected by an unillustrated conducting portion.

[0049] The first measurement electrode **51** is provided, with the Pt—Au alloy as a metal component, as a porous cermet electrode containing the Pt—Au alloy and zirconia and being rectangular in plan view, for example. The Pt—Au alloy preferably has an Au concentration of 1 wt % or more and 50 wt % or less and more preferably has an Au concentration of 10 wt % or more and 30 wt % or less. In this case, a selective H_2 oxidation property, that is, a property that, when H_2 and CO coexist in the second chamber **40**, only H_2 is selectively oxidized with oxygen pumped in by the first measurement pump cell **50** and CO is not oxidized, of the first measurement electrode **51** is more suitably developed.

[0050] In the sensor element **101**, the first measurement electrode **51**, the reference electrode **42**, and a solid electrolyte present in a portion of the structure **14** sandwiched between these electrodes constitute a second chamber sensor cell **81**. The second chamber sensor cell **81** is an electro-

chemical sensor cell to grasp oxygen partial pressure in an atmosphere in the second chamber **40**.

[0051] In the second chamber sensor cell **81**, electromotive force (Nernst electromotive force) V**1** is generated between the first measurement electrode **51** and the reference electrode **42**. The electromotive force V**1** has a value in accordance with a difference between an oxygen concentration (oxygen partial pressure) in the second chamber **40** and the oxygen concentration (oxygen partial pressure) of the reference gas. Since the oxygen concentration (oxygen partial pressure) of the reference gas is basically constant, the electromotive force V**1** has a value in accordance with the oxygen concentration (oxygen partial pressure) in the second chamber **40**.

[0052] The fourth diffusion control part **60** is a part providing predetermined diffusion resistance to the measurement gas introduced from the second chamber **40** into the third chamber **61** and containing H_2O and CO while substantially not containing CO_2 and oxygen.

[0053] The third chamber **61** is provided as a space to oxidize all of CO contained in the measurement gas introduced through the fourth diffusion control part **60** to generate CO_2 again. Generation of CO_2 by oxidation of CO is implemented by operation of a second measurement pump cell **41**.

[0054] The second measurement pump cell **41** is an electrochemical pump cell including a second measurement electrode **44**, the outer pump electrode **23**, and a solid electrolyte present in a portion of the structure **14** sandwiched between these electrodes.

[0055] In the second measurement pump cell **41**, a voltage Vp**2** is applied across the second measurement electrode **44** and the outer pump electrode **23** from a variable power supply **46** disposed outside the sensor element **101** to generate an oxygen pump current (oxygen ion current) Ip**2**. Oxygen can thereby be pumped into the third chamber **61** from the external space. Assume that a direction of the oxygen pump current Ip**2** when oxygen is pumped out from the third chamber **61** is a positive direction of the oxygen pump current Ip**2** in the present embodiment.

[0056] The second measurement electrode **44** is provided on substantially the entire portion of the upper surface **4***a* of the first solid electrolyte layer **4** defining the third chamber **61**.

[0057] The second measurement electrode **44** is provided, with Pt as a metal component, as a porous cermet electrode containing Pt and zirconia and being rectangular in plan view, for example.

[0058] In the sensor element **101**, the second measurement electrode **44**, the reference electrode **42**, and a solid electrolyte present in a portion of the structure **14** sandwiched between these electrodes constitute a third chamber sensor cell **82**. The third chamber sensor cell **82** is an electrochemical sensor cell to grasp oxygen partial pressure in an atmosphere in the third chamber **61**.

[0059] In the third chamber sensor cell **82**, electromotive force (Nernst electromotive force) V**2** is generated between the second measurement electrode **44** and the reference electrode **42**. The electromotive force V**2** has a value in accordance with a difference between an oxygen concentration (oxygen partial pressure) in the third chamber **61** and the oxygen concentration (oxygen partial pressure) of the reference gas. Since the oxygen concentration (oxygen partial pressure) of the reference gas is basically constant, the electromotive force V**2** has a value in accordance with the oxygen concentration (oxygen partial pressure) in the third chamber **61**.

[0060] The sensor element **101** further includes an electrochemical sensor cell **83** including the outer pump electrode **23**, the reference electrode **42**, and a solid electrolyte present in a portion of the structure **14** sandwiched between these electrodes. Electromotive force Vref generated between the outer pump electrode **23** and the reference electrode **42** of the sensor cell **83** has a value in accordance with oxygen partial pressure of the measurement gas present outside the sensor element **101**.

[0061] In addition to the foregoing, the sensor element **101** includes a heater part **70** playing a role in temperature adjustment of heating the sensor element **101** and maintaining the temperature thereof to enhance oxygen ion conductivity of the solid electrolyte forming the structure **14**.

[0062] The heater part **70** mainly includes a heater electrode **71**, a heater element **72**, a heater lead **72***a*, a through hole **73**, a heater insulating layer **74**, and a heater resistance detection lead, which is not illustrated in FIG. **1**. The heater element **72** is hereinafter also simply referred to as a heater **72**.

[0063] The heater **72** is provided to be sandwiched between the second substrate **2** and the third substrate **3** from below and above and generates heat by being powered from outside through the heater electrode **71** provided on a lower surface **1***b* of the first substrate **1**, the through hole **73**, and the heater lead **72***a*. The heater **72** is buried over the entire region of a range from the buffer space **12** to the third chamber **61** and can heat the sensor element **101** to a predetermined temperature and, further, maintain the temperature.

[0064] The heater **72** is provided so that a temperature is highest near the first chamber **20** (near the adjustment electrode **22**) and decreases with increasing distance from the first chamber **20** in the longitudinal direction of the element during heating. In the present embodiment, a temperature in a range from the one end portion of the sensor element **101** in which the gas inlet **10** is disposed to the third chamber **61** when the gas sensor **100** is in use (when the sensor element **101** is driven) is referred to as an element driving temperature. The heater **72** performs heating so that the element driving temperature is in a range of 750° C. to 950° C.

[0065] The heater insulating layer **74** of alumina and the like is formed above and below the heater **72** to electrically insulate the heater **72** from the second substrate **2** and the third substrate **3**. The heater part **70** also includes a pressure dissipation hole **75**. The pressure dissipation hole **75** is a part provided to penetrate the third substrate **3** and communicate with the reference gas introduction space **43** and is provided to mitigate a rise in internal pressure associated with a rise in temperature in the heater insulating layer **74**.

[0066] The gas sensor **100** further includes a controller **110** controlling operation of the sensor element **101** and performing processing to identify concentrations of the sensing target gas components based on currents flowing through the sensor element **101**.

[0067] FIG. **2** is a block diagram showing functional components implemented by the controller **110**. The controller **110** is configured by one or more electronic circuits including one or more central processing units (CPUs), a storage device, and the like, for example. Each of the

electronic circuits is a software functional part implementing a predetermined functional component by a CPU executing a predetermined program stored in the storage device, for example. The controller **110** may naturally be configured by an integrated circuit, such as a field-programmable gate array (FPGA), on which a plurality of electronic circuits are connected in accordance with their functions and the like.

[0068] When the gas sensor **100** is attached to the exhaust path of the engine of the vehicle and is used with the exhaust gas flowing along the exhaust path as the measurement gas, some or all of functions of the controller **110** may be implemented by an electronic control unit (ECU) of the vehicle.

[0069] The controller **110** includes, as functional components implemented by the CPU executing a predetermined program, an element operation control part **120** controlling operation of each part of the sensor element **101** described above and a concentration identification part **130** performing processing to identify the concentrations of the sensing target gas components contained in the measurement gas.

[0070] The element operation control part **120** mainly includes an adjustment pump cell control part **121** controlling operation of the adjustment pump cell **21**, a first measurement pump cell control part **122***a* controlling operation of the first measurement pump cell **50**, a second measurement pump cell control part **122***b* controlling operation of the second measurement pump cell **41**, and a heater control part **123** controlling heating operation performed by the heater **72**.

[0071] On the other hand, the concentration identification part **130** mainly includes a water vapor concentration identification part **130**H and a carbon dioxide concentration identification part **130**C respectively identifying a concentration of H_2O and a concentration of CO_2 as the main sensing target gas components of the gas sensor **100**.

[0072] The water vapor concentration identification part **130**H identifies the concentration of H_2O contained in the measurement gas based on a value of the oxygen pump current Ip**1** flowing through the first measurement pump cell **50** acquired by the first measurement pump cell control part **122***a*.

[0073] The carbon dioxide concentration identification part **130**C identifies the concentration of CO_2 contained in the measurement gas based on a value of the oxygen pump current Ip**2** flowing through the second measurement pump cell **41** acquired by the second measurement pump cell control part **122***b*.

[0074] The concentration identification part **130** further includes an oxygen concentration identification part **130**A identifying a concentration of oxygen contained in the measurement gas. The oxygen concentration identification part **130**A identifies the concentration of oxygen contained in the measurement gas based on a value of the oxygen pump current Ip**0** flowing through the adjustment pump cell **21** acquired by the adjustment pump cell control part **121**, the value of the oxygen pump current Ip**1** flowing through the first measurement pump cell **50** acquired by the first measurement pump cell control part **122***a*, and the value of the oxygen pump current Ip**2** flowing through the second measurement pump cell **41** acquired by the second measurement pump cell control part **122***b*. That is to say, the gas sensor **100** according to the present embodiment senses, in addition to H_2O and CO_2 as the main sensing target gas components, oxygen as an appendant sensing target gas component.

<Basic Idea of Multi-Gas Sensing and Concentration Identification>

[0075] A basic idea of sensing of a plurality of types of gases (multi-gas sensing) and identification of concentrations of the sensed gases implemented by the gas sensor **100** having a configuration as described above will be described next. Assume hereinafter that the measurement gas is an exhaust gas containing oxygen, H_2O, and CO_2.

[0076] FIG. **3** is a schematic diagram illustrating basic entry and exit of gases into and from the three chambers (internal spaces) comprised in the sensor element **101** of the gas sensor **100**.

[0077] First, in the sensor element **101** of the gas sensor **100** according to the present embodiment, the measurement gas is introduced through the gas inlet **10** (first diffusion control part **11**), the buffer space **12**, and the second diffusion control part **13** into the first chamber **20** as described above. In the first chamber **20**, oxygen contained in the introduced measurement gas is pumped out, and H_2O and CO_2 contained in the introduced measurement gas are reduced by operation of the adjustment pump cell **21**. That is to say, by operation of the adjustment pump cell **21**, oxygen is pumped out of the measurement introduced into the first chamber **20**, and a reduction (decomposition) reaction ($2H_2O \rightarrow 2H_2+O_2$ and $2CO_2 \rightarrow 2CO+O_2$) of H_2O and CO_2 contained in the measurement gas progresses, so that substantially all H_2O and CO_2 are decomposed into hydrogen (H_2), carbon monoxide (CO), and oxygen.

[0078] Pumping-out of Oxygen and reduction (decomposition) of H_2O and CO_2 are performed in the way that the adjustment pump cell control part **121** of the controller **110** sets a target value (control voltage) of the electromotive force V**0** in the first chamber sensor cell **80** to a value in a range of 1000 mV to 1500 mV (preferably 1000 mV) and feedback-controls the voltage Vp**0** applied from the variable power supply **24** to the adjustment pump cell **21** in accordance with a difference between an actual value and the target value of the electromotive force V**0** so that the electromotive force V**0** is maintained at the target value.

[0079] The adjustment pump cell **21** operates in this manner, so that oxygen partial pressure in the first chamber **20** is maintained at a sufficiently low value at which oxygen is considered to be substantially not present. It is approximately 10-20 atm when an equation V**0**=1000 mV holds true, for example. The measurement gas thus no longer substantially contains H_2O, CO_2, and oxygen.

[0080] The measurement gas containing H_2 and CO while not substantially containing H_2O, CO_2, and oxygen is introduced into the second chamber **40**.

[0081] In the second chamber **40**, oxygen is pumped in by operation of the first measurement pump cell **50**, and only H_2 contained in the introduced measurement gas is selectively oxidized.

[0082] Pumping-in of Oxygen is performed in the way that the first measurement pump cell control part **122***a* of the controller **110** sets a target value (control voltage) of the electromotive force V**1** in the second chamber sensor cell **81** to a value in a range of 250 mV to 450 mV (preferably 350 mV) and feedback-controls the voltage Vp**1** applied from the variable power supply **52** to the first measurement pump

cell **50** in accordance with a difference between an actual value and the target value of the electromotive force V**1** so that the electromotive force V**1** is maintained at the target value.

[0083] The first measurement pump cell **50** operates in this manner, so that an oxidation (a combustion) reaction $2H_2+O_2 \rightarrow 2H_2O$ is facilitated, and H_2O in an amount correlating with the amount of H_2O introduced through the gas inlet **10** is generated again in the second chamber **40**. In the present embodiment, H_2O in the correlating amount means that the amount of H_2O introduced through the gas inlet **10** and the amount of H_2O generated again by oxidation of H_2 generated by decomposition of H_2O are the same or are within a certain error range allowable in terms of measurement accuracy.

[0084] The target value of the electromotive force V**1** is set to the value in the range of 250 mV to 450 mV, so that oxygen partial pressure in the second chamber **40** is maintained at a value in a range in which almost all H_2 is oxidized but CO is not oxidized. It is approximately 10^{-7} atm when an equation V**1**=350 mV holds true, for example.

[0085] Providing the first measurement electrode **51** as the cermet electrode containing the Pt—Au alloy having an Au concentration of 1 wt % or more and 50 wt % or less as the metal component as described above also contributes to improvement in selective H_2 oxidation property.

[0086] In this case, the oxygen pump current Ip**1** (hereinafter also referred to as a water vapor detection current Ip**1**) flowing through the first measurement pump cell **50** is substantially proportional to the concentration of H_2O generated by combustion of H_2 in the second chamber **40** (there is a linear relationship between the water vapor detection current Ip**1** and the concentration of generated H_2O). The amount of H_2O generated by combustion correlates with the amount of H_2O in the measurement gas decomposed once in the first chamber **20** after being introduced through the gas inlet **10**. Accordingly, it can be said that sensing of H_2O in the measurement gas is implemented with detection of the water vapor detection current Ip**1** by the first measurement pump cell control part **122***a*. The second chamber **40** is thus also referred to as a first measurement chamber.

[0087] There is a linear relationship between the water vapor detection current Ip**1** and a concentration of water vapor in the measurement gas. Data (water vapor characteristics data) indicating the linear relationship is identified in advance using model gases having known water vapor concentrations and is held in the water vapor concentration identification part **130**H. In the gas sensor **100** according to the present embodiment, the water vapor concentration identification part **130**H acquires the value of the water vapor detection current Ip**1** detected by the first measurement pump cell control part **122***a*. The water vapor concentration identification part **130**H identifies a value of a concentration of water vapor corresponding to the acquired water vapor detection current Ip**1** with reference to the water vapor characteristics data. The concentration of water vapor in the measurement gas is thereby identified.

[0088] If H_2O is not present in the measurement gas introduced through the gas inlet **10**, H_2O is naturally not decomposed in the first chamber **20**, and thus H_2 is not introduced into the second chamber **40**, so that the water vapor detection current Ip**1** is approximately zero.

[0089] H_2 is oxidized to generate H_2O, so that the measurement gas contains H_2O and CO and substantially does not contain CO_2 and oxygen. The measurement gas is introduced into the third chamber **61**. In the third chamber **61**, oxygen is pumped in by operation of the second measurement pump cell **41**, and CO contained in the introduced measurement gas is oxidized.

[0090] Pumping-in of Oxygen is performed in the way that the second measurement pump cell control part **122***b* of the controller **110** sets a target value (control voltage) of the electromotive force V**2** in the third chamber sensor cell **82** to a value in a range of 100 mV to 300 mV (preferably 200 mV) and feedback-controls the voltage Vp**2** applied from the variable power supply **46** to the second measurement pump cell **41** in accordance with a difference between an actual value and the target value of the electromotive force V**2** so that the electromotive force V**2** is maintained at the target value.

[0091] The second measurement pump cell **41** operates in this manner, so that an oxidation (a combustion) reaction $2CO+O_2 \rightarrow 2CO_2$ is facilitated, and CO_2 in an amount correlating with the amount of CO_2 introduced through the gas inlet **10** is generated again in the third chamber **61**.

[0092] The target value of the electromotive force V**2** is set to the value in the range of 100 mV to 300 mV, so that oxygen partial pressure in the third chamber **61** is maintained at a value in a range in which almost all CO is oxidized. It is approximately 10^{-4} atm when an equation V**2**=200 mV holds true, for example.

[0093] In this case, the oxygen pump current Ip**2** (hereinafter also referred to as a carbon dioxide detection current Ip**2**) flowing through the second measurement pump cell **41** is substantially proportional to the concentration of CO_2 generated by combustion of CO in the third chamber **61** (there is a linear relationship between the carbon dioxide detection current Ip**2** and the concentration of generated CO_2). The amount of CO_2 generated by combustion correlates with the amount of CO_2 in the measurement gas decomposed once in the first chamber **20** after being introduced through the gas inlet **10**. Accordingly, it can be said that sensing of CO_2 in the measurement gas is implemented with detection of the carbon dioxide detection current Ip**2** by the second measurement pump cell control part **122***b*. The third chamber **61** is thus also referred to as a second measurement chamber.

[0094] There is a linear relationship between the carbon dioxide detection current Ip**2** and the concentration of carbon dioxide in the measurement gas. Data (carbon dioxide characteristics data) indicating the linear relationship is identified in advance using model gases having known carbon dioxide concentrations and is held in the carbon dioxide concentration identification part **130**C. In the gas sensor **100** according to the present embodiment, the carbon dioxide concentration identification part **130**C acquires the value of the carbon dioxide detection current Ip**2** detected by the second measurement pump cell control part **122***b*. The carbon dioxide concentration identification part **130**C identifies a value of a concentration of carbon dioxide corresponding to the acquired carbon dioxide detection current Ip**2** with reference to the carbon dioxide characteristics data. The concentration of carbon dioxide in the measurement gas is thereby identified.

[0095] If CO_2 is not present in the measurement gas introduced through the gas inlet **10**, CO_2 is naturally not decomposed in the first chamber **20**, and thus CO is not

introduced into the third chamber **61**, so that the carbon dioxide detection current Ip**2** is approximately zero.

[0096] Operation of the gas sensor **100** as described above based on FIG. **3** is hereinafter also referred to as basic operation.

[0097] Furthermore, in the gas sensor **100** according to the present embodiment, a concentration of oxygen contained in the measurement gas can be acquired, albeit indirectly. Generally, the following difference value between a concentration of oxygen pumped out from the first chamber **20** (C**0**) and a concentration of oxygen pumped into the second chamber **40** and the third chamber **61** (respectively C**1** and C**2**) corresponds to a concentration of oxygen in the measurement gas introduced through the gas inlet **10**.

$$C = C0 - C1 - C2 \quad (1)$$

[0098] C**0**, C**1**, and C**2** are values respectively substantially proportional to the oxygen pump currents Ip**0**, Ip**1**, and Ip**2**, and, in the gas sensor **100**, relationships between C**0** and Ip**0**, C**1** and Ip**1**, and C**2** and Ip**2** (constants of proportionality) are identified in advance and stored in the oxygen concentration identification part **130**A. Upon the start of measurement of the measurement gas, the oxygen concentration identification part **130**A acquires detected values of the oxygen pump currents Ip**0**, Ip**1**, and Ip**2** respectively from the adjustment pump cell control part **121**, the first measurement pump cell control part **122***a*, and the second measurement pump cell control part **122***b* and acquires the concentration of oxygen in the measurement gas based on the detected values, the above-mentioned constants of proportionality, and the equation (1).

<Concentration Identification Considering Continued Use>

[0099] FIGS. **4** and **5** are diagrams for each describing a failure occurring when the gas sensor **100** continuously performs measurement based on the above-mentioned basic operation.

[0100] When the gas sensor **100** measures the concentrations of H_2O and CO_2 and further the concentration of oxygen in the measurement gas in accordance with the above-mentioned basic operation, H_2O generated in the second chamber **40** is basically introduced into the third chamber **61** or resides in the second chamber **40**. CO_2 generated in the third chamber **61** basically resides in the third chamber **61**. The amount of generated H_2O and CO_2 in the second chamber **40** and the third chamber **61** thus increases as measurement is continuously performed.

[0101] When the measurement gas newly introduced through the first diffusion control part **11** (gas inlet **10**) has a relatively low concentration, a concentration gradient can be formed so that the concentrations of H_2O and CO_2 increase toward the third chamber **61** as a farthermost internal space from the gas inlet **10** in the gas distribution part extending from the gas inlet **10** to the third chamber **61** as illustrated in FIG. **4**.

[0102] As a result of formation of such a concentration gradient, H_2O and CO_2 present in the third chamber **61** or the second chamber **40** can diffuse from the third chamber **61** and the second chamber **40** to the first chamber **20**. That is to say, H_2O and CO_2 can flow back to the first chamber **20**.

[0103] As described above, in the first chamber **20**, pumping-out of oxygen and further reduction of H_2O and CO_2 are continuously performed by operation of the adjustment pump cell **21**. Thus, as illustrated in FIG. **5**, when H_2O and CO_2 flow back from the third chamber **61** and the second chamber **40**, they are reduced (re-reduced) to generate H_2 and CO without being distinguished from H_2O and CO_2 as original measurement targets at the time contained in the measurement gas introduced through the gas inlet **10**.

[0104] Once such re-reduction occurs, H_2 being to be oxidized by the first measurement pump cell **50** pumping oxygen into the second chamber **40** includes H_2 generated by re-reduction, and CO being to be oxidized by the second measurement pump cell **41** pumping oxygen into the third chamber **61** includes CO generated by re-reduction, so that currents resulting from re-reduced H_2O and CO_2 are superimposed onto the water vapor detection current Ip**1** flowing through the first measurement pump cell **50** and the carbon dioxide detection current Ip**2** flowing through the second measurement pump cell **41**. That is to say, the values of the water vapor detection current Ip**1** and the carbon dioxide detection current Ip**2** no longer correspond to the concentrations of H_2O and CO_2 originally contained in the measurement gas, resulting in reduction in measurement accuracy.

[0105] In the gas sensor **100** according to the present embodiment, operation of each pump cell is controlled so that such reduction in measurement accuracy attributable to the backflow of H_2O and CO_2 does not occur. Generally, the backflow of H_2O and CO_2 generated in the second chamber **40** and the third chamber **61** is not suppressed, but operation to emit H_2O and CO_2 flowing back to the first chamber **20** outside the sensor element **101** is performed to secure measurement accuracy. This operation is also referred to as generated gas emission operation.

[0106] FIGS. **6**A and **6**B are diagrams showing changes in target values of the electromotive forces V**0**, V**1**, and V**2** over time in the generated gas emission operation. FIG. **7** is a schematic diagram illustrating entry and exit of gases into and from the three chambers (internal spaces) during the generated gas emission operation.

[0107] As described above, in the basic operation, the target value of the electromotive force V**0** in the first chamber sensor cell **80** is set to the value in the range of 1000 mV to 1500 mV, and feedback control is performed on the voltage Vp**0** applied to the adjustment pump cell **21** so that the electromotive force V**0** is maintained at the target value.

[0108] In contrast, in the generated gas emission operation, the target value (set value) of the electromotive force V**0** in the first chamber sensor cell **80** is temporarily changed from a steady-state value as a value V**0***a* to a value V**0***b* at any timing as shown in FIG. **6**A.

[0109] The value V**0***a* is herein the value in the range of 1000 mV to 1500 mV as with the target value of the electromotive force V**0** in the basic operation. The value V**0***a* may be set to the same value as the target value of the electromotive force V**0** in the basic operation.

[0110] While the target value of the electromotive force V**0** is set to the value V**0***a*, the adjustment pump cell **21** pumps out oxygen from the first chamber **20** so that substantially all H_2O and CO_2 contained in the measurement gas are reduced as in the basic operation.

[0111] In contrast, the value V**0***b* is a value smaller than the value V**0***a* and in a range of 400 mV to 700 mV (preferably 400 mV).

[0112] When the target value of the electromotive force V**0** is set to the value V**0***b*, the adjustment pump cell **21** pumps out oxygen present in the first chamber **20** to the extent that H_2O and CO_2 contained in the measurement gas are not reduced. That is to say, reduction of H_2O and CO_2 in the first chamber **20** is temporarily interrupted while operation of the adjustment pump cell **21** as an oxygen pumping-out means is maintained. In this case, the oxygen partial pressure in the first chamber **20** is maintained at a sufficiently low value to the extent that H_2O and CO_2 contained in the measurement gas are not reduced. It is approximately 10^{-8} atm when an equation V**0**=400 mV holds true, for example.

[0113] That is to say, in the generated gas emission operation, the adjustment pump cell **21** performs, in the middle of pumping-out operation (first pumping-out operation) to pump out oxygen from the first chamber **20** so that substantially all water vapor and carbon dioxide contained in the measurement gas are reduced, pumping-out operation (second pumping-out operation) to pump out oxygen from the first chamber **20** to the extent that water vapor and carbon dioxide contained in the measurement gas introduced into the first chamber **20** are not reduced.

[0114] On the other hand, the target values of the electromotive force V**1** and the electromotive force V**2** are set similarly to those in the basic operation. Specifically, the target value of the electromotive force V**1** is set to the value in the range of 250 mV to 450 mV (preferably 350 mV), and the target value of the electromotive force V**2** is set to the value in the range of 100 mV to 300 mV (preferably 200 mV).

[0115] In this case, while operation of the gas sensor **100** when the target value of the electromotive force V**0** is set to the value V**0***a* is the same as the basic operation, only oxygen contained in the measurement gas introduced into the first chamber **20** is pumped out, and H_2O and CO_2 are not reduced when the target value of the electromotive force V**0** is set to the value V**0***b*. Thus, even when a concentration gradient as illustrated in FIG. **4** is formed, and H_2O and CO_2 flow back to the first chamber **20** as a result of residing of H_2O and CO_2 generated in the second chamber **40** and the third chamber **61**, flowing back H_2O and CO_2 are emitted outside the element as they are without being re-reduced in the first chamber **20** as illustrated in FIG. **7**. The concentration gradient is thereby reduced, and, as a result, re-reduction of flowing back H_2O and CO_2 when and after the target value of the electromotive force V**0** is set to the value V**0***a* again is less likely to occur. That is to say, in the gas sensor **100** according to the present embodiment, the second pumping-out operation is started, so that H_2O and CO_2 generated by selective oxidation of H_2 and CO are suitably emitted outside the element through the first chamber **20** in accordance with the concentration gradient formed in the gas distribution part in the sensor element **101**.

[0116] The second pumping-out operation may be performed at any timing or may be performed at a predetermined timing. Alternatively, it may be performed when a predetermined condition is met. For example, the second pumping-out operation may be performed based on integral values of measured values of H_2O and CO_2 because the amount of H_2O and CO_2 generated in the second chamber **40** and the third chamber **61** increases as the measured values are continuously large in the gas sensor **100**.

[0117] A time period that the target value of the electromotive force V**0** is set to the value V**0***b* and the second pumping-out operation is performed is preferably in a range of 1 ms to 1 s. A set time of less than 1 ms is not preferable because diffusion of H_2O and CO_2 from the second chamber **40** or the third chamber **61** does not sufficiently progress, so that the concentration gradient is not sufficiently reduced, and the measurement accuracy might still continuously be reduced. A set time of more than 1 s is not preferable because H_2O and CO_2 contained in the newly introduced measurement gas cannot be reduced for a long time period, that is, concentrations cannot be measured for a long time to reduce responsiveness.

[0118] Alternatively, the target value of the electromotive force V**0** may periodically be changed so that the adjustment pump cell **21** alternately and periodically performs the first pumping-out operation and the second pumping-out operation to periodically make a temporal stop of reduction of H_2O and CO_2, and, the target values (set values) of the electromotive force V**1** in the second chamber sensor cell **81** and the electromotive force V**2** in the third chamber sensor cell **82** may also periodically be changed in synchronization with the periodic change in target value of the electromotive force V**0** as shown in FIG. **6**B. That is to say, the first measurement pump cell **50** and the second measurement pump cell **41** may pump in oxygen in synchronization with the second pumping-out operation.

[0119] The target values of the electromotive force V**1** and the electromotive force V**2** are each set to zero when the target value of the electromotive force V**0** is set to the value V**0***a* and are each set to a value in the same range as that in the basic operation only when the target value of the electromotive force V**0** is set to the value V**0***b*. In this case, the first measurement pump cell **50** and the second measurement pump cell **41** operate only when the adjustment pump cell **21** performs the second pumping-out operation and do not operate when the adjustment pump cell **21** performs the first pumping-out operation. The electromotive force V**1** and the electromotive force V**2** are actually set to different values while they are indicated by one graph for ease of illustration in FIG. **6**B.

[0120] In this case, reduction of H_2O and CO_2 in the first chamber **20** and selective oxidation of H_2 and CO respectively in the second chamber **40** and the third chamber **61** are performed at different timings. That is to say, while H_2 and CO are re-oxidized in the second chamber **40** and the third chamber **61**, only oxygen contained in the introduced measurement gas is pumped out, and H_2O and CO_2 are not reduced in the first chamber **20**.

[0121] Also in this case, even when H_2O and CO_2 generated in the second chamber **40** and the third chamber **61** reside, and a concentration gradient as illustrated in FIG. **4** is formed, H_2O and CO_2 flowing back to the first chamber **20** are emitted outside the element as they are without being re-reduced in the first chamber **20**.

[0122] In this case, the time period that the target value of the electromotive force V**0** is set to the value V**0***a* is also preferably in the range of 1 ms to 1 s.

[0123] FIGS. **8**A and **8**B are diagrams showing yet another example of the generated gas emission operation. In this case, while a periodic change in target value of the electromotive force V**0** is similar to that in a case of FIG. **6**A as

shown in FIG. **8**A, a phase (timing) of a periodic change in target values of the electromotive force V**1** and the electromotive force V**2** is shifted from that in a case of FIG. **6**B as shown in FIG. **8**B. More specifically, pumping of oxygen into the second chamber **40** and the third chamber **61** starts early during the first pumping-in operation and ends during the second pumping-in operation. A degree of advancement in start time, however, is 50% or less of a time period for which the first pumping-in operation is performed (a time period for which the target value of the electromotive force V**0** is set to the value V**0***a*) Δt.

[0124] As described above, according to the present embodiment, in the gas sensor that performs pumping-in of oxygen contained in the measurement gas and reduction of H_2O and CO_2 in the first chamber, oxidizes H_2 and CO generated by reduction respectively in the second chamber and the third chamber, and acquires the concentrations of H_2O and CO_2 contained in the measurement gas based on the magnitudes of the oxygen pump currents generated by pumping-in in the second chamber and the third chamber during oxidation, reduction of H_2O and CO_2 in the first chamber is temporarily or periodically stopped to emit H_2O and CO_2 generated by oxidation of H_2 and CO outside the sensor element from the first chamber using the concentration gradient thereof. Reduction in measurement accuracy attributable to re-reduction of H_2O and CO_2 generated by oxidation of H_2 and CO is suitably suppressed.

<Modifications>

[0125] In the above-mentioned embodiment, generated gas emission operation to emit H_2O and CO_2 generated by oxidation of H_2 and CO generated by reduction of H_2O and CO_2 contained in the measurement gas for concentration measurement in the gas sensor **100** including the sensor element **101** having a three chamber structure is targeted. A process to reduction of H_2O and CO_2 contained in the measurement gas to generate H_2 and CO, however, may not necessarily be performed only in one chamber. The sensor element may have another structure as long as generated gas emission operation similar to that in the above-mentioned embodiment can be performed.

What is claimed is:

1. A gas sensor capable of measuring concentrations of a plurality of sensing target gas components contained in a measurement gas, the measurement gas at least containing water vapor and carbon dioxide, the gas sensor comprising:

a sensor element having a structure formed of an oxygen-ion conductive solid electrolyte; and

a controller controlling operation of the gas sensor, wherein

the sensor element comprises:

a gas inlet through which the measurement gas is introduced;

a plurality of chambers communicating sequentially from the gas inlet via different diffusion control parts; and

a heater heating the sensor element,

two of the plurality of chambers are a first measurement chamber and a second measurement chamber, the second measurement chamber being one of the plurality of chambers farthest from the gas inlet, the first measurement chamber being a chamber next to the second measurement chamber,

the sensor element further comprises:

an oxygen pumping-out means capable of performing first pumping-out operation to pump out oxygen contained in the measurement gas so that substantially all water vapor and carbon dioxide contained in the measurement gas are reduced before the measurement gas introduced through the gas inlet reaches the first measurement chamber;

a first measurement pump cell including a first measurement electrode formed to face the first measurement chamber, an out-of-space pump electrode provided at a location other than a location in the plurality of chambers, and a portion of the solid electrolyte present between the first measurement electrode and the out-of-space pump electrode; and

a second measurement pump cell including a second measurement electrode formed to face the second measurement chamber, the out-of-space pump electrode, and a portion of the solid electrolyte present between the second measurement electrode and the out-of-space pump electrode,

the first measurement pump cell is capable of pumping oxygen into the first measurement chamber to selectively oxidize, in the first measurement chamber, hydrogen generated by reduction of water vapor associated with the first pumping-out operation and contained in the measurement gas introduced into the first measurement chamber,

the second measurement pump cell is capable of pumping oxygen into the second measurement chamber to oxidize, in the second measurement chamber, carbon monoxide generated by reduction of carbon dioxide associated with the first pumping-out operation and contained in the measurement gas introduced into the second measurement chamber,

the controller identifies:

a concentration of water vapor contained in the measurement gas based on a magnitude of a current flowing between the first measurement electrode and the out-of-space pump electrode when oxygen is pumped into the first measurement chamber by the first measurement pump cell; and

a concentration of carbon dioxide contained in the measurement gas based on a magnitude of a current flowing between the second measurement electrode and the out-of-space pump electrode when oxygen is pumped into the second measurement chamber by the second measurement pump cell,

the oxygen pumping-out means is further capable of performing second pumping-out operation for a predetermined time period in the middle of the first pumping-out operation, the second pumping-out operation being operation to pump out oxygen contained in the measurement gas to the extent that water vapor and carbon dioxide contained in the measurement gas before reaching the first measurement chamber are not reduced, and

reduction of water vapor and carbon dioxide by the oxygen pumping-out means is interrupted upon start of the second pumping-out operation, so that water vapor generated in the first measurement chamber and carbon dioxide generated in the second measurement chamber are emitted outside the sensor element.

2. The gas sensor according to claim 1, wherein

the plurality of chambers include a first chamber, a second chamber as the first measurement chamber, and a third chamber as the second measurement chamber,

the sensor element further comprises

an adjustment pump cell as the oxygen pumping-out means including an adjustment electrode formed to face the first chamber, the out-of-space pump electrode, and a portion of the solid electrolyte present between the adjustment electrode and the out-of-space pump electrode,

the adjustment pump cell is capable of performing, as the first pumping-out operation, operation to pump out oxygen from the first chamber so that substantially all water vapor and carbon dioxide contained in the measurement gas introduced into the first chamber are reduced and performing, as the second pumping-out operation, operation to pump out oxygen from the first chamber to the extent that water vapor and carbon dioxide contained in the measurement gas introduced into the first chamber are not reduced for a predetermined time period in the middle of the first pumping-out operation, and

reduction of water vapor and carbon dioxide in the first chamber is interrupted upon start of the second pumping-out operation performed by the adjustment pump cell, so that water vapor generated in the second chamber and carbon dioxide generated in the third chamber are emitted outside the sensor element through the first chamber.

3. The gas sensor according to claim 2, wherein

the adjustment pump cell alternately and periodically performs the first pumping-out operation and the second pumping-out operation, and

pumping of oxygen into the second chamber by the first measurement pump cell and pumping of oxygen into the third chamber by the second measurement pump cell are performed periodically in accordance with the first pumping-out operation and the second pumping-out operation performed by the adjustment pump cell.

4. The gas sensor according to claim 3, wherein

pumping of oxygen into the second chamber by the first measurement pump cell and pumping of oxygen into the third chamber by the second measurement pump cell are performed in synchronization with the second pumping-out operation performed by the adjustment pump cell.

5. The gas sensor according to claim 3, wherein

pumping of oxygen into the second chamber by the first measurement pump cell and pumping of oxygen into the third chamber by the second measurement pump cell start during the first pumping-out operation and end during the second pumping-out operation performed by the adjustment pump cell.

6. The gas sensor according to claim 2, wherein

the sensor element further comprises:

a reference electrode in contact with a reference gas;

a first chamber sensor cell which includes the adjustment electrode, the reference electrode, and a portion of the solid electrolyte present between the adjustment electrode and the reference electrode and in which electromotive force V**0** in accordance with a concentration of oxygen in the first chamber is generated between the adjustment electrode and the reference electrode;

a second chamber sensor cell which includes the first measurement electrode, the reference electrode, and a portion of the solid electrolyte present between the first measurement electrode and the reference electrode and in which electromotive force V**1** in accordance with a concentration of oxygen in the second chamber is generated between the first measurement electrode and the reference electrode; and

a third chamber sensor cell which includes the second measurement electrode, the reference electrode, and a portion of the solid electrolyte present between the second measurement electrode and the reference electrode and in which electromotive force V**2** in accordance with a concentration of oxygen in the third chamber is generated between the second measurement electrode and the reference electrode, and

the controller controls:

a voltage applied across the adjustment electrode and the out-of-space pump electrode by the adjustment pump cell so that the electromotive force V**0** in the first chamber sensor cell is maintained at a predetermined target value in a range of 1000 mV to 1500 mV during the first pumping-out operation and is maintained at a predetermined target value in a range of 400 mV to 700 mV during the second pumping-out operation;

a voltage applied across the first measurement electrode and the out-of-space pump electrode by the first measurement pump cell so that the electromotive force V**1** in the second chamber sensor cell is maintained at a predetermined target value in a range of 250 mV to 450 mV; and

a voltage applied across the second measurement electrode and the out-of-space pump electrode by the second measurement pump cell so that the electromotive force V**2** in the third chamber sensor cell is maintained at a predetermined target value in a range of 100 mV to 300 mV.

7. A concentration measurement method of measuring concentrations of a plurality of sensing target gas components contained in a measurement gas using a gas sensor, the measurement gas at least containing water vapor and carbon dioxide, wherein

the gas sensor includes a sensor element having a structure formed of an oxygen-ion conductive solid electrolyte,

the sensor element comprises:

a gas inlet through which the measurement gas is introduced;

a plurality of chambers communicating sequentially from the gas inlet via different diffusion control parts; and

a heater heating the sensor element,

two of the plurality of chambers are a first measurement chamber and a second measurement chamber, the second measurement chamber being one of the plurality of chambers farthest from the gas inlet, the first measurement chamber being a chamber next to the second measurement chamber,

the sensor element further comprises:

an oxygen pumping-out means capable of performing first pumping-out operation to pump out oxygen contained in the measurement gas so that substantially all water vapor and carbon dioxide contained in the measurement gas are reduced before the measurement gas introduced through the gas inlet reaches the first measurement chamber;

a first measurement pump cell including a first measurement electrode formed to face the first measurement chamber, an out-of-space pump electrode provided at a location other than a location in the plurality of chambers, and a portion of the solid electrolyte present between the first measurement electrode and the out-of-space pump electrode; and

a second measurement pump cell including a second measurement electrode formed to face the second measurement chamber, the out-of-space pump electrode, and a portion of the solid electrolyte present between the second measurement electrode and the out-of-space pump electrode,

the concentration measurement method using the gas sensor comprises:

a) performing the first pumping-out operation using the oxygen pumping-out means;

b) pumping, using the first measurement pump cell, oxygen into the first measurement chamber to selectively oxidize, in the first measurement chamber, hydrogen generated by reduction of water vapor associated with the first pumping-out operation and contained in the measurement gas introduced into the first measurement chamber;

c) pumping, using the second measurement pump cell, oxygen into the second measurement chamber to oxidize, in the second measurement chamber, carbon monoxide generated by reduction of carbon dioxide associated with the first pumping-out operation and contained in the measurement gas introduced into the second measurement chamber;

d) identifying a concentration of water vapor contained in the measurement gas based on a magnitude of a current flowing between the first measurement electrode and the out-of-space pump electrode when oxygen is pumped into the first measurement chamber using the first measurement pump cell; and

e) identifying a concentration of carbon dioxide contained in the measurement gas based on a magnitude of a current flowing between the second measurement electrode and the out-of-space pump electrode when oxygen is pumped into the second measurement chamber using the second measurement pump cell,

the oxygen pumping-out means performs second pumping-out operation to pump out oxygen contained in the measurement gas to the extent that water vapor and carbon dioxide contained in the measurement gas before reaching the first measurement chamber are not reduced for a predetermined time period in the middle of the step a) to interrupt reduction of water vapor and carbon dioxide using the oxygen pumping-out means, so that water vapor generated in the first measurement chamber and carbon dioxide generated in the second measurement chamber are emitted outside the sensor element.

8. The concentration measurement method using the gas sensor according to claim **7**, wherein

the plurality of chambers include a first chamber, a second chamber as the first measurement chamber, and a third chamber as the second measurement chamber,

the sensor element further comprises

an adjustment pump cell as the oxygen pumping-out means including an adjustment electrode formed to face the first chamber, the out-of-space pump electrode, and a portion of the solid electrolyte present between the adjustment electrode and the out-of-space pump electrode,

in the step a), using the adjustment pump cell, operation to pump out oxygen from the first chamber so that substantially all water vapor and carbon dioxide contained in the measurement gas introduced into the first chamber are reduced is performed as the first pumping-out operation, and operation to pump out oxygen from the first chamber to the extent that water vapor and carbon dioxide contained in the measurement gas introduced into the first chamber are not reduced is performed as the second pumping-out operation for a predetermined time period in the middle of the first pumping-out operation to interrupt reduction of water vapor and carbon dioxide in the first chamber, so that water vapor generated in the second chamber and carbon dioxide generated in the third chamber are emitted outside the sensor element through the first chamber.

9. The concentration measurement method using the gas sensor according to claim **8**, wherein

in the step a), the first pumping-out operation and the second pumping-out operation are alternately and periodically performed using the adjustment pump cell, and

pumping of oxygen into the second chamber using the first measurement pump cell in the step b) and pumping of oxygen into the third chamber using the second measurement pump cell in the step c) are performed periodically in accordance with the first pumping-out operation and the second pumping-out operation performed using the adjustment pump cell in the step a).

10. The concentration measurement method using the gas sensor according to claim **9**, wherein

pumping of oxygen into the second chamber using the first measurement pump cell in the step b) and pumping of oxygen into the third chamber using the second measurement pump cell in the step c) are performed in synchronization with the second pumping-out operation performed using the adjustment pump cell in the step a).

11. The concentration measurement method using the gas sensor according to claim **9**, wherein

pumping of oxygen into the second chamber using the first measurement pump cell in the step b) and pumping of oxygen into the third chamber using the second measurement pump cell in the step c) start during the first pumping-out operation and end during the second pumping-out operation performed using the adjustment pump cell in the step a).

12. The concentration measurement method using the gas sensor according to claim **8**, wherein

the sensor element further comprises

a reference electrode in contact with a reference gas,

in the step a), a voltage applied across the adjustment electrode and the out-of-space pump electrode using the adjustment pump cell is controlled so that electromotive force V**0** generated between the adjustment electrode and the reference electrode in accordance with a concentration of oxygen in the first chamber is maintained at a predetermined target value in a range of 1000 mV to 1500 mV during the first pumping-out operation and is maintained at a predetermined target value in a range of 400 mV to 700 mV during the second pumping-out operation,

in the step b), a voltage applied across the first measurement electrode and the out-of-space pump electrode using the first measurement pump cell is controlled so that electromotive force V**1** generated between the first measurement electrode and the reference electrode in accordance with a concentration of oxygen in the second chamber is maintained at a predetermined target value in a range of 250 mV to 450 mV, and

in the step c), a voltage applied across the second measurement electrode and the out-of-space pump electrode using the second measurement pump cell is controlled so that electromotive force V**2** generated between the second measurement electrode and the reference electrode in accordance with a concentration of oxygen in the third chamber is maintained at a predetermined target value in a range of 100 mV to 300 mV.

13. The gas sensor according to claim **3**, wherein

the sensor element further comprises:

a reference electrode in contact with a reference gas;

a first chamber sensor cell which includes the adjustment electrode, the reference electrode, and a portion of the solid electrolyte present between the adjustment electrode and the reference electrode and in which electromotive force V**0** in accordance with a concentration of oxygen in the first chamber is generated between the adjustment electrode and the reference electrode;

a second chamber sensor cell which includes the first measurement electrode, the reference electrode, and a portion of the solid electrolyte present between the first measurement electrode and the reference electrode and in which electromotive force V**1** in accordance with a concentration of oxygen in the second chamber is generated between the first measurement electrode and the reference electrode; and

a third chamber sensor cell which includes the second measurement electrode, the reference electrode, and a portion of the solid electrolyte present between the second measurement electrode and the reference electrode and in which electromotive force V**2** in accordance with a concentration of oxygen in the third chamber is generated between the second measurement electrode and the reference electrode, and

the controller controls:

a voltage applied across the adjustment electrode and the out-of-space pump electrode by the adjustment pump cell so that the electromotive force V**0** in the first chamber sensor cell is maintained at a predetermined target value in a range of 1000 mV to 1500 mV during the first pumping-out operation and is maintained at a predetermined target value in a range of 400 mV to 700 mV during the second pumping-out operation;

a voltage applied across the first measurement electrode and the out-of-space pump electrode by the first measurement pump cell so that the electromotive force V**1** in the second chamber sensor cell is maintained at a predetermined target value in a range of 250 mV to 450 mV; and

a voltage applied across the second measurement electrode and the out-of-space pump electrode by the second measurement pump cell so that the electromotive force V**2** in the third chamber sensor cell is maintained at a predetermined target value in a range of 100 mV to 300 mV.

14. The gas sensor according to claim **4**, wherein

the sensor element further comprises:

a reference electrode in contact with a reference gas;

a first chamber sensor cell which includes the adjustment electrode, the reference electrode, and a portion of the solid electrolyte present between the adjustment electrode and the reference electrode and in which electromotive force V**0** in accordance with a concentration of oxygen in the first chamber is generated between the adjustment electrode and the reference electrode;

a second chamber sensor cell which includes the first measurement electrode, the reference electrode, and a portion of the solid electrolyte present between the first measurement electrode and the reference electrode and in which electromotive force V**1** in accordance with a concentration of oxygen in the second chamber is generated between the first measurement electrode and the reference electrode; and

a third chamber sensor cell which includes the second measurement electrode, the reference electrode, and a portion of the solid electrolyte present between the second measurement electrode and the reference electrode and in which electromotive force V**2** in accordance with a concentration of oxygen in the third chamber is generated between the second measurement electrode and the reference electrode, and

the controller controls:

a voltage applied across the adjustment electrode and the out-of-space pump electrode by the adjustment pump cell so that the electromotive force V**0** in the first chamber sensor cell is maintained at a predetermined target value in a range of 1000 mV to 1500 mV during the first pumping-out operation and is maintained at a predetermined target value in a range of 400 mV to 700 mV during the second pumping-out operation;

a voltage applied across the first measurement electrode and the out-of-space pump electrode by the first measurement pump cell so that the electromotive force V**1** in the second chamber sensor cell is maintained at a predetermined target value in a range of 250 mV to 450 mV; and

a voltage applied across the second measurement electrode and the out-of-space pump electrode by the second measurement pump cell so that the electromotive force V**2** in the third chamber sensor cell is maintained at a predetermined target value in a range of 100 mV to 300 mV.

15. The gas sensor according to claim **5**, wherein

the sensor element further comprises:

a reference electrode in contact with a reference gas;

a first chamber sensor cell which includes the adjustment electrode, the reference electrode, and a portion of the solid electrolyte present between the adjustment electrode and the reference electrode and in which electromotive force V**0** in accordance with a concentration of oxygen in the first chamber is generated between the adjustment electrode and the reference electrode;

a second chamber sensor cell which includes the first measurement electrode, the reference electrode, and a portion of the solid electrolyte present between the first measurement electrode and the reference electrode and in which electromotive force V**1** in accordance with a concentration of oxygen in the second chamber is generated between the first measurement electrode and the reference electrode; and

a third chamber sensor cell which includes the second measurement electrode, the reference electrode, and a portion of the solid electrolyte present between the second measurement electrode and the reference electrode and in which electromotive force V**2** in accordance with a concentration of oxygen in the third chamber is generated between the second measurement electrode and the reference electrode, and

the controller controls:

a voltage applied across the adjustment electrode and the out-of-space pump electrode by the adjustment pump cell so that the electromotive force V**0** in the first chamber sensor cell is maintained at a predetermined target value in a range of 1000 mV to 1500 mV during the first pumping-out operation and is maintained at a predetermined target value in a range of 400 mV to 700 mV during the second pumping-out operation;

a voltage applied across the first measurement electrode and the out-of-space pump electrode by the first measurement pump cell so that the electromotive force V**1** in the second chamber sensor cell is maintained at a predetermined target value in a range of 250 mV to 450 mV; and

a voltage applied across the second measurement electrode and the out-of-space pump electrode by the second measurement pump cell so that the electromotive force V**2** in the third chamber sensor cell is maintained at a predetermined target value in a range of 100 mV to 300 mV.

16. The concentration measurement method using the gas sensor according to claim **9**, wherein

the sensor element further comprises

a reference electrode in contact with a reference gas,

in the step a), a voltage applied across the adjustment electrode and the out-of-space pump electrode using the adjustment pump cell is controlled so that electromotive force V**0** generated between the adjustment electrode and the reference electrode in accordance with a concentration of oxygen in the first chamber is maintained at a predetermined target value in a range of 1000 mV to 1500 mV during the first pumping-out operation and is maintained at a predetermined target value in a range of 400 mV to 700 mV during the second pumping-out operation,

in the step b), a voltage applied across the first measurement electrode and the out-of-space pump electrode using the first measurement pump cell is controlled so that electromotive force V**1** generated between the first measurement electrode and the reference electrode in accordance with a concentration of oxygen in the second chamber is maintained at a predetermined target value in a range of 250 mV to 450 mV, and

in the step c), a voltage applied across the second measurement electrode and the out-of-space pump electrode using the second measurement pump cell is controlled so that electromotive force V**2** generated between the second measurement electrode and the reference electrode in accordance with a concentration of oxygen in the third chamber is maintained at a predetermined target value in a range of 100 mV to 300 mV.

17. The concentration measurement method using the gas sensor according to claim **10**, wherein

the sensor element further comprises

a reference electrode in contact with a reference gas,

in the step a), a voltage applied across the adjustment electrode and the out-of-space pump electrode using the adjustment pump cell is controlled so that electromotive force V**0** generated between the adjustment electrode and the reference electrode in accordance with a concentration of oxygen in the first chamber is maintained at a predetermined target value in a range of 1000 mV to 1500 mV during the first pumping-out operation and is maintained at a predetermined target value in a range of 400 mV to 700 mV during the second pumping-out operation,

in the step b), a voltage applied across the first measurement electrode and the out-of-space pump electrode using the first measurement pump cell is controlled so that electromotive force V**1** generated between the first measurement electrode and the reference electrode in accordance with a concentration of oxygen in the second chamber is maintained at a predetermined target value in a range of 250 mV to 450 mV, and

in the step c), a voltage applied across the second measurement electrode and the out-of-space pump electrode using the second measurement pump cell is controlled so that electromotive force V**2** generated between the second measurement electrode and the reference electrode in accordance with a concentration of oxygen in the third chamber is maintained at a predetermined target value in a range of 100 mV to 300 mV.

18. The concentration measurement method using the gas sensor according to claim **11**, wherein

the sensor element further comprises

a reference electrode in contact with a reference gas,

in the step a), a voltage applied across the adjustment electrode and the out-of-space pump electrode using the adjustment pump cell is controlled so that electromotive force V**0** generated between the adjustment electrode and the reference electrode in accordance with a concentration of oxygen in the first chamber is maintained at a predetermined target value in a range of 1000 mV to 1500 mV during the first pumping-out operation and is maintained at a predetermined target value in a range of 400 mV to 700 mV during the second pumping-out operation,

in the step b), a voltage applied across the first measurement electrode and the out-of-space pump electrode using the first measurement pump cell is controlled so that electromotive force V**1** generated between the first measurement electrode and the reference electrode in accordance with a concentration of oxygen in the second chamber is maintained at a predetermined target value in a range of 250 mV to 450 mV, and

in the step c), a voltage applied across the second measurement electrode and the out-of-space pump electrode using the second measurement pump cell is controlled so that electromotive force V**2** generated between the second measurement electrode and the reference electrode in accordance with a concentration of oxygen in the third chamber is maintained at a predetermined target value in a range of 100 mV to 300 mV.

* * * * *