US012394976B2

(12) **United States Patent**
Fisher

(10) **Patent No.: US 12,394,976 B2**
(45) **Date of Patent: Aug. 19, 2025**

(54) **MOBILE APPLICATION WITH COMBINED BREAKER AND RELAY**

(71) Applicant: **Eaton Intelligent Power Limited**, Dublin (IE)

(72) Inventor: **Brandon William Fisher**, Portland, OR (US)

(73) Assignee: **EATON INTELLIGENT POWER LIMITED**, Dublin (IE)

(*) Notice: Subject to any disclaimer, the term of this patent is extended or adjusted under 35 U.S.C. 154(b) by 126 days.

(21) Appl. No.: **18/214,459**

(22) Filed: **Jun. 26, 2023**

(65) **Prior Publication Data**

US 2023/0335985 A1 Oct. 19, 2023

Related U.S. Application Data

(63) Continuation of application No. 17/448,302, filed on Sep. 21, 2021, now Pat. No. 11,689,010, which is a (Continued)

(51) **Int. Cl.**
H02H 7/085 (2006.01)
B60K 6/22 (2007.10)
(Continued)

(52) **U.S. Cl.**
CPC ***H02H 7/085*** (2013.01); ***H01H 71/32*** (2013.01); ***H01H 89/00*** (2013.01);
(Continued)

(58) **Field of Classification Search**
CPC H01H 50/54; H01H 50/64; H02H 7/122; H02M 1/0009; H02M 1/32; B60L 3/04;
(Continued)

(56) **References Cited**

U.S. PATENT DOCUMENTS

2,545,639 A 3/1951 Wolff et al.
2,618,688 A 11/1952 Pulvari
(Continued)

FOREIGN PATENT DOCUMENTS

CN 1214154 A 4/1999
CN 101499673 A 8/2009
(Continued)

OTHER PUBLICATIONS

Delphi Technologies, "Second Quarter 2019 Results" (Power Point Slides) Aug. 1, 2019, 26 pages.
(Continued)

Primary Examiner — Antony M Paul
(74) *Attorney, Agent, or Firm* — Talem IP Law, LLP

(57) **ABSTRACT**

A mobile application includes a breaker/relay that includes a plurality of fixed contacts electrically coupled to a power bus, a plurality of corresponding moveable contacts that are selectively electrically coupled to the plurality of fixed contacts, allowing power flow through the power bus when electrically coupled to the fixed contacts and preventing power flow when not electrically coupled, an armature operationally coupled to at least one of the moveable contacts, such that the armature prevents electrical coupling between the at least one of the moveable contacts and the corresponding one of the fixed contacts when in a first position and allows electrical coupling when in a second position, a first biasing member biasing the armature into the first position or the second position; and an arc suppression assembly structured to guide and disperse an opening arc between each of the plurality of moveable contacts and the corresponding fixed contacts.

20 Claims, 142 Drawing Sheets

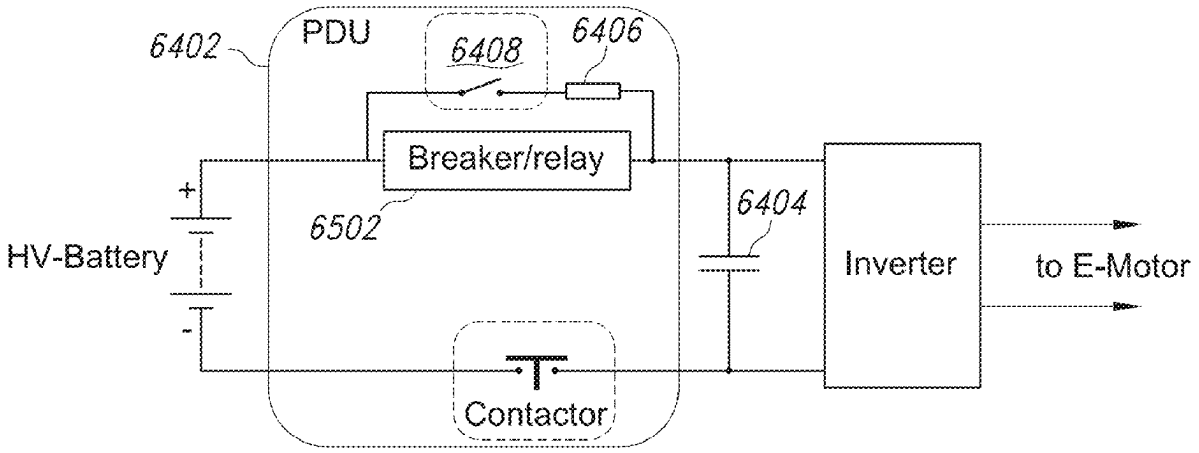

Related U.S. Application Data

continuation of application No. 17/218,806, filed on Mar. 31, 2021, now Pat. No. 11,658,477, which is a continuation of application No. 16/994,196, filed on Aug. 14, 2020, now Pat. No. 11,121,540, which is a continuation of application No. 16/380,857, filed on Apr. 10, 2019, now Pat. No. 11,070,049.

(60) Provisional application No. 62/809,384, filed on Feb. 22, 2019, provisional application No. 62/809,375, filed on Feb. 22, 2019, provisional application No. 62/809,367, filed on Feb. 22, 2019.

(51) **Int. Cl.**

H01H 71/32	(2006.01)
H01H 89/00	(2006.01)
H02H 1/00	(2006.01)
H02M 7/00	(2006.01)
H02P 29/68	(2016.01)
H05K 7/20	(2006.01)

(52) **U.S. Cl.**

CPC ***H02H 1/0007*** (2013.01); ***H02M 7/003*** (2013.01); ***H02P 29/68*** (2016.02); ***H05K 7/2089*** (2013.01); *B60K 6/22* (2013.01); *B60Y 2200/91* (2013.01); *B60Y 2200/92* (2013.01)

(58) **Field of Classification Search**

CPC B60L 2240/429; B60L 2240/529; B60L 2210/40

See application file for complete search history.

(56) **References Cited**

U.S. PATENT DOCUMENTS

2,749,454 A 6/1956 Little et al.
2,786,968 A 3/1957 Kabak
2,994,015 A 7/1961 Edward
3,147,467 A 9/1964 Peter
3,172,010 A 3/1965 Diebold
3,211,958 A 10/1965 Miller et al.
3,240,930 A 3/1966 Porter et al.
3,272,949 A 9/1966 Lawrence
3,491,315 A 1/1970 Kesselring
3,718,875 A 2/1973 Kussy et al.
3,914,723 A 10/1975 Goodbar
4,023,127 A 5/1977 Mune
4,032,870 A 6/1977 Oppel et al.
4,181,922 A 1/1980 Matsko et al.
4,208,689 A 6/1980 Dunham et al.
4,213,165 A 7/1980 Zylstra et al.
4,262,179 A 4/1981 Bauer et al.
4,518,055 A 5/1985 Yagi et al.
4,633,207 A 12/1986 McClellan et al.
4,816,792 A 3/1989 Belbel et al.
4,879,535 A 11/1989 Mori et al.
4,893,102 A 1/1990 Bauer
4,982,060 A 1/1991 Streich et al.
5,020,801 A 6/1991 Negron
5,021,760 A 6/1991 Krubsack et al.
5,029,064 A 7/1991 Ball
5,047,603 A 9/1991 Pardini
5,109,185 A 4/1992 Ball
5,369,540 A 11/1994 Konrad et al.
5,539,608 A 7/1996 Hurley et al.
5,559,426 A 9/1996 Shea et al.
5,568,350 A 10/1996 Brown
5,654,859 A 8/1997 Shi
5,675,238 A * 10/1997 Asao H02J 7/1438 322/28
5,793,189 A 8/1998 Kawaguchi et al.
5,796,175 A 8/1998 Itoh et al.
5,818,122 A 10/1998 Miyazawa et al.
5,821,642 A 10/1998 Nishhira et al.
5,872,497 A 2/1999 Yerkovich et al.
6,020,801 A 2/2000 Passow
6,064,024 A 5/2000 Moldovan
6,194,988 B1 2/2001 Yamaguchi et al.
6,344,985 B1 2/2002 Akerson
6,369,460 B1 4/2002 Endoh et al.
6,417,579 B1 7/2002 Lehnst et al.
6,492,747 B1 12/2002 Hoffmann
6,768,402 B2 7/2004 Davidson et al.
6,894,463 B2 5/2005 Kernahan
6,975,191 B2 12/2005 Ward
7,030,641 B1 4/2006 Tang et al.
7,210,304 B2 5/2007 Nagashima et al.
7,514,990 B1 4/2009 Voo
7,561,017 B2 7/2009 Darr et al.
7,561,448 B2 7/2009 Katayama et al.
7,576,630 B2 8/2009 Darr
7,595,710 B2 9/2009 DeBoer et al.
7,644,220 B2 1/2010 Moriyama et al.
7,692,903 B2 4/2010 Dwyer et al.
7,777,600 B2 8/2010 Brooks
7,952,875 B2 5/2011 Woody et al.
7,957,169 B2 6/2011 Nakajima et al.
8,134,438 B2 3/2012 Brooks
8,138,440 B2 3/2012 Onufriyenko et al.
8,186,466 B2 5/2012 Verbrugge et al.
8,378,623 B2 2/2013 Kusch et al.
8,432,246 B2 4/2013 Suzuki et al.
8,520,381 B2 8/2013 Hobein et al.
8,587,912 B2 11/2013 Jezierski et al.
8,614,618 B2 12/2013 Darr et al.
8,653,913 B2 2/2014 Vellaiyanaicken et al.
8,659,270 B2 2/2014 Hermann et al.
8,686,596 B2 4/2014 Huss et al.
8,783,396 B2 7/2014 Bowman
8,805,314 B2 8/2014 Katsube
8,829,722 B2 9/2014 Kusch et al.
8,981,724 B2 3/2015 Klein et al.
8,981,727 B2 3/2015 Kusch et al.
8,994,327 B2 3/2015 Kusch et al.
9,130,421 B2 9/2015 Chamberlin et al.
9,148,946 B1 9/2015 Singh et al.
9,188,645 B2 11/2015 Barrenscheen et al.
9,241,429 B2 1/2016 Kaneko et al.
9,324,522 B2 4/2016 Nakamura et al.
9,362,544 B2 6/2016 Kelley et al.
9,493,077 B2 11/2016 Yamasaki et al.
9,504,191 B2 11/2016 Singh et al.
9,520,764 B1 12/2016 Bundschuh et al.
9,538,691 B2 1/2017 Kikuchi et al.
9,691,562 B2 6/2017 Neuhaus
9,726,726 B2 8/2017 Bock et al.
9,758,047 B2 9/2017 Hou et al.
9,923,546 B2 3/2018 Nagahisa et al.
9,969,276 B2 5/2018 DeDona et al.
10,010,011 B2 6/2018 Donth et al.
10,032,588 B2 7/2018 Gonzales et al.
10,116,249 B2 10/2018 Zou et al.
10,149,413 B1 12/2018 Dede et al.
10,164,300 B2 12/2018 Lee et al.
10,242,829 B2 3/2019 Hasegawa et al.
10,269,520 B2 4/2019 Honick et al.
10,288,665 B2 5/2019 Smith
10,320,220 B2 6/2019 Ge et al.
10,361,051 B2 7/2019 Bock et al.
10,850,623 B2 12/2020 Chung et al.
11,050,241 B2 6/2021 Fisher
11,052,764 B2 7/2021 Muller et al.
11,052,784 B2 7/2021 Mensch et al.
11,063,421 B2 7/2021 Griffiths
11,070,049 B2 7/2021 Mensch et al.
11,075,514 B2 7/2021 Shah et al.
11,081,874 B2 8/2021 Fisher
11,081,875 B2 8/2021 Fisher
11,088,533 B2 8/2021 Fisher
11,095,115 B2 8/2021 Fisher
11,095,116 B2 8/2021 Douglass
11,101,639 B2 8/2021 Griffiths et al.

(56) **References Cited**

U.S. PATENT DOCUMENTS

11,108,225	B2	8/2021	Fisher
11,114,840	B2	9/2021	Fisher
11,121,540	B2	9/2021	Dukaric et al.
11,128,124	B2	9/2021	Shah et al.
11,128,125	B2	9/2021	Fisher
11,152,781	B2	10/2021	Fisher
11,159,008	B2	10/2021	Fisher
11,183,833	B2	11/2021	Shah et al.
11,368,031	B2	6/2022	Qian et al.
11,370,324	B2	6/2022	Douglass et al.
2003/0142449	A1	7/2003	Iwata et al.
2004/0105664	A1	6/2004	Ivankovic
2004/0189319	A1	9/2004	Stanisic et al.
2004/0207968	A1	10/2004	Martin et al.
2005/0006956	A1	1/2005	Shi
2007/0053769	A1	3/2007	Schlanger et al.
2007/0058303	A1	3/2007	Hirai et al.
2007/0076355	A1	4/2007	Oohama
2007/0290646	A1	12/2007	Hasenour et al.
2008/0137253	A1	6/2008	George et al.
2009/0057112	A1	3/2009	Bennett et al.
2009/0303647	A1	12/2009	Bauer et al.
2010/0172515	A1	7/2010	Kimura
2010/0302699	A1	12/2010	Minami
2011/0043307	A1	2/2011	Gonzales et al.
2011/0049977	A1	3/2011	Onnerud et al.
2011/0101904	A1	5/2011	Sakamoto
2011/0170223	A1	7/2011	DiMarco
2011/0187376	A1	8/2011	Barrenscheen et al.
2012/0068663	A1	3/2012	Tanikawa et al.
2012/0133477	A1	5/2012	West
2013/0062724	A1	3/2013	Tokuyama et al.
2013/0154352	A1	6/2013	Tokarz et al.
2013/0175856	A1	7/2013	Ojima
2013/0179012	A1	7/2013	Hermann et al.
2013/0257375	A1	10/2013	Ang et al.
2013/0320905	A1	12/2013	Uryu
2014/0009162	A1	1/2014	Barrenscheen et al.
2014/0092655	A1	4/2014	Igarashi et al.
2014/0151337	A1	6/2014	Hiraiwa et al.
2014/0159481	A1	6/2014	Berger
2014/0242421	A1	8/2014	Kelley et al.
2014/0265743	A1	9/2014	Chamberlin et al.
2014/0316735	A1	10/2014	Jao et al.
2015/0084724	A1*	3/2015	Gonzales H01H 47/22 335/158
2015/0244165	A1	8/2015	Roesner et al.
2015/0295395	A1	10/2015	Wortberg et al.
2016/0169945	A1	6/2016	Mauder et al.
2016/0233039	A1*	8/2016	Kanematsu H01H 50/38
2016/0233777	A1	8/2016	Murakami et al.
2016/0380563	A1	12/2016	Fukuta
2017/0023618	A1	1/2017	Douglass et al.
2017/0368941	A1	12/2017	Chow
2018/0029475	A1	2/2018	Capers
2018/0182587	A1	6/2018	Koepf et al.
2018/0222333	A1	8/2018	Khaligh et al.
2018/0277325	A1	9/2018	De Palma et al.
2018/0323601	A1	11/2018	Sato et al.
2019/0140245	A1	5/2019	Mensch et al.
2019/0296541	A1	9/2019	Mensch et al.
2020/0039365	A1	2/2020	Chang et al.
2020/0114776	A1	4/2020	Fisher
2020/0114777	A1	4/2020	Fisher et al.
2020/0114778	A1	4/2020	Fisher
2020/0114779	A1	4/2020	Fisher et al.
2020/0114780	A1	4/2020	Douglass et al.
2020/0114781	A1	4/2020	Douglass
2020/0114782	A1	4/2020	Douglass
2020/0114783	A1	4/2020	Douglass
2020/0114784	A1	4/2020	Fisher
2020/0119542	A1	4/2020	Fisher
2020/0119543	A1	4/2020	Fisher
2020/0119544	A1	4/2020	Fisher
2020/0144809	A1	5/2020	Fisher
2020/0185907	A1	6/2020	Griffiths
2020/0185908	A1	6/2020	Shah et al.
2020/0185909	A1	6/2020	Fisher
2020/0194995	A1	6/2020	Shah et al.
2020/0194996	A1	6/2020	Fisher
2020/0194997	A1	6/2020	Fisher
2020/0194998	A1	6/2020	Fisher
2020/0194999	A1	6/2020	Fisher
2020/0195000	A1	6/2020	Douglass
2020/0195001	A1	6/2020	Griffiths
2020/0235564	A1	7/2020	Shah et al.
2020/0235565	A1	7/2020	Griffiths et al.
2020/0235566	A1	7/2020	Fisher
2020/0235567	A1	7/2020	Griffiths et al.
2020/0274375	A1	8/2020	Griffiths et al.
2020/0381915	A1	12/2020	Mensch et al.
2021/0006061	A9	1/2021	Shah et al.
2021/0036505	A9	2/2021	Fisher
2021/0044102	A9	2/2021	Douglass
2021/0083470	A9	3/2021	Fisher
2021/0111552	A9	4/2021	Fisher
2021/0184455	A9	6/2021	Fisher
2021/0218242	A1	7/2021	Mensch et al.
2021/0272758	A1	9/2021	Friedrichsen et al.
2022/0006283	A1	1/2022	Dukaric et al.
2022/0006284	A1	1/2022	Dukaric et al.
2022/0006285	A1	1/2022	Dukaric et al.
2022/0131398	A1	4/2022	Herranz et al.
2022/0274504	A1	9/2022	Douglass et al.

FOREIGN PATENT DOCUMENTS

CN	102903580	A	1/2013
CN	106329496	A	1/2017
CN	205871956	U	1/2017
CN	106451370	A	2/2017
DE	10058898	A1	5/2002
DE	102009023801	A1	2/2010
DE	102012205957	A1	10/2013
DE	102012224223	A1	7/2014
EP	0825068	A1	2/1998
EP	1033803	A2	9/2000
EP	1046545	A2	10/2000
EP	3017992	A1	5/2016
EP	3608153	A1	2/2020
FR	2741994	A1	6/1997
FR	3041143	A1	3/2017
GB	2575684	A	1/2020
JP	H08154311	A	6/1996
JP	H09284902	A	10/1997
JP	H10322880	A	12/1998
JP	H11262198	A	9/1999
JP	2000324674	A	11/2000
JP	2001078350	A	3/2001
JP	5675337	B2	2/2015
JP	2016205866	A	12/2016
JP	2017139902	A	8/2017
JP	6255429	B2	12/2017
KR	20140030458	A	3/2014
KR	20160119604	A	10/2016
WO	9724790	A1	7/1997
WO	2011141785	A1	11/2011
WO	2018186573	A1	10/2018
WO	2019197459	A2	10/2019
WO	2019197459	A3	2/2020
WO	2020193466	A1	10/2020
WO	2021009217	A2	1/2021
WO	2021009217	A3	3/2021

OTHER PUBLICATIONS

Search Report Issued in United Kingdom Application No. 1811874.5, mailed Jan. 7, 2019, 5 pages.

International Search Report and Written Opinion issued in International Application No. PCT/EP2018/080611, Mailed Jun. 18, 2019, 17 pages.

(56) **References Cited**

OTHER PUBLICATIONS

Invitation to Pay Additional Fees and Where Applicable and Protest Fee issued in International Application No. PCT/EP2018/080611, Mailed Feb. 13, 2019, 9 pages.
International Search Report and Written Opinion issued in International Application No. PCT/EP2019/059070, Mailed Jan. 7, 2020, 39 pages.
Invitation to Pay Additional Fees and Where Applicable and Protest Fee issued in International Application No. PCT/EP2019/059070, Mailed Aug. 27, 2019, 12 pages.
Invitation to Pay Additional Fees and Where Applicable and Protest Fee issued in International Application No. PCT/EP2020/057951, Mailed Jun. 24, 2020, 13 pages.
Floyd, Thomas L., "Electronic Devices Fourth edition," 1996, pp. 839, 850-852.
International Search Report and Written Opinion issued in International Application No. PCT/EP2020/069987, Mailed Feb. 19, 2021, 16 pages.
Invitation to Pay Additional Fees and Where Applicable and Protest Fee issued in International Application No. PCT/EP2020/069987, Mailed Oct. 26, 2020, 9 pages.
Communication pursuant to Article 94(3) EPC issued in European Patent Office Application No. 18800137.4, Mailed Jun. 8, 2022, 5 pages.
Notice of Allowance issued in U.S. Appl. No. 16/184,185, Mailed Mar. 3, 2021, 19 pages.
Non-Final Office Action issued in U.S. Appl. No. 16/710,382, mailed May 12, 2022, 6 pages.
Non-Final Office Action issued in U.S. Appl. No. 16/712,644, mailed Aug. 4, 2022, 14 pages.
Non-Final Office Action issued in U.S. Appl. No. 16/712,078, mailed Jun. 29, 2022, 15 pages.
Non-Final Office Action issued in U.S. Appl. No. 17/218,806, mailed Jun. 17, 2022, 16 pages.
Notice of Allowance issued in U.S. Appl. No. 17/448,302, Mailed Oct. 26, 2022, 8 pages.
Search Report issued in Chinese Application No. 201980038321.1, mailed Feb. 2, 2023, 5 pages.

* cited by examiner

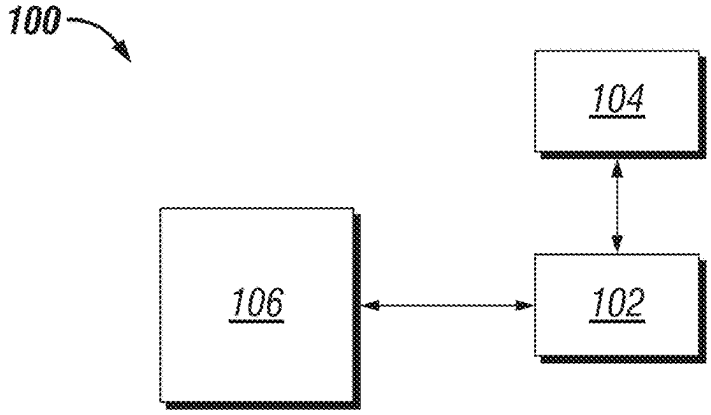
100
104
106
102

FIG. 1

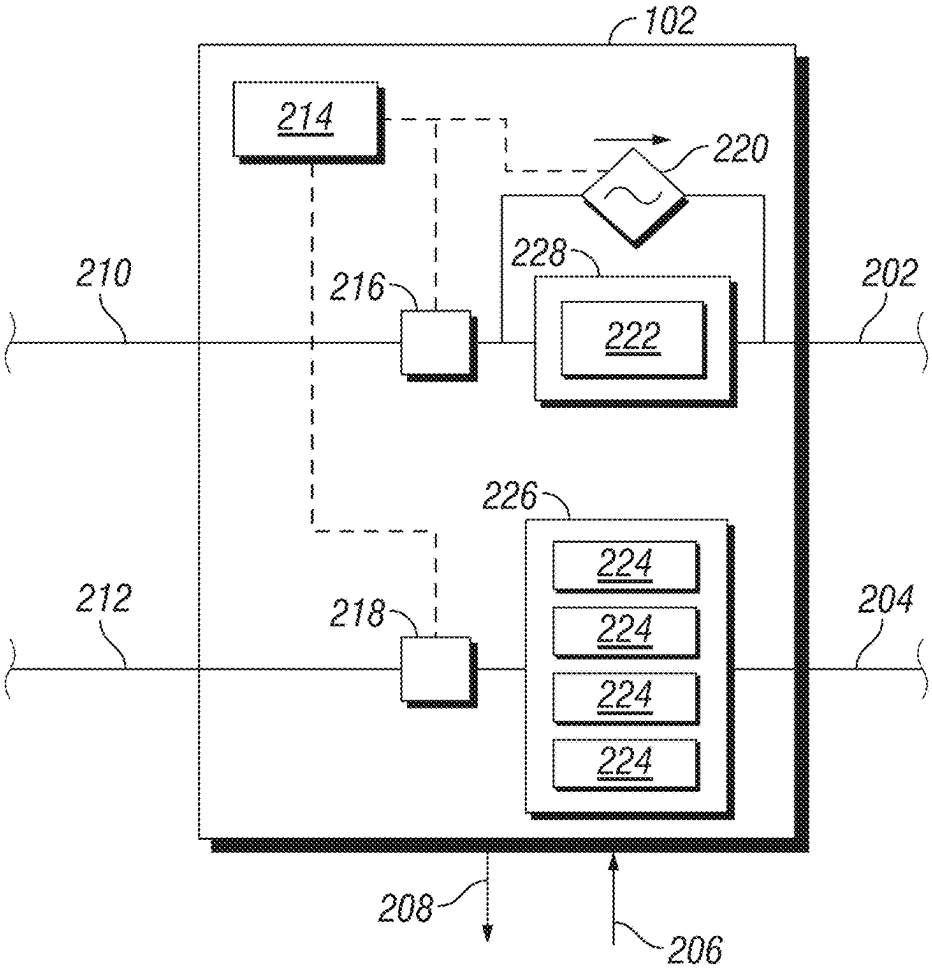
102
214
220
228
222
210
216
202
226
224
224
224
224
212
218
204
208
206

FIG. 2

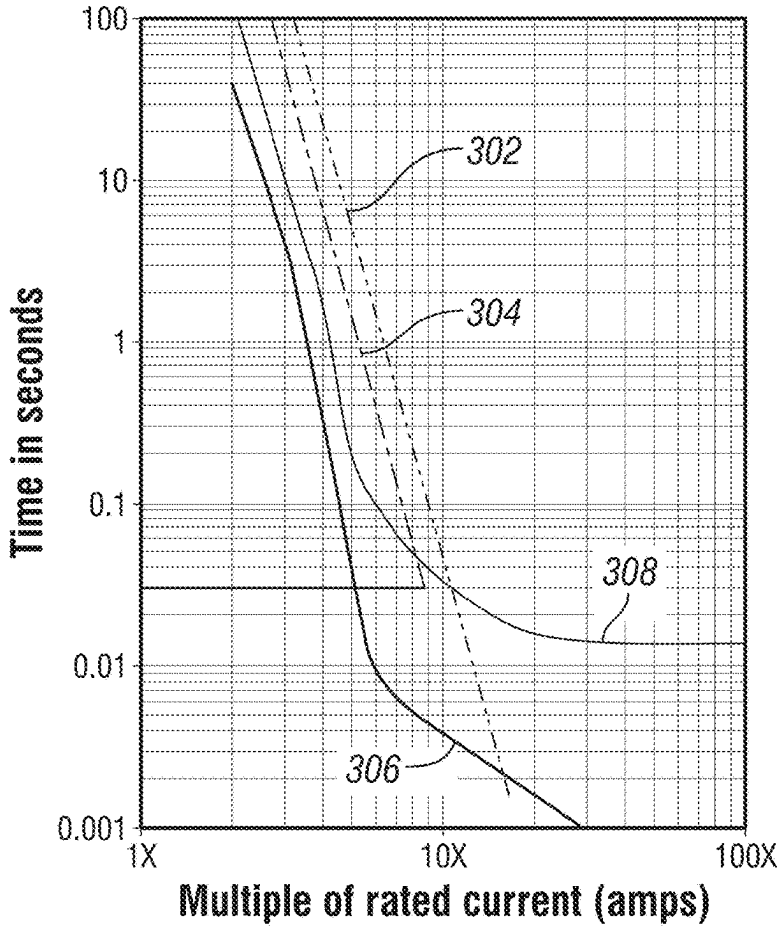
100
10
1
0.1
0.01
0.001
Time in seconds
1X
10X
100X
Multiple of rated current (amps)
302
304
306
308

FIG. 3

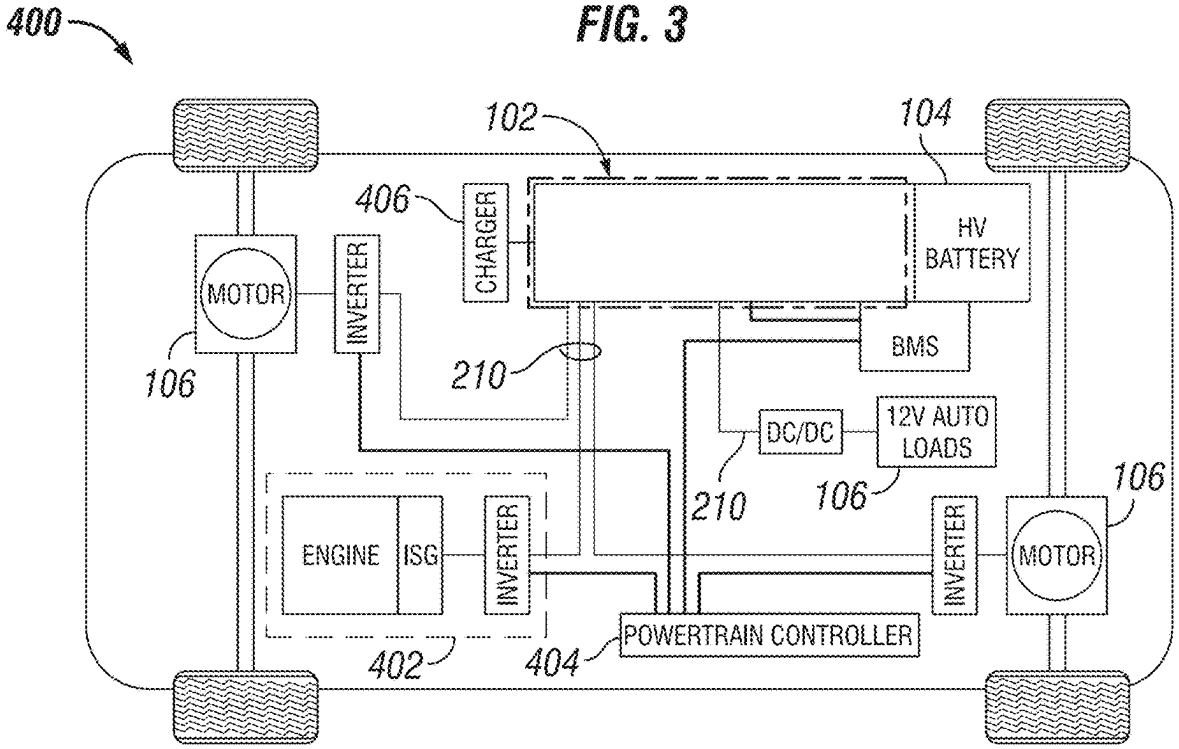
400
102
104
406
CHARGER
HV BATTERY
MOTOR
INVERTER
106
210
BMS
DC/DC
12V AUTO LOADS
210
106
106
ENGINE
ISG
INVERTER
INVERTER
MOTOR
POWERTRAIN CONTROLLER
402
404

FIG. 4

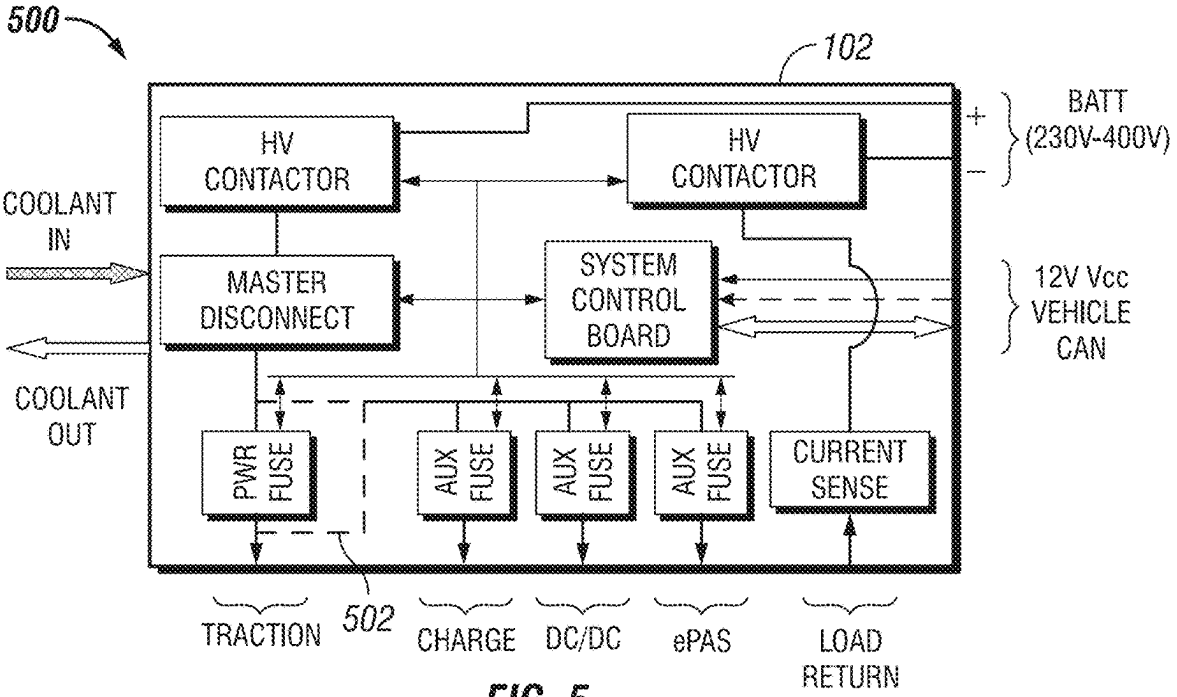
500
102
HV CONTACTOR
HV CONTACTOR
BATT (230V-400V)
+
–
COOLANT IN
MASTER DISCONNECT
SYSTEM CONTROL BOARD
12V Vcc VEHICLE CAN
COOLANT OUT
PWR FUSE
AUX FUSE
AUX FUSE
AUX FUSE
CURRENT SENSE
502
TRACTION
CHARGE
DC/DC
ePAS
LOAD RETURN

FIG. 5

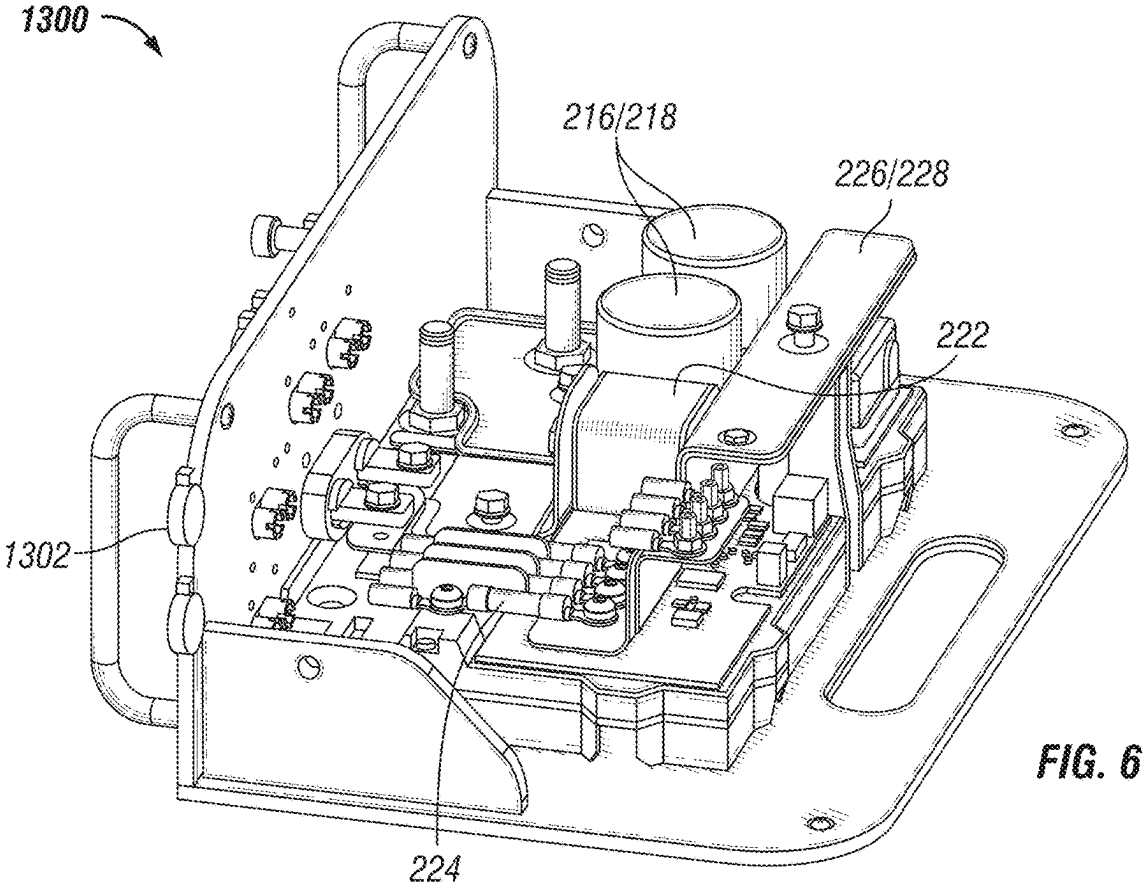
1300
216/218
226/228
222
1302
224

FIG. 6

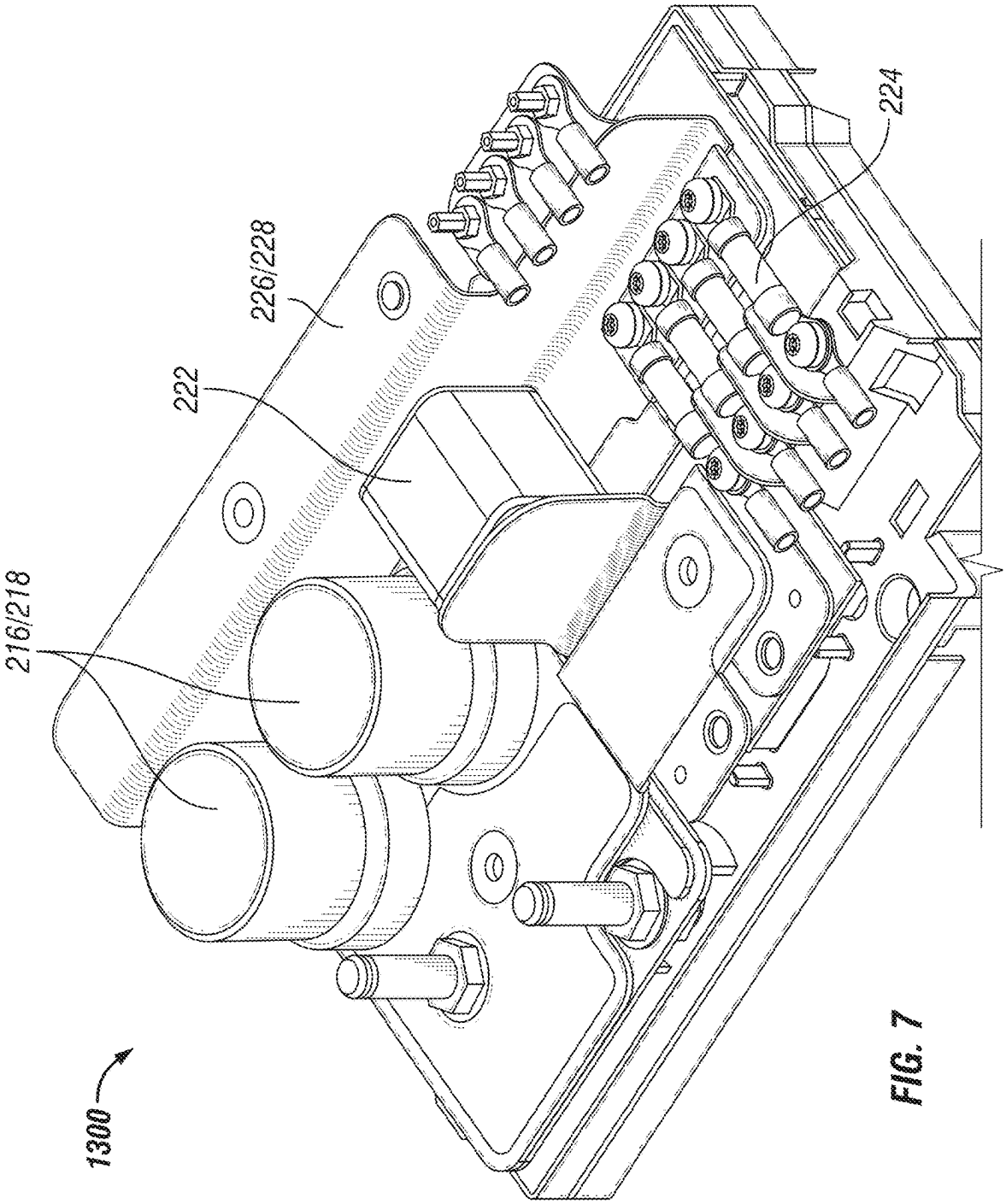

FIG. 7

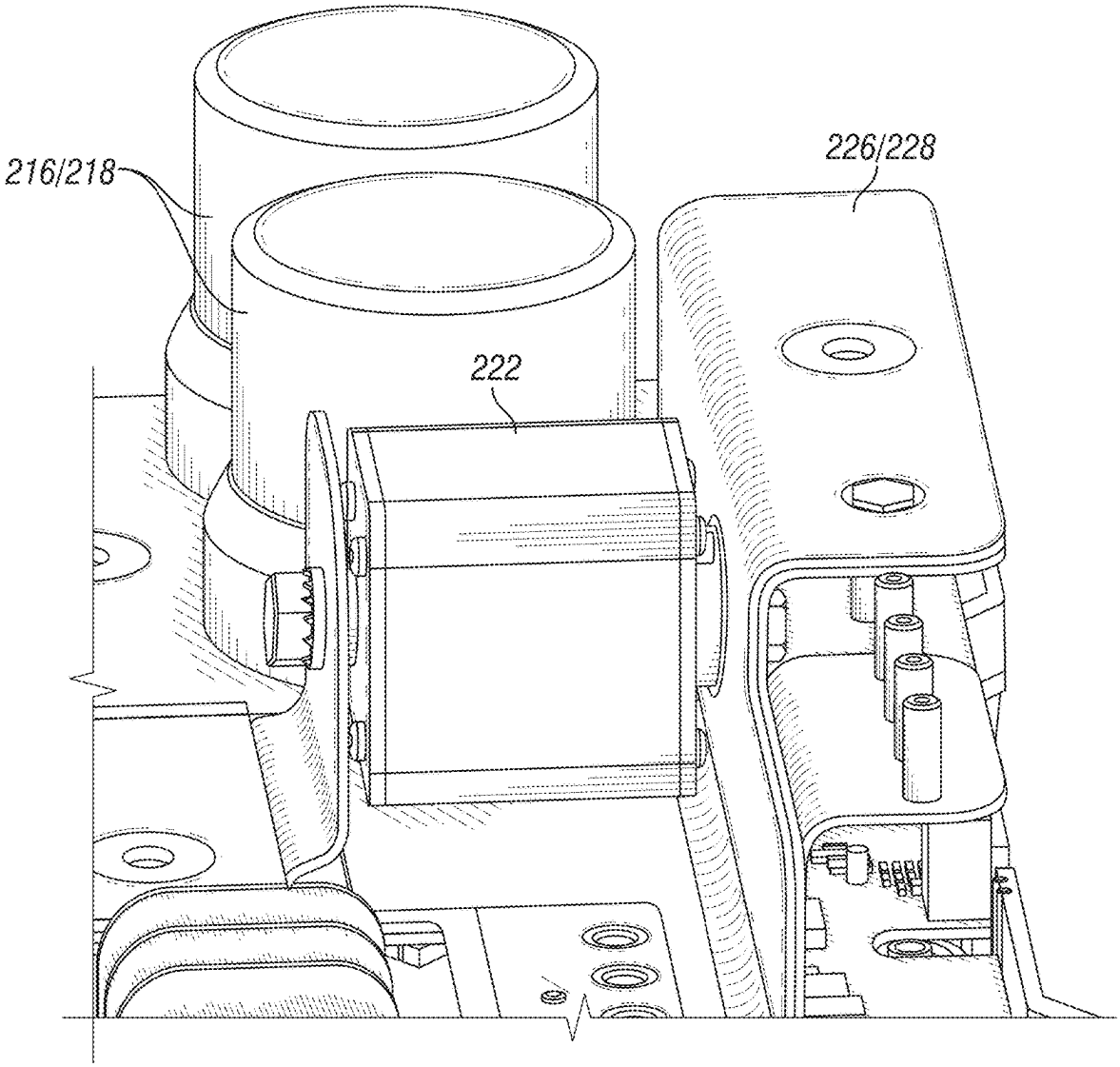

FIG. 8

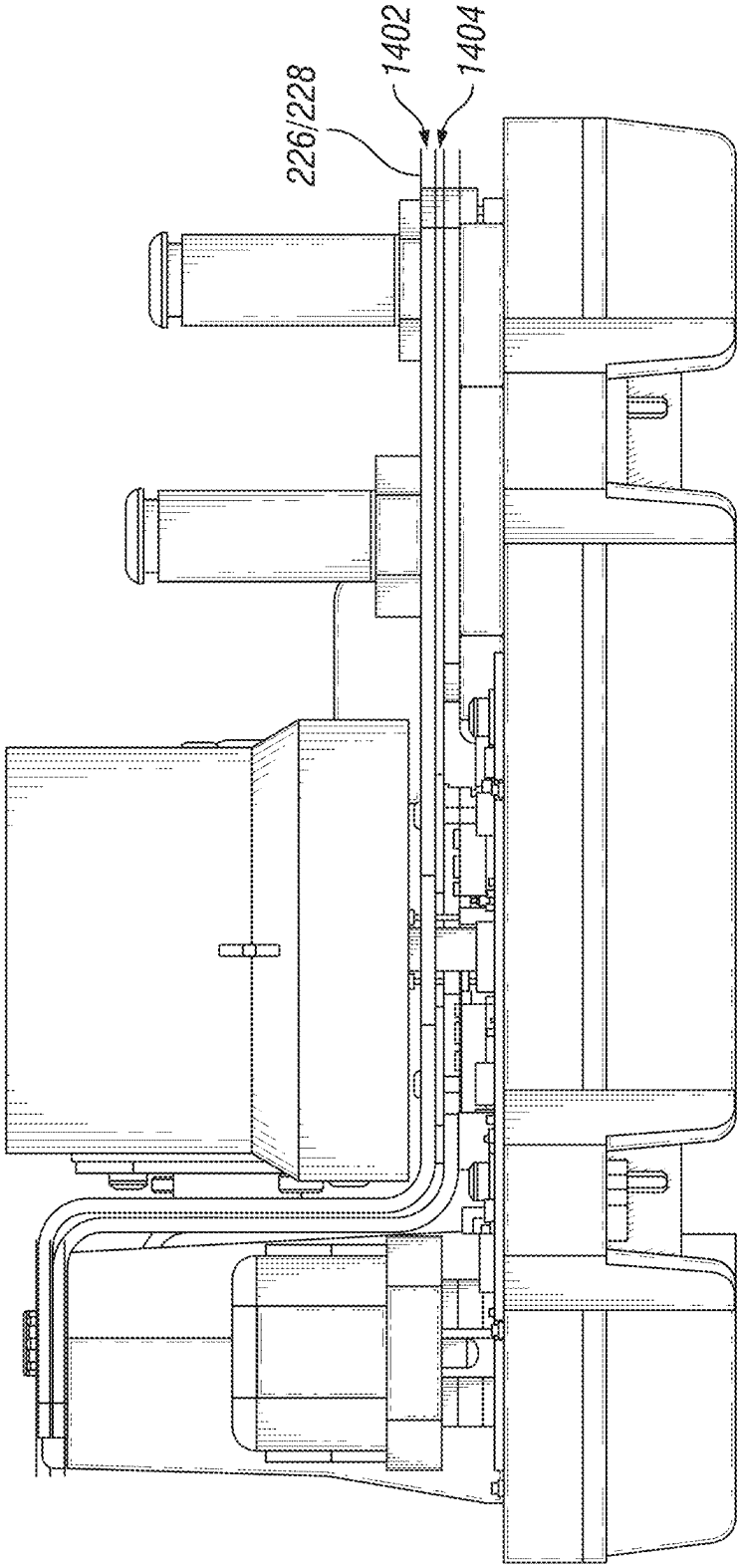

FIG. 9

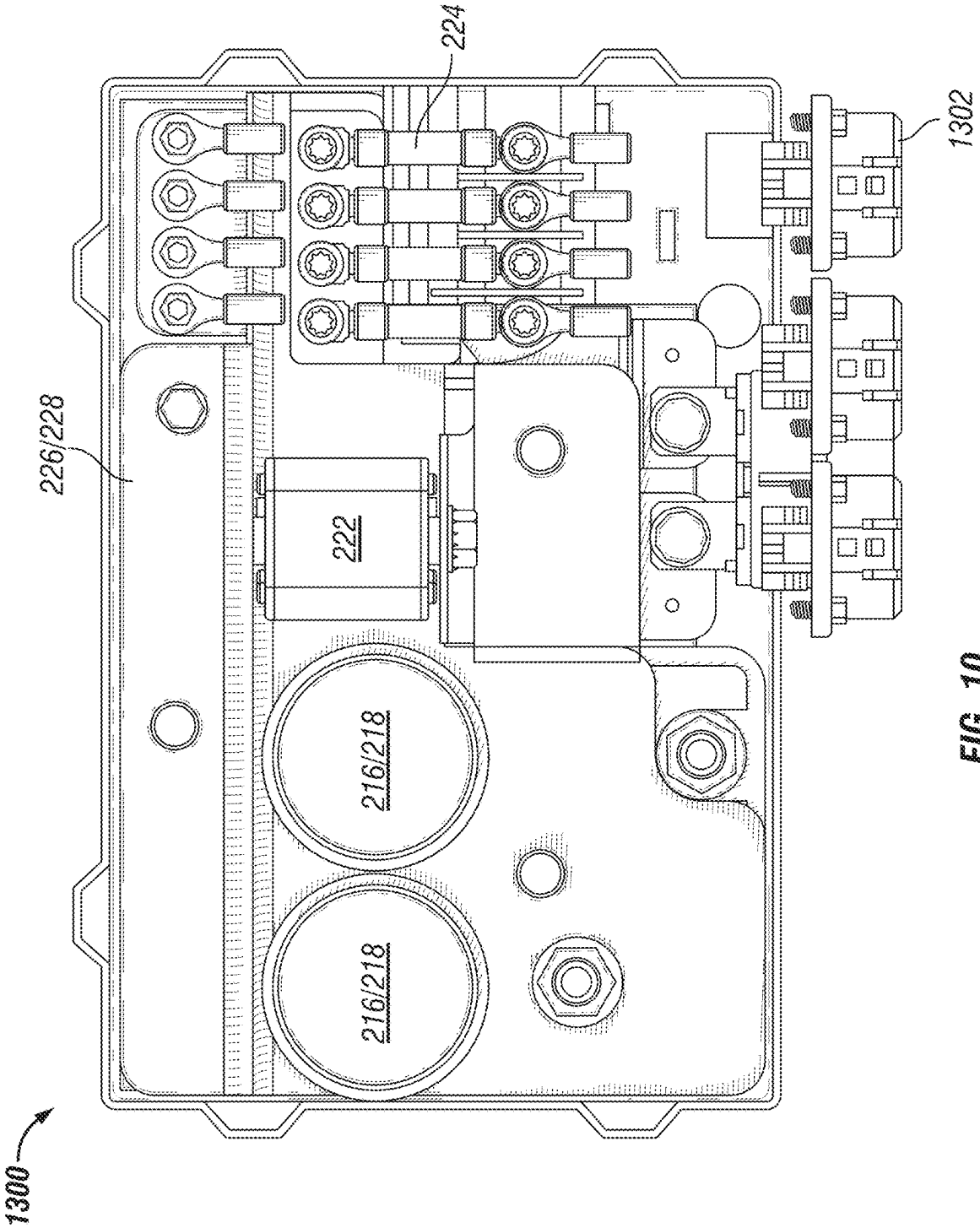

FIG. 10

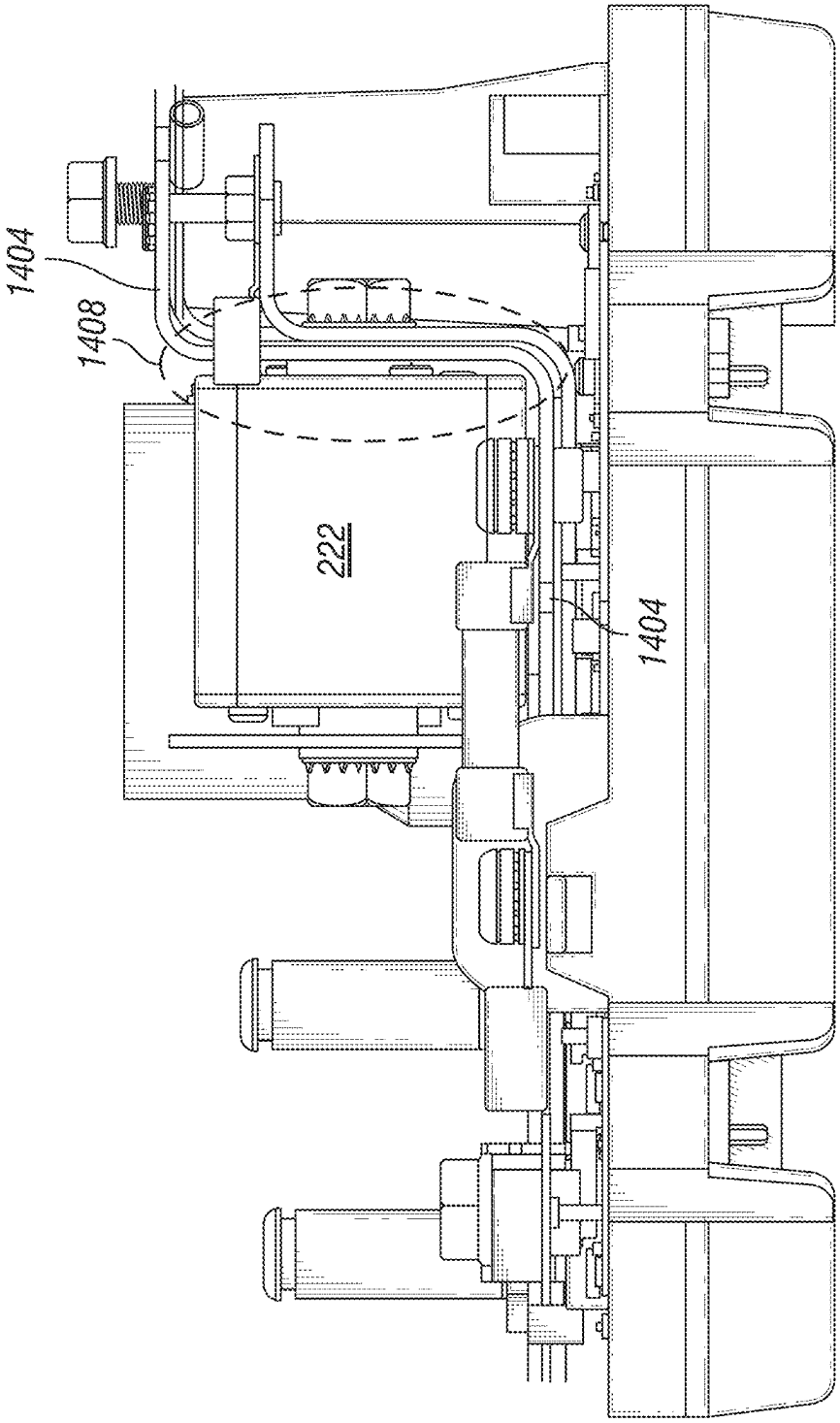

FIG. 11

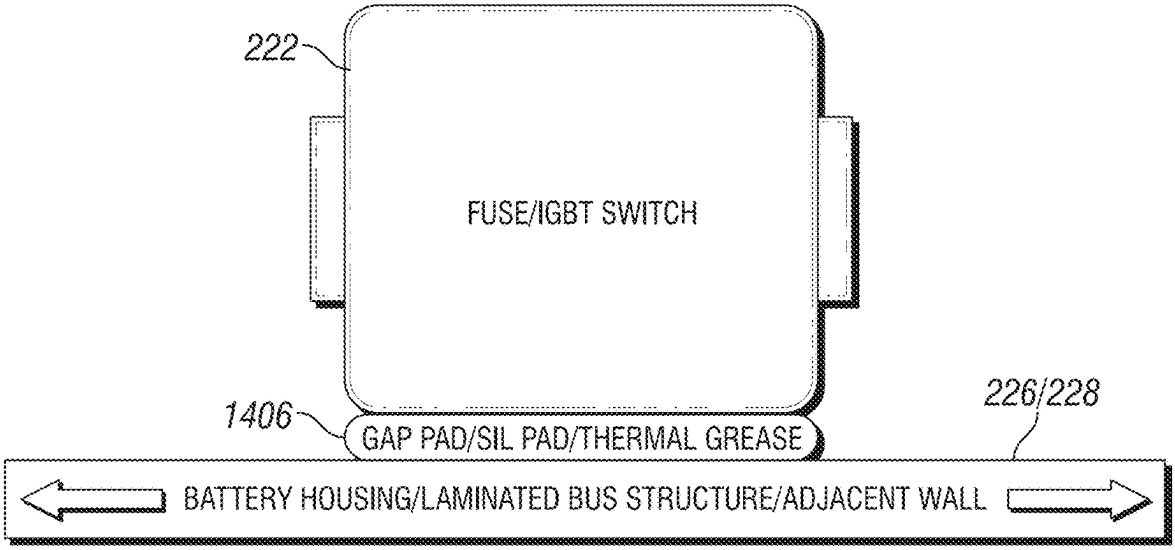
222
FUSE/IGBT SWITCH
1406
GAP PAD/SIL PAD/THERMAL GREASE
226/228
BATTERY HOUSING/LAMINATED BUS STRUCTURE/ADJACENT WALL

FIG. 12

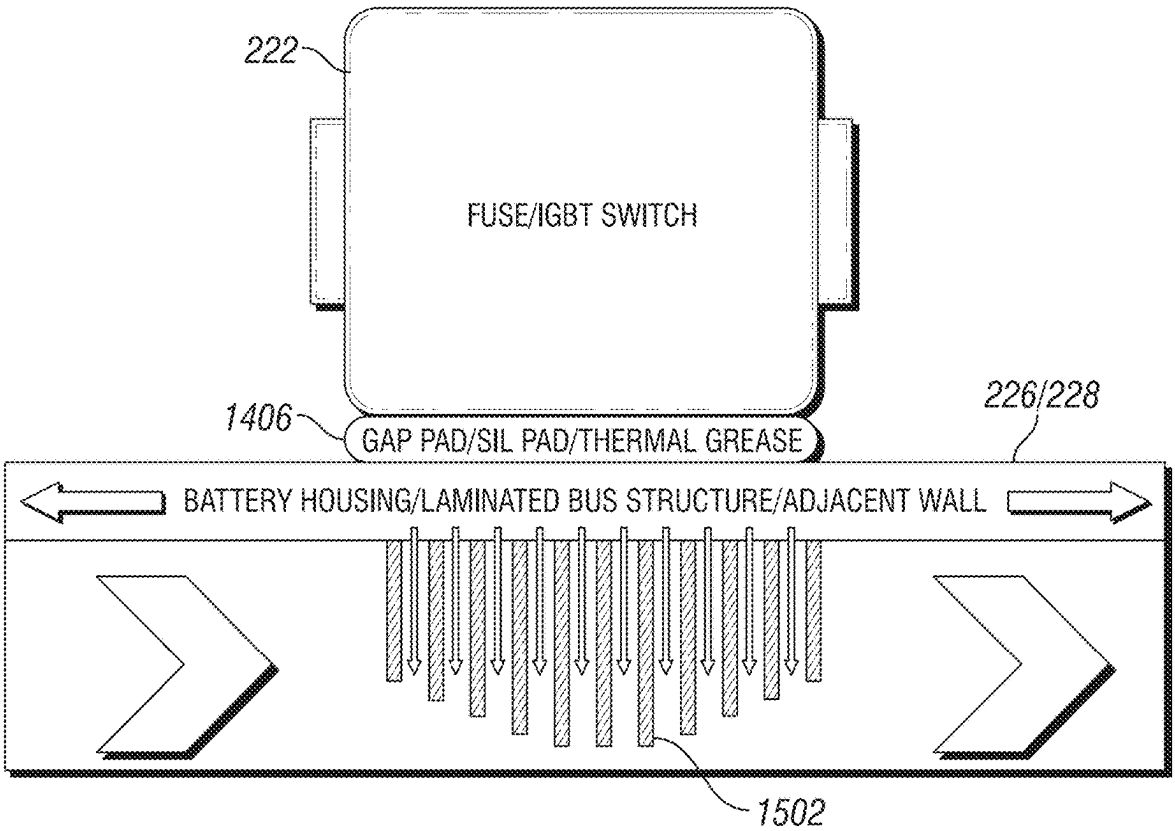
222
FUSE/IGBT SWITCH
1406
GAP PAD/SIL PAD/THERMAL GREASE
226/228
BATTERY HOUSING/LAMINATED BUS STRUCTURE/ADJACENT WALL
1502

FIG. 13

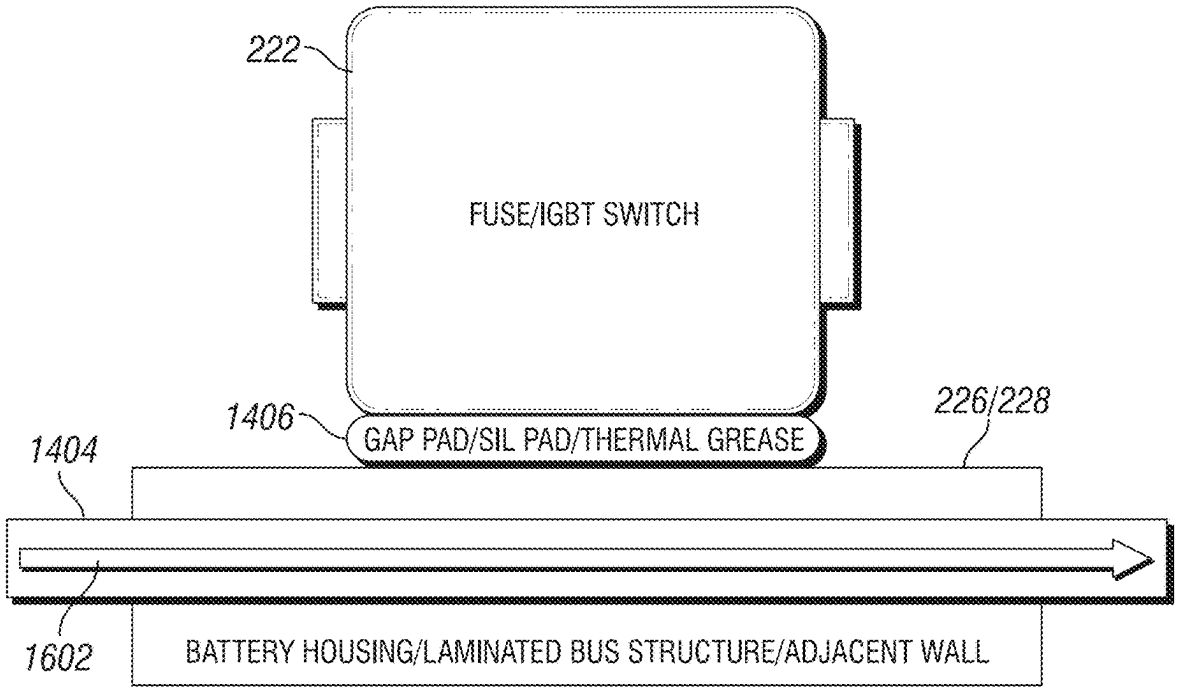
222
FUSE/IGBT SWITCH
1406
GAP PAD/SIL PAD/THERMAL GREASE
226/228
1404
1602
BATTERY HOUSING/LAMINATED BUS STRUCTURE/ADJACENT WALL

FIG. 14

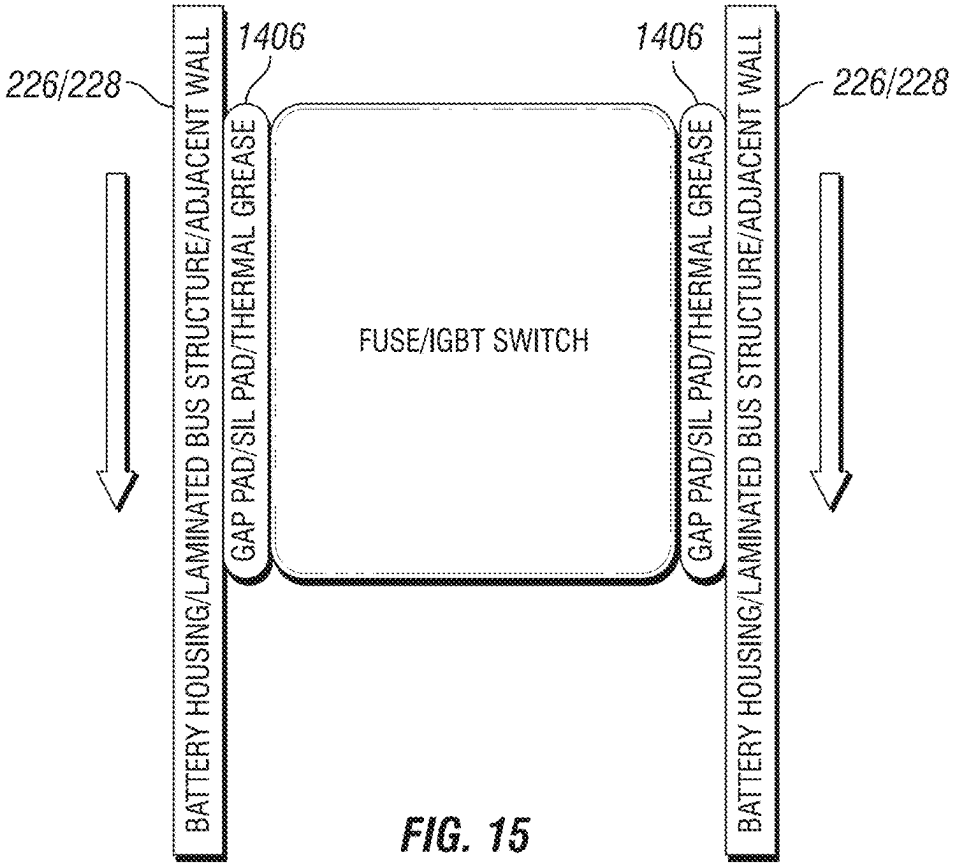
226/228
1406
1406
226/228
BATTERY HOUSING/LAMINATED BUS STRUCTURE/ADJACENT WALL
GAP PAD/SIL PAD/THERMAL GREASE
FUSE/IGBT SWITCH
GAP PAD/SIL PAD/THERMAL GREASE
BATTERY HOUSING/LAMINATED BUS STRUCTURE/ADJACENT WALL

FIG. 15

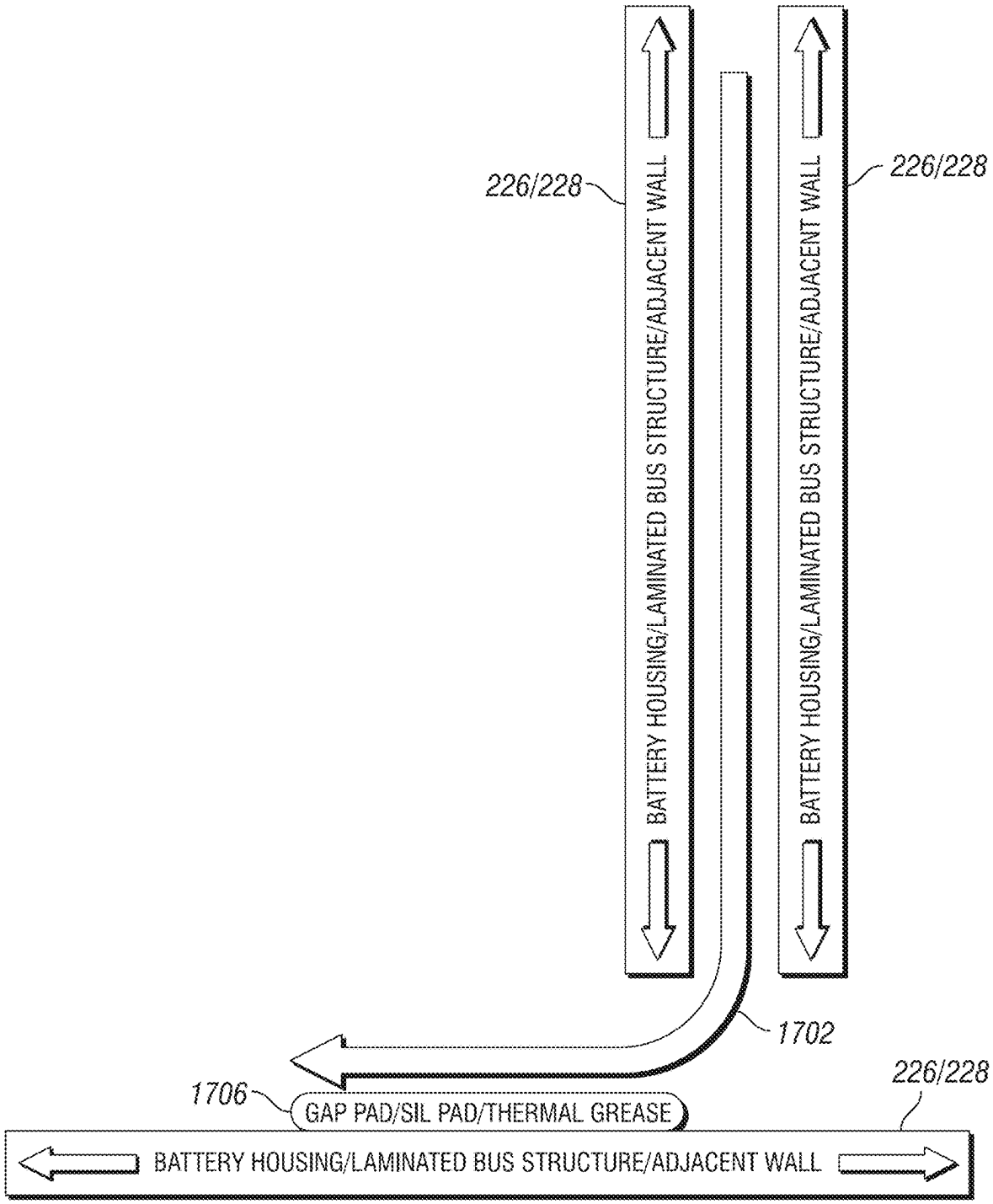
226/228
BATTERY HOUSING/LAMINATED BUS STRUCTURE/ADJACENT WALL
226/228
BATTERY HOUSING/LAMINATED BUS STRUCTURE/ADJACENT WALL
1702
1706
GAP PAD/SIL PAD/THERMAL GREASE
226/228
BATTERY HOUSING/LAMINATED BUS STRUCTURE/ADJACENT WALL

FIG. 16

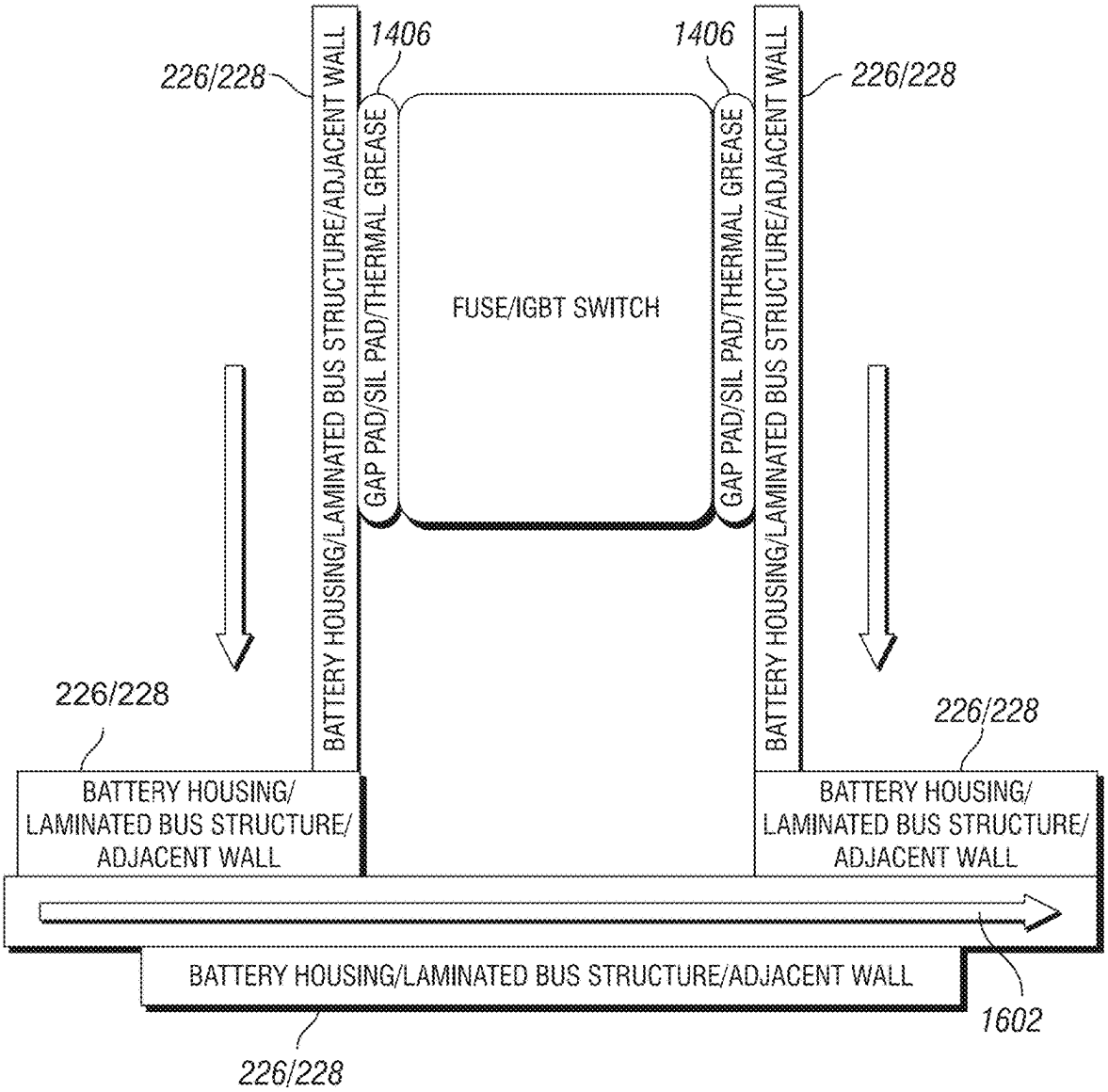
226/228
BATTERY HOUSING/LAMINATED BUS STRUCTURE/ADJACENT WALL
1406
GAP PAD/SIL PAD/THERMAL GREASE
FUSE/IGBT SWITCH
1406
GAP PAD/SIL PAD/THERMAL GREASE
BATTERY HOUSING/LAMINATED BUS STRUCTURE/ADJACENT WALL
226/228
226/228
BATTERY HOUSING/ LAMINATED BUS STRUCTURE/ ADJACENT WALL
226/228
BATTERY HOUSING/ LAMINATED BUS STRUCTURE/ ADJACENT WALL
BATTERY HOUSING/LAMINATED BUS STRUCTURE/ADJACENT WALL
1602
226/228

FIG. 17

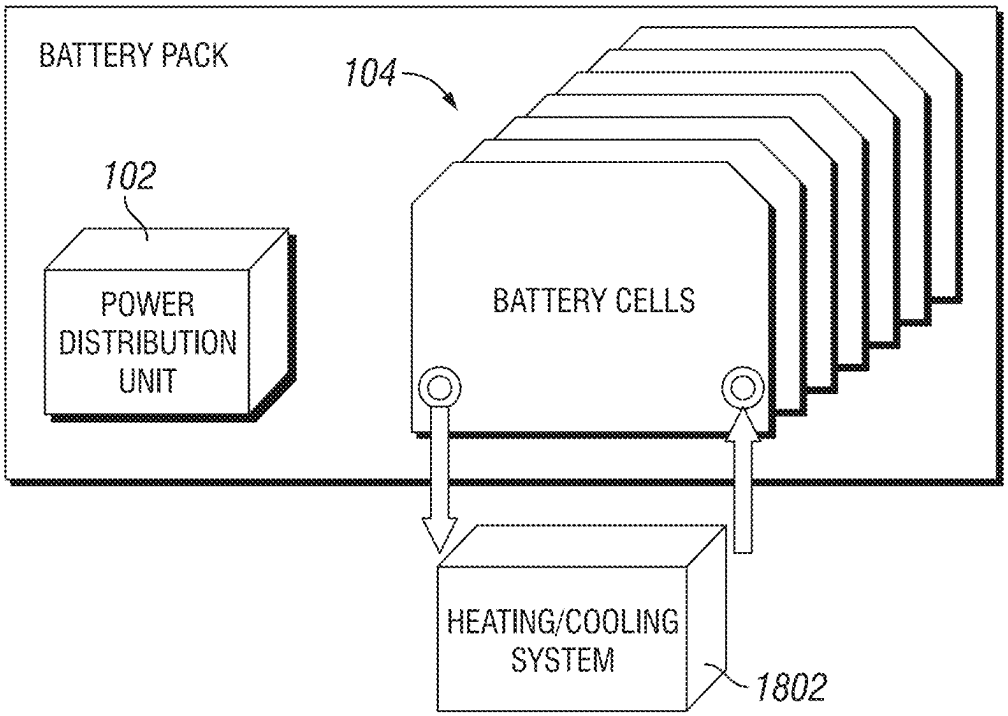
BATTERY PACK
104
102
POWER DISTRIBUTION UNIT
BATTERY CELLS
HEATING/COOLING SYSTEM
1802

FIG. 18

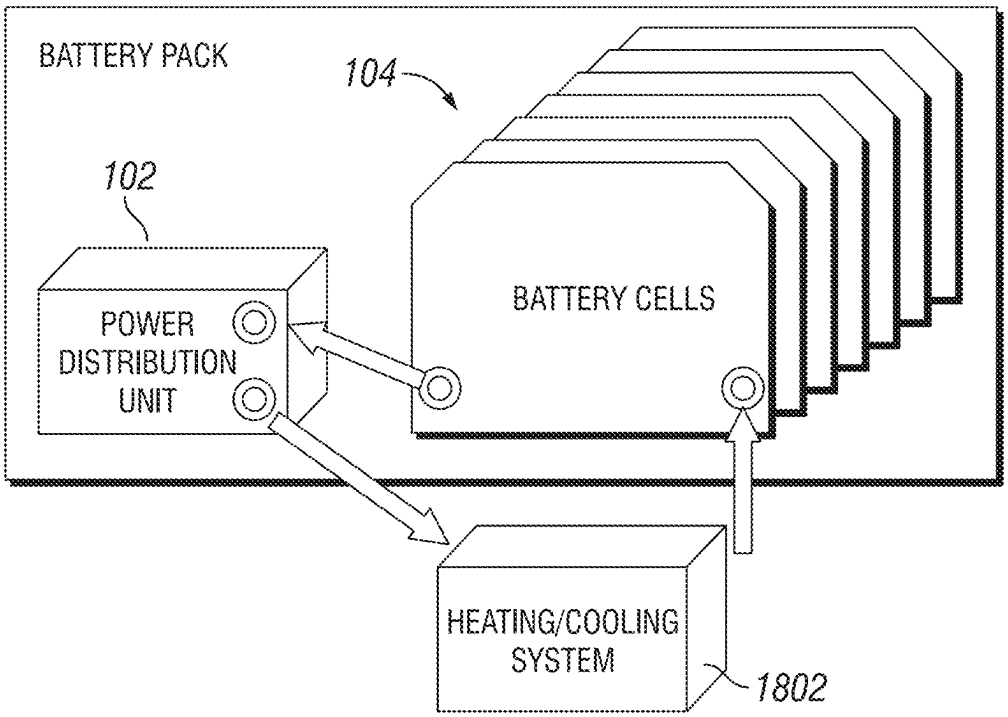
BATTERY PACK
104
102
POWER DISTRIBUTION UNIT
BATTERY CELLS
HEATING/COOLING SYSTEM
1802

FIG. 19

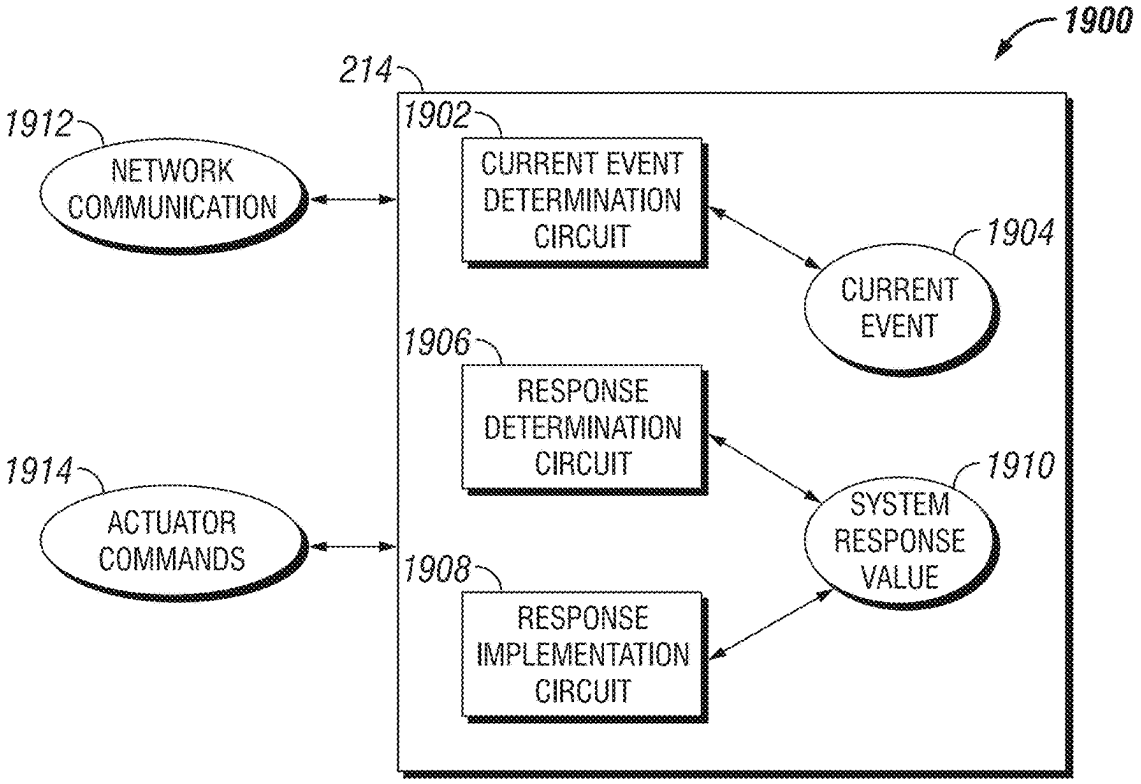
1900
214
1902
CURRENT EVENT DETERMINATION CIRCUIT
1912
NETWORK COMMUNICATION
1904
CURRENT EVENT
1906
RESPONSE DETERMINATION CIRCUIT
1914
ACTUATOR COMMANDS
1910
SYSTEM RESPONSE VALUE
1908
RESPONSE IMPLEMENTATION CIRCUIT

FIG. 20

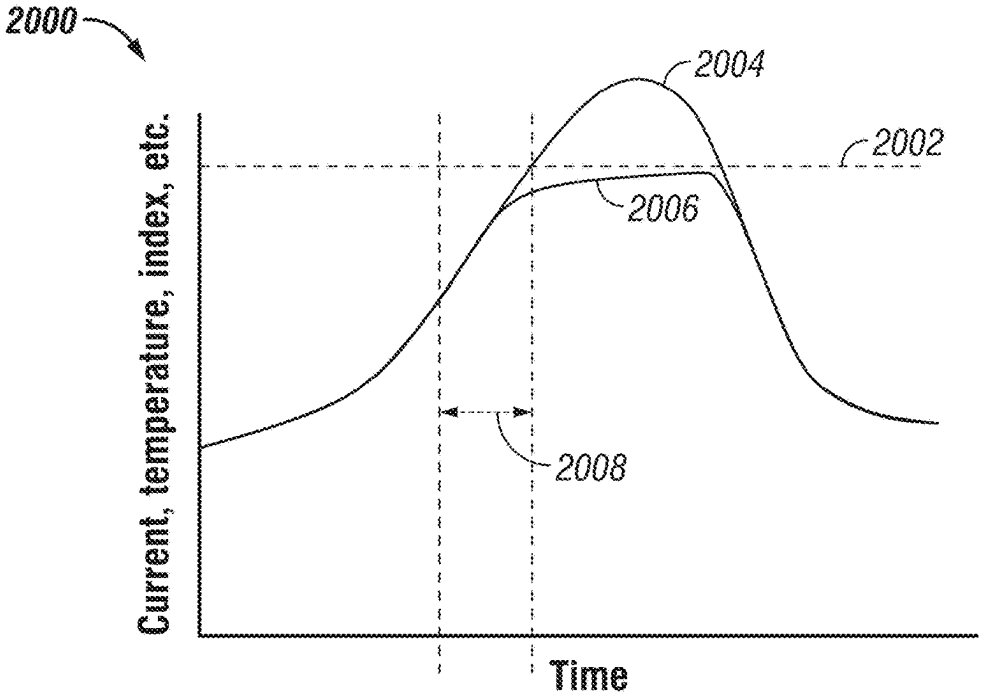
2000
2004
2002
2006
2008
Current, temperature, index, etc.
Time

FIG. 21

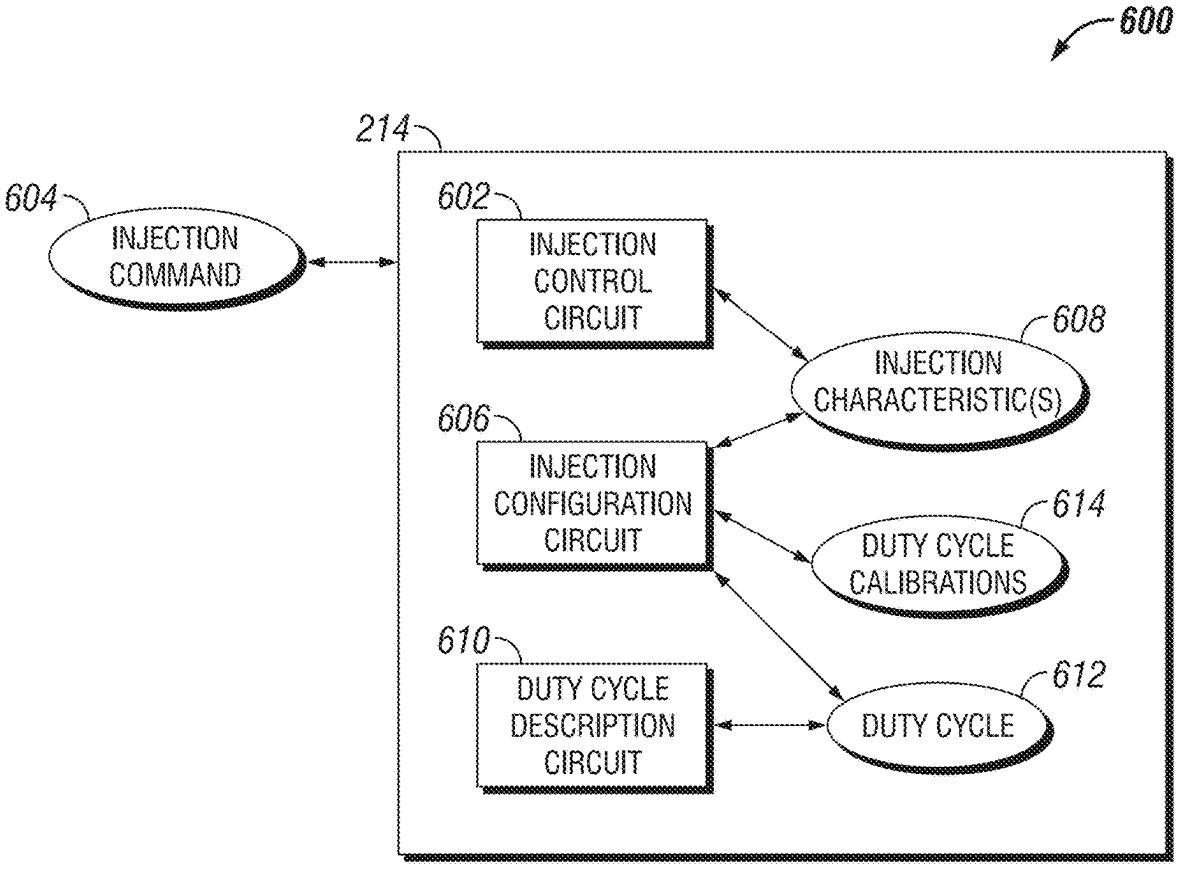
600
214
604
INJECTION COMMAND
602
INJECTION CONTROL CIRCUIT
608
INJECTION CHARACTERISTIC(S)
606
INJECTION CONFIGURATION CIRCUIT
614
DUTY CYCLE CALIBRATIONS
610
DUTY CYCLE DESCRIPTION CIRCUIT
612
DUTY CYCLE

FIG. 22

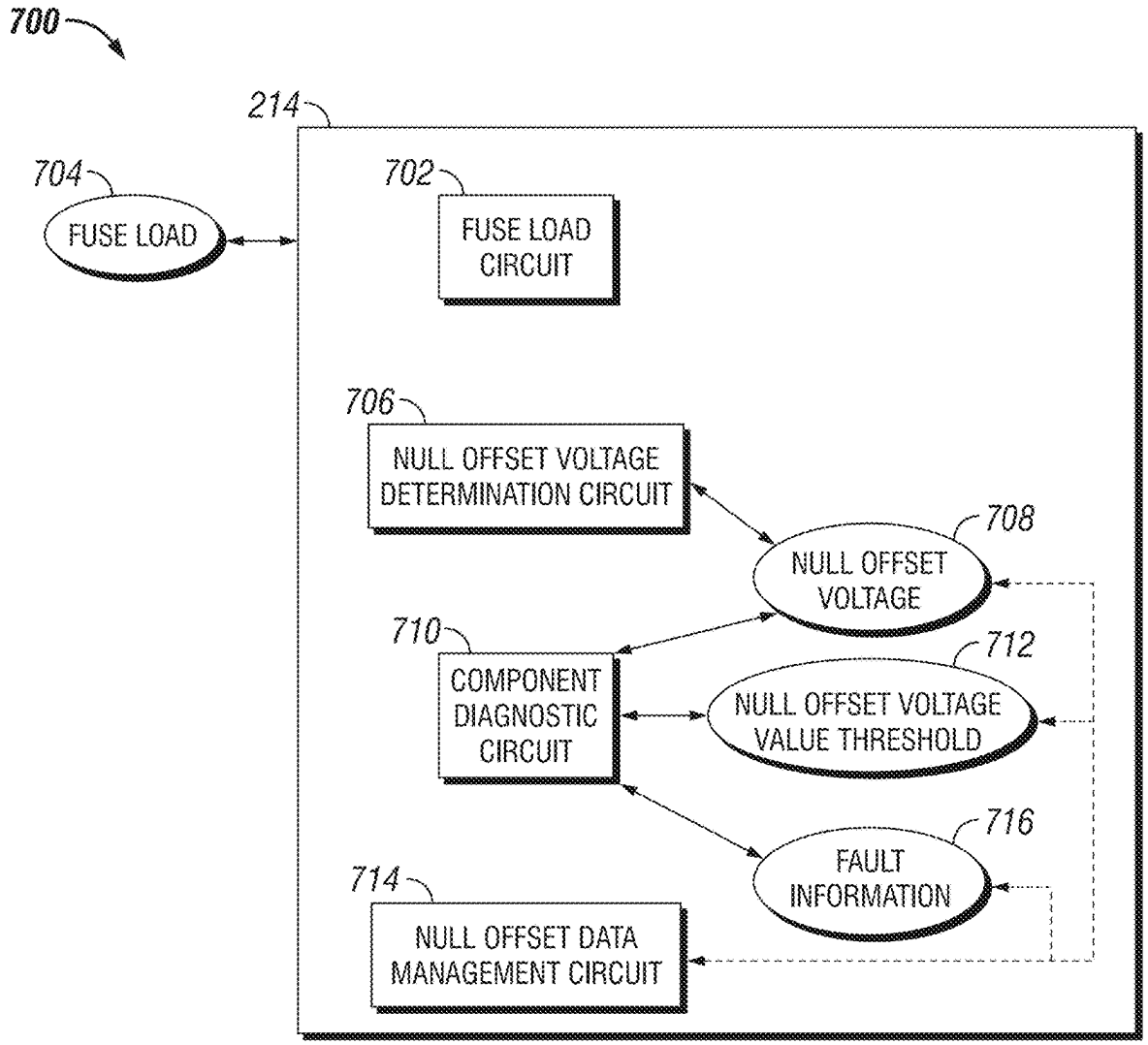
700
214
704
FUSE LOAD
702
FUSE LOAD CIRCUIT
706
NULL OFFSET VOLTAGE DETERMINATION CIRCUIT
708
NULL OFFSET VOLTAGE
710
COMPONENT DIAGNOSTIC CIRCUIT
712
NULL OFFSET VOLTAGE VALUE THRESHOLD
716
FAULT INFORMATION
714
NULL OFFSET DATA MANAGEMENT CIRCUIT

FIG. 23

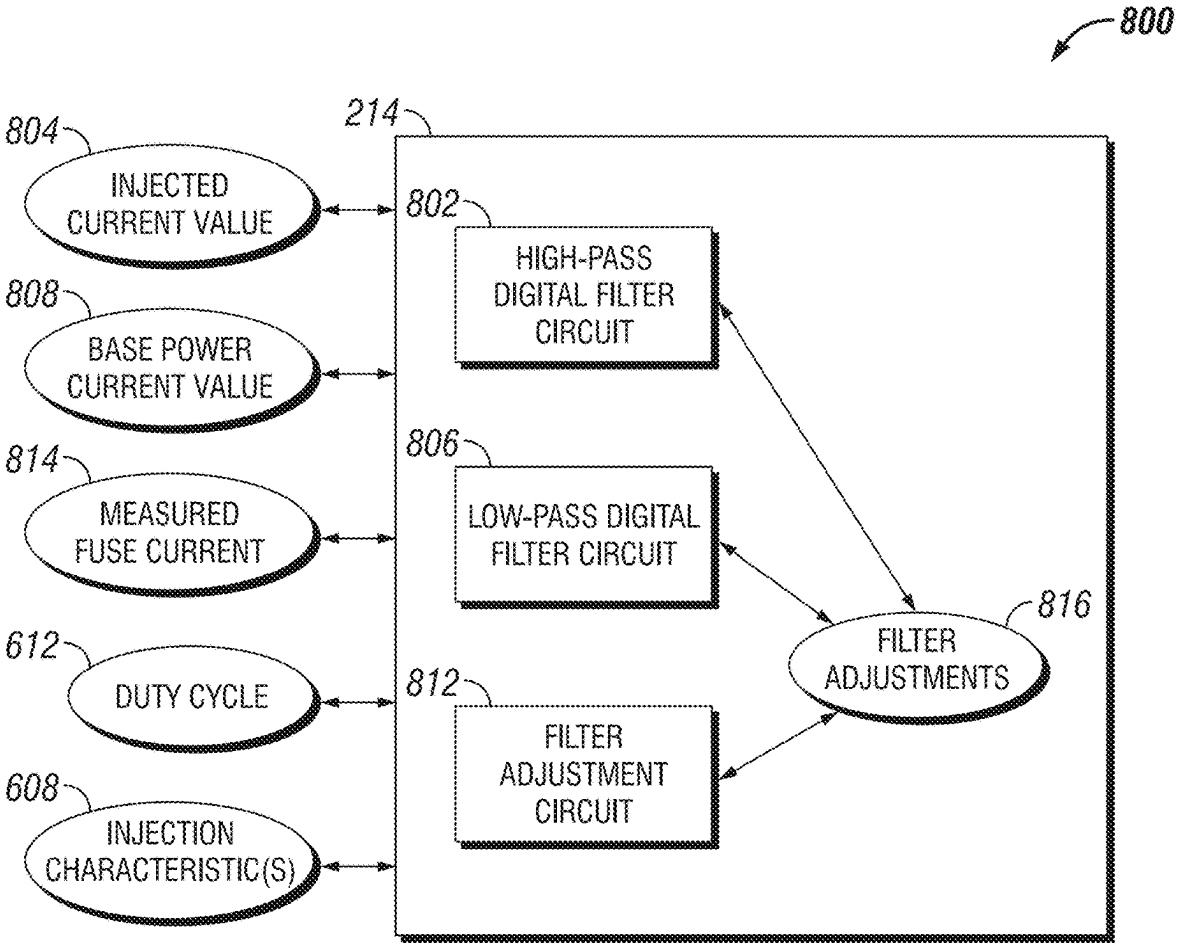
800
214
804
INJECTED CURRENT VALUE
808
BASE POWER CURRENT VALUE
814
MEASURED FUSE CURRENT
612
DUTY CYCLE
608
INJECTION CHARACTERISTIC(S)
802
HIGH-PASS DIGITAL FILTER CIRCUIT
806
LOW-PASS DIGITAL FILTER CIRCUIT
812
FILTER ADJUSTMENT CIRCUIT
816
FILTER ADJUSTMENTS

FIG. 24

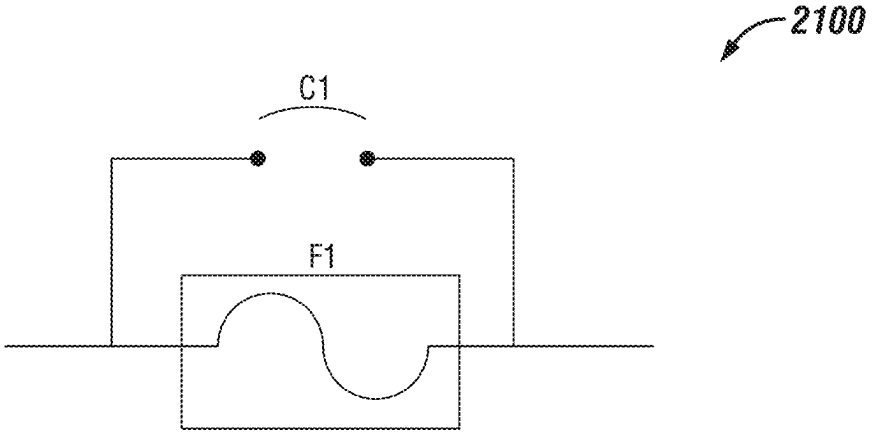

FIG. 25

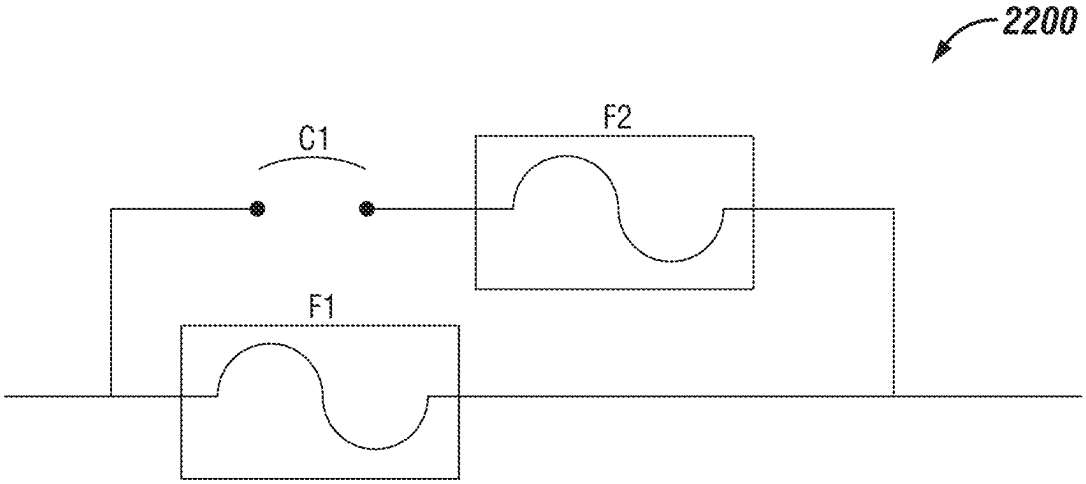

FIG. 26

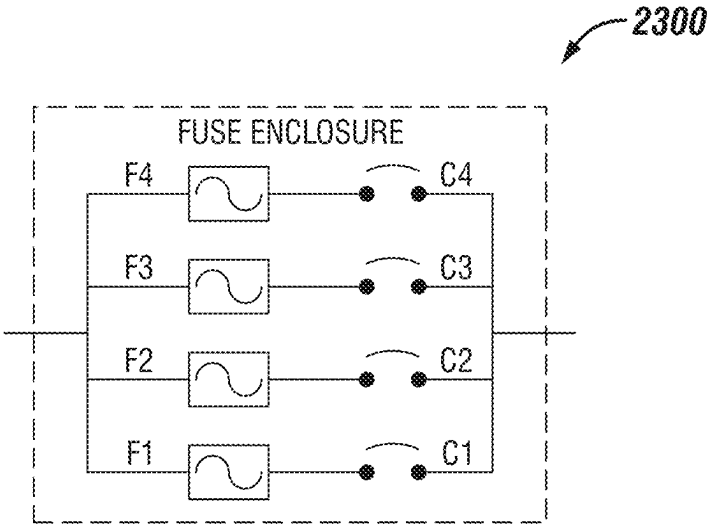
2300
FUSE ENCLOSURE
F4
C4
F3
C3
F2
C2
F1
C1

FIG. 27

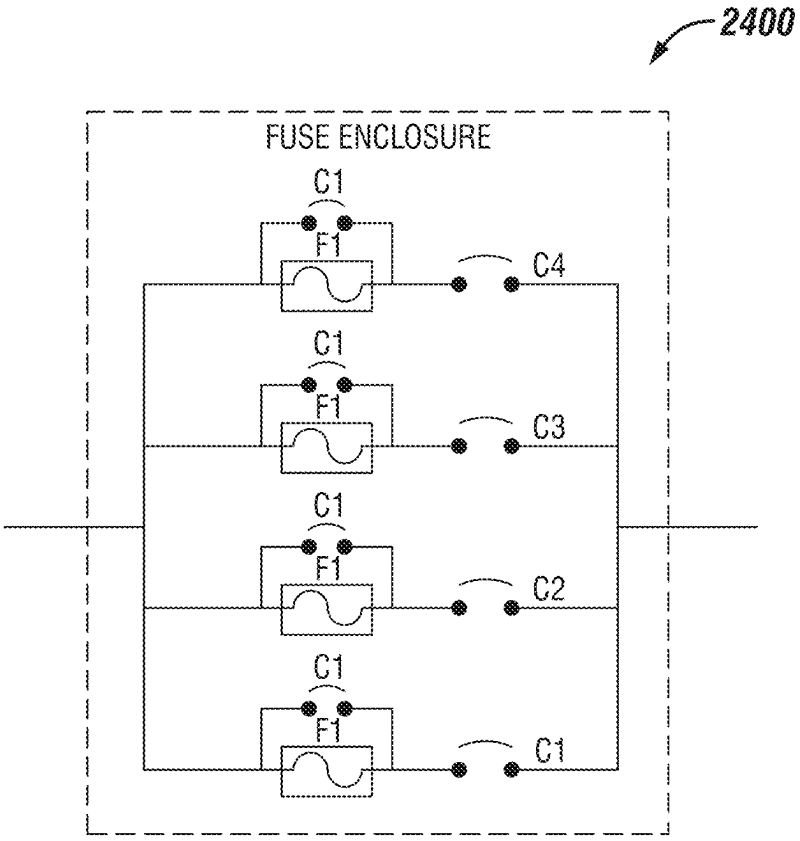
2400
FUSE ENCLOSURE
C1
F1
C4
C1
F1
C3
C1
F1
C2
C1
F1
C1

FIG. 28

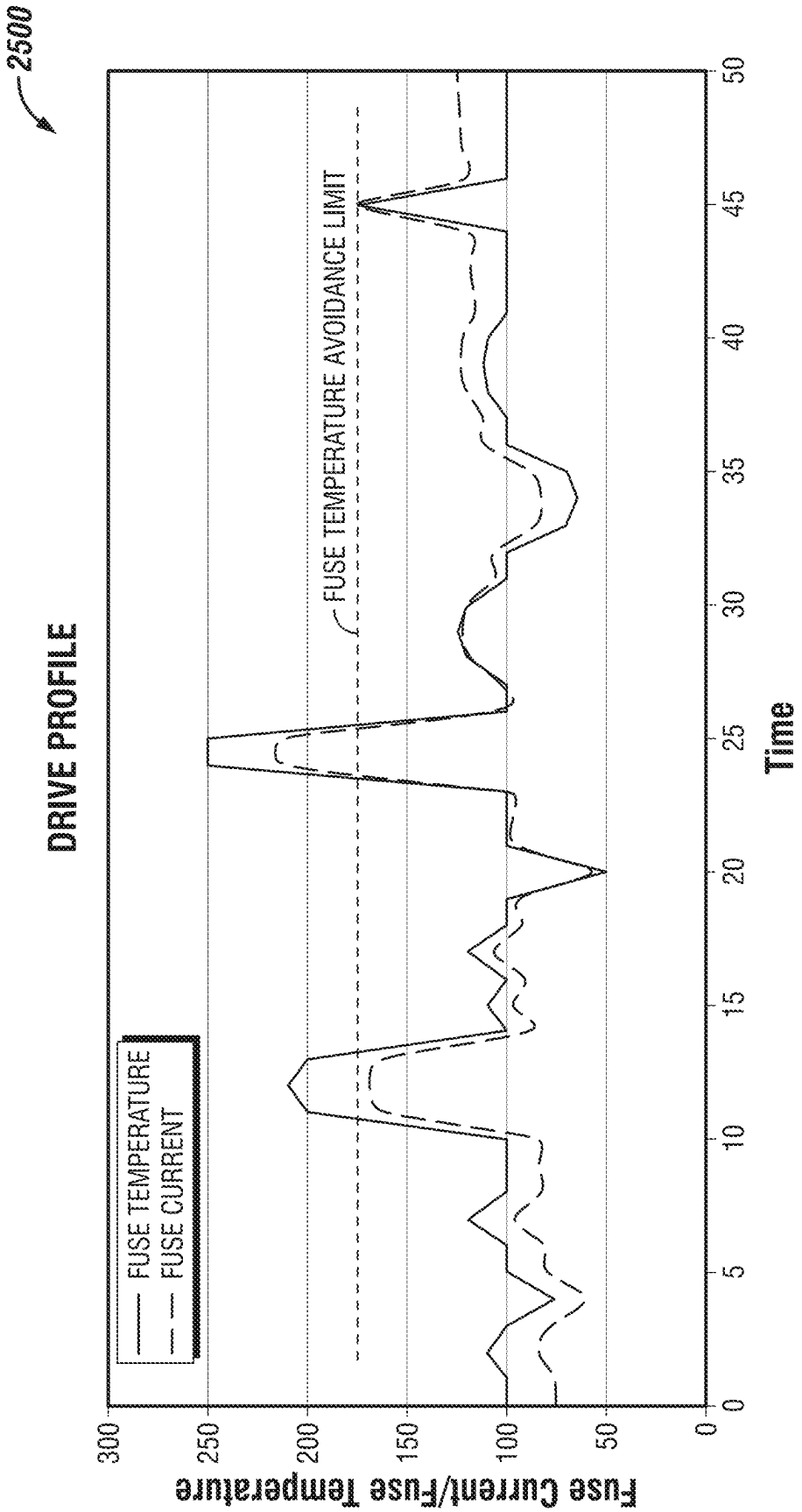
2500
DRIVE PROFILE
FUSE TEMPERATURE
FUSE CURRENT
FUSE TEMPERATURE AVOIDANCE LIMIT
Fuse Current/Fuse Temperature
300
250
200
150
100
50
0
0
5
10
15
20
25
30
35
40
45
50
Time

FIG. 29

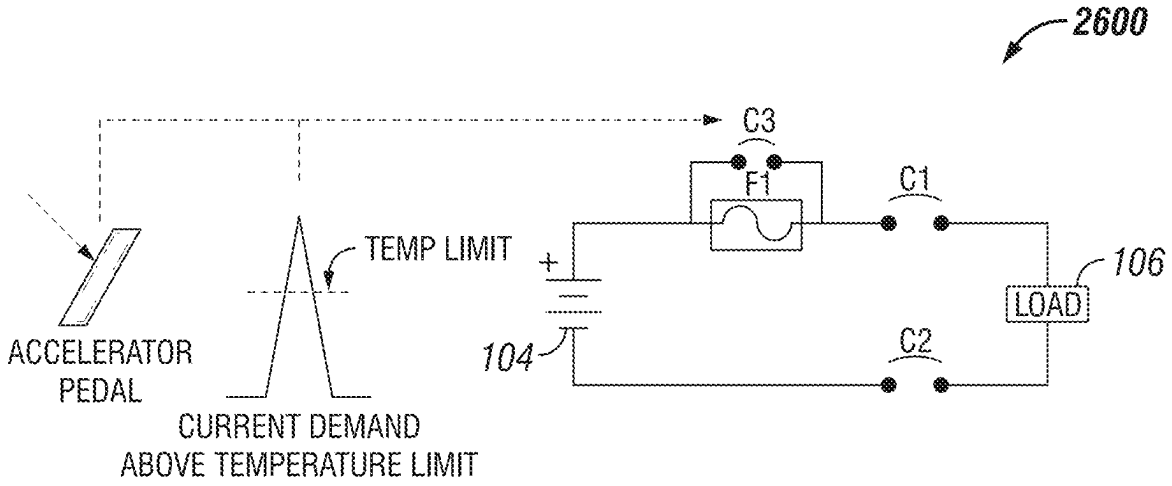
2600
C3
F1
C1
TEMP LIMIT
+
106
LOAD
ACCELERATOR
PEDAL
104
C2
CURRENT DEMAND
ABOVE TEMPERATURE LIMIT

FIG. 30

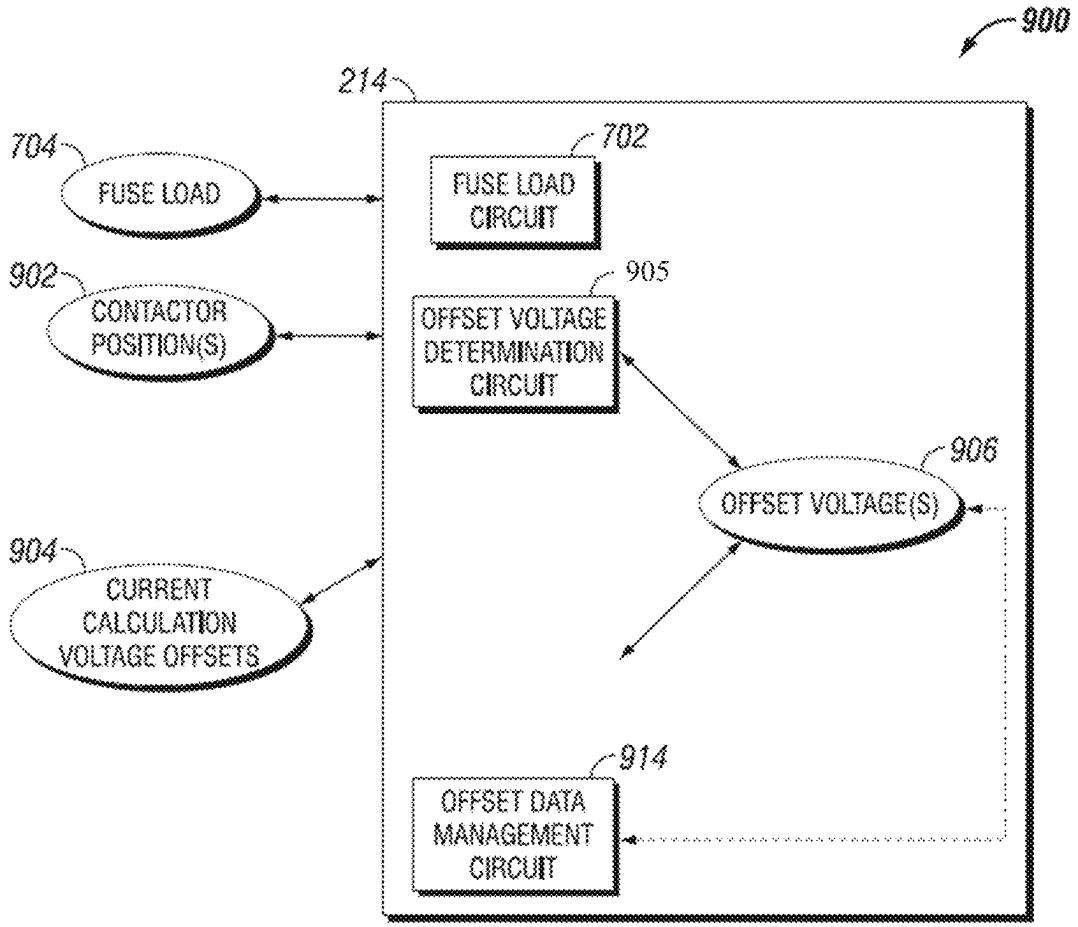
900
214
704
FUSE LOAD
702
FUSE LOAD CIRCUIT
902
CONTACTOR POSITION(S)
905
OFFSET VOLTAGE DETERMINATION CIRCUIT
906
OFFSET VOLTAGE(S)
904
CURRENT CALCULATION VOLTAGE OFFSETS
914
OFFSET DATA MANAGEMENT CIRCUIT

FIG. 31

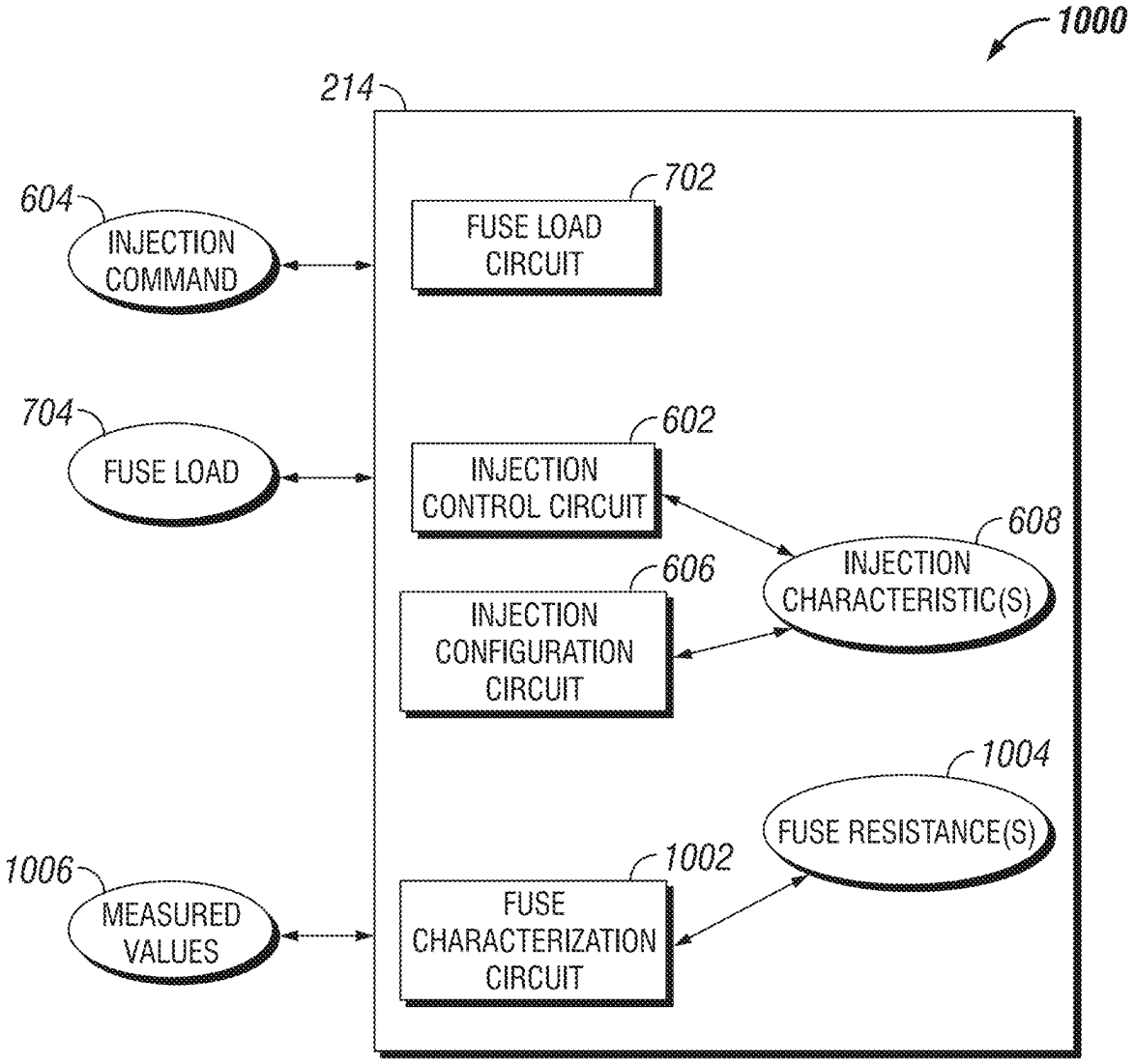
1000
214
604
INJECTION COMMAND
702
FUSE LOAD CIRCUIT
704
FUSE LOAD
602
INJECTION CONTROL CIRCUIT
608
INJECTION CHARACTERISTIC(S)
606
INJECTION CONFIGURATION CIRCUIT
1004
FUSE RESISTANCE(S)
1006
MEASURED VALUES
1002
FUSE CHARACTERIZATION CIRCUIT

FIG. 32

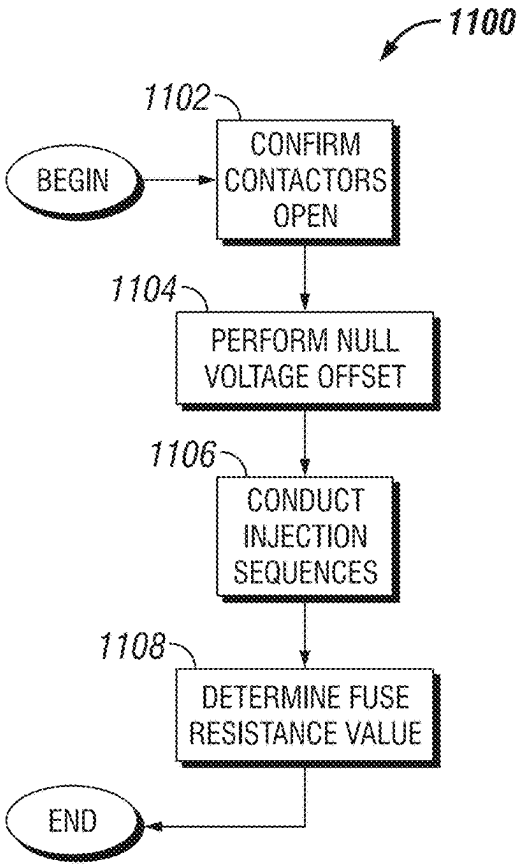
1100
1102
BEGIN
CONFIRM CONTACTORS OPEN
1104
PERFORM NULL VOLTAGE OFFSET
1106
CONDUCT INJECTION SEQUENCES
1108
DETERMINE FUSE RESISTANCE VALUE
END

FIG. 33

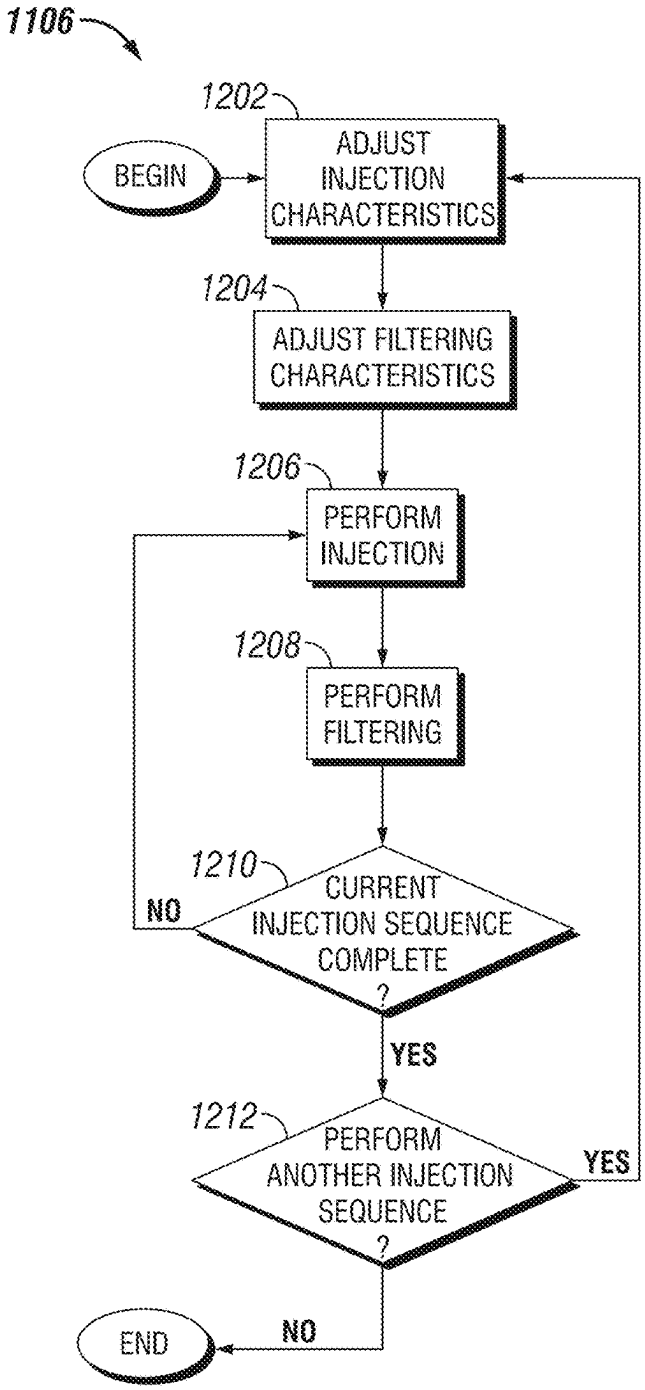
1106
1202
BEGIN
ADJUST INJECTION CHARACTERISTICS
1204
ADJUST FILTERING CHARACTERISTICS
1206
PERFORM INJECTION
1208
PERFORM FILTERING
1210
CURRENT INJECTION SEQUENCE COMPLETE ?
NO
YES
1212
PERFORM ANOTHER INJECTION SEQUENCE ?
YES
NO
END

FIG. 34

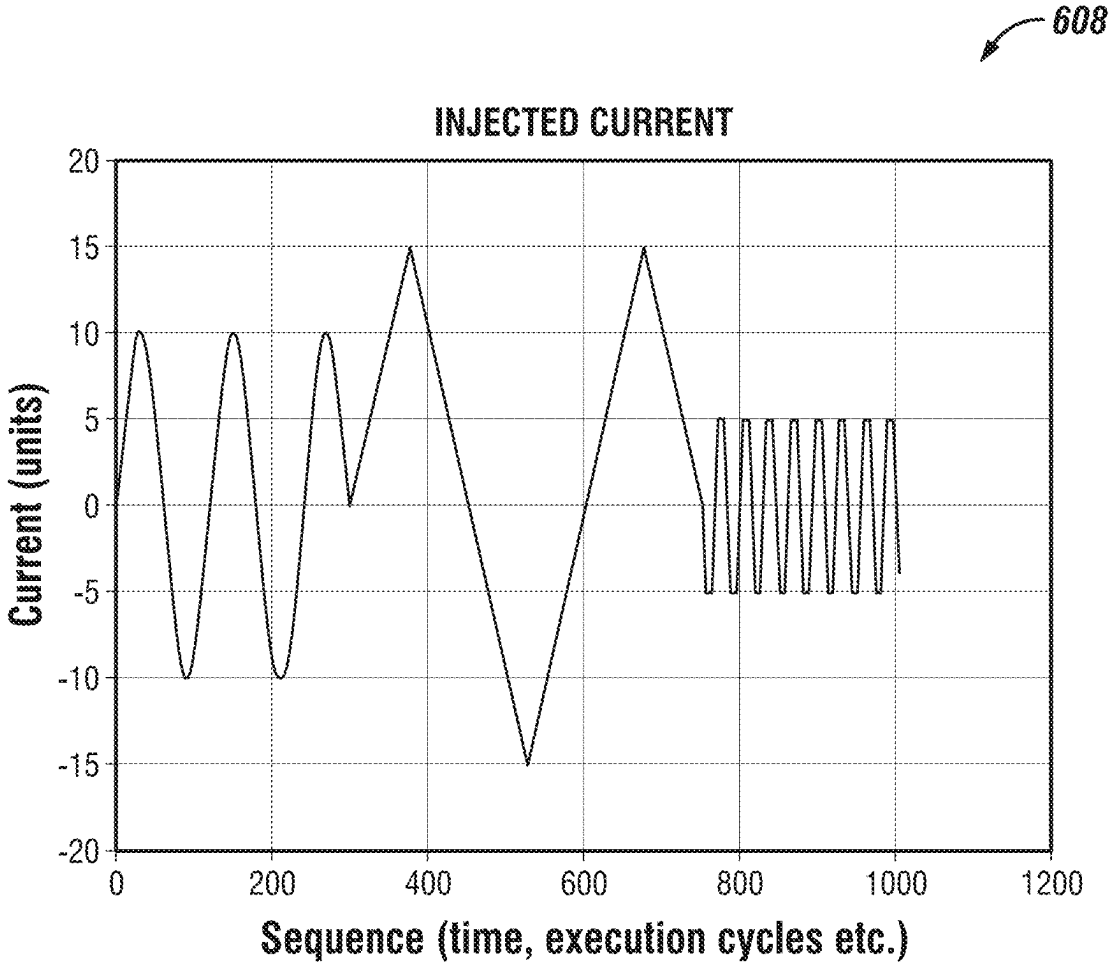
608
INJECTED CURRENT
Current (units)
20
15
10
5
0
-5
-10
-15
-20
0
200
400
600
800
1000
1200
Sequence (time, execution cycles etc.)

FIG. 35

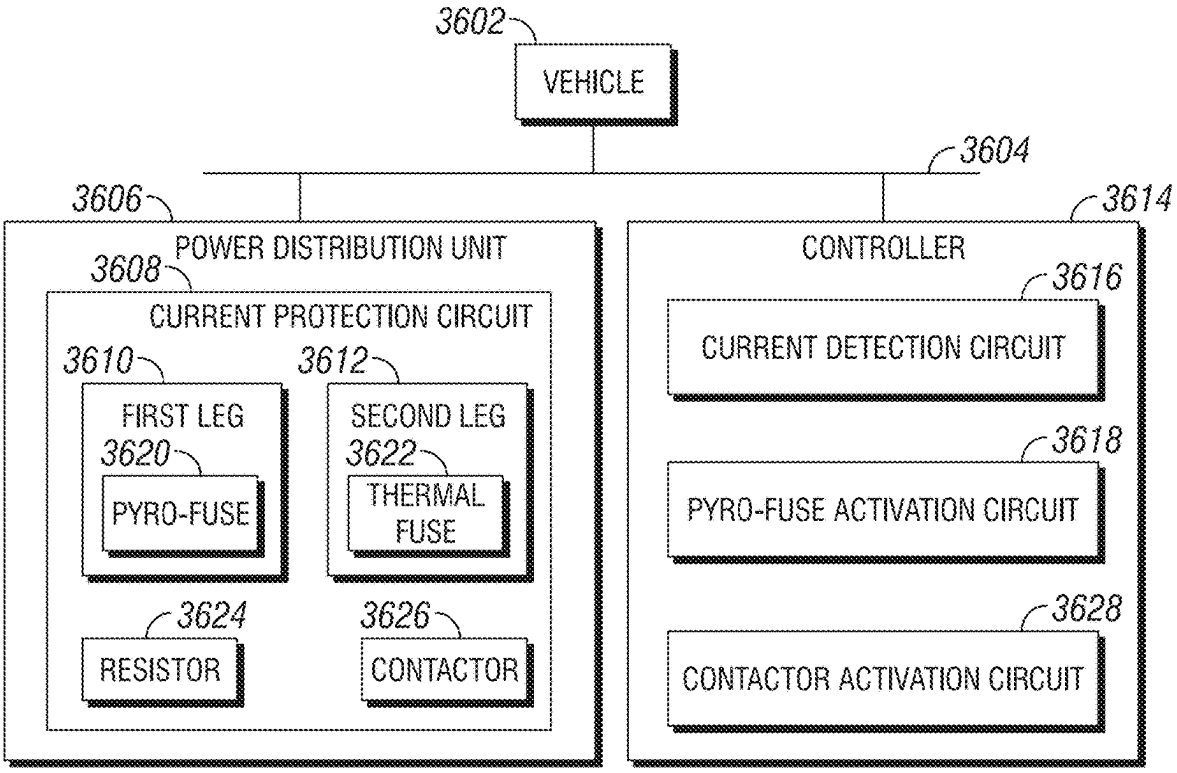
3602
VEHICLE
3604
3606
POWER DISTRIBUTION UNIT
3608
CURRENT PROTECTION CIRCUIT
3610
FIRST LEG
3620
PYRO-FUSE
3612
SECOND LEG
3622
THERMAL FUSE
3624
RESISTOR
3626
CONTACTOR
3614
CONTROLLER
3616
CURRENT DETECTION CIRCUIT
3618
PYRO-FUSE ACTIVATION CIRCUIT
3628
CONTACTOR ACTIVATION CIRCUIT

FIG. 36

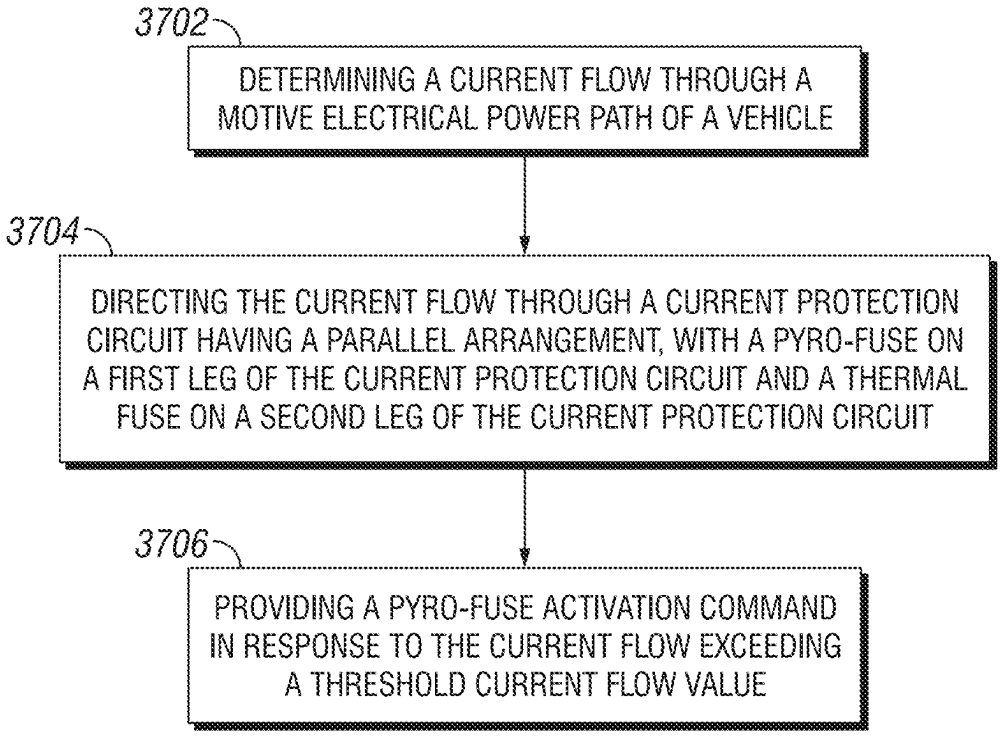
3702
DETERMINING A CURRENT FLOW THROUGH A MOTIVE ELECTRICAL POWER PATH OF A VEHICLE
3704
DIRECTING THE CURRENT FLOW THROUGH A CURRENT PROTECTION CIRCUIT HAVING A PARALLEL ARRANGEMENT, WITH A PYRO-FUSE ON A FIRST LEG OF THE CURRENT PROTECTION CIRCUIT AND A THERMAL FUSE ON A SECOND LEG OF THE CURRENT PROTECTION CIRCUIT
3706
PROVIDING A PYRO-FUSE ACTIVATION COMMAND IN RESPONSE TO THE CURRENT FLOW EXCEEDING A THRESHOLD CURRENT FLOW VALUE

FIG. 37

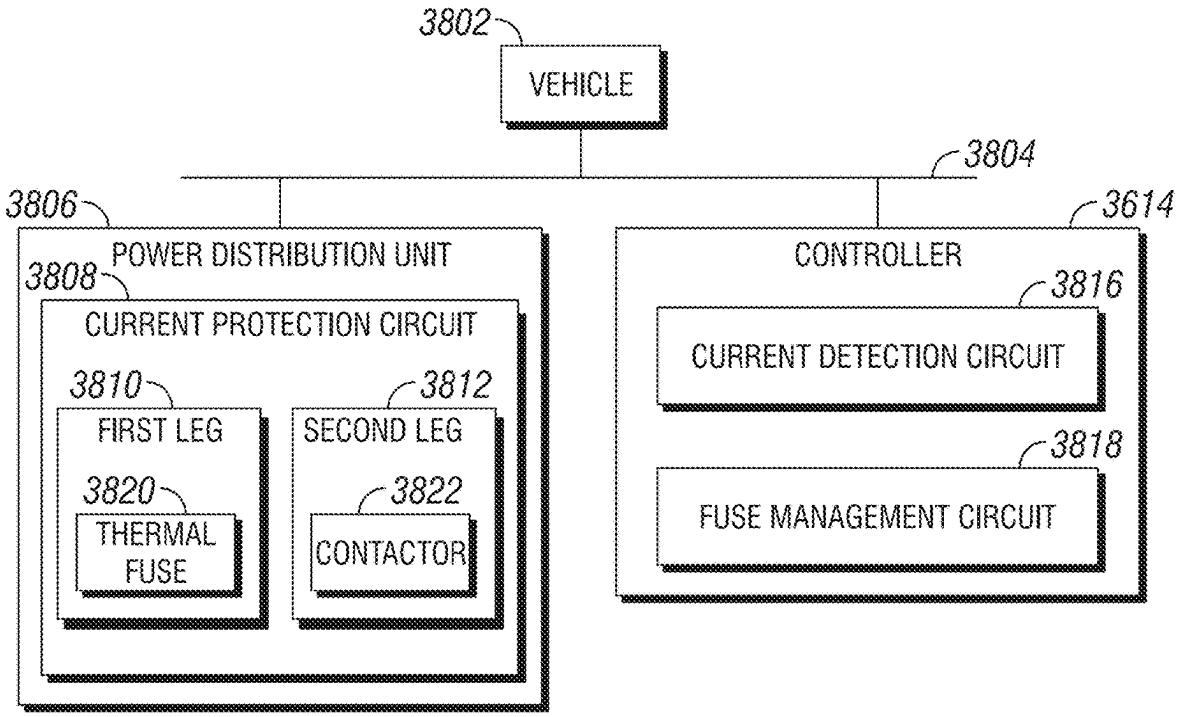
3802
VEHICLE
3804
3806
POWER DISTRIBUTION UNIT
3808
CURRENT PROTECTION CIRCUIT
3810
FIRST LEG
3820
THERMAL FUSE
3812
SECOND LEG
3822
CONTACTOR
3614
CONTROLLER
3816
CURRENT DETECTION CIRCUIT
3818
FUSE MANAGEMENT CIRCUIT

FIG. 38

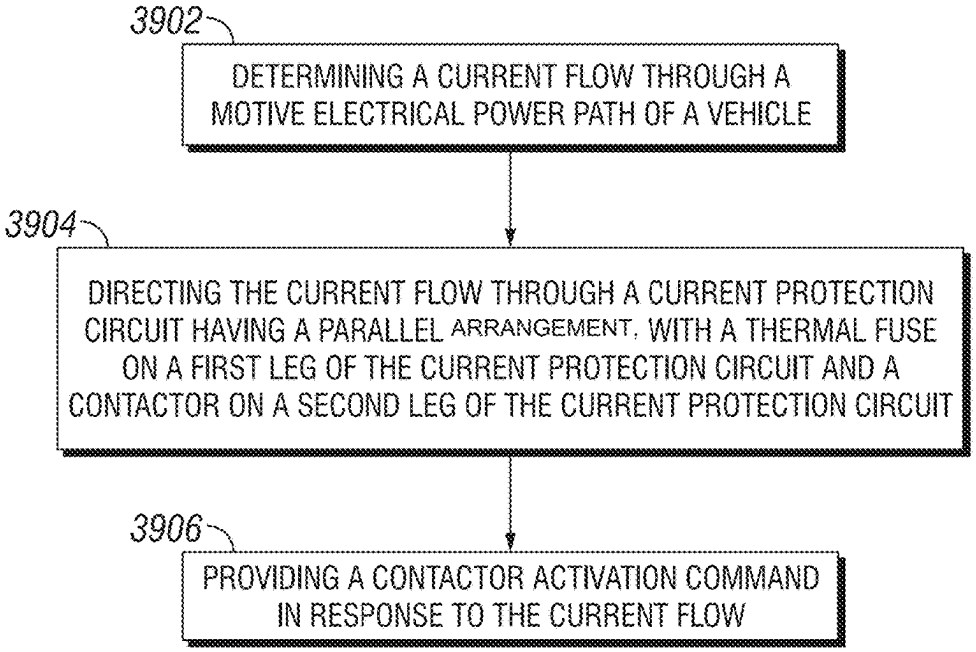
3902
DETERMINING A CURRENT FLOW THROUGH A MOTIVE ELECTRICAL POWER PATH OF A VEHICLE
3904
DIRECTING THE CURRENT FLOW THROUGH A CURRENT PROTECTION CIRCUIT HAVING A PARALLEL ARRANGEMENT, WITH A THERMAL FUSE ON A FIRST LEG OF THE CURRENT PROTECTION CIRCUIT AND A CONTACTOR ON A SECOND LEG OF THE CURRENT PROTECTION CIRCUIT
3906
PROVIDING A CONTACTOR ACTIVATION COMMAND IN RESPONSE TO THE CURRENT FLOW

FIG. 39

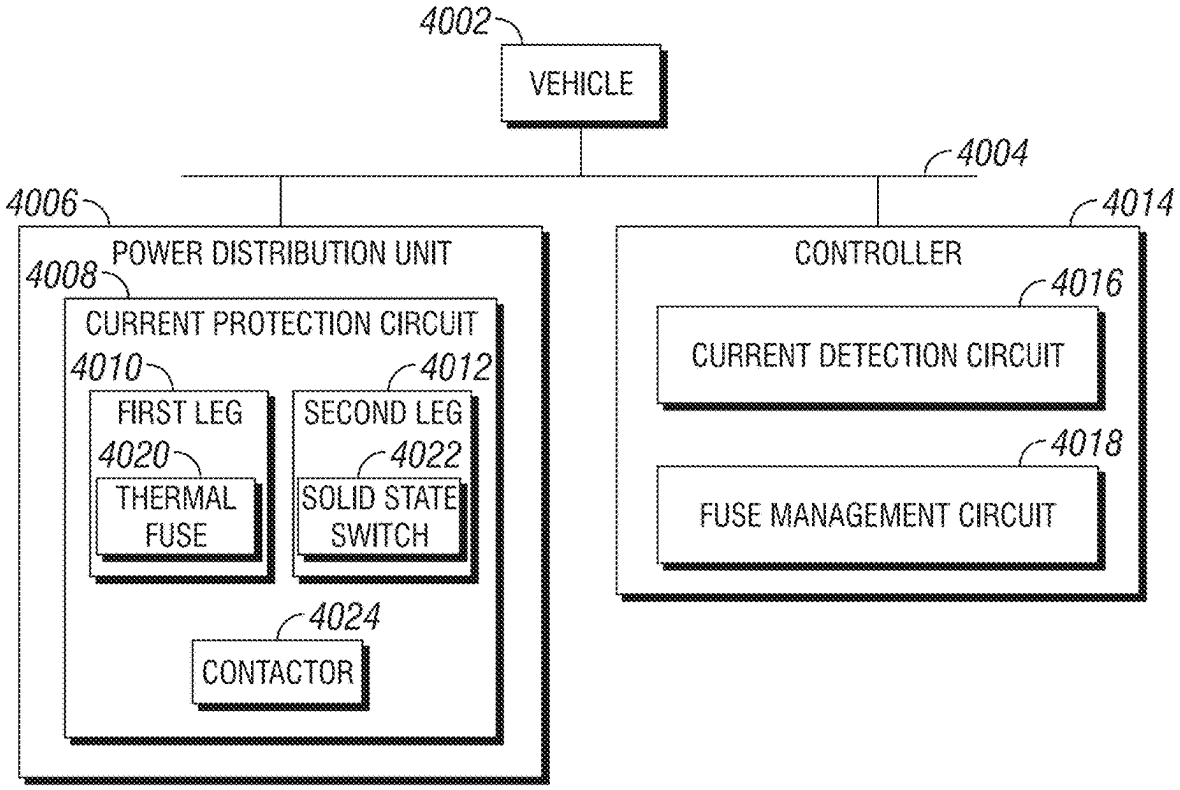
4002
VEHICLE
4004
4006
POWER DISTRIBUTION UNIT
4008
CURRENT PROTECTION CIRCUIT
4010
FIRST LEG
4020
THERMAL FUSE
4012
SECOND LEG
4022
SOLID STATE SWITCH
4024
CONTACTOR
4014
CONTROLLER
4016
CURRENT DETECTION CIRCUIT
4018
FUSE MANAGEMENT CIRCUIT

FIG. 40

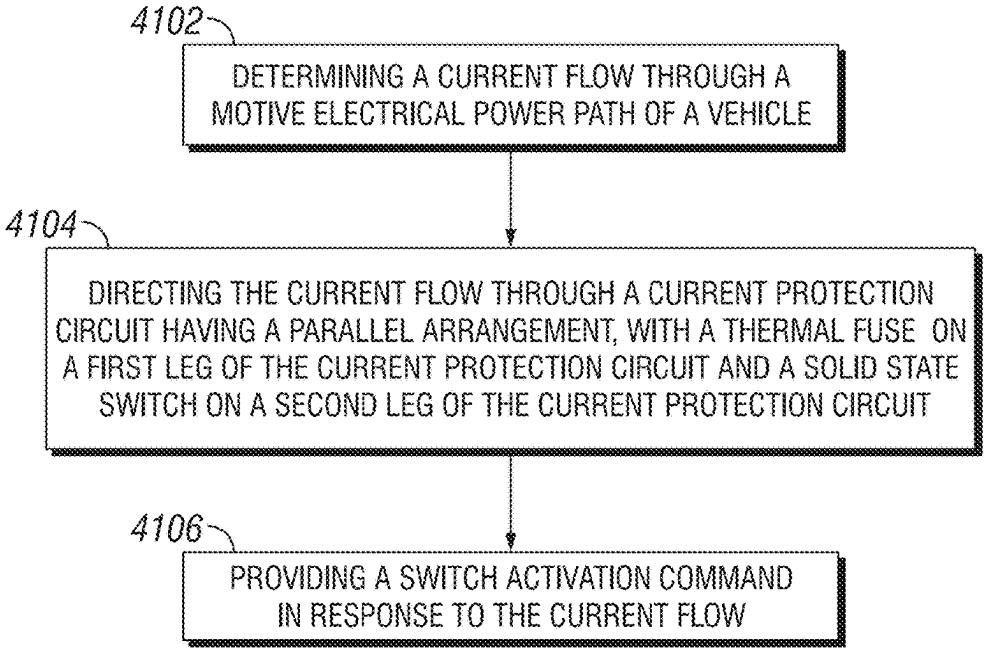
4102
DETERMINING A CURRENT FLOW THROUGH A MOTIVE ELECTRICAL POWER PATH OF A VEHICLE
4104
DIRECTING THE CURRENT FLOW THROUGH A CURRENT PROTECTION CIRCUIT HAVING A PARALLEL ARRANGEMENT, WITH A THERMAL FUSE ON A FIRST LEG OF THE CURRENT PROTECTION CIRCUIT AND A SOLID STATE SWITCH ON A SECOND LEG OF THE CURRENT PROTECTION CIRCUIT
4106
PROVIDING A SWITCH ACTIVATION COMMAND IN RESPONSE TO THE CURRENT FLOW

FIG. 41

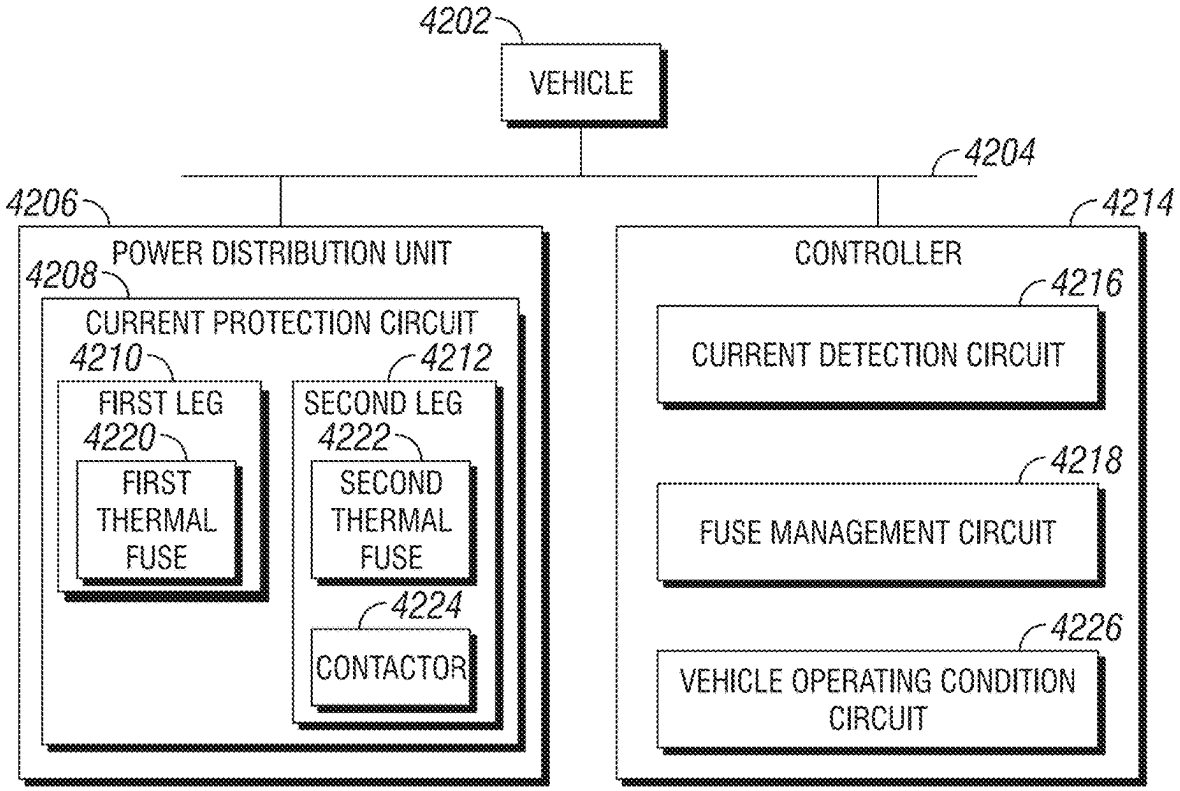
4202
VEHICLE
4204
4206
POWER DISTRIBUTION UNIT
4208
CURRENT PROTECTION CIRCUIT
4210
FIRST LEG
4220
FIRST THERMAL FUSE
4212
SECOND LEG
4222
SECOND THERMAL FUSE
4224
CONTACTOR
4214
CONTROLLER
4216
CURRENT DETECTION CIRCUIT
4218
FUSE MANAGEMENT CIRCUIT
4226
VEHICLE OPERATING CONDITION CIRCUIT

FIG. 42

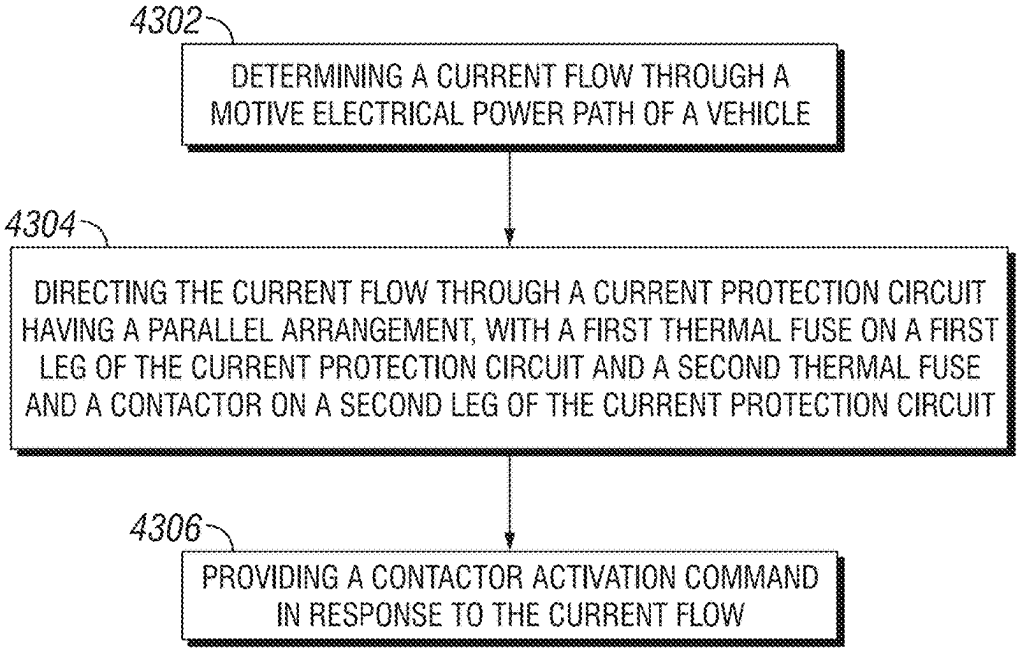
4302
DETERMINING A CURRENT FLOW THROUGH A MOTIVE ELECTRICAL POWER PATH OF A VEHICLE
4304
DIRECTING THE CURRENT FLOW THROUGH A CURRENT PROTECTION CIRCUIT HAVING A PARALLEL ARRANGEMENT, WITH A FIRST THERMAL FUSE ON A FIRST LEG OF THE CURRENT PROTECTION CIRCUIT AND A SECOND THERMAL FUSE AND A CONTACTOR ON A SECOND LEG OF THE CURRENT PROTECTION CIRCUIT
4306
PROVIDING A CONTACTOR ACTIVATION COMMAND IN RESPONSE TO THE CURRENT FLOW

FIG. 43

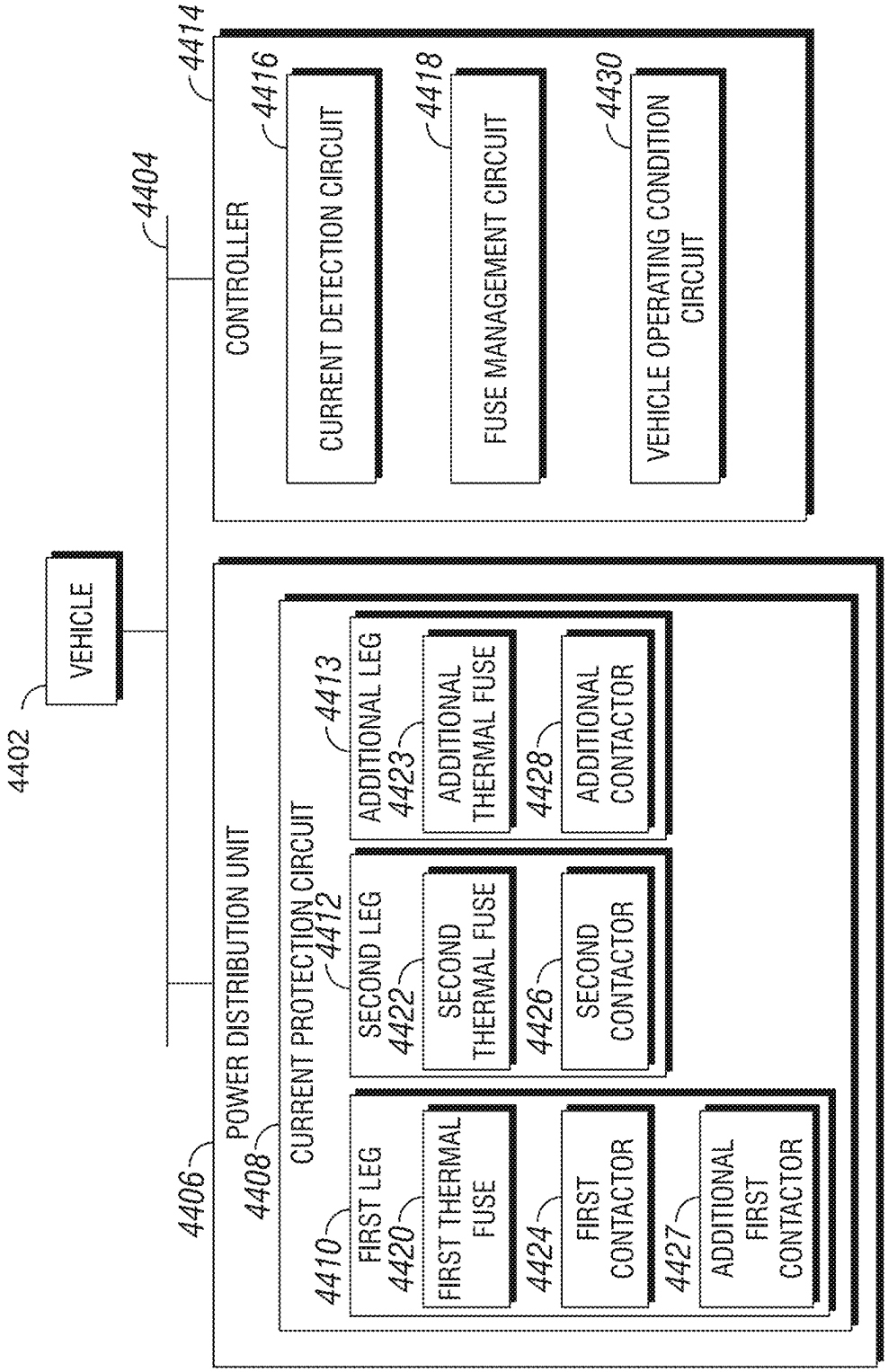
4402
VEHICLE
4404
4414
CONTROLLER
4416
CURRENT DETECTION CIRCUIT
4418
FUSE MANAGEMENT CIRCUIT
4430
VEHICLE OPERATING CONDITION CIRCUIT
4406
POWER DISTRIBUTION UNIT
4408
CURRENT PROTECTION CIRCUIT
4412
4410
FIRST LEG
4420
FIRST THERMAL FUSE
4424
FIRST CONTACTOR
4427
ADDITIONAL FIRST CONTACTOR
SECOND LEG
4422
SECOND THERMAL FUSE
4426
SECOND CONTACTOR
4413
ADDITIONAL LEG
4423
ADDITIONAL THERMAL FUSE
4428
ADDITIONAL CONTACTOR

FIG. 44

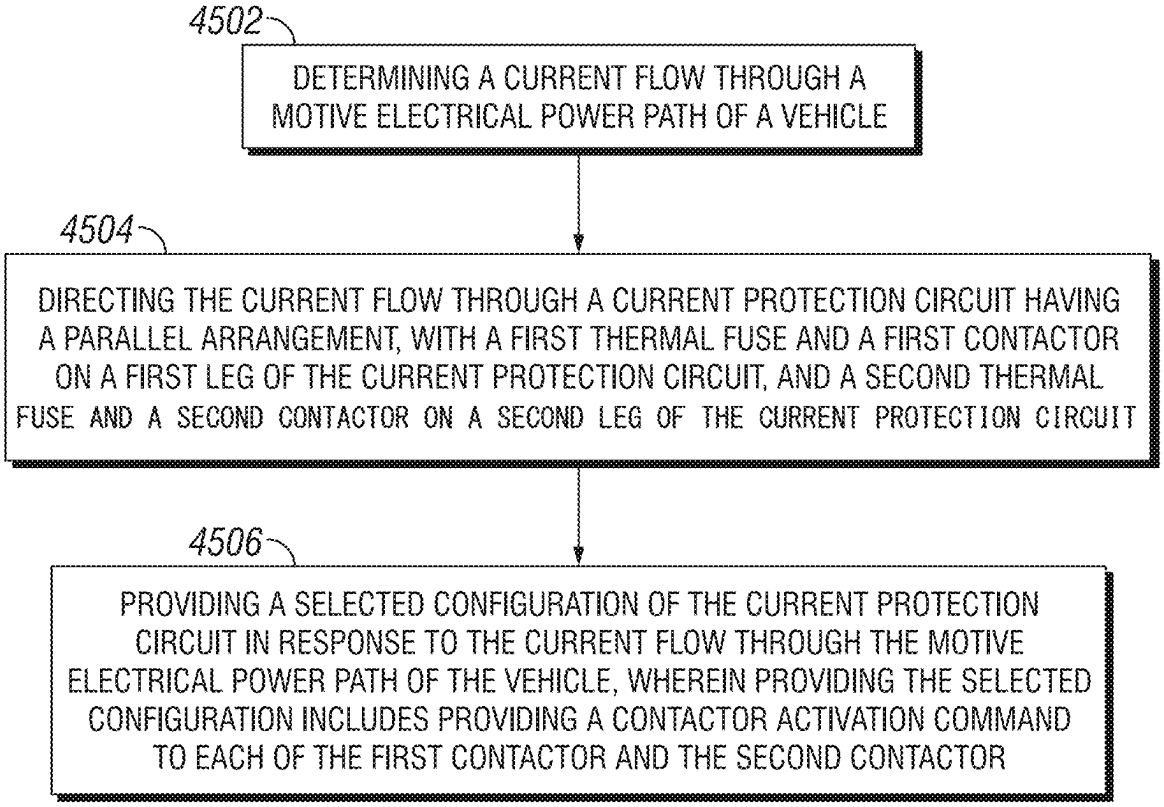
4502
DETERMINING A CURRENT FLOW THROUGH A MOTIVE ELECTRICAL POWER PATH OF A VEHICLE
4504
DIRECTING THE CURRENT FLOW THROUGH A CURRENT PROTECTION CIRCUIT HAVING A PARALLEL ARRANGEMENT, WITH A FIRST THERMAL FUSE AND A FIRST CONTACTOR ON A FIRST LEG OF THE CURRENT PROTECTION CIRCUIT, AND A SECOND THERMAL FUSE AND A SECOND CONTACTOR ON A SECOND LEG OF THE CURRENT PROTECTION CIRCUIT
4506
PROVIDING A SELECTED CONFIGURATION OF THE CURRENT PROTECTION CIRCUIT IN RESPONSE TO THE CURRENT FLOW THROUGH THE MOTIVE ELECTRICAL POWER PATH OF THE VEHICLE, WHEREIN PROVIDING THE SELECTED CONFIGURATION INCLUDES PROVIDING A CONTACTOR ACTIVATION COMMAND TO EACH OF THE FIRST CONTACTOR AND THE SECOND CONTACTOR

FIG. 45

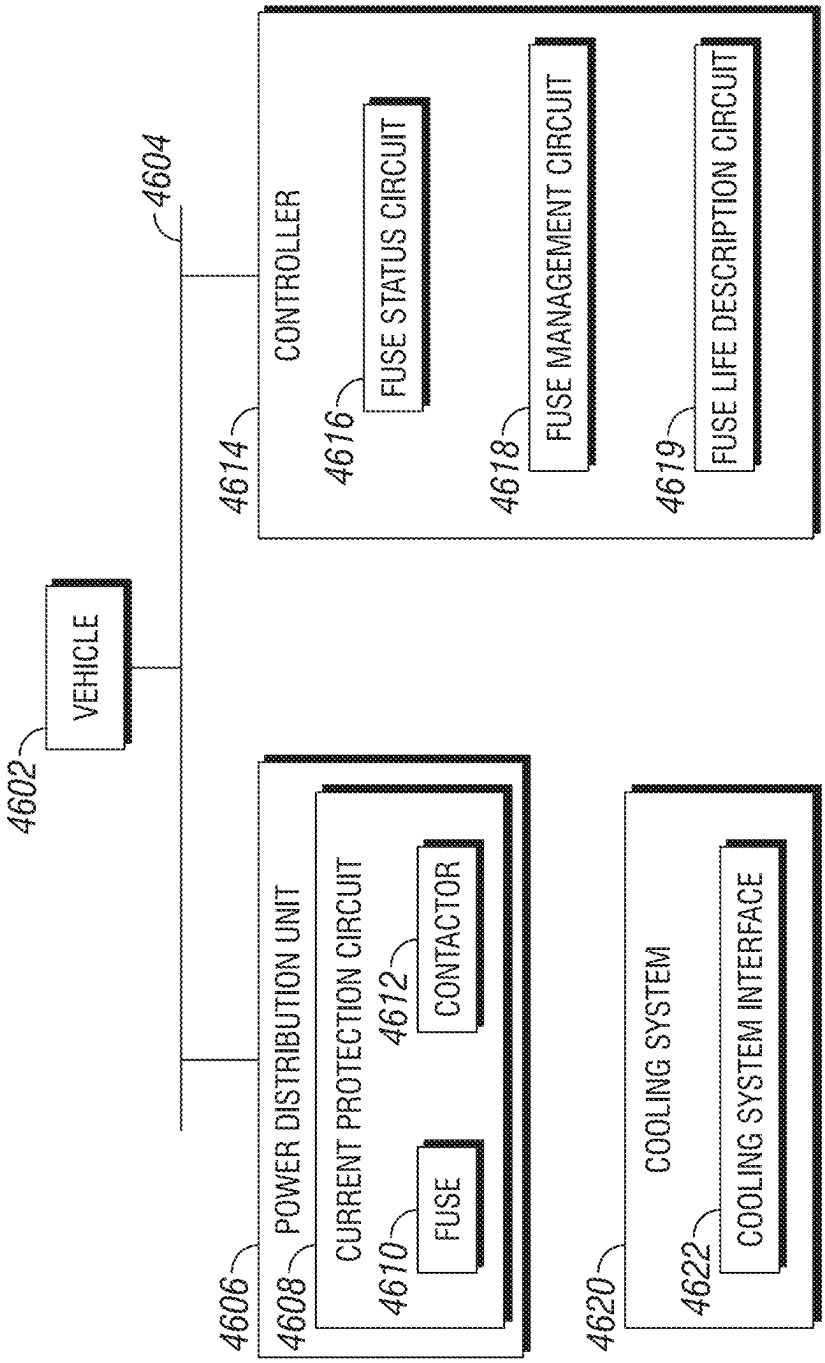
4602
VEHICLE
4604
4606
POWER DISTRIBUTION UNIT
4608
CURRENT PROTECTION CIRCUIT
4610
FUSE
4612
CONTACTOR
4614
CONTROLLER
4616
FUSE STATUS CIRCUIT
4618
FUSE MANAGEMENT CIRCUIT
4619
FUSE LIFE DESCRIPTION CIRCUIT
4620
COOLING SYSTEM
4622
COOLING SYSTEM INTERFACE

FIG. 46

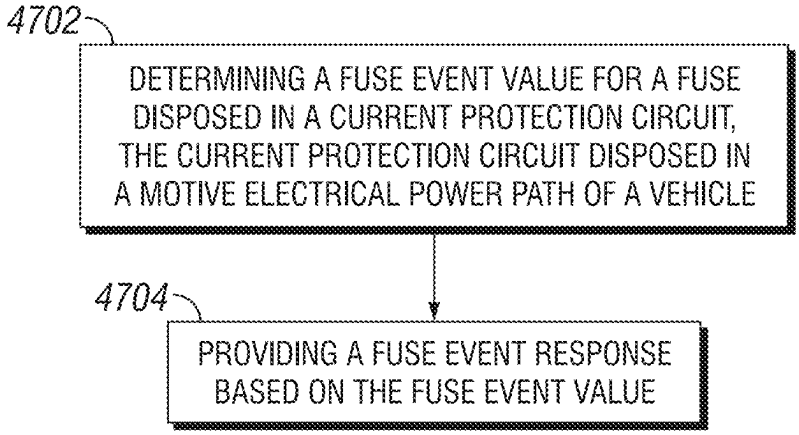
4702
DETERMINING A FUSE EVENT VALUE FOR A FUSE DISPOSED IN A CURRENT PROTECTION CIRCUIT, THE CURRENT PROTECTION CIRCUIT DISPOSED IN A MOTIVE ELECTRICAL POWER PATH OF A VEHICLE
4704
PROVIDING A FUSE EVENT RESPONSE BASED ON THE FUSE EVENT VALUE

FIG. 47

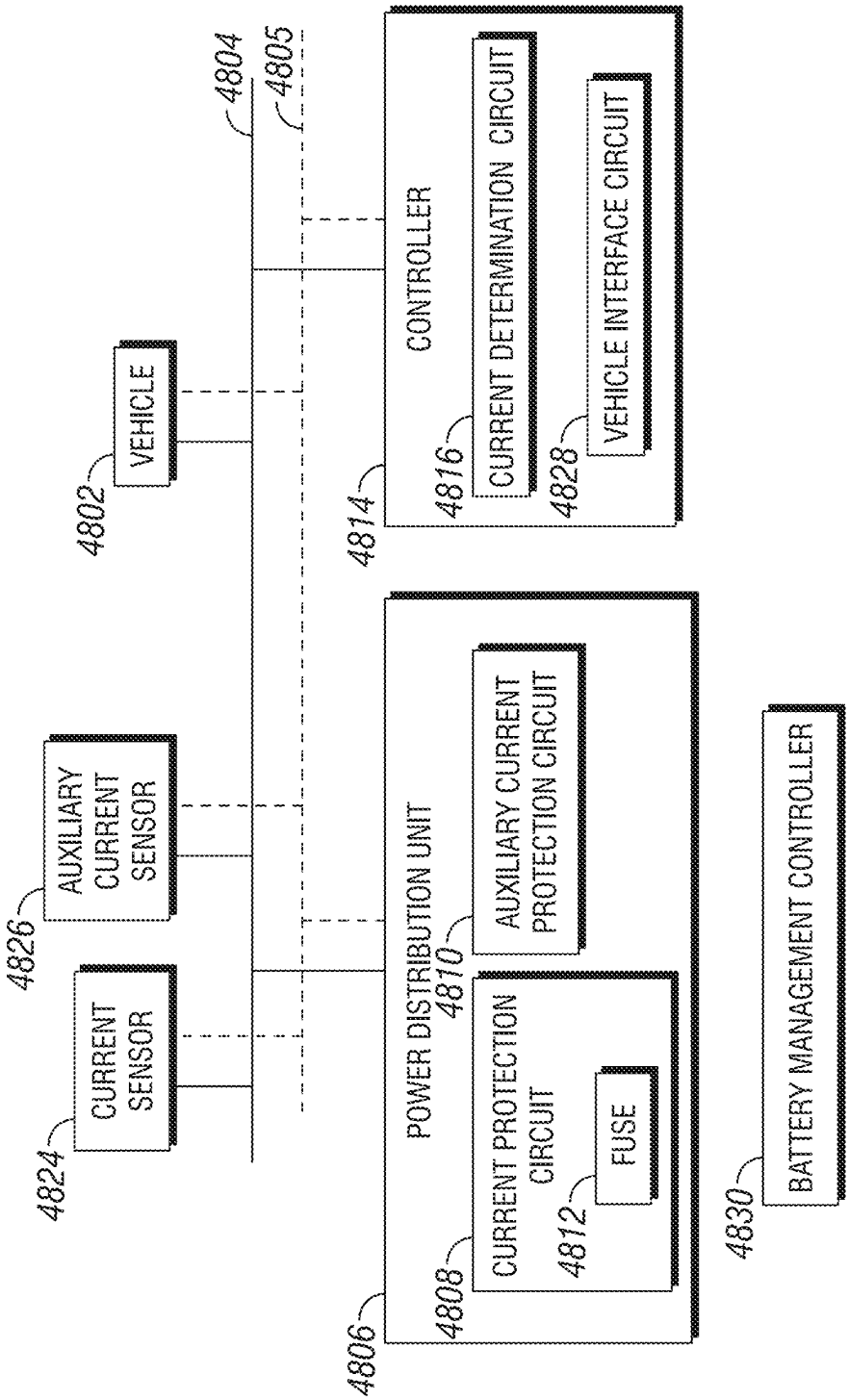
4804
4805
VEHICLE
4802
CONTROLLER
4814
CURRENT DETERMINATION CIRCUIT
4816
VEHICLE INTERFACE CIRCUIT
4828
AUXILIARY CURRENT SENSOR
4826
CURRENT SENSOR
4824
POWER DISTRIBUTION UNIT
4810
AUXILIARY CURRENT PROTECTION CIRCUIT
CURRENT PROTECTION CIRCUIT
4808
FUSE
4812
4806
BATTERY MANAGEMENT CONTROLLER
4830

FIG. 48

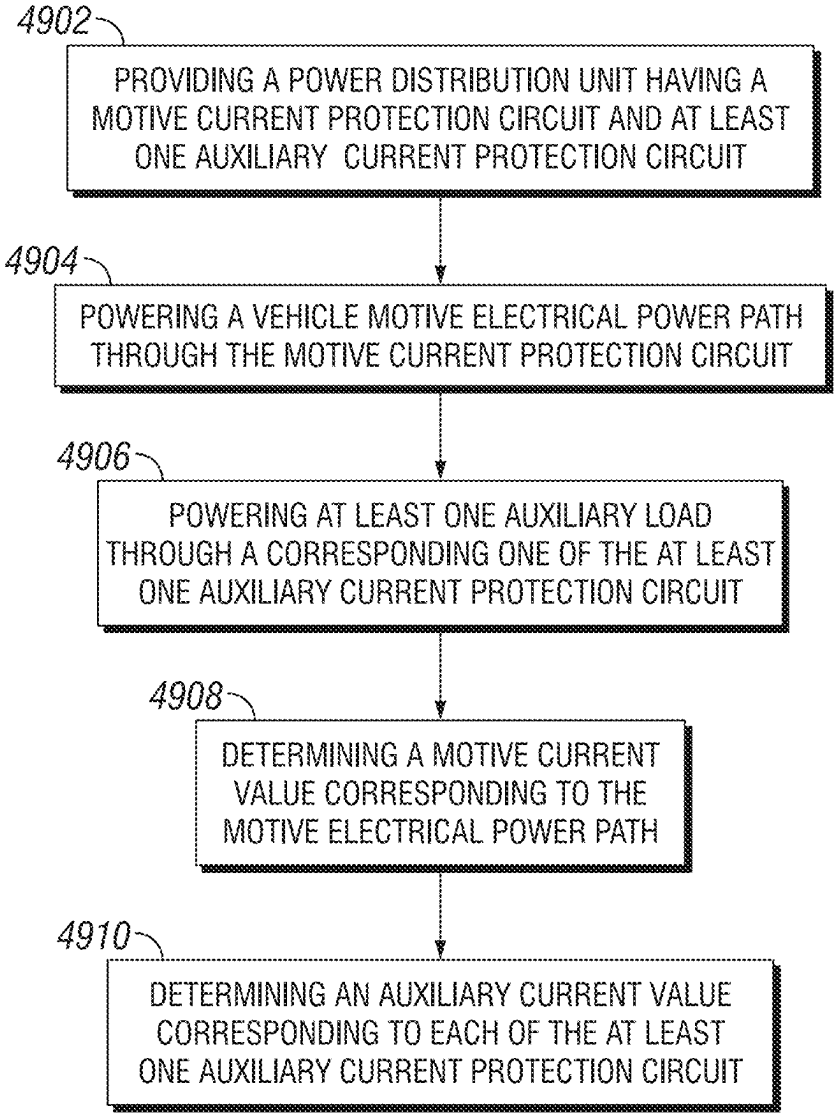
4902
PROVIDING A POWER DISTRIBUTION UNIT HAVING A MOTIVE CURRENT PROTECTION CIRCUIT AND AT LEAST ONE AUXILIARY CURRENT PROTECTION CIRCUIT
4904
POWERING A VEHICLE MOTIVE ELECTRICAL POWER PATH THROUGH THE MOTIVE CURRENT PROTECTION CIRCUIT
4906
POWERING AT LEAST ONE AUXILIARY LOAD THROUGH A CORRESPONDING ONE OF THE AT LEAST ONE AUXILIARY CURRENT PROTECTION CIRCUIT
4908
DETERMINING A MOTIVE CURRENT VALUE CORRESPONDING TO THE MOTIVE ELECTRICAL POWER PATH
4910
DETERMINING AN AUXILIARY CURRENT VALUE CORRESPONDING TO EACH OF THE AT LEAST ONE AUXILIARY CURRENT PROTECTION CIRCUIT

FIG. 49

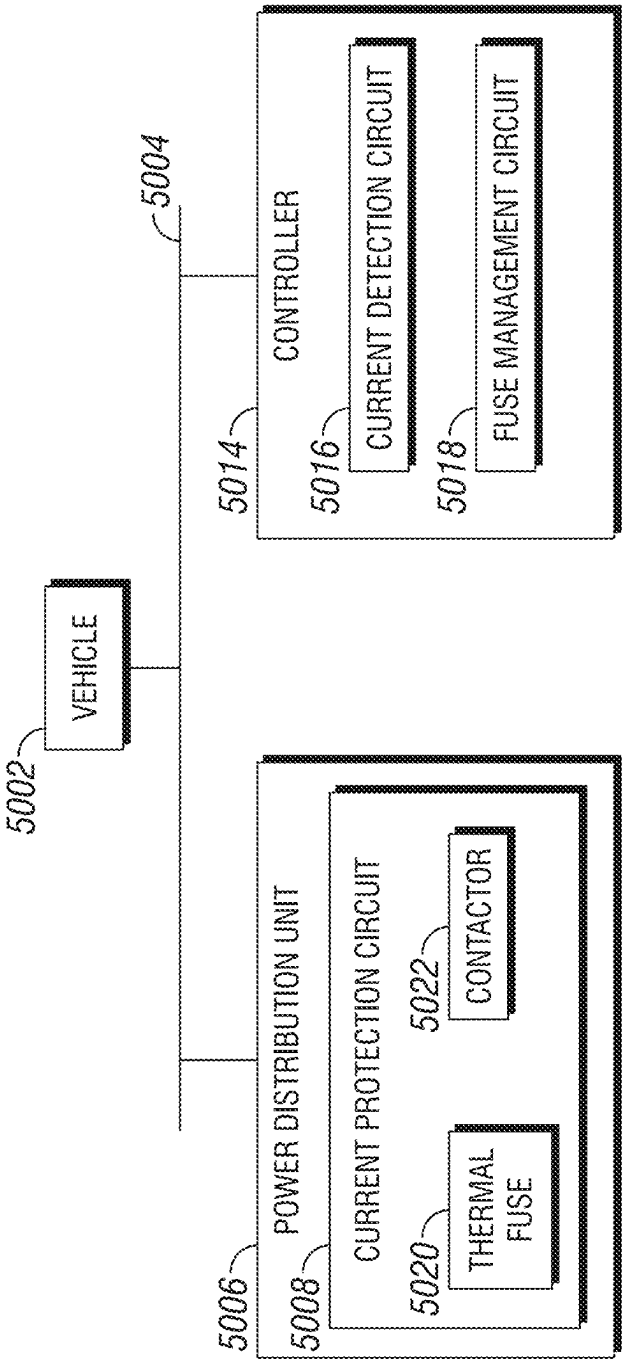
5002
VEHICLE
5004
5006
POWER DISTRIBUTION UNIT
5008
CURRENT PROTECTION CIRCUIT
5020
THERMAL FUSE
5022
CONTACTOR
5014
CONTROLLER
5016
CURRENT DETECTION CIRCUIT
5018
FUSE MANAGEMENT CIRCUIT

FIG. 50

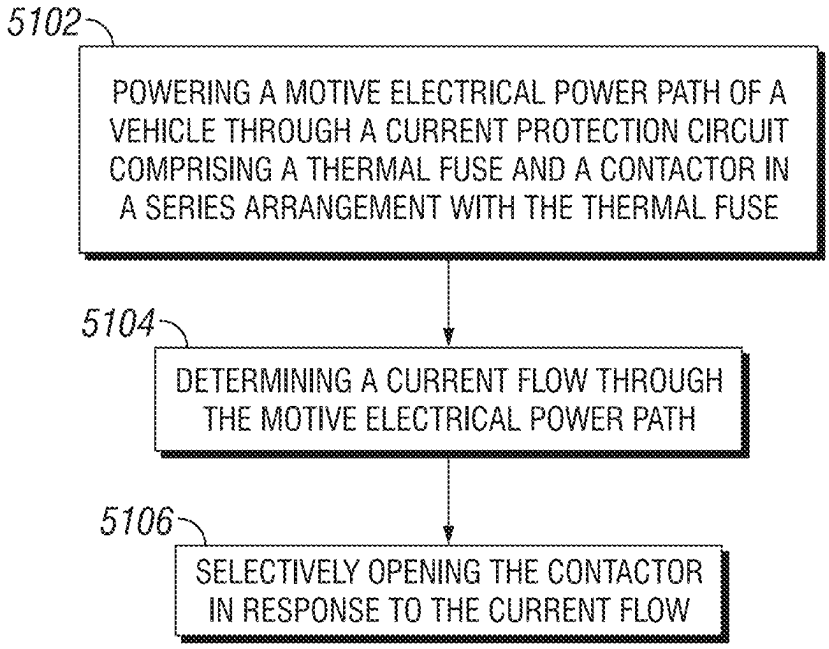
5102
POWERING A MOTIVE ELECTRICAL POWER PATH OF A VEHICLE THROUGH A CURRENT PROTECTION CIRCUIT COMPRISING A THERMAL FUSE AND A CONTACTOR IN A SERIES ARRANGEMENT WITH THE THERMAL FUSE
5104
DETERMINING A CURRENT FLOW THROUGH THE MOTIVE ELECTRICAL POWER PATH
5106
SELECTIVELY OPENING THE CONTACTOR IN RESPONSE TO THE CURRENT FLOW

FIG. 51

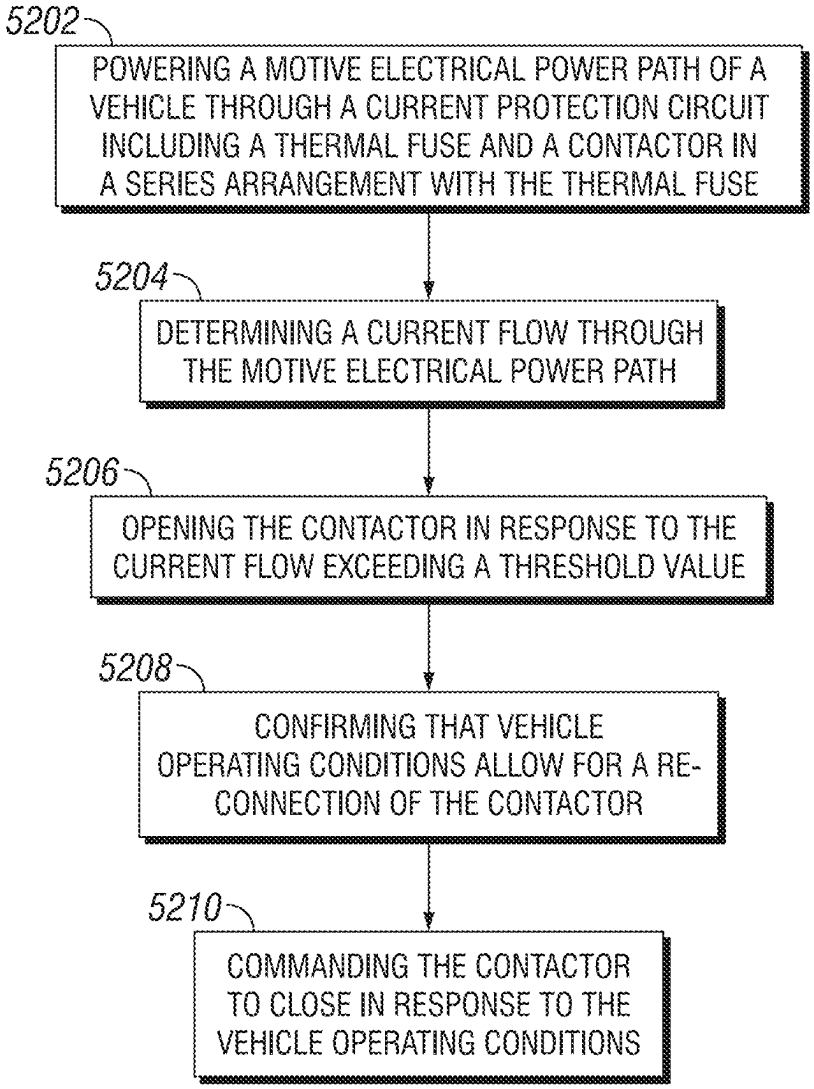
5202
POWERING A MOTIVE ELECTRICAL POWER PATH OF A VEHICLE THROUGH A CURRENT PROTECTION CIRCUIT INCLUDING A THERMAL FUSE AND A CONTACTOR IN A SERIES ARRANGEMENT WITH THE THERMAL FUSE
5204
DETERMINING A CURRENT FLOW THROUGH THE MOTIVE ELECTRICAL POWER PATH
5206
OPENING THE CONTACTOR IN RESPONSE TO THE CURRENT FLOW EXCEEDING A THRESHOLD VALUE
5208
CONFIRMING THAT VEHICLE OPERATING CONDITIONS ALLOW FOR A RE-CONNECTION OF THE CONTACTOR
5210
COMMANDING THE CONTACTOR TO CLOSE IN RESPONSE TO THE VEHICLE OPERATING CONDITIONS

FIG. 52

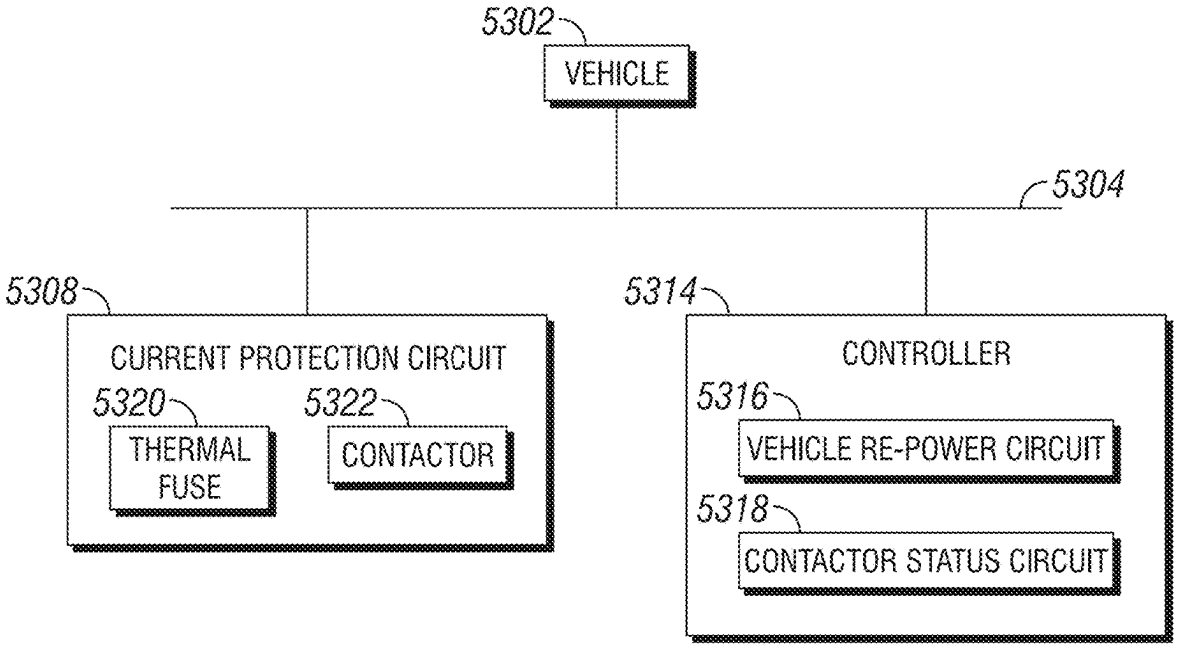
5302
VEHICLE
5304
5308
CURRENT PROTECTION CIRCUIT
5320
THERMAL FUSE
5322
CONTACTOR
5314
CONTROLLER
5316
VEHICLE RE-POWER CIRCUIT
5318
CONTACTOR STATUS CIRCUIT

FIG. 53

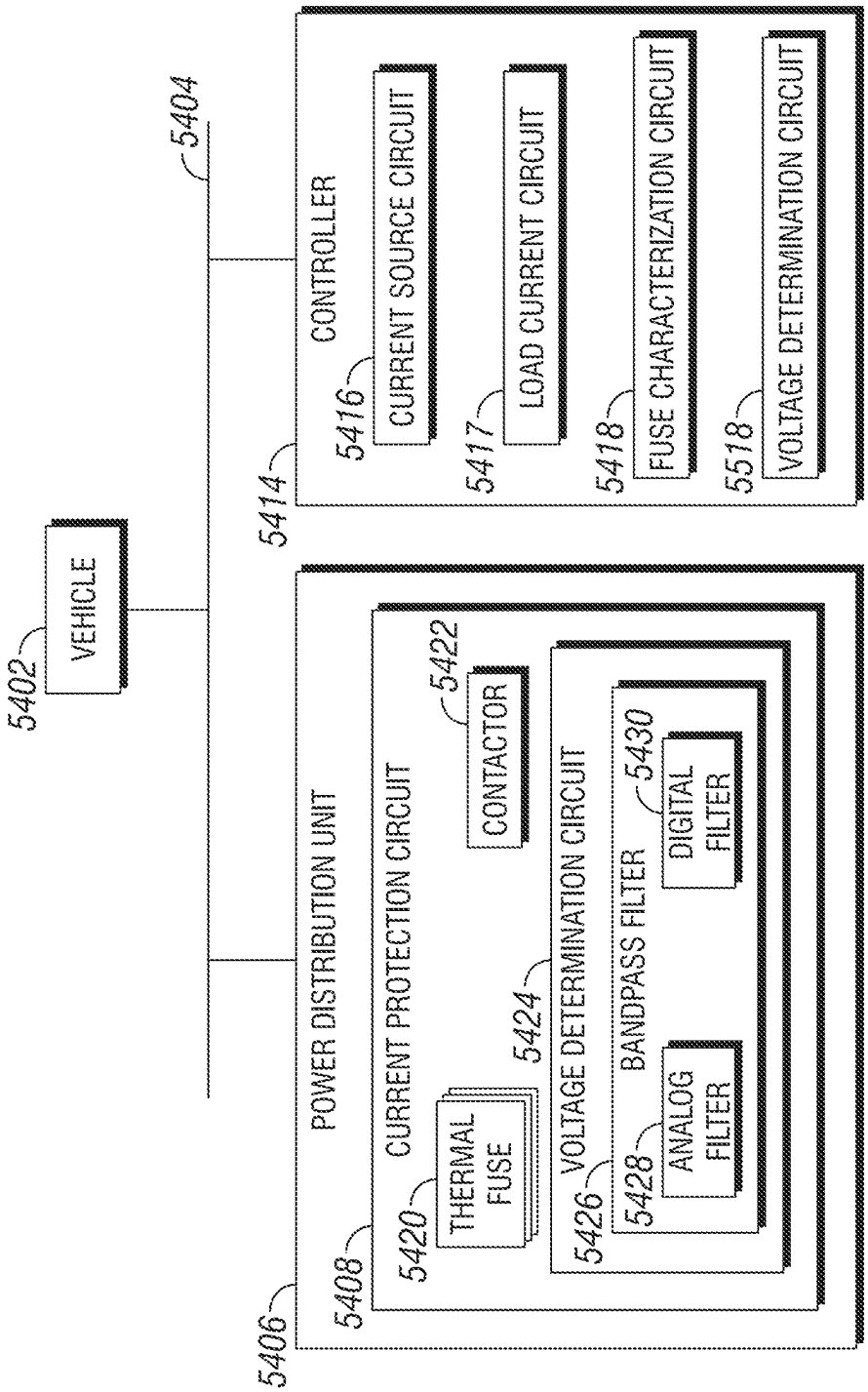
5402
VEHICLE
5404
5406
POWER DISTRIBUTION UNIT
5408
CURRENT PROTECTION CIRCUIT
5420
THERMAL FUSE
5422
CONTACTOR
5424
VOLTAGE DETERMINATION CIRCUIT
5426
BANDPASS FILTER
5428
ANALOG FILTER
5430
DIGITAL FILTER
5414
CONTROLLER
5416
CURRENT SOURCE CIRCUIT
5417
LOAD CURRENT CIRCUIT
5418
FUSE CHARACTERIZATION CIRCUIT
5518
VOLTAGE DETERMINATION CIRCUIT

FIG. 54

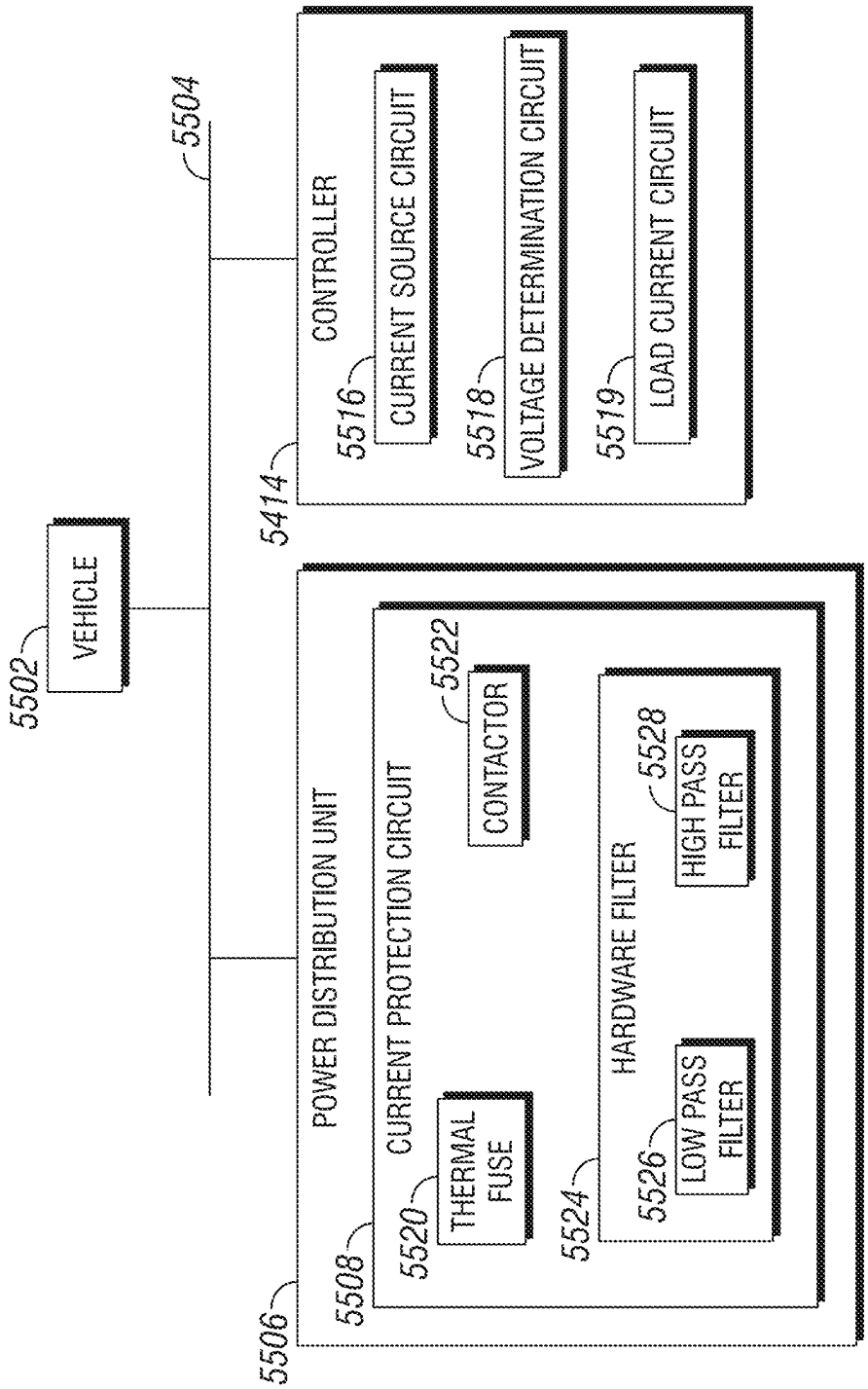
5502
VEHICLE
5504
5414
CONTROLLER
5516
CURRENT SOURCE CIRCUIT
5518
VOLTAGE DETERMINATION CIRCUIT
5519
LOAD CURRENT CIRCUIT
5506
POWER DISTRIBUTION UNIT
5508
CURRENT PROTECTION CIRCUIT
5520
THERMAL FUSE
5522
CONTACTOR
5524
HARDWARE FILTER
5526
LOW PASS FILTER
5528
HIGH PASS FILTER

FIG. 55

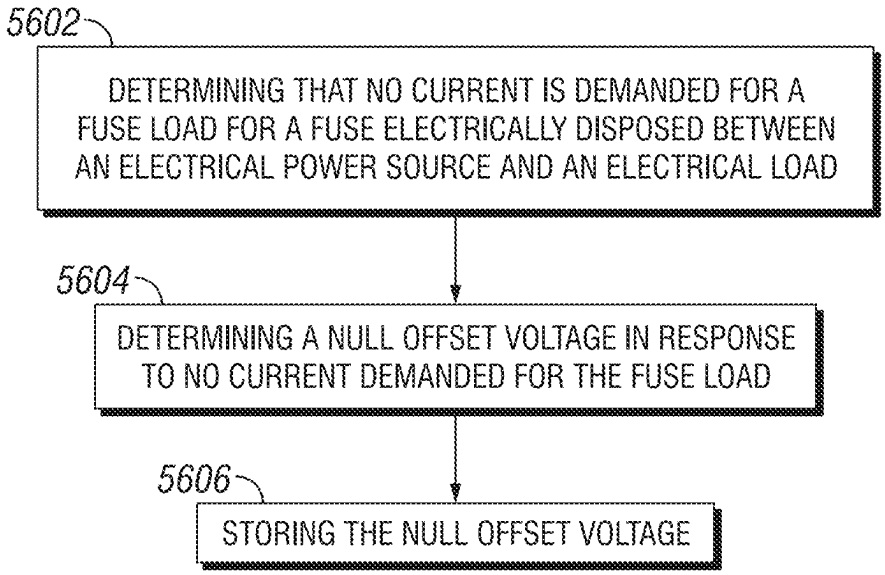
5602
DETERMINING THAT NO CURRENT IS DEMANDED FOR A FUSE LOAD FOR A FUSE ELECTRICALLY DISPOSED BETWEEN AN ELECTRICAL POWER SOURCE AND AN ELECTRICAL LOAD
5604
DETERMINING A NULL OFFSET VOLTAGE IN RESPONSE TO NO CURRENT DEMANDED FOR THE FUSE LOAD
5606
STORING THE NULL OFFSET VOLTAGE

FIG. 56

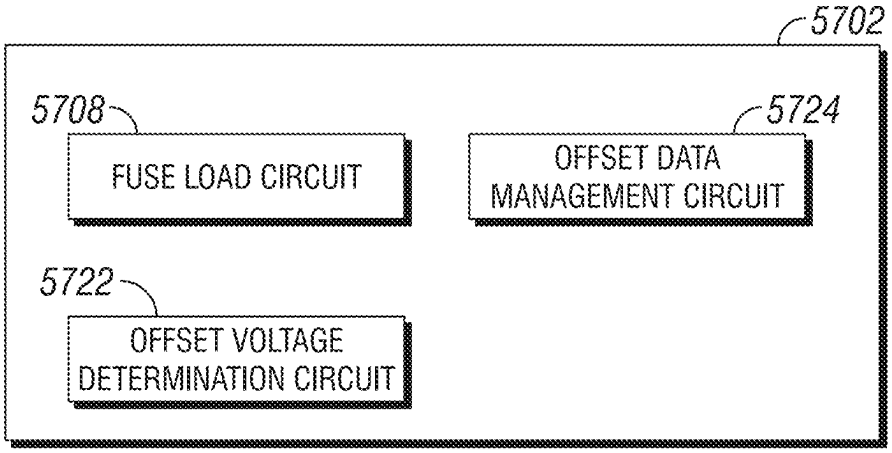
5702
5708
FUSE LOAD CIRCUIT
5724
OFFSET DATA MANAGEMENT CIRCUIT
5722
OFFSET VOLTAGE DETERMINATION CIRCUIT

FIG. 57

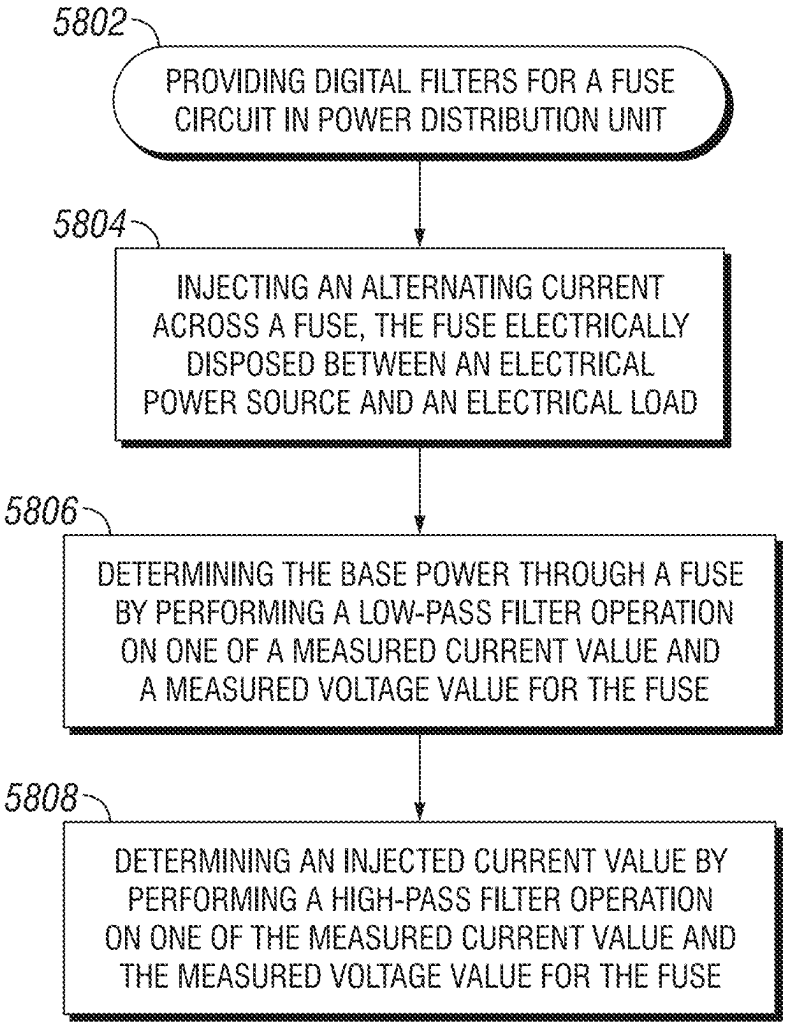
5802
PROVIDING DIGITAL FILTERS FOR A FUSE CIRCUIT IN POWER DISTRIBUTION UNIT
5804
INJECTING AN ALTERNATING CURRENT ACROSS A FUSE, THE FUSE ELECTRICALLY DISPOSED BETWEEN AN ELECTRICAL POWER SOURCE AND AN ELECTRICAL LOAD
5806
DETERMINING THE BASE POWER THROUGH A FUSE BY PERFORMING A LOW-PASS FILTER OPERATION ON ONE OF A MEASURED CURRENT VALUE AND A MEASURED VOLTAGE VALUE FOR THE FUSE
5808
DETERMINING AN INJECTED CURRENT VALUE BY PERFORMING A HIGH-PASS FILTER OPERATION ON ONE OF THE MEASURED CURRENT VALUE AND THE MEASURED VOLTAGE VALUE FOR THE FUSE

FIG. 58

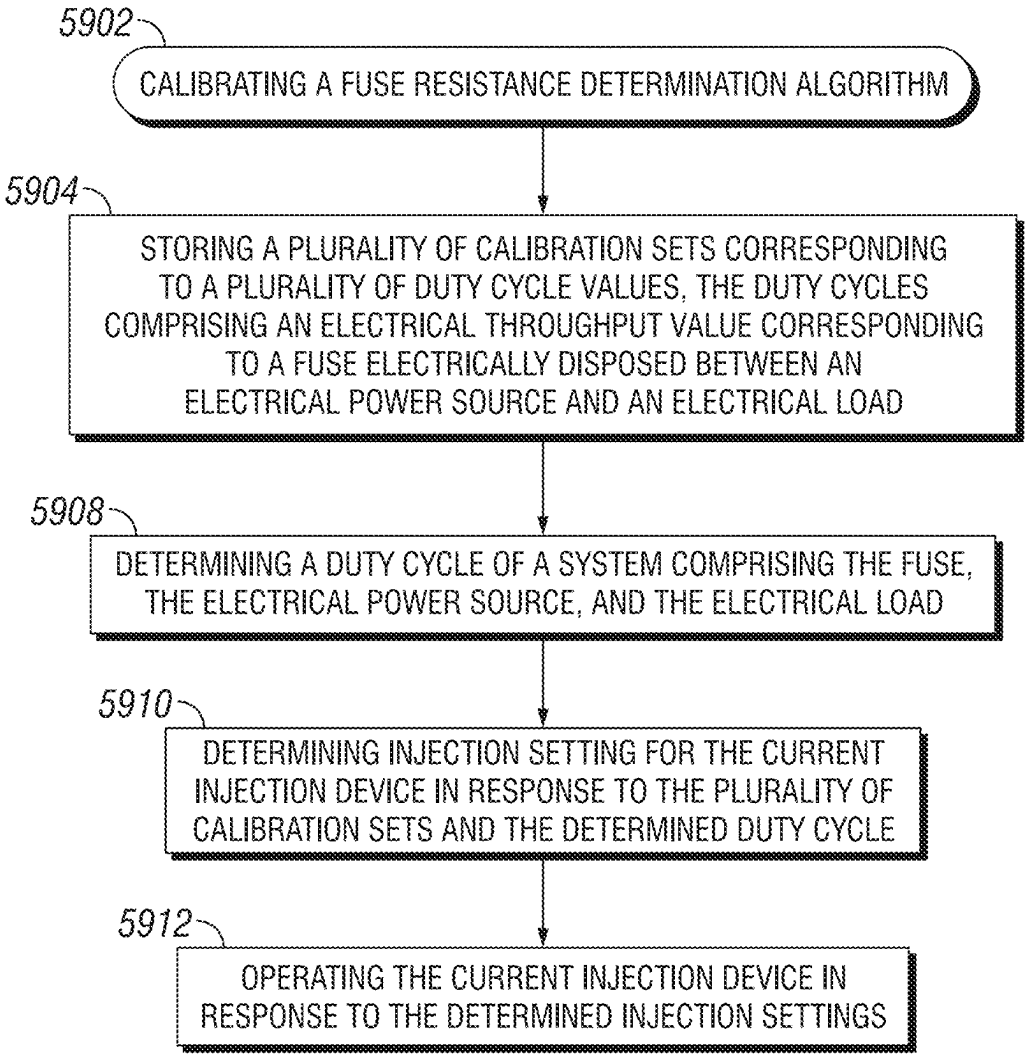
5902
CALIBRATING A FUSE RESISTANCE DETERMINATION ALGORITHM
5904
STORING A PLURALITY OF CALIBRATION SETS CORRESPONDING TO A PLURALITY OF DUTY CYCLE VALUES, THE DUTY CYCLES COMPRISING AN ELECTRICAL THROUGHPUT VALUE CORRESPONDING TO A FUSE ELECTRICALLY DISPOSED BETWEEN AN ELECTRICAL POWER SOURCE AND AN ELECTRICAL LOAD
5908
DETERMINING A DUTY CYCLE OF A SYSTEM COMPRISING THE FUSE, THE ELECTRICAL POWER SOURCE, AND THE ELECTRICAL LOAD
5910
DETERMINING INJECTION SETTING FOR THE CURRENT INJECTION DEVICE IN RESPONSE TO THE PLURALITY OF CALIBRATION SETS AND THE DETERMINED DUTY CYCLE
5912
OPERATING THE CURRENT INJECTION DEVICE IN RESPONSE TO THE DETERMINED INJECTION SETTINGS

FIG. 59

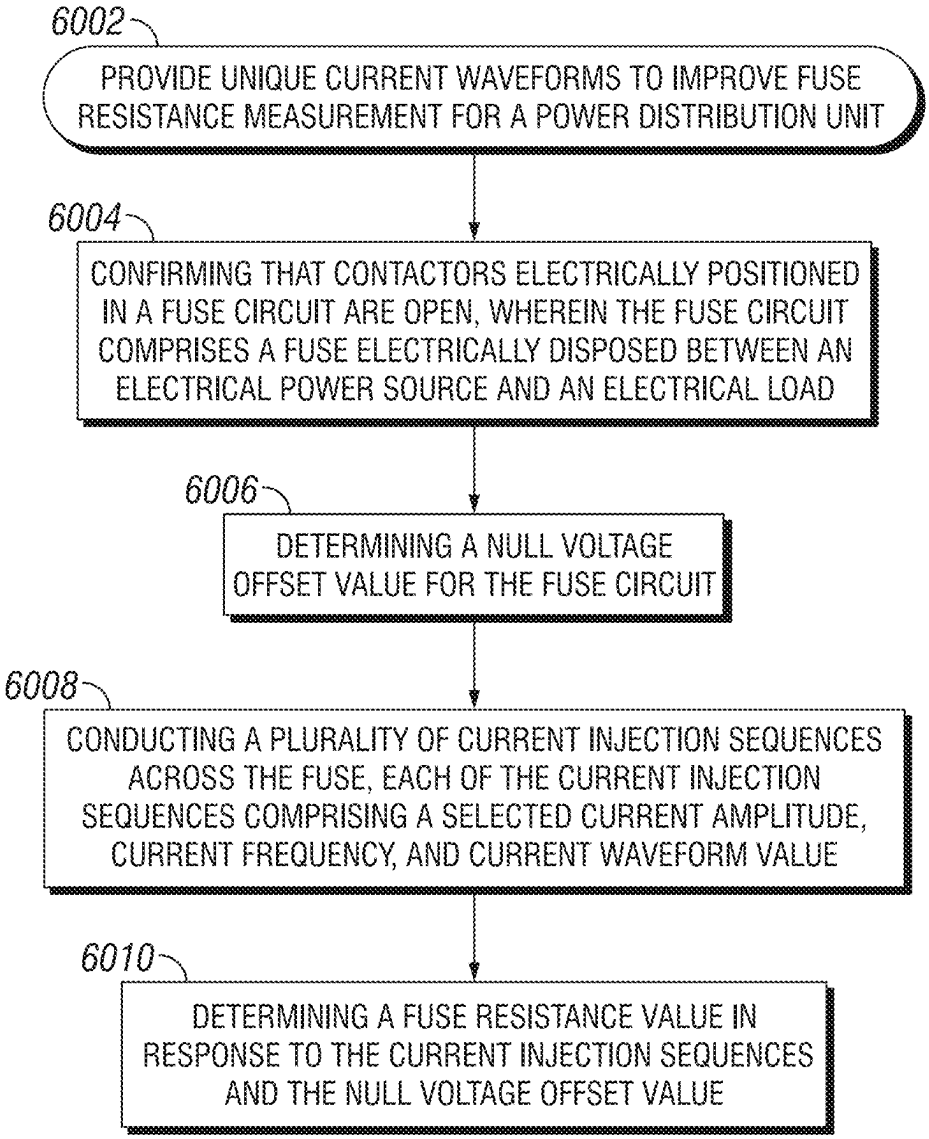
6002
PROVIDE UNIQUE CURRENT WAVEFORMS TO IMPROVE FUSE RESISTANCE MEASUREMENT FOR A POWER DISTRIBUTION UNIT
6004
CONFIRMING THAT CONTACTORS ELECTRICALLY POSITIONED IN A FUSE CIRCUIT ARE OPEN, WHEREIN THE FUSE CIRCUIT COMPRISES A FUSE ELECTRICALLY DISPOSED BETWEEN AN ELECTRICAL POWER SOURCE AND AN ELECTRICAL LOAD
6006
DETERMINING A NULL VOLTAGE OFFSET VALUE FOR THE FUSE CIRCUIT
6008
CONDUCTING A PLURALITY OF CURRENT INJECTION SEQUENCES ACROSS THE FUSE, EACH OF THE CURRENT INJECTION SEQUENCES COMPRISING A SELECTED CURRENT AMPLITUDE, CURRENT FREQUENCY, AND CURRENT WAVEFORM VALUE
6010
DETERMINING A FUSE RESISTANCE VALUE IN RESPONSE TO THE CURRENT INJECTION SEQUENCES AND THE NULL VOLTAGE OFFSET VALUE

FIG. 60

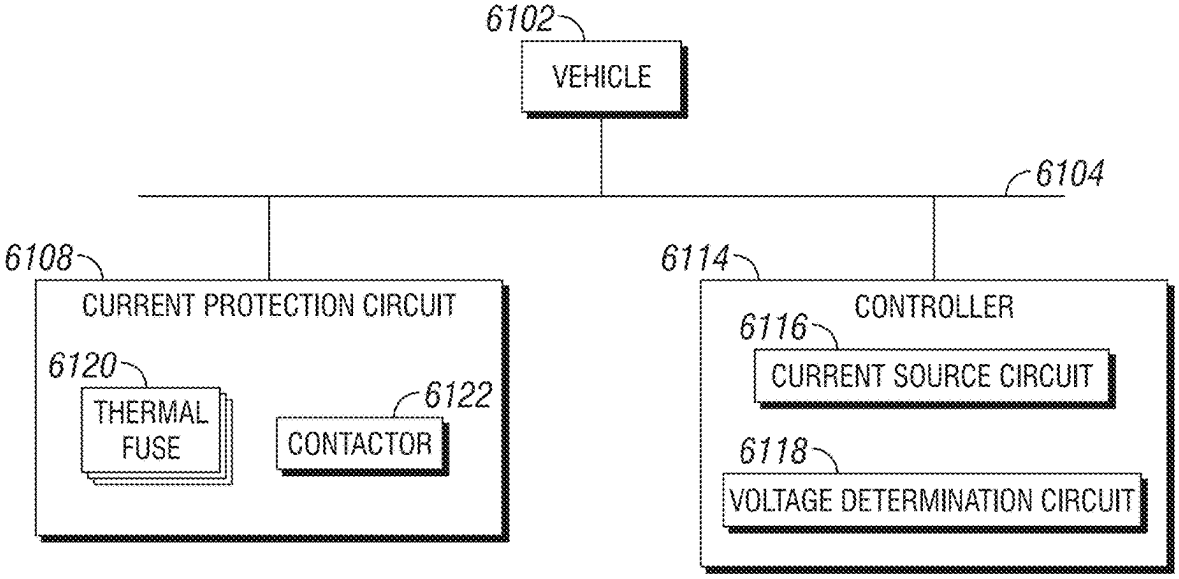
6102
VEHICLE
6104
6108
CURRENT PROTECTION CIRCUIT
6120
THERMAL FUSE
6122
CONTACTOR
6114
CONTROLLER
6116
CURRENT SOURCE CIRCUIT
6118
VOLTAGE DETERMINATION CIRCUIT

FIG. 61

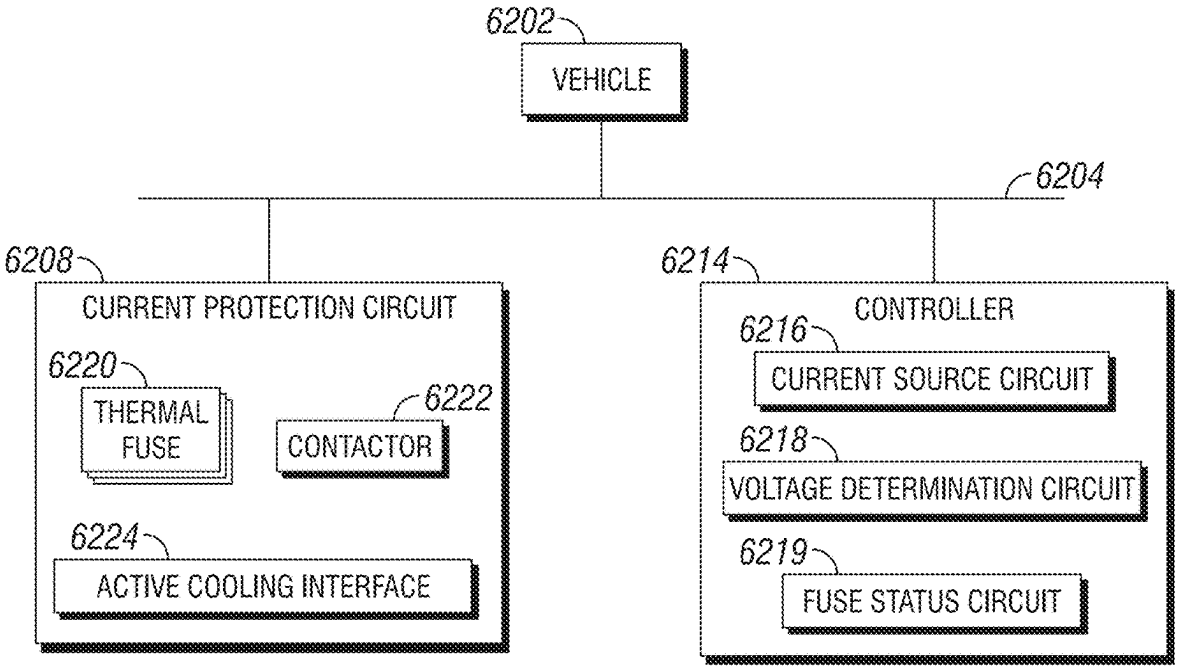
6202
VEHICLE
6204
6208
CURRENT PROTECTION CIRCUIT
6220
THERMAL FUSE
6222
CONTACTOR
6224
ACTIVE COOLING INTERFACE
6214
CONTROLLER
6216
CURRENT SOURCE CIRCUIT
6218
VOLTAGE DETERMINATION CIRCUIT
6219
FUSE STATUS CIRCUIT

FIG. 62

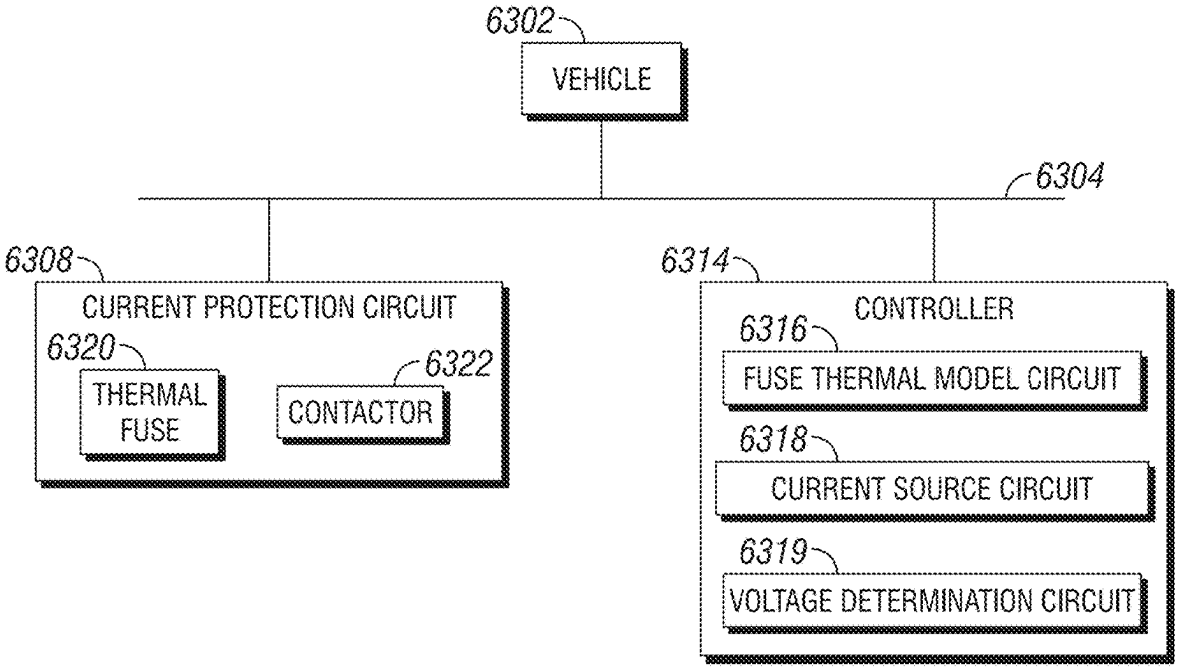
6302
VEHICLE
6304
6308
CURRENT PROTECTION CIRCUIT
6320
THERMAL FUSE
6322
CONTACTOR
6314
CONTROLLER
6316
FUSE THERMAL MODEL CIRCUIT
6318
CURRENT SOURCE CIRCUIT
6319
VOLTAGE DETERMINATION CIRCUIT

FIG. 63

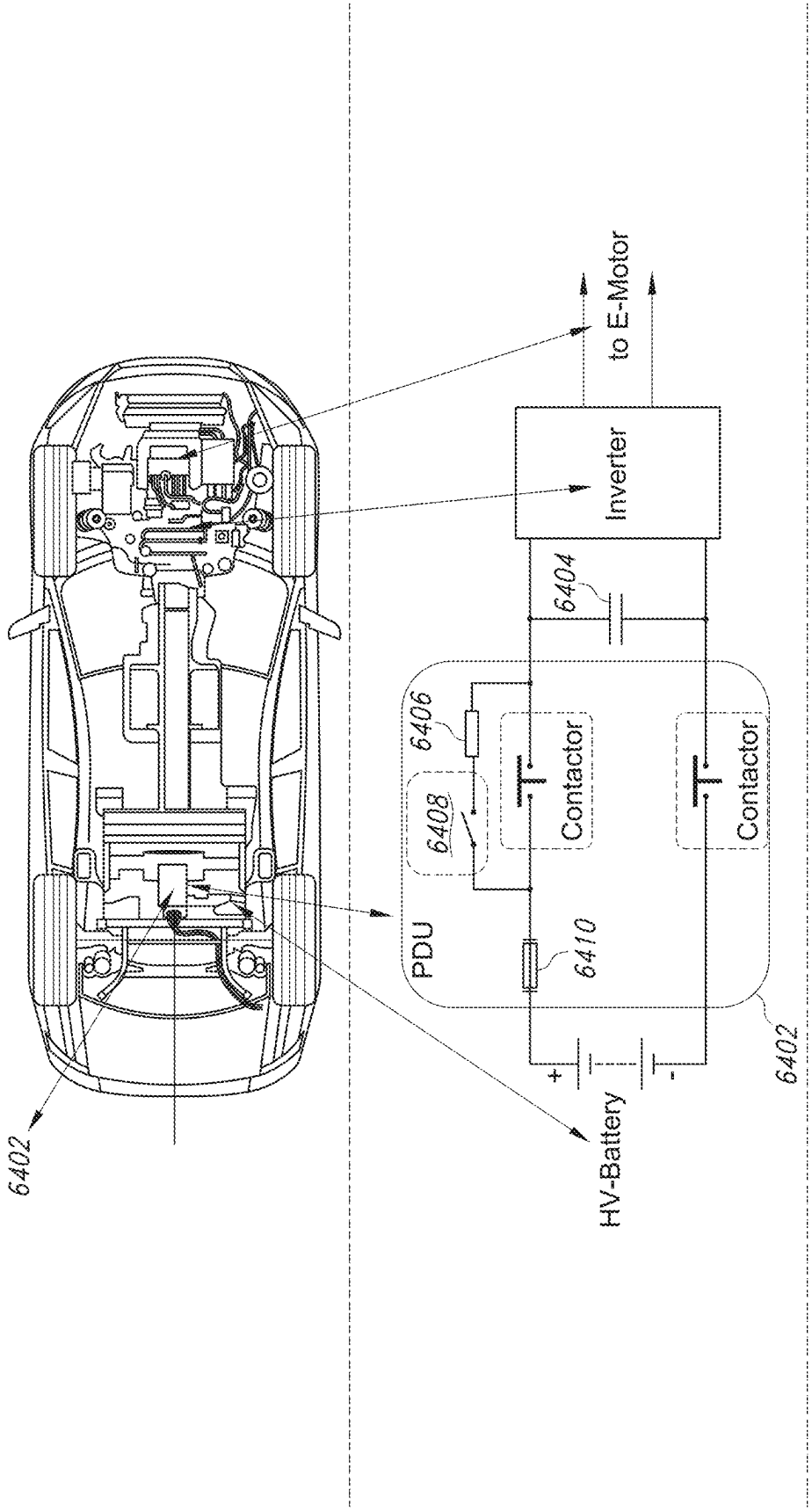

FIG. 64
(Prior Art)

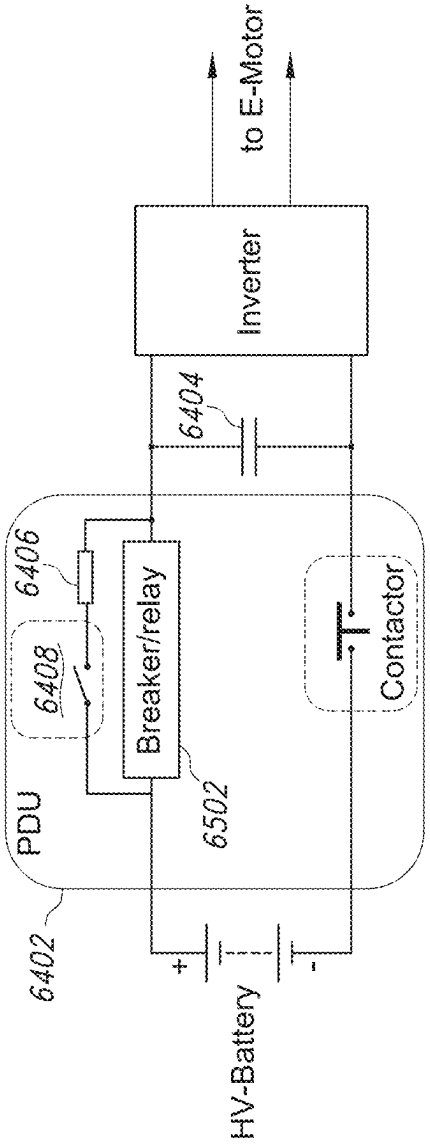
6402
PDU
6408
6406
Breaker/relay
6502
6404
Inverter
Contactor
to E-Motor
HV-Battery
+
-

FIG. 65

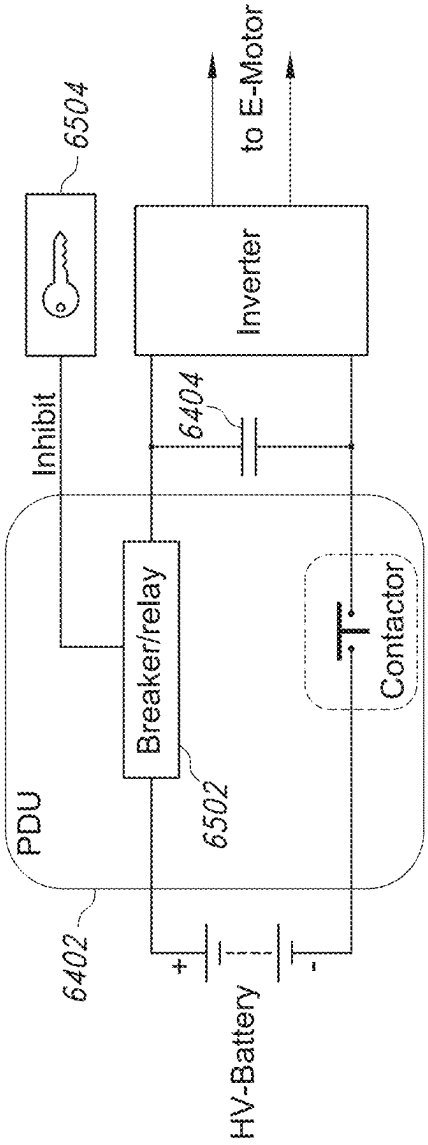
6402
PDU
Inhibit
6504
Breaker/relay
6502
6404
Inverter
Contactor
to E-Motor
HV-Battery
+
-

FIG. 66

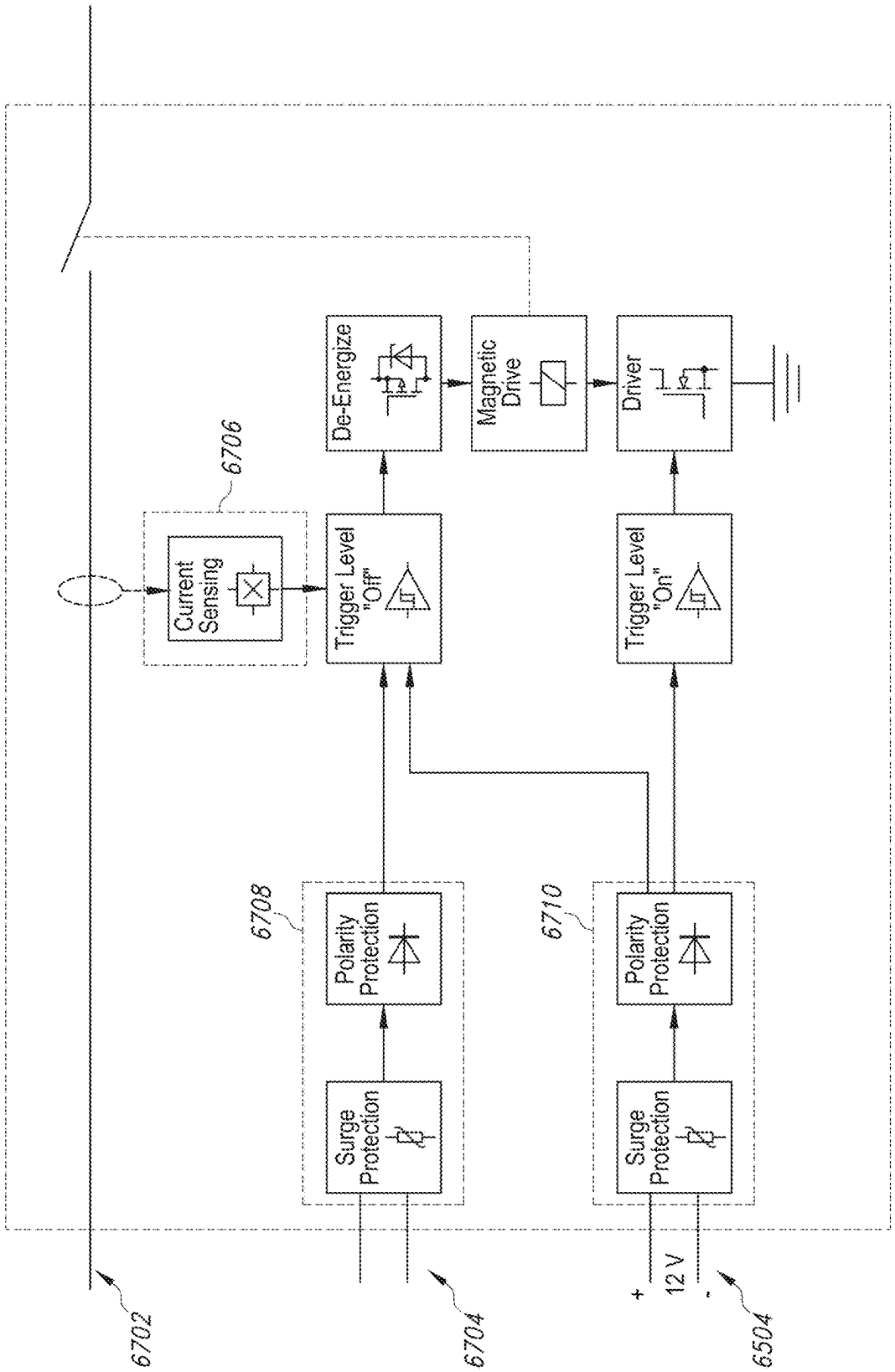
6702
6704
6504
+
12 V
-
6708
Surge Protection
Polarity Protection
6710
Surge Protection
Polarity Protection
6706
Current Sensing
Trigger Level "Off"
Trigger Level "On"
De-Energize
Magnetic Drive
Driver

FIG. 67

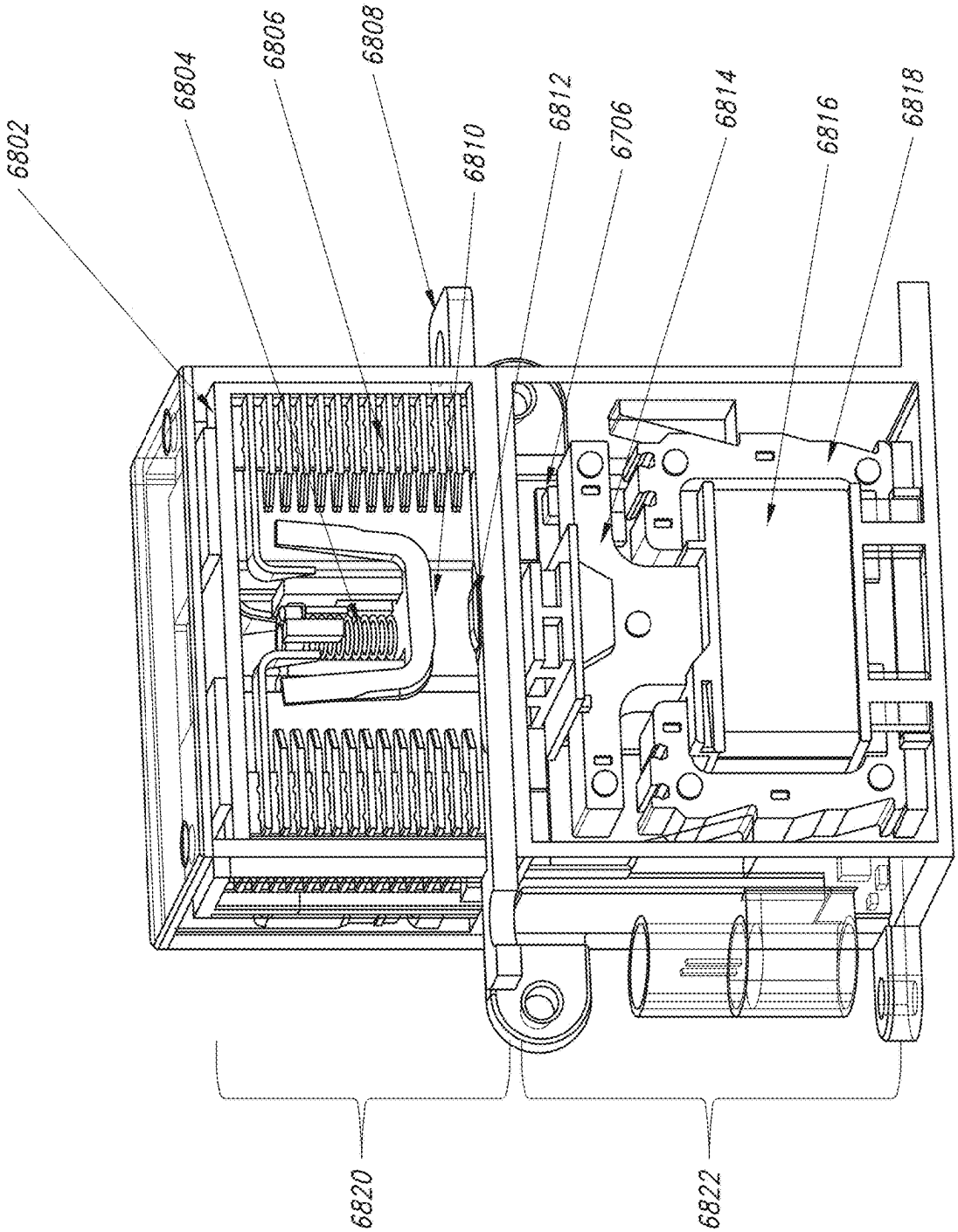

FIG. 68

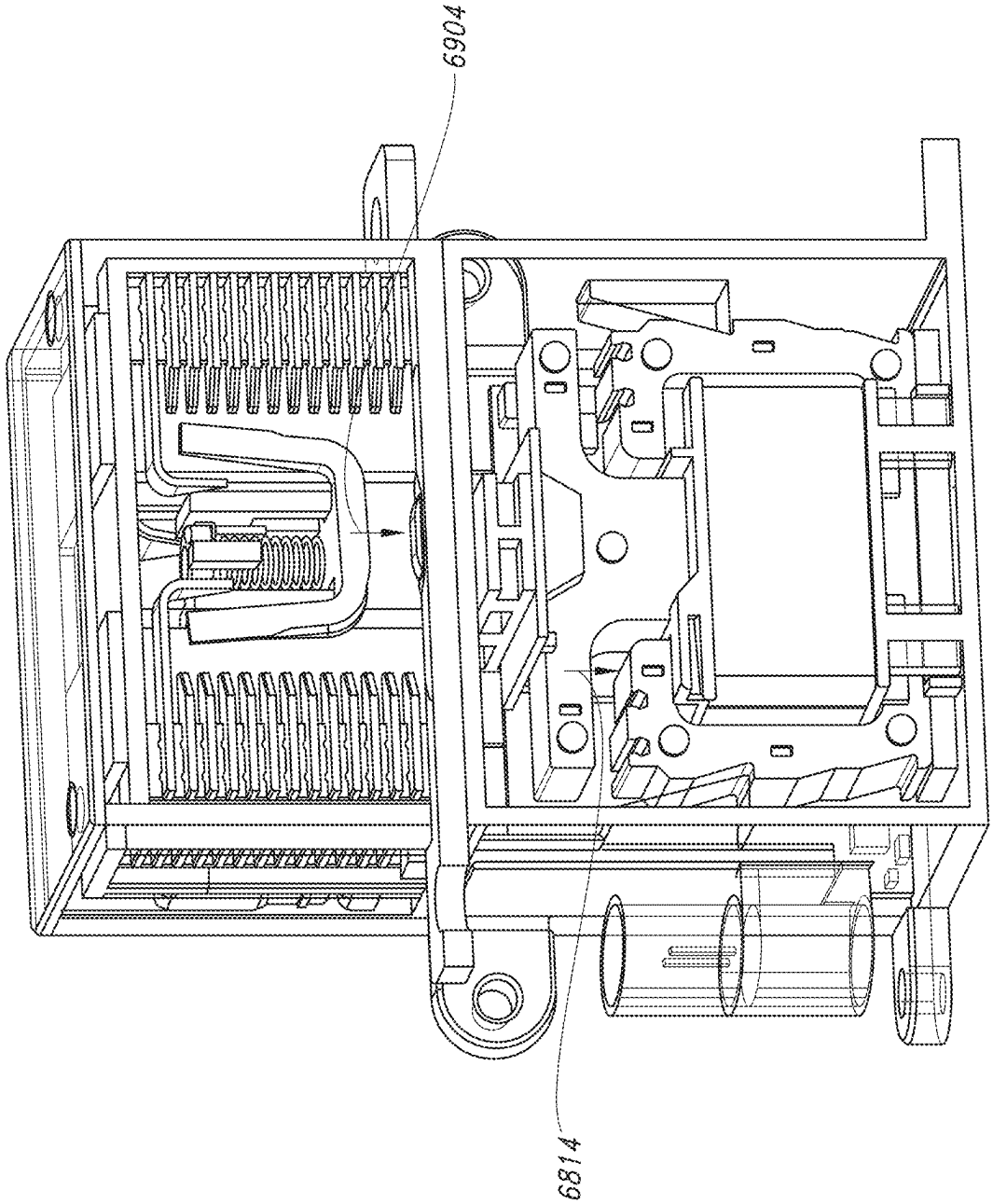

FIG. 69

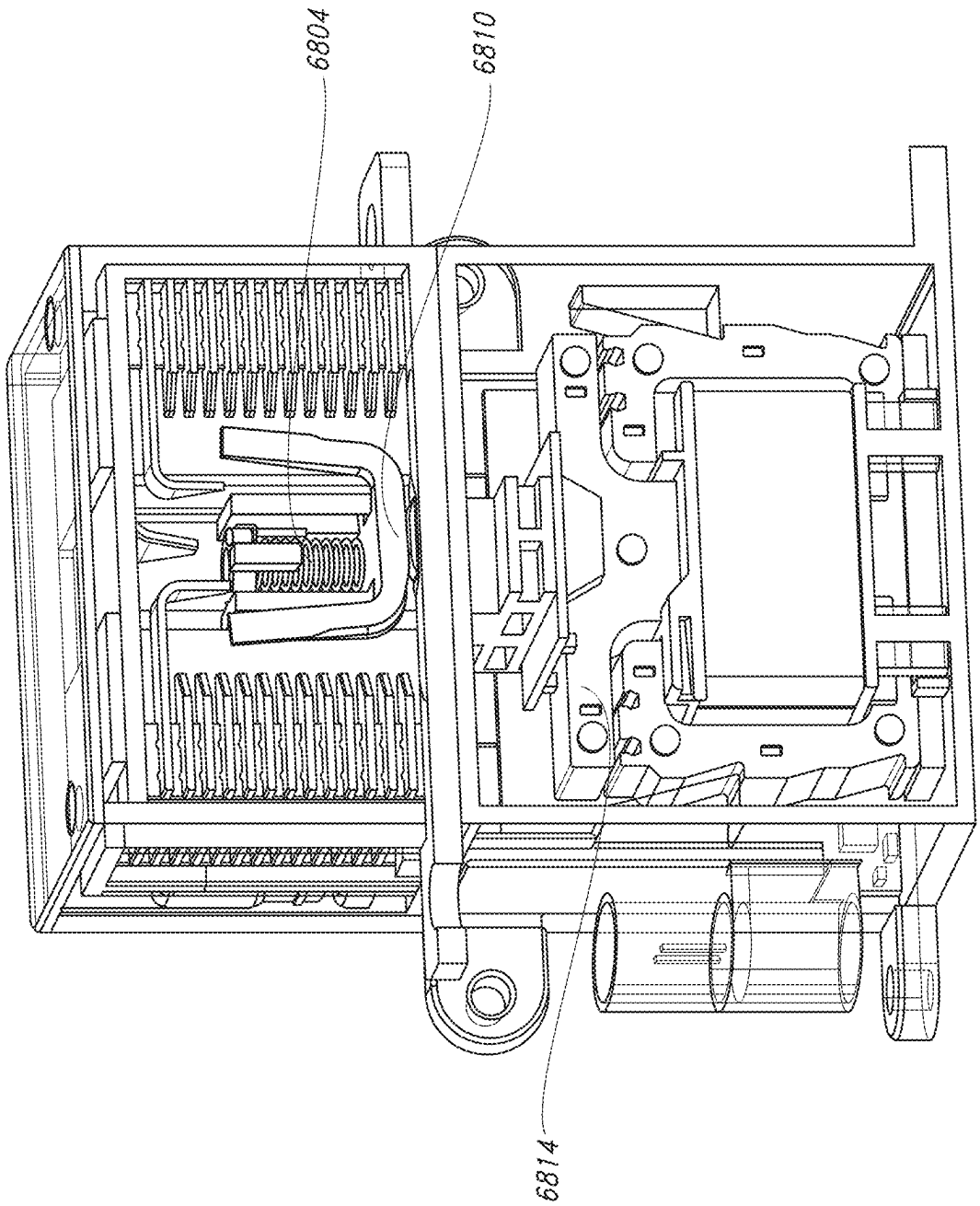

FIG. 69A

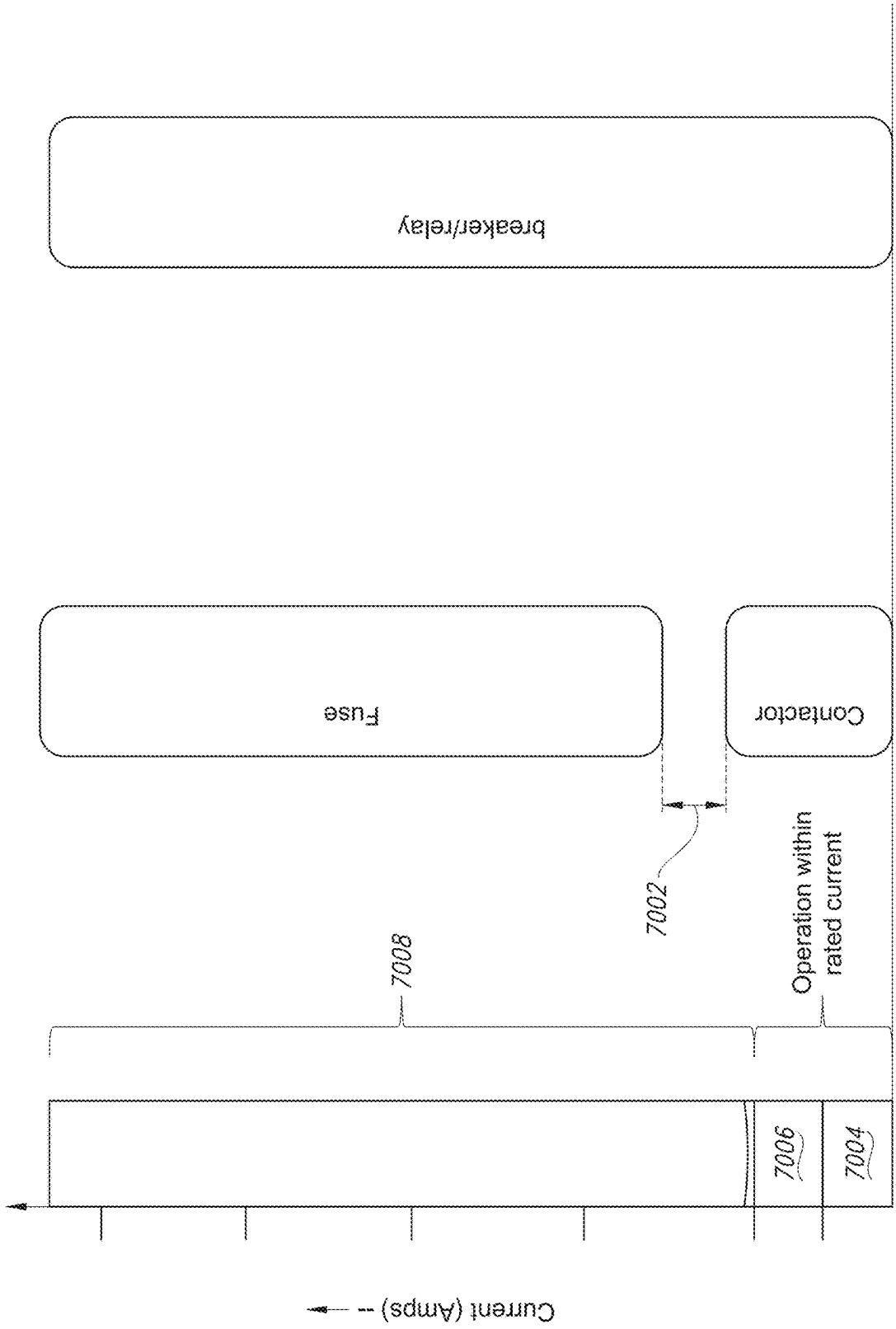
Current (Amps)
7008
7006
7004
7002
Operation within rated current
Fuse
Contactor
breaker/relay

FIG. 70

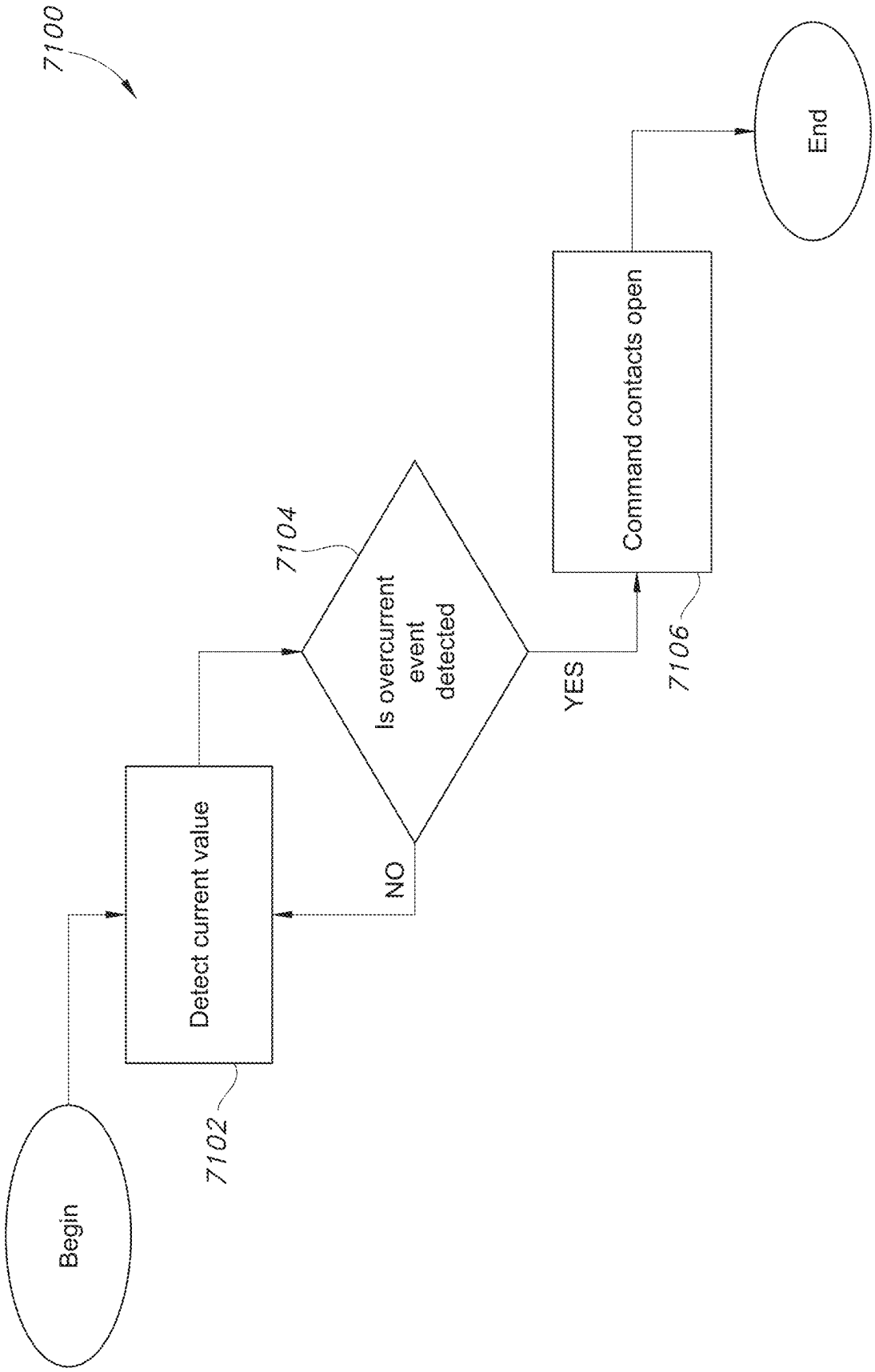
7100
Begin
7102
Detect current value
7104
Is overcurrent event detected
NO
YES
7106
Command contacts open
End

FIG. 71

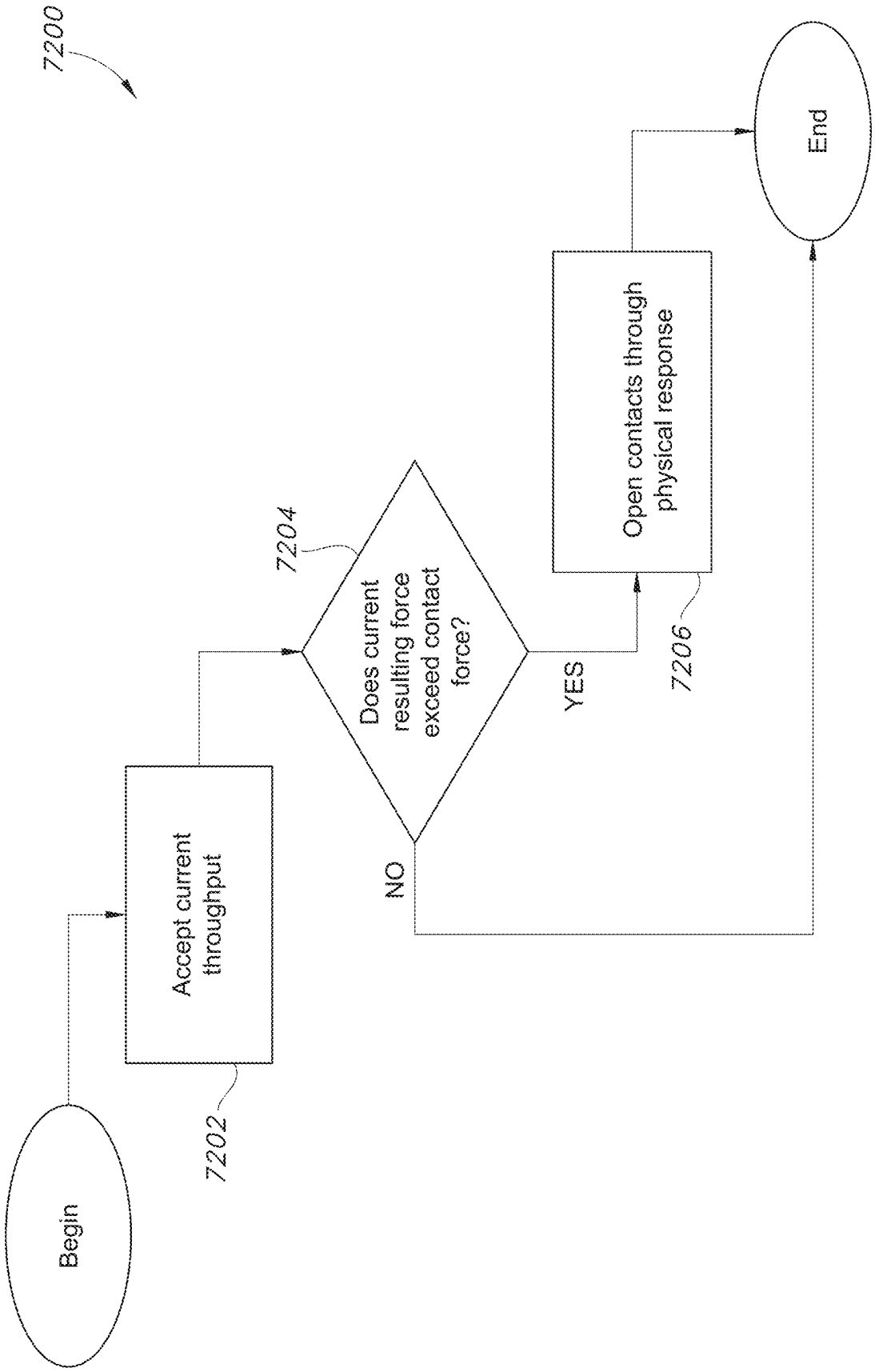
7200
Begin
7202
Accept current throughput
7204
Does current resulting force exceed contact force?
NO
YES
7206
Open contacts through physical response
End

FIG. 72

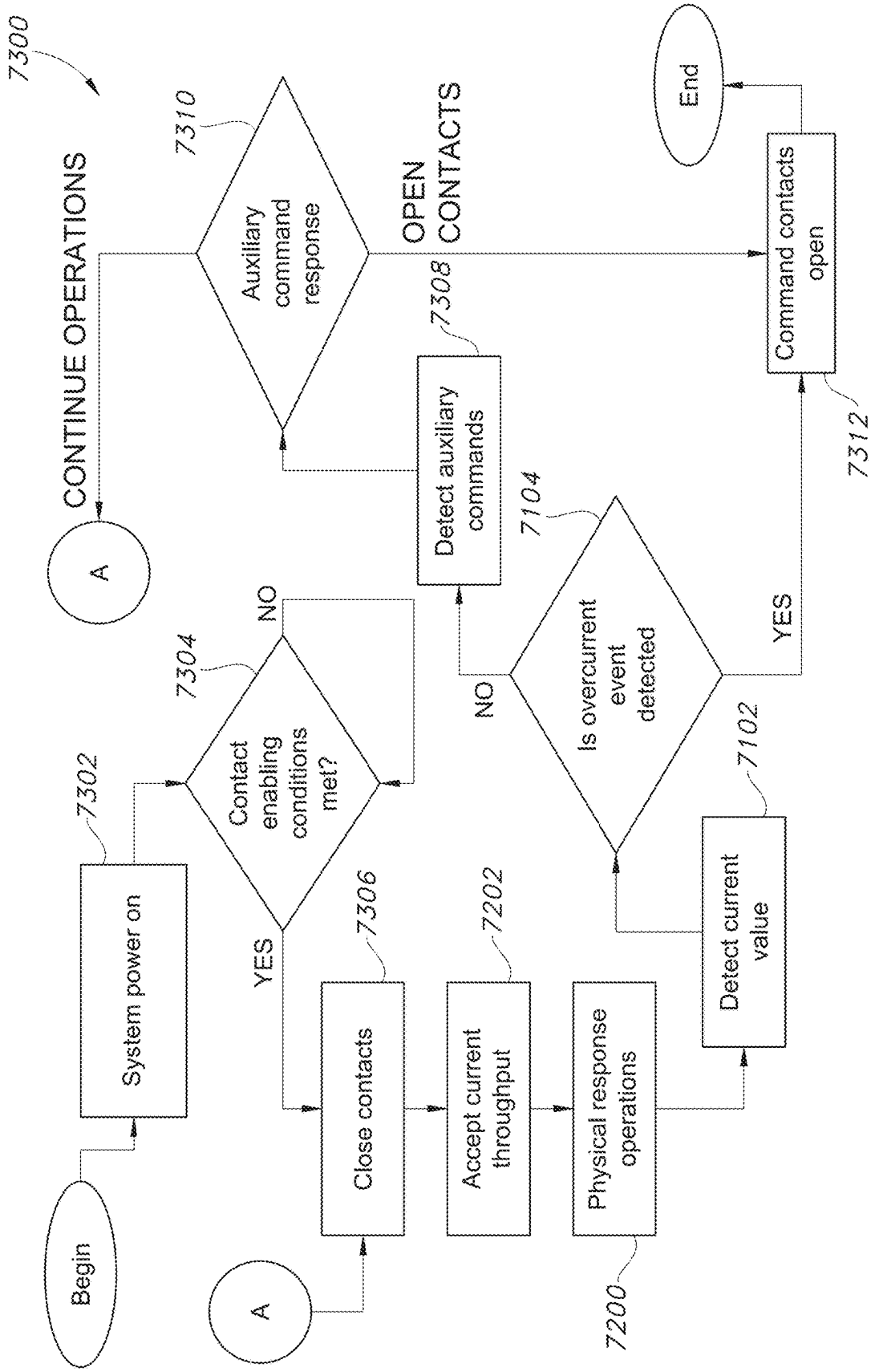
7300
Begin
System power on
7302
Contact enabling conditions met?
7304
NO
YES
A
Close contacts
7306
Accept current throughput
7202
Physical response operations
7200
Detect current value
7102
Is overcurrent event detected
7104
NO
YES
Detect auxiliary commands
7308
Auxiliary command response
7310
CONTINUE OPERATIONS
A
OPEN CONTACTS
Command contacts open
7312
End

FIG. 73

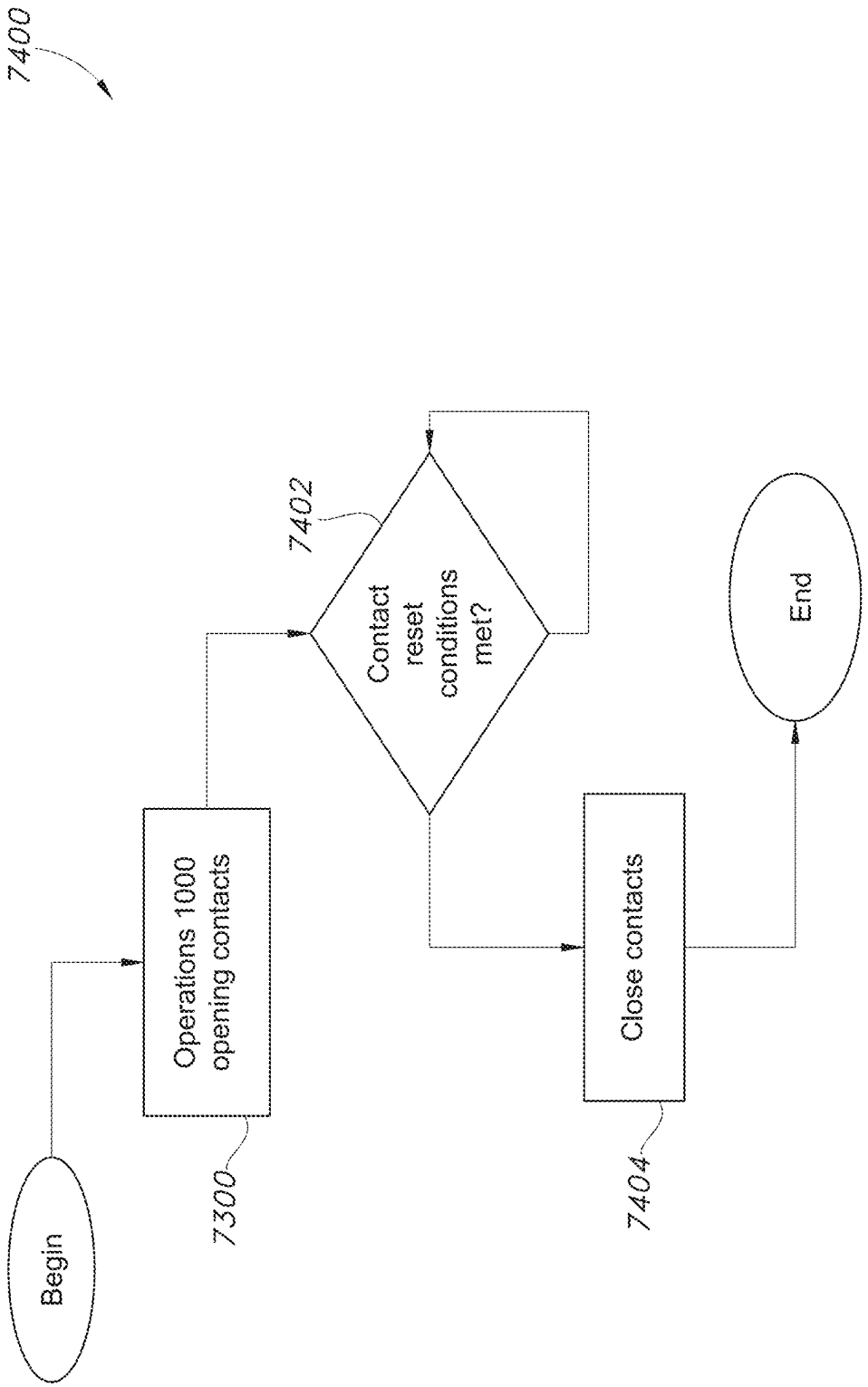
7400
Begin
Operations 1000 opening contacts
7300
7402
Contact reset conditions met?
Close contacts
7404
End

FIG. 74

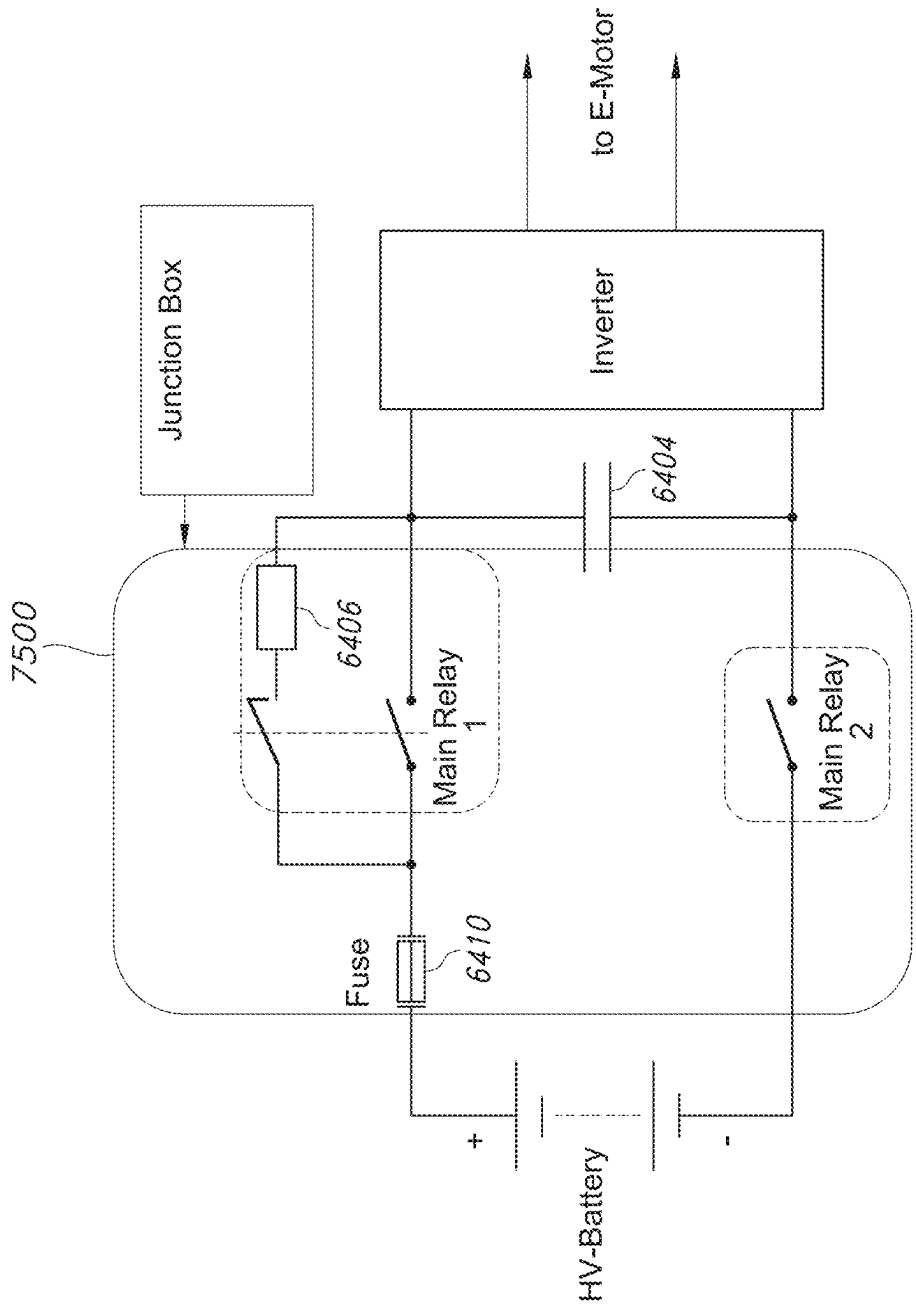

FIG. 75
(Prior Art)

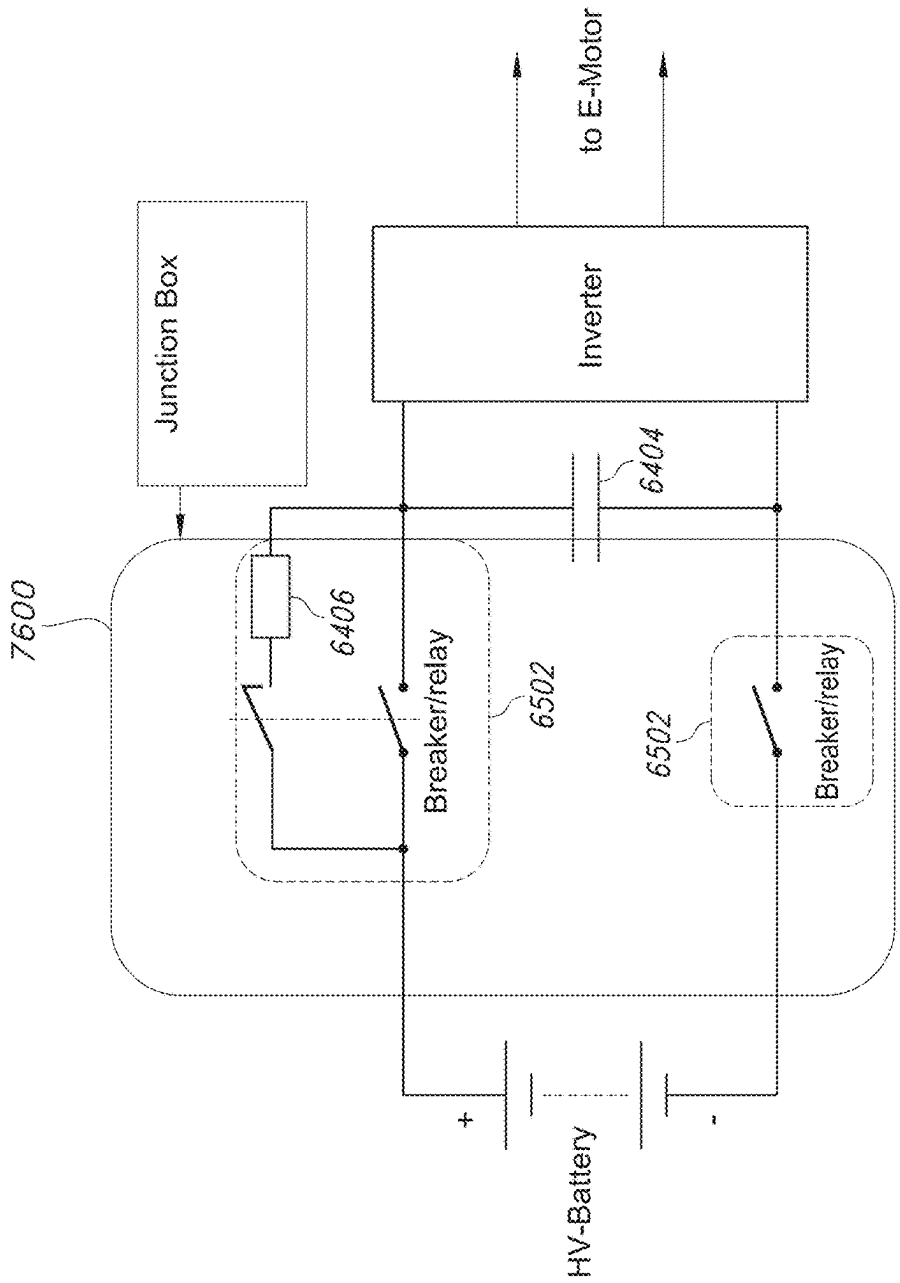
7600
Junction Box
6406
Breaker/relay
6502
Inverter
6404
to E-Motor
6502
Breaker/relay
+
HV-Battery
-

FIG. 76

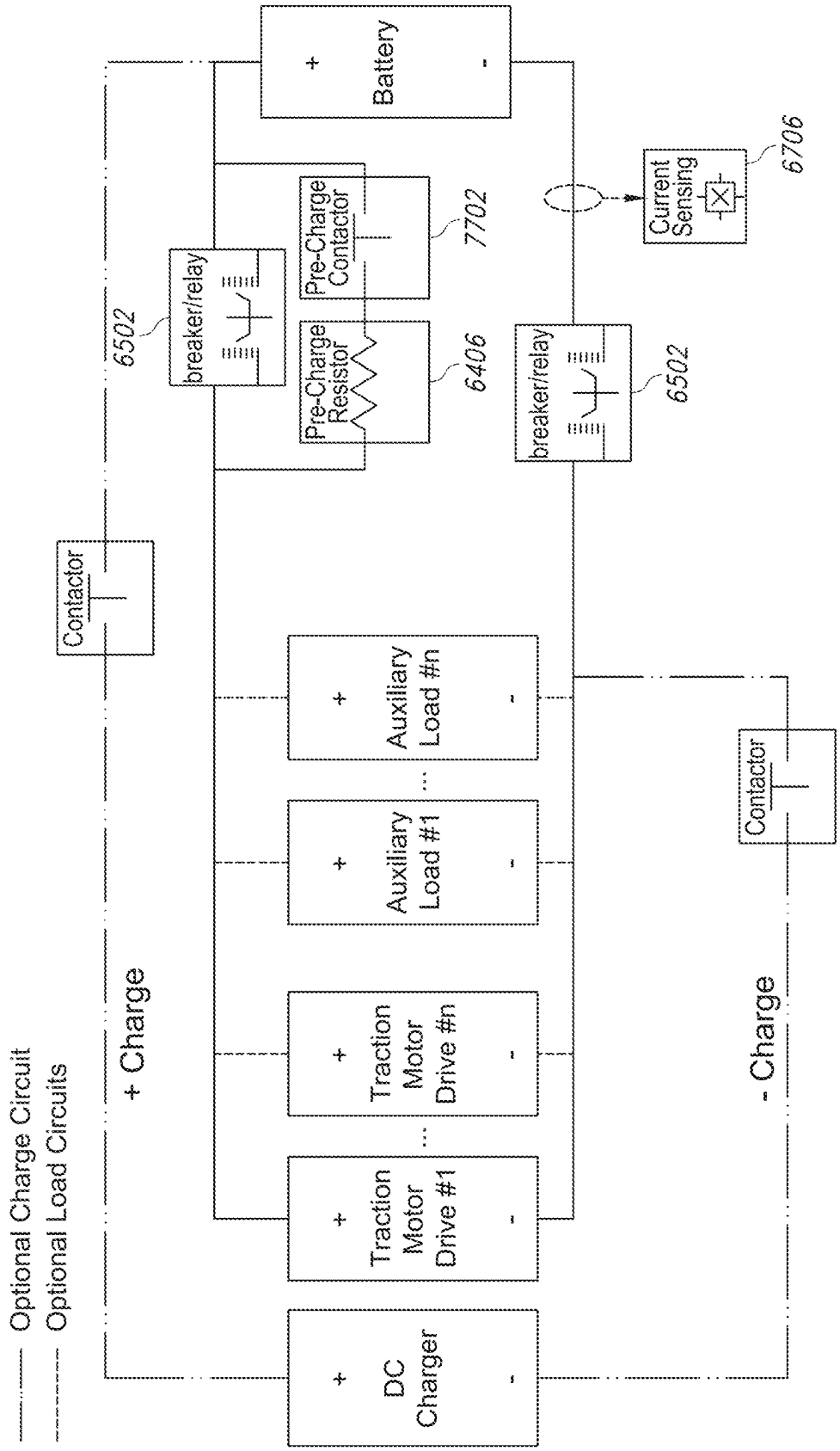
Optional Charge Circuit
Optional Load Circuits
+ Charge
- Charge
Battery
+
-
Contactor
breaker/relay
6502
Pre-Charge Contactor
7702
Pre-Charge Resistor
6406
Current Sensing
6706
DC Charger
Traction Motor Drive #1
Traction Motor Drive #n
Auxiliary Load #1
Auxiliary Load #n

FIG. 77

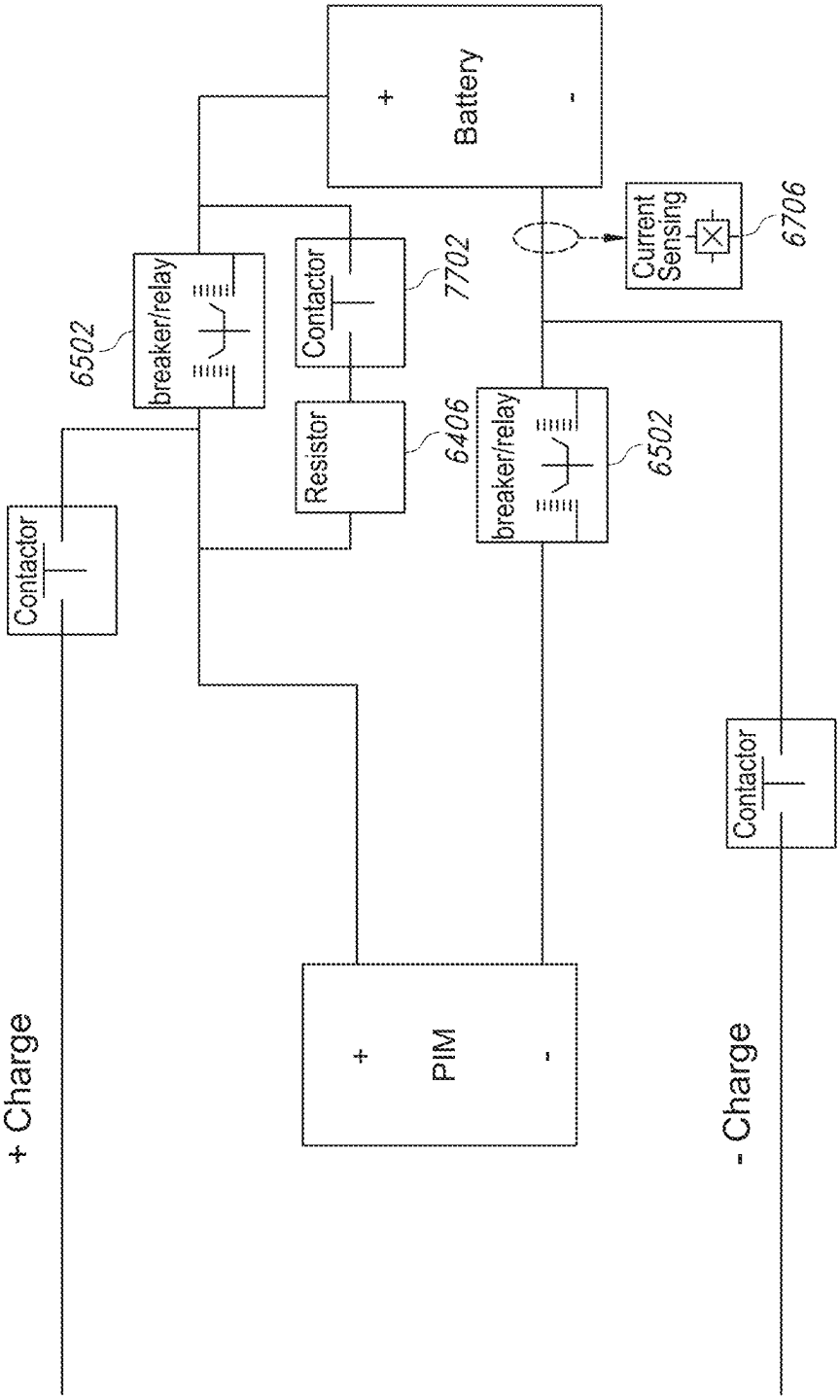
+ Charge
Contactor
6502
breaker/relay
Contactor
7702
Resistor
6406
+
Battery
-
Current Sensing
6706
breaker/relay
6502
+
PIM
-
Contactor
- Charge

FIG. 78

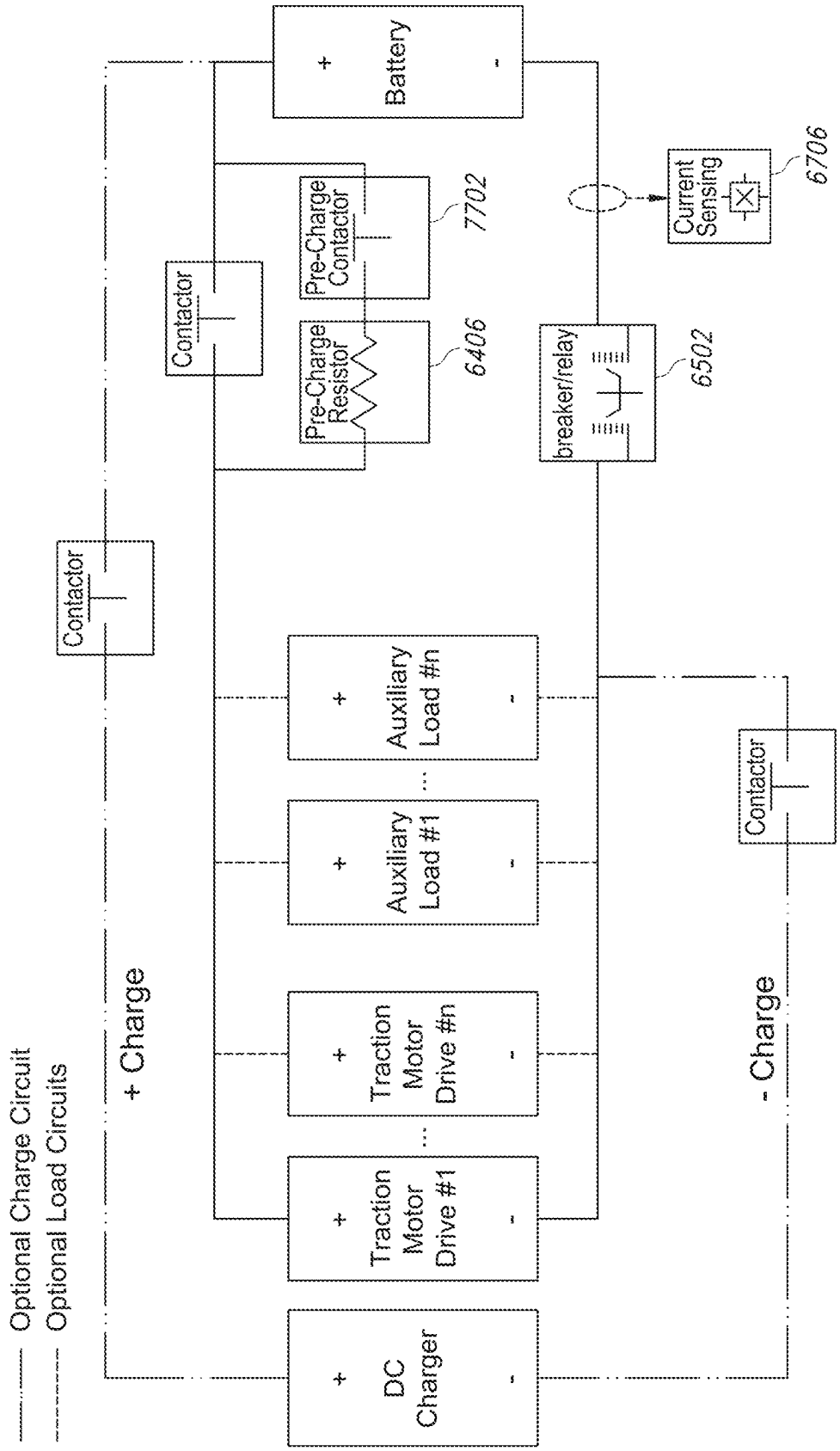
Optional Charge Circuit
Optional Load Circuits
+ Charge
- Charge
Contactor
Contactor
Contactor
Battery
Pre-Charge Contactor
Pre-Charge Resistor
7702
6406
breaker/relay
6502
Current Sensing
6706
DC Charger
Traction Motor Drive #1
Traction Motor Drive #n
Auxiliary Load #1
Auxiliary Load #n

FIG. 79

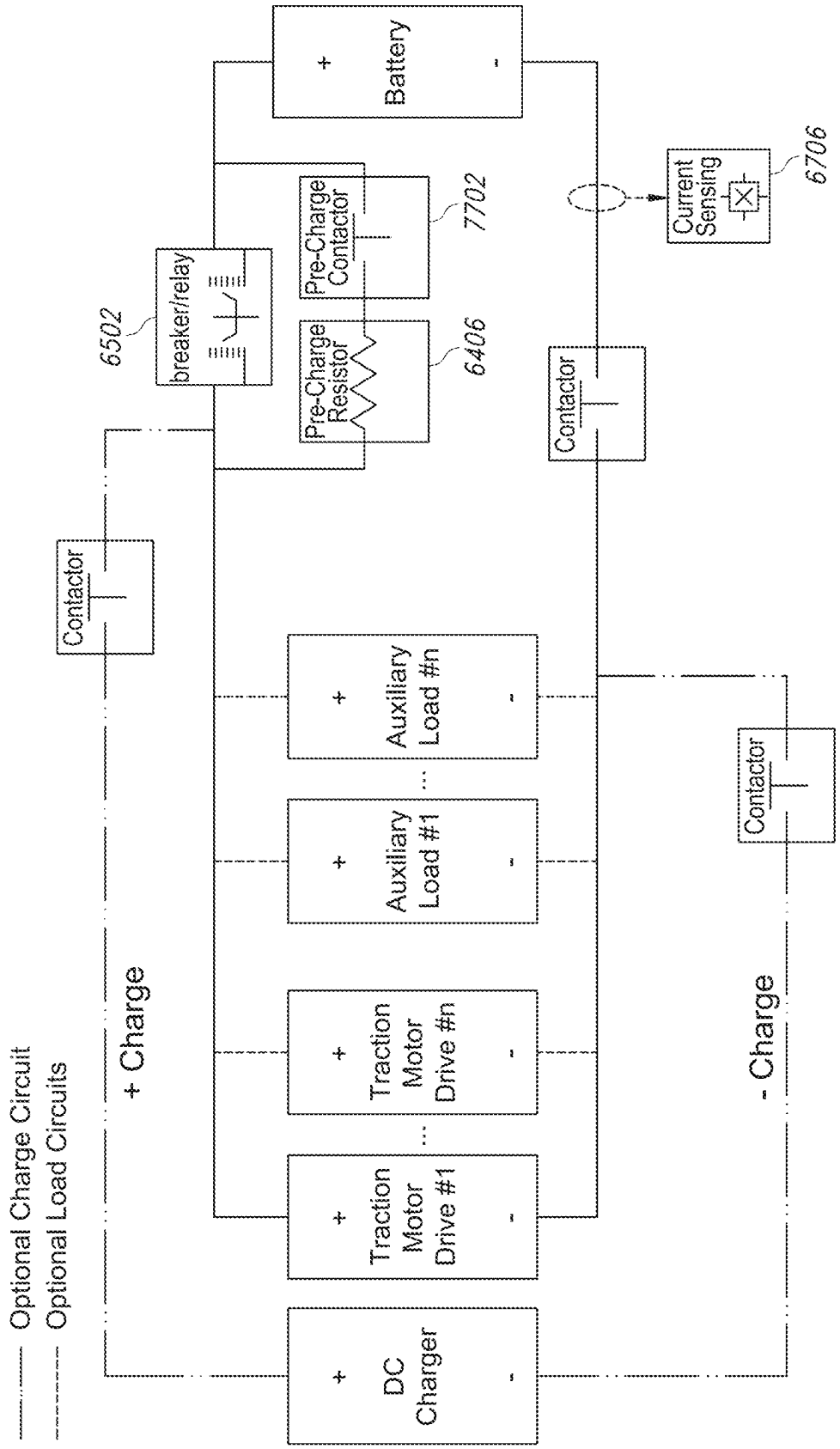
Optional Charge Circuit
Optional Load Circuits
+ Charge
- Charge
+
DC Charger
-
+
Traction Motor Drive #1
-
+
Traction Motor Drive #n
-
+
Auxiliary Load #1
-
+
Auxiliary Load #n
-
Contactor
Contactor
Contactor
breaker/relay
6502
Pre-Charge Resistor
6406
Pre-Charge Contactor
7702
+
Battery
-
Current Sensing
6706

FIG. 80

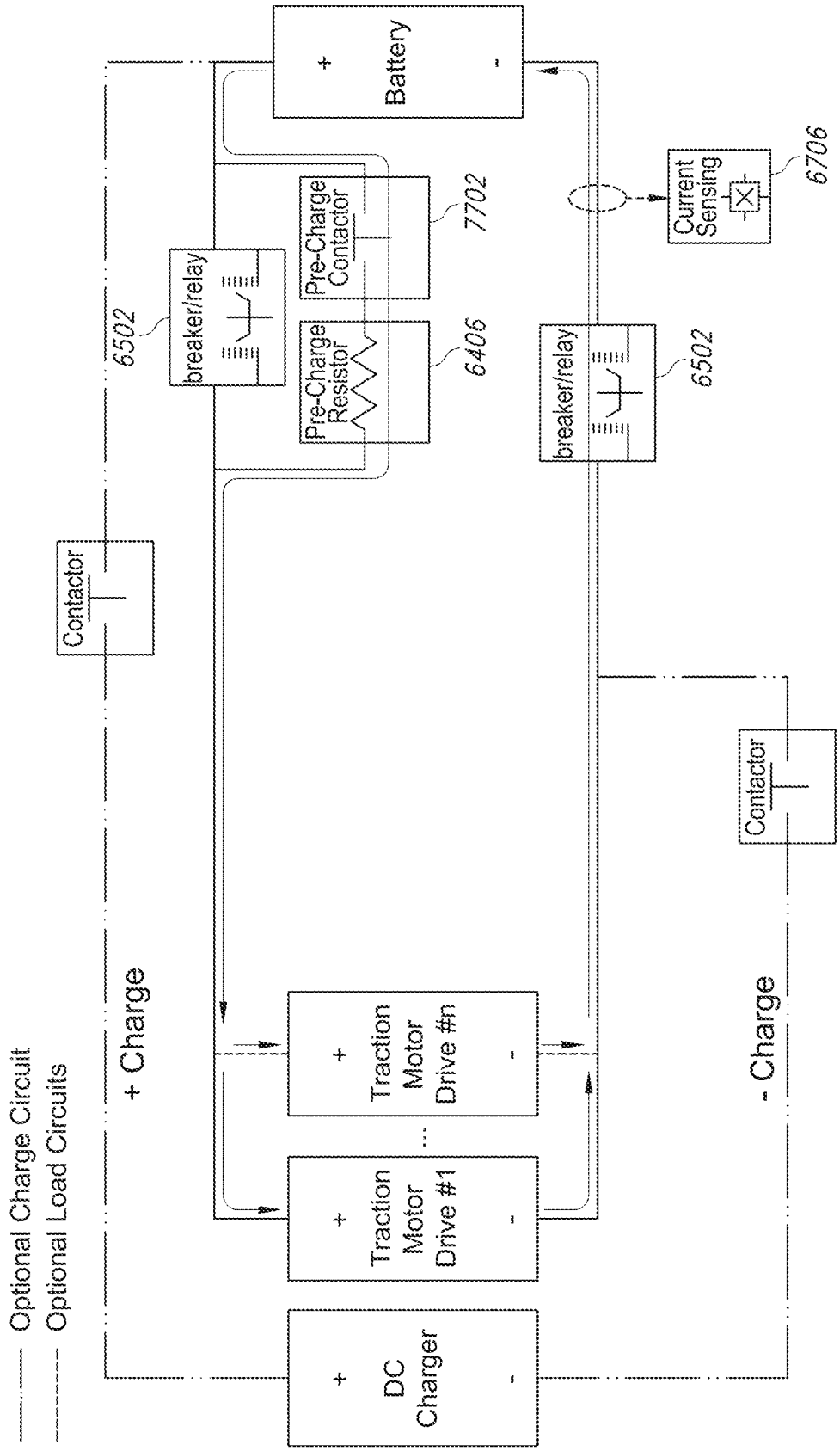
Optional Charge Circuit
Optional Load Circuits
+ Charge
- Charge
+
DC Charger
-
+
Traction Motor Drive #1
-
...
+
Traction Motor Drive #n
-
Contactor
6502
breaker/relay
Pre-Charge Resistor
6406
Pre-Charge Contactor
7702
+
Battery
-
breaker/relay
6502
Current Sensing
6706
Contactor

FIG. 81

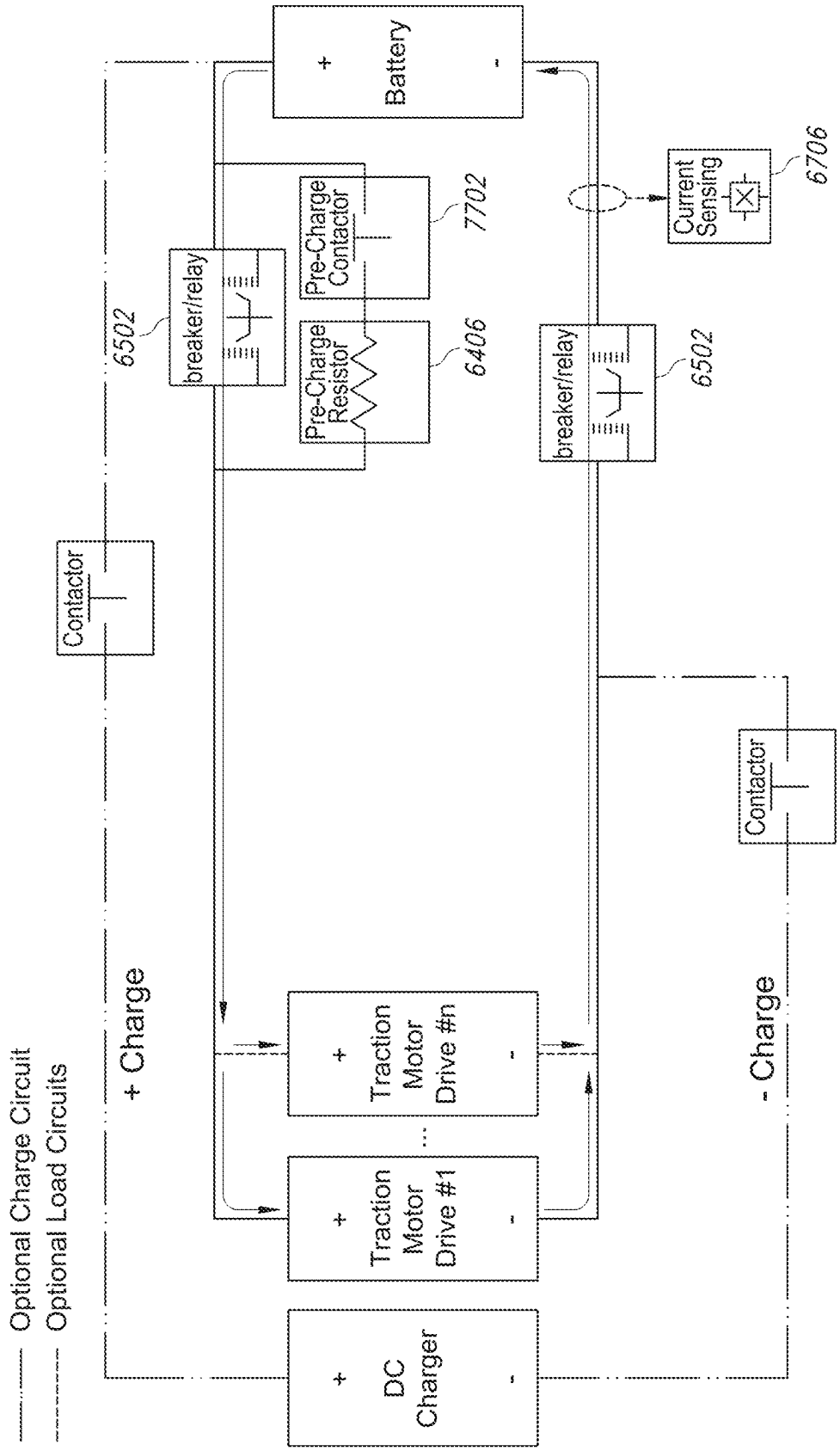
Optional Charge Circuit
Optional Load Circuits
+ Charge
- Charge
+
DC Charger
-
+
Traction Motor Drive #1
-
...
+
Traction Motor Drive #n
-
Contactor
6502
breaker/relay
Pre-Charge Resistor
6406
Pre-Charge Contactor
7702
+
Battery
-
breaker/relay
6502
Current Sensing
6706
Contactor

FIG. 82

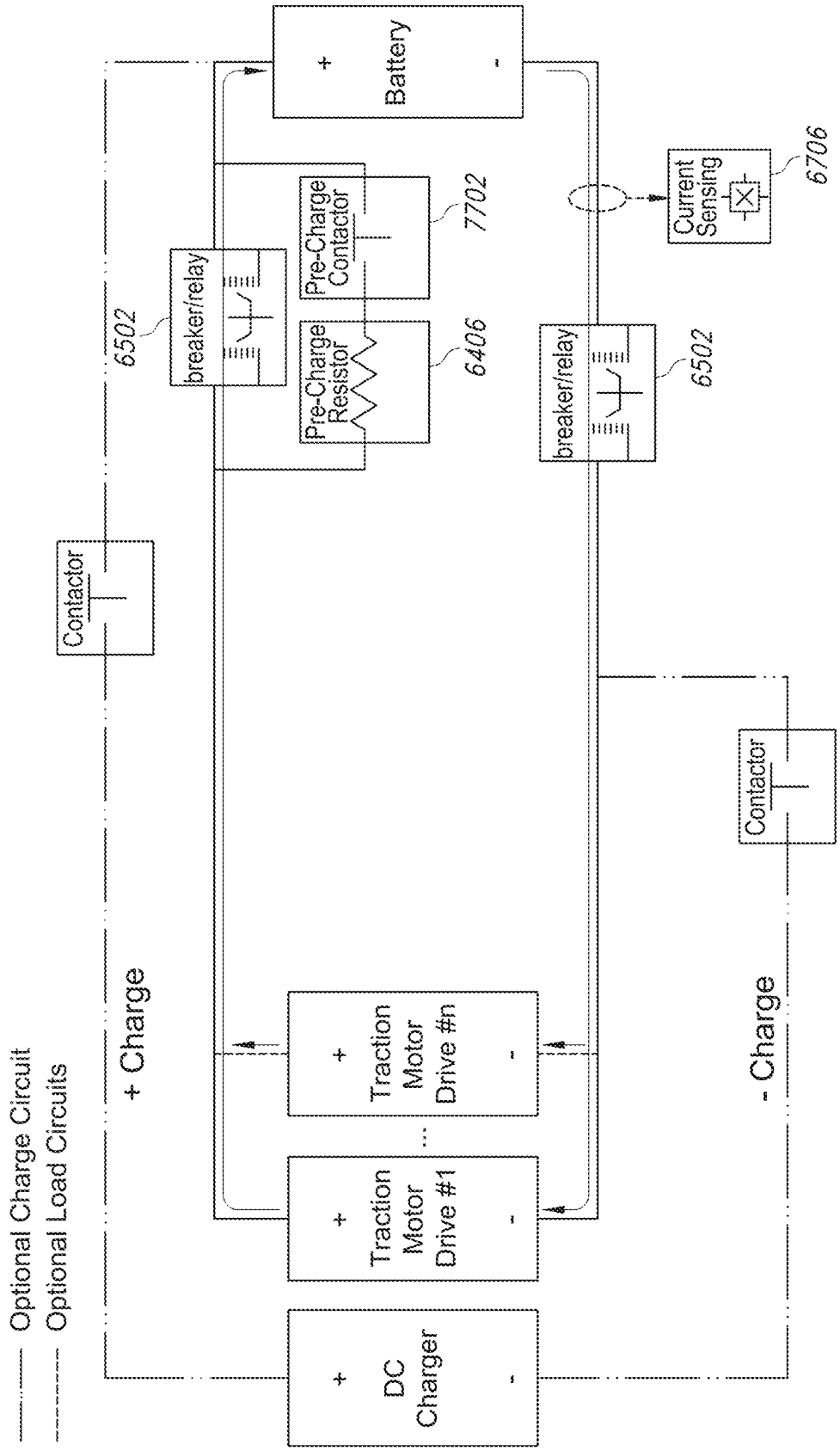
Optional Charge Circuit
Optional Load Circuits
+ Charge
- Charge
+
DC Charger
-
+
Traction Motor Drive #1
-
...
+
Traction Motor Drive #n
-
Contactor
breaker/relay
6502
Pre-Charge Resistor
6406
Pre-Charge Contactor
7702
+
Battery
-
breaker/relay
6502
Current Sensing
6706
Contactor

FIG. 83

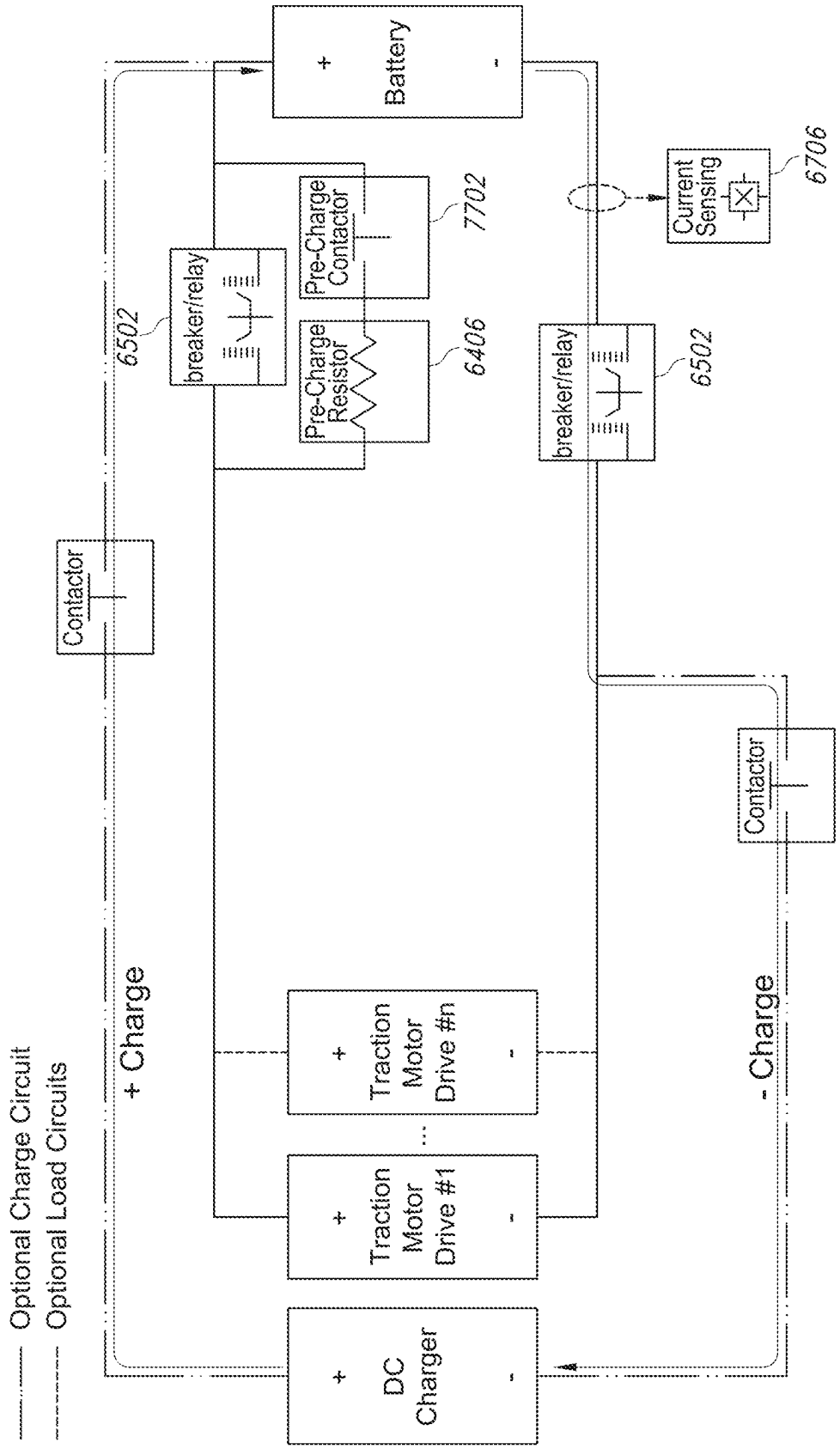
Optional Charge Circuit
Optional Load Circuits
+ Charge
- Charge
+
DC Charger
-
+
Traction Motor Drive #1
-
...
+
Traction Motor Drive #n
-
Contactor
6502
breaker/relay
Pre-Charge Resistor
6406
Pre-Charge Contactor
7702
+
Battery
-
breaker/relay
6502
Current Sensing
6706
Contactor

FIG. 84

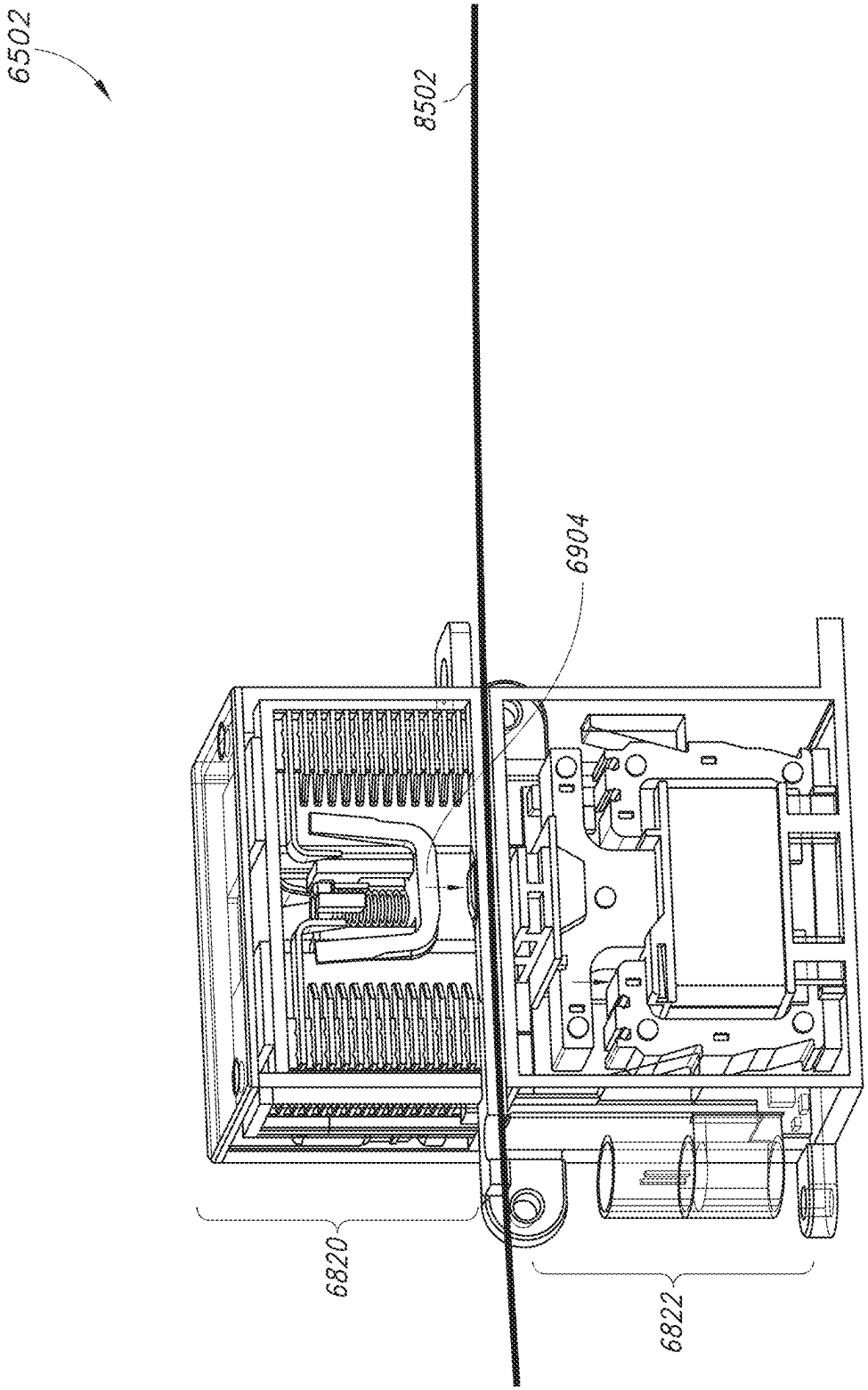

FIG. 85

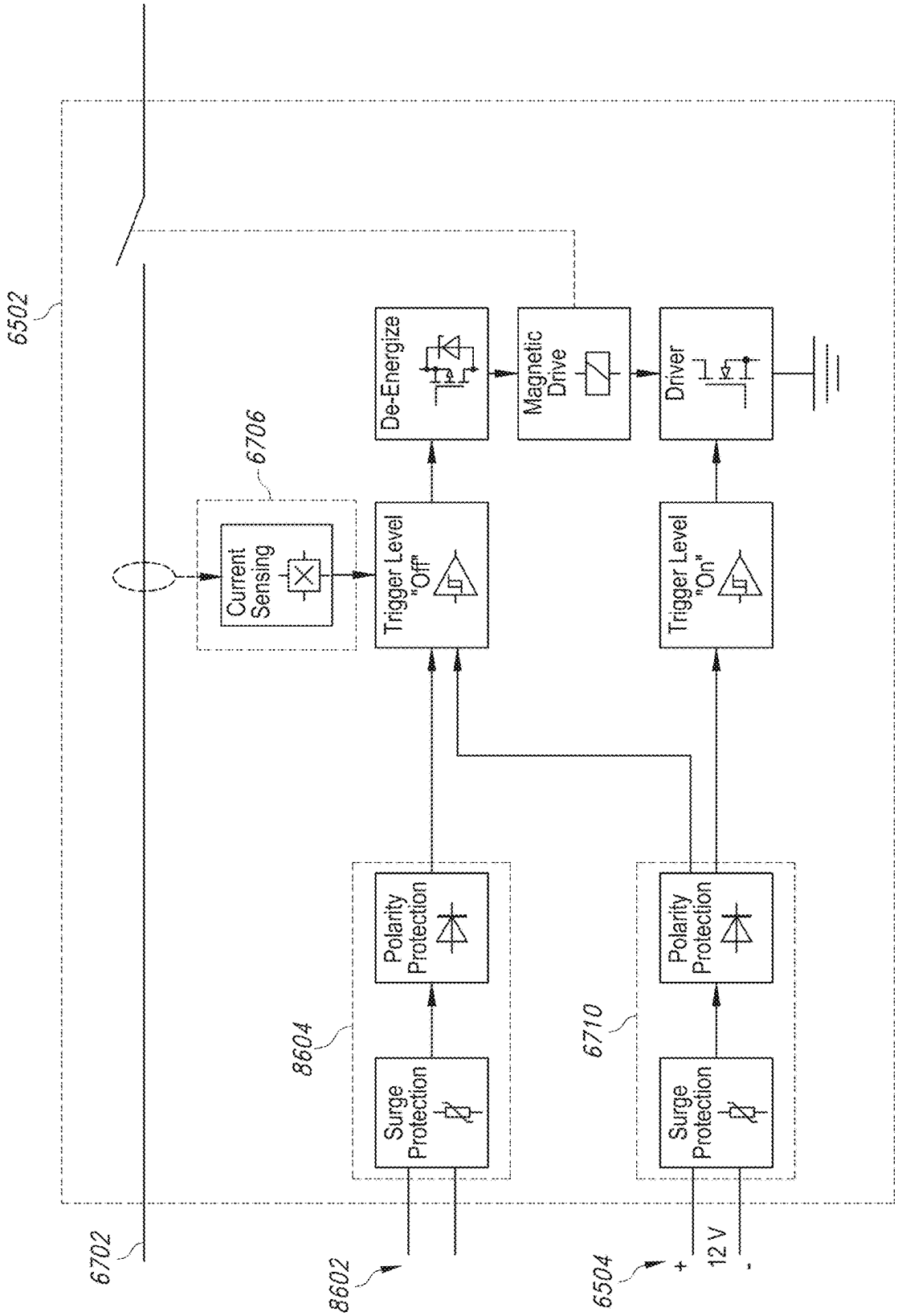
6502
6706
Current Sensing
Trigger Level "Off"
De-Energize
Magnetic Drive
Driver
Trigger Level "On"
8604
Polarity Protection
Surge Protection
6710
Polarity Protection
Surge Protection
6702
8602
6504
+
12 V
-

FIG. 86

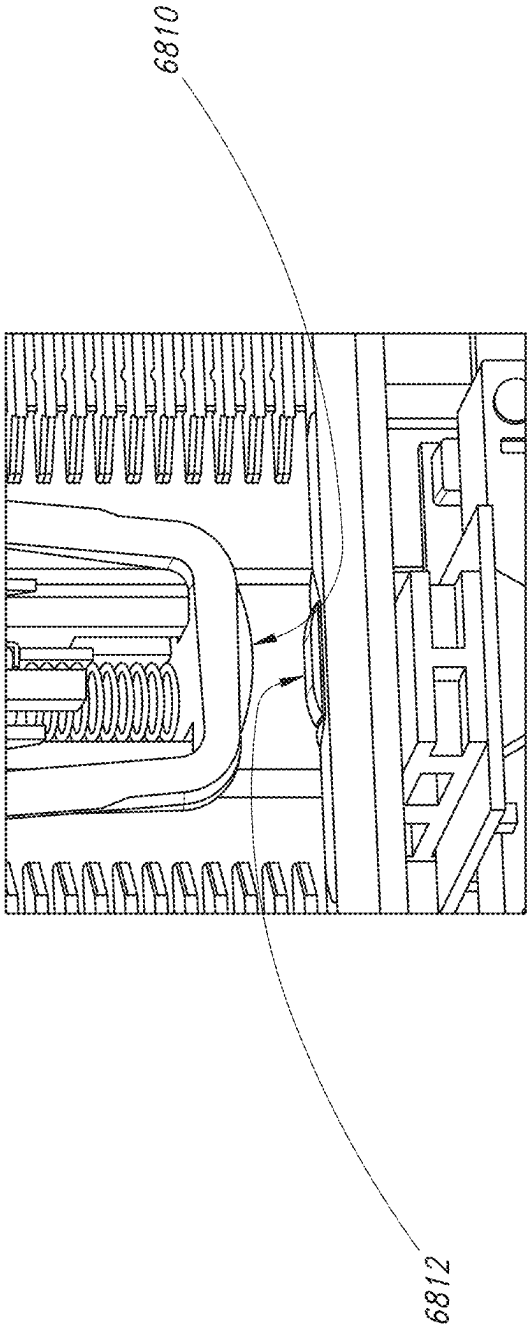

FIG. 87

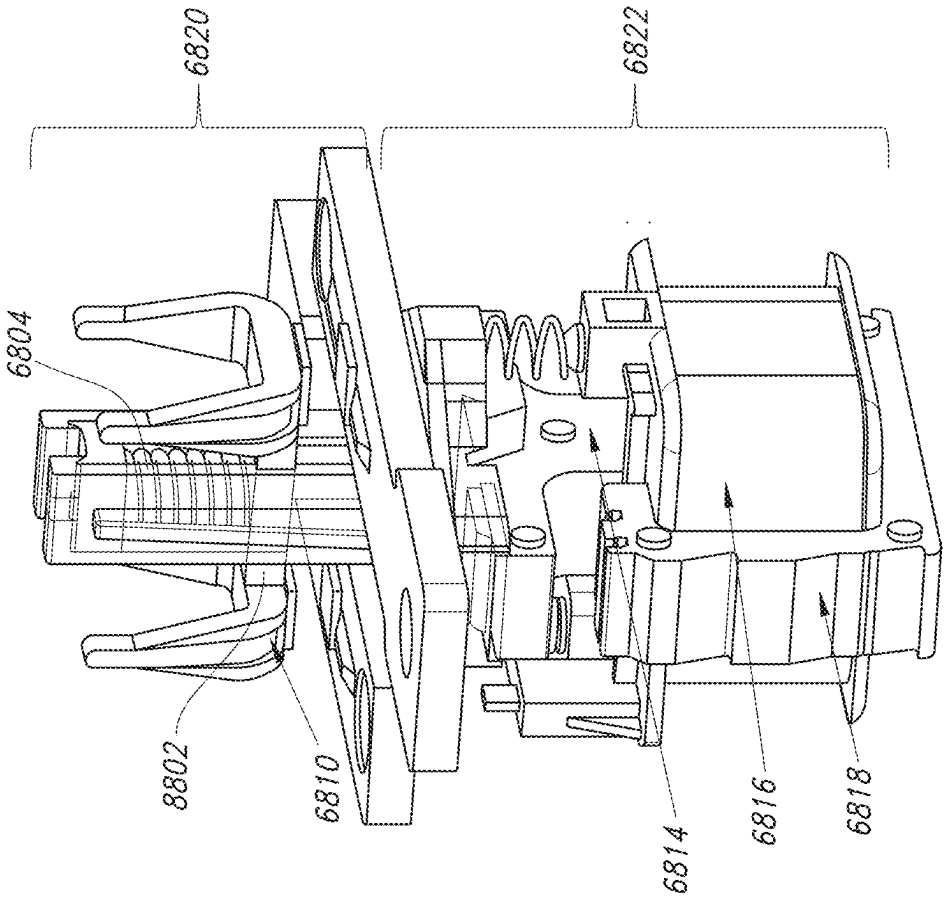

FIG. 88

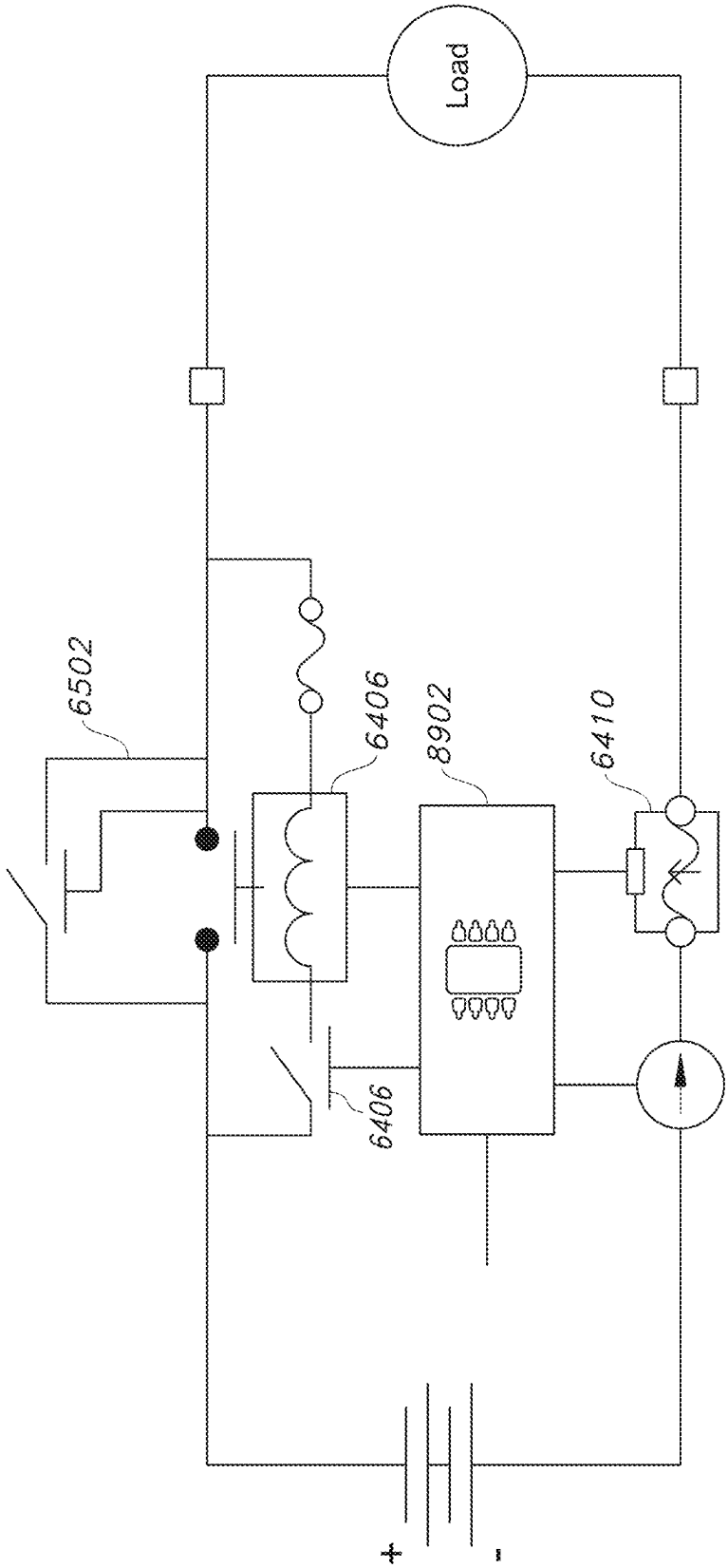

FIG. 89

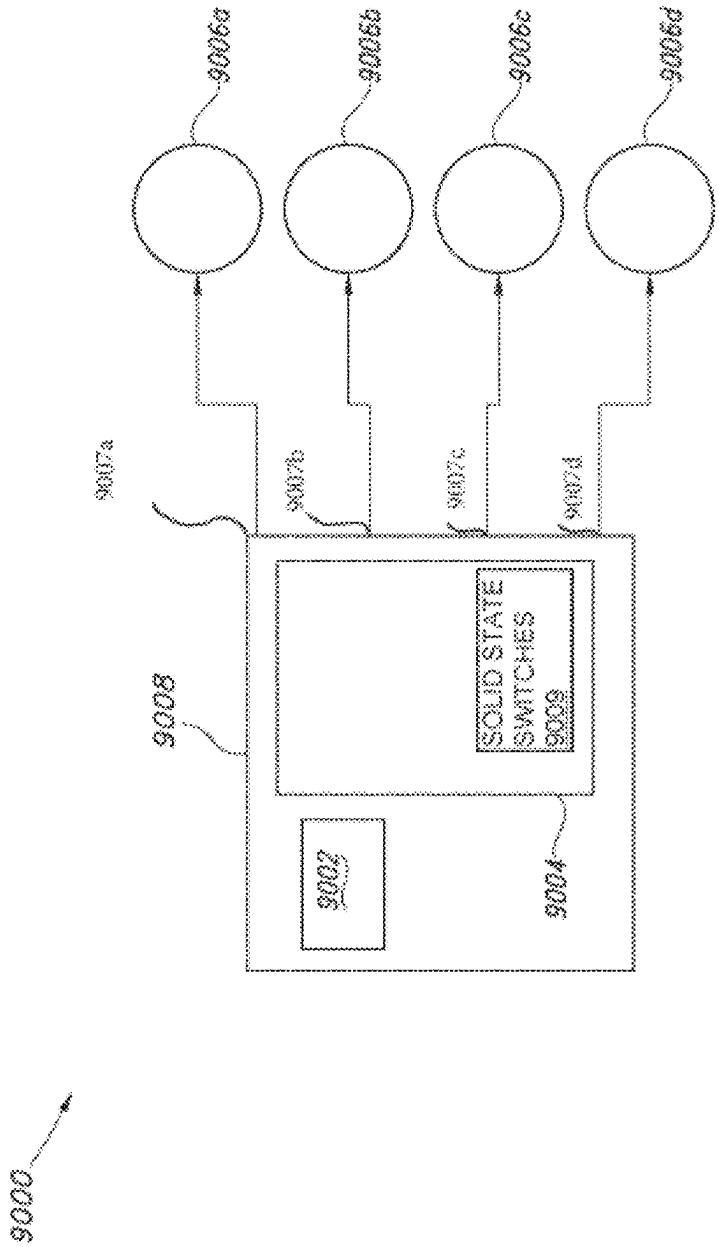
9006a
9006b
9006c
9006d
9007a
9007b
9007c
9007d
9008
SOLID STATE SWITCHES 9009
9002
9004
9000

FIG. 90A

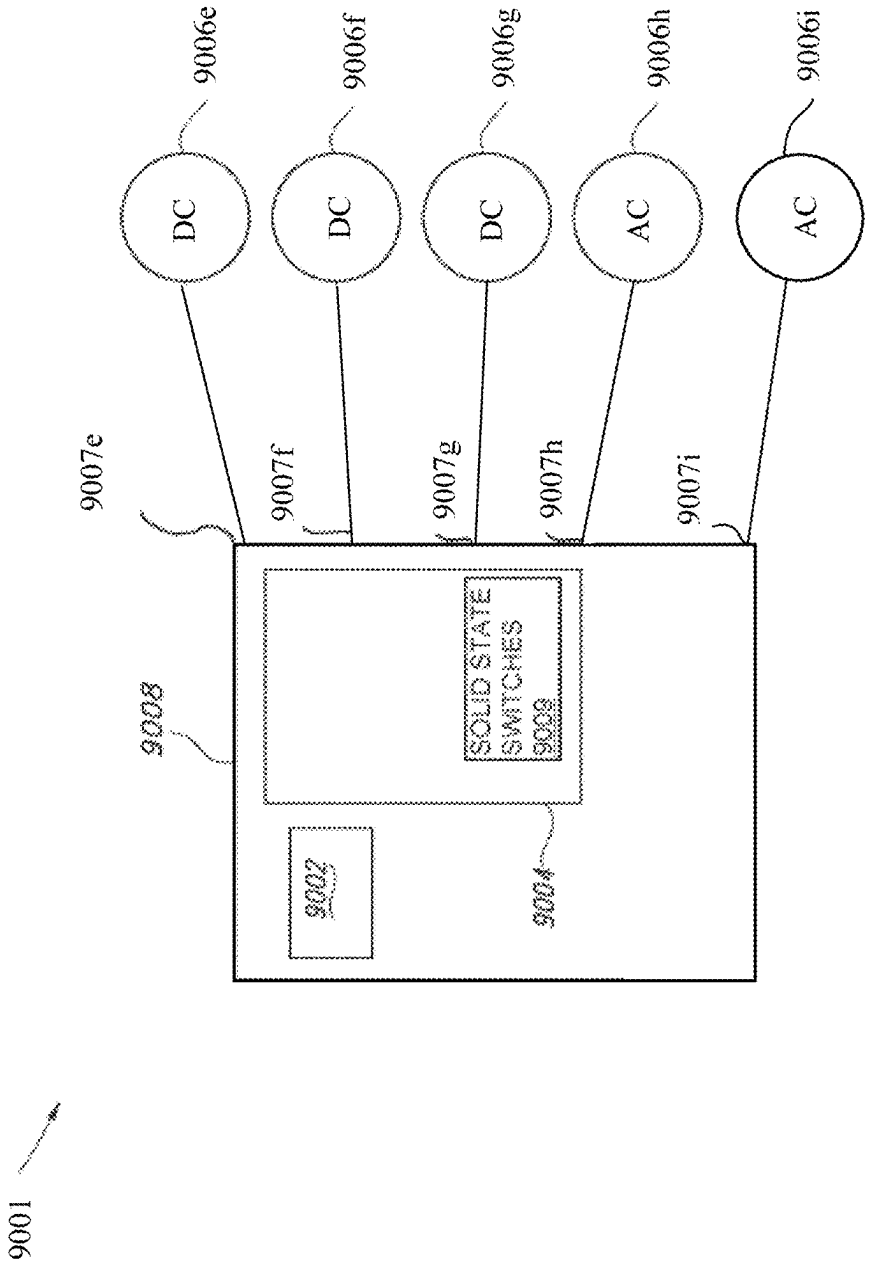
9001
9002
9003
9004
9006
SOLID STATE SWITCHES 9009
9007e
9007f
9007g
9007h
9007i
DC
DC
DC
AC
AC
9006e
9006f
9006g
9006h
9006i

FIG. 90B

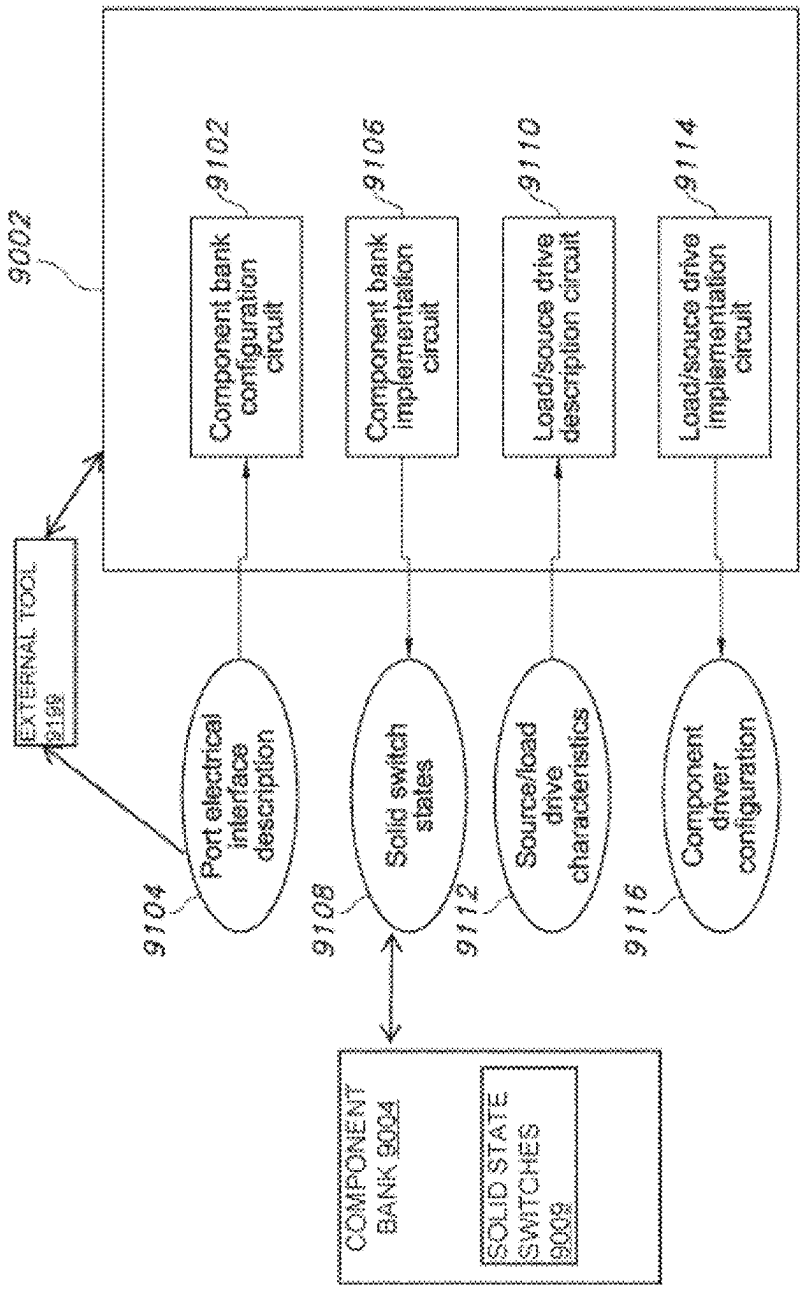
9002
EXTERNAL TOOL
9199
9104
Port electrical interface description
9108
Solid switch states
9112
Source/load drive characteristics
9116
Component driver configuration
9102
Component bank configuration circuit
9106
Component bank implementation circuit
9110
Load/source drive description circuit
9114
Load/source drive implementation circuit
COMPONENT BANK 9004
SOLID STATE SWITCHES 9009

FIG. 91

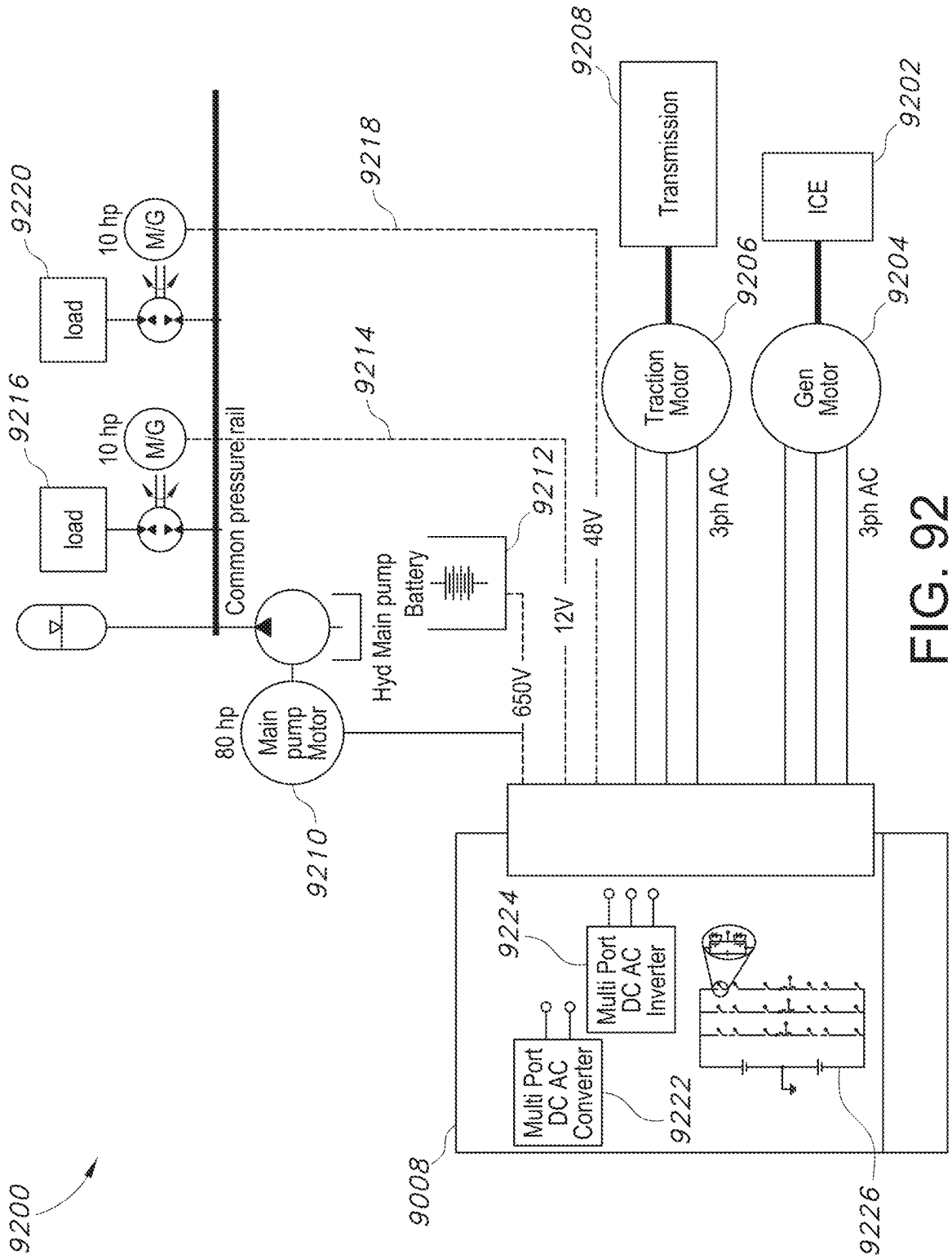
9200
9220
load
10 hp
M/G
9216
load
10 hp
M/G
Common pressure rail
9218
9214
9212
Hyd Main pump
Battery
80 hp
Main pump Motor
9210
650V
12V
48V
9208
Transmission
9206
Traction Motor
3ph AC
9202
ICE
9204
Gen Motor
3ph AC
9008
9224
Multi Port DC AC Inverter
Multi Port DC AC Converter
9222
9226

FIG. 92

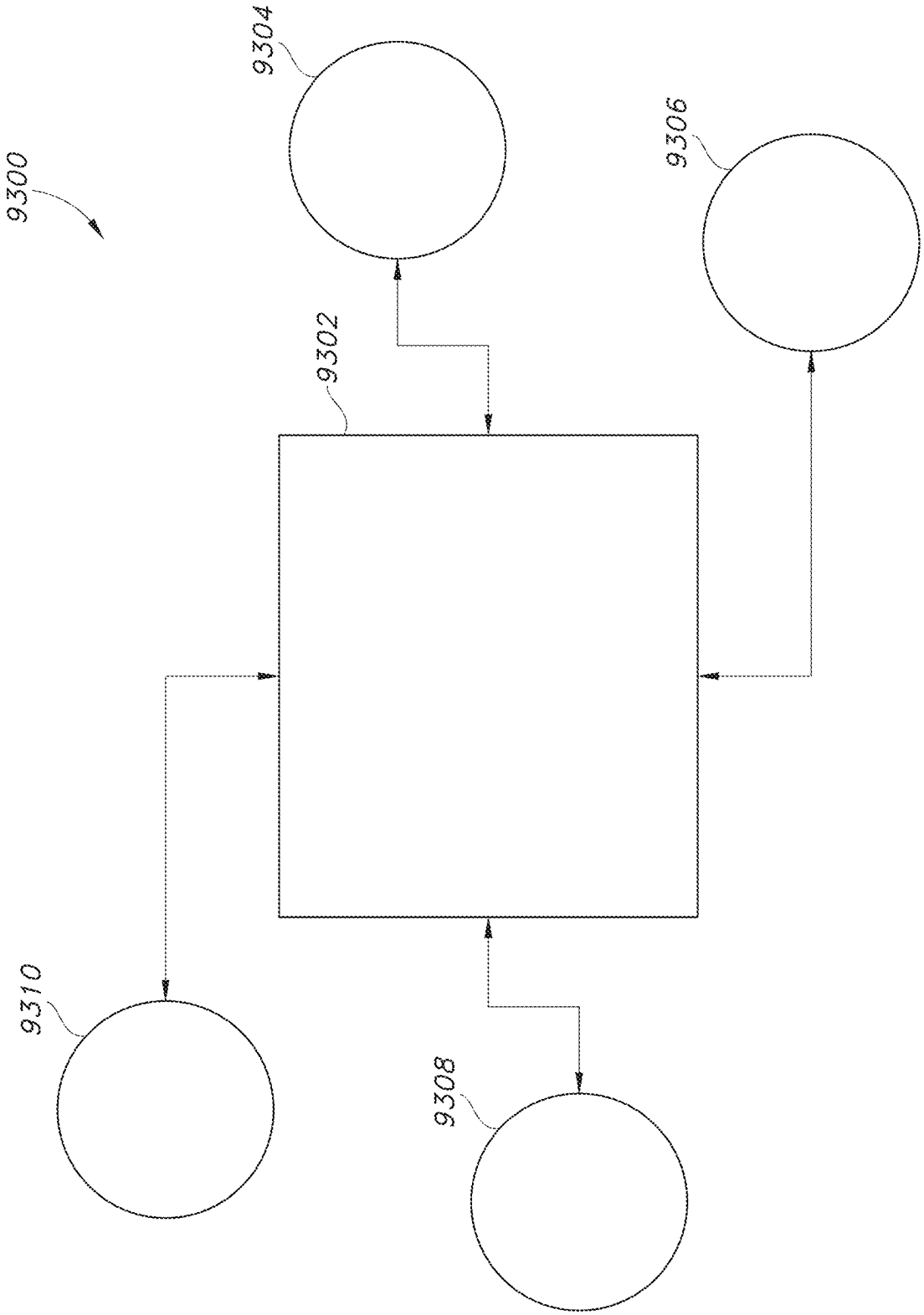

FIG. 93

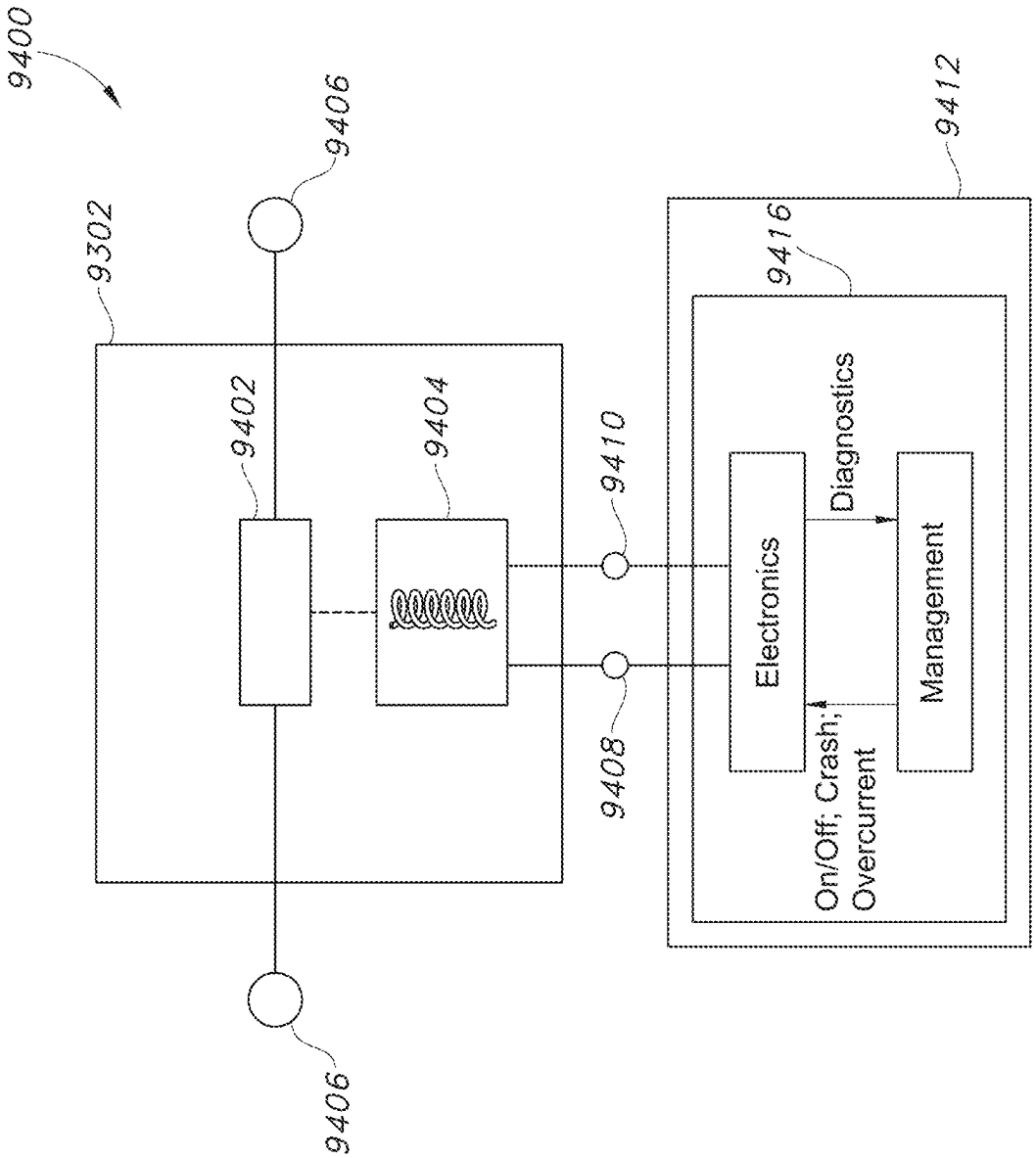
9400
9302
9402
9404
9406
9406
9408
9410
9412
9416
Electronics
Diagnostics
Management
On/Off; Crash; Overcurrent

FIG. 94

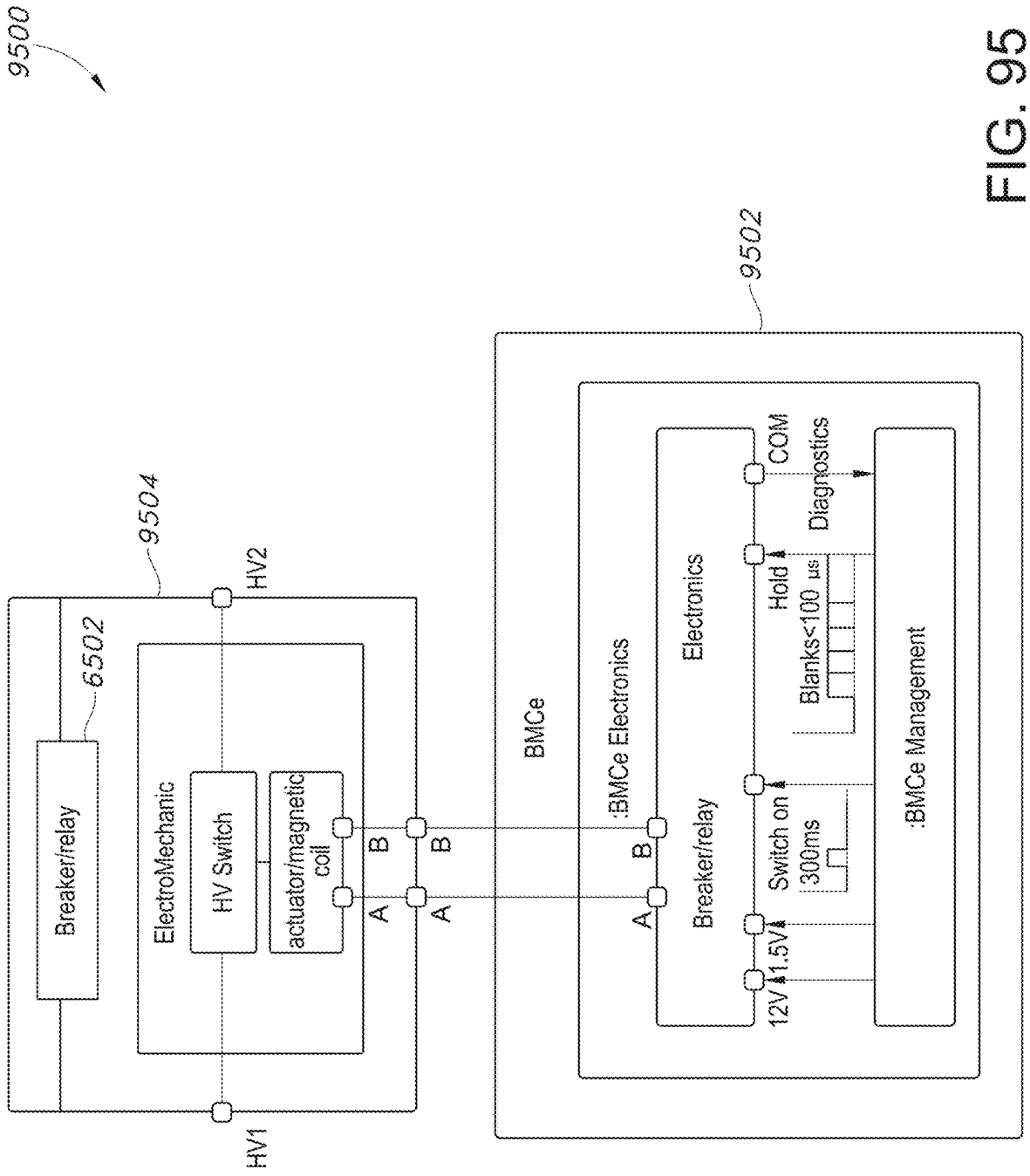
9500
9502
9504
6502
Breaker/relay
ElectroMechanic
HV Switch
actuator/magnetic coil
HV1
HV2
A
B
A
B
BMCe
:BMCe Electronics
Electronics
Breaker/relay
12V
1.5V
Switch on
300ms
Hold
Blanks<100 µs
COM
Diagnostics
:BMCe Management

FIG. 95

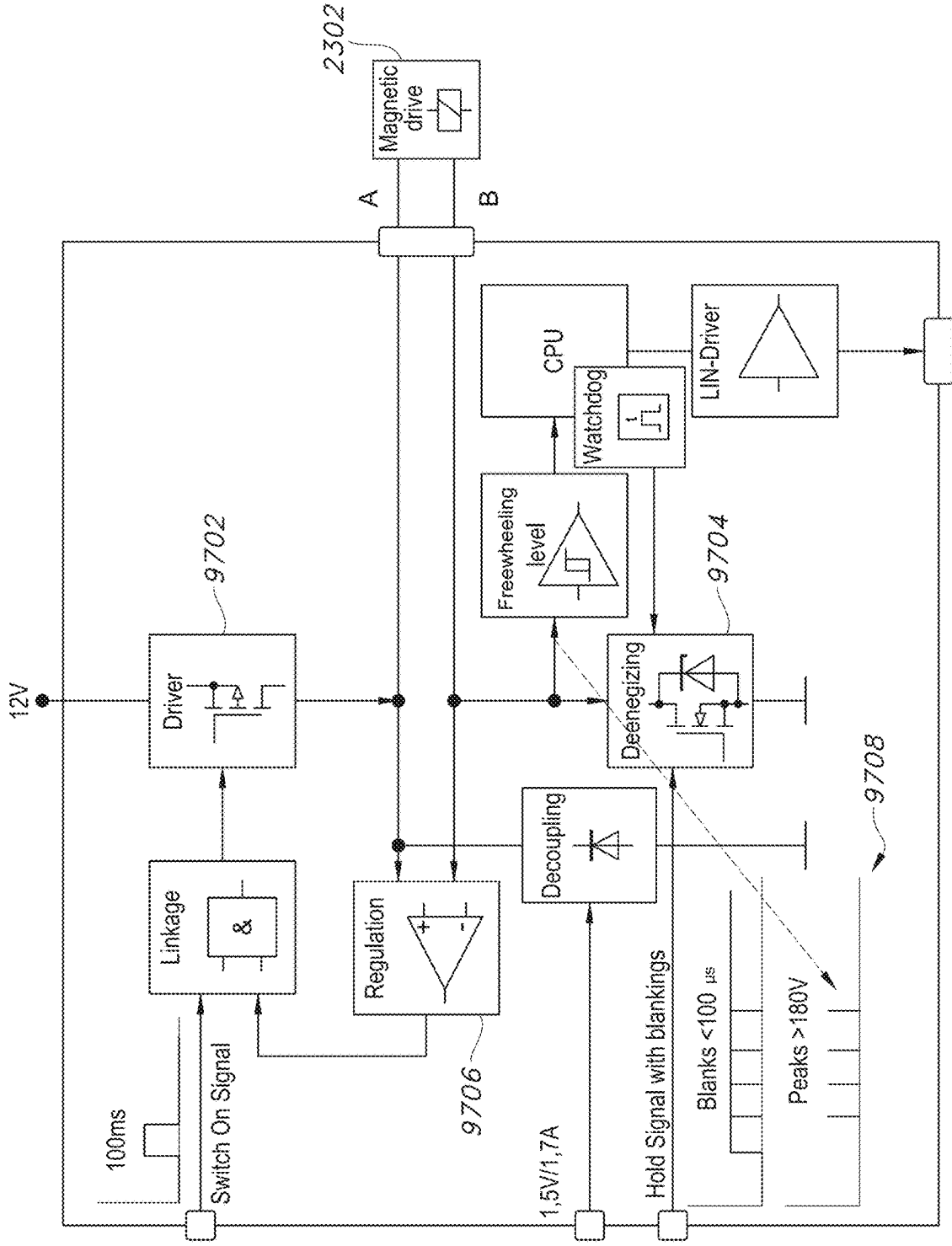
2302
Magnetic drive
A
B
12V
9702
Driver
Linkage
&
100ms
Switch On Signal
Regulation
+
-
9706
CPU
Watchdog
Freewheeling level
LIN-Driver
COM
9704
Deenergizing
Decoupling
1,5V/1,7A
Hold Signal with blankings
Blanks <100 µs
Peaks >180V
9708

FIG. 96

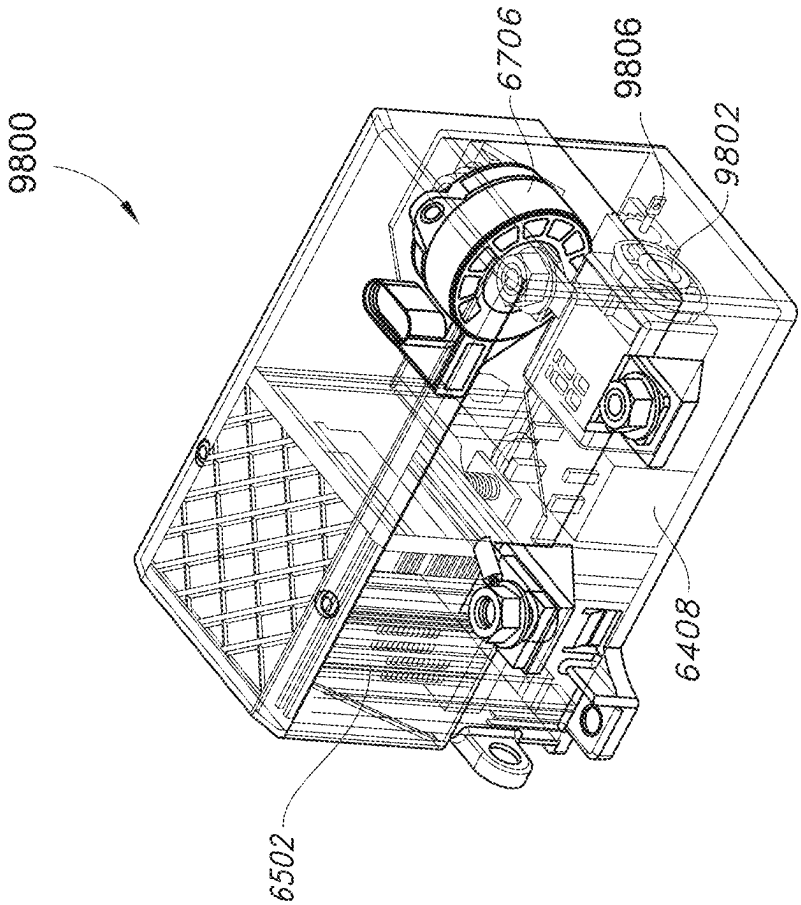

FIG. 98

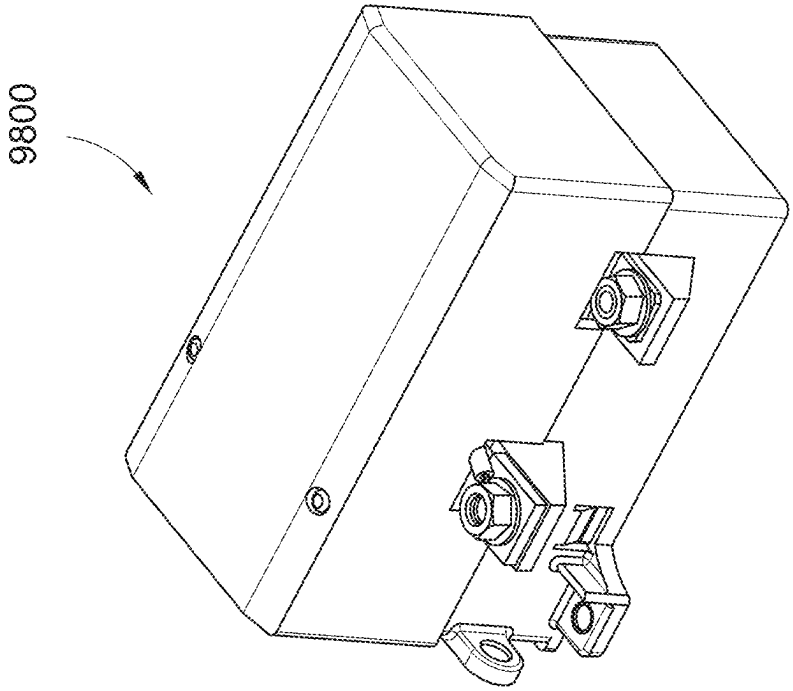

FIG. 97

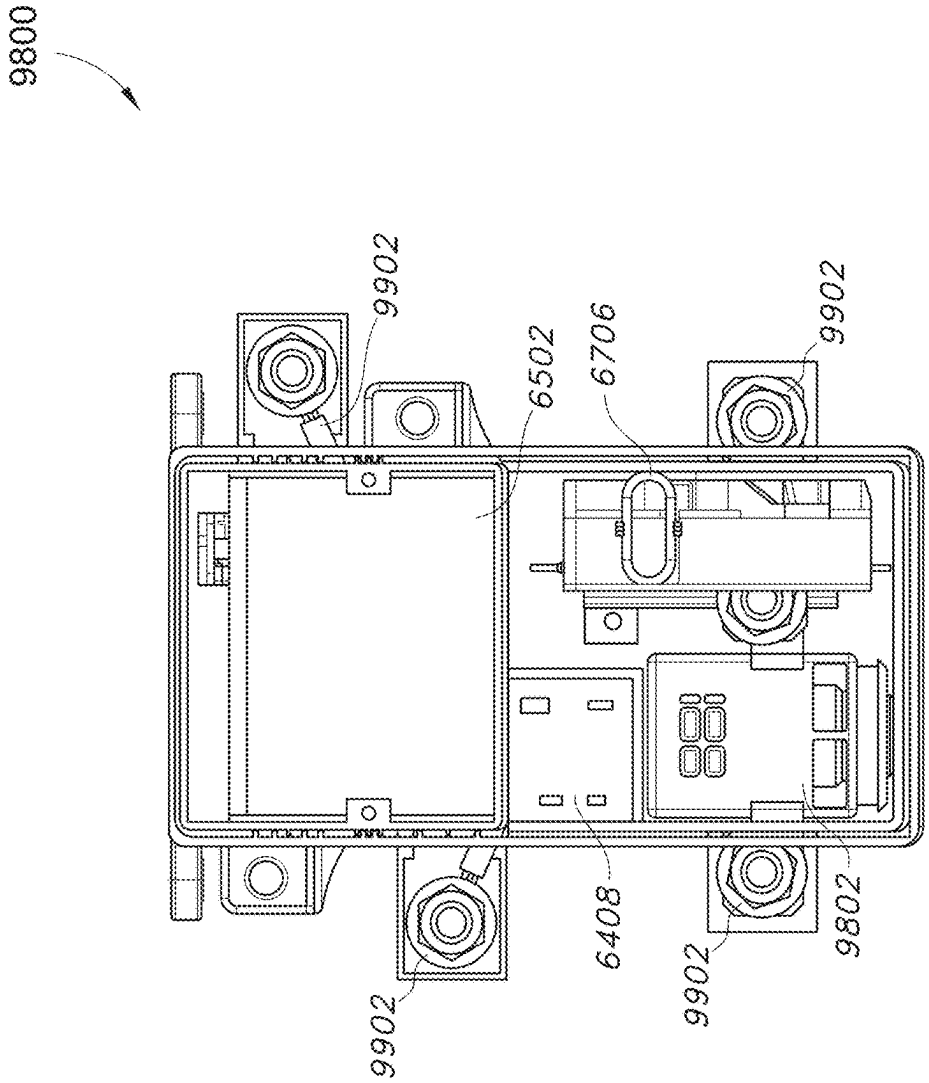

FIG. 99

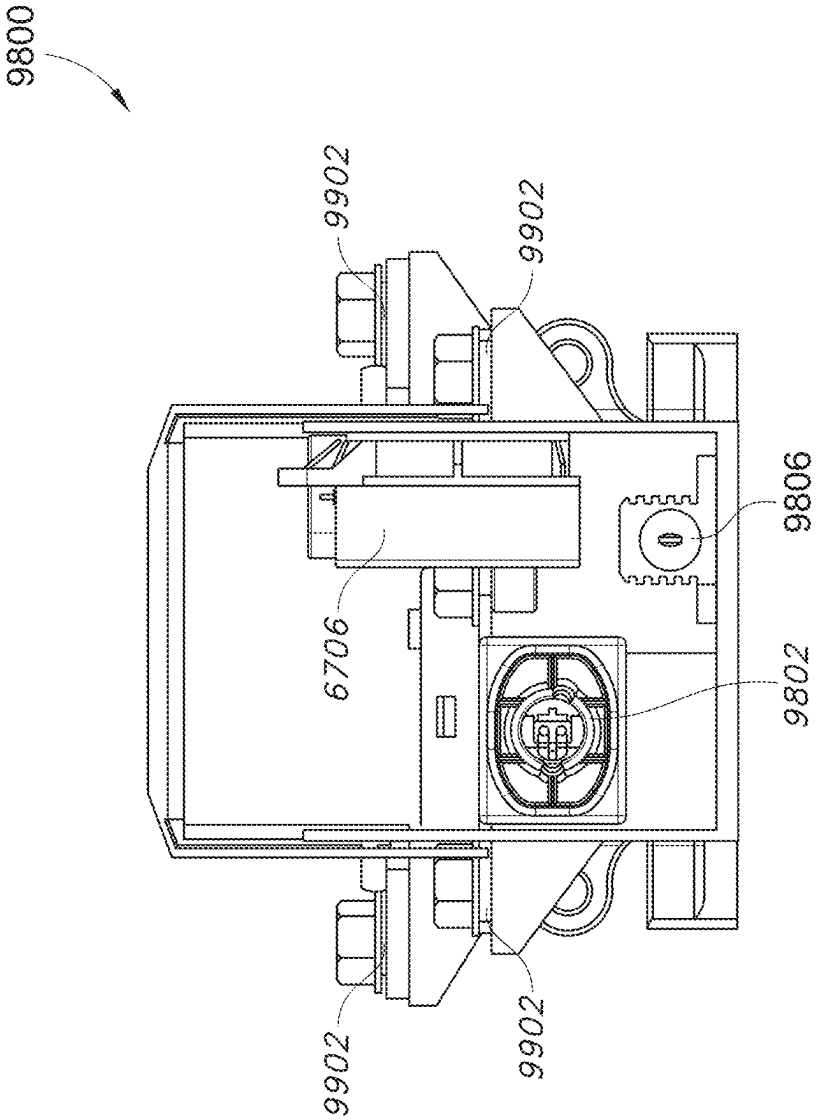

FIG. 100

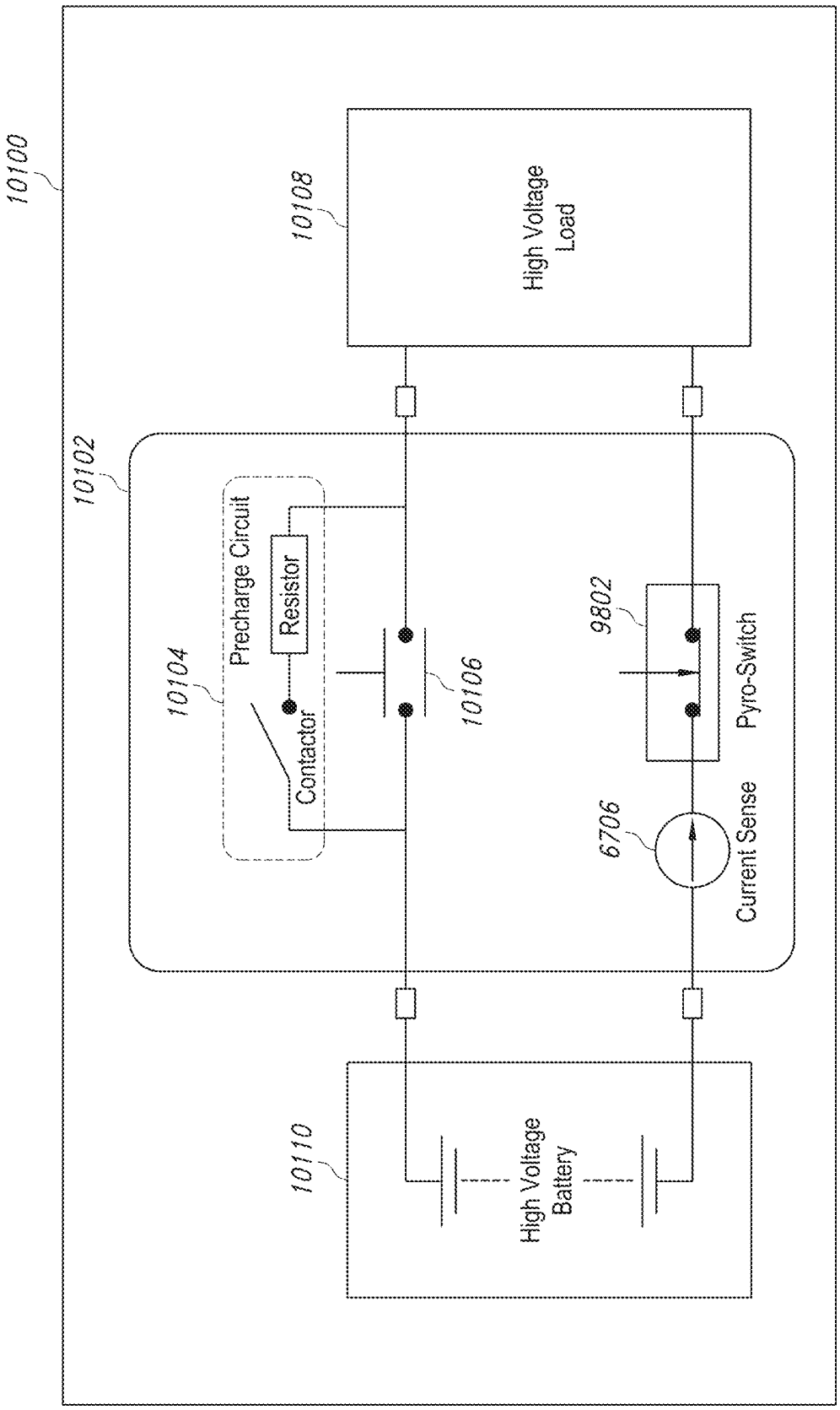
10100
10102
10104
Precharge Circuit
Resistor
Contactor
10106
10108
High Voltage Load
9802
Pyro-Switch
6706
Current Sense
10110
High Voltage Battery

FIG. 101

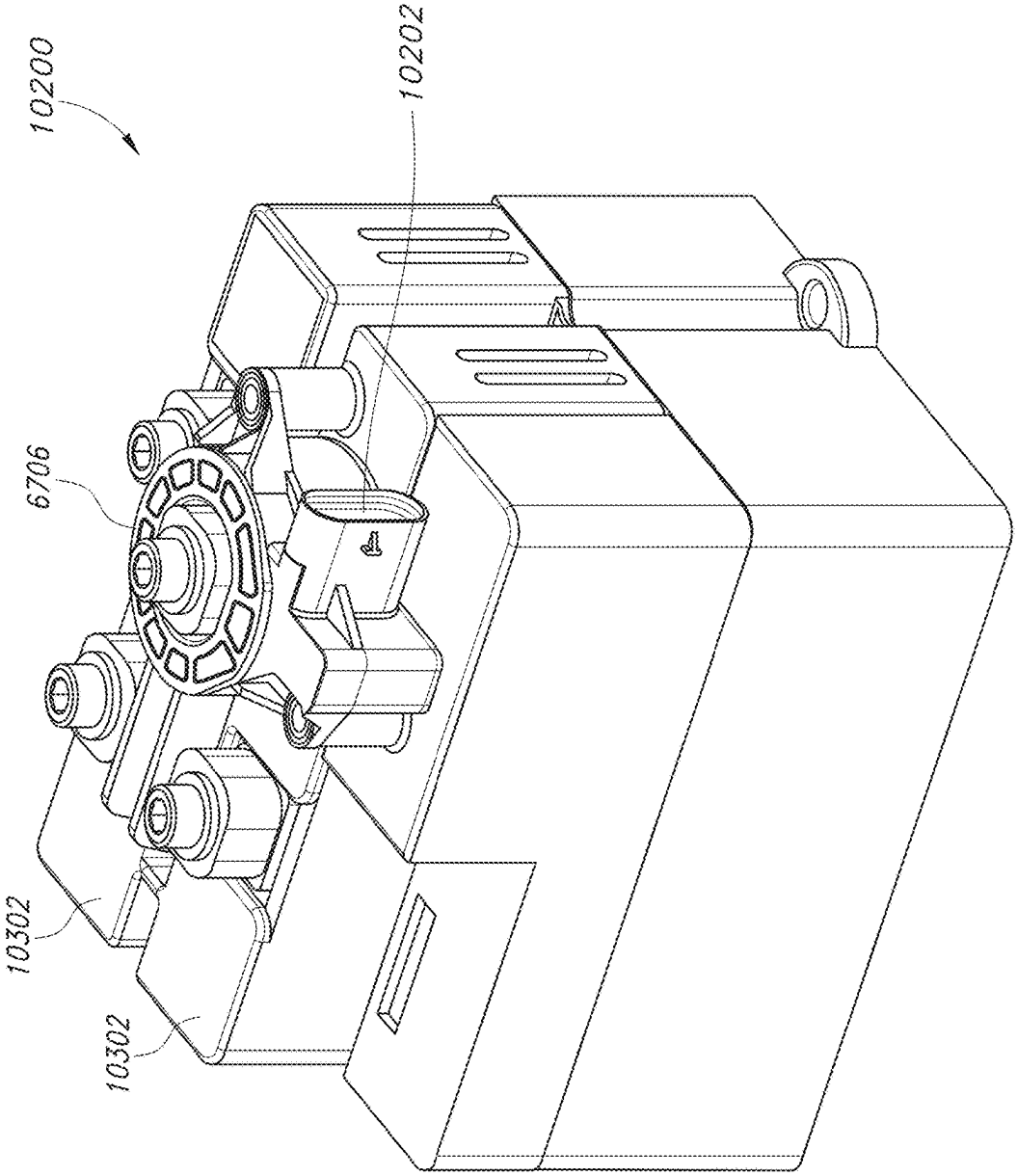

FIG. 102

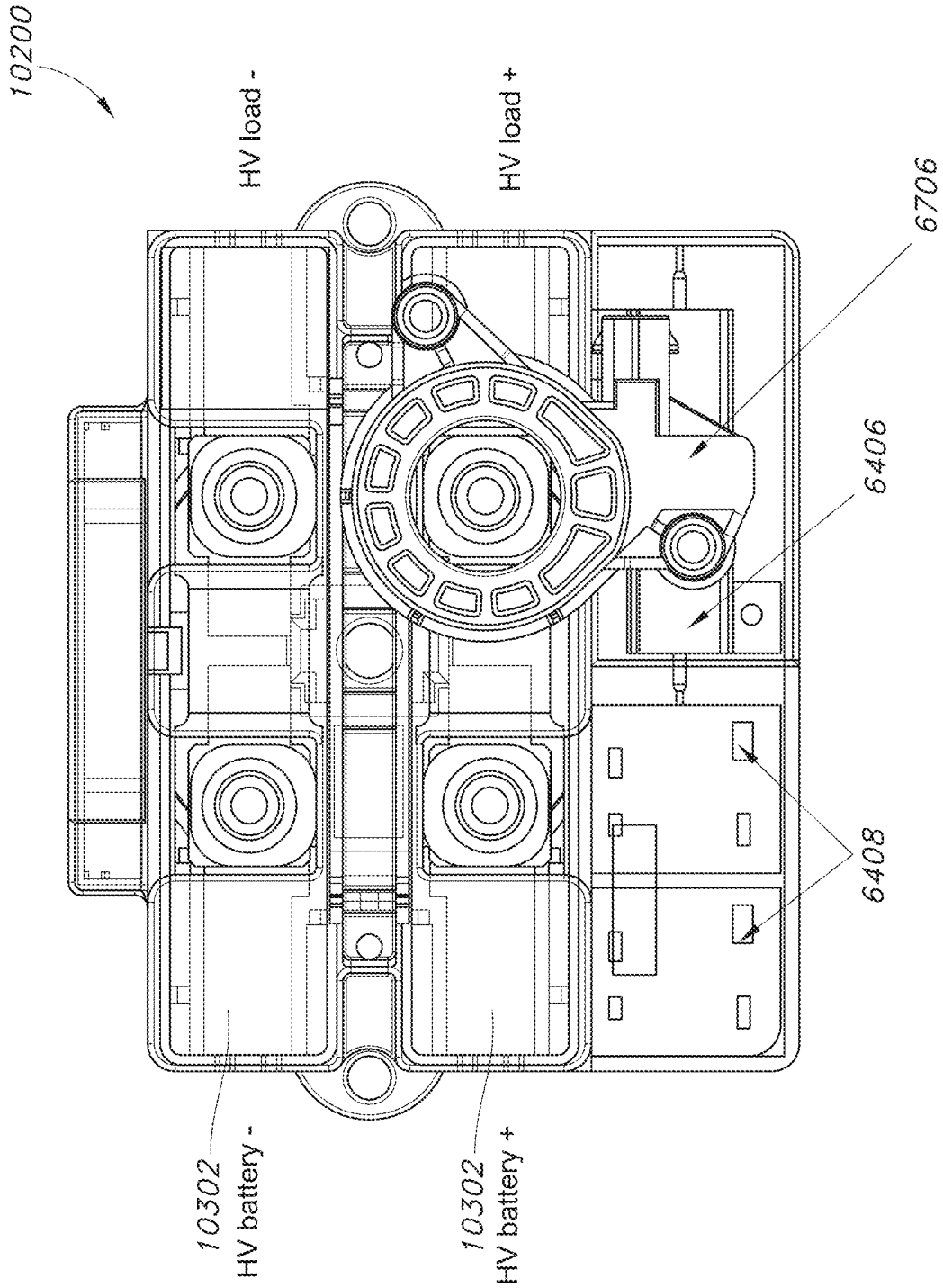
10200
HV load -
HV load +
6706
6406
6408
10302
HV battery -
10302
HV battery +

FIG. 103

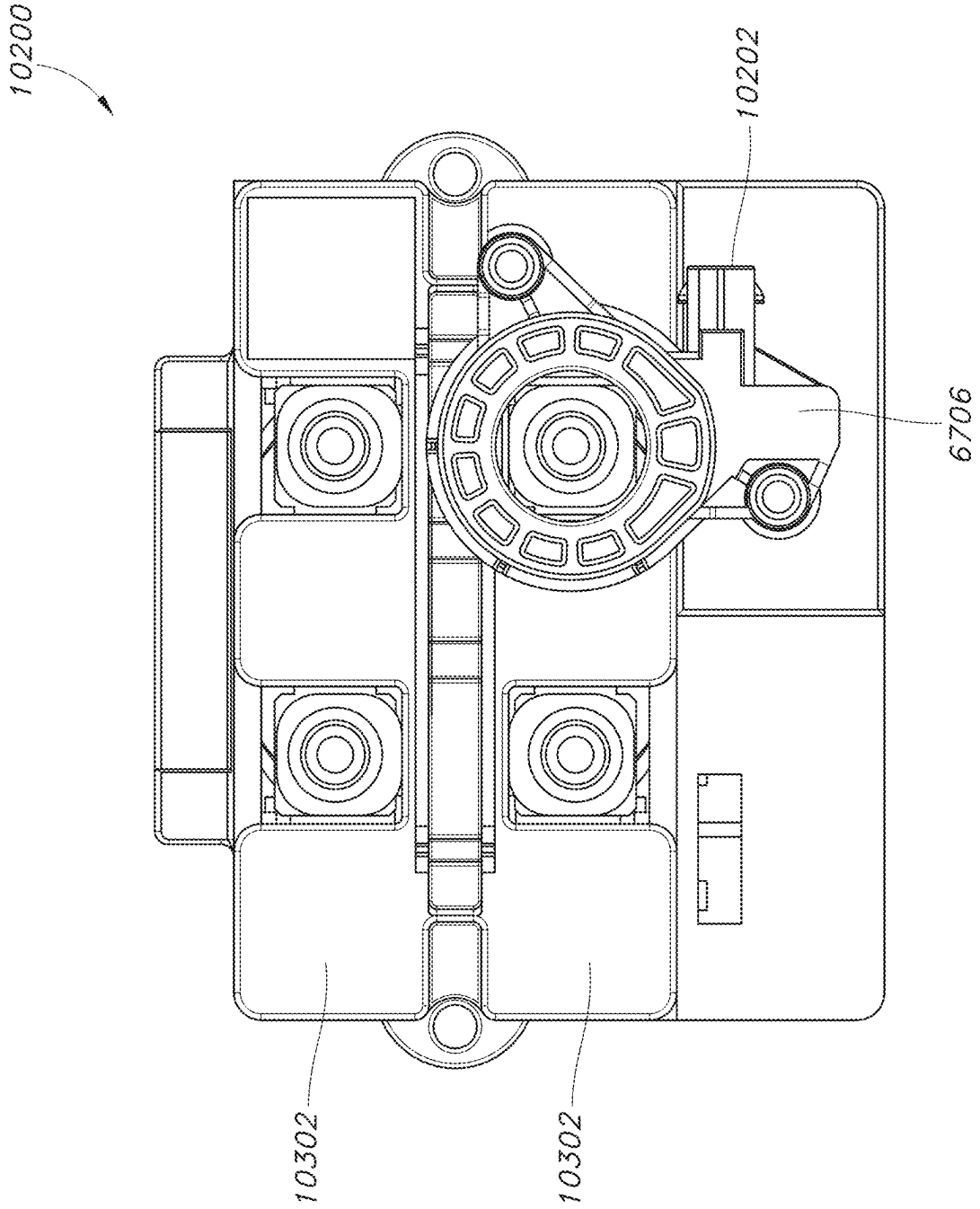

FIG. 104

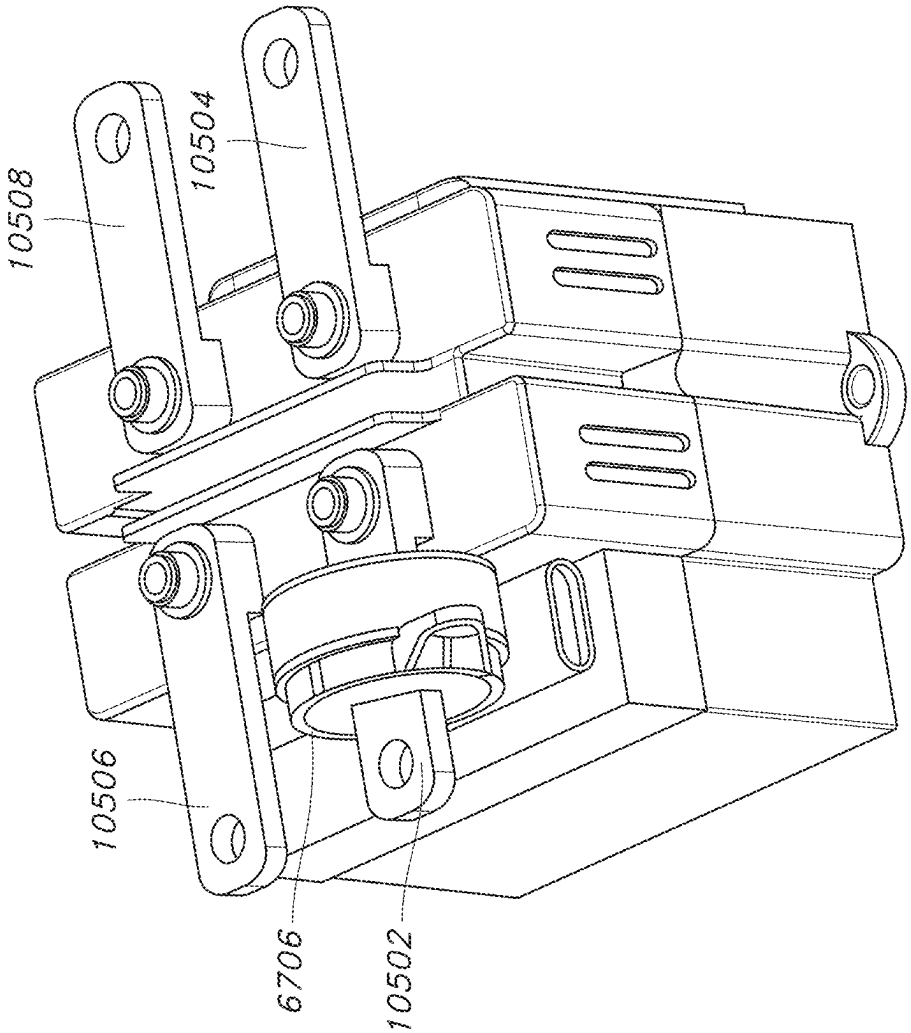

FIG. 105

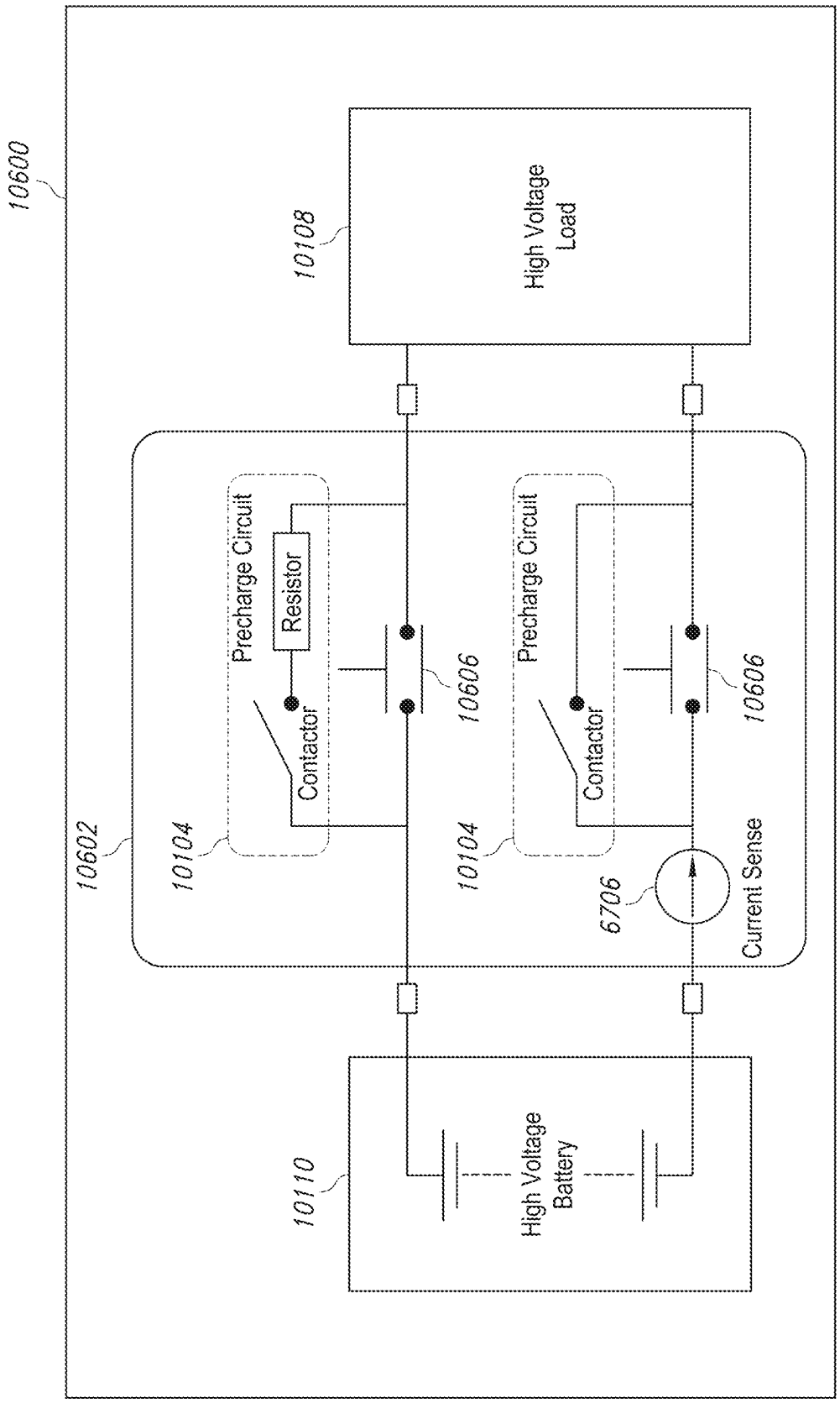
10600
10108
High Voltage Load
10602
10104
Precharge Circuit
Resistor
Contactor
10606
10104
Precharge Circuit
Contactor
10606
6706
Current Sense
10110
High Voltage Battery

FIG. 106

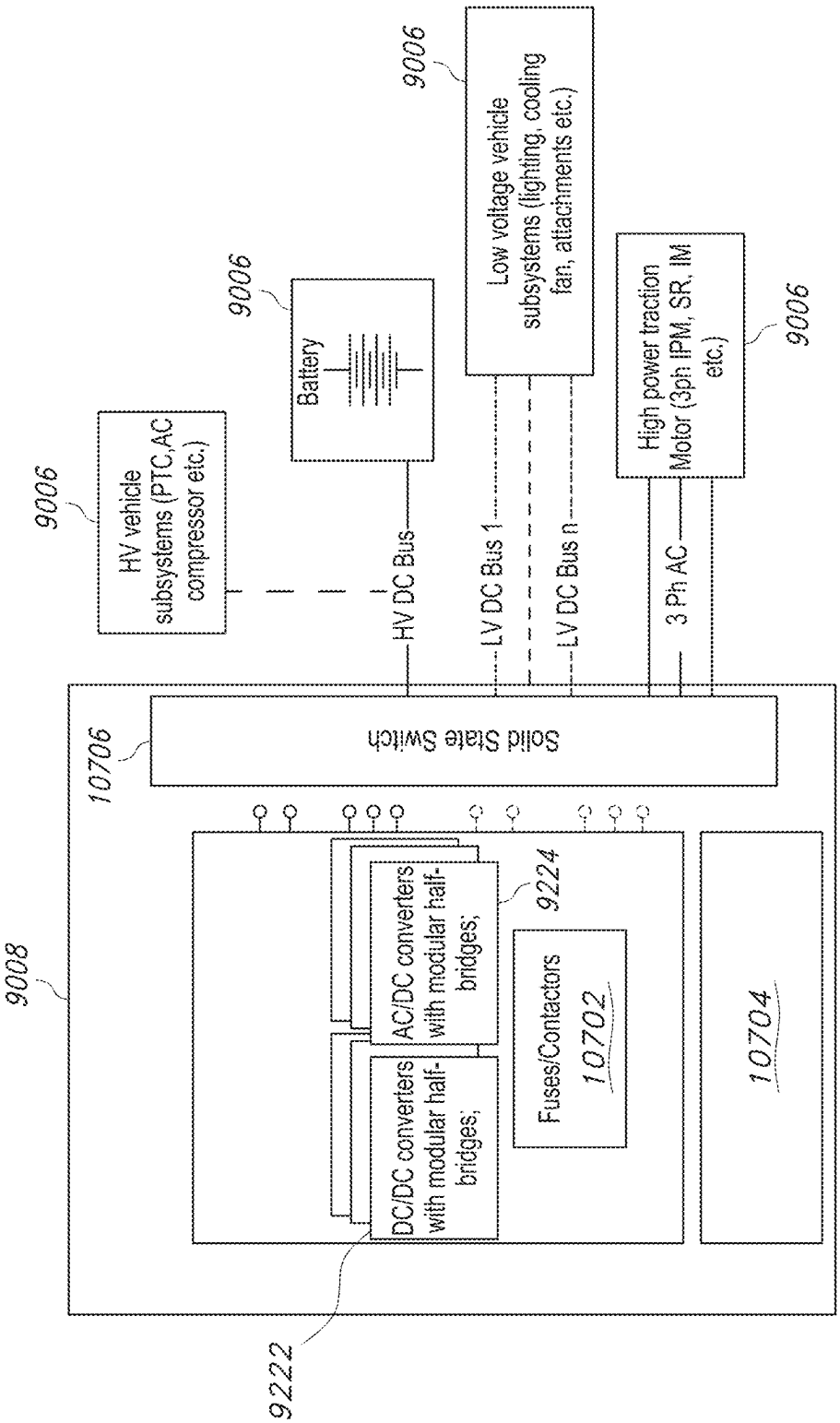
9006
HV vehicle subsystems (PTC,AC compressor etc.)
9006
Battery
9006
Low voltage vehicle subsystems (lighting, cooling fan, attachments etc.)
9006
High power traction Motor (3ph IPM, SR, IM etc.)
HV DC Bus
LV DC Bus 1
LV DC Bus n
3 Ph AC
10706
Solid State Switch
9008
DC/DC converters with modular half-bridges;
AC/DC converters with modular half-bridges;
9224
Fuses/Contactors
10702
10704
9222

FIG. 107

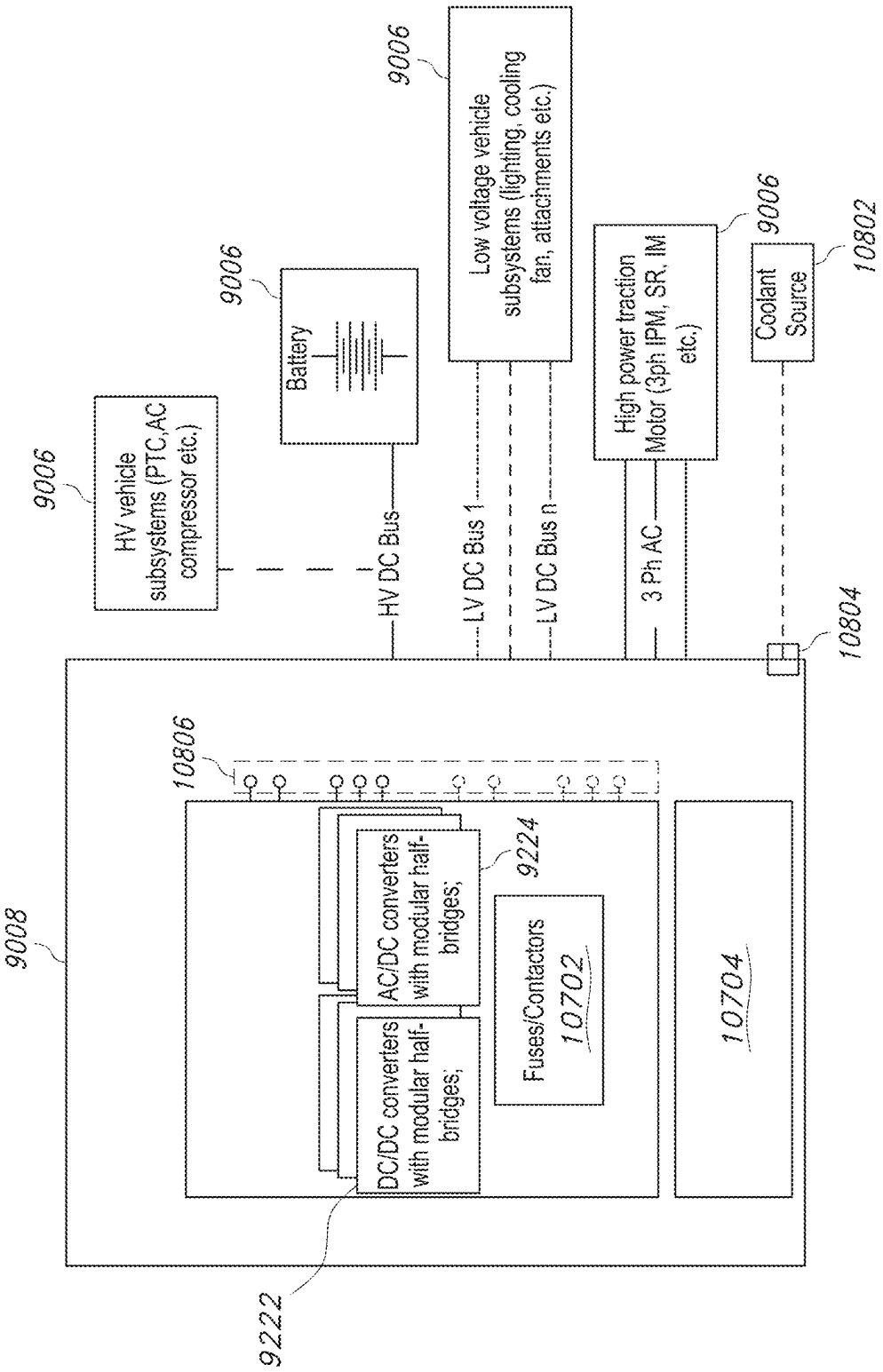
9006
HV vehicle subsystems (PTC,AC compressor etc.)
9006
Battery
9006
Low voltage vehicle subsystems (lighting, cooling fan, attachments etc.)
9006
High power traction Motor (3ph IPM, SR, IM etc.)
10802
Coolant Source
HV DC Bus
LV DC Bus 1
LV DC Bus n
3 Ph AC
10804
10806
9008
DC/DC converters with modular half-bridges;
AC/DC converters with modular half-bridges;
9224
Fuses/Contactors
10702
10704
9222

FIG. 108

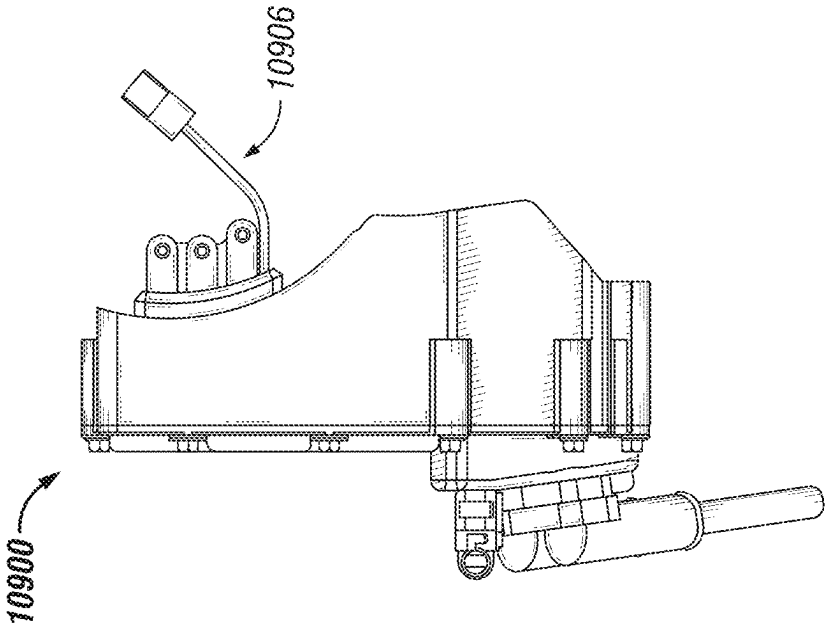

FIG. 109B

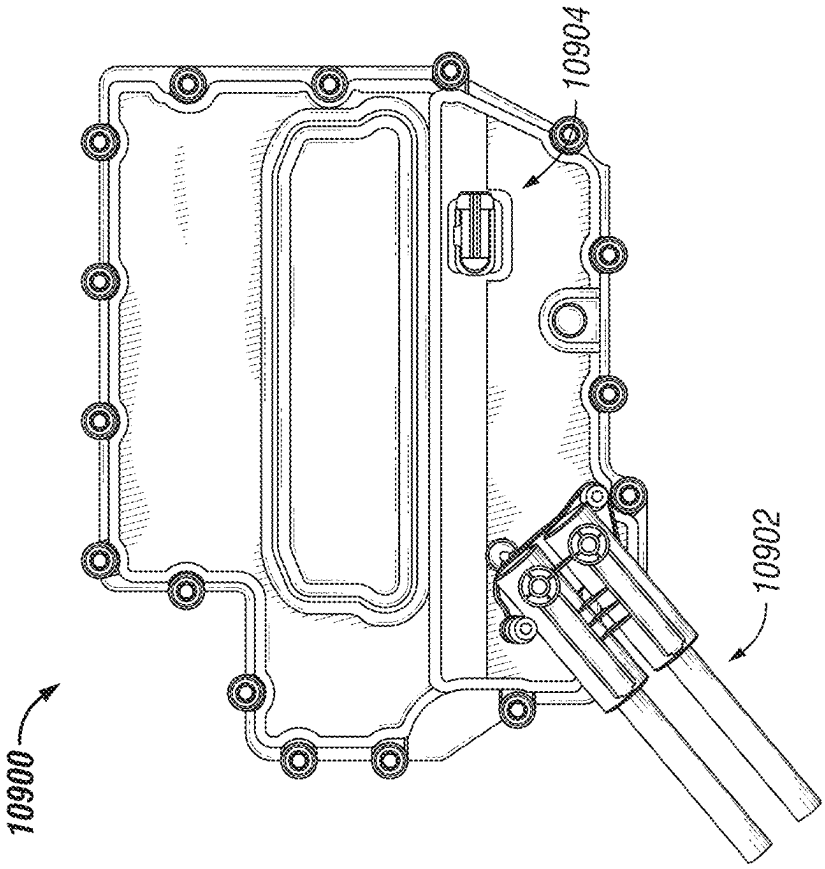

FIG. 109A

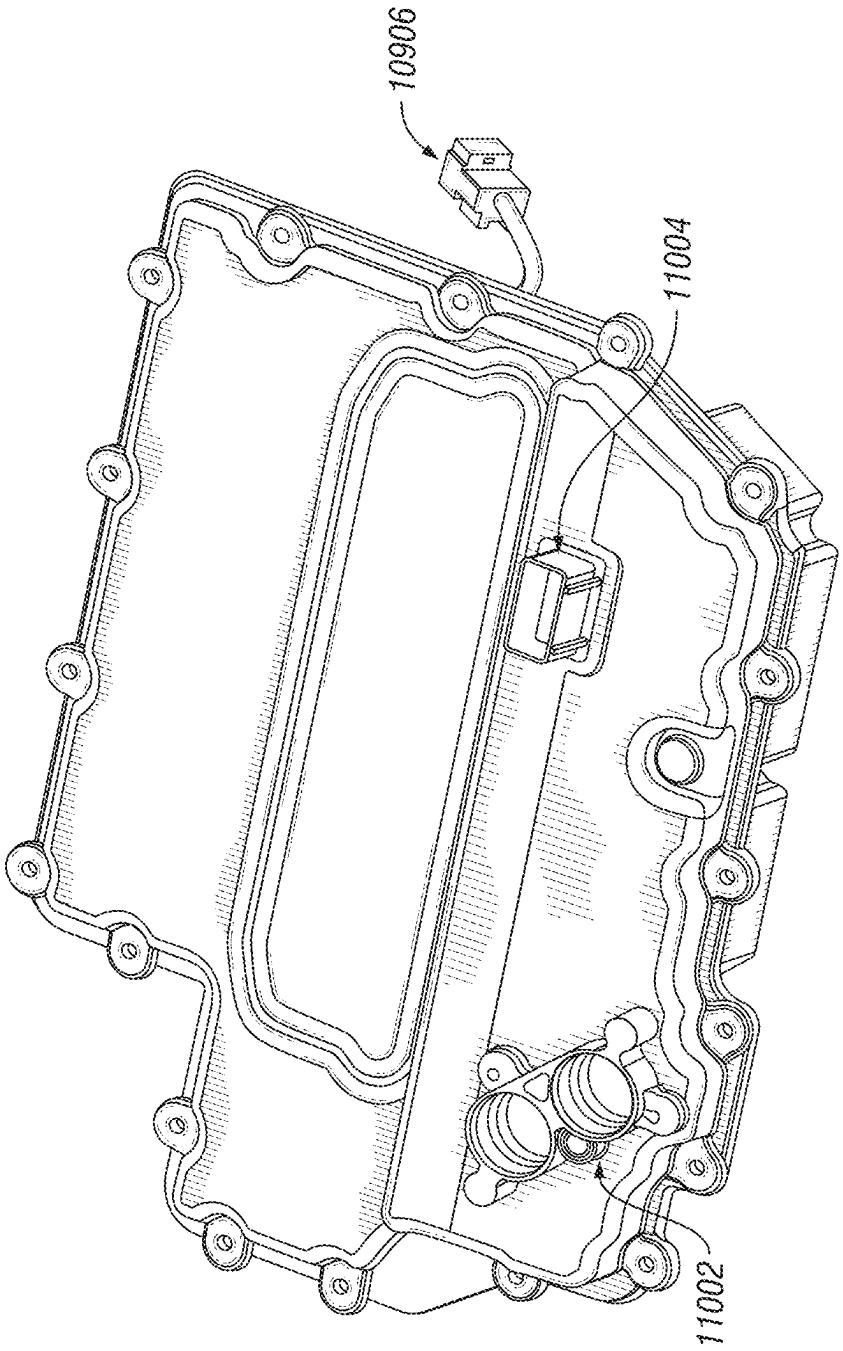

FIG. 110

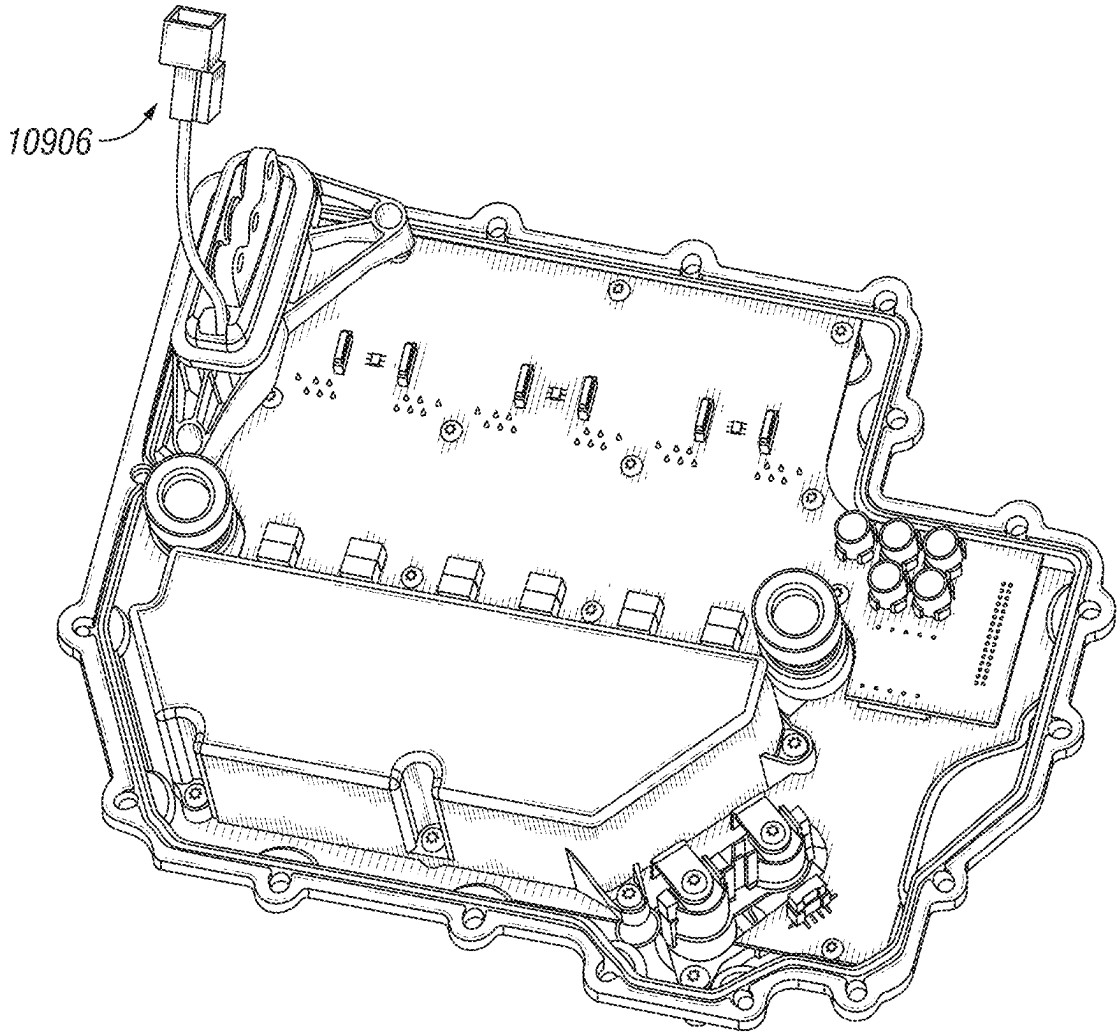

FIG. 111

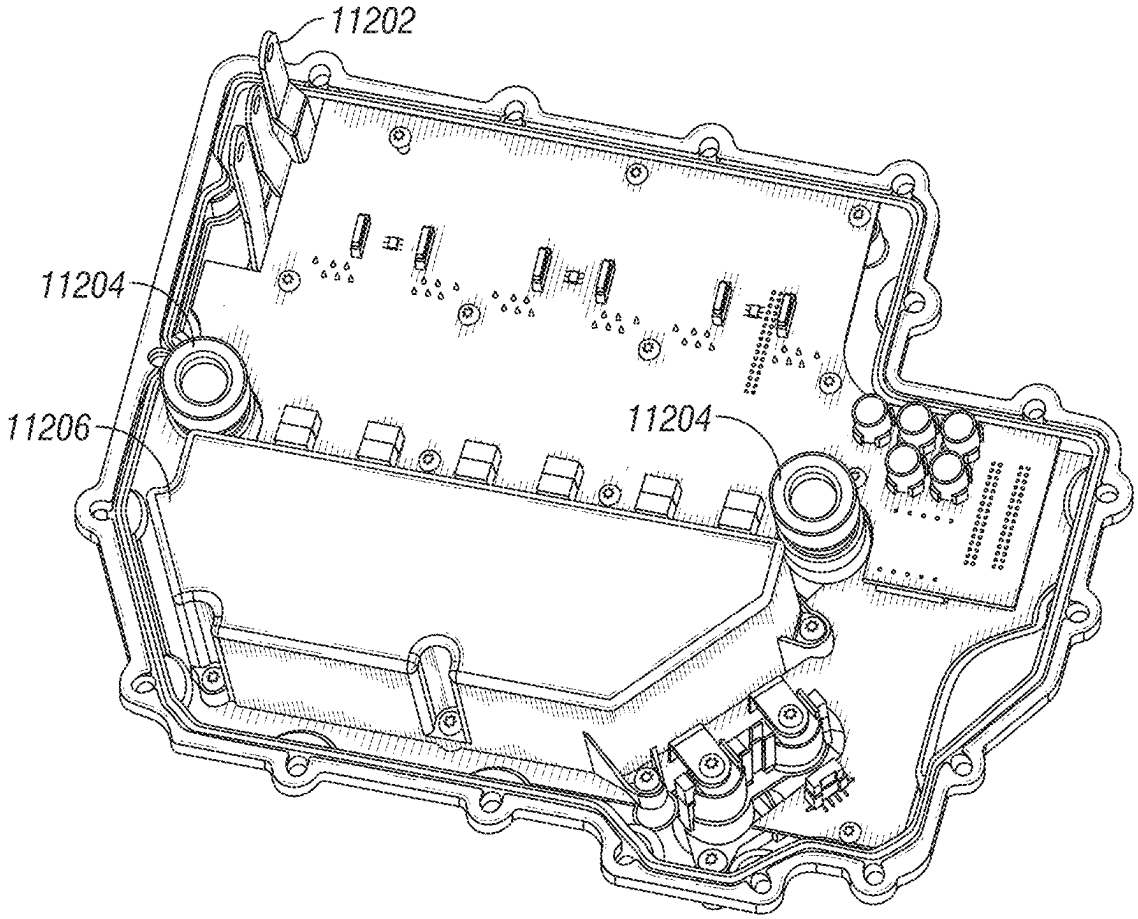

FIG. 112

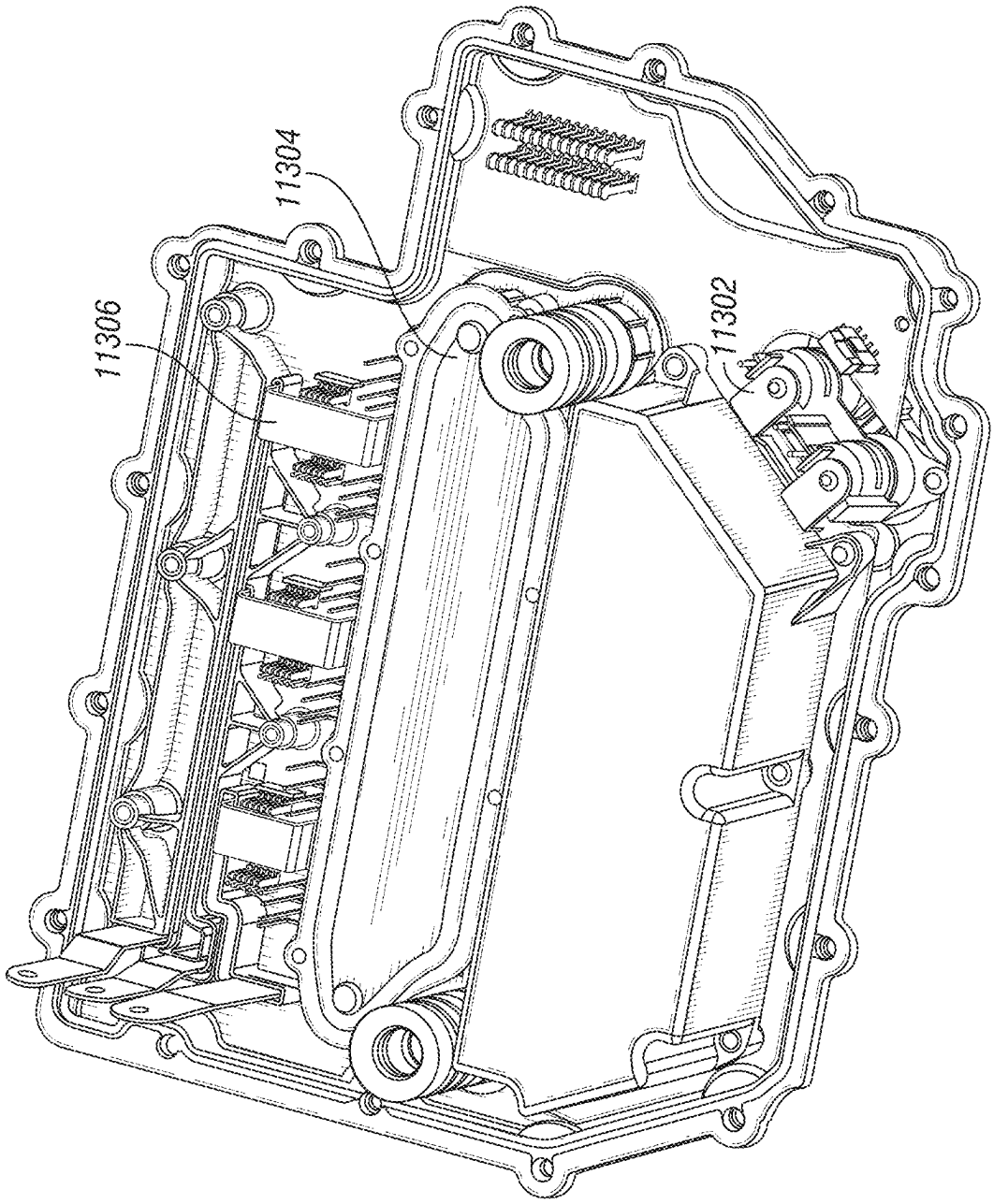

FIG. 113

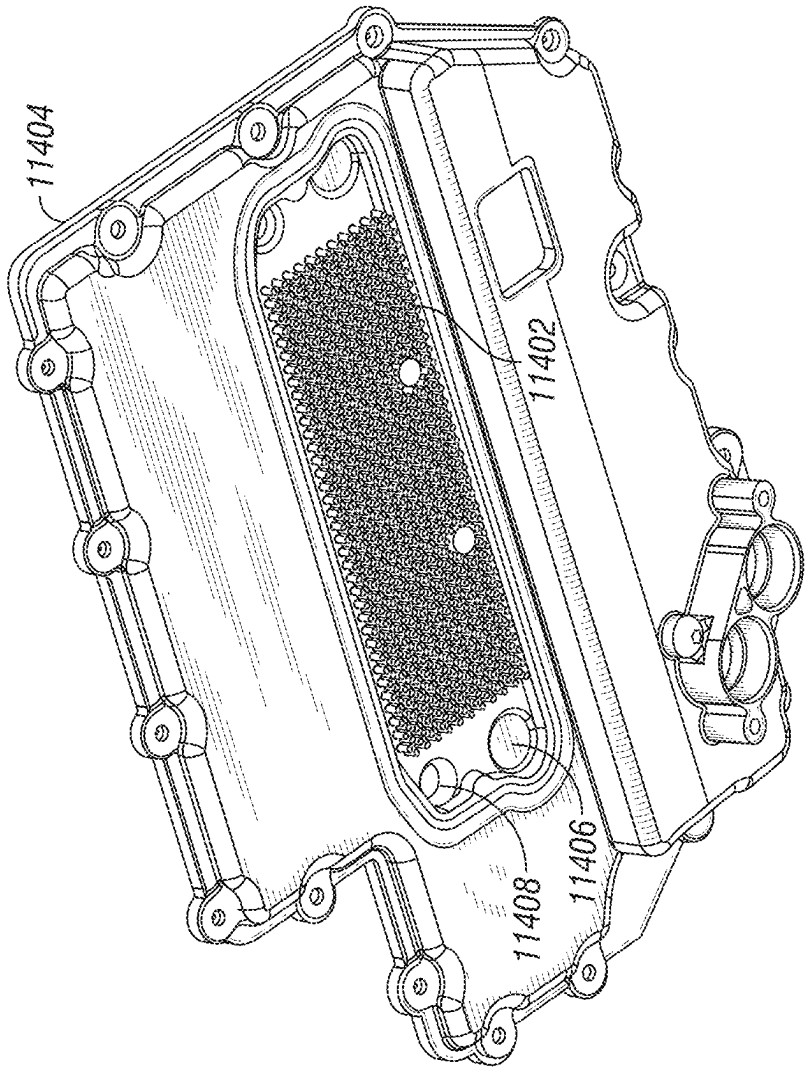

FIG. 114

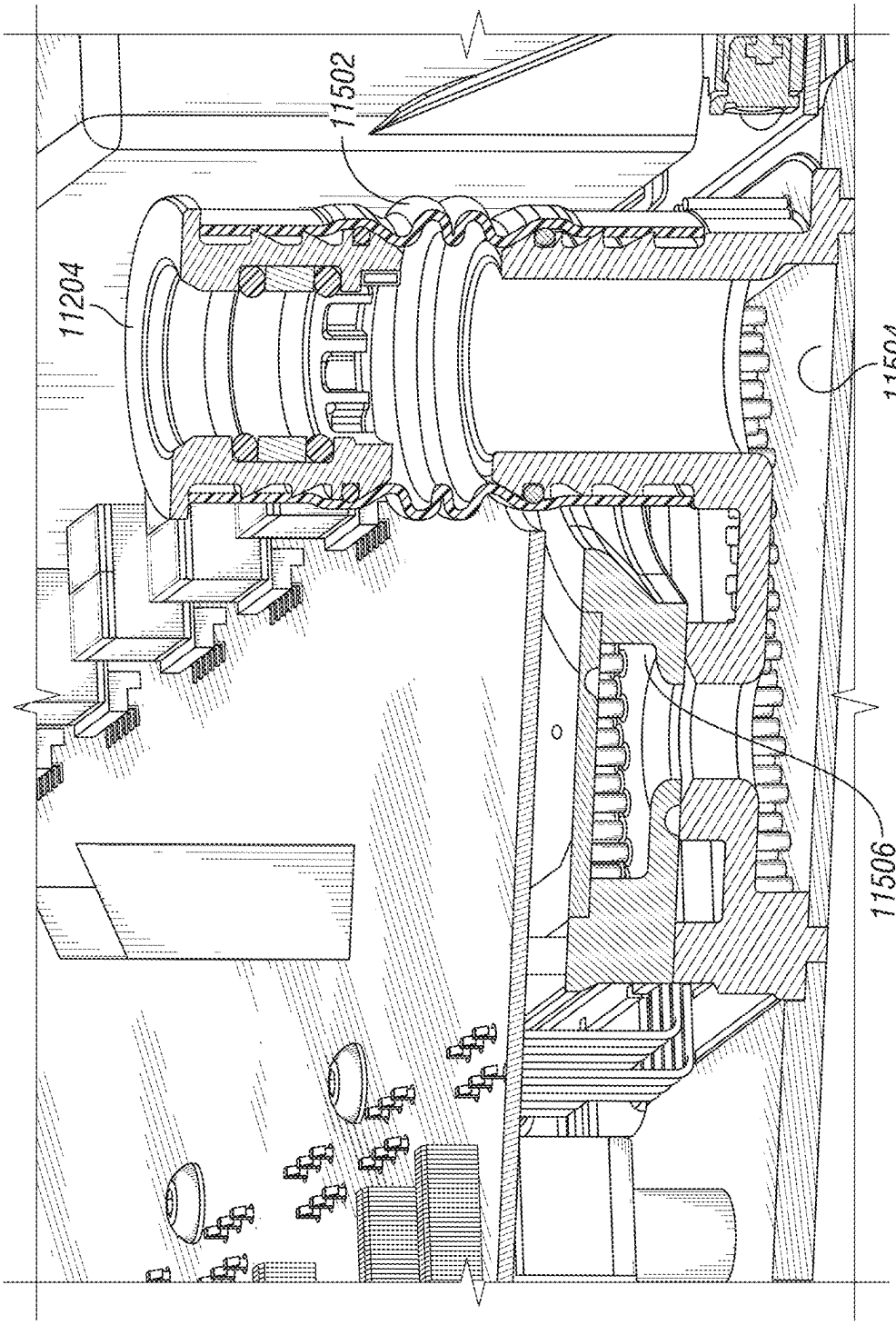

FIG. 115

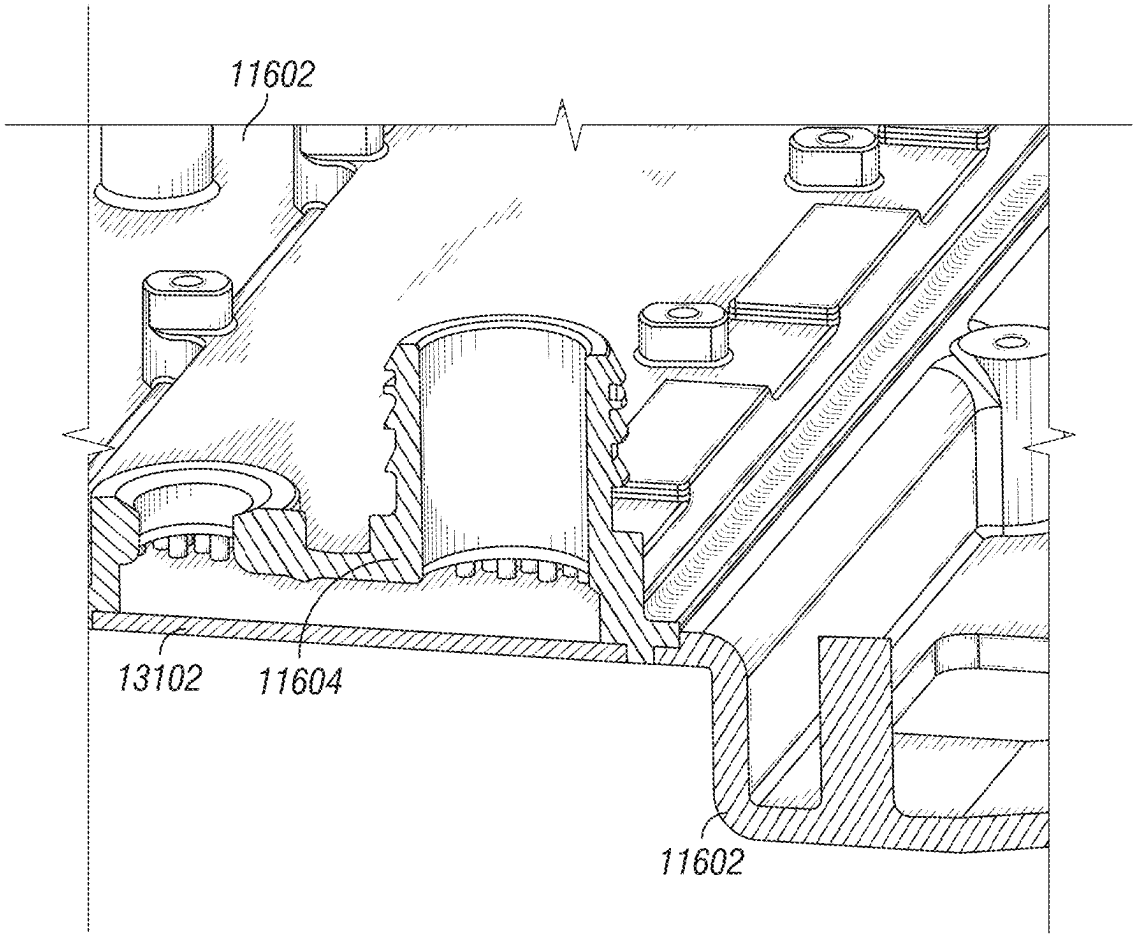

FIG. 116

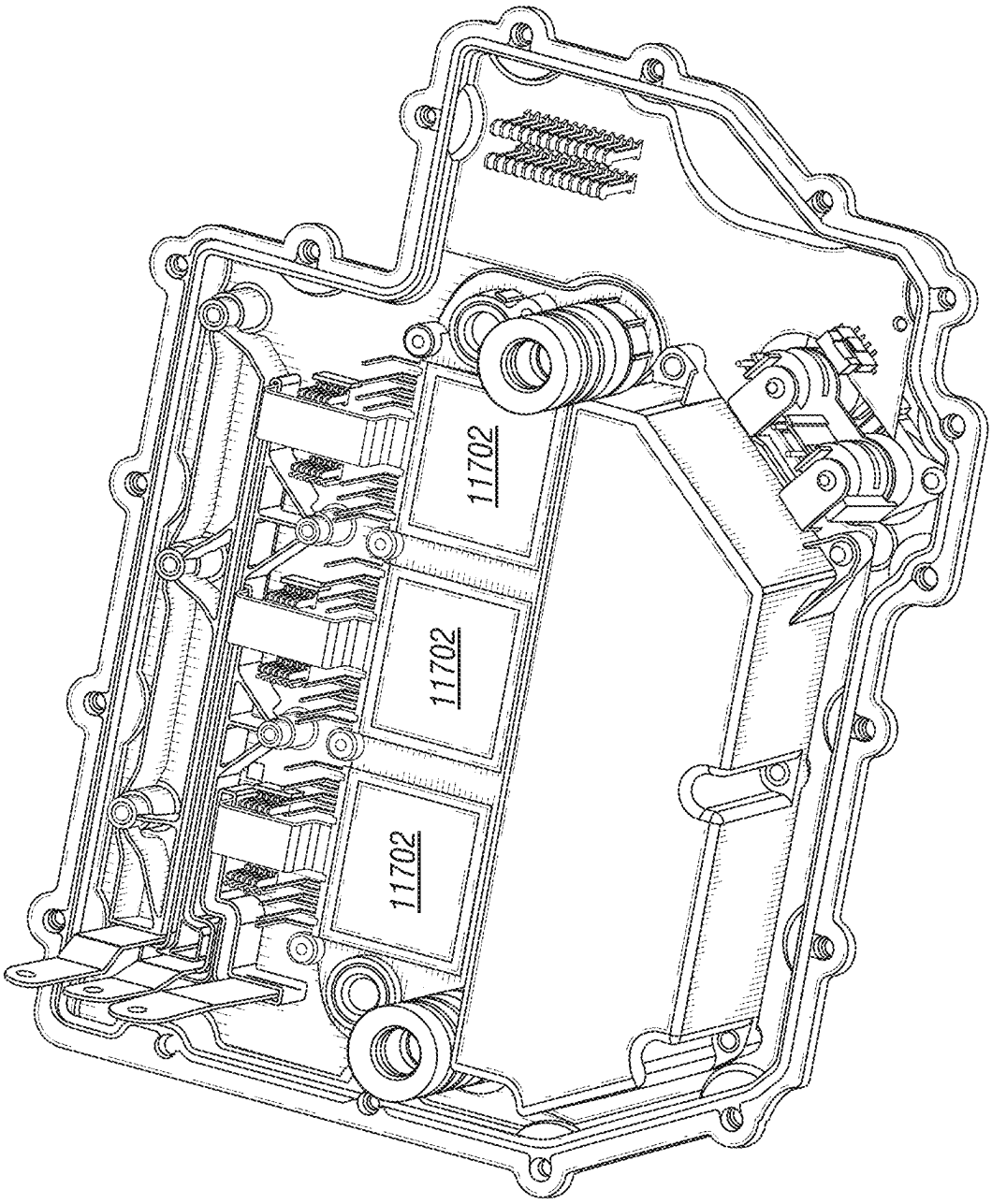

FIG. 117

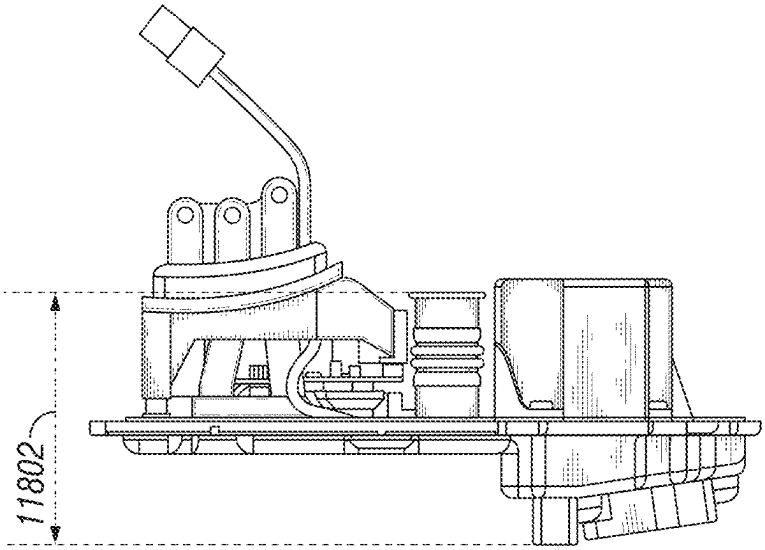

FIG. 118B

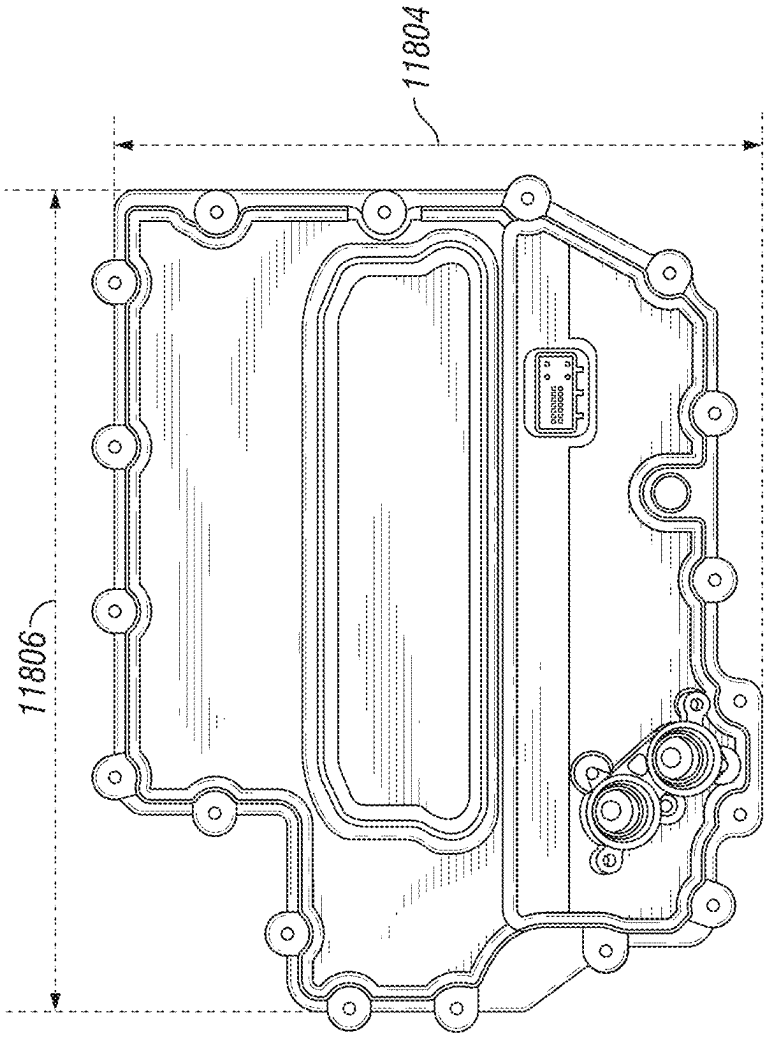

FIG. 118A

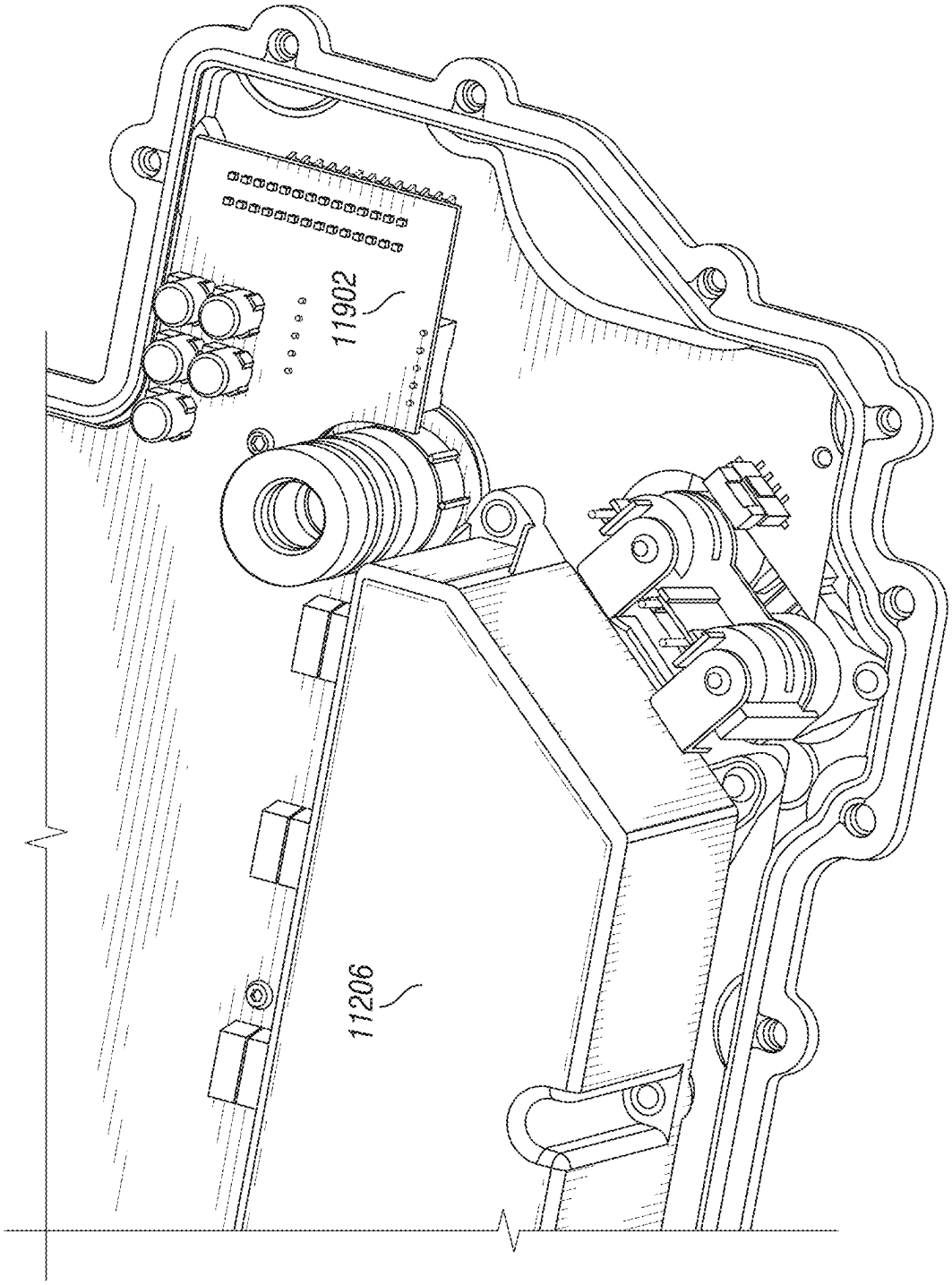

FIG. 119

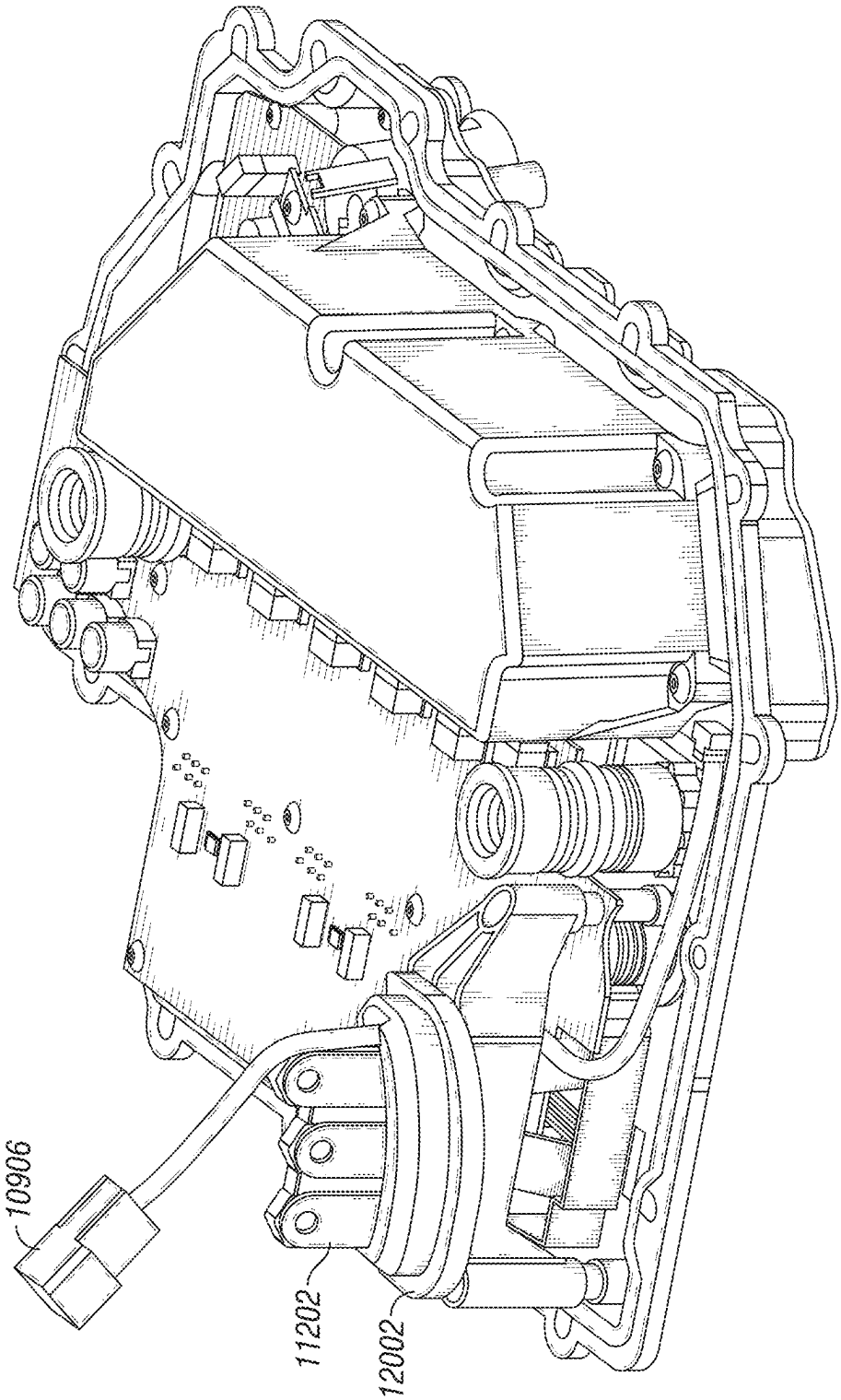

FIG. 120

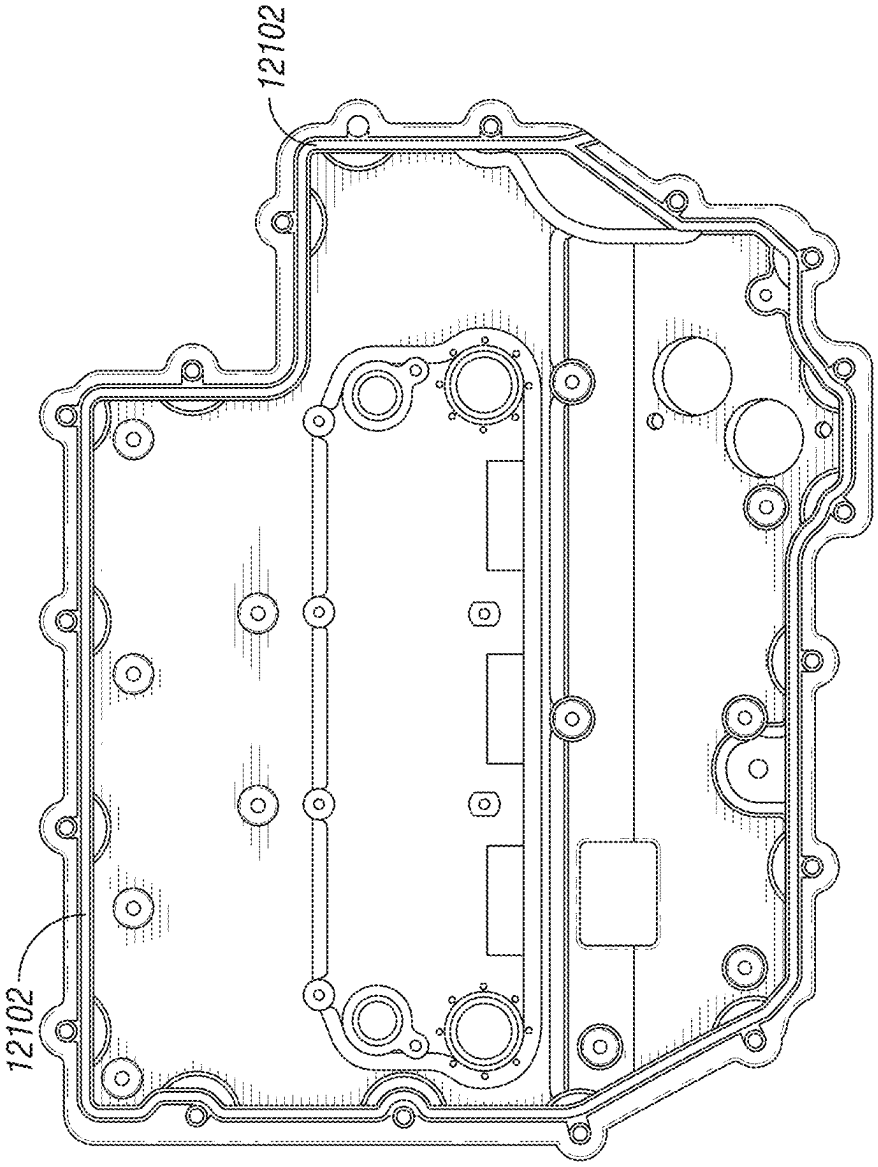

FIG. 121

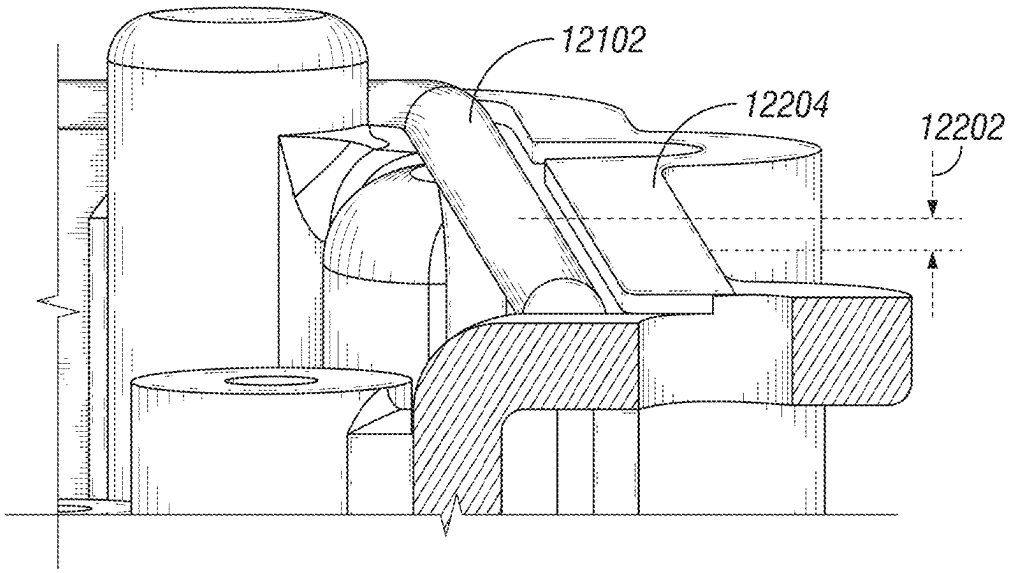

FIG. 122

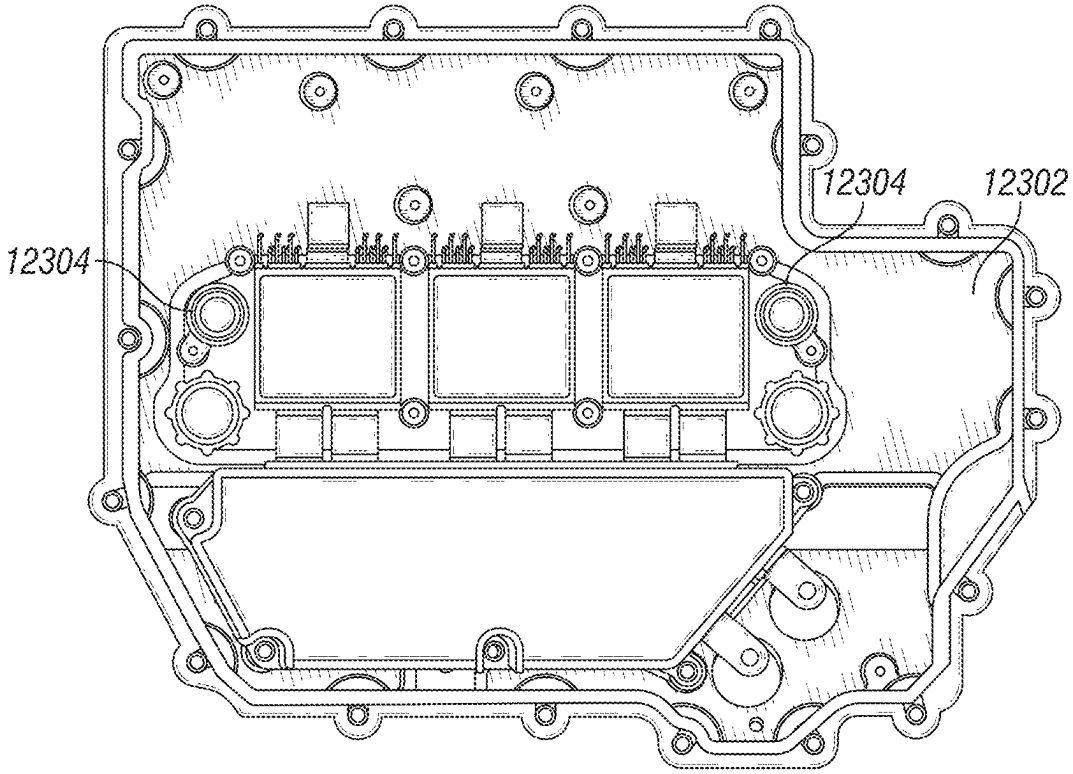

FIG. 123

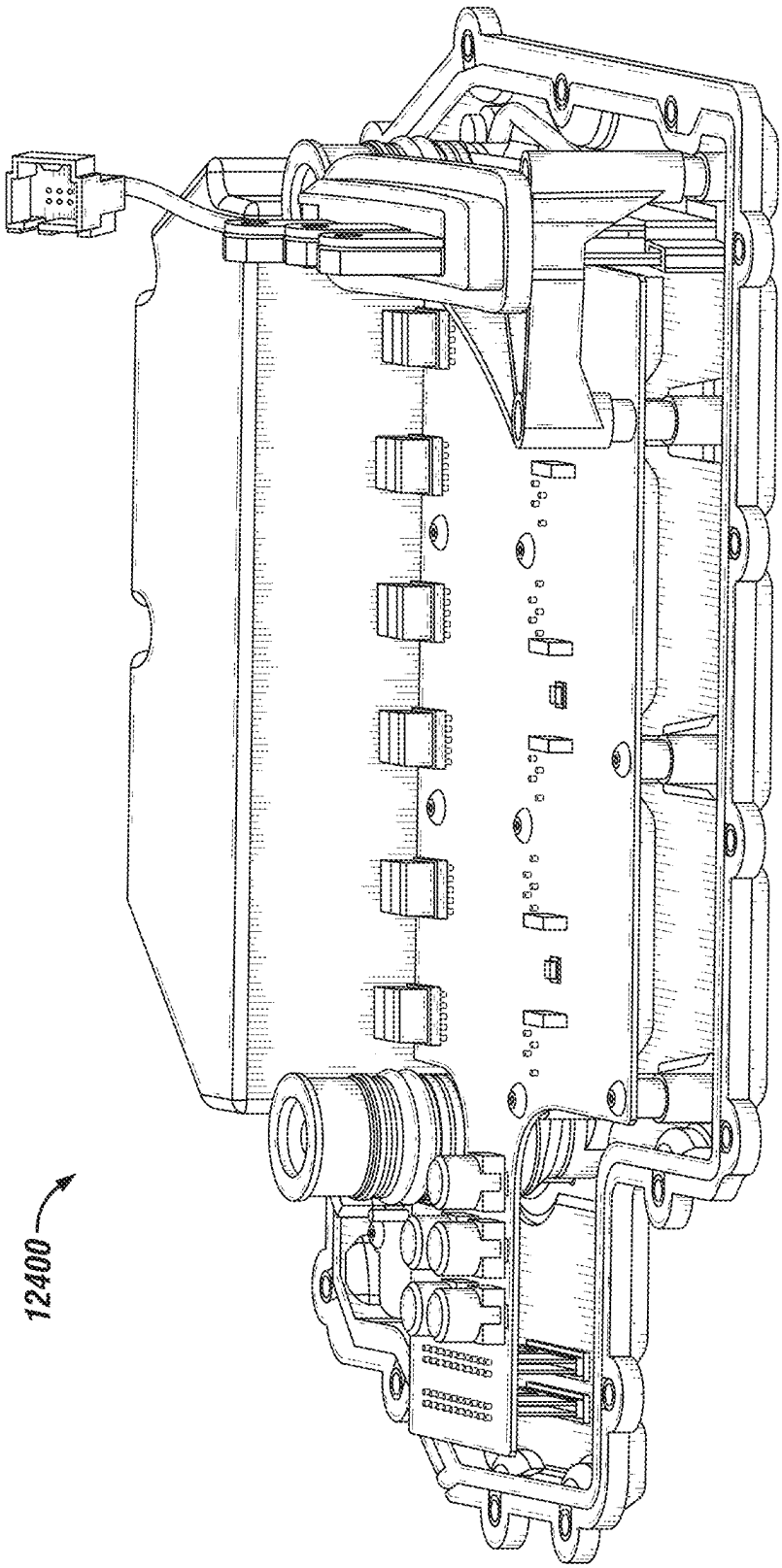

FIG. 124

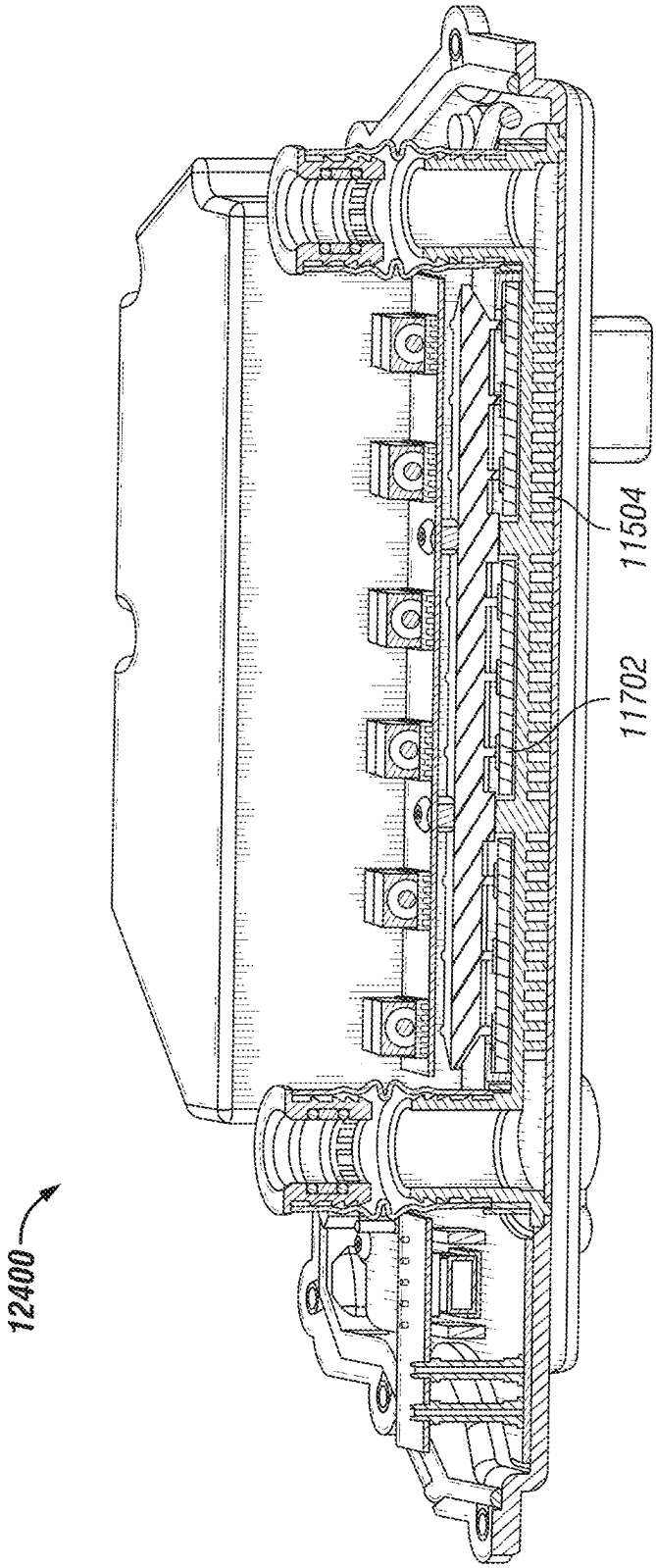

FIG. 125

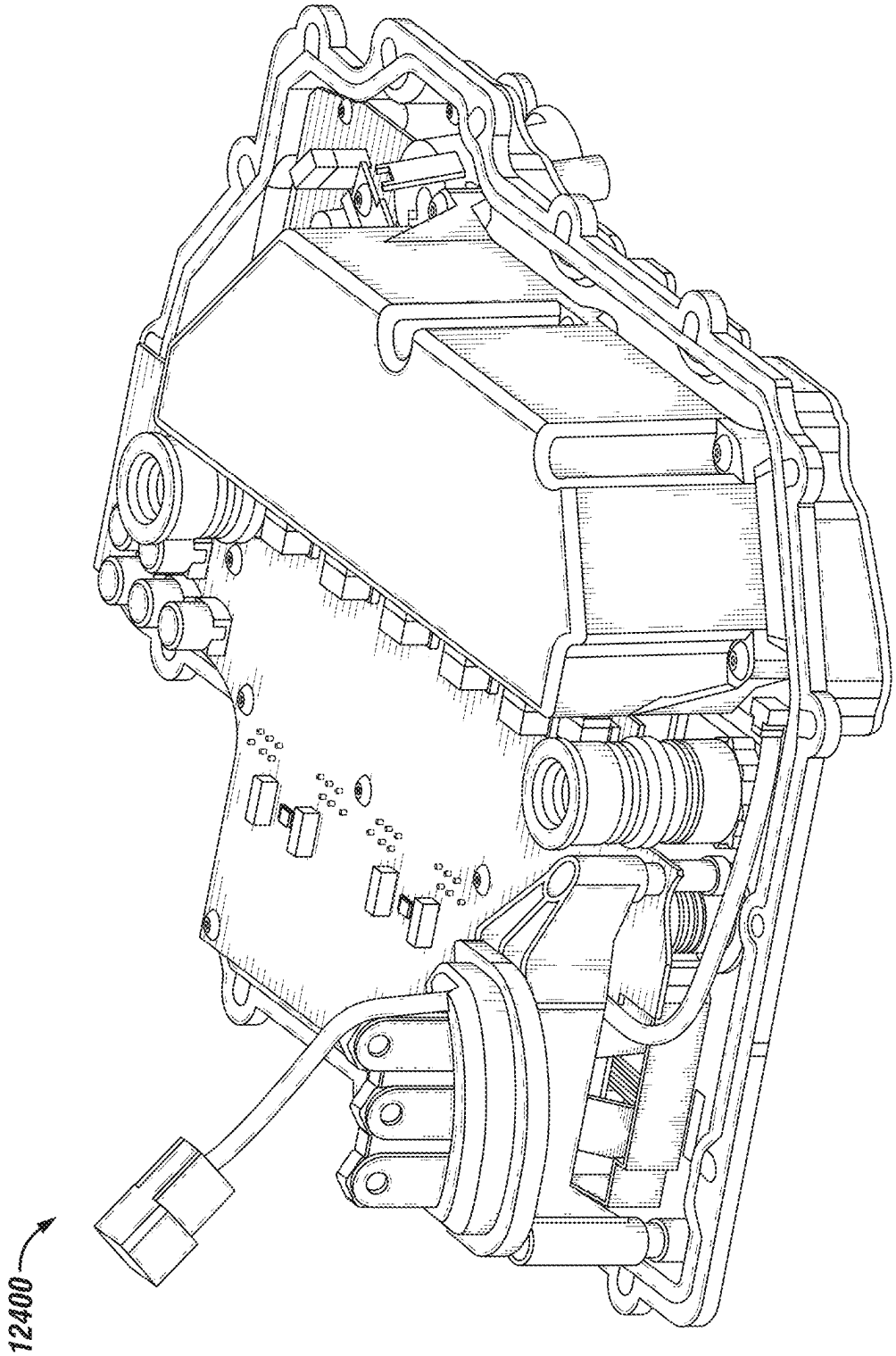

FIG. 126

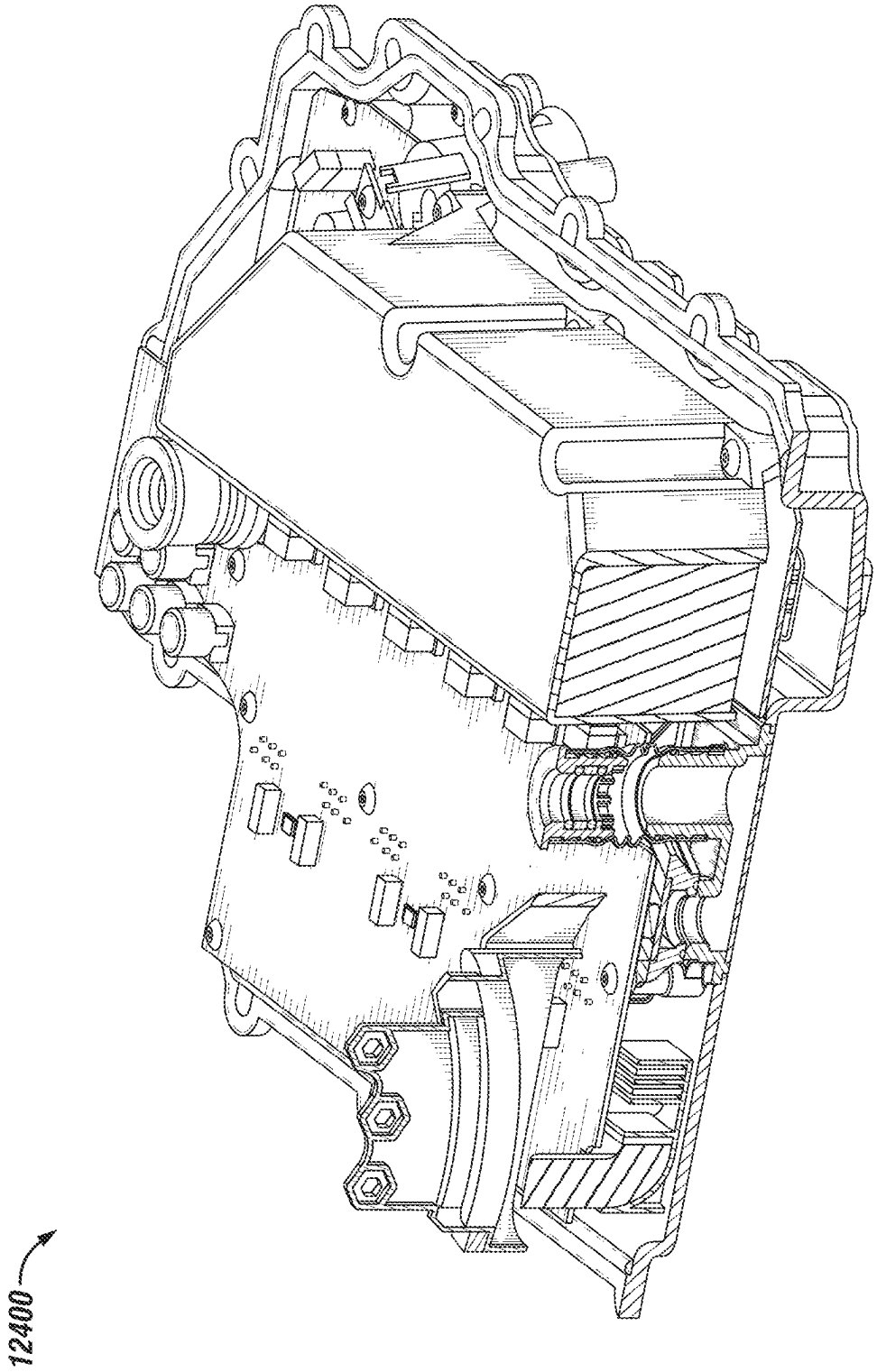

FIG. 127

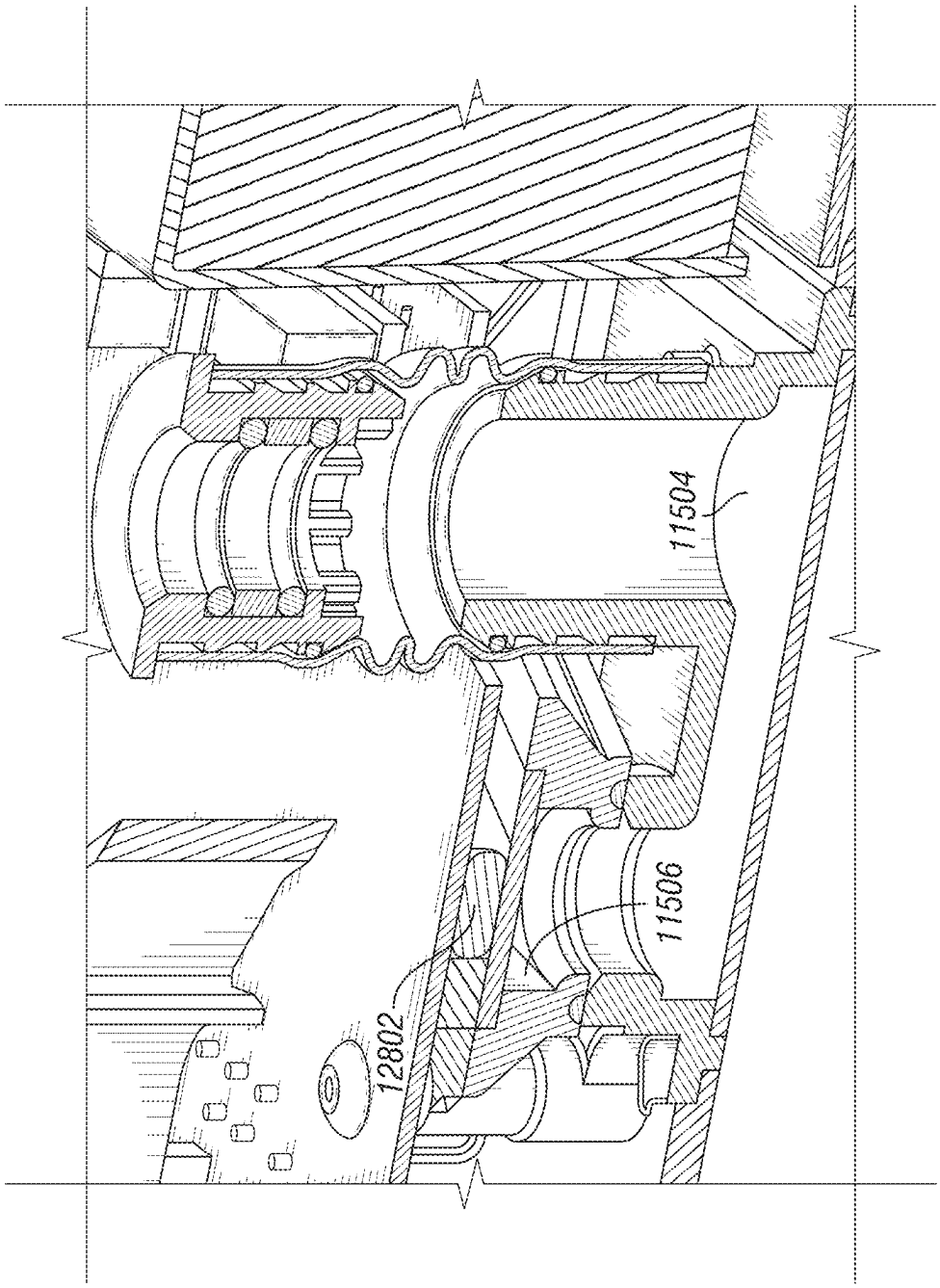

FIG. 128

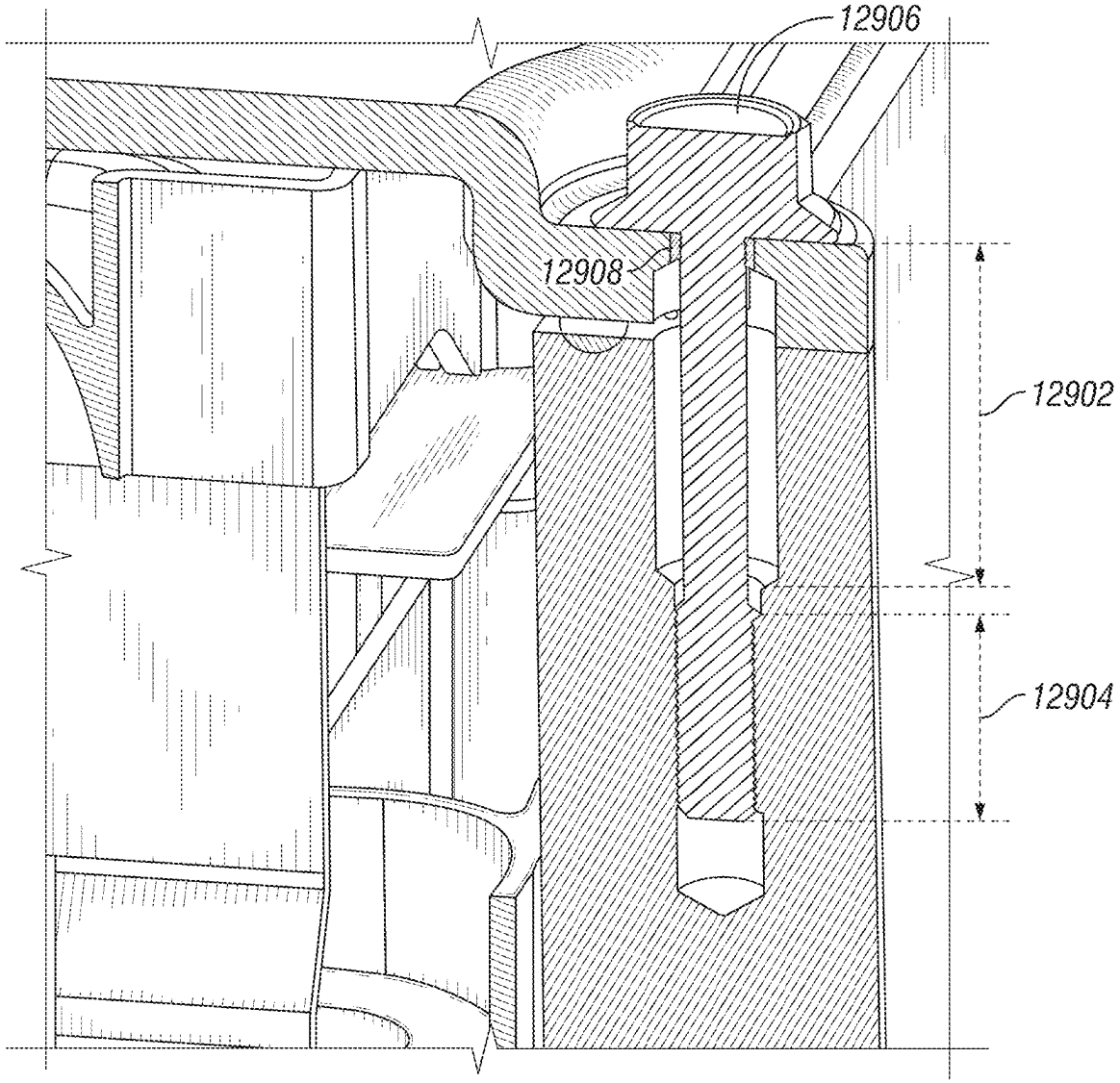

FIG. 129

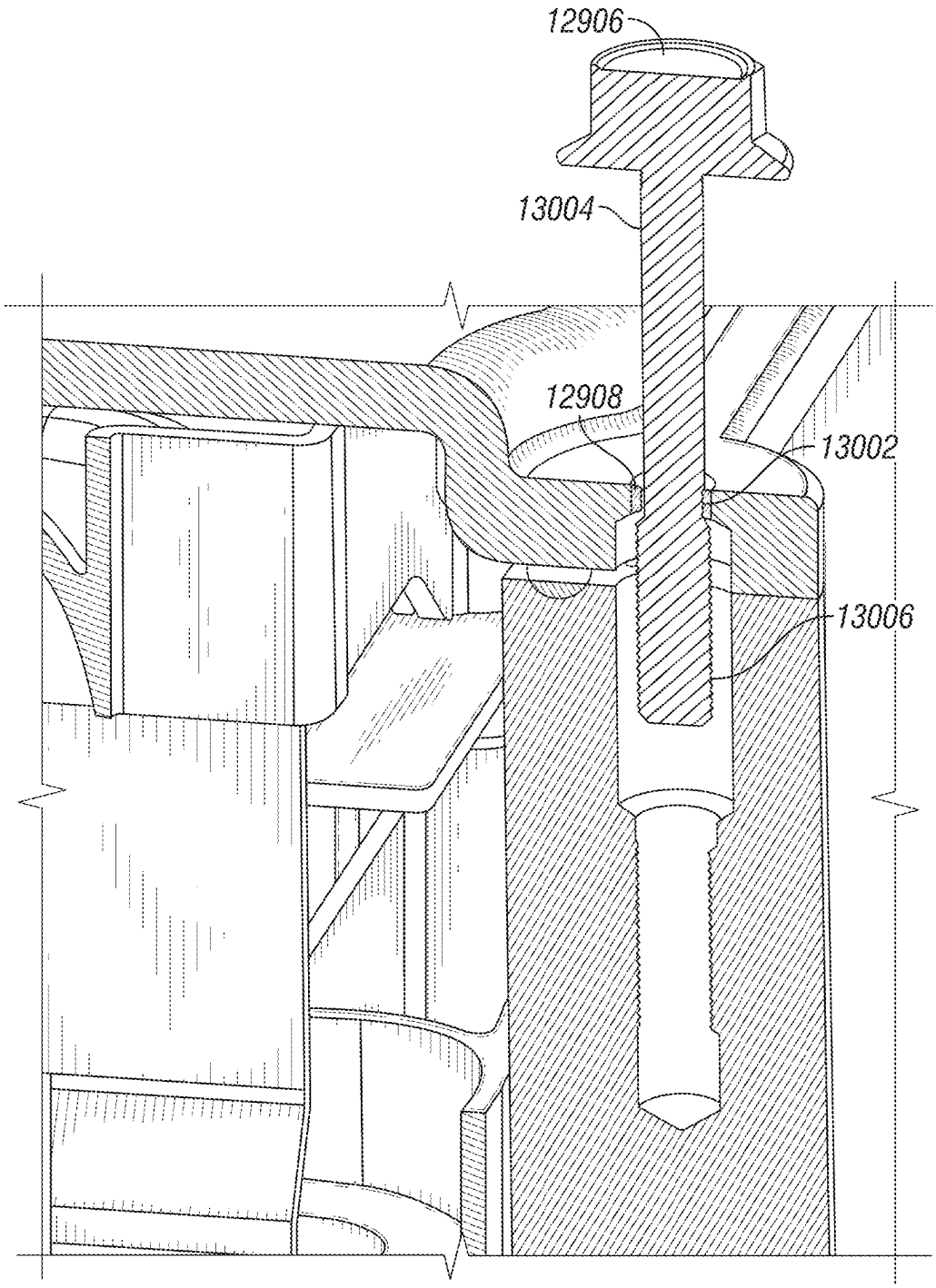

FIG. 130

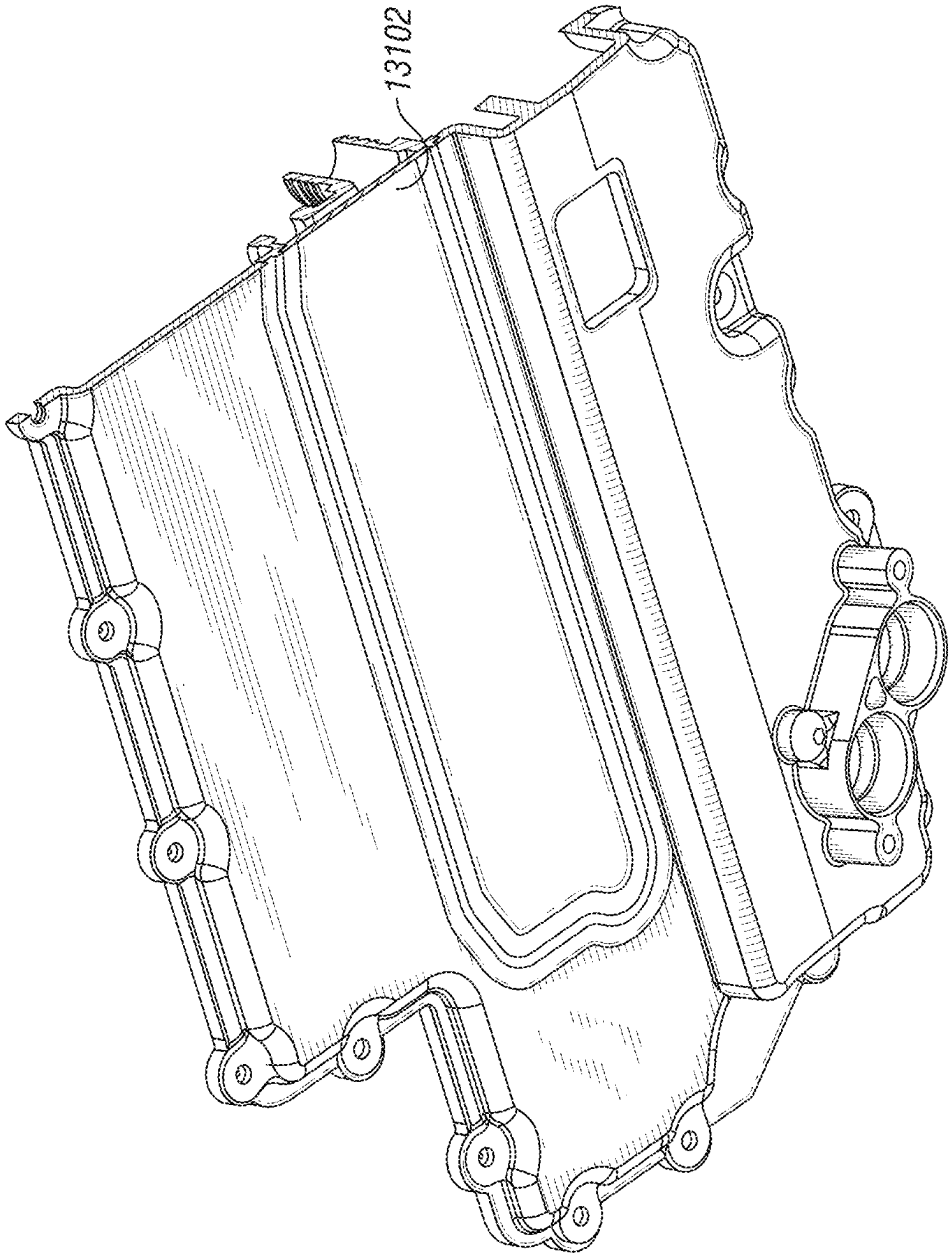

FIG. 131

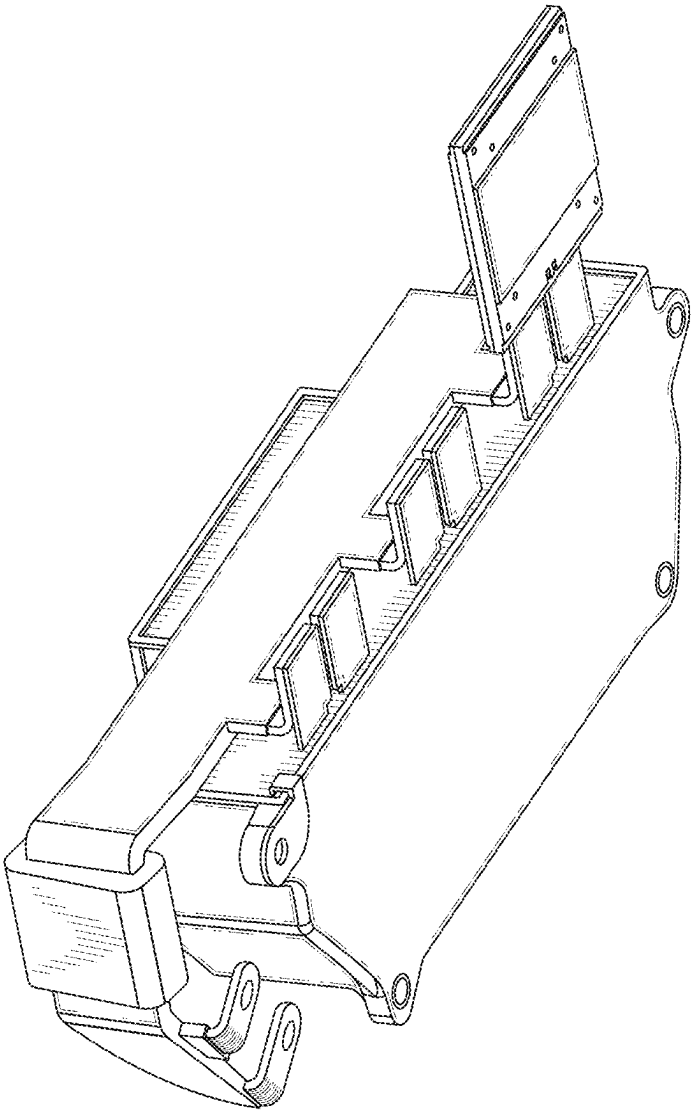

FIG. 132
(Prior Art)

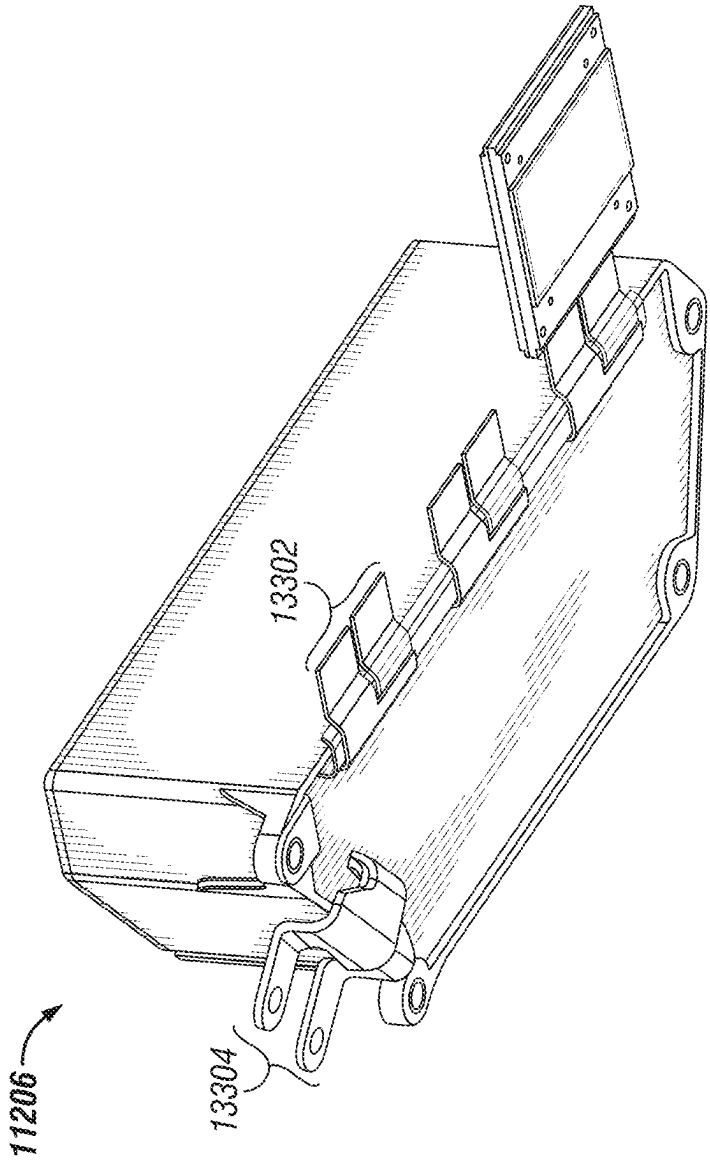

FIG. 133

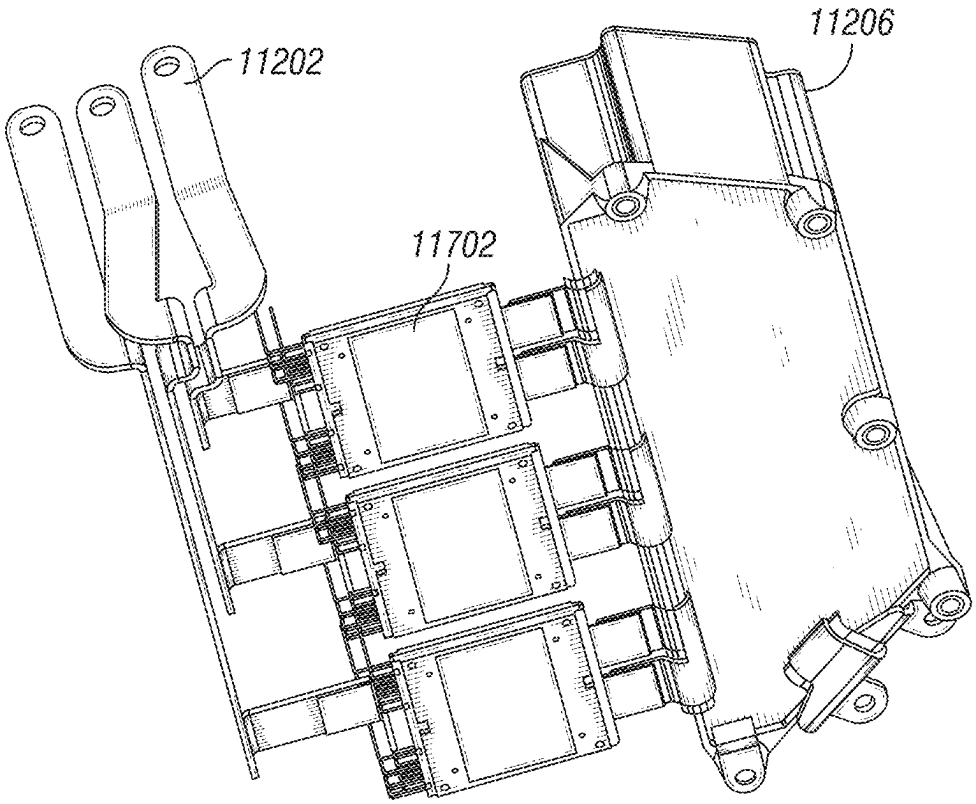

FIG. 134

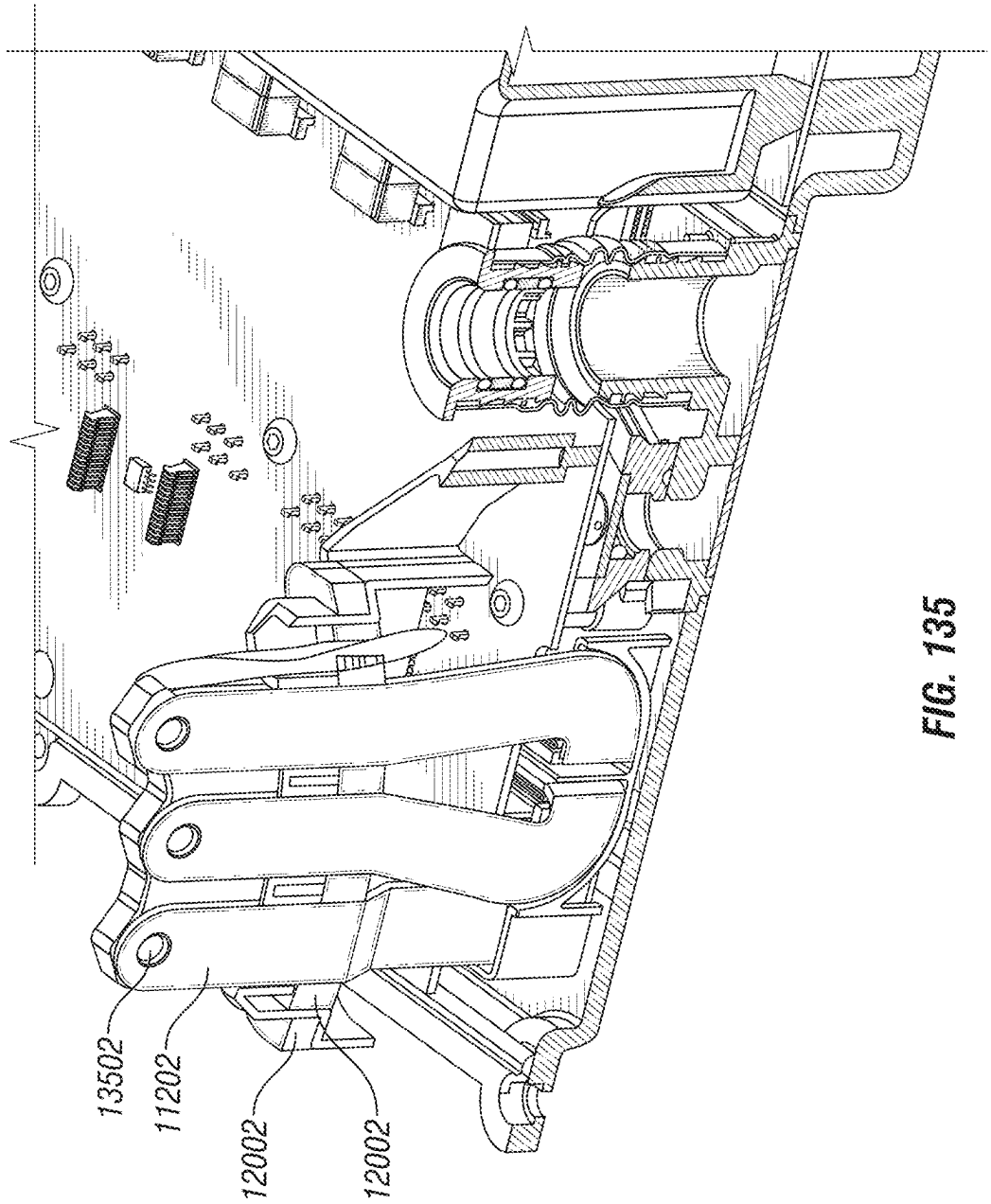

FIG. 135

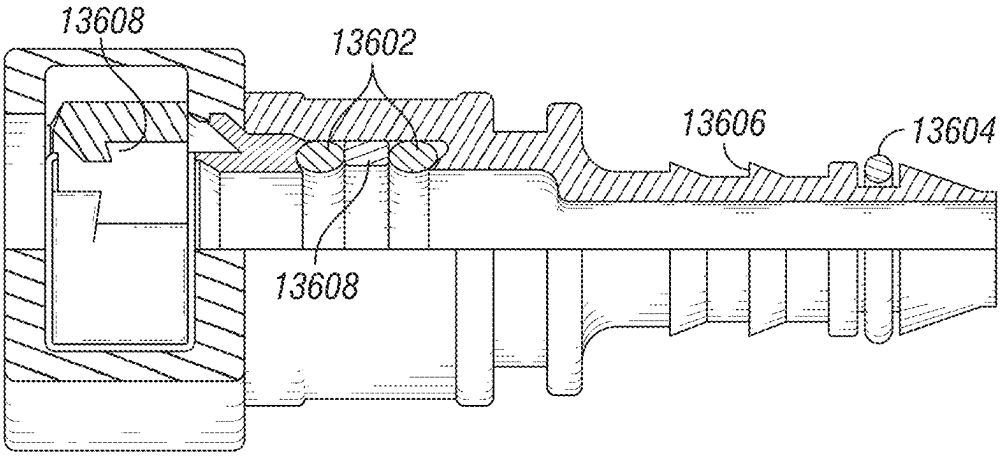

FIG. 136
(Prior Art)

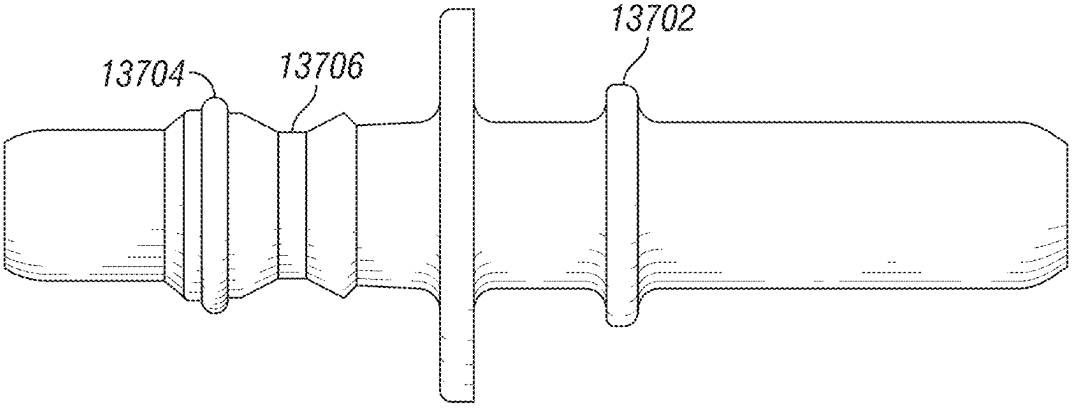

FIG. 137
(Prior Art)

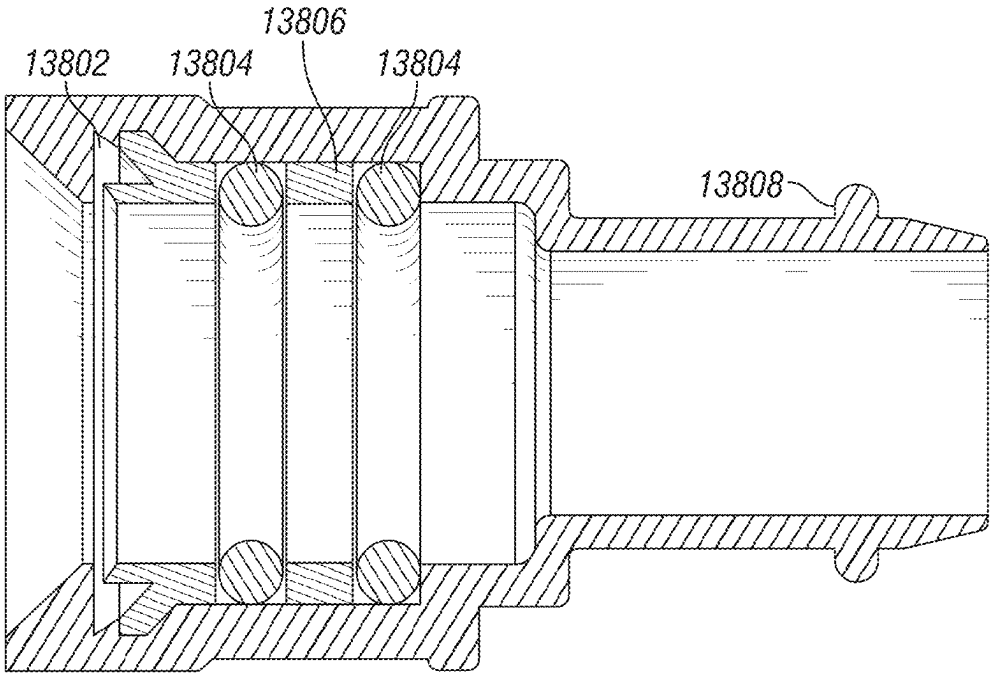

FIG. 138

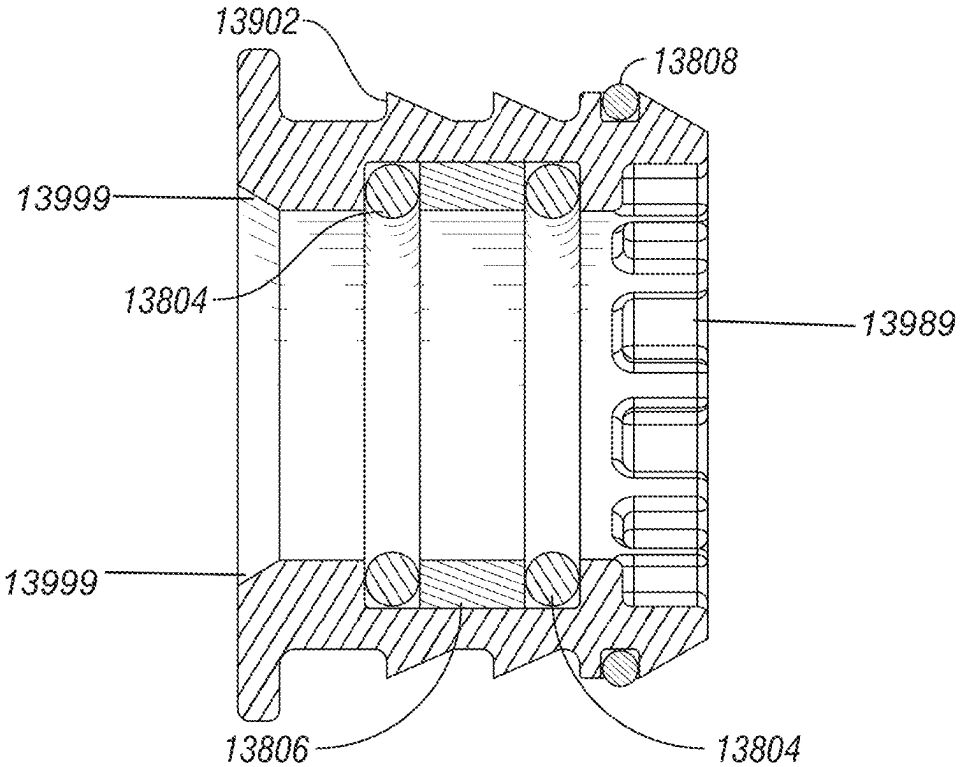

FIG. 139

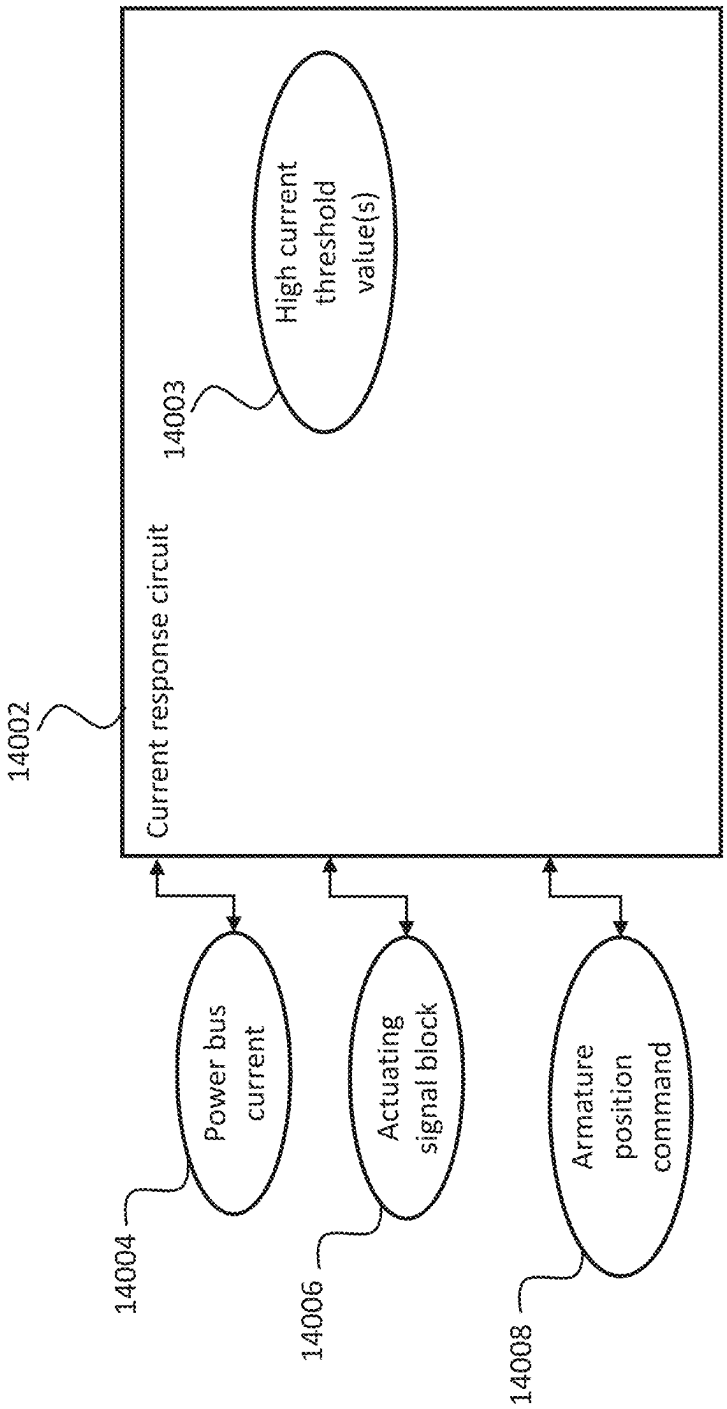
14002
Current response circuit
14003
High current threshold value(s)
14004
Power bus current
14006
Actuating signal block
14008
Armature position command

Fig. 140

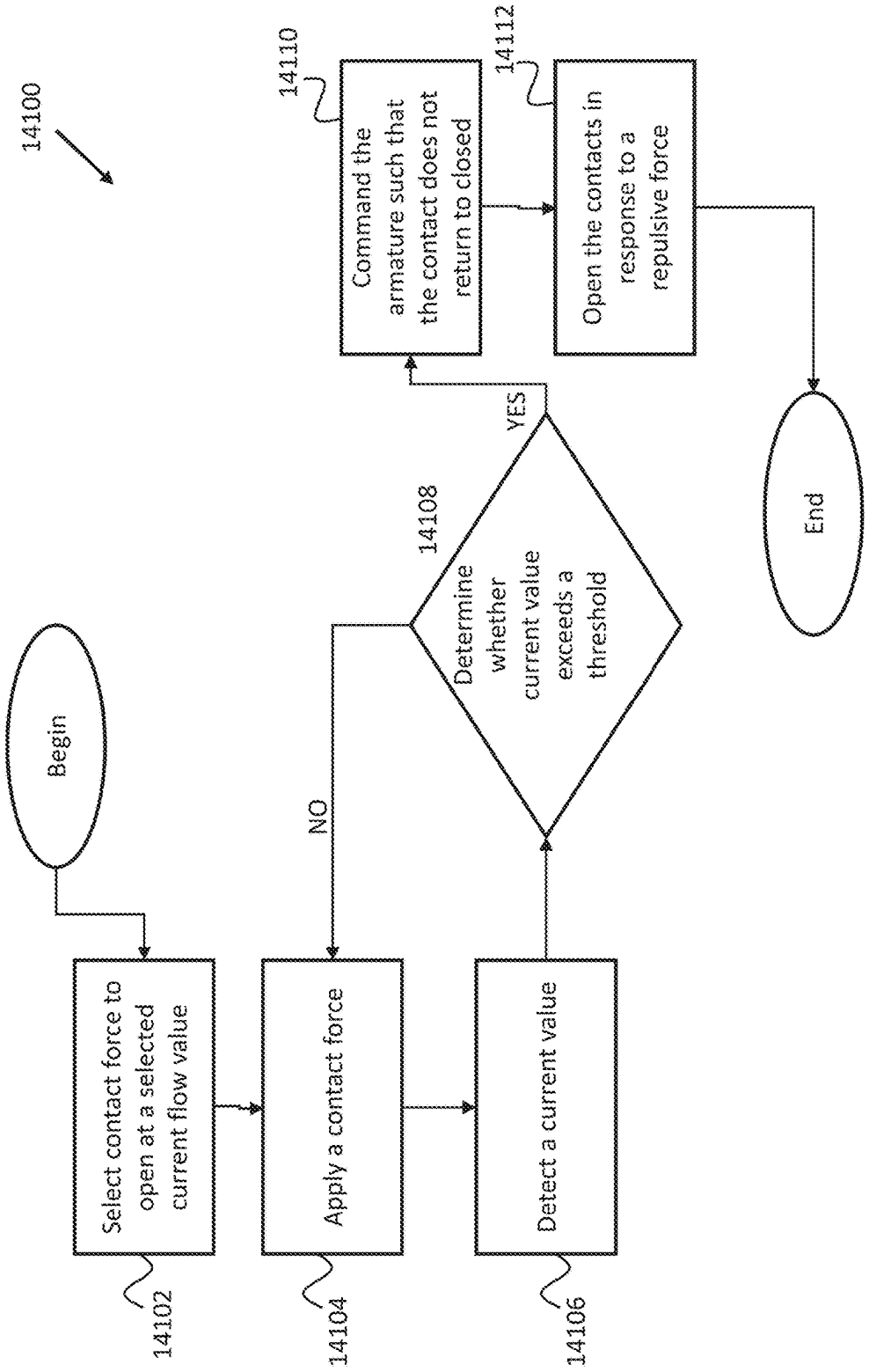
14100
Begin
Select contact force to open at a selected current flow value
14102
Apply a contact force
14104
Detect a current value
14106
Determine whether current value exceeds a threshold
14108
NO
YES
Command the armature such that the contact does not return to closed
14110
Open the contacts in response to a repulsive force
14112
End

Fig. 141

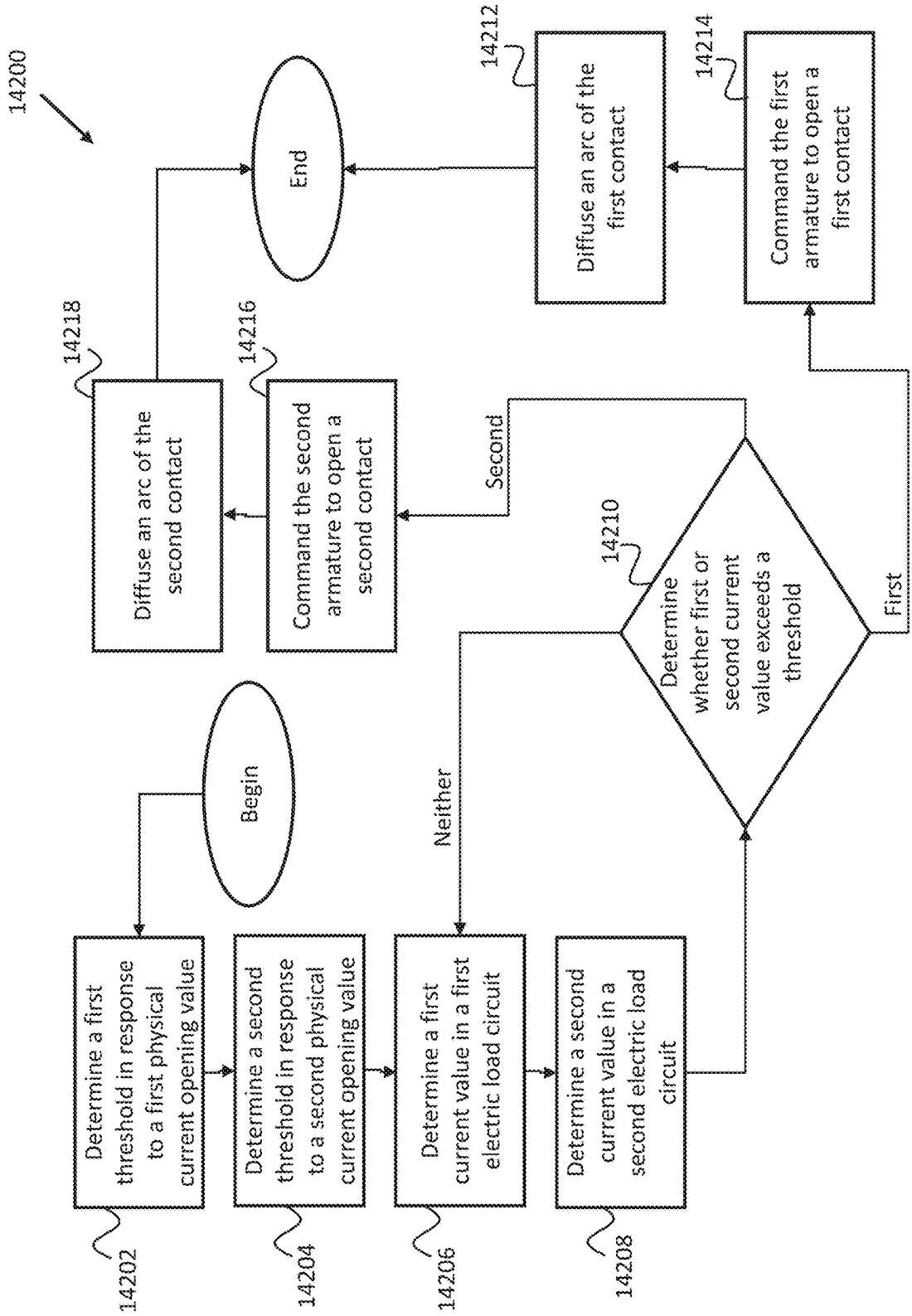
14200
Begin
Determine a first threshold in response to a first physical current opening value
14202
Determine a second threshold in response to a second physical current opening value
14204
Determine a first current value in a first electric load circuit
14206
Determine a second current value in a second electric load circuit
14208
Neither
Determine whether first or second current value exceeds a threshold
14210
Second
First
Command the second armature to open a second contact
14216
Diffuse an arc of the second contact
14218
Command the first armature to open a first contact
14214
Diffuse an arc of the first contact
14212
End

Fig. 142

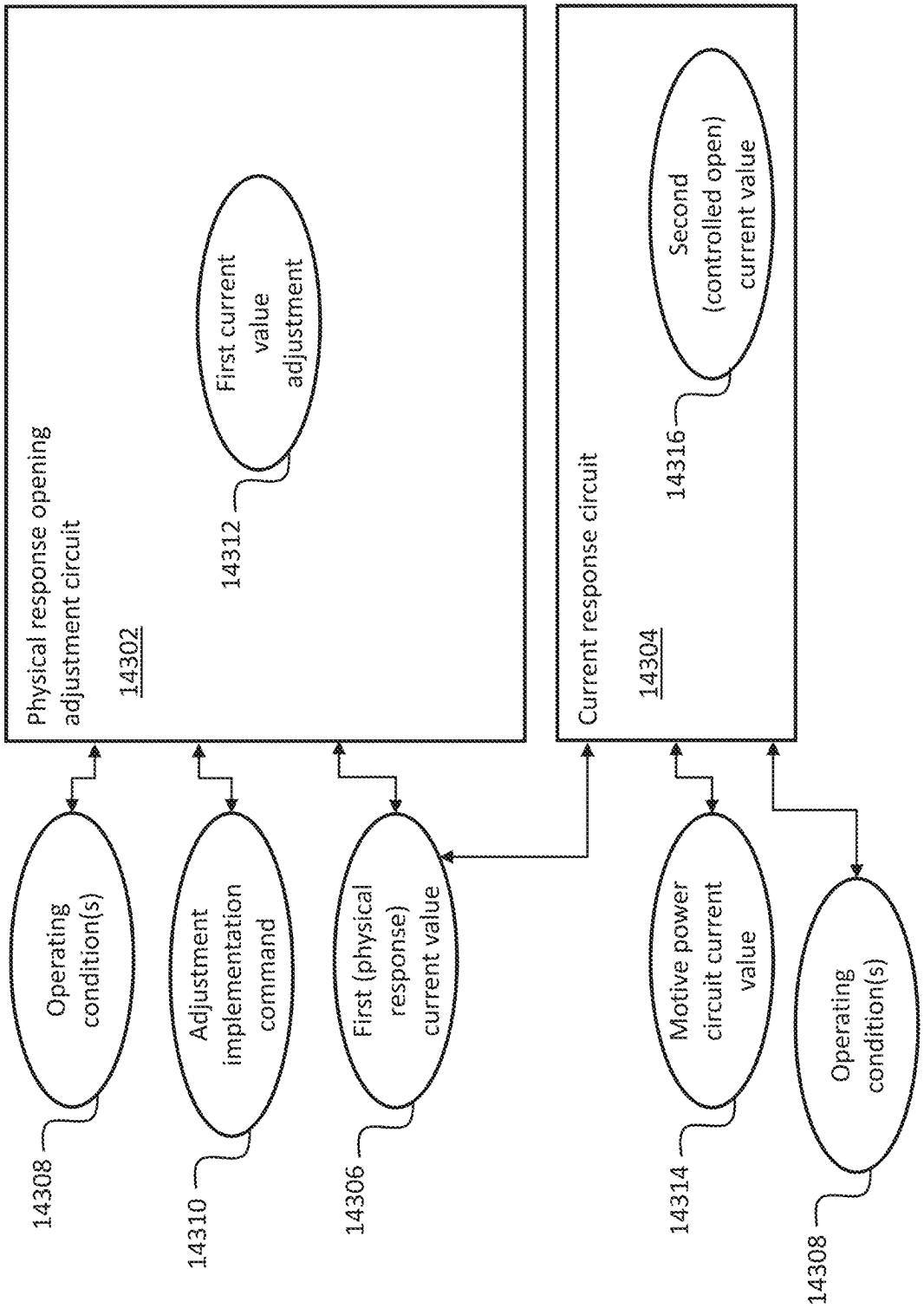
Physical response opening adjustment circuit
14302
First current value adjustment
14312
Current response circuit
14304
Second (controlled open) current value
14316
Operating condition(s)
14308
Adjustment implementation command
14310
First (physical response) current value
14306
Motive power circuit current value
14314
Operating condition(s)
14308

Fig. 143

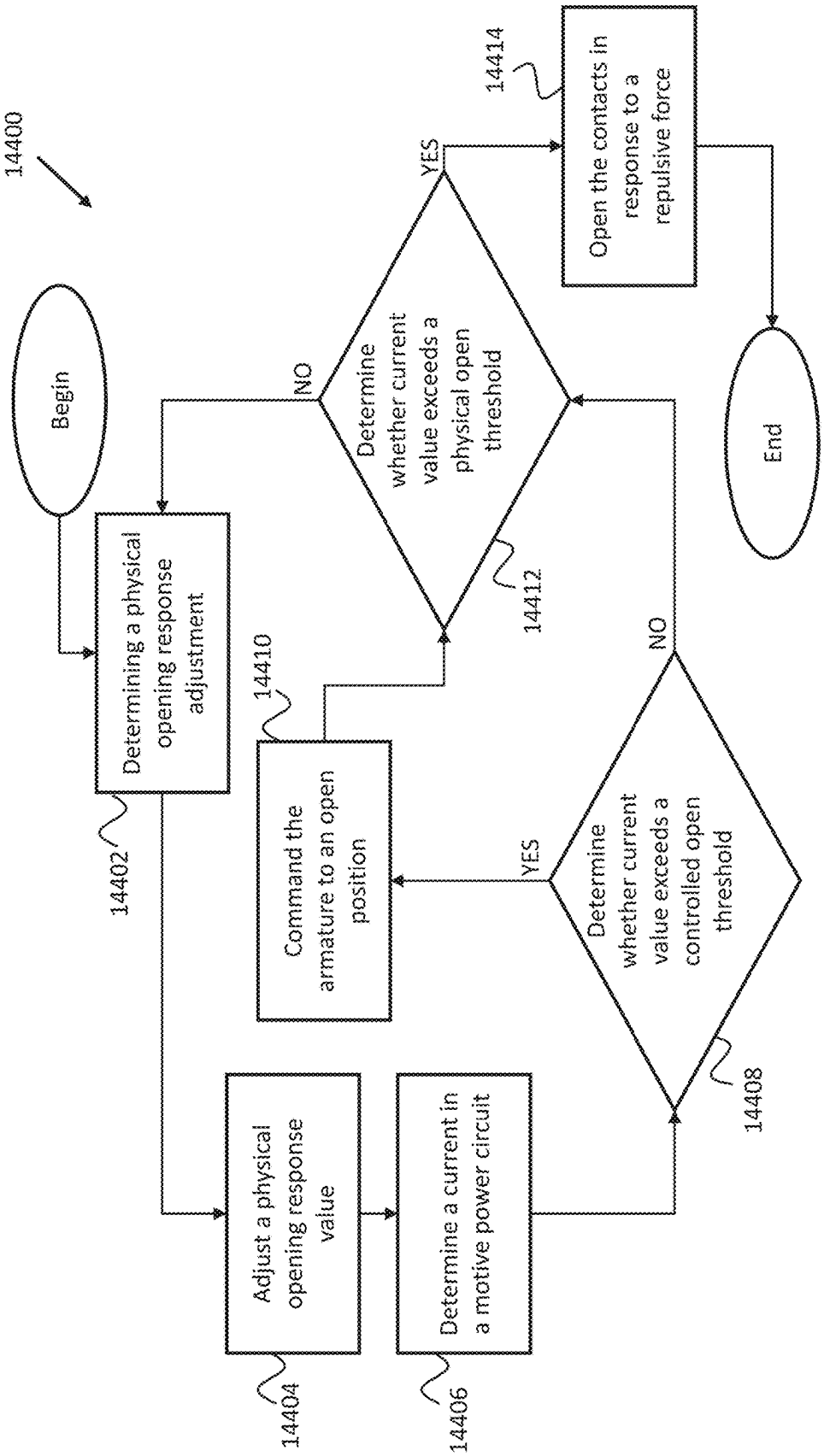
14400
Begin
Determining a physical opening response adjustment
14402
Adjust a physical opening response value
14404
Determine a current in a motive power circuit
14406
Determine whether current value exceeds a controlled open threshold
14408
NO
YES
Command the armature to an open position
14410
Determine whether current value exceeds a physical open threshold
14412
NO
YES
Open the contacts in response to a repulsive force
14414
End

Fig. 144

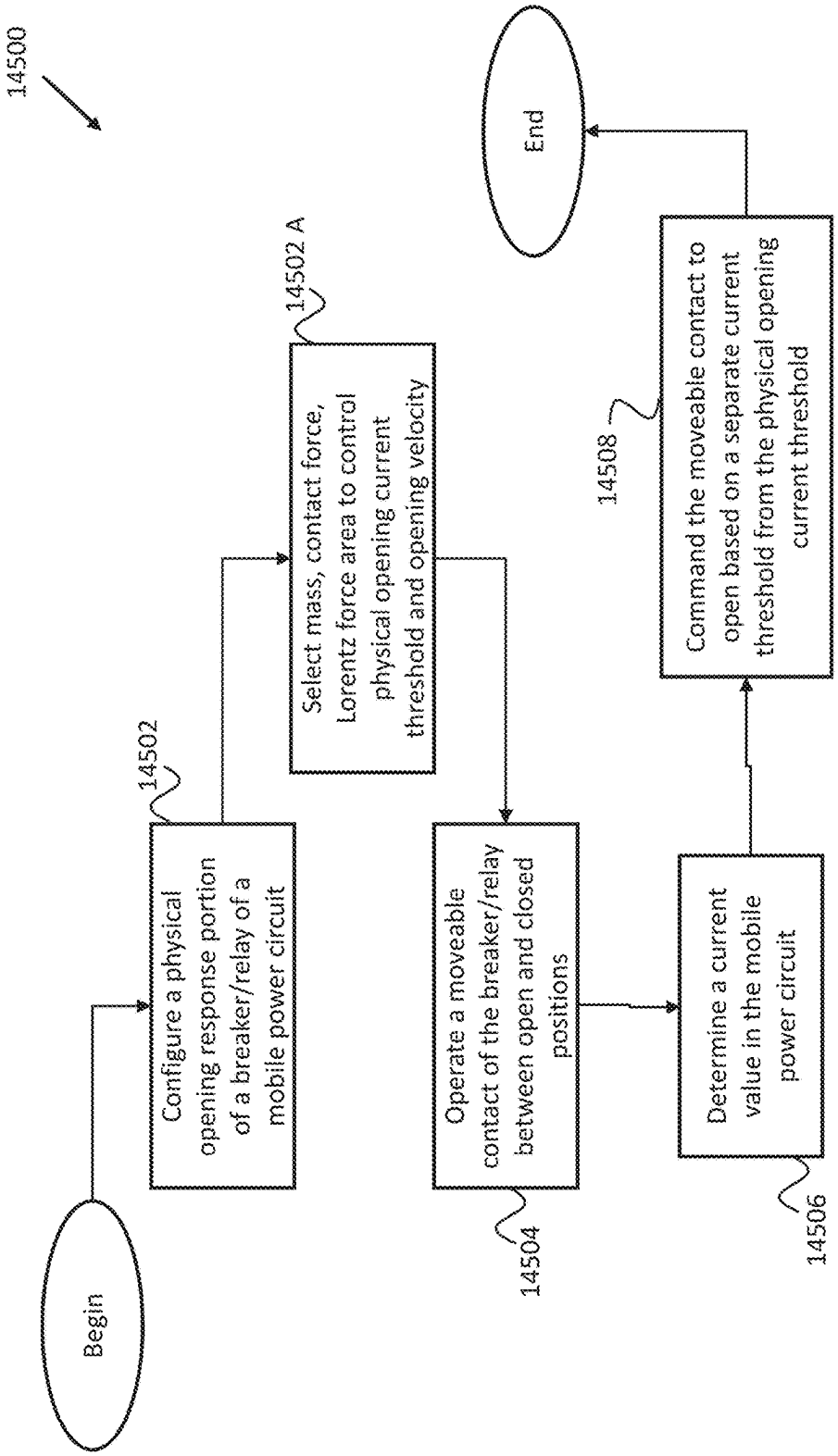
14500
Begin
14502
Configure a physical opening response portion of a breaker/relay of a mobile power circuit
14502 A
Select mass, contact force, Lorentz force area to control physical opening current threshold and opening velocity
14504
Operate a moveable contact of the breaker/relay between open and closed positions
14506
Determine a current value in the mobile power circuit
14508
Command the moveable contact to open based on a separate current threshold from the physical opening current threshold
End

Fig. 145

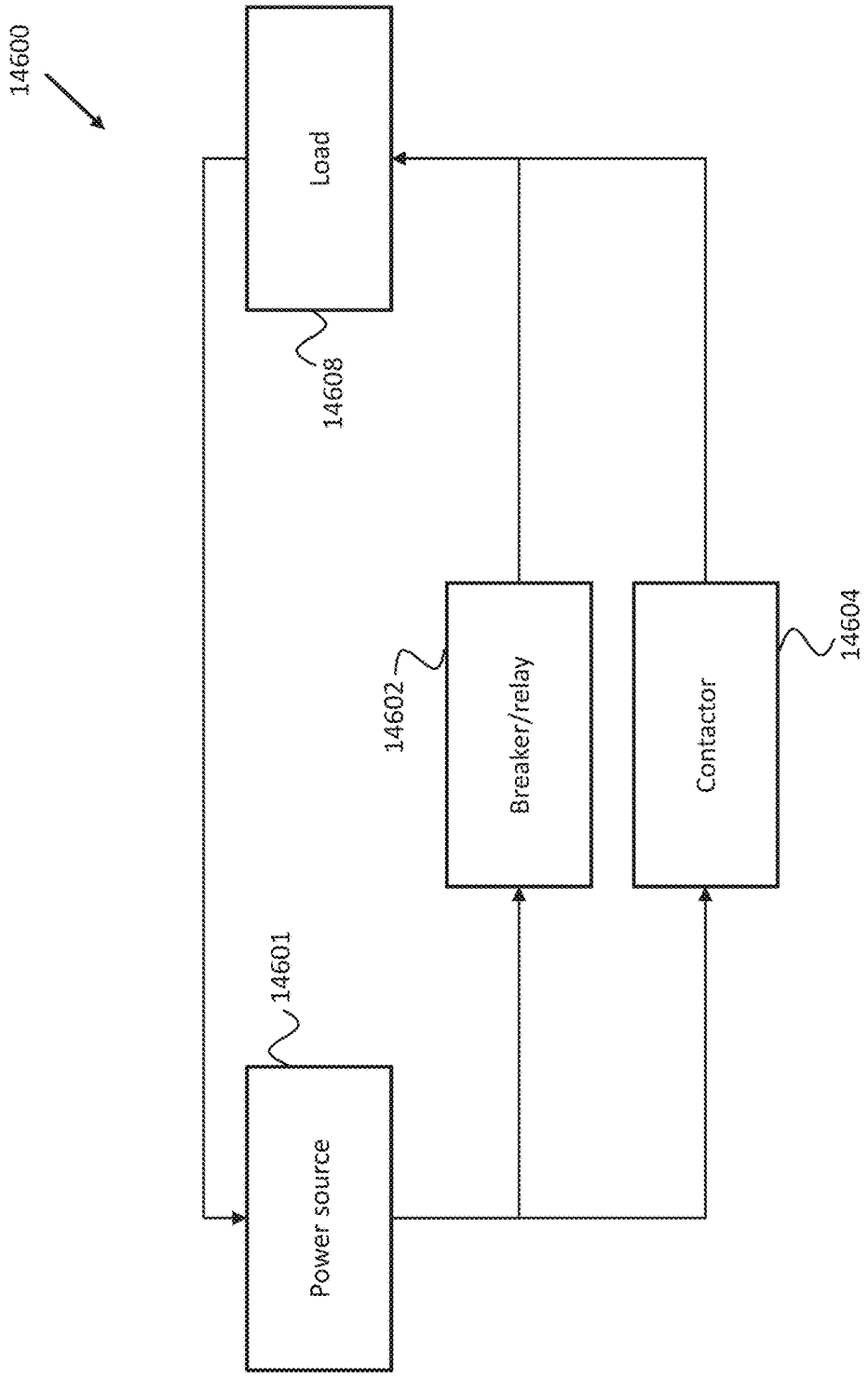
14600
Load
14608
14602
Breaker/relay
Contactor
14604
14601
Power source

Fig. 146

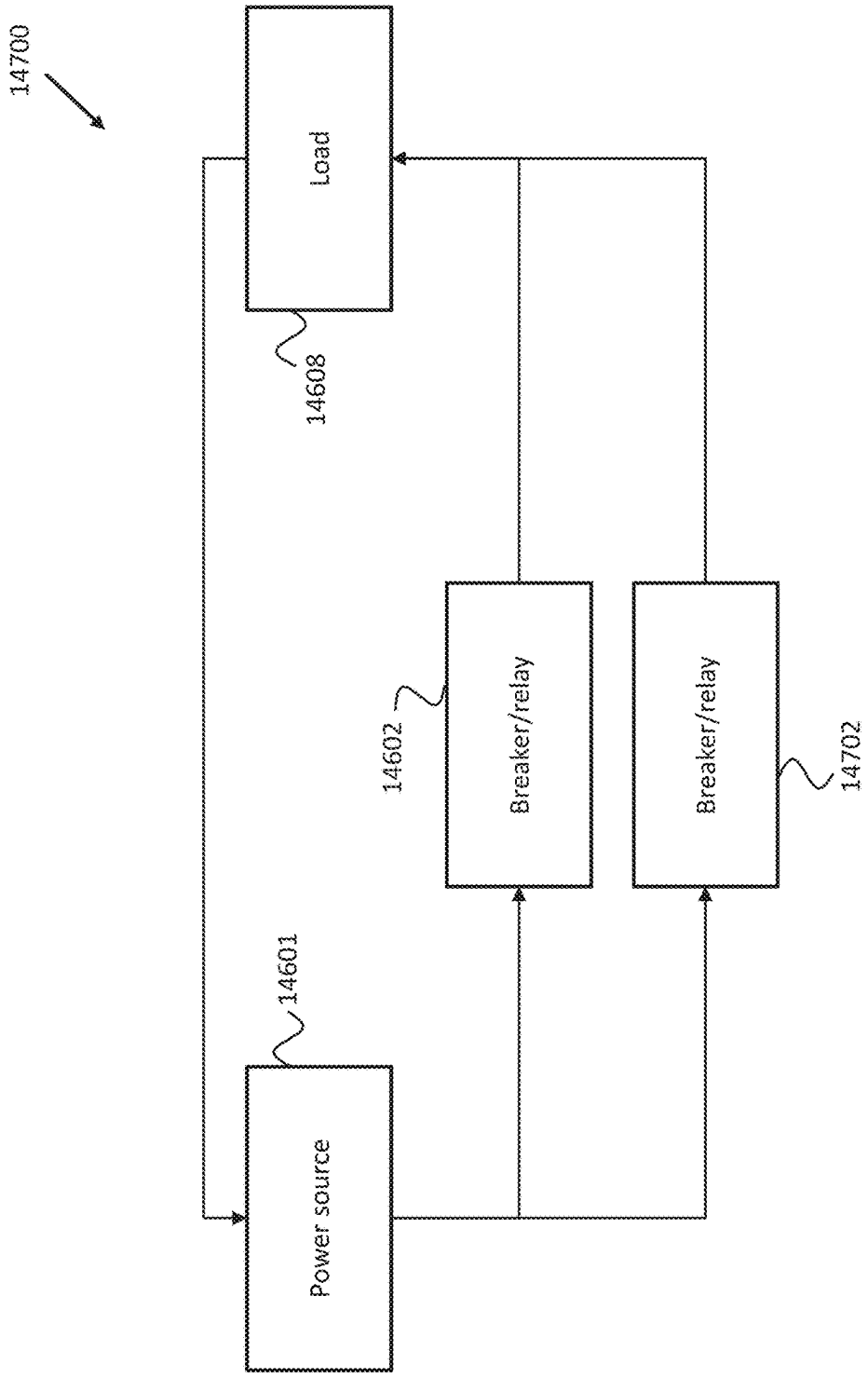
14700
Load
14608
14602
Breaker/relay
Breaker/relay
14702
14601
Power source

Fig. 147

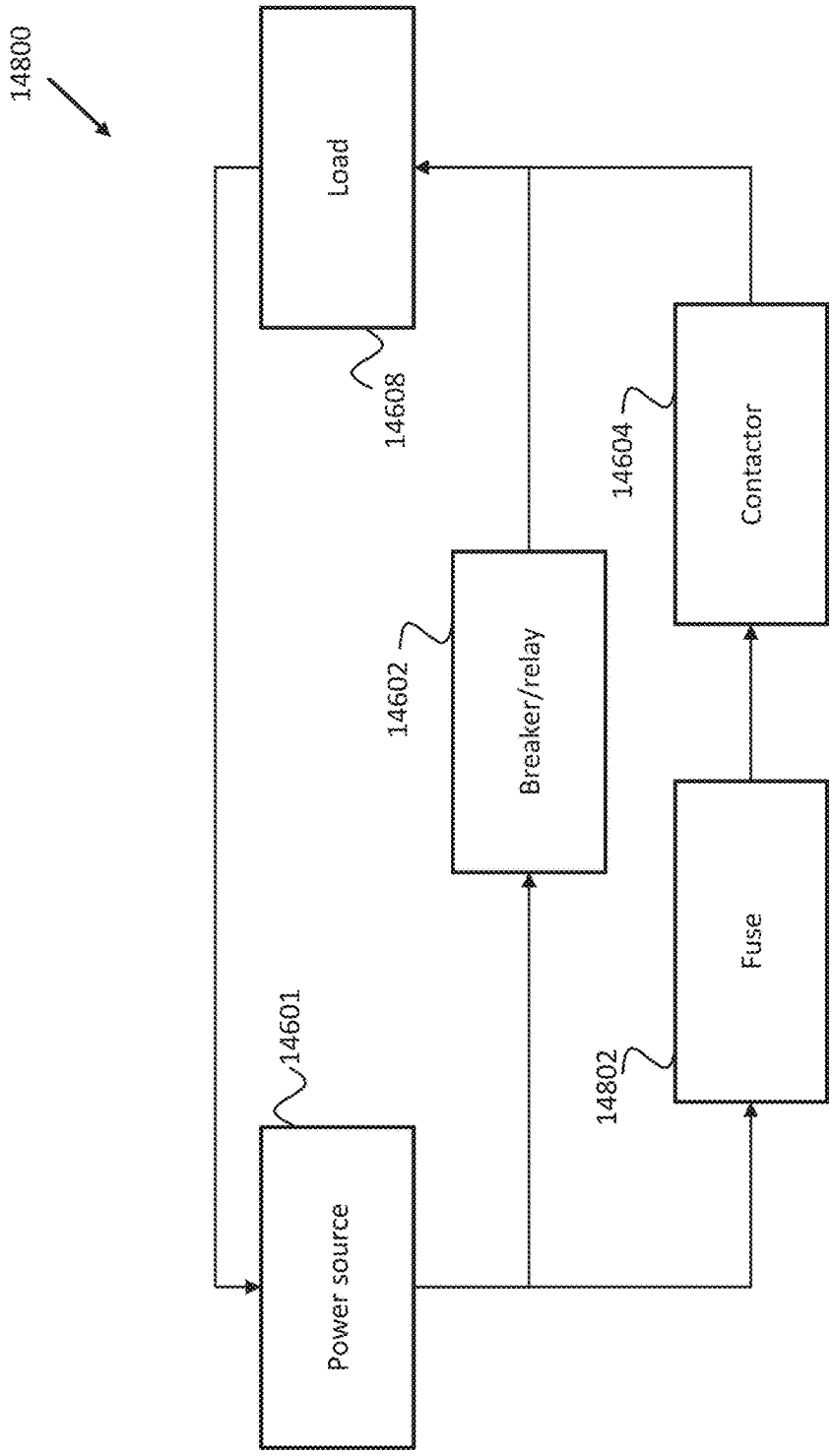
14800
Load
14608
14604
Contactor
14602
Breaker/relay
Fuse
14802
14601
Power source

Fig. 148

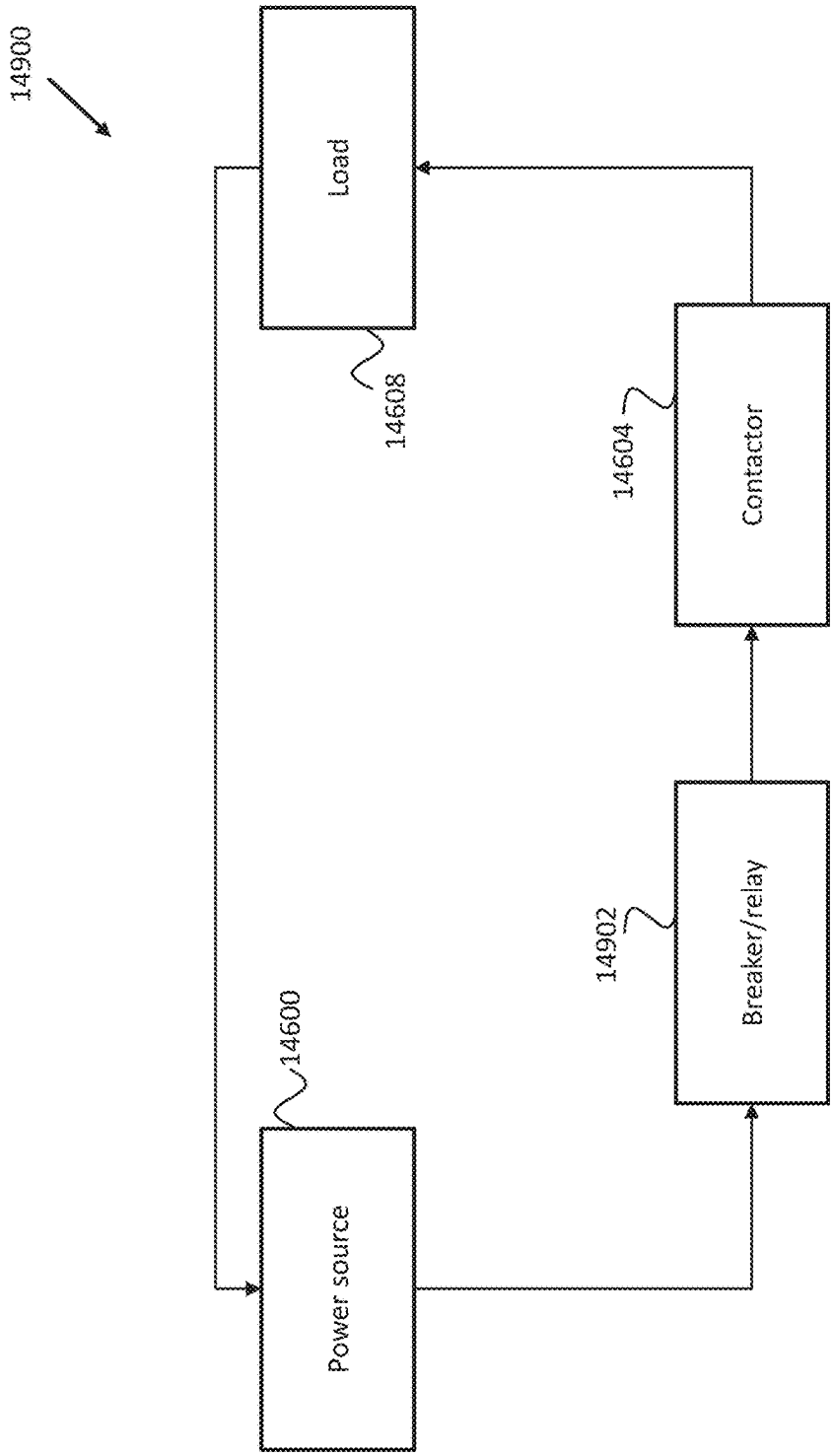
14900
Load
14608
14604
Contactor
14902
Breaker/relay
14600
Power source

Fig. 149

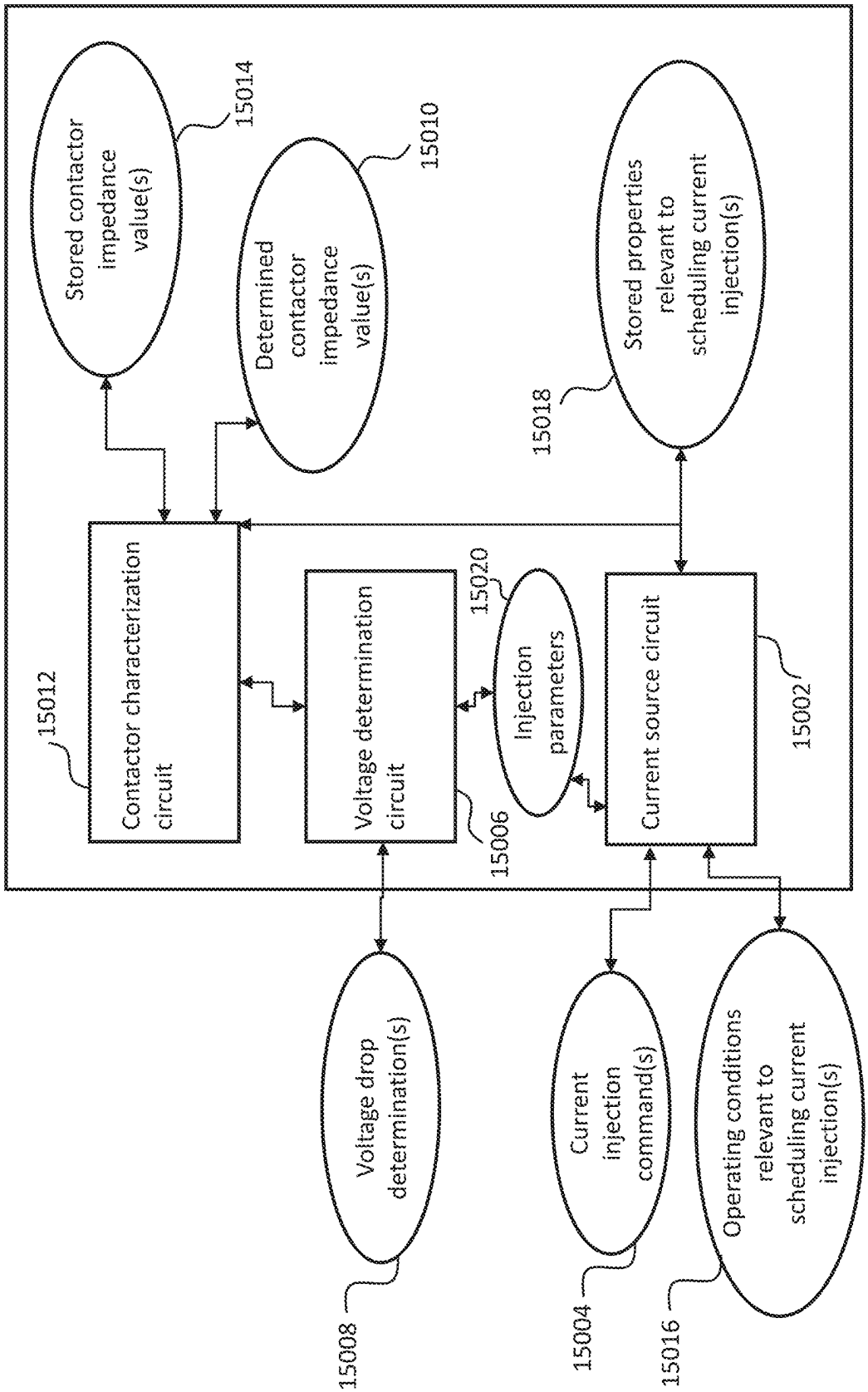
Stored contactor impedance value(s)
15014
Determined contactor impedance value(s)
15010
Stored properties relevant to scheduling current injection(s)
15018
Contactor characterization circuit
15012
Voltage determination circuit
15006
Injection parameters
15020
Current source circuit
15002
Voltage drop determination(s)
15008
Current injection command(s)
15004
Operating conditions relevant to scheduling current injection(s)
15016

Fig. 150

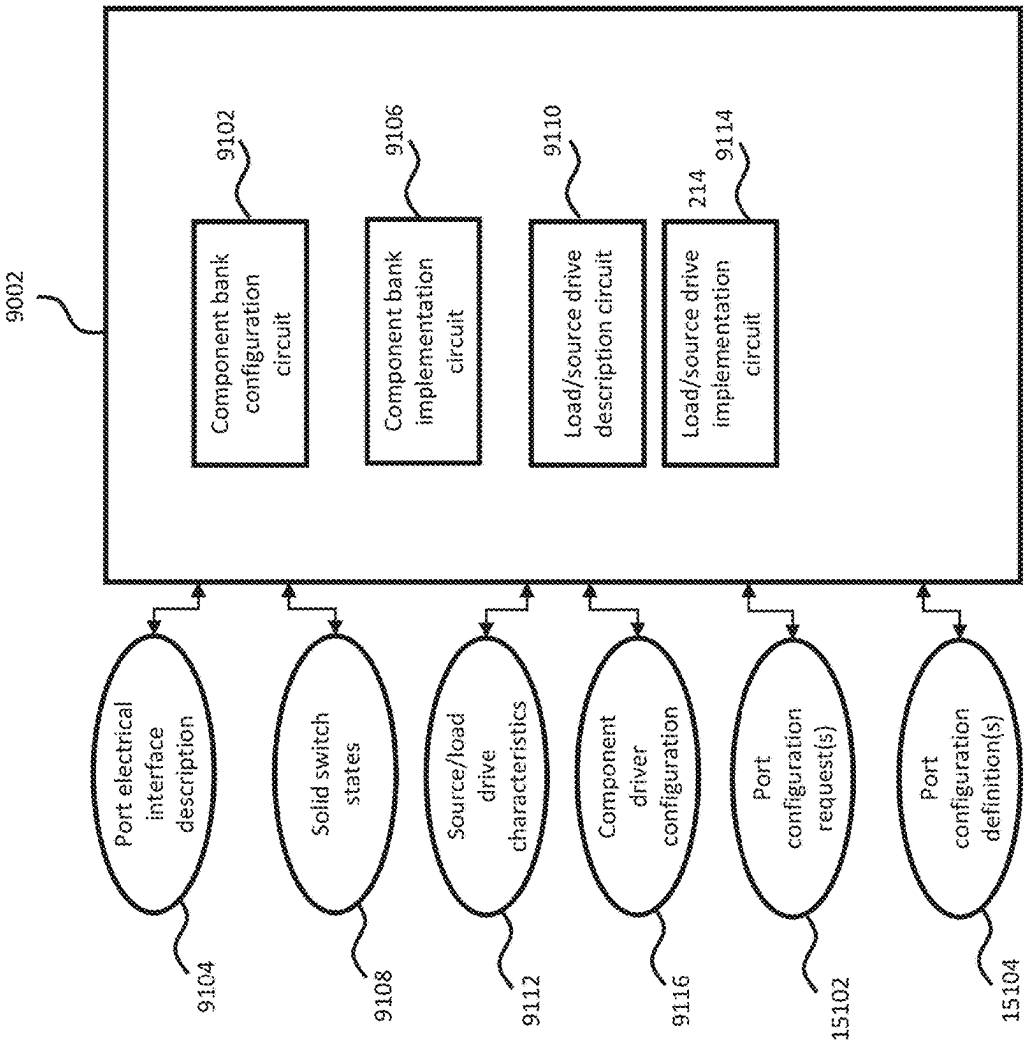
9002
Component bank configuration circuit
9102
Component bank implementation circuit
9106
Load/source drive description circuit
9110
Load/source drive implementation circuit
214
9114
Port electrical interface description
9104
Solid switch states
9108
Source/load drive characteristics
9112
Component driver configuration
9116
Port configuration request(s)
15102
Port configuration definition(s)
15104

Fig. 151

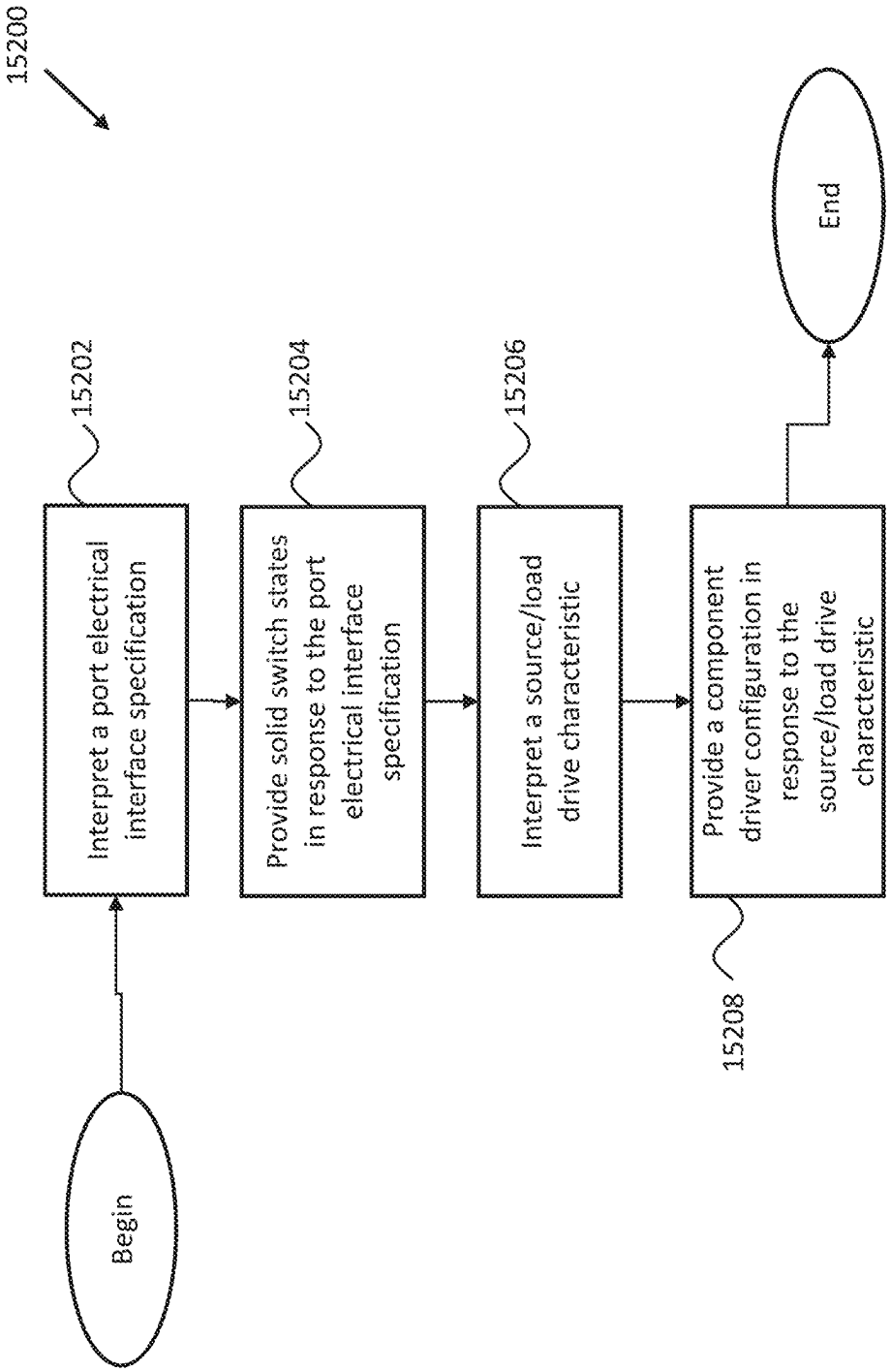
15200
Begin
Interpret a port electrical interface specification
15202
Provide solid switch states in response to the port electrical interface specification
15204
Interpret a source/load drive characteristic
15206
Provide a component driver configuration in response to the source/load drive characteristic
15208
End

Fig. 152

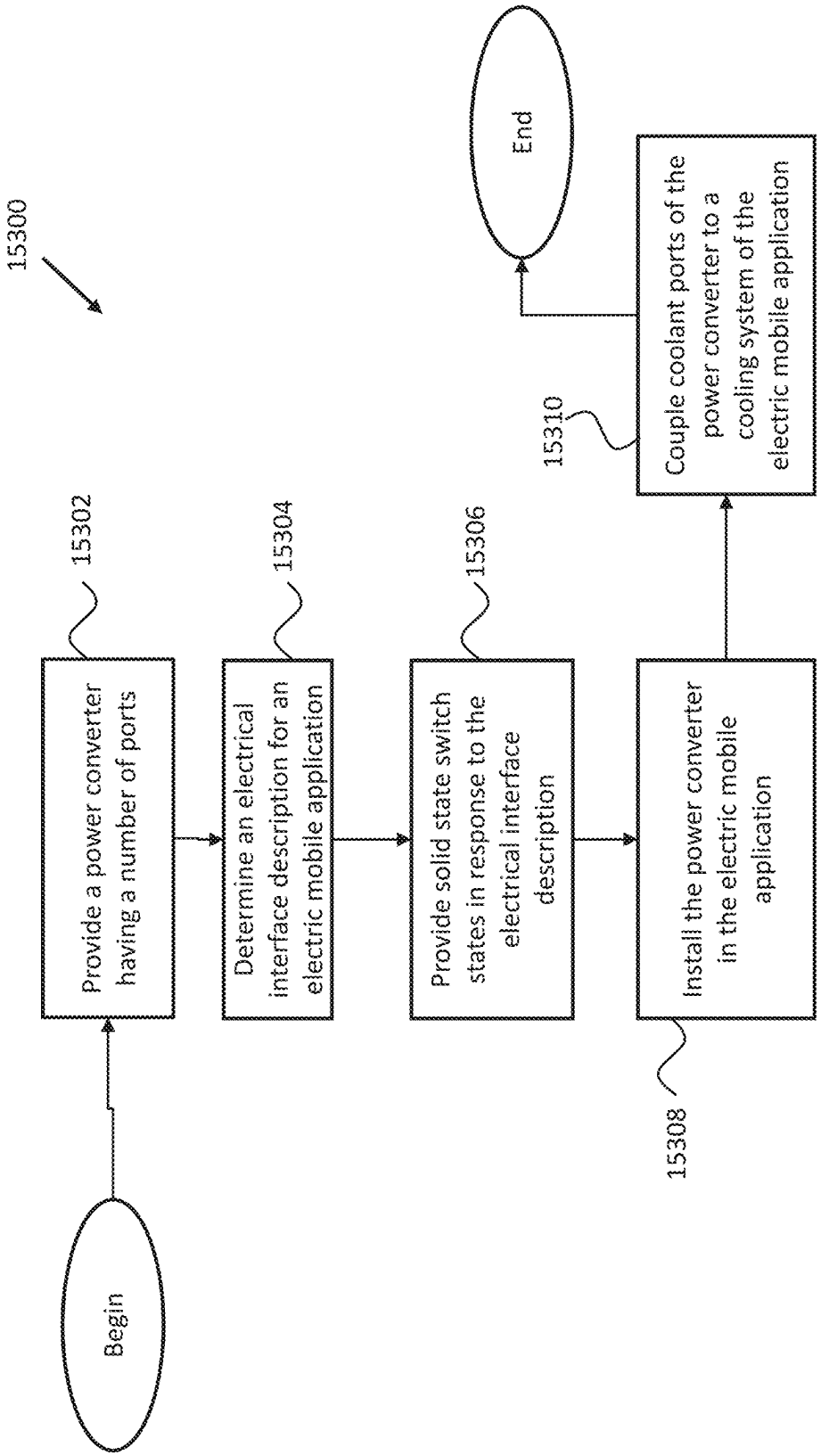
15300
Begin
15302
Provide a power converter having a number of ports
15304
Determine an electrical interface description for an electric mobile application
15306
Provide solid state switch states in response to the electrical interface description
15308
Install the power converter in the electric mobile application
15310
Couple coolant ports of the power converter to a cooling system of the electric mobile application
End

Fig. 153

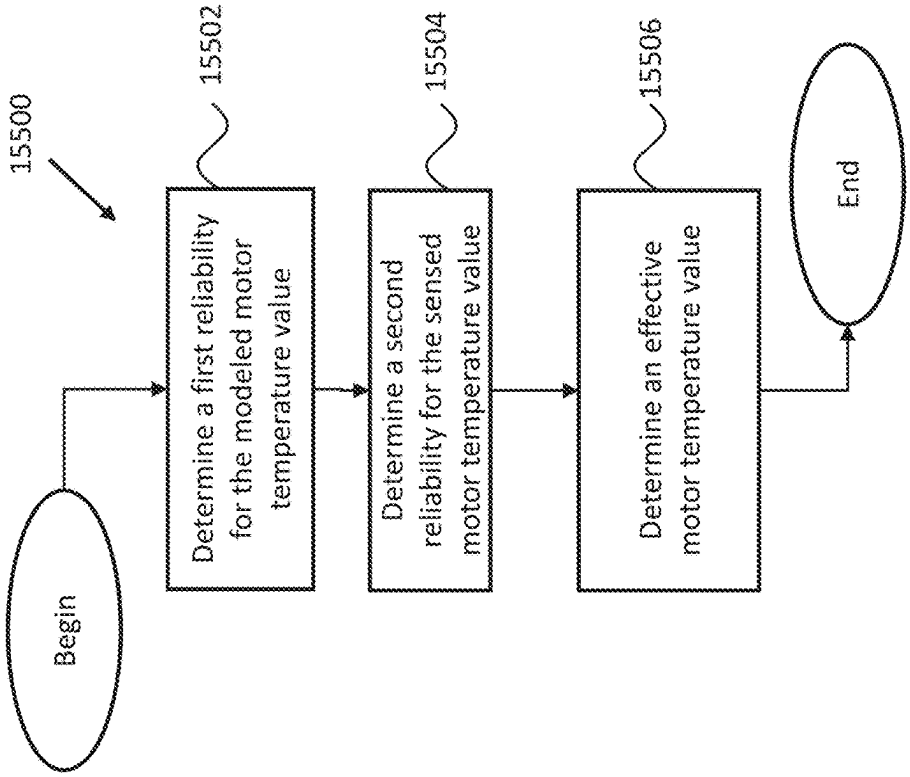

Fig. 155

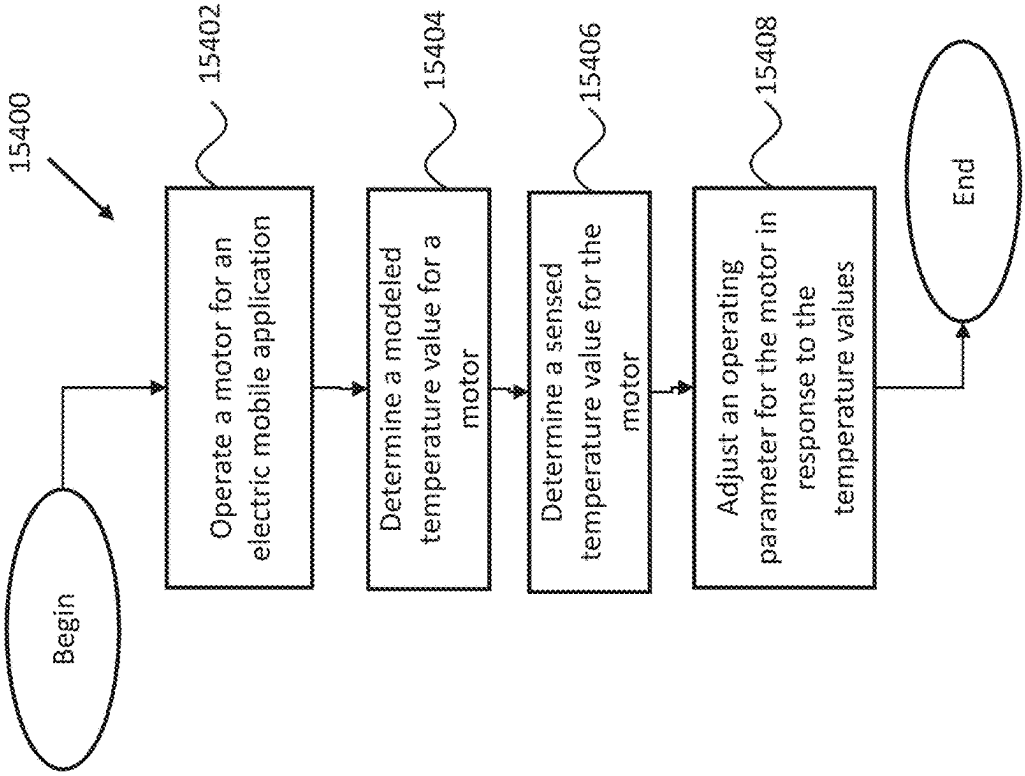

Fig. 154

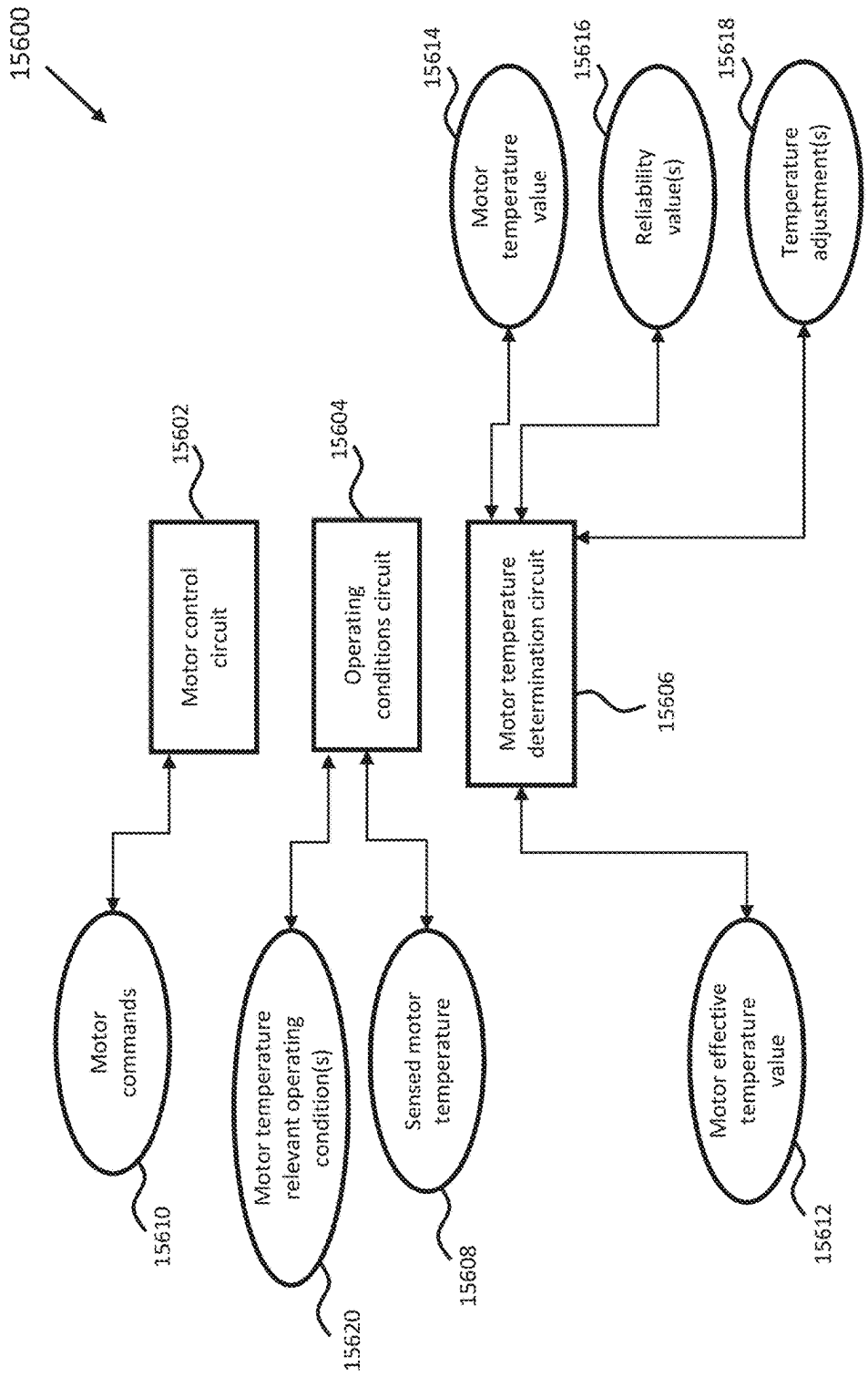
15600
Motor control circuit
15602
Operating conditions circuit
15604
Motor temperature determination circuit
15606
Motor commands
15610
Motor temperature relevant operating condition(s)
15620
Sensed motor temperature
15608
Motor effective temperature value
15612
Motor temperature value
15614
Reliability value(s)
15616
Temperature adjustment(s)
15618

Fig. 156

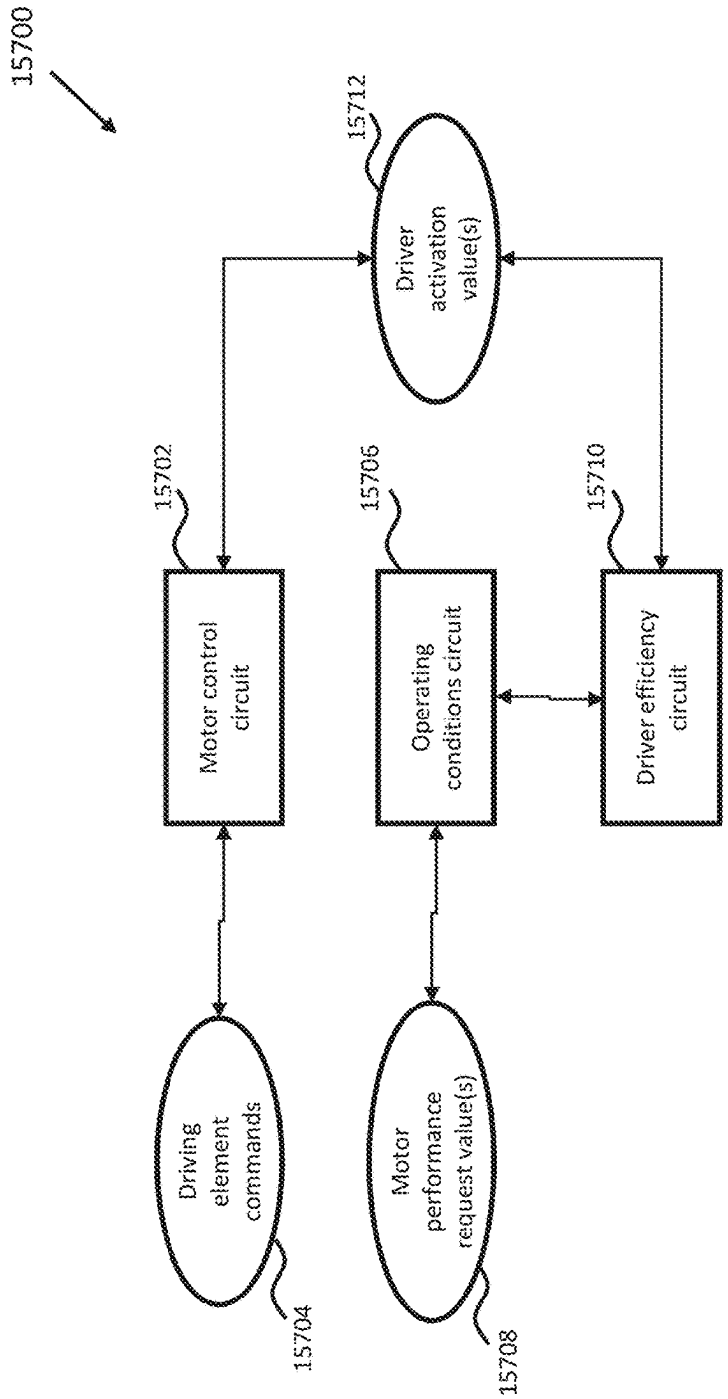
15700
15712
Driver activation value(s)
15702
Motor control circuit
15706
Operating conditions circuit
15710
Driver efficiency circuit
Driving element commands
15704
Motor performance request value(s)
15708

Fig. 157

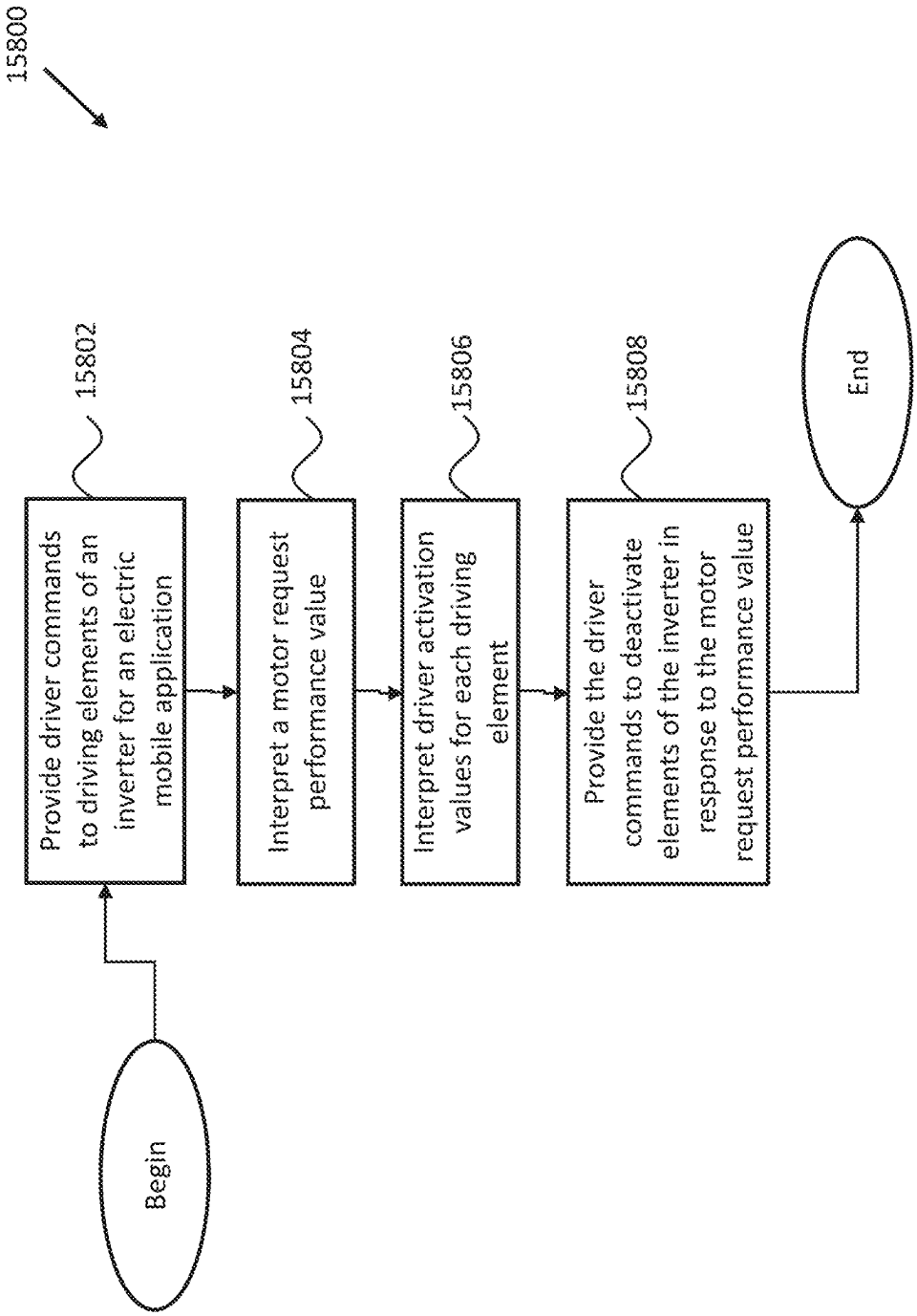
15800
Begin
Provide driver commands to driving elements of an inverter for an electric mobile application
15802
Interpret a motor request performance value
15804
Interpret driver activation values for each driving element
15806
Provide the driver commands to deactivate elements of the inverter in response to the motor request performance value
15808
End

Fig. 158

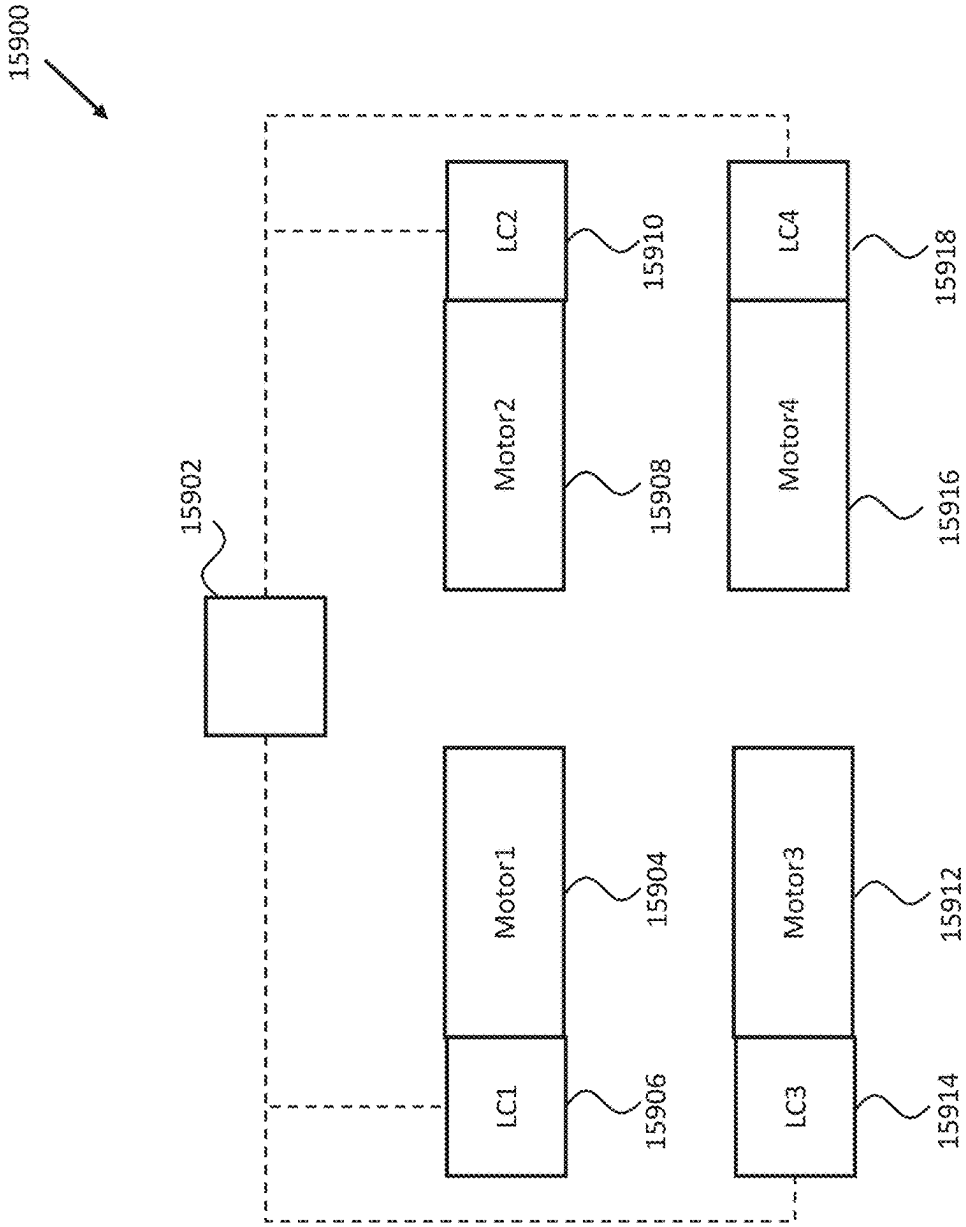
15900
15902
LC2
15910
Motor2
15908
LC4
15918
Motor4
15916
Motor1
15904
LC1
15906
Motor3
15912
LC3
15914

Fig. 159

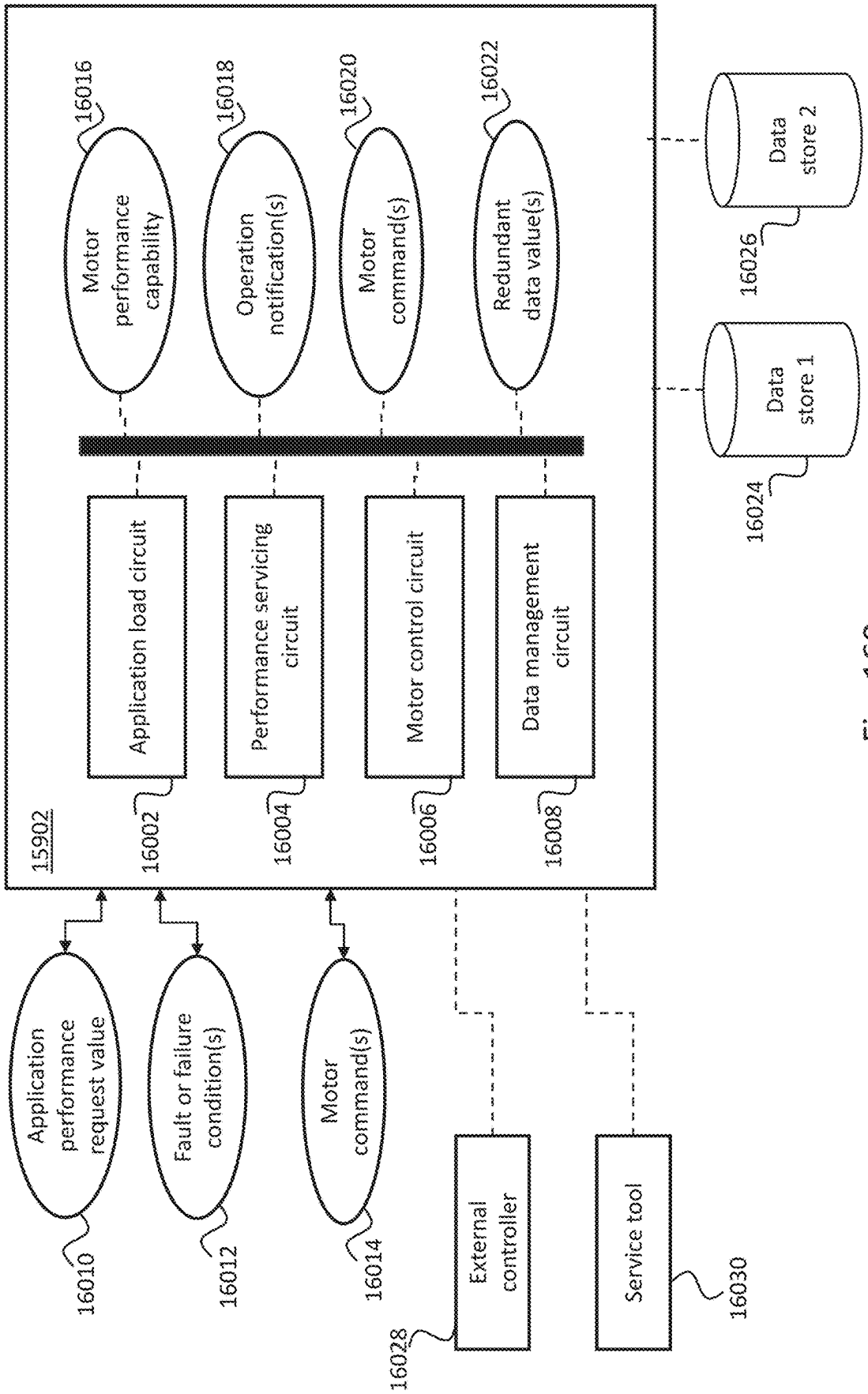
15902
Application load circuit
Performance servicing circuit
Motor control circuit
Data management circuit
16002
16004
16006
16008
Motor performance capability
Operation notification(s)
Motor command(s)
Redundant data value(s)
16016
16018
16020
16022
Data store 1
Data store 2
16024
16026
Application performance request value
Fault or failure condition(s)
Motor command(s)
16010
16012
16014
External controller
Service tool
16028
16030

Fig. 160

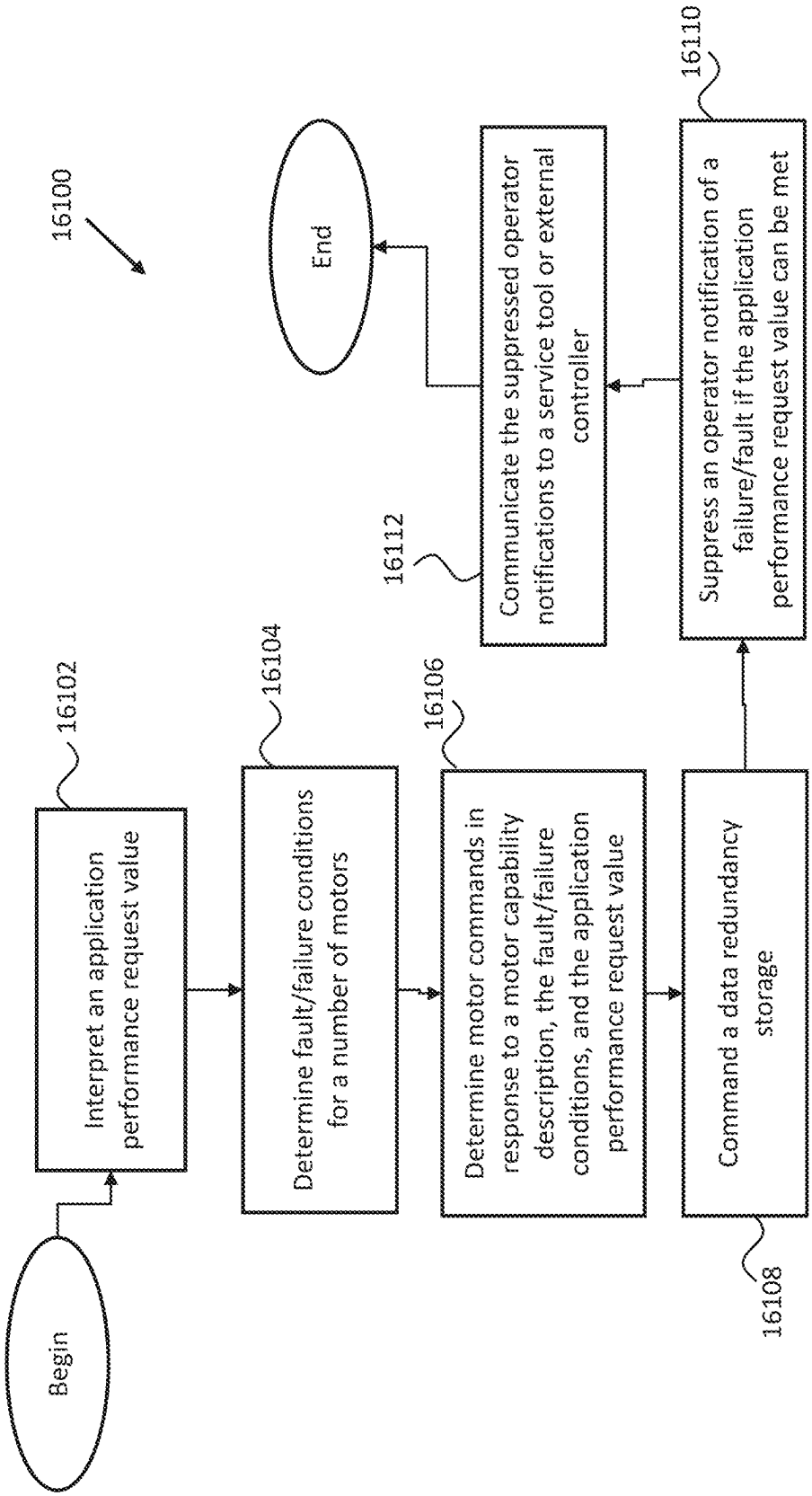
16100
Begin
16102
Interpret an application performance request value
16104
Determine fault/failure conditions for a number of motors
16106
Determine motor commands in response to a motor capability description, the fault/failure conditions, and the application performance request value
16108
Command a data redundancy storage
16110
Suppress an operator notification of a failure/fault if the application performance request value can be met
16112
Communicate the suppressed operator notifications to a service tool or external controller
End

Fig. 161

MOBILE APPLICATION WITH COMBINED BREAKER AND RELAY

CROSS-REFERENCE TO RELATED APPLICATIONS

This application is a continuation of U.S. patent application Ser. No. 17/448,302, filed Sep. 21, 2021, and entitled "COOLANT FITTING PROMOTING TURBULENT FLOW".

U.S. patent application Ser. No. 17/448,302 is a continuation of U.S. patent application Ser. No. 17/218,806, filed Mar. 31, 2021, and entitled "SYSTEM, METHOD, AND APPARATUS FOR MULTI-PORT POWER CONVERTER AND INVERTER ASSEMBLY".

U.S. patent application Ser. No. 17/218,806 is a continuation of U.S. patent application Ser. No. 16/994,196, filed Aug. 14, 2020, now U.S. Pat. No. 11,121,540, and entitled "SYSTEM, METHOD, AND APPARATUS FOR MULTI-PORT POWER CONVERTER AND INVERTER ASSEMBLY"

U.S. patent application Ser. No. 16/994,196 is a continuation of U.S. patent application Ser. No. 16/380,857, filed Apr. 10, 2019, now U.S. Pat. No. 11,070,049, and entitled "SYSTEM, METHOD, AND APPARATUS FOR POWER DISTRIBUTION IN AN ELECTRIC MOBILE APPLICATION USING A COMBINED BREAKER AND RELAY".

U.S. patent application Ser. No. 16/380,857 claims priority to the following U.S. Provisional Patent Applications: Ser. No. 62/809,384, filed Feb. 22, 2019, and entitled "INVERTER HOUSING WITH MULTIPLE COST-OPTIMIZED COMPONENTS"; Ser. No. 62/809,375, filed Feb. 22, 2019, and entitled "NON-LOCKING, BLIND MATE COMPATIBLE, INTEGRATED QUICK CONNECT COUPLING"; Ser. No. 62/809,367, filed Feb. 22, 2019, and entitled "DC LINK CAPACITOR WITH INTEGRATED COMPONENTS".

All of the foregoing patent documents are incorporated herein by reference in their entirety.

FIELD

Without limitation to a particular field of technology, the present disclosure is directed to electrical power distribution and circuit protection, and more particularly to electronic power distribution and circuit protection for highly variable load applications.

BACKGROUND

Electrical power distribution in many applications is subject to a number of challenges. Applications having a highly variable load, such as mobile applications or vehicles, subject fuses in the power channels to rapid swings in power throughput and induce thermal and mechanical stresses on the fuses. Certain applications have a high cost for downtime of the application. Certain applications, including mobile applications, are subject to additional drawbacks from loss of power, such as loss of mobility of the application unexpectedly, including at an inconvenient location, while in traffic, or the like. Electrical systems in many applications are complex, with multiple components in the system, and variations in the wiring and environment of the electrical system, leading to variations in the electrical system response, introduction of noise, variations in system resonant frequencies, and/or variations in system capacitance and/or inductance, even for nominally identical installations. These complexities introduce additional challenges for high resolution and/or highly precise determinations of the electrical characteristics of aspects of the system. Additionally, highly variable and/or mobile systems provide additional challenges for diagnostics and determinations about aspects of the electrical system, as highly invasive active determinations may not be acceptable to application performance, and/or the system may not provide many opportunities, or only brief opportunities, for making determinations about the electrical system.

Electric mobile applications, such as electric vehicles and high-capability hybrid vehicles provide numerous challenges for previously known inverter and power electronics systems. Mobile applications include on-highway vehicles, off-highway vehicles, commercial and passenger car vehicles, and/or off-road applications including any type of vehicle or mobile equipment.

For example, many mobile applications, such as commercial and passenger vehicles, are highly cost sensitive to both initial costs of a system, and to ongoing operating costs. Additionally, downtime for service, maintenance, or system failures has a very high cost, due to large volumes and competitive markets. Accordingly, even modest improvements to initial costs, operating costs, and reliability can make a significant impact on the outcome of the system, or make a non-marketable system competitive.

Mobile applications have limited space and weight available for components of the drive system. For example, vehicle sizing and fuel efficiency concerns drive many applications to reduce both the size and the weight of the vehicle, and to accommodate vehicle shape for aerodynamics, according to the specific application, and/or according to user or customer preferences. Additionally, mobile applications have a large number of features, and application requirements and customer preferences are such that additional features are almost always value added if the system can accommodate them while meeting other constraints. Accordingly, reducing the size and weight of a given component provides value to the application, whether through a net reduction of the application size and weight, or through the ability to accommodate additional features within the same size and weight.

Mobile applications generally have a large number of components, and often many of the components are provided by third parties and integrated by a primary manufacturer or original equipment manufacturer (OEM). Accordingly, reductions in the size or weight of a component provide for easier integration of components, and/or are required to accommodate a limited space claim during the design phase, upgrades, retro-fits, or the like. Additionally, both the large number of components and the integration of many components from separate component providers introduce complexities into the integration of the mobile application. Further, each component and sub-component, and each interface between components, creates a failure point that can cause a service event, undesirable operation, application downtime, and/or a mission disabling failure. Failures occurring in mobile applications often occur at a location that is inconvenient for service access, and may require moving the degraded or disabled vehicle to a service location before the failure can be corrected. Accordingly, components that have a reduced number of sub-components, that can utilize standardized interfaces, and/or that have a reduced number of interfaces are desirable for mobile applications. Some mobile applications are produced in very high

volume, and even modest reductions in either the number of interfaces or the number of sub-components can add high value to the system.

Some mobile applications are produced in small volumes with short engineering design time, and accordingly a reduction in the number of interfaces can greatly reduce the design cycle time, providing a significant benefit where engineering costs cannot be distributed across a high volume of products. Some mobile applications are produced as retro-fit or upgrades, and/or include a number of options where a component may appear on certain models or versions of the mobile application, but may not be on other models or versions, and/or may be installed in a different location on the vehicle than on other models or versions. For example, mobile applications may have components added post-manufacturing as part of a customer option, to accommodate new regulations, to support an environmental policy (e.g., of a company, or for a fleet of vehicles), to upgrade a vehicle, and/or to repurpose or remanufacture a vehicle. Accordingly, components having a reduced size, a reduced weight, and/or a reduced number of interfaces provide for easier post-manufacturing changes, a greater number of options in the post-manufacturing changes, and/or greater reliability for components that are installed using non-standardized or low volume processes that may not be as refined as a standardized process for a high volume application. Additionally, size and weight savings in components of the application can provide for the inclusion of additional features within the same cost and weight profile.

Mobile applications often have a large differential in duty cycle even for systems that have similar power ratings. Further, mobile applications often involve systems that are sold or otherwise transferred, where the same system can experience a significant change in the duty cycle and operating conditions after the system is in the hands of a user. Accordingly, a lack of flexibility in design parameters at the time of initial sale can limit the available markets for a system, and a lack of flexibility in design parameters in use can result in increased failures later in the life cycle of the system.

Electrical power distribution in many applications is subject to a number of challenges. Presently available systems for providing conversion between electric power and other power sources and loads suffer from a number of drawbacks. Variability in the load types, performance characteristics, and overall system arrangements lead to difficult integration issues that reduce the desirability of hybrid power utilization for many applications, and reduce the available system efficiencies as many aspects of an application are not integrated into the hybrid power arrangement. Additionally, many applications, such as off-road applications, and certain specific on-road applications that have unusual equipment or duty cycles, are low volume and are not economically justifiable to design and integrate a hybrid power system. Systems having a number of varying load and power devices and subsystems additionally create integration challenges, leading to a multiplicity of power conversion devices distributed around the system and customized for the particular system. Accordingly, it may not be economically justifiable to create a hybrid power system for such systems using presently known technologies.

SUMMARY

In an aspect, a mobile application may include a motive power circuit, the motive power circuit including a power storage device and an electrical load, wherein the power storage device and the electrical load may be selectively electrically coupled through a power bus; a power distribution unit (PDU) electrically interposed between the power storage device and the electrical load, wherein the PDU may include a breaker/relay positioned on one of a high side and a low side of the power storage device; wherein the breaker/relay includes a fixed contact electrically coupled to the power bus; a moveable contact selectively electrically coupled to the fixed contact, and wherein the moveable contact allows power flow through the power bus when electrically coupled to the fixed contact, and prevents power flow through the power bus when not electrically coupled to the fixed contact; and an armature operationally coupled to the moveable contact, such that the armature in a first position prevents electrical coupling between the moveable contact and the fixed contact, and the armature in a second position allows electrical coupling between the moveable contact and the fixed contact; and a first biasing member biasing the armature into one of the first position or the second position. In embodiments, the mobile application may include a standard on/off circuit having at least two states, wherein the standard on/off circuit in a first state provides an actuating signal and in a second state prevents the actuating signal; a current response circuit structured to determine a current in the power bus, and further structured to block the actuating signal of the standard on/off circuit in response to the current in the power bus indicating a high current value; and wherein the armature may be responsive to the actuating signal to electrically couple the moveable contact to the fixed contact. The breaker/relay may include an auxiliary off circuit structured to interpret an auxiliary command, and further structured to block the actuating signal of the standard on/off circuit in response to the auxiliary command indicating that the moveable contact should not be electrically coupled to the fixed contact. The auxiliary command may include at least one command selected from the commands consisting of: an emergency shutdown command, a service event indicator, a maintenance event indicator, an accident indicator, a vehicle controller request, and a device protection request. The standard on/off circuit may include one of a key switch voltage and a key switch indicator. The breaker/relay may include a contact force spring operationally interposed between the armature and the moveable contact, such that in response to the armature being in the second position, the contact force spring may be at least partially compressed, and wherein the contact force spring may be configured such that a Lorentz force acting between the fixed contact and the moveable contact further compresses the contact force spring in response to a selected current value. The high current value may be lower than the selected current value. The moveable contact may include a body extending away from the fixed contact, wherein the body of the moveable contact may be disposed within a plurality of splitter plates, and wherein the plurality of splitter plates may be at least partially disposed within a permanent magnet. The mobile application may include a charging circuit, and wherein the breaker/relay may be further positioned on the charging circuit. The charging circuit may include a quick charging circuit having a higher current throughput value than a rated current for operations of the electrical load. The mobile application may include a standard on/off circuit having at least two states, wherein the standard on/off circuit in a first state provides an actuating signal and in a second state prevents the actuating signal; a current response circuit structured to determine a current in the power bus, and further structured to block the actuating signal of the standard on/off circuit in response to

the current in the power bus indicating a high current value; wherein the current response circuit may be further structured to utilize a first threshold current value for the high current value in response to the motive power circuit powering the electrical load, and the utilized a second threshold current value for the high current value in response to the charging circuit coupled to a quick charging device; and wherein the armature may be responsive to the actuating signal to electrically couple the moveable contact to the fixed contact. The electrical load may include at least one load selected from the loads consisting of a motive power load, a regeneration load, a power take-off load, an auxiliary device load, and an accessory device load. The mobile application may include a second breaker/relay disposed on the other of the high side or the low side of the power storage device. The power storage device may include a rechargeable device. The power storage device may include at least one device selected from the devices consisting of a battery, a capacitor, and a fuel cell.

In an aspect, a breaker/relay may include a fixed contact electrically coupled to a power bus for a mobile application; a moveable contact selectively electrically coupled to the fixed contact; an armature operationally coupled to the moveable contact, such that the armature in a first position prevents electrical coupling between the moveable contact and the fixed contact, and the armature in a second position allows electrical coupling between the moveable contact and the fixed contact; a first biasing member biasing the armature into one of the first position or the second position; a standard on/off circuit having at least two states, wherein the standard on/off circuit in a first state provides an actuating signal and in a second state prevents the actuating signal; a current response circuit structured to determine a current in the power bus, and further structured to block the actuating signal of the standard on/off circuit in response to the current in the power bus indicating a high current value; and wherein the armature may be responsive to the actuating signal to electrically couple the moveable contact to the fixed contact. In embodiments, the mobile application may include at least two electrical current operating regions. The current response circuit may be further structured to adjust the high current value in response to an active one of the at least two electrical current operating regions.

In an aspect, a method may include detecting a current value, the current value including an electrical current flow through a power bus electrically coupled to a breaker/relay; determining whether the current value exceeds a threshold current value; and in response to the current value exceeding the threshold current value, actuating an armature to open contacts in the breaker/relay, thereby preventing the electrical current flow through the power bus. In embodiments, the method may include applying a contact force to a moveable one of the contacts of the breaker/relay; and opening the contacts in response to a repulsive force generated between the contacts in response to the electrical current flow through the power bus. The method may further include selecting the contact force such that the opening the contacts occurs at a selected current flow value of the electrical current flow. The method may further include actuating the armature to open the contacts in the breaker/relay such that the moveable one of the contacts does not return to a closed position after the opening the contacts in response to the repulsive force. The actuating the armature may be commenced before the opening the contacts in response to the repulsive force.

In an aspect, a breaker/relay may include a fixed contact electrically coupled to a power bus; a moveable contact selectively electrically coupled to the fixed contact; an armature operationally coupled to the moveable contact, such that the armature in a first position prevents electrical coupling between the moveable contact and the fixed contact, and the armature in a second position allows electrical coupling between the moveable contact and the fixed contact; a first biasing member biasing the armature into one of the first position or the second position; a current response circuit structured to determine a current in the power bus, and further structured to command the armature to the first position in response to the current in the power bus indicating a high current value. In embodiments, the breaker/relay may further include a contact force spring operationally interposed between the armature and the moveable contact, such that in response to the armature being in the second position, the contact force spring may be at least partially compressed, and wherein the contact force spring may be configured such that a Lorentz force acting between the fixed contact and the moveable contact further compresses the contact force spring in response to a selected current value. The high current value may be lower than the selected current value. The moveable contact may include a body extending away from the fixed contact, wherein the body of the moveable contact may be disposed within a plurality of splitter plates, and wherein the plurality of splitter plates may be at least partially disposed within a permanent magnet. The power bus may be a power bus for a mobile application. The mobile application may include at least two electrical current operating regions.

In an aspect, a mobile application may include a motive power circuit, the motive power circuit including a power storage device and an electrical load, wherein the power storage device and the electrical load may be selectively electrically coupled through a power bus; a power distribution unit (PDU) electrically interposed between the power storage device and the electrical load, wherein the PDU may include a breaker/relay positioned on one of a high side and a low side of the power storage device; wherein the breaker/relay may include: a plurality of fixed contacts electrically coupled to the power bus; a plurality of moveable contacts corresponding to the plurality of fixed contacts, wherein the plurality of moveable contacts may be selectively electrically coupled to the plurality of fixed contacts, and wherein the moveable contacts allow power flow through the power bus when electrically coupled to the fixed contacts, and prevent power flow through the power bus when not electrically coupled to the fixed contacts; an armature operationally coupled to at least one of the moveable contacts, such that the armature in a first position prevents electrical coupling between the at least one of the moveable contacts and the corresponding one of the fixed contacts, and the armature in a second position allows electrical coupling between the at least one of the moveable contacts and the corresponding one of the fixed contacts; a first biasing member biasing the armature into one of the first position or the second position; and an arc suppression assembly structured to guide and disperse an opening arc between each of the plurality of moveable contacts and the corresponding fixed contacts. In embodiments, the plurality of moveable contacts may be linked as a dual pole single throw contacting arrangement. The armature may be operationally coupled to both of the moveable contacts. The plurality of moveable contacts may be separately controllable. The mobile application may further include a pre-charge circuit coupled in parallel with at least one of the fixed contacts. The pre-charge circuit may include a solid state pre-charge circuit. The moveable contacts and the fixed contacts may be disposed within a single housing. The mobile application

may further include a magnetic actuator coupled to one of the moveable contacts, and wherein all of the plurality of moveable contacts may be responsive to the magnetic actuator. The arc suppression assembly may include a plurality of splitter plates and at least one permanent magnet. At least one of the plurality of splitter plates may be positioned within arc dispersion proximity of more than one of the moveable contacts. The permanent magnet may be positioned within arc guidance proximity of more than one of the moveable contacts. The mobile application may further include a current sensor structured to determine an electrical current value in response to electrical current flowing through at least one of the moveable contacts, the mobile application may further include a controller structured to interpret the electrical current value and to command the at least one of the moveable contacts to the first position in response to the electrical current value exceeding a threshold value. The at least one of the moveable contacts may be responsive to a Lorentz force to physically move to the first position in response to the electrical current value exceeding a second threshold value. The second threshold value may be greater than the threshold value. The controller may be further structured to adjust the threshold value in response to an expected electrical current value. The controller may be further structured to increase the threshold value in response to determining that a charge operation of a battery may be active. The mobile application may further include a bus bar electrically coupling two of the plurality of moveable contacts. The bus bar may include a hardware configuration in the region of each of the moveable contacts, wherein the hardware configuration provides for a physical response force of the moveable contacts in response to a current value through the power bus. The hardware configuration may include at least one configuration selected from the configurations consisting of: an area of the bus bar in proximity to a current providing portion of the power bus; and a positioning of a portion of the bus bar in proximity to the current providing portion of the power bus. The mobile application may further include a plurality of current sensors, each of the plurality of current sensors operationally coupled to one of the plurality of moveable contacts. A first one of the plurality of moveable contacts may couple a first circuit of the power bus, and wherein a second one of the plurality of moveable contacts couples a second circuit of the power bus, and wherein the first circuit and the second circuit may be power circuits for separate electrical loads. The PDU further may include a coolant coupling configured to interface with a coolant source of the mobile application, and an active cooling path configured to thermally couple the coolant source with the fixed contacts.

In an aspect, a breaker/relay may include a plurality of fixed contacts electrically coupled electric load circuits for a mobile application; a plurality of moveable contacts, each moveable contact selectively electrically coupled to a corresponding one of the plurality of fixed contacts; a plurality of armatures each operationally coupled to a corresponding one of the moveable contacts, such that each armature in a first position prevents electrical coupling between the corresponding moveable contact and the corresponding fixed contact, and each armature in a second position allows electrical coupling between the corresponding moveable contact and the corresponding fixed contact; and a current response circuit structured to determine a current in each of the electric load circuits, and further structured to provide an armature command to open the corresponding one of the moveable contacts in response to the current in the corresponding electrical load circuit indicating a high current value. In embodiments, the breaker/relay may further include a plurality of biasing members each operationally coupled to a corresponding one of the plurality of moveable contacts, and configured to bias the corresponding one of the plurality of armatures into one of the first position or the second position. A first high current value for a first one of the electric load circuits may include a distinct value from a second high current value for a second one of the electric load circuits. The breaker/relay may further include a first biasing member operationally coupled to a corresponding one of the moveable contacts for the first electric load circuit, a second biasing member operationally coupled to a corresponding one of the moveable contacts for the second electric load circuit, and wherein the first biasing member may include a distinct biasing force from the second biasing member. A first moveable contact for the first electric load may include a distinct mass value from a second moveable contact for the second electric load.

In an aspect, a method may include determining a first current value in a first electric load circuit for a mobile application; determining a second current value in a second electric load circuit for the mobile application; and in response to one of the first current value exceeding a first high current value or the second current value exceeding a second high current value, providing armature command to open a contactor for a corresponding one of the first electric load circuit or the second electric load circuit. In embodiments, the method may further include diffusing an arc for the opened contactor to a plurality of splitter plates positioned in proximity to the opened contactor. The method may further include determining a first physical current opening value for the first electric load circuit and a second physical current opening value for the second electric load circuit, providing the first high current value as a value lower than the first physical current opening value, and providing the second high current value as a value lower than the second physical current opening value.

In an aspect, a system may include a housing; a breaker/relay device positioned in the housing, wherein the breaker/relay device may be configured to interrupt a motive power circuit for an electrical vehicle system, where the housing may be disposed on the electrical vehicle system; wherein the breaker/relay device may include a physical opening response portion responsive to a first current value in the motive power circuit, and a controlled opening response portion responsive to a second current value in the motive power circuit; and a pre-charge circuit electrically coupled in parallel to the breaker/relay device. In embodiments, the pre-charge circuit may be positioned within the housing. The first current value may be greater than the second current value. The physical opening response portion may include a first biasing member biasing an armature of the breaker/relay device into an open position for a contactor of the motive power circuit, and a selected difference between a first force of the armature closing the contactor and a second force of the first biasing member opening the contactor. The controlled opening response portion may include a current sensor providing a current value through the motive power circuit, and a current response circuit structured to command an armature to open a contactor in response to the current value exceeding the second current value. The breaker/relay device may include a dual-pole breaker/relay device. The breaker/relay device may include a single-pole breaker/relay device. The breaker/relay device may be positioned on one of a high side circuit or a low side circuit of the motive power circuit. The system may further include a pyro-switch device positioned on the other of the high side circuit or the

low side circuit. The system may further include a physical opening response adjustment circuit structured to determine a first current value adjustment, and to adjust the physical opening response portion in response to the first current value adjustment. The physical opening response adjustment circuit may be further structured to adjust the physical opening response portion by performing at least one operation selected from the operations consisting of: adjusting a compression of the first biasing member; adjusting the first force; and adjusting the second force. The physical opening response adjustment circuit may be further structured to adjust the physical opening response portion in response to an operating condition of the electrical vehicle system. The controlled opening response portion may be further structured to command the armature to open the contactor in response to at least one value selected from the values consisting of: a time-current profile of the motive power circuit; a time-current trajectory of the motive power circuit; a time-current area value of the motive power circuit; a rate of change of a current value through the motive power circuit; and a difference between a current value through the motive power circuit and the second current value.

In an aspect, a method may include determining a current value through a motive power circuit of an electrical vehicle system; opening the motive power circuit with a physical response of a breaker/relay device in response to the current value exceeding a first current value; and opening the motive power circuit with a controlled response of an armature operationally coupled to a contactor of the breaker/relay device in response to the current value exceeding a second current value. In embodiments, the first current value may be greater than the second current value. The method may further include determining a first current value adjustment in response to an operating condition of the electrical vehicle system, and adjusting the first current value in response to the first current value adjustment. The method may further include adjusting the physical opening response portion by performing at least one operation selected from the operations consisting of: adjusting a compression of a first biasing member operationally coupled to the contactor of the breaker/relay device; adjusting a first force of the first biasing member operationally coupled to the contactor of the breaker/relay device; and adjusting a second force of the armature operationally coupled to the contactor of the breaker/relay device. The method may further providing controlling the response of the armature to open the contactor in response to at least one value selected from the values consisting of: a time-current profile of the motive power circuit; a time-current trajectory of the motive power circuit; a time-current area value of the motive power circuit; a rate of change of the current value through the motive power circuit; and a difference between the current value through the motive power circuit and the second current value.

In an aspect, a breaker/relay may include a fixed contact electrically coupled to a motive power circuit for a mobile application; a moveable contact selectively electrically coupled to the fixed contact, wherein the moveable contact in a first position allows power to flow through the motive power circuit, and the moveable contact in a second position does not allow power to flow through the motive power circuit; and a physical opening response portion responsive to a current value in the motive power circuit, wherein the physical opening response portion may be configured to move the moveable contact to the second position in response to the current value exceeding a threshold current value. In embodiments, the fixed contact may include a first fixed contact, wherein the moveable contact may include a second fixed contact, wherein the moveable contact may include a first moveable contact corresponding to the first fixed contact, the breaker/relay may further include a second moveable contact corresponding to the second fixed contact, and a bus bar electrically coupling the first moveable contact to the second moveable contact. The bus bar may include a hardware configuration in the region of each of the moveable contacts, wherein the hardware configuration provides for a physical response force of the moveable contacts in response to a current value through the motive power circuit. The hardware configuration may include at least one configuration selected from the configurations consisting of: an area of the bus bar in proximity to a current providing portion of the motive power circuit; and a positioning of a portion of the bus bar in proximity to the current providing portion of the motive power circuit. The physical opening response portion may include a contact area between the fixed contact and the moveable contact, and a biasing member providing a contact force to the moveable contact, wherein the contact area and the contact force may be configured to move the moveable contact to the second position in response to the current value exceeding the threshold current value. The physical opening response portion further may include a mass value of the moveable contacts, wherein the contact area, the contact force, and the mass value may be configured to move the moveable contact away from the first position at a selected velocity value in response to the current value exceeding the threshold current value. The breaker/relay may further include an armature operatively coupled to the moveable contact and capable to move the moveable contact between the first position and the second position; a current response circuit structured to determine a current in mobile power circuit, and further structured to provide an armature command to command the moveable contact to the first position in response to the current in the mobile power circuit exceeding a second current threshold value. The second current threshold value may be lower than the threshold current value. The selected velocity value may be configured to be high enough such that the moveable contact does not return to the first position after moving away from the first position. The moveable contact may be pivotally coupled to a pivoting arm.

In an aspect, a method may include operating a moveable contact between a first position in contact with a fixed contact and allowing power to flow through a motive power circuit for a mobile application, and a second position not in contact with the fixed contact and preventing power flow through the motive power circuit for the mobile application; and configuring a physical opening response portion of a breaker/relay including the moveable contact and the fixed contact, such that the physical opening response portion moves the moveable contact to the second position in response to a current value exceeding a threshold current value. Configuring the physical opening response portion may include selecting a biasing force of a biasing member providing contact force to the moveable contact. Configuring the physical opening response portion may include selecting a contact area between the moveable contact and the fixed contact. Configuring the physical opening response portion may include selecting a mass of the moveable contact. Configuring the physical opening response portion may include selecting a bus bar configuration, wherein the bus bar couples two moveable contacts, and wherein the bus bar configuration may include at least one of a bus bar area in proximity to a current providing portion of the mobile power circuit or a positioning of a portion of the bus bar in

proximity to the current providing portion of the mobile power circuit. The method may further include determining a current in the mobile power circuit, and providing an armature command to command the moveable contact to the first position in response to the current in the mobile power circuit exceeding a second current threshold value. The method may further include configuring the physical opening response portion such that the moveable contact does not return to the first position after moving away from the first position.

In an aspect, a mobile application may include a motive power circuit, the motive power circuit including a power storage device and an electrical load, wherein the power storage device and the electrical load may be selectively electrically coupled through a power bus; a power distribution unit (PDU) electrically interposed between the power storage device and the electrical load, wherein the PDU may include a breaker/relay positioned on one of a high side and a low side of the power storage device; wherein the breaker/relay may include: a fixed contact electrically coupled to the power bus; a moveable contact selectively electrically coupled to the fixed contact, and wherein the moveable contact allows power flow through the power bus when electrically coupled to the fixed contact, and prevents power flow through the power bus when not electrically coupled to the fixed contact; an armature operationally coupled to the moveable contact, such that the armature in a first position prevents electrical coupling between the moveable contact and the fixed contact, and the armature in a second position allows electrical coupling between the moveable contact and the fixed contact; a first biasing member biasing the armature into one of the first position or the second position; a breaker/relay electronics component, including a standard on/off circuit having at least two states, wherein the standard on/off circuit in a first state provides an actuating signal and in a second state prevents the actuating signal; a current response circuit structured to determine a current in the power bus, and further structured to block the actuating signal of the standard on/off circuit in response to the current in the power bus indicating a high current value; and wherein the armature may be responsive to the actuating signal to electrically couple the moveable contact to the fixed contact. In embodiments, the breaker/relay further may include an auxiliary off circuit structured to interpret an auxiliary command, and further structured to block the actuating signal of the standard on/off circuit in response to the auxiliary command indicating that the moveable contact should not be electrically coupled to the fixed contact. The auxiliary command may include at least one command selected from the commands consisting of: an emergency shutdown command, a service event indicator, a maintenance event indicator, an accident indicator, a vehicle controller request, and a device protection request. The standard on/off circuit may include one of a keyswitch voltage and a keyswitch indicator. The breaker/relay further may include a contact force spring operationally interposed between the armature and the moveable contact, such that in response to the armature being in the second position, the contact force spring may be at least partially compressed, and wherein the contact force spring may be configured such that a Lorentz force acting between the fixed contact and the moveable contact further compresses the contact force spring in response to a selected current value. The high current value may be lower than the selected current value. The moveable contact may include a body extending away from the fixed contact, wherein the body of the moveable contact may be disposed within a plurality of splitter plates, and wherein the plurality of splitter plates may be at least partially disposed within a permanent magnet. The mobile application may further include a charging circuit, and wherein the breaker/relay may be further positioned on the charging circuit. The charging circuit may include a quick charging circuit having a higher current throughput value than a rated current for operations of the electrical load. The electrical load may include at least one load selected from the loads consisting of: a motive power load, a regeneration load, a power take-off load, an auxiliary device load, and an accessory device load. The mobile application may further include a second breaker/relay disposed on the other of the high side or the low side of the power storage device. The power storage device may include a rechargeable device. The power storage device may include at least one device selected from the devices consisting of: a battery, a capacitor, and a fuel cell.

In an aspect, a system may include a vehicle having a motive electrical power circuit; a power distribution unit having a current protection circuit disposed in a motive electrical power path, the current protection circuit including a first leg of the current protection circuit including a breaker/relay, the breaker/relay including a fixed contact electrically coupled to a motive power circuit for a mobile application; a moveable contact selectively electrically coupled to the fixed contact, wherein the moveable contact in a first position allows power to flow through the motive power circuit, and the moveable contact in a second position does not allow power to flow through the motive power circuit; and a physical opening response portion responsive to a current value in the motive power circuit, wherein the physical opening response portion may be configured to move the moveable contact to the second position in response to the current value exceeding a threshold current value; and a second leg of the current protection circuit electrically coupled in parallel with the first leg of the current protection circuit, the second leg including a contactor. In embodiments, the breaker/relay may include a first breaker/relay, and wherein the contactor may include a second breaker/relay. The second leg further may include a thermal fuse in series with the contactor.

In an aspect, a system may include a vehicle having a motive electrical power circuit; a power distribution unit having a current protection circuit disposed in a motive electrical power path, the current protection circuit including: a breaker/relay including a fixed contact electrically coupled to a motive power circuit for a mobile application; a moveable contact selectively electrically coupled to the fixed contact, wherein the moveable contact in a first position allows power to flow through the motive power circuit, and the moveable contact in a second position does not allow power to flow through the motive power circuit; and a physical opening response portion responsive to a current value in the motive power circuit, wherein the physical opening response portion may be configured to move the moveable contact to the second position in response to the current value exceeding a threshold current value; and a contactor in series with the breaker/relay.

In an aspect, a system may include a vehicle having a motive electrical power path; a power distribution unit including a current protection circuit disposed in the motive electrical power path, the current protection circuit including breaker/relay, the breaker/relay including: a fixed contact electrically coupled to a motive power circuit for a mobile application; a moveable contact selectively electrically coupled to the fixed contact, wherein the moveable contact in a first position allows power to flow through the motive

power circuit, and the moveable contact in a second position does not allow power to flow through the motive power circuit; and a physical opening response portion responsive to a current value in the motive power circuit, wherein the physical opening response portion may be configured to move the moveable contact to the second position in response to the current value exceeding a threshold current value; a current source circuit electrically coupled to the breaker/relay and structured to inject a current across the fixed contact; and a voltage determination circuit electrically coupled to the breaker/relay and structured to determine at least one of an injected voltage amount and a contactor impedance value, wherein the voltage determination circuit may include a high-pass filter having a cutoff frequency selected in response to a frequency of the injected current. In embodiments, the voltage determination circuit further may include a bandpass filter having a bandwidth selected to bound the frequency of the injected current. The high-pass filter may include an analog hardware filter. The high-pass filter may include a digital filter. The voltage determination circuit may be further structured to determine the contactor impedance value in response to an injected voltage drop. The system may further include a contactor characterization circuit structured to store one of a contactor resistance value and the contactor impedance value, and wherein the contactor characterization circuit may be further structured to update the stored one of the contactor resistance value and the contactor impedance value in response to the contactor impedance value. The contactor characterization circuit may be further structured to update the stored one of the contactor resistance value and the contactor impedance value by performing at least one operation selected from the operations consisting of: updating a value to the contactor impedance value; filtering a value using the contactor impedance value as a filter input; rejecting the contactor impedance value for a period of time or for a number of determinations of the contactor impedance value; and updating a value by performing a rolling average of a plurality of contactor impedance values over time. The power distribution unit further may include a plurality of breaker/relay devices disposed therein, and wherein the current source circuit may be further electrically coupled to the plurality of breaker/relay devices, and to sequentially inject a current across each fixed contact of the plurality of breaker/relay devices; and wherein the voltage determination circuit may be further electrically coupled to each of the plurality of breaker/relay devices, and further structured to determine at least one of an injected voltage amount and a contactor impedance value for each of the plurality of breaker/relay devices. The current source circuit may be further structured to sequentially inject the current across each of the plurality of breaker/relay devices in a selected order of the breaker/relay devices. The current source circuit may be further structured to adjust the selected order in response to at least one of: a rate of change of a temperature of each of the fixed contacts of the breaker/relay devices; an importance value of each of the breaker/relay devices; a criticality of each of the breaker/relay devices; a power throughput of each of the breaker/relay devices; and one of a fault condition or a contactor health condition of each of the breaker/relay devices. The current source circuit may be further structured to adjust the selected order in response to one of a planned duty cycle and an observed duty cycle of the vehicle. The current source circuit may be further structured to sweep the injected current through a range of injection frequencies. The current source circuit may be further structured to inject the current across the fixed contact at a plurality of injection frequencies. The current source circuit may be further structured to inject the current across the fixed contact at a plurality of injection voltage amplitudes. The current source circuit may be further structured to inject the current across the fixed contact at an injection voltage amplitude determined in response to a power throughput of the breaker/relay devices. The current source circuit may be further structured to inject the current across the fixed contact at an injection voltage amplitude determined in response to a duty cycle of the vehicle.

In an aspect, a system may include a vehicle having a motive electrical power path; a power distribution unit including a current protection circuit disposed in the motive electrical power path, the current protection circuit including breaker/relay, the breaker/relay including a fixed contact electrically coupled to a motive power circuit for a mobile application; a moveable contact selectively electrically coupled to the fixed contact, wherein the moveable contact in a first position allows power to flow through the motive power circuit, and the moveable contact in a second position does not allow power to flow through the motive power circuit; and a physical opening response portion responsive to a current value in the motive power circuit, wherein the physical opening response portion may be configured to move the moveable contact to the second position in response to the current value exceeding a threshold current value; a current source circuit electrically coupled to the breaker/relay and structured to inject a current across the fixed contact; and a voltage determination circuit electrically coupled to the breaker/relay and structured to determine an injected voltage amount and a contactor impedance value, wherein the voltage determination circuit may be structured to perform a frequency analysis operation to determine the injected voltage amount. In embodiments, the voltage determination circuit may be further structured to determine the injected voltage amount by determining an amplitude of a voltage across the fixed contact at a frequency of interest. The frequency of interest may be determined in response to a frequency of the injected voltage. The current source circuit may be further structured to sweep the injected current through a range of injection frequencies. The current source circuit may be further structured to inject the current across the fixed contact at a plurality of injection frequencies. The current source circuit may be further structured to inject the current across the fixed contact at a plurality of injection voltage amplitudes. The current source circuit may be further structured to inject the current across the fixed contact at an injection voltage amplitude determined in response to a power throughput of the breaker/relay. The current source circuit may be further structured to inject the current across the fixed contact at an injection voltage amplitude determined in response to a duty cycle of the vehicle.

In an aspect, a multi-port power converter may include a housing may include a plurality of ports structured to electrically interface to a plurality of loads, the plurality of loads having distinct electrical characteristics; a plurality of solid state components configured to provide selected electrical power outputs and to accept selected electrical power inputs; and a plurality of solid state switches configured to provide selected connectivity between the plurality of solid state components and the plurality of ports. In embodiments, the plurality of distinct electrical characteristics may be selected from the electrical characteristics consisting of: a DC voltage, an AC voltage or voltage equivalent, a load power rating, a regenerative power rating, a current rating, a current directionality, a response time characteristic, a

frequency characteristic, and a phase characteristic. The plurality of ports may include at least two AC interface ports and at least three DC interface ports. The multi-port power converter may further include a controller, the controller including a component bank configuration circuit structured to interpret a port electrical interface description, the port electrical interface description including a description of at least a portion of the distinct electrical characteristics; and a component bank implementation circuit structured to provide solid state switch states in response to the port electrical interface description, and wherein the plurality of solid state switches may be responsive to the solid state switch states. The controller further may include a load/source drive description circuit structured to interpret a source/load drive characteristic, wherein the source/load drive characteristic may include at least one electrical characteristic requirement of a load; and a load/source drive implementation circuit structured to provide a component driver configuration in response to the source/load drive characteristic. The multi-port power converter may further include at least one of wherein the solid state switches may be further responsive to the source/load drive characteristic; wherein a gate driver controller may be responsive to the source/load drive characteristic; and wherein a requestor component for a gate driver controller may be responsive to the source/load drive characteristic. The plurality of loads having distinct electrical characteristics may be a superset of a plurality of loads having distinct electrical characteristics sufficient to encompass a selected class of applications, each application including at least one of: a vehicle, an off-road vehicle, and a set of load types for a vehicle. The multi-port power converter includes a sufficient number of solid state components, solid state switches, and ports, such that the multi-port power converter can provide the plurality of loads having distinct electrical characteristics for any member of the selected class of applications. The plurality of loads having distinct electrical characteristics may be a superset of a plurality of loads having distinct electrical characteristics sufficient to encompass a selected class of applications, each application including at least one of: a vehicle, an off-road vehicle, and a set of load types for a vehicle. The multi-port power converter may further include a first application of the selected class of applications having a first set of distinct electrical characteristics, wherein a second application of the selected class of applications has a second set of distinct electrical characteristics, wherein a first multi-port power converter supports the first application, wherein a second multi-port power converter supports the second application, and wherein the first multi-port power converter and the second multi-port power converter have identical ports, solid state components, and solid state switches. The first multi-port power converter and the second multi-port power converter have distinct solid state switch states. The plurality of loads having distinct electrical characteristics may be a superset of a plurality of loads having distinct electrical characteristics sufficient to encompass a selected class of applications, each application including at least one of: a vehicle, an off-road vehicle, and a set of load types for a vehicle. The multi-port power converter may further include a first application of the selected class of applications having a first set of distinct electrical characteristics, wherein a second application of the selected class of applications has a second set of distinct electrical characteristics, wherein a first multi-port power converter supports the first application, wherein a second multi-port power converter supports the second application, and wherein the first multi-port power converter and the second multi-port power converter have identical ports, solid state components, and solid state switches. The first multi-port power converter and the second multi-port power converter have distinct solid state switch states and distinct component driver configurations.

In an aspect, a power converter have a plurality of ports including a plurality of solid state components configured to provide selected electrical power outputs and to accept selected electrical power inputs; a plurality of solid state switches electrically interposed between the plurality of ports and the plurality of solid state components, wherein the plurality of solid state switches may be configured to selectively couple sets of the plurality of solid state components to the plurality of ports; and a controller, including: a component bank configuration circuit structured to interpret a port electrical interface description, the port electrical interface description including a description of electrical characteristics for one of the plurality of ports; and a component bank implementation circuit structured to provide solid state switch states in response to the port electrical interface description, and wherein the plurality of solid state switches may be responsive to the solid state switch states. In embodiments, the controller further may include a load/source drive description circuit structured to interpret a source/load drive characteristic, wherein the source/load drive characteristic may include at least one electrical characteristic requirement of a load; and a load/source drive implementation circuit structured to provide a component driver configuration in response to the source/load drive characteristic. The component bank implementation circuit further provides the solid state switch states in response to the source/load drive characteristic; and wherein a gate driver controller for at least one of the solid state components may be responsive to the source/load drive characteristic. Each of the solid state components may include at least one of an inverter or a DC/DC converter. The component bank configuration circuit may be further structured to interpret a port configuration service request value, and wherein the component bank implementation circuit further provides the solid state switch states in response to the port configuration service request value. The component bank configuration circuit may be further structured to interpret a port configuration definition value, and wherein the component bank implementation circuit further provides the solid state switch states in response to the port configuration definition value.

In an aspect, a method may include interpreting a port electrical interface description, the port electrical interface description including a description of electrical characteristics for at least one of a plurality of ports of a power converter for an electric mobile application; and providing solid state switch states in response to the port electrical interface description, thereby configuring at least one of an AC inverter or a DC/DC converter to provide power to the at least one of the plurality of ports according to the port electrical interface description. In embodiments, the method may further include interpreting the port electrical interface description during run-time operations of the electric mobile application. The method may further include interpreting the port electrical interface description from a service tool communicating with a controller of the power converter. The method may further include interpreting the port electrical interface description from a manufacturing tool in communicating with a controller of the power converter. Providing the solid state switch states may be performed as a remanufacture operation for the power converter. Providing the solid state switch states may be performed as an operation selected from the operations consisting of: an upfit operation

for the electric mobile application, an application change operation for the electric mobile application, and a refit operation for the electric mobile application. The method may further include interpreting a source/load drive characteristic for at least one of the plurality of ports of the power converter, wherein the source/load drive characteristic may include at least one electrical characteristic requirement of a load, and providing a component driver configuration in response to the source/load drive characteristic. The method may further include interpreting the source/load drive characteristic during run-time operations of the electric mobile application. The method may further include interrogating at least one load electrically coupled to the at least one port of the power converter, and interpreting the source/load drive characteristic in response to the interrogating. The method may further include interpreting the source/load drive characteristic from a service tool communicating with a controller of the power converter. The method may further include interpreting the source/load drive characteristic from a manufacturing tool in communicating with a controller of the power converter. Providing the component driver configuration may be performed as a remanufacture operation for the power converter. The providing the component driver configuration may be performed as an operation selected from the operations consisting of: an upfit operation for the electric mobile application, an application change operation for the electric mobile application, and a refit operation for the electric mobile application.

In an aspect, a method may include providing a power converter having a plurality of ports; determining an electrical interface description for at least one power source of an electric mobile application and at least one electrical load of the electric mobile application; providing solid state switch states in response to the electrical interface description, thereby configuring at least one of an AC inverter or a DC/DC converter to provide or accept power to the at least one of the plurality of ports according to the port electrical interface description; and installing the power converter into the electric mobile application. In embodiments, the method may further include determining which ports of the power converter are to be coupled to the at least one power source and the at least one electrical load, and wherein providing the solid state switch states may include configuring electrical characteristics of the determined ports according to the port electrical interface description. The method may further include a plurality of the electric loads, wherein a first one of the electrical loads may include an AC load, and wherein a second one of the electrical loads may include a DC load. The method may further include a plurality of the power sources, wherein a first one of the power sources may include a DC source at a first voltage, and wherein a second one of the power sources may include a DC source at a second voltage. The method may further include determining a source/load drive characteristic for at least one of electric loads of the electric mobile application, and providing a component driver configuration in response to the source/load drive characteristic. The component driver configuration may include a gate driver controller for an inverter component coupled to one of the plurality of ports corresponding to the at least one of the electric loads of the electric mobile application. The method may further include coupling a coolant inlet port and a coolant outlet port to a cooling system of the electric mobile application.

In an aspect, an integrated inverter assembly may include a main cover and an opposing back cover; a coolant channel disposed between a coolant channel cover and a coolant channel separating body; wherein power electronics of the inverter assembly may be thermally coupled to the coolant channel; and wherein at least one of a coolant inlet or a coolant outlet of the coolant channel may include a quick connector without a locking element. In embodiments, the quick connector further may include a fir tree hose coupling disposed on an outer housing wall of the quick connector. The coolant channel separating body further may include an integrated hose nipple configured to couple with the quick connector. The inverter assembly may further include a hose configured to couple to the integrated hose nipple at a first end, and to the quick connector at a second end. The hose may include a baffled hose.

In an aspect, an integrated inverter assembly may include a main cover and an opposing back cover; a plurality of IGBTs, each of the plurality of IGBTs configured to provide at least one phase of AC power to a motor; and a potted DC link capacitor operationally disposed between the IGBTs and a DC power source, and wherein the potted DC link capacitor may include a bus bar, a common-mode choke, and a capacitor disposed in a housing of the potted DC link capacitor. In embodiments, the inverter assembly may further include a first welded connection between the potted DC link capacitor and each of the IGBTs, and a second welded connection between each of the IGBTs and an AC motor connector of the inverter assembly. The AC motor connector may include a plurality of AC blades. Each of the plurality of AC blades may extend through a foam seal, thereby forming the AC motor connector. The potted DC link capacitor may be thermally coupled to an integral coolant channel of the inverter assembly. The potted DC link capacitor may project from one of the main cover and the opposing back cover.

In an aspect, an integrated inverter assembly may include a main cover and an opposing back cover; a coolant channel disposed between a coolant channel cover and a coolant channel separating body; and wherein power electronics of the inverter assembly may be thermally coupled to the coolant channel. In embodiments, the coolant channel separating body may be friction-stir welded to each of the main cover and the coolant channel separating body. The assembly may further include a second coolant channel, wherein the coolant channel may be disposed on a first side of the coolant channel separating body, and wherein the second coolant channel may be disposed on a second side of the coolant channel separating body. The assembly may further include where the main cover may be cast, the coolant channel separating body may be forged, and the coolant channel cover may be stamped. The assembly may further include wherein the main cover defines a plurality of coupling threaded bores, and wherein the back cover defines a corresponding plurality of coupling threaded bores. The corresponding plurality of coupling threaded bores further each include an unthreaded pilot portion of the bores, and wherein the unthreaded pilot portion of the bores may include a first height, wherein a plurality of coupling screws each include a threaded portion having a second height, and wherein the first height may be greater than the second height. The main cover further defines a narrowed portion of each of the plurality of coupling threaded bores, and wherein each of the plurality of coupling screws further may include a thin neck portion, and wherein the threaded portion of each of the plurality of coupling screws has a diameter greater than the thin neck portion. The assembly may further include a cure-in-place-gasket positioned between the main cover and the back cover. The assembly may further include wherein the cure-in-place-gasket may be dispensed on the main cover. At least one of the main cover and the back

cover may include a ledge having a selected height such that the cure-in-place-gasket has a selected compression when the main cover may be coupled to the back cover.

In an aspect, a method may include operating a motor for an electric mobile application; determining a motor temperature value in response to at least one parameter selected from the parameters consisting of: a power throughput of the motor; a voltage input value to the motor; and a current input value to the motor; interpreting a sensed motor temperature value for the motor; and adjusting an operating parameter for the motor in response to the motor temperature value and the sensed motor temperature value. In embodiments, the method may further include using a combination of the motor temperature value and the sensed motor temperature value to determine a motor effective temperature value, and wherein the adjusting the operating parameter may be further in response to the motor effective temperature value. The method may further include determining a first reliability value for the motor temperature value in response to a first operating condition for the motor, determining a second reliability value for the sensed motor temperature value in response to a second operating condition for the motor, and wherein determining the motor effective temperature value may be further in response to the first reliability value and the second reliability value. The method may further include using the sensed motor temperature value as the motor effective temperature value in response to the second reliability value exceeding a threshold value. The sensed motor temperature value for the motor may include a sensed temperature from a first component within the motor, the method may further include applying a correction to the sensed motor temperature value to determine a second sensed temperature value including an estimated temperature for a second component within the motor, and further using the second sensed temperature value to determine the motor effective temperature value. The method may further include applying a hot spot adjustment correction to the sensed motor temperature value, and further using the adjusted sensed motor temperature value to determine the motor effective temperature value. The method may further include determining the first reliability value in response to at least one operating condition selected from the operating conditions consisting of: a power throughput of the motor; a rate of change of power throughput of the motor; a defined range value for a model used to determine the motor temperature value; and a rate of change of one of the motor temperature value or the effective motor temperature value. The method may further include determining the second reliability value in response to at least one operating condition selected from the operating conditions consisting of: a power throughput of the motor; a rate of change of power throughput of the motor; a defined range value for a temperature sensor providing the sensed motor temperature value; a response time for a temperature sensor providing the sensed motor temperature value; and a fault condition for a temperature sensor providing the sensed motor temperature value. The method may further include using one or the other of the motor temperature value and the sensed motor temperature value as the motor effective temperature value. The method may further include mixing the motor temperature value, the sensed motor temperature value, and a previous value of the motor effective temperature value to determine the motor effective temperature value. The method may further include applying a low-pass filter to the motor effective temperature value. The adjusting the operating parameter may include at least one operation selected from the operations consisting of: adjusting a rating of the motor; adjusting a rating of a load of the electric mobile application; adjusting an active cooling amount for the motor; and adjusting an operating space of the motor based on an efficiency map of the motor.

In an aspect, an apparatus may include a motor control circuit structured to operate a motor for an electric mobile application; an operating conditions circuit structured to interpret a sensed motor temperature value for the motor, and further structured to interpret at least one parameter selected from the parameters consisting of: a power throughput of the motor; a voltage input value to the motor; a current input value to the motor; an ambient temperature value; and an active cooling amount for the motor; a motor temperature determination circuit structured to determine a motor temperature value in response to the at least one of a power throughput of the motor; a voltage input value to the motor; a current input value to the motor; an ambient temperature value; and an active cooling amount for the motor; and determine a motor effective temperature value in response to the motor temperature value and the sensed motor temperature value; and wherein the motor control circuit may be further structured to adjust at least one operating parameter for the motor in response to the motor effective temperature value. In embodiments, the motor temperature determination circuit may be further structured to determine a first reliability value for the motor temperature value in response to a first operating condition for the motor; determine a second reliability value for the sensed motor temperature value in response to a second operating condition for the motor; and determine the motor effective temperature value further in response to the first reliability value and the second reliability value. The motor temperature determination circuit may be further structured to use the sensed motor temperature value as the motor effective temperature value in response to the second reliability value exceeding a threshold value. The motor temperature determination circuit may be further structured to apply one of an offset component adjustment or a hot spot adjustment to the sensed motor temperature value; and determine the motor effective temperature value further in response to the adjusted sensed motor temperature value. The motor temperature determination circuit may be further structured to determine the first reliability value in response to at least one operating condition selected from the operating conditions consisting of: the power throughput of the motor; a rate of change of power throughput of the motor; a defined range value for a model used to determine the motor temperature value; and a rate of change of one of the motor temperature value or the effective motor temperature value. The motor temperature determination circuit may be further structured to determine the second reliability value in response to at least one operating condition selected from the operating conditions consisting of: the power throughput of the motor; a rate of change of power throughput of the motor; a defined range value for a temperature sensor providing the sensed motor temperature value; a response time for a temperature sensor providing the sensed motor temperature value; and a fault condition for a temperature sensor providing the sensed motor temperature value. The motor control circuit may be further structured to adjust at least one operating parameter selected from the operating parameters consisting of: a rating of the motor; a rating of a load of the electric mobile application; the active cooling amount for the motor; and an operating space of the motor based on an efficiency map of the motor.

In an aspect, a system may include an electric mobile application having a motor and an inverter, wherein the inverter may include a plurality of driving elements for the

motor; a controller, including a motor control circuit structured to provide driver commands, and wherein the plurality of driving elements may be responsive to the driver commands; an operating conditions circuit structured to interpret a motor performance request value including at least one of a power, speed, or torque request for the motor; a driver efficiency circuit structured to interpret a driver activation value for each of the plurality of driving elements of the inverter in response to the motor performance request value; and wherein the motor control circuit may be further structured to provide the driver commands to de-activate at least one of the plurality of driving elements for the motor in response to the driver activation value for each of the plurality of driving elements of the inverter. In embodiments, the motor may include a three-phase AC motor, wherein the plurality of driving elements include six driving elements, and wherein the driver efficiency circuit provides the driver activation value to de-activate three of the six driving elements in response to the motor performance request value being below a threshold value.

In an aspect, a method may include providing driver commands to a plurality of driving elements of an inverter electrically coupled to a motor for an electric mobile application; interpreting a motor performance request value including at least one of a power, speed, or torque request for the motor; interpreting a driver activation value for each of the plurality of driving elements of the inverter in response to the motor performance request value; and providing the driver commands to de-activate at least one of the plurality of driving elements for the motor in response to the driver activation value for each of the plurality of driving elements of the inverter. In embodiments, the method may further include providing the driver commands to de-activate three out of six total driving elements in response to the motor performance request value being below a threshold value. The method may further include de-activating a first three out of the six total driving elements during a first de-activation operation, and de-activating a second three out of the six total driving elements during a second de-activation operation.

In an aspect, a system may include an electric mobile application having a plurality of electric motors, each one of the plurality of electric motors operationally coupled to a corresponding one of a plurality of electric loads; a controller, including an application load circuit structured to interpret an application performance request value; a performance servicing circuit structured to determine a plurality of motor commands in response to a motor capability description and the application performance request value; and a motor control circuit structured to provide the plurality of motor commands to corresponding motors of the plurality of electric motors; and wherein the plurality of electric motors may be responsive to the plurality of motor commands. In embodiments, the performance servicing circuit may be further structured to determine the plurality of motor commands in response to one of a fault condition or a failure condition for at least one of the plurality of electric motors. The performance servicing circuit may be further structured to provide the plurality of motor commands to meet the application performance request value by at least partially redistributing load requirements from one of the plurality of electric motors having the fault condition or the failure condition, to at least one of the plurality of electric motors having available performance capacity. The performance servicing circuit may be further structured to derate one of the plurality of electric motors in response to the one of the fault condition or the failure condition. The system may further include a first data store associated with a first one of the plurality of electric motors, a second data store associated with a second one of the plurality of electric motors, and wherein the controller further may include a data management circuit structured to command at least partial data redundancy between the first data store and the second data store. The at least partial data redundancy may include at least one data value selected from the data values consisting of: a fault value, a system state, and a learning component value. The data management circuit may be further structured to command the at least partial data redundancy in response to one of a fault condition or a failure condition related to at least one of: one of the plurality of electric motors, or a local controller operationally coupled to one of the plurality of electric motors. The performance servicing circuit may be further structured to determine the plurality of motor commands in response to the one of the fault condition or the failure condition, and further in response to data from the at least partial data redundancy. The performance servicing circuit may be further structured to suppress an operator notification of one of a fault condition or a failure condition in response to a performance capability of the plurality of electric motors being capable of delivering the application performance request value. The performance servicing circuit may be further structured to communicate the suppressed operator notification to at least one of a service tool or an external controller, wherein the external controller may be at least intermittently communicatively coupled to the controller. The performance servicing circuit may be further structured to adjust the application performance request value in response to a performance capability of the plurality of electric motors being incapable of delivering the application performance request value.

In an aspect, a method may include interpreting an application performance request value; determining a plurality of motor commands in response to a motor capability description and the application performance request value; and providing the plurality of motor commands to corresponding motors of a plurality of electric motors operationally coupled to corresponding ones of a plurality of electric loads of an electric mobile application. In embodiments, the method may further include determining the plurality of motor commands in response to one of a fault condition or a failure condition for at least one of the plurality of electric motors. The method may further include providing the plurality of motor commands to meet the application performance request value by at least partially redistributing load requirements from one of the plurality of electric motors having the fault condition or the failure condition, to at least one of the plurality of electric motors having available performance capacity. The method may further include derating one of the plurality of electric motors in response to the one of the fault condition or the failure condition. The method may further include commanding at least partial data redundancy between a first data store associated with a first one of the plurality of electric motors and a second data store associated with a second one of the plurality of electric motors. The at least partial data redundancy may include at least one data value selected from the data values consisting of: a fault value, a system state, and a learning component value. The method may further include commanding the at least partial data redundancy in response to one of a fault condition or a failure condition related to at least one of: one of the plurality of electric motors, or a local controller operationally coupled to one of the plurality of electric motors. The method may further include determining the plurality of motor commands in

response to the one of the fault condition or the failure condition, and further in response to data from the at least partial data redundancy. One of a fault condition or a failure condition may relate to a first local controller operationally coupled to one of the plurality of electric motors, the method may further include controlling the one of the plurality of electric motors with a second local controller communicatively coupled to the one of the plurality of electric motors. The method may further include suppressing an operator notification of one of a fault condition or a failure condition in response to a performance capability of the plurality of electric motors being capable of delivering the application performance request value. The method may further include communicating the suppressed operator notification to at least one of a service tool or an external controller, wherein the external controller may be at least intermittently communicatively coupled to a controller of the electric mobile application. The method may further include adjusting the application performance request value in response to a performance capability of the plurality of electric motors being incapable of delivering the application performance request value.

In an aspect, a system may include a vehicle having a motive electrical power path; a power distribution unit having a current protection circuit disposed in the motive electrical power path, the current protection circuit including: a first leg of the current protection circuit including a pyro-fuse; a second leg of the current protection circuit including a thermal fuse; and wherein the first leg and the second leg may be coupled in a parallel arrangement; a controller may include a current detection circuit structured to determine a current flow through the motive electrical power path; and a pyro-fuse activation circuit structured to provide a pyro-fuse activation command in response to the current flow exceeding a threshold current flow value; wherein the pyro-fuse may be responsive to the pyro-fuse activation command; and a fuse management circuit structured to provide a switch activation command in response to the current flow, wherein the solid state switch may be responsive to the switch activation command. In embodiments, a first resistance through the first leg and a second resistance through the second leg may be configured such that a resulting current through the second leg after the pyro-fuse activates may be sufficient to activate the thermal fuse. The system may further include a contactor coupled to the current protection circuit, wherein the contactor in the open position disconnects one of the current protection circuit or the second leg of the current protection circuit.

In an aspect, a system may include a vehicle having a motive electrical power path; a power distribution unit having a current protection circuit disposed in the motive electrical power path, the current protection circuit including: a first leg of the current protection circuit including a thermal fuse, a second leg of the current protection circuit including a solid state switch, wherein the first leg and the second leg may be coupled in a parallel arrangement, and a thermal fuse and a contactor in a series arrangement with the thermal fuse; a controller may include a current detection circuit structured to determine a current flow through the motive electrical power path; and a fuse management circuit structured to provide a switch activation command in response to the current flow; wherein the solid state switch may be responsive to the switch activation command; a high voltage power input coupling including a first electrical interface for a high voltage power source; and a high voltage power output coupling including a second electrical interface for a motive power load; wherein the current protection circuit electrically couples the high voltage power input to the high voltage power output, and wherein the current protection circuit may be at least partially disposed in a laminated layer of the power distribution unit, the laminated layer including an electrically conductive flow path disposed two electrically insulating layers. In embodiments, the system may further include a contactor coupled to the current protection circuit, wherein the contactor in the open position disconnects one of the current protection circuit or the second leg of the current protection circuit. The current protection circuit may include a motive power bus bar disposed in the laminated layer of the power distribution unit.

In an aspect, an integrated inverter assembly with power converter having a plurality of ports may include a main cover and an opposing back cover; a coolant channel disposed between a coolant channel cover and a coolant channel separating body; wherein power electronics of the inverter assembly may be thermally coupled to the coolant channel; wherein at least one of a coolant inlet or a coolant outlet of the coolant channel includes a quick connector without a locking element; a plurality of solid state components configured to provide selected electrical power outputs and to accept selected electrical power inputs; a plurality of solid state switches electrically interposed between the plurality of ports and the plurality of solid state components, wherein the plurality of solid state switches may be configured to selectively couple sets of the plurality of solid state components to the plurality of ports; and a controller may include a component bank configuration circuit structured to interpret a port electrical interface description, the port electrical interface description including a description of electrical characteristics for one of the plurality of ports; and a component bank implementation circuit structured to provide solid state switch states in response to the port electrical interface description, and wherein the plurality of solid state switches may be responsive to the solid state switch states. In embodiments, the quick connector may further include a fir tree hose coupling disposed on an outer housing wall of the quick connector. The controller may further include a load/source drive description circuit structured to interpret a source/load drive characteristic, wherein the source/load drive characteristic includes at least one electrical characteristic requirement of a load; and a load/source drive implementation circuit structured to provide a component driver configuration in response to the source/load drive characteristic.

In an aspect, an integrated inverter assembly may include a main cover and an opposing back cover; a coolant channel disposed between a coolant channel cover and a coolant channel separating body; wherein power electronics of the inverter assembly may be thermally coupled to the coolant channel; wherein at least one of a coolant inlet or a coolant outlet of the coolant channel includes a quick connector without a locking element; a plurality of IGBTs, each of the plurality of IGBTs configured to provide at least one phase of AC power to a motor; and a potted DC link capacitor operationally disposed between the IGBTs and a DC power source, and wherein the potted DC link capacitor includes a bus bar, a common-mode choke, and a capacitor disposed in a housing of the potted DC link capacitor. In embodiments, the quick connector may further include a fir tree hose coupling disposed on an outer housing wall of the quick connector. The inverter assembly may further include a first welded connection between the potted DC link capacitor and

each of the IGBTs, and a second welded connection between each of the IGBTs and an AC motor connector of the inverter assembly.

In an aspect, a system may include an electric mobile application having a motor and an inverter, wherein the inverter includes a plurality of driving elements for the motor; a controller may include a motor control circuit structured to provide driver commands, and wherein the plurality of driving elements may be responsive to the driver commands; an operating conditions circuit structured to interpret a motor performance request value including at least one of a power, speed, or torque request for the motor; a driver efficiency circuit structured to interpret a driver activation value for each of the plurality of driving elements of the inverter in response to the motor performance request value; wherein the motor control circuit may be further structured to provide the driver commands to de-activate at least one of the plurality of driving elements for the motor in response to the driver activation value for each of the plurality of driving elements of the inverter; and a breaker/relay including: a fixed contact electrically coupled to a motive power circuit; a moveable contact selectively electrically coupled to the fixed contact, wherein the moveable contact in a first position allows power to flow through the motive power circuit, and the moveable contact in a second position does not allow power to flow through the motive power circuit; and a physical opening response portion responsive to a current value in the motive power circuit, wherein the physical opening response portion may be configured to move the moveable contact to the second position in response to the current value exceeding a threshold current value. In embodiments, the motor may include a three-phase AC motor, wherein the plurality of driving elements include six driving elements, and wherein the driver efficiency circuit provides the driver activation value to de-activate three of the six driving elements in response to the motor performance request value being below a threshold value. The fixed contact may include a first fixed contact, the breaker/relay further including a second fixed contact, wherein the moveable contact includes a first moveable contact corresponding to the first fixed contact, the breaker/relay further including a second moveable contact corresponding to the second fixed contact, and a bus bar electrically coupling the first moveable contact to the second moveable contact.

In an aspect, a system may include an electric mobile application having a plurality of electric motors, each one of the plurality of electric motors operationally coupled to a corresponding one of a plurality of electric loads; a controller may include an application load circuit structured to interpret an application performance request value; a performance servicing circuit structured to determine a plurality of motor commands in response to a motor capability description and the application performance request value; and a motor control circuit structured to provide the plurality of motor commands to corresponding motors of the plurality of electric motors; and wherein the plurality of electric motors may be responsive to the plurality of motor commands; a multi-port power converter may include a housing including a plurality of ports structured to electrically interface to a plurality of loads, the plurality of loads having distinct electrical characteristics; a plurality of solid state components configured to provide selected electrical power outputs and to accept selected electrical power inputs; and a plurality of solid state switches configured to provide selected connectivity between the plurality of solid state components and the plurality of ports. In embodiments, the performance servicing circuit may be further structured to determine the plurality of motor commands in response to one of a fault condition or a failure condition for at least one of the plurality of electric motors. The plurality of distinct electrical characteristics may be selected from the electrical characteristics consisting of: a DC voltage, an AC voltage or voltage equivalent, a load power rating, a regenerative power rating, a current rating, a current directionality, a response time characteristic, a frequency characteristic, and a phase characteristic.

In an aspect, a system may include an electric mobile application having a plurality of electric motors, each one of the plurality of electric motors operationally coupled to a corresponding one of a plurality of electric loads; a controller may include an application load circuit structured to interpret an application performance request value; a performance servicing circuit structured to determine a plurality of motor commands in response to a motor capability description and the application performance request value; a motor control circuit structured to provide the plurality of motor commands to corresponding motors of the plurality of electric motors; wherein the plurality of electric motors may be responsive to the plurality of motor commands; a housing; a breaker/relay device positioned in the housing, wherein the breaker/relay device may be configured to interrupt a motive power circuit for an electrical vehicle system, where the housing may be disposed on the electrical vehicle system; wherein the breaker/relay device includes a physical opening response portion responsive to a first current value in the motive power circuit, and a controlled opening response portion responsive to a second current value in the motive power circuit; and a pre-charge circuit electrically coupled in parallel to the breaker/relay device. In embodiments, the performance servicing circuit may be further structured to determine the plurality of motor commands in response to one of a fault condition or a failure condition for at least one of the plurality of electric motors. The first current value may be greater than the second current value.

In an aspect, a system may include an electric mobile application having a plurality of electric motors, each one of the plurality of electric motors operationally coupled to a corresponding one of a plurality of electric loads; a controller may include an application load circuit structured to interpret an application performance request value; a performance servicing circuit structured to determine a plurality of motor commands in response to a motor capability description and the application performance request value; and a motor control circuit structured to provide the plurality of motor commands to corresponding motors of the plurality of electric motors; wherein the plurality of electric motors may be responsive to the plurality of motor commands; and a multi-port power converter may include a housing including a plurality of ports structured to electrically interface to a plurality of loads, the plurality of loads having distinct electrical characteristics; a plurality of solid state components configured to provide selected electrical power outputs and to accept selected electrical power inputs; and a plurality of solid state switches configured to provide selected connectivity between the plurality of solid state components and the plurality of ports. In embodiments, the performance servicing circuit may be further structured to determine the plurality of motor commands in response to one of a fault condition or a failure condition for at least one of the plurality of electric motors. The plurality of distinct electrical characteristics may be selected from the electrical characteristics consisting of: a DC voltage, an AC voltage or

voltage equivalent, a load power rating, a regenerative power rating, a current rating, a current directionality, a response time characteristic, a frequency characteristic, and a phase characteristic.

In an aspect, a system may include an electric mobile application having a plurality of electric motors, each one of the plurality of electric motors operationally coupled to a corresponding one of a plurality of electric loads; a controller may include an application load circuit structured to interpret an application performance request value; a performance servicing circuit structured to determine a plurality of motor commands in response to a motor capability description and the application performance request value; and a motor control circuit structured to provide the plurality of motor commands to corresponding motors of the plurality of electric motors; wherein the plurality of electric motors may be responsive to the plurality of motor commands; a breaker/relay may include a plurality of fixed contacts electrically coupled electric load circuits for a mobile application; a plurality of moveable contacts, each moveable contact selectively electrically coupled to a corresponding one of the plurality of fixed contacts; a plurality of armatures each operationally coupled to a corresponding one of the moveable contacts, such that each armature in a first position prevents electrical coupling between the corresponding moveable contact and the corresponding fixed contact, and each armature in a second position allows electrical coupling between the corresponding moveable contact and the corresponding fixed contact; and a current response circuit structured to determine a current in each of the electric load circuits, and further structured to provide an armature command to open the corresponding one of the moveable contacts in response to the current in the corresponding electrical load circuit indicating a high current value. In embodiments, the performance servicing circuit may be further structured to determine the plurality of motor commands in response to one of a fault condition or a failure condition for at least one of the plurality of electric motors. The system may further include a plurality of biasing members each operationally coupled to a corresponding one of the plurality of moveable contacts, and configured to bias the corresponding one of the plurality of armatures into one of the first position or the second position.

In an aspect, a system may include an electric mobile application having a plurality of electric motors, each one of the plurality of electric motors operationally coupled to a corresponding one of a plurality of electric loads; a controller may include an application load circuit structured to interpret an application performance request value; a performance servicing circuit structured to determine a plurality of motor commands in response to a motor capability description and the application performance request value; and a motor control circuit structured to provide the plurality of motor commands to corresponding motors of the plurality of electric motors; wherein the plurality of electric motors may be responsive to the plurality of motor commands; a multi-port power converter may include a housing including a plurality of ports structured to electrically interface to a plurality of loads, the plurality of loads having distinct electrical characteristics; a plurality of solid state components configured to provide selected electrical power outputs and to accept selected electrical power inputs; and a plurality of solid state switches configured to provide selected connectivity between the plurality of solid state components and the plurality of ports. In embodiments, the performance servicing circuit may be further structured to determine the plurality of motor commands in response to one of a fault condition or a failure condition for at least one of the plurality of electric motors. The plurality of distinct electrical characteristics may be selected from the electrical characteristics consisting of: a DC voltage, an AC voltage or voltage equivalent, a load power rating, a regenerative power rating, a current rating, a current directionality, a response time characteristic, a frequency characteristic, and a phase characteristic.

In an aspect, a system may include an electric mobile application having a plurality of electric motors, each one of the plurality of electric motors operationally coupled to a corresponding one of a plurality of electric loads; a controller may include an application load circuit structured to interpret an application performance request value; a performance servicing circuit structured to determine a plurality of motor commands in response to a motor capability description and the application performance request value; and a motor control circuit structured to provide the plurality of motor commands to corresponding motors of the plurality of electric motors; wherein the plurality of electric motors may be responsive to the plurality of motor commands; a breaker/relay may include a fixed contact electrically coupled to a motive power circuit for a mobile application; a moveable contact selectively electrically coupled to the fixed contact, wherein the moveable contact in a first position allows power to flow through the motive power circuit, and the moveable contact in a second position does not allow power to flow through the motive power circuit; and a physical opening response portion responsive to a current value in the motive power circuit, wherein the physical opening response portion may be configured to move the moveable contact to the second position in response to the current value exceeding a threshold current value. In embodiments, the performance servicing circuit may be further structured to determine the plurality of motor commands in response to one of a fault condition or a failure condition for at least one of the plurality of electric motors. The fixed contact may include a first fixed contact, the breaker/relay further including a second fixed contact, wherein the moveable contact includes a first moveable contact corresponding to the first fixed contact, the breaker/relay further including a second moveable contact corresponding to the second fixed contact, and a bus bar electrically coupling the first moveable contact to the second moveable contact.

In an aspect, a system may include an electric mobile application having a plurality of electric motors, each one of the plurality of electric motors operationally coupled to a corresponding one of a plurality of electric loads; a controller may include an application load circuit structured to interpret an application performance request value; a performance servicing circuit structured to determine a plurality of motor commands in response to a motor capability description and the application performance request value; and a motor control circuit structured to provide the plurality of motor commands to corresponding motors of the plurality of electric motors; wherein the plurality of electric motors may be responsive to the plurality of motor commands; a multi-port power converter may include a housing including a plurality of ports structured to electrically interface to a plurality of loads, the plurality of loads having distinct electrical characteristics; a plurality of solid state components configured to provide selected electrical power outputs and to accept selected electrical power inputs; and a plurality of solid state switches configured to provide selected connectivity between the plurality of solid state components and the plurality of ports. In embodiments, the performance

servicing circuit may be further structured to determine the plurality of motor commands in response to one of a fault condition or a failure condition for at least one of the plurality of electric motors. The plurality of distinct electrical characteristics may be selected from the electrical characteristics consisting of: a DC voltage, an AC voltage or voltage equivalent, a load power rating, a regenerative power rating, a current rating, a current directionality, a response time characteristic, a frequency characteristic, and a phase characteristic.

In an aspect, an integrated inverter assembly may include a main cover and an opposing back cover; a coolant channel disposed between a coolant channel cover and a coolant channel separating body; wherein power electronics of the inverter assembly may be thermally coupled to the coolant channel; wherein at least one of a coolant inlet or a coolant outlet of the coolant channel includes a quick connector without a locking element; and a multi-port power converter may include a housing including a plurality of ports structured to electrically interface to a plurality of loads, the plurality of loads having distinct electrical characteristics; a plurality of solid state components configured to provide selected electrical power outputs and to accept selected electrical power inputs; and a plurality of solid state switches configured to provide selected connectivity between the plurality of solid state components and the plurality of ports. In embodiments, the plurality of distinct electrical characteristics may be selected from the electrical characteristics consisting of: a DC voltage, an AC voltage or voltage equivalent, a load power rating, a regenerative power rating, a current rating, a current directionality, a response time characteristic, a frequency characteristic, and a phase characteristic. The quick connector may further include a fir tree hose coupling disposed on an outer housing wall of the quick connector.

In an aspect, an integrated inverter assembly may include a main cover and an opposing back cover; a plurality of IGBTs, each of the plurality of IGBTs configured to provide at least one phase of AC power to a motor; a potted DC link capacitor operationally disposed between the IGBTs and a DC power source, and wherein the potted DC link capacitor includes a bus bar, a common-mode choke, and a capacitor disposed in a housing of the potted DC link capacitor; and a multi-port power converter may include a housing including a plurality of ports structured to electrically interface to a plurality of loads, the plurality of loads having distinct electrical characteristics; a plurality of solid state components configured to provide selected electrical power outputs and to accept selected electrical power inputs; and a plurality of solid state switches configured to provide selected connectivity between the plurality of solid state components and the plurality of ports. In embodiments, the plurality of distinct electrical characteristics may be selected from the electrical characteristics consisting of: a DC voltage, an AC voltage or voltage equivalent, a load power rating, a regenerative power rating, a current rating, a current directionality, a response time characteristic, a frequency characteristic, and a phase characteristic. The inverter assembly may further include a first welded connection between the potted DC link capacitor and each of the IGBTs, and a second welded connection between each of the IGBTs and an AC motor connector of the inverter assembly.

In an aspect, a mobile application may include a motive power circuit, the motive power circuit including a power storage device and an electrical load, wherein the power storage device and the electrical load may be selectively electrically coupled through a power bus; a power distribution unit (PDU) electrically interposed between the power storage device and the electrical load, wherein the PDU includes a breaker/relay positioned on one of a high side and a low side of the power storage device; wherein the breaker/relay includes: a plurality of fixed contacts electrically coupled to the power bus; a plurality of moveable contacts corresponding to the plurality of fixed contacts, wherein the plurality of moveable contacts may be selectively electrically coupled to the plurality of fixed contacts, and wherein the moveable contacts allow power flow through the power bus when electrically coupled to the fixed contacts, and prevent power flow through the power bus when not electrically coupled to the fixed contacts; an armature operationally coupled to at least one of the moveable contacts, such that the armature in a first position prevents electrical coupling between the at least one of the moveable contacts and the corresponding one of the fixed contacts, and the armature in a second position allows electrical coupling between the at least one of the moveable contacts and the corresponding one of the fixed contacts; a first biasing member biasing the armature into one of the first position or the second position; and an arc suppression assembly structured to guide and disperse an opening arc between each of the plurality of moveable contacts and the corresponding fixed contacts; and a multi-port power converter may include a housing including a plurality of ports structured to electrically interface to a plurality of loads, the plurality of loads having distinct electrical characteristics; a plurality of solid state components configured to provide selected electrical power outputs and to accept selected electrical power inputs; and a plurality of solid state switches configured to provide selected connectivity between the plurality of solid state components and the plurality of ports. In embodiments, the plurality of distinct electrical characteristics may be selected from the electrical characteristics consisting of: a DC voltage, an AC voltage or voltage equivalent, a load power rating, a regenerative power rating, a current rating, a current directionality, a response time characteristic, a frequency characteristic, and a phase characteristic. The plurality of moveable contacts may be linked as a dual pole single throw contacting arrangement.

In an aspect, a multi-port power converter may include a housing including a plurality of ports structured to electrically interface to a plurality of loads, the plurality of loads having distinct electrical characteristics; a plurality of solid state components configured to provide selected electrical power outputs and to accept selected electrical power inputs; a plurality of solid state switches configured to provide selected connectivity between the plurality of solid state components and the plurality of ports; and a controller may include a component bank configuration circuit structured to interpret a port electrical interface description, the port electrical interface description including a description of electrical characteristics for one of the plurality of ports; and a component bank implementation circuit structured to provide solid state switch states in response to the port electrical interface description, and wherein the plurality of solid state switches may be responsive to the solid state switch states. In embodiments, the plurality of distinct electrical characteristics may be selected from the electrical characteristics consisting of: a DC voltage, an AC voltage or voltage equivalent, a load power rating, a regenerative power rating, a current rating, a current directionality, a response time characteristic, a frequency characteristic, and a phase characteristic. The controller may further include a load/source drive description circuit structured to interpret a source/load drive characteristic, wherein the source/load

drive characteristic includes at least one electrical characteristic requirement of a load; and a load/source drive implementation circuit structured to provide a component driver configuration in response to the source/load drive characteristic.

In an aspect, a multi-port power converter may include a housing including a plurality of ports structured to electrically interface to a plurality of loads, the plurality of loads having distinct electrical characteristics; a plurality of solid state components configured to provide selected electrical power outputs and to accept selected electrical power inputs; and a plurality of solid state switches configured to provide selected connectivity between the plurality of solid state components and the plurality of ports; and a breaker/relay may include a fixed contact electrically coupled to a motive power circuit for a mobile application; a moveable contact selectively electrically coupled to the fixed contact, wherein the moveable contact in a first position allows power to flow through the motive power circuit, and the moveable contact in a second position does not allow power to flow through the motive power circuit; and a physical opening response portion responsive to a current value in the motive power circuit, wherein the physical opening response portion may be configured to move the moveable contact to the second position in response to the current value exceeding a threshold current value. In embodiments, the plurality of distinct electrical characteristics may be selected from the electrical characteristics consisting of: a DC voltage, an AC voltage or voltage equivalent, a load power rating, a regenerative power rating, a current rating, a current directionality, a response time characteristic, a frequency characteristic, and a phase characteristic. The fixed contact may include a first fixed contact, the breaker/relay further including a second fixed contact, wherein the moveable contact includes a first moveable contact corresponding to the first fixed contact, the breaker/relay further including a second moveable contact corresponding to the second fixed contact, and a bus bar electrically coupling the first moveable contact to the second moveable contact.

In an aspect, a mobile application may include a motive power circuit, the motive power circuit including a power storage device and an electrical load, wherein the power storage device and the electrical load may be selectively electrically coupled through a power bus; a power distribution unit (PDU) electrically interposed between the power storage device and the electrical load, wherein the PDU includes a breaker/relay positioned on one of a high side and a low side of the power storage device; wherein the breaker/relay includes: a plurality of fixed contacts electrically coupled to the power bus; a plurality of moveable contacts corresponding to the plurality of fixed contacts, wherein the plurality of moveable contacts may be selectively electrically coupled to the plurality of fixed contacts, and wherein the moveable contacts allow power flow through the power bus when electrically coupled to the fixed contacts, and prevent power flow through the power bus when not electrically coupled to the fixed contacts; an armature operationally coupled to at least one of the moveable contacts, such that the armature in a first position prevents electrical coupling between the at least one of the moveable contacts and the corresponding one of the fixed contacts, and the armature in a second position allows electrical coupling between the at least one of the moveable contacts and the corresponding one of the fixed contacts; a first biasing member biasing the armature into one of the first position or the second position; and an arc suppression assembly structured to guide and disperse an opening arc between each of the plurality of moveable contacts and the corresponding fixed contacts; and a multi-port power converter may include a housing including a plurality of ports structured to electrically interface to a plurality of loads, the plurality of loads having distinct electrical characteristics; a plurality of solid state components configured to provide selected electrical power outputs and to accept selected electrical power inputs; and a plurality of solid state switches configured to provide selected connectivity between the plurality of solid state components and the plurality of ports. In embodiments, the plurality of distinct electrical characteristics may be selected from the electrical characteristics consisting of: a DC voltage, an AC voltage or voltage equivalent, a load power rating, a regenerative power rating, a current rating, a current directionality, a response time characteristic, a frequency characteristic, and a phase characteristic. The plurality of moveable contacts may be linked as a dual pole single throw contacting arrangement.

In an aspect, a mobile application may include a motive power circuit, the motive power circuit including a power storage device and an electrical load, wherein the power storage device and the electrical load may be selectively electrically coupled through a power bus; a power distribution unit (PDU) electrically interposed between the power storage device and the electrical load, wherein the PDU includes a breaker/relay positioned on one of a high side and a low side of the power storage device; wherein the breaker/relay includes: a plurality of fixed contacts electrically coupled to the power bus; a plurality of moveable contacts corresponding to the plurality of fixed contacts, wherein the plurality of moveable contacts may be selectively electrically coupled to the plurality of fixed contacts, and wherein the moveable contacts allow power flow through the power bus when electrically coupled to the fixed contacts, and prevent power flow through the power bus when not electrically coupled to the fixed contacts; an armature operationally coupled to at least one of the moveable contacts, such that the armature in a first position prevents electrical coupling between the at least one of the moveable contacts and the corresponding one of the fixed contacts, and the armature in a second position allows electrical coupling between the at least one of the moveable contacts and the corresponding one of the fixed contacts; a first biasing member biasing the armature into one of the first position or the second position; and an arc suppression assembly structured to guide and disperse an opening arc between each of the plurality of moveable contacts and the corresponding fixed contacts; and a power converter having a plurality of ports, wherein the power converter determines an electrical interface description for at least one power source of an electric mobile application and at least one electrical load of the electric mobile application and provides solid state switch states in response to the electrical interface description, thereby configuring at least one of an AC inverter or a DC/DC converter to provide or accept power to the at least one of the plurality of ports according to the port electrical interface description, and installing the power converter into the electric mobile application. In embodiments, the mobile application may further include determining which ports of the power converter may be to be coupled to the at least one power source and the at least one electrical load, and wherein providing the solid state switch states includes configuring electrical characteristics of the determined ports according to the port electrical interface description. The plurality of moveable contacts may be linked as a dual pole single throw contacting arrangement.

In an aspect, a system may include a housing; a breaker/relay device positioned in the housing, wherein the breaker/relay device may be configured to interrupt a motive power circuit for an electrical vehicle system, where the housing may be disposed on the electrical vehicle system; wherein the breaker/relay device includes a physical opening response portion responsive to a first current value in the motive power circuit, and a controlled opening response portion responsive to a second current value in the motive power circuit; a pre-charge circuit electrically coupled in parallel to the breaker/relay device; and a power converter having a plurality of ports, wherein the power converter determines an electrical interface description for at least one power source of an electric mobile application and at least one electrical load of the electric mobile application and provides solid state switch states in response to the electrical interface description, thereby configuring at least one of an AC inverter or a DC/DC converter to provide or accept power to the at least one of the plurality of ports according to the port electrical interface description, and installing the power converter into the electric mobile application. In embodiments, the system may further include determining which ports of the power converter may be to be coupled to the at least one power source and the at least one electrical load, and wherein providing the solid state switch states includes configuring electrical characteristics of the determined ports according to the port electrical interface description. The first current value may be greater than the second current value.

In an aspect, an integrated inverter assembly may include a main cover and an opposing back cover; a coolant channel disposed between a coolant channel cover and a coolant channel separating body; wherein power electronics of the inverter assembly may be thermally coupled to the coolant channel; wherein at least one of a coolant inlet or a coolant outlet of the coolant channel includes a quick connector without a locking element; and a power converter have a plurality of ports may include a plurality of solid state components configured to provide selected electrical power outputs and to accept selected electrical power inputs; a plurality of solid state switches electrically interposed between the plurality of ports and the plurality of solid state components, wherein the plurality of solid state switches may be configured to selectively couple sets of the plurality of solid state components to the plurality of ports; and a controller may include a component bank configuration circuit structured to interpret a port electrical interface description, the port electrical interface description including a description of electrical characteristics for one of the plurality of ports; and a component bank implementation circuit structured to provide solid state switch states in response to the port electrical interface description, and wherein the plurality of solid state switches may be responsive to the solid state switch states. In embodiments, the controller may further include: a load/source drive description circuit structured to interpret a source/load drive characteristic, wherein the source/load drive characteristic includes at least one electrical characteristic requirement of a load; and a load/source drive implementation circuit structured to provide a component driver configuration in response to the source/load drive characteristic. The quick connector may further include a fir tree hose coupling disposed on an outer housing wall of the quick connector.

In an aspect, a power converter with a plurality of ports may include a plurality of solid state components configured to provide selected electrical power outputs and to accept selected electrical power inputs; a plurality of solid state switches electrically interposed between the plurality of ports and the plurality of solid state components, wherein the plurality of solid state switches may be configured to selectively couple sets of the plurality of solid state components to the plurality of ports; and a controller may include a component bank configuration circuit structured to interpret a port electrical interface description, the port electrical interface description including a description of electrical characteristics for one of the plurality of ports; and a component bank implementation circuit structured to provide solid state switch states in response to the port electrical interface description, and wherein the plurality of solid state switches may be responsive to the solid state switch states; and a breaker/relay may include a fixed contact electrically coupled to a motive power circuit for a mobile application; a moveable contact selectively electrically coupled to the fixed contact, wherein the moveable contact in a first position allows power to flow through the motive power circuit, and the moveable contact in a second position does not allow power to flow through the motive power circuit; and a physical opening response portion responsive to a current value in the motive power circuit, wherein the physical opening response portion may be configured to move the moveable contact to the second position in response to the current value exceeding a threshold current value. In embodiments, the controller may further include: a load/source drive description circuit structured to interpret a source/load drive characteristic, wherein the source/load drive characteristic includes at least one electrical characteristic requirement of a load; and a load/source drive implementation circuit structured to provide a component driver configuration in response to the source/load drive characteristic. The fixed contact may include a first fixed contact, the breaker/relay further including a second fixed contact, wherein the moveable contact includes a first moveable contact corresponding to the first fixed contact, the breaker/relay further including a second moveable contact corresponding to the second fixed contact, and a bus bar electrically coupling the first moveable contact to the second moveable contact.

In an aspect, a mobile application may include a motive power circuit, the motive power circuit including a power storage device and an electrical load, wherein the power storage device and the electrical load may be selectively electrically coupled through a power bus; a power distribution unit (PDU) electrically interposed between the power storage device and the electrical load, wherein the PDU includes a breaker/relay positioned on one of a high side and a low side of the power storage device; wherein the breaker/relay includes: a plurality of fixed contacts electrically coupled to the power bus; a plurality of moveable contacts corresponding to the plurality of fixed contacts, wherein the plurality of moveable contacts may be selectively electrically coupled to the plurality of fixed contacts, and wherein the moveable contacts allow power flow through the power bus when electrically coupled to the fixed contacts, and prevent power flow through the power bus when not electrically coupled to the fixed contacts; an armature operationally coupled to at least one of the moveable contacts, such that the armature in a first position prevents electrical coupling between the at least one of the moveable contacts and the corresponding one of the fixed contacts, and the armature in a second position allows electrical coupling between the at least one of the moveable contacts and the corresponding one of the fixed contacts; a first biasing member biasing the armature into one of the first position or the second position; and an arc suppression assembly struc-

tured to guide and disperse an opening arc between each of the plurality of moveable contacts and the corresponding fixed contacts; and a power converter have a plurality of ports may include a plurality of solid state components configured to provide selected electrical power outputs and to accept selected electrical power inputs; a plurality of solid state switches electrically interposed between the plurality of ports and the plurality of solid state components, wherein the plurality of solid state switches may be configured to selectively couple sets of the plurality of solid state components to the plurality of ports; and a controller may include a component bank configuration circuit structured to interpret a port electrical interface description, the port electrical interface description including a description of electrical characteristics for one of the plurality of ports; and a component bank implementation circuit structured to provide solid state switch states in response to the port electrical interface description, and wherein the plurality of solid state switches may be responsive to the solid state switch states. In embodiments, the controller may further include a load/source drive description circuit structured to interpret a source/load drive characteristic, wherein the source/load drive characteristic includes at least one electrical characteristic requirement of a load; and a load/source drive implementation circuit structured to provide a component driver configuration in response to the source/load drive characteristic. The plurality of moveable contacts may be linked as a dual pole single throw contacting arrangement.

In an aspect, an integrated inverter assembly may include a main cover and an opposing back cover; a coolant channel disposed between a coolant channel cover and a coolant channel separating body; wherein power electronics of the inverter assembly may be thermally coupled to the coolant channel; and wherein at least one of a coolant inlet or a coolant outlet of the coolant channel includes a quick connector without a locking element; and a power converter having a plurality of ports may include a plurality of solid state components configured to provide selected electrical power outputs and to accept selected electrical power inputs; a plurality of solid state switches electrically interposed between the plurality of ports and the plurality of solid state components, wherein the plurality of solid state switches may be configured to selectively couple sets of the plurality of solid state components to the plurality of ports; and a controller may include a component bank configuration circuit structured to interpret a port electrical interface description, the port electrical interface description including a description of electrical characteristics for one of the plurality of ports; and a component bank implementation circuit structured to provide solid state switch states in response to the port electrical interface description, and wherein the plurality of solid state switches may be responsive to the solid state switch states. In embodiments, the controller may further include a load/source drive description circuit structured to interpret a source/load drive characteristic, wherein the source/load drive characteristic includes at least one electrical characteristic requirement of a load; and a load/source drive implementation circuit structured to provide a component driver configuration in response to the source/load drive characteristic. The quick connector may further include a fir tree hose coupling disposed on an outer housing wall of the quick connector.

In an aspect, a system may include a vehicle having a motive electrical power path; a power distribution unit including a current protection circuit disposed in the motive electrical power path, the current protection circuit including a thermal fuse and a contactor in a series arrangement with the thermal fuse; a fuse thermal model circuit structured to determine a fuse temperature value of the thermal fuse, and to determine a fuse condition value in response to the fuse temperature value; and a power converter having a plurality of ports may include a plurality of solid state components configured to provide selected electrical power outputs and to accept selected electrical power inputs; a plurality of solid state switches electrically interposed between the plurality of ports and the plurality of solid state components, wherein the plurality of solid state switches may be configured to selectively couple sets of the plurality of solid state components to the plurality of ports; and a controller may include a component bank configuration circuit structured to interpret a port electrical interface description, the port electrical interface description including a description of electrical characteristics for one of the plurality of ports; and a component bank implementation circuit structured to provide solid state switch states in response to the port electrical interface description, and wherein the plurality of solid state switches may be responsive to the solid state switch states. In embodiments, the controller may further include a load/source drive description circuit structured to interpret a source/load drive characteristic, wherein the source/load drive characteristic includes at least one electrical characteristic requirement of a load; and a load/source drive implementation circuit structured to provide a component driver configuration in response to the source/load drive characteristic. The system may further include a current source circuit electrically coupled to the thermal fuse and structured to inject a current across the thermal fuse; a voltage determination circuit electrically coupled to the thermal fuse and structured to determine at least one of an injected voltage amount and a thermal fuse impedance value, wherein the voltage determination circuit includes a high-pass filter having a cutoff frequency selected in response to a frequency of the injected current; and wherein the fuse thermal model circuit may be structured to determine the fuse temperature value of the thermal fuse further in response to the at least one of the injected voltage amount and the thermal fuse impedance value.

In an aspect, a power converter have a plurality of ports may include a plurality of solid state components configured to provide selected electrical power outputs and to accept selected electrical power inputs; a plurality of solid state switches electrically interposed between the plurality of ports and the plurality of solid state components, wherein the plurality of solid state switches may be configured to selectively couple sets of the plurality of solid state components to the plurality of ports; and a controller may include a component bank configuration circuit structured to interpret a port electrical interface description, the port electrical interface description including a description of electrical characteristics for one of the plurality of ports; and a component bank implementation circuit structured to provide solid state switch states in response to the port electrical interface description, and wherein the plurality of solid state switches may be responsive to the solid state switch states; and a breaker/relay may include a plurality of fixed contacts electrically coupled electric load circuits for a mobile application; a plurality of moveable contacts, each moveable contact selectively electrically coupled to a corresponding one of the plurality of fixed contacts; a plurality of armatures each operationally coupled to a corresponding one of the moveable contacts, such that each armature in a first position prevents electrical coupling between the corresponding moveable contact and the corresponding fixed contact, and

each armature in a second position allows electrical coupling between the corresponding moveable contact and the corresponding fixed contact; and a current response circuit structured to determine a current in each of the electric load circuits, and further structured to provide an armature command to open the corresponding one of the moveable contacts in response to the current in the corresponding electrical load circuit indicating a high current value. In embodiments, the controller may further include a load/source drive description circuit structured to interpret a source/load drive characteristic, wherein the source/load drive characteristic includes at least one electrical characteristic requirement of a load; and a load/source drive implementation circuit structured to provide a component driver configuration in response to the source/load drive characteristic. The power converter may further include a plurality of biasing members each operationally coupled to a corresponding one of the plurality of moveable contacts, and configured to bias the corresponding one of the plurality of armatures into one of the first position or the second position.

In an aspect, an integrated inverter assembly may include a main cover and an opposing back cover; a plurality of IGBTs, each of the plurality of IGBTs configured to provide at least one phase of AC power to a motor; a potted DC link capacitor operationally disposed between the IGBTs and a DC power source, and wherein the potted DC link capacitor includes a bus bar, a common-mode choke, and a capacitor disposed in a housing of the potted DC link capacitor; and a power converter have a plurality of ports may include a plurality of solid state components configured to provide selected electrical power outputs and to accept selected electrical power inputs; a plurality of solid state switches electrically interposed between the plurality of ports and the plurality of solid state components, wherein the plurality of solid state switches may be configured to selectively couple sets of the plurality of solid state components to the plurality of ports; and a controller may include a component bank configuration circuit structured to interpret a port electrical interface description, the port electrical interface description including a description of electrical characteristics for one of the plurality of ports; and a component bank implementation circuit structured to provide solid state switch states in response to the port electrical interface description, and wherein the plurality of solid state switches may be responsive to the solid state switch states. In embodiments, the controller may further include a load/source drive description circuit structured to interpret a source/load drive characteristic, wherein the source/load drive characteristic includes at least one electrical characteristic requirement of a load; and a load/source drive implementation circuit structured to provide a component driver configuration in response to the source/load drive characteristic. The inverter assembly may further include a first welded connection between the potted DC link capacitor and each of the IGBTs, and a second welded connection between each of the IGBTs and an AC motor connector of the inverter assembly.

In an aspect, a mobile application may include a motive power circuit, the motive power circuit including a power storage device and an electrical load, wherein the power storage device and the electrical load may be selectively electrically coupled through a power bus; a power distribution unit (PDU) electrically interposed between the power storage device and the electrical load, wherein the PDU includes a breaker/relay positioned on one of a high side and a low side of the power storage device; wherein the breaker/relay includes: a plurality of fixed contacts electrically coupled to the power bus; a plurality of moveable contacts corresponding to the plurality of fixed contacts, wherein the plurality of moveable contacts may be selectively electrically coupled to the plurality of fixed contacts, and wherein the moveable contacts allow power flow through the power bus when electrically coupled to the fixed contacts, and prevent power flow through the power bus when not electrically coupled to the fixed contacts; an armature operationally coupled to at least one of the moveable contacts, such that the armature in a first position prevents electrical coupling between the at least one of the moveable contacts and the corresponding one of the fixed contacts, and the armature in a second position allows electrical coupling between the at least one of the moveable contacts and the corresponding one of the fixed contacts; a first biasing member biasing the armature into one of the first position or the second position; an arc suppression assembly structured to guide and disperse an opening arc between each of the plurality of moveable contacts and the corresponding fixed contacts; and wherein the motive electrical power path of a vehicle may be provided through a current protection circuit including a thermal fuse and a contactor in a series arrangement with the thermal fuse, wherein the mobile application: determines a current flow through the motive electrical power path; opens the contactor in response to the current flow exceeding a threshold value; confirms that vehicle operating conditions allow for a reconnection of the contactor; and commands the contactor to close in response to the vehicle operating conditions. In embodiments, the confirming the vehicle operating conditions may include at least one vehicle operating condition selected from the conditions consisting of: an emergency vehicle operating condition; a user override vehicle operating condition; a service event vehicle operating condition; and a reconnection command communicated on a vehicle network. The plurality of moveable contacts may be linked as a dual pole single throw contacting arrangement.

In an aspect, a system may include a vehicle having a motive electrical power path; a power distribution unit including a current protection circuit disposed in the motive electrical power path, the current protection circuit including breaker/relay, the breaker/relay including: fixed contact electrically coupled to a motive power circuit for a mobile application; a moveable contact selectively electrically coupled to the fixed contact, wherein the moveable contact in a first position allows power to flow through the motive power circuit, and the moveable contact in a second position does not allow power to flow through the motive power circuit; and a physical opening response portion responsive to a current value in the motive power circuit, wherein the physical opening response portion may be configured to move the moveable contact to the second position in response to the current value exceeding a threshold current value; a current source circuit electrically coupled to the breaker/relay and structured to inject a current across the fixed contact; a voltage determination circuit electrically coupled to the breaker/relay and structured to determine at least one of an injected voltage amount and a contactor impedance value, wherein the voltage determination circuit includes a high-pass filter having a cutoff frequency selected in response to a frequency of the injected current; and a breaker/relay may include a fixed contact electrically coupled to a motive power circuit for a mobile application; a moveable contact selectively electrically coupled to the fixed contact, wherein the moveable contact in a first position allows power to flow through the motive power circuit, and the moveable contact in a second position does not allow

power to flow through the motive power circuit; and a physical opening response portion responsive to a current value in the motive power circuit, wherein the physical opening response portion may be configured to move the moveable contact to the second position in response to the current value exceeding a threshold current value. In embodiments, the fixed contact may include a first fixed contact, the breaker/relay further including a second fixed contact, wherein the moveable contact includes a first moveable contact corresponding to the first fixed contact, the breaker/relay further including a second moveable contact corresponding to the second fixed contact, and a bus bar electrically coupling the first moveable contact to the second moveable contact. The voltage determination circuit may further include a bandpass filter having a bandwidth selected to bound the frequency of the injected current.

In an aspect, a system may include an electric mobile application having a motor and an inverter, wherein the inverter includes a plurality of driving elements for the motor; a controller may include a motor control circuit structured to provide driver commands, and wherein the plurality of driving elements may be responsive to the driver commands; an operating conditions circuit structured to interpret a motor performance request value including at least one of a power, speed, or torque request for the motor; a driver efficiency circuit structured to interpret a driver activation value for each of the plurality of driving elements of the inverter in response to the motor performance request value; wherein the motor control circuit may be further structured to provide the driver commands to de-activate at least one of the plurality of driving elements for the motor in response to the driver activation value for each of the plurality of driving elements of the inverter; and a breaker/relay may include a fixed contact electrically coupled to a motive power circuit for a mobile application; a moveable contact selectively electrically coupled to the fixed contact, wherein the moveable contact in a first position allows power to flow through the motive power circuit, and the moveable contact in a second position does not allow power to flow through the motive power circuit; and a physical opening response portion responsive to a current value in the motive power circuit, wherein the physical opening response portion may be configured to move the moveable contact to the second position in response to the current value exceeding a threshold current value. In embodiments, the fixed contact may include a first fixed contact, the breaker/relay further including a second fixed contact, wherein the moveable contact includes a first moveable contact corresponding to the first fixed contact, the breaker/relay further including a second moveable contact corresponding to the second fixed contact, and a bus bar electrically coupling the first moveable contact to the second moveable contact. The motor may include a three-phase AC motor, wherein the plurality of driving elements include six driving elements, and wherein the driver efficiency circuit provides the driver activation value to de-activate three of the six driving elements in response to the motor performance request value being below a threshold value.

In an aspect, a mobile application may include a motive power circuit, the motive power circuit including a power storage device and an electrical load, wherein the power storage device and the electrical load may be selectively electrically coupled through a power bus; a power distribution unit (PDU) electrically interposed between the power storage device and the electrical load, wherein the PDU includes a breaker/relay positioned on one of a high side and a low side of the power storage device; wherein the breaker/relay includes: a plurality of fixed contacts electrically coupled to the power bus; a plurality of moveable contacts corresponding to the plurality of fixed contacts, wherein the plurality of moveable contacts may be selectively electrically coupled to the plurality of fixed contacts, and wherein the moveable contacts allow power flow through the power bus when electrically coupled to the fixed contacts, and prevent power flow through the power bus when not electrically coupled to the fixed contacts; an armature operationally coupled to at least one of the moveable contacts, such that the armature in a first position prevents electrical coupling between the at least one of the moveable contacts and the corresponding one of the fixed contacts, and the armature in a second position allows electrical coupling between the at least one of the moveable contacts and the corresponding one of the fixed contacts; a first biasing member biasing the armature into one of the first position or the second position; an arc suppression assembly structured to guide and disperse an opening arc between each of the plurality of moveable contacts and the corresponding fixed contacts; and a power converter have a plurality of ports may include a plurality of solid state components configured to provide selected electrical power outputs and to accept selected electrical power inputs; a plurality of solid state switches electrically interposed between the plurality of ports and the plurality of solid state components, wherein the plurality of solid state switches may be configured to selectively couple sets of the plurality of solid state components to the plurality of ports; and a controller may include a component bank configuration circuit structured to interpret a port electrical interface description, the port electrical interface description including a description of electrical characteristics for one of the plurality of ports; and a component bank implementation circuit structured to provide solid state switch states in response to the port electrical interface description, and wherein the plurality of solid state switches may be responsive to the solid state switch states. In embodiments, the controller may further include a load/source drive description circuit structured to interpret a source/load drive characteristic, wherein the source/load drive characteristic includes at least one electrical characteristic requirement of a load; and a load/source drive implementation circuit structured to provide a component driver configuration in response to the source/load drive characteristic. The plurality of moveable contacts may be linked as a dual pole single throw contacting arrangement.

In an aspect, a mobile application may include a motive power circuit, the motive power circuit including a power storage device and an electrical load, wherein the power storage device and the electrical load may be selectively electrically coupled through a power bus; a power distribution unit (PDU) electrically interposed between the power storage device and the electrical load, wherein the PDU includes a breaker/relay positioned on one of a high side and a low side of the power storage device; wherein the breaker/relay includes: a plurality of fixed contacts electrically coupled to the power bus; a plurality of moveable contacts corresponding to the plurality of fixed contacts, wherein the plurality of moveable contacts may be selectively electrically coupled to the plurality of fixed contacts, and wherein the moveable contacts allow power flow through the power bus when electrically coupled to the fixed contacts, and prevent power flow through the power bus when not electrically coupled to the fixed contacts; an armature operationally coupled to at least one of the moveable contacts, such that the armature in a first position prevents electrical coupling between the at least one of the moveable contacts

and the corresponding one of the fixed contacts, and the armature in a second position allows electrical coupling between the at least one of the moveable contacts and the corresponding one of the fixed contacts; a first biasing member biasing the armature into one of the first position or the second position; an arc suppression assembly structured to guide and disperse an opening arc between each of the plurality of moveable contacts and the corresponding fixed contacts; and a multi-port power converter may include a housing including a plurality of ports structured to electrically interface to a plurality of loads, the plurality of loads having distinct electrical characteristics; a plurality of solid state components configured to provide selected electrical power outputs and to accept selected electrical power inputs; and a plurality of solid state switches configured to provide selected connectivity between the plurality of solid state components and the plurality of ports. In embodiments, the plurality of distinct electrical characteristics may be selected from the electrical characteristics consisting of: a DC voltage, an AC voltage or voltage equivalent, a load power rating, a regenerative power rating, a current rating, a current directionality, a response time characteristic, a frequency characteristic, and a phase characteristic. The plurality of moveable contacts may be linked as a dual pole single throw contacting arrangement.

Electrical power distribution in many applications is subject to a number of challenges. Presently available systems for controlling electrical power distribution, such as on/off control of power supplies and circuit paths, circuit and device protection (e.g., from overcurrent conditions) utilize a combined contactor and fuse.

Presently known contactors suffer from a number of drawbacks, including wear and deterioration from arcs during open and close events under high power, and deterioration during high current operation.

Presently known fuse components also suffer from a number of drawbacks. Fuses suffer from a difficulty in providing a consistent and reliable disconnection profile, as a fuse ultimately activates from temperature rather than current, and the temperature history, aging profile of the fuse, wear and deterioration, as well as the dynamics of current throughput through the fuse can all affect the actual current where fuse activation (e.g., breaking the circuit) occurs. Additionally, fuses experience deterioration and premature aging at high current loads, and accordingly designing a long-lasting and consistent fuse is difficult for systems having a high turndown ratio in the operating current range, as well as for systems having a highly variable current load during operations. Additionally, fuse activation is an unrecoverable event, resulting in a period of shutdown and/or system maintenance or repair after fuse activation before the system is operable again.

Additionally, presently known combined fuse-contactor systems suffer from a number of drawbacks. Because the contactor is required to remain engaged throughout the rated operation of the system, and because even an ideal fuse should not activate during rated operation of the system, there is necessarily an operational gap between rated operation of the system and the current protection level of the fuse. A fuse contactor design accordingly requires that a fuse be slightly undersized, risking fuse activation in the upper range of otherwise normal rated operation, or the fuse must be slightly oversized, risking components in the system to exposure to current levels above a rated current level. Additionally, a fuse may be undersized to protect for a contactor failure mode where an arc build-up in the contactor delays the current dynamics in the circuit, resulting in a delayed activation, or even failure to activate, of the fuse and accordingly an increased risk of damage to the contactor or components in the system. The previously described difficulties in tuning the fuse activation profile leads to increased design, operational, and/or capital expense, or to reduced system capability. For example, a presently known design may be overly conservative—such as utilizing components that are able to withstand current significantly higher than rated current values, or a true system performance significantly below rated current values during at least certain operating conditions. Additionally or alternatively, a risk of component failure may be accepted driving higher operational costs and/or lower system reliability, or fuse and/or contactor maintenance schedules may be more frequent, increasing operational costs and reducing the uptime of the overall system. Additionally or alternatively, additional power sources, power storage, or the like may be provided to enhance the operating capability of the system to meet desired performance characteristics.

Applications that have a highly variable load, highly dynamic load profiles, and/or high turndown ratios within the operating current range exacerbate all of the challenges of combined fuse-contactor systems. For example, mobile applications such as vehicles or mobile equipment often have highly variability and low predictability of the load profile during operations. Certain types of systems have varying categories of loads driving different duty cycles and load profiles—for example mobile applications that also operate additional equipment (e.g., pumps, PTO devices, communication equipment, etc.) either during mobile operations or while stationary. Additionally, load profiles may vary considerably depending upon the load direction or operation—for example it may be desirable to charge much more quickly than discharge, for example where charging is associated with useful operation of the system and discharging is associated with downtime of the system. In other examples, motive power loads on the system may be highly distinct from regenerative recovery of power from a load, and/or certain energy recovery operations may have very small currents associated therewith (e.g., solar power, waste heat recovery, etc.). Presently known systems that are highly variable, including in load values and load types, and/or highly dynamic, further increase the design and/or operational expense of the system, through conservative design, redundant and/or duplicative systems to manage variability, lowered system capability, and/or acceptance of operational risk.

Mobile applications provide further challenges for previously known combined fuse-contactor systems. For example, many mobile applications, such as commercial and passenger vehicles, are cost sensitive to both initial costs of a system, and to ongoing operating costs. Additionally, downtime for service, maintenance, or system failures has a very high cost, due to large volumes and competitive markets. Accordingly, even modest improvements to initial costs, operating costs, and reliability can make a significant impact on the outcome of the system, or make a non-marketable system competitive. Mobile applications often have a large differential in duty cycle even for systems that have similar power ratings. Further, mobile applications often involve systems that are sold or otherwise transferred, where the same system can experience a significant change in the duty cycle and operating conditions after the system is in the hands of a user. Accordingly, a lack of flexibility in design parameters at the time of initial sale can limit the available markets for a system, and a lack of flexibility in design parameters in use can result in increased failures later

in the life cycle of the system. An example system includes a vehicle having a motive electrical power path; a power distribution unit having a current protection circuit disposed in the motive electrical power path, the current protection circuit including: a first leg of the current protection circuit including a pyro-fuse; a second leg of the current protection circuit including a thermal fuse; and where the first leg and the second leg are coupled in a parallel arrangement; a controller, including: a current detection circuit structured to determine a current flow through the motive electrical power path; and a pyro-fuse activation circuit structured to provide a pyro-fuse activation command in response to the current flow exceeding a threshold current flow value; and where the pyro-fuse is responsive to the pyro-fuse activation command.

Certain further aspects of an example system are described following, any one or more of which may be present in certain embodiments. An example system includes where a first resistance through the first leg and a second resistance through the second leg are configured such that a resulting current through the second leg after the pyro-fuse activates is sufficient to activate the thermal fuse. An example includes a resistor coupled in a series arrangement with the thermal fuse, such that a resulting current through the second leg after the pyro-fuse activates is below a second threshold current flow value. An example system includes a contactor coupled in a series arrangement with the thermal fuse, the controller further including a contactor activation circuit structured to provide a contactor open command in response to at least one of the pyro-fuse activation command or the current flow exceeding the threshold current flow value; and/or a resistor coupled in a series arrangement with the thermal fuse, such that a resulting current through the second leg after the pyro-fuse activates is below a second threshold current flow value. An example includes a resistor coupled in a series arrangement with the pyro-fuse, such that a resulting current through the first leg after the thermal fuse activates is below a second threshold current flow value; and/or a second thermal fuse coupled in a series arrangement with the pyro-fuse, such that a resulting current through the first leg after the thermal fuse activates is sufficient to activate the second thermal fuse.

An example procedure includes an operation to determine a current flow through a motive electrical power path of a vehicle; an operation to direct the current flow through a current protection circuit having a parallel arrangement, with a pyro-fuse on a first leg of the current protection circuit and a thermal fuse on a second leg of the current protection circuit; and an operation to provide a pyro-fuse activation command in response to the current flow exceeding a threshold current flow value.

Certain further aspects of an example procedure are described following, any one or more of which may be present in certain embodiments. An example procedure further includes an operation to configure a first resistance through the first leg and a second resistance through the second leg such that a resulting current through the second leg after the pyro-fuse activates is sufficient to activate the thermal fuse. An example procedure includes an operation to configure a second resistance through the second leg such that a resulting current through the second leg after the pyro-fuse activates is below a second threshold current flow value. An example procedure includes an operation to a contactor coupled in a series arrangement with the thermal fuse, the procedure further including providing a contactor open command in response to at least one of providing the pyro-fuse activation command or the current flow exceeding the threshold current flow value; and/or an operation to configure a second resistance through the second leg such that a resulting current through the second leg after the pyro-fuse activates is below a second threshold current flow value. An example procedure further including a resistor coupled in a series arrangement with the pyro-fuse such that a resulting current through the first leg after the thermal fuse activates is below a second threshold current flow value; and/or further including a second thermal fuse coupled in a series arrangement with the pyro-fuse, such that a resulting current through the first leg after the thermal fuse activates is sufficient to activate the second thermal fuse.

An example system includes a vehicle having a motive electrical power path; a power distribution unit having a current protection circuit disposed in the motive electrical power path, the current protection circuit including: a first leg of the current protection circuit including a thermal fuse; a second leg of the current protection circuit including a contactor; and where the first leg and the second leg are coupled in a parallel arrangement; a controller, including: a current detection circuit structured to determine a current flow through the motive electrical power path; and a fuse management circuit structured to provide a contactor activation command in response to the current flow; and where the contactor is responsive to the contactor activation command.

Certain further aspects of an example system are described following, any one or more of which may be present in certain embodiments. An example system includes where the contactor is open during nominal operations of the vehicle, and where the fuse management circuit is structured to provide the contactor activation command as a contactor closing command in response to determining that the current flow is a above a thermal wear current for the thermal fuse; and/or where the fuse management circuit is further structured to provide the contactor activation command as the contactor closing command in response to determining that the current flow is below a current protection value for the motive electrical power path. An example system includes where the contactor is closed during nominal operations of the vehicle, and where the fuse management circuit is structured to provide the contactor activation command as a contactor opening command in response to determining that the current flow is above a current protection value for the motive electrical power path. An example system includes where the fuse management circuit is further structured to provide the contactor activation command in response to the current flow by performing at least one operation selected from the operations consisting of: responding to a rate of change of the current flow; responding to a comparison of the current flow to a threshold value; responding to one of an integrated or accumulated value of the current flow; and responding to one of an expected or a predicted value of any of the foregoing.

An example procedure includes an operation to determine a current flow through a motive electrical power path of a vehicle; an operation to direct the current flow through a current protection circuit having a parallel arrangement, with a thermal fuse on a first leg of the current protection circuit and a contactor on a second leg of the current protection circuit; and an operation to provide a contactor activation command in response to the current flow.

Certain further aspects of an example procedure are described following, any one or more of which may be present in certain embodiments. An example procedure further includes an operation to close the contactor in response to the current flow. An example procedure includes

an operation to determine that the current flow is below a current protection value for the motive electrical power path before the closing the contactor. An example procedure includes at least one operation selected from the operations consisting of: responding to a rate of change of the current flow; responding to a comparison of the current flow to a threshold value; responding to one of an integrated or accumulated value of the current flow; and responding to one of an expected or a predicted value of any of the foregoing. An example procedure includes an operation to open the contactor in response to the current flow; an operation to determine that the current flow is above a current protection value for the motive electrical power path before opening the contactor; an operation to open the contactor including performing at least one operation selected from the operations consisting of: responding to a rate of change of the current flow; responding to a comparison of the current flow to a threshold value; responding to one of an integrated or accumulated value of the current flow; and responding to one of an expected or a predicted value of any of the foregoing.

An example system includes a vehicle having a motive electrical power path; a power distribution unit having a current protection circuit disposed in the motive electrical power path, the current protection circuit including: a first leg of the current protection circuit including a thermal fuse; a second leg of the current protection circuit including a solid state switch; and where the first leg and the second leg are coupled in a parallel arrangement; a controller, including: a current detection circuit structured to determine a current flow through the motive electrical power path; and a fuse management circuit structured to provide a switch activation command in response to the current flow; and where the solid state switch is responsive to the switch activation command.

Certain further aspects of an example system are described following, any one or more of which may be present in certain embodiments. An example system includes a contactor coupled to the current protection circuit, where the contactor in the open position disconnects one of the current protection circuit or the second leg of the current protection circuit.

An example procedure includes an operation to determine a current flow through a motive electrical power path of a vehicle; an operation to direct the current flow through a current protection circuit having a parallel arrangement, with a thermal fuse on a first leg of the current protection circuit and a solid state switch-on a second leg of the current protection circuit; and an operation to provide a switch activation command in response to the current flow.

Certain further aspects of an example procedure are described following, any one or more of which may be present in certain embodiments. An example procedure further includes an operation to close the solid state switch in response to the current flow; and/or determine that the current flow is below a current protection value for the motive electrical power path before the closing the solid state switch. An example procedure includes an operation to close the solid state switch includes performing at least one operation selected from the operations consisting of: responding to a rate of change of the current flow; responding to a comparison of the current flow to a threshold value; responding to one of an integrated or accumulated value of the current flow; and responding to one of an expected or a predicted value of any of the foregoing. An example procedure includes an operation to open the solid state switch in response to the current flow; and/or determine that the current flow is above a current protection value for the motive electrical power path before opening the solid state switch. An example procedure includes an operation to open the solid state switch includes performing at least one operation selected from the operations consisting of: responding to a rate of change of the current flow; responding to a comparison of the current flow to a threshold value; responding to one of an integrated or accumulated value of the current flow; and responding to one of an expected or a predicted value of any of the foregoing. An example procedure includes an operation to open a contactor after the opening the solid state switch, where opening the contactor disconnects one of the current protection circuit or the second leg of the current protection circuit.

An example system includes a vehicle having a motive electrical power path; a power distribution unit having a current protection circuit disposed in the motive electrical power path, the current protection circuit including: a first leg of the current protection circuit including a first thermal fuse; a second leg of the current protection circuit including a second thermal fuse and a contactor; and where the first leg and the second leg are coupled in a parallel arrangement; a controller, including: a current detection circuit structured to determine a current flow through the motive electrical power path; and a fuse management circuit structured to provide a contactor activation command in response to the current flow; and where the contactor is responsive to the contactor activation command.

Certain further aspects of an example system are described following, any one or more of which may be present in certain embodiments. An example system includes where the contactor is open during nominal operations of the vehicle, and where the fuse management circuit is structured to provide the contactor activation command as a contactor closing command in response to determining that the current flow is a above a thermal wear current for the first thermal fuse; and/or where the fuse management circuit is further structured to provide the contactor activation command as a contactor closing command in response to determining that the current flow is below a current protection value for the motive electrical power path. An example system includes a vehicle operating condition circuit structured to determine an operating mode for the vehicle, and where the fuse management circuit is further structured to provide the contactor activation command in response to the operating mode; and/or where the fuse management circuit is further structured to provide the contactor activation command as a contactor closing command in response to the operating mode including at least one operating mode selected from the operating modes consisting of: a charging mode; a high performance mode; a high power request mode; an emergency operation mode; and a limp home mode. An example system includes where the contactor is closed during nominal operations of the vehicle, and where the fuse management circuit is structured to provide the contactor activation command as a contactor opening command in response to determining that the current flow is above a current protection value for the motive electrical power path; where the contactor is closed during nominal operations of the vehicle, and where the fuse management circuit is structured to provide the contactor activation command as a contactor opening command in response to the operating mode; and/or where the fuse management circuit is further structured to provide the contactor activation command as a contactor opening command in response to the operating mode including at least one of an economy mode or a service mode.

An example procedure includes an operation to determine a current flow through a motive electrical power path of a vehicle; an operation to direct the current flow through a current protection circuit having a parallel arrangement, with a first thermal fuse on a first leg of the current protection circuit and a second thermal fuse and a contactor on a second leg of the current protection circuit; and an operation to provide a contactor activation command in response to the current flow.

Certain further aspects of an example procedure are described following, any one or more of which may be present in certain embodiments. An example procedure further includes an operation to close the contactor in response to the current flow being above a thermal wear current for the first thermal fuse; and/or closing the contactor further in response to the current flow being below a current protection value for the motive electrical power path. An example procedure includes an operation to determine an operating mode for the vehicle, and providing the contactor activation command further in response to the operating mode. An example procedure includes an operation to provide the contactor activation command as a contactor closing command in response to the operating mode including at least one operating mode selected from the operating modes consisting of: a charging mode; a high performance mode; a high power request mode; an emergency operation mode; and a limp home mode. An example procedure includes an operation to provide the contactor activation command as a contactor opening command in response to determining that the current flow is above a current protection value for the motive electrical power path; and/or provide the contactor activation command as a contactor opening command in response to the operating mode including at least one of an economy mode or a service mode.

An example system includes a vehicle having a motive electrical power path; a power distribution unit having a current protection circuit disposed in the motive electrical power path, the current protection circuit including: a first leg of the current protection circuit including a first thermal fuse and a first contactor; a second leg of the current protection circuit including a second thermal fuse and a second contactor; and where the first leg and the second leg are coupled in a parallel arrangement; a controller, including: a current detection circuit structured to determine a current flow through the motive electrical power path; and a fuse management circuit structured to provide a plurality of contactor activation commands in response to the current flow; and where the first contactor and the second contactor are responsive to the plurality of contactor activation commands, thereby providing a selected configuration of the current protection circuit.

Certain further aspects of an example system are described following, any one or more of which may be present in certain embodiments. An example system includes where the current protection circuit further includes: at least one additional leg, where each additional leg includes an additional thermal fuse and an additional contactor; and where each additional contactor is further responsive to the plurality of contactor activation commands, thereby providing the selected configuration of the current protection circuit. An example system includes a vehicle operating condition circuit structured to determine an operating mode for the vehicle, and where the fuse management circuit is further structured to provide the plurality of contactor activation commands in response to the operating mode; and/or where the fuse management circuit is further structured to determine an active current rating for the motive electrical power path in response to the operating mode, and to provide the plurality of contactor activation commands in response to the active current rating. An example system includes where the first leg of the current protection circuit further includes an additional first contactor in a parallel arrangement with the first thermal fuse, where the current detection circuit is further structured to determine a first leg current flow, where the fuse management circuit is further structured to provide the plurality of contactor activation commands further in response to the first leg current flow, and where the additional first contactor is responsive to the plurality of contactor activation commands; where the additional first contactor is open during nominal operations of the vehicle, and where the fuse management circuit is structured to provide the plurality of contactor activation commands including an additional first contactor closing command in response to determining that the first leg current flow is a above a thermal wear current for the first thermal fuse: where the fuse management circuit is structured to provide the additional first contactor closing command in response to determining at least one of: that the first leg current flow is below a first leg current protection value, or that the current flow is below a motive electrical power path current protection value; and/or where the additional first contactor is closed during nominal operations of the vehicle, and where the fuse management circuit is structured to provide the plurality of contactor activation commands including an additional first contactor opening command in response to determining at least one of: that the first leg current flow is above a first leg current protection value, or that the current flow is above a motive electrical power path current protection value.

An example procedure includes an operation to determine a current flow through a motive electrical power path of a vehicle; an operation to direct the current flow through a current protection circuit having a parallel arrangement, with a first thermal fuse and a first contactor on a first leg of the current protection circuit, and a second thermal fuse and a second contactor on a second leg of the current protection circuit; and an operation to provide a selected configuration of the current protection circuit in response to the current flow through the motive electrical power path of the vehicle, where providing the selected configuration includes providing a contactor activation command to each of the first contactor and the second contactor.

Certain further aspects of an example procedure are described following, any one or more of which may be present in certain embodiments. An example procedure includes an operation further including at least one additional leg of the current protection circuit, each additional leg of the current protection circuit having an additional thermal fuse and an additional contactor, and where the providing the selected configuration of the current protection circuit includes providing a contactor activation command to each additional contactor. An example procedure includes an operation to determine an operating mode for the vehicle, and providing the selected configuration further in response to the operating mode; and/or an operation to determine an active current rating for the motive electrical power path in response to the operating mode, and where providing the selected configuration of the current protection circuit is further in response to the active current rating. An example procedure includes an operation to determine an active current rating for the motive electrical power path, and where providing the selected configuration of the current protection circuit is further in response to the active current rating. An example procedure includes an operation where

the first leg of the current protection circuit further includes an additional first contactor in a parallel arrangement with the first thermal fuse, the method further including: determining a first leg current flow, and where providing the selected configuration further includes providing a contactor activation command to the additional first contactor; an operation to close the additional first contactor in response to determining that the first leg current flow is a above a thermal wear current for the first thermal fuse; an operation to close the additional first contactor further in response to determining at least one of: that the first leg current flow is below a first leg current protection value, or that the current flow is below a motive electrical power path current protection value; and/or an operation to open the additional first contactor in response to determining at least one of: that the first leg current flow is above a first leg current protection value, or that the current flow is above a motive electrical power path current protection value.

An example system includes a vehicle having a motive electrical power path; a power distribution unit having a current protection circuit disposed in the motive electrical power path, the current protection circuit including a fuse; a controller, including: a fuse status circuit structured to determine a fuse event value; and a fuse management circuit structured to provide a fuse event response based on the fuse event value.

Certain further aspects of an example system are described following, any one or more of which may be present in certain embodiments. An example system includes a fuse life description circuit structured to determine a fuse life remaining value, where the fuse event value includes a representation that the fuse life remaining value is below a threshold value, and where the fuse management circuit is further structured to provide the fuse event response further based on the fuse life remaining value; where providing the fuse event response includes providing at least one of a fault code or a notification of the fuse event value; where providing the fuse event response includes adjusting a maximum power rating for the motive electrical power path; where providing the fuse event response includes adjusting a maximum power slew rate for the motive electrical power path; and/or where providing the fuse event response includes adjusting a configuration of the current protection circuit. An example system includes where the current protection circuit further includes a contactor coupled in a parallel arrangement to the fuse; where the fuse management circuit is further structured to provide a contactor activation command in response to the fuse event value; and where the contactor is responsive to the contactor activation command. An example system includes where the fuse management circuit is further structured to provide the contactor activation command as a contactor closing command in response to the fuse event value including one of a thermal wear event or an imminent thermal wear event for the fuse. An example system includes where the fuse management circuit is further structured to adjust a current threshold value for the contactor activation command in response to the fuse life remaining value; and/or where providing the fuse event response includes adjusting a cooling system interface for a cooling system at least selectively thermally coupled to the fuse in response to the fuse life remaining value.

An example procedure includes an operation to determine a fuse event value for a fuse disposed in a current protection circuit, the current protection circuit disposed in a motive electrical power path of a vehicle; and an operation to provide a fuse event response based on the fuse event value.

Certain further aspects of an example procedure are described following, any one or more of which may be present in certain embodiments. An example procedure further includes an operation to determine a fuse life remaining value, where the fuse event value includes a representation that the fuse life remaining value is below a threshold value, and providing the fuse event response further based on the fuse life remaining value; an operation to provide the fuse event response includes providing at least one of a fault code or a notification of the fuse event value; an operation to provide the fuse event response includes adjusting a maximum power rating for the motive electrical power path; an operation to provide the fuse event response includes adjusting a maximum power slew rate for the motive electrical power path; an operation to provide the fuse event response includes adjusting a configuration of the current protection circuit. An example procedure includes an operation where the current protection circuit further includes a contactor coupled in a parallel arrangement to the fuse; where the fuse management circuit is further structured to provide a contactor activation command in response to the fuse event value; and where the contactor is responsive to the contactor activation command; where the fuse management circuit is further structured to provide the contactor activation command as a contactor closing command in response to the fuse event value including one of a thermal wear event or an imminent thermal wear event for the fuse; and/or where the fuse management circuit is further structured to adjust a current threshold value for the contactor activation command in response to the fuse life remaining value. An example procedure includes an operation to provide the fuse event response includes adjusting a cooling system interface for a cooling system at least selectively thermally coupled to the fuse in response to the fuse life remaining value. An example procedure includes an operation to provide the fuse event response includes providing at least one of a fault code or a notification of the fuse event value. An example procedure includes an operation to determine an accumulated fuse event description in response to the fuse event response, and storing the accumulated fuse event description. An example procedure includes an operation to provide the accumulated fuse event description, where providing the accumulated fuse event description includes at least one of providing at least one of a fault code or a notification of the accumulated fuse event description; and an operation to provide the accumulated fuse event description in response to at least one of a service event or a request for the accumulated fuse event description.

An example system includes a vehicle having a motive electrical power path and at least one auxiliary electrical power path; a power distribution unit having a motive current protection circuit disposed in the motive electrical power path, the current protection circuit including a fuse; and an auxiliary current protection circuit disposed in each of the at least one auxiliary electrical power paths, each auxiliary current protection circuit including an auxiliary fuse; a controller, including: a current determination circuit structured to interpret a motive current value corresponding to the motive electrical power path, and an auxiliary current value corresponding to each of the at least one auxiliary electrical power paths.

Certain further aspects of an example system are described following, any one or more of which may be present in certain embodiments. An example system includes a motive current sensor electrically coupled to the motive electrical power path, where the motive current sensor is configured to provide the motive current value. An

example system includes at least one auxiliary current sensor each electrically coupled to one of the at least one auxiliary electrical power paths, each auxiliary current sensor configured to provide the corresponding auxiliary current value. An example system includes where the controller further includes a vehicle interface circuit, the vehicle interface circuit structured to provide the motive current value to a vehicle network; where the vehicle interface circuit is further structured to provide the auxiliary current value corresponding to each of the at least one auxiliary electrical power paths to the vehicle network; and/or further including a battery management controller configured to receive the motive current value from the vehicle network.

An example procedure includes an operation to provide a power distribution unit having a motive current protection circuit and at least one auxiliary current protection circuit; an operation to power a vehicle motive electrical power path through the motive current protection circuit; an operation to power at least one auxiliary load through a corresponding one of the at least one auxiliary current protection circuit; an operation to determine a motive current value corresponding to the motive electrical power path; and an operation to determine an auxiliary current value corresponding to each of the at least one auxiliary current protection circuits.

Certain further aspects of an example procedure are described following, any one or more of which may be present in certain embodiments. An example procedure further includes an operation to provide the motive current value to a vehicle network; and/or an operation to receive the motive current value with a battery management controller.

An example system includes a vehicle having a motive electrical power path; a power distribution unit having a current protection circuit disposed in the motive electrical power path, the current protection circuit including: a thermal fuse; a contactor in a series arrangement with the thermal fuse; and a controller, including: a current detection circuit structured to determine a current flow through the motive electrical power path; and a fuse management circuit structured to provide a contactor activation command in response to the current flow; and where the contactor is responsive to the contactor activation command.

Certain further aspects of an example system are described following, any one or more of which may be present in certain embodiments. An example system includes where the thermal fuse includes a current rating that is higher than a current corresponding to a maximum power throughput of the motive electrical power path. An example system includes where the thermal fuse includes a current rating that is higher than a current corresponding to a quick charging power throughput of the motive electrical power path. An example system includes where the contactor includes a current rating that is higher than a current corresponding to a maximum power throughput of the motive electrical power path. An example system includes where the contactor includes a current rating that is higher than a current corresponding to a quick charging power throughput of the motive electrical power path. An example system includes where the fuse management circuit is further structured to provide the contactor activation command as a contactor opening command in response to the current flow indicating a motive electrical power path protection event; and/or where the current detection circuit is further structured to determine the motive electrical power path protection event by performing at least one operation selected from the operations consisting of: responding to a rate of change of the current flow; responding to a comparison of the current flow to a threshold value; responding to one of an integrated or accumulated value of the current flow; and responding to one of an expected or a predicted value of any of the foregoing.

An example procedure includes an operation to power a motive electrical power path of a vehicle through a current protection circuit including a thermal fuse and a contactor in a series arrangement with the thermal fuse; an operation to determine a current flow through the motive electrical power path; and an operation to selectively open the contactor in response to the current flow.

Certain further aspects of an example procedure are described following, any one or more of which may be present in certain embodiments. An example procedure further includes an operation to provide the thermal fuse having a current rating that is higher than a current corresponding to a maximum power throughput of the motive electrical power path. An example procedure includes an operation to provide the thermal fuse having a current rating that is higher than a current corresponding to a quick charging power throughput of the motive electrical power path. An example procedure includes an operation to provide the contactor having a current rating that is higher than a current corresponding to a maximum power throughput of the motive electrical power path. An example procedure includes an operation to provide the contactor having a current rating that is higher than a current corresponding to a quick charging power throughput of the motive electrical power path. An example procedure includes an operation to open the contactor is further in response to at least one of: a rate of change of the current flow; a comparison of the current flow to a threshold value; one of an integrated or accumulated value of the current flow; and an expected or predicted value of any of the foregoing.

An example procedure includes an operation to power a motive electrical power path of a vehicle through a current protection circuit including a thermal fuse and a contactor in a series arrangement with the thermal fuse; an operation to determine a current flow through the motive electrical power path; an operation to open the contactor in response to the current flow exceeding a threshold value; an operation to confirm that vehicle operating conditions allow for a reconnection of the contactor; and an operation to command the contactor to close in response to the vehicle operating conditions.

Certain further aspects of an example procedure are described following, any one or more of which may be present in certain embodiments. An example procedure further includes an operation to confirm the vehicle operating conditions includes at least one vehicle operating condition selected from the conditions consisting of: an emergency vehicle operating condition; a user override vehicle operating condition; a service event vehicle operating condition; and a reconnection command communicated on a vehicle network. An example procedure includes an operation to monitor the motive electrical power path during the commanding the contactor to close, and re-opening the contactor in response to the monitoring. An example procedure includes an operation to determine an accumulated contactor open event description in response to the opening the contactor; an operation to prevent the commanding the contactor to close in response to the accumulated contactor open event description exceeding a threshold value; and/or an operation to adjust the accumulated contactor open event description in response to the current flow during the opening the contactor. An example procedure includes an operation to diagnose a welded contactor in response to one of the current flow during the opening the contactor, and a moni-

toring of the motive electrical power path during the commanding the contactor to close. An example procedure includes an operation to diagnose a welded contactor in response to a monitoring of at least one of a contactor actuator position, a contactor actuator response, or the motive electrical power path during the opening the contactor; and/or an operation to prevent the commanding the contactor to close in response to the diagnosed welded contactor.

An example apparatus includes a motive electrical power current protection circuit structured to: determine a current flow through a motive electrical power path of a vehicle; and open a contactor disposed in a current protection circuit including a thermal fuse and the contactor in a series arrangement with the thermal fuse in response to the current flow exceeding a threshold value; a vehicle re-power circuit structured to: confirm that vehicle operating conditions allow for a reconnection of the contactor; and close the contactor in response to the vehicle operating conditions.

Certain further aspects of an example apparatus are described following, any one or more of which may be present in certain embodiments. An example apparatus includes where the vehicle re-power circuit is further structured to confirm the vehicle operating conditions by confirming at least one vehicle operating condition selected from the conditions consisting of: an emergency vehicle operating condition; a user override vehicle operating condition; a service event vehicle operating condition; and a reconnection command communicated on a vehicle network. An example apparatus includes where the motive electrical power current protection circuit is further structured to monitor the motive electrical power path during the closing the contactor to close, and where the vehicle re-power circuit is further structured to re-open the contactor in response to the monitoring. An example apparatus includes a contactor status circuit structured to determine an accumulated contactor open event description in response to the opening the contactor; where the vehicle re-power circuit is further structured to prevent the closing the contactor in response to the accumulated contactor open event description exceeding a threshold value; and/or where the contactor status circuit is further structured to adjust the accumulated contactor open event description in response to the current flow during the opening the contactor. An example apparatus includes a contactor status circuit structured to diagnose a welded contactor in response to one of, during the commanding the contactor to close: the current flow during the opening the contactor; and a monitoring of the motive electrical power path by the motive electrical power current protection circuit. An example apparatus includes a contactor status circuit structured to diagnose a welded contactor in response to a monitoring of, during the opening of the contactor, at least one of: a contactor actuator position by the vehicle re-power circuit; a contactor actuator response by the vehicle re-power circuit; and the motive electrical power path by the motive electrical power current protection circuit; and/or where the contactor status circuit is further structured to prevent the closing the contactor in response to the diagnosed welded contactor.

An example system includes a vehicle having a motive electrical power path; a power distribution unit including: a current protection circuit disposed in the motive electrical power path, the current protection circuit including a thermal fuse and a contactor in a series arrangement with the thermal fuse; a high voltage power input coupling including a first electrical interface for a high voltage power source; a high voltage power output coupling including a second electrical interface for a motive power load; and where the current protection circuit electrically couples the high voltage power input to the high voltage power output, and where the current protection circuit is at least partially disposed in a laminated layer of the power distribution unit, the laminated layer including an electrically conductive flow path disposed two electrically insulating layers.

Certain further aspects of an example system are described following, any one or more of which may be present in certain embodiments. An example system includes where current protection circuit includes a motive power bus bar disposed in the laminated layer of the power distribution unit. An example system includes where the vehicle further includes an auxiliary electrical power path; where the power distribution unit further includes: an auxiliary current protection circuit disposed in the auxiliary electrical power path, the auxiliary current protection circuit including a second thermal fuse; an auxiliary voltage power input coupling including a first auxiliary electrical interface for a low voltage power source; an auxiliary voltage power output coupling including a second auxiliary electrical interface for an auxiliary load; and where the auxiliary current protection circuit electrically couples the auxiliary voltage power input to the auxiliary voltage power output, and where the auxiliary current protection circuit is at least partially disposed in the laminated layer of the power distribution unit. An example system includes where the laminated layer of the power distribution unit further includes at least one thermally conductive flow path disposed between two thermally insulating layers; where the at least one thermally conductive flow path is configured to provide thermal coupling between a heat sink, and a heat source, where the heat source includes at least one of the contactor, the thermal fuse, and the second thermal fuse; where the heat sink includes at least one of a thermal coupling to an active cooling source and a housing of the power distribution unit; and/or further including a thermal conduit disposed between the at least one thermally conductive flow path and the heat source.

An example system includes a vehicle having a motive electrical power path; a power distribution unit including a current protection circuit disposed in the motive electrical power path, the current protection circuit including a thermal fuse and a contactor in a series arrangement with the thermal fuse; a current source circuit electrically coupled to the thermal fuse and structured to inject a current across the thermal fuse; and a voltage determination circuit electrically coupled to the thermal fuse and structured to determine at least one of an injected voltage amount and a thermal fuse impedance value.

Certain further aspects of an example system are described following, any one or more of which may be present in certain embodiments. An example system includes where the motive electrical power path includes a direct current power path; where the current source circuit includes at least one of an alternating current source and a time varying current source, further including a hardware filter electrically coupled to the thermal fuse, the hardware filter configured in response to an injection frequency of the current source circuit; where the hardware filter includes a high-pass filter having a cutoff frequency determined in response to the injection frequency of the current source circuit; where the hardware filter includes a low pass filter having a cutoff frequency determined in response to at least one of the injection frequency of the current source circuit or a load change value of the motive electrical power path; where the hardware filter includes a low pass filter having a

cutoff frequency determined in response to at least one of the injection frequency of the current source circuit or a load change value of the motive electrical power path; where the voltage determination circuit is further structured to determine to determine an injected voltage drop of the thermal fuse in response to an output of the high-pass filter; where the voltage determination circuit is further structured to determine the thermal fuse impedance value in response to the injected voltage drop; and/or where the voltage determination circuit is further structured to determine a load voltage drop of the thermal fuse in response to an output of the low pass filter, the system further including a load current circuit structured to determine a load current through the fuse in response to the thermal fuse impedance value, and further in response to the load voltage drop.

An example system includes a vehicle having a motive electrical power path; a power distribution unit including a current protection circuit disposed in the motive electrical power path, the current protection circuit including a thermal fuse and a contactor in a series arrangement with the thermal fuse; a current source circuit electrically coupled to the thermal fuse and structured to inject a current across the thermal fuse; a voltage determination circuit electrically coupled to the thermal fuse and structured to determine at least one of an injected voltage amount and a thermal fuse impedance value, where the voltage determination circuit includes a high-pass filter having a cutoff frequency selected in response to a frequency of the injected current.

Certain further aspects of an example system are described following, any one or more of which may be present in certain embodiments. An example system includes where the voltage determination circuit further includes a bandpass filter having a bandwidth selected to bound the frequency of the injected current. An example system includes where the high-pass filter includes an analog hardware filter, and where the bandpass filter includes a digital filter. An example system includes where the high-pass filter and the bandpass filter comprise digital filters; where the voltage determination circuit is further structured to determine the thermal fuse impedance value in response to the injected voltage drop; and/or further including a fuse characterization circuit structured to store one of a fuse resistance value and a fuse impedance value, and where the fuse characterization circuit is further structured to update the stored one of the fuse resistance value and the fuse impedance value in response to the thermal fuse impedance value. An example system includes where the fuse characterization circuit is further structured to update the stored one of the fuse resistance value and the fuse impedance value by performing at least one operation selected from the operations consisting of: updating a value to the thermal fuse impedance value; filtering a value using the thermal fuse impedance value as a filter input; rejecting the thermal fuse impedance value for a period of time or for a number of determinations of the thermal fuse impedance value; and updating a value by performing a rolling average of a plurality of thermal impedance values over time. An example system includes where the power distribution unit further includes a plurality of thermal fuses disposed therein, and where the current source circuit is further electrically coupled to the plurality of thermal fuses, and to sequentially inject a current across each of the plurality of thermal fuses; and where the voltage determination circuit is further electrically coupled to each of the plurality of thermal fuses, and further structured to determine at least one of an injected voltage amount a thermal fuse impedance value for each of the plurality of thermal fuses; where the current source circuit is further structured to sequentially inject the current across each of the plurality of thermal fuses in a selected order of the fuses; where the current source circuit is further structured to adjust the selected order in response to at least one of: a rate of change of a temperature of each of the fuses; an importance value of each of the fuses; a criticality of each of the fuses; a power throughput of each of the fuses; and one of a fault condition or a fuse health condition of each of the fuses; and/or where the current source circuit is further structured to adjust the selected order in response to one of a planned duty cycle and an observed duty cycle of the vehicle. An example system includes where the current source circuit is further structured to sweep the injected current through a range of injection frequencies; where the current source circuit is further structured to inject the current across the thermal fuse at a plurality of injection frequencies. An example system includes where the current source circuit is further structured to inject the current across the thermal fuse at a plurality of injection voltage amplitudes. An example system includes where the current source circuit is further structured to inject the current across the thermal fuse at an injection voltage amplitude determined in response to a power throughput of the thermal fuse. An example system includes where the current source circuit is further structured to inject the current across the thermal fuse at an injection voltage amplitude determined in response to a duty cycle of the vehicle.

An example procedure includes an operation to determine null offset voltage for a fuse current measurement system, including an operation to determine that no current is demanded for a fuse load for a fuse electrically disposed between an electrical power source and an electrical load; an operation to determine a null offset voltage in response to no current demanded for the fuse load; and an operation to store the null offset voltage.

Certain further aspects of an example procedure are described following, any one or more of which may be present in certain embodiments. An example procedure further includes an operation to update a stored null offset voltage in response to the determined null offset voltage. An example procedure includes an operation to diagnose a component in response to the null offset voltage; and/or an operation to determine which one of a plurality of components is contributing to the null offset voltage. An example procedure includes an operation to determine that no current is demanded for the fuse load includes at least one operation selected from the operations consisting of an operation to determine that a key-off event has occurred for a vehicle including the fuse, the electrical power source, and the electrical load; an operation to determine that a key-on event has occurred for the vehicle; and operation to determine that the vehicle is powering down; and an operation to determine that the vehicle is in an accessory condition, where the vehicle in the accessory condition does not provide power through the fuse.

An example apparatus to determine offset voltage to adjust a fuse current determination includes a fuse load circuit structured to determine that no current is demanded for a fuse load, and to further determine that contactors associated with the fuse are open; an offset voltage determination circuit structured to determine an offset voltage corresponding to at least one component in a fuse circuit associated with the fuse, in response to the determining that no current is demanded for the fuse load; and an offset data management circuit structured to store the offset voltage,

and to communicate a current calculation offset voltage for use by a controller to determine current flow through the fuse.

An example procedure includes an operation to provide digital filters for a fuse circuit in power distribution unit, including an operation to inject an alternating current across a fuse, the fuse electrically disposed between an electrical power source and an electrical load; an operation to determine the base power through a fuse by performing a low-pass filter operation on one of a measured current value and a measured voltage value for the fuse; and an operation to determine an injected current value by performing a high-pass filter operation on one of the measured current value and the measured voltage value for the fuse.

Certain further aspects of an example procedure are described following, any one or more of which may be present in certain embodiments. An example procedure further includes an operation to adjust parameters of at least one of the low-pass filter and the high-pass filter in response to a duty cycle of one of power and current through the fuse. An example procedure includes an operation to sweep the injected alternating current through a range of injection frequencies. An example procedure includes an operation to inject the alternating current across the fuse at a plurality of injection frequencies. An example procedure includes an operation where the current source circuit is further structured to inject the current across the fuse at a plurality of injection voltage amplitudes. An example procedure includes an operation where the current source circuit is further structured to inject the current across the fuse at an injection voltage amplitude determined in response to a power throughput of the fuse.

An example procedure includes an operation to calibrate a fuse resistance determination algorithm, including: an operation to store a plurality of calibration sets corresponding to a plurality of duty cycle values, the duty cycles including an electrical throughput value corresponding to a fuse electrically disposed between an electrical power source and an electrical load; where the calibration sets include current source injection settings for a current injection device operationally coupled to the fuse; an operation to determine a duty cycle of a system including the fuse, the electrical power source, and the electrical load; an operation to determine injection settings for the current injection device in response to the plurality of calibration sets and the determined duty cycle; and an operation to operate the current injection device in response to the determined injection settings.

Certain further aspects of an example procedure are described following, any one or more of which may be present in certain embodiments. An example procedure further includes an operation where the calibration sets further comprise filter settings for at least one digital filter, where the method further includes determining the fuse resistance utilizing the at least one digital filter.

An example procedure includes an operation to 1. A method to provide unique current waveforms to improve fuse resistance measurement for a power distribution unit, including: confirming that contactors electrically positioned in a fuse circuit are open, where the fuse circuit includes a fuse electrically disposed between an electrical power source and an electrical load; determining a null voltage offset value for the fuse circuit; conducting a plurality of current injection sequences across the fuse, each of the current injection sequences including a selected current amplitude, current frequency, and current waveform value; determining a fuse resistance value in response to the current injection sequences and the null voltage offset value.

Certain further aspects of an example procedure are described following, any one or more of which may be present in certain embodiments. An example procedure further includes an operation to adjust filtering characteristics for a digital filter in response to each of the plurality of current injection sequences, and measuring one of the fuse circuit voltage and the fuse circuit current with the digital filter during the corresponding one of the plurality of current injection sequences using the adjusted filtering characteristics.

An example system includes a vehicle having a motive electrical power path; a power distribution unit including a current protection circuit disposed in the motive electrical power path, the current protection circuit including a thermal fuse and a contactor in a series arrangement with the thermal fuse; a current source circuit electrically coupled to the thermal fuse and structured to inject a current across the thermal fuse; a voltage determination circuit electrically coupled to the thermal fuse and structured to determine an injected voltage amount and a thermal fuse impedance value, where the voltage determination circuit is structured to perform a frequency analysis operation to determine the injected voltage amount.

Certain further aspects of an example system are described following, any one or more of which may be present in certain embodiments. An example system includes where the voltage determination circuit is further structured to determine the injected voltage amount by determining an amplitude of a voltage across the fuse at a frequency of interest; and/or where the frequency of interest is determined in response to a frequency of the injected voltage. An example system includes where the current source circuit is further structured to sweep the injected current through a range of injection frequencies. An example system includes where the current source circuit is further structured to inject the current across the thermal fuse at a plurality of injection frequencies. An example system includes where the current source circuit is further structured to inject the current across the thermal fuse at a plurality of injection voltage amplitudes. An example system includes where the current source circuit is further structured to inject the current across the thermal fuse at an injection voltage amplitude determined in response to a power throughput of the thermal fuse. An example system includes where the current source circuit is further structured to inject the current across the thermal fuse at an injection voltage amplitude determined in response to a duty cycle of the vehicle.

An example system includes a vehicle having a motive electrical power path; a power distribution unit including a current protection circuit disposed in the motive electrical power path, the current protection circuit including a thermal fuse and a contactor in a series arrangement with the thermal fuse; a current source circuit electrically coupled to the thermal fuse and structured to determine that a load power throughput of the motive electrical power path is low, and to inject a current across the thermal fuse in response to the load power throughput of the motive electrical power path being low; a voltage determination circuit electrically coupled to the thermal fuse and structured to determine at least one of an injected voltage amount and a thermal fuse impedance value, where the voltage determination circuit includes a high-pass filter having a cutoff frequency selected in response to a frequency of the injected current.

Certain further aspects of an example system are described following, any one or more of which may be present in certain embodiments. An example system includes where the current source circuit is further structured to determine the load power throughput of the motive electrical power path is low in response to the vehicle being in a shutdown state. An example system includes where the current source circuit is further structured to determine the load power throughput of the motive electrical power path is low in response to the vehicle being in a key-off state. An example system includes where the current source circuit is further structured to determine the load power throughput of the motive electrical power path is low in response to a motive torque request for the vehicle being zero. An example system includes where the power distribution unit further includes a plurality of fuses, and where the current source circuit is further structured to inject the current across each of the plurality of fuses in a selected sequence; and/or where the current source circuit is further structured to inject the current across a first one of the plurality of fuses at a first shutdown event of the vehicle, and to inject the current across a second one of the plurality of fuses at a second shutdown event of the vehicle.

An example system includes a vehicle having a motive electrical power path; a power distribution unit including a current protection circuit disposed in the motive electrical power path, the current protection circuit including a thermal fuse and a contactor in a series arrangement with the thermal fuse; a current source circuit electrically coupled to the thermal fuse and structured to inject a current across the thermal fuse; a voltage determination circuit electrically coupled to the thermal fuse and structured to determine at least one of an injected voltage amount and a thermal fuse impedance value, where the voltage determination circuit includes a high-pass filter having a cutoff frequency selected in response to a frequency of the injected current; and a fuse status circuit structured to determine a fuse condition value in response to the at least one of the injected voltage amount and the thermal fuse impedance value.

Certain further aspects of an example system are described following, any one or more of which may be present in certain embodiments. An example system includes where the fuse status circuit is further structured to provide the fuse condition value by providing at least one of a fault code or a notification of the fuse condition value; where the fuse status circuit is further structured to adjust a maximum power rating for the motive electrical power path in response to the fuse condition value; where the fuse status circuit is further structured to adjust a maximum power slew rate for the motive electrical power path in response to the fuse condition value; where the fuse status circuit is further structured to adjust a configuration of the current protection circuit in response to the fuse condition value; where the power distribution unit further includes an active cooling interface, and where the fuse status circuit is further structured to adjust the active cooling interface in response to the fuse condition value; where the fuse status circuit is further structured to clear the at least one of the fault code or the notification of the fuse condition value in response to the fuse condition value indicating that the fuse condition has improved; where the fuse status circuit is further structured to clear the at least one of the fault code or the notification of the fuse condition value in response to a service event for the fuse; where the fuse status circuit is further structured to determine a fuse life remaining value in response to the fuse condition value; where the fuse status circuit is further structured to determine the fuse life remaining value further in response to a duty cycle of the vehicle; and/or where the fuse status circuit is further structured to determine the fuse life remaining value further in response to one of an adjusted maximum power rating for the motive electrical power path or an adjusted maximum power slew rate for the motive electrical power path.

An example system includes a vehicle having a motive electrical power path; a power distribution unit including a current protection circuit disposed in the motive electrical power path, the current protection circuit including a thermal fuse and a contactor in a series arrangement with the thermal fuse; a fuse thermal model circuit structured to determine a fuse temperature value of the thermal fuse, and to determine a fuse condition value in response to the fuse temperature value.

Certain further aspects of an example system are described following, any one or more of which may be present in certain embodiments. An example system includes a current source circuit electrically coupled to the thermal fuse and structured to inject a current across the thermal fuse; a voltage determination circuit electrically coupled to the thermal fuse and structured to determine at least one of an injected voltage amount and a thermal fuse impedance value, where the voltage determination circuit includes a high-pass filter having a cutoff frequency selected in response to a frequency of the injected current; and where the fuse thermal model circuit is structured to determine the fuse temperature value of the thermal fuse further in response to the at least one of the injected voltage amount and the thermal fuse impedance value. An example system includes where the fuse thermal model circuit is further structured to determine the fuse condition value by counting a number of thermal fuse temperature excursion events; and/or where the thermal fuse temperature excursion events each comprise a temperature rise threshold value within a time threshold value. An example system includes where the fuse thermal model circuit is further structured to determine the fuse condition value by integrating the fuse temperature value; and/or where the fuse thermal model circuit is further structured to determine the fuse condition value by integrating the fuse temperature value above a temperature threshold.

BRIEF DESCRIPTION OF THE DRAWINGS

The present disclosure will become more fully understood from the detailed description and the accompanying drawings, wherein:

FIG. **1** shows an embodiment system schematically depicting a power distribution unit (PDU) operationally positioned between a power source and a load.

FIG. **2** depicts a more detailed embodiment system schematically depicting a PDU.

FIG. **3** depicts a non-limiting example response curve for a fuse.

FIG. **4** depicts a non-limiting example system for mobile application such as a vehicle.

FIG. **5** depicts a non-limiting example system including a PDU.

FIG. **6** depicts an embodiment apparatus including all or portions of a PDU.

FIG. **7** shows a non-limiting example of interactions between a main fuse and laminated layers.

FIG. **8** shows closer detail of a non-limiting example of interactions between a main fuse and laminated layers.

FIG. **9** depicts an embodiment detailed view of a side section of the laminated layers.

FIG. **10** shows a top view of a non-limiting example apparatus.

FIG. **11** shows an alternate side view of a non-limiting example apparatus.

FIG. **12** depicts an embodiment configuration showing a main fuse coupled to laminated layers on a bottom side of the main fuse.

FIG. **13** depicts an embodiment configuration showing a main fuse coupled to laminated layers on a bottom side of the main fuse with thermal fins.

FIG. **14** depicts an embodiment configuration showing a main fuse coupled to laminated layers on a bottom side of the main fuse with features for enhanced heat flow.

FIG. **15** depicts an alternate embodiment configuration showing a main fuse coupled to laminated layers on a bottom side of the main fuse with features for heat flow.

FIG. **16** depicts an alternate embodiment configuration showing a main fuse coupled to laminated layers on a bottom side of the main fuse with features for heat flow.

FIG. **17** depicts an alternate embodiment configuration showing a main fuse coupled to laminated layers on a bottom side of the main fuse with features for heat flow.

FIG. **18** shows a non-limiting example system including a PDU positioned within a battery pack housing or enclosure.

FIG. **19** shows a non-limiting example system including a PDU in a coolant loop for a heat transfer system.

FIG. **20** shows a non-limiting example apparatus for providing additional protection against fuse nuisance faults and system failures.

FIG. **21** depicts an embodiment illustrative data for implementing a system response value.

FIG. **22** depicts a non-limiting example apparatus to measure current through a fuse utilizing active current injection.

FIG. **23** depicts a non-limiting example apparatus to determine a null offset voltage and/or diagnose a system component.

FIG. **24** depicts a non-limiting example apparatus to provide for digital filtering of a current measurement through a fuse circuit.

FIG. **25** depicts a non-limiting example fuse circuit that may be present on a PDU.

FIG. **26** depicts an embodiment of a fuse circuit with a contactor.

FIG. **27** depicts an embodiment fuse circuit including a plurality of fuses.

FIG. **28** depicts a fuse circuit with fuses in parallel with a contactor.

FIG. **29** depicts illustrative data showing a fuse response to a drive cycle for a vehicle.

FIG. **30** depicts a non-limiting example system including a power source and s load with a fuse electrically disposed between the load and the source.

FIG. **31** depicts a non-limiting example apparatus to determine an offset voltage to adjust a fuse current determination.

FIG. **32** depicts a non-limiting example apparatus is depicted to provide unique current waveforms to improve fuse resistance measurement for a PDU.

FIG. **33** depicts a non-limiting example procedure to provide unique current waveforms to improve fuse resistance measurement for a PDU.

FIG. **34** depicts a non-limiting example procedure to conduct a number of injection sequences.

FIG. **35** depicts an illustrative injection characteristic for an example test.

FIG. **36** depicts a schematic diagram of a vehicle having a PDU.

FIG. **37** depicts a schematic flow diagram of a procedure to utilize a parallel thermal fuse and pyro-fuse.

FIG. **38** depicts a schematic diagram of a vehicle having a PDU.

FIG. **39** depicts a schematic flow diagram of a procedure to operate a thermal fuse bypass.

FIG. **40** depicts a schematic diagram of a vehicle having a PDU.

FIG. **41** depicts a schematic flow diagram of a procedure to operate a thermal fuse bypass.

FIG. **42** depicts a schematic diagram of a vehicle having a PDU.

FIG. **43** depicts a schematic flow diagram of a procedure to operate parallel thermal fuses.

FIG. **44** depicts a schematic diagram of a vehicle having a PDU.

FIG. **45** depicts a schematic flow diagram of a procedure to selectively configure a current protection circuit.

FIG. **46** depicts a schematic diagram of a vehicle having a PDU.

FIG. **47** depicts a schematic flow diagram of a procedure to determine a fuse event value, and to respond thereto.

FIG. **48** depicts a schematic diagram of a vehicle having a PDU.

FIG. **49** depicts a schematic flow diagram of a procedure to determine current flow through a number of fuses.

FIG. **50** depicts a schematic diagram of a vehicle having a PDU.

FIG. **51** depicts a schematic flow diagram of a procedure to operate a thermal fuse in series with a contactor.

FIG. **52** depicts a schematic flow diagram of a procedure to re-connect a contactor.

FIG. **53** depicts a schematic diagram of a vehicle having a PDU.

FIG. **54** depicts a schematic diagram of a vehicle having a PDU.

FIG. **55** depicts a schematic diagram of a vehicle having a PDU.

FIG. **56** depicts a schematic flow diagram of a procedure to determine a null offset voltage.

FIG. **57** depicts a schematic diagram of an apparatus for determining an offset voltage.

FIG. **58** depicts a schematic flow diagram of a procedure to determine an injected current value.

FIG. **59** depicts a schematic flow diagram of a procedure to calibrate a fuse resistance algorithm.

FIG. **60** depicts a schematic flow diagram of a procedure to determine a fuse resistance using a unique current waveform.

FIG. **61** depicts a schematic diagram of a vehicle having a current protection circuit.

FIG. **62** depicts a schematic diagram of a vehicle having a current protection circuit.

FIG. **63** depicts a schematic diagram of a vehicle having a current protection circuit.

FIG. **64** depicts a schematic diagram of a vehicle having a PDU.

FIG. **65** depicts a schematic diagram of a breaker/relay and pre-charge relay.

FIG. **66** depicts a schematic diagram of a breaker/relay and inhibit.

FIG. **67** depicts a schematic diagram of a power bus protection configuration.

FIG. **68** depicts an embodiment detail of a breaker/relay component.

FIG. **69** depicts an embodiment detail of a breaker/relay component.

FIG. **69**A depicts an embodiment detail of a breaker/relay component.

FIG. **70** depicts a current plot for a contactor-fuse and breaker/relay.

FIG. **71** depicts an embodiment flow diagram for current protection.

FIG. **72** depicts an embodiment flow diagram for current protection.

FIG. **73** depicts an embodiment flow diagram for current protection.

FIG. **74** depicts an embodiment flow diagram for current protection.

FIG. **75** depicts a schematic diagram of a power protection configuration between a battery and an inverter.

FIG. **76** depicts a schematic diagram of a power protection configuration between a battery and an inverter.

FIG. **77** depicts a schematic diagram of a power protection configuration between a battery and loads.

FIG. **78** depicts a schematic diagram of a power protection configuration.

FIG. **79** depicts a schematic diagram of a power protection configuration between a battery and loads.

FIG. **80** depicts a schematic diagram of a power protection configuration between a battery and loads.

FIG. **81** depicts a schematic diagram of a power protection configuration between a battery and loads with current path depiction.

FIG. **82** depicts a schematic diagram of a power protection configuration between a battery and loads with current path depiction.

FIG. **83** depicts a schematic diagram of a power protection configuration between a battery and loads with current path depiction.

FIG. **84** depicts a schematic diagram of a power protection configuration between a battery and loads with current path depiction.

FIG. **85** depicts an embodiment detail of a breaker/relay component.

FIG. **86** depicts a schematic diagram of a power bus protection configuration.

FIG. **87** depicts an embodiment detail of a contact in a breaker/relay component.

FIG. **88** depicts an embodiment detail of a breaker/relay component.

FIG. **89** depicts a schematic diagram of a power protection configuration with controller.

FIG. **90**A and FIG. **90**B depict schematic diagrams of an adaptive system using a multi-port power converter.

FIG. **91** depicts a schematic diagram of a controller.

FIG. **92** depicts a schematic diagram of a controller with multi-port power converter.

FIG. **93** depicts an embodiment functional diagram of a breaker/relay.

FIG. **94** depicts an embodiment schematic diagram of a breaker/relay.

FIG. **95** depicts an embodiment schematic diagram of a breaker/relay configuration showing certain voltage, amperage, and time-based values.

FIG. **96** depicts an embodiment schematic diagram of breaker/relay operations.

FIG. **97** depicts an embodiment breaker/relay device with pre-charge circuit.

FIG. **98** depicts an embodiment breaker/relay device with pre-charge circuit.

FIG. **99** depicts an embodiment breaker/relay device with pre-charge circuit.

FIG. **100** depicts an embodiment breaker/relay device with pre-charge circuit.

FIG. **101** depicts an embodiment schematic diagram of a single-pole breaker/relay device.

FIG. **102** depicts detail of an embodiment dual-pole breaker/relay device.

FIG. **103** depicts detail of an embodiment dual-pole breaker/relay device.

FIG. **104** depicts detail of an embodiment dual-pole breaker/relay device.

FIG. **105** depicts detail of an embodiment dual-pole breaker/relay device depicting current connection components.

FIG. **106** depicts a schematic diagram of a breaker/relay device.

FIG. **107** depicts a schematic diagram of a multi-port converter with solid state switch.

FIG. **108** depicts a schematic diagram of a multi-port converter.

FIGS. **109**A and **109**B depict an integrated inverter assembly.

FIG. **110** depicts an integrated inverter assembly with a battery connector and vehicle connector.

FIG. **111** depicts a view of an integrated inverter assembly.

FIG. **112** depicts a view of an integrated inverter assembly.

FIG. **113** depicts a view of an integrated inverter assembly with coolant channel.

FIG. **114** depicts a view of an integrated inverter assembly with coolant channel.

FIG. **115** depicts a view of an integrated inverter assembly with coolant channels.

FIG. **116** depicts a view of an integrated inverter assembly with coolant channels.

FIG. **117** depicts a view of an integrated inverter assembly with insulated-gate bipolar transistors (IGBTs).

FIG. **118**A depicts a view of an integrated inverter assembly.

FIG. **118**B depicts a side view of an integrated inverter assembly.

FIG. **119** depicts a view of an integrated inverter assembly with a perspective view depicting the gate driver PCB and the DC link capacitor.

FIG. **120** depicts a view of an integrated inverter assembly with AC bus bars and motor temperature/position sensor.

FIG. **121** depicts a view of an integrated inverter assembly with cure-in-place-gasket.

FIG. **122** depicts a view of an integrated inverter assembly with close-up of one corner of the main cover.

FIG. **123** depicts a view of an integrated inverter assembly with example installation for the IGBTs.

FIGS. **124-127** depict views of an example embodiment of a main cover portion of an integrated inverter assembly.

FIG. **128** depicts an example embodiment of an upper and lower cooling channel.

FIG. **129** depicts an example embodiment of a coupling mechanism.

FIG. **130** depicts an example embodiment of a coupling mechanism.

FIG. **131** depicts a view of an integrated inverter assembly showing a coolant channel cover.

FIG. **132** depicts a DC Link Capacitor in the prior art.

FIG. **133** depicts an embodiment DC Link Capacitor.

FIG. **134** depicts an embodiment potted DC Link Capacitor.

FIG. **135** depicts a view of an integrated inverter assembly with AC bus bars and motor temperature/position sensor.

FIG. **136** depicts a quick connector in the prior art.

FIG. **137** depicts a quick connector in the prior art.

FIG. **138** depicts an embodiment fluid connector.

FIG. **139** depicts an embodiment fluid connector.

FIG. **140** depicts a schematic diagram of a controller.

FIG. **141** depicts a schematic flow diagram of a procedure to open a motive power circuit.

FIG. **142** depicts a schematic flow diagram of a procedure to open a motive power circuit.

FIG. **143** depicts a schematic diagram of a controller.

FIG. **144** depicts a schematic flow diagram of a procedure to open a motive power circuit.

FIG. **145** depicts a schematic flow diagram of a procedure to open a motive power circuit.

FIG. **146** depicts an embodiment of a system having a breaker/relay.

FIG. **147** depicts an embodiment of a system having a breaker/relay.

FIG. **148** depicts an embodiment of a system having a breaker/relay.

FIG. **149** depicts an embodiment of a system having a breaker/relay.

FIG. **150** depicts a schematic diagram of a controller.

FIG. **151** depicts a schematic diagram of a controller.

FIG. **152** depicts a schematic flow diagram of a procedure to configure a power converter.

FIG. **153** depicts a schematic flow diagram of a procedure to integrate a power converter.

FIG. **154** depicts a schematic flow diagram of a procedure to adjust operations of a motor.

FIG. **155** depicts a schematic flow diagram of a procedure to adjust operations of a motor.

FIG. **156** depicts a schematic diagram of a controller.

FIG. **157** depicts a schematic diagram of a controller.

FIG. **158** depicts a schematic flow diagram of a procedure to adjust operations of an inverter.

FIG. **159** depicts an embodiment of a system having multiple motors.

FIG. **160** depicts a schematic diagram of a controller.

FIG. **161** depicts a schematic flow diagram of a procedure to operate multiple motors.

DETAILED DESCRIPTION

Referencing FIG. **1**, an example system **100** is schematically depicted including a power distribution unit (PDU) **102** operationally positioned between a power source **104** and a load **106**. The power source **104** may be any type—including at least a battery, generator, and/or capacitor. The power source **104** may include multiple sources or lines of power, which may be distributed according to the type of power (e.g., a battery input separated from a generator input) and/or may be distributed according to the devices powered (e.g., auxiliary and/or accessory power separated from main load power such as motive force power, and/or divisions within the accessories, divisions within the motive force power, etc.). The load **106** may be any type, including one or more motive force loads (e.g., to individual drive wheel motors, to a global motive drive motor, etc.), one or more accessories (e.g., on-vehicle accessories such as steering, fan, lights, cab power, etc.). In certain embodiments, the PDU **102** provides for ease of integration of the electrical system of the application including the system **100**, such as by utilizing uniform input and output access, grouping all power distribution into a single box, single area, and/or to a single logically integrated group of components. In certain embodiments, the PDU **102** provides for protection of the electrical system, including fusing and/or connection or disconnection (manual and/or automated) of the electrical system or individual aspects of the electrical system. In certain embodiments, one or more power sources **104** may be high voltage (e.g., motive power sources, which may be 96V, 230V-360V, 240V, 480V, or any other value) or low voltage (e.g., 12V, 24V, 42V, or any other value). In certain embodiments, one or more power sources **104** may be a direct current (DC) power source or an alternating current (AC) power source, including multi-phase (e.g., three phase) AC power. In certain embodiments, the PDU **102** is a pass-through device, providing power to the load **106** approximately as configured by the power source **104**—for example only as affected by sensing and other operations from the PDU **102** that are not provided for power configuration. In certain embodiments, the PDU **102** may include power electronics, for example rectifying, adjusting voltage, cleaning up noisy electrical power, etc. to provide selected electrical power characteristics to the load **106**.

Referencing FIG. **2**, a more detailed view of an example PDU **102** is schematically depicted. The example PDU **102** includes a main power source **202** (e.g., high voltage, main load power, motive power, etc.) which may be provided by one or more power sources **104**, and an auxiliary power source **204** (e.g., auxiliary, accessory, low voltage, etc.) which may be provided by one or more power sources **104**. The example PDU **102** depicts a single main power source **202** and a single auxiliary power source **204**, but a given application may include one or more main power sources **202**, and may include separated auxiliary power sources **204** and/or omit auxiliary power sources **204**.

The example PDU **102** further includes a coolant inlet **206** and a coolant outlet **208**. The provision of coolant to the PDU **102** is optional and may not be included in certain embodiments. The coolant may be of any type according to availability in the application, including for example an on-vehicle coolant available (e.g., engine coolant, transmission coolant, a coolant stream associated with an auxiliary device or other power components such as a power source **104**, etc.) and/or may be a coolant dedicated to the PDU **102**. Where present, the amount of cooling provided by the coolant may be variable—for example by changing an amount of coolant flowing through a coolant loop through the PDU **102**—such as by operating hardware (e.g. a valve or restriction) within the PDU **102**, providing a request for a coolant flow rate to another device in the system, etc.

The example PDU **102** further includes a main power outlet **210** and an auxiliary power outlet **212**. As described preceding, the PDU **102** may include multiple main power outlets **210**, and/or divided, multiple, multiplexed, and/or omitted auxiliary power outlets **212**. The example PDU **102** is a pass-through power device where, except for effects on the power due to sensing and/or active diagnostics, the power outlets **210**, **212** have approximately the same electrical characteristics of the corresponding power inlets **202**, **204**. However, the PDU **102** can include power electronics (solid state or otherwise) to configure power in any desired manner.

The example PDU **102** further includes a controller **214** configured to functionally execute certain operations of the PDU **102**. The controller **214** includes and/or is communicatively coupled to one or more sensors and/or actuators in the PDU **102**, for example to determine current values,

voltage values, and/or temperatures of any power source or input, fuse, connector, or other device in the PDU **102**. Additionally or alternatively, the controller **214** is communicatively coupled to the system **100** including the PDU **102**, including for example a vehicle controller, engine controller, transmission controller, application controller, and/or network device or server (e.g., a fleet computer, cloud server, etc.). The controller **214** may be coupled to an application network (e.g., a CAN, a datalink, a private or public network, etc.), an outside network, and/or another device (e.g., an operator's portable device, an in-cab computer for a vehicle, etc.). The controller **214** is depicted schematically as a single stand-alone device for convenience of illustration. It will be understood that the controller **214** and/or aspects of the controller **214** may be distributed across multiple hardware devices, included within another hardware device (e.g., a controller for the power source, load, vehicle, application, etc.), and/or configured as hardware devices, logic circuits, or the like to perform one or more operations of the controller **214**. The PDU **102** is depicted schematically as a device within a single enclosure, but may be within a single enclosure and/or distributed in two or more places within an application. In certain embodiments, the inclusion of the PDU **102** within a single enclosure provides certain advantages for integration, reduction of footprint, and/or simplification of interfaces. Additionally or alternatively, inclusion of the PDU **102** in more than one location in an application is contemplated herein, and/or the inclusion of more than one PDU **102** within an application is contemplated herein.

The example PDU **102** includes a main contactor **216** selectively controlling the main power throughput of the PDU **102**. In the example, the main contactor **216** is communicatively coupled to and controlled by the controller **214**. The main contactor **216** may additionally be controllable manually, and/or other main contactors **216** may be in-line for the main power that are controllable manually. An example main contactor **216** includes a solenoid (or other coil-based) contactor, such that energizing the solenoid provides for either connected main power (e.g., normally open, or power is disconnected when not energized) and/or energizing the solenoid provides for disconnected main power (e.g., normally closed, or power is connected when not energized). The characteristics of the system **100**, including design choices about whether power should be active when controller **214** power fails, servicing plans, regulations and/or policies in place, the consequences of power loss for the system **100**, the voltage typically carried on the main power source, the availability of a positive manual disconnect option, and the like, may inform or dictate the decision of whether the main contactor **216** is normally open or normally closed. In certain embodiments, the main contactor **216** may be a solid state device such as a solid state relay. Where more than one main contactor **216** is present, the various contactors may include the same or distinct hardware (e.g., one is a solenoid and one is a solid state relay), and/or may include the same or distinct logic for being normally open or normally closed. The main contactor **216** may be additionally controllable by devices outside the PDU **102**—for example a keyswitch lockout, another controller in the system **100** having access to control the main contactor **216**, etc., and/or the controller **214** may be responsive to outside commands to open or close the main contactor **216**, and/or additional contactors in-line for the main power may be responsive to devices outside the PDU **102**.

The example PDU **102** includes an auxiliary contactor **218** selectively controlling the auxiliary power throughput of the PDU **102**. In the example, the auxiliary contactor **218** is communicatively coupled to and controlled by the controller **214**. The auxiliary contactor **218** may additionally be controllable manually, and/or other auxiliary contactor **218** may be in-line for the auxiliary power that are controllable manually. An example auxiliary contactor **218** includes a solenoid (or other coil-based) contactor, such that energizing the solenoid provides for either connected auxiliary power (e.g., normally open, or power is disconnected when not energized) and/or energizing the solenoid provides for disconnected auxiliary power (e.g., normally closed, or power is connected when not energized). The characteristics of the system **100**, including design choices about whether power should be active when controller **214** power fails, servicing plans, regulations and/or policies in place, the consequences of power loss for the system **100**, the voltage typically carried on the auxiliary power source(s), the availability of a positive manual disconnect option, and the like, may inform or dictate the decision of whether the auxiliary contactor **218** is normally open or normally closed. In certain embodiments, the auxiliary contactor **218** may be a solid state device such as a solid state relay. The auxiliary contactor **218** may be additionally controllable by devices outside the PDU **102**—for example a keyswitch lockout, another controller in the system **100** having access to control the auxiliary contactor **218**, etc., and/or the controller **214** may be responsive to outside commands to open or close the auxiliary contactor **218**, and/or additional contactors in-line for the auxiliary power may be responsive to devices outside the PDU **102**. In certain embodiments, auxiliary contactors **218** may be provided for each auxiliary line, for subsets of the auxiliary lines (e.g., four auxiliary power inputs, with **2**, **3**, or **4** auxiliary contactors **218**), etc.

An example PDU **102** includes a current source **220**, which may be an alternating current source, and/or which may be provided as solid state electronics on the controller **214**. The current source **220** is capable of providing a selected current injection to the main power across a main fuse **222**, for example as AC current, DC current, and/or controllable current over time. For example, the PDU **102** may include sensors such as voltage and/or current sensors on the main power, and the current source **220** provides an electrical connection to a power source (which may be an external power source and/or sourced through the controller) in a manner configured to inject the desired current to the main power. The current source **220** may include feedback to ensure the desired current is injected, for example to respond to system noise, variability, and aging, and/or may apply the nominal electrical connection to inject current, and the controller **214** determines sensor inputs to determine what current was actually injected on the main power. The example PDU **102** depicts a current source **220** associated with the main fuse **222**, but the PDU **102** may further include one or more current sources **220** associated with any one or more of the fuses **222**, **224** in the PDU **102**, including across fuses individually, in subsets, or across all of the fuses (subject to compatibility of power on the fuses—for example simultaneous current injection across electrically coupled fuses should generally be avoided) at once. It can be seen that the inclusion of additional current sources **220** provides for greater resolution in injecting current across individual fuses and in managing variation of the fuses over time, which the inclusion of fewer current sources **220** reduces system cost and complexity. In certain embodiments the current source **220** is configured to selectively inject current across each fuse in the PDU **102**, and/or across each

fuse of interest, in a sequence or schedule, and/or as requested by a controller **214**.

The example PDU **102** includes the main fuse **222** and the auxiliary fuses **224**. The main fuse **222** or fuses are associated with the main power, and the auxiliary fuses **224** are associated with the auxiliary power. In certain embodiments, the fuses are thermal fuses, such as resistive devices that exhibit heating, and are intended to fail if a given current profile is exceeded in the associated power line. Referencing FIG. **3**, a typical and non-limiting example response curve for a fuse is depicted. The curve **302** represents an application damage curve, depicting a current-time space over which some aspect of the application will be damaged if the curve is exceeded. For example, in the example application damage curve **302**, if 10× rated current is exceeded for about 50 milliseconds, damage to some aspect of the application will occur. It will be understood that an application may contain many components, and that the components may differ in the application damage curve **302**. Additionally, each fuse **222**, **224** may be associated with distinct components having a different damage curve than other components. The curve **304** represents a control space, wherein in certain embodiments, the controller **114** provides control protection to keep the system from reaching the application damage curve **302** in the event of a fuse failure or off-nominal operation. The application damage curve **302** may be a specified value, for example a system requirement to be met, where exceedance of the application damage curve **302** does not meet the system requirement, although actual damage to components may be experienced at some other value in the current-time space. The curve **306** represents the fuse melting line for an illustrative fuse. At the position of the fuse melting line **306**, the fuse temperature exceeds the fuse design temperature, and the fuse melts. However, the fuse continues conducting for a period of time after melting commences, as depicted by the fuse conduction line **308** (e.g., due to conduction through the melted material before the connection is broken, arcing, and the like). When the time-current space reaches the fuse conduction line **308**, the fuse is no longer conducting on the power line, and the line is disconnected. It will be understood that specific system dynamics, fuse-to-fuse variability, fuse aging (e.g., induced mechanical or thermal degradation, changes in composition or oxidation, and the like), the exact nature of the current experienced (e.g., the rise time of the current), and other real-world variables will affect the exact timing of both fuse melting and fuse disconnection. However, even with a nominal fuse as depicted in FIG. **3**, it can be seen that for very high currents, the nominal fuse conduction line **308**, and even the fuse melting line **306**, can cross the application damage curve **302**—for example because certain dynamics of the fuse disconnection operation are less responsive (in the time domain) or unresponsive to the current applied at very high current values.

The example PDU **102** further includes a conduction layer **226** associated with the auxiliary power, and a conduction layer **228** associated with the main power. The conduction layers **226**, **228** include the power couplings of the power lines to the fuses. In certain embodiments, the conduction layers **226**, **228** are just wires or other conductive couplings between the fuses and the power connections to the PDU **102**. Additionally or alternatively, conduction layers **226**, **228** may include flat or laminated portions, for example with stamped or formed conductive layers, to provide power connections within the PDU **102**, and/or portions of the conduction layers **226**, **228** may include flat or laminated portions. Without limitation to any other disclosures provided herein, the utilization of flat or laminated portions provides for flexibility in the manufacture of the conduction layers **226**, **228**, flexibility in the installation and/or a reduced installed footprint of the conduction layers **226**, **228**, and/or provides for greater contact area between the conduction layers **226**, **228** and portions of the PDU **102**—for example the fuses, controller, contactors, or other devices within the PDU **102** where thermal and/or electrical contact between the conduction layers **226**, **228** and the other devices are desired. The example conduction layers **226**, **228** are depicted in association with the fuses, but the conduction layers **226**, **228** may additionally or alternatively be associated with the controller **214** (e.g., power coupling, communications within or outside the PDU **102**, coupling to actuators, coupling to sensors, and/or thermal coupling), contactors **216**, **218**, and/or any other device within the PDU **102**.

Referencing FIG. **4**, an example system **400** is a mobile application such as a vehicle. The example system **400** includes the high voltage battery **104** electrically coupled to high voltage loads **106** through the PDU **102**. In the example system **400**, an auxiliary prime mover, such as an internal combustion engine **402** (with associated conversion electronics, such as a generator, motor-generator, and/or inverter) is additionally coupled to the PDU **102**. It is understood that the high voltage battery **104** and/or the auxiliary prime mover **402** may act as a power source or a load during certain operating conditions of the system **400**, and additionally the high voltage loads **106** (e.g., electric motors or motor-generators coupled to the wheels) may act as a load or a source during certain operating conditions. The description of loads **106** and sources **104** herein is non-limiting, and references only nominal operation, ordinary operation, and/or operational conditions selected for conceptual description, even if the described load **106** and/or source **104** often, usually, or always operates in a mode that is not the described name. For example, the high voltage battery **104** may operate as a power source during motive operations where net energy is being taken from the battery, and/or as a load during charging operations, motive operations where the wheels or auxiliary prime mover are charging the battery, etc.

The example system **400** further includes a powertrain controller **404** to control operations of the powertrain, which may be associated with another component in the system **400**, and/or part of another controller in the system (e.g., a vehicle controller, battery controller, motor or motor-generator controller, and/or engine controller). The example system **400** further includes a charger **406** coupled to the high voltage battery **104** through the PDU **102**, and low voltage loads ("12V Auto Loads" in the example of FIG. **4**) representing auxiliary and accessory loads in the system **400**. One of skill in the art will recognize the system **400** as including a serial hybrid powertrain for a vehicle—for example where auxiliary power (e.g., the internal combustion engine) interacts only with the electrical system to re-charge batteries and/or provide additional real-time electrical power during operations, but does not mechanically interact with the drive wheels. Additionally or alternatively, a system may include a parallel hybrid system, where auxiliary power can interact mechanically with the drive wheels, and/or interact with the electrical system (either, or both). Additionally or alternatively, a system may be a fully electric system, where auxiliary power is not present, and/or where auxiliary power is present but does not interact with the high voltage/motive power system (e.g., an alternative power unit to drive accessories, refrigeration, or the like—

which power may be communicated through the PDU **102** but separated from the motive power electrical system). In certain embodiments, motive systems such as vehicles experience highly transient load cycles—for example during acceleration, deceleration, stop-and-go traffic, emergency operations, and the like—and accordingly management of power in such system is complex, and certain devices such as fuses can be vulnerable to the highly transient load cycle. Additionally or alternatively, loss of operations for vehicles can result in costs for system down-time, loss or untimely delivery of cargo, and/or significant operational risks due to failures (e.g., stranding the operator and/or vehicle, loss of operations in traffic, loss of operations on a motor-way, etc.). In certain embodiments, other systems that may be hybrid electric and/or fully electric are additionally or alternatively subject to highly variable duty cycles and/or specific vulnerabilities to operational interruptions, such as, without limitation, pumping operations, process operations for a larger process (e.g., chemical, refining, drilling, etc.), power generation operations, mining operations, and the like. System failures for these and other operations may involve externalities such as losses associated with the process failure that go beyond the down-time for the specific system, and/or down-time for such systems can incur a significant cost.

Referencing FIG. **5**, an example system is depicted including a PDU **102**. The example PDU **102** has a number of auxiliary power connections (e.g., charging, power steering, vehicle accessories, and a load return for current detection, in the example), and a main motive/traction power connection. The example system **500** includes two high voltage contactors, one for each of the battery high side and low side, where in the example two high voltage contactors are controllable by the system control board but may be additionally or alternatively manual (e.g., a switch accessible by an operator). The system control board additionally can control a master disconnect that can disconnect all power through the PDU **102**. The system **500** further depicts a power fuse bypass **502**, controllable by the system control board, that supports certain operations of the present disclosure as described throughout. The system **500** depicts a power fuse bypass **502**, but may additionally or alternatively include an auxiliary bypass for one or more of the auxiliary fuses, any subset of the auxiliary fuses, and/or for all of the auxiliary fuses together. The example system **500** includes an optional coolant supply and return coupling. The battery coupling in the system **500** depicts a 230V to 400V battery coupling, but the high voltage coupling may be any value. The system control board is depicted as communicatively coupled to a 12V CAN network, although the communicative coupling of the system control board to the surrounding application or system can be any network understood in the art, multiple networks (e.g., vehicle, engine, powertrain, private, public, OBD, etc.), and/or may be or may include a wireless network connection.

Referencing FIG. **6**, an illustrative apparatus **1300** is depicted, which may include all or portions of a PDU **102**. Any descriptions referencing interactions between the main fuse **222** and laminated layers **226/228** herein additionally or alternatively contemplate interactions between any fuses and/or connectors in the apparatus **1300**, and/or any other component of a PDU **102** as described throughout the present disclosure. The example apparatus **1300** includes contactors **216/218** which may be high voltage contactors, and/or may be associated with various ones of the fuses **222**, **224** in the apparatus **1300**. The apparatus **1300** includes laminated layers **226/228**, which may include conductive layers for certain aspects of the conductive circuitry in the apparatus **1300**. The laminated layers **226/228** may additionally or alternatively provide stiffness and/or structural support for various components in the apparatus **1300**. The laminated layers **226/228** may be configured to interact with any components in a manner desired to support the functions of the laminated layers **226/228**, including structural functions, heat transfer functions, and/or electrical conductivity functions. The example laminated layers **226/228** interact with all contactors and fuses in the apparatus **1300**, although laminated layers **226/228** can readily be configured to interact with selected ones of the contactors and/or fuses, and/or with other components in the apparatus, for example in a manner similar to a printed circuit board (PCB) design. The example apparatus **1300** is positioned on a L-bracket, which may be a final configuration, and/or may be a test configuration. In certain embodiments, the apparatus **1300** is enclosed in a dedicated housing, and/or enclosed in a housing of another device in a system **100**—such as the battery housing. In certain embodiments, the apparatus **1300** includes a removable housing portion (e.g., a top portion, lid, etc.) for service and/or maintenance access to the components of the apparatus. The example apparatus **1300** includes connectors **1302**—for example to provide power, datalink access, connections to the power source **104**, connections to loads **106**, connections to sensors (not shown), and/or any other type of connection to the system **100** or otherwise.

Referencing FIG. **7**, an alternate view of an apparatus **1300** is depicted. The apparatus **1300** depicted in FIG. **7** shows the physical interaction between the main fuse **222** and the laminated layers **226/228** for an example embodiment. Referencing FIG. **8**, a closer detail view of interactions between the main fuse **222** and the laminated layers **226/228** is depicted for an example embodiment. In the example of FIG. **8**, it can be seen that the main fuse **222** includes a relatively large thermal contact area with the laminated layers **226/228** on a bottom side of the fuse, and a relatively small thermal contact area with the laminated layers **226/228** on the mounting sides (e.g., through the mounting components). The thermal contact area between the main fuse **222** and the laminated layers **226/228** is selectable, and in certain embodiments the mounting side or an open side of the main fuse **222** includes a greater thermal contact area, and/or the bottom side includes a large thermal contact area or is not in significant thermal contact with the laminated layers **226/228**.

Referencing FIG. **9**, a detail view of a side section of the laminated layers **226/228** is depicted. The laminated layers **226/228** in the example include an outer structural layer **1402** and an opposing outer structural layer (not numbered), with an interstitial space **1404** between the outer structural layers. In certain embodiments, conductive flow paths and/or thermal flow paths are provided in the interstitial space **1404** between the structural layers. It will be understood that the use of two outer structural layers **1402** provides certain mechanical advantages, including increased durability to shocks and minor impacts, denting of a layer, and bending or flexing of the PDU **102**. Additionally or alternatively, the use of two outer structural layers **1402** provides for improved mechanical moments for certain types of stresses. Accordingly, in certain embodiments, the interstitial space **1404** is empty (e.g., it forms a gap), and/or negligible (e.g., the outer layers are sandwiched directly together at least in certain portions of the PDU **102**), and nevertheless an improved design is achieved. In certain embodiments, the interstitial space **1404** includes thermally conductive mem-

bers (e.g., high thermal conductivity paths at selected locations), electrically conductive members (e.g., high electrical conductivity paths at selected locations), active and/or convective thermal paths (e.g., coolant or other convective thermal materials that flow through selected paths in the interstitial space **1404**), insulating materials (e.g., to direct electrical or heat flow, and/or to separate components or layers electrically and/or thermally), and/or dielectric materials (e.g., to improve electric isolation of components and/or layers).

Referencing FIG. **10**, a top view of an example apparatus **1300** is depicted. The laminated layers **226**/**228** are distributed throughout the apparatus **1300**, providing selectable support, thermal conductivity paths, and/or electrical conductivity paths, to any desired components in the apparatus. Referencing FIG. **11**, a side detail view of the interactive space **1408** between the laminated layers **226**/**228** and the main fuse **222** is depicted. The interactive space includes thermally conductive paths between mount points on the main fuse **222** and the laminated layers **226**/**228**. Additionally, the interstitial space **1404** between the layers is present, in the example, along both the bottom and side of the main fuse **222**. Accordingly, desired thermal transfer and/or electrical communication between the main fuse **222** and the interstitial layer **226**/**228** (and thereby with any other selected components in the apparatus **1300**) is available as desired. In certain embodiments, greater thermal and/or electrical coupling between the main fuse **222** and the laminated layers **226**/**228** is provided—for example by running the laminated layers **226**/**228** along the housing of the main fuse **222** rather than offset from the housing, and/or by providing a thermally conductive connection (e.g., thermal grease, silicone, and/or contact utilizing any other thermally coupling material such as a metal or other conductor) between the main fuse **222** and the laminated layers **226**/**228**.

Referencing FIG. **12**, a main fuse **222** coupled to laminated layers **226**/**228** on a bottom side of the main fuse **222** is depicted. The example of FIG. **12** depicts a thermally conductive layer **1406** disposed between the main fuse **222** and the laminated layers **226**/**228**—for example thermal grease, silicone, a silicone pad, a mounted metal material, and/or any other thermally conductive layer understood in the art. In the example of FIG. **12**, the increased effective thermal contact area provides for greater heat transfer away from the main fuse **222** when the main fuse **222** gets hotter than the laminated layer **226**, **228**. Additionally, the heat can be directed away by the inclusion of a thermally conductive material within the interstitial space **1404** (e.g., reference FIG. **14**), including for example utilizing a conductive path the direct heat to a selected portion of a PDU housing, to an active cooling exchange, heating fins, or the like. In the example of FIG. **12**, the support layers **226**/**228** that the fuse **222** is coupled to in FIG. **12** may additionally or alternatively include be only a single layer (e.g., not a laminated layer, and/or layers **226**, **228** having no interstitial space **1404**), a housing of the PDU **102**, and/or another component in a system **100** such as a battery pack housing. In certain embodiments, the heat conductivity in FIG. **12** is enhanced by the laminated layers **226**/**228**, for example by the inclusion of a highly conductive channel in the interstitial space **1404**, which may be improved by the structural support, routing availability, and/or environmental isolation provided by the laminated layers **226**/**228**. Referencing FIG. **13**, in addition to the features depicted in FIG. **12**, fins **1502** for improved heat transfer and/or structural rigidity are depicted upon the laminated layers **226**/**228** (which may be laminated layers, a single layer, a housing wall, etc.). In certain embodiments, the fins are oriented such that fluid flows past them in a direction to enhance heat transfer (e.g., oriented for improved effective flow area and/or turbulence generation in a liquid flow, to maximize effective area in a gas flow, and/or to allow natural convection of fluid—such as gas rising—to cause a high effective flow area of the fins **1502**). In certain embodiments, for example where the support layers **226**, **228** (and/or layer **226**) is a portion of a housing, battery pack housing, or other device, the fins **1502** may instead be presented into ambient air, a forced air flow region, or in a region to be in contact with any selected fluid to facilitate heat transfer to the fluid.

Convective heat transfer, as utilized herein, includes any heat transfer path wherein convective heat transfer forms at least a portion of the overall heat transfer mechanism. For example, where a portion of the heat transfer is conductive (e.g., through a wall, thermal grease, etc.) into a flowing fluid (where generally convective heat transfer dominates), then the heat transfer mechanism is convective and/or includes a convective portion. In certain embodiments, heat transfer utilizing an active or passively flowing fluid include convective heat transfer as utilized herein. The heat transfer may be dominated by conduction under certain operating conditions, dominated by convection under certain operating conditions, and/or include contributing mixes of conductive and convective heat transfer under certain operating conditions.

Referencing FIG. **14**, in addition to the features depicted in FIG. **12**, a fluid flow **1602** through the interstitial space **1404** is provided, which in certain embodiments enhances the heat flow from the main fuse **222** to the laminated layers **226**/**228**. The fluid flow **1602** may be a coolant (e.g., a vehicle, engine, battery pack, and/or transmission coolant, or other coolant source available in the system), and/or may be a dedicated coolant such as a closed system for the PDU **102** and/or power source **104**. In certain embodiments, the fluid flow **1602** includes a gas (e.g., air, compressed air, etc.). In certain embodiments, coolant flow may be active (e.g., through a valve from a pressurized source, and/or pumped) or passive (e.g., configured to occur during normal operations without further control or input).

Referencing FIG. **15**, a main fuse **222** is depicted having enhanced thermal connectivity to laminated layers **226**, **228** (which may be laminated, a single layer, a housing, etc.). In the example, enhanced thermal conductivity is provided by a thermal coupling layer **1406**, but may alternatively or additionally include positioning the layers **226**, **228** in proximity to the main fuse **222**, and/or providing another high conductivity path (e.g., a metal, etc.) to a selected location of the layer **226**, **228** and/or the thermal coupling layer **1406**. The embodiment of FIG. **15** provides additional heat transfer capability for the main fuse **222**, similar to that depicted in FIG. **12**, and the embodiments of FIGS. **12**, **13**, **14**, and **15** may be fully or partially combined.

Referencing FIG. **16**, a high conductivity thermal path **1702** to move heat out of the laminated layers **226**/**228** is depicted. The high conductivity thermal path **1702** may be combined with any other embodiments described throughout the present disclosure to control heat flow in a desired manner. In certain embodiments, the high conductivity thermal path **1702** is thermally coupled **1706** to another portion of the laminated layers **226**, **228**, to a housing, to a single layer, or to any other desired component in the PDU **102** or within thermal connectivity of the PDU **102**. The portion of FIG. **16** receiving the transferred heat may additionally or alternatively be coupled to active or passive heat transfer

components, include fins or other heat transfer enhancement aspects, and/or may be thermally coupled to a convective heat transfer component or fluid.

Referencing FIG. **17**, the fluid flow **1602** is displaced from the portion of the laminated layers **226/228** in direct thermal contact to the main fuse **222**. The example includes the fluid flow **1602** below the main fuse **222**, and the main fuse **222** thermally coupled to the laminated layers **226/228** on the sides of the fuse, but the fluid flow **1602** may be on either side or both sides of the main fuse **222**, with the main fuse **222** thermally coupled to another one of the sides and/or the bottom of the main fuse **222**, and combinations of any of the foregoing. The descriptions of FIGS. **12** through **17** are described in the context of the main fuse **222**, but the embodiments therein may apply to any one or more selected components of the PDU **102**, including without limitation any fuse, connector, and/or controller positioned within the PDU **102**.

Referencing FIG. **18**, an example system includes the PDU **102** positioned within a battery pack housing or enclosure, where the battery cells (e.g., power source **104**) are thermally coupled to a heating/cooling system **1802** present in the system. Additionally or alternatively, the PDU **102** may be thermally coupled to the battery cells **104**, for example with conductive paths, at a housing interface, or the like, and/or the PDU **102** may be thermally isolated from the battery cells **104** and/or only in nominal thermal connectivity with the battery cells **104** (e.g., an arrangement where some heat transfer therebetween is expected, but without intentional design elements to increase the heat transfer between the PDU **102** and the battery cells **104**). Referencing FIG. **19**, an example system includes the PDU **102** in the coolant loop for the heat transfer system **1802**, for example with thermal coupling aspects provided to transfer heat from the PDU **102** to the coolant loop and/or with the coolant loop including a flow branch in thermal contact with the PDU **102**. The example in FIG. **19** depicts a series coolant arrangement between the battery cells **104** and the PDU **102**, but any arrangement is contemplated herein including at least a parallel arrangement, a series arrangement with the PDU **102** contacted first, and/or mixed arrangements (e.g., portions of one of the battery cells **104** and the PDU **102** contacted, then all or a portion of the other, etc.).

An example procedure includes an operation to provide active and/or passive cooling to a temperature-sensitive component on a PDU **102**. The example procedure further includes cooling the temperature-sensitive component sufficiently to extend a life of the component to a designed service life, to a predetermined maintenance interval, to a life and/or predetermined maintenance interval of the PDU **102** and/or a battery pack, and/or to reduce a temperature of a fuse to avoid thermal/mechanical damage to the fuse, a "nuisance fault" of the fuse (e.g., a failure of the fuse not occurring due to a designed protective mechanism of the fuse, such as over-current operation).

In certain embodiments, fuse design imposes complications on system—for example a fuse threshold may be desired for the fuse to engage between about 135% up to 300% of the system overcurrent threshold value. However, a fuse on the smaller end of the scale may fail due to thermal and/or mechanical fatigue over the life of the system, causing a "nuisance failure" or a fuse failure that is not due to the protective function of the fuse. Such failures cause high costs, down-time, degraded perception of the product embodying the system, potentially dangerous situations or stranding due to power loss, and the like. Designing a larger fuse to avoid nuisance failures can impose the external system to increased risk of an overcurrent event, and/or significant costs to upgrade the rest of the power system. Additionally, design of a system for multiple maximum power availabilities (e.g., one power system for two different power ratings) requires that the fuse plan be altered or designed to accommodate multiple systems. In certain embodiments, the same hardware may be utilized for different power ratings, and/or changed after the system is in operation, providing for an off-nominal fuse sizing for at least one of the multiple power ratings.

Referencing FIG. **20**, an example apparatus **1900** for providing additional protection against fuse nuisance faults and system failures is described. The example apparatus **1900**, for example implemented on the controller **214**, includes a current event determination circuit **1902** that determines a current event **1904** is active or predicted to occur, where the current event includes a component experiencing (or about to experience) a wear event—such as a current value that will cause thermal and/or mechanical stress on the component but may not cause an immediate failure or observable damage. An example component includes the fuse, but may be any other component in the system including a battery cell, a switch or connector, a motor, etc. Another example current event includes a system failure value—for example a current value that will possibly or is expected to cause a system failure (e.g., a cable failure, connector failure, etc.).

The apparatus **1900** further includes a response determination circuit **1906** that determines a system response value **1910** to the current event **1904**. Example and non-limiting responses include notifying an operator to reduce power, reducing power, notifying a system controller that a current event **1904** is present or imminent, opening a contactor on the circuit related to the event, delaying circuit protection, monitoring the event and a cause for response delay and responding at a later time, and/or scheduling a response according to an operating condition in the system. The apparatus **1900** further includes a response implementation circuit **1908**, where the response implementation circuit **1908** determines communications and/or actuator responses according to the system response value **1910**, and provides network communications **1912** and/or actuator commands **1914** to implement the system response value **1910**. Example and non-limiting actuator responses include operating a contactor, operating an active coolant actuator to modulate thermal conduction away from the fuse, or the like.

Referencing FIG. **21**, illustrative data **2000** for implementing a system response value **1910** is depicted. The illustrative data **2000** includes a threshold value **2002**—for example a current, temperature, index parameter, or other value at which component wear and/or system failure is expected to occur, and utilized as a threshold by the current event determination circuit **1902**—at least under certain operating conditions at a point in time for the system. It is understood that the current event determination circuit **1902** may utilize multiple thresholds, and/or dynamic thresholds, as described throughout the present disclosure. The curve **2004** represents the nominal system performance, for example the current, temperature, index parameter, or the like that will be experienced by the system in the absence of operations of the apparatus **1900**. In the example, the response determination circuit **1906** determines that the threshold value **2002** will be crossed, and accounts for a contactor disconnection time **2008** (and/or an active coolant loop response time), commanding the contactor and/or increasing thermal conduction away from the fuse, in time

to avoid crossing the threshold value **2002**. The illustrative data **2000** depicts a resulting system response curve **2006**, wherein the resulting system performance is kept below the threshold value **2002**. The system may experience alternative response trajectories (e.g., the resulting system response curve **2006** may fall well below the threshold value **2002** depending upon the dynamics of the system, how long the contactor is kept open, etc.). Additionally or alternatively, the response determination circuit **1906** may nevertheless allow the threshold value **2002** to be crossed, for example according to any operations or determinations described throughout the present disclosure. In certain embodiments, the response determination circuit **1906** allows the threshold value **2002** to be crossed, but results in a lower peak value of the response, and/or a lower area under the response curve that is above the threshold value **2002**, than would occur without the operations of the response determination circuit **1906**.

An example procedure, which may be performed by an apparatus such as apparatus **1900**, includes an operation to determine that a current event (or other response event) is exceeding or predicted to exceed a wear threshold value, and/or determining that the current event is exceeding or predicted to exceed a system failure value. In response to determining the current event is exceeding or predicted to exceed either value, the procedure includes an operation to perform a mitigating action. The component for the wear threshold value may be a fuse (e.g., the fuse is experiencing or expected to experience a current event that will cause mechanical stress, thermal stress, or high usage of the fuse life), a component in the system (e.g., a contactor, a cable, a switch, a battery cell, etc.), and/or a defined threshold value that is nominally determined (e.g., calibration for a value that is expected to be relevant to possible component damage, without being necessarily tied to a specific component). In certain embodiments, the wear threshold value and/or the system failure value are compensated for the age or wear state of the system or a component in the system (e.g., thresholds are reduced, and/or responses are increased, as the system ages).

Non-limiting mitigating actions, which may be system response values **1910**, include, without limitation: 1) disconnecting a circuit having the wear component (e.g., the fuse, system component, and/or the specific power line experiencing the event); 2) notifying an operator to reduce a power request; 3) notifying a vehicle or powertrain controller of the current event; 4) adjusting or limiting available power to the operator; 5) delaying circuit protection (disconnection and/or power reduction) in response to circumstances (e.g., in traffic, moving vehicle, application type, notification from an operator that continued operation is required, etc.)—including allowing a component in the system to experience the underlying wear event and/or failure event; 6) continued monitoring and disconnecting the circuit (or reducing power, etc.) if the event persists and if later conditions allow; 7) scheduling the response according to an operating mode of the system (e.g., sport, economy, emergency, fleet operator (and/or policy), owner/operator (and/or policy), geographic policy, and/or regulatory policy); and/or 8) bypassing the wear component (e.g., bypassing current around a fuse as a response action).

In certain embodiments, the operation to determine that the current event is exceeding the wear threshold value and/or the system failure value is based upon a calculation such as: 1) determining the current through the circuit exceeds a threshold value (e.g., an amp value); 2) determining a rate of change of the current through the circuit exceeds a threshold value (e.g., an amp/second value); and/or **3**) determining that an index parameter exceeds a threshold value (e.g., the index including accumulated amp-seconds; amp/sec-seconds; a counting index for periods above a threshold value or more than one threshold value; a counting index weighted by the instantaneous current value; an integrated current, heat transfer, and/or power value; and/or counting down or resetting these based on current operating conditions).

In certain embodiments, the operation to determine that the current event is exceeding the wear threshold value and/or the system failure value includes or is adjusted based upon one or more of: 1) a trip curve (e.g., a power-time or current-time trajectory, and/or an operating curve on a data set or table such as that represented in FIG. **3**); 2) a fuse temperature model, including a first or second derivative of the temperature, and one or more temperature thresholds for scheduled and/or escalating response; 3) a measured battery voltage (e.g., current values may be higher as battery voltage lowers, and/or dynamic response of current may change causing changes for the wear threshold value, system failure value, and/or current event determination); 4) a first derivative of current, temperature, power demand, and/or an index parameter; 5) a second derivative of current, temperature, power demand, and/or an index parameter; 6) information from a battery management system (e.g., voltage, current, state of charge, state of health, rate of change of any of these, which parameters may affect current values, expected current values, and/or dynamic response of current values, causing changes for the wear threshold value, system failure value, and/or current event determination); 7) determination of and monitoring of contactor disconnect times, and accounting for the contactor disconnect time in determining the response to the current event; 8) utilizing ancillary system information and adjusting the response (e.g., a power request from operations that is expected to create an upcoming change, a supplemental restraint system active/deploying—open contactors (cut power); collision avoidance system active—keep contactors closed for maximum system control; and/or an anti-lock brake system and/or traction control system active—keep contactors closed for maximum system control). In certain embodiments, a degree of activation may also be considered, and/or system status may be communicated to the PDU—for example the system may report critical operation requiring power as long as possible, or shut-down operations requiring power to be cut as soon as possible, etc.

Referencing FIG. **22**, an example apparatus **600** to measure current through a fuse utilizing active current injection is schematically depicted. The apparatus **600** includes the controller **214** having a number of circuits configured to functionally execute operations of the controller **214**. The controller **214** includes an injection control circuit **602** that provides an injection command **604**, where the current source **220** is responsive to the injection command **604**. The controller **214** further includes an injection configuration circuit **606** that selects a frequency, amplitude, and/or waveform characteristic (injection characteristic **608**) for the injection command **604**. The controller **214** further includes a duty cycle description circuit **610** that determines a duty cycle **612** for a system including the controller **214**, where the duty cycle includes a description of currents and voltages experienced by the fuse. In certain embodiments, the duty cycle description circuit **612** further updates the duty cycle **612**, for example by observing the duty cycle over time, over a number of trips, over a number of operating hours, and/or over a number of miles traveled. In certain embodiments, the

duty cycle description circuit **612** provides the duty cycle as an aggregated duty cycle, such as a filtered duty cycle, averaged duty cycle, weighted average duty cycle, bucketed duty cycle with a quantitative description of a number of operating regions, or the like, and selects or mixes a calibration from a number of calibrations **614**, each calibration corresponding to a defined duty cycle.

An example procedure to determine fuse current throughput is described following. In certain embodiments, one or more aspects of the procedure may be performed by an apparatus **600**. The procedure includes an operation to inject a current having a selected frequency, amplitude, and/or waveform characteristic into the circuit through the fuse, and to estimate the fuse resistance (including dynamic resistance and/or impedance) in response to the measured injected AC voltages and the injected current. In certain embodiments, the selected frequency, amplitude, and/or waveform characteristic is selected to provide for an acceptable, improved, or optimized measurement of the fuse resistance. For example, the base power current through the fuse to support operations of the application have a certain amplitude and frequency characteristic (where frequency includes both the power frequency if AC, and the long term variability of the amplitude if AC or DC). The injected current may have a selected frequency and/or amplitude to allow for acceptable detection of the fuse resistance in view of the base power current characteristics, and also selected to avoid interference with the operations of the application. For example, if the base power current is high, a higher amplitude of the injection current may be indicated, both to support measurement of the injected AC voltage, and because the base power current will allow for a higher injected current without interfering with the operations of the system. In another example, a frequency may be selected that is faster than current variability due to operations, that does not impinge upon a resonant frequency or harmonic frequency of a component in the system, or the like.

An example procedure includes storing a number of calibration values corresponding to various duty cycles of the system (e.g., current-voltage trajectories experienced by the system, bucketed time windows of current-voltage values, etc.), determining the duty cycle of the system, and selecting a calibration value from the calibration values in response to the determined duty cycle. The calibration values correspond to the current injection settings for the current injection source, and/or to filter values for digital filters to measure the fuse voltage and/or fuse current values. In certain embodiments, the duty cycle can be tracked during operations, and updated in real-time or at shutdown. In certain embodiments, an aggregated duty cycle description is stored, which is updated by data as observed. An example aggregated duty cycle includes a moving average of the duty cycle observed (e.g., a duty cycle defined as a trip, power on to power off cycle, operating time period, and/or distance traveled), a filtered average of the duty cycle (e.g., with selected filter constants to provide the desired response to a change—for example to respond within one trip, five trips, 30 trips, one day, one week, one month, etc.). In certain embodiments, the duty cycle updates occur with a weighted average (e.g., longer trips, higher confidence determinations, and/or operator selections or inputs may be weighted more heavily in determining the duty cycle).

A response indicates the period until the system is acting substantially based upon the changed duty cycle information, for example where calibration A is for a first duty cycle and calibration B is for the changed duty cycle, the system may be deemed to have responded to the change when 60% of calibration B is utilized, 90% of calibration B is utilized, 96% of calibration B is utilized, and/or when the system has switched over to calibration B. The utilization of multiple calibrations may be continuous or discrete, and certain aspects of the calibrations individually may be continuous or discrete. For example, where calibration A is selected, a particular amplitude (or trajectory of amplitudes), frequency (or trajectory of frequencies), and/or waveform (or number of waveforms) may be utilized, and where calibration B is selected, a different set of amplitudes, frequencies, and/or waveforms may be utilized. Where a duty cycle is positioned between A and B, and/or where the duty cycle response is moving between A and B, the system can utilize mixtures of the A and B duty cycles, and/or switch between the A and B duty cycles. In a further example, the switching between the A and B duty cycles can occur in a mixed fashion—for example where the current response is at 80% of B, then calibration B may be utilized 80% of the time and calibration A may be utilized 20% of the time. In certain embodiments, the calibration may be switched abruptly at a certain threshold (e.g., at 70% response toward the new calibration), which may include hysteresis (e.g., switch to calibration B at 80% of the distance between calibration A and B, but switch back only when at 40% of the distance between calibration A and B). In certain embodiments, certain aspects (e.g., the amplitude) may move continuously between calibrations, where other aspects (e.g., the waveform) utilize only one calibration or the other. In certain embodiments, indicators of quality feedback may be utilized to adjust the calibration response (e.g., where, during movement toward calibration B, the indicated fuse resistance appears to be determined with greater certainty, the system moves the response toward calibration B more quickly than otherwise, which may include utilizing more of calibration B than indicated by the current aggregated duty cycle, and/or adjusting the aggregated duty cycle to reflect a greater confidence that the duty cycle is going to be maintained).

Example amplitude selections include both the peak amplitude of the injected current, the adjustment from the baseline (e.g., higher increase than decrease, or the reverse), and/or the shape of amplitude generation (e.g., which may be in addition to or incorporated within the waveform selection). Additionally or alternatively, the amplitude for a given calibration may be adjusted throughout a particular current injection event—for example to provide observations at a number of amplitudes within the current injection event. Example frequency selections include adjusting the frequency of the periods of the current injection events, and may further include testing at a number of discrete frequencies, sweeping the frequencies through one or more selected ranges, and combinations of these. Example waveform selections include waveform selections to induce desired responses, to be more robust to system noise (e.g., variability in the base current, inductance and/or capacitance of components in the system, or the like), to enhance the ability of the current injection detection to isolate the injected current from the load current, and/or may include utilization of multiple waveforms in a given calibration to provide a number of different tests. In certain embodiments, where multiple amplitudes, frequencies, and/or waveforms are utilized, the injected AC voltage (and corresponding fuse resistance) can be determined by averaging measured parameters, by using higher confidence measurements, and/or by eliminating outlying measurements from the injected AC voltage determination.

According to the present description, operations to provide a high confidence determination of a fuse resistance

value in a PDU **102** are described. In certain embodiments, the high confidence determination of the fuse resistance can be utilized to determine the fuse condition, to provide a high accuracy or high precision determination of current through the fuse and of power consumption by the system **100**, and/or to perform system diagnostics, fault management, circuit management, or the like.

Referencing FIG. **23**, an example apparatus **700** to determine a null offset voltage and/or diagnose a system component are schematically depicted. The example apparatus **700** includes a controller **214** having a fuse load circuit **702** that determines that no current is demanded for a fuse load **704**. The example apparatus **700** further includes a null offset voltage determination circuit **706** that determines a null offset voltage **708** in response to the fuse load **704** indicating that no current is demanded. The example apparatus **700** further includes a component diagnostic circuit **710** that determines whether a component is degraded, failed, and/or in a fault or off-nominal condition in response to the null offset voltage **708**, and determines fault information **716** in response to the determining whether a component is degraded, failed, and/or in a fault or off-nominal condition (e.g., fault counters, fault values, and/or component-specific information). Operations of the component diagnostic circuit **710** include comparing the null offset nominal voltage **708** to a null offset voltage threshold value **712**, and/or performing operations to determine which component is causing an off-nominal null offset voltage **708**. The example apparatus **700** further includes a null offset data management circuit **714** that stores the null offset voltage **708**, and/or any diagnostic or fault information **716** such as fault counters, fault values, and/or indications of which component is causing the off-nominal null offset voltage **708**. In certain embodiments, where contributions to the null offset voltage **708** are determined separately for certain components, an example null offset data management circuit **714** stores individual contributions of the null offset voltage **708** separately. In certain embodiments, the utilization of the null offset voltage **708** improves the accuracy of determining the fuse resistance from the injected current.

An example procedure to determine null offset voltage for a fuse current measurement system is described following. The example procedure may be performed by a system component such as an apparatus **700**. Null offset voltages occur in a controller **214** due to individual offsets of op-amps and other solid state components in the controller **214**, as well as due to part-to-part variations, temperature drift, and degradation of one or more components in the system over time. The presence of a null offset voltage limits the accuracy with which current measurement through a fuse is available, and can thereby limit the types of controls and diagnostics that can be performed in the system.

An example procedure includes an operation to determine that no current is demanded for a fuse load. Example operations to determine that no current is demanded for a fuse load include a recent key-on or key-off event for a vehicle (e.g., the vehicle is starting, powering down, is in an accessory position, and/or has not yet engaged power to the fuse of interest), observation of the fuse circuit, and/or by a status observation provided by another controller in the system (e.g., a powertrain controller is explicitly indicating that no power is being provided, is indicating a status inconsistent with power being provided, etc.). An example operation determines that no current is demanded for a fuse during a key-off event, and/or within a time period after a key-on event.

The example procedure further includes an operation to determine the null offset voltage in response to determining that no current is demanded for the fuse load, and an operation to store the null offset voltage. In certain embodiments, the stored null offset voltage is stored in non-volatile memory, for example to be utilized in a subsequent operation of the system. In certain embodiments, the null offset voltage is stored in a volatile memory and utilized for a current operation cycle. The stored null offset voltage may be replaced when a new value is determined for the null offset voltage, and/or updated in a scheduled manner (e.g., by averaging in or filtering in updated values, by holding new values for subsequent confirmation before being applied, etc.).

An example procedure further includes diagnosing a component of the system in response to the null offset voltage. For example, as the null offset voltage increases over time, a degradation of the controller **214** may be indicated, and a fault (visible or service available) may be provided to indicate that the controller **214** is operating off-nominally or failed. Additionally or alternatively, a contactor (e.g., the main contactor **216**) may be diagnosed in response to the null offset voltage. In certain embodiments, further operations such as engaging another contactor in-line with the diagnosed contactor may be utilized to confirm which component of the system is degraded or failed. In certain embodiments, the controller **214** may cut power to one or more components within the controller **214** to confirm that the controller **214** components are causing the offset voltage. In certain embodiments, the procedure includes determining the individual contributions of components to the offset voltage—for example by separating the controller **214** contribution and the contactor contribution. In response to the offset voltage being above a threshold value and/or confirming which component of the system is causing the off-nominal offset voltage, the controller **214** may increment a fault value, set a fault value, and/or set a service or diagnostic value. In certain embodiments, the null offset voltage and/or any fault values may be made available to the system, to a network, and/or communicated to another controller on the network.

According to the present description, operations to provide a nominal offset voltage for high confidence determination of a fuse current and a fuse resistance value in a PDU **102** are described. In certain embodiments, the high confidence determination of the fuse resistance can be utilized to determine the fuse condition, to provide a high accuracy or high precision determination of current through the fuse and of power consumption by the system **100**, and/or to perform system diagnostics, fault management, circuit management, or the like.

Referencing FIG. **24**, an example apparatus **800** to provide for digital filtering of a current measurement through a fuse circuit is depicted schematically. In certain embodiments, where current is injected through a fuse, the measurement of the base power current and the injected AC current through the fuse are de-coupled utilizing a low-pass filter (pulling out the base power signal) and a high-pass filter (pulling out the injected current signal). Previously known systems utilize an analog filter system—for example constructed of capacitors, resistors, and/or inductive devices, that provide the selected filtering of the signal and thereby provide the separated base power signal and injected current signal. However, analog filter systems suffer from a number of drawbacks. First, analog systems are not configurable, are only configurable to a discrete number of preconsidered options, and/or are expensive to implement.

Accordingly, a wide range of base power signals and injected AC current signals are not typically available for high accuracy determination of the fuse current with an analog filter system. Additionally, analog filter systems suffer from phase variance between the low-pass filter and the high-pass filter, and/or between the filtered output and the injected current signal. Accordingly, post-processing and/or acceptance of a less accurate signal are required, and accuracy is diminished on the measured current even with post-processing. Further, if the system has a component that has a base frequency or harmonic that interferes with the filter, the analog filter is not able to respond and will not provide reliable measurements. Because the frequency dynamics of the system can change over time, for example as components degrade, are service or replaced, and/or due to environmental or duty-cycle driven changes, even careful system design cannot fully resolve the inability of analog filters to respond to interference from frequency dynamics in the system. The example apparatus **800** includes a high-pass digital filter circuit **802** that determines the injected current value **804** for the fuse circuit by providing a high-pass filter operation on a measured fuse current **814**, and a low-pass digital filter circuit **806** that determines the base power current value **808** for the fuse circuit by providing a low-pass filter operation on the measured fuse current. The example apparatus **800** further includes a filter adjustment circuit **812** that interprets a duty cycle **612** and/or an injection characteristic **608**, and adjusts the filtering for the high-pass digital filter circuit **802** and/or the injection characteristic **608**—for example by providing filter adjustments **816** such as providing distinct cutoff frequencies to ensure separation of the signals, to raise or lower cutoff frequencies to ensure a descriptive energy portion of the signal is captured, and/or to manipulate the filters to avoid a frequency or a harmonic in the system. While the example embodiment of FIG. **24** utilizes a digital filter, in certain embodiments the available controller processing resources and/or time response of digital filtering may lead certain systems to utilize analog filters and/or a combination of analog filters with digital filters.

An example procedure includes an operation to provide digital filters in a PDU **102** to determine base power and injected current values from a measured current value through the fuse. The example procedure further includes an operation to determine the base power by performing a low-pass filter operation on the measured current value, and to determine the injected current value by performing a high-pass filter operation on the measured current value. The example procedure further includes an operation to adjust parameters of the low-pass filter and/or the high-pass filter in response to a duty cycle of the system including the PDU **102** (including, for example, power, voltage, and/or current values passing through the fuse), and/or in response to an injection characteristic of the injected current through the fuse. The example procedure includes adjusting the parameters to improve the separation of the base power and/or injected current values, to improve the accuracy of determining the injected current amount, to adjust to a frequency and/or a harmonic of a component in the system in electrical communication with the fuse, and/or to respond to a system or environmental noise affecting one or both of the high-pass and low-pass filters.

According to the present description, operations to implement digital filters for de-convoluting a voltage characteristic and current measurement through a fuse are provided. The digital filtering allows for the system to provide a high confidence determination of a fuse current and a fuse resistance value in a PDU **102**. In certain embodiments, the high confidence determination of the fuse resistance can be utilized to determine the fuse condition, to provide a high accuracy or high precision determination of current through the fuse and of power consumption by the system **100**, and/or to perform system diagnostics, fault management, circuit management, or the like.

Fuses for highly transient load applications and/or high duty cycle variability applications, such as but not limited to electrical systems for mobile applications and vehicles experience a number of challenges. Load variation can change considerably throughout operations, including experiencing both high positive and high negative current operations, and often in a short period of time (e.g., acceleration and regenerative braking cycles in stop-and-go traffic; high load operation going up a hill followed by significant regeneration down the other side, etc.). Additionally, current transients and reversals can result in significant inrush currents that are experienced by the fuse. Fuses are designed to fail at a protective current value, which is intended to correspond to a fuse temperature value. Because they are designed to fail at a relatively close value to the maximum current demands, they are consequently one of the most delicate physical parts in the system—both electrically and physically. Sub-critical current values and current transient values can cause the fuse to suffer thermal and mechanical stresses, both from temperatures experienced and temperature transients. Fuses subject to significant sub-critical cycling can fail—either by melting even though the designed failure current has not been exceeded, or by breaking due to mechanical stress. Mobile applications, as discussed throughout the present disclosure, are subject to particularly high costs and risks when a mission critical component such as a fuse fails (e.g., the vehicle generally does not have motive power available if a main power fuse fails). Additionally, mobile applications are subject to high transient loads through the motive power system.

Referencing FIG. **25**, an example fuse circuit **2100** is depicted, which may be present on a PDU **102**. The example fuse circuit **2100** may be associated with a main fuse, an auxiliary fuse, and/or a group of fuses or a subset of a group of fuses. The fuse circuit **2100** includes a contactor (C**1**) in parallel with the fuse (F**1**). During normal operations the contactor is open, and the current in the fuse circuit **2100** passes through the fuse. In certain embodiments, the contactor may include physical components (e.g., a solenoid and/or coil-based switch or relay), and/or the contactor may be a solid state relay. In certain embodiments, the contactor may be normally-open (e.g., power applied closes the contactor) or normally-closed (e.g., power applied opens the contactor). The example fuse circuit **2100** allows for the contactor to selectively bypass the fuse circuit, for example in accordance with operations of an apparatus **1900** (reference FIG. **20** and the corresponding disclosure).

Referencing FIG. **26**, another embodiment of a fuse circuit **2200** is disclosed, with a contactor (C**1**) in series with a second fuse (F**2**), and the C**1**-F**2** branch in parallel with a first fuse F**1**. The fuse circuit **2200** provides for additional flexibility and a number of additional features for operations of an apparatus **1900**. For example, normal operation may be performed with the contactor closed, dividing current between F**1** and F**2** (in the resistance ratios of the two fuses). An example includes a fuse F**2** with a low current threshold value, set such that the divided current would fail fuse F**2** if the system design current is exceeded by a designed amount (e.g., between 135% and 300% of system design current—although any value is contemplated herein). The fuse F**1**

may be set at a very high value, allowing for the opening of the contactor to briefly increase the fusing capacity of the circuit but still be fused. Additionally or alternatively, fuse F**2** may be a relatively cheap and/or accessible fuse, and being at a lower current threshold F**2** is likely to suffer greater mechanical and thermal fatigue, and act as the failure point for the fuse circuit **2200**, which may greatly extend the life of the fuse F**1** which may be more expensive and/or less accessible. Additionally or alternatively, normal operation may be performed with the contactor open, with fuse F**1** defining the ordinary fusing of the circuit. When a high transient or other current event occurs, the contactor is closed, and the branch C**1**-F**2** shares the current load, keeping the fuse F**1** within normal or lower wear operating conditions. In certain embodiments, fuses F**1** and F**2** may be similarly sized—for example to allow fuse F**2** to operate as a backup fuse and to keep similar failure conditions in place for F**1** and F**2**. Alternatively, fuse F**2** may be smaller than fuse F**1**, allowing for alternate operations as described, the intermittent use of the C**1**-F**2** circuit to take up some current to protect fuse F**1**, and/or to provide back-up fusing for F**1**—which may be at a reduced power limit for the system if the fuse F**2** is smaller (e.g., as a de-rated mode of operation, and/or a limp-home mode of operation). Alternatively, fuse F**2** may be larger than fuse F**1**, for example to allow fuse F**2** to manage very high transient current conditions where it is desired that operation still continues. The utilization of a fuse circuit **2200** allows for a high degree of control of the fusing system, to be protective of the power system during nominal operation and still provide a high degree of capability during failure modes, for off-nominal operation, and/or during transient operation. In certain embodiments, a resistor may be provided on the C**1**-F**2** branch, for example to control the current sharing load between F**1** and F**2** when the contactor C**1** is closed.

Referencing FIG. **27**, a fuse circuit **2300** includes a plurality of fuses F**1**, F**2**, F**3**, F**4** depicted in parallel, with a corresponding contactor in series with each. An example fuse circuit **2300** is for auxiliary fuses, although fuse circuit **2300** can be any fuse, including a main fuse. The example fuse circuit **2300** allows for either the removal of fuses from operation—for example where one of the fuses is experiencing a transient event—or for the addition of fuses, such as when a high transient event occurs to share the current load. In certain embodiments, one or more of the fuses in the fuse circuit **2300** does not have an associated contactor, and is a primary load bearing fuse for the fuse circuit **2300**. The relative sizing of the fuses in the fuse circuit **2300** may be according to any selected values, and will depend upon the purpose of the fuse circuit **2300** (e.g., to provide a limp-home feature, to provide additional capacity, to act as a back-up, and/or to allow for the cut-off of individual fuses in the system). Additionally or alternatively, any one or more of the fuses in fuse circuit **2300** may be positioned serially with a resistor, for example to control current load balancing. In certain embodiments, the fuses F**1**, F**2**, F**3**, F**4** are not in parallel, and/or one or more of the fuses is not in parallel. Accordingly, the opening of a contactor for such a fuse will not shunt current to another one of the fuses. An example embodiment includes the contactors for fuses individually to allow for shutting down of certain system capability (e.g., due to a failure, high transient, or the like) without shutting down all system capability (e.g., a fuse supporting braking may remain active even in a high transient event, while an accessory fuse for non-critical systems may be cut off to protect the fuse and/or the system).

Referencing FIG. **28**, a fuse circuit **2400** is depicted, similar to fuse circuit **2300**, except that each fuse has a contactor in parallel, allowing for the shorting of the particular fuse while keeping current flowing on that fuse's path. In certain embodiments, the parallel path for each fuse may include an additional fuse and/or a resistor, such that when the fuses are connected in parallel, the load across each fuse circuit remains at least partially balanced. The embodiments of FIGS. **25** to **28** may be referenced as current protection circuits, and embodiments such as those depicted in FIGS. **25** to **28**, and/or as described, allow for selectable configuration of the current protection circuit. Selectable configuration of the current protection circuit may include run-time operations (e.g., reconfiguring the current protection circuit in response to events or operating conditions) and/or design-time operations (e.g., allowing a same hardware device to support multiple power ratings, electrical connection configurations, and/or service event or upgrade changes).

Referencing FIG. **29**, illustrative data **2500** showing a fuse response to a drive cycle for a vehicle is depicted. In the example, fuse current (e.g., the dashed line lower curve at times of 12 and 25 units) and fuse temperature (e.g., the solid line upper curve at times of 12 and 25 units) are depicted. It will be understood that another parameter describing the fuse performance and/or limits may be utilized, including at least any values described in the portion referencing FIG. **21**. The operations of the drive cycle exhibit high transients where, in the example, the fuse temperature is expected to exceed the "fuse temperature avoidance limit"—for example, a temperature or temperature transient at which the fuse experiences mechanical stress. An apparatus **1900** may consider a number of thresholds for the fuse—for example a light wear threshold, a heavy wear threshold, and a potential failure threshold, which may be set at distinct values of the fuser performance indicator being utilized (e.g., temperature). In certain embodiments, more than one type of threshold value may be utilized—for example a threshold or set of thresholds for temperature, a second threshold or set of thresholds for temperature change with time (e.g., dT/dt), etc. In the example, an apparatus **1900** may take mitigating action at the transient points, for example bypassing the corresponding fuse briefly to avoid the transient and/or control the rate of transient experienced by the fuse.

Referencing FIG. **30**, an example system **2600** include the power source **104** and load **106**, with a fuse (F**1**) electrically disposed between the load **106** and the source **104**. An operator provides a power request (accelerator pedal input), and an apparatus **1900** determines that the load request will exceed a threshold for the fuse (e.g., according to the current demand above temperature limit, or some other determination) but may further determine that the transient event will not otherwise exceed system operating condition limits. In the example, apparatus **1900** commands the contactor (C**3**) to close for a period of time before or during the transient to protect the fuse. The system **2600** depicts the high-side (C**1**) and low-side (C**3**) high voltage contactors (e.g., **216**, **218** from system **100**), which are distinct from the fuse bypass contactor C**3**.

Referencing FIG. **21**, illustrative data **2000** for implementing a system response value **1910** is depicted. The illustrative data **2000** includes a threshold value **2002**—for example a current, temperature, index parameter, or other value at which fuse wear and/or failure is expected to occur, and utilized as a threshold by the current event determination circuit **1902**—at least under certain operating conditions

at a point in time for the system. It is understood that the current event determination circuit **1902** may utilize multiple thresholds, and/or dynamic thresholds, as described throughout the present disclosure. The curve **2004** represents the nominal system performance, for example the current, temperature, index parameter, or the like that will be experienced by the fuse in the absence of operations of the apparatus **1900**. In the example, the response determination circuit **1906** determines that the threshold value **2002** will be crossed, and accounts for a contactor connection/disconnection time **2008** (e.g., to bypass the fuse, engage a second fuse branch, and/or close off a more vulnerable fuse branch), commanding the contactor to connect or disconnect in time to avoid crossing the threshold value **2002**. Additionally or alternatively, the response determination circuit **1906** may nevertheless allow the threshold value **2002** to be crossed, for example according to any operations or determinations described throughout the present disclosure—for example when a more critical system parameter requires the fuse to remain connected, and the fuse is allowed to experience the wear and/or failure event.

In certain embodiments, the operation to determine that the current event is exceeding the wear threshold value and/or the fuse failure value is based upon a calculation such as: 1) determining the current through the fuse exceeds a threshold value (e.g., an amp value); 2) determining a rate of change of the current through the fuse exceeds a threshold value (e.g., an amp/second value); 3) determining that an index parameter exceeds a threshold value (e.g., the index including accumulated amp-seconds; amp/sec-seconds; a counting index for periods above a threshold value or more than one threshold value; a counting index weighted by the instantaneous current value; an integrated current, heat transfer, and/or power value; and/or counting down or resetting these based on current operating conditions).

In certain embodiments, the operation to determine that the current event is exceeding the wear threshold value and/or the fuse failure value includes or is adjusted based upon one or more of: 1) a trip curve (e.g., a power-time or current-time trajectory, and/or an operating curve on a data set or table such as that represented in FIG. **3**); 2) a fuse temperature model, including a first or second derivative of the temperature, and one or more temperature thresholds for scheduled and/or escalating response; 3) a measured battery voltage (e.g., current values may be higher as battery voltage lowers, and/or dynamic response of current may change causing changes for the wear threshold value, system failure value, and/or current event determination); 4) first derivative of current, temperature, power demand, and/or an index parameter; 5) second derivative of current, temperature, power demand, and/or an index parameter; 6) information from a battery management system (e.g., voltage, current, state of charge, state of health, rate of change of any of these, which parameters may affect current values, expected current values, and/or dynamic response of current values, causing changes for the wear threshold value, fuse failure value, and/or current event determination); 7) determination of and monitoring of contactor connection or disconnection times, and accounting for the contactor connection or disconnection time in determining the response to the current event; 8) utilizing ancillary system information and adjusting the response (e.g., collision avoidance system active—allow the fuse to fail, and/or bypass the fuse allowing potential damage to the system, to keep power flowing; anti-lock brake system and/or traction control system active—keep power flowing for maximum system control (degree of activation may also be considered, and/or system status communicated to the PDU—for example the system may report critical operation requiring power as long as possible, or shut-down operations requiring power to be cut as soon as possible, etc.)).

Referencing FIG. **20**, an example apparatus **1900** to reduce or prevent fuse damage and/or a fuse failure is depicted. The example apparatus **1900** includes a current event determination circuit **1902**, which may determine that current event **1904** indicates that a fuse threshold value (wear, failure, fatigue, or other threshold value) is exceeded or is predicted to be exceeded. The current event **1904** may be a current, temperature, or any other parameter described, for example, in relation to FIGS. **21**, **29**, and **30**. The example apparatus **1900** further includes a response determination circuit **1906** that determines a system response value **1910**—for example opening or closing one or more contactors in a fuse circuit (e.g., **2100**, **2200**, **2300**, **2400**, or any other fuse circuit or current protection circuit). The apparatus **1900** further includes a response implementation circuit **1908** that provides network communications **1912** and/or actuator commands **1914** in response to the system response value **1910**. For example, the system response value **1910** may determine to close one or more contactors, and the actuator commands **1914** provides commands to the selected contactors which are responsive to the actuator commands **1914**.

In certain embodiments, operations to bypass and/or engage one or more fuses are performed in coordination with a vehicle battery management system and/or an accelerator pedal input (or other load request indicator)—for example to time inrush currents that would be experienced on the fuses, to provide an indication to the battery management system or other vehicle power systems that momentary un-fused operation is going to occur, and/or that a higher fuse limit will be briefly applicable. In certain embodiments, during un-fused operation and/or higher fuse limit operation, the apparatus **1900** may operate a virtual fuse—for example if the experienced current is higher than predicted (e.g., it was predicted to exceed a fuse wear limit but be less than a system failure limit, but in fact appears that a system failure limit will be exceeded), the apparatus **1900** may operate to open a main high voltage contactor, re-engage the fuse, or make another system adjustment to protect the system in the absence of ordinarily available fusing operations.

Referencing FIG. **31**, an example apparatus **900** to determine an offset voltage to adjust a fuse current determination are schematically depicted. The example apparatus **900** includes a controller **214** having a fuse load circuit **702** that determines that no current is demanded for a fuse load **704**, and further determines that contactors associated with the fuse are open. The example apparatus **900** further includes an offset voltage(s) determination circuit **905** that determines offset voltages **906** for components in the fuse circuit observed during the no current demanded portion of the operating cycle. In certain embodiments, the contactors remain open while pre-charge capacitors are still charging after a key-on cycle, whereupon the fuse load circuit **702** determines that no current is demanded for the fuse load **704**. In certain embodiments, the contactors are opened during an operation of the system, and an example fuse load circuit **702** determines that no current is demanded for a fuse load **704**, including potentially waiting for observed voltages to settle before determining that no current is demanded for the fuse load **704**.

The example apparatus **900** further includes an offset data management circuit **914** that stores the offset voltages **906**,

and communicates current calculation offset voltages **904** for use in the system to determine current flow through the one or more fuses in the system. The current calculation offset voltages **904** may be the offset voltages **906** for the applicable components, and/or may be processed or conditioned values determined from the offset voltages **906**.

An example procedure to determine an offset voltage for a fuse current measurement system is described following. The example procedure may be performed by a system component such as an apparatus **900**. Offset voltages occur in a controller **214** due to individual offsets of op-amps and other solid state components in the controller **214**, as well as due to part-to-part variations, temperature drift, and degradation of one or more components in the system over time. The presence of an offset voltage limits the accuracy with which current measurement through a fuse is available, and can thereby limit the types of controls and diagnostics that can be performed in the system.

An example procedure includes an operation to determine that no current is demanded for a fuse load. Example operations to determine that no current is demanded for a fuse load include a recent key-on or key-off event for a vehicle (e.g., the vehicle is starting, powering down, is in an accessory position, and/or has not yet engaged power to the fuse of interest), observation of the fuse circuit, and/or by a status observation provided by another controller in the system (e.g., a powertrain controller is explicitly indicating that no power is being provided, is indicating a status inconsistent with power being provided, etc.). An example operation determines that no current is demanded for a fuse during a key-off event, and/or within a time period after a key-on event.

The example procedure further includes an operation to determine the offset voltage in response to determining that no current is demanded for the fuse load, and an operation to store the offset voltage. In certain embodiments, the stored offset voltage is stored in non-volatile memory, for example to be utilized in a subsequent operation of the system. In certain embodiments, the offset voltage is stored in a volatile memory and utilized for a current operation cycle. The stored offset voltage may be replaced when a new value is determined for the offset voltage, and/or updated in a scheduled manner (e.g., by averaging in or filtering in updated values, by holding new values for subsequent confirmation before being applied, etc.).

According to the present description, operations to provide an offset voltage for components in the fuse circuit, for high confidence determination of a fuse current and a fuse resistance value in a PDU **102** are described. In certain embodiments, the high confidence determination of the fuse resistance can be utilized to determine the fuse condition, to provide a high accuracy or high precision determination of current through the fuse and of power consumption by the system **100**, and/or to perform system diagnostics, fault management, circuit management, or the like.

Referencing FIG. **32**, an example apparatus **1000** to provide unique current waveforms to improve fuse resistance measurement for a PDU **102** is schematically depicted. The example apparatus **1000** includes a fuse load circuit **702** that determines that no current is demanded for a fuse load **704**, and further determines that contactors associated with the fuse are open. The example apparatus **1000** further includes an injection configuration circuit **606** that determines injection characteristics **608**, including frequency, amplitude, and waveform characteristics for test injection currents through one or more fuses to be tested. The example apparatus **1000** further includes an injection control circuit **602** that injects current through the fuses according to the injection characteristics **608**, and a fuse characterization circuit **1002** that determines one or more fuse resistance(s) **1004** in response to the measured values **1006** during the test. An example injection control circuit **602** waits for the determination of voltage offset values while the fuse load **704** is still zero, and the fuse characterization circuit **1002** further utilized the voltage offset values in determining the fuse resistance(s) **1004** for the fuses. In certain embodiments, the injection configuration circuit **606** determines injection characteristics **608** in response to the characteristics of the system (e.g., the inherent capacitance and/or inductance of the system, the size of the fuse, the current ranges of the system during operation, and/or the resistance range and/or desired precision to support operations determinations utilizing the fuse resistance value). In certain embodiments, a high accuracy of the fuse resistance supports diagnostics, fuse protection control, and/or high accuracy on battery state of charge determinations.

In certain embodiments, the fuse characterization circuit **1002** determines the fuse resistance(s) **1004** for a given response based upon a number of current injection events, each of which may have a distinct one or more of an amplitude, frequency, and/or waveform. Additionally or alternatively, frequency sweeping, amplitude sweeping, and/or waveform shape management may be manipulated between injection events and/or within a given injection event. The fuse characterization circuit **1002** determines the fuse resistance **1004** by determining, for example, an averaged resistance value determined over the course of the tests. In certain embodiments, the fuse characterization circuit **1002** utilizes only a portion of each test window—for example to allow circuit settling time after an injection characteristic **608** switch, to allow for the injection provision circuit (e.g., a solid state op-amp, PWM, relay, or the like, which is configured to provide a selected current through the fuse circuit) to settle after switching the injection characteristic **608**, to utilize a selected amount of data from each of the tests (e.g., for weighting purposes), and the like. In certain embodiments, the fuse characterization circuit **1002** may exclude outlying data (e.g., two of the tests agree, but a third test provides a far different value), and/or data which appears to indicate a rapid change which may appear to not be valid data. In certain embodiments, filtering, moving averages, rolling buffers, counters for delay in switching values (e.g., to confirm that a new value appears to be a real change) and the like are applied by the fuse characterization circuit **1002** to the fuse resistance **1004** to smooth changing values of the fuse resistance **1004** over time and/or to confirm that new information is repeatable. In certain embodiments, each period or a group of periods of a given injection waveform may be treated as a separate data point for resistance determinations. In certain embodiments, for example where the amplitude is swept for a given waveform, and/or where the frequency is swept for a given waveform, the resistance contribution for a given period may also be weighted (e.g., higher amplitudes and/or lower frequencies provide for a lower designed area under the current-time curve—see, e.g. FIG. **35**—which may provide a higher quantity of information about the resistance relative to a lower amplitude and/or higher frequency period of the same waveform). Additionally or alternatively, measurement confidence may be dependent upon the frequency and/or amplitude of the current injection, and accordingly resistance determinations for those injection events may be weighted accordingly (e.g., given lower weight with lower confidence, and higher weight with higher confidence). Additionally or

alternatively, conformance of the current injection source may be dependent upon the frequency, amplitude, and/or waveform of the current injection, and accordingly resistance determinations for those injection events may be weighted accordingly, and/or adjusted by feedback on the injector outlet about what frequency, amplitude, and/or waveform was actually provided relative to what was commanded.

In certain embodiments, the resistance determinations made by the fuse characterization circuit **1002**, including how the resistance is determined and the average indicated by a given test, depend upon the waveform and other parameters. For example, if a sine wave waveform is utilized, resistance may be determined from the area under the voltage and current curves, from an rms determination (for current and/or voltage), and/or from high resolution time slices within the voltage determinations utilizing the injected current characterization. Other waveforms will utilize similar techniques for determining the resistance. If the circuit exhibits significant impedance (e.g. from latent capacitance and/or inductance, and/or from components in communication with the circuit that exhibit impedance), the impedance can be calculated by varying the frequency and determining the common impedance effects between the tests. The availability of multiple tests utilizing varying amplitudes, waveforms, and/or frequency values ensures that high accuracy can be determined even for circuits with complex effects or that exhibit changes due to age, degradation, or component servicing or replacing. Further, adjusting the frequency throughout the tests, and/or sweeping the frequency for a given amplitude or waveform can assist in de-coupling the phase-shifted aspects of impedance (e.g., capacitance effects versus inductance effects) to more confidently determine a resistance for the fuse. Typically for a fuse circuit having a closely coupled current source, impedance will be minimal. The desired degree of accuracy for the resistance measurement, which may depend upon the diagnostics, battery state of charge algorithms, and/or fuse protection algorithms in use on the system, may also affect whether impedance must be accounted for, and accordingly the selection of injection characteristics **608** utilized.

It can be seen that the use of multiple injection characteristics **608** during a test leverages comparisons between the tests to de-couple system characteristics from the resistance determination, provides for a range of system excitement parameters to ensure that system characteristics do not dominate a single test, and overall increase the amount of information available for a test to develop statistical confidence in the determined resistance value. Also, manipulation of injection characteristics **608** allows for better averaging—for example to prepare waveforms with high confidence that the resistance calculation is correct such as utilizing frequency values that avoid resonant or harmonic frequencies in the system, provide a large area under the current-time (or voltage-time) curve, and/or provide for a stabilized system during the test to ensure that measurement is correct.

Additionally or alternatively, the fuse characterization circuit **1002** adjusts digital filter values before the test, between changes in injection characteristics **608** for the test, and/or dynamically during the test (e.g., where a frequency sweep, amplitude sweep, and/or waveform change is utilized during a given injection event). In certain embodiments, the measurement of the voltage out of the filter circuit utilizes a high-pass filter to determine the injection voltage (and/or current), and the filter characteristics can be manipulated in real time to provide for an appropriate filter, such as cutoff frequencies. The utilization of digital filters for measurement can also eliminate phase lags between different filter types—such as a low pass filter and a high-pass filter (e.g., where the low pass filter determines base power current during operation, and/or confirms that base power current remains zero or negligible during the test).

Referencing FIG. **35**, an illustrative injection characteristic **608** is depicted for an example test. The injection characteristic **608** includes a first injection portion having an amplitude of 10 current units (e.g., amps—but any current units are contemplated herein), a sinusoidal waveform, and a period of approximately 150 time units (e.g., execution cycles of the controller **214**, milliseconds, seconds, or any other parameter). The units and values depicted in FIG. **35** are non-limiting examples, and are used to illustrate that sequential changes in the injection characteristic **608** can be applied. The injection characteristic **608** includes a second injection portion having an amplitude of 15 current units, a sawtooth waveform, and a period of approximately 250 time units. The injection characteristic **608** further includes a third injection portion having an amplitude of 5 current units, a near square waveform (a slightly trapezoidal waveform is depicted), and a period of approximately 80 time units. The embodiment depicted in FIG. **35** is non-limiting, and other features may be added to the test, including more or less than three distinct waveforms, gaps between waveforms, and adjustments within a waveform (including sweeping, stepping, or otherwise adjusting frequency or amplitude, and/or adjusting the waveform itself). The example of FIG. **35** shows a trajectory reversal between the first and second injection characteristic (e.g., decreasing sine wave to increasing sawtooth wave) and a continuation of the trajectory between the second and third injection characteristic (e.g., decreasing sawtooth wave to an increasing square wave), although any possibilities, including step changes of the current and the like, are contemplated herein.

Referencing FIG. **33**, an example procedure **1100** to provide unique current waveforms to improve fuse resistance measurement for a PDU **102** is schematically depicted. The procedure **1100** includes an operation **1102** to confirm that the contactors are open (and/or to confirm that the fuse load is zero or intended to be zero), and an operation **1104** to perform a null voltage offset determination—for example to determine offset voltage of op-amps and other components of the controller **214** and/or in the system **100** electrically coupled to the fuse circuit. An example operation **1102** is commenced during a key-on or system startup event with the contactors open, although any operating condition meeting the criteria for operation **1102** may be utilized. The procedure **1100** further includes an operation **1106** to conduct a number of injection sequences—for example three sequences each having a distinct frequency, amplitude, and waveform. The operation **1106** may include more than three sequences, and one or more of the sequences may share a frequency, an amplitude, and/or a waveform. The operation **1106** may be configured to perform as many sequences as desired, and may be carried over multiple tests (e.g., where a test is interrupted by operations of the system or exceeds a desired time, the test may be continued on a later sequence initiated by operation **1102**). The procedure **1100** further includes an operation **1108** to determine fuse resistance values for one or more of the fuses in the system. The procedure **1100** may be operated on individual fuses where hardware in the system is configured to support that, including across subsets of the fuses or the like.

Referencing FIG. **34**, an example procedure **1106** to conduct a number of injection sequences is depicted. The example procedure **1106** includes an operation **1202** to

adjust injection characteristics for a current injection source associated with the fuse(s) to be tested, and an operation **1204** to adjust filtering characteristics for one or more digital filters associated with measuring voltage and/or current values on the filtering circuit. The procedure **1106** further includes an operation **1206** to perform the injection sequence in response to the injection characteristic, and an operation **1208** to perform the filtering (e.g., thereby measuring the current and/or voltage on the fuse circuit in response to the injection events). The procedure **1106** further includes an operation **1210** to determine if the current injection sequence is completed, returning to continue the injection event at operation **1206** until the sequence is complete (at operation **1210** determining YES). For example, referencing FIG. **35**, at time step **200** the operation **1210** would determine NO, as the sine wave portion of the test is still being performed. If the operation **1210** determines YES (e.g., in FIG. **35**, where the sine wave portion transitions to the sawtooth portion), the procedure **1106** includes an operation **1212** to determine whether another injection sequence is desired, and returns to operation **1202** to adjust the injection sequence in response to operation **1212** determining YES (e.g., in FIG. **9**, where the sine wave portion is completed and the sawtooth portion commences). In response to the operation **1212** determining NO (e.g., where the square wave portion is completed, and no further sequences are scheduled in the test), the procedure **1106** completes—for example returning to operation **1108** to determine the fuse resistance value from the test.

According to the present description, operations to provide varying waveforms for current injection, thereby enhancing determination of the fuse resistance value in a PDU **102** are described. In certain embodiments, the high confidence determination of the fuse resistance can be utilized to determine the fuse condition, to provide a high accuracy or high precision determination of current through the fuse and of power consumption by the system **100**, and/or to perform system diagnostics, fault management, circuit management, or the like.

Referencing FIG. **36**, an example system includes a vehicle **3602** having a motive electrical power path **3604**; and a power distribution unit **3606** having a current protection circuit **3608** disposed in the motive electrical power path **3604**. The example current protection circuit **3608** includes a first leg **3610** of the current protection circuit **3608** including a pyro-fuse **3620** (e.g., a controllable activated fuse that can be commanded to activate and open the first leg of the current protection circuit; a second leg **3612** of the current protection circuit **3608** including a thermal fuse **3622**; and where the first leg **3610** and the second leg **3612** are coupled in a parallel arrangement (e.g., in a similar manner to the depiction of any one of FIGS. **26** to **28**). The example system includes a controller **3614** having a current detection circuit **3616** structured to determine a current flow through the motive electrical power path **3604**, and a pyro-fuse activation circuit **3618** structured to provide a pyro-fuse activation command in response to the current flow exceeding a threshold current flow value. The pyro-fuse **3620** is responsive to the pyro-fuse activation command, for example to activate and open the second leg **3612** upon command. Upon activation of the pyro-fuse **3620**, the second leg **3612** is opened, providing for normal fused operation on the first leg **3610** (e.g., thermal failure of the thermal fuse **3622** thereby opens the motive electrical power path **3604**), and/or opening the motive electrical power path **3604** directly when a contactor **3626** in series with the thermal fuse **3622** is already opened.

Certain further aspects of an example system are described following, any one or more of which may be present in certain embodiments. An example system includes where a first resistance through the first leg **3610** and a second resistance through the second leg **3612** are configured such that a resulting current through the second leg **3612** after the pyro-fuse **3620** activates is sufficient to activate the thermal fuse **3622**. For example, a high current event may be experienced such that, if the second leg **3612** were not drawing a portion of the high current event, the thermal fuse **3622** would be activated. In the example, the opening of the second leg **3612** will cause the current in the first leg **3610** to increase and activate the thermal fuse **3622**. An example includes a resistor **3624** coupled in a series arrangement with the thermal fuse **3622**, such that a resulting current through the second leg **3612** after the pyro-fuse **3620** activates is below a second threshold current flow value. For example, an undersized thermal fuse **3622** may be utilized in the system, with the operating current through the second leg **3612** reduced by the resistor **3624**. When the pyro-fuse **3620** opens, the current through the second leg **3612** is increased, but still reduced by the resistor **3624** to prevent high current transients in the motive electrical power path **3604**, and still allowing sufficient current through the second leg **3612** to activate the thermal fuse **3622**.

An example system includes a contactor coupled **3626** in a series arrangement with the thermal fuse **3622**, the controller further including a contactor activation circuit **3628** structured to provide a contactor open command in response to at least one of the pyro-fuse activation command or the current flow exceeding the threshold current flow value. In certain embodiments, the contactor **3626** coupled in the series arrangement with the thermal fuse **3622** allows for control of the current through the second leg **3612**, including opening the second leg **3612** to open the motive electrical power path **3604** in combination with activation of the pyro-fuse **3620**. The resistor **3624** may additionally be utilized with the contactor **3626**, for example reducing the current through the second leg **3612** when the pyro-fuse **3620** activates (e.g., where contactor **3626** dynamics may be slower than the pyro-fuse **3620** dynamics). An example includes a resistor **3624** coupled in a series arrangement with the pyro-fuse **3620**, such that a resulting current through the first leg **3610** after the thermal fuse **3622** activates is below a second threshold current flow value—for example to reduce the current through the motive electrical power path **3604** if the thermal fuse **3622** activates when the pyro-fuse **3620** has not already activated (e.g., an unmeasured current spike, and/or a current spike occurring after a controller has failed and is unable to command the pyro-fuse **3620** to open). An example system includes a second thermal fuse (not shown) coupled in a series arrangement with the pyro-fuse **3620**, such that a resulting current through the first leg **3610** after the thermal fuse **3622** activates is sufficient to activate the second thermal fuse. For example, the use of a second thermal fuse provides for all branches of the motive electrical power path **3604** to have fuses with physical responses present, avoiding failures due to loss of ability to detect currents in the system or to command a pyro-fuse **3620** to activate. In the example, the sizing of the thermal fuse **3622** and the second thermal fuse can be made to avoid thermal wear during normal operations, but sufficient such that either thermal fuse **3622** will readily protect the system when the other leg (the first leg **3610** or second leg **3612**) is opened during high current events. It can be seen that embodiments of the system depicted in FIG. **36** provide for both the high controllability of a pyro-fuse **3620** to discon-

nect the power, along with the robust protection of a thermal fuse that will physically respond to high current values regardless of failures in current sensing or controller operation, as may occur during a system failure, vehicle accident, etc. Additionally, the utilization of the two legs **3610**, **3612**, including potentially current management therethrough with resistor(s) **3624** and/or contactor(s) **3626**, allows for the utilization of fuses that can be sized to avoid thermal wear and/or nuisance failures over the life of the vehicle, while still providing for reliable power disconnection for high current events.

Referencing FIG. **37**, an example procedure includes an operation **3702** to determine a current flow through a motive electrical power path of a vehicle; an operation **3704** to direct the current flow through a current protection circuit having a parallel arrangement, with a pyro-fuse on a first leg of the current protection circuit and a thermal fuse on a second leg of the current protection circuit; and an operation **3706** to provide a pyro-fuse activation command in response to the current flow exceeding a threshold current flow value.

Certain further aspects of an example procedure are described following, any one or more of which may be present in certain embodiments. An example procedure further includes an operation to configure a first resistance through the first leg and a second resistance through the second leg such that a resulting current through the second leg after the pyro-fuse activates is sufficient to activate the thermal fuse. An example procedure includes an operation to configure a second resistance through the second leg such that a resulting current through the second leg after the pyro-fuse activates is below a second threshold current flow value. An example procedure includes an operation to a contactor coupled in a series arrangement with the thermal fuse, the procedure further including providing a contactor open command in response to at least one of providing the pyro-fuse activation command or the current flow exceeding the threshold current flow value; and/or an operation to configure a second resistance through the second leg such that a resulting current through the second leg after the pyro-fuse activates is below a second threshold current flow value. An example procedure further including a resistor coupled in a series arrangement with the pyro-fuse such that a resulting current through the first leg after the thermal fuse activates is below a second threshold current flow value; and/or further including a second thermal fuse coupled in a series arrangement with the pyro-fuse, such that a resulting current through the first leg after the thermal fuse activates is sufficient to activate the second thermal fuse.

Referencing FIG. **38**, an example system includes a vehicle **3802** having a motive electrical power path **3804**; a power distribution unit **3806** having a current protection circuit **3808** disposed in the motive electrical power path **3804**, where the current protection circuit includes a first leg **3810** of the including a thermal fuse **3820** and a second leg **3812** including a contactor **3822**. The first leg **3810** and the second leg **3812** are coupled in a parallel arrangement. The system includes a controller **3614** having a current detection circuit **3816** structured to determine a current flow through the motive electrical power path **3804**; and a fuse management circuit **3818** structured to provide a contactor activation command in response to the current flow. The contactor **3822** is responsive to the contactor activation command.

Certain further aspects of an example system are described following, any one or more of which may be present in certain embodiments. An example system includes where the contactor **3822** is open during nominal operations of the vehicle, and where the fuse management circuit is structured to provide the contactor activation command as a contactor closing command in response to determining that the current flow is a above a thermal wear current for the thermal fuse **3820**; and/or where the fuse management circuit is further structured to provide the contactor activation command as the contactor closing command in response to determining that the current flow is below a current protection value for the motive electrical power path **3804**. An example system includes where the contactor **3822** is closed during nominal operations of the vehicle, and where the fuse management circuit is structured to provide the contactor activation command as a contactor opening command in response to determining that the current flow is above a current protection value for the motive electrical power path **3804**. An example system includes where the fuse management circuit is further structured to provide the contactor activation command in response to the current flow by performing at least one operation selected from the operations consisting of: responding to a rate of change of the current flow; responding to a comparison of the current flow to a threshold value; responding to one of an integrated or accumulated value of the current flow; and responding to one of an expected or a predicted value of any of the foregoing. It can be seen that the embodiments of the system depicted in FIG. **38** allow for the utilization of an oversized fuse **3820** that will experience reduced wear and increased life, while still allowing for circuit protection for moderate overcurrent (e.g., utilizing the contactor) and fused protection for high overcurrent values. It can be seen that the embodiments of the system depicted FIG. **38** allow for utilization of a nominally sized or undersized fuse **3820** that can reliably open the circuit at moderate overcurrent values, but experience reduced wear and increased life (e.g., by sharing current through the contactor branch).

Referencing FIG. **39**, an example procedure includes an operation **3902** to determine a current flow through a motive electrical power path of a vehicle; an operation **3904** to direct the current flow through a current protection circuit having a parallel arrangement, with a thermal fuse on a first leg of the current protection circuit and a contactor on a second leg of the current protection circuit; and an operation **3906** to provide a contactor activation command in response to the current flow.

Certain further aspects of an example procedure are described following, any one or more of which may be present in certain embodiments. An example procedure further includes an operation to close the contactor in response to the current flow. An example procedure includes an operation to determine that the current flow is below a current protection value for the motive electrical power path before the closing the contactor. An example procedure includes at least one operation selected from the operations consisting of: responding to a rate of change of the current flow; responding to a comparison of the current flow to a threshold value; responding to one of an integrated or accumulated value of the current flow; and responding to one of an expected or a predicted value of any of the foregoing. An example procedure includes an operation to open the contactor in response to the current flow; an operation to determine that the current flow is above a current protection value for the motive electrical power path before opening the contactor; and/or an operation to open the contactor including performing any one or more of: responding to a rate of change of the current flow; responding to a comparison of the current flow to a threshold value; responding to one of an integrated or accumulated value of

the current flow; and responding to one of an expected or a predicted value of any of the foregoing.

Referencing FIG. **40**, an example system includes a vehicle **4002** having a motive electrical power path **4004**; a power distribution unit **4006** having a current protection circuit **4008** disposed in the motive electrical power path **4004**, where the current protection circuit includes a first leg **4010** of the current protection circuit **4008** including a thermal fuse **4020** and a second leg **4012** of the current protection circuit **4008** including a solid state switch **4022**. The first leg **4010** and the second leg **4012** are coupled in a parallel arrangement. The example system includes a controller **4014** including a current detection circuit **4016** structured to determine a current flow through the motive electrical power path **4004** and a fuse management circuit **4018** structured to provide a switch activation command in response to the current flow. The solid state switch **4022** is responsive to the switch activation command. In certain embodiments, the system includes a contactor **4024** coupled to the current protection circuit **4008**, where the contactor **4024** in the open position disconnects the current protection circuit **4008** (e.g., the contactor **4024** in series with both legs **4010**, **4012**), and/or the contactor **4024** in series with the solid state switch **4022** on the second leg **4012**). Any contactor described throughout the present disclosure may, in certain embodiments, be a solid state switch instead of, or in series with, a conventional contactor device. Solid state switches are known to have rapid response and are robust to opening during high current events. However, solid state switches also experience a small leakage current, which may be acceptable in certain embodiments, or not acceptable in other embodiments. In certain embodiments, the utilization of a conventional contactor with a solid state switch allows for the rapid response time and survivability of the solid state switch, as well as the enforced zero current of a conventional contactor. In certain embodiments, the solid state switch is utilized to open the circuit first, and then the conventional contactor opens the circuit second, allowing for the avoidance of conditions where the conventional contactor opens under high current conditions.

Referencing FIG. **41**, an example procedure includes an operation **4102** to determine a current flow through a motive electrical power path of a vehicle; an operation **4104** to direct the current flow through a current protection circuit having a parallel arrangement, with a thermal fuse on a first leg of the current protection circuit and a solid state switch-on a second leg of the current protection circuit; and an operation **4106** to provide a switch activation command in response to the current flow.

Certain further aspects of an example procedure are described following, any one or more of which may be present in certain embodiments. An example procedure further includes an operation to close the solid state switch in response to the current flow; and/or determine that the current flow is below a current protection value for the motive electrical power path before the closing the solid state switch. For example, a current flow value or transient may be sufficiently high to cause degradation of the thermal fuse, but lower than a threshold where a system protection response from the thermal fuse is required. In certain embodiments, closing the solid state switch reduces the current flow and/or transient through the thermal fuse, reducing the wear and/or a nuisance failure of the thermal fuse. An example procedure includes an operation to close the solid state switch includes performing at least one operation such as: responding to a rate of change of the current flow; responding to a comparison of the current flow to a threshold value; responding to one of an integrated or accumulated value of the current flow; and responding to one of an expected or a predicted value of any of the foregoing. An example procedure includes an operation to open the solid state switch in response to the current flow; and/or determine that the current flow is above a current protection value for the motive electrical power path before opening the solid state switch. An example procedure includes an operation to open the solid state switch includes performing at least one operation selected from the operations consisting of: responding to a rate of change of the current flow; responding to a comparison of the current flow to a threshold value; responding to one of an integrated or accumulated value of the current flow; and responding to one of an expected or a predicted value of any of the foregoing. An example procedure includes an operation to open a contactor after the opening the solid state switch, where opening the contactor disconnects one of the current protection circuit or the second leg of the current protection circuit.

Referencing FIG. **42**, an example system includes a vehicle having a motive electrical power path **4204**; a power distribution unit **4206** having a current protection circuit **4208** disposed in the motive electrical power path **4204**, where the current protection circuit includes a first leg **4210** of the current protection circuit **4208** including a first thermal fuse **4220**, a second leg **4212** of the current protection circuit **4208** including a second thermal fuse **4222** and a contactor **4224**, and where the first leg **4210** and the second leg **4212** are coupled in a parallel arrangement. The example system includes a controller, including: a current detection circuit **4216** structured to determine a current flow through the motive electrical power path **4204**; and a fuse management circuit **4218** structured to provide a contactor activation command in response to the current flow. The contactor **4224** is responsive to the contactor activation command.

Certain further aspects of an example system are described following, any one or more of which may be present in certain embodiments. An example system includes where the contactor **4224** is open during nominal operations of the vehicle, and where the fuse management circuit **4218** is structured to provide the contactor activation command as a contactor closing command in response to determining that the current flow is a above a thermal wear current for the first thermal fuse **4220**. An example system includes the fuse management circuit **4218** further structured to provide the contactor activation command as a contactor closing command in response to determining that the current flow is below a current protection value for the motive electrical power path **4204**. An example system includes a vehicle operating condition circuit **4226** structured to determine an operating mode for the vehicle (e.g., moving, stopped, high performance, high economy, charging, quick charging, etc.), and where the fuse management circuit **4218** is further structured to provide the contactor activation command in response to the operating mode. An example system includes the fuse management circuit **4218** further structured to provide the contactor activation command as a contactor closing command in response to the operating mode including at least one operating mode selected from the operating modes consisting of: a charging mode; a quick charging mode; a high performance mode; a high power request mode; an emergency operation mode; and/or a limp home mode. An example system includes where the contactor **4224** is closed during nominal operations of the vehicle, and where the fuse management circuit **4218** is structured to provide the contactor activation command as a

contactor opening command in response to determining that the current flow is above a current protection value for the motive electrical power path **4204**. An example system includes where the contactor is closed during nominal operations of the vehicle, and where the fuse management circuit **4218** is structured to provide the contactor activation command as a contactor opening command in response to the operating mode; and/or where the fuse management circuit **4218** is further structured to provide the contactor activation command as a contactor opening command in response to the operating mode including at least one of an economy mode or a service mode. For example, during certain operating conditions such as an economy mode or during a service event, a reduced maximum power throughput through the motive electrical power path **4204** may be enforced, where the opening of the contactor **4224** is utilized to provide configured fuse protection for the reduced maximum power throughput.

Referencing FIG. **43**, an example procedure includes an operation **4302** to determine a current flow through a motive electrical power path of a vehicle; an operation **4304** to direct the current flow through a current protection circuit having a parallel arrangement, with a first thermal fuse on a first leg of the current protection circuit and a second thermal fuse and a contactor on a second leg of the current protection circuit; and an operation **4306** to provide a contactor activation command in response to the current flow.

Certain further aspects of an example procedure are described following, any one or more of which may be present in certain embodiments. An example procedure further includes an operation to close the contactor in response to the current flow being above a thermal wear current for the first thermal fuse; and/or closing the contactor further in response to the current flow being below a current protection value for the motive electrical power path. An example procedure includes an operation to determine an operating mode for the vehicle, and providing the contactor activation command further in response to the operating mode. An example procedure includes an operation to provide the contactor activation command as a contactor closing command in response to the operating mode including at least one operating mode selected from the operating modes consisting of: a charging mode; a high performance mode; a high power request mode; an emergency operation mode; and a limp home mode. An example procedure includes an operation to provide the contactor activation command as a contactor opening command in response to determining that the current flow is above a current protection value for the motive electrical power path; and/or provide the contactor activation command as a contactor opening command in response to the operating mode including at least one of an economy mode or a service mode.

Referencing FIG. **44**, an example system includes a vehicle **4402** having a motive electrical power path **4404**; a power distribution unit **4406** having a current protection circuit **4408** disposed in the motive electrical power path **4404**, where the current protection circuit includes: a first leg **4410** of the current protection circuit **4408** including a first thermal fuse **4420** and a first contactor **4424**; a second leg **4412** of the current protection circuit **4408** including a second thermal fuse **4422** and a second contactor **4426**; and where the first leg **4410** and the second leg **4412** are coupled in a parallel arrangement. The example system includes a controller **4414** including a current detection circuit **4416** structured to determine a current flow through the motive electrical power path **4404**; and a fuse management circuit **4418** structured to provide a plurality of contactor activation commands in response to the current flow. The first contactor **4424** and the second contactor **4426** are responsive to the contactor activation commands, thereby providing a selected configuration of the current protection circuit **4408**.

Certain further aspects of an example system are described following, any one or more of which may be present in certain embodiments. An example system includes where the current protection circuit further includes: one or more additional legs **4413**, where each additional leg **4413** includes an additional thermal fuse **4423** and an additional contactor **4428**; and where each additional contactor **4428** is further responsive to the contactor activation commands, thereby providing the selected configuration of the current protection circuit **4408**. An example system includes a vehicle operating condition circuit **4430** structured to determine an operating mode for the vehicle, and where the fuse management circuit **4418** is further structured to provide the contactor activation commands in response to the operating mode. An example fuse management circuit **4418** is further structured to determine an active current rating for the motive electrical power path **4404** in response to the operating mode, and to provide the contactor activation commands in response to the active current rating. An example system includes where the first leg **4410** of the current protection circuit **4408** further includes an additional first contactor **4427** in a parallel arrangement with the first thermal fuse **4420**, where the current detection circuit **4416** is further structured to determine a first leg current flow, where the fuse management circuit **4418** is further structured to provide the contactor activation commands further in response to the first leg current flow, and where the additional first contactor **4427** is responsive to the contactor activation commands. An example system includes the additional first contactor **4427** being open during nominal operations of the vehicle, and where the fuse management circuit **4418** is structured to provide the contactor activation commands including an additional first contactor closing command in response to determining that the first leg current flow is a above a thermal wear current for the first thermal fuse **4420**. An example system includes the fuse management circuit **4418** structured to provide the additional first contactor closing command in response to determining at least one of: that the first leg current flow is below a first leg current protection value, or that the current flow is below a motive electrical power path current protection value. An example system includes where the additional first contactor **4427** is closed during nominal operations of the vehicle, and where the fuse management circuit **4418** is structured to provide the contactor activation commands including an additional first contactor opening command in response to determining at least one of: that the first leg current flow is above a first leg current protection value, or that the current flow is above a motive electrical power path current protection value. The example system may further include additional contactors **4428** positioned on any one or more of the legs **4410**, **4412**, **4413**. Any one or more of the contactors **4424**, **4426**, **4428** may be configured in series and/or parallel with the associated thermal fuse **4420**, **4422**, **4423** on the associated leg.

Referencing FIG. **45**, an example procedure includes an operation **4502** to determine a current flow through a motive electrical power path of a vehicle; an operation **4504** to direct the current flow through a current protection circuit having a parallel arrangement, with a first thermal fuse and a first contactor on a first leg of the current protection circuit, and a second thermal fuse and a second contactor on a second leg of the current protection circuit; and an operation

4506 to provide a selected configuration of the current protection circuit in response to the current flow through the motive electrical power path of the vehicle, where providing the selected configuration includes providing a contactor activation command to each of the first contactor and the second contactor.

Certain further aspects of an example procedure are described following, any one or more of which may be present in certain embodiments. An example procedure includes an operation further including at least one additional leg of the current protection circuit, each additional leg of the current protection circuit having an additional thermal fuse and an additional contactor, and where the providing the selected configuration of the current protection circuit includes providing a contactor activation command to each additional contactor. An example procedure includes an operation to determine an operating mode for the vehicle, and providing the selected configuration further in response to the operating mode; and/or an operation to determine an active current rating for the motive electrical power path in response to the operating mode, and where providing the selected configuration of the current protection circuit is further in response to the active current rating. An example procedure includes an operation to determine an active current rating for the motive electrical power path, and where providing the selected configuration of the current protection circuit is further in response to the active current rating. An example procedure includes an operation where the first leg of the current protection circuit further includes an additional first contactor in a parallel arrangement with the first thermal fuse, the procedure further including: determining a first leg current flow, and where providing the selected configuration further includes providing a contactor activation command to the additional first contactor; an operation to close the additional first contactor in response to determining that the first leg current flow is a above a thermal wear current for the first thermal fuse; an operation to close the additional first contactor further in response to determining at least one of: that the first leg current flow is below a first leg current protection value, or that the current flow is below a motive electrical power path current protection value; and/or an operation to open the additional first contactor in response to determining at least one of: that the first leg current flow is above a first leg current protection value, or that the current flow is above a motive electrical power path current protection value.

Referencing FIG. **46**, an example system includes a vehicle **4602** having a motive electrical power path **4604**; a power distribution unit **4606** having a current protection circuit **4608** disposed in the motive electrical power path **4604**, where the current protection circuit **4608** includes a fuse **4610**. The example system further includes a controller **4614** including a fuse status circuit **4616** structured to determine a fuse event value; and a fuse management circuit **4618** structured to provide a fuse event response based on the fuse event value.

Certain further aspects of an example system are described following, any one or more of which may be present in certain embodiments. An example system includes a fuse life description circuit **4619** structured to determine a fuse life remaining value, where the fuse event value includes a representation that the fuse life remaining value is below a threshold value, and where the fuse management circuit **4618** is further structured to provide the fuse event response further based on the fuse life remaining value. Example and non-limiting operations to provide the fuse event include providing a fault code and/or a notification of the fuse event value, for example to a datalink, another controller in the system, as a service notification, to a fleet owner (e.g., a maintenance manager), stored as a fault code for service access, and/or as a notification to an operator, a mobile device, a service report, or the like. Example and non-limiting operations to provide the fuse event response include: adjusting a maximum power rating for the motive electrical power path; adjusting a maximum power slew rate for the motive electrical power path; and/or adjusting a configuration of the current protection circuit. An example system includes where the current protection circuit **4608** further includes a contactor **4612** coupled in a parallel arrangement to the fuse **4610**; and/or where the fuse management circuit **4618** is further structured to provide a contactor activation command in response to the fuse event value. In the example, the contactor **4612** is responsive to the contactor activation command. An example system includes where the fuse management circuit **4618** is further structured to provide the contactor activation command as a contactor closing command in response to the fuse event value being one of a thermal wear event or an imminent thermal wear event for the fuse **4610**. An example system includes where the fuse management circuit **4618** is further structured to adjust a current threshold value for the contactor activation command in response to the fuse life remaining value (e.g., open the contactor at a lower or higher threshold as the fuse ages). An example system includes a cooling system **4620** at least selectively thermally coupled to the fuse, and a cooling system interface **4622** (e.g., hardware interfaces such as flow couplings, valves, etc., and/or communication interfaces such as network commands, electrical couplings, etc.); and/or where providing the fuse event response includes adjusting a cooling system interface **4622** for the cooling system **4620** in response to the fuse life remaining value (e.g., increasing active cooling capability to the fuse as the fuse ages).

Referencing FIG. **47**, an example procedure includes an operation **4702** to determine a fuse event value for a fuse disposed in a current protection circuit, the current protection circuit disposed in a motive electrical power path of a vehicle; and an operation **4704** to provide a fuse event response based on the fuse event value.

Certain further aspects of an example procedure are described following, any one or more of which may be present in certain embodiments. An example procedure further includes an operation to determine a fuse life remaining value, where the fuse event value includes a representation that the fuse life remaining value is below a threshold value, and providing the fuse event response further based on the fuse life remaining value; an operation to provide the fuse event response includes providing at least one of a fault code or a notification of the fuse event value; an operation to provide the fuse event response includes adjusting a maximum power rating for the motive electrical power path; an operation to provide the fuse event response includes adjusting a maximum power slew rate for the motive electrical power path; an operation to provide the fuse event response includes adjusting a configuration of the current protection circuit. An example procedure includes an operation where the current protection circuit further includes a contactor coupled in a parallel arrangement to the fuse; where the fuse management circuit is further structured to provide a contactor activation command in response to the fuse event value; and where the contactor is responsive to the contactor activation command; where the fuse management circuit is further structured to provide the contactor activation command as a contactor closing command in

response to the fuse event value including one of a thermal wear event or an imminent thermal wear event for the fuse; and/or where the fuse management circuit is further structured to adjust a current threshold value for the contactor activation command in response to the fuse life remaining value. An example procedure includes an operation to provide the fuse event response includes adjusting a cooling system interface for a cooling system at least selectively thermally coupled to the fuse in response to the fuse life remaining value. An example procedure includes an operation to provide the fuse event response includes providing at least one of a fault code or a notification of the fuse event value. An example procedure includes an operation to determine an accumulated fuse event description in response to the fuse event response, and storing the accumulated fuse event description. An example procedure includes an operation to provide the accumulated fuse event description, where providing the accumulated fuse event description includes at least one of providing at least one of a fault code or a notification of the accumulated fuse event description; and an operation to provide the accumulated fuse event description in response to at least one of a service event or a request for the accumulated fuse event description.

Referencing FIG. **48**, an example system includes a vehicle **4802** having a motive electrical power path **4804** and at least one auxiliary electrical power path **4805**; a power distribution unit **4806** having a motive current protection circuit **4808** disposed in the motive electrical power path **4804**, the motive current protection circuit including a fuse; and an auxiliary current protection circuit **4810** disposed in each of the at least one auxiliary electrical power paths **4805**, each auxiliary current protection circuit **4810** including an auxiliary fuse (not shown). The system includes a controller **4814** including: a current determination circuit **4816** structured to interpret a motive current value corresponding to the motive electrical power path, and an auxiliary current value corresponding to each of the at least one auxiliary electrical power paths.

Certain further aspects of an example system are described following, any one or more of which may be present in certain embodiments. An example system includes a motive current sensor **4824** electrically coupled to the motive electrical power path **4804**, where the motive current sensor **4824** is configured to provide the motive current value. An example system includes at least one auxiliary current sensor **4826** each electrically coupled to one of the at least one auxiliary electrical power paths, each auxiliary current sensor **4826** configured to provide the corresponding auxiliary current value. An example system includes where the controller **4814** further includes a vehicle interface circuit **4828**, the vehicle interface circuit structured to provide the motive current value to a vehicle network (not shown); where the vehicle interface circuit **4828** is further structured to provide the auxiliary current value corresponding to each of the at least one auxiliary electrical power paths **4805** to the vehicle network; and/or further including a battery management controller (not shown) configured to receive the motive current value from the vehicle network. In certain embodiments, one or more of the motive current value and/or the auxiliary current value(s) are provided by a fuse current model, for example determined in accordance with a load voltage drop across the fuse and/or a fuse resistance (and/or fuse dynamic resistance or fuse impedance) value determined from an injected current operation across the fuse. The utilization of a fuse current model can provide for higher accuracy (e.g. relative to a moderately capable or inexpensive current sensor) and/or faster response time for current determination than a sensor. In certain embodiments, a current sensor may be combined with the utilization of a fuse current model, for example favoring one or the other of the sensor or the model depending upon the operating conditions, and the expected accuracies of the sensor or the model in view of the operating conditions.

Referencing FIG. **49**, an example procedure includes an operation **4902** to provide a power distribution unit having a motive current protection circuit and at least one auxiliary current protection circuit; an operation **4904** to power a vehicle motive electrical power path through the motive current protection circuit; an operation **4906** to power at least one auxiliary load through a corresponding one of the at least one auxiliary current protection circuit; an operation **4908** to determine a motive current value corresponding to the motive electrical power path; and an operation **4910** to determine an auxiliary current value corresponding to each of the at least one auxiliary current protection circuits.

Certain further aspects of an example procedure are described following, any one or more of which may be present in certain embodiments. An example procedure further includes an operation to provide the motive current value to a vehicle network; and/or an operation to receive the motive current value with a battery management controller.

Referencing FIG. **50**, an example system includes a vehicle **5002** having a motive electrical power path **5004**; a power distribution unit **5006** having a current protection circuit **5008** disposed in the motive electrical power path **5004**, where the current protection circuit includes: a thermal fuse **5020**; and a contactor **5022** in a series arrangement with the thermal fuse **5020**. The system further includes a controller **5014**, including: a current detection circuit **5016** structured to determine a current flow through the motive electrical power path **5004**; and a fuse management circuit **5018** structured to provide a contactor activation command in response to the current flow; and where the contactor **5022** is responsive to the contactor activation command.

Certain further aspects of an example system are described following, any one or more of which may be present in certain embodiments. An example system includes where the thermal fuse **5020** includes a current rating that is higher than a current corresponding to a maximum power throughput of the motive electrical power path **5004** (e.g., where the fuse is sized to avoid wear or degradation up to the maximum power throughput, where the fuse is sized to accommodate a higher power rating and/or a quick charging power throughput, etc.). An example system includes where the thermal fuse **5020** includes a current rating that is higher than a current corresponding to a quick charging power throughput of the motive electrical power path **5004**. An example system includes where the contactor **5022** includes a current rating that is higher than a current corresponding to a maximum power throughput of the motive electrical power path **5004**. In certain embodiments, the current corresponding to the maximum power throughput of the motive electrical power path **5004** may correspond to a current at nominal voltage, and/or a current at a degraded and/or failure mode voltage (e.g., as the battery pack ages, and/or if one or more cells are deactivated). An example system includes where the contactor **5022** includes a current rating that is higher than a current corresponding to a quick charging power throughput of the motive electrical power path **5004**. An example system includes where the fuse management circuit **5018** is further structured to provide the contactor activation command as a contactor opening command in response to the current flow

indicating a motive electrical power path protection event. An example current detection circuit **5016** determines the motive electrical power path protection event by performing at least one operation such as: responding to a rate of change of the current flow; responding to a comparison of the current flow to a threshold value; responding to one of an integrated or accumulated value of the current flow; and/or responding to one of an expected or a predicted value of any of the foregoing.

Referencing FIG. **51**, an example procedure includes an operation **5102** to power a motive electrical power path of a vehicle through a current protection circuit including a thermal fuse and a contactor in a series arrangement with the thermal fuse; and an operation **5104** to determine a current flow through the motive electrical power path; and an operation to selectively open the contactor in response to the current flow.

Certain further aspects of an example procedure are described following, any one or more of which may be present in certain embodiments. An example procedure further includes an operation to provide the thermal fuse having a current rating that is higher than a current corresponding to a maximum power throughput of the motive electrical power path. An example procedure includes an operation to provide the thermal fuse having a current rating that is higher than a current corresponding to a quick charging power throughput of the motive electrical power path. An example procedure includes an operation to provide the contactor having a current rating that is higher than a current corresponding to a maximum power throughput of the motive electrical power path. An example procedure includes an operation to provide the contactor having a current rating that is higher than a current corresponding to a quick charging power throughput of the motive electrical power path. An example procedure includes an operation to open the contactor is further in response to at least one of: a rate of change of the current flow; a comparison of the current flow to a threshold value; one of an integrated or accumulated value of the current flow; and/or an expected or predicted value of any of the foregoing.

Referencing FIG. **52**, an example procedure includes an operation **5202** to power a motive electrical power path of a vehicle through a current protection circuit including a thermal fuse and a contactor in a series arrangement with the thermal fuse; an operation **5204** to determine a current flow through the motive electrical power path; an operation **5206** to open the contactor in response to the current flow exceeding a threshold value; an operation **5208** to confirm that vehicle operating conditions allow for a reconnection of the contactor; and an operation **5210** to command the contactor to close in response to the vehicle operating conditions. Previously known fused system, including systems having a controllable pyro-fuse, are not capable of restoring system power after an overcurrent event, as the fuse has opened the circuit and cannot be restored. Certain example embodiments throughout the present disclosure provide for a system that can open the circuit without activation of the fuse under certain circumstances. Accordingly, in certain embodiments, power can be restored after a high current event, providing for additional capability. However, in certain embodiments, it may be undesirable to restore power to the system, for example if the system is being accessed by emergency personnel and/or service after the overcurrent event. In certain embodiments, the controller is configured to perform certain checks, including checking current operating conditions and permissions, before attempting to restore power. Additionally or alternatively, the controller is configured to determine, during the attempted restoration of power and/or shortly thereafter, whether a condition causing an overcurrent event is still present. Additionally or alternatively, the controller is configured to determine whether the contactor or another electrical device has been damaged during the overcurrent event, or during the disconnection process being performed to halt the overcurrent event.

Certain further aspects of an example procedure are described following, any one or more of which may be present in certain embodiments. An example procedure further includes an operation to confirm the vehicle operating conditions, and in certain embodiments further includes determining at least one vehicle operating condition such as: an emergency vehicle operating condition; a user override vehicle operating condition; a service event vehicle operating condition; and a reconnection command communicated on a vehicle network. In certain embodiments, an emergency vehicle operating condition may indicate that a reconnection is desirable—for example where continued operation of the vehicle is more important than damage to the electrical system of the vehicle. In certain embodiments, an emergency vehicle operating condition may indicate that a reconnection is undesirable—for example where the vehicle has experienced an accident, and disconnection of power is desired to protect vehicle occupants and/or emergency response personnel. In certain embodiments, a service event vehicle operating condition indicates that a reconnection is desirable—for example where a servicing operator is requesting re-powering of the vehicle. In certain embodiments, a service event vehicle operating condition indicates that a reconnection is undesirable—for example when service personnel are performing service, maintenance, or repairs on the vehicle.

An example procedure includes an operation to monitor the motive electrical power path during the commanding the contactor to close, and re-opening the contactor in response to the monitoring (e.g., where the post-closing current and/or a current transient indicates that a condition causing the overcurrent may still be active). An example procedure includes an operation to determine an accumulated contactor open event description in response to the opening the contactor, and/or an operation to prevent the commanding the contactor to close in response to the accumulated contactor open event description exceeding a threshold value. For example, the accumulated contactor open event may be determined from a number of contactor open events under load, and/or according to a severity of those events. Where a number of open events under load are experienced, and/or where one or more severe open events are experienced, reconnection of the contactor may be undesirable to avoid the risk of further damage, overheating of the contactor, and/or sticking or welding of a damaged contactor that may prevent a subsequent re-opening of the contactor. An example procedure includes an operation to adjust the accumulated contactor open event description in response to the current flow during the opening of the contactor. An example procedure includes an operation to diagnose a welded contactor in response to one of the current flow during the opening the contactor, and/or a monitoring of the motive electrical power path during the commanding the contactor to close. An example procedure includes an operation to diagnose a welded contactor in response to a monitoring of at least one of a contactor actuator position (e.g., a failure of the actuator to respond as expected on command), a contactor actuator response, and/or the motive electrical power path during the opening the contactor. An

example procedure further includes an operation to prevent the commanding the contactor to close in response to the diagnosed welded contactor.

Referencing FIG. **53**, an example apparatus includes a motive electrical power current protection circuit **5308** structured to: determine a current flow through a motive electrical power path **5304** of a vehicle; and open a contactor **5322** disposed in the current protection circuit **5308** including a thermal fuse **5320** and the contactor **5322** in a series arrangement with the thermal fuse **5320** in response to the current flow exceeding a threshold value. The apparatus further includes a vehicle re-power circuit **5316** structured to: confirm that vehicle operating conditions allow for a reconnection of the contactor; and to close the contactor **5322** in response to the vehicle operating conditions.

Certain further aspects of an example apparatus are described following, any one or more of which may be present in certain embodiments. An example apparatus includes where the vehicle re-power circuit **5316** is further structured to confirm the vehicle operating conditions by confirming at least one vehicle operating condition such as: an emergency vehicle operating condition; a user override vehicle operating condition; a service event vehicle operating condition; and a reconnection command communicated on a vehicle network (not shown). For example, a system may include an operator override interface (e.g., a button, a sequence of control inputs, or the like) that provide an input for the operator to request continued power operations where the motive electrical power current protection circuit **5308** has opened the contactor **5322** to protect the motive power system. In certain embodiments, operator access to the override is utilized by the vehicle re-power circuit **5316** to command a reconnection of the contactor. In certain embodiments, the reconnection by an operator input includes only allowing a reconnection for certain applications (e.g., an emergency or military vehicle), and/or only allowing a reconnection for a period of time (e.g., 10 seconds or 30 seconds), and/or only allowing a reconnection when the electrical conditions after the reconnection do not indicate that another overcurrent event is occurring. In certain embodiments, the vehicle re-power circuit **5316** additionally or alternatively may de-rate maximum power, de-rate the maximum power slew rate, provide a notification or warning to the operator during reconnection operations, and/or provide a notification or warning to the operator when a reconnection time period is about to expire (e.g., a first light or light sequence during reconnection operations, and a different light or light sequence when the reconnection time period is about to expire).

An example apparatus includes where the motive electrical power current protection circuit **5308** is further structured to monitor the motive electrical power path during the closing the contactor to close, and where the vehicle re-power circuit **5316** is further structured to re-open the contactor in response to the monitoring. An example apparatus includes a contactor status circuit **5318** structured to determine an accumulated contactor open event description in response to the opening the contactor **5322**; where the vehicle re-power circuit **5316** is further structured to prevent the closing the contactor **5322** in response to the accumulated contactor open event description exceeding a threshold value; and/or where the contactor status circuit **5318** is further structured to adjust the accumulated contactor open event description in response to the current flow during the opening the contactor. An example apparatus includes a contactor status circuit **5318** structured to diagnose a welded contactor in response to one of, during the commanding the contactor to close: the current flow during the opening the contactor **5322**, and/or a monitoring of the motive electrical power path by the motive electrical power current protection circuit **5308**. An example apparatus includes a contactor status circuit **5318** structured to diagnose a welded contactor in response to a monitoring of, during the opening of the contactor, at least one of: a contactor actuator position by the vehicle re-power circuit **5316**; a contactor actuator response by the vehicle re-power circuit **5316**; and the motive electrical power path by the motive electrical power current protection circuit **5308**; and/or where the contactor status circuit **5318** is further structured to prevent the closing the contactor in response to the diagnosed welded contactor.

An example system (e.g., referencing FIGS. **1** and **2**) includes a vehicle having a motive electrical power path; a power distribution unit including: a current protection circuit disposed in the motive electrical power path, the current protection circuit including a thermal fuse and a contactor in a series arrangement with the thermal fuse; a high voltage power input coupling including a first electrical interface for a high voltage power source; a high voltage power output coupling including a second electrical interface for a motive power load; and where the current protection circuit electrically couples the high voltage power input to the high voltage power output, and where the current protection circuit is at least partially disposed in a laminated layer (e.g., referencing FIGS. **12** through **17**) of the power distribution unit, where the laminated layer includes an electrically conductive flow path disposed between two electrically insulating layers.

Certain further aspects of an example system are described following, any one or more of which may be present in certain embodiments. An example system includes where current protection circuit includes a motive power bus bar disposed in the laminated layer of the power distribution unit. An example system includes where the vehicle further includes an auxiliary electrical power path; where the power distribution unit further includes: an auxiliary current protection circuit disposed in the auxiliary electrical power path, the auxiliary current protection circuit including a second thermal fuse; an auxiliary voltage power input coupling including a first auxiliary electrical interface for a low voltage power source; an auxiliary voltage power output coupling including a second auxiliary electrical interface for a an auxiliary load; and where the auxiliary current protection circuit electrically couples the auxiliary voltage power input to the auxiliary voltage power output, and where the auxiliary current protection circuit is at least partially disposed in the laminated layer of the power distribution unit. An example system includes where the laminated layer of the power distribution unit further includes at least one thermally conductive flow path disposed between two thermally insulating layers; where the at least one thermally conductive flow path is configured to provide thermal coupling between a heat sink (e.g., a cooling system, a housing or other system aspect having a high thermal mass, and/or ambient air), and a heat source, where the heat source includes at least one of the contactor, the thermal fuse, and the second thermal fuse; where the heat sink includes at least one of a thermal coupling to an active cooling source and a housing of the power distribution unit; and/or further including a thermal conduit disposed between the at least one thermally conductive flow path and the heat source.

Referencing FIG. **55**, an example system includes a vehicle **5502** having a motive electrical power path **5504**; a power distribution unit **5506** including a current protection

circuit **5508** disposed in the motive electrical power path **5504**, the current protection circuit **5508** including a thermal fuse **5520** and a contactor **5522** in a series arrangement with the thermal fuse **5520**; a current source circuit **5516** electrically coupled to the thermal fuse **5520** and structured to inject a current across the thermal fuse **5520** (e.g., using an op-amp driven current source); and a voltage determination circuit **5518** electrically coupled to the thermal fuse **5520** and structured to determine at least one of an injected voltage amount and a thermal fuse impedance value.

Certain further aspects of an example system are described following, any one or more of which may be present in certain embodiments. An example system includes where the motive electrical power path **5504** includes a direct current power path (e.g., the motive power path); where the current source circuit **5516** includes at least one of an alternating current source and a time varying current source, and further including a hardware filter **5524** electrically coupled to the thermal fuse **5520**. In the example, the hardware filter **5524** is configured in response to an injection frequency of the current source circuit **5516**; where the hardware filter **5524** includes a high-pass filter **5526** having a cutoff frequency determined in response to the injection frequency of the current source circuit **5516** (e.g., to remove voltage fluctuations that are significantly lower than the injection AC frequency). An example system includes the hardware filter **5524** having a low pass filter **5528** having a cutoff frequency determined in response to at least one of the injection frequency of the current source circuit (e.g., to remove voltage fluctuations induced by the current injection) or a load change value of the motive electrical power path **5504** (e.g., to remove transient fluctuations caused by a change in the load). In certain embodiments, the high-pass filtered voltage is analyzed separately from the low pass filtered voltage—e.g., where the base voltage signal is analyzed separately with a low pass filter applied and with a high-pass filter applied, allowing for a separate determination of the response voltage to the injected current, and of the base voltage due to the current load. In certain embodiments, the voltage determination circuit **5518** is further structured to determine to determine an injected voltage drop of the thermal fuse in response to an output of the high-pass filter; and/or where the voltage determination circuit **5518** is further structured to determine the thermal fuse impedance value in response to the injected voltage drop. In certain embodiments, the voltage determination circuit **5518** is further structured to determine a load voltage drop of the thermal fuse **5520** in response to an output of the low pass filter, and/or where the system further includes a load current circuit **5519** structured to determine a load current through the fuse in response to the thermal fuse impedance value (e.g., determined from the response voltage to the injected current), and further in response to the load voltage drop from the low pass filter.

Referencing FIG. **54**, an example system includes a vehicle **5402** having a motive electrical power path **5404**; a power distribution unit **5406** including a current protection circuit **5408** disposed in the motive electrical power path **5404**, the current protection circuit **5408** including a thermal fuse **5420** and a contactor **5422** in a series arrangement with the thermal fuse **5420**. The example system further includes a current source circuit **5416** electrically coupled to the thermal fuse **5420** and structured to inject a current across the thermal fuse **5420**; and a voltage determination circuit **5518** electrically coupled to the thermal fuse **5420** and structured to determine at least one of an injected voltage amount and a thermal fuse impedance value, where the voltage determination circuit **5518** includes a high-pass filter (e.g., analog filter **5428**, depicted in a bandpass filter **5426**, but which may additionally or alternatively include a high-pass filter) having a cutoff frequency selected in response to a frequency of the injected current.

Certain further aspects of an example system are described following, any one or more of which may be present in certain embodiments. An example system includes where the voltage determination circuit **5518** further includes a bandpass filter **5426** having a bandwidth selected to bound the frequency of the injected current. For example, where the frequency of the injected current is 200 Hz, the bandpass filter **5426** may be configured with cutoff frequencies of 190 Hz to 210 Hz, 195 Hz to 205 Hz, 199 Hz to 201 Hz, within 5% of the injected frequency, and/or within 1% of the injected frequency. One of skill in the art, having the benefit of the disclosures herein, can determine an appropriate injection frequency and/or range of injection frequencies to be utilized, and values for the high-pass filter and/or the band pass filter to provide an appropriately conditioned voltage response determination to the injected current. Certain considerations for selecting an injected frequency and the band pass filter range include, without limitation, frequency components in electrical communication with the motive electrical power system including base frequencies and harmonics, the noise environment of the system, the desired accuracy of the thermal fuse impedance value determination, the dynamic response and capability of the current injector, the dynamic response and attenuation capability of the filters, the time available for performing an injection event, a number of fuses coupled to the current injector(s) that are to be checked, the desired time response for determining changes in the fuse impedance value, and/or the amount of statistical and/or frequency component analysis post-processing that is available on the controller **5414**.

An example system includes where the high-pass filter includes an analog hardware filter **5428**, and where the bandpass filter **5426** includes a digital filter **5430**. For example, the analog hardware filter **5428** may perform the high-pass filtering function, and a downstream digital filter **5430** may perform a digital or analytical bandpass filtering function on the high-pass filtered input. An example system includes where the high-pass filter and the bandpass filter are both digital filters **5430**. An example voltage determination circuit **5518** is further structured to determine the thermal fuse impedance value in response to the injected voltage drop from the high-pass and band pass filtered input. An example system includes a fuse characterization circuit **5418** that stores a fuse resistance value and/or a fuse impedance value, and/or the fuse characterization circuit **5418** further updates the stored one of the fuse resistance value and the fuse impedance value in response to the thermal fuse impedance value. An example system includes where the fuse characterization circuit **5418** is further updates the stored one of the fuse resistance value and the fuse impedance value by performing at least one operation such as: updating a value to the thermal fuse impedance value (e.g., instantaneously or periodically replacing the stored value with the determined value); filtering a value using the thermal fuse impedance value as a filter input (e.g., moving continuously toward the determined value, such as with a selected time constant); rejecting the thermal fuse impedance value for a period of time or for a number of determinations of the thermal fuse impedance value (e.g., where a low trust and/or anomalous value is determined, setting the value aside or ignoring it for a period of time or selected number of determinations, and/or later confirming the value if it

appears to be consistent over time); and/or updating a value by performing a rolling average of a plurality of thermal impedance values over time (e.g., utilizing a rolling buffer or other memory construct to replace older determinations with updated determinations). An example system includes where the power distribution unit **5406** further includes a number of thermal fuses **5420** disposed therein, and where the current source circuit **5416** is further electrically coupled to the number of thermal fuses (which may be a single current source selectively coupled to various fuses, and/or separate current sources controllable by the current source circuit **5416**). The example current source circuit **5416** further configured to sequentially inject a current across each of the number of thermal fuses (e.g., to check the thermal fuse impedance value and/or resistance for each of the fuses in a selected sequence). An example voltage determination circuit **5518** is further electrically coupled to each of the number of thermal fuses, and further structured to determine at least one of an injected voltage amount a thermal fuse impedance value for each of the number of thermal fuses. An example current source circuit **5416** is further configured to sequentially inject the current across each of the number of thermal fuses in a selected order of the fuses (e.g., the fuses need not be checked in any particular order, and need not be checked with the same frequency or the same number of times). An example current source circuit **5416** further structured adjusts the selected order in response to at least one of: a rate of change of a temperature of each of the fuses (e.g., a fuse that is changing temperature more quickly may be checked more frequently); an importance value of each of the fuses (e.g., a motive power fuse may be checked more frequently than a non-critical accessory fuse); a criticality of each of the fuses (e.g., a mission disabling fuse may be checked more frequently than another fuse); a power throughput of each of the fuses (e.g., similar to the rate of change of temperature, and/or indicative of the potential for increased wear or aging of the fuse); and/or one of a fault condition or a fuse health condition of each of the fuses (e.g., a fuse having a suspected or active fault, and/or a fuse that is worn or aged, may be checked more frequently to track the progress of the fuse, confirm or clear the diagnostic, and/or to more rapidly detect or respond to a failure). An example current source circuit **5416** is further structured to adjust the selected order in response to one of a planned duty cycle and an observed duty cycle of the vehicle (e.g., adjusting the fuse checking order and/or frequency based on the planned duty cycle of the vehicle or the motive power circuit, and/or based on the observed duty cycle of the vehicle or the motive power circuit, allowing adjustment for various applications and/or observed run-time changes). An example system includes where the current source circuit **5416** is further structured to sweep the injected current through a range of injection frequencies (e.g., ensuring robustness to system noise, informing a multi-frequency impedance model of the fuse, and/or passively or actively avoiding injected noise onto the power circuit including the fuse). An example current source circuit **5416** is further structured to inject the current across the thermal fuse at a number of injection frequencies (e.g., similar to a sweep, but using a selected number of discrete frequencies, which achieves some of the benefits of the sweep with more convenient filtering and processing, and includes updating the selected injection frequencies based on system changes such as loads, observed noise, and/or observed value of selected frequencies in characterizing the fuse). An example system includes where the current source circuit **5416** is further structured to inject the current across the thermal fuse at a number of injection voltage amplitudes. The injection voltage amplitude may be coupled with the injection current amplitude. Wherever an injection amplitude is described throughout the present disclosure, it is understood that an injection amplitude may be a current injection amplitude and/or a voltage injection amplitude, and in certain operating conditions these may be combined (e.g., selecting a voltage amplitude until a current limit in the current source is reached, selecting a current amplitude until a voltage limit in the current source is reached, and/or following an amplitude trajectory that may include a combination of voltage and/or current). An example system includes where the current source circuit **5416** is further structured to inject the current across the thermal fuse at an injection voltage amplitude determined in response to a power throughput of the thermal fuse (e.g., injecting a greater amplitude at high load to assist a signal-to-noise ratio, and/or a lower amplitude at high load to reduce the load on the fuse). An example system includes where the current source circuit **5416** is further structured to inject the current across the thermal fuse at an injection voltage amplitude determined in response to a duty cycle of the vehicle.

Referencing FIG. **56**, an example procedure includes an operation **5602** to determine null offset voltage for a fuse current measurement system, including an operation **5604** to determine that no current is demanded for a fuse load for a fuse electrically disposed between an electrical power source and an electrical load; and the operation **5604** including determining a null offset voltage in response to the no current demanded for the fuse load; and an operation **5606** to store the null offset voltage.

Certain further aspects of an example procedure are described following, any one or more of which may be present in certain embodiments. An example procedure further includes an operation to update a stored null offset voltage in response to the determined null offset voltage. An example procedure includes an operation to diagnose a component in response to the null offset voltage, for example where a high null offset voltage indicates that a component in the system may not be operating properly. An example procedure includes an operation to determine which one of a plurality of components is contributing to the null offset voltage (e.g., by performing a null offset voltage determination with selected components coupled or decoupled from the circuit having the fuse being checked). An example procedure includes an operation to determine that no current is demanded for the fuse load by performing at least one operation such as: determining that a key-off event has occurred for a vehicle including the fuse, the electrical power source, and the electrical load; determining that a key-on event has occurred for the vehicle; determining that the vehicle is powering down; and/or determining that the vehicle is in an accessory condition, where the vehicle in the accessory condition does not provide power through the fuse (e.g., a keyswitch accessory position for an application where the motive power fuse is not energized in the accessory position).

Referencing FIG. **57**, an example apparatus to determine offset voltage to adjust a fuse current determination includes a controller **5702** having a fuse load circuit **5708** structured to determine that no current is demanded for a fuse load, and to further determine that contactors associated with the fuse are open; an offset voltage determination circuit **5722** structured to determine an offset voltage corresponding to at least one component in a fuse circuit associated with the fuse, in response to the determining that no current is demanded for the fuse load; and an offset data management circuit **5724**

structured to store the offset voltage, and to communicate a current calculation offset voltage for use by a controller to determine current flow through the fuse.

Referencing FIG. **58**, an example procedure includes an operation **5802** to provide digital filters for a fuse circuit in a power distribution unit, including an operation **5804** to inject an alternating current across a fuse, where the fuse is electrically disposed between an electrical power source and an electrical load; an operation **5806** to determine the base power through a fuse by performing a low-pass filter operation on one of a measured current value and a measured voltage value for the fuse; and an operation **5808** to determine an injected current value by performing a high-pass filter operation on one of the measured current value and the measured voltage value for the fuse.

Certain further aspects of an example procedure are described following, any one or more of which may be present in certain embodiments. An example procedure further includes an operation to adjust parameters of at least one of the low-pass filter and the high-pass filter in response to a duty cycle of one of power and current through the fuse. An example procedure includes an operation to sweep the injected alternating current through a range of injection frequencies. An example procedure includes an operation to inject the alternating current across the fuse at a number of injection frequencies. An example procedure includes an operation where the current source circuit is further structured to inject the current across the fuse at a number of injection voltage amplitudes. An example procedure includes an operation where the current source circuit is further structured to inject the current across the fuse at an injection voltage amplitude determined in response to a power throughput of the fuse. In certain embodiments, the low-pass filter and/or the high-pass filter are digital filters, and where the adjusting parameters of the digital filters includes adjusting values for the digital filter(s). An example procedure includes further processing the measured voltage value with a digital bandpass filter after performing the high-pass filter, and determining a fuse resistance, fuse dynamic resistance, and/or fuse impedance value based on the high-pass and then bandpass filtered measured voltage value.

Referencing FIG. **59**, an example procedure includes an operation **5902** to calibrate a fuse resistance determination algorithm, including: an operation **5904** to store a number of calibration sets corresponding to a number of duty cycle values, the duty cycles including an electrical throughput value corresponding to a fuse electrically disposed between an electrical power source and an electrical load. Example calibration sets include current source injection settings for a current injection device operationally coupled to the fuse, including injection frequencies, injection duty cycles (e.g., on-time for each cycle), injection waveform shapes, fuse sequence operations (e.g., the order and frequency to check each fuse), injection amplitudes, and/or injection run-times (e.g., the number of seconds or milliseconds for each injection sequence for each fuse, such as 130 ms, 20 ms, 1 second, etc.). The example procedure includes an operation **5908** to determine a duty cycle of a system including the fuse, the electrical power source, and the electrical load; an operation **5910** to determine injection settings for the current injection device in response to the number of calibration sets and the determined duty cycle (e.g., using the indicated calibration set according to the determined duty cycle, and/or interpolating between calibration sets); and an operation **5912** to operate the current injection device in response to the determined injection settings.

An example procedure further includes an operation where the calibration sets further comprise filter settings for at least one digital filter, where the method further includes determining the fuse resistance utilizing the at least one digital filter.

Referencing FIG. **60**, an example procedure includes an operation **6002** to provide unique current waveforms to improve fuse resistance measurement for a power distribution unit. In certain embodiments, the procedure includes an operation **6004** to confirm that contactors electrically positioned in a fuse circuit are open, where the fuse circuit includes a fuse electrically disposed between an electrical power source and an electrical load, and/or an operation **6006** to determine a null voltage offset value for the fuse circuit. An example procedure includes an operation **6006** to conduct a number of current injection sequences across the fuse, where each of the current injection sequences includes a selected current amplitude, current frequency, and current waveform value. An example procedure further includes an operation **6010** to determine a fuse resistance value in response to the current injection sequences and/or the null voltage offset value.

Certain further aspects of an example procedure are described following, any one or more of which may be present in certain embodiments. An example procedure further includes an operation to adjust filtering characteristics for a digital filter in response to each of the number of current injection sequences, and to measure one of the fuse circuit voltage or the fuse circuit current with the digital filter during the corresponding current injection sequence using the adjusted filtering characteristics.

Referencing FIG. **61**, an example system includes a vehicle **6102** having a motive electrical power path **6104**; a power distribution unit including a current protection circuit **6108** disposed in the motive electrical power path **6104**, where the current protection circuit **6108** includes a thermal fuse **6120** and a contactor **6122** in a series arrangement with the thermal fuse **6120**. The example system includes a controller **6114** having a current source circuit **6116** electrically coupled to the thermal fuse **6120** and structured to inject a current across the thermal fuse **6120**, and a voltage determination circuit **6118** electrically coupled to the thermal fuse **6120** and structured to determine an injected voltage amount and a thermal fuse impedance value. The example voltage determination circuit **6118** is structured to perform a frequency analysis operation to determine the injected voltage amount. Example and non-limiting frequency analysis operations include applying analog and/or digital filters to remove frequency components of the fuse voltage that are not of interest and/or that are not related to the injected frequency. Example and non-limiting frequency analysis operations include utilizing at least one frequency analysis technique selected from the techniques such as: a Fourier transform, a fast Fourier transform, a Laplace transform, a Z transform, and/or a wavelet analysis. In certain embodiments, a frequency analysis operation is performed on filtered and/or unfiltered measurements of the thermal fuse voltage.

Certain further aspects of an example system are described following, any one or more of which may be present in certain embodiments. An example system includes where the voltage determination circuit **6118** further structured to determine the injected voltage amount by determining an amplitude of a voltage across the fuse at a frequency of interest; and/or where the frequency of interest is determined in response to a frequency of the injected voltage. An example system includes where the current

source circuit **6116** is further structured to sweep the injected current through a range of injection frequencies. An example system includes where the current source circuit **6116** is further structured to inject the current across the thermal fuse **6120** at a number of injection frequencies. An example system includes where the current source circuit **6116** is further structured to inject the current across the thermal fuse **6120** at a number of injection voltage amplitudes. An example system includes where the current source circuit **6116** is further structured to inject the current across the thermal fuse **6120** at an injection voltage amplitude determined in response to a power throughput of the thermal fuse **6120**. An example system includes where the current source circuit **6116** is further structured to inject the current across the thermal fuse **6120** at an injection voltage amplitude determined in response to a duty cycle of the vehicle **6102**.

Referencing FIG. **62**, an example system includes a vehicle **6202** having a motive electrical power path **6204**; a power distribution unit including a current protection circuit **6208** disposed in the motive electrical power path **6204**, the current protection circuit **6208** including a thermal fuse **6220** and a contactor **6222** in a series arrangement with the thermal fuse. The example system further includes a controller **6214** having a current source circuit **6216** electrically coupled to the thermal fuse and structured to determine that a load power throughput of the motive electrical power path **6204** is low, and to inject a current across the thermal fuse **6220** in response to the load power throughput of the motive electrical power path **6204** being low. The controller **6214** further includes a voltage determination circuit **6218** electrically coupled to the thermal fuse **6220** and structured to determine at least one of an injected voltage amount and a thermal fuse impedance value, and where the voltage determination circuit **6218** includes a high-pass filter having a cutoff frequency selected in response to a frequency of the injected current.

Certain further aspects of an example system are described following, any one or more of which may be present in certain embodiments. An example system includes where the current source circuit **6216** is further structured to determine the load power throughput of the motive electrical power path **6204** is low in response to the vehicle being in a shutdown state. An example system includes where the current source circuit **6216** is further structured to determine the load power throughput of the motive electrical power path **6204** is low in response to the vehicle being in a key-off state. An example system includes where the current source circuit **6216** is further structured to determine the load power throughput of the motive electrical power path **6204** is low in response to a motive torque request for the vehicle being zero. An example system includes where the power distribution unit further includes a number of fuses, and where the current source circuit **6216** is further structured to inject the current across each of the fuses in a selected sequence; and/or where the current source circuit **6216** is further structured to inject the current across a first one of the plurality of fuses at a first shutdown event of the vehicle, and to inject the current across a second one of the plurality of fuses at a second shutdown event of the vehicle (e.g., to limit run-time of the controller **6214** during shutdown events that may be of limited duration, an example current source circuit **6216** checks only one or a subset of the fuses during a given shutdown event, only checking all of the fuses over a number of shutdown events).

Referencing FIG. **62**, an example system includes a vehicle **6202** having a motive electrical power path **6204**; a power distribution unit including a current protection circuit **6308** disposed in the motive electrical power path **6204**, where the current protection circuit **6208** includes a thermal fuse **6220** and a contactor **6222** in a series arrangement with the thermal fuse **6220**. An example system further includes a controller **6214** having a current source circuit **6216** electrically coupled to the thermal fuse **6220** and structured to inject a current across the thermal fuse **6220**; and a voltage determination circuit **6218** electrically coupled to the thermal fuse **6220** and structured to determine at least one of an injected voltage amount and a thermal fuse impedance value. The example voltage determination circuit **6218** includes a high-pass filter having a cutoff frequency selected in response to a frequency of the injected current. The example controller **6214** further includes a fuse status circuit **6219** structured to determine a fuse condition value in response to the at least one of the injected voltage amount and the thermal fuse impedance value. For example, a correlation between the fuse resistance (and/or dynamic resistance or impedance) may be established for a particular fuse or type of fuse, and the example fuse status circuit **6219** determines the fuse condition value in response to the observed fuse resistance or other related parameter. In certain embodiments, the fuse status circuit **6219** may additionally include other information, such as the power throughput accumulated through the fuse, power transient events accumulated and/or power excursion events accumulated through the fuse, temperature events and/or temperature transients accumulated by the fuse, and/or an operational longevity parameter such as hours of operation, miles of operation, hours of powered operation, or the like.

Certain further aspects of an example system are described following, any one or more of which may be present in certain embodiments. An example system includes where the fuse status circuit **6219** is further structured to provide the fuse condition value by providing at least one of a fault code or a notification of the fuse condition value (e.g., storing a parameter, communicating a fault parameter to a datalink, and/or providing a fault parameter to a service tool). An example fuse status circuit **6219** further adjusts a maximum power rating for the motive electrical power path **6204**, a maximum power slew rate for the motive electrical power path; and/or adjusts a configuration of the current protection circuit in response to the fuse condition value (e.g., sharing a load between parallel fuses, bypassing the fuse at lower thresholds for power or power transients, etc.). An example power distribution unit further includes an active cooling interface **6224**, and where the fuse status circuit **6219** further adjusts the active cooling interface **6224** in response to the fuse condition value (e.g., providing additional cooling for an aging fuse, and/or lowering a threshold for an active cooling increase request for an aging fuse). An example fuse status circuit **6219** is further structured to clear the at least one of the fault code or the notification of the fuse condition value in response to the fuse condition value indicating that the fuse condition has improved (e.g., where a previous indication from the fuse condition value indicated degradation, but continued observations indicate that degradation of the fuse is not present; upon a reset by an operator or a service technician, such as an indication that the fuse has been checked or changed, etc.). An example fuse status circuit **6219** is further structured to clear the at least one of the fault code or the notification of the fuse condition value in response to a service event for the fuse (e.g., through a service tool, planned sequence of inputs, or the like); where the fuse status circuit **6219** is further structured to determine a fuse life remaining value in response to the fuse condition value

(e.g., through a correlation of the fuse condition value to the fuse life remaining value, and/or using a cutoff or threshold value of the fuse condition value to trigger an end-of-life condition or warning; for example it may be determined that a particular value of the fuse condition value indicates that the fuse is at 90% of a planned life, has 500 hours of operation remaining, etc.); where the fuse status circuit **6219** is further structured to determine the fuse life remaining value further in response to a duty cycle of the vehicle (e.g., in certain embodiments a heavier vehicle duty cycle will consume the remaining fuse life more quickly, which may be accounted for in determining the fuse life remaining value, and which may depend upon the units of fuse life remaining such as operating hours versus calendar days, and/or upon the notification type—e.g., a service light, a quantitative time remaining, etc.—to a service technician, operator, or the like); and/or where the fuse status circuit **6219** is further structured to determine the fuse life remaining value further in response to one of: an adjusted maximum power rating for the motive electrical power path, an adjusted maximum power slew rate for the motive electrical power path, and/or an adjusted configuration of the current protection circuit (e.g., where the fuse status circuit **6219** has adjusted system parameters such as power throughput, fuse loading and/or bypass configurations or thresholds, and/or cooling strategies, the fuse status circuit **6219** may account for the estimated life extension of the fuse due to these or any other mitigating strategies in place).

Referencing FIG. **63**, an example system includes a vehicle **6302** having a motive electrical power path **6304**; a power distribution unit including a current protection circuit **6308** disposed in the motive electrical power path **6304**, where the current protection circuit further includes a thermal fuse **6320** and a contactor **6322** in a series arrangement with the thermal fuse **6320**. The example system further includes a controller **6314** having a fuse thermal model circuit **6316** structured to determine a fuse temperature value of the thermal fuse **6320**, and to determine a fuse condition value in response to the fuse temperature value. An example system includes a current source circuit **6318** electrically coupled to the thermal fuse **6320** and structured to inject a current across the thermal fuse **6320**; a voltage determination circuit **6319** electrically coupled to the thermal fuse **6320** and structured to determine at least one of an injected voltage amount and a thermal fuse impedance value, and where the voltage determination circuit **6319** includes a high-pass filter having a cutoff frequency selected in response to a frequency of the injected current. An example fuse thermal model circuit **6316** further determines the fuse temperature value of the thermal fuse further in response to the at least one of the injected voltage amount and the thermal fuse impedance value. An example system includes where the fuse thermal model circuit **6316** is further structured to determine the fuse condition value by counting a number of thermal fuse temperature excursion events. Example thermal fuse temperature excursion events include: a temperature rise threshold value within a time threshold value, a temperature of the thermal fuse exceeding a threshold value, and/or more than one threshold of these (e.g., counting more severe occurrences as more than one temperature excursion event). An example system includes the fuse thermal model circuit is further determining the fuse condition value by integrating the fuse temperature value, integrating a temperature based index (e.g., based on temperatures and/or temperature change rates), and/or integrating the fuse temperature value for temperatures above a temperature threshold.

Referencing FIG. **64**, an example previously known system is depicted having a contactor and fuse combination. The example system, for purposes of illustration, is provided as a part of a power distribution unit (PDU) **6402** for an electric or partially electric vehicle. The system includes electrical storage (e.g., a battery) and a motor providing motive power for the vehicle. The electrical storage (or power storage) device may be of any type, including a battery, a fuel cell, and/or a capacitor (e.g., a super-capacitor or a hyper-capacitor), and combinations of these (e.g., a capacitor included in the circuit to assist in peak power production or management of transient operations). In certain embodiments, the electrical storage device is rechargeable (e.g., any rechargeable battery technology such as lithium ion, nickel metal-hydride, or nickel-cadmium) or recoverable (e.g., a chemical based fuel cell having reversible chemistry to recover charge generating capability). In the example system, the battery operates as a DC device and the motor operates as an AC device, with an inverter positioned therebetween to condition power for the motor. The example system includes filter capacitors **6404** providing conditioning for the main power circuit. The example system includes a low side contactor and a high side contactor. The high side contactor is in series with a fuse **6410** providing overcurrent protection for the circuit. The example system further includes a pre-charge circuit, depicted as a pre-charge relay **6408** and a pre-charge resistor **6406**. In certain embodiments, the pre-charge relay **6408** is engaged before the high side contactor is engaged, allowing capacitive elements of the overall circuit to energize through the pre-charge resistor **6406**, limiting inrush currents or other charge-up artifacts on system start-up. It can be seen that overcurrent protection is provided by the system through the fuse **6410**, and the characteristics of the fuse **6410** set the overcurrent protection for the motive circuit through the PDU. Additionally, the contactors are exposed to connection and disconnection events, including arcing, heating, and other wear.

Referencing FIG. **65**, an example PDU **6402** of the present disclosure is schematically depicted. The example PDU **6402** is utilizable in a system such as that depicted in FIG. **64**. The example PDU of FIG. **65** includes a breaker/relay **6502** component on the high side. The example arrangement of FIG. **65** is non-limiting, and any arrangement of the breaker/relay **6502** that provides designed overcurrent protection for a system using any of the principles described throughout the present disclosure is contemplated herein. The example PDU **6402** of FIG. **65** omits a fuse in series with a contactor, utilizing the breaker/relay **6502** for overcurrent protection. Any breaker/relay **6502** as described throughout the present disclosure may be utilized in a system such as that depicted in FIG. **65**. The PDU **6402** of FIG. **65** additionally utilizes a pre-charge relay **6408** and a pre-charge resistor **6406**, similar to that depicted in FIG. **64**. In the example of FIG. **65**, the breaker/relay **6502** is in parallel with the pre-charge circuit, and the relay portion of the breaker/relay **6502** may be engaged after the system has charged through the pre-charge circuit. As described throughout the present document, the breaker/relay **6502** provides for continuous and selectable overcurrent protection, while providing for full rated operation throughout range of designed operating current for the system. In previously known systems, a contactor/fuse arrangement necessarily provides for a gap in the operating range, either pushing fuse activation at least partially down into the operating current range, or moving fuse activation away from the rated range and providing for a gap in overcurrent

protection above the rated current for the system. Additionally, as described throughout the present disclosure, the breaker/relay **6502** can provide for multiple current protection regimes, selectable current protection based on operating conditions, and provides for reduced wear on the contact elements of the breaker/relay relative to previously known contactors. Accordingly, a system such as that depicted in FIG. **65** can provide reliable, responsive, and recoverable overcurrent protection relative to previously known systems.

Referencing FIG. **66**, an example PDU **6402** is schematically depicted. The example PDU **6402** is utilizable in a system such as that depicted in FIG. **1**, and has features that may be additional to or alternative to features described with regard to FIG. **65**. The example of FIG. **66** depicts an external input to the breaker/relay **6502** (Inhibit, with a schematic depiction of a keyswitch input **6504**, in the example). The breaker/relay **6502** is responsive to the external signal in a configurable manner. For example, a keyswitch ON operation may be utilized to energize the breaker/relay **6502**—either directly (e.g., hard-wiring the keyswitch circuit through a coil of the breaker/relay) or indirectly (e.g., receiving a network value representing the keyswitch position, receiving a voltage signal representing the keyswitch position, etc.), thereby charging the motive power circuit. In another example, a keyswitch OFF operation may be utilized to de-energize the breaker/relay **6502**, thereby removing power from the motive power circuit. The external signal may be of any type or of several types, including external commands generated from any portion of the system, calculated values indicating whether power should be supplied or cut (e.g., a service event, a maintenance event, an accident indicator, an emergency shutdown command, a vehicle controller request, a device protection request for some device on the vehicle, a calculation that a temperature, voltage value, or current value has exceeded a threshold, etc.). The external signal may be supplied as a hard-wired signal (e.g., an electrical connection with a voltage representing the signal value), and/or as a communication (e.g., a datalink or network communication) which may be a wired or wireless communication, and may be generated by a controller on the PDU **6402** or external to the PDU **6402** (e.g., a vehicle controller, a power management controller, or the like). The example of FIG. **66** does not depict a pre-charge circuit for convenience of illustration, but embodiments such as those depicted in FIG. **65** or FIG. **66** may have a pre-charge circuit or omit a pre-charge circuit depending upon the characteristics of the system, the design goals and requirements for the system, and the like.

Referencing FIG. **67**, an example schematic block diagram of a breaker/relay is depicted. The example breaker/relay of FIG. **67** includes a power bus **6702** (e.g., the high voltage, motive power, load power, etc.) that operates the high voltage throughput and is connected or disconnected through a contact which is schematically depicted. A voltage that is a "high voltage" on the power bus may be any value, and depends upon the load being driven and other selection parameters for the system. In certain embodiments, a high voltage is any voltage above 42V, above 72V, above 110V, above 220V, above 300V, and/or above 360V. The voltage range may be different for a motive power load versus an auxiliary load (e.g., a PTO device, pump, or the like) and may be higher or lower than these ranges. In the example, the standard on/off **6504** or control voltage is depicted on the left side (depicted as 12 V, although any value such as 6 V, 12 V, 24 V, 42 V may be utilized). The standard voltage **6504** is depicted for purposes of illustration, although the standard voltage may additionally or alternatively be a datalink or network input (e.g., where the breaker/relay has independent access to control power) in communication with a controller of the breaker/relay. In certain embodiments, the standard voltage **6504** will be the same voltage as experienced at the keyswitch, by a vehicle controller, by auxiliary (e.g., not-motive or non-load) components in a system, or the like. In certain embodiments, the standard voltage **6504** will be the keyswitch **6504** signal. The standard voltage **6504** may be configured to be received through an input control isolation **6710**.

Further in the example of FIG. **67**, an auxiliary off isolation **6708** is depicted, which provides an input for auxiliary control of the breaker/relay. In certain embodiments, the auxiliary off isolation **6708** is coupled to an electrical input **6704**, such as a selectable input at the standard voltage, an output from a controller (e.g., the controller providing electrical power as an output at a selected voltage to the auxiliary off isolation). In certain embodiments, the auxiliary off isolation **6708** may utilize a datalink or network input. In certain embodiments, for example where the breaker/relay has an internal controller, the standard on/off **6504** and the auxiliary off isolation input **6704** may be the same physical input—for example where a datalink input, network input, and/or controllable electrical signal (e.g., a controlled voltage value) provide the breaker/relay with information to determine the current requested state of the breaker/relay. In certain embodiments, the breaker/relay is a hardware only device that accepts a first voltage value at the standard on/off position, a second voltage value at the auxiliary off position, and responds through the hardware configuration of the breaker/relay to perform selected operations.

In the example of FIG. **67**, the standard on/off input **6504** and the auxiliary off input **6704** include circuit protection components (e.g. isolations **6708**, **6710**), such as surge protection and polarity protection. The example breaker/relay includes a logic circuit that provides for energizing the relay (closing the contact on the power bus) when the standard on/off input **6504** is high, and de-energizing the relay (opening the contact on the power bus) when either the standard on/off input **6504** is low or the auxiliary off input is low **6704**. In the example of FIG. **67**, the logic circuit is depicted schematically, and may be implemented as hardware elements in the breaker/relay. Additionally or alternatively, a controller in the breaker/relay may interpret input voltages, datalink signals, and/or network communications to implement the logic and determine whether to open or close the relay. The logic in the present system is depicted as a "normally-open" relay that utilizes power to close (make contact), although the breaker/relay may be configured as a "normally-closed", latching, or any other logical configuration. Additionally or alternatively, the standard on/off inputs **6504** and/or the auxiliary off inputs **6704** may utilize logical highs or logical lows to implement operations of the breaker/relay.

The example breaker/relay of FIG. **67** additionally depicts a current sensing device **6706** ("current sensing") which may be a current sensor on the bus, a calculated current value based on other system parameters, a current value passed to the breaker/relay and/or a controller operatively coupled to the breaker/relay, or any other device, mechanism, or method to determine current values on the bus. In the example of FIG. **67**, the current sensing device **6706** is coupled to the "trigger level 'off'" portion of the logical circuit, and operates to de-energize the relay when a high current value is sensed. The sensed high current value may be either a single threshold, for example as determined by

the hardware in the logic circuit, and/or a selectable threshold, for example determined by a controller based on operating conditions or other values in the system. It can be seen that, either through hardware or utilizing a controller, functions of the sensed current value such as a rate of change, accumulated current value over a threshold, etc. may be utilized additionally or alternatively to the single sensed current value. It can be seen that a breaker/relay such as that depicted in FIG. **67** provides for controllable opening of the power bus circuit at a selected threshold current value and/or functions thereof, allowing for continuous operation throughout the range of rated current for the system. Additionally, a breaker/relay such as that depicted in FIG. **67** provides for a controllable disconnection of the power bus for any selected parameter which may not be current related, such as emergency shutdown operations, a request from somewhere else in the system (e.g., a vehicle controller), service or maintenance operations, or any other selected reason. Certain embodiments throughout the present disclosure provide for additional features of the breaker/relay, any one or more of which may be included in an embodiment such as that depicted in FIG. **67**.

Referencing FIG. **68**, an example breaker/relay is depicted schematically in a cutaway view. The example breaker/relay includes generally a switching portion **6820** (upper half, or "breaker") and an actuating portion **6822** (lower half, or "relay"). A few example components of the breaker/relay are depicted and described for illustration. The example breaker/relay includes a coil **6816** and magnet core **6818** in the relay portion. In the example, energizing the coil **6816** actuates the relay, pulling the armature **6814** down to the magnet core **6818**. The armature **6814** is coupled to the movable contact **6810** in the upper portion, and is thereby moved into contact with the fixed contact **6812**, completing the circuit and allowing current flow through the power bus. In the example of FIG. **68**, the movable contact **6810** is pressed into the fixed contact **6812** by a contact force, which is a biasing spring **6804** of a selectable biasing force in the example of FIG. **68**. The movable contact **6810** can be lifted from the fixed contact **6812** with sufficient force, compressing the contact force spring **6804**, even if the armature **6814** is in the engaged (lower) position. The example of FIG. **68** depicts the armature **6814** in the disengaged (upper) position, where the movable contact **6810** is open or not in contact with the fixed contact **6812**.

The breaker portion **6820** of the breaker/relay includes a number of splitter plates **6806** in proximity to a body of the main contact, and a permanent magnet system **6802** surrounding the splitter plates **6806** and/or the arcing path between the contact gap and the splitter plates **6806**. During engagement or disengagement of the movable contact **6810** when the power bus is energized, the body of the main contact cooperates with the splitter plates **6806**, in the presence of the magnetic fields provided by the permanent magnet system **6802**, to dissipate and distribute the resulting arc, greatly reducing wear, degradation, and damage of the contacts. It has been shown that the combined aspects of the breaker portion greatly extend the life of the contacts and the switching chamber (e.g., due to lower arcing heat load over the life of the breaker/relay).

The current passing through the power bus generates a repulsive force between the contacts, or a Lorentz force. The Lorentz force is a complex function of the contact area of the contacts and the current value through the power bus. When the current is very high, the Lorentz force between the contacts sufficiently compresses the contact force spring **6804** to force the movable contact **6810** to lift off of the fixed contact **6812** and cause the relay to momentarily open. It has been found that the contact force spring **6804** can be readily tuned to provide for a physical disconnect of the contacts at a selectable value. Additionally or alternatively, the contact area between the contacts and other geometric aspects of the contacts can be manipulated to select or adjust the physical disconnect current. However, in certain embodiments, selection of the contact force spring **6804** provides for a straightforward tuning of the physical disconnect current. In certain embodiments, selection of the contact force spring **6804** includes changing the spring to change the physical disconnect current. Additionally or alternatively, the contact force spring **6804** can be adjusted in situ (e.g., compressing or releasing the spring axially) to adjust the physical disconnect current.

In certain embodiments, after the physical disconnect event (e.g., the movable contact **6810** is forced away from the fixed contact **6812**, compressing the contact force spring **6804**, while the armature **6814** is in the lower or contact position), the current through the power bus falls rapidly, and the Lorentz force decreases, causing the movable contact **6810** to be pushed by the contact force spring **6804** back toward an engaged position. In certain embodiments, the current sensor **6706** will have detected the high current event, triggering the coil **6816** to de-energize, and moving the armature **6814** back up to the disengaged position. Accordingly, as the movable contact **6810** returns to the engaged position, the armature **6814** has already moved it away such that the movable contact **6810** does not touch the fixed contact **6812** after a physical disconnect event. In certain embodiments, the threshold detected by the current sensor **6706** to disengage the armature **6814** is lower than the physical disconnect current, giving the armature **6814** a "head start" and decreasing the likelihood of a re-contact of the movable contact **6810** with the fixed contact **6812**. In many systems, a re-contact between the movable contact **6810** and the fixed contact **6812** during a very high current event can result in significant damage to the breaker/relay and/or welding of the contacts.

Referencing FIG. **69**, an example breaker/relay is depicted showing the relative movement of the armature and the movable contact. In the example, the armature at the top enforces the movable contact away from the fixed contact, resulting in a disconnection of the power bus. The armature at the bottom pulls the moving contact down to engage the fixed contact, resulting in a connection of the power bus. The motion arrow **6904** in FIG. **69** references the movement of the armature that will occur as the armature moves from the open state to the closed state after the coil is energized. Any reference throughout the disclosure to "up" or "down" are for clarity of description, and do not reference actual vertical relationships of any components of the breaker/relay. A breaker/relay may be positioned such that movement of the armature is along any axis, including up-down, down-up, a horizontal orientation, and/or any other orientation. In certain embodiments, the armature returns to the up or disengaged position utilizing a passive element, such as a biasing spring or reverse spring (e.g., positioned between the armature and the permanent magnet, and/or a housing of one or more of these), resulting in a "normally-open" logical operation for the breaker/relay. The biasing spring or reverse spring does not appear in the schematic cutaway view of FIG. **69**. As described throughout the present disclosure, the breaker/relay may be normally-open, normally-closed, latching, or in any other logical configuration, with appropriate adjustments to the hardware and/or control elements to provide such a configuration.

Referencing FIG. **69**A, an example breaker/relay is depicted in a closed position. The armature in the example of FIG. **69**A has moved down, and the movable contact **6810** has additionally moved down with the armature **6814** to an engaged position with the fixed contact, closing the circuit and allowing power to pass through the power bus. The contact force spring **6804** in the position depicted in FIG. **69**A is compressed, providing a contact force to the movable contact **6810** against the fixed contact. It can be seen that the movable contact is provided with movement space, where a force sufficient to overcome the contact force **6804** spring can lift the movable contact **6810** off of the fixed contact, thereby opening the circuit and preventing power to pass through the power bus.

Referencing FIG. **70**, an operating diagram for a previously known contactor-fuse system and a breaker/relay system consistent with embodiments of the present disclosure are depicted schematically. In the example of FIG. **70**, an operating current bar is depicted at the left, having two general operating regimes—operation within rated current values (e.g., within designed current limits for a system, such as regions **7004**, **7006**) and operation above rated current values (e.g., region **7008**). Additionally, in the example of FIG. **70**, operations within the rated current are sub-divided into a lower region **7004** and an upper region **7006**. In the example of FIG. **70**, the lower region **7004** and upper region **7006** are illustrative examples to depict operating modes within the rated current region—for example the lower region **7004** may be associated with lower power operation such as operation of accessories and the upper region **7006** may be associated with higher power operation such as provision of motive power or pumping power. The regions **7004**, **7006** provide for a notional distinction between operating conditions, and the actual operations that occur within the lower region **7004** and upper region **7006** are not important for the illustration of FIG. **70**. For example, an upper region **7006** for one illustrative system may be motive power to move a vehicle (e.g., where the lower region **7004** is another function such as power to communications or accessories), where a lower region **7004** for another illustrative system may be motive power to move a vehicle (e.g., where the upper region **7006** is another function such as charging or high performance motive power).

In the example of FIG. **70**, an operation region for the contactor-fuse system is depicted in the middle. The contactor provides for full operation up to the rated power. A design choice may allow for the contactor to provide operation slightly above rated power (e.g., where system risk is accepted to provide higher capability) or slightly below rated power (e.g., where system performance is compromised to protect the system components). The contactor-fuse system further includes an operating region for the fuse, where the fuse activates at a selected current value. It can be seen that an operational gap **7002** occurs, where the fuse does not activate due to the low current value, but the contactor also does not support operations in the gap **7002** region. The gap **7002** can only be closed by overlapping operation of the contactor and/or the fuse, necessarily compromising the system risk profile or performance. If the fuse region is extended lower, then rated operation under certain duty cycles may trigger a fuse event and loss of mission. Additionally, as the contactor and fuse experience wear or degradation, the operating region for the contactor-fuse system will move, resulting in inconsistent system performance, loss of protection, and/or unnecessary fuse events. Additionally, the failure mode of a fuse results in extended exposure of the system to high currents due to the fuse melt period and extended arcing time through the activating fuse. Finally, operations of the contactor at the upper range of the contactor operating region results in undesirable heating and degradation of the contactor.

In the example of FIG. **70**, an operating region for a breaker/relay consistent with certain embodiments of the present disclosure is depicted. The breaker/relay provides for a smooth and selectable functionality throughout the operating current bar. The breaker/relay provides for a highly capable contact that does not operate near the upper region of its current capacity, reducing heating and degradation from high, within rated range, operations, such as in the upper region **7006**. Additionally, the current sensor and related disconnect operations allow for a selectable disconnection when operation is above the rated current for the system. Further, a physical disconnect current is available (e.g., reference FIG. **68** and the associated disclosure) that provides for immediate disconnection of the power bus at very high current values. In certain embodiments, arc dissipation features of the breaker/relay additionally provide for a faster and less damaging disconnect event than experienced by previously known contactor-fuse arrangements. Additionally, the breaker/relay provides for a recoverable disconnect operation, where a mere command to the breaker/relay will again provide connection without a service event. Accordingly, if the system failure causing the high current event is resolved or consistent with a restart, the system can resume operations with the breaker/relay as soon as desired, without having to diagnose a fuse event or change out the fuse.

Referencing FIG. **71**, an example procedure **7100** is depicted to disconnect a power bus. The example procedure **7100** includes an operation **7102** to detect a current value, for example utilizing a current sensor (reference FIG. **68**). The procedure **7100** further includes an operation **7104** to determine if an overcurrent event is detected. For example, the detected current value, a function thereof, or a calculated parameter determined in response to the current value, can be compared to a threshold value to determine if an overcurrent event is detected. The example procedure **7100** further includes an operation **7106** to command the contacts open, for example by de-energizing a coil and thereby moving an armature to a position that opens the contacts. The overcurrent threshold may be any value, and may be modified in real-time and/or in accordance with operating conditions. The value for the overcurrent threshold depends upon the application and the components in the system. Example and non-limiting overcurrent values include 100 A, 200 A, 400 A, 1 kA (1,000 amps), 1.5 kA, 3 kA, and 6 kA.

Referencing FIG. **72**, an example procedure **7200** is depicted to perform a physical disconnect. The example procedure **7200** includes an operation **7202** to accept current throughput, for example as current passing through coupled contacts in a power bus. The example procedure **7200** further includes an operation **7204** to determine whether the current resulting force (e.g., a Lorentz force between a movable contact and a fixed contact) exceeds a contact force (e.g., as provide by a contact force spring). The example procedure **7200** further includes an operation **7206** to open the contacts through a physical response—for example as the Lorentz force overcoming the contact force spring and moving the movable contact away from the fixed contact. The physical disconnect current may be any value, and depends upon the application and the components in the system. Example and non-limiting physical disconnect currents include 400 A, 1 kA, 2 kA, 4.5 kA, 9 kA, and 20 kA.

Referencing FIG. **73**, an example procedure **7300** is depicted to open contacts in response to an overcurrent event, and/or in response to any other selected parameters. The example procedure **7300** includes an operation **7302** to power a system on, for example via a keyswitch or other circuit, and/or via recognition of a keyswitch ON condition. The procedure **7300** further includes an operation **7304** to determine whether contact enabling conditions are met, for example immediately after the keyswitch ON, after a selected time period, after a system pre-charge event is determined to be completed, and/or according to any other selected conditions. In certain embodiments, where the operation **7304** determines that contact enabling conditions are not met, the procedure **7300** holds on operation **7304** until contact enabling conditions are met. Any other response to operation **7304** determining that contact enabling conditions are not met is contemplated herein, including requesting a permission to enable contact conditions, setting a fault code, or the like. In response to operation **7304** determining that contact conditions are met, procedure **7300** further includes an operation **7306** to close the contacts (e.g., energizing a coil to move an armature), and an operation **7202** to accept current throughput. The example procedure **7300** further includes operation **7200** performing a physical disconnect if the accepted current is high enough, and proceeds to operation **7102** to detect a current value through the power bus. The procedure **7300** further includes an operation **7104** to determine if an overcurrent event is detected (operation **7104**, in certain embodiments, may be set at a lower current value than the physical disconnect current tested at operation **7200**). In response to the operation **7104** determining that an overcurrent event is detected, procedure **7300** includes an operation **7312** to command the contacts open. In response to operation **7104** determining that an overcurrent event is not detected, procedure **7300** includes an operation **7308** to detect auxiliary commands (e.g., an auxiliary off input), and an operation **7310** to determine if an auxiliary command is present to open the contacts (e.g., a logical high, logical low, specified value, lack of a specified value, etc.). In response to the operation **7310** determining that an auxiliary command is present to open the contacts, procedure **7300** includes the operation **7312** to command the contacts open. In response to the operation **7310** determining that an auxiliary command is not present to open the contacts (e.g., branch "CONTINUE OPERATIONS" in the example of FIG. **73**) procedure returns to operation **7306**.

Referencing FIG. **74**, an example procedure **7400** to restore operations of a breaker/relay after a contact opening event. The example procedure **7400** includes an operation **7300** to open the contacts of the breaker/relay, for example an operation wherein the contacts are opened due to a physical disconnect, an overcurrent detection, and/or an auxiliary off command. The procedure **7400** further includes an operation **7402** to determine if contact reset conditions are present. Example and non-limiting operations **7402** include determining that contact enabling conditions are met, determining that a fault code value has been reset, determining that a system controller is requesting a contact reset, and/or any other contact reset conditions. The procedure **7400** further includes an operation **7404** to close the contacts, for example by providing power to the coil to move the armature.

Referencing FIG. **75**, an example previously known mobile power circuit is depicted. The example mobile power circuit is similar to the mobile power circuit depicted in FIG. **64**. The example of FIG. **75** includes a junction box housing the pre-charge circuit, a high side relay, and a low side relay. In certain embodiments, the pre-charge circuit and the high side relay are provided in a housing within the junction box. In the example of FIG. **75**, a fuse **6410** provides overcurrent protection on the high side, and is housed with the main relays and the pre-charge resistor **6406** within a PDU housing **7500**.

Referencing FIG. **76**, an example mobile power circuit including a breaker/relay **6502** disposed in the high side circuit, and a second breaker/relay **6502** positioned in the low side circuit. Each breaker/relay **6502**, in certain embodiments, provides continuous overcurrent control throughout the operating region of the mobile application as described throughout the present disclosure. Additionally, it can be seen that the low side breaker/relay **6502** provides for overcurrent protection in all operating conditions, including during a pre-charge operation when the high side breaker/relay **6502** may be bypassed so the mobile power circuit can pre-charge through the pre-charge resistor **6406**. In certain embodiments, both the high side breaker/relay **6502** and the low side breaker/relay **6502** provide additional benefits such as rapid arc dispersion, low wear during connection and disconnection events, and improved heating characteristics during high, but in rated range, current operation of the mobile circuit.

Referencing FIG. **77**, an example power distribution arrangement for a mobile application is depicted. The embodiment of FIG. **77** is similar to the embodiment of FIG. **76**, with a high side breaker/relay **6502** and a low side breaker/relay **6502**. Four operating regimes of the embodiment of FIG. **77** are described herein, including pre-charge operations (e.g., at system power-on for the mobile application), powering operations for loads (e.g., providing motive power or auxiliary power for the mobile application), regeneration operations (e.g., recovering power from a motive load or auxiliary load), and charging operations (e.g., connection of a dedicated charger to the system). In the example of FIG. **77**, the low side breaker/relay **6502** has an associated current sensor **6706**. In the example of FIG. **77**, the low side breaker/relay **6502** is in the loop during all operations, and can provide current protection for any operating conditions. To save costs, a current sensor for the high side breaker/relay **6502** can be omitted. In certain embodiments, for protection of the breaker/relay contacts **6502**, a local current sensor may be included for each breaker/relay **6502**, to provide for operations to protect the contacts in the event of a physical current disconnection (e.g., reference FIG. **70**). It can be seen that additional contactors and/or breaker/relays may be provided beyond those shown—for example to isolate the charge circuit, to route power through selected ones of the motive loads and/or auxiliary loads, and/or to prevent power flow through an inverter (not shown) during charging operations. Additionally or alternatively, certain components depicted in FIG. **77** may not be present in certain embodiments. For example, a low-side contactor on the charge circuit may not be present, and any one or more of the motive loads (traction motor drive) or auxiliary loads may not be present. During a pre-charge operation, a pre-charge contactor **7702** may be closed while the high-side breaker/relay **6502** is open, where the low-side breaker/relay **6502** provides for current protection (in addition or as an alternative to a pre-charge fuse) during pre-charge operations. During charging operations, the low-side breaker/relay **6502** provides current protection, while the high-side breaker/relay **6502** is bypassed by the charging circuit.

Referencing FIG. **78**, an example power distribution management for a mobile application is depicted. The embodiment of FIG. **78** is similar to the embodiment of FIG. **77**, except that the high side breaker/relay **6502** is in the loop during all operations, and the low side breaker/relay **6502** is not in the loop during charging operations. In the example of FIG. **78**, the high side breaker/relay **6502** may include current sensing associated therewith to provide protection for the contacts during a physical current disconnection. In certain embodiments, depending upon the circuit dynamics of the mobile application, the current sensor **6706** depicted on the low side may be sufficient to provide protection for the contacts of the high side breaker/relay **6502** without a dedicated current sensor for the high side breaker/relay **6502**. During pre-charge operations for the embodiment of FIG. **78**, current protection is not present, or is provided by a pre-charge fuse. During charging operations for the embodiment of FIG. **78**, current protection is provided by the high-side breaker/relay **6502**.

Referencing FIG. **79**, an example power distribution management for a mobile application is depicted. The embodiment of FIG. **79** is similar to the embodiment of FIG. **77**, except that the high side breaker/relay **6502** is exchanged for a standard contactor. In the example of FIG. **79**, the low side breaker/relay **6502** provides for current protection during all operating conditions, and the system otherwise uses conventional components. In certain embodiments, improved current protection capability is desirable, but contactor wear may not be as much of a concern, and a trade-off for inexpensive contactors at other positions in the mobile power circuit away from the low side breaker/relay **6502** may be an acceptable solution. Additionally, the presence of the low side breaker/relay **6502** in the circuit for all operating conditions can reduce the wear on the conventional contactors in the mobile power circuit through timing of connections such that the low side breaker/relay **6502** reduces the number of connection and disconnection events on other contactors while the system is charged.

Referencing FIG. **80**, an example power distribution management for a mobile application is depicted. The embodiment of FIG. **80** is similar to the embodiment of FIG. **78**, except that the low side breaker/relay is replaced with a contactor, and the low side charging circuit is routed through the low side contactor. The low side charging circuit may bypass the low side contactor in certain embodiments, similar to the embodiment of FIG. **78**. It can be seen in FIG. **80** that a circuit path lacking short-circuit protection exists through the pre-charge circuit during pre-charging operations when the high side breaker/relay **6502** is being bypassed, unless protection is provided by a pre-charge fuse. In certain embodiments, a fuse in the pre-charge circuit (not shown) may be provided to provide for short-circuit protection during the pre-charge operating condition, and/or the unprotected pre-charge operation may be an acceptable risk. In any of the embodiments depicted throughout the present disclosure, fuses may be included, potentially in-line with a breaker/relay **6502**, depending upon the benefits sought from the breaker/relay **6502** for the particular embodiment. In certain embodiments, an included fuse with a breaker/relay **6502** may be configured to activate at a very high current value that is expected to be higher than the physical disconnection current of the breaker/relay **6502**, for example as a redundant protection for the circuit, and/or to provide for a long-life fuse that is expected to last for a selected period, such as the service life of the electric mobile application.

Referencing FIG. **81**, an example power distribution management for a mobile application is depicted, consistent with the embodiment depicted in FIG. **77**. Power flow during pre-charge operations is depicted schematically in FIG. **81**, with arrows showing the power flow path. The operations described in relation to FIG. **81** can be understood in the context of any of the embodiments described throughout the present disclosure. During pre-charge operations, the pre-charge contactor **7702** is closed and the low side breaker/relay **6502** is closed, providing power through the mobile circuit and through the pre-charge resistor **6406**. The pre-charge operation allows for capacitive elements of the mobile circuit to be charged before the high side breaker/relay **6502** is closed. During pre-charge operations in the embodiment of FIG. **81**, the low side breaker/relay **6502** provides for overcurrent protection of the circuit. After the pre-charge operation is complete, which may be determined in an open loop (e.g. using a timer) manner or in a closed loop (e.g., detecting a voltage drop across the batter terminals, or detecting the current through the circuit), the high side breaker/relay **6502** is closed and the pre-charge contactor **7702** may be opened.

Referencing FIG. **82**, an example power distribution management for a mobile application is depicted, consistent with the embodiment depicted in FIG. **77**. Power flow during load powering operations is depicted in FIG. **82**, with arrows showing the power flow path. The operations described in relation to FIG. **82** can be understood in the context of any of the embodiments described throughout the present disclosure. During load powering operations, in the example the pre-charge contactor **7702** is open, and power flows through the high side breaker/relay **6502** and the low side breaker/relay **6502**. The embodiment of FIG. **82** depicts a traction motor load being powered, but one or more auxiliary loads may additionally or alternatively be powered in a similar manner. During load powering operations, both the high side breaker/relay **6502** and the low side breaker/relay **6502** provide overcurrent protection. In certain embodiments, the high side breaker/relay **6502** and the low side breaker/relay **6502** may have the same or distinct current ratings. For example, where one of the high side breaker/relay **6502** or low side breaker/relay **6502** are easier to service or less expensive, that one of the breaker/relays **6502** may have a lower overall current rating to provide for a system where a predictable one of the breaker/relays **6502** fails first. Additionally or alternatively, certain operations on the system may have a higher current rating—for example charging operations where the charging circuit is routed only through one of the breaker/relays **6502** (e.g., the low side breaker/relay in the embodiment of FIG. **82**), and thus one of the breaker/relays **6502** may have a higher current rating than the other. In certain embodiments, a breaker/relay **6502** current rating may be reflected in the contact materials of the movable contact and the fixed contact, by a contact surface area of the movable contact and the fixed contact, by threshold settings for the controlled operations in response to detected current, by a number or arrangement of splitter plates, by splitter plate materials and geometry, by the magnet strength and geometry of the permanent magnet system around the splitter plates, by the contact force of the contact force spring, and/or by the breaker/relay design elements (e.g., contact surface area and contact spring force) determining the physical disconnection current due to the Lorentz force on the contacts.

Referencing FIG. **83**, an example power distribution management for a mobile application is depicted, consistent with the embodiment depicted in FIG. **77**. Power flow

during regeneration operations is depicted in FIG. **83**, with arrows showing the flow path. Regenerative operations from motive loads are depicted, for example as might be experienced during regenerative braking, but any regenerative operations from any loads in the system are contemplated herein. During regeneration operations, the high side breaker/relay **6502** and the low side breaker/relay **6502** are closed, and the pre-charge contactor **7702** may be open. Accordingly, both the high side breaker/relay **6502** and the low side breaker/relay **6502** provide overcurrent protection during regeneration operations of the system.

Referencing FIG. **84**, an example power distribution management for a mobile application is depicted, consistent with the embodiment depicted in FIG. **77**. Power flow during charging operations is depicted in FIG. **84**, with arrows showing the flow path. Charging may be with an external charging device, and may include a high current quick charging operation which may provide for higher current operations than is associated with a rated power for the load(s). In the operations depicted in FIG. **84**, the low side breaker/relay **6502** is closed, and contactors in the charging circuit are closed, providing the power flow path as depicted. In certain embodiments, the high side breaker/relay **6502** and the pre-charge relay **7702** may be open, for example to isolate an inverter (not shown) from the circuit during charging operations. In certain embodiments, the high side breaker/relay **6502** may be closed, for example where isolation of the inverter during charging operations is not required, and/or where rapid operation without a pre-charging cycle after the charging may be desired. During charging operations, the low side breaker/relay **6502** provides overcurrent protection in the example of FIG. **84**.

Referencing FIG. **85**, another cutaway schematic view of a breaker/relay is depicted. In the example of FIG. **85**, circuit breaking and connecting components are depicted on the breaker side **6820**, and contactor operation components are depicted on the relay side **6822**. The depicted breaker/relay is an example and depicts a single pole, single throw breaker/relay. Additionally, or alternatively, a breaker/relay may be a dual pole (e.g., operating two distinct circuits, a parallel path for one of the circuits to provide additional current capability, and/or one pole providing high-side coupling and the other pole providing low-side coupling). In certain embodiments, a breaker/relay having more than one pole can control the poles independently, or they may be operated together utilizing the same armature. In certain embodiments, both poles have arc diffusion protection provided by the same splitter plates, or by independent sets of splitter plates. In certain embodiments, both poles have arc diffusion protection provided by the same permanent magnet system, or by independent permanent magnet systems.

Referencing FIG. **86**, another example of a schematic logic diagram for a breaker/relay is depicted. The example of FIG. **86** includes an emergency or auxiliary input **8602**, which is processed by an input isolation **8604**. The emergency or auxiliary input **8602** may replace or be in addition to any other auxiliary input, and provides for the capability of a particular application to control operations of the breaker/relay for a selected response to any desired aspect of the system—including without limitation, allowing for a disconnect assurance during service, during an emergency, and/or according to any desired control logic.

Referencing FIG. **87**, a detailed cutaway view of a contact portion of an example breaker/relay is depicted. The contact portion of FIG. **87** includes an example configuration for the contact surface of the moveable contact **6810** and the fixed contact **6812**. The configuration of the contacts is a part of the system that contributes to the physical opening force of the contacts, and can be configured with any shape or area to provide the desired response to high currents occurring in the associated circuit.

Referencing FIG. **88**, an example breaker/relay is depicted with portions of the housing removed for illustration. The example breaker/relay includes two moveable contacts engaging two fixed contacts. In the example of FIG. **88**, the moveable contacts are coupled and operated by the same armature **6814**, with contact force provided by the contact spring **6804**. In the example of FIG. **88**, the contacts are electrically coupled through a bus bar **8802**. In the example, the bus bar **8802** transitions directly between the contacts, and is not significantly exposed to the current carrying portion of the bus bar including the fixed contacts. In certain embodiments, the bus bar **8802** can include a trajectory that exposes a portion of the bus bar **8802** into proximity with the current carrying member of the fixed contacts, thereby contributing to the Lorentz force that provides the physical disconnect of the breaker/relay. In certain embodiments, both of the area of the bus bar **8802** exposed to the fixed contact current carrying portion, and the proximity of the bus bar **8802** to the fixed contact current carrying portion are design elements that allow for configuration of the Lorentz force response.

Referencing FIG. **89**, an example power management arrangement for a mobile application is depicted. The example of FIG. **89** includes a breaker/relay **6502** disposed on the high side of the power circuit, and a pre-charge contactor, resistor, and fuse, coupled in parallel to the high side breaker/relay **6502**. In the example of FIG. **89**, the breaker/relay **6502** is a dual pole breaker/relay **6502**, for example to provide additional current capability through the contacts for the power circuit. In the example of FIG. **89**, a controller **8902** is depicted that performs control functions for the breaker/relay **6502** and for the power management arrangement. For example, the controller **8902** receives a keyswitch input, performs pre-charge operations, operates the closing of the breaker/relay, and responds to a high current event by opening the contacts of the breaker/relay. In another example, the controller **8902** performs shutdown operations of the power management arrangement, such as opening the breaker/relay after the keyswitch is off, or in response to an auxiliary, emergency, or other input requesting that power be disconnected.

Further referencing FIG. **89**, an example power distribution management for a mobile application is depicted schematically, which may be utilized in whole or part with any other systems or aspects of the present disclosure. An example power distribution management system includes a dual pole breaker/relay—the example of FIG. **89** includes a dual pole breaker/relay (e.g., using one set of contacts per pole) having a single magnetic drive (e.g., a magnetic actuator). In certain embodiments, both contacts are mechanically linked such that they open or close together (e.g., operating as a dual pole single throw contactor). In certain embodiments, the contactors may share one or more arc suppression aspects (e.g., splitter plates and/or permanent magnet), and/or may have individual arc suppression aspects. In certain embodiments, arc suppression aspects may be partially shared (e.g., some splitter plates in proximity to both contacts) and/or partially individual (e.g., some splitter plates in proximity to only one or the other of the contacts). In certain embodiments, various features of the contactors may be shared and other features of the contactors individually supplied—such as control commands or actuation (e.g., a dual pole, dual throw arrangement), arc

suppression aspects, and/or housings. The example of FIG. **89** additionally depicts a separate contactor (e.g., the lower left of the three (3) depicted contacts) which is separately controllable to provide contact management for a pre-charge circuit for the power distribution management system. In certain embodiments, the pre-charge contactor may be integrated with the dual pole contacts—for example within a same housing as the dual pole contacts and/or with pre-charge coupling provided as one of the dual pole contacts. The example of FIG. **89** depicts a fuse on the pre-charge circuit, and a further overall fuse on a battery low side. The presence of fuses depicted is optional and non-limiting, and fuses may be present in other locations, omitted, and/or replaced (e.g., by a breaker/relay as described throughout the present disclosure, and/or as a pole on a dual pole or multi-pole breaker/relay). In certain embodiments, a pre-charge circuit may be contained within a power distribution unit separate from the breaker/relay and/or containing the breaker/relay, as a solid state pre-charge circuit, and/or as a mechanical/electrical circuit positioned elsewhere in the system and/or within the breaker/relay housing.

The electrical arrangement of poles in FIG. **89** is a schematic example, and not limiting to arrangements of the system for particular embodiments. In certain embodiments, each pole of the dual pole breaker/relay (and/or each pole or a subset of poles in a multi pole breaker/relay) may provide selectable electrical coupling for a same circuit, for separate circuits, and/or for a selected circuit (e.g., using controllable switches or connectors elsewhere in the system—not depicted). In certain embodiments, the power distribution management system further includes a high resolution current sensor, and/or current sensing on more than one pole of the dual pole or multi pole breaker/relay. In certain embodiments, a controller is communicatively coupled to the one or more high resolution current sensors, and utilizes the one or more high resolution current sensors for any operations described throughout the present disclosure (e.g., to command one or more of the contacts to an open position to avoid re-contact after opening) and/or to communicate information determined from the current sensor (e.g., the electrical current, or other information derived therefrom) to another controller in the system such as a vehicle controller. In certain embodiments, each contactor of the dual pole or multi-pole breaker/relay includes an arrangement configured to open the contact with a Lorentz force response due to high current through the circuit of the contactor as described throughout the present disclosure. In certain embodiments, one contact has an arrangement to open with a Lorentz force response, and the other contactor opens due to mechanical linkage to the responding contactor. In certain embodiments, each contact has an arrangement to open with a Lorentz force response, for example to provide circuit protection redundancy. In certain embodiments, each contact has an arrangement to open with a Lorentz force response, where each contact has a separate configured threshold for opening response, and/or where each contact is separably controllable (e.g., with a separate magnetic actuator or other controlled actuator).

Referencing FIG. **90**A, a schematic depiction of an adaptive system using a multi-port power converter is depicted for hybrid vehicles. The utilization of the terms multi-port, X port, and/or X-in-1 port indicate that a power converter includes one or more ports **9007***a-d* that can serve distinct power loads and/or power sources with one or more varying electrical characteristics. A configurable power converter may have one or more fixed ports, one or more configurable ports, or combinations of these. The example system **9000** includes a multi-port power converter **9008**, having a number of ports structured to connect to electrical sources and/or loads. The multi-port power converter **9008** in the example of FIG. **90**A is coupled to four electrical loads/sources **9006** (**9006***a*-**9006***d*), although any number of loads and/or sources may be connected to as described throughout the present disclosure. In the example, each load/source **9006***a* to **9006***d* has a distinct electrical characteristic, for example current type (e.g., AC, DC), frequency components (phase(s) and/or frequencies), and/or voltage. In certain embodiments, the load/source **9006** may have additional electrical characteristics or requirements—for example a load which is a motor may have rise time and/or response time requirements. The example multi-port power converter **9008** is able to configure the electrical characteristics to the multi-port connections without a change to the hardware of the multi-port power converter **108**, and further is able to support configuration changes for the multi-port power converter **108** at various selectable stages of manufacture, application selection, and/or in-use operation as described throughout the present disclosure.

Referencing FIG. **90**B, a schematic depiction of an adaptive system using a multi-port power converter is depicted for hybrid vehicles. The utilization of the terms multi-port, X port, and/or X-in-1 port indicate that a power converter includes one or more ports **9007***e-i* that can serve distinct power loads and/or power sources with one or more varying electrical characteristics. A configurable power converter may have one or more fixed ports, one or more configurable ports, or combinations of these. The example system **9001** includes a multi-port power converter **9008**, having a number of ports structured to connect to electrical sources and/or loads. The plurality of ports may include at least two AC interface ports **9007***h* and **9007***i* and at least three DC interface ports **9007***e*, **9007***f*, **9007***g*. The multi-port power converter **9008** in the example of FIG. **90**B is coupled to at least five electrical loads/sources **9006** (**9006***e*-**90061**). In the example of FIG. **90**B, there are three DC load/sources (e.g., **9006***e*, **9006***f*, and **9006***g*) and two AC load/sources (e.g., **9006***h* and **9006***i*).

The example system **9000** includes a converter/inverter bank **9004**. The converter/inverter bank **9004** includes a plurality of solid state components that can be converted to various configurations of DC/DC conversion interfaces, and/or DC/AC conversion interfaces, to selected ones of the ports on the multi-port power converter **9008**. An example configuration includes a plurality of half-bridge components having connectivity selected by a plurality of solid state switches **9009** in the converter/inverter bank **9004**. Accordingly, each of the ports on the multi-port power converter **9008** can be configured for the selected DC/DC and/or DC/AC interface according to the electrical load/sources **9006** in the application. In certain embodiments, the half-bridge components include silicon carbide (SiC) half-bridges. SiC half-bridges, in certain embodiments, can operate at very high switching frequencies and high efficiencies with low electrical losses in the converter/inverter components.

The selection of the components in the converter/inverter bank **9004** may be made according to the number of different load types to be supported. Accordingly, one of skill in the art can design a particular converter/inverter bank **9004** to support a wide variety of contemplated applications, each of which can be supported by manipulating only solid state switches and drive controls for the components of the converter/inverter bank **9004**, without changes to the hardware of the multi-port power converter **9008**. For example,

if a given class of off-road vehicles can be supported by 4 distinct DC voltage interactions for loads and power sources (e.g., a high voltage battery, a 12-V circuit, a 24-V circuit, and a 48-V circuit), and 2 distinct AC voltage interactions (including potentially driving the load and accepting regenerative inputs), then a configurable bank of components for the converter/inverter bank **9004** and a sufficient number of ports are packaged that will support the entire class of off-road vehicles without changes to the hardware of the multi-port power converter **9008**. Accordingly, a given application can be supported at a selected point in the manufacturing cycle—either through calibration in a controller **9002** at design time of the multi-port power converter **9008** (e.g., before integration with an OEM), by an OEM assembling a vehicle and/or driveline for the vehicle, and/or by a bodybuilder assembling a final vehicle for a particular application. The controller **9002** may be accessible by the use of a manufacturing tool, a service tool, or the like, to configure the component bank **9004** in the multi-port power converter **9008**, and/or to define the drive controls for the components in the component bank **9004** to meet the electrical characteristics of the loads/sources **9006** in the application.

In certain embodiments, a DC/DC conversion can be supported by a half-bridge having 4 MOSFET switches, and an AC/DC conversion can be supported by a half-bridge having 6 MOSFET switches. In certain embodiments, the half-bridges may be modular and can be combined as needed to support a particular electrical input, output, or interface. Additionally or alternatively, H-bridge circuits, H-bridge circuits supporting a three-phase output, or other components may be included in the component bank **9004**, depending upon the requirements for the class of applications to be supported by a particular multi-port power converter **9008**.

The utilization of a multi-port power converter **9008** provides for a number of benefits and features that allow for integration of a system **9000** with a wide variety of applications without changes to the hardware. For example, the multi-port power converter **9008** allows for centralization of power management on a given application, rather than having a number of converters and/or inverters distributed throughout the vehicle or application. Accordingly, cooling requirements can be reduced, especially in the number of interfaces and connections for cooling to be supplied. Additionally, the electrical connections for power conversion throughout the vehicle or application can be standardized, and the number of connections reduced. Each connection drives a point of potential failure or environmental intrusion, and requires specification, testing, and other integration requirements. The use of a multi-port power converter **9008** greatly simplifies integration, and allows for electrification and hybridization of many applications, such as off-road applications with a wide variety of load types, that have not adopted electrification and/or hybridization in previously known systems. Further, the ability of the multi-port power converter **108** to configure port outputs and inputs allows for a wider variety of loads on a particular system to be readily integrated into an electrification and/or hybridization scheme, increasing the overall efficiency gains that can be achieved for the application, and enabling use cases for electrification and hybridization that would otherwise be prohibitive to due design and integration challenges that do are not commercially justifiable for complex designs and/or low volume applications. The ability to configure the multi-port power converter **108** without changes to hardware, interfaces, and at selected points in the manufacturing cycle additionally supports providing electrification and/or hybridization for many applications where design control and integration responsibilities may vary across the industry. Further, the multi-port power converter **9008** is configurable after initial use by an end user—for example to allow changes to a power rating or other systemic change for the vehicle or application (which could be accomplished remotely via an update to the controller **9002**), changes in electrical components on the vehicle or application that a customer may implement, and/or changes in electrical components made during service, remanufacture, or other post-use events.

Referencing FIG. **91**, an example controller **9002** is depicted having a number of circuits structured to functionally execute certain operations and aspects of the controller **9002**. The controller **9002** is depicted as a single device positioned on the multi-port power converter **108**, but the controller **9002** may be a distributed device having portions positioned on a vehicle controller, in a manufacturing or service tool, on a server (e.g., a cloud-based or internet accessible server), or combinations of these. In certain embodiments, aspects of the controller **9002** may be implemented as computer readable instructions stored on a memory, as logic circuits or other hardware devices structured to perform certain operations of the controller **9002**, and/or as sensors, data communications, electrical interfaces, or other aspects not depicted. The example controller **9002** includes a component bank configuration circuit **9102** structured to interpret a port electrical interface description **9104**. The example of FIG. **91** depicts the port electrical interface description **9104** communicated to the component bank configuration circuit **9102**, but the port electrical interface description **9104** may additionally or alternatively be stored in a memory on or in communication with the controller **9002**. The example controller **9002** further includes a component bank implementation circuit **9106** that provides solid state switch states **9108** in response to the port electrical interface description **9104**, where the component bank **9004** is responsive to the solid state switch states **9108**, thereby setting up the connections between components on the component bank and the ports on the multi-port power converter **9008** to provide the desired electrical interfaces, including varying DC voltage inputs/outputs and/or varying AC voltage inputs/outputs.

The example controller **9002** further includes a load/source drive description circuit **9110** structured to interpret source/load drive characteristics **9112**. The source/load drive characteristics **9112** are depicted as being communicated to the controller **9002**, but may additionally or alternatively be stored in a memory on or in communication with the controller **9002**. The source/load drive characteristics **9112** provide for any characteristics for driving a particular load, such as required phases, frequencies, rise time parameters, and/or may include qualitative functions such as emergency shutoff commands required to be supported or the like. The example controller **9002** further includes a load/source drive implementation circuit **9114** that provides a component driver configuration **9116**. The component driver configuration **9116** may be, for example, the actual gate driver controls utilized to drive the components of the component bank **9004**. In certain embodiments, components of a component bank **9004**, such as SiC solid state inverter/converter components, are provided with gate driver controls from the manufacturer. In certain embodiments, the component driver configuration **9116** provides interface commands and requests that are passed to the manufacturer gate driver controls to make appropriate requests for driving the com-

ponents such that the source/load drive characteristics **9112** are met. The actual arrangement and location of the gate driver controls is not limiting, and any arrangement is contemplated herein and can be accommodated for a particular system. It can be seen that the example controller **9002** of FIG. **91** provides for rapid configuration of electrical characteristics at the ports of a multi-port power converter **9008**, including configured driver controls that are motor agnostic (e.g., able to scale across a range of motor capabilities, and meet the mechanical requirements of the motor), without hardware changes to the multi-port power converter **9008**.

Referencing FIG. **151**, an example component bank configuration circuit **9102** may be further structured to interpret a port configuration service request value (e.g., port configuration request **15102**), and wherein the component bank implementation circuit **9106** further provides the solid state switch states **9108** in response to the port configuration service request value **15102**. The component bank configuration circuit **9102** may be further structured to interpret a port configuration definition value **15104**, and wherein the component bank implementation circuit **9106** further provides the solid state switch states in response to the port configuration definition value **15104**. Accordingly, the controller **9002** for a system may be responsive to configuration requests and/or configuration definitions for events such as: service, integration, manufacture, remanufacture, upgrades, upfits, and/or changes to an application of the system.

Referencing FIG. **92**, an example system **9200** is depicted including a multi-port power converter **9008**. The example system **9200** may be an actual contemplated system—for example a serial hybrid vehicle having a plurality of DC loads, a traction motor, an internal combustion engine with a motor/generator interface to the multi-port power converter **9008**, and a high voltage battery. In certain embodiments, a system **9200** may be a representative system for a class of applications—for example including a sufficient number of interfaces and loads such that, if the example system **9200** can be sufficiently supported, then a multi-port power converter **9008** to support that system would be capable to support an entire class of applications without hardware changes. In certain embodiments, a multi-port power converter **9008** may be designed in more than one version, for example to support a similar number of electrical interfaces and number of types of interfaces, but have distinct components such as to support a high voltage level in one version, and a lower voltage level in another version. It can be seen that an example system **9200** will still be useful as an actual system to be built that can be repeated with few hardware changes to support similar classes of applications, or as a representative system where a limited number of selected hardware changes in the multi-port power converter **9008** can support a large class of applications.

The example system **9200** includes an internal combustion engine **9202**. The internal combustion engine **9202** represents any prime mover or power source, and may additionally or alternatively include a grid power connector, fuel cell, or other device. In certain embodiments, the internal combustion engine **9202** provides power to the multi-port power converter **9008** during certain operating conditions, and can accept power from the multi-port power converter **9008** during other operating conditions. The example system **9200** further includes a motor/generator **9204** that electrically interfaces the internal combustion engine **9202** with the multi-port power converter **9008**, and is typically (but may not be) an AC device having a relatively high power rating (e.g., 80 hp in the example). Where necessary for the application or the class of applications under consideration, the motor/generator **9204** is capable to transfer power in either direction—accepting power from the internal combustion engine **9202** and/or returning power to the internal combustion engine **9202**. The example depicts the multi-port power converter **9008** having a 3-wire interface to the motor/generator **9204**, although any interface may be supported.

The example system **9200** further includes a traction motor **9206**, which may be an AC motor and/or motor/generator, and is depicted with a 3-wire interface to the multi-port power converter **9008**. In the example of FIG. **92**, the traction motor **9206** drives a transmission **9208**, but the traction motor **9206** may drive any traction device, for example providing motive power to the vehicle or other device. The transmission **9208** represents conceptually any primary powered component for the system **9200**, and may additionally or alternatively be a pump or other high power requirement device in the system. Additionally, the transmission **9208** may not be present, and the traction motor **9206** may interface directly with the primary powered component. The example of FIG. **92** is a "serial hybrid" example, where the prime mover **9202** and the primary load **9208** are electrically separated, although a given system **9200** (whether an actual designed system or a representative system for designing in appropriate capability to a multi-port power converter **9008**) may be a "parallel hybrid" (e.g., the prime mover **9202** is capable to fully or partially drive the primary load **9208** directly, at least intermittently), a fully electrical system (e.g., where the prime mover **9202** is not present, and/or is only utilized as a backup power supply), and/or any other arrangement (e.g., where shaft power from some other source is provided in addition to or at the position of the prime mover **9202** depicted in FIG. **92**). In certain embodiments, an arrangement such as the serial hybrid arrangement of FIG. **92** is contemplated for a system or a representative system, because the serial hybrid arrangement provides a number of interface requirements to the multi-port power converter **9008** that are sufficient to also support other systems (e.g., serial hybrid or fully electric), and accordingly a multi-port power converter **9008** capable to support a serial hybrid arrangement is capable to support a large class of systems, vehicles, and applications without hardware changes to the multi-port power converter **9008**.

The example system **9200** of FIG. **92** further depicts a number of DC loads and sources. In the example of FIG. **92**, a high voltage DC interface (650 V, in the example) couples to a high voltage battery **9212** and a main pump motor **9210** (e.g., supporting a hydraulic pump for an off-road vehicle having a large hydraulic system). The main pump motor **9210** and the high voltage battery **9212** are depicted as coupled to the same 650V circuit, although a large DC load (e.g., the main pump motor **9210**) and a high voltage battery **9212** need not be at the same voltage on a particular system. In the example of FIG. **92**, the main pump motor **9210** is also rated at 80 hp—which in the example allows for the motor/generator **9204** to fully support either traction loads or main pump loads, which may be a contemplated arrangement for a particular system or a contemplated system to support a class of applications. However, in certain embodiments, a main DC load and/or the traction load may differ, and the motor/generator **9204** may support only a highest one of the available loads, all of the available loads simultaneously, and/or support some other load value (e.g., an expected average load over the operating cycle of the application, a load value that is expected to rely upon net battery **9212**

discharging during some operating periods, or the like). In certain embodiments, the motor/generator **9204** may not be present, or may have a load capability unrelated to the DC and/or traction loads on the application.

In the example of FIG. **92**, a 12 V DC interface **9214** is depicted, which in the example of FIG. **92** drives an actuator to operate a load **9216** using the hydraulic pressure from the main pump motor **9210**. In the example, the 12 V DC interface **9214** is coupled to the load **9216** allowing for both actuation and regenerative recovery from the load **9216**. The directional operation of power on the 12 V DC interface **9214** drives a configuration of the components in the multi-port power converter **9008** to allow for both powering the 12 V DC interface **9214** and recovering energy from the 12 V DC interface **9214**, and can be utilized for any 12 V DC operations (e.g., vehicle accessories, low power devices, etc.). In certain embodiments, power recovered on the 12 V DC interface **9214** may be returned to the high voltage battery **9212**, provided to a low voltage battery interface (not shown), and/or used for other loads in the system.

In the example of FIG. **92**, a 48 V DC interface **9218** is depicted, which in the example of FIG. **92** drives an actuator to operate a second load **9220** using the hydraulic pressure from the main pump motor **9210**. In the example, the 48 V DC interface **9218** is coupled to the load **9220** allowing for both actuation and regenerative recovery from the load **9220**. The directional operation of power on the 48 V DC interface **9218** drives a configuration of the components in the multi-port power converter **9008** to allow for both powering the 48 V DC interface **9218** and recovering energy from the 48 V DC interface **9218**, and can be utilized for any 48 V DC operations (e.g., vehicle accessories, refrigeration, PTO devices, etc.). In certain embodiments, power recovered on the 48 V DC interface **9218** may be returned to the high voltage battery **9212**, provided to a low voltage battery interface (not shown), and/or used for other loads in the system.

It can be seen that a system **9200** such as depicted in FIG. **92** can readily provide for integration and support to a large number of applications with minimal changes for design of the interface to the multi-port power converter **9008**, and with no changes to hardware or selected versions from a small number of hardware versions of the multi-port power converter **9008**. Certain application differences can be supported without changes—for example the types of loads on a 12 V interface **9214** can be changed without any hardware or even calibration changes in the controller **9002**. Certain application differences can be supported with only calibration changes in the controller **9002**—for example switching a 12 V interface **9214** to a 24 V interface (or some other value). Certain application differences can be supported with only a minor hardware version change—for example switching a high voltage DC from 650 V to 900 V may require only a different version of the multi-port power converter **9008** having a more capable SiC component that can interface with the higher voltage. It can also be seen that many application changes can be accommodated at selected points in the manufacturing cycle, including at design time of the multi-port power converter **9008**, at a OEM phase (e.g., integrating the multi-port power converter **9008** with a selected driveline), at a bodybuilder phase (e.g., integrating a particular vehicle or specific loads with the multi-port power converter **9008**), and/or after the application has been in use (e.g., changing or upgrading an electrical system of the vehicle, changing a power rating, performing a remanufacture or upgrade of the application, and/or changing a basic use scenario or duty cycle for the system, vehicle, or application). Additionally or alternatively, versions of the multi-port power converter **9008** may be configured for different applications that are electrically similar (e.g., the same or similar number of distinct voltages, electrical types, and power ratings required) but have different certifications or regulations applicable, where the configuration of the multi-port power converter **9008** is otherwise similar, but the components, diagnostics, or other aspects of the multi-port power converter **9008** are configured in each version for the different certifications, regulations, or other requirements of each class of applications. For example, an electrically similar on-road and off-road application may have distinct requirements for certifications and/or a different regulatory requirement for components on the multi-port power converter **9008**.

Referencing FIG. **107**, an example X-port converter **9008** is depicted, which is similar to the embodiment depicted in FIG. **92**. In the example of FIG. **107**, the X-port converter **9008** further includes fuses/contactors **10702**, which may be provided on circuits to be used for power connections, and/or may be configured to be coupled into selected circuits by solid state switches. The example X-port converter **9008** further includes a solid state switch bank **10706** positioned between the power electronics **9222**, **9224** and coupling ports on the housing of the X-port converter **9008**, allowing for configured power electronics, fuses, and/or contactors to be directed into the circuit associated with any selected port. The example X-port converter **9008** further includes a controller **10704**, which may be responsive to commands to configure the converter, to interrogate electrical sources and loads to determine their electrical characteristics, and/or to determine power exchange parameters (e.g., regenerative loads received, etc.) and improve the efficiency of operations of the converter to support the loads and sources. Referencing FIG. **108**, an example X-port converter **9008** is depicted, which is similar to the embodiment depicted in FIG. **107**. In the example of FIG. **108**, the port bank **10806** may not include a solid state switch bank. In the example of FIG. **108**, ports of the converter **9008** have configurable electrical characteristics, but may have less flexibility than the example of FIG. **107**. For example, a given port may be a dedicated AC port in the example of FIG. **108**, with configurable voltage, frequency, and phase ratings, where in the example of FIG. **107** a given port may be switchable between AC and DC. The example converter **9008** of FIG. **108** additionally includes a coolant port (e.g., a coolant inlet coupling and a coolant outlet coupling) for coupling to a coolant source **10802** (e.g., the primary cooling system for an electric mobile application). In the example, the coolant coupling **10804** provides for a consistent cooling interface to all power electronics. The coolant coupling **10804** may be present in any embodiment of the converter **9008**.

It can be seen that the systems described herein provide for a high machine level efficiency for systems, vehicles, and applications at a lower cost than previously known systems. Additionally, the ease and selectability of integration of the systems herein enable the use of hybrid, fully electric, and/or regenerative systems for applications not previously available due to the difficulty of integration and/or low volumes of such applications that prohibit development of a hybrid, fully electric, and/or regenerative system for such applications. The systems described herein are scalable to different power ratings and voltage levels on both DC and AC portions of the system. Additionally, energy recovery systems for a wide variety of loads, such as for hydraulic loads, motive loads, PTO loads, pneumatic loads, and/or any other type of load that is capable of interfacing with an electrical

system of any type can readily be supported, including as a class of applications that are supported without hardware changes to a multi-port power converter **9008**. Additionally, the systems herein are agnostic to the motor and/or motor/generator requirements for a particular application, and can support any type of electrical interface without hardware changes and/or with only minimal calibration changes in a controller **9002** at a selected point in a manufacturing cycle, and including post-use changes such as for upgrades, remanufacture, service, and/or maintenance. The systems herein provide for a ready interface and integration with prime movers or power sources, traction drive, and system loads. Both load support and energy recovery are readily supported on any interface of the multi-port power converter **9008**. A wide variety of previously known applications do not utilize hybridization and/or electrification due to the integration, certification, and/or number of diverse loads on those systems that prohibit reasonable integration of hybrid and/or electrified actuation and energy recovery of various loads—such as pumps, cranes, heavy-duty work vehicles, wheel loaders, aerial lift trucks, and tractors. The systems herein provide for ease of design and integration with any such applications, including the support of classes of applications with a configurable multi-port power converter **9008** able to accommodate the classes of applications without hardware changes, and/or using a small selected number of hardware versions. The use of SiC components in a multi-port power converter **9008** can provide 5-10% power conversion efficiency improvement in electrical conversion, and the addition of energy recovery and prime mover optimization (e.g., operating a prime mover in efficient operating regions a greater percentage of the time during operations) can result in overall machine level efficiency gains of >50% for applications where previously known systems do not enable adoption of hybridization and/or electrification of loads and energy recovery. The systems herein provide for ready adoption of hybridization and electrification of loads on an application where previously known systems are not feasible for integration, and provides for selected engagement of the design of the multi-port power converter **9008** in the manufacturing and supply chain to further improve ease of integration and enable adoption for applications where previously known systems are not viable.

Referencing FIG. **93**, an example breaker/relay **9302** is schematically depicted in a context **9300**. The example context **9300** includes a regulatory interface **9304**, for example including legal or industry regulations, policies, or other enforceable frameworks for which the breaker/relay **9302** is responsible to maintain certain performance characteristics. The example regulatory interface **9304** may be physically manifested during run-time operations of an application having the breaker/relay **9302** thereon—for example as a network communication, calibrated value for a response, selection of a sizing of a component of the breaker/relay **9302** or the like, and/or the regulatory interface **9304** may represent one or more design time considerations made during the selection, installation, repair, maintenance, and/or replacement of a breaker/relay **9302** that are not physically manifested during run-time operations of the application having the breaker/relay **9302** thereon.

The example context **9300** further includes a command and/or control interface **9306**, which may include signals, voltages, electrical couplings, and/or network couplings over which commanded functions (e.g., connector open or closed commands) are received by the breaker/relay **9302**. In certain embodiments, the breaker/relay **9302** includes only electromechanical components—for example where the breaker/relay **9302** does not include a microprocessor, controller, printed circuit board, or other "intelligent" features. In certain embodiments, the breaker/relay **9302** includes some functions controller locally on the breaker/relay **9302**, and other functions controller elsewhere on an application having the breaker/relay **9302** thereon—for example on a battery management system controller, vehicle controller, power electronics controller, and/or having aspects distributed across one or more controllers. In certain embodiments, certain command or control aspects are provided as physical or electrical commands, and other command or control aspects are provided as communicative elements (e.g., data-link or network commands) and/or as intelligent aspects of the breaker/relay **9302** determined in accordance with programmed logic in response to detected or otherwise determined parameters during run-time operations.

The example context **9300** further includes an environmental interface **9308**, such as the vibration, temperature events, shock, and other environmental parameters experienced by the breaker/relay **9302**. Aspects of the environmental interface **9308** may be physically manifested in the breaker/relay **9302**, for example through material design selections, sizing and location of parts, connector selections, active or passive cooling selections, and the like. Additionally or alternatively, the planned or experienced duty cycle, power throughput, or the like may be a part of the environmental interface **9308** of the breaker/relay **9302**.

The example context **9300** further includes a high voltage interface **9310**, for example a coupling to the high voltage battery of a system, to system loads, to a charger, or the like. In certain embodiments, the high voltage interface **9310** is physically manifested on the breaker/relay **9302**, for example with voltage ratings, sizes of components, ratings of current sensors (where present), material selections, and the like. Any example features of a breaker/relay as described throughout the present disclosure may be included herein for an example breaker/relay **9302**, including without limitation arc extinguishing features, contactor design elements, connector contact force affecting aspects, and the like. Any aspects of the context **9300** may be included or omitted, and the described aspects of the context **9300** are not limiting to the contemplated context **9300** of a particular breaker/relay **9302**. Additionally, it will be understood that the organization of context **9300** aspects is an example for clarity of description, but that particular aspects **9304**, **9306**, **9308**, **9310** may be omitted, separated, and/or present on other aspects **9304**, **9306**, **9308**, **9310** in certain embodiments. For example, a voltage limit, time limit for response, etc. may be understood to originate from a regulatory interface **9304** in one embodiment, from a command/control interface **9306** in another embodiment, and from both interfaces **9304**, **9306** in yet another embodiment.

Referencing FIG. **94**, an example breaker/relay architecture **9400** is depicted. The example breaker/relay **9302** includes all electronic control functions positioned away from the breaker/relay **9302**, with only electro-mechanical hardware remaining on the breaker/relay **9302**. The example breaker/relay **9302** includes a contactor **9402** movably operated by a coil **9404**, for example a high voltage contactor that is normally open or normally closed, and wherein power to the coil **9404** provides for opening or closing force to the contactor **9402**. In certain embodiments, the contactor **9402** is normally open, and power to the coil **9404** closes the contactor **9402**. The example architecture **9400** further includes a high voltage circuit **9406** switched by the contactor **9402**, and a pair of input signals—for example an A input **9408** and a B input **9410**, although any number and

type of input signal is contemplated herein. An example system is depicted in FIG. **96** showing example operations of the Electronics to control the example breaker/relay **9302** (Magnetic drive **2302** in the depiction of FIG. **96**). The example architecture **9400** further includes an external controller **9412**, for example a battery management controller, vehicle controller, or other controller present on an application, the external controller **9412** including the Electronics portion and a Management portion. For the example architecture **9400**, the Electronics portion schematically depicts a controller configured to manage direct opening and closing control of the breaker/relay **9302** and to communicate diagnostic information about the breaker/relay **9302**. The Management portion schematically depicts the sourcing of external commands to the breaker/relay **9302**, for example to command the breaker/relay **9302** on or off, to implement an over-current shutdown, and/or to implement an auxiliary or safety shutdown (e.g., a crash signal, service event signal, or the like). The Electronics and Management portions are depicted in an arrangement for clarity of description, but it is understood that aspects of the Electronics and Management portions may be distributed throughout a system, and/or portions of the Electronics may be positioned on a breaker/relay **9302**.

Referencing FIG. **95**, an example system **9500** is depicted showing certain voltage, amperage, and time-based values for an example system. The example system **9500** includes a switch-on signal having certain electrical characteristics and a hold signal having certain electrical characteristics, which are non-limiting examples. The example system **9500** is consistent with certain embodiments of the architecture **9400** depicted in FIG. **94**. An example breaker/relay consistent with certain embodiments of the system of FIG. **95** is responsive to an 8.2V switch-on voltage, a holding voltage of 1.5V, and includes a 3 Ohm resistance in the actuating coil.

Referencing FIG. **96**, operations of an example Electronics portion of an architecture **9400** such as that depicted in FIG. **94** are shown for purposes of illustration. It will be understood that components of a system such as in FIG. **96** may be implemented in hardware, software, logic circuits, and/or may be combined or distributed about a system. The example Electronics include a Switch-On response, with a 12 V control voltage applied to the module. The actual drive coil of the breaker/relay can be switched to the control voltage via a deenergizing circuit and driver. The switch-on driver **9702** is controlled at approximately 65% of the minimum nominal voltage (e.g., rated value <70% or 8.2 V) for 100 ms. The timing, voltage, and switching logic of Switch-On operations are non-limiting examples. During Switch-On operations, the drive coil is energized with the pull-in current, so that the drive can switch-on.

An example Electronics includes a Regulation response. An example Regulation response includes linearly regulating the voltages during the Switch-On process, for example using a control circuit (Regulation) and Linkage for the duration of the switch-on process (e.g., 100 ms) thereby applying a selected actuating voltage to the drive coil.

An example Electronics includes a Hold response. The example Hold response includes disabling the Driver after the Switch-on time period, and providing the drive coil with a hold signal (e.g., 1.5 V) that remains on constantly, and/or constantly with diagnostic interruptions (e.g., see schematic voltage graph **9708**).

In certain embodiments, the deenergizing transistor is checked at selected intervals (e.g., depending upon the Fault Tolerant Time Interval, a regulatory or policy interval, and/or an interval of interest). If the deenergizing transistor is defective (e.g., if it is permanently conductive), the breaker/relay will be reliant on turning off the 1.5V supply to de-energize the magnetic drive. While the system can still be turned off, the operations with a defective deenergizing relay may be slower than anticipated, and/or too slow for the breaker/relay to be compliant. In certain embodiments, the frequent blanking pulses (or diagnostic interruptions) lead to cut-off voltage peaks at the coil connection (Freewheeling level, approx. 180V in the example system). If the voltage peaks remain off, the deenergizing transistor can be diagnosed as defective. In certain embodiments, the blanking pulses are kept short, thereby keeping the energy in the freewheeling circuit low, reducing waste energy and heating, and also keeping the holding energy low to reduce noise emissions. In certain embodiments, 100 micro-second blanking pulses are sufficient. In certain embodiments, faster or slower blanking pulses may be utilized. In certain embodiments, diagnostics of the deenergizing relay and/or system responses (e.g., a more conservative shut-off to account for slower response) may be utilized, in the Electronics, the Management, or elsewhere in the system.

An example Electronics includes a Switch-off and/or deenergizing response. In the example, turning off the 1.5V holding voltage deactivates the deenergizing circuit above a trigger voltage of about 4.5V (nominal <50%*Urated=6V).

Certain further example embodiments of systems having a breaker/relay device incorporated therein are set forth following. Any one or more aspects of the following systems may be included within any other systems or portions of a system described throughout the present disclosure. Any one or more aspects of the following systems may be utilized in performing any procedure, operations, or methods herein.

Referencing FIG. **97**, an example system **9800** includes a breaker/relay device having a pre-charge circuit, a current sensor, and a pyro-switch device positioned within a single housing. Referencing FIG. **98**, the system **9207** is depicted with a transparent housing for convenience of illustration. The example system **9800** includes the breaker/relay **6502**, a current sensor **6706**, a pre-charge fuse **9806**, and a pre-charge contactor **6408** positioned within the housing and arranged to electrically interface with a power circuit, such as a mobile power circuit for a mobile electric application.

In certain embodiments, the breaker/relay device includes any combined breaking and contacting device, for example as described throughout the present disclosure. In certain embodiments, the breaker/relay device includes a single contact (e.g., as compared with a dual contact embodiment). In certain embodiments, the breaker/relay device includes two contacts operated utilizing a single actuator. In certain embodiments, the system includes a fuse, which in the embodiment of FIG. **98** is depicted as a pyro-switch **9802** (or pyro-fuse), such as a pyrotechnically activated fuse (e.g., a fuse separated at a selected time by operating a small explosive device to break the circuit). In certain embodiments, the pyro-switch is operated on a circuit in line with one leg of the circuits controlled by the breaker/relay device **6502**, for example to provide pyro-switch protection for a high side or a low side of a circuit. For convenience of illustration, the pre-charge circuit wiring is not depicted. The pre-charge circuit may be wired in parallel with a contactor of the breaker/relay **6502**, and/or in parallel with the pyro-switch **9802**. Referencing FIG. **99**, a top schematic view of the system **9800** is depicted, showing an illustrative arrangement of the components in the system. The example system **9800** includes high voltage connections **9902**, such as a low and high side connection to a power source (e.g., a high

voltage battery) and a low and high side connection to a load (e.g., a motor providing motive power). Referencing FIG. **100**, a side schematic view of the system is depicted, from an end having the pyro-switch **9802** and the pre-charge fuse **9806**.

In certain embodiments, the system **6702** (e.g., a "breaker/relay PDU") has a mass that does not exceed 5 kg, and/or does not exceed 1.5 kg. In certain embodiments, a dimension of the breaker/relay PDU is smaller than one or more of: a 600 mm length, a 140 mm width, and/or a 110 mm height. In certain embodiments, a dimension of the breaker/relay PDU is smaller than one or more of: a 160 mm length, a 135 mm width, and/or a 105 mm height. In certain embodiments, the breaker/relay PDU is capable to support operating at 300 A or greater continuous current flow. In certain embodiments, the breaker/relay PDU is capable to interrupt 1100 A and/or over 400 V without assistance. In certain embodiments, breaker/relay PDU is capable to interrupt 8,000 A and/or over 400 V. In certain embodiments, the breaker/relay PDU is capable to passively interrupt a short circuit condition (e.g., no outside control signal or communication required), and/or is further capable to actively interrupt other operating conditions (e.g., an active trigger command for any reason). In certain embodiments, the pyro-switch **9802** is on the negative leg of the overall circuit, although the pyro-switch may be anywhere it is desirable. In certain embodiments, the pyro-switch is actively controlled with a trigger to command an interrupt. In certain embodiments, the breaker/relay, the pyro-switch **9802**, and/or both may be actively commanded to interrupt the circuit. In certain embodiments, the breaker/relay PDU is capable to support dual amp ratings, such as 90 A and 1000 A (non-limiting example).

Referencing FIG. **101**, an example system **10100** includes a power circuit protection arrangement for a high-voltage load, such as for a motive power circuit for a mobile application. The example system **10100** includes a breaker/relay PDU **10102**, where the breaker/relay **10106** is disposed in the high-side of the motive power circuit. The example system **10100** includes a pre-charge circuit **10104**, including a pre-charge resistor and a pre-charge contactor, positioned within the housing of the breaker/relay PDU **10102**. The example system further includes a current sensor **6706** and a pyro-switch **9802** positioned within the housing of the breaker/relay PDU **10102**. The system includes the breaker/relay PDU **10102** interfaced with a high-voltage battery **10110** on a first side, and with a high-voltage load **10108** on a second side.

Referencing FIG. **102**, an oblique view of a system **10200** having a dual pole breaker/relay **10302** is depicted, with a coupled current sensor **6706** connected thereto. The example current sensor **6706** is shown with a connector **10202** for communicative coupling to a controller. Referencing FIG. **103**, a top view of the system **10200** is depicted having a partially transparent top side of a housing of the system **10200**. Example positions for the pre-charge fuse **9806** and pre-charge connector **6408** are shown, and coupling locations for a high voltage battery (HV battery+ and −) and for a high voltage load (HV load+ and −) are illustrated. Referencing FIG. **104**, a system **10200** consistent with the system of FIG. **103** is depicted, with the top side of the housing of the system normally positioned. Referencing FIG. **105**, an example breaker/relay PDU is depicted showing high voltage bus bar couplings **10502**, **10504**, **10506**, **10508** to the breaker/relay PDU. In the example of FIG. **105**, connection **10508** is the battery low side, connection **10506** is the battery high side, connection **10502** is the high voltage load high side, and connection **10504** is the high voltage low side. However, any arrangement of high voltage source and load connections is contemplated herein.

Referencing FIG. **106**, an example system **10600** includes a power circuit protection arrangement for a high-voltage load, such as for a motive power circuit for a mobile application. The example system **10600** includes a dual pole breaker/relay PDU **10602**, where the breaker/relay **10606** includes a first pole disposed on the high-side of the motive power circuit, and a second pole disposed on the low-side of the motive power circuit. The example system **10600** includes a pre-charge circuit **10104**, including a pre-charge resistor and a pre-charge contactor, positioned within the housing of the breaker/relay PDU **10602**. The example system further includes a current sensor **6706**. The example system **10600** does not include a fuse or a pyro-switch, although a fuse or pyro-switch may be present in certain embodiments. The system includes the breaker/relay PDU **10602** interfaced with a high-voltage battery **10110** on a first side, and with a high-voltage load **10108** on a second side.

The example dual-pole breaker/relay device includes separate breaker/relay contactors responsive to active and passive interruption operations, having arc suppression, and/or one or more of the poles having a current sensor. In certain embodiments, each pole is disposed in a high side or a low side circuit of a system. In certain embodiments, one or more of the poles includes an integrated pre-charge circuit in parallel therewith.

It can be seen that the example single-pole and dual-pole breaker/relay devices provide for highly capable interruption systems, as well as systems with high flexibility on the capability. Additionally, the systems have resettable interruption (with the breaker/relay), and the integration as depicted significantly reduces the footprint from previously known systems.

Example embodiments include a high voltage electric vehicle battery power distribution system architecture that includes a breaker/relay with a pre-charge circuit integrated in the same housing. These two elements distribute power from one side of the battery. In addition to these two elements, the housing also contains a current sensor and pyro disconnect (e.g., pyro-switch), that are in series with each other on the opposite side of the battery.

High voltage batteries in mobile applications contain a large amount of energy, making it desirable that the rest of the vehicle and operators to be protected in the event of overload, short circuit, or emergency conditions. Previously known systems include a contactor and a fuse on the high side of the battery, a pre-charge circuit in parallel of the high side contactor, and a contactor and current sensor on the low side of the battery. Certain example systems of the present disclosures have at least one or more of the following benefits over previously known systems: Efficiency (e.g., power transfer, losses, reduced cooling requirements) by reducing the number of contactor poles from two to one; providing active and passive protection in overcurrent, short circuit, or emergency events, because the breaker/relay or pyro can both be actively triggered; additional break protection in an overload or short circuit event, such as physical breaking operations that do not rely upon an active and properly operating controller; size and weight advantages, because of the shared housing and combined component footprint being smaller; and the like.

Referencing FIG. **109**A, a top view and in FIG. **109**B a side view (right) of an example embodiment of an integrated inverter assembly **10900** is schematically depicted. The example of FIGS. **109**A, **109**B includes a high voltage DC

battery coupling **10902** and a vehicle (or mobile application) coupling **10904**. The vehicle coupling **10904** provides for data communications, keyswitch state, sensor communications, and/or any other desired coupling aspects. Referencing FIGS. **109**A, **109**B, a battery connector **10902** and vehicle connector **10904** are provided, which may be any type of connector known in the art and selected for the particular application. An example battery connector **10902** includes a Rosenberger HPK series connector, however any battery connector may be utilized. An example vehicle connector **10904** includes a Yazaki connector part number 7282885330, however any vehicle connector may be utilized. In the example of FIGS. **109**A, **109**B the main cover is visible, which may be on the vertically upper portion of the integrated inverter assembly **10900** as installed on a vehicle or mobile application, although other orientations of the integrated inverter assembly **10900** are contemplated in certain embodiments of the present disclosure. In the example of FIGS. **109**A, **109**B, a harness **10906** is depicted, which provides a connection for a motor temperature and/or position sensor. The harness **10906** may be shielded as determined according to the specific EMI environment, sensor characteristics, and/or communication mechanism between the sensor(s) and the integrated inverter assembly **10900**. In the side view of FIG. **109**B, the base (or back cover) can be seen.

Referencing FIG. **110**, an underside view of the main cover of the integrated inverter assembly **10900** is schematically depicted, with certain aspects removed for clarity of the description. The integrated inverter assembly **10900** includes coolant inlet and outlet connections **11002**, which may be blind connections, and/or which may be sized to accommodate an SAEJ2044 Quick Connect Coupling. The coolant connections provide for coolant flow through one or more coolant channels, as described in the present disclosure. In the example of FIG. **110**, the main cover is coupled to the back cover using a cure-in-place-gasket.

Referencing FIG. **111**, the underside view of the main cover of the integrated inverter assembly **10900** is schematically depicted, with certain aspects of the electronics packaging of the integrated inverter assembly **10900** included for reference. Referencing FIG. **112**, motor connections **11202** configured for a 3-phase high voltage motor connection, for example as blades that interface with the motor connector **10906** of FIG. **111**. The example of FIG. **112** depicts a printed circuit board (PCB) where the gate drivers for the inverter are mounted, as well as a current sensor corresponding to each phase of the gate drivers. The example of FIG. **112** depicts a second PCB (partially obscured by the DC link capacitor **11206**) for control of the inverter, including interfaces with the vehicle, power control operations, diagnostics, and the like. The DC link capacitor **11206** provides for coupling between the DC high voltage system (e.g., the battery) and the gate drivers. In certain embodiments, the DC link capacitor **11206** may include certain power conditioning aspects, such as a capacitor, a bus bar, and/or a choke. Referencing FIG. **113**, an embodiment having a coolant channel **11304** is depicted, with connector **11306** for an inverter drive of the inverter assembly **10900**.

Referencing FIG. **113**, a top surface [**11402**] of a coolant channel **11304** (the upper coolant channel in the example of FIG. **113**) is depicted. The gate drivers (e.g., IGBTs) are mounted in thermal contact with the coolant channel, such that coolant flowing through the coolant channel thermally communicates with the inverter power electronics.

Referencing FIG. **114**, an underside (relative to FIG. **113**) of the main cover is depicted to show aspects of the coolant channels **11402**, with the lower coolant channel being depicted in FIG. **114**. The coolant channel includes heat transfer features (pins, in the example of FIG. **114**) to provide the desired heat transfer environment between the coolant flowing in the channel and cooled components of the integrated inverter assembly **10900**. Two of the holes defined in the lower coolant channel of FIG. **114** provide inlet and outlet communication to coolant into the inverter. Two of the holes defined in the lower coolant channel of FIG. **114** provide fluid communication between an upper coolant channel and a lower coolant channel. Referencing FIG. **115**, an example relationship between the upper coolant channel **11506** and the lower coolant channel **11504** is depicted. In the example of FIG. **115**, each of the coolant channels includes heat transfer features such as pins. The utilization of two parallel coolant channels provides for increased heat transfer capacity and greater ease in communication with all cooled components within a compact integrated package. The description of coolant channels as "upper" and "lower" is for convenience and clarity of description to identify the separate channels. The actual vertical positioning of channels may vary with the specific design of the integrated inverter assembly, and the orientation of the integrated inverter assembly as installed. FIG. **115** additionally depicts an external coolant coupling port **11204**, having a baffled stem **11502** in the example of FIG. **115**.

Referencing FIG. **116**, an assembly example for coupling the coolant channels with the main cover is depicted. In the example, a coolant channel separating body **11604** (having the lower coolant channel on the underside, and the upper coolant channel on the upper side) is assembled with a lower coolant channel cover **13102** (e.g., the portion of the coolant channel visible in FIG. **109**A) and the main cover body. In certain embodiments, the assembly of FIG. **116** is formed using friction-stir welding (FSW), which is a low cost process that provides for sealed seams forming the coolant channel. Other assembly techniques are contemplated herein. Each component of the assembly may be formed by any known techniques. It is desirable that the coolant channel separating body be thermally conductive, and may be formed, for example, from aluminum. In certain embodiments, the coolant channel separating body is forged, although it may be cast, machined, or formed by any other technique. In certain embodiments, the lower coolant channel cover is stamped. In certain embodiments, the main cover body is cast. Referencing FIG. **131**, an example embodiment is depicted with the lower coolant channel cover depicted in position, integrated with the main cover and the coolant channel separating body.

Referencing FIG. **117**, the underside of the main cover is depicted with insulated-gate bipolar transistors **11702** (IGBTs) installed. The IGBTs **11702** are thermally coupled (e.g., using thermal adhesive) to the surface of the upper cooling channel, and accordingly have a high heat transfer capacity to the coolant to support high power density installations.

Referencing FIG. **118**A, the dimensions and weight of an example integrated inverter assembly **10900** are shown, where a width **11806** is about 118 mm, and wherein a length **11804** is about 277 mm. Referencing FIG. **118**B, an example embodiment includes a depth **11802** of about 87 mm. An overall mass of an example inverter assembly **10900** is below about 5 kg. The example of FIG. **118**A is based upon various aspects of the present disclosure, and is believed to

describe one example of achievable dimensions having sufficient power capacity for an automotive passenger car application.

Referencing FIG. **119**, a perspective view depicting the gate driver PCB **11902** and the DC link capacitor **11206** is shown. Referencing FIG. **120**, a perspective view for an example embodiment depicts the AC bus bars **11202**, the motor temperature/position sensor **10906**. The AC connection utilizes two foam seals **12002** and replaceable captive nuts **13502** (also reference FIG. **35**). Referencing FIG. **121**, an underside view of the main cover is depicted. In the example of FIG. **121**, a curable in-place gasket (CIPG) **12102** is dispensed and cured on the cover, and is reusable after a service event if the gasket is not damaged during the service event.

Referencing FIG. **122**, a close-up of one corner of the example main cover is depicted. In the example of FIG. **122**, a ledge **12204** is provided that provides for controlled compression of the CIPG **12102**, through selection of the ledge height and CIPG dispensation (height difference **12202** provides selectable compression), and accordingly provides for ease and reliability in proper installation and sealing of the main cover. Referencing FIG. **123**, certain aspects of an example installation for the IGBTs is depicted, with thermal paste **12302** providing thermal coupling for the IGBTs and the PCBs, and with formed-in-place-gaskets **12304** providing reliable sealing for coolant flows between the cooling channels. FIGS. **124-127** depict a number of views of an example embodiment of a main cover portion, with installed components, of an integrated inverter assembly **12400** consistent with various aspects of the present disclosure. Referencing FIG. **125**, a lower cooling channel **11504** and side cutaway view of an IGBT **11702** provides an illustrative heat transfer environment for the IGBTs **11702** of the integrated inverter assembly. Referencing FIG. **128**, an example embodiment depicts the upper **11506** and lower **11504** cooling channels, with an example location for a temperature sensor **12802** (a thermistor, in the example) which may be utilized, for example, to control active cooling, and/or to monitor the power electronics.

An example IGBT consistent with certain embodiments of the present disclosure is a dual side cooling half-bridge power module, capable of 750V, 800 A operation, and having an operating temperature capability of 175° C. for continuous operation. Certain commercially available FS4 IGBTs using a half-bridge configuration exhibit low losses at light loads, and in certain embodiments are favorable to applications tending to have a low duty cycle, such as passenger car applications.

Referencing FIG. **129**, an example coupling mechanism for the main cover to the back cover is depicted. The example coupling mechanism includes a threaded area **12908** in the main cover to retain the coupling screw **12906** when disengaged, and where the height **12902** of the unthreaded portion in the motor casting (back cover) is greater than the threaded engagement portion **12904** of the screw **12906**. Thus, the screw can be backed into the threaded area **12908** in the main cover, and ensure that the threads remain disengaged from the motor casting. Referencing FIG. **130**, the example coupling mechanism includes a reduced diameter portion **13004** for a portion of the coupling screw, providing for a convenient captive screw mechanism. In the example of FIG. **130**, the screw main threads **13006** are disengaged from the motor casting, and a second threaded portion **13002** of the screw is engaged with the threaded area **12908** of the main cover. Referencing FIG. **131**, a cutaway side view depicting a view of an integrated inverter assembly showing a coolant channel cover **13102**.

Referencing FIG. **132**, a previously known DC Link Capacitor is depicted. The DC Link Capacitor includes a bus bar, common-mode choke, and capacitors (Y-caps) as external elements to the DC Link Capacitor. The bus bar is a laminated bus bar to provide isolation of the three AC phases, and the bus bar external to the DC Link Capacitor housing is required to be as long as the housing, with a full thickness along the length of the housing.

Referencing FIG. **133**, an example DC Link Capacitor **11206** is depicted, with the bus bar, common-mode choke, and Y-caps included in the housing of the DC Link Capacitor **11206**. The bus bar, choke, and Y-caps are potted within the DC Link Capacitor, providing for a compact design and enhanced mechanical integrity. In certain embodiments, the DC Link Capacitor **11206** of the example in FIG. **133** can be utilized in an integrated inverter assembly **10900** consistent with any other aspect of the present disclosure. The DC Link Capacitor **11206** further includes an IGBT interface **13302** providing power to each of the IGBTs, and a DC interface **13304** providing an interface to DC power, such as to the battery. Referencing FIG. **134**, an example embodiment depicts the potted DC Link Capacitor **11206** coupled to the three phases of the AC motor connector through the IGBTs **11702**. In the example of FIG. **134**, the connections are welded, providing for reduced assembly complexity and reduced contact resistance. In certain embodiments, the utilization of an integrated inverter assembly **10900**, with a fixed, small, footprint, and with limited external interfaces to the rest of the vehicle and/or electrical drive system, enables one or both of the potted DC Link Capacitor **11209** and the welded connections—for example by providing a consistent geometric positioning allowing the parts to be assembled using potting and welding without having to arrange or assemble the positioning of the DC Link Capacitor, the bus bar, the common-mode choke, the Y-caps, and/or the spatial arrangement of the IGBTs and AC connector blades. Referencing FIG. **135**, another view of the embodiment depicted in FIG. **126**, where FIG. **135** is a cutaway view of the embodiment of FIG. **126**, and can be used to reference the positioning of the DC Link Capacitor assembly within the example integrated inverter assembly **10900**.

Referencing FIGS. **136** and **137**, a previously known quick connector consistent with the SAEJ2044 quick connect coupling standard is depicted. The quick connector of FIG. **136** includes a lock **13608** with a retaining spring, and two internal o-rings **13602** for sealing the fluid coupling. A spacer is provided between the two internal o-rings. The quick connector of FIG. **136** is configured to receive a fluid coupling such as an end piece having an end form (**13702** of FIG. **137**) such as that depicted in FIG. **26**. The quick connector of FIG. **136** includes ribbing ("fir tree") **13606** on the outer diameter of the tube connection, with an external o-ring **13604** on the tube-side for sealing.

Referencing FIG. **138**, a first embodiment of a fluid connector of the present disclosure is depicted. The fluid connector of FIG. **138** does not include a locking element, but is configured to receive an end piece having a standard SAEJ2044 end form. The example fluid connection includes two internal o-rings **13804** and a spacer **13806** therebetween. The connector further includes a shaped receiving portion **13802** and does not include a lock. The connector further includes an external o-ring **13808**. In certain embodiments, fluid connections within the integrated inverter assembly **10900** have a tight spacing and poor access (or no access) to portions of a quick connector to manipulate the

lock and thereby operate the quick connector. Additionally, in certain embodiments, the integrated inverter assembly **10900** provides for a fixed geometry of fluid coupling positions, which are at least partially internal to the housing of the integrated inverter assembly **10900**, and thereby provide for a secure fluid connection without the lock. Accordingly, it can be seen that a quick connector embodiment such as that depicted in FIG. **138**, improves and/or enables certain aspects of the integrated inverter assembly **10900**.

Referencing FIG. **139**, a second embodiment of a fluid connector of the present disclosure is depicted. The fluid connector of FIG. **139** does not include a locking element, but is configured to receive an end piece having a standard SAEJ2044 end form. Additionally, it can be seen that the fluid connector of the example in FIG. **139** omits the right extension, utilizing the housing of the fluid connector to form the ribbing **13902** and support the seal. The fluid connector of the example in FIG. **139** further includes the o-ring **13808** on the outer body, a chamfered lip **13999**, and at least one rib **13989**. Again referencing FIG. **115**, it can be seen that the fluid connector for the coolant outlet depicted in FIG. **115** is consistent with the quick connector embodiment of FIG. **139**. It can further be seen that the quick connector depicted in FIG. **139** provides for a greatly reduced vertical footprint of the fluid connection, allowing for a more compact footprint of the integrated inverter assembly. The embodiment of FIG. **115** additionally depicts a hose coupled to the quick connector that provides for compliance in the horizontal and vertical planes (using baffled hose **11502**), further enhancing the ease of installation of the coolant connection. It can further be seen that the coolant channel separating body **11604** (e.g. reference FIG. **116**) includes an integrated hose nipple configured to couple with the quick connector, thereby further reducing the footprint and the assembly complexity of the integrated inverter assembly **10900**. A given embodiment of the integrated inverter assembly **10900** may utilize one or both of the quick connector embodiments of FIGS. **138** and **139**, or neither of these.

An example breaker/relay may include a fixed contact electrically coupled to a power bus for a mobile application, a moveable contact selectively electrically coupled to the fixed contact, an armature operationally coupled to the moveable contact, such that the armature in a first position prevents electrical coupling between the moveable contact and the fixed contact, and the armature in a second position allows electrical coupling between the moveable contact and the fixed contact. The example breaker/relay further includes a first biasing member biasing the armature into one of the first position or the second position, a standard on/off circuit having at least two states, wherein the standard on/off circuit in a first state provides an actuating signal and in a second state prevents the actuating signal. Referencing FIG. **140**, an example current response circuit **14002** is depicted that may be utilized with any system or to perform any operations described throughout the present disclosure. The example current response circuit **14002**, determines a current in the power bus **14004**, and further blocks an actuating signal **14006** of the standard on/off circuit in response to the current in the power bus **14004** indicating a high current value **14003**. The actuating signal may be provided as an armature position command **14008**, where an armature is responsive to the actuating signal to electrically couple the moveable contact to the fixed contact. In embodiments, the mobile application may include at least two electrical current operating regions. The current response circuit **14002** may be further structured to adjust the high current value **14003** in response to an active one of the at least two electrical current operating regions.

Referencing FIG. **141**, an example procedure **14100** for opening a contact is schematically depicted. Operations of the procedure **14100** may be performed by any controllers, circuits, and/or hardware arrangements as described throughout the present disclosure, and further may be performed in relation to any of the systems or hardware arrangements described throughout the present disclosure. In an aspect, the procedure **14100** includes an operation **14102** to select contact force for a breaker/relay such that the opening the contacts occurs at a selected current flow value of the electrical current flow through the contacts. The procedure **14100** further includes an operation **14104** to apply a contact force to the moveable contact of the breaker/relay, and an operation **14106** to determine a current value through the contacts. The procedure **14100** further includes an operation **14108** to determine whether the current value exceeds a threshold value, and an operation **14110** to command an armature or actuator to open the contacts in response to the current value exceeding the threshold. The example procedure **14100** further includes an operation **14112** to open the contacts in response to a repulsive force on the contacts—for example as a physical response of the moveable contact at the selected current flow value. In certain embodiments, the operation **14110** may be commenced before the operation **14112**. In certain embodiments, the operation **14110** is performed such that the moveable contact does not return to the closed position after the operation **14112** to open the contacts (e.g., relieving the return force of the moveable contact that may otherwise drive the contact back to a closed position after the physical opening operation **14112**).

Referencing FIG. **142**, an example procedure **14200** for opening a contact is schematically depicted. Operations of the procedure **14200** may be performed by any controllers, circuits, and/or hardware arrangements as described throughout the present disclosure, and further may be performed in relation to any of the systems or hardware arrangements described throughout the present disclosure. The example procedure **14200** includes an operation **14202** to determine a first threshold (for current in an electric load circuit) in response to a first physical current opening value (e.g., based on the opening characteristics for a contactor), an operation **14204** to determine a second threshold in response to a second physical current opening value, an operation **14206** to determine a first current value in a first electric load circuit, and an operation **14208** to determine a second current value in a second electric load circuit. The procedure **14200** further includes an operation **14210** to determine whether the first current value exceeds the first threshold, and/or whether the second current value exceeds the second threshold. The example procedure **14200** includes an operation **14214** to command an armature (or actuator) for the first contactor to open if the first threshold is exceeded, and an operation **14212** to diffuse an arc from the first contact (e.g., using splitter plates and/or a magnet). The example procedure **14200** includes an operation **14216** to command an armature for the second contactor to open if the second threshold is exceeded, and an operation **14218** to diffuse an arc of the second contactor. In certain embodiments, determining the first or second threshold includes providing components configured to provide a selected value for the first or second threshold (e.g., selected contact areas, contact force values, and/or bus bar configurations). In certain embodiments, procedure **14200** is utilized in relation

to a system having more than one contactor, where each contactor is separately controllable.

In an aspect, a system may include a housing; a breaker/relay device positioned in the housing, wherein the breaker/relay device may be configured to interrupt a motive power circuit for an electrical vehicle system, where the housing may be disposed on the electrical vehicle system; wherein the breaker/relay device may include a physical opening response portion responsive to a first current value in the motive power circuit, and a controlled opening response portion responsive to a second current value in the motive power circuit; and a pre-charge circuit electrically coupled in parallel to the breaker/relay device. In embodiments, the pre-charge circuit may be positioned within the housing. The first current value may be greater than the second current value. The physical opening response portion may include a first biasing member biasing an armature of the breaker/relay device into an open position for a contactor of the motive power circuit, and a selected difference between a first force of the armature closing the contactor and a second force of the first biasing member opening the contactor. The controlled opening response portion may include a current sensor providing a current value through the motive power circuit, and a current response circuit **14304** (reference FIG. **143**) structured to command an armature to open a contactor in response to the current value **14314** exceeding the second current value **14316**. The breaker/relay device may include a dual-pole breaker/relay device. The breaker/relay device may include a single-pole breaker/relay device. The breaker/relay device may be positioned on one of a high side circuit or a low side circuit of the motive power circuit. The system may further include a pyro-switch device positioned on the other of the high side circuit or the low side circuit.

Referencing FIG. **143**, an example system includes a physical opening response adjustment circuit **14302** that determines a first current value adjustment **14312**, and adjusts the physical opening response portion in response to the first current value adjustment **14312**. The physical opening response adjustment circuit **14302** may be further structured to adjust the physical opening response portion by providing an adjustment implementation command **14310**, which may include adjusting a compression of the first biasing member; adjusting the first force (e.g., the force applied by the armature); and/or adjusting the second force (e.g., the force of the compression spring). The physical opening response adjustment circuit **14302** may be further structured to adjust the physical opening response portion in response to an operating condition **14308** of the electrical vehicle system. Example and non-limiting operating conditions **14308** include a time-current profile of the motive power circuit; a time-current trajectory of the motive power circuit; a time-current area value of the motive power circuit; a rate of change of a current value through the motive power circuit; and/or a difference between a current value through the motive power circuit and the second current value.

Referencing FIG. **144**, an example procedure **14400** for opening a contact is schematically depicted. Operations of the procedure **14400** may be performed by any controllers, circuits, and/or hardware arrangements as described throughout the present disclosure, and further may be performed in relation to any of the systems or hardware arrangements described throughout the present disclosure. The example procedure **14400** includes an operation **14402** to determine a physical opening response adjustment for a contactor—for example where operating conditions of an electric mobile application indicate that the current flow through a load circuit should be permitted to be increased, or reduced, including during high performance operation, charging operation, and/or emergency operation. The example procedure **14400** further includes an operation **14404** to adjust a physical opening response value for a contactor, and an operation **14406** to determine a current in a load circuit (e.g., a motive power circuit) of the electric mobile application. The example procedure **14400** further includes an operation **14408** to determine whether a current value in the load circuit exceeds a controlled open threshold value, and an operation **14410** to command an armature (or actuator) of the contactor to an open position in response to the current exceeding the controlled open threshold value. In certain embodiments, the controlled open threshold value is distinct from, and may be lower than, the physical open threshold value. The example procedure **14400** further includes an operation **14412** to determine whether the current value exceeds a physical open threshold, and an operation **14414** to open the contacts in response to a repulsive force in the contactor in response to the determination **14412** indicating a YES value. In certain embodiments, operations described throughout the present disclosure to determine whether a physical open current value is exceeded include operation to configure a contactor (e.g., within a breaker/relay) to open at a selected current value, to expose the contactor to a load current, where the contact responds to the load current according to the configuration made in response to the selected current value. The order of determinations **14408**, **14412** may be reversed, and/or one or more determinations **14408**, **14412** may be omitted. Operations **14402** to determine a physical opening response adjustment may be performed during run-time operations or design-time operations of a system, and similarly operations **14404** to adjust the physical opening response may be performed during run-time operations or design-time operations.

Referencing FIG. **145**, an example procedure **14500** for opening a contact is schematically depicted. Operations of the procedure **14500** may be performed by any controllers, circuits, and/or hardware arrangements as described throughout the present disclosure, and further may be performed in relation to any of the systems or hardware arrangements described throughout the present disclosure. The example procedure **14500** includes an operation **14502** to configure a physical response opening portion of a breaker/relay of a mobile power circuit to provide for an opening of the contactor of the breaker/relay based on a physical opening response threshold current. Example and non-limiting operations **14502** include an operation **14502**A to select a mass (e.g., of the moving portion of a moveable contact), a Lorentz force area (e.g., contact area, bus bar area in the region of the contact, etc.), and/or to select a contact force (e.g., adjust a strength or number of engaged biasing members, and/or to change an amount of compression on a biasing member, and/or to change a movement position of an actuator for the moveable contact). In certain embodiments, configuring the physical opening response portion may include selecting a bus bar configuration, wherein the bus bar couples two moveable contacts, and wherein the bus bar configuration may include at least one of a bus bar area in proximity to a current providing portion of the mobile power circuit or a positioning of a portion of the bus bar in proximity to the current providing portion of the mobile power circuit. The example procedure **14500** further includes an operation **14504** to operate a moveable contact of the breaker/relay between open and/or closed positions—for example moving to the closed position to allow for power flow through the contactor, and to the open position

to prevent power flow through the contactor. The example procedure **14500** further includes an operation **14506** to determine a current value in the mobile power circuit, and an operation **14508** to command the moveable contact to an open position based on a separate current threshold from the physical opening current threshold. In certain embodiments, the separate current threshold utilized in operation **14508** is a lower current threshold than the configured physical opening response threshold current.

In an aspect, referencing FIG. **146**, a system may include a vehicle having a motive electrical power circuit **14600** (or power path) between a power source **14601** and a load **14608**, and a power distribution unit having a current protection circuit disposed in a motive electrical power circuit **14600**. An example current protection circuit includes a breaker/relay **14602**, a breaker/relay including a fixed contact electrically coupled to a motive power circuit for a mobile application, a moveable contact selectively electrically coupled to the fixed contact, and where the moveable contact in a first position allows power to flow through the motive power circuit, and the moveable contact in a second position does not allow power to flow through the motive power circuit, and a physical opening response portion responsive to a current value in the motive power circuit, wherein the physical opening response portion may be configured to move the moveable contact to the second position in response to the current value exceeding a threshold current value. The example current protection circuit **14600** includes a contactor **14604** in parallel with the breaker/relay **14602**; a pair of breaker/relays **14602**, **14702** in parallel (e.g., reference FIG. **147**) and/or a dual pole breaker relay **14602** providing two parallel electrical paths; and/or a breaker/relay **14602** in parallel with a contactor **14604** and a fuse **14802** (e.g. reference FIG. **148**). In certain embodiments, the current protection circuit **14600** includes a contactor in series with a breaker/relay.

In an aspect, referencing FIG. **146**, a system may include a vehicle having a motive electrical power circuit **14600** (or power path) between a power source **14601** and a load **14608**, and a power distribution unit having a current protection circuit disposed in a motive electrical power circuit **14600**. An example current protection circuit includes a breaker/relay **14602**, a breaker/relay including a fixed contact electrically coupled to a motive power circuit for a mobile application, a moveable contact selectively electrically coupled to the fixed contact, and where the moveable contact in a first position allows power to flow through the motive power circuit, and the moveable contact in a second position does not allow power to flow through the motive power circuit, and a physical opening response portion responsive to a current value in the motive power circuit, wherein the physical opening response portion may be configured to move the moveable contact to the second position in response to the current value exceeding a threshold current value. The example current protection circuit **14600** includes a contactor **14604** in parallel with the breaker/relay **14602**; a pair of breaker/relays **14602**, **14702** in parallel (e.g., reference FIG. **147**) and/or a dual pole breaker relay **14602** providing two parallel electrical paths; and/or a breaker/relay **14602** in parallel with a contactor **14604** and a fuse **14802** (e.g. reference FIG. **148**). In certain embodiments, the current protection circuit **14600** includes a contactor **14604** in series with a breaker/relay **14902** (e.g., reference FIG. **149**). The utilization of a breaker/relay in series with a contactor allows the breaker/relay to open the circuit, thereby allowing the contactor to open when the circuit is not powered. The utilization of a breaker/relay in parallel with a contactor allows the contactor to open when the circuit is powered, and to allow the breaker/relay to open the circuit.

Referring to FIG. **150**, the power distribution unit further may include a plurality of breaker/relay devices disposed therein, and wherein the current source circuit **15002** may be further electrically coupled to the plurality of breaker/relay devices, and to sequentially inject a current across each fixed contact of the plurality of breaker/relay devices; and wherein the voltage determination circuit **15006** may be further electrically coupled to each of the plurality of breaker/relay devices, and further structured to determine at least one of an injected voltage amount and a contactor impedance value for each of the plurality of breaker/relay devices (e.g., voltage drop determinations **15008**). The current source circuit **15002** may be further structured to sequentially inject the current across each of the plurality of breaker/relay devices in a selected order of the breaker/relay devices. The current source circuit **15002** may be further structured to adjust the selected order in response to one or more operating conditions **15016** or stored properties **15018** such as: a rate of change of a temperature of each of the fixed contacts of the breaker/relay devices; an importance value of each of the breaker/relay devices; a criticality of each of the breaker/relay devices; a power throughput of each of the breaker/relay devices; and/or a fault condition or a contactor health condition of each of the breaker/relay devices. The current source circuit **15002** may be further structured to adjust the selected order in response to an operating condition **15016** such as a planned duty cycle and/or an observed duty cycle of the vehicle. The current source circuit **15002** may be further structured to sweep the injected current through a range of injection frequencies. The current source circuit **15002** may be further structured to inject the current across the fixed contact at a plurality of injection frequencies. The current source circuit **15002** may be further structured to inject the current across the fixed contact at a plurality of injection voltage amplitudes. The current source circuit **15002** may be further structured to inject the current across the fixed contact at an injection voltage amplitude determined in response to an operating condition **15106** such as a power throughput of the breaker/relay devices. The current source circuit **15002** may be further structured to inject the current across the fixed contact at an injection voltage amplitude determined in response to a duty cycle of the vehicle.

In an aspect, a system may include a vehicle having a motive electrical power path; a power distribution unit including a current protection circuit disposed in the motive electrical power path, the current protection circuit including breaker/relay, the breaker/relay including a fixed contact electrically coupled to a motive power circuit for a mobile application; a moveable contact selectively electrically coupled to the fixed contact, wherein the moveable contact in a first position allows power to flow through the motive power circuit, and the moveable contact in a second position does not allow power to flow through the motive power circuit; and a physical opening response portion responsive to a current value in the motive power circuit, wherein the physical opening response portion may be configured to move the moveable contact to the second position in response to the current value exceeding a threshold current value; a current source circuit **15002** electrically coupled to the breaker/relay and structured to inject a current (injection command **15004**) across the fixed contact; and a voltage determination circuit **15006** electrically coupled to the breaker/relay and structured to determine an injected voltage

amount and a contactor impedance value (voltage drop determination **15008**), wherein the voltage determination circuit **15006** may be structured to perform a frequency analysis operation to determine the injected voltage amount. In embodiments, the voltage determination circuit **15006** may be further structured to determine the injected voltage amount by determining an amplitude of a voltage across the fixed contact at a frequency of interest. The frequency of interest may be determined in response to a frequency of the injected voltage. The current source circuit **15002** may be further structured to sweep the injected current through a range of injection frequencies. The current source circuit **15002** may be further structured to inject the current across the fixed contact at a plurality of injection frequencies. The current source circuit **15002** may be further structured to inject the current across the fixed contact at a plurality of injection voltage amplitudes. The current source circuit **15002** may be further structured to inject the current across the fixed contact at an injection voltage amplitude determined in response to a power throughput of the breaker/relay. The current source circuit **15002** may be further structured to inject the current across the fixed contact at an injection voltage amplitude determined in response to a duty cycle of the vehicle.

Referencing FIG. **152**, an example procedure **15200** for configuring an X-in-1 power converter is schematically depicted. Operations of the procedure **15200** may be performed by any controllers, circuits, and/or hardware arrangements as described throughout the present disclosure, and further may be performed in relation to any of the systems or hardware arrangements described throughout the present disclosure. In certain embodiments, the procedure **152** may be utilized with any system having configurable power electronics, a multi-port power converter, an "X" port power converter, and/or an X-in-1 port power converter. The utilization of the terms multi-port, X-port, and/or X-in-1 port indicate that a power converter includes one or more ports that can serve distinct power loads and/or power sources with one or more varying electrical characteristics. A configurable power converter may have one or more fixed ports, one or more configurable ports, or combinations of these.

The example procedure **15200** includes an operation to interpret a port electrical interface description (or specification), where the port electrical interface description includes a description of (or a specification of) electrical characteristics for at least one of a plurality of ports of a power converter for an electric mobile application. The example procedure **15200** further includes an operation **15204** to provide solid state switch states in response to the port electrical interface description, thereby configuring at least one of an AC inverter or a DC/DC converter to provide power to the at least one of the plurality of ports according to the port electrical interface description. In certain embodiments, operation **15204** provides solid state switch states to configure at least one of a rectifier or a DC/DC converter to interface with a power source (e.g., a battery, capacitor, regenerative state of a load, or the like), and/or to configure a port to accept power under certain operating conditions, and to provide power under other operating conditions. Without limitation, configurable electrical characteristics include voltage levels, frequency values, phase values (including a number and arrangement of phases), and/or tolerances to one or more of these.

The example procedure **15200** further includes an operation **15206** to interpret a source/load drive characteristic (e.g., frequency, phase, or other characteristics of an electric motor, motor/generator, or other device), and an operation **15208** to provide a component driver configuration (e.g., gate drivers for an insulated-gate bipolar transistor) in response to the source/load drive characteristic. In certain embodiments, one or more aspects of the procedure **15200** may be performed at various periods in the life cycle of the power converter and/or an electric mobile application having the power converter, such as: design time (e.g., specifying setting for a power converter), at installation time (e.g., configuring settings for the power converter according to a specification and/or needs of a particular installation), as a service operation (e.g., adjusting the configuration as a part of a test, to correct a failed or faulted component, and/or as a diagnostic operation), as a remanufacture operation (e.g., testing and/or confirming operations of the power converter, configuring the power converter to a standard state or a planned state for installation, etc.), as an upfit operation (e.g., providing an electric mobile application with an uprated capability such as a greater power rating, changing of a voltage and/or current rating through a port, addition of power inputs or outputs, changing one of the power inputs or outputs, and/or addition of phases or other capabilities to interface with loads or power sources), at a manufacture time (e.g., configuring settings for the power converter according to a specification and/or needs of a particular installation, testing and/or confirming operations of the power converter, configuring the power converter to a standard state or a planned state for installation, etc.), and/or as an application change operation (e.g., a conversion of an electric mobile platform to a different service operation, duty cycle, and/or the addition or removal of one or more loads or power sources).

Referencing FIG. **153**, an example procedure **15300** for integrating a power converter into an electric mobile application is depicted. Operations of the procedure **15300** may be performed by any controllers, circuits, and/or hardware arrangements as described throughout the present disclosure, and further may be performed in relation to any of the systems or hardware arrangements described throughout the present disclosure. The example procedure **15300** includes an operation **15302** to provide a power converter having a number of ports for interfacing to electrical loads and/or sources, an operation **15304** to determine an electrical interface description for an electric mobile application, and an operation **15306** to provide solid state switch states in response to the electrical interface description. The example procedure **15300** further includes an operation **15308** to install the power converter in the electric mobile application, and an operation **15310** to couple coolant ports of the power converter to a cooling system of the electric mobile application. It can be seen that procedure **15300** provides for rapid and low cost integration with a number of electric mobile applications, including both the design and engineering for the integration, as well as simplified installation operations. The example procedure **15300** provides for the capability to meet multiple applications with a single power converter device, and/or with a small number of power converter devices having a similar (or identical) footprint and interface locations. The procedure **15300** further includes the capability to provide for a simple cooling interface to power electronics for the electric mobile application without having a number of cooling connections and cooling fluid routing challenges to provide cooling for multiple power electronics components distributed around the electric mobile application.

Referencing FIG. **154**, an example procedure **15400** for adjusting motor operations in response to a motor temperature is schematically depicted. Operations of the procedure

15400 may be performed by any controllers, circuits, and/or hardware arrangements as described throughout the present disclosure, and further may be performed in relation to any of the systems or hardware arrangements described throughout the present disclosure. The example procedure **15400** includes an operation **15402** to operate a motor for an electric mobile application, and an operation **15404** to determine a motor temperature value (e.g., a modeled motor temperature, inferred motor temperature, and/or a motor temperature determined from a virtual sensor). Example operations **15404** to determine the motor temperature include, without limitation, determining and considering parameters such as: a power throughput of the motor, determining a voltage and/or current input value to the motor, adjusting the motor temperature value based on ambient temperature values, determining a motor efficiency value at the current operating conditions (e.g., to separate useful work energy from potentially heat generating energy throughput), and/or utilizing the rates of change of these.

The example procedure **15400** further includes an operation **15406** to determine a sensed temperature value for the motor. Example operations **15406** to determine the sensed motor temperature include, without limitation: determining a temperature from a sensor positioned to provide a temperature representative of the motor; determining a temperature from a sensor positioned to provide a temperature associated with the motor (e.g., having a known offset from the motor temperature, and/or from which the motor temperature can be derived); and/or determining a temperature from a sensor positioned to provide a temperature from which a temperature of interest of the motor is determined. For example, an operation **15406** includes applying a hot spot adjustment correction to the sensed motor temperature (e.g., where a temperature of interest is of a hottest location in the motor, which may not be reflected in a bulk temperature reading by a sensor). In certain embodiments, a hot spot adjustment correction may be calibrated as an offset from a detected temperature (which may be scheduled, e.g., as a function of the detected temperature), and/or from a calibrated relationship between the detected temperature and the hot spot temperature. In certain embodiments, the hot spot adjustment correction may further include dynamic information related to the sensed temperature, such as rates of change of the sensed temperature or power through the motor, and/or integration based parameters of the sensed temperature or power through the motor (e.g., accumulators, time values relative to threshold values, etc.).

The example procedure **15400** further includes an operation **15408** to adjust an operating parameter for the motor in response to the temperature values (e.g., the motor temperature value and the sensed motor temperature value). Example and non-limiting operations **15408** include: adjusting a rating of the motor (e.g., de-rating the motor, allowing greater power output of the motor, adjusting a voltage parameter of the motor to reduce heat production, etc.); adjusting a rating of a load of the electric mobile application (e.g., limiting the requested power and/or torque based on a temperature-induced limitation of the motor); adjusting an active cooling amount for the motor (e.g., engaging active cooling and/or changing a flow rate of active cooling to the motor); and/or adjusting an operating space of the motor based on an efficiency map of the motor (e.g., shifting the motor to a more efficient operating point to reduce heat generation, allowing the motor to operate at a less efficient operating point—for example to allow for a system-level optimization or efficiency routine, etc.).

Referencing FIG. **155**, an example procedure **15500** to determine reliability values for the sensed motor temperature value and/or the modeled/estimated motor temperature value is schematically depicted. The procedure **15500** includes an operation **15502** to determine a first reliability value for the motor temperature value (e.g., the modeled, estimated, or virtual motor temperature value) in response to a first operating condition for the motor. For example, a model or estimator may have a valid range, a known relationship to uncertainty based on operating condition regions, and/or depend upon other sensors or determined values having a fault or failure condition. The example procedure **15500** further includes an operation **15504** to determine a second reliability for the sensed motor temperature value. For example, the sensed motor temperature value may have a fault condition or a failure condition for the associated sensor, the sensor may have a time constant that is slower than currently observed temperature changes, and/or the sensor may be saturated, have a low resolution, and/or have a reduced accuracy in certain temperature or other operating conditions. Example and non-limiting operating conditions to determine the first reliability value include: a power throughput of the motor; a rate of change of power throughput of the motor; a defined range value for a model used to determine the motor temperature value; and/or a rate of change of one of the motor temperature value or the effective motor temperature value. Example and non-limiting operating conditions to determine the second reliability value include: a power throughput of the motor; a rate of change of power throughput of the motor; a defined range value for a temperature sensor providing the sensed motor temperature value; a defined temperature-accuracy relationship for a temperature sensor providing the sensed motor temperature value; a response time for a temperature sensor providing the sensed motor temperature value; and a fault condition for a temperature sensor providing the sensed motor temperature value.

The example procedure **15500** further includes an operation **15506** to determine an effective motor temperature value in response to the motor temperature value and the sensed motor temperature value, and in certain embodiments the operation **15506** further determined the effective motor temperature in response to the first reliability value and the second reliability value. An example operation **15506** includes choosing one or the other of the motor temperature value or the sensed motor temperature value as the effective motor temperature value based on the first reliability value and the second reliability value; and/or utilizing one or the other of the motor temperature value or the sensed motor temperature value as a target for the effective motor temperature value based on the first reliability value and the second reliability value (e.g., where the effective motor temperature value is a filtered value moving toward the target). In certain embodiments, the effective motor temperature value, or the target for the effective motor temperature value, use a mixing of the motor temperature value and/or the sensed motor temperature value (e.g., a weighted average as a function of the reliability values). In certain embodiments, for example where one or the other of the motor temperature value or the sensed motor temperature value are utilized to drive the effective motor temperature value, the operation **15506** may further include hysteresis or other processing (e.g., filtering, averaging, rate-limiting, etc.), for example to avoid dithering of the effective motor temperature value. In certain embodiments, procedure **15500** is utilized in combination with procedure **15400**—for example utilizing the effective motor temperature value as

an input to operation **15408**, and adjusting an operating parameter of the motor in response to the effective motor temperature value.

The term a motor temperature value, or a temperature of the motor, should be understood broadly. A motor temperature value may be any temperature value of interest that is related to the motor—for example a hottest position within the motor, a component of the motor that is most prone to failure in response to temperature excursions, a component of the motor that is most prone to affect some other component of the system in response to temperature excursions, and/or a temperature related to the motor that correlates with an effective efficient power conversion of the motor. Example and non-limiting motor temperature values include, without limitation: a winding temperature of the motor, a bus bar temperature for a bus bar providing power to the motor, a connector temperature related to the motor, and/or a hot spot temperature of the motor.

Referencing FIG. **156**, in an aspect, an apparatus **15600** may include a motor control circuit **15602** structured to operate a motor for an electric mobile application; an operating conditions circuit **15604** structured to interpret a sensed motor temperature value **15608** for the motor, and further structured to interpret at least motor temperature relevant operating condition **15620** such as: a power throughput of the motor; a voltage input value to the motor; a current input value to the motor; an ambient temperature value; and/or an active cooling amount for the motor. An example apparatus **15600** includes a motor temperature determination circuit **15606** structured to determine a motor temperature value **15614** in response to the motor temperature relevant operating condition(s) **15620**. An example motor temperature determination circuit **15606** further determines a motor effective temperature value **15612** in response to the motor temperature value **15614** and the sensed motor temperature value **15608**; where the motor control circuit **15602** may be further structured to adjust at least one operating parameter for the motor (e.g., as an updated motor command **15610**) in response to the motor effective temperature value **15614**. In embodiments, the motor temperature determination circuit **15606** may be further structured to determine a first reliability value for the motor temperature value in response to a first operating condition for the motor and determine a second reliability value for the sensed motor temperature value in response to a second operating condition for the motor (reliability values **15616**), and determine the motor effective temperature value **15612** further in response to the reliability values **15616**.

The motor temperature determination circuit **15606** may be further structured to use the sensed motor temperature value **15608** as the motor effective temperature value in response to the second reliability value exceeding a threshold value. The motor temperature determination circuit **15606** may be further structured to apply a temperature adjustment **15618** such as an offset component adjustment or a hot spot adjustment to the sensed motor temperature value **15608**, and determine the motor effective temperature value **15612** further in response to the adjusted sensed motor temperature value. The motor temperature determination circuit **15606** may be further structured to determine the first reliability value in response to at least one operating condition **15620** such as: the power throughput of the motor; a rate of change of power throughput of the motor; a defined range value for a model used to determine the motor temperature value; and a rate of change of one of the motor temperature value or the effective motor temperature value. The motor temperature determination circuit **15606** may be further structured to determine the second reliability value in response to at least one operating condition **15620** such as: the power throughput of the motor; a rate of change of power throughput of the motor; a defined range value for a temperature sensor providing the sensed motor temperature value; a response time for a temperature sensor providing the sensed motor temperature value; and a fault condition for a temperature sensor providing the sensed motor temperature value. The motor control circuit **15606** may be further structured to adjust at least one operating parameter (e.g., an adjusted motor command **15610**) for the motor such as: a rating of the motor; a rating of a load of the electric mobile application; the active cooling amount for the motor; and an operating space of the motor based on an efficiency map of the motor.

In an aspect, a system may include an electric mobile application having a motor and an inverter, wherein the inverter may include a plurality of driving elements for the motor. Referencing FIG. **157**, the example system further includes a controller **15700** having a motor control circuit **15702** structured to provide driver commands (driving element commands **15704**), and where the plurality of driving elements may be responsive to the driver commands **15704**. The controller **15700** further includes an operating conditions circuit **15706** structured to interpret a motor performance request value **15708** such as a power, speed, and/or torque request for the motor. The controller **15700** further includes a driver efficiency circuit **15710** that interprets a driver activation value **15712** for each of the plurality of driving elements of the inverter in response to the motor performance request value **15708**, and where the motor control circuit **15702** may be further structured to provide the driver commands **15704** to de-activate at least one of the driving elements for the motor in response to the driver activation value **15712** for each of the plurality of driving elements of the inverter. In embodiments, the motor may include a three-phase AC motor, wherein the plurality of driving elements include six driving elements, and wherein the driver efficiency circuit **15710** provides the driver activation value **15712** to de-activate three of the six driving elements in response to the motor performance request value **15708** being below a threshold value.

Referencing FIG. **158**, an example procedure **15800** for selectively de-activating portions of a power inverter for an electric mobile application is depicted. Operations of the procedure **15800** may be performed by any controllers, circuits, and/or hardware arrangements as described throughout the present disclosure, and further may be performed in relation to any of the systems or hardware arrangements described throughout the present disclosure. The example procedure **15800** includes an operation **15802** to provide driver commands to a plurality of driving elements of an inverter electrically coupled to a motor for an electric mobile application, and an operation **15804** to interpret a motor performance request value for the electric mobile application. Example and non-limiting motor performance request values include, without limitation, a power, a speed, and/or or a torque request for a motor powered by the power inverter. The example procedure **15800** further includes an operation **15806** to interpret a driver activation value for each of the plurality of driving elements in response to the motor performance request value. For example, if the motor performance request value includes a power request requiring all of the driving elements (e.g., IGBTs on an inverter) to be active to accommodate the power request, then operation **15806** may determine that the driver activation value for each driving

element is "TRUE". In another example, if the motor performance request value includes a power request where only a portion of the driving elements are required to meet the power request, the operation **15806** may include determining whether some of the driving elements may be deactivated. In a further example, the operation **15806** may include determining an efficiency of the driving elements in a first condition (e.g., all driving elements active), and the efficiency of the driving elements in a second condition (e.g., some driving elements inactive), and determining the driver activation values that meet the desired goals (e.g., power conversion efficiency, temperature targets for driving elements, planned life cycle of the driving elements, noise or electrical characteristic requirements of the motor or load, etc.). The example procedure **15800** further includes an operation **15806** to provide driver commands to the driving elements in response to the driver activation values, including deactivating one or more driving elements in response to the driver activation value(s). An example procedure **15800** includes the operation **15806** to deactivate three out of six total driving elements (e.g., retaining capability to support three balanced phases to drive a motor). A further example procedure **15800** includes the operation **15806** to deactivate a first three out of six total driving elements during a first de-activation operation, and de-activating a second three out of the six total driving elements during a second de-activation (e.g., to balance the life cycles of driving elements, to balance heat generation within the inverter over time, to utilize banks of driving elements having distinct capabilities such as power ratings, etc.).

Referencing FIG. **159**, an example system **15900** may include an electric mobile application having a plurality of electric motors **15904**, **15908**, **15912**, **15916**, each one of the plurality of electric motors operationally coupled to a corresponding one of a plurality of electric loads **15906**, **15910**, **15914**, **15918**. The example system **15900** includes four motors coupled to four loads, although a system may include any number of motors coupled to any number of loads, and the motors and loads may have more than one motor for a given load, and/or more than one load for a given motor. The system includes a controller **15902**, where the controller **15902** includes (Reference FIG. **160**) an application load circuit **16002** structured to interpret an application performance request value **16010**; a performance servicing circuit **16004** structured to determine a plurality of motor commands **16020** in response to a motor capability description (motor performance capability **16016**), and the application performance request value **16010**. The controller **15902** further includes a motor control circuit **16006** structured to provide the plurality of motor commands **16014** to corresponding motors **15904**, **15908**, **15912**, **15916** of the plurality of electric motors; and wherein the plurality of electric motors **15904**, **15908**, **15912**, **15916** may be responsive to the plurality of motor commands **16014**. The determined motor commands **16020** may differ from the communicated motor commands **16014**, for example to account for system dynamics, rate change limits, and/or other constraints not related to meeting performance requests of the system.

In embodiments, the performance servicing circuit **16004** may be further structured to determine the plurality of motor commands **16020** in response to one of a fault condition or a failure condition **16012** for at least one of the plurality of electric motors, and/or for a component related to one of the plurality of electric motors (e.g., a local inverter, local controller, sensor, and/or the load). The performance servicing circuit **16004** may be further structured to determine the plurality of motor commands **16020** to meet the application performance request value **16010** by at least partially redistributing load requirements from one of the plurality of electric motors having the fault condition or the failure condition **16012**, to at least one of the plurality of electric motors having available performance capacity (but which may have a separate fault condition or failure condition **16012**). The performance servicing circuit **16004** may be further structured to derate one of the plurality of electric motors in response to the one of the fault condition or the failure condition **16012**. The system may further include a first data store **16024** associated with a first one of the plurality of electric motors, a second data store **16026** associated with a second one of the plurality of electric motors, and wherein the controller **15902** further may include a data management circuit **16008** structured to command at least partial data redundancy (e.g., redundant data value(s) **16022**) between the first data store **16024** and the second data store **16026**, and/or between one of the data stores **16024**, **16026**, and another data store in the system (not shown) and/or to an external data store. The at least partial data redundancy may include at least one data value selected from the data values consisting of: a fault value, a system state, and a learning component value. The data management circuit **16008** may be further structured to command the at least partial data redundancy in response to one of a fault condition or a failure condition **16012** related to, without limitation, at least one of: one of the plurality of electric motors, an inverter operationally coupled to one of the plurality of electric motors; a sensor operationally coupled to one of the plurality of electric motors; and/or a local controller operationally coupled to one of the plurality of electric motors. The performance servicing circuit **16004** may be further structured to determine the plurality of motor commands **16020** in response to the one of the fault condition or the failure condition **16012**, and further in response to data **16022** from the at least partial data redundancy. The performance servicing circuit **16004** may be further structured to suppress an operator notification **16018** of one of a fault condition or a failure condition **16012** in response to a performance capability **16016** of the plurality of electric motors being capable of delivering the application performance request value **16010**. The performance servicing circuit **16004** may be further structured to communicate the suppressed operator notification **16018** to at least one of a service tool **16030** or an external controller **16028**, wherein the external controller **16028** and/or the service tool **16030** may be at least intermittently communicatively coupled to the controller **15902**. The performance servicing circuit **16004** may be further structured to adjust the application performance request value **16010** in response to a performance capability **16016** of the plurality of electric motors being incapable of delivering the application performance request value **16010**.

Referencing FIG. **161**, an example procedure **16100** for controlling an electric mobile application having a number of distributed motors is schematically depicted. In certain embodiments, the procedure **16100** may be utilized with an electric mobile application having one or more distributed driving elements (e.g., inverters) associated with one or more of the distributed motors, and/or one or more distributed controllers for the inverters and/or motors. The distributed motors may be configured to power various loads within the electric mobile application, and in certain embodiments, more than one motor may be capable to provide power to a particular load (e.g., motors associated with the wheels may be combined to provide overall motive power). Operations of the procedure **16100** may be per-

formed by any controllers, circuits, and/or hardware arrangements as described throughout the present disclosure, and further may be performed in relation to any of the systems or hardware arrangements described throughout the present disclosure. The example procedure **16100** includes an operation **16102** to interpret an application performance request value. Example and non-limiting application performance request values include a motive or load power request, a motive or load torque request, and/or a motive or load speed request. The application performance request may be related to the entire application (e.g., a vehicle speed) and/or any portion of the application (e.g., a pump speed, a fan torque, etc.). The example procedure **16100** includes an operation **16104** to determine a fault and/or failure condition for one or more motors, inverters, and/or local controllers of the electric mobile application. The determination of a fault and/or failure condition may further include determining a capability for the faulted or failed component (e.g., a de-rated motor may still be capable to provide some increment of power, and/or a motor having a failed inverter related to that motor may have some capability to receive power provided by another inverter in the system). In certain embodiments, for example where a motor is related to a local controller for the motor, and the local controller has failed, the motor may nevertheless be able to be controlled by another controller in the system and/or another local controller related to another motor in the system. In certain embodiments, the control of the motor by another controller in the system may be de-rated—for example where the distant controller does not have one or more parameters available such a temperature value, a speed value, or another feedback value for the motor, and/or has a degraded version of any such parameter (e.g., slower, lower resolution, and/or lower certainty), the distant controller may control the motor at a reduced power limit to protect the motor and/or the electric mobile application.

The example procedure **16100** further includes an operation **16106** to determine motor commands in response to a motor capability description (e.g., motor ratings, including de-rates according to fault or failure conditions for related components, and/or due to the type of control such as when a distant controller is operating the motor), the application performance request value, and the fault/failure conditions of the motors. In certain embodiments, operation **16106** includes providing sufficient performance across the available motors such that the application performance request value can be met. In certain embodiments, operation **16106** further includes providing commands to one or more of the motors, local controllers, and/or related inverters in response to the determined motor commands.

In certain embodiments, the procedure **16100** further includes an operation **16108** to command a data redundancy storage operation. For example, critical operating information such as motor or inverter calibrations, operating states, limitations, or the like, may be stored in more than one location. In certain embodiments, the operation **16108** is responsive to fault or failure conditions in the electric mobile application, for example where a local controller, sensor, or other component has a fault or failure condition, the operation **16108** may include commanding data redundancy storage related to the component (or related components) having the fault or failure condition. In certain embodiments, the operation **16108** may include commanding data redundancy storage for components that do not have a fault or failure condition, and further enhancing the data redundancy storage in response to the occurrence of a fault or failure condition. In certain embodiments, the operation **16108** provides for data redundancy storage regardless of the fault or failure condition of components in the electric mobile application. Accordingly, operation **16108** provides for protection from the loss of data in response to the loss of a data storage component (e.g., parameters stored on a local controller), and provides for improved control of components (e.g., inverters and/or motors) if an associated local controller has a fault or failure and is not able to control the related component and/or communicate out control parameters for the local component after the fault or failure. In certain embodiments, data redundancy may include at least one data value selected from the data values consisting of: a fault value, a system state, and a learning component value (e.g., control parameters related to a machine learning operation and/or real-time calibration values). In certain embodiments, operation **16106** includes determining the motor, inverter, or local controller commands in response to the data in the data redundancy storage. The operation **16108** to provide for data redundancy storage includes distributing data in any manner within a data store available beyond the host data store, including at least a data store associated with any one or more of the following: another local controller, a master controller and/or a distributed (e.g., virtual) controller, a powertrain controller, a vehicle controller, and/or an external controller (e.g., a manufacturer server, a fleet server, a cloud-based server, a personal device such as an operator's smart phone, etc.).

The example procedure **16100** includes an operation **16110** to suppress an operator notification (e.g., a warning or maintenance light, a vehicle response based notification, an app-based notification, or the like) of a failure or fault (e.g., as determined in operation **16104**) in response to the available motor commands being capable to meet the application performance request value. For example, if a motor derate occurs where the mission of the electric mobile application can still be met (e.g., rated power is achievable, and/or a power request exceeding the current capability of the motors has not occurred or is not likely to occur), then operation **16110** may suppress the operator notification of the fault or failure indication that would normally occur. The example procedure **16100** further includes an operation **16112** to communicate the suppressed operator notifications (and/or the underlying fault or failure condition(s)) to a service tool or external controller. For example, if a motor derate occurs where the mission of the electric mobile application can still be met, the procedure **16100** may include suppressing an operator notification, and notifying an external controller (e.g., a fleet maintenance server, manufacturer server, or other external server) and/or a service tool (e.g., an OBD device connecting to a communications port of the electric mobile application, a Wi-Fi based device in a service shop, etc.). Accordingly, inconvenient and/or expensive service events can be avoided, and/or servicing parties can be notified such that the fault or failure can be addressed at a convenient time and/or when the electric mobile application is already being serviced. In certain embodiments, the procedure **16100** includes an operation (not shown) to receive parameters defining the types of faults and/or failures that can be suppressed from operator notification, and/or performance limits and/or component types (relating to the faults/failures) that can be suppressed from operator notification. Additionally or alternatively, the procedure **16100** includes an operation (not shown) to receive parameters defining the types of faults and/or failures that are to be communicated to an external controller, and/or performance limits and/or component types that are to be communicated to the external controller. Additionally or alternatively, the

procedure **16100** includes an operation (not shown) defining operator notification types that should be suppressed (e.g., where one type of operator notification is suppressed and another is executed), and/or the timing or locations of external controller notifications.

The methods and systems described herein may be deployed in part or in whole through a machine having a computer, computing device, processor, circuit, and/or server that executes computer readable instructions, program codes, instructions, and/or includes hardware configured to functionally execute one or more operations of the methods and systems disclosed herein. The terms computer, computing device, processor, circuit, and/or server, as utilized herein, should be understood broadly.

Any one or more of the terms computer, computing device, processor, circuit, and/or server include a computer of any type, capable to access instructions stored in communication thereto such as upon a non-transient computer readable medium, whereupon the computer performs operations of systems or methods described herein upon executing the instructions. In certain embodiments, such instructions themselves comprise a computer, computing device, processor, circuit, and/or server. Additionally or alternatively, a computer, computing device, processor, circuit, and/or server may be a separate hardware device, one or more computing resources distributed across hardware devices, and/or may include such aspects as logical circuits, embedded circuits, sensors, actuators, input and/or output devices, network and/or communication resources, memory resources of any type, processing resources of any type, and/or hardware devices configured to be responsive to determined conditions to functionally execute one or more operations of systems and methods herein.

Network and/or communication resources include, without limitation, local area network, wide area network, wireless, internet, or any other known communication resources and protocols. Example and non-limiting hardware, computers, computing devices, processors, circuits, and/or servers include, without limitation, a general purpose computer, a server, an embedded computer, a mobile device, a virtual machine, and/or an emulated version of one or more of these. Example and non-limiting hardware, computers, computing devices, processors, circuits, and/or servers may be physical, logical, or virtual. A computer, computing device, processor, circuit, and/or server may be: a distributed resource included as an aspect of several devices; and/or included as an interoperable set of resources to perform described functions of the computer, computing device, processor, circuit, and/or server, such that the distributed resources function together to perform the operations of the computer, computing device, processor, circuit, and/or server. In certain embodiments, each computer, computing device, processor, circuit, and/or server may be on separate hardware, and/or one or more hardware devices may include aspects of more than one computer, computing device, processor, circuit, and/or server, for example as separately executable instructions stored on the hardware device, and/or as logically partitioned aspects of a set of executable instructions, with some aspects of the hardware device comprising a part of a first computer, computing device, processor, circuit, and/or server, and some aspects of the hardware device comprising a part of a second computer, computing device, processor, circuit, and/or server.

A computer, computing device, processor, circuit, and/or server may be part of a server, client, network infrastructure, mobile computing platform, stationary computing platform, or other computing platform. A processor may be any kind of computational or processing device capable of executing program instructions, codes, binary instructions and the like. The processor may be or include a signal processor, digital processor, embedded processor, microprocessor or any variant such as a co-processor (math co-processor, graphic co-processor, communication co-processor and the like) and the like that may directly or indirectly facilitate execution of program code or program instructions stored thereon. In addition, the processor may enable execution of multiple programs, threads, and codes. The threads may be executed simultaneously to enhance the performance of the processor and to facilitate simultaneous operations of the application. By way of implementation, methods, program codes, program instructions and the like described herein may be implemented in one or more threads. The thread may spawn other threads that may have assigned priorities associated with them; the processor may execute these threads based on priority or any other order based on instructions provided in the program code. The processor may include memory that stores methods, codes, instructions and programs as described herein and elsewhere. The processor may access a storage medium through an interface that may store methods, codes, and instructions as described herein and elsewhere. The storage medium associated with the processor for storing methods, programs, codes, program instructions or other type of instructions capable of being executed by the computing or processing device may include but may not be limited to one or more of a CD-ROM, DVD, memory, hard disk, flash drive, RAM, ROM, cache and the like.

A processor may include one or more cores that may enhance speed and performance of a multiprocessor. In embodiments, the process may be a dual core processor, quad core processors, other chip-level multiprocessor and the like that combine two or more independent cores (called a die).

The methods and systems described herein may be deployed in part or in whole through a machine that executes computer readable instructions on a server, client, firewall, gateway, hub, router, or other such computer and/or networking hardware. The computer readable instructions may be associated with a server that may include a file server, print server, domain server, internet server, intranet server and other variants such as secondary server, host server, distributed server and the like. The server may include one or more of memories, processors, computer readable transitory and/or non-transitory media, storage media, ports (physical and virtual), communication devices, and interfaces capable of accessing other servers, clients, machines, and devices through a wired or a wireless medium, and the like. The methods, programs, or codes as described herein and elsewhere may be executed by the server. In addition, other devices required for execution of methods as described in this application may be considered as a part of the infrastructure associated with the server.

The server may provide an interface to other devices including, without limitation, clients, other servers, printers, database servers, print servers, file servers, communication servers, distributed servers, and the like. Additionally, this coupling and/or connection may facilitate remote execution of instructions across the network. The networking of some or all of these devices may facilitate parallel processing of program code, instructions, and/or programs at one or more locations without deviating from the scope of the disclosure. In addition, all the devices attached to the server through an interface may include at least one storage medium capable of storing methods, program code, instructions, and/or programs. A central repository may provide program instruc-

tions to be executed on different devices. In this implementation, the remote repository may act as a storage medium for methods, program code, instructions, and/or programs.

The methods, program code, instructions, and/or programs may be associated with a client that may include a file client, print client, domain client, internet client, intranet client and other variants such as secondary client, host client, distributed client and the like. The client may include one or more of memories, processors, computer readable transitory and/or non-transitory media, storage media, ports (physical and virtual), communication devices, and interfaces capable of accessing other clients, servers, machines, and devices through a wired or a wireless medium, and the like. The methods, program code, instructions, and/or programs as described herein and elsewhere may be executed by the client. In addition, other devices utilized for execution of methods as described in this application may be considered as a part of the infrastructure associated with the client.

The client may provide an interface to other devices including, without limitation, servers, other clients, printers, database servers, print servers, file servers, communication servers, distributed servers, and the like. Additionally, this coupling and/or connection may facilitate remote execution of methods, program code, instructions, and/or programs across the network. The networking of some or all of these devices may facilitate parallel processing of methods, program code, instructions, and/or programs at one or more locations without deviating from the scope of the disclosure. In addition, all the devices attached to the client through an interface may include at least one storage medium capable of storing methods, program code, instructions, and/or programs. A central repository may provide program instructions to be executed on different devices. In this implementation, the remote repository may act as a storage medium for methods, program code, instructions, and/or programs.

The methods and systems described herein may be deployed in part or in whole through network infrastructures. The network infrastructure may include elements such as computing devices, servers, routers, hubs, firewalls, clients, personal computers, communication devices, routing devices and other active and passive devices, modules, and/or components as known in the art. The computing and/or non-computing device(s) associated with the network infrastructure may include, apart from other components, a storage medium such as flash memory, buffer, stack, RAM, ROM and the like. The methods, program code, instructions, and/or programs described herein and elsewhere may be executed by one or more of the network infrastructural elements.

The methods, program code, instructions, and/or programs described herein and elsewhere may be implemented on a cellular network having multiple cells. The cellular network may either be frequency division multiple access (FDMA) network or code division multiple access (CDMA) network. The cellular network may include mobile devices, cell sites, base stations, repeaters, antennas, towers, and the like.

The methods, program code, instructions, and/or programs described herein and elsewhere may be implemented on or through mobile devices. The mobile devices may include navigation devices, cell phones, mobile phones, mobile personal digital assistants, laptops, palmtops, netbooks, pagers, electronic books readers, music players, and the like. These mobile devices may include, apart from other components, a storage medium such as a flash memory, buffer, RAM, ROM and one or more computing devices. The computing devices associated with mobile devices may be enabled to execute methods, program code, instructions, and/or programs stored thereon. Alternatively, the mobile devices may be configured to execute instructions in collaboration with other devices. The mobile devices may communicate with base stations interfaced with servers and configured to execute methods, program code, instructions, and/or programs. The mobile devices may communicate on a peer to peer network, mesh network, or other communications network. The methods, program code, instructions, and/or programs may be stored on the storage medium associated with the server and executed by a computing device embedded within the server. The base station may include a computing device and a storage medium. The storage device may store methods, program code, instructions, and/or programs executed by the computing devices associated with the base station.

The methods, program code, instructions, and/or programs may be stored and/or accessed on machine readable transitory and/or non-transitory media that may include: computer components, devices, and recording media that retain digital data used for computing for some interval of time; semiconductor storage known as random access memory (RAM); mass storage typically for more permanent storage, such as optical discs, forms of magnetic storage like hard disks, tapes, drums, cards and other types; processor registers, cache memory, volatile memory, non-volatile memory; optical storage such as CD, DVD; removable media such as flash memory (e.g., USB sticks or keys), floppy disks, magnetic tape, paper tape, punch cards, standalone RAM disks, Zip drives, removable mass storage, off-line, and the like; other computer memory such as dynamic memory, static memory, read/write storage, mutable storage, read only, random access, sequential access, location addressable, file addressable, content addressable, network attached storage, storage area network, bar codes, magnetic ink, and the like.

Certain operations described herein include interpreting, receiving, and/or determining one or more values, parameters, inputs, data, or other information. Operations including interpreting, receiving, and/or determining any value parameter, input, data, and/or other information include, without limitation: receiving data via a user input; receiving data over a network of any type; reading a data value from a memory location in communication with the receiving device; utilizing a default value as a received data value; estimating, calculating, or deriving a data value based on other information available to the receiving device; and/or updating any of these in response to a later received data value. In certain embodiments, a data value may be received by a first operation, and later updated by a second operation, as part of the receiving a data value. For example, when communications are down, intermittent, or interrupted, a first operation to interpret, receive, and/or determine a data value may be performed, and when communications are restored an updated operation to interpret, receive, and/or determine the data value may be performed.

Certain logical groupings of operations herein, for example methods or procedures of the current disclosure, are provided to illustrate aspects of the present disclosure. Operations described herein are schematically described and/or depicted, and operations may be combined, divided, re-ordered, added, or removed in a manner consistent with the disclosure herein. It is understood that the context of an operational description may require an ordering for one or more operations, and/or an order for one or more operations may be explicitly disclosed, but the order of operations should be understood broadly, where any equivalent group-

ing of operations to provide an equivalent outcome of operations is specifically contemplated herein. For example, if a value is used in one operational step, the determining of the value may be required before that operational step in certain contexts (e.g. where the time delay of data for an operation to achieve a certain effect is important), but may not be required before that operation step in other contexts (e.g. where usage of the value from a previous execution cycle of the operations would be sufficient for those purposes). Accordingly, in certain embodiments an order of operations and grouping of operations as described is explicitly contemplated herein, and in certain embodiments reordering, subdivision, and/or different grouping of operations is explicitly contemplated herein.

The methods and systems described herein may transform physical and/or or intangible items from one state to another. The methods and systems described herein may also transform data representing physical and/or intangible items from one state to another.

The elements described and depicted herein, including in flow charts, block diagrams, and/or operational descriptions, depict and/or describe specific example arrangements of elements for purposes of illustration. However, the depicted and/or described elements, the functions thereof, and/or arrangements of these, may be implemented on machines, such as through computer executable transitory and/or non-transitory media having a processor capable of executing program instructions stored thereon, and/or as logical circuits or hardware arrangements. Example arrangements of programming instructions include at least: monolithic structure of instructions; standalone modules of instructions for elements or portions thereof, and/or as modules of instructions that employ external routines, code, services, and so forth; and/or any combination of these, and all such implementations are contemplated to be within the scope of embodiments of the present disclosure. Examples of such machines include, without limitation, personal digital assistants, laptops, personal computers, mobile phones, other handheld computing devices, medical equipment, wired or wireless communication devices, transducers, chips, calculators, satellites, tablet PCs, electronic books, gadgets, electronic devices, devices having artificial intelligence, computing devices, networking equipment, servers, routers and the like. Furthermore, the elements described and/or depicted herein, and/or any other logical components, may be implemented on a machine capable of executing program instructions. Thus, while the foregoing flow charts, block diagrams, and/or operational descriptions set forth functional aspects of the disclosed systems, any arrangement of program instructions implementing these functional aspects are contemplated herein. Similarly, it will be appreciated that the various steps identified and described above may be varied, and that the order of steps may be adapted to particular applications of the techniques disclosed herein. Additionally, any steps or operations may be divided and/or combined in any manner providing similar functionality to the described operations. All such variations and modifications are contemplated in the present disclosure. The methods and/or processes described above, and steps thereof, may be implemented in hardware, program code, instructions, and/or programs or any combination of hardware and methods, program code, instructions, and/or programs suitable for a particular application. Example hardware includes a dedicated computing device or specific computing device, a particular aspect or component of a specific computing device, and/or an arrangement of hardware components and/or logical circuits to perform one or more of the operations of a method and/or system. The processes may be implemented in one or more microprocessors, microcontrollers, embedded microcontrollers, programmable digital signal processors or other programmable device, along with internal and/or external memory. The processes may also, or instead, be embodied in an application specific integrated circuit, a programmable gate array, programmable array logic, or any other device or combination of devices that may be configured to process electronic signals. It will further be appreciated that one or more of the processes may be realized as a computer executable code capable of being executed on a machine readable medium.

The computer executable code may be created using a structured programming language such as C, an object oriented programming language such as C++, or any other high-level or low-level programming language (including assembly languages, hardware description languages, and database programming languages and technologies) that may be stored, compiled or interpreted to run on one of the above devices, as well as heterogeneous combinations of processors, processor architectures, or combinations of different hardware and computer readable instructions, or any other machine capable of executing program instructions.

Thus, in one aspect, each method described above and combinations thereof may be embodied in computer executable code that, when executing on one or more computing devices, performs the steps thereof. In another aspect, the methods may be embodied in systems that perform the steps thereof, and may be distributed across devices in a number of ways, or all of the functionality may be integrated into a dedicated, standalone device or other hardware. In another aspect, the means for performing the steps associated with the processes described above may include any of the hardware and/or computer readable instructions described above. All such permutations and combinations are contemplated in embodiments of the present disclosure.

While the methods and systems described herein have been disclosed in connection with certain preferred embodiments shown and described in detail, various modifications and improvements thereon may become readily apparent to those skilled in the art. Accordingly, the spirit and scope of the methods and systems described herein is not to be limited by the foregoing examples, but is to be understood in the broadest sense allowable by law.

All documents referenced herein are hereby incorporated by reference.

What is claimed is:

1. A mobile application, comprising:

a motive power circuit, the motive power circuit comprising a power storage device and an electrical load, wherein the power storage device and the electrical load are selectively electrically coupled through a power bus; and

a power distribution unit (PDU) electrically interposed between the power storage device and the electrical load, wherein the PDU comprises a breaker/relay positioned on one of a high side and a low side of the power storage device;

wherein the breaker/relay comprises:

a plurality of fixed contacts electrically coupled to the power bus;

a plurality of moveable contacts corresponding to the plurality of fixed contacts, wherein the plurality of moveable contacts are selectively electrically coupled to the plurality of fixed contacts, and wherein the moveable contacts allow power flow through the power bus when electrically coupled to

the fixed contacts, and prevent power flow through the power bus when not electrically coupled to the fixed contacts;

an armature operationally coupled to at least one of the moveable contacts, such that the armature in a first position prevents electrical coupling between the at least one of the moveable contacts and the corresponding one of the fixed contacts, and the armature in a second position allows electrical coupling between the at least one of the moveable contacts and the corresponding one of the fixed contacts;

a first biasing member biasing the armature into one of the first position or the second position; and

an arc suppression assembly structured to guide and disperse an opening arc between each of the plurality of moveable contacts and the corresponding fixed contacts.

2. The mobile application of claim **1**, wherein the plurality of moveable contacts are linked as a dual pole single throw contacting arrangement.

3. The mobile application of claim **2**, wherein the armature is operationally coupled to both of the moveable contacts.

4. The mobile application of claim **1**, wherein the plurality of moveable contacts are separately controllable.

5. The mobile application of claim **1**, further comprising a pre-charge circuit coupled in parallel with at least one of the fixed contacts.

6. The mobile application of claim **5**, wherein the pre-charge circuit comprises a solid state pre-charge circuit.

7. The mobile application of claim **1**, further comprising a magnetic actuator coupled to one of the moveable contacts, and wherein all of the plurality of moveable contacts are responsive to the magnetic actuator.

8. The mobile application of claim **1**, wherein the arc suppression assembly comprises a plurality of splitter plates and at least one permanent magnet.

9. The mobile application of claim **8**, wherein at least one of the plurality of splitter plates is positioned within arc dispersion proximity of more than one of the moveable contacts.

10. The mobile application of claim **8**, wherein the permanent magnet is positioned within arc guidance proximity of more than one of the moveable contacts.

11. The mobile application of claim **1**, further comprising a current sensor structured to determine an electrical current value in response to electrical current flowing through at least one of the moveable contacts, the mobile application further comprising a controller structured to interpret the electrical current value and to command the at least one of the moveable contacts to the first position in response to the electrical current value exceeding a threshold value.

12. The mobile application of claim **11**, wherein the at least one of the moveable contacts is responsive to a Lorentz force to physically move to the first position in response to the electrical current value exceeding a second threshold value.

13. The mobile application of claim **12**, wherein the second threshold value is greater than the threshold value.

14. The mobile application of claim **12**, wherein the controller is further structured to adjust the threshold value in response to an expected electrical current value.

15. The mobile application of claim **11**, wherein the controller is further structured to increase the threshold value in response to determining that a charge operation of a battery is active.

16. The mobile application of claim **1**, further comprising a bus bar electrically coupling two of the plurality of moveable contacts.

17. The mobile application of claim **16**, wherein the bus bar comprises a hardware configuration in a region of each of the moveable contacts, wherein the hardware configuration provides for a physical response force of the moveable contacts in response to a current value through the power bus.

18. The mobile application of claim **17**, wherein the hardware configuration comprises at least one configuration selected from the configurations consisting of: an area of the bus bar in proximity to a current providing portion of the power bus; and a positioning of a portion of the bus bar in proximity to the current providing portion of the power bus.

19. The mobile application of claim **1**, further comprising a plurality of current sensors, each of the plurality of current sensors operationally coupled to one of the plurality of moveable contacts.

20. The mobile application of claim **19**, wherein a first one of the plurality of moveable contacts couples a first circuit of the power bus, and wherein a second one of the plurality of moveable contacts couples a second circuit of the power bus, and wherein the first circuit and the second circuit are power circuits for separate electrical loads.

* * * * *