US 20250267525A1

(19) **United States**

(12) **Patent Application Publication** (10) **Pub. No.: US 2025/0267525 A1**

Shi et al. (43) **Pub. Date: Aug. 21, 2025**

(54) **QOS UPDATE HANDLING ALTERNATIVES DURING XN HO**

(71) Applicant: **Telefonaktiebolaget LM Ericsson (publ)**, Stockholm (SE)

(72) Inventors: **Nianshan Shi**, Järfälla (SE); **Paul Schliwa-Bertling**, Ljungsbro (SE); **Qian Chen**, Mölndal (SE)

(21) Appl. No.: **19/203,321**

(22) Filed: **May 9, 2025**

Related U.S. Application Data

(63) Continuation of application No. 18/027,140, filed on Mar. 20, 2023, filed as application No. PCT/IB2021/058611 on Sep. 21, 2021, now Pat. No. 12,335,794.

(60) Provisional application No. 63/081,084, filed on Sep. 21, 2020.

Publication Classification

(51) **Int. Cl.**
H04W 36/00 (2009.01)

(52) **U.S. Cl.**
CPC ***H04W 36/0044*** (2013.01); ***H04W 36/0011*** (2013.01); *H04W 36/0072* (2013.01)

(57) **ABSTRACT**

Embodiments disclosed herein include supporting a Quality of Service (QOS) update during a Handover (HO) procedure. More specifically, methods performed by a Radio Access Network (RAN) node and a Core Network (CN) node for supporting a QoS update during an HO are provided. The methods disclosed herein can facilitate flexible New Generation (NG)-RAN (NG-RAN) deployment with a mixture of NG-RAN nodes capable or incapable of supporting additional parameters in an HO procedure. The methods also make it possible to provide smooth NG-RAN software updates between different software releases.

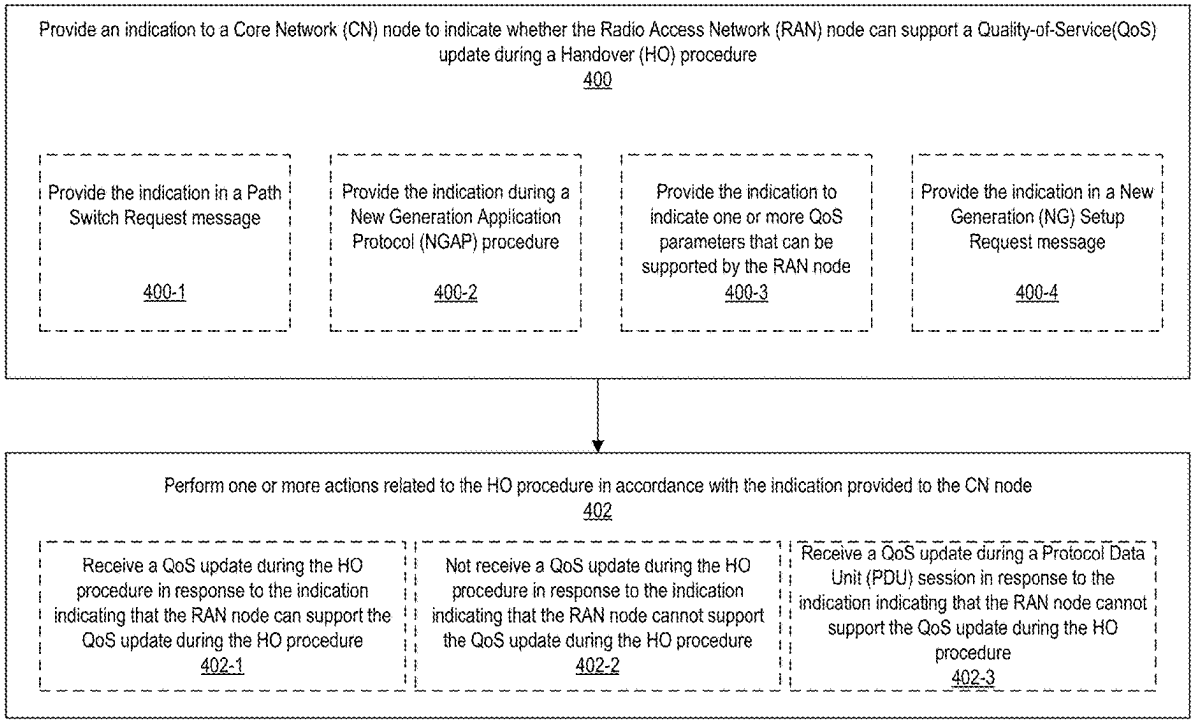

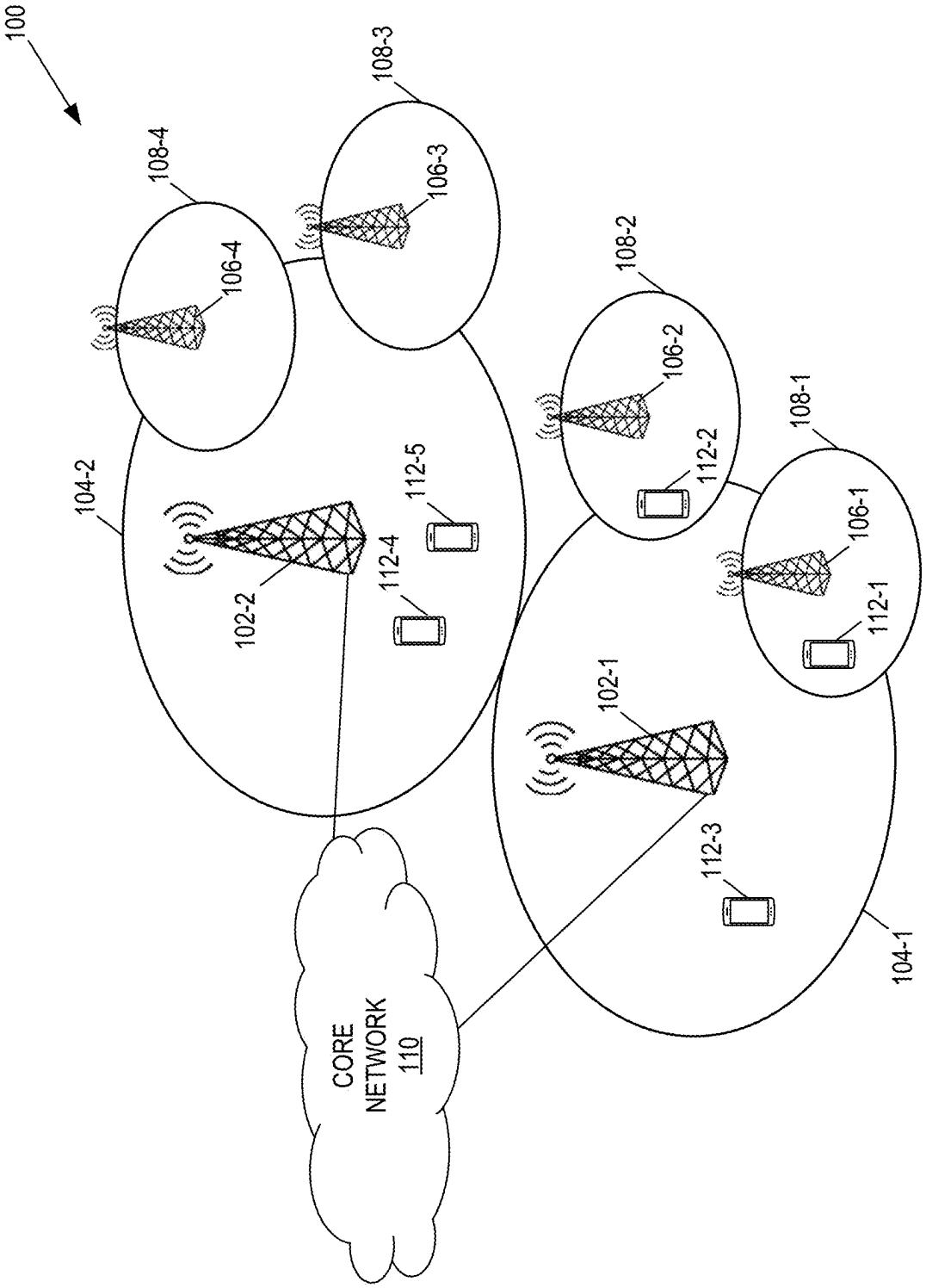
100
108-3
108-4
106-3
106-4
108-2
106-2
112-2
108-1
104-2
112-5
106-1
102-2
112-4
112-1
102-1
112-3
CORE NETWORK 110
104-1

FIG. 1

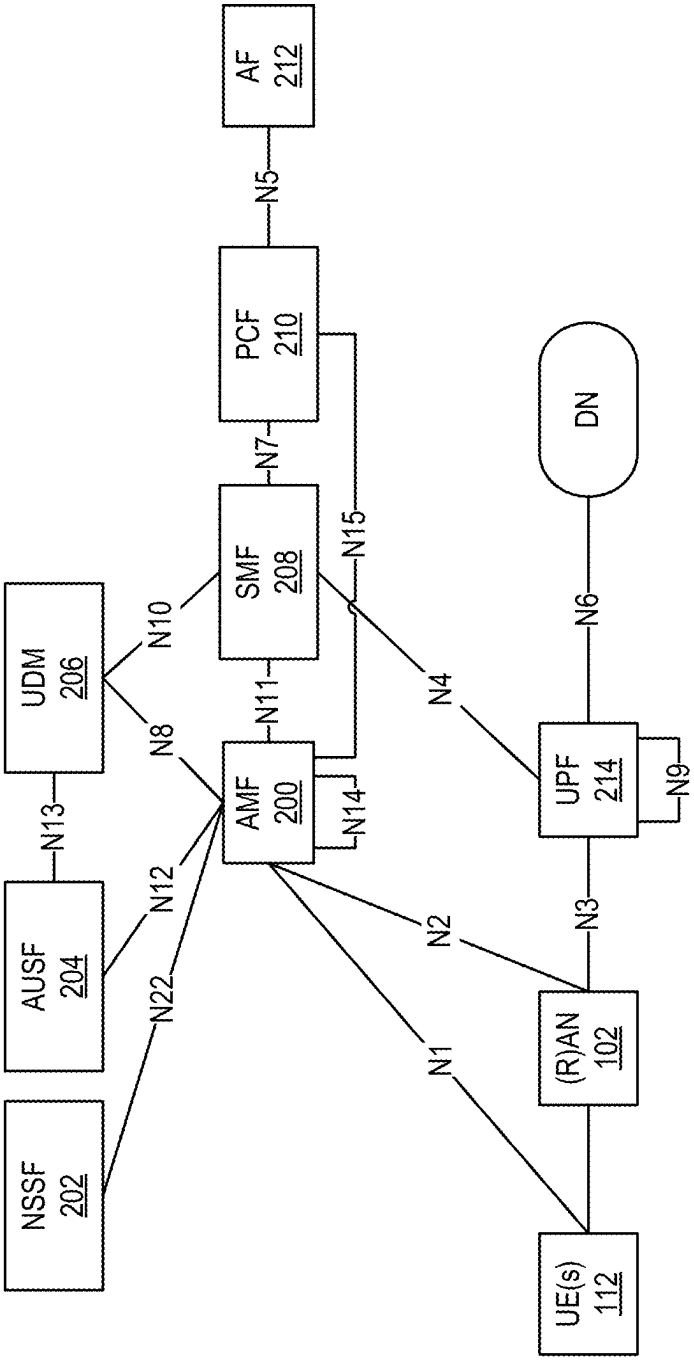
AF
212
N5
PCF
210
N7
SMF
208
N15
UDM
206
N10
N8
N11
AMF
200
N14
N13
AUSF
204
N12
N22
NSSF
202
N4
DN
N6
UPF
214
N9
N3
N2
N1
(R)AN
102
UE(s)
112

FIG. 2

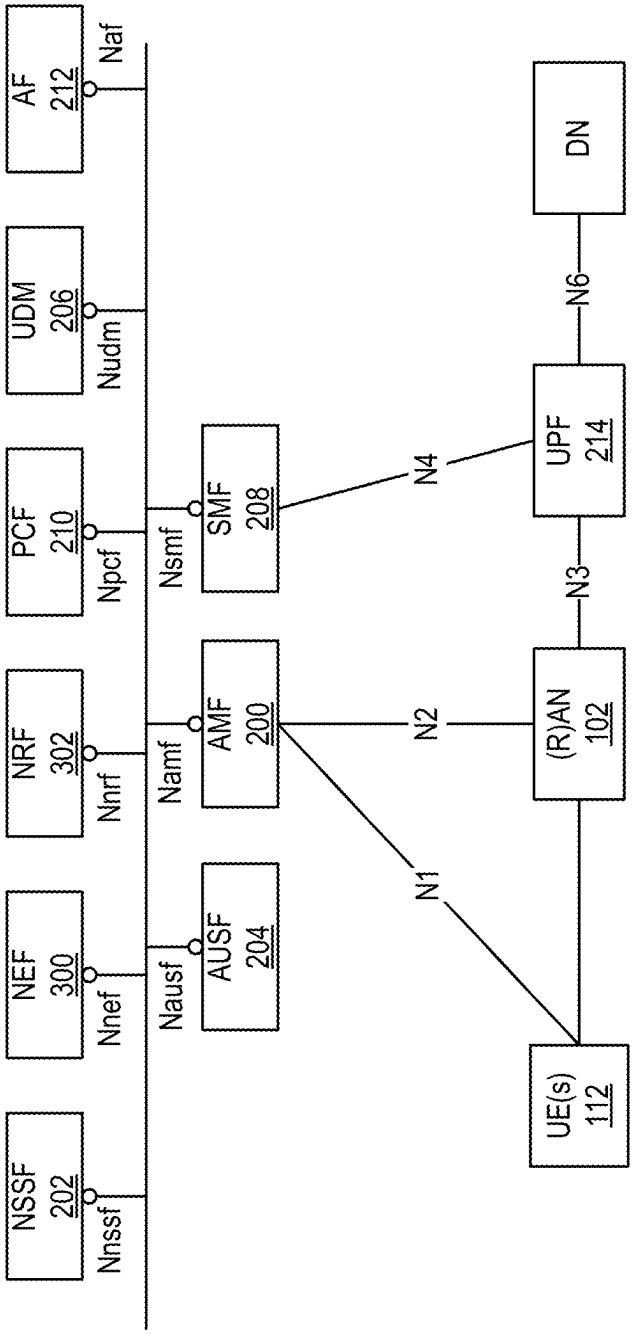
NSSF 202
Nnssf
NEF 300
Nnef
NRF 302
Nnrf
PCF 210
Npcf
UDM 206
Nudm
AF 212
Naf
Nausf
AUSF 204
Namf
AMF 200
Nsmf
SMF 208
N1
N2
N3
N4
UE(s) 112
(R)AN 102
UPF 214
N6
DN

FIG. 3

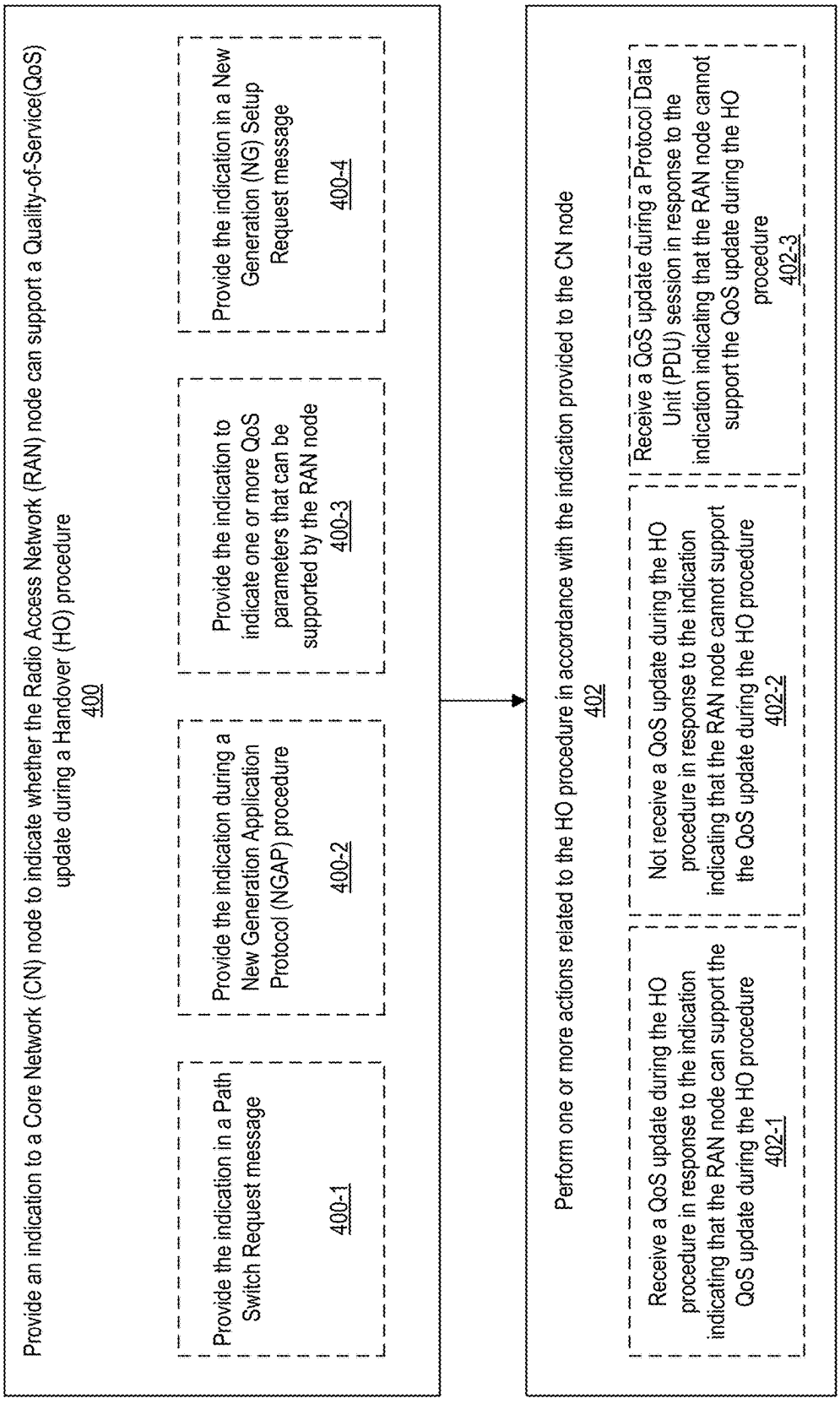
Provide an indication to a Core Network (CN) node to indicate whether the Radio Access Network (RAN) node can support a Quality-of-Service(QoS) update during a Handover (HO) procedure
400
Provide the indication in a Path Switch Request message
400-1
Provide the indication during a New Generation Application Protocol (NGAP) procedure
400-2
Provide the indication to indicate one or more QoS parameters that can be supported by the RAN node
400-3
Provide the indication in a New Generation (NG) Setup Request message
400-4
Perform one or more actions related to the HO procedure in accordance with the indication provided to the CN node
402
Receive a QoS update during the HO procedure in response to the indication indicating that the RAN node can support the QoS update during the HO procedure
402-1
Not receive a QoS update during the HO procedure in response to the indication indicating that the RAN node cannot support the QoS update during the HO procedure
402-2
Receive a QoS update during a Protocol Data Unit (PDU) session in response to the indication indicating that the RAN node cannot support the QoS update during the HO procedure
402-3

FIG. 4

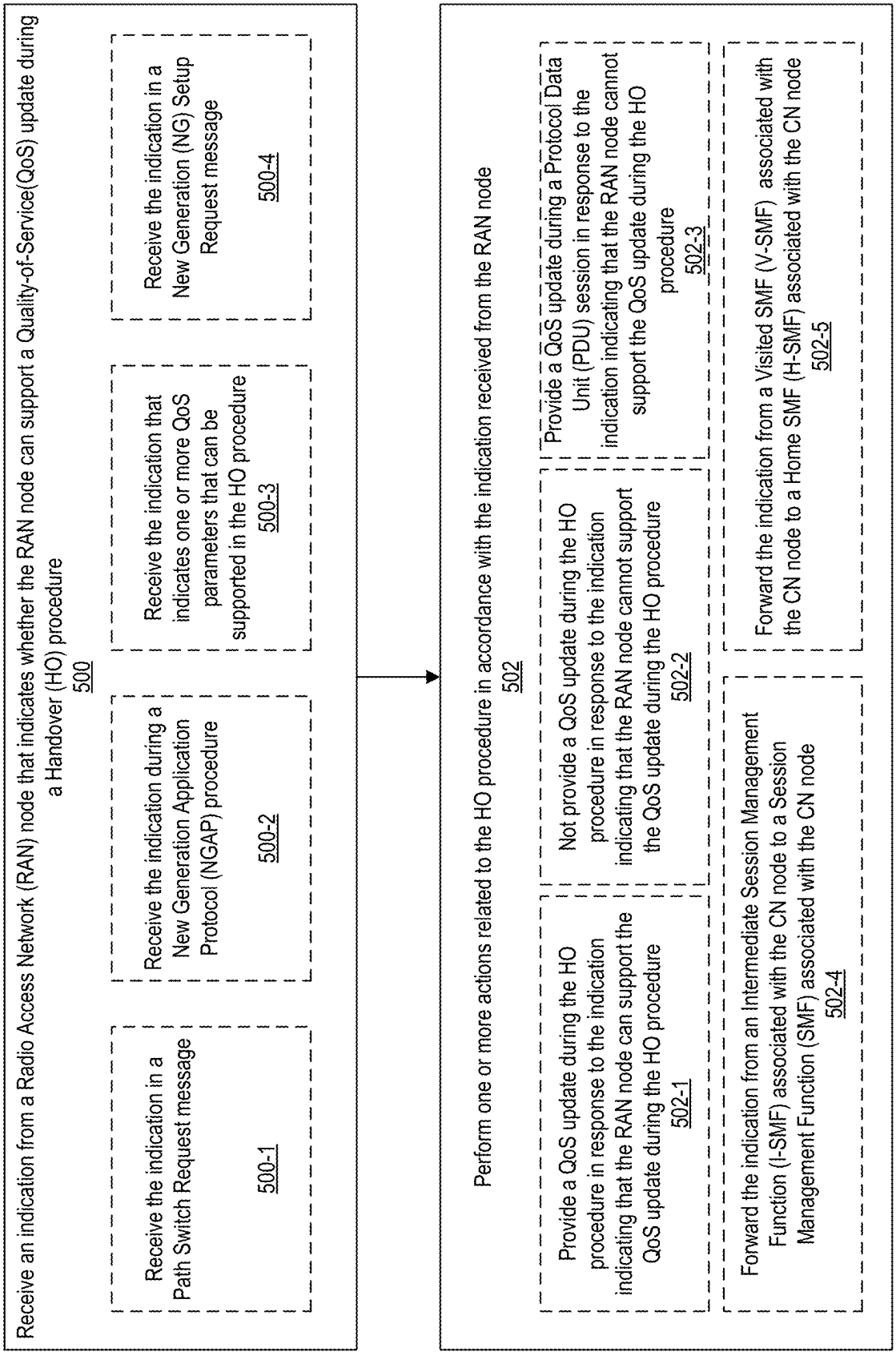
Receive an indication from a Radio Access Network (RAN) node that indicates whether the RAN node can support a Quality-of-Service(QoS) update during a Handover (HO) procedure
500
Receive the indication in a Path Switch Request message
500-1
Receive the indication during a New Generation Application Protocol (NGAP) procedure
500-2
Receive the indication that indicates one or more QoS parameters that can be supported in the HO procedure
500-3
Receive the indication in a New Generation (NG) Setup Request message
500-4
Perform one or more actions related to the HO procedure in accordance with the indication received from the RAN node
502
Provide a QoS update during the HO procedure in response to the indication indicating that the RAN node can support the QoS update during the HO procedure
502-1
Not provide a QoS update during the HO procedure in response to the indication indicating that the RAN node cannot support the QoS update during the HO procedure
502-2
Provide a QoS update during a Protocol Data Unit (PDU) session in response to the indication indicating that the RAN node cannot support the QoS update during the HO procedure
502-3
Forward the indication from an Intermediate Session Management Function (I-SMF) associated with the CN node to a Session Management Function (SMF) associated with the CN node
502-4
Forward the indication from a Visited SMF (V-SMF) associated with the CN node to a Home SMF (H-SMF) associated with the CN node
502-5

FIG. 5

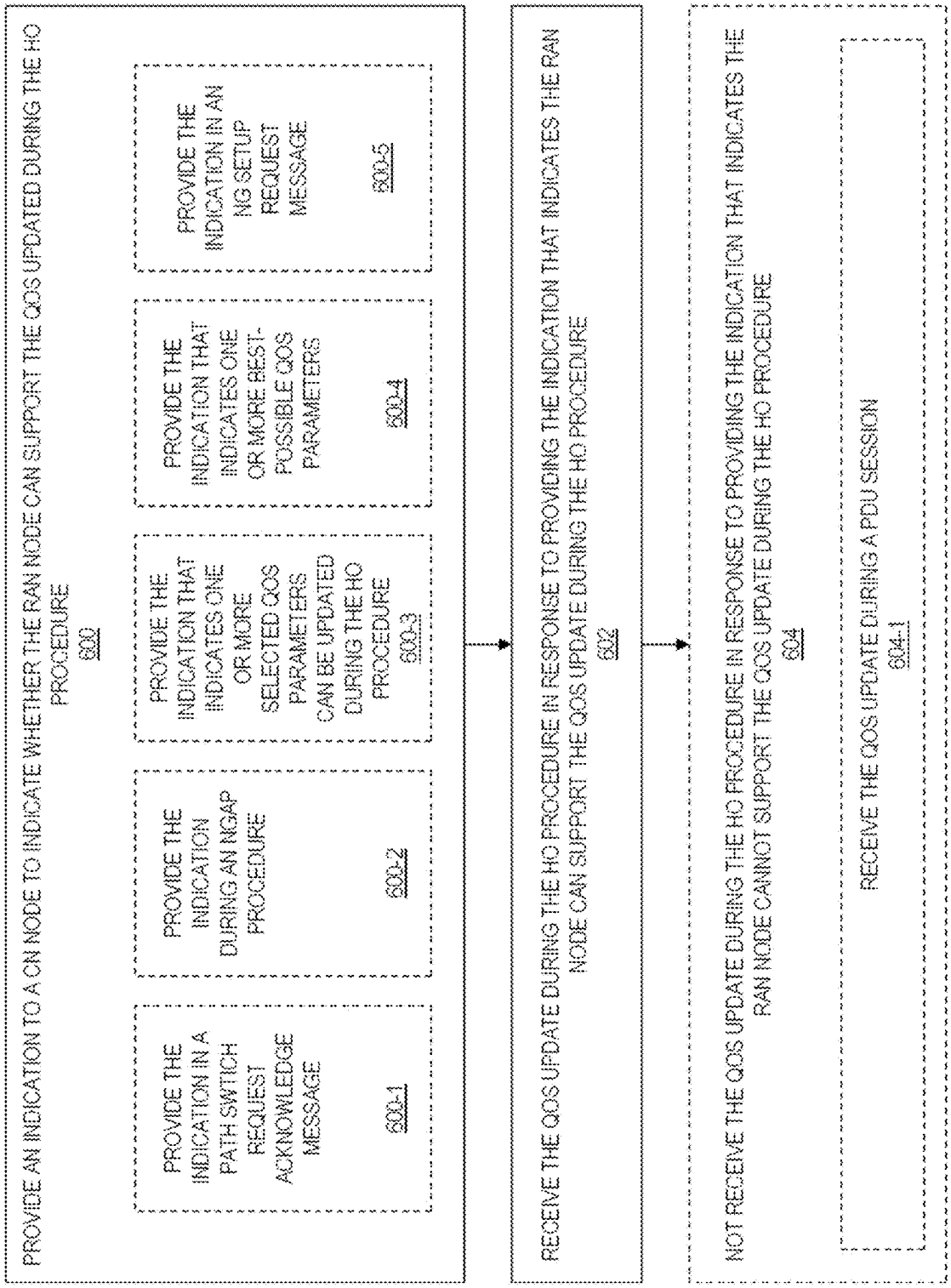
PROVIDE AN INDICATION TO A CN NODE TO INDICATE WHETHER THE RAN NODE CAN SUPPORT THE QOS UPDATED DURING THE HO PROCEDURE
600
PROVIDE THE INDICATION IN A PATH SWTICH REQUEST ACKNOWLEDGE MESSAGE
600-1
PROVIDE THE INDICATION DURING AN NGAP PROCEDURE
600-2
PROVIDE THE INDICATION THAT INDICATES ONE OR MORE SELECTED QOS PARAMETERS CAN BE UPDATED DURING THE HO PROCEDURE
600-3
PROVIDE THE INDICATION THAT INDICATES ONE OR MORE BEST-PUSSIBLE QOS PARAMETERS
600-4
PROVIDE THE INDICATION IN AN NG SETUP REQUEST MESSAGE
600-5
RECEIVE THE QOS UPDATE DURING THE HO PROCEDURE IN RESPONSE TO PROVIDING THE INDICATION THAT INDICATES THE RAN NODE CAN SUPPORT THE QOS UPDATE DURING THE HO PROCEDURE
602
NOT RECEIVE THE QOS UPDATE DURING THE HO PROCEDURE IN RESPONSE TO PROVIDING THE INDICATION THAT INDICATES THE RAN NODE CANNOT SUPPORT THE QOS UPDATE DURING THE HO PROCEDURE
604
RECEIVE THE QOS UPDATE DURING A PDU SESSION
604-1

FIG. 6

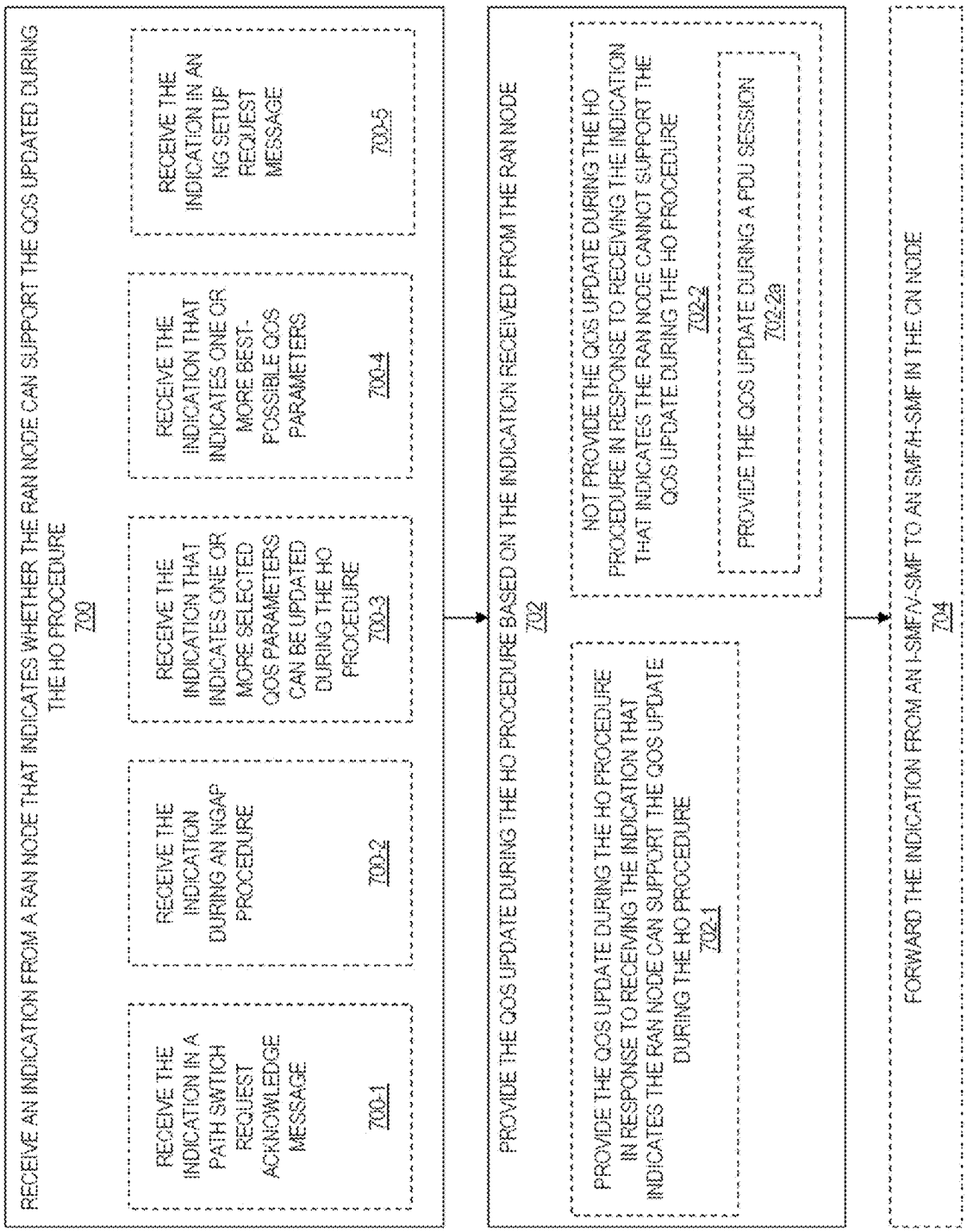
RECEIVE AN INDICATION FROM A RAN NODE THAT INDICATES WHETHER THE RAN NODE CAN SUPPORT THE QOS UPDATED DURING THE HO PROCEDURE
700
RECEIVE THE INDICATION IN A PATH SWTICH REQUEST ACKNOWLEDGE MESSAGE
700-1
RECEIVE THE INDICATION DURING AN NGAP PROCEDURE
700-2
RECEIVE THE INDICATION THAT INDICATES ONE OR MORE SELECTED QOS PARAMETERS CAN BE UPDATED DURING THE HO PROCEDURE
700-3
RECEIVE THE INDICATION THAT INDICATES ONE OR MORE BEST-POSSIBLE QOS PARAMETERS
700-4
RECEIVE THE INDICATION IN AN NG SETUP REQUEST MESSAGE
700-5
PROVIDE THE QOS UPDATE DURING THE HO PROCEDURE BASED ON THE INDICATION RECEIVED FROM THE RAN NODE
702
PROVIDE THE QOS UPDATE DURING THE HO PROCEDURE IN RESPONSE TO RECEIVING THE INDICATION THAT INDICATES THE RAN NODE CAN SUPPORT THE QOS UPDATE DURING THE HO PROCEDURE
702-1
NOT PROVIDE THE QOS UPDATE DURING THE HO PROCEDURE IN RESPONSE TO RECEIVING THE INDICATION THAT INDICATES THE RAN NODE CANNOT SUPPORT THE QOS UPDATE DURING THE HO PROCEDURE
702-2
PROVIDE THE QOS UPDATE DURING A PDU SESSION
702-2a
FORWARD THE INDICATION FROM AN I-SMF/V-SMF TO AN SMF/H-SMF IN THE CN NODE
704

FIG. 7

IE/Group Name	Presence	Range	IE type and reference	Semantics description	Criticality	Assigned Criticality
DL NG-U UP TNL Information	M		UP Transport Layer Information 9.3.2.2	NG-RAN node endpoint of the NG-U transport bearer, for delivery of DL PDUs.	-	
DL NG-U TNL Information Reused	O		ENUMERATED (true, ...)	Indicates that DL NG-U TNL Information has been reused.	-	
User Plane Security Information	O		9.3.1.60		-	
QoS Flow Accepted List		*1*		QoS flows associated with the *DL NG-U UP TNL Information* IE	-	
>QoS Flow Accepted Item		*1..<maxnoofQoSFlows>*			-	
>>QoS Flow Identifier	M		9.3.1.51		-	
>>Current QoS Parameters Set Index	O		Alternative QoS Parameters Set Index 9.3.1.152	Index to the currently fulfilled alternative QoS parameters set.	YES	ignore
Additional DL QoS Flow per TNL Information	O		QoS Flow per TNL Information List 9.3.2.1	NG-RAN node endpoint of the additional NG-U transport bearer(s) for delivery of DL PDUs for split PDU session, together with associated QoS flows.	YES	ignore
Redundant DL NG-U UP TNL Information	O		UP Transport Layer Information 9.3.2.2	NG-RAN node endpoint of the NG-U transport bearer, for delivery of redundant DL PDUs.	YES	ignore
Redundant DL NG-U TNL Information Reused	O		ENUMERATED (true, ...)	Indicates that Redundant DL NG-U TNL Information has been reused.	YES	ignore
Additional Redundant DL QoS Flow per TNL Information	O		QoS Flow per TNL Information List 9.3.2.1	NG-RAN node endpoint of the additional NG-U transport bearer(s) for delivery of Redundant DL PDUs for split PDU session, together with associated QoS flows.	YES	ignore
Used RSN Information	O		Redundant PDU Session Information 9.3.1.136		YES	ignore
Global RAN Node ID of Secondary NG-RAN Node	O		9.3.1.5		YES	ignore
support for reception of additional QoS parameters	O		ENUMERATED (true, false)		YES	ignore

FIG. 8

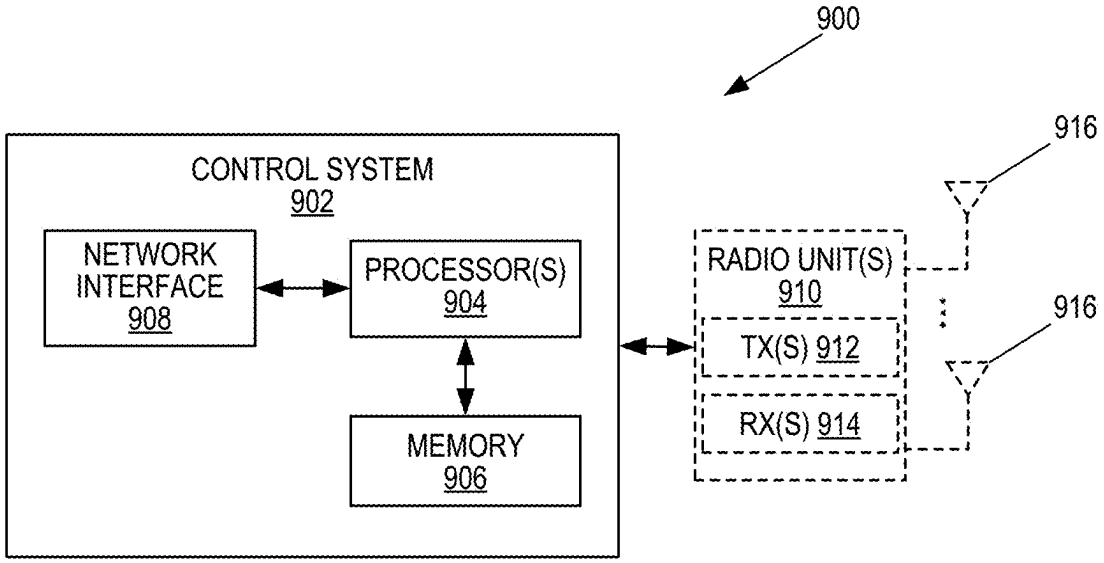
900
916
CONTROL SYSTEM
902
NETWORK INTERFACE
908
PROCESSOR(S)
904
MEMORY
906
RADIO UNIT(S)
910
TX(S) 912
RX(S) 914
916

FIG. 9

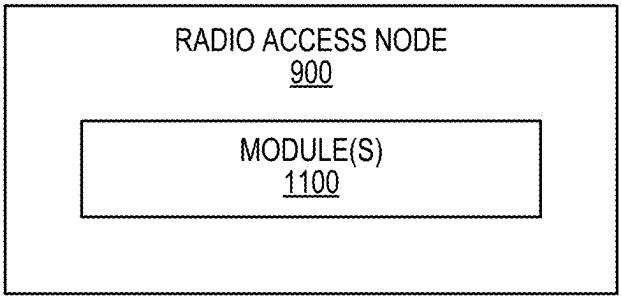
RADIO ACCESS NODE
900
MODULE(S)
1100

FIG. 11

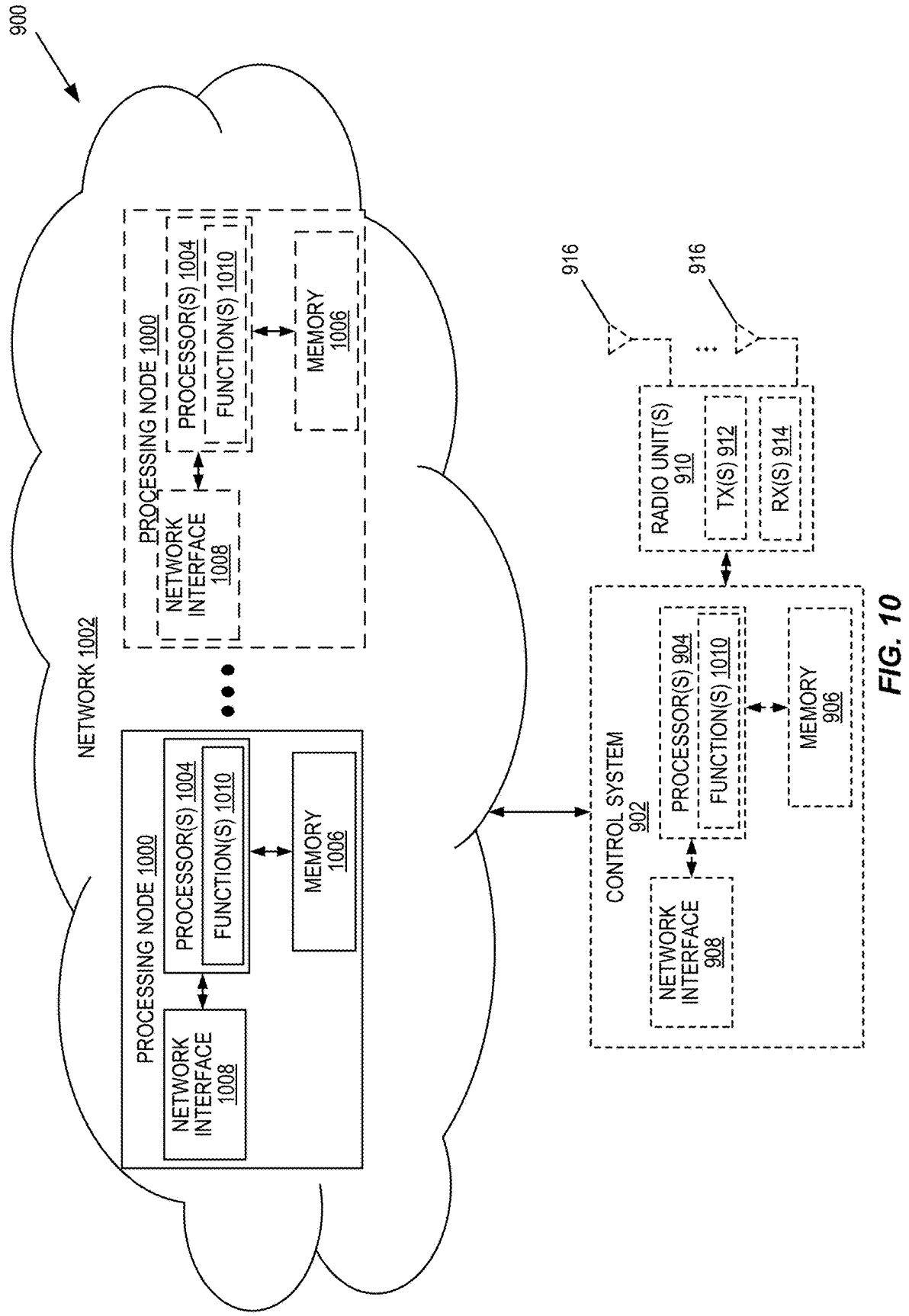
900
NETWORK 1002
PROCESSING NODE 1000
NETWORK INTERFACE 1008
PROCESSOR(S) 1004
FUNCTION(S) 1010
MEMORY 1006
PROCESSING NODE 1000
NETWORK INTERFACE 1008
PROCESSOR(S) 1004
FUNCTION(S) 1010
MEMORY 1006
916
916
RADIO UNIT(S) 910
TX(S) 912
RX(S) 914
CONTROL SYSTEM 902
NETWORK INTERFACE 908
PROCESSOR(S) 904
FUNCTION(S) 1010
MEMORY 906

FIG. 10

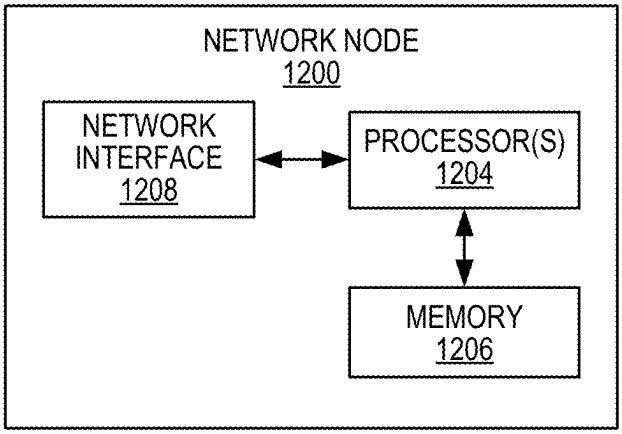
NETWORK NODE
1200
NETWORK INTERFACE
1208
PROCESSOR(S)
1204
MEMORY
1206

FIG. 12

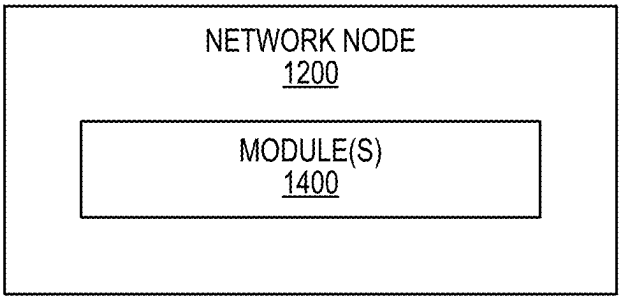
NETWORK NODE
1200
MODULE(S)
1400

FIG. 14

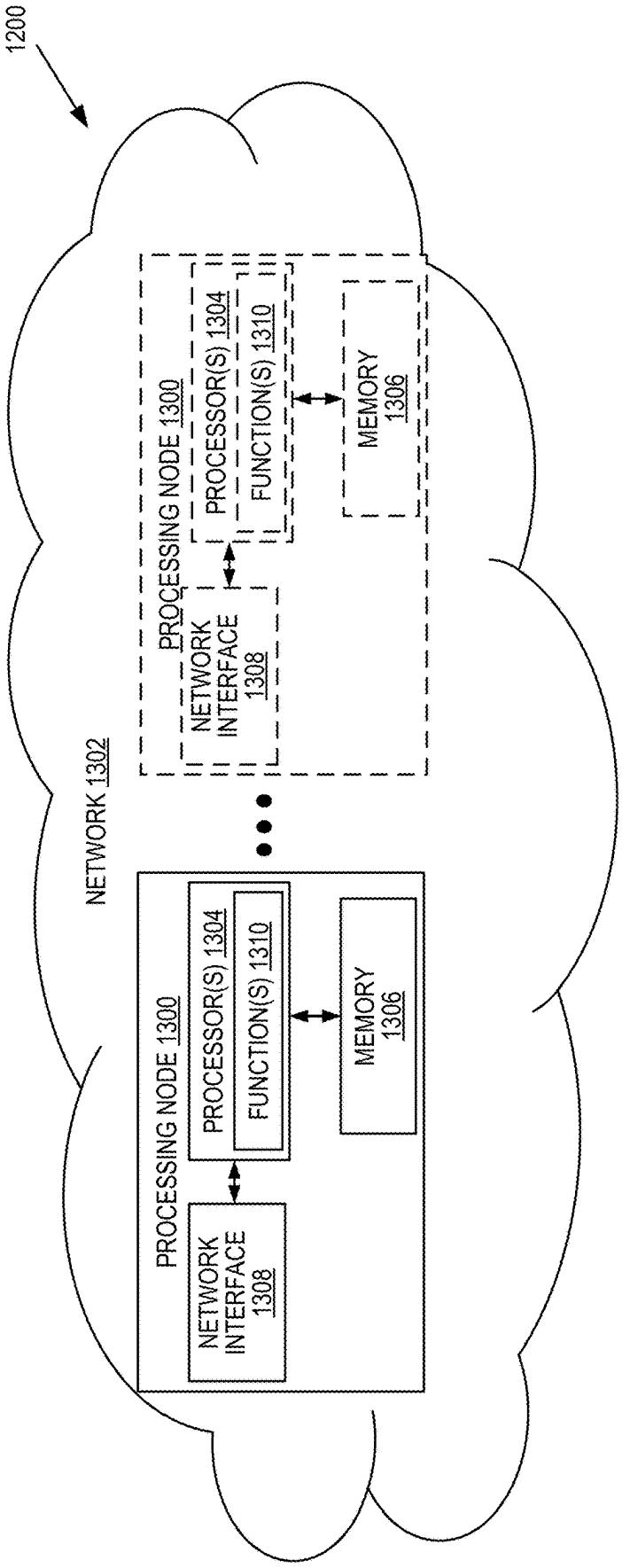
1200
NETWORK 1302
PROCESSING NODE 1300
NETWORK INTERFACE 1308
PROCESSOR(S) 1304
FUNCTION(S) 1310
MEMORY 1306
PROCESSING NODE 1300
NETWORK INTERFACE 1308
PROCESSOR(S) 1304
FUNCTION(S) 1310
MEMORY 1306

FIG. 13

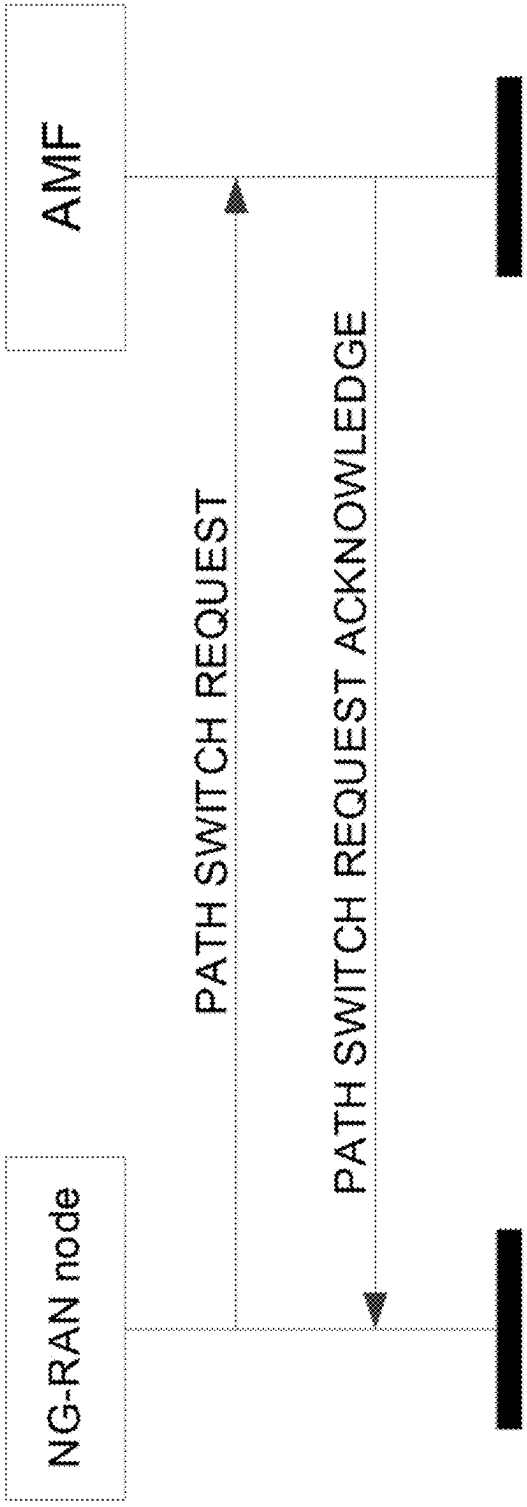
AMF
NG-RAN node
PATH SWITCH REQUEST
PATH SWITCH REQUEST ACKNOWLEDGE

FIG. 15

IE/Group Name	Presence	Range	IE type and reference	Semantics description	Criticality	Assigned Criticality
Message Type	M		9.3.1.1		YES	reject
RAN UE NGAP ID	M		9.3.3.2		YES	reject
Source AMF UE NGAP ID	M		AMF UE NGAP ID 9.3.3.1		YES	reject
User Location Information	M		9.3.1.16		YES	ignore
UE Security Capabilities	M		9.3.1.86		YES	ignore
PDU Session Resource to be Switched in Downlink List		*1*			YES	reject
>PDU Session Resource to be Switched in Downlink Item		*1..<maxnoofPDUSessions>*			-	
>>PDU Session ID	M		9.3.1.50		-	
>>Path Switch Request Transfer	M		OCTET STRING	Containing the *Path Switch Request Transfer* IE specified in subclause 9.3.4.8.	-	
PDU Session Resource Failed to Setup List		*0..1*			YES	ignore
>PDU Session Resource Failed to Setup Item		*1..<maxnoofPDUSessions>*			-	
>>PDU Session ID	M		9.3.1.50		-	
>>Path Switch Request Setup Failed Transfer	M		OCTET STRING	Containing the *Path Switch Request Setup Failed Transfer* IE specified in subclause 9.3.4.15.	-	
RRC Resume Cause	O		RRC Establishment Cause 9.3.1.111		YES	ignore

Range bound	Explanation
maxnoofPDUSessions	Maximum no. of PDU sessions allowed towards one UE. Value is 256.

FIG. 16

IE/Group Name	Presence	Range	IE type and reference	Semantics description	Criticality	Assigned Criticality
Message Type	M		9.3.1.1		YES	reject
AMF UE NGAP ID	M		9.3.3.1		YES	ignore
RAN UE NGAP ID	M		9.3.3.2		YES	ignore
UE Security Capabilities	O		9.3.1.86		YES	reject
Security Context	M		9.3.1.88		YES	reject
New Security Context Indicator	O		9.3.1.55		YES	reject
PDU Session Resource Switched List		*1*			YES	ignore
>PDU Session Resource Switched Item		*1..<maxnoofPDUSessions>*			-	
>>PDU Session ID	M		9.3.1.50		-	
>>Path Switch Request Acknowledge Transfer	M		OCTET STRING	Containing the *Path Switch Request Acknowledge Transfer* IE specified in subclause 9.3.4.9.	-	
PDU Session Resource Released List		*0..1*			YES	ignore
>PDU Session Resource Released Item		*1..<maxnoofPDUSessions>*			-	
>>PDU Session ID	M		9.3.1.50		-	
>>Path Switch Request Unsuccessful Transfer	M		OCTET STRING	Containing the *Path Switch Request Unsuccessful Transfer* IE specified in subclause 9.3.4.20.	-	
Allowed NSSAI	M		9.3.1.31	Indicates the S-NSSAIs permitted by the network.	YES	reject
Core Network Assistance Information for RRC INACTIVE	O		9.3.1.15		YES	ignore
RRC Inactive Transition Report Request	O		9.3.1.91		YES	ignore
Criticality Diagnostics	O		9.3.1.3		YES	ignore
Redirection for Voice EPS Fallback	O		9.3.1.116		YES	ignore

Range bound	Explanation
maxnoofPDUSessions	Maximum no. of PDU sessions allowed towards one UE. Value is 256.

FIG. 17

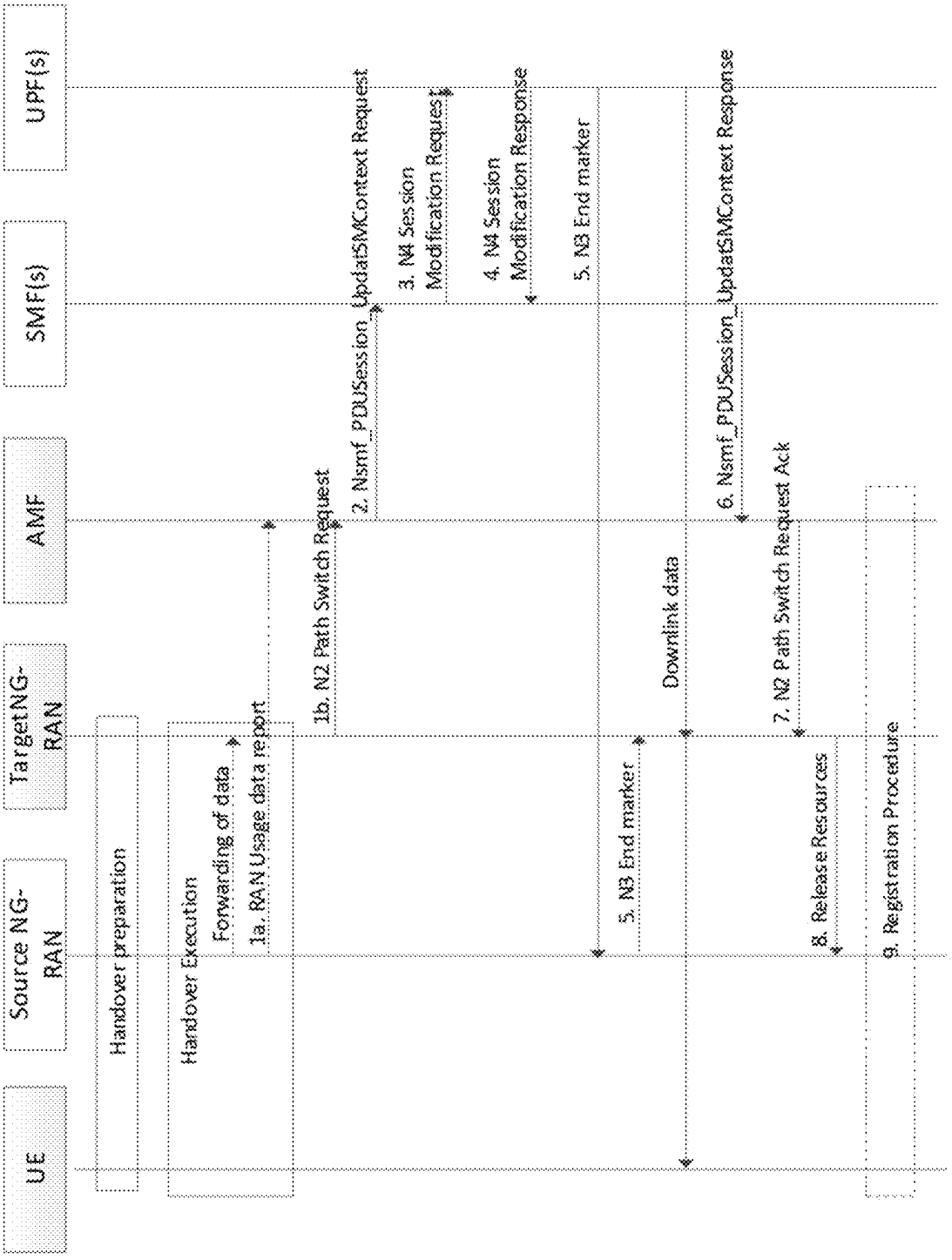
UE
Source NG-RAN
TargetNG-RAN
AMF
SMF(s)
UPF(s)
Handover preparation
Handover Execution
Forwarding of data
1a. RAN Usage data report
1b. N2 Path Switch Request
2. Nsmf_PDUSession_UpdateSMContext Request
3. N4 Session Modification Request
4. N4 Session Modification Response
5. N3 End marker
5. N3 End marker
Downlink data
6. Nsmf_PDUSession_UpdateSMContext Response
7. N2 Path Switch Request Ack
8. Release Resources
9. Registration Procedure

FIG. 18

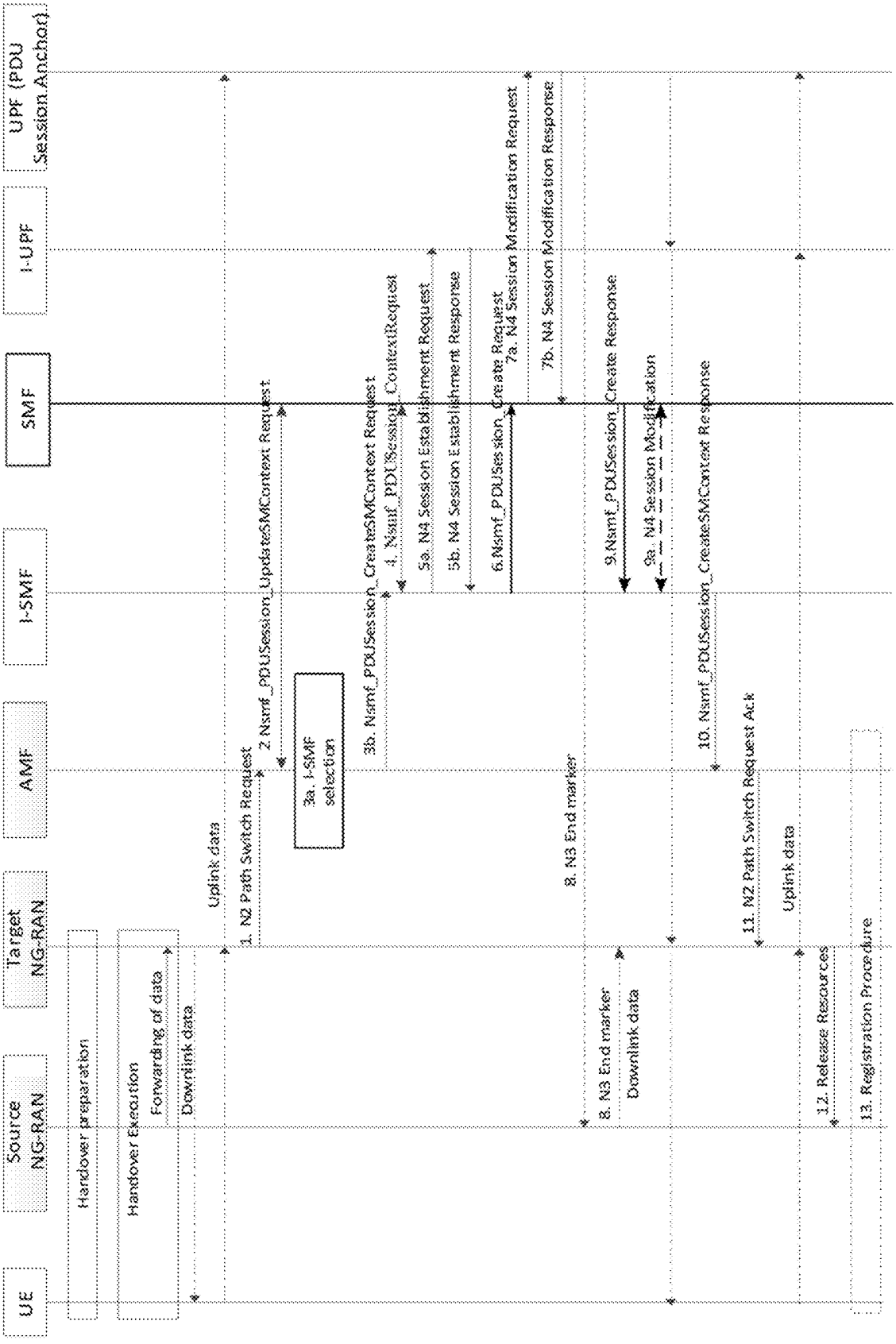
UE
Source NG-RAN
Target NG-RAN
AMF
I-SMF
SMF
I-UPF
UPF (PDU Session Anchor)
Handover preparation
Handover Execution
Forwarding of data
Downlink data
Uplink data
1. N2 Path Switch Request
2. Nsmf_PDUSession_UpdateSMContext Request
3a. I-SMF selection
3b. Nsmf_PDUSession_CreateSMContext Request
4. Nsmf_PDUSession_ContextRequest
5a. N4 Session Establishment Request
5b. N4 Session Establishment Response
6.Nsmf_PDUSession_Create Request
7a. N4 Session Modification Request
7b. N4 Session Modification Response
8. N3 End marker
9.Nsmf_PDUSession_Create Response
9a. N4 Session Modification
10. Nsmf_PDUSession_CreateSMContext Response
11. N2 Path Switch Request Ack
Uplink data
8. N3 End marker
Downlink data
12. Release Resources
13. Registration Procedure

FIG. 19

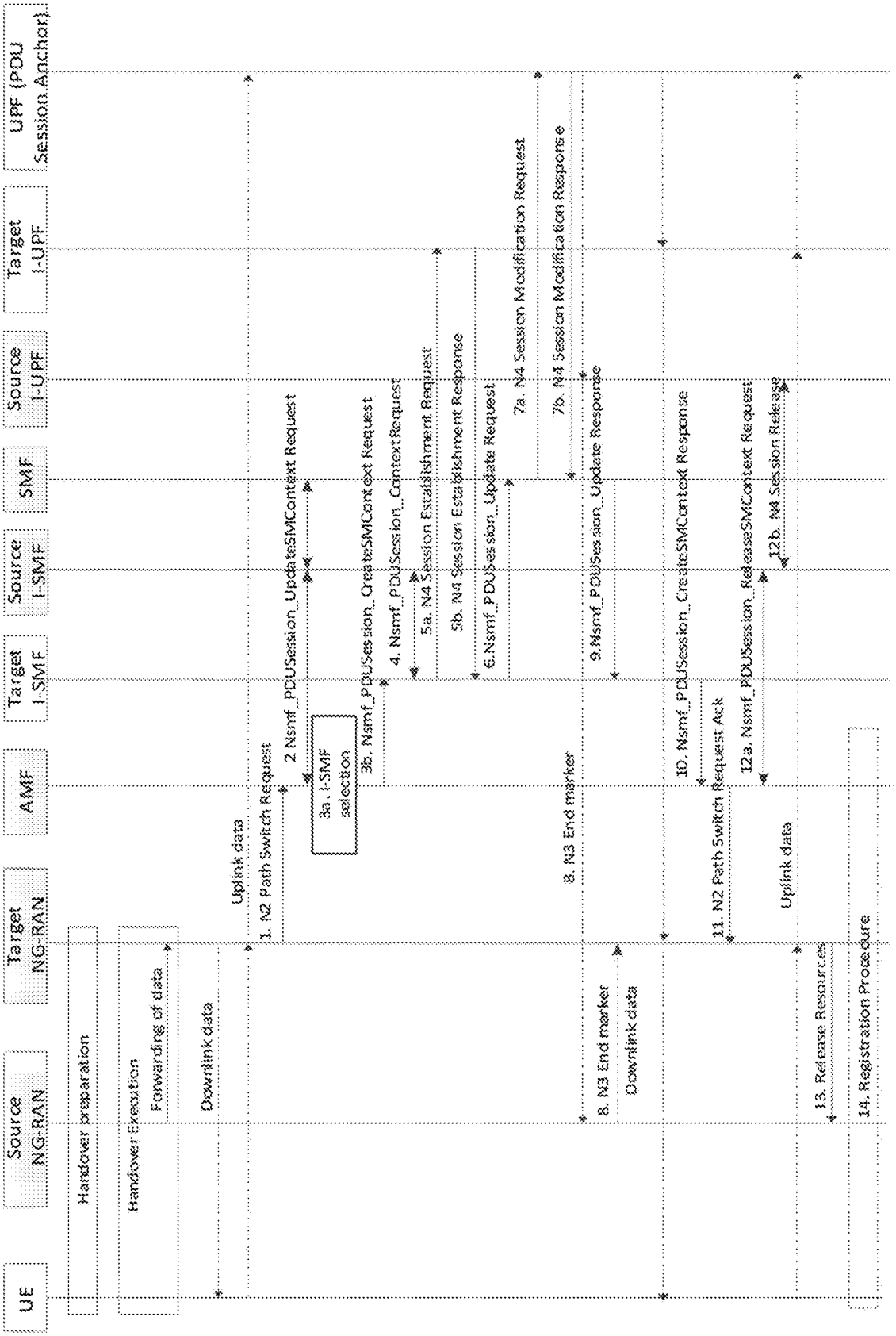
UE
Source NG-RAN
Target NG-RAN
AMF
Target I-SMF
Source I-SMF
SMF
Source I-UPF
Target I-UPF
UPF (PDU Session Anchor)
Handover preparation
Handover Execution
Forwarding of data
Downlink data
Uplink data
1. N2 Path Switch Request
2 Nsmf_PDUSession_UpdateSMContext Request
3a. I-SMF selection
3b. Nsmf_PDUSession_CreateSMContext Request
4. Nsmf_PDUSession_ContextRequest
5a. N4 Session Establishment Request
5b. N4 Session Establishment Response
6.Nsmf_PDUSession_Update Request
7a. N4 Session Modification Request
7b. N4 Session Modification Response
8. N3 End marker
9.Nsmf_PDUSession_Update Response
8. N3 End marker
Downlink data
10. Nsmf_PDUSession_CreateSMContext Response
11. N2 Path Switch Request Ack
12a. Nsmf_PDUSession_ReleaseSMContext Request
12b. N4 Session Release
Uplink data
13. Release Resources
14. Registration Procedure

FIG. 20

QOS UPDATE HANDLING ALTERNATIVES DURING XN HO

RELATED APPLICATIONS

[0001] This application claims the benefit of provisional patent application Ser. No. 63/081,084, filed Sep. 21, 2020, the disclosure of which is hereby incorporated herein by reference in its entirety.

TECHNICAL FIELD

[0002] The technology of the disclosure relates generally to enabling handling of Quality-of-Service (QOS) during a Handover (HO) procedure.

BACKGROUND

[0003] 3GPP (Third Generation Partnership Project) has specified handling of Quality-of-Service (QOS) during Xn Handover (HO) in New Radio (NR) (a.k.a. NG) (a.k.a. 5G HO) (or X2 HO in EPS). The logic is that during Xn HO, the QoS parameters remain unchanged. The change that can happen is the user plane tunnel information at the Radio Access Network (RAN) side and also possibly the user plane tunnel information at the Core Network (CN) side.

[0004] If any QoS parameter updates are needed, the CN can trigger a separate Protocol Data Unit (PDU) session modification procedure to enforce the needed update after the handover.

[0005] The current NG Application Protocol (NGAP) messages handling Xn HO (i.e., Path Switch Request/Path Switch Request Ack) are so defined, for example, not to include QoS parameters in these messages).

SUMMARY

[0006] Embodiments disclosed herein include supporting a Quality of Service (QOS) update during a Handover (HO) procedure. More specifically, methods performed by a Radio Access Network (RAN) node and a Core Network (CN) node for supporting a QoS update during an HO are provided. The methods disclosed herein can facilitate flexible New Generation (NG)-RAN (NG-RAN) deployment with a mixture of NG-RAN nodes capable or incapable of supporting additional parameters in an HO procedure. The methods also make it possible to provide smooth NG-RAN software updates between different software releases.

[0007] In one aspect, a method performed by a RAN node for supporting a QoS update during an HO procedure is provided. The method includes providing an indication to a CN node to indicate whether the RAN node can support the QoS update during the HO procedure. The method also includes performing one or more actions related to the HO procedure in accordance with the indication provided to the CN node.

[0008] In another aspect, providing the indication comprises providing the indication in a Path Switch Request message.

[0009] In another aspect, the Path Switch Request message comprises a 'support for reception of additional QoS parameters' field configured to indicate whether the RAN node can support the QoS update during the HO procedure.

[0010] In another aspect, the Path Switch Request message comprises one or more of a 'best QoS available' and a 'best RAN Packet Delay Budget, PDB' field configured to indicate one or more best-possible QoS parameters the RAN node can support.

[0011] In another aspect, providing the indication comprises providing the indication during a New Generation Application Protocol (NGAP) procedure.

[0012] In another aspect, providing the indication comprises providing the indication to indicate one or more QoS parameters that can be updated during the HO procedure.

[0013] In another aspect, the one or more QoS parameters comprise one or more of a CN Packet Delay Budget (PDB) and Traffic Characteristics (TCS).

[0014] In another aspect, providing the indication comprises providing the indication in a New Generation (NG) Setup Request message.

[0015] In another aspect, performing one or more actions related to the HO procedure comprises one of: receiving the QoS update during the HO procedure in response to the indication indicating that the RAN node can support the QoS update during the HO procedure, not receiving the QoS update during the HO procedure in response to the indication indicating that the RAN node cannot support the QoS update during the HO procedure, and receiving the QoS update during a Protocol Data Unit (PDU) session in response to the indication indicating that the RAN node cannot support the QoS update during the HO procedure.

[0016] In one aspect, a RAN node is provided. The RAN node includes processing circuitry configured to cause the RAN node to provide an indication to a CN node to indicate whether the RAN node can support the QoS update during the HO procedure. The processing circuitry is also configured to cause the RAN node to perform one or more actions related to the HO procedure in accordance with the indication provided to the CN node.

[0017] In another aspect, the processing circuitry is further configured to cause the RAN node to perform any of the steps in the method performed by the RAN node.

[0018] In one aspect, a method performed by a CN node for supporting a QoS update during an HO procedure is provided. The method includes receiving an indication from a RAN node that indicates whether the RAN node can support the QoS update during the HO procedure. The method also includes performing one or more actions related to the HO procedure in accordance with the indication received from the RAN node.

[0019] In another aspect, receiving the indication comprises receiving the indication in a Path Switch Request message.

[0020] In another aspect, the Path Switch Request message comprises a 'support for reception of additional QoS parameters' field configured to indicate whether the RAN node can support the QoS update during the HO procedure.

[0021] In another aspect, the Path Switch Request message comprises one or more of a 'best QoS available' and a 'best RAN Packet Delay Budget, PDB' field configured to indicate one or more best-possible QoS parameters the RAN node can support.

[0022] In another aspect, receiving the indication comprises receiving the indication during an NGAP procedure.

[0023] In another aspect, receiving the indication comprises receiving the indication to indicate one or more QoS parameters that can be updated during the HO procedure.

[0024] In another aspect, the one or more QoS parameters comprise one or more of a CN PDB and TCS.

[0025] In another aspect, receiving the indication comprises receiving the indication in a NG Setup Request message.

[0026] In another aspect, performing one or more actions related to the HO procedure comprises one of: a QoS update during the HO procedure in response to the indication indicating that the RAN node can support the QoS update during the HO procedure, not providing the QoS update during the HO procedure in response to the indication indicating that the RAN node cannot support the QoS update during the HO procedure, and providing the QoS update during a PDU session in response to the indication indicating that the RAN node cannot support the QoS update during the HO procedure.

[0027] In another aspect, performing one or more actions related to the HO procedure further comprises one or more of: forwarding the indication from an

[0028] Intermediate Session Management Function (I-SMF) associated with the CN node to a Session Management Function (SMF) associated with the CN node and forwarding the indication from a Visited SMF (V-SMF) associated with the CN node to a Home SMF (H-SMF) associated with the CN node.

[0029] In one aspect, a CN is provided. The CN node includes processing circuitry configured to cause the CN node to receive an indication from a RAN node that indicates whether the RAN node can support the QoS update during the HO procedure. The processing circuitry is also configured to cause the CN node to perform one or more actions related to the HO procedure in accordance with the indication received from the RAN node.

[0030] In another aspect, the processing circuitry is further configured to cause the CN node to perform any of the steps in the method performed by the CN node.

BRIEF DESCRIPTION OF THE DRAWINGS

[0031] The accompanying drawing figures incorporated in and forming a part of this specification illustrate several aspects of the disclosure, and together with the description serve to explain the principles of the disclosure.

[0032] FIG. **1** illustrates one example of a cellular communications system in which embodiments of the present disclosure may be implemented;

[0033] FIG. **2** illustrates a wireless communication system represented as a Fifth Generation (5G) network architecture composed of core Network Functions (NFs), where interaction between any two NFs is represented by a point-to-point reference point/interface;

[0034] FIG. **3** illustrates a 5G network architecture using service-based interfaces between the NFs in a Control Plane (CP), instead of the point-to-point reference points/interfaces used in the 5G network architecture of FIG. **2**;

[0035] FIG. **4** is a flowchart of an exemplary method performed by a Radio Access Network (RAN) node for supporting a Quality-of-Service (QOS) update during a Handover (HO) procedure according to embodiments of the present disclosure;

[0036] FIG. **5** is a flowchart of an exemplary method performed by a Core Network (CN) node for supporting a QoS update during a HO procedure according to embodiments of the present disclosure;

[0037] FIG. **6** is a flowchart of an exemplary method performed by a RAN node for supporting a QoS update during a HO procedure;

[0038] FIG. **7** is a flowchart of an exemplary method performed by a CN node for supporting a QoS update during a HO procedure;

[0039] FIG. **8** illustrates an exemplary message transmitted from the RAN node in FIGS. **4** and **6** to the CN node in FIGS. **5** and **7**;

[0040] FIG. **9** is a schematic block diagram of a radio access node according to some embodiments of the present disclosure;

[0041] FIG. **10** is a schematic block diagram that illustrates a virtualized embodiment of the radio access node according to some embodiments of the present disclosure;

[0042] FIG. **11** is a schematic block diagram of the radio access node according to some other embodiments of the present disclosure;

[0043] FIG. **12** is a schematic block diagram of a network node according to some embodiments of the present disclosure;

[0044] FIG. **13** is a schematic block diagram that illustrates a virtualized embodiment of the network node according to some embodiments of the present disclosure;

[0045] FIG. **14** is a schematic block diagram of the network node according to some other embodiments of the present disclosure;

[0046] FIG. **15** illustrates a path switch request for a successful operation;

[0047] FIG. **16** illustrates a message sent by a Next Generation (NG) RAN to an Access and Mobility Management Function (AMF);

[0048] FIG. **17** illustrates a message sent from an AMF to an NG-RAN;

[0049] FIG. **18** is a signal diagram illustrating Xn based inter NG-RAN handover with User Plane Function (UPF) re-allocation;

[0050] FIG. **19** is a signal diagram illustrating Xn based inter NG-RAN handover with insertion of Intermediate Session Management Function (I-SMF); and

[0051] FIG. **20** is a signal diagram illustrating Xn based inter NG-RAN handover with intermediate I-SMF re-allocation.

DETAILED DESCRIPTION

[0052] The embodiments set forth below represent information to enable those skilled in the art to practice the embodiments and illustrate the best mode of practicing the embodiments. Upon reading the following description in light of the accompanying drawing figures, those skilled in the art will understand the concepts of the disclosure and will recognize applications of these concepts not particularly addressed herein. It should be understood that these concepts and applications fall within the scope of the disclosure.

[0053] Radio Node: As used herein, a "radio node" is either a radio access node or a wireless communication device.

[0054] Radio Access Node: As used herein, a "radio access node" or "radio network node" or "radio access network node" is any node in a Radio Access Network (RAN) of a cellular communications network that operates to wirelessly transmit and/or receive signals. Some examples of a radio access node include, but are not limited to, a base station (e.g., a New Radio (NR) base station (gNB) in a Third Generation Partnership Project (3GPP) Fifth Generation (5G) NR network or an enhanced or evolved Node B (eNB) in a 3GPP Long Term Evolution (LTE)

network), a high-power or macro base station, a low-power base station (e.g., a micro base station, a pico base station, a home eNB, or the like), a relay node, a network node that implements part of the functionality of a base station (e.g., a network node that implements a gNB Central Unit (gNB-CU) or a network node that implements a gNB Distributed Unit (gNB-DU)) or a network node that implements part of the functionality of some other type of radio access node.

[0055] Core Network Node: As used herein, a "core network node" is any type of node in a core network or any node that implements a core network function. Some examples of a core network node include, e.g., a Mobility Management Entity (MME), a Packet Data Network Gateway (P-GW), a Service Capability Exposure Function (SCEF), a Home Subscriber Server (HSS), or the like. Some other examples of a core network node include a node implementing a Access and Mobility Management Function (AMF), a User Plane Function (UPF), a Session Management Function (SMF), an Authentication Server Function (AUSF), a Network Slice Selection Function (NSSF), a Network Exposure Function (NEF), a Network Function (NF) Repository Function (NRF), a Policy Control Function (PCF), a Unified Data Management (UDM), or the like.

[0056] Communication Device: As used herein, a "communication device" is any type of device that has access to an access network. Some examples of a communication device include, but are not limited to: mobile phone, smart phone, sensor device, meter, vehicle, household appliance, medical appliance, media player, camera, or any type of consumer electronic, for instance, but not limited to, a television, radio, lighting arrangement, tablet computer, laptop, or Personal Computer (PC). The communication device may be a portable, hand-held, computer-comprised, or vehicle-mounted mobile device, enabled to communicate voice and/or data via a wireless or wireline connection.

[0057] Wireless Communication Device: One type of communication device is a wireless communication device, which may be any type of wireless device that has access to (i.e., is served by) a wireless network (e.g., a cellular network). Some examples of a wireless communication device include, but are not limited to: a User Equipment device (UE) in a 3GPP network, a Machine Type Communication (MTC) device, and an Internet of Things (IoT) device. Such wireless communication devices may be, or may be integrated into, a mobile phone, smart phone, sensor device, meter, vehicle, household appliance, medical appliance, media player, camera, or any type of consumer electronic, for instance, but not limited to, a television, radio, lighting arrangement, tablet computer, laptop, or PC. The wireless communication device may be a portable, hand-held, computer-comprised, or vehicle-mounted mobile device, enabled to communicate voice and/or data via a wireless connection.

[0058] Network Node: As used herein, a "network node" is any node that is either part of the RAN or the core network of a cellular communications network/system.

[0059] Transmission/Reception Point (TRP): In some embodiments, a TRP may be either a network node, a radio head, a spatial relation, or a Transmission Configuration Indicator (TCI) state. A TRP may be represented by a spatial relation or a TCI state in some embodiments. In some embodiments, a TRP may be using multiple TCI states.

[0060] Note that the description given herein focuses on a 3GPP cellular communications system and, as such, 3GPP terminology or terminology similar to 3GPP terminology is oftentimes used. However, the concepts disclosed herein are not limited to a 3GPP system.

[0061] Note that, in the description herein, reference may be made to the term "cell"; however, particularly with respect to 5G NR concepts, beams may be used instead of cells and, as such, it is important to note that the concepts described herein are equally applicable to both cells and beams.

[0062] There currently exist certain challenge(s). Ultra Reliable and Low Latency Communication (URLLC) is supported in 3GPP Stage 2 specifications (e.g., 23.501 and 23.502). The 3GPP Stage 2 specifications indicate that during a Xn HO procedure, the QoS parameter (i.e., CN Packet Delay Budget (PDB)) can be updated as part of the Xn HO procedure (i.e., in the Path Switch Request Ack message.).

[0063] This may have a fundamental impact on Xn HO related NGAP messages, such as Path Switch procedure. It introduces more complicated handling in RAN. Considering that CN PDB change during Xn HO is a debatable issue, QoS parameters updated in an Xn HO NGAP message should be considered as one alternative, but not the only alternative.

[0064] In a radio network deployed with mixed RAN nodes that may or may not be capable to support QoS parameters in Xn HO NGAP messages, it may create inconsistency issues between a CN node and an NG Radio Access Network (NG-RAN) node if the NG-RAN node does not support QoS parameters in the Xn HO NGAP message.

[0065] Certain aspects of the present disclosure and their embodiments may provide solutions to the aforementioned or other challenges. Embodiments disclosed herein are directed to solving the inconsistency issues between the CN node and the NG-RAN node when QoS related parameters (e.g., CN PDB) are updated during Xn Handover.

[0066] The essence of the solution is to provide means for avoiding Paging collision when a UE with more than one SIM-card is registered to more than one network at the same time. There are, proposed herein, various embodiments which address one or more

[0067] of the issues disclosed herein. In one aspect, a method performed by a RAN node for supporting a QoS update during a HO (e.g., Xn HO in 5G or X2 HO in EPS) procedure is provided. The method includes providing an indication to a CN node to indicate whether the RAN node can support the QoS update during the HO procedure. The method also includes receiving the QoS update during the HO procedure in response to providing the indication that indicates the RAN node can support the QoS update during the HO procedure.

[0068] In another aspect, a method performed by a CN node for supporting Qos update during a HO (e.g., Xn HO in 5G or X2 HO in EPS) procedure is provided. The method includes receiving an indication from a RAN node that indicates whether the RAN node can support the QoS update during the HO procedure. The method also includes providing the QoS update based on the indication received from the RAN node.

[0069] Certain embodiments may provide one or more of the following technical advantage(s). The proposed solution solves the CN and NG-RAN node inconsistency and provides possibility for the RAN to impact the way of additional parameters delivery.

[0070] Embodiments disclosed herein can facilitate flexible NG-RAN deployment with a mixture of NG-RAN nodes capable or incapable of supporting additional parameters in a Xn HO procedure. The embodiments also make it possible to provide smooth NG-RAN software updates from one 3GPP release to another release.

[0071] FIG. **1** illustrates one example of a cellular communications system **100** in which embodiments of the present disclosure may be implemented. In the embodiments described herein, the cellular communications system **100** is a 5G system (5GS) including a Next Generation RAN (NG-RAN) and a 5G Core (5GC). In this example, the RAN includes base stations **102-1** and **102-2**, which in the 5GS include NR base stations (gNBs) and optionally next generation eNBs (ng-eNBs) (e.g., LTE RAN nodes connected to the 5GC), controlling corresponding (macro) cells **104-1** and **104-2**. The base stations **102-1** and **102-2** are generally referred to herein collectively as base stations **102** and individually as base station **102**. Likewise, the (macro) cells **104-1** and **104-2** are generally referred to herein collectively as (macro) cells **104** and individually as (macro) cell **104**. The RAN may also include a number of low power nodes **106-1** through **106-4** controlling corresponding small cells **108-1** through **108-4**. The low power nodes **106-1** through **106-4** can be small base stations (such as pico or femto base stations) or Remote Radio Heads (RRHs), or the like. Notably, while not illustrated, one or more of the small cells **108-1** through **108-4** may alternatively be provided by the base stations **102**. The low power nodes **106-1** through **106-4** are generally referred to herein collectively as low power nodes **106** and individually as low power node **106**. Likewise, the small cells **108-1** through **108-4** are generally referred to herein collectively as small cells **108** and individually as small cell **108**. The cellular communications system **100** also includes a core network **110**, which in the 5G System (5GS) is referred to as the 5GC. The base stations **102** (and optionally the low power nodes **106**) are connected to the core network **110**.

[0072] The base stations **102** and the low power nodes **106** provide service to wireless communication devices **112-1** through **112-5** in the corresponding cells **104** and **108**. The wireless communication devices **112-1** through **112-5** are generally referred to herein collectively as wireless communication devices **112** and individually as wireless communication device **112**. In the following description, the wireless communication devices **112** are oftentimes UEs, but the present disclosure is not limited thereto.

[0073] FIG. **2** illustrates a wireless communication system represented as a 5G network architecture composed of core Network Functions (NFs), where interaction between any two NFs is represented by a point-to-point reference point/interface. FIG. **2** can be viewed as one particular implementation of the system **100** of FIG. **1**.

[0074] Seen from the access side the 5G network architecture shown in FIG. **2** comprises a plurality of UEs **112** connected to either a RAN **102** or an Access Network (AN) as well as an AMF **200**. Typically, the R(AN) **102** comprises base stations, e.g., such as eNBs or gNBs or similar. Seen from the core network side, the 5GC NFs shown in FIG. **2** include a NSSF **202**, an AUSF **204**, a UDM **206**, the AMF **200**, a SMF **208**, a PCF **210**, and an Application Function (AF) **212**.

[0075] Reference point representations of the 5G network architecture are used to develop detailed call flows in the normative standardization. The N1 reference point is defined to carry signaling between the UE **112** and AMF **200**. The reference points for connecting between the AN **102** and AMF **200** and between the AN **102** and UPF **214** are defined as N2 and N3, respectively. There is a reference point, N11, between the AMF **200** and SMF **208**, which implies that the SMF **208** is at least partly controlled by the AMF **200**. N4 is used by the SMF **208** and UPF **214** so that the UPF **214** can be set using the control signal generated by the SMF **208**, and the UPF **214** can report its state to the SMF **208**. N9 is the reference point for the connection between different UPFs **214**, and N14 is the reference point connecting between different AMFs **200**, respectively. N15 and N7 are defined since the PCF **210** applies policy to the AMF **200** and SMF **208**, respectively. N12 is required for the AMF **200** to perform authentication of the UE **112**. N8 and N10 are defined because the subscription data of the UE **112** is required for the AMF **200** and SMF **208**.

[0076] The 5GC network aims at separating UP and CP. The UP carries user traffic while the CP carries signaling in the network. In FIG. **2**, the UPF **214** is in the UP and all other NFs, i.e., the AMF **200**, SMF **208**, PCF **210**, AF **212**, NSSF **202**, AUSF **204**, and UDM **206**, are in the CP. Separating the UP and CP guarantees each plane resource to be scaled independently. It also allows UPFs to be deployed separately from CP functions in a distributed fashion. In this architecture, UPFs may be deployed very close to UEs to shorten the Round Trip Time (RTT) between UEs and data network for some applications requiring low latency.

[0077] The core 5G network architecture is composed of modularized functions. For example, the AMF **200** and SMF **208** are independent functions in the CP. Separated AMF **200** and SMF **208** allow independent evolution and scaling. Other CP functions like the PCF **210** and AUSF **204** can be separated as shown in FIG. **2**. Modularized function design enables the 5GC network to support various services flexibly.

[0078] Each NF interacts with another NF directly. It is possible to use intermediate functions to route messages from one NF to another NF. In the CP, a set of interactions between two NFs is defined as service so that its reuse is possible. This service enables support for modularity. The UP supports interactions such as forwarding operations between different UPFs.

[0079] FIG. **3** illustrates a 5G network architecture using service-based interfaces between the NFs in the CP, instead of the point-to-point reference points/interfaces used in the 5G network architecture of FIG. **2**. However, the NFs described above with reference to FIG. **2** correspond to the NFs shown in FIG. **3**. The service(s) etc. that a NF provides to other authorized NFs can be exposed to the authorized NFs through the service-based interface. In FIG. **3** the service based interfaces are indicated by the letter "N" followed by the name of the NF, e.g. Namf for the service based interface of the AMF **200** and Nsmf for the service based interface of the SMF **208**, etc. The NEF **300** and the NRF **302** in FIG. **3** are not shown in FIG. **2** discussed above. However, it should be clarified that all NFs depicted in FIG. **2** can interact with the NEF **300** and the NRF **302** of FIG. **3** as necessary, though not explicitly indicated in FIG. **2**.

[0080] Some properties of the NFs shown in FIGS. **2** and **3** may be described in the following manner. The AMF **200** provides UE-based authentication, authorization, mobility management, etc. A UE **112** even using multiple access

technologies is basically connected to a single AMF **200** because the AMF **200** is independent of the access technologies. The SMF **208** is responsible for session management and allocates Internet Protocol (IP) addresses to UEs. It also selects and controls the UPF **214** for data transfer. If a UE **112** has multiple sessions, different SMFs **208** may be allocated to each session to manage them individually and possibly provide different functionalities per session. The AF **212** provides information on the packet flow to the PCF **210** responsible for policy control in order to support QoS. Based on the information, the PCF **210** determines policies about mobility and session management to make the AMF **200** and SMF **208** operate properly. The AUSF **204** supports authentication function for UEs or similar and thus stores data for authentication of UEs or similar while the UDM **206** stores subscription data of the UE **112**. The Data Network (DN), not part of the 5GC network, provides Internet access or operator services and similar.

[0081] An NF may be implemented either as a network element on a dedicated hardware, as a software instance running on a dedicated hardware, or as a virtualized function instantiated on an appropriate platform, e.g., a cloud infrastructure

[0082] Before discussing specific embodiments of the present disclosure, a pair of high-level processes that may be employed by an NG-RAN node (e.g., the base stations **102** in FIG. **1**) and a CN node (e.g., the core network **110** in FIG. **1**) for supporting QoS update during Xn HO are first provided with reference to FIGS. **4** and **5**.

[0083] FIG. **4** is a flowchart of an exemplary method performed by a RAN node for supporting a QoS update during an HO procedure according to embodiments of the present disclosure. The RAN node is configured to provide an indication to a CN node to indicate whether the RAN node can support a QoS update during an HO procedure (step **400**). In one embodiment, the RAN node can provide the indication in a Path Switch Request message (step **400-1**). In another embodiment, the RAN node can provide the indication during an NG Application Protocol (NGAP) procedure (step **400-2**). In another embodiment, the RAN node can provide the indication to indicate one or more QoS parameters that can be supported by the RAN node (step **400-3**). In another embodiment, the RAN node can provide the indication in an NG Setup Request message (step **400-4**).

[0084] The RAN node can then perform one or more actions related to the HO procedure in accordance with the indication provided to the CN node (step **402**). In one embodiment, the RAN node can receive a QoS update during the HO procedure in response to the indication indicating that the RAN node can support the QoS update during the HO procedure (step **402-1**). In another embodiment, the RAN node does not receive a QoS update during the HO procedure in response to the indication indicating that the RAN node cannot support the QoS update during the HO procedure (step **402-2**). In another embodiment, the RAN node can receive a QoS update during a Protocol Data Unit (PDU) session in response to the indication indicating that the RAN node cannot support the QoS update during the HO procedure (step **402-3**).

[0085] FIG. **5** is a flowchart of an exemplary method performed by a CN node for supporting a QoS update during a HO procedure according to embodiments of the present disclosure. The CN node can receive an indication from a RAN node that indicates whether the RAN node can support a QoS update during an HO procedure (step **500**). In one embodiment, the CN node can receive the indication in a Path Switch Request message (step **500-1**). In another embodiment, the CN node can receive the indication during an NGAP procedure (step **500-2**). In another embodiment, the CN node can receive the indication that indicates one or more QoS parameters that can be supported in the HO procedure (step **500-3**). In another embodiment, the CN node can receive the indication in an NG Setup Request message (step **500-4**).

[0086] Accordingly, the CN node can perform one or more actions related to the HO procedure in accordance with the indication received from the RAN node (step **502**). In one embodiment, the CN node can provide a QoS update during the HO procedure in response to the indication indicating that the RAN node can support the QoS update during the HO procedure (step **502-1**). In another embodiment, the CN node does not provide a QoS update during the HO procedure in response to the indication indicating that the RAN node cannot support the QoS update during the HO procedure (step **502-2**). In another embodiment, the CN node can provide a QoS update during a PDU session in response to the indication indicating that the RAN node can support the QoS update during the HO procedure (step **502-3**). In another embodiment, the CN node can forward the indication from an Intermediate SMF (I-SMF) associated with the CN node to an SMF associated with the CN node (step **502-4**). In another embodiment, the CN node can forward the indication from a Visited SMF (V-SMF) associated with the CN node to a Home SMF (H-SMF) associated with the CN node (step **502-5**).

[0087] FIG. **6** is a flowchart of an exemplary method performed by a RAN node (e.g., the RAN node **102** in FIG. **1**) for supporting a QoS update during a HO (e.g., Xn HO in 5G or X2 HO in EPS) procedure. Specifically, the RAN node is configured to provide an indication to a CN node (e.g., the CN node **110** in FIG. **1**) to indicate whether the RAN node can support the QoS update during the HO procedure (step **400**).

[0088] In one embodiment, the RAN node may provide the indication in a Path Switch Request Acknowledge message (e.g., in a "support for reception of additional QoS parameters" field) (step **600-1**). In another embodiment, the RAN node may provide the indication during a NGAP procedure (step **600-2**). In another embodiment, the RAN node may provide the indication that indicates one or more selected Qos parameters (e.g., CN Packet Delay Budget, PDB, and Traffic Characteristics, TCS) can be updated during the HO procedure (step **600-3**). In another embodiment, the RAN node may provide the indication that indicates one or more best-possible QoS parameters the RAN node can support, wherein the indication is provided in a Path Switch Request message (e.g., in a "best QoS available" field or a "best RAN PDB" field) (step **600-4**). In another embodiment, the RAN node may provide the indication in an NG Setup Request message (step **600-5**).

[0089] Accordingly, the RAN node can receive the QoS update during the HO procedure in response to providing the indication that indicates the RAN node can support the QoS update during the HO procedure (step **602**). Alternatively, the RAN node does not receive the QoS update during the HO procedure in response to providing the indication that indicates the RAN node cannot support the QoS update

during the HO procedure (step **604**). In this regard, the RAN node may receive the QoS update during a PDU session (step **604-1**).

[0090] FIG. **7** is a flowchart of an exemplary method performed by a CN node (e.g., the CN node **110** in FIG. **1**) for supporting a QoS update during a HO (e.g., Xn HO in 5G or X2 HO in EPS) procedure. Specifically, the CN node receives an indication from a Radio Access Network, RAN, node that indicates whether the RAN node can support the QoS update during the HO procedure (step **700**).

[0091] In one embodiment, the CN node may receive the indication in a Path Switch Request Acknowledge message (e.g., in a "support for reception of additional Qos parameters" field) (step **700-1**). In another embodiment, the CN node may receive the indication during a NGAP procedure (step **700-2**). In another embodiment, the CN node may receive the indication that indicates one or more selected QoS parameters (e.g., CN Packet Delay Budget, PDB, and Traffic Characteristics, TCS) can be updated during the HO procedure (step **700-3**). In another embodiment, the CN node may receive the indication that indicates one or more best-possible QoS parameters the RAN node can support, wherein the indication is provided in a Path Switch Request message (e.g., in a "best QoS available" field or a "best RAN PDB" field) (step **700-4**). Accordingly, the CN node may determine a UPF based on the best possible QoS parameters in the indication. In another embodiment, the CN node may receive the indication in an NG Setup Request message (step **700-5**).

[0092] Accordingly, the CN node can provide the QoS update based on the indication received from the RAN node (step **702**). In one non-limiting example, the CN node provides the QoS update during the HO procedure in response to receiving the indication that indicates the RAN node can support the QoS update during the HO procedure (step **702-1**). In another non-limiting example, the CN node does not provide the QoS update during the HO procedure in response to receiving the indication that indicates the RAN node cannot support the QoS update during the HO procedure (step **702-2**). In this regard, the CN node may provide the QoS update during a PDU session (step **702**-2a).

[0093] In a non-limiting example, the indication can be received by an I-SMF/V-SMF in the CN node. In this regard, the CN node may be configured to forward the indication from the I-SMF/V-SMF to an SMF/H-SMF in the CN node (step **704**).

[0094] Specific embodiments of the present disclosure with respect to supporting QoS update during a HO procedure are discussed in detail below.

Solution 1

[0095] In an embodiment related to providing (**400**) the indication to the CN node, an NG-RAN node shall provide an indication to a CN node that indicates the RAN node is capable of receiving and handling additional parameters (e.g., CN PDB) provided by the CN node (e.g., via an NGAP Path Switch Request Acknowledge message). The RAN node may provide the indication in a message transmitted from the RAN node to the CN node (e.g., in the NGAP Path Switch Request), as illustrated in FIG. **8** (e.g., steps **400-1**, **500-1**).

[0096] In another embodiment related to providing (**400**) the indication to the CN node, the NG-RAN node can indicate the support during NGAP setup procedure (e.g., steps **400-4**, **500-4**).

[0097] In another embodiment related to providing (**400**) the indication to the CN node, the NG-RAN node can indicate the support for selected parameter updates during the Xn Handover, such as CN PDB and Traffic Characteristics (TSC) (e.g., steps **400-3**, **500-3**).

[0098] As a result of providing (**400**) the indication to the CN node, the CN node can determine whether additional parameters can be provided to the NG-RAN as part of the Xn HO procedure or as part of a separate PDU session modification procedure.

Solution 2

[0099] In another embodiment related to providing (**400**) the indication to the CN node, the NG-RAN node indicates to the CN node a best QoS parameter(s) (e.g., the RAN side PDB that the NG-RAN can support) when the best QoS parameter(s) is better than the originally required QoS parameters. This serves an indication to the CN node as to what the NG-RAN node can best perform. In a non-limiting example, the indication can be provided by introducing a "best QoS available" or a "best RAN PDB" field in a message sent from the RAN node to the CN node (e.g., Path Switch Request message).

[0100] After receiving (**500**) the indication from the RAN node, the CN node (e.g., SMF) may calculate the longest-possible CN PDB and select a UPF that can fulfill the QoS requirement.

[0101] FIG. **9** is a schematic block diagram of a radio access node **900** according to some embodiments of the present disclosure. Optional features are represented by dashed boxes. The radio access node **900** may be, for example, a base station **102** or **106** or a network node that implements all or part of the functionality of the base station **102** or gNB described herein. As illustrated, the radio access node **900** includes a control system **902** that includes one or more processors **904** (e.g., Central Processing Units (CPUs), Application Specific Integrated Circuits (ASICs), Field Programmable Gate Arrays (FPGAs), and/or the like), memory **906**, and a network interface **908**. The one or more processors **904** are also referred to herein as processing circuitry. In addition, the radio access node **900** may include one or more radio units **910** that each includes one or more transmitters **912** and one or more receivers **914** coupled to one or more antennas **916**. The radio units **910** may be referred to or be part of radio interface circuitry. In some embodiments, the radio unit(s) **910** is external to the control system **902** and connected to the control system **902** via, e.g., a wired connection (e.g., an optical cable). However, in some other embodiments, the radio unit(s) **910** and potentially the antenna(s) **916** are integrated together with the control system **902**. The one or more processors **904** operate to provide one or more functions of a radio access node **900** as described herein. In some embodiments, the function(s) are implemented in software that is stored, e.g., in the memory **906** and executed by the one or more processors **904**.

[0102] FIG. **10** is a schematic block diagram that illustrates a virtualized embodiment of the radio access node **900** according to some embodiments of the present disclosure. This discussion is equally applicable to other types of network nodes. Further, other types of network nodes may

have similar virtualized architectures. Again, optional features are represented by dashed boxes.

[0103] As used herein, a "virtualized" radio access node is an implementation of the radio access node **900** in which at least a portion of the functionality of the radio access node **900** is implemented as a virtual component(s) (e.g., via a virtual machine(s) executing on a physical processing node (s) in a network(s)). As illustrated, in this example, the radio access node **900** may include the control system **902** and/or the one or more radio units **910**, as described above. The control system **902** may be connected to the radio unit(s) **910** via, for example, an optical cable or the like. The radio access node **900** includes one or more processing nodes **1000** coupled to or included as part of a network(s) **1002**. If present, the control system **902** or the radio unit(s) is connected to the processing node(s) **1000** via the network **1002**. Each processing node **1000** includes one or more processors **1004** (e.g., CPUs, ASICs, FPGAS, and/or the like), memory **1006**, and a network interface **1008**.

[0104] In this example, functions **1010** of the radio access node **900** described herein are implemented at the one or more processing nodes **1000** or distributed across the one or more processing nodes **1000** and the control system **902** and/or the radio unit(s) **910** in any desired manner. In some particular embodiments, some or all of the functions **1010** of the radio access node **900** described herein are implemented as virtual components executed by one or more virtual machines implemented in a virtual environment(s) hosted by the processing node(s) **1000**. As will be appreciated by one of ordinary skill in the art, additional signaling or communication between the processing node(s) **1000** and the control system **902** is used in order to carry out at least some of the desired functions **1010**. Notably, in some embodiments, the control system **902** may not be included, in which case the radio unit(s) **910** communicates directly with the processing node(s) **1000** via an appropriate network interface (s).

[0105] In some embodiments, a computer program including instructions which, when executed by at least one processor, causes the at least one processor to carry out the functionality of radio access node **900** or a node (e.g., a processing node **1000**) implementing one or more of the functions **1010** of the radio access node **900** in a virtual environment according to any of the embodiments described herein is provided. In some embodiments, a carrier comprising the aforementioned computer program product is provided. The carrier is one of an electronic signal, an optical signal, a radio signal, or a computer readable storage medium (e.g., a non-transitory computer readable medium such as memory).

[0106] FIG. **11** is a schematic block diagram of the radio access node **900** according to some other embodiments of the present disclosure. The radio access node **900** includes one or more modules **1100**, each of which is implemented in software. The module(s) **1100** provide the functionality of the radio access node **900** described herein. This discussion is equally applicable to the processing node **1000** of FIG. **10** where the modules **1100** may be implemented at one of the processing nodes **1000** or distributed across multiple processing nodes **1000** and/or distributed across the processing node(s) **1000** and the control system **902**.

[0107] FIG. **12** is a schematic block diagram of a network node **1200** according to some embodiments of the present disclosure. The network node **1200** may be, for example, a core network node (e.g., SMF, I-SMF, V-SMF, H-SMF). As illustrated, the network node **1200** includes one or more processors **1204** (e.g., Central Processing Units (CPUs), Application Specific Integrated Circuits (ASICs), Field Programmable Gate Arrays (FPGAs), and/or the like), memory **1206**, and a network interface **1208**. The one or more processors **1204** are also referred to herein as processing circuitry. The one or more processors **1204** operate to provide one or more functions of the network node **1200** as described herein (e.g., one or more functions of SMF, I-SMF, V-SMF, H-SMF as described herein). In some embodiments, the function(s) are implemented in software that is stored, e.g., in the memory **1206** and executed by the one or more processors **1204**.

[0108] FIG. **13** is a schematic block diagram that illustrates a virtualized embodiment of the network node **1200** according to some embodiments of the present disclosure. Optional features are represented by dashed boxes. As used herein, a "virtualized" network node is an implementation of the network node **1200** in which at least a portion of the functionality of the network node **1200** is implemented as a virtual component(s) (e.g., via a virtual machine(s) executing on a physical processing node(s) in a network(s)). As illustrated, in this example, the network node **1200** includes one or more processing nodes **1300** coupled to or included as part of a network(s) **1302**. Each processing node **1300** includes one or more processors **1304** (e.g., CPUs, ASICs, FPGAS, and/or the like), memory **1306**, and a network interface **1308**. In this example, functions **1310** of the network node **1200** described herein (e.g., one or more functions of SMF, I-SMF, V-SMF, H-SMF as described herein) are implemented at the one or more processing nodes **1300** or distributed across the two or more processing nodes **1300** in any desired manner. In some particular embodiments, some or all of the functions **1310** of the network node **1200** described herein are implemented as virtual components executed by one or more virtual machines implemented in a virtual environment(s) hosted by the processing node(s) **1300**.

[0109] In some embodiments, a computer program including instructions which, when executed by at least one processor, causes the at least one processor to carry out the functionality of the network node **1200** or a node (e.g., a processing node **1300**) implementing one or more of the functions **1310** of the network node **1200** in a virtual environment according to any of the embodiments described herein is provided. In some embodiments, a carrier comprising the aforementioned computer program product is provided. The carrier is one of an electronic signal, an optical signal, a radio signal, or a computer readable storage medium (e.g., a non-transitory computer readable medium such as memory).

[0110] FIG. **14** is a schematic block diagram of the network node **1200** according to some other embodiments of the present disclosure. The network node **1200** includes one or more modules **1400**, each of which is implemented in software. The module(s) **1400** provide the functionality of the network node **1200** described herein. This discussion is equally applicable to the processing node **1300** of FIG. **13** where the modules **1400** may be implemented at one of the processing nodes **1300** or distributed across multiple processing nodes **1300**.

[0111] Specific changes are further described in detail in the Change Requests (CRs) for 23.502 and 38.413, as provided below.

Change Request 38.413 CR

8.4.4 Path Switch Request (e.g., steps **400-1**, **500-1**)

8.4.4.1 General

[0112] The purpose of the Path Switch Request procedure is to establish a UE associated signalling connection to the 5GC and, if applicable, to request the switch of the downlink termination point of the NG-U transport bearer towards a new termination point.

8.4.4.2 Successful Operation

[0113] Refer to FIG. **15**, which illustrates a pass switch request of a successful operation. The NG-RAN node initiates the procedure by sending the PATH SWITCH REQUEST message to the AMF. Upon reception of the PATH SWITCH REQUEST message the AMF shall, for each PDU session indicated in the PDU Session ID IE, transparently transfer the Path Switch Request Transfer IE to the SMF associated with the concerned PDU session.

[0114] When the NG-RAN node has received from the radio interface the RRC Resume Cause IE, it shall include it in the PATH SWITCH REQUEST message.

[0115] After all necessary updates including the UP path switch have been successfully completed in the 5GC for at least one of the PDU session resources included in the PATH SWITCH REQUEST, the AMF shall send the PATH SWITCH REQUEST ACKNOWLEDGE message to the NG-RAN node and the procedure ends.

[0116] The list of accepted QoS flows shall be included in the PATH SWITCH REQUEST message within the Path Switch Request Transfer IE. The SMF shall handle this information as specified in TS 23.502.

[0117] For each PDU session for which the Additional DL QOS Flow per TNL Information IE is included in the Path Switch Request Transfer IE of the PATH SWITCH REQUEST message, the SMF may use each included UP transport layer information as the downlink termination point for the included associated QoS flows for this PDU session split in different tunnels.

[0118] The list of PDU sessions which failed to be setup, if any, shall be included in the PATH SWITCH REQUEST message within the Path Switch Request Setup Failed Transfer IE. The AMF shall handle this information as specified in TS 23.502.

[0119] For each PDU session for which the User Plane Security Information IE is included in the Path Switch Request Transfer IE of the PATH SWITCH REQUEST message, the SMF shall behave as specified in TS 33.501 and may send back the Security Indication IE within the Path Switch Request Acknowledge Transfer IE of the PATH SWITCH REQUEST ACKNOWLEDGE message.

[0120] For each PDU session for which the DL NG-U TNL Information Reused IE set to "true" is included in the Path Switch Request Transfer IE of the PATH SWITCH REQUEST message, the SMF shall, if supported, consider that the DL TNL information contained in the DL NG-U UP TNL Information IE has been reused.

[0121] For each PDU session for which the Additional Redundant DL QoS Flow per TNL Information IE is included in the Path Switch Request Transfer IE of the PATH SWITCH REQUEST message, the SMF may use each included UP transport layer information as the downlink termination point for the included associated QoS flows for this PDU session split in different tunnels for the redundant transmission.

[0122] For each PDU session for which the Redundant DL NG-U TNL Information Reused IE is included in the Path Switch Request Transfer IE of the PATH SWITCH REQUEST message, the SMF shall, if supported, consider the included DL transport layer address as the DL transport layer address for the redundant transmission as specified in TS 23.501.

[0123] For each PDU session for which the Global RAN Node ID of Secondary NG-RAN Node IE is included in the Path Switch Request Transfer IE of the PATH SWITCH REQUEST message, the SMF shall, if supported, handle this information as specified in TS 23.501.

[0124] For each PDU session included in the PATH SWITCH REQUEST message, if the Current QoS Parameters Set Index IE is included in the Path Switch Request Transfer IE the SMF shall consider it as the currently fulfilled QoS parameters set among the alternative QoS parameters for the involved QoS flow.

[0125] For each PDU session for which the support for reception of additional QoS parameters IE is included in the Path Switch Request Transfer IE of the PATH SWITCH REQUEST message, the SMF shall, if supported, handle this information as specified in TS 23.501.

[0126] If the Security Indication IE is included within the Path Switch Request Acknowledge Transfer IE of the PATH SWITCH REQUEST ACKNOWLEDGE message, the NG-RAN node shall behave as specified in TS 33.501.

[0127] If the UL NG-U UP TNL Information IE is included within the Path Switch Request Acknowledge Transfer IE of the PATH SWITCH REQUEST ACKNOWLEDGE message, the NG-RAN node shall store this information and use it as the uplink termination point for the user plane data for this PDU session.

[0128] If the Additional NG-U UP TNL Information IE is included within the Path Switch Request Acknowledge Transfer IE of the PATH SWITCH REQUEST ACKNOWLEDGE message, the NG-RAN node shall store this information and use the included UL NG-U UP TNL Information IE(s) as the uplink termination point(s) of the user plane data for this PDU session split in different tunnels.

[0129] If the Redundant UL NG-U UP TNL Information IE is included within the Path Switch Request Acknowledge Transfer IE of the PATH SWITCH REQUEST ACKNOWLEDGE message, the NG-RAN node shall store this information and use it as the uplink termination point for the user plane data for the redundant transmission for this PDU session as specified in TS 23.501.

[0130] If the Additional Redundant NG-U UP TNL Information IE is included within the Path Switch Request Acknowledge Transfer IE of the PATH SWITCH REQUEST ACKNOWLEDGE message, the NG-RAN node shall store this information and use the included UL NG-U UP TNL Information IE(s) as the uplink termination point(s) of the user plane data for this PDU session split in different tunnels.

[0131] If the Core Network Assistance Information for RRC INACTIVE IE is included in the PATH SWITCH REQUEST ACKNOWLEDGE message, the NG-RAN node

shall, if supported, store this information in the UE context and use it for e.g., the RRC_INACTIVE state decision and RNA configuration for the UE and RAN paging if any for a UE in RRC_INACTIVE state, as specified in TS 38.300.

[0132] If the CN Assisted RAN Parameters Tuning IE is included in the PATH SWITCH REQUEST ACKNOWLEDGE message, the NG-RAN node may use it as described in TS 23.501.

[0133] If the RRC Inactive Transition Report Request IE is included in the PATH SWITCH REQUEST ACKNOWLEDGE message, the NG-RAN node shall, if supported, store this information in the UE context.

[0134] If the New Security Context Indicator IE is included in the PATH SWITCH REQUEST ACKNOWLEDGE message, the NG-RAN node shall use the information as specified in TS 33.501.

[0135] Upon reception of the PATH SWITCH REQUEST ACKNOWLEDGE message the NG-RAN node shall store the received Security Context IE in the UE context and the NG-RAN node shall use it as specified in TS 33.501.

[0136] If the UE Security Capabilities IE is included in the PATH SWITCH REQUEST ACKNOWLEDGE message, the NG-RAN node shall handle it accordingly (TS 33.501).

[0137] If the Redirection for Voice EPS Fallback IE is included in the PATH SWITCH REQUEST ACKNOWLEDGE message, the NG-RAN node shall, if supported, store it and use it in a subsequent decision of EPS fallback for voice as specified in TS 23.502.

[0138] If the PDU Session Resource Released List IE is included in the PATH SWITCH REQUEST ACKNOWLEDGE message, the NG-RAN node shall release the corresponding QoS flows and regard the PDU session(s) indicated in the PDU Session Resource Released List IE as being released. The appropriate cause value for each PDU session released is included in the Path Switch Request Unsuccessful Transfer IE contained in the PATH SWITCH REQUEST ACKNOWLEDGE message.

[0139] If the SRVCC Operation Possible IE is included in the PATH SWITCH REQUEST ACKNOWLEDGE message, the NG-RAN node shall, if supported, store the content of the received SRVCC Operation Possible IE in the UE context and use it as defined in TS 23.216.

[0140] If the Enhanced Coverage Restriction IE is included in the PATH SWITCH REQUEST ACKNOWLEDGE message, the NG-RAN node shall, if supported, store this information in the UE context and use it as defined in TS 23.501.

[0141] If the Extended Connected Time IE is included in the PATH SWITCH REQUEST ACKNOWLEDGE message, the NG-RAN node shall, if supported, use it as described in TS 23.501.

[0142] If the UE Differentiation Information IE is included in the PATH SWITCH REQUEST ACKNOWLEDGE message, the NG-RAN node shall, if supported, store this information in the UE context for further use according to TS 23.501.

[0143] If the NR V2X Services Authorized IE is contained in the PATH SWITCH REQUEST ACKNOWLEDGE message, the NG-RAN node shall, if supported, update its NR V2X services authorization information for the UE accordingly. If the NR V2X Services Authorized IE includes one or more IEs set to "not authorized", the NG-RAN node shall, if supported, initiate actions to ensure that the UE is no longer accessing the relevant service(s).

[0144] If the LTE V2X Services Authorized IE is contained in the PATH SWITCH REQUEST ACKNOWLEDGE message, the NG-RAN node shall, if supported, update its LTE V2X services authorization information for the UE accordingly. If the LTE V2X Services Authorized IE includes one or more IEs set to "not authorized", the NG-RAN node shall, if supported, initiate actions to ensure that the UE is no longer accessing the relevant service(s).

[0145] If the NR UE Sidelink Aggregate Maximum Bit Rate IE is included in the PATH SWITCH REQUEST ACKNOWLEDGE message, the NG-RAN node shall, if supported:

[0146] replace the previously provided UE Sidelink Aggregate Maximum Bit Rate, if available in the UE context, with the received value;

[0147] use the received value for the concerned UE's sidelink communication in network scheduled mode for NR V2X services.

[0148] If the LTE UE Sidelink Aggregate Maximum Bit Rate IE is included in the PATH SWITCH REQUEST ACKNOWLEDGE message, the NG-RAN node shall, if supported:

[0149] replace the previously provided UE Sidelink Aggregate Maximum Bit Rate, if available in the UE context, with the received value;

[0150] use the received value for the concerned UE's sidelink communication in network scheduled mode for LTE V2X services.

[0151] If the PC5 QOS Parameters IE is included in the PATH SWITCH REQUEST ACKNOWLEDGE message, the NG-RAN node shall, if supported, use it as defined in TS 23.287.

[0152] If the CE-mode-B Restricted IE is included in the PATH SWITCH REQUEST ACKNOWLEDGE message and the Enhanced Coverage Restriction IE is not set to "restricted" and the Enhanced Coverage Restriction information stored in the UE context is not set to "restricted", the NG-RAN node shall, if supported, store this information in the UE context and use it as defined in TS 23.501.

[0153] If the UE User Plane CIoT Support Indicator IE is included in the PATH SWITCH REQUEST ACKNOWLEDGE message the NG-RAN node shall, if supported, store this information in the UE context and consider that User Plane CIoT 5GS Optimisation as specified in TS 23.501 is supported for the UE.

[0154] If the PATH SWITCH REQUEST ACKNOWLEDGE message contains the UE Radio Capability ID IE, the NG-RAN node shall, if supported, use it as specified in TS 23.501 and TS 23.502.

Interactions with RRC Inactive Transition Report Procedure

[0155] If the RRC Inactive Transition Report Request IE is included in the PATH SWITCH REQUEST ACKNOWLEDGE message and set to "single RRC connected state report" and the UE is in RRC_CONNECTED state, the NG-RAN node shall, if supported, send one RRC INACTIVE TRANSITION REPORT message to the AMF to report the RRC state of the UE.

[0156] If the RRC Inactive Transition Report Request IE is included in the PATH SWITCH REQUEST ACKNOWLEDGE message and set to "single RRC connected state report" and the UE is in RRC_INACTIVE state, the NG-RAN node shall, if supported, send to the AMF one RRC INACTIVE TRANSITION REPORT message plus one sub-

sequent RRC INACTIVE TRANSITION REPORT message when the RRC state transitions to RRC_CONNECTED state.

[0157] If the RRC Inactive Transition Report Request IE is included in the PATH SWITCH REQUEST ACKNOWLEDGE message and set to "subsequent state transition report", the NG-RAN node shall, if supported, send one RRC INACTIVE TRANSITION REPORT message to the AMF to report the RRC state of the UE and subsequent RRC INACTIVE TRANSITION REPORT messages to report the RRC state of the UE when the UE enters or leaves RRC_INACTIVE state.

9.2.3.8 Path Switch Request

[0158] FIG. **16** illustrates a message sent by the NG-RAN node to inform the AMF of the new serving NG-RAN node and to transfer some NG-U DL tunnel termination point(s) to the SMF via the AMF for one or multiple PDU session resources. Direction: NG-RAN node→AMF.

9.2.3.9 PATH SWITCH REQUEST ACKNOWLEDGE

[0159] FIG. **17** illustrates a message sent by the AMF to inform the NG-RAN node that the path switch has been successfully completed in the 5GC. Direction: AMF→NG-RAN node.

9.3.4.8 Path Switch Request Transfer

[0160] An IE as shown in FIG. **8** is transparent to the AMF.

Change Request 38.413 CR 2348

[0161] 4.9.1.2.2 Xn based inter NG-RAN handover without User Plane function re-allocation

[0162] This procedure is used to hand over a UE from a source NG-RAN to target NG-RAN using Xn when the AMF is unchanged and the SMF decides to keep the existing UPF. The UPF referred in this clause 4.9.1.2.2 is the UPF which terminates N3 interface in the 5GC for non-roaming or local breakout roaming scenario, V-UPF which terminates N3interface in 5GC for home routed roaming scenario. The SMF referred in this clause 4.9.1.2.2 is the V-SMF for home routed roaming scenario. The presence of IP connectivity between the Source UPF and Target NG-RAN is assumed.

[0163] The call flow is shown in FIG. **18**.

[0164] 1a. If the PLMN has configured secondary RAN usage reporting, the source NG-RAN node during the handover execution phase may provide a RAN usage data Report (N2 SM Information (Secondary RAN usage data), Handover Flag, Source to Target transparent container) to the AMF. The source NG-RAN node shall provide this only when the Target NG-RAN has confirmed handover over Xn interface. The Handover Flag indicates to the AMF that it should buffer the N2 SM Information containing the usage data report before forwarding it.

[0165] If the source NG RAN and target NG RAN support RACS as defined in TS 23.501, the source NG-RAN provides the UE's UE Radio Capability ID to the target NG-RAN. If the source NG-RAN has knowledge that the target NG-RAN might not have a local copy of the Radio Capability corresponding to the UE Radio Capability ID (i.e., because the source NG-RAN had itself to retrieve the UE's Radio Capability from the AMF) then the source NG-RAN may also send some or all of the UE's Radio Capability to the target NG-RAN (the size limit based on local configuration) in Xn signalling as defined in TS 38.423. In the case of inter-PLMN handover, when the source and target NG-RAN support RACS as defined in TS 23.501 and the source NG-RAN determines based on local configuration that the target PLMN does not support the UE Radio Capability ID assigned by the source PLMN, then the source NG-RAN shall provide the UE radio access capabilities to the target NG-RAN and shall not send the UE Radio Capability ID. If, as permitted in TS 38.423, the target NG-RAN during the handover preparation received the UE radio access capabilities but did not receive the UE Radio Capability ID, NG-RAN shall proceed with handover using the received UE radio access capabilities. If the target NG-RAN received both the UE radio access capabilities and the UE Radio Capability ID, then the target NG-RAN shall use any locally stored UE radio access capability information corresponding to the UE Radio Capability ID. If none are stored locally, the target NG-RAN may request the full UE radio access capability information from the core network. If the full UE radio access capability information is not promptly received from the core network, or the target NG-RAN chooses not to request them, then the target NG-RAN shall proceed with the UE radio access capabilities sent by the source NG-RAN. The target NG-RAN shall not use the UE radio access capability information received from the source NG-RAN for any other UE with the same the UE Radio Capability ID.

[0166] 1b. Target NG-RAN to AMF: N2 Path Switch Request (List of PDU Sessions To Be Switched with N2 SM Information, List of PDU Sessions that failed to be established with the failure cause given in the N2 SM information element, UE Location Information)

[0167] The Target NG-RAN sends an N2 Path Switch Request message to an AMF to inform that the UE has moved to a new target cell and provides a List Of PDU Sessions To Be Switched. AN Tunnel Info for each PDU Session to be switched is included in the N2 SM Information.

[0168] If redundant transmission is performed for one or more QoS Flows in the PDU Session, two AN Tunnel Info are provided by the Target NG-RAN and the Target NG-RAN indicates to the SMF one of the AN Tunnel Info is used as the redundancy tunnel of the PDU Session as described in clause 5.33.2.2 of TS 23.501 [2]. If only one AN Tunnel Info is provided by the Target NG-RAN for the PDU session, the SMF may release these QoS Flows by triggering PDU Session Modification procedure as specified in clause 4.3.3 after the handover procedure.

[0169] The serving PLMN ID is included in the message. The target NG-RAN shall include the PDU Session in the PDU Sessions Rejected list:

[0170] If none of the QoS Flows of a PDU Session are accepted by the Target NG-RAN; or

[0171] If the corresponding network slice is not supported in the Target NG-RAN; or

[0172] When the NG-RAN cannot set up user plane resources fulfilling the User Plane Security Enforcement with a value Required, the NG-RAN rejects the establishment of user plane resources for the PDU Session.

[0173] If the NG-RAN cannot set up user plane resources fulfilling the User Plane Security Enforcement with a value Preferred, the NG-RAN establishes the user plane resources

for the PDU session and shall include the PDU Session in the PDU Sessions Modified list.

[0174] PDU Sessions Rejected contains an indication of whether the PDU session was rejected because User Plane Security Enforcement is not supported in the Target NG-RAN. Depending on the type of target cell, the Target NG-RAN includes appropriate information in this message.

[0175] For the PDU Sessions to be switched to the Target NG-RAN, the N2 Path Switch Request message shall include the list of accepted QoS Flows. For each QoS Flow accepted with an Alternative QoS Profile as specified in TS 23.501 [2], the N2 SM Information shall include a reference to the fulfilled Alternative QoS Profile. The Target NG-RAN may also include indication of support for reception of additional parameters (e.g., CN PDB) in Path Switch Request Acknowledge.

[0176] 2. AMF to SMF: Nsmf_PDUSession_UpdateSMContext Request (N2 SM information received from T-RAN in step 1b and N2 SM Information from source NG-RAN (Secondary RAT usage data), UE Location Information, UE presence in LADN service area). The N2 SM Information here from source NG-RAN is the one buffered at step 1a when applicable.

[0177] The AMF sends N2 SM information by invoking the

[0178] Nsmf_PDUSession_UpdateSMContext request service operation for each PDU Session in the lists of PDU Sessions received in the N2 Path Switch Request.

[0179] The Nsmf_PDUSession_UpdateSMContext Request contains either an indication that the PDU Session Is To Be Switched (together with information on the N3 addressing to use and on the transferred QoS flows) or an indication that the PDU Session is to be Rejected (together with a rejection cause).

[0180] For a PDU Sessions to be switched to the Target NG-RAN, upon receipt of the Nsmf_PDUSession_UpdateSMContext request, the SMF determines whether the existing UPF can continue to serve the UE. If the existing UPF cannot continue to serve the UE, steps 3-11 of clause 4.9.1.2.3 or 4.9.1.2.4 are performed depending on whether the existing UPF is a PDU Session Anchor. Otherwise, the following steps 3 to 6 are performed if the existing UPFs can continue to serve the PDU Session.

[0181] In the case that the AMF determines that the PDU Session is related to a LADN, then the AMF provides the "UE presence in LADN service area" to the SMF. If the AMF does not provide the "UE presence in LADN service area" indication and the SMF determines that the DNN corresponds to a LADN, then the SMF considers that the UE is OUT of the LADN service area. The SMF takes actions for the LADN PDU Session as defined in TS 23.501 clause 5.6.5 based on the "UE presence in LADN service area" indication.

[0182] If a PDU Session is rejected by the Target NG-RAN with an indication that the PDU session was rejected because User Plane Security Enforcement is not supported in the Target NG-RAN and the User Plane Enforcement Policy indicates "Required" as described in clause 5.10.3 of TS 23.501, the SMF triggers the release of this PDU Session. In all other cases of PDU Session rejection, the SMF can decide whether to release the PDU Session or to deactivate the UP connection of this PDU Session.

[0183] If some of the QoS Flows of a PDU Session are not accepted by the Target NG-RAN, the SMF shall initiate the PDU Session Modification procedure to remove the non-accepted QoS Flows from the PDU Session(s) after the handover procedure is completed.

[0184] For the PDU Session(s) that do not have active N3 UP connections before handover procedure, the SMF(s) keep the inactive status after handover procedure.

[0185] If the UE moves into a non-Allowed Area, the AMF also notifies via Namf_EventExposure_Notify to each NF Consumer (e.g., SMFs of the established PDU Sessions) which has subscribed for UE reachability event, that the UE is only reachable for regulatory prioritized services. The SMF then deactivates the PDU session if this PDU Session is not for emergency service.

[0186] 3. SMF to UPF: N4 Session Modification Request (AN Tunnel Info) For PDU Sessions that are modified by the Target NG-RAN, the SMF sends an N4 Session Modification Request message to the UPF. The SMF may notify the UPF that originated the Data Notification to discard downlink data for the PDU Sessions and/or to not provide further Data Notification messages.

[0187] Depending on the network deployment, the CN Tunnel Info of UPF used for connection to Target NG-RAN and connection to Source NG-RAN may be different, e.g., due to Source and Target NG-RAN are in different IP domains. In this case the SMF may ask the UPF to allocate new CN Tunnel Info, providing the target Network Instance.

[0188] 4. UPF to SMF: N4 Session Modification Response (CN Tunnel Info) For the PDU Sessions that are switched, the UPF returns an N4 Session Modification Response message to the SMF after requested PDU Sessions are switched. Tunnel identifiers for UL traffic are included only for PDU Sessions whose user plane resources are not being released, and was requested by the SMF. If redundant transmission is performed for one or more QoS Flows of a PDU Session and different CN Tunnel Info were requested by the SMF, the UPF allocates two different CN Tunnel Info and indicates the SMF that one CN Tunnel Info is used as the redundancy tunnel of the PDU session as described in clause 5.33.2.2 of TS 23.501. For the PDU Sessions that are deactivated, the UPF returns an N4 Session Modification Response message to the SMF after the N3 (R) AN tunnel information is released.

[0189] 5. In order to assist the reordering function in the Target NG-RAN, the UPF (as specified in TS 23.501 [2], clause 5.8.2.9) sends one or more "end marker" packets for each N3 tunnel on the old path immediately after switching the path. The UPF starts sending downlink packets to the Target NG-RAN.

[0190] 6. SMF to AMF: Nsmf_PDUSession_UpdateSMContext Response (N2 SM information) The SMF sends an Nsmf_PDUSession_UpdateSMContext response (N2 SM Information (CN Tunnel Info, updated QoS parameters for the accepted QoS Flows)) to the AMF for PDU Sessions which have been switched successfully. The CN Tunnel Info of UPF send to AMF is used to setup N3 tunnel. If redundant transmission is performed for one or more QoS Flows of a PDU Session, two CN Tunnel Info are sent and the SMF indicates to the Target NG-RAN one of the CN Tunnel Info is used as the redundancy tunnel of the PDU Session as described in clause 5.33.2.2 of TS 23.501. The SMF sends an Nsmf_PDUSession_Up-

dateSMContext response without including the CN Tunnel Info to the AMF for the PDU Sessions for which user plane resources are deactivated or released, and then the SMF releases the PDU Session(s) which is to be released using a separate procedure as defined in clause 4.3.4. For each accepted GBR QOS Flow of Delay-critical resource type, the dynamic CN PDB may be updated and sent to the Target NG-RAN by the SMF, either as part of the current procedure or using separate procedure as specified in clause 4.3.3 PDU Session Modification based on the indication in step 1b above.

[0191] If the Source NG-RAN does not support Alternative QoS Profiles (see TS 23.501) and the Target NG-RAN supports them, the SMF sends the Alternative QoS Profiles (see TS 23.501) to the Target NG-RAN on a per QoS Flow basis, if available.

[0192] NOTE: Step 6 can occur any time after receipt of N4 Session Modification Response at the SMF.

[0193] 7. AMF to NG-RAN: N2 Path Switch Request Ack (N2 SM Information, Failed PDU Sessions, UE Radio Capability ID).

[0194] Once the Nsmf_PDUSession_UpdateSMContext response is received from all the SMFs, the AMF aggregates received CN Tunnel Info and sends this aggregated information as a part of N2 SM Information along with the Failed PDU Sessions in N2 Path Switch Request Ack to the Target NG-RAN. If none of the requested PDU Sessions have been switched successfully, the AMF shall send an N2 Path Switch Request Failure message to the Target NG-RAN.

[0195] If the UE Radio Capability ID is included in the N2 Path Switch Request Ack message, when there are no corresponding UE radio capabilities set for UE Radio Capability ID at the target NR-RAN, the target NG-RAN shall request the AMF to provide the UE radio capabilities set corresponding to UE Radio Capability ID to the target NG-RAN.

[0196] 8. By sending a Release Resources message to the Source NG-RAN, the Target NG-RAN confirms success of the handover. It then triggers the release of resources with the Source NG-RAN.

[0197] 9. [Conditional] The UE may initiate Mobility Registration Update procedure if one of the triggers of registration procedure applies as described in clause 4.2.2.2.2. In this case, only steps 1, 2, 3, 17 and 21 in clause 4.2.2.2.2 are performed.

[0198] For the mobility related events as described in clause 4.15.4, the AMF invokes the Namf_EventExposure_Notify service operation.

[0199] Upon reception of the Namf_EventExposure_Notify with an indication that UE is reachable only for regulatory prioritized service, the SMF deactivates the PDU Session if the service of the PDU Session is not regulatory prioritized. For home routed roaming case, the V-SMF triggers the deactivation of the PDU Session, in addition, the H-SMF refrains from sending downlink signaling if the signaling is not related to regulatory prioritized service upon receiving the notification.

4.23.11.2 Xn Based Handover with Insertion of Intermediate SMF

[0200] This procedure is used to hand over a UE from a Source NG-RAN to a Target NG-RAN using Xn interface (in this case the AMF is unchanged) and the AMF decides that insertion of a new intermediate I-SMF is needed. This procedure is used for non-roaming or local breakout roaming scenario.

[0201] The call flow is shown in FIG. **19**.

[0202] 1. Step 1 is the same as described in clause 4.9.1.2.2.

[0203] 2. For each PDU Session Rejected in the list of PDU Sessions received in the N2 Path Switch Request, the AMF perform same step as step 2 in clause 4.9.1.2.2.

[0204] The rest of this procedure applies for each PDU Session To Be Switched.

[0205] 3a. The AMF checks if an I-SMF needs to be selected as described in clause 5.35.3 of TS 23.501.

[0206] 3b. If a new I-SMF is selected the AMF sends Nsmf_PDUSession_CreateSMContext Request (SUPI, AMF ID, SMF ID, SM Context ID, PDU Session To Be Switched with N2 SM Information (Secondary RAT usage data), UE Location Information, UE presence in LADN service area, indication of the support for receiption of additional parameters) to the new selected I-SMF.

[0207] 4. The new I-SMF sends Nsmf_PDUSession_Context Request (SM context type, SM Context ID) to SMF to retrieve the SM Context.

[0208] The new I-SMF uses SM Context ID received from AMF for this service operation. SM context type indicates that the requested information is all SM context, i.e., PDN Connection Context and 5G SM context. The SM Context ID is used by the recipient of Nsmf_PDUSession_Context Request in order to determine the targeted PDU Session.

[0209] 5a. I-SMF to I-UPF: N4 Session Establishment Request (Target NG-RAN Tunnel Info).

[0210] The I-SMF then selects a I-UPF based on UPF Selection Criteria according to clause 6.3.3 of TS 23.501. An N4 Session Establishment Request message is sent to the I-UPF. The target NG-RAN Tunnel Info is included in the N4 Session Establishment Request message.

[0211] 5b. I-UPF to I-SMF: N4 Session Establishment Response.

[0212] The I-UPF sends an N4 Session Establishment Response message to the I-SMF. The UL CN Tunnel Info and DL CN Tunnel Info of I-UPF are sent to the I-SMF.

[0213] 6. I-SMF to SMF: Nsmf_PDUSession_Create Request to the SMF (SUPI, PDU Session ID, Secondary RAT usage data, UE Location Information, UE presence in LADN service area, DL CN Tunnel Info of the I-UPF, DNAI list supported by the I-SMF, additional parameters supporting indicator for Xn HO).

[0214] The I-SMF provides the DNAI list it supports to the SMF as defined in FIG. 4.23.9.1-1 step 1.

[0215] Secondary RAT usage data is extracted from N2 SM Information within PDU Session To Be Switched received from NG RAN.

[0216] The I-SMF also provides the additional parameters supporting indicator for Xn HO, if an indication is received in step 3b

[0217] 7a. SMF to UPF (PSA): N4 Session Modification Request (DL CN Tunnel Info of the I-UPF).

[0218] The SMF provides the DL CN Tunnel Info of the I-UPF to the UPF (PSA).

[0219] If old I-UPF controlled by SMF does not exist and if different CN Tunnel Info need to be used by PSA UPF, i.e., the CN Tunnel Info at the PSA for N3 and N9 are different,

the CN Tunnel Info at the PSA for N9 needs to be allocated. The CN Tunnel Info is provided from UPF to SMF in the response.

[0220] 7b. UPF (PSA) to SMF: N4 Session Modification Response.

[0221] The PDU Session Anchor responds with the N4 Session Modification Response message after requested PDU Sessions are switched. At this point, PDU Session Anchor starts sending downlink packets to the Target NG-RAN via I-UPF.

[0222] PDU Session Anchor sends one or more "end marker" packets for each N3/N9 tunnel on the old path immediately after switching the path, the source NG-RAN shall forward the "end marker" packets to the target NG-RAN.

[0223] 8. In order to assist the reordering function in the Target NG-RAN, the PDU Session Anchor sends one or more "end marker" packets for each N3/N9 tunnel on the old path immediately after switching the path, the source NG-RAN shall forward the "end marker" packets to the target NG-RAN.

[0224] 9. SMF to I-SMF: Nsmf_PDUSession_Create Response (Information for local traffic steering location, CN Tunnel Info at the PSA for N9, QoS parameters for the accepted QoS Flows).

[0225] The SMF may updates the QoS parameters (e.g., CN PDB due to I-SMF/I-UPF insertion) directly in the response or using separate procedure as specified in clause 4.3.3 PDU Session Modification based on the indication received in step 6 above.

[0226] 9a. If the CN Tunnel Info at PSA for N9 is allocated, it is included in the response, and the I-SMF provides the CN Tunnel Info at the PSA for N9 to I-UPF via N4 Session Modification Request.

[0227] In the case of I-SMF insertion and the PDU session corresponds to a LADN, the SMF shall release the PDU session after the handover procedure is completed.

[0228] 10. I-SMF to AMF: Nsmf_PDUSession_CreateSMContext Response (UL CN Tunnel Info of the I-UPF, QoS parameters for the accepted QoS Flows).

[0229] The SMF sends an Nsmf_PDUSession_CreateSMContext response to the AMF.

[0230] 11-13. Steps 11-13 are same as steps 7-9 defined in clause 4.9.1.2.2 with the following addition:

[0231] If a Source I-UPF controlled by SMF was serving the PDU Session, the SMF initiates Source I-UPF Release procedure by sending an N4 Session Release Request toward the Source I-UPF.

4.23.11.3 Xn Based Handover with Re-Allocation of Intermediate SMF

[0232] This procedure is used to hand over a UE from a Source NG-RAN to a Target NG-RAN using Xn interface (in this case the AMF is unchanged) and the AMF decides that the intermediate SMF (I-SMF) is to be changed. This procedure is used for non-roaming or local breakout roaming scenario. In the case of home routed roaming scenario, this procedure is also used except the I-SMF is replaced by V-SMF.

[0233] The call flow is shown in FIG. **20**.

[0234] 1-3. Steps 1-3 are same as steps 1-3 described in clause 4.23.11.2 except that in step 2 the AMF sends Nsmf_PDUSession_UpdateSMContext Request to source I-SMF and then the source I-SMF sends the Nsmf_PDUSession_Update Request to SMF.

[0235] 4. The target I-SMF sends Nsmf_PDUSession_Context Request to Source I-SMF to retrieve 5G SM Context.

[0236] 5a-11. Steps 5a-11 are same as steps 5a-11 described in clause 4.23.11.2 with the following difference:

[0237] In step 6, the target I-SMF invokes Nsmf_PDUSession_Update Request (Secondary RAT usage data, UE Location Information, UE presence in LADN service area, DL CN Tunnel Info of the I-UPF, DNAI list supported by target I-SMF, additional parameters supporting indicator for Xn HO) toward the SMF;

[0238] In step 9, the SMF respond with Nsmf_PDUSession_Update Response. The SMF may provide the DNAI(s) of interest for this PDU Session to I-SMF as described in step 1 of FIG. 4.23.9.1-1. The SMF may updates the QoS parameters (e.g., CN PDB due to I-SMF/I-UPF re-allocation) directly in the response or using separate procedure as specified in clause 4.3.3 PDU Session Modification based on the indication received in step 6 above.

[0239] Secondary RAT usage data is extracted from PDU Session To Be Switched with N2 SM Information received from NG RAN.

[0240] 12a. The AMF sends Nsmf_PDUSession_ReleaseSMContext Request (I-SMF only indication) to source I-SMF. The source I-SMF removes the SM context of this PDU session. An indication is included in this message to avoid invoking resource release in SMF.

[0241] 12b. The source I-SMF sends N4 Session Release to release the resource in source I-UPF. If the source I-UPF acts as UL CL and is not co-located with local PSA, the source I-SMF also sends N4 Session Release to the local PSA to release the resource for the PDU Session.

[0242] 13-14. Steps 13-14 are same as steps 12-13 described in clause 4.23.11.2.

[0243] Any appropriate steps, methods, features, functions, or benefits disclosed herein may be performed through one or more functional units or modules of one or more virtual apparatuses. Each virtual apparatus may comprise a number of these functional units. These functional units may be implemented via processing circuitry, which may include one or more microprocessor or microcontrollers, as well as other digital hardware, which may include Digital Signal Processor (DSPs), special-purpose digital logic, and the like. The processing circuitry may be configured to execute program code stored in memory, which may include one or several types of memory such as Read Only Memory (ROM), Random Access Memory (RAM), cache memory, flash memory devices, optical storage devices, etc. Program code stored in memory includes program instructions for executing one or more telecommunications and/or data communications protocols as well as instructions for carrying out one or more of the techniques described herein. In some implementations, the processing circuitry may be used to cause the respective functional unit to perform corresponding functions according one or more embodiments of the present disclosure.

[0244] While processes in the figures may show a particular order of operations performed by certain embodiments of the present disclosure, it should be understood that such order is exemplary (e.g., alternative embodiments may per-

form the operations in a different order, combine certain operations, overlap certain operations, etc.).

[0245] Some exemplary embodiments of the present disclosure are as follows.

[0246] Embodiment 1: A method performed by a RAN node (**102**) for supporting a QoS update during an HO (e.g., Xn HO in 5G or X2 HO in EPS) procedure is provided. The method includes providing (**600**) an indication to a CN node to indicate whether the RAN node can support the QoS update during the HO procedure. The method also includes receiving (**602**) the QoS update during the HO procedure in response to providing the indication that indicates the RAN node can support the QoS update during the HO procedure.

[0247] Embodiment 2: the method also includes not receiving (**604**) the QoS update during the HO procedure in response to providing the indication that indicates the RAN node cannot support the QoS update during the HO procedure.

[0248] Embodiment 3: wherein not receiving (**604**) the QoS update during the HO procedure comprises receiving (**604-1**) the QoS update during a PDU session.

[0249] Embodiment 4: wherein providing (**600**) the indication to the CN node comprises providing (**600-1**) the indication in a Path Switch Request message (e.g., in a "support for reception of additional QoS parameters" field).

[0250] Embodiment 5: wherein providing (**600**) the indication to the CN node comprises providing (**600-5**) the indication in an NG Setup Request message.

[0251] Embodiment 6: wherein providing (**600**) the indication to the CN node comprises providing (**600-2**) the indication during a NGAP procedure.

[0252] Embodiment 7: wherein providing (**600**) the indication to the CN node comprises providing (**600-3**) the indication that indicates one or more selected QoS parameters (e.g., CN Packet Delay Budget, PDB, and Traffic Characteristics, TCS) can be updated during the HO procedure.

[0253] Embodiment 8: wherein providing (**600**) the indication to the CN node comprises providing (**600-4**) the indication that indicates one or more best-possible Qos parameters the RAN node can support, wherein the indication is provided in a Path Switch Request message (e.g., in a "best QoS available" field or a "best RAN PDB" field).

[0254] Embodiment 9: A method performed by a CN node (**110**) for supporting a QoS update during an HO (e.g., Xn HO in 5G or X2 HO in EPS) procedure is provided. The method includes receiving (**700**) an indication from a RAN node that indicates whether the RAN node can support the QoS update during the HO procedure. The method also includes providing (**702**) the QoS update based on the indication received from the RAN node.

[0255] Embodiment 10: wherein providing (**702**) the QoS update includes one of: providing (**702-1**) the QoS update during the HO procedure in response to receiving the indication that indicates the RAN node can support the QoS update during the HO procedure; and not providing (**702-2**) the QoS update during the HO procedure in response to receiving the indication that indicates the RAN node cannot support the QoS update during the HO procedure.

[0256] Embodiment 11: wherein not providing (**702-2**) the QoS update during the HO procedure comprises providing (**702**-2a) the QoS update during a PDU session.

[0257] Embodiment 12: wherein receiving (**700**) the indication from the RAN node comprises receiving (**700-1**) the indication in a Path Switch Request message (e.g., in a "support for reception of additional QoS parameters" field).

[0258] Embodiment 13: wherein receiving (**700**) the indication to the CN node comprises receiving (**700-5**) the indication in an NG Setup Request message.

[0259] Embodiment 14: wherein receiving (**700**) the indication from the RAN node comprises receiving (**700-2**) the indication during a NGAP procedure.

[0260] Embodiment 15: wherein receiving (**700**) the indication from the RAN node comprises receiving (**700-3**) the indication that indicates one or more selected Qos parameters (e.g., CN PDB and TCS) can be updated during the HO procedure.

[0261] Embodiment 16: wherein receiving (**700**) the indication from the RAN node comprises receiving (**700-4**) the indication that indicates one or more best-possible QoS parameters the RAN node can support, wherein the indication is provided in a Path Switch Request message (e.g., in a "best QoS available" field or a "best RAN PDB" field) and used to determine a User Plane Function, UPF.

[0262] Embodiment 17: the method also includes forwarding (**704**) the indication from an I-SMF/V-SMF to an SMF/H-SMF in the CN node.

[0263] Embodiment 18: A RAN node (**900**) for supporting QoS update during an HO (e.g., Xn HO in 5G or X2 HO in EPS) procedure is provided. The RAN node (**900**) includes processing circuitry (**902**) configured to perform any of the steps of any of the embodiments performed by the RAN node. The RAN node also includes power supply circuitry configured to supply power to the wireless device.

[0264] Embodiment 19: A CN node (**110**) for supporting QoS update during an HO (e.g., Xn HO in 5G or X2 HO in EPS) procedure is provided. The CN node includes processing circuitry configured to perform any of the steps of any of the embodiments performed by the CN node. The CN node also includes power supply circuitry configured to supply power to the base station.

[0265] Embodiment 20: A communication system including a host computer comprising processing circuitry configured to provide user data and a communication interface configured to forward the user data to a cellular network for transmission to a UE. The cellular network comprises a base station having a radio interface and processing circuitry, the base station's processing circuitry configured to perform any of the steps of any of the embodiments performed by the CN node.

[0266] Embodiment 21: the communication system also includes the base station.

[0267] Embodiment 22: the communication system also includes the UE, wherein the UE is configured to communicate with the base station.

[0268] Embodiment 23: the processing circuitry of the host computer is configured to execute a host application, thereby providing the user data; and the UE comprises processing circuitry configured to execute a client application associated with the host application.

[0269] Embodiment 24: A method implemented in a communication system including a host computer, a base station, and a UE is provided. The method includes at the host computer, providing user data. The method also includes at the host computer, initiating a transmission carrying the user data to the UE via a cellular network comprising the base station, wherein the base station performs any of the steps of any of the embodiments performed by the CN node.

[0270] Embodiment 25: the method also includes at the base station, transmitting the user data.

[0271] Embodiment 26: wherein the user data is provided at the host computer by executing a host application, the method further comprising, at the UE, executing a client application associated with the host application.

[0272] Embodiment 27: A UE configured to communicate with a base station, the UE comprising a radio interface and processing circuitry configured to perform the method of the previous 3 embodiments.

[0273] Embodiment 28: A communication system including a host computer comprising: processing circuitry configured to provide user data; and a communication interface configured to forward user data to a cellular network for transmission to a UE. The UE comprises a radio interface and processing circuitry, the UE's components configured to perform any of the steps of any of the embodiments performed by the RAN node.

[0274] Embodiment 29: the cellular network further includes a base station configured to communicate with the UE.

[0275] Embodiment 30: the processing circuitry of the host computer is configured to execute a host application, thereby providing the user data; and the UE's processing circuitry is configured to execute a client application associated with the host application.

[0276] Embodiment 31: A method implemented in a communication system including a host computer, a base station, and a UE is provided. The method includes at the host computer, providing user data. The method also includes at the host computer, initiating a transmission carrying the user data to the UE via a cellular network comprising the base station, wherein the UE performs any of the steps of any of the embodiments performed by the RAN node.

[0277] Embodiment 32: the method also includes at the UE, receiving the user data from the base station.

[0278] Embodiment 33: A communication system including a host computer comprising: communication interface configured to receive user data originating from a transmission from a UE to a base station. The UE comprises a radio interface and processing circuitry, the UE's processing circuitry configured to perform any of the steps of any of the embodiments performed by the RAN node.

[0279] Embodiment 34: the communication system also includes the UE.

[0280] Embodiment 35: the communication system also includes the base station, wherein the base station comprises a radio interface configured to communicate with the UE and a communication interface configured to forward to the host computer the user data carried by a transmission from the UE to the base station.

[0281] Embodiment 36: the processing circuitry of the host computer is configured to execute a host application; and the UE's processing circuitry is configured to execute a client application associated with the host application, thereby providing the user data.

[0282] Embodiment 37: the processing circuitry of the host computer is configured to execute a host application, thereby providing request data; and the UE's processing circuitry is configured to execute a client application associated with the host application, thereby providing the user data in response to the request data.

[0283] Embodiment 38: A method implemented in a communication system including a host computer, a base station, and a UE is provided. The method includes at the host computer, receiving user data transmitted to the base station from the UE, wherein the UE performs any of the steps of any of the embodiments performed by the RAN node.

[0284] Embodiment 39: the method also includes, at the UE, providing the user data to the base station.

[0285] Embodiment 40: the method also includes at the UE, executing a client application, thereby providing the user data to be transmitted. The method also includes at the host computer, executing a host application associated with the client application.

[0286] Embodiment 41: the method also includes at the UE, executing a client application. The method also includes at the UE, receiving input data to the client application, the input data being provided at the host computer by executing a host application associated with the client application. The user data to be transmitted is provided by the client application in response to the input data.

[0287] Embodiment 42: A communication system including a host computer comprising a communication interface configured to receive user data originating from a transmission from a User Equipment, UE, to a base station, wherein the base station comprises a radio interface and processing circuitry, the base station's processing circuitry configured to perform any of the steps of any of the embodiments performed by the CN node.

[0288] Embodiment 43: the communication system also includes the base station.

[0289] Embodiment 44: the communication system also includes the UE, wherein the UE is configured to communicate with the base station.

[0290] Embodiment 45: the processing circuitry of the host computer is configured to execute a host application; and the UE is configured to execute a client application associated with the host application, thereby providing the user data to be received by the host computer.

[0291] Embodiment 46: A method implemented in a communication system including a host computer, a base station, and a UE is provided. The method includes at the host computer, receiving, from the base station, user data originating from a transmission which the base station has received from the UE, wherein the UE performs any of the steps of any of the embodiments performed by the RAN node.

[0292] Embodiment 47: the method also includes at the base station, receiving the user data from the UE.

[0293] Embodiment 48: the method also includes at the base station, initiating a transmission of the received user data to the host computer.

[0294] At least some of the following abbreviations may be used in this disclosure. If there is an inconsistency between abbreviations, preference should be given to how it is used above. If listed multiple times below, the first listing should be preferred over any subsequent listing(s).

[0295] 3GPP Third Generation Partnership Project

[0296] 5G Fifth Generation

[0297] 5GC Fifth Generation Core

[0298] 5GS Fifth Generation System

[0299] AF Application Function

[0300] AMF Access and Mobility Function

[0301] AN Access Network

[0302] AP Access Point

[0303] ASIC Application Specific Integrated Circuit

[0304] AUSF Authentication Server Function

[0305] CPU Central Processing Unit
[0306] DN Data Network
[0307] DSP Digital Signal Processor
[0308] eNB Enhanced or Evolved Node B
[0309] EPS Evolved Packet System
[0310] E-UTRA Evolved Universal Terrestrial Radio Access
[0311] FPGA Field Programmable Gate Array
[0312] gNB New Radio Base Station
[0313] gNB-DU New Radio Base Station Distributed Unit
[0314] HO Handover
[0315] HSS Home Subscriber Server
[0316] IoT Internet of Things
[0317] IP Internet Protocol
[0318] I-SMF Intermediate Session Management Function
[0319] LTE Long Term Evolution
[0320] MME Mobility Management Entity
[0321] MTC
[0322] Machine Type Communication
[0323] Network Exposure Function
[0324] NEF
[0325] NF
[0326] Network Function
[0327] NG New Generation
[0328] NGAP New Generation Application Protocol
[0329] NR New Radio
[0330] NRF Network Function Repository Function
[0331] NSSF Network Slice Selection Function
[0332] OTT Over-the-Top
[0333] PC Personal Computer
[0334] PCF Policy Control Function
[0335] PDB Packet Delay Budget
[0336] PDU Protocol Data Unit
[0337] P-GW
[0338] Packet Data Network Gateway
[0339] Quality of Service
[0340] Qos
[0341] RAM Random Access Memory
[0342] RAN Radio Access Network
[0343] ROM Read Only Memory
[0344] RRH Remote Radio Head
[0345] RTT Round Trip Time
[0346] SCEF Service Capability Exposure Function
[0347] SMF Session Management Function
[0348] TCS Traffic Characteristics
[0349] UDM Unified Data Management
[0350] UE User Equipment
[0351] UPF User Plane Function
[0352] URLLC Ultra Reliable and Low Latency Communication

[0353] Those skilled in the art will recognize improvements and modifications to the embodiments of the present disclosure. All such improvements and modifications are considered within the scope of the concepts disclosed herein.

1. A method performed by a Radio Access Network, RAN, node for supporting a Quality-of-Service, QoS, update during a Handover, HO, procedure, comprising:
- providing an indication to a Core Network, CN, node to indicate whether the RAN node can support a QoS update during the HO procedure; and
- performing one or more actions related to the HO procedure in accordance with the indication provided to the CN node.

2. The method of claim **1**, wherein providing the indication comprises providing the indication in a Path Switch Request message.

3. The method of claim **2**, wherein the Path Switch Request message comprises a 'support for reception of additional QoS parameters' field configured to indicate whether the RAN node can support the QoS update during the HO procedure.

4. The method of claim **2**, wherein the Path Switch Request message comprises one or more of a 'best QoS available' and a 'best RAN Packet Delay Budget, PDB' field configured to indicate one or more best-possible QoS parameters the RAN node can support.

5. The method of claim **1**, wherein providing the indication comprises providing (**400-2**) the indication during a New Generation Application Protocol, NGAP, procedure.

6. The method of claim **1**, wherein providing the indication comprises providing the indication to indicate one or more QoS parameters that can be updated during the HO procedure.

7. The method of claim **6**, wherein the one or more QoS parameters comprise one or more of a CN Packet Delay Budget, PDB, and Traffic Characteristics, TCS.

8. The method of claim **1**, wherein providing the indication comprises providing the indication in a New Generation, NG, Setup Request message.

9. The method of claim **1**, wherein performing one or more actions related to the HO procedure comprises one of:
- receiving the QoS update during the HO procedure in response to the indication indicating that the RAN node can support the QoS update during the HO procedure;
- not receiving the QoS update during the HO procedure in response to the indication indicating that the RAN node cannot support the QoS update during the HO procedure; and
- receiving the QoS update during a Protocol Data Unit, PDU, session in response to the indication indicating that the RAN node cannot support the QoS update during the HO procedure.

10. A Radio Access Network, RAN, node comprising processing circuitry configured to cause the RAN node to:
- provide an indication to a Core Network, CN, node to indicate whether the RAN node can support a Quality-of-Service, QoS, update during the HO procedure; and
- perform one or more actions related to the HO procedure in accordance with the indication provided to the CN node.

11. A method performed by a Core Network, CN, node for supporting a Quality-of-Service, QoS, update during a Handover, HO, procedure, comprising:
- receiving an indication from a Radio Access Network, RAN, node that indicates whether the RAN node can support a QoS update during the HO procedure; and
- performing one or more actions related to the HO procedure in accordance with the indication received from the RAN node.

12. The method of claim **11**, wherein receiving the indication comprises receiving the indication in a Path Switch Request message.

13. The method of claim **12**, wherein the Path Switch Request message comprises a 'support for reception of

additional QoS parameters' field configured to indicate whether the RAN node can support the QoS update during the HO procedure.

14. The method of claim **12**, wherein the Path Switch Request message comprises one or more of a 'best QoS available' and a 'best RAN Packet Delay Budget, PDB' field configured to indicate one or more best-possible QoS parameters the RAN node can support.

15. The method of claim **11**, wherein receiving the indication comprises receiving the indication during a New Generation Application Protocol, NGAP, procedure.

16. The method of claim **11**, wherein receiving the indication comprises receiving the indication to indicate one or more QoS parameters that can be updated during the HO procedure.

17. The method of claim **16**, wherein the one or more QoS parameters comprise one or more of a CN Packet Delay Budget, PDB, and Traffic Characteristics, TCS.

18. The method of claim **11**, wherein receiving the indication comprises receiving the indication in a New Generation, NG, Setup Request message.

19. The method of claim **11**, wherein performing one or more actions related to the HO procedure comprises one of:

providing a QoS update during the HO procedure in response to the indication indicating that the RAN node can support the QoS update during the HO procedure;

not providing the QoS update during the HO procedure in response to the indication indicating that the RAN node cannot support the QoS update during the HO procedure; and

providing the QoS update during a Protocol Data Unit, PDU, session in response to the indication indicating that the RAN node cannot support the QoS update during the HO procedure.

20. The method of claim **11**, wherein performing one or more actions related to the HO procedure further comprises one or more of:

forwarding the indication from an Intermediate Session Management Function, I-SMF, associated with the CN node to a Session Management Function, SMF, associated with the CN node; and

forwarding the indication from a Visited SMF, V-SMF, associated with the CN node to a Home SMF, H-SMF, associated with the CN node.

* * * * *