US012390266B2

(12) **United States Patent**
Lee et al.

(10) **Patent No.: US 12,390,266 B2**
(45) **Date of Patent: Aug. 19, 2025**

(54) **END TOOL OF SURGICAL INSTRUMENT AND ELECTROCAUTERIZATION SURGICAL INSTRUMENT COMPRISING SAME**

(71) Applicant: **LIVSMED INC.**, Seongnam-si (KR)

(72) Inventors: **Jung Joo Lee**, Seongnam-si (KR); **Hee Jin Kim**, Seongnam-si (KR); **Dong Kyu Jang**, Seongnam-si (KR)

(73) Assignee: **LIVSMED INC.**, Seongnam-si (KR)

(*) Notice: Subject to any disclaimer, the term of this patent is extended or adjusted under 35 U.S.C. 154(b) by 0 days.

(21) Appl. No.: **18/897,979**

(22) Filed: **Sep. 26, 2024**

(65) **Prior Publication Data**

US 2025/0017644 A1 Jan. 16, 2025

Related U.S. Application Data

(63) Continuation of application No. PCT/KR2023/007038, filed on May 23, 2023.

(30) **Foreign Application Priority Data**

May 23, 2022 (KR) 10-2022-0063142
Mar. 3, 2023 (KR) 10-2023-0028804

(51) **Int. Cl.**
A61B 18/14 (2006.01)
A61B 17/29 (2006.01)
A61B 18/00 (2006.01)

(52) **U.S. Cl.**
CPC .. ***A61B 18/1442*** (2013.01); *A61B 2017/2903* (2013.01); *A61B 2017/2929* (2013.01); *A61B 2018/00208* (2013.01); *A61B 2018/00595* (2013.01); *A61B 2018/1455* (2013.01)

(58) **Field of Classification Search**
CPC A61B 17/07207; A61B 2017/00367; A61B 2017/07271; A61B 2017/07278; A61B 2017/2903; A61B 2017/291; A61B 2017/2927; A61B 2017/2929; A61B 2017/2936; A61B 2017/2937; A61B 2017/2939; A61B 34/30; A61B 34/71; A61B 18/1442; A61B 18/1455
See application file for complete search history.

(56) **References Cited**

U.S. PATENT DOCUMENTS

2009/0326530	A1	12/2009	Orban, III et al.	
2016/0228171	A1*	8/2016	Boudreaux	A61B 18/00
2017/0252096	A1	9/2017	Felder et al.	
2020/0038127	A1*	2/2020	Chaplin	A61B 17/0218
2020/0107894	A1*	4/2020	Wallace	A61B 17/3423
2021/0022819	A1	1/2021	Duque et al.	
2021/0244430	A1	8/2021	Lee et al.	

FOREIGN PATENT DOCUMENTS

JP	2015-506724	A	3/2015
JP	2019-530530	A	10/2019
KR	10-2019-0112195	A	10/2019
KR	10-2118721	B1	6/2020
KR	10-2153408	B1	9/2020
WO	2020/198372	A1	10/2020

* cited by examiner

Primary Examiner — Khadijeh A Vahdat
(74) *Attorney, Agent, or Firm* — Bridgeway IP Law Group, PLLC; Sang Ho Lee; Hyun Woo Shin

(57) **ABSTRACT**

Provided is a surgical instrument for electrocautery, and in particular, a surgical instrument for electrocautery installed on a robot arm or manually operable in order to be used in laparoscopic surgery or other various surgeries.

13 Claims, 224 Drawing Sheets

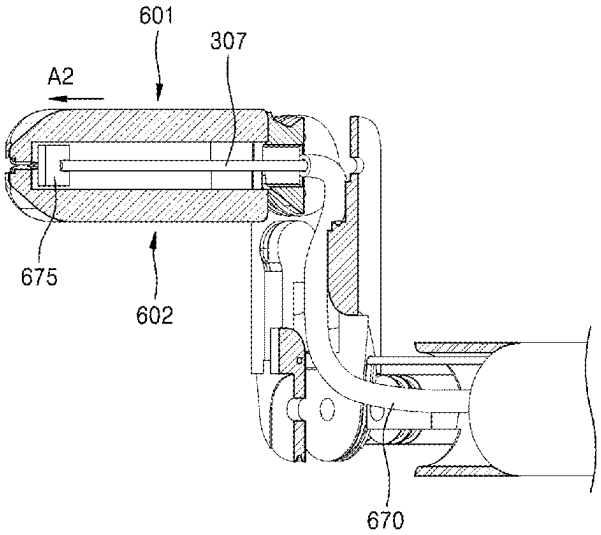

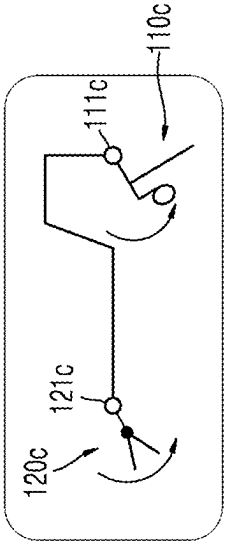

FIG. 1A

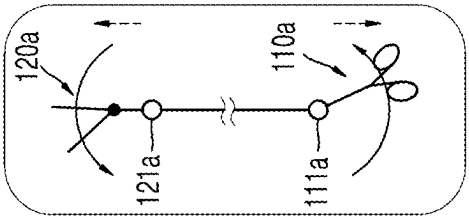

FIG. 1B

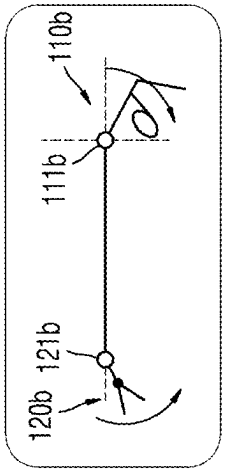

FIG. 1C

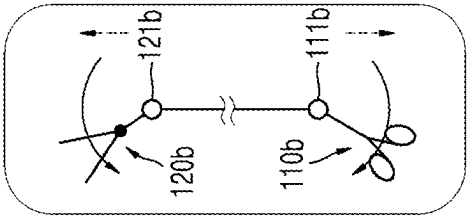

FIG. 1D

FIG. 1E

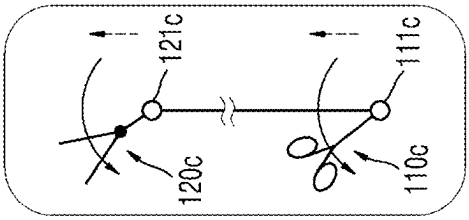

FIG. 1F

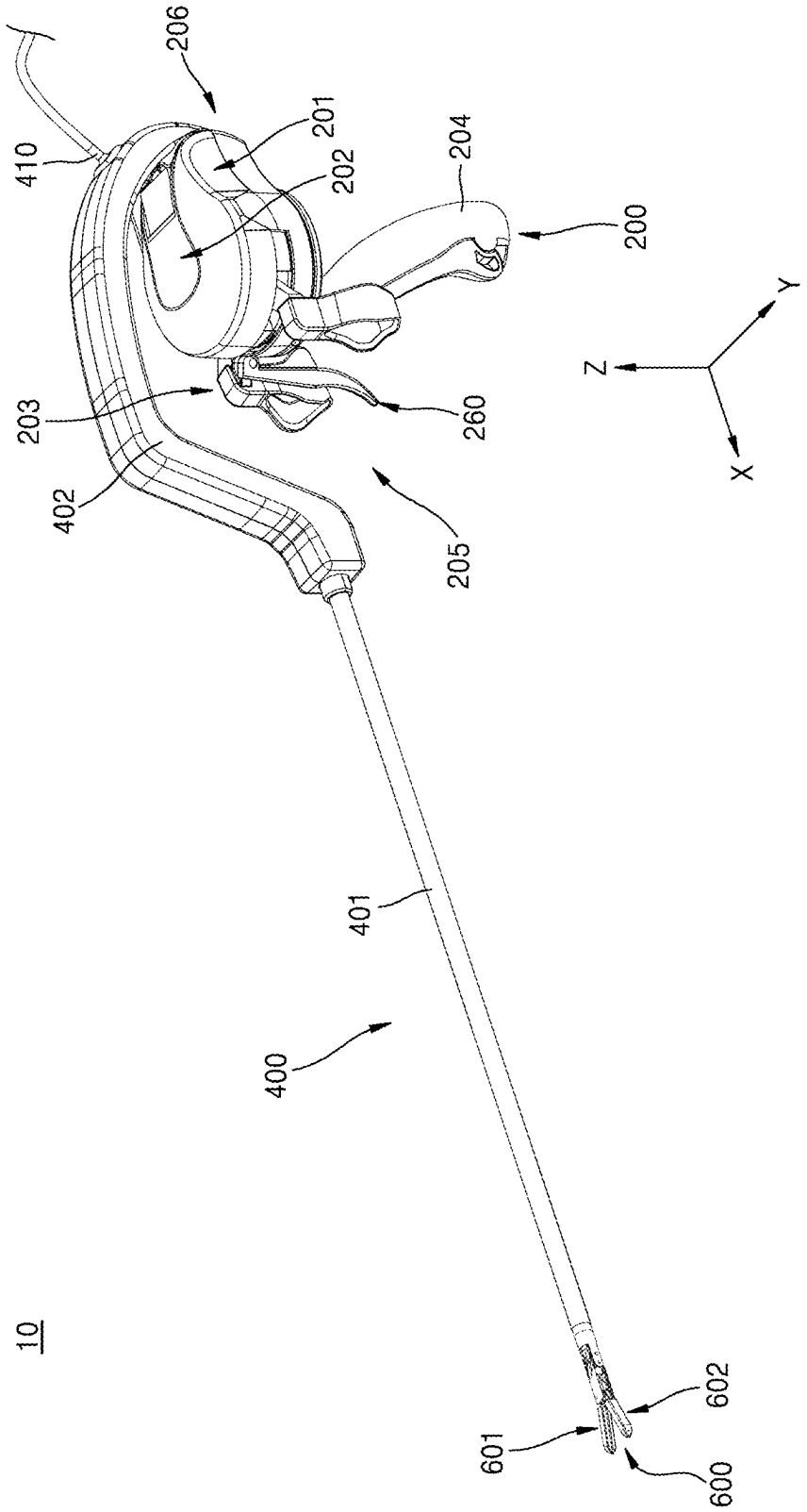
10
206
410
201
202
204
200
203
402
260
205
Z
Y
X
401
400
601
602
600

FIG. 2

FIG. 3

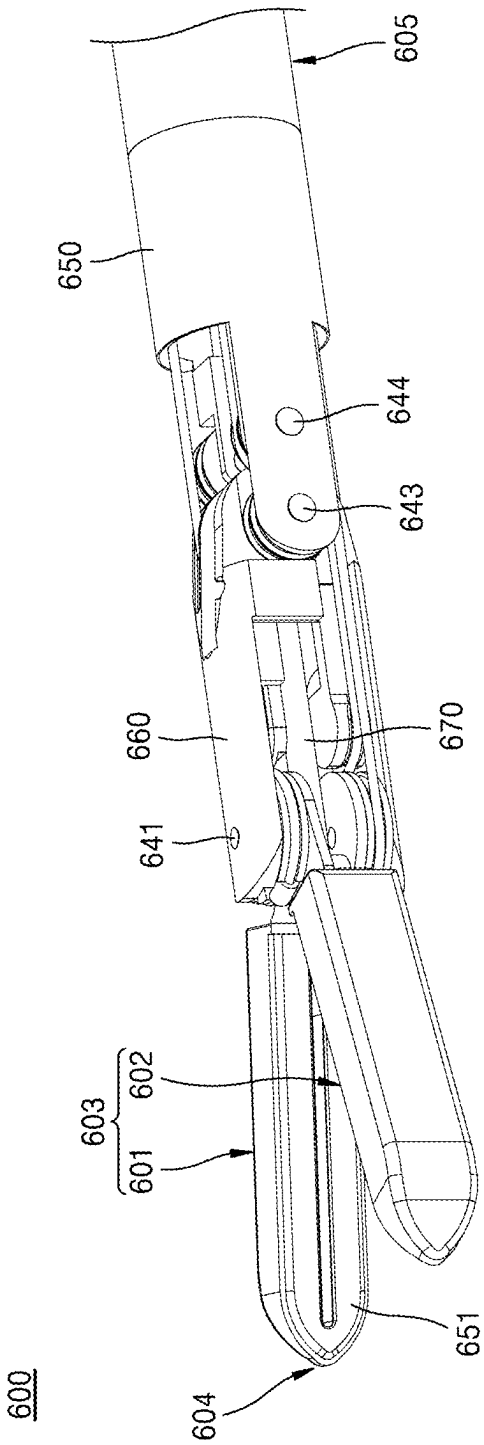

FIG. 4

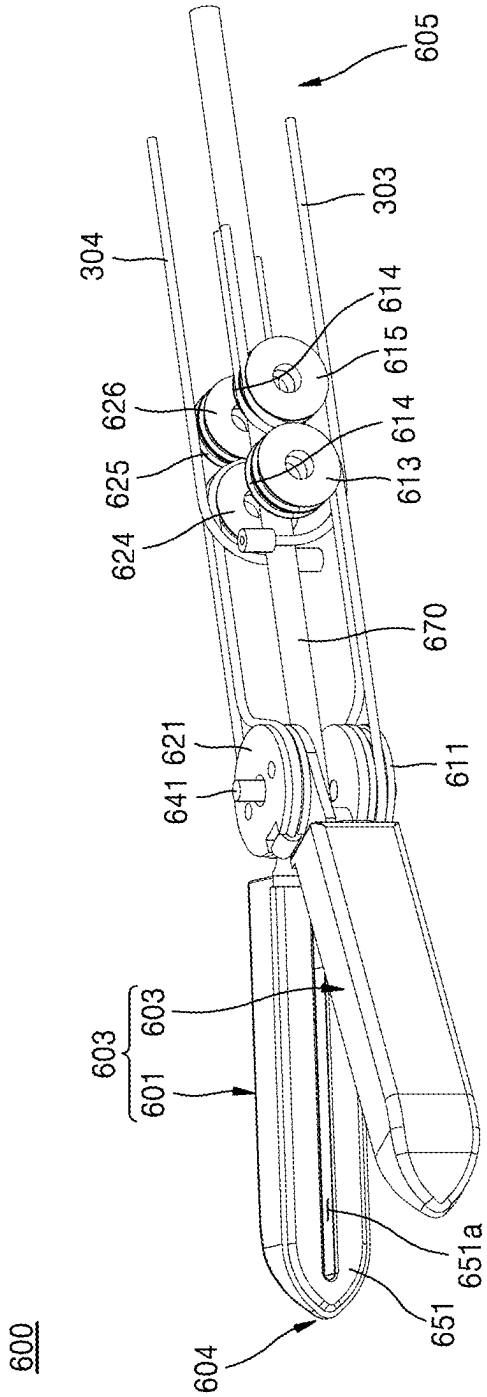
600
604
651
651a
603
601
603
641
621
624
625
626
670
611
613
614
615
614
304
303
605

FIG. 5

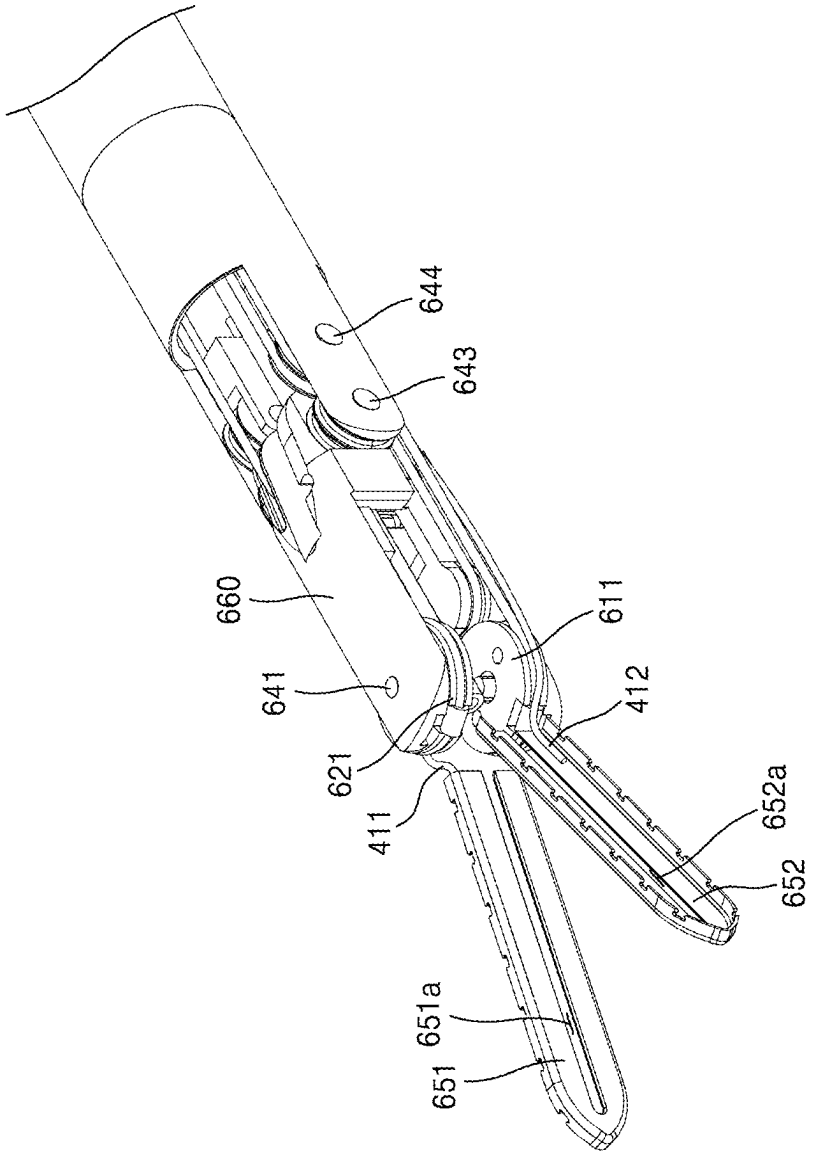

FIG. 6

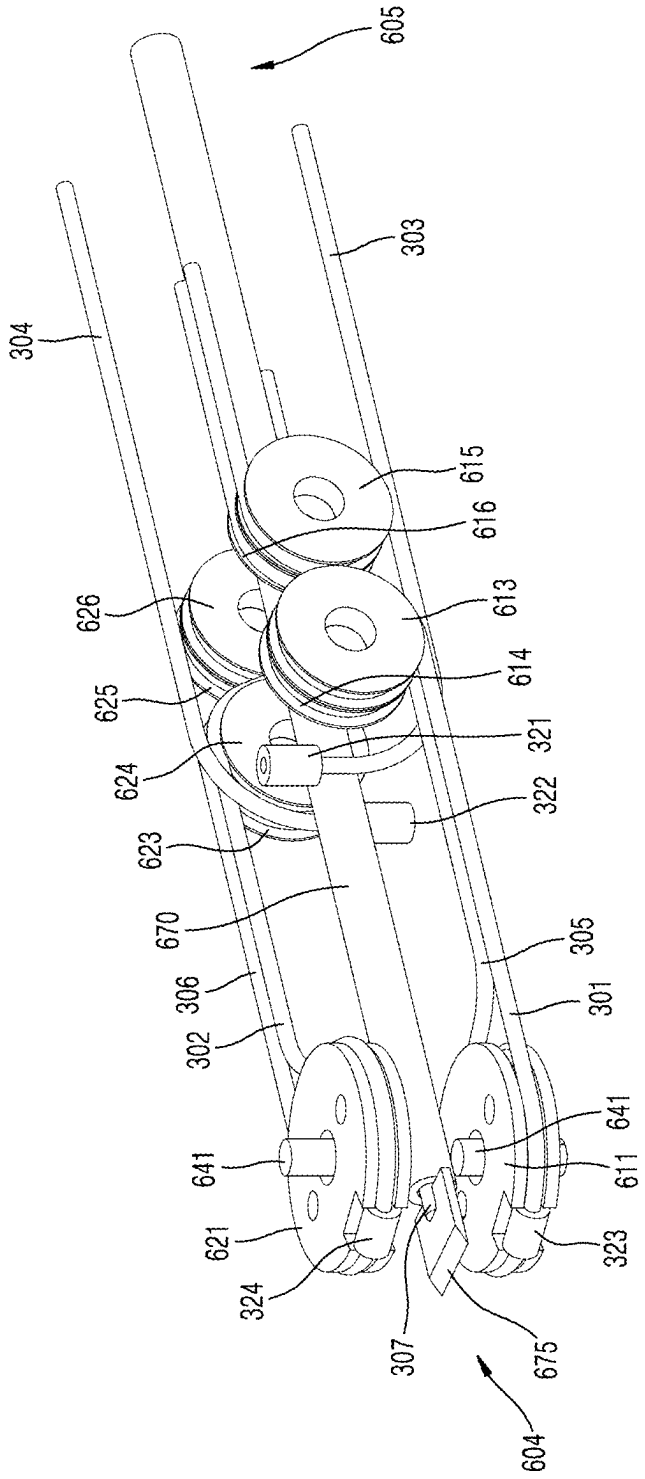
605
303
304
615
616
626
613
625
614
624
321
322
623
670
305
306
301
302
641
641
611
621
323
324
307
675
604

FIG. 7

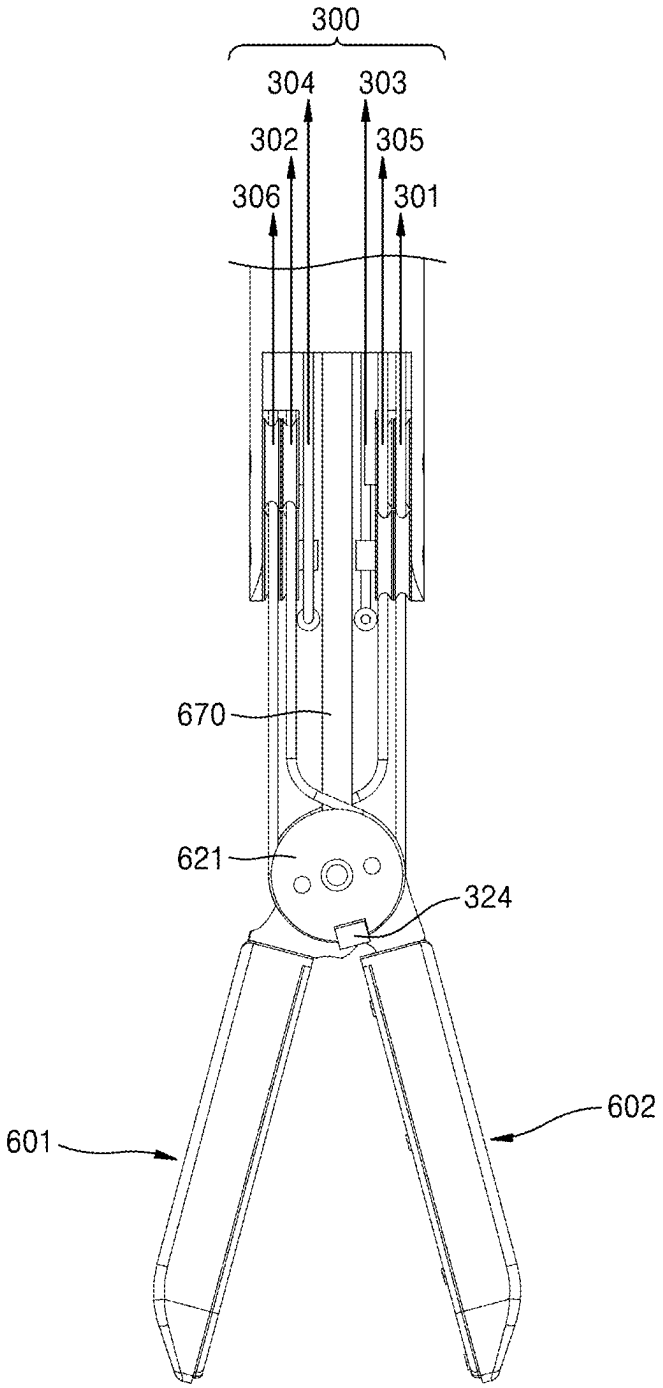

FIG. 8

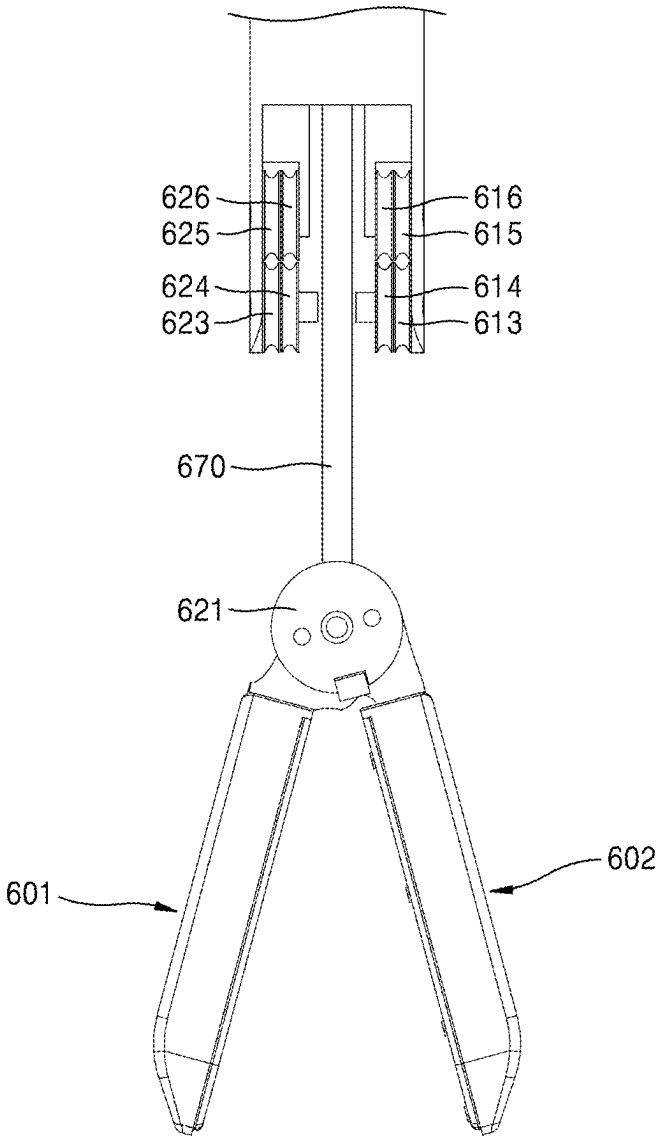

FIG. 9

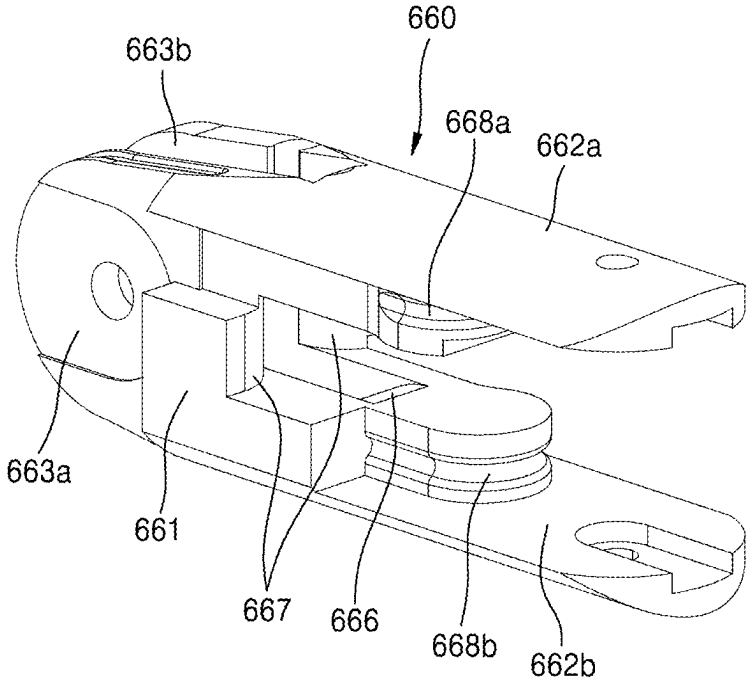

FIG. 10

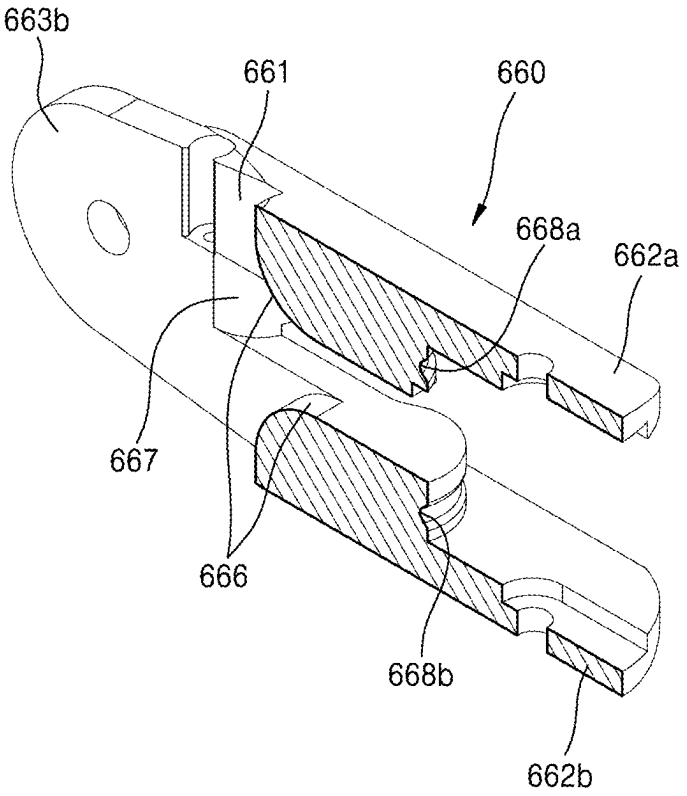

FIG. 11

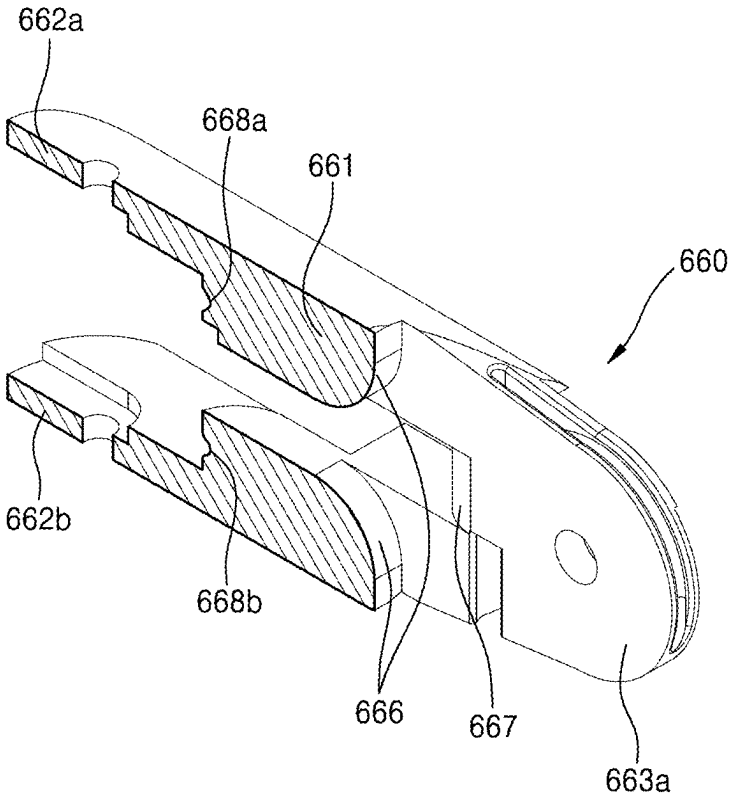

FIG. 12

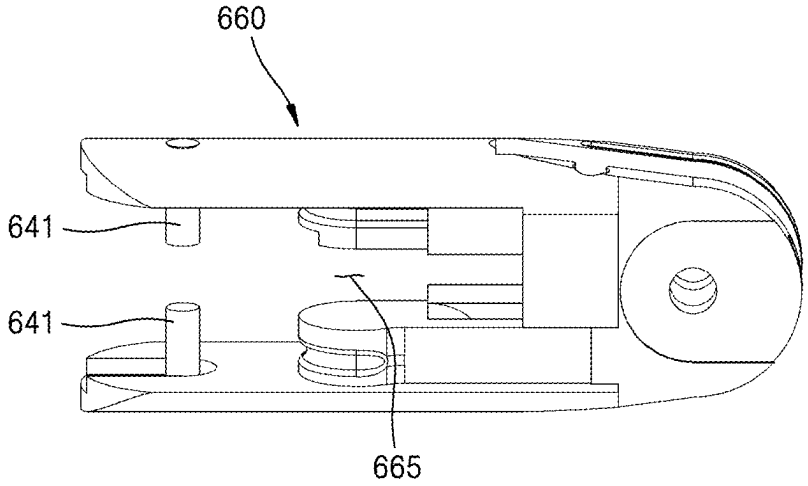

FIG. 13

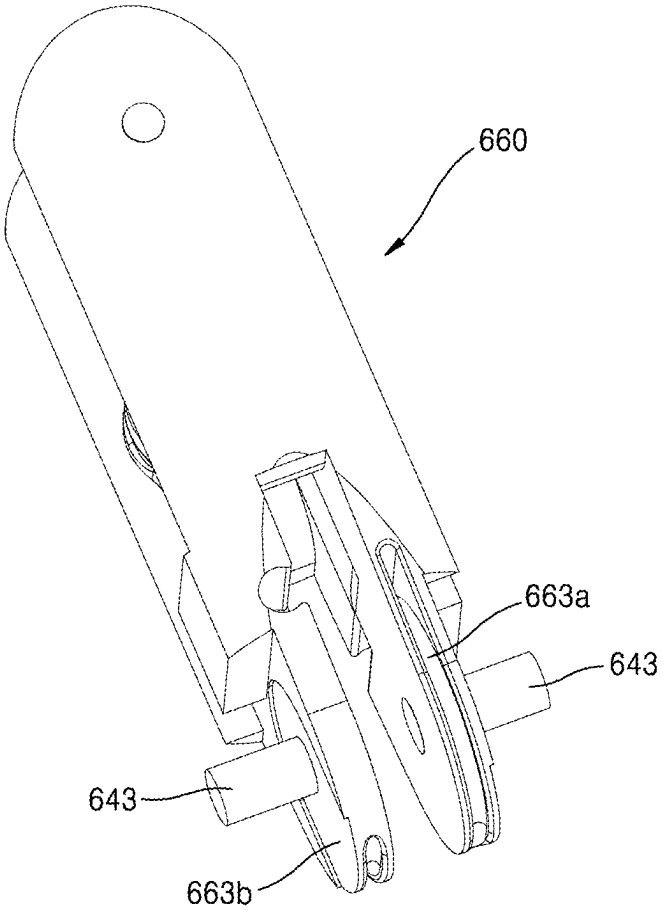

FIG. 14

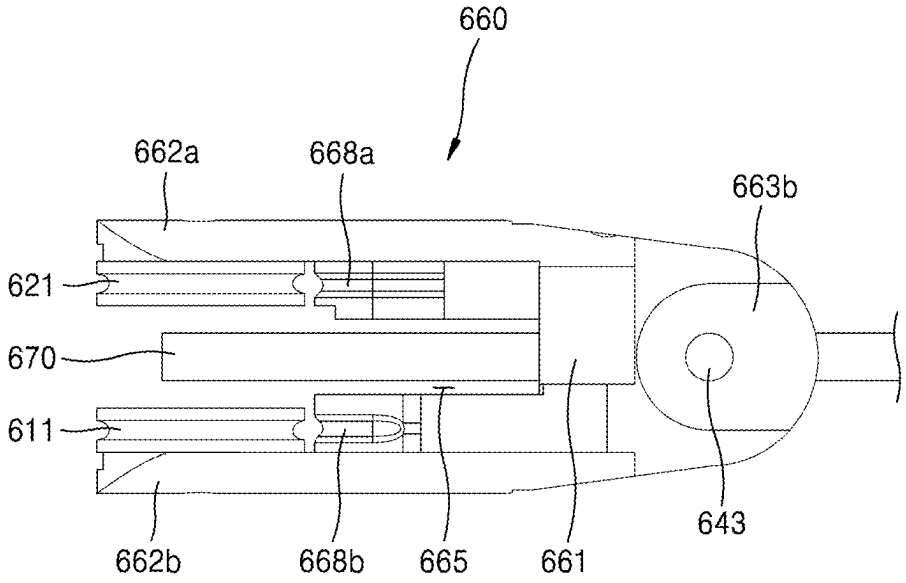

FIG. 15

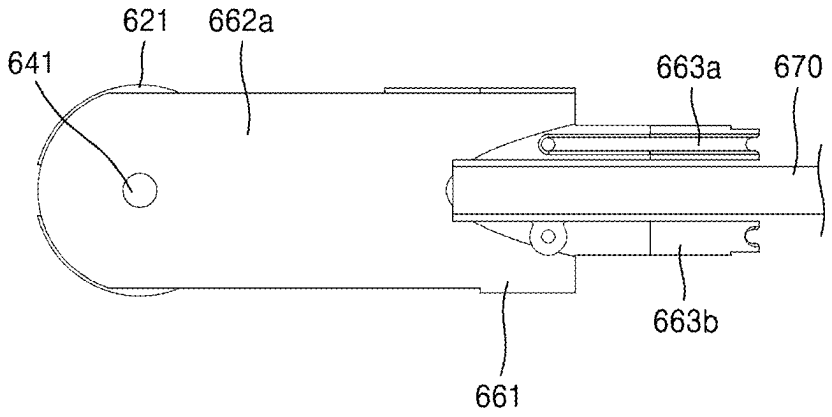

FIG. 16

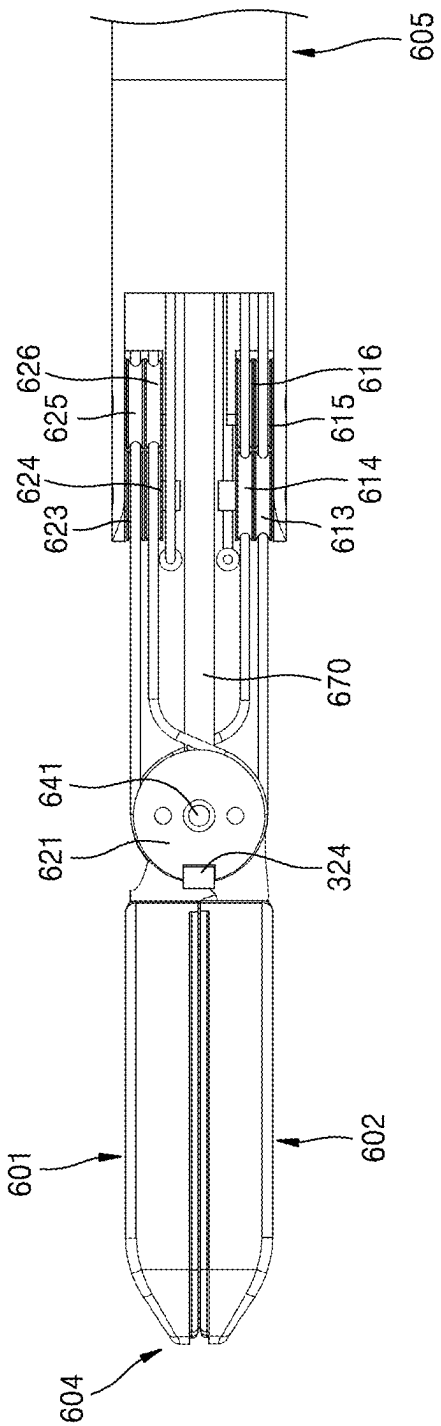

FIG. 17

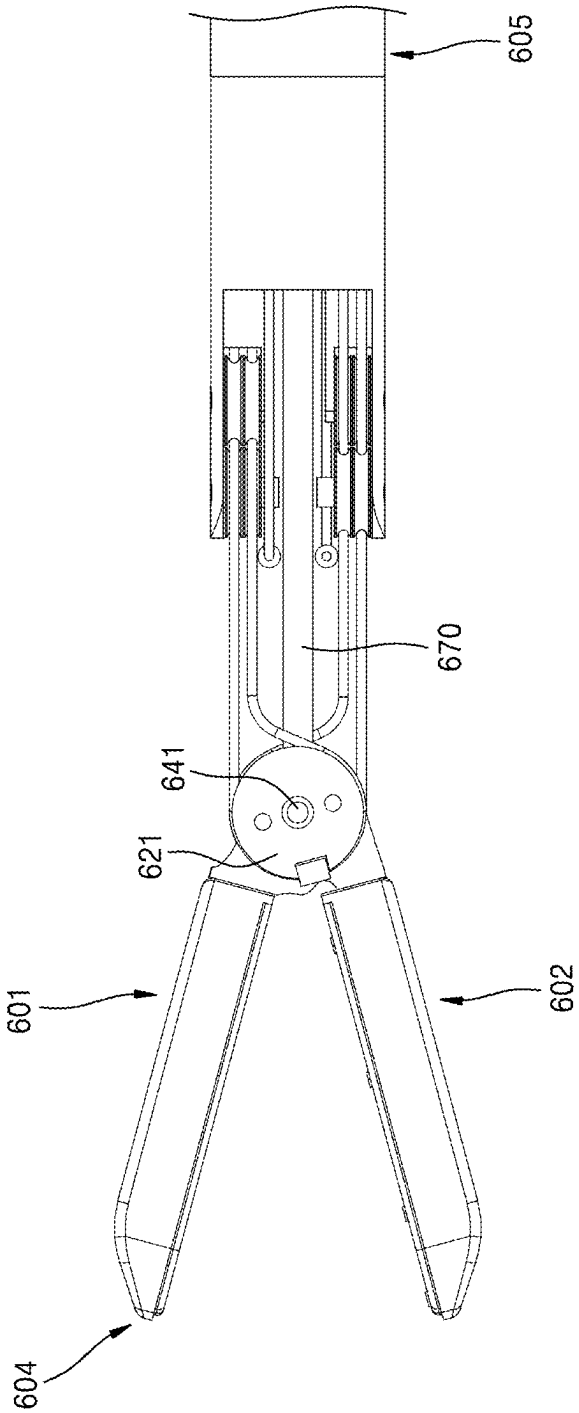

FIG. 18

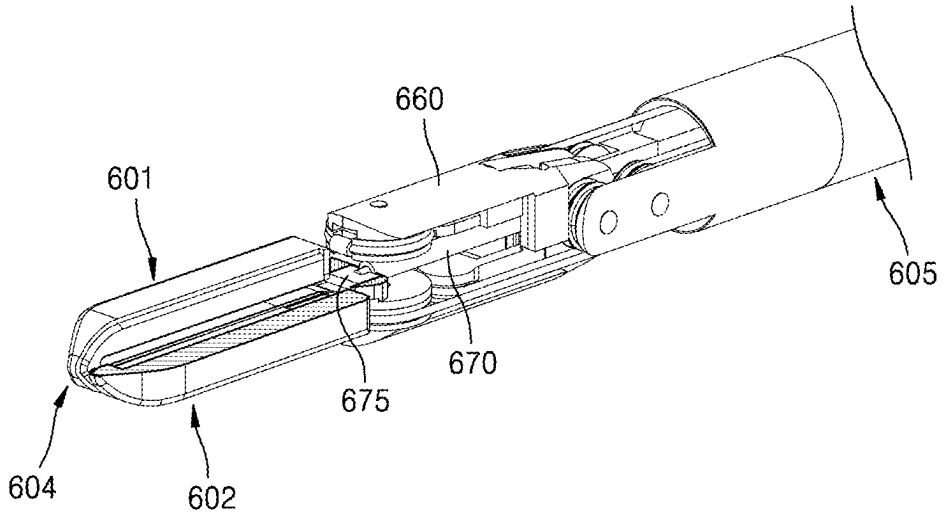

FIG. 19

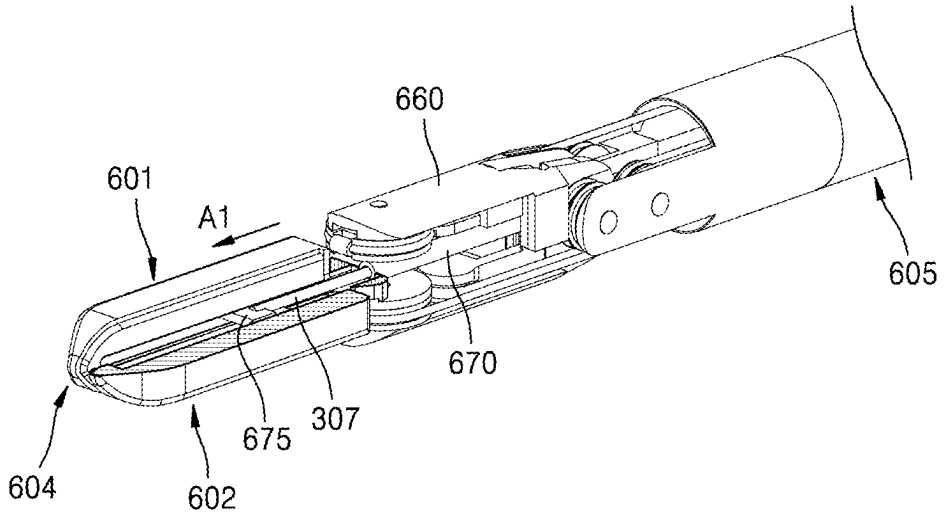

FIG. 20

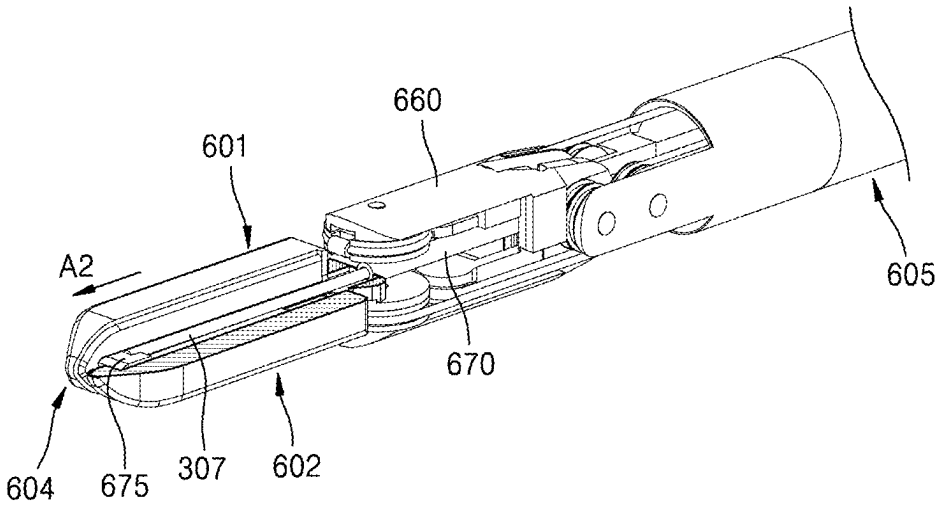

FIG. 21

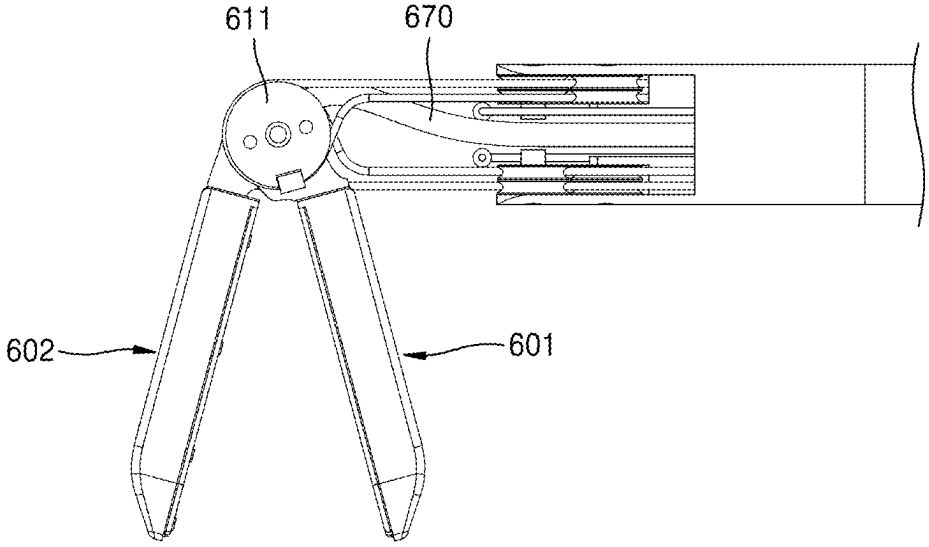

FIG. 22

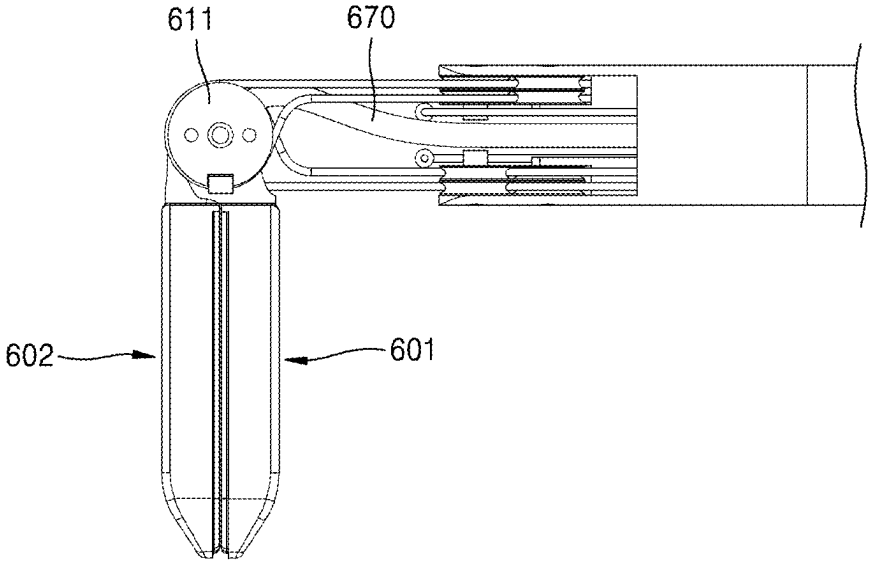

FIG. 23

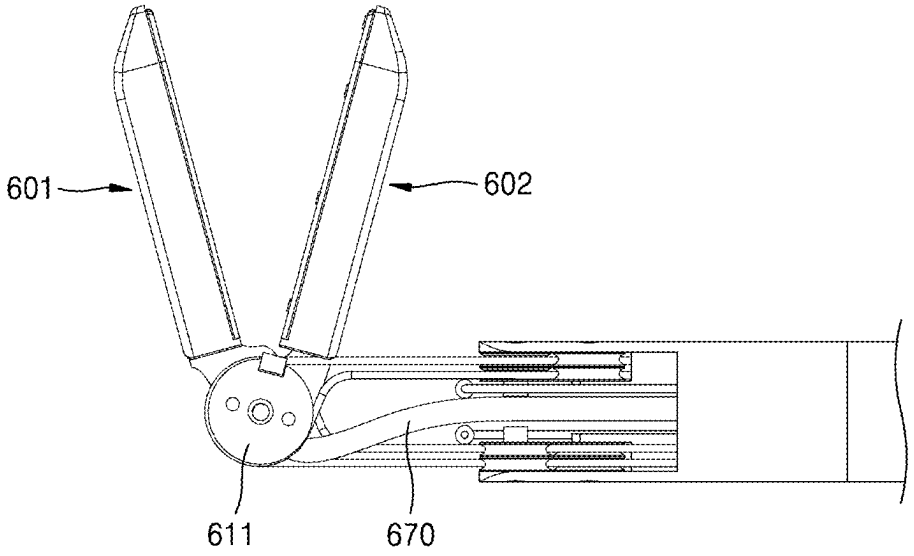

FIG. 24

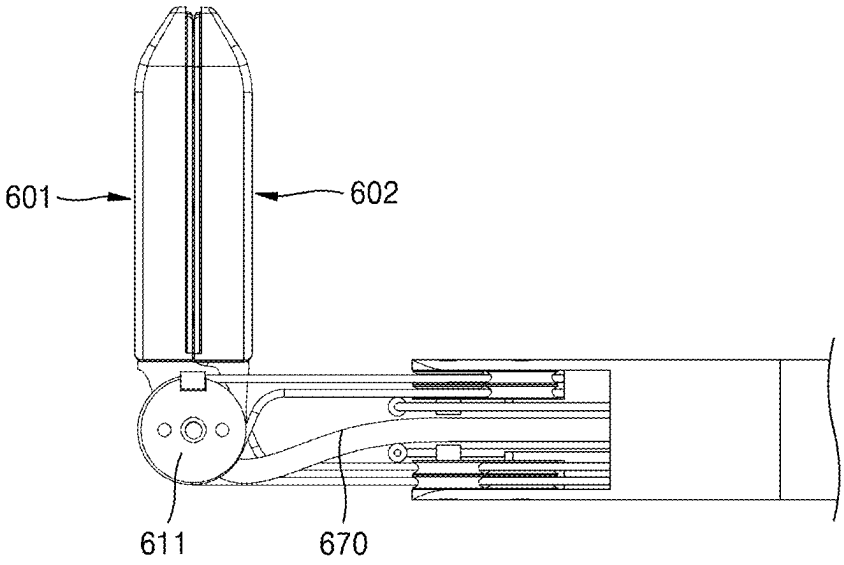

FIG. 25

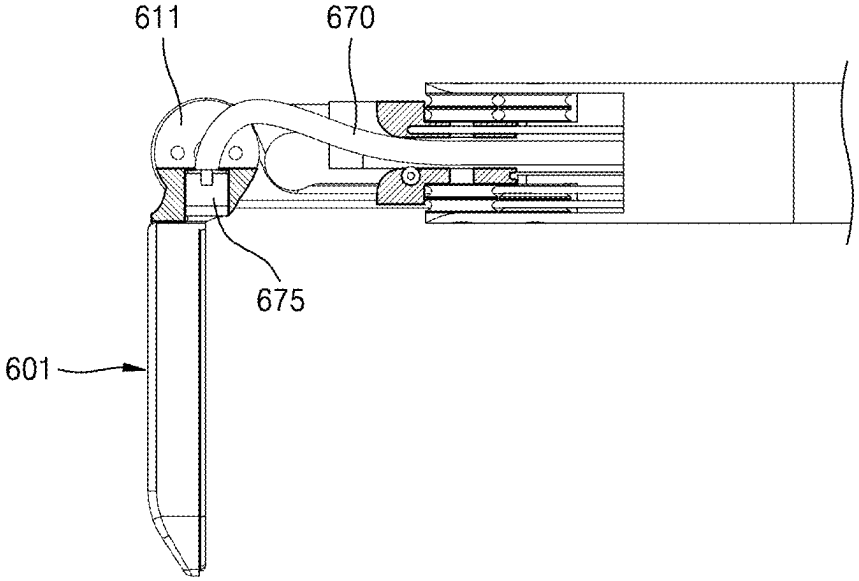

FIG. 26

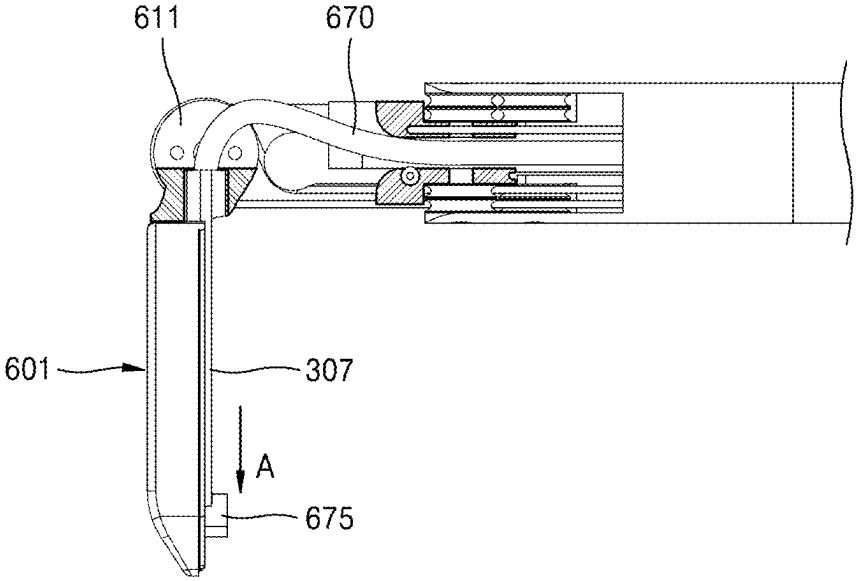

FIG. 27

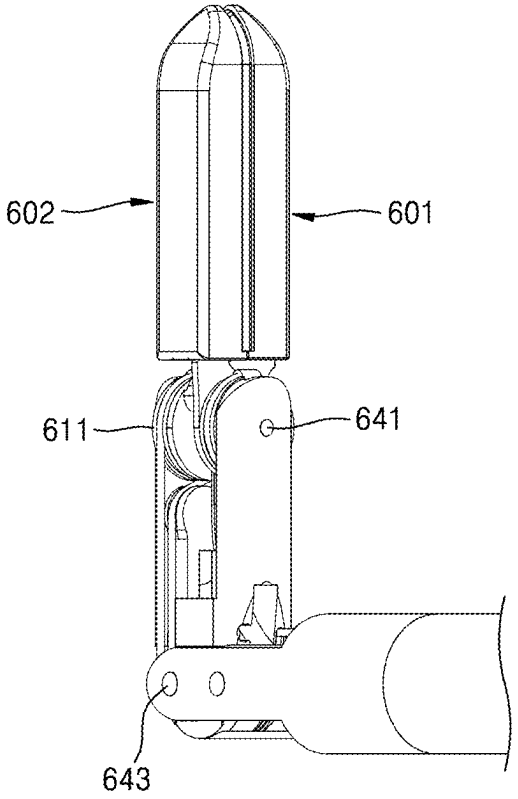

FIG. 28

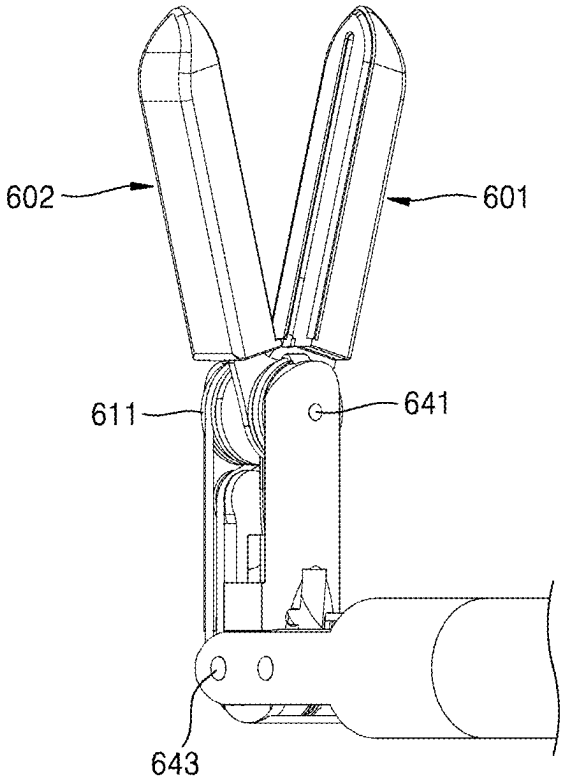

FIG. 29

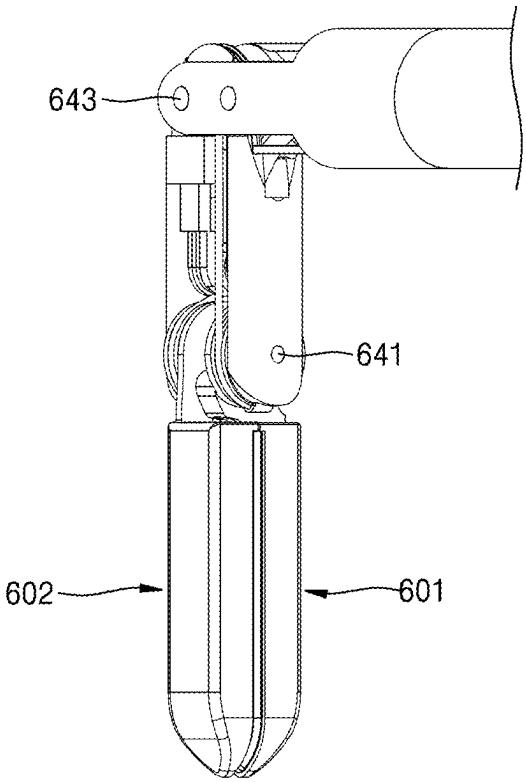

FIG. 30

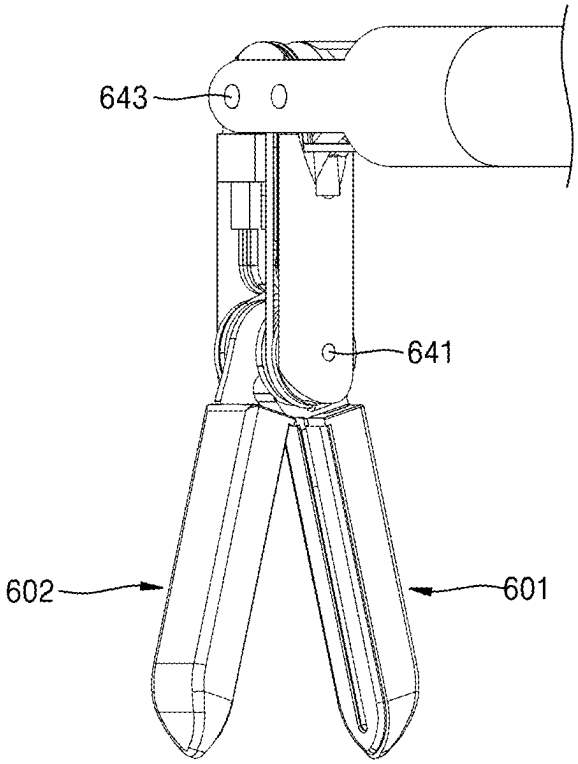

FIG. 31

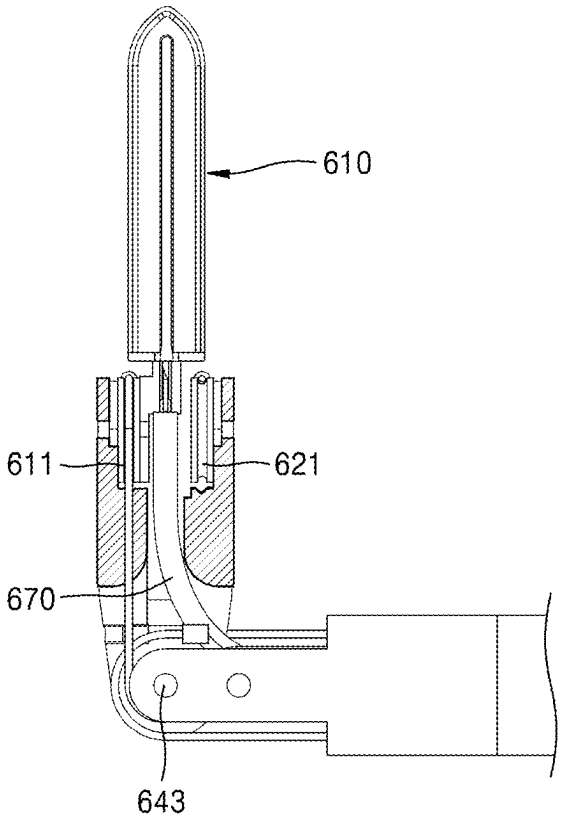

FIG. 32

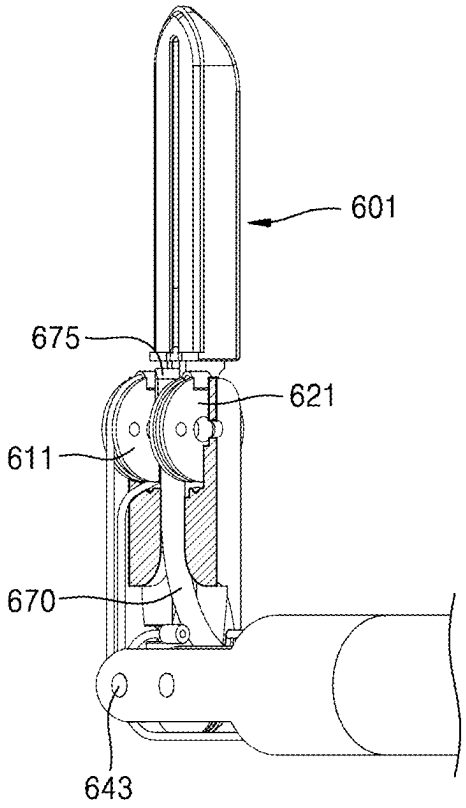

FIG. 33

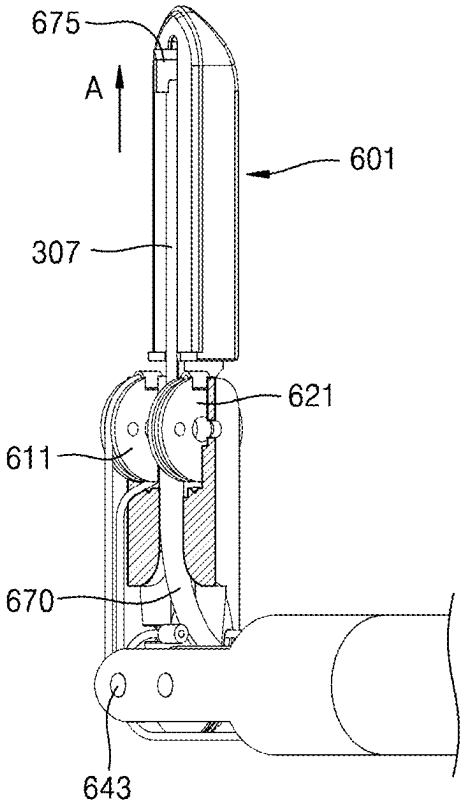

FIG. 34

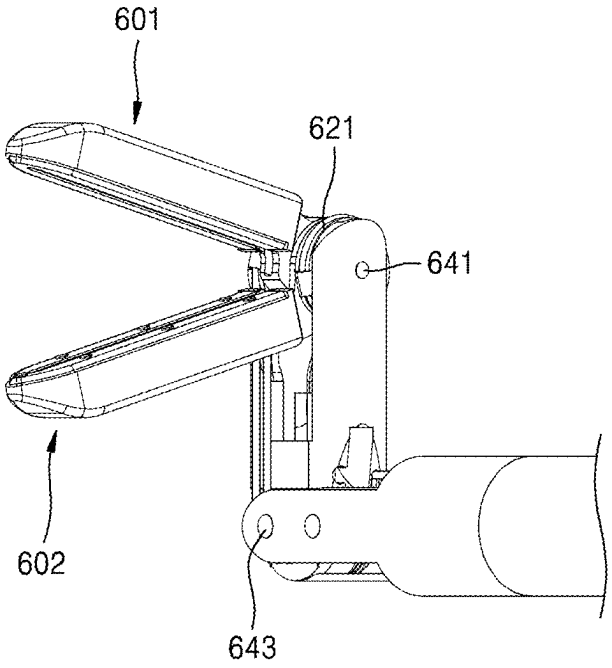

FIG. 35

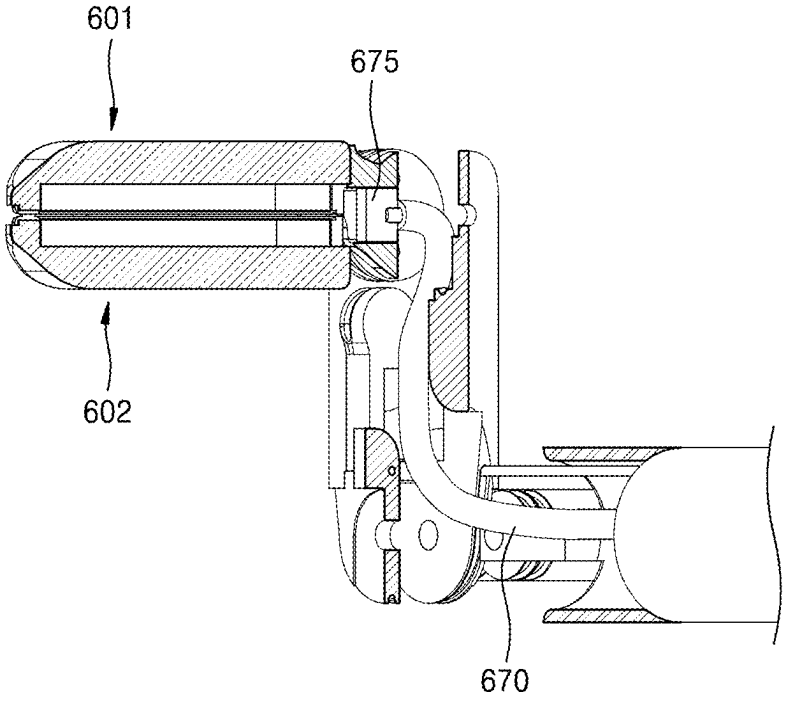

FIG. 36

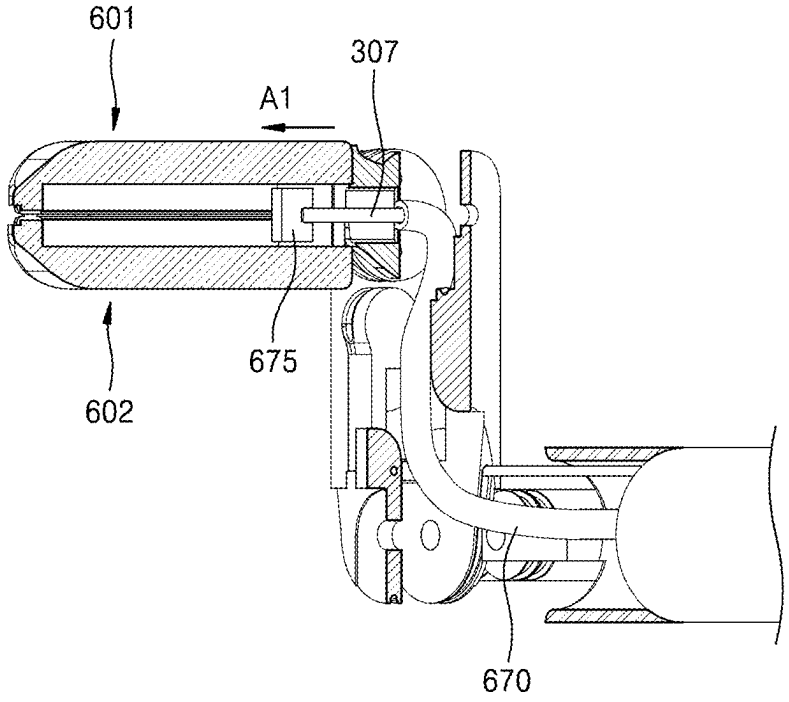

FIG. 37

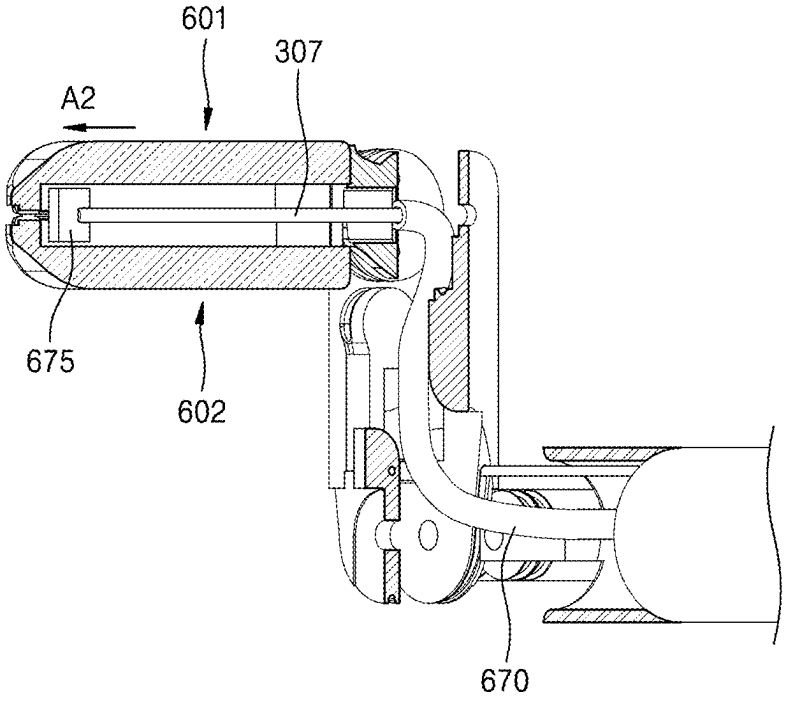

FIG. 38

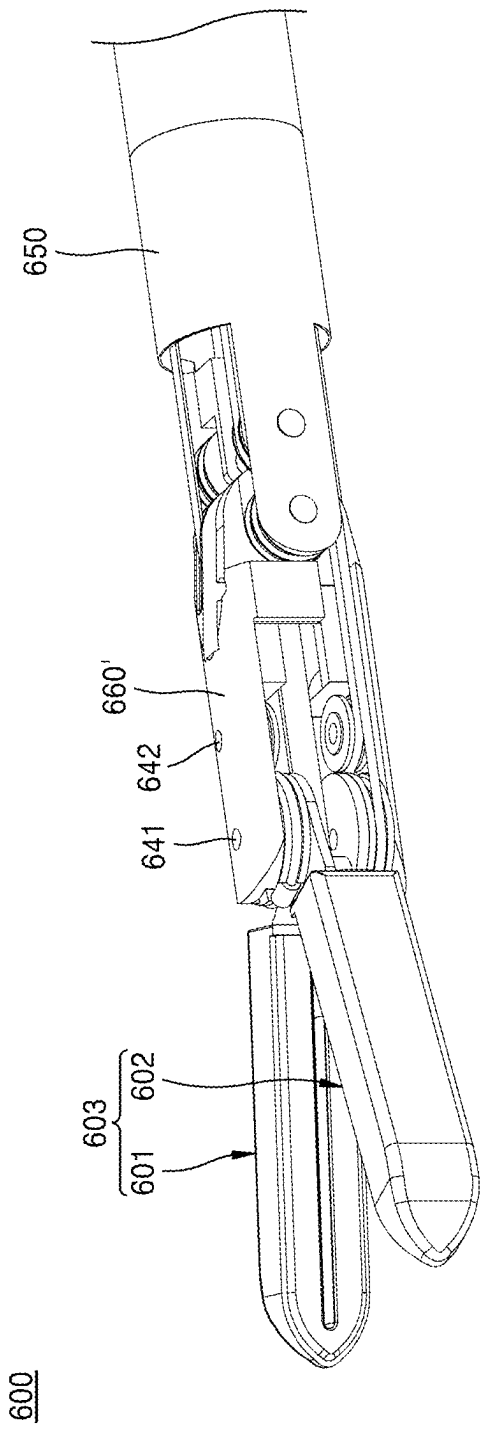

FIG. 39

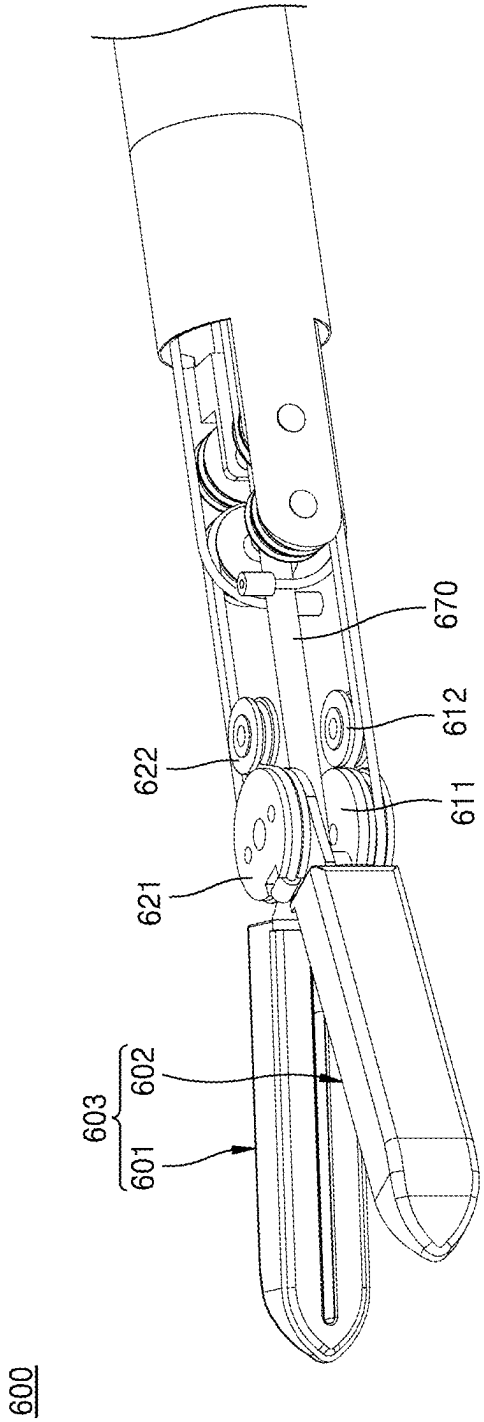

FIG. 40

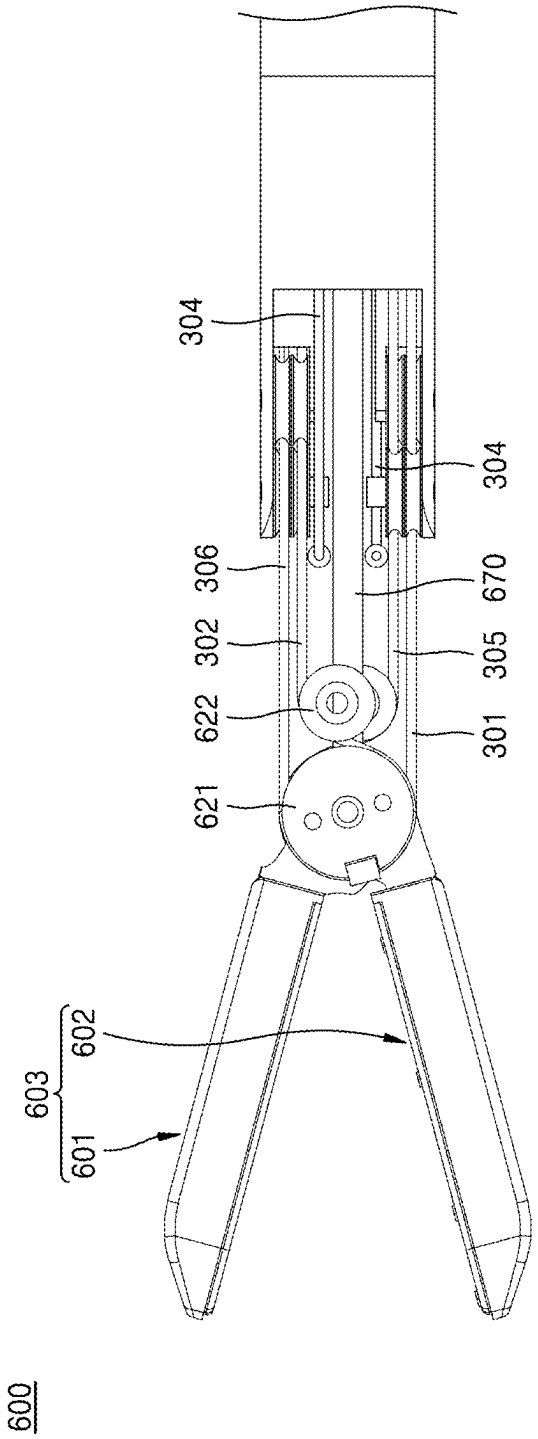

FIG. 41

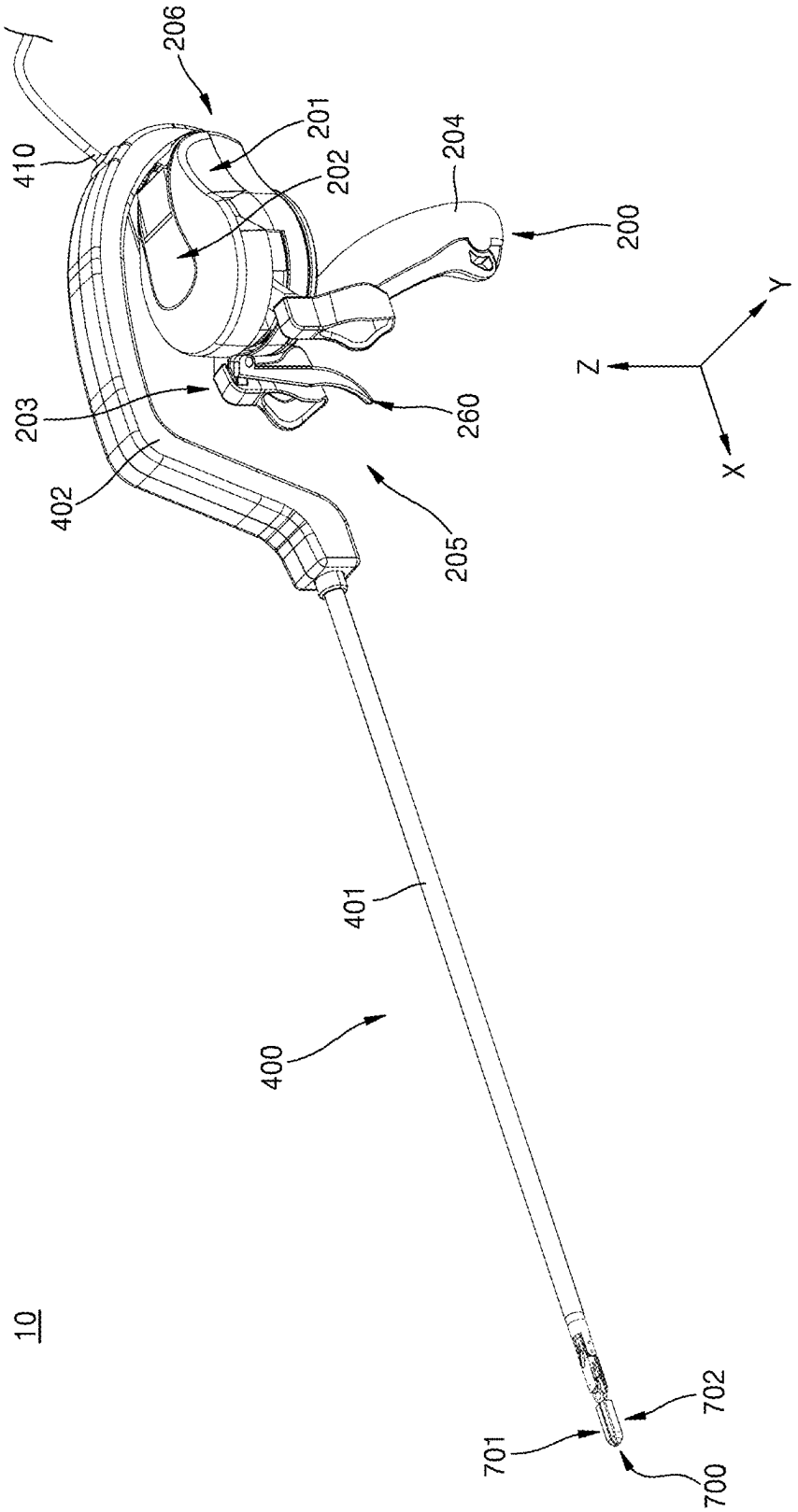
10
410
206
201
202
203
402
204
200
260
205
Z
Y
X
401
400
701
702
700

FIG. 42

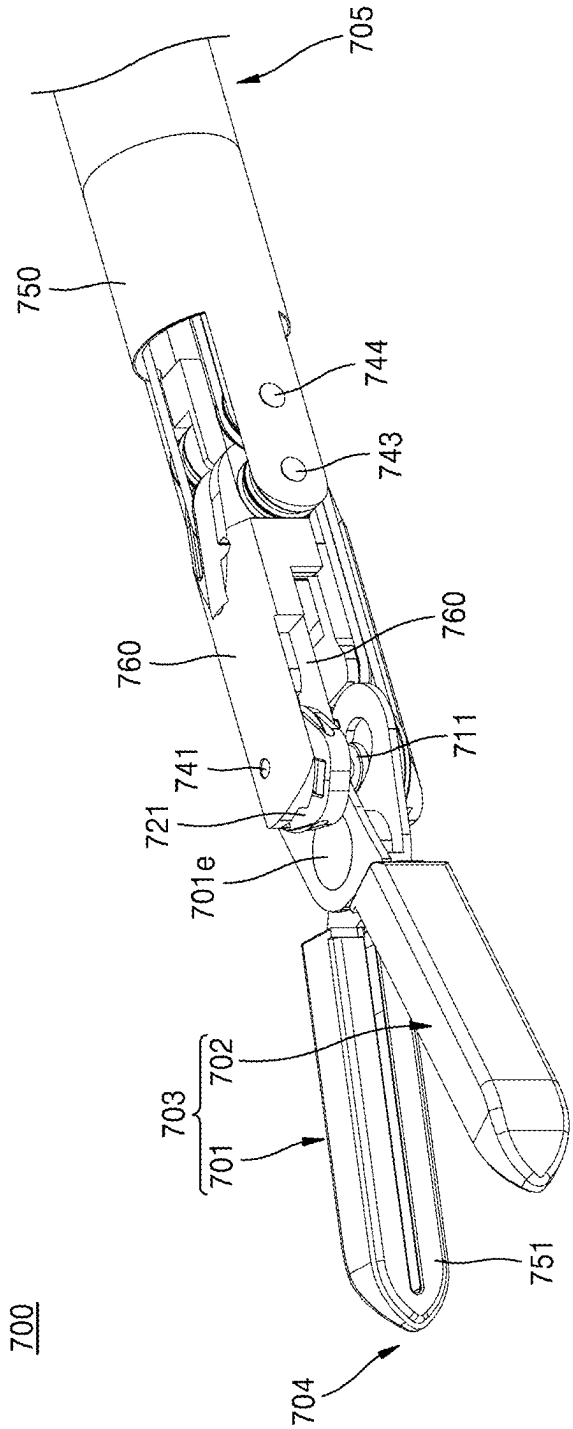

FIG. 43

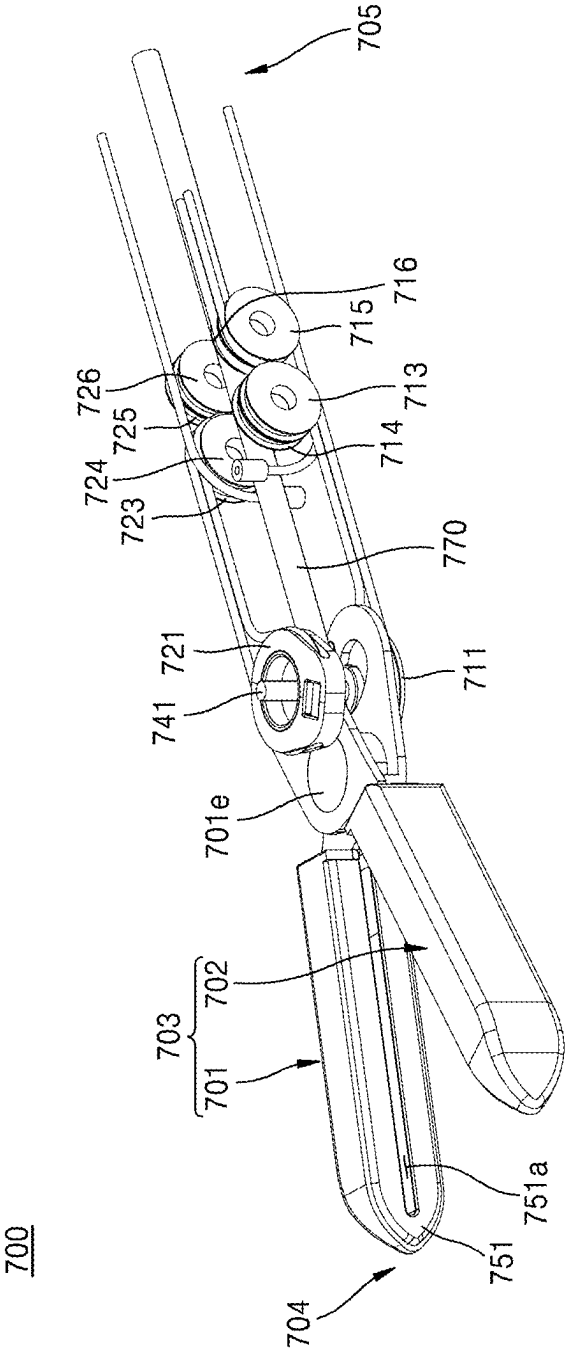
700
704
751
751a
703
701
702
701e
741
721
723
724
725
726
770
711
714
713
715
716
705

FIG. 44

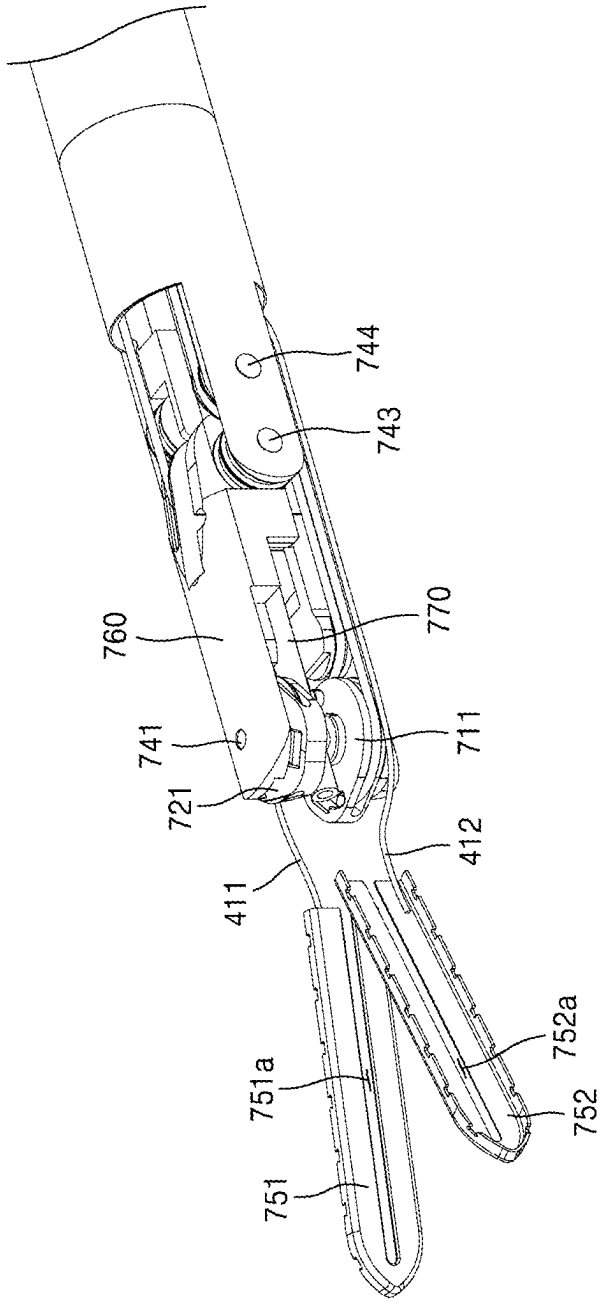

FIG. 45

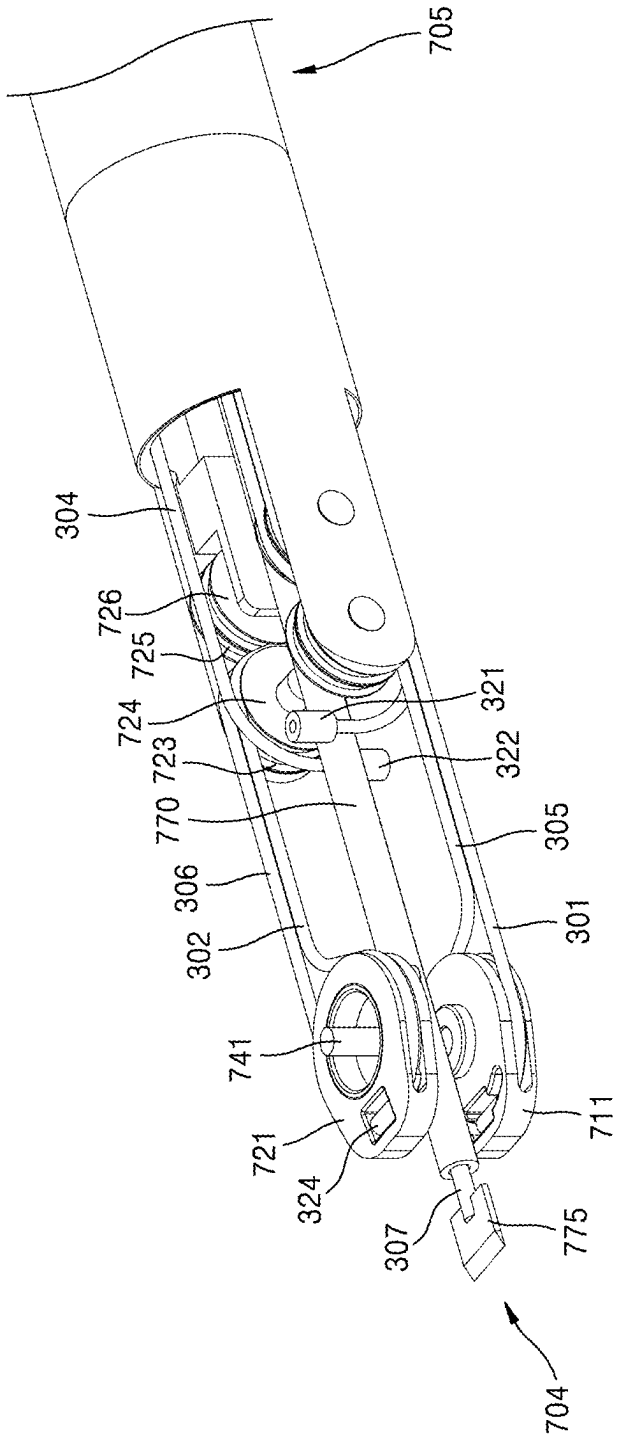
705
304
726
725
724
723
770
306
302
741
721
324
307
704
775
711
301
305
322
321

FIG. 46

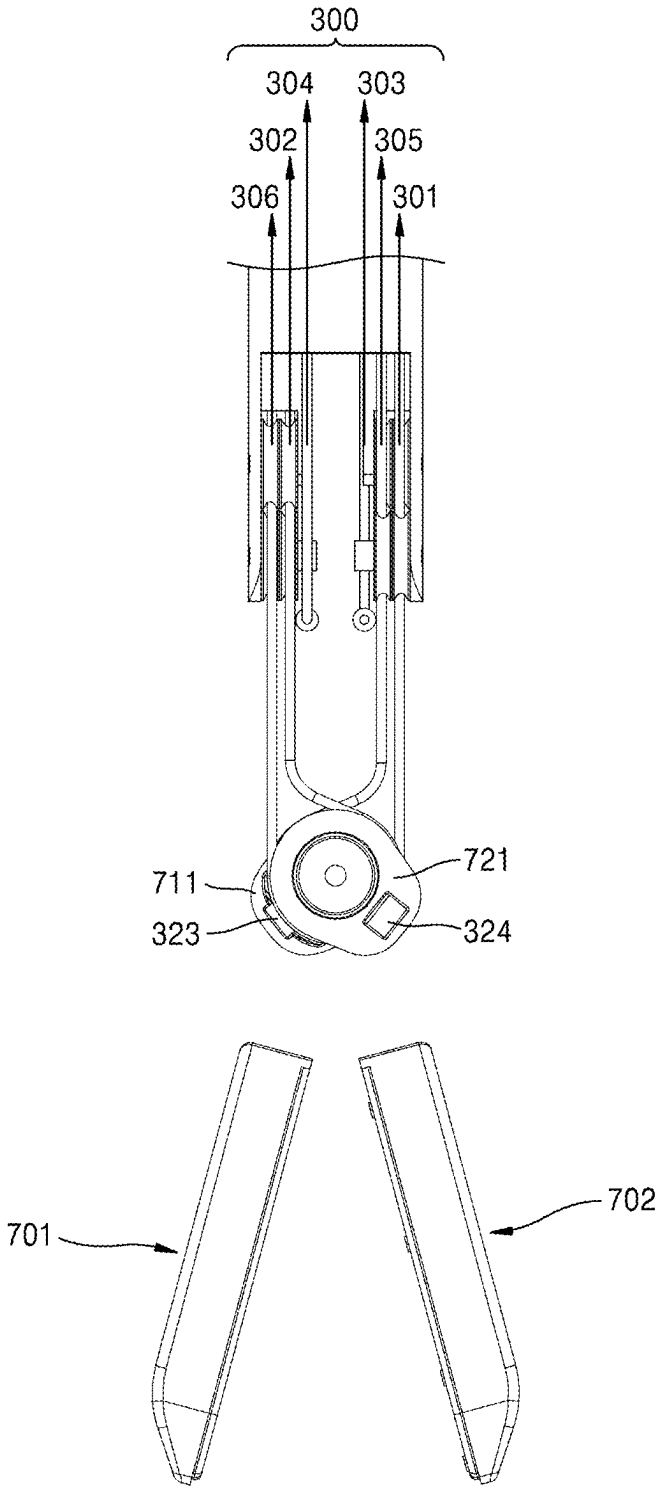

FIG. 47

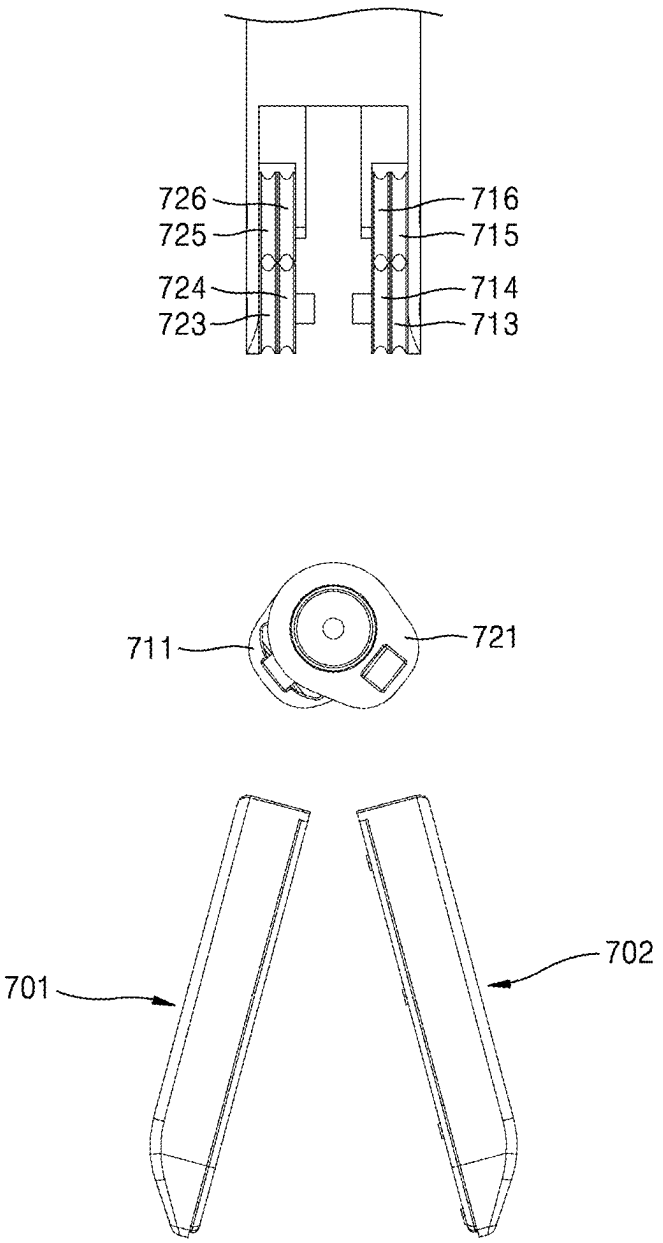

FIG. 48

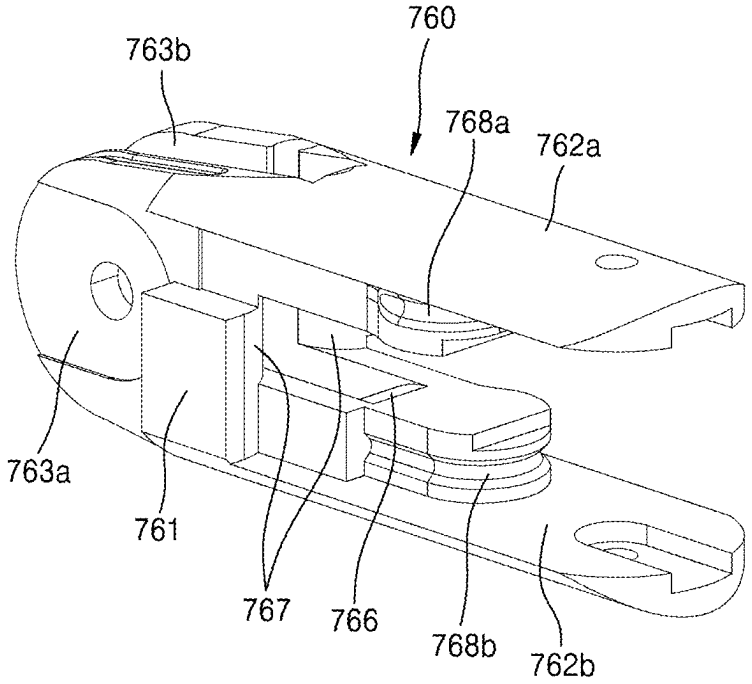

FIG. 49

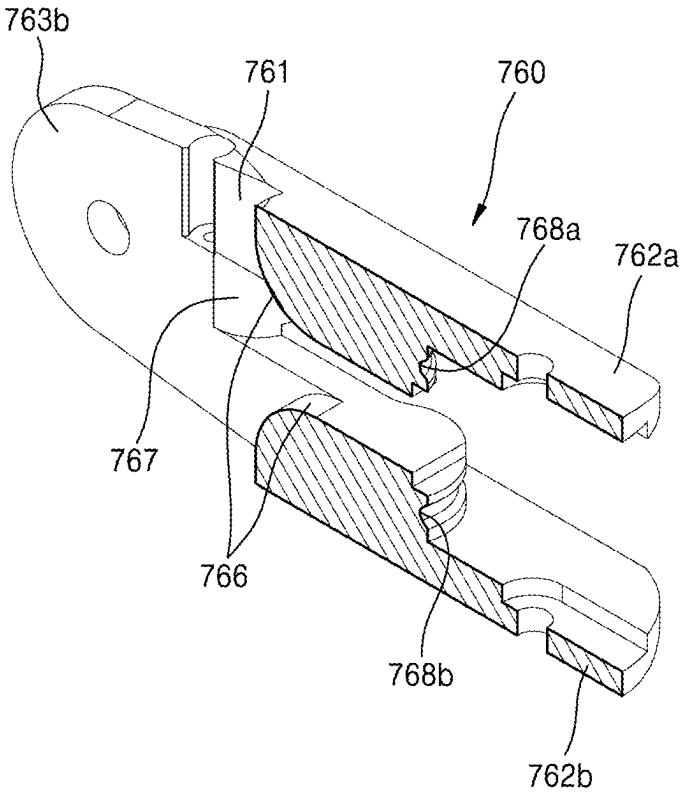

FIG. 50

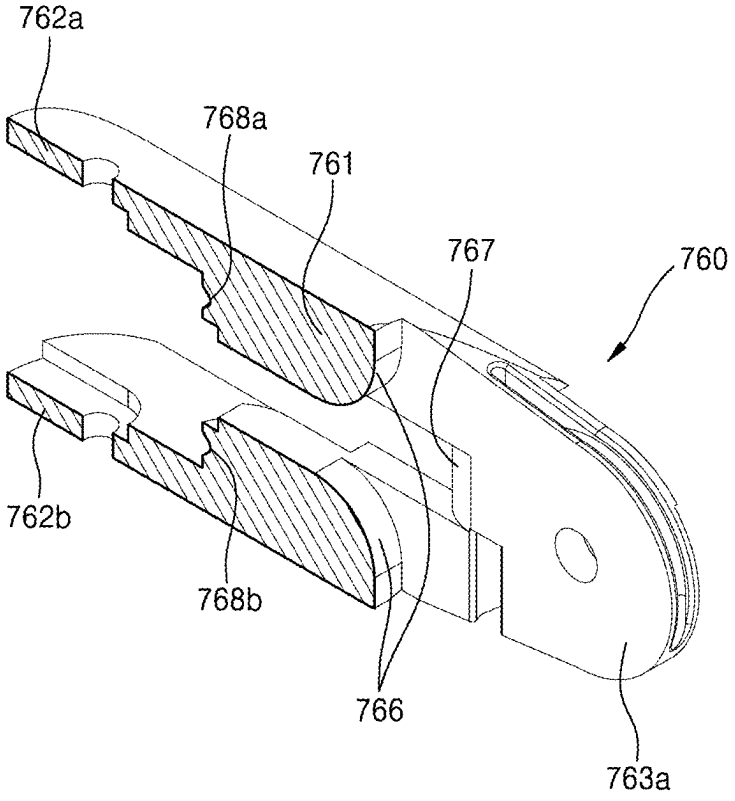

FIG. 51

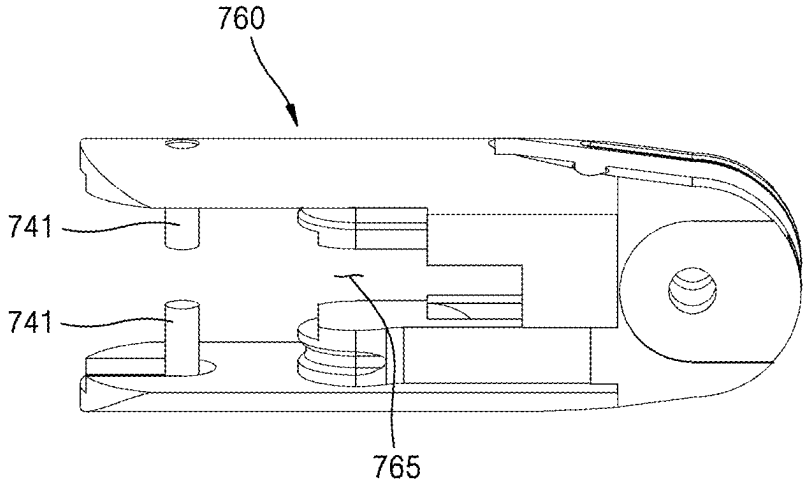

FIG. 52

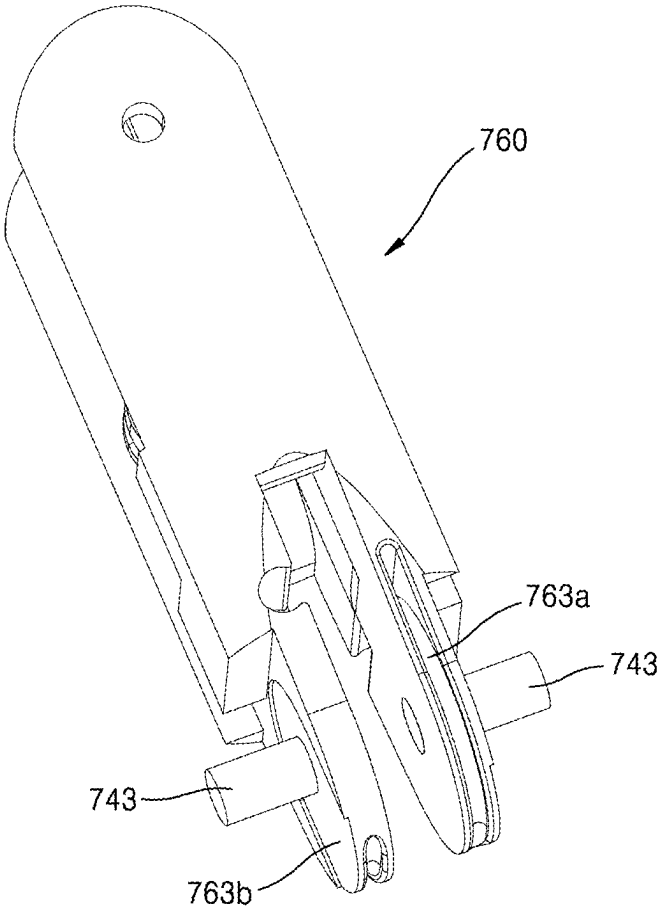

FIG. 53

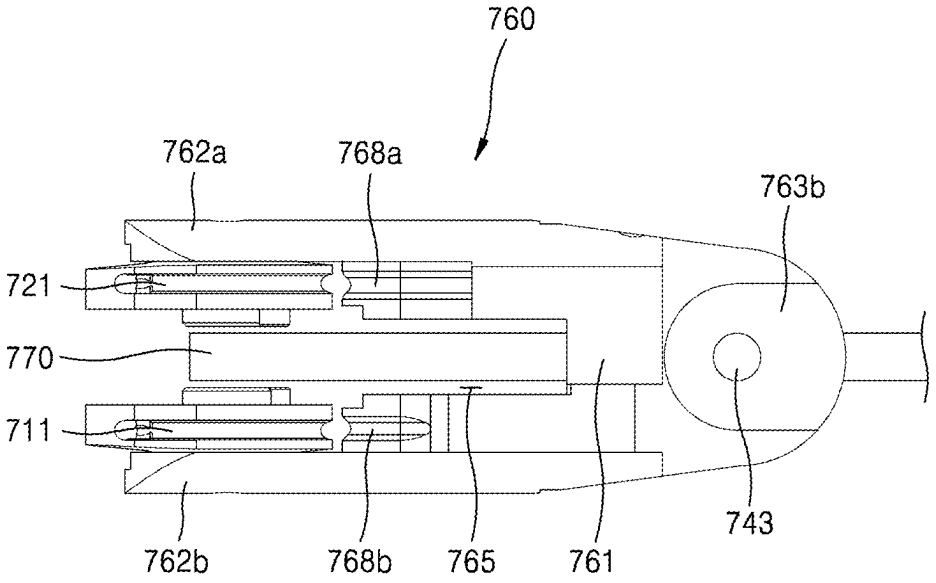

FIG. 54

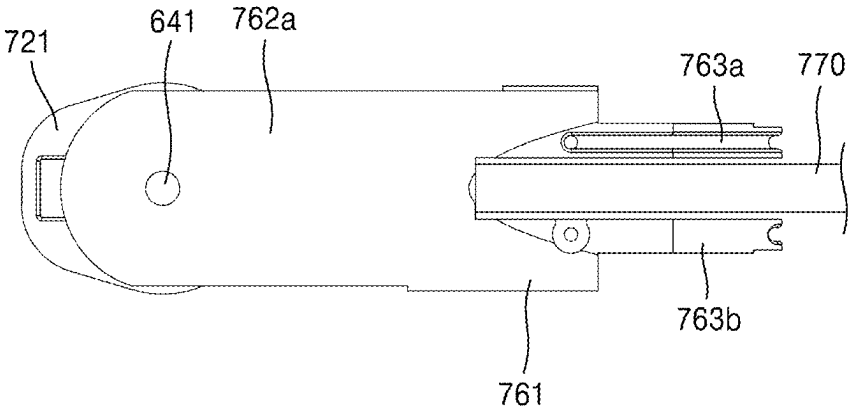

FIG. 55

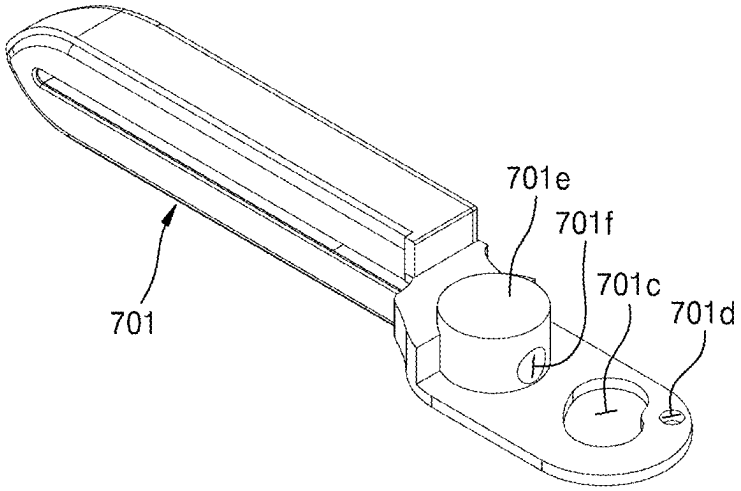

FIG. 56

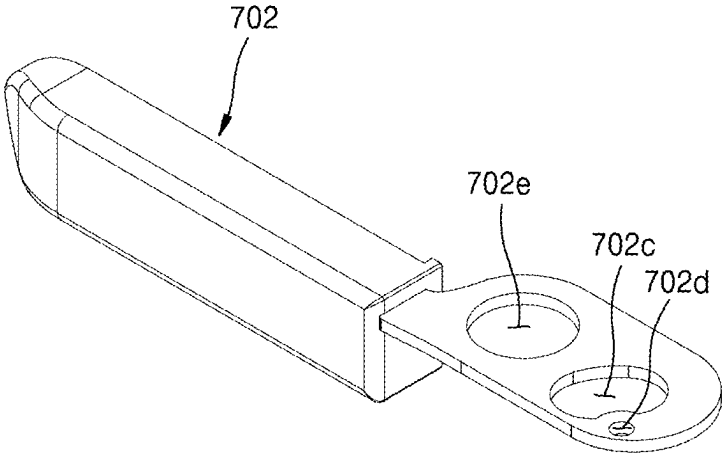

FIG. 57

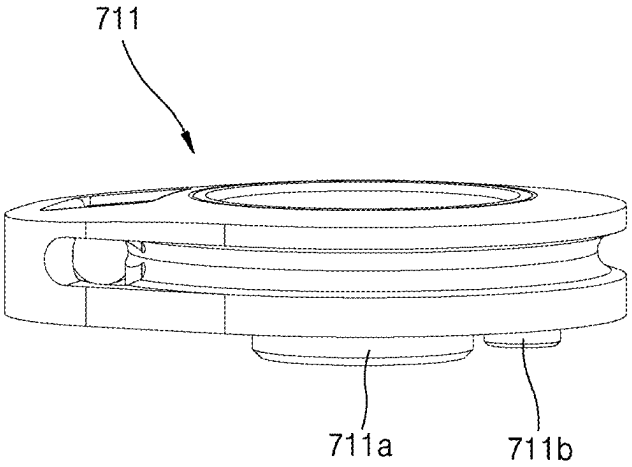

FIG. 58

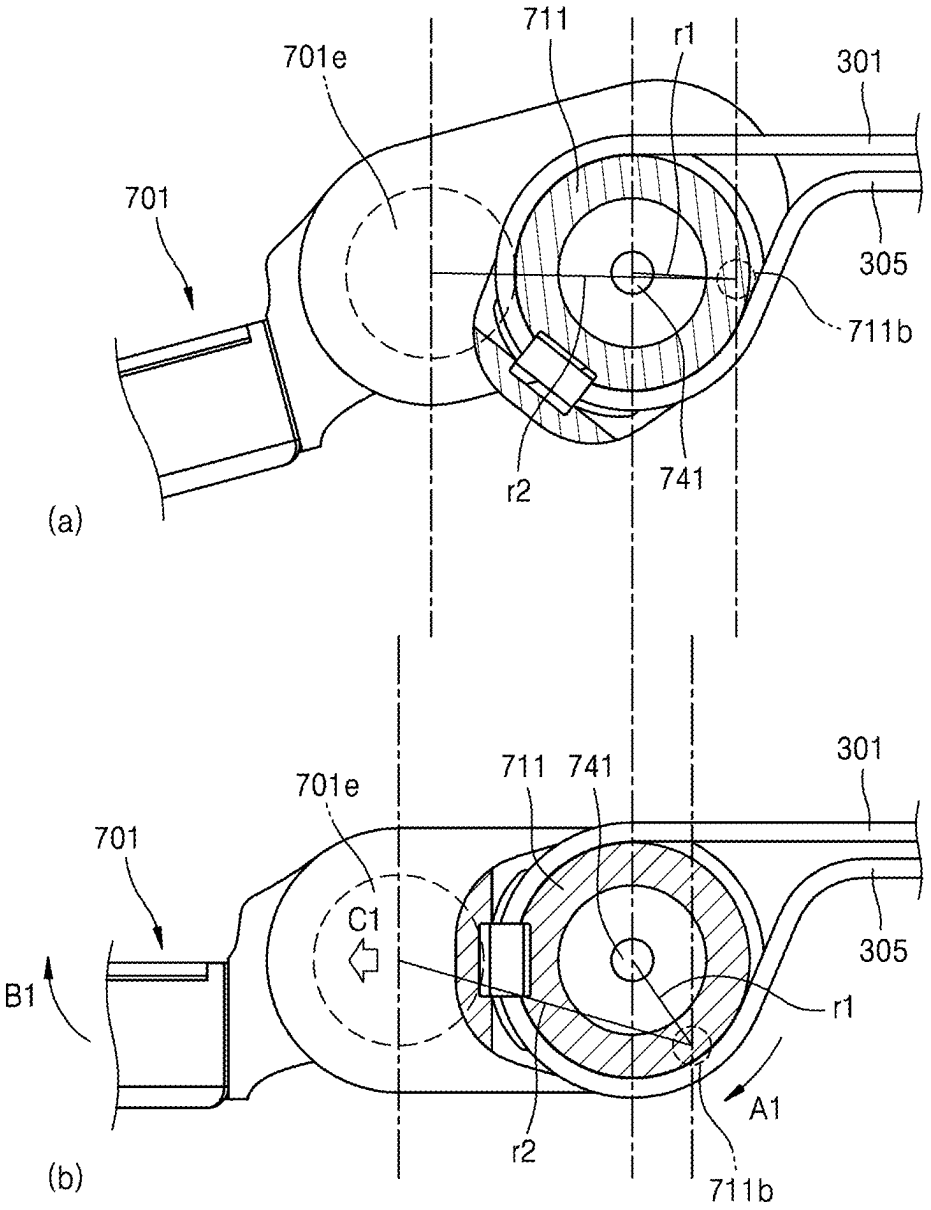
711
r1
701e
301
701
305
711b
r2
741
(a)
301
711
741
701e
701
C1
305
B1
r1
A1
r2
(b)
711b

FIG. 59

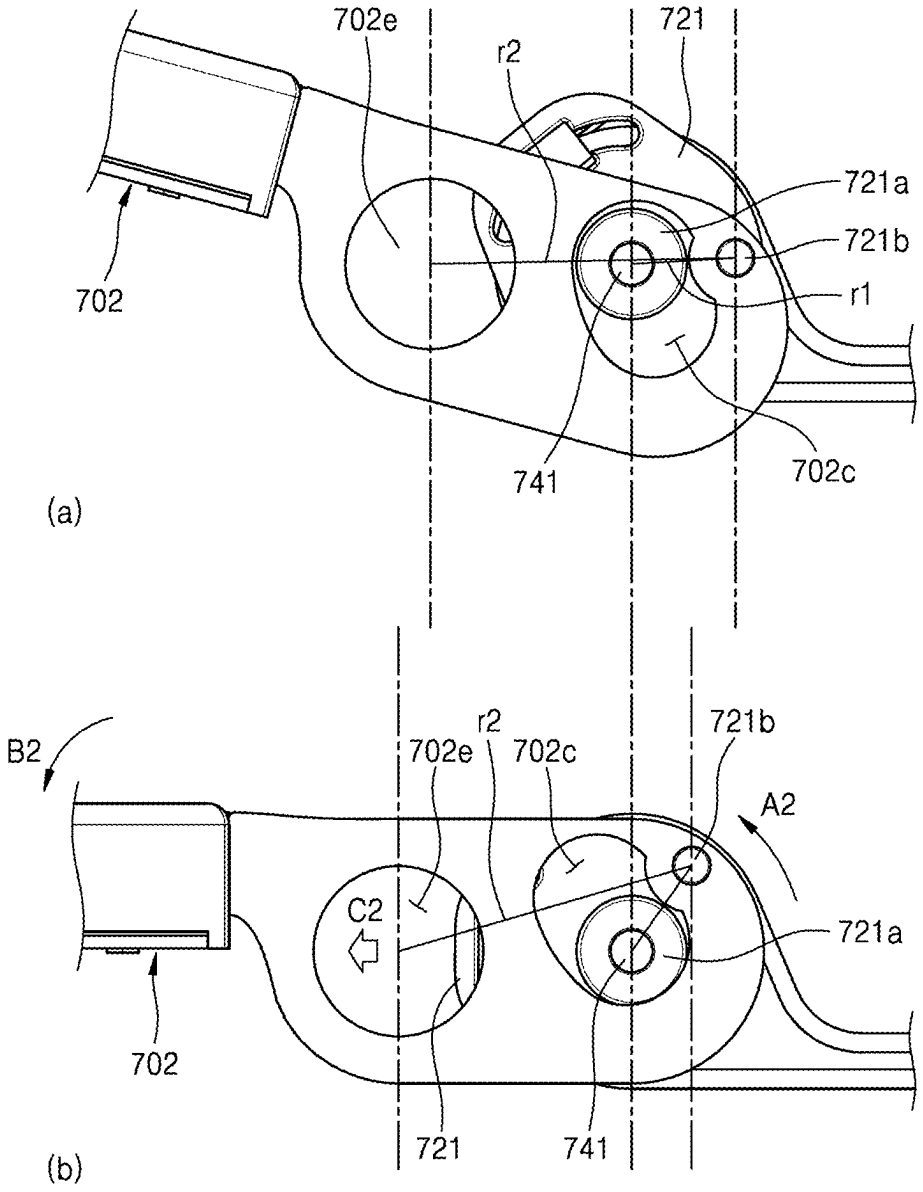
702e
r2
721
721a
721b
r1
702
741
702c
(a)
B2
r2
702e
702c
721b
A2
C2
721a
702
721
741
(b)

FIG. 60

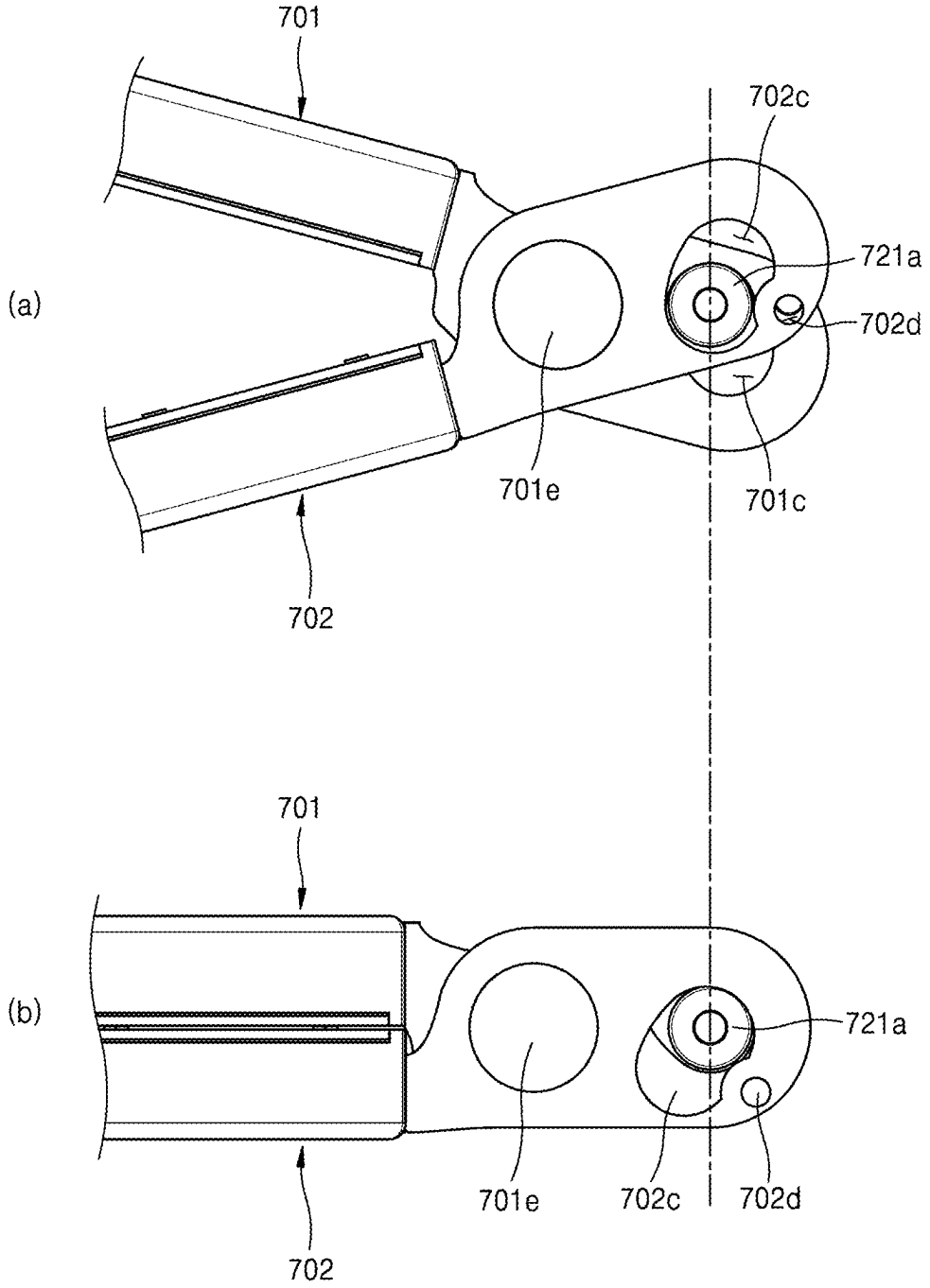
701
702c
721a
(a)
702d
701e
701c
702
701
(b)
721a
701e
702c
702d
702

FIG. 61

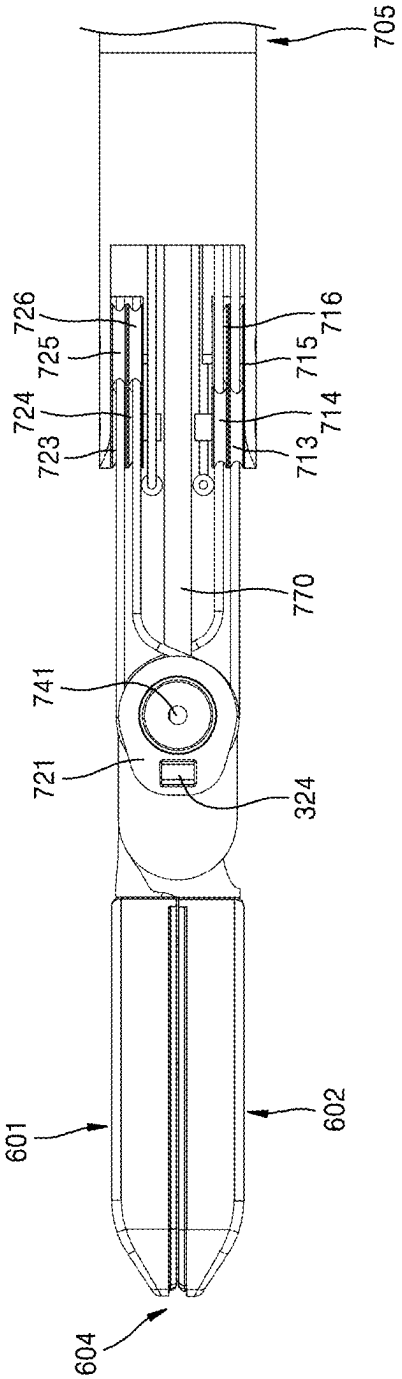

FIG. 62

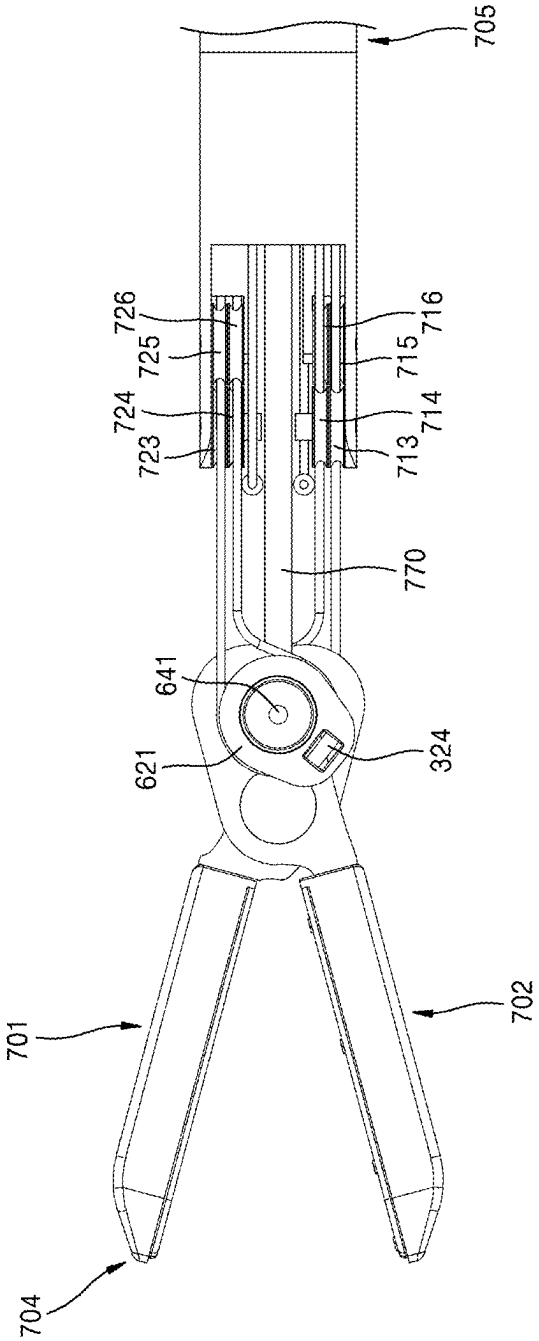

FIG. 63

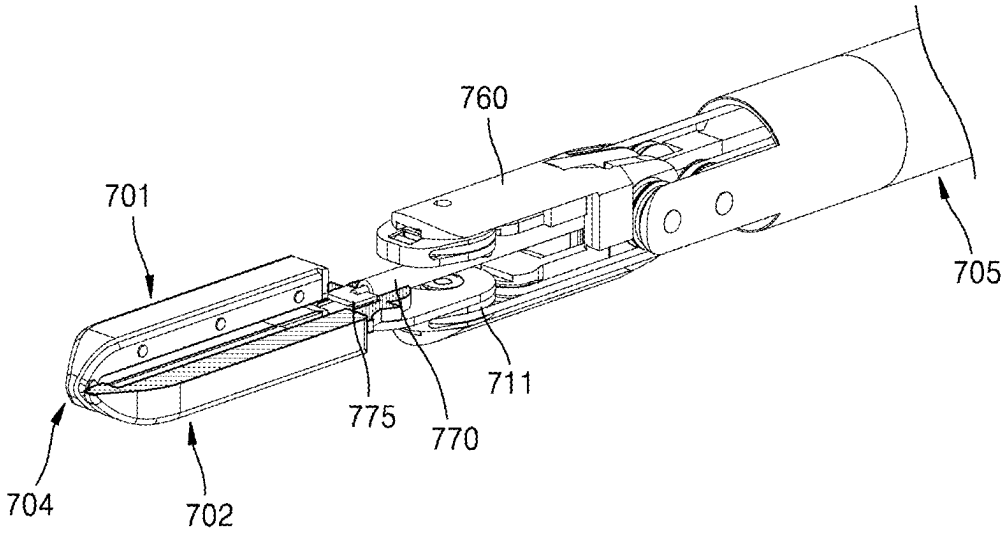

FIG. 64

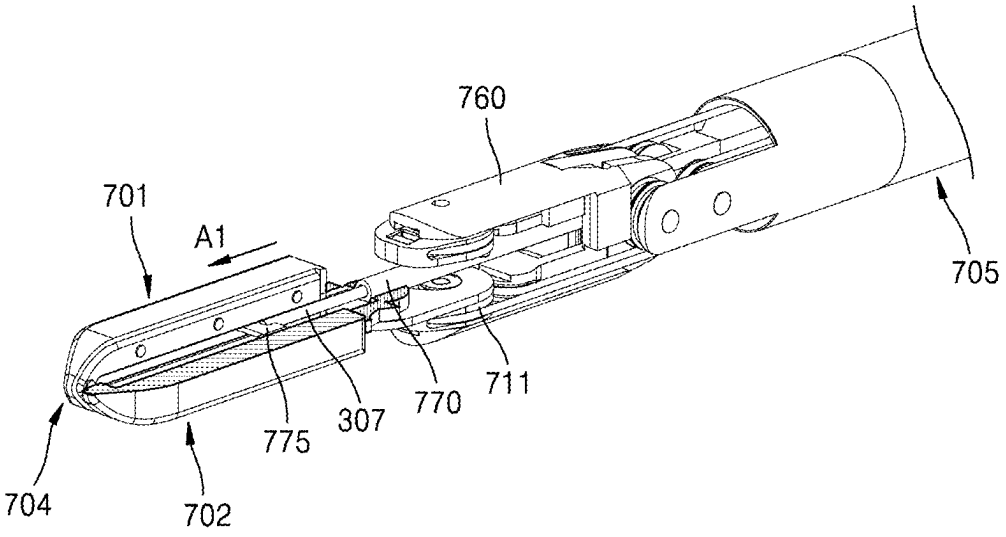

FIG. 65

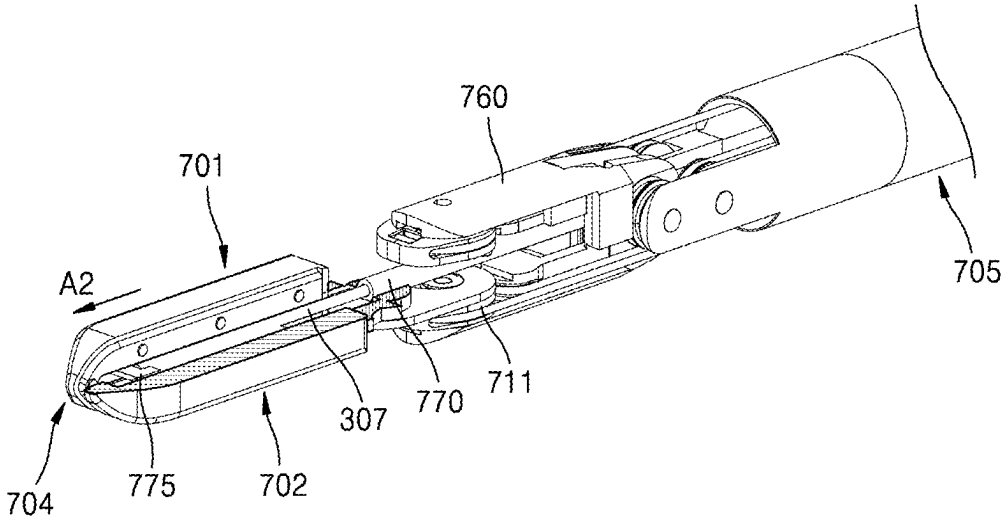

FIG. 66

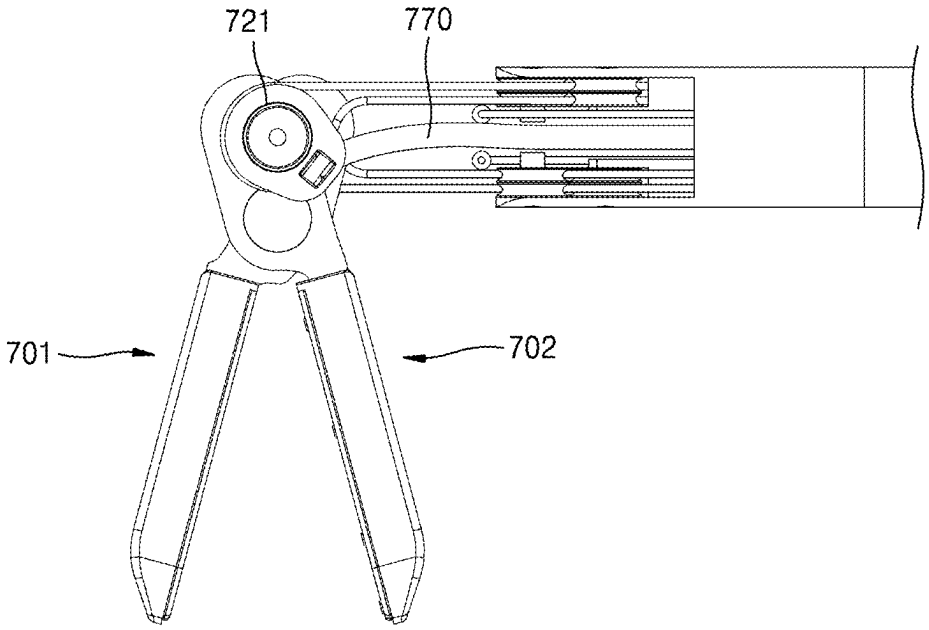

FIG. 67

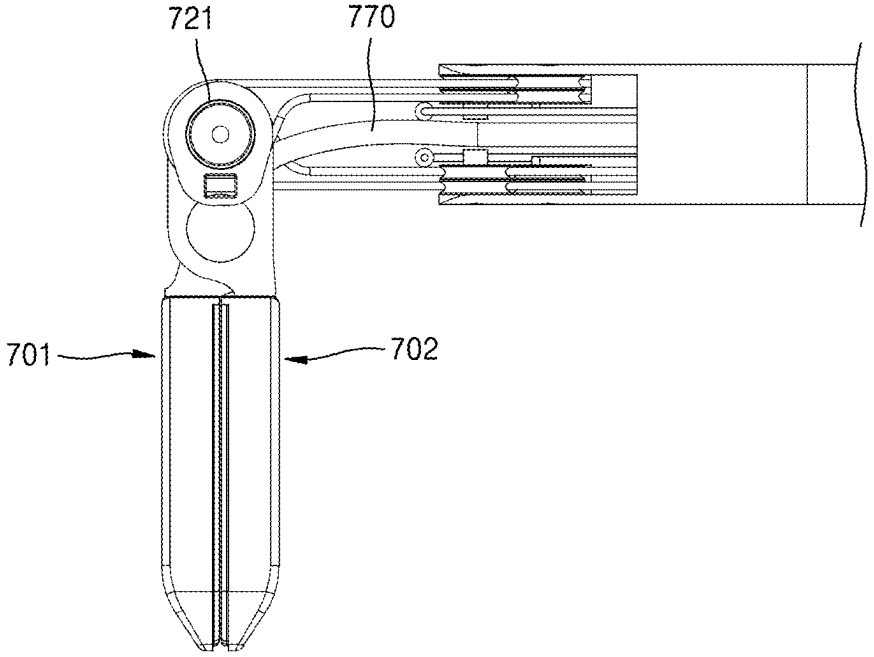

FIG. 68

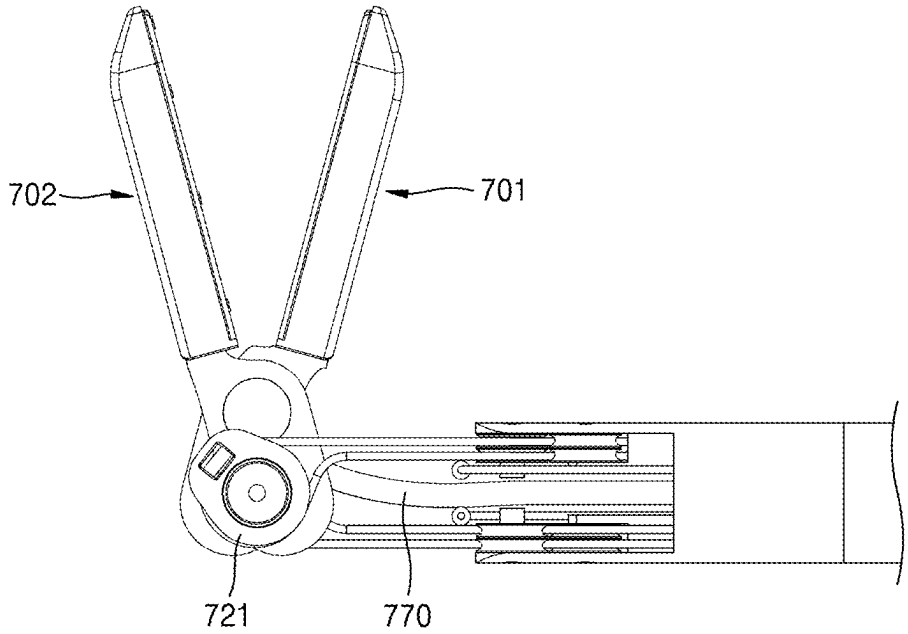

FIG. 69

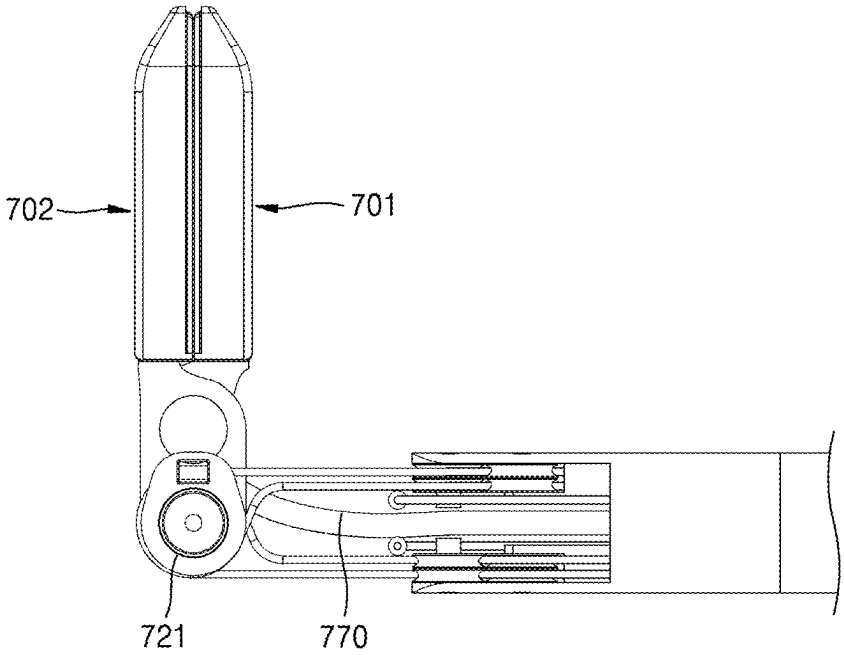

FIG. 70

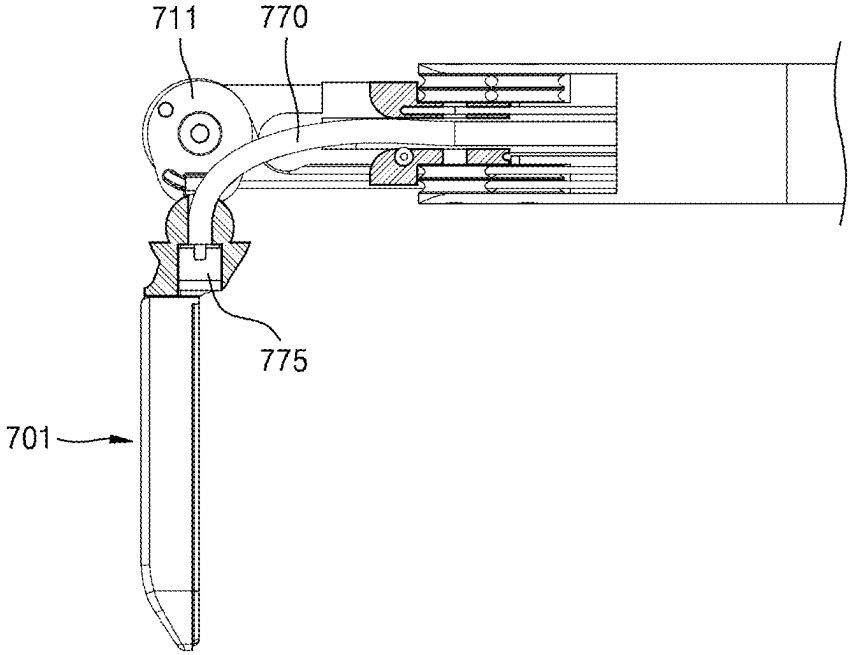

FIG. 71

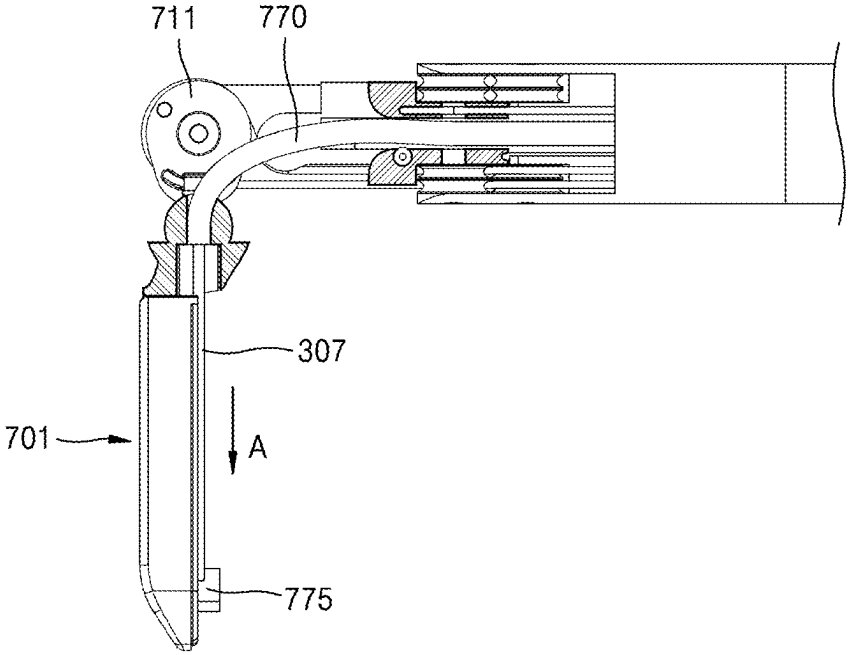

FIG. 72

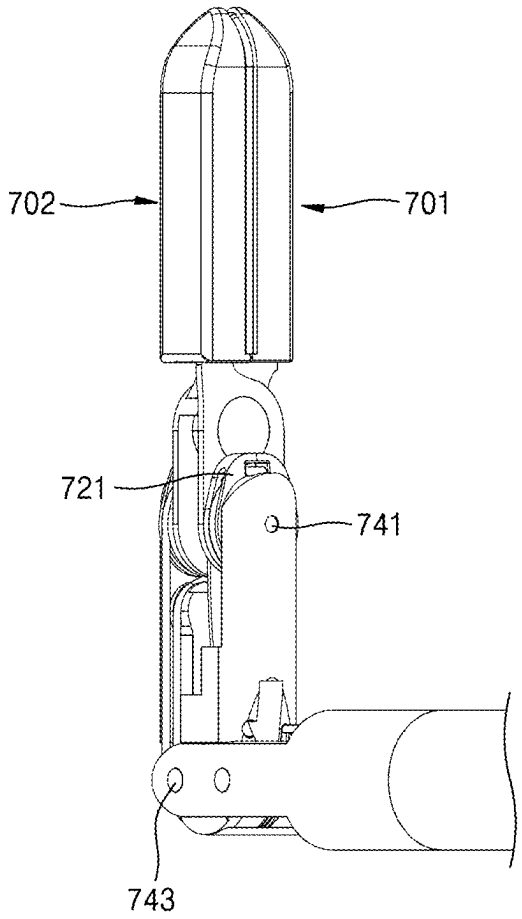

FIG. 73

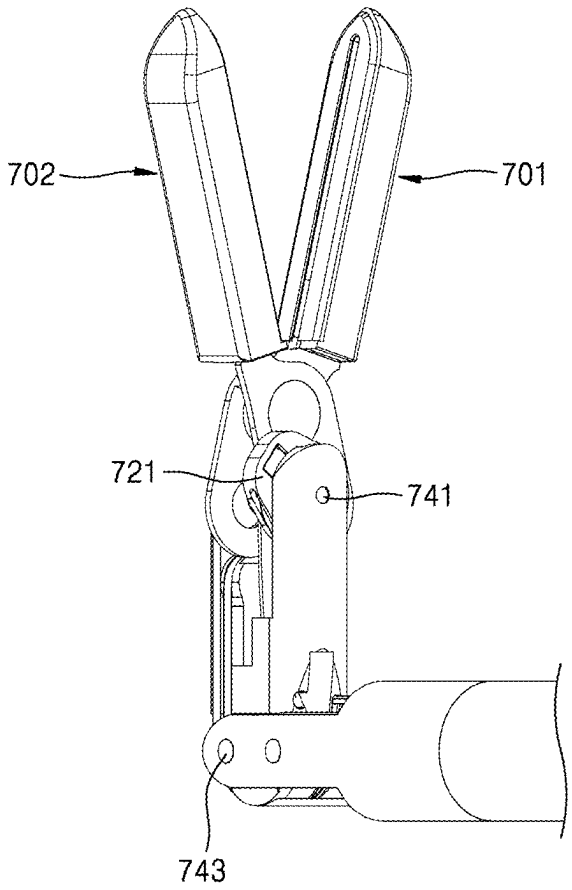

FIG. 74

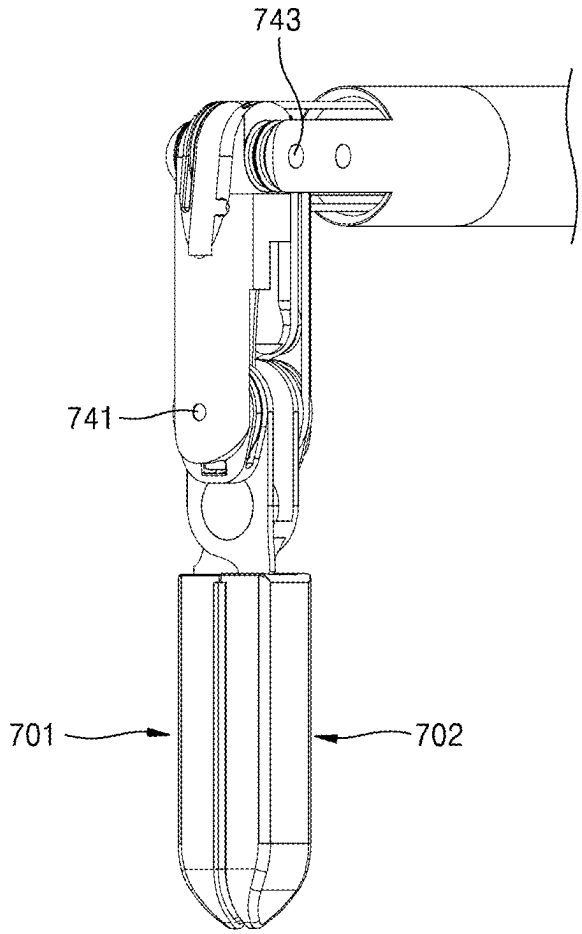

FIG. 75

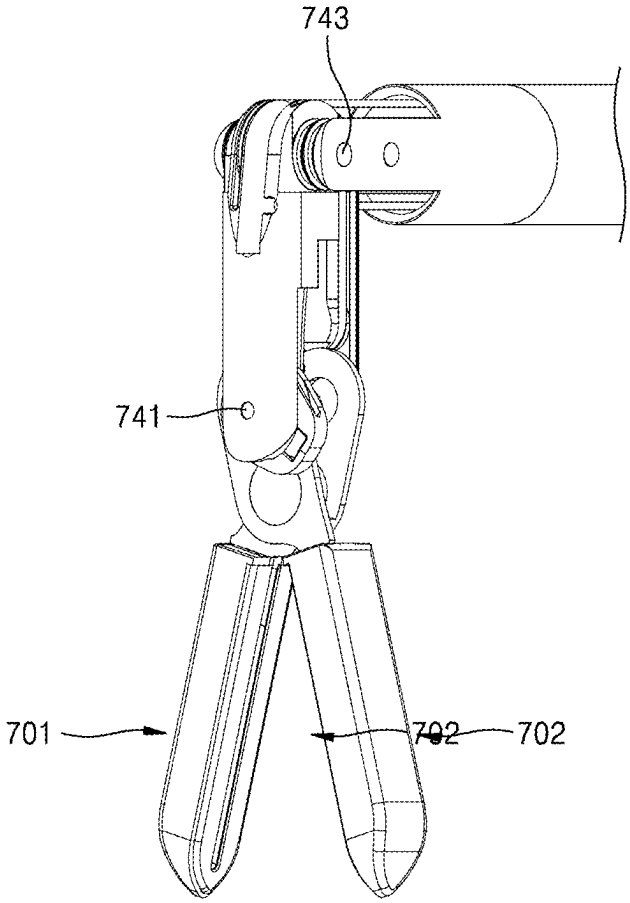

FIG. 76

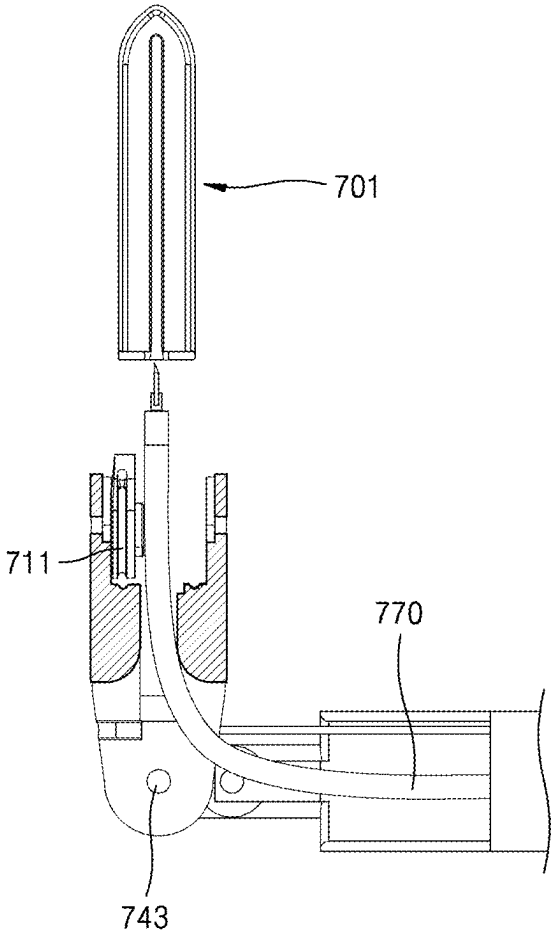

FIG. 77

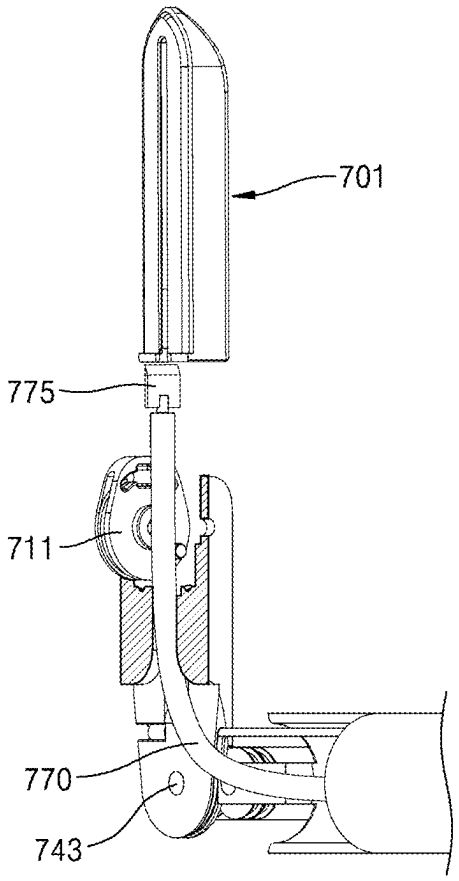

FIG. 78

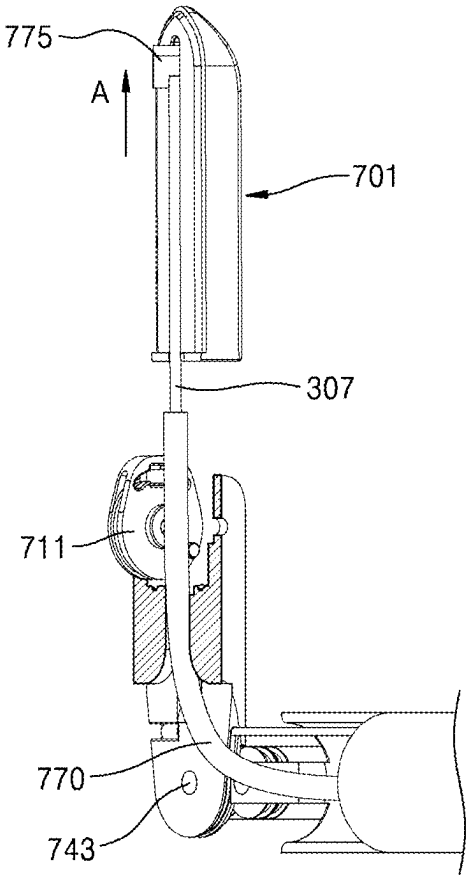

FIG. 79

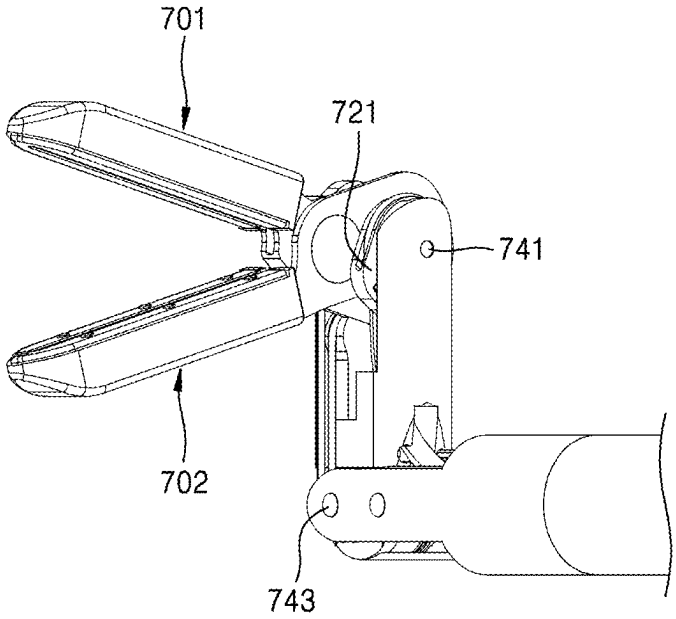

FIG. 80

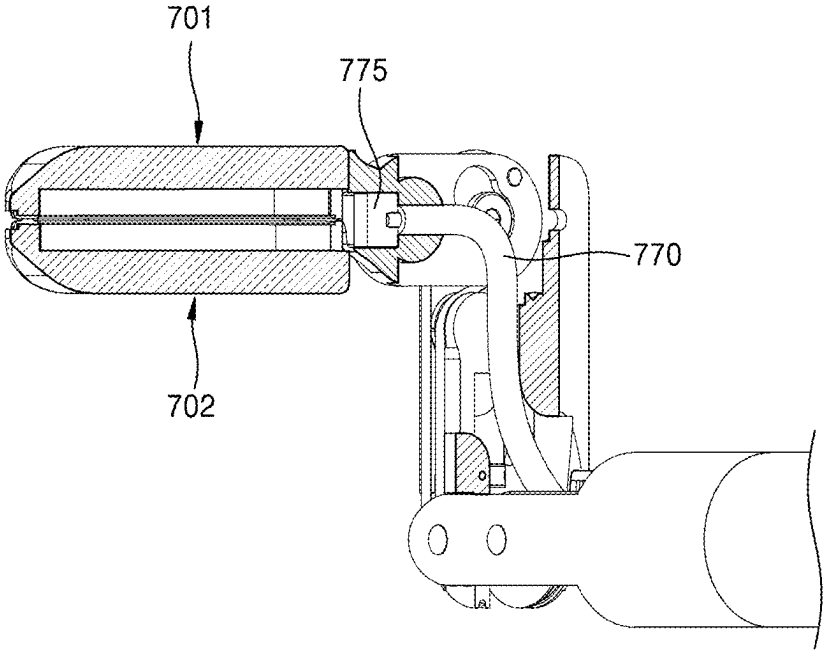

FIG. 81

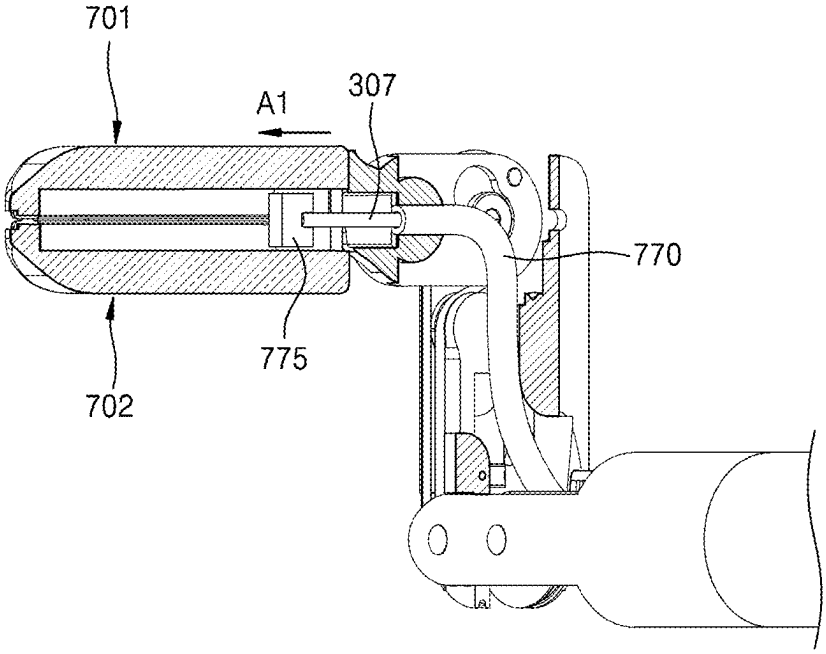

FIG. 82

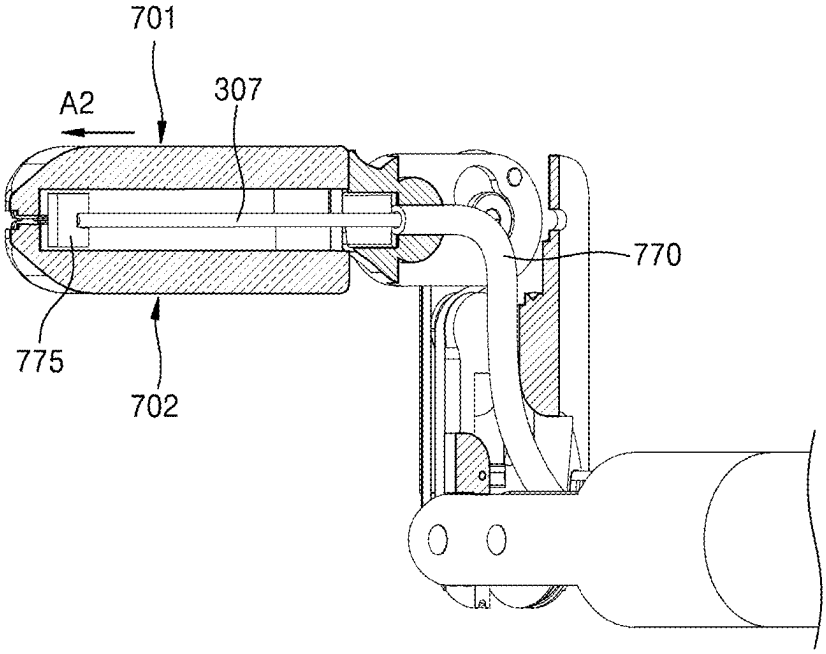

FIG. 83

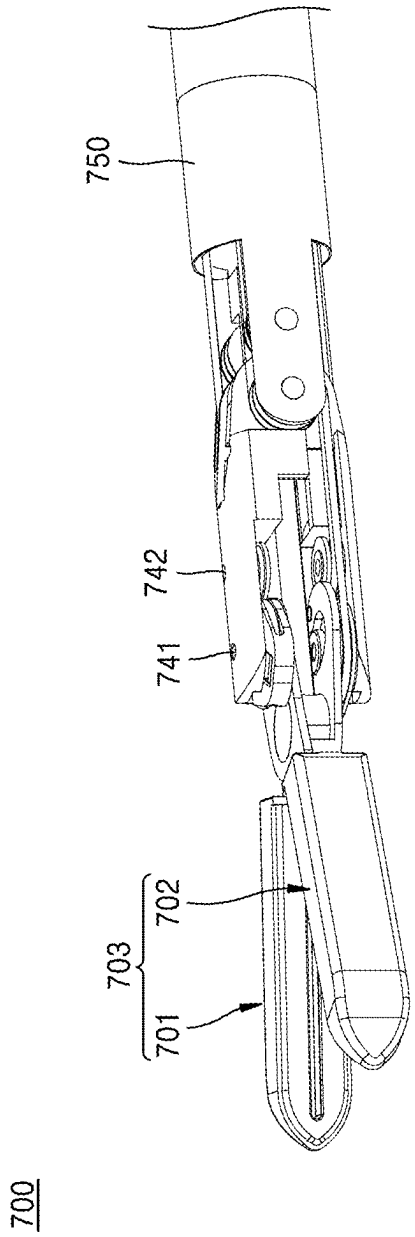

FIG. 84

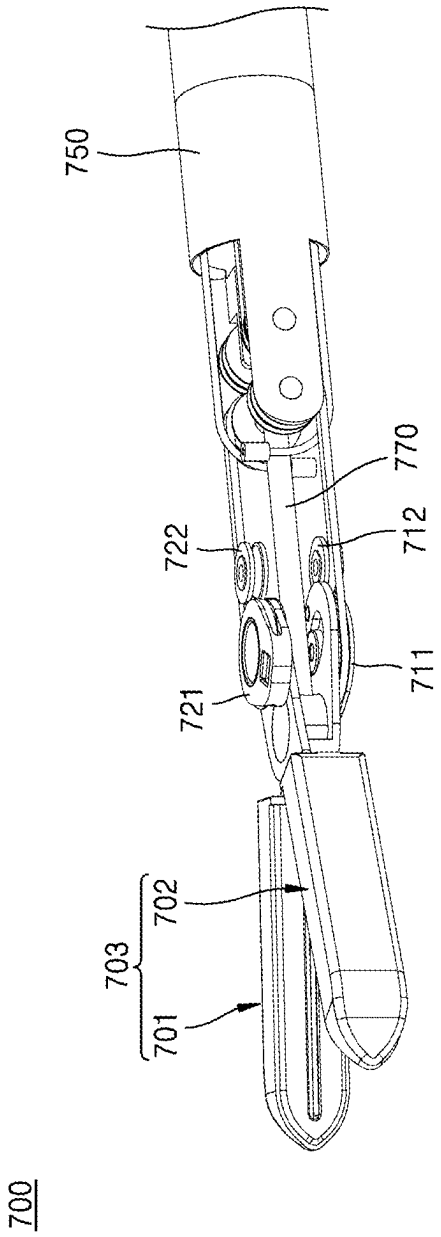

FIG. 85

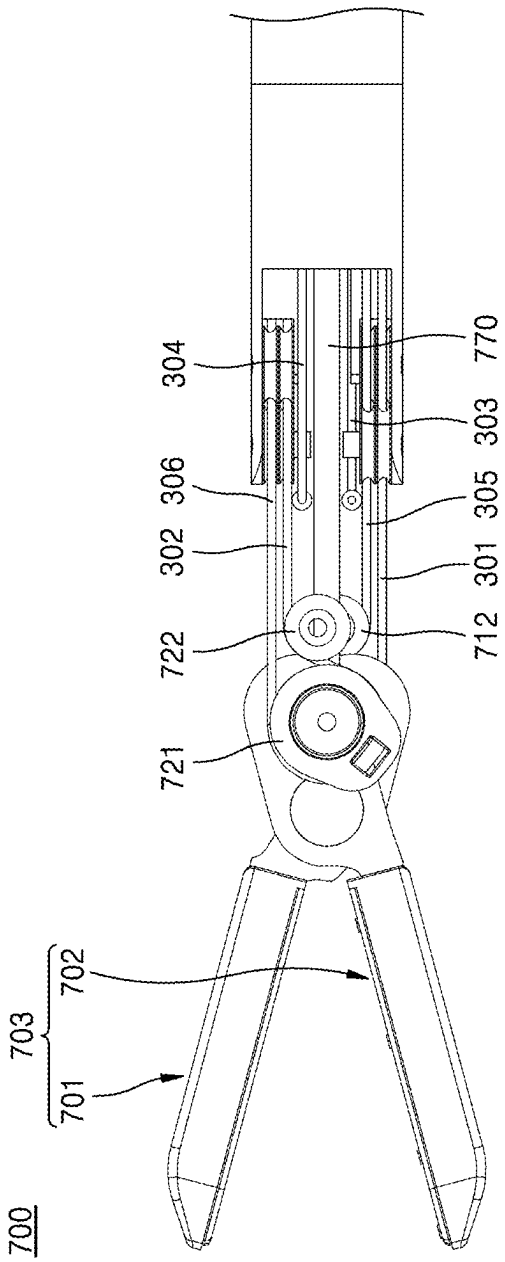

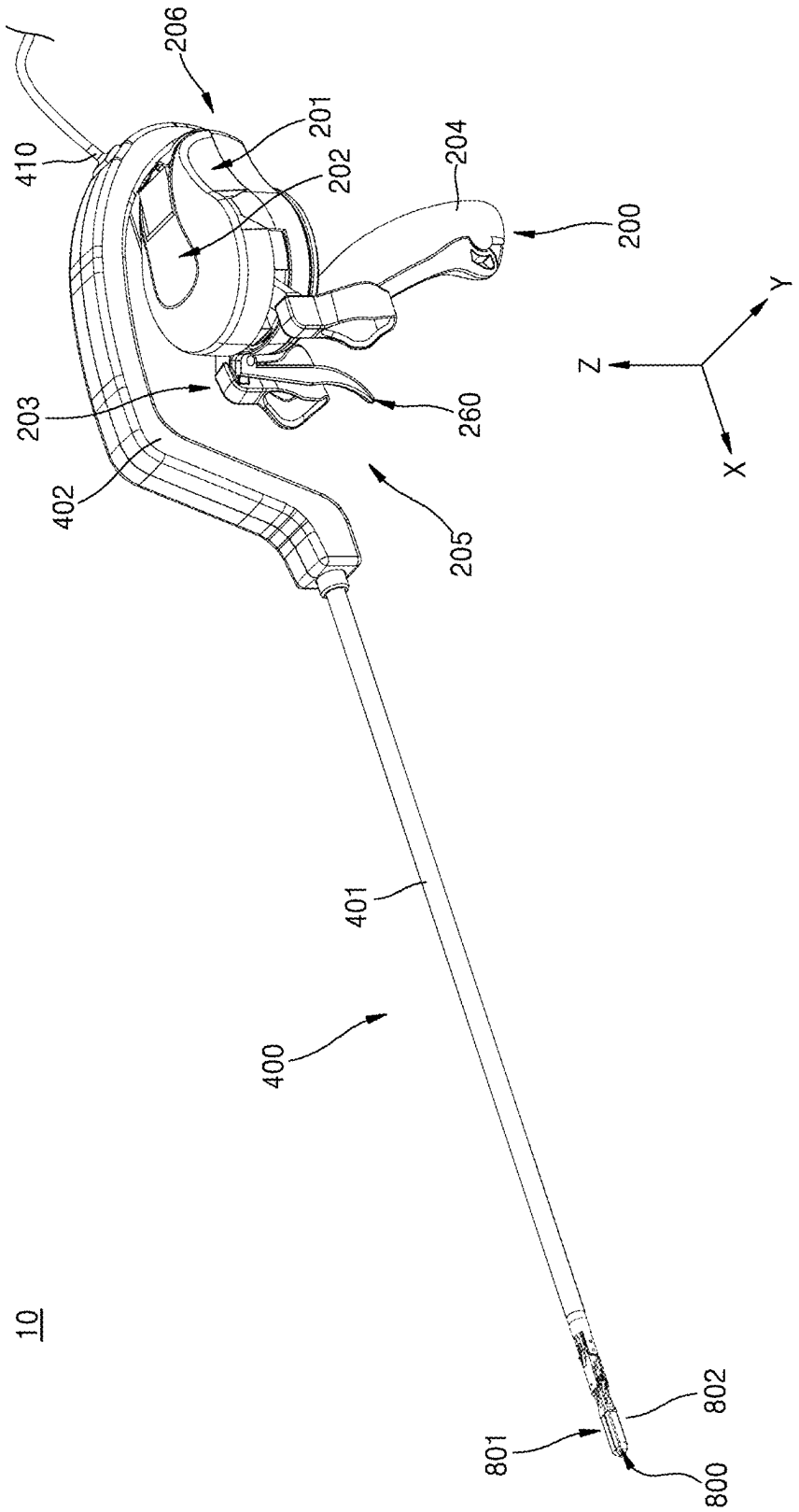
206
410
201
202
204
200
203
402
260
205
Y
Z
X
401
400
10
801
802
800

FIG. 86

FIG. 87

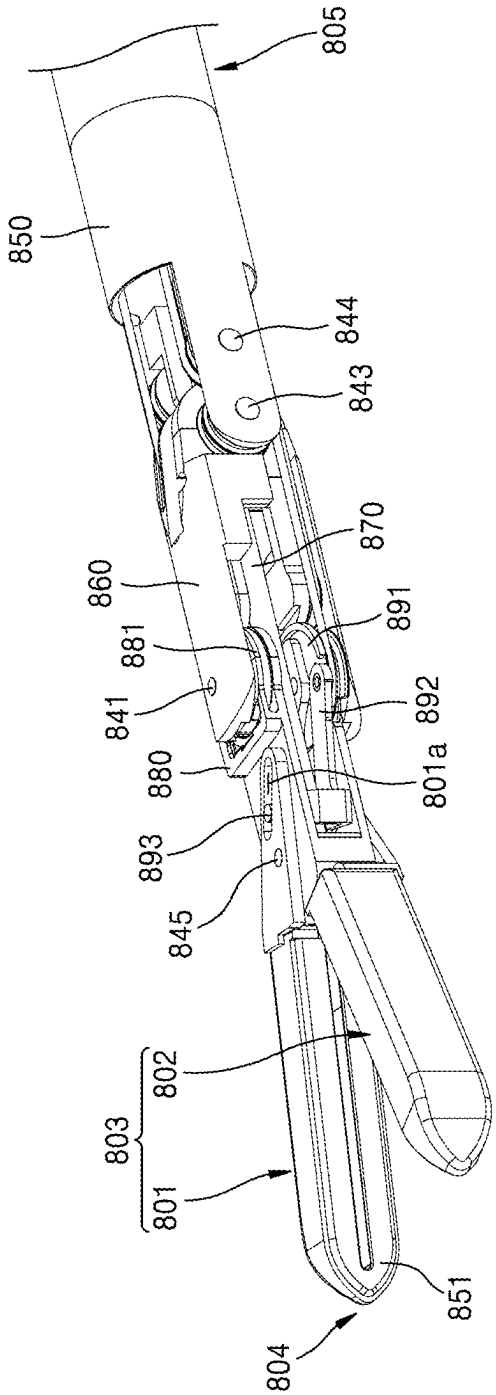
805
850
844
843
870
860
891
881
841
892
880
801a
893
845
802
803
801
851
804

FIG. 88

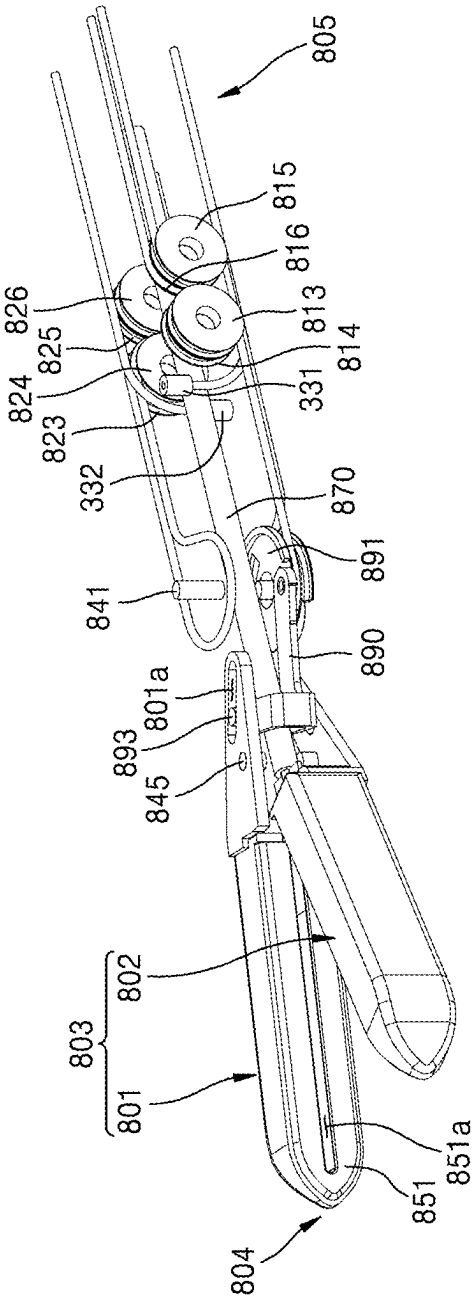
805
815
816
826
813
825
814
824
331
823
332
870
841
891
890
801a
893
845
802
803
801
851a
851
804

FIG. 89

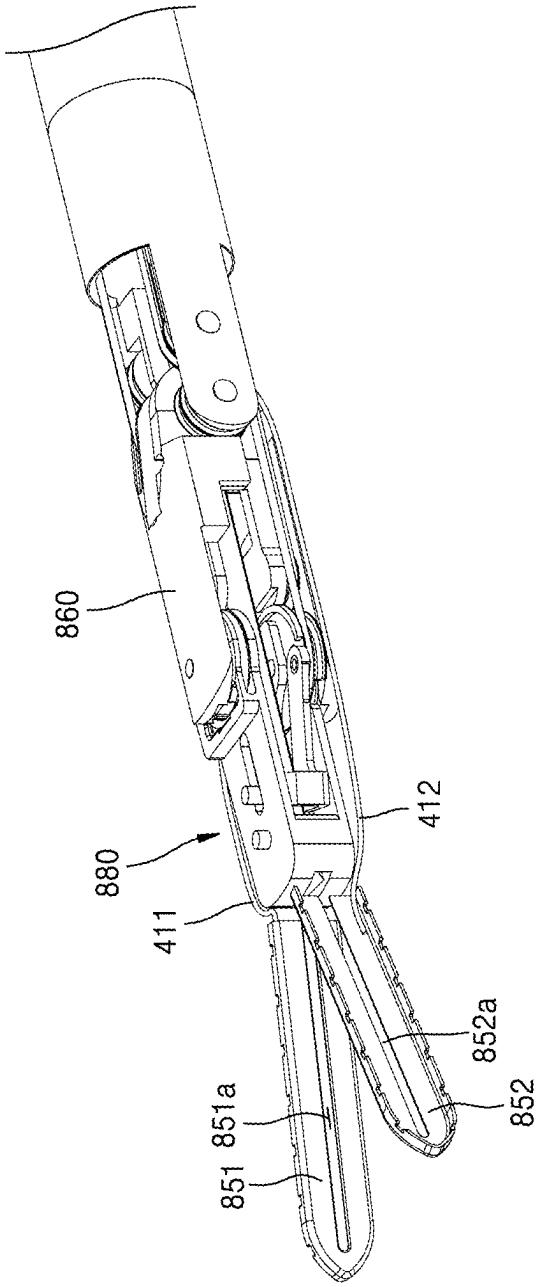

FIG. 90

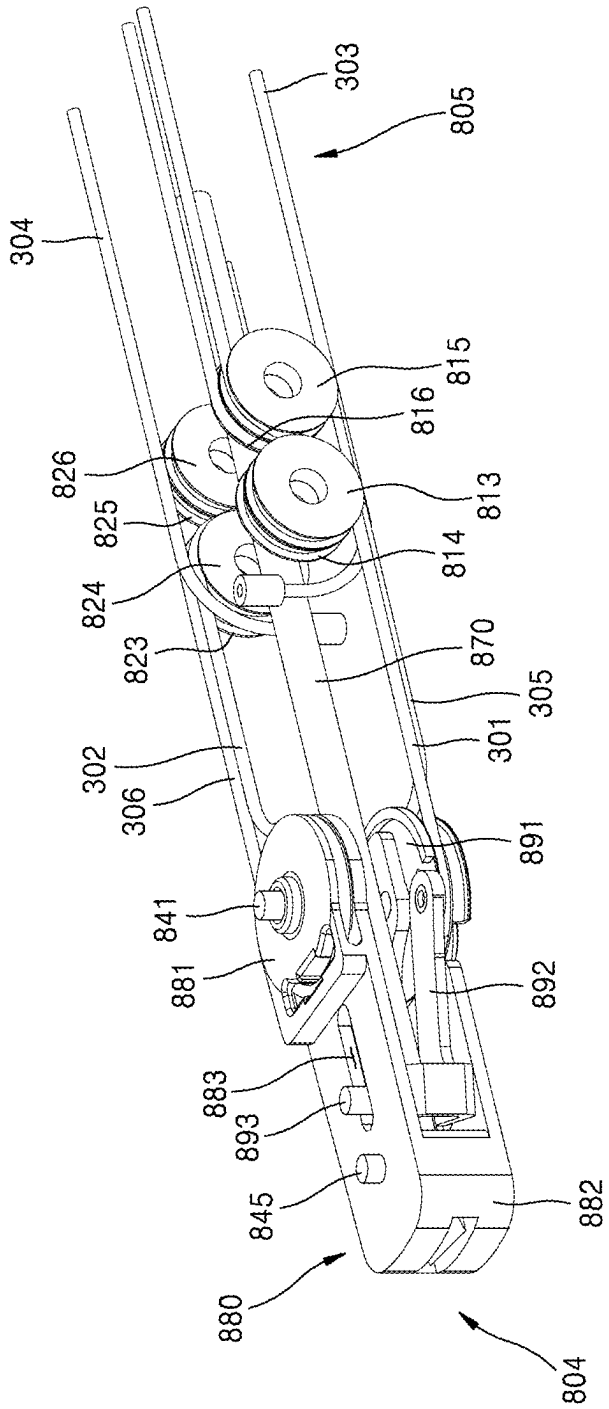
303
805
304
815
816
826
813
825
814
824
823
870
305
302
301
306
891
841
881
892
883
893
845
882
880
804

FIG. 91

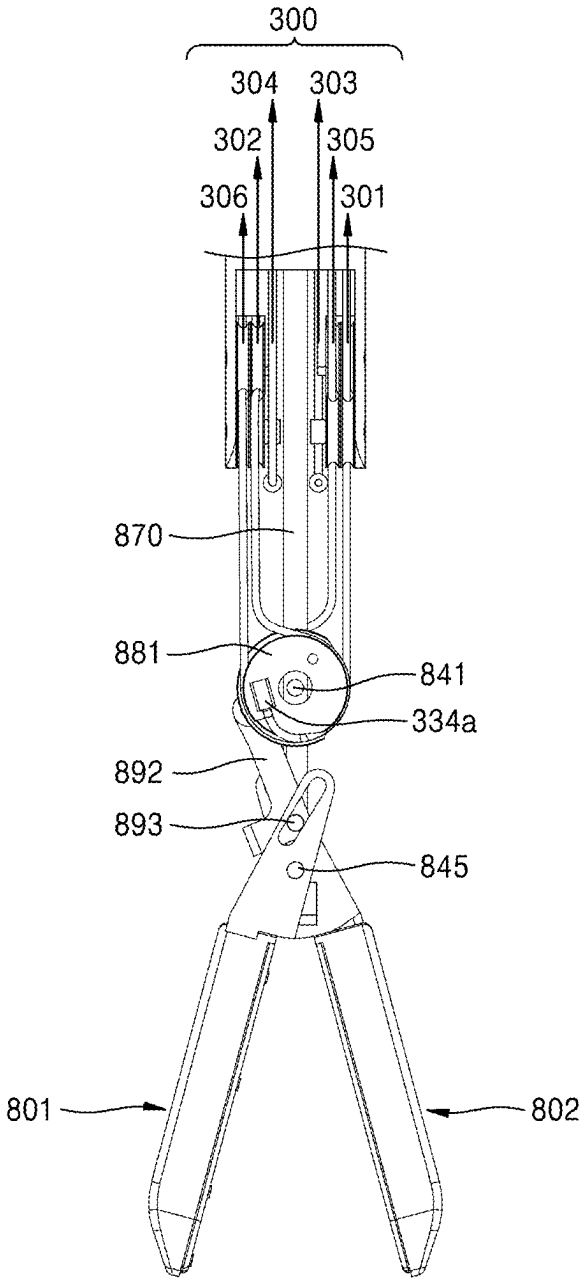

FIG. 92

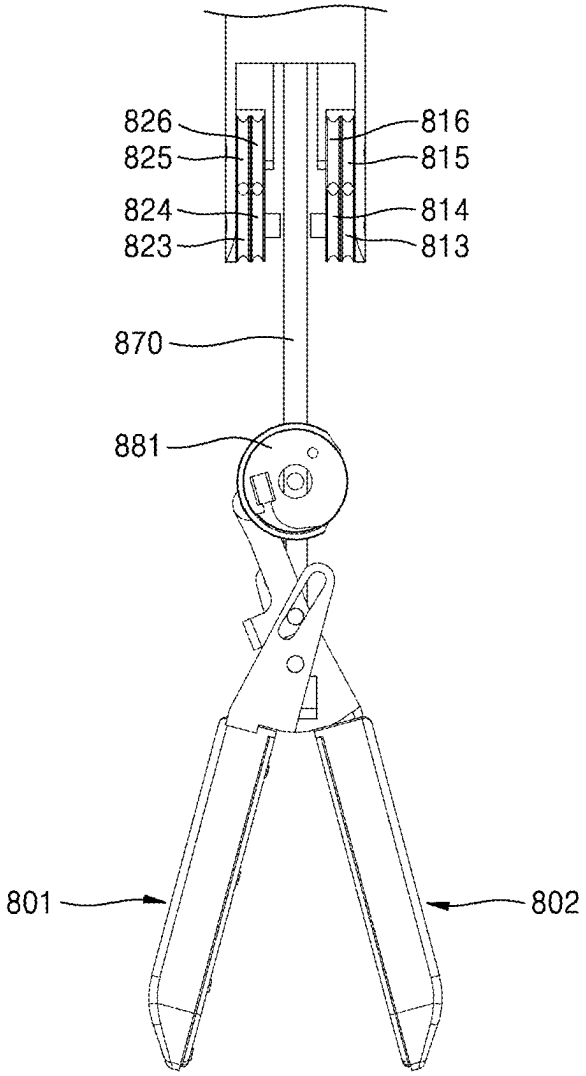

FIG. 93

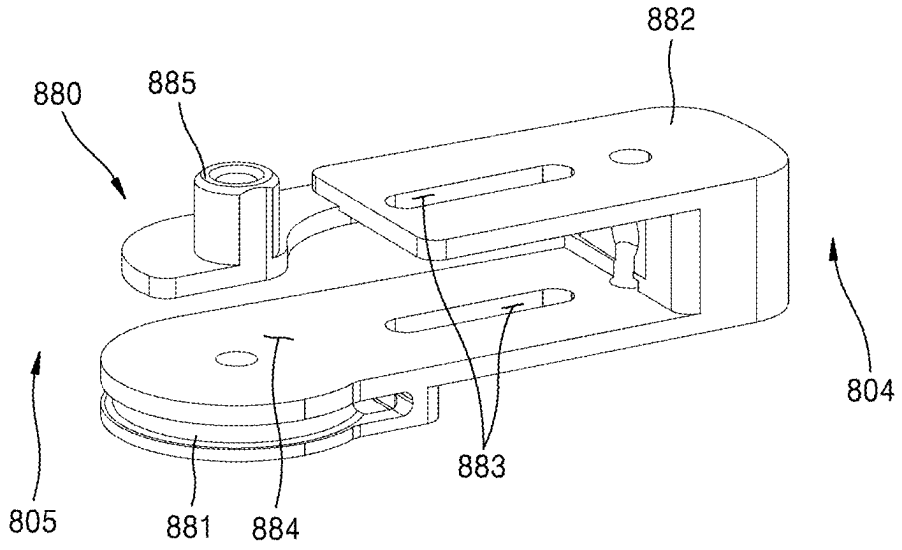

FIG. 94

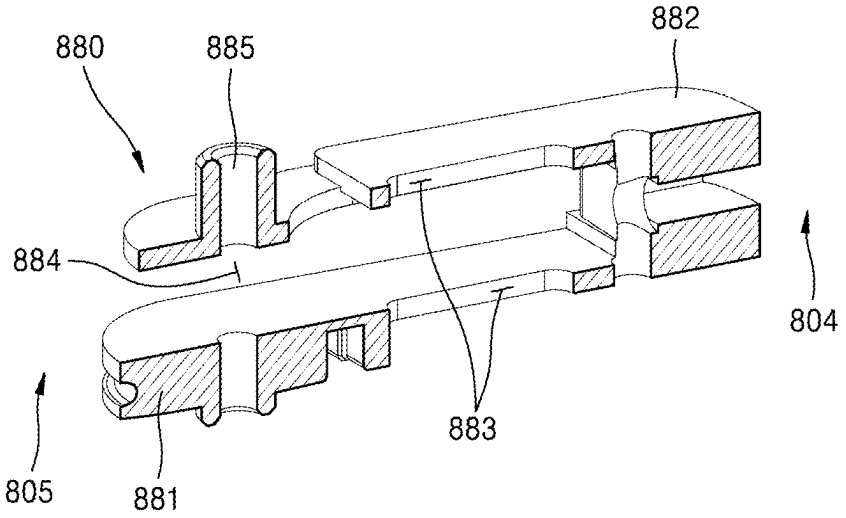

FIG. 95

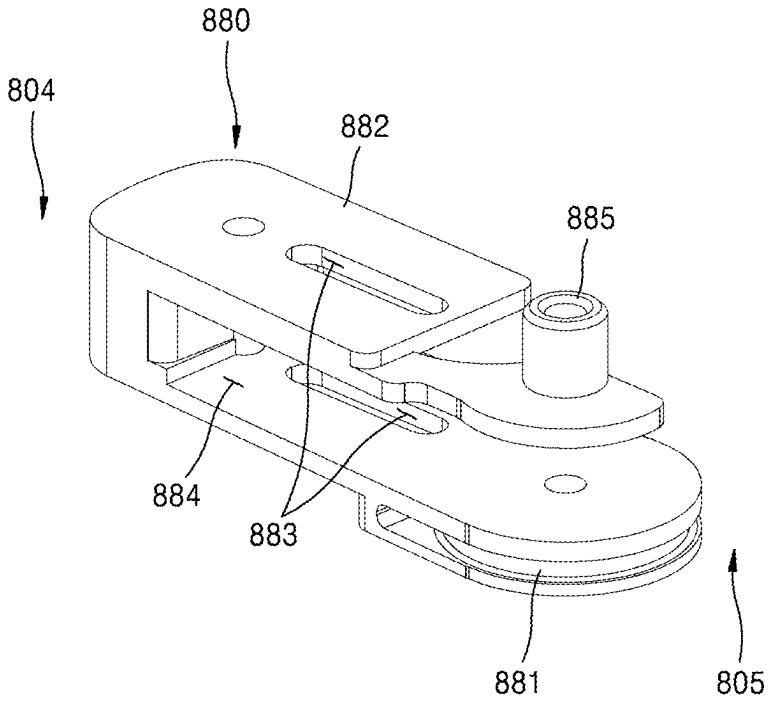

FIG. 96

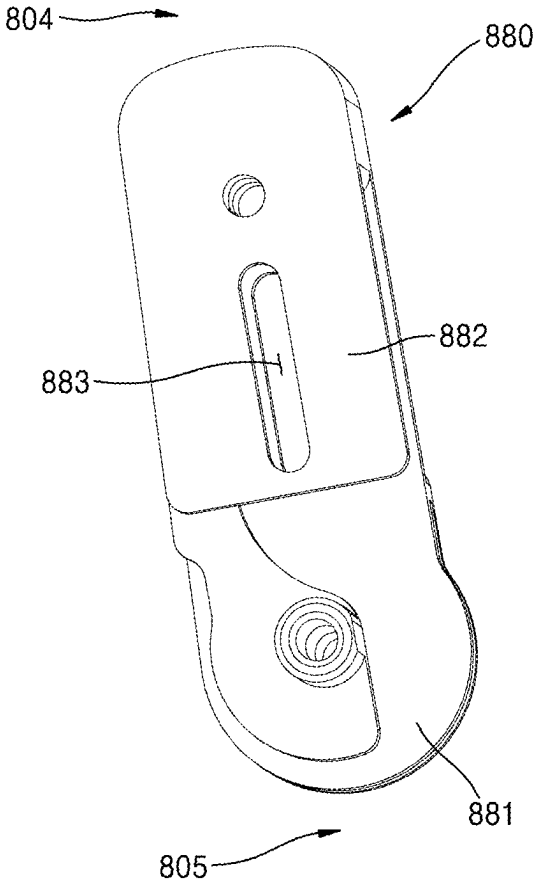

FIG. 97

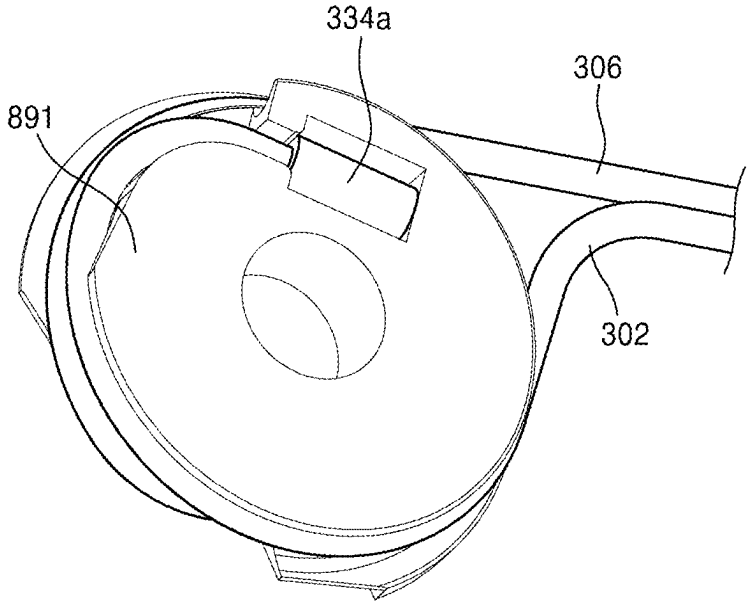

FIG. 98

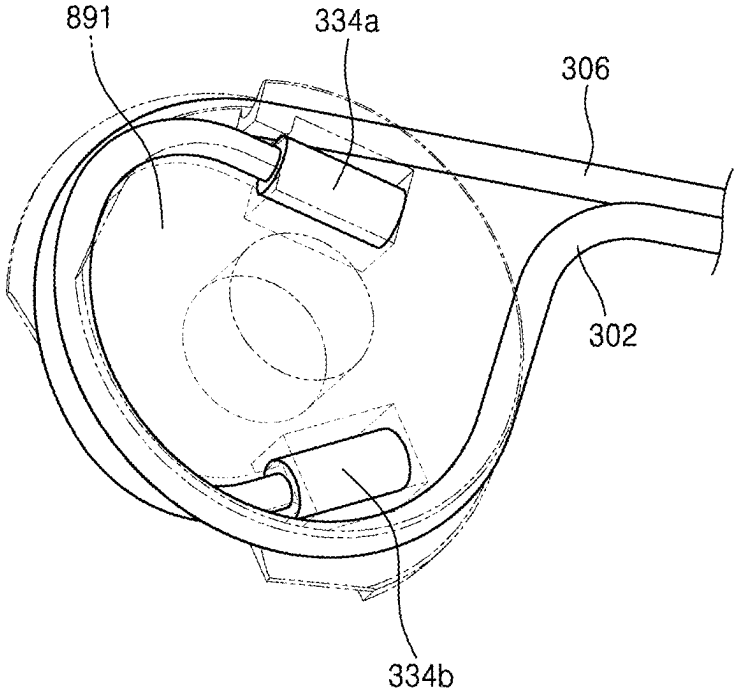

FIG. 99

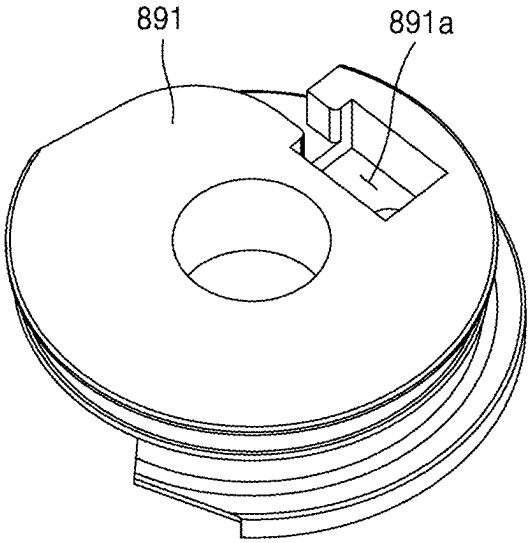

FIG. 100

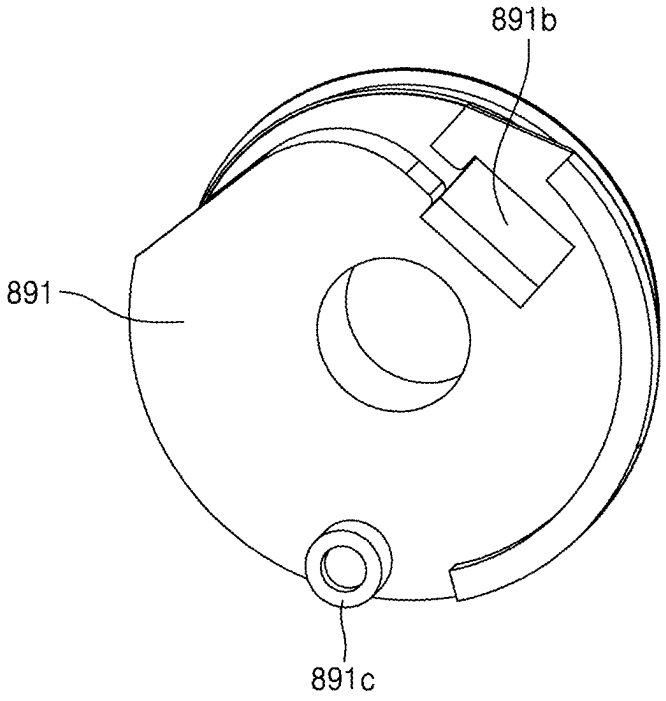

FIG. 101

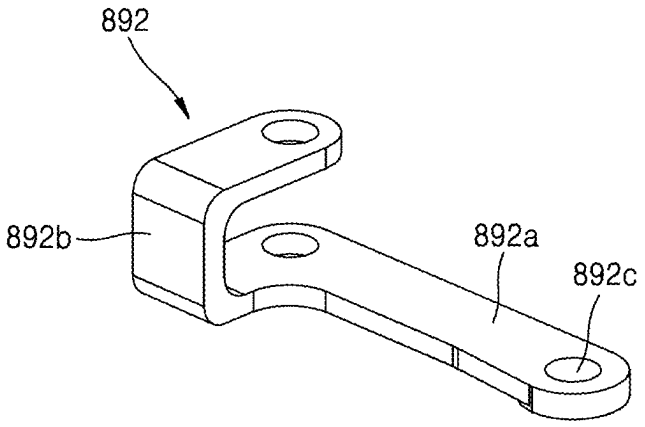

FIG. 102

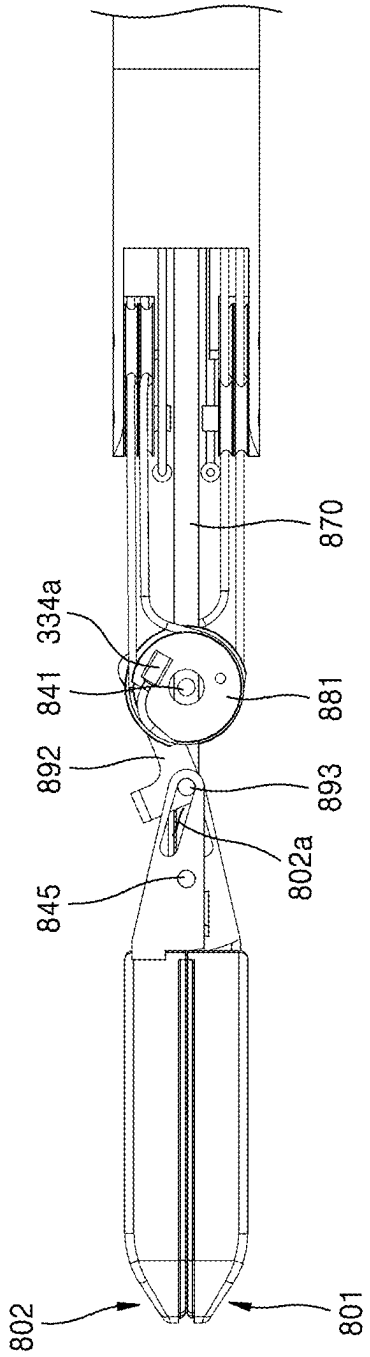

FIG. 103

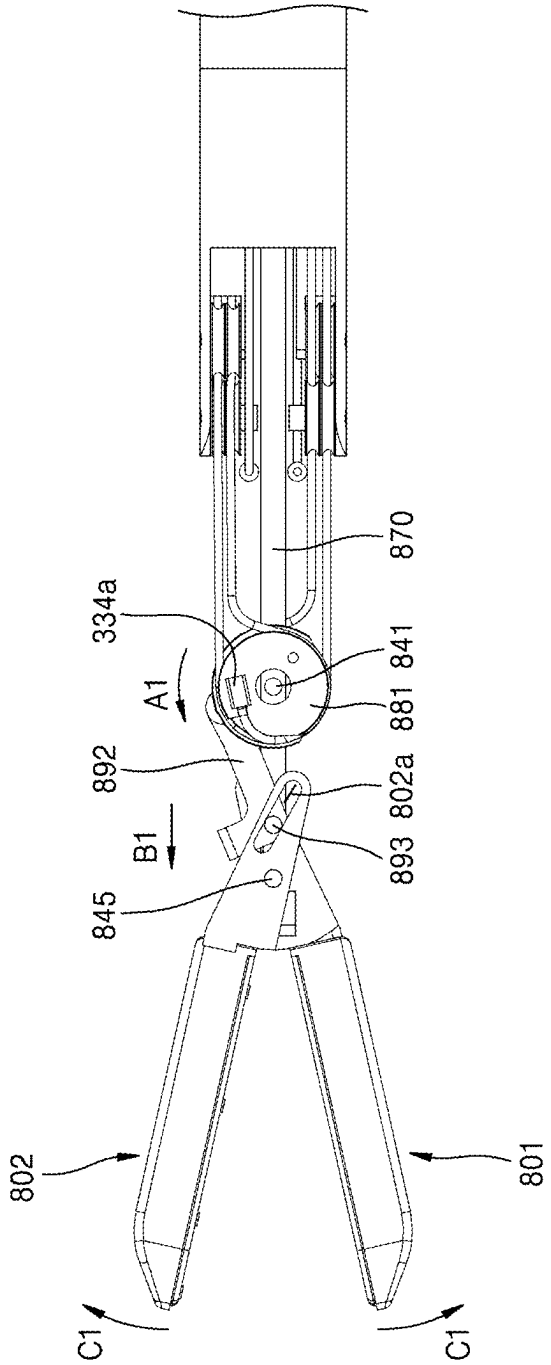

FIG. 104

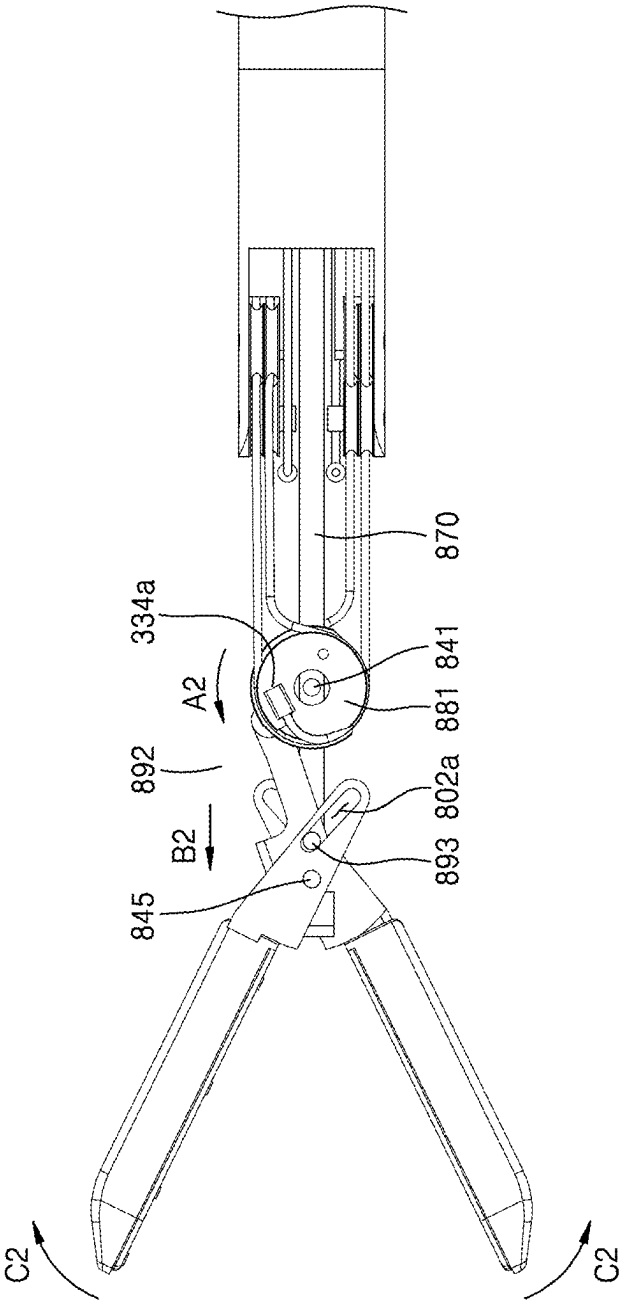

FIG. 105

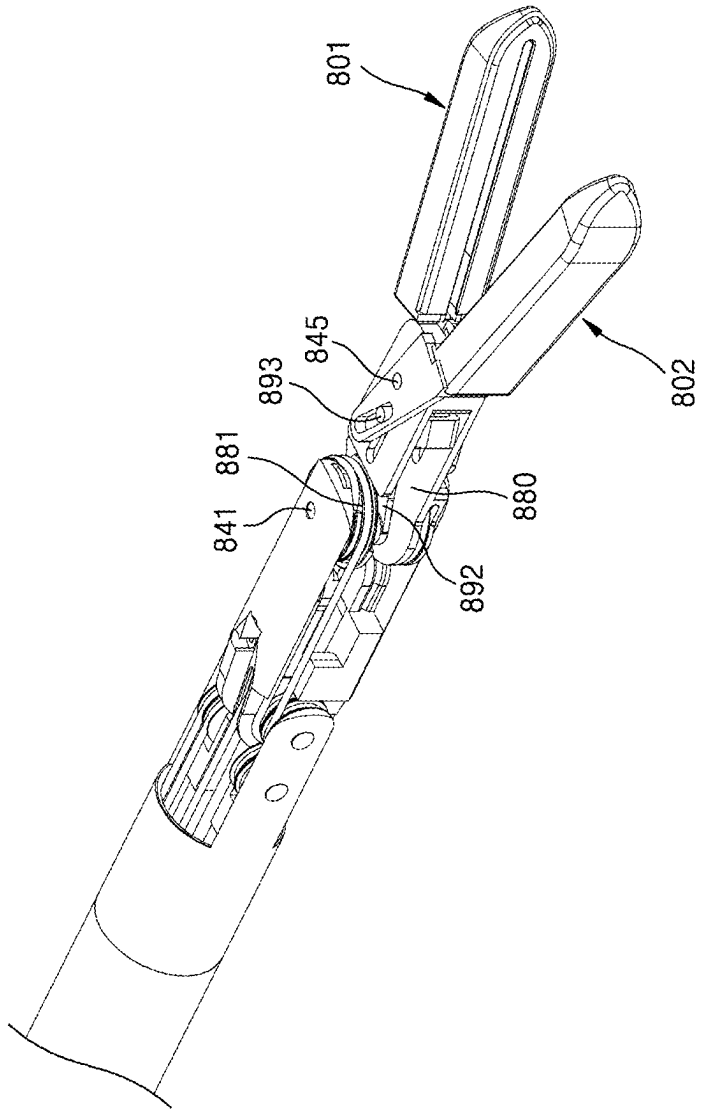

FIG. 106

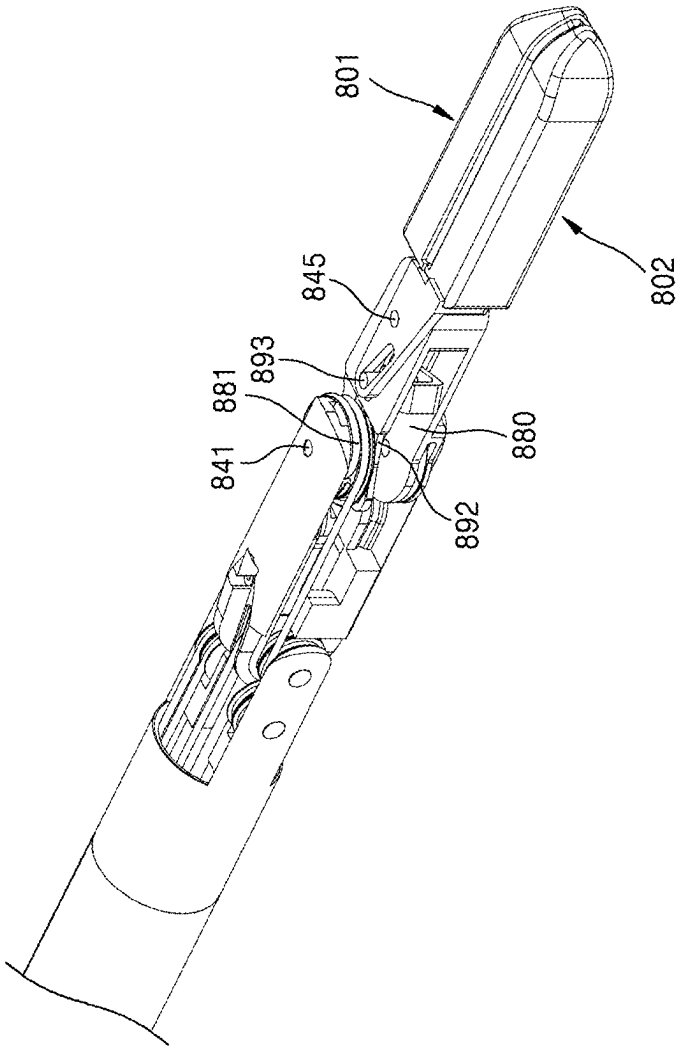

FIG. 107

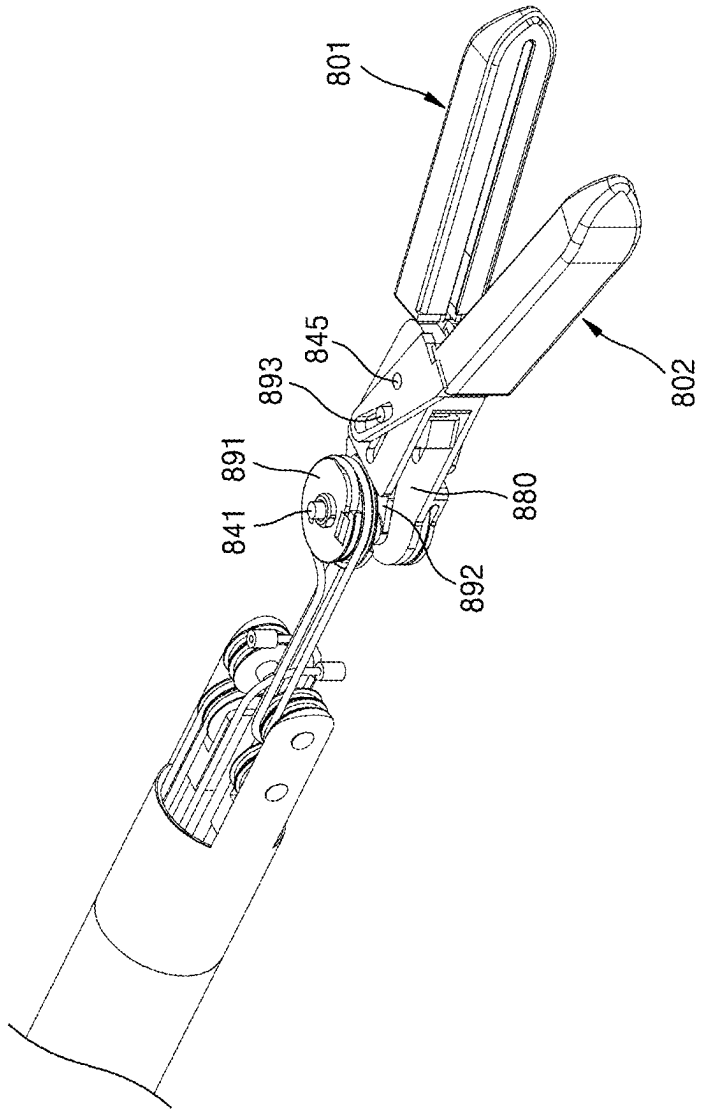

FIG. 108

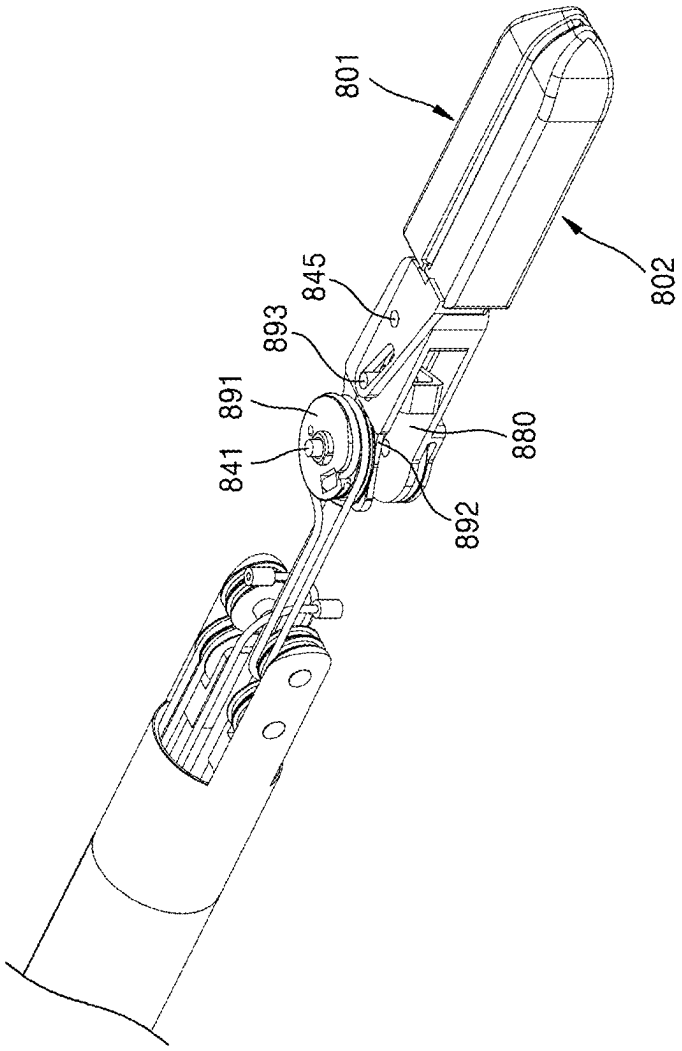

FIG. 109

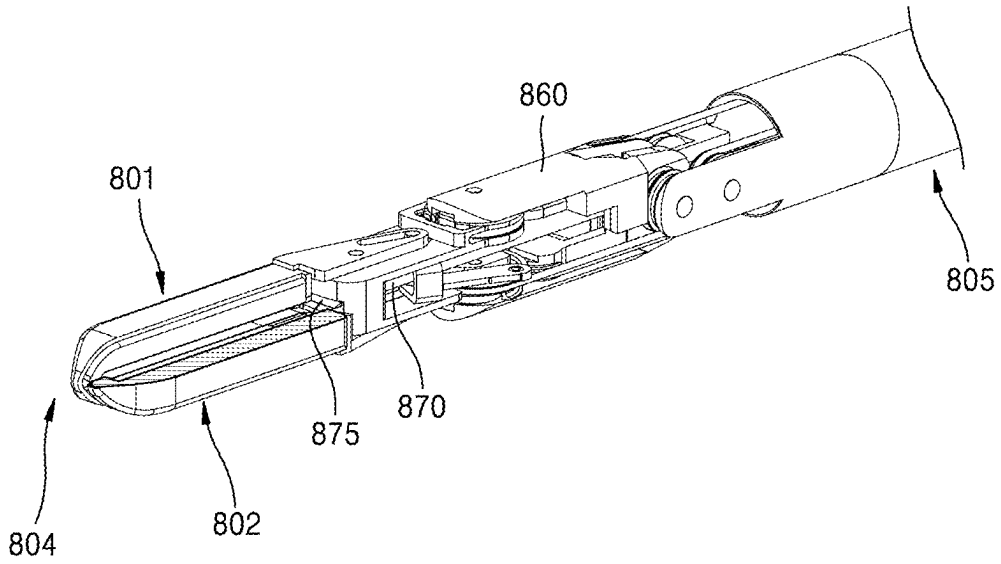

FIG. 110

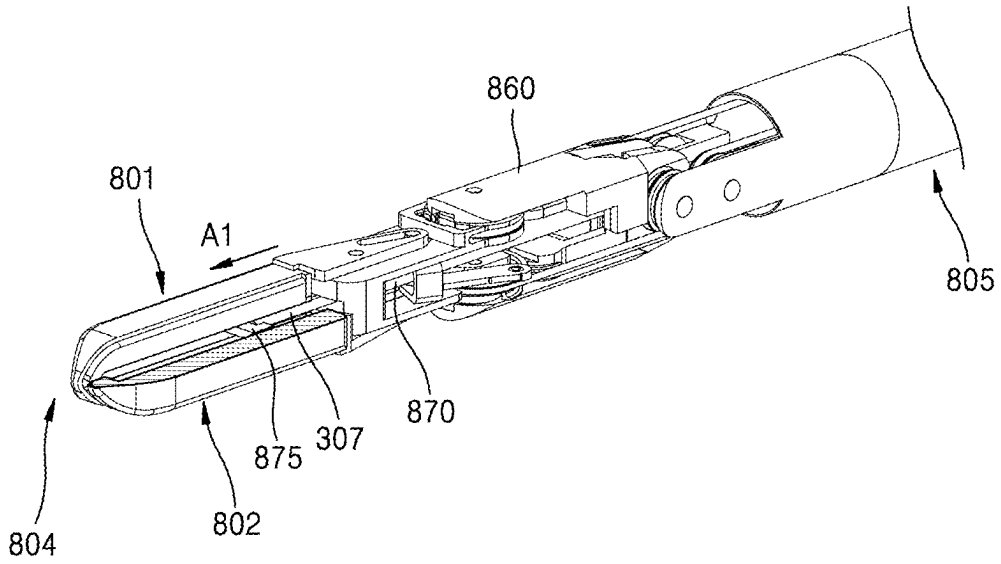

FIG. 111

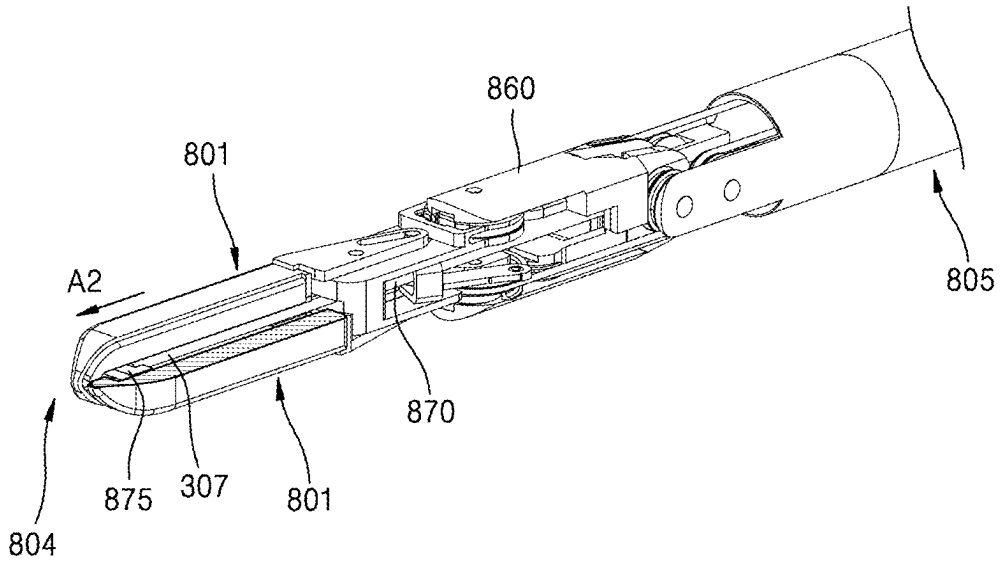

FIG. 112

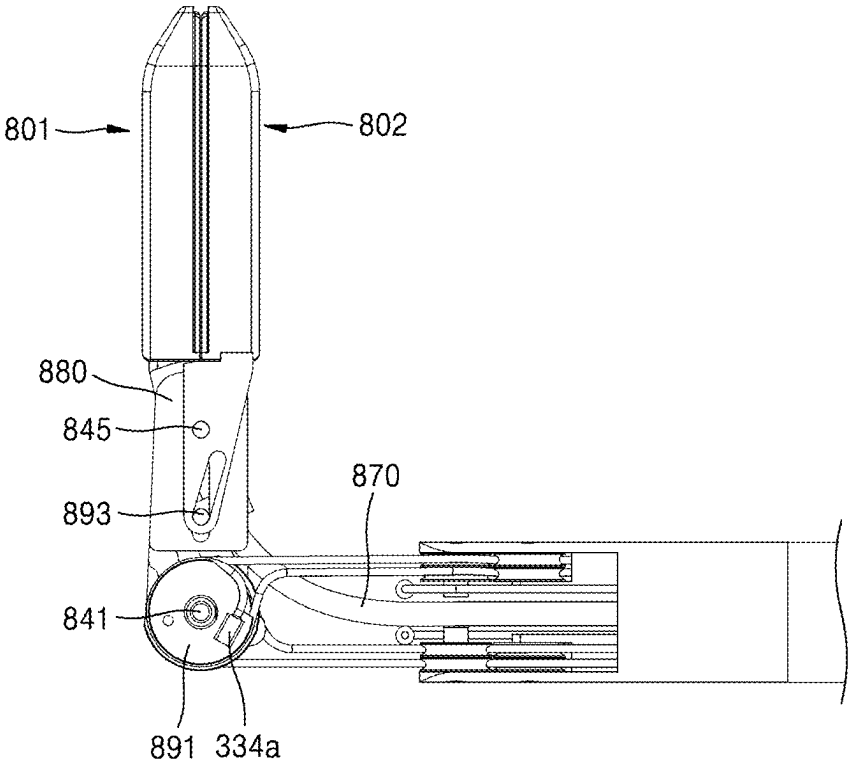

FIG. 113

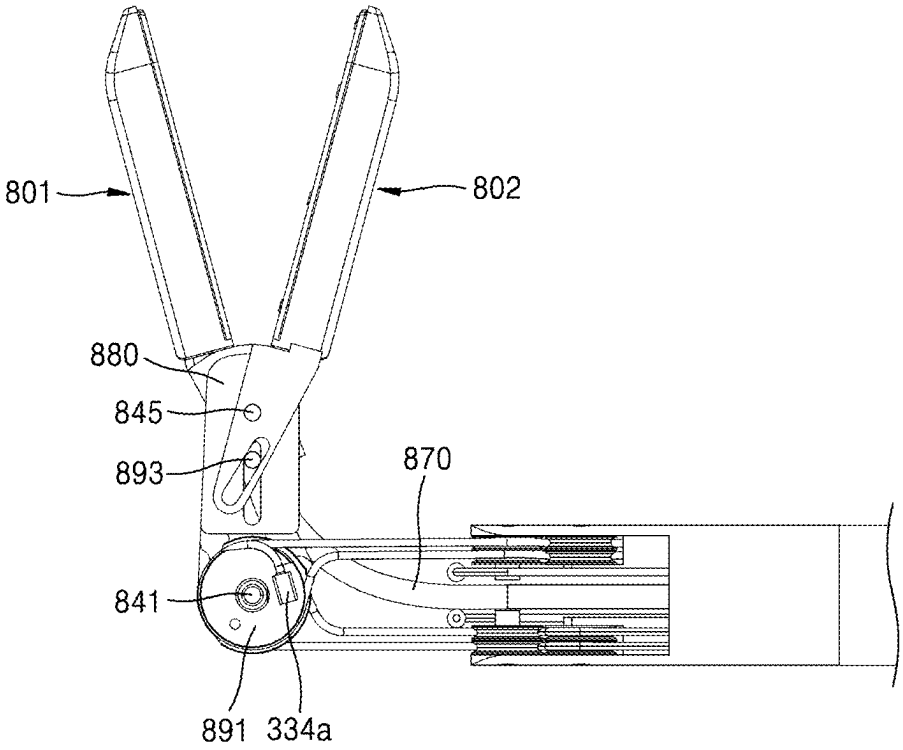

FIG. 114

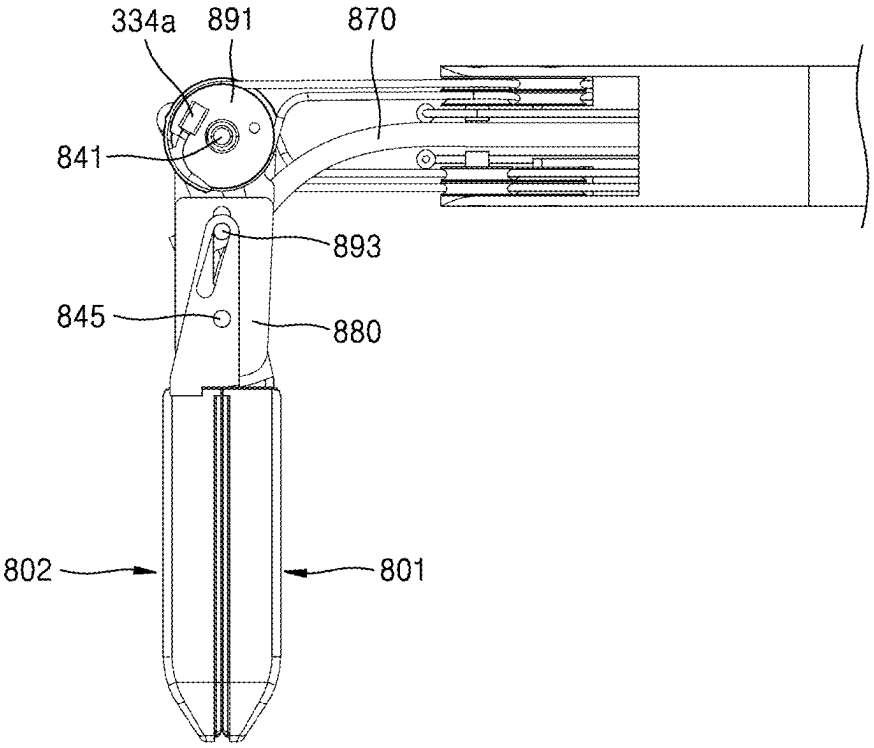

FIG. 115

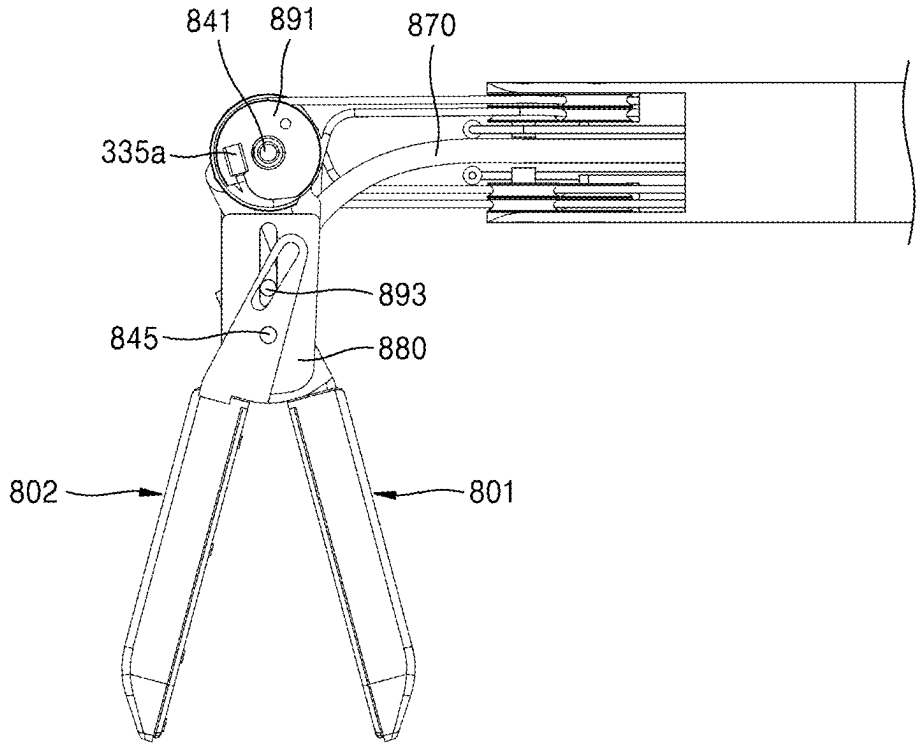

FIG. 116

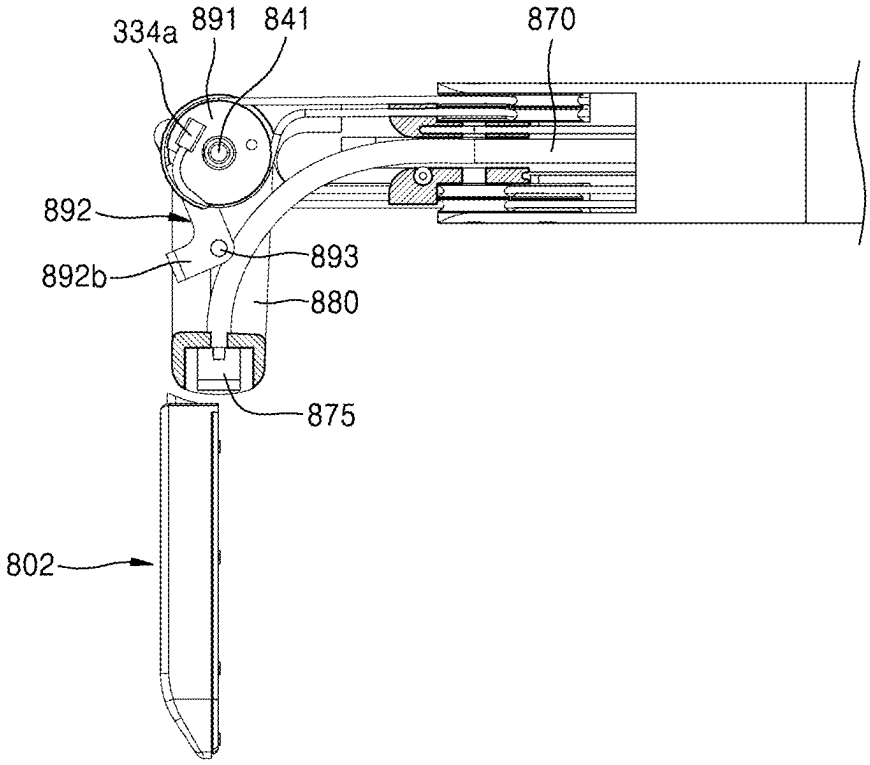

FIG. 117

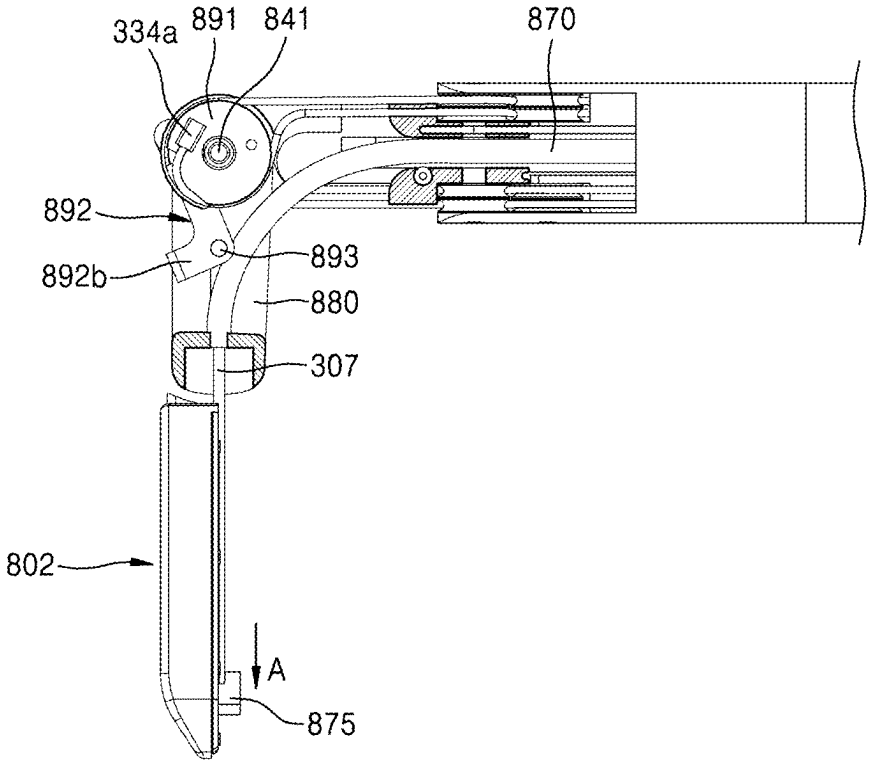

FIG. 118

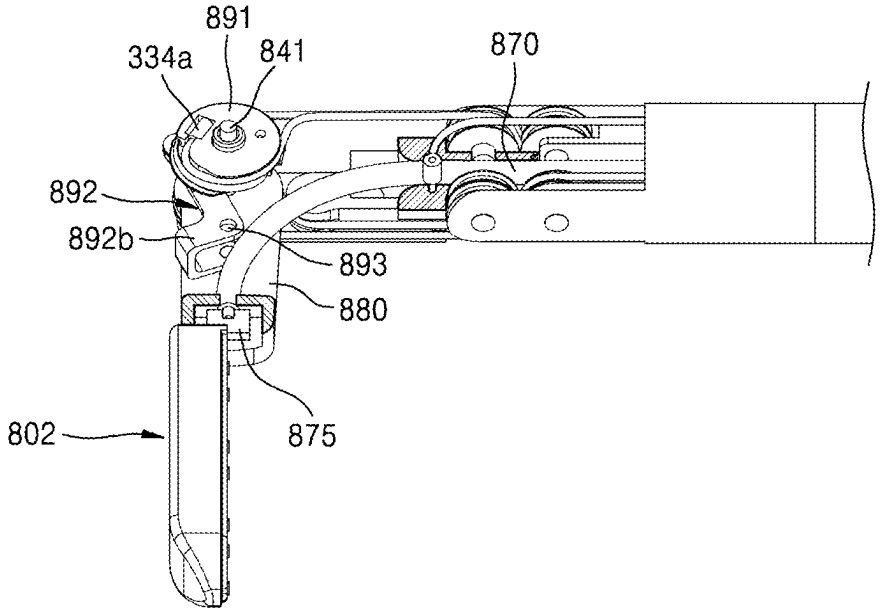

FIG. 119

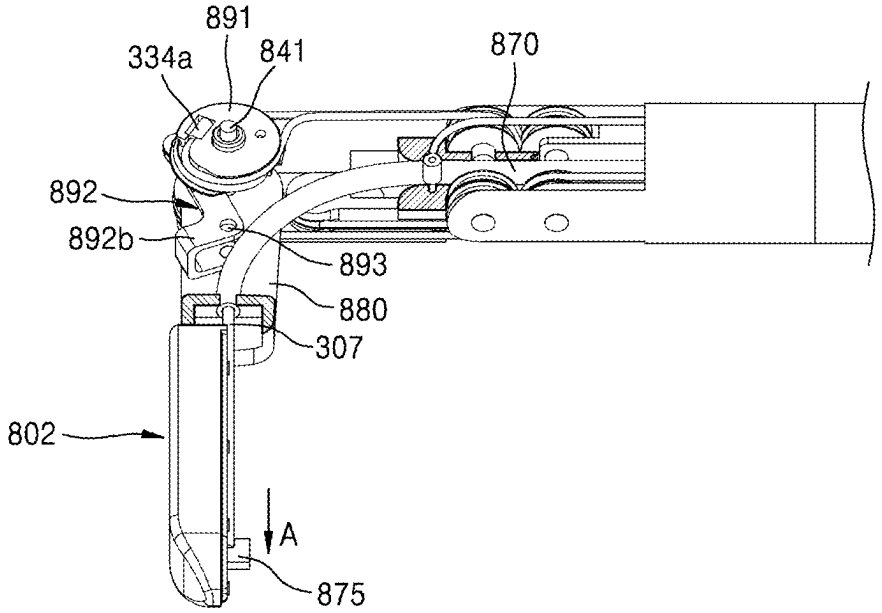

FIG. 120

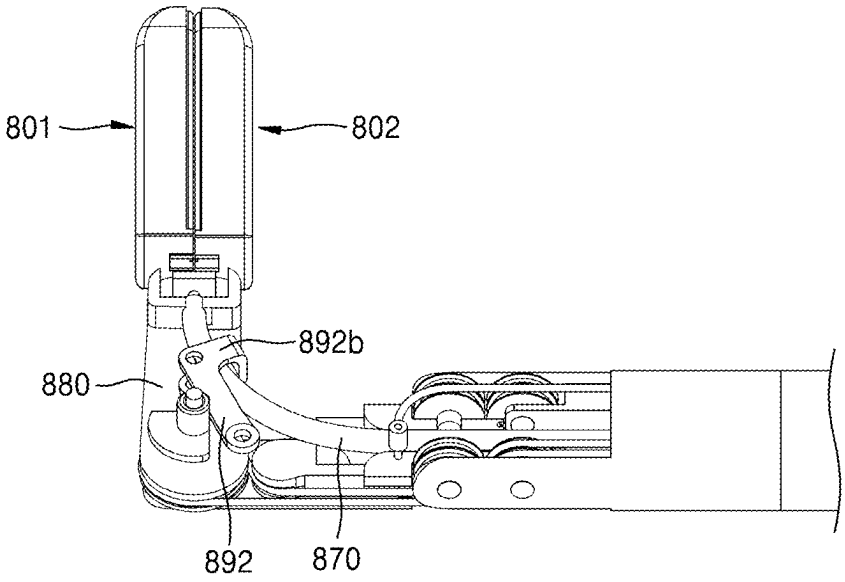

FIG. 121

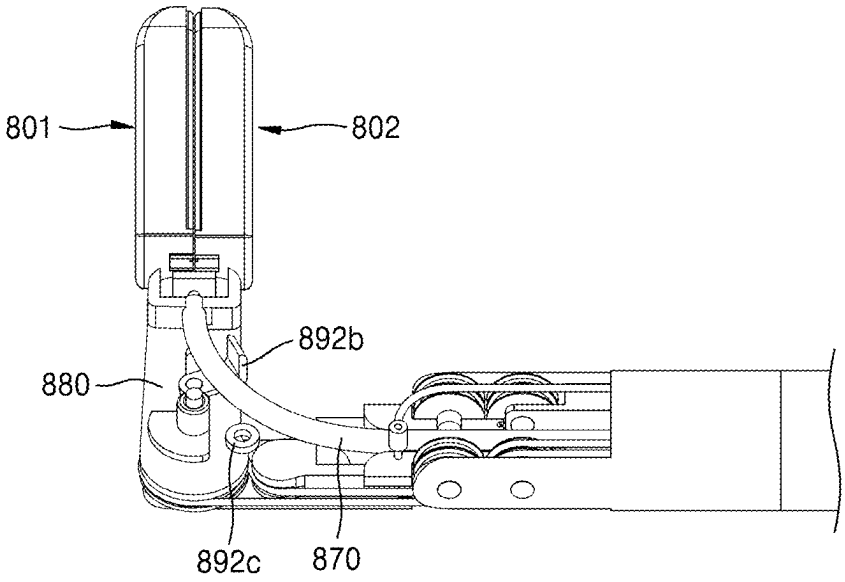

FIG. 122

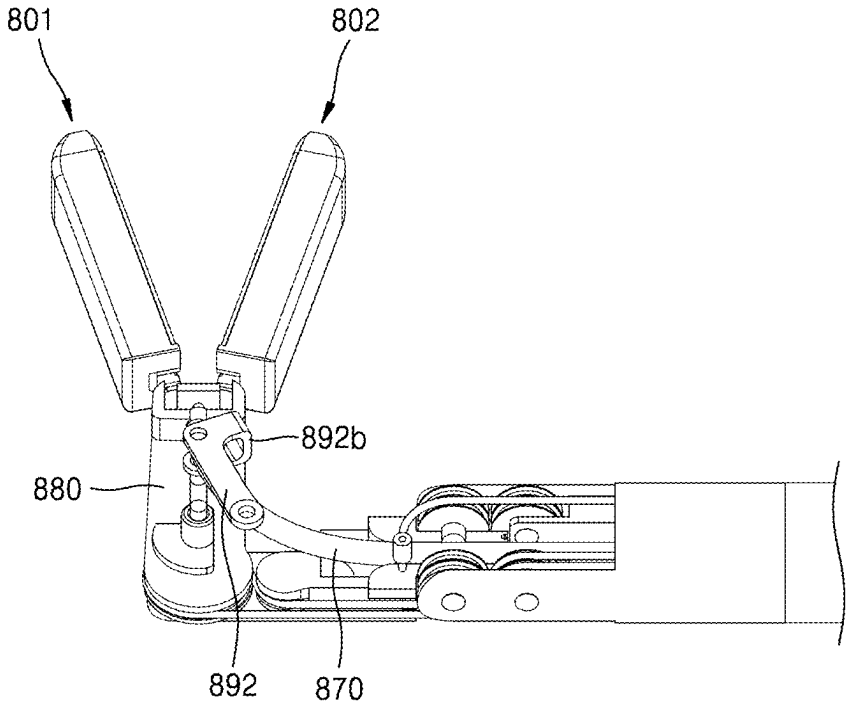

FIG. 123

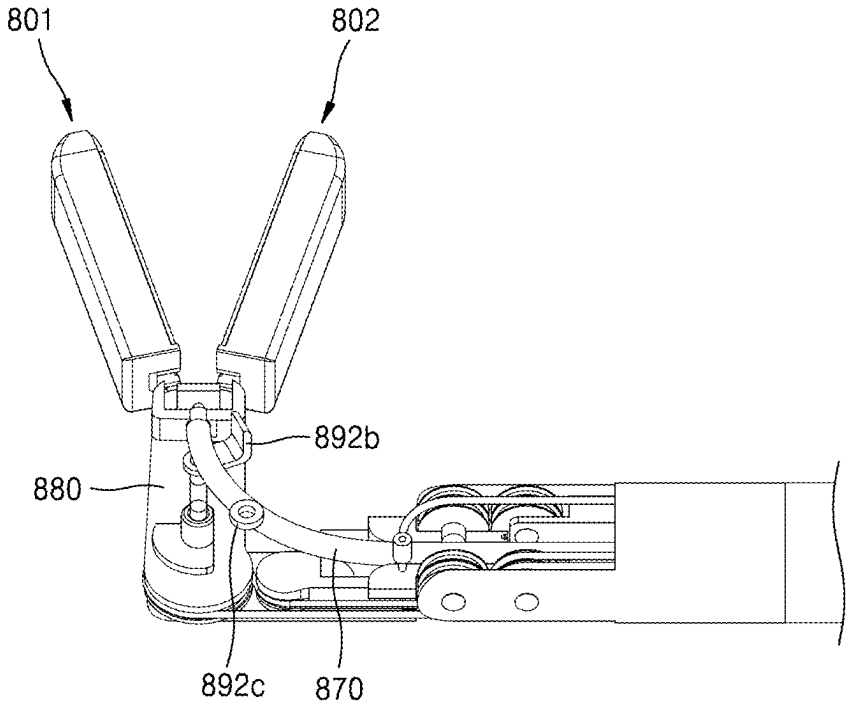

FIG. 124

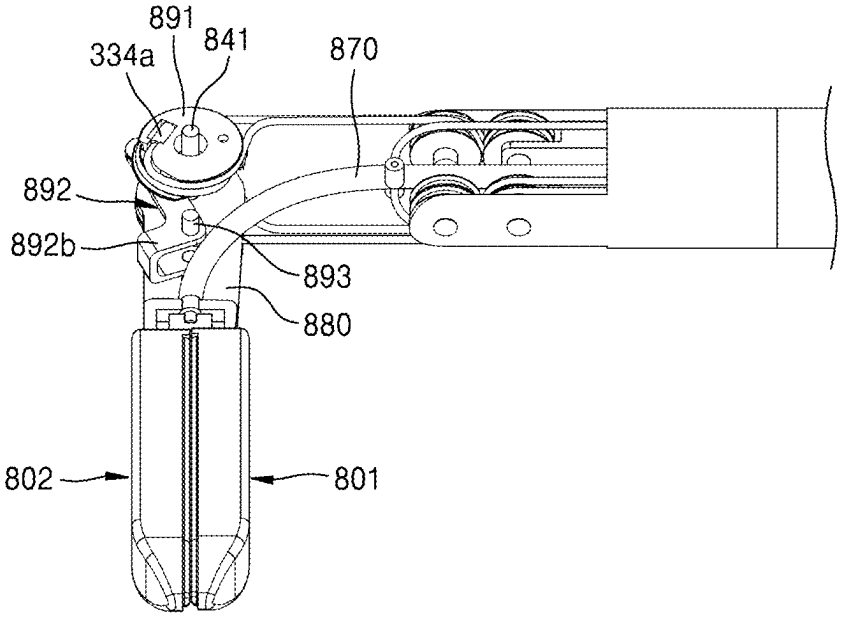

FIG. 125

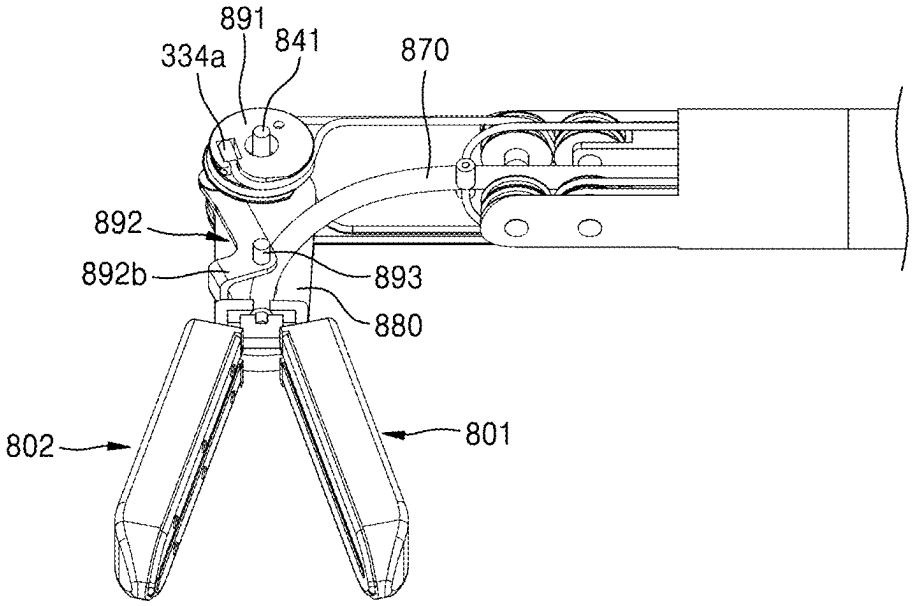

FIG. 126

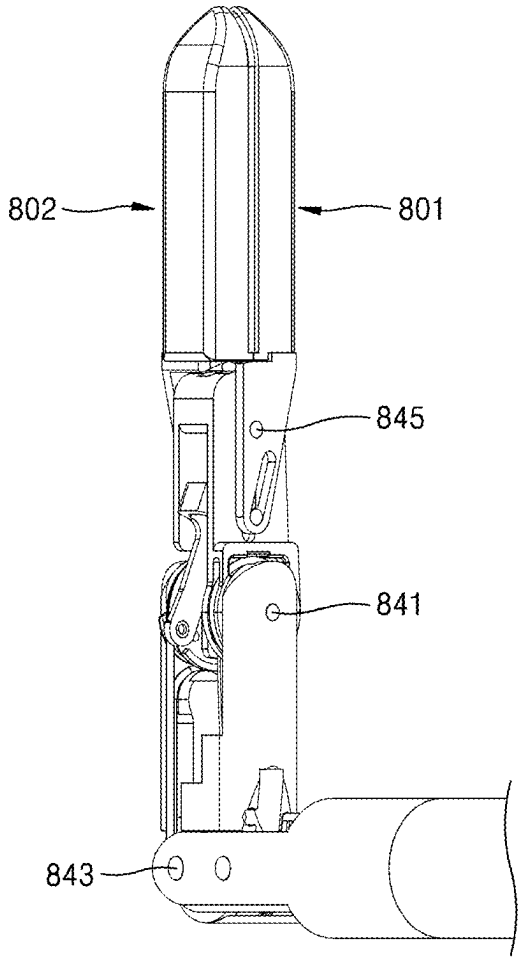

FIG. 127

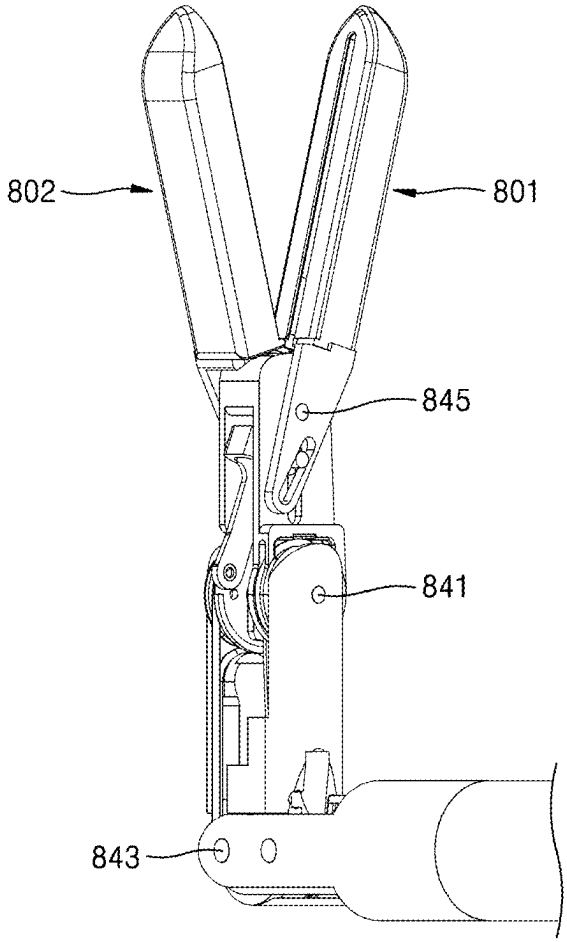

FIG. 128

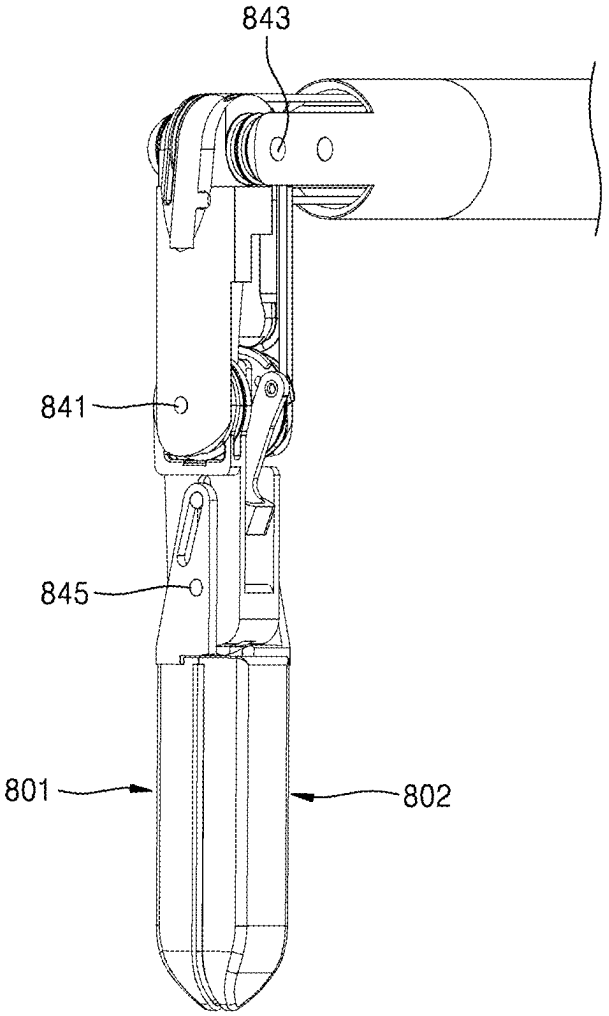

FIG. 129

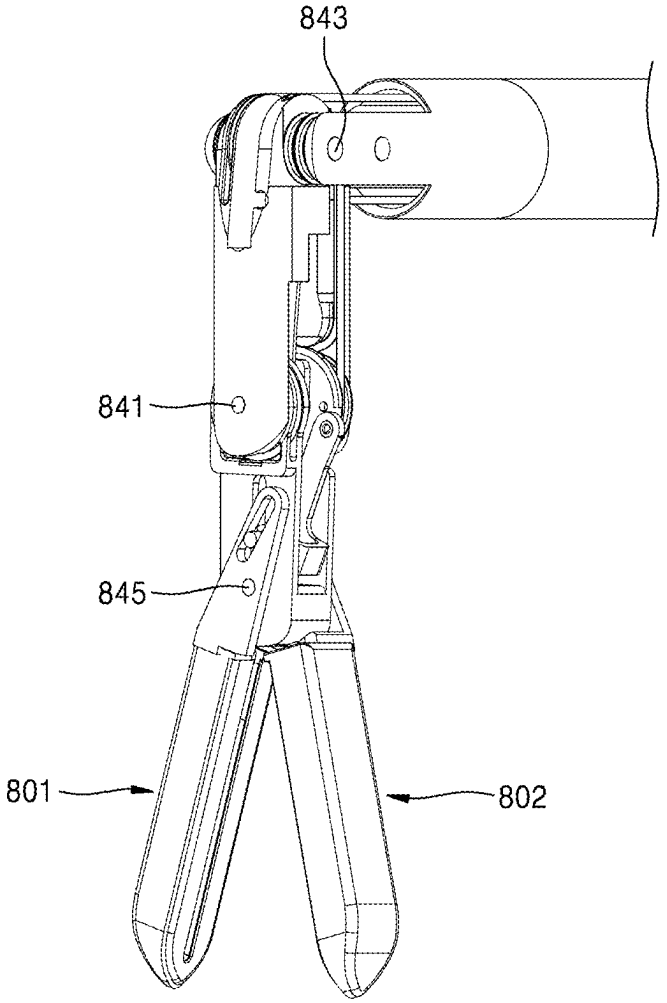

FIG. 130

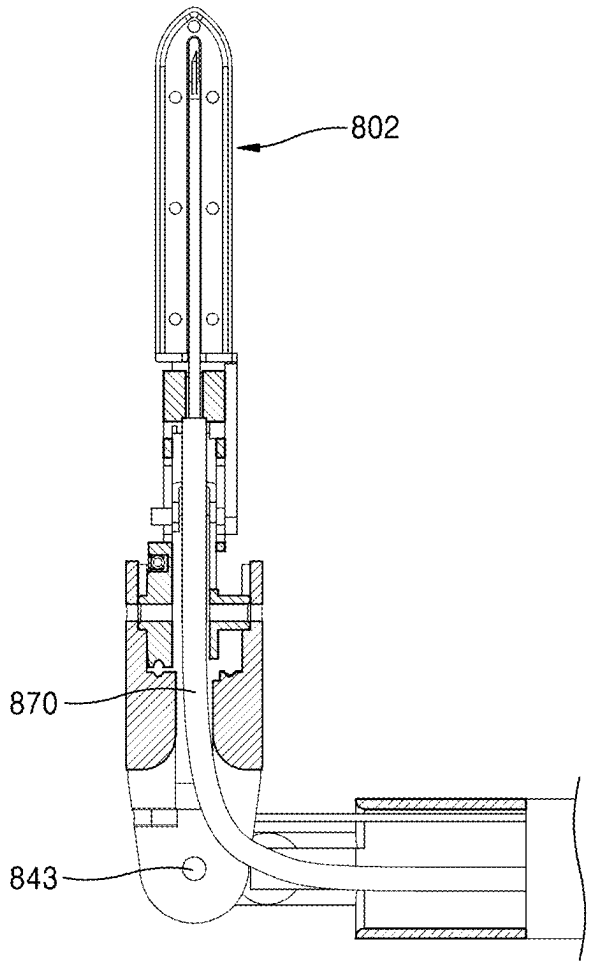

FIG. 131

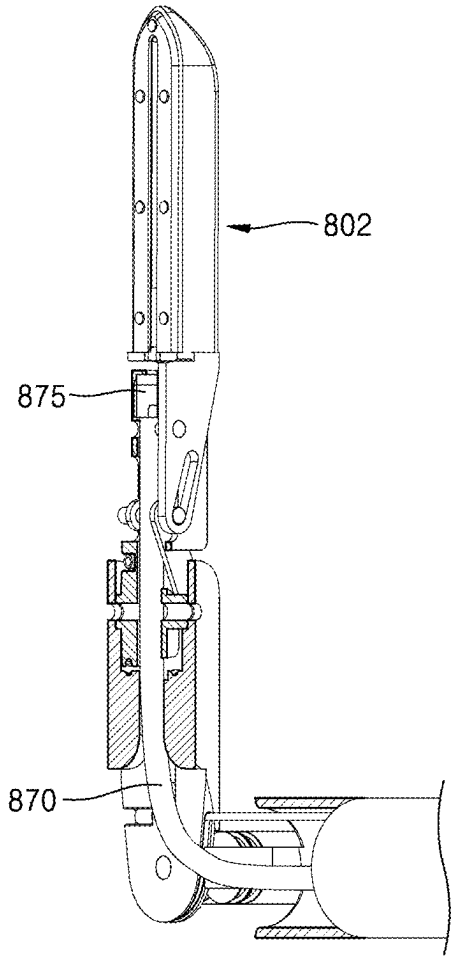

FIG. 132

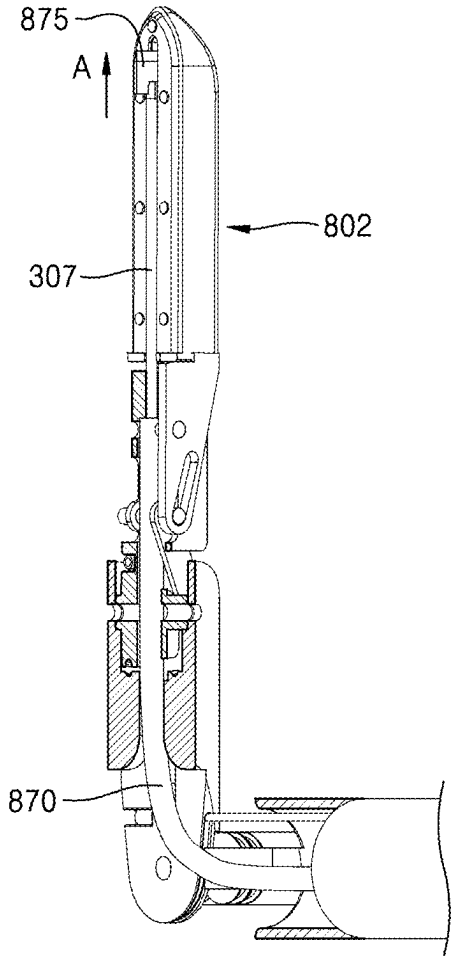

FIG. 133

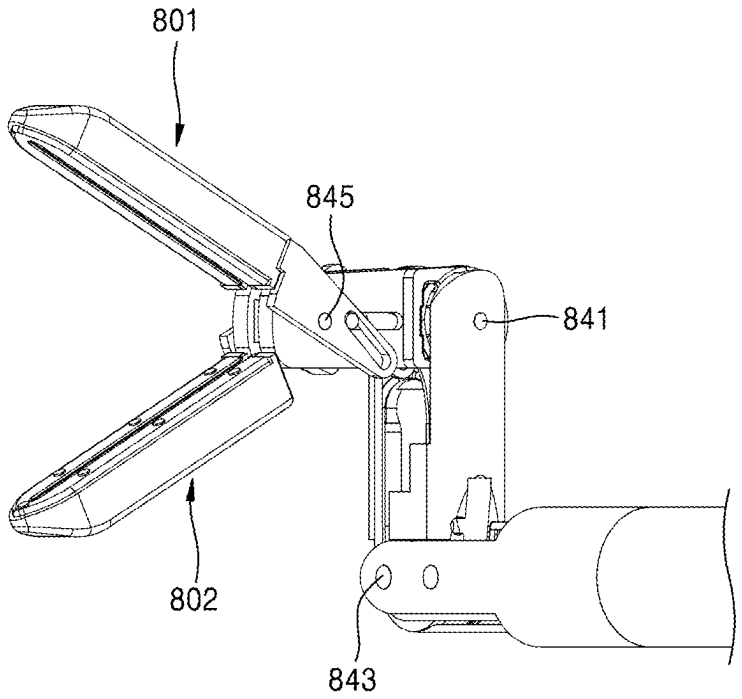

FIG. 134

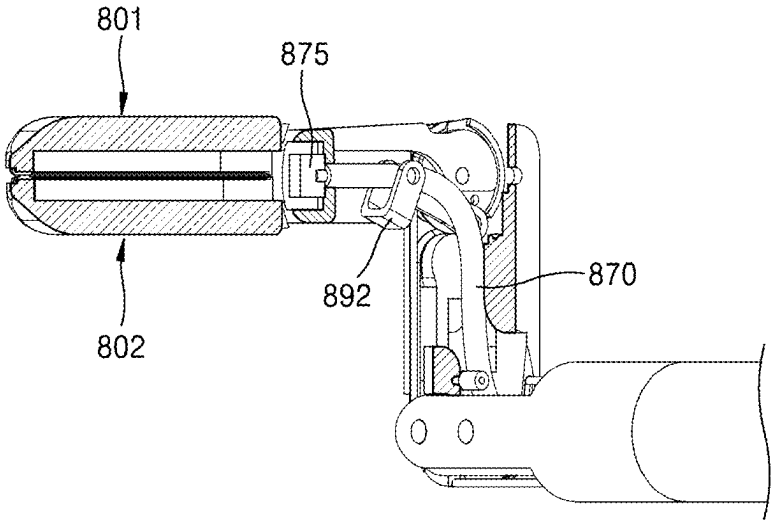

FIG. 135

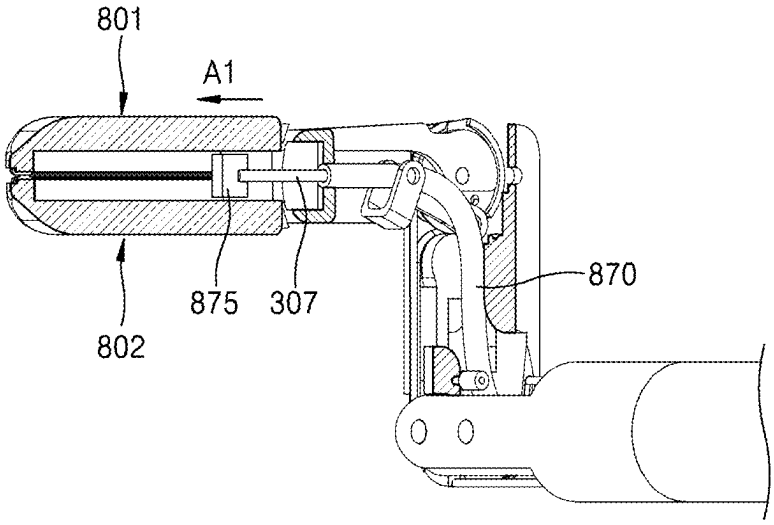

FIG. 136

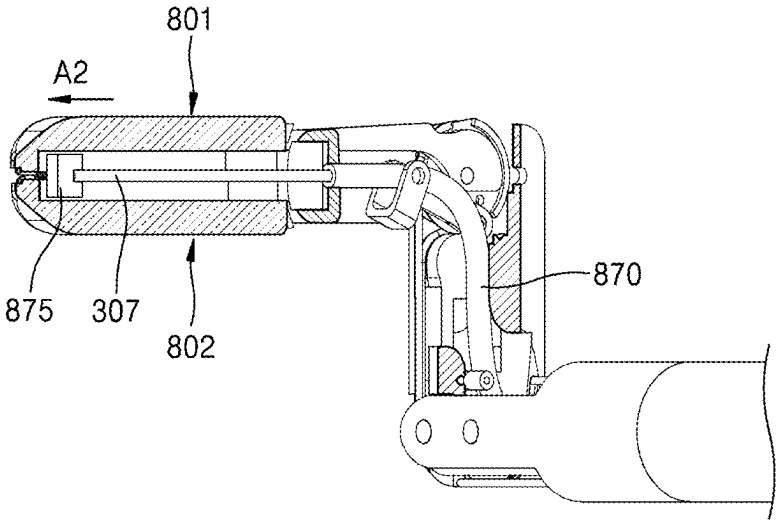

FIG. 137

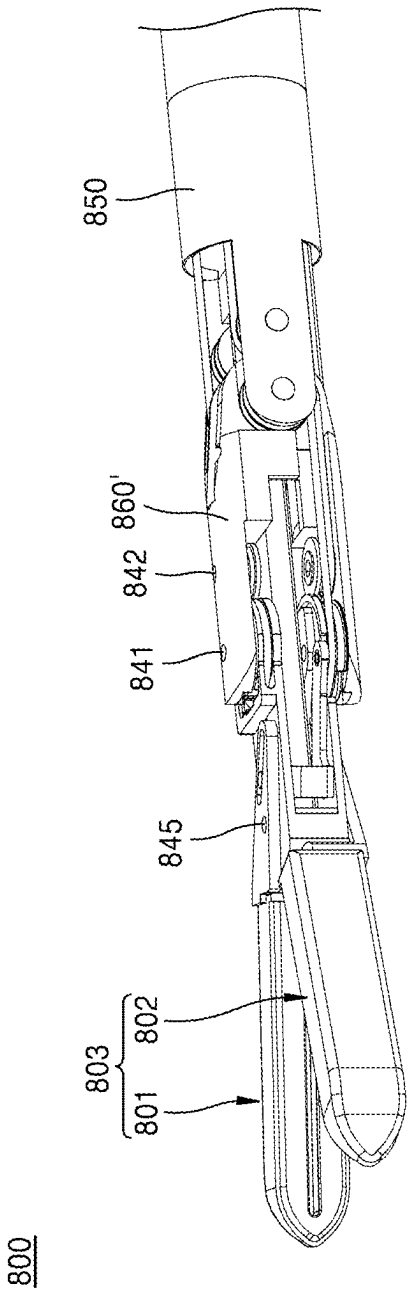

FIG. 138

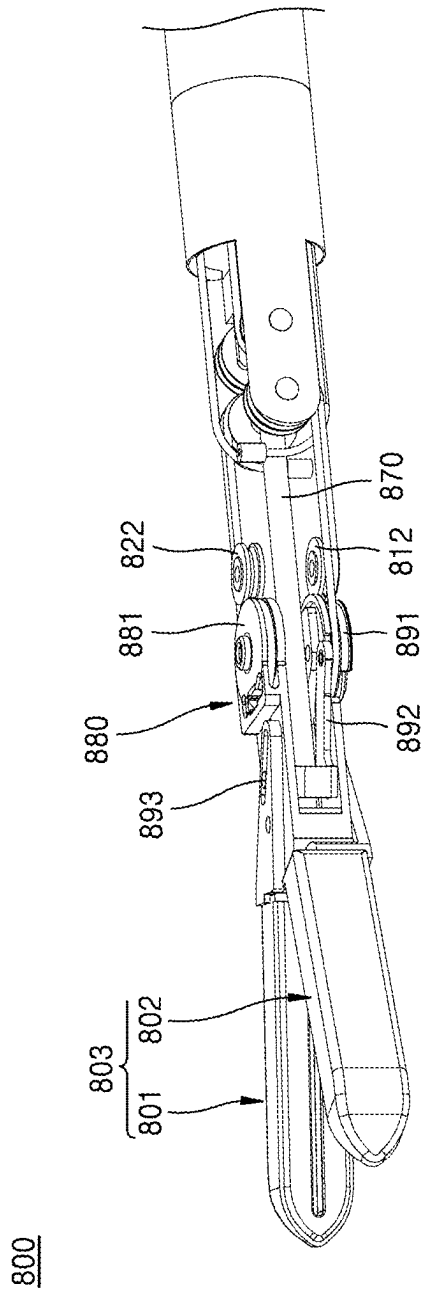

FIG. 139

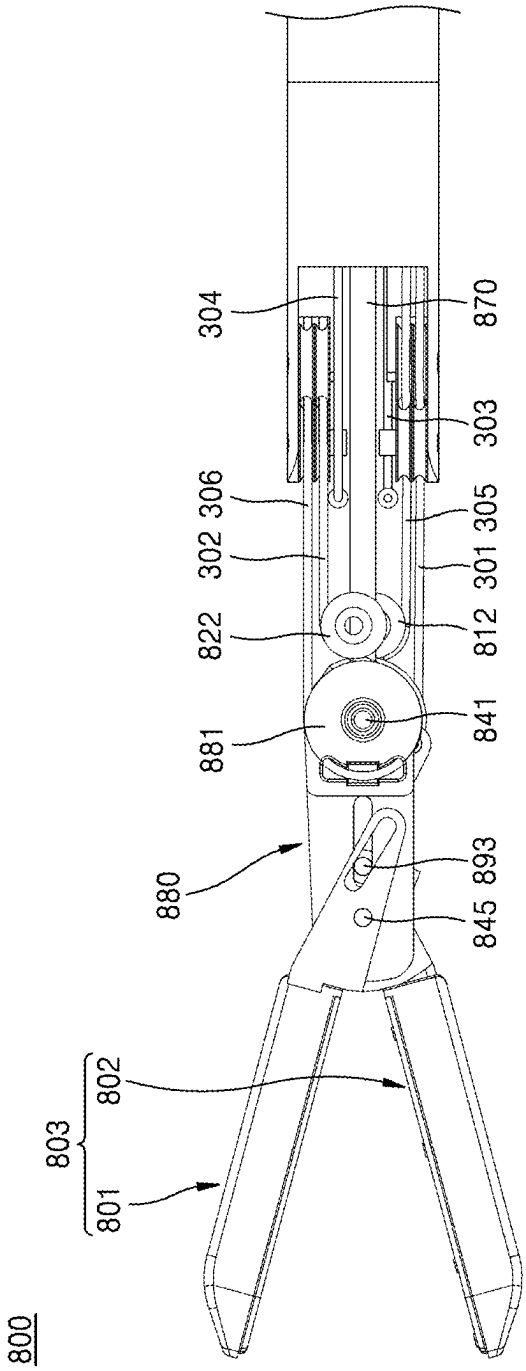
800
803
801
802
880
845
893
881
841
822
812
302
306
301
305
304
303
870

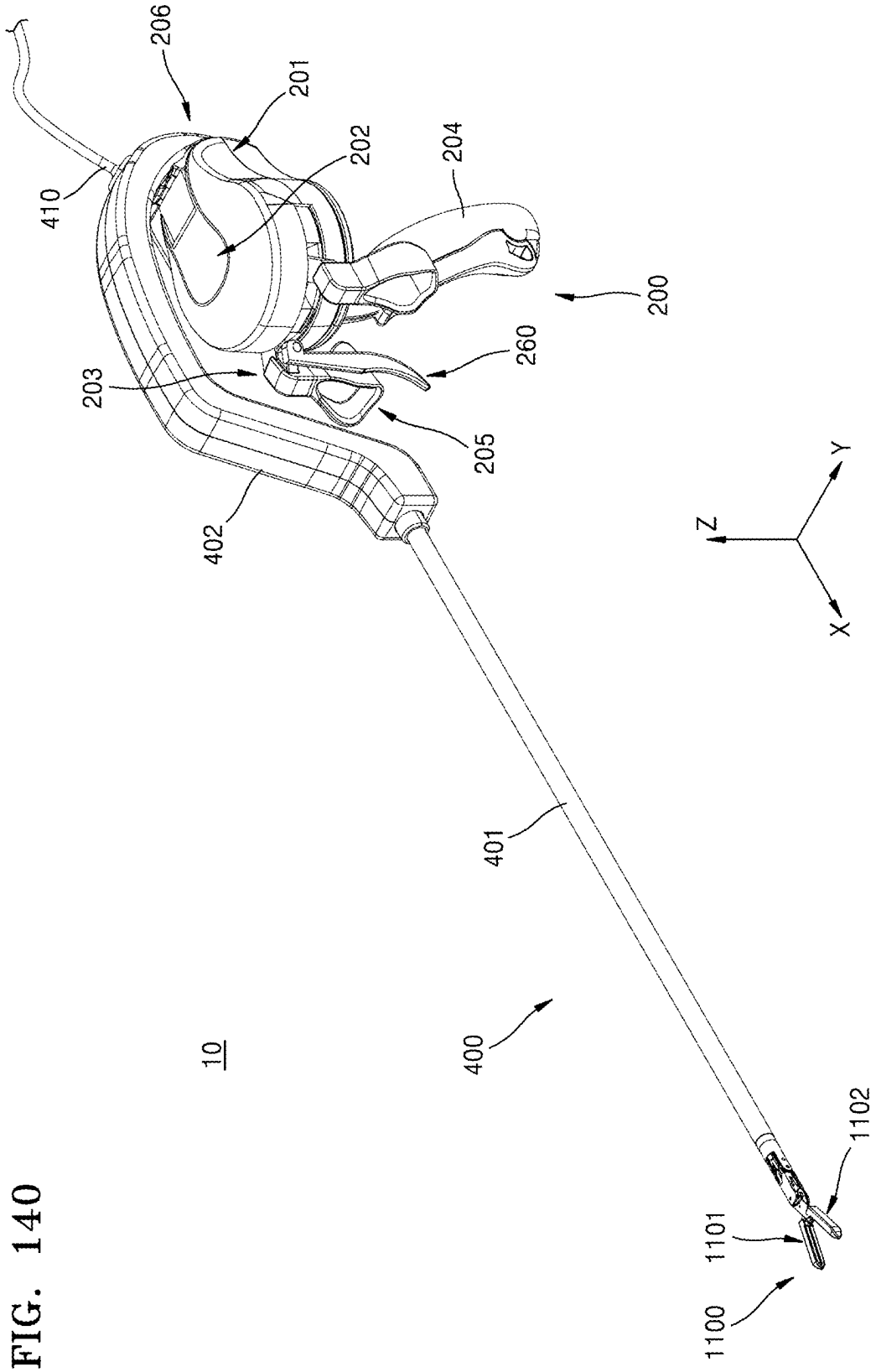
206
201
202
204
410
200
260
203
205
402
Z
Y
X
401
10
400
1102
1101
1100

FIG. 140

FIG. 141

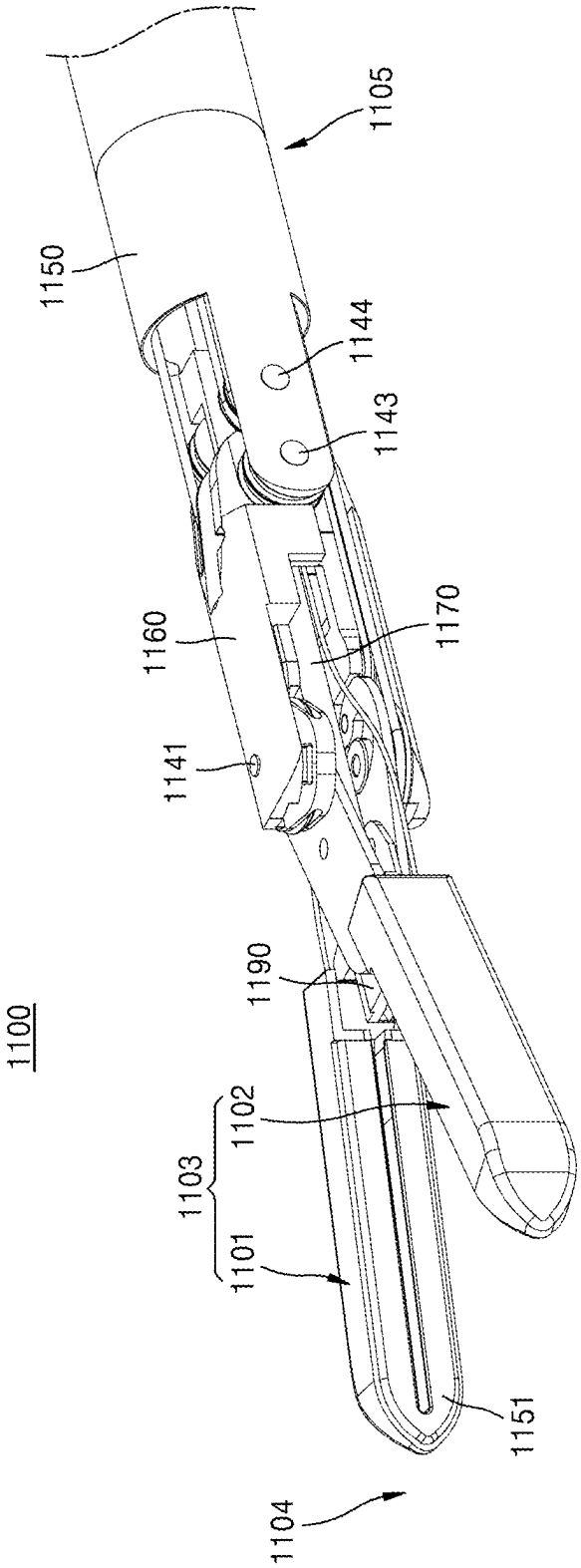
1100
1105
1150
1144
1143
1160
1170
1141
1190
1102
1103
1101
1151
1104

FIG. 142

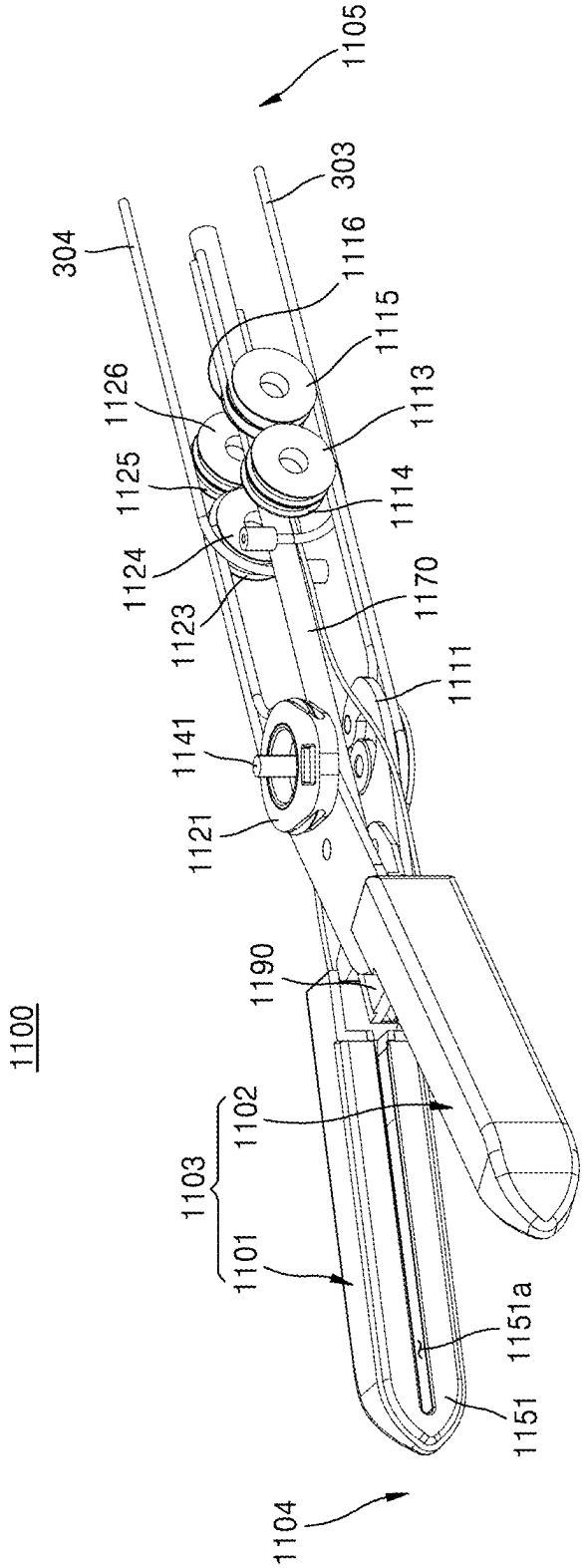
1105
303
304
1116
1115
1126
1113
1125
1114
1124
1170
1123
1111
1141
1121
1190
1100
1102
1103
1101
1151a
1151
1104

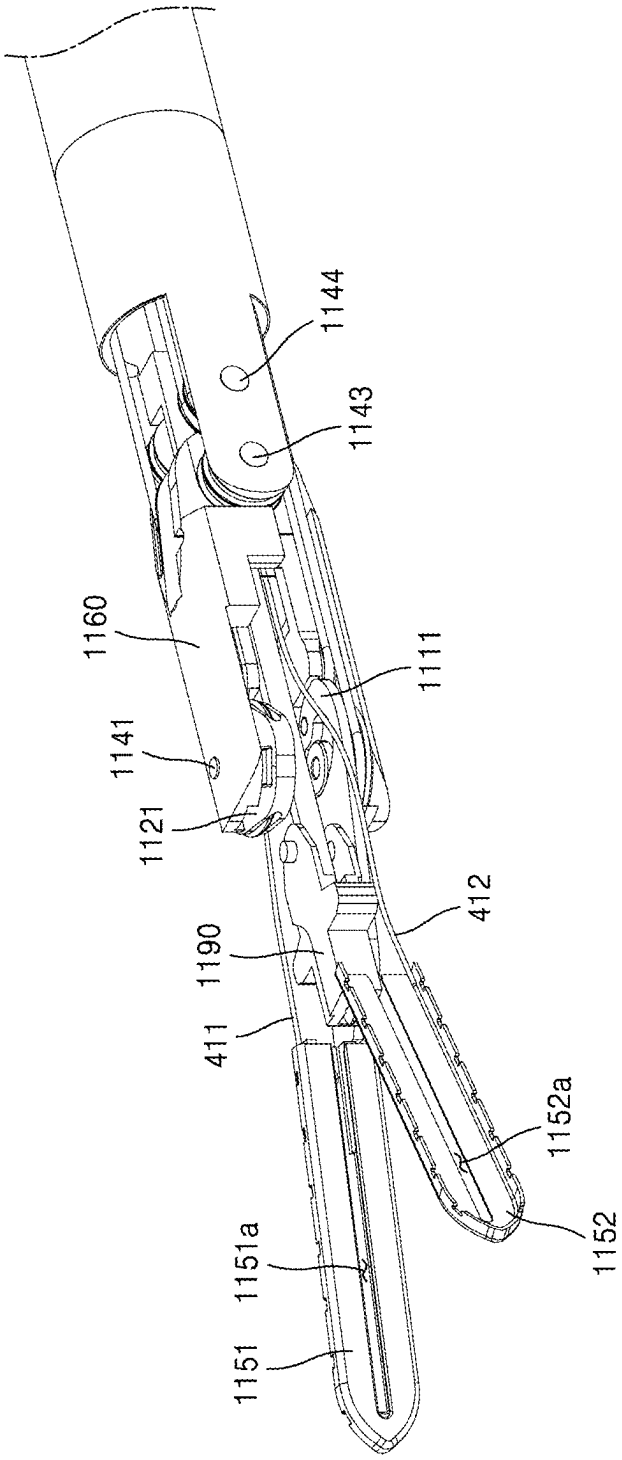
1144
1143
1160
1111
1141
1121
412
1190
411
1152a
1152
1151a
1151

FIG. 143

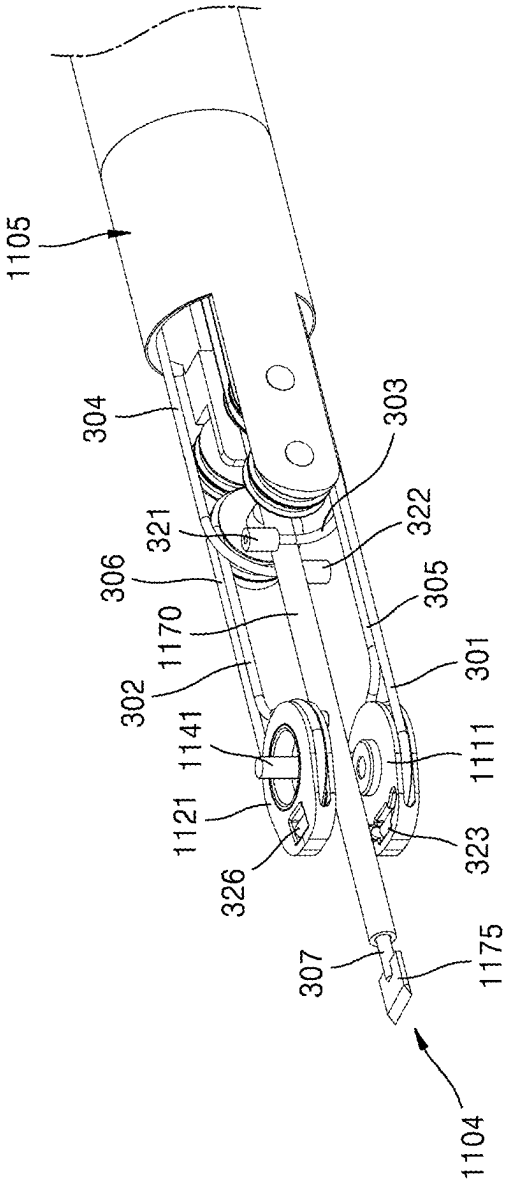
1105
304
306
321
302
1170
1141
1121
326
307
1104
303
322
305
301
1111
323
1175

FIG. 144

FIG. 145

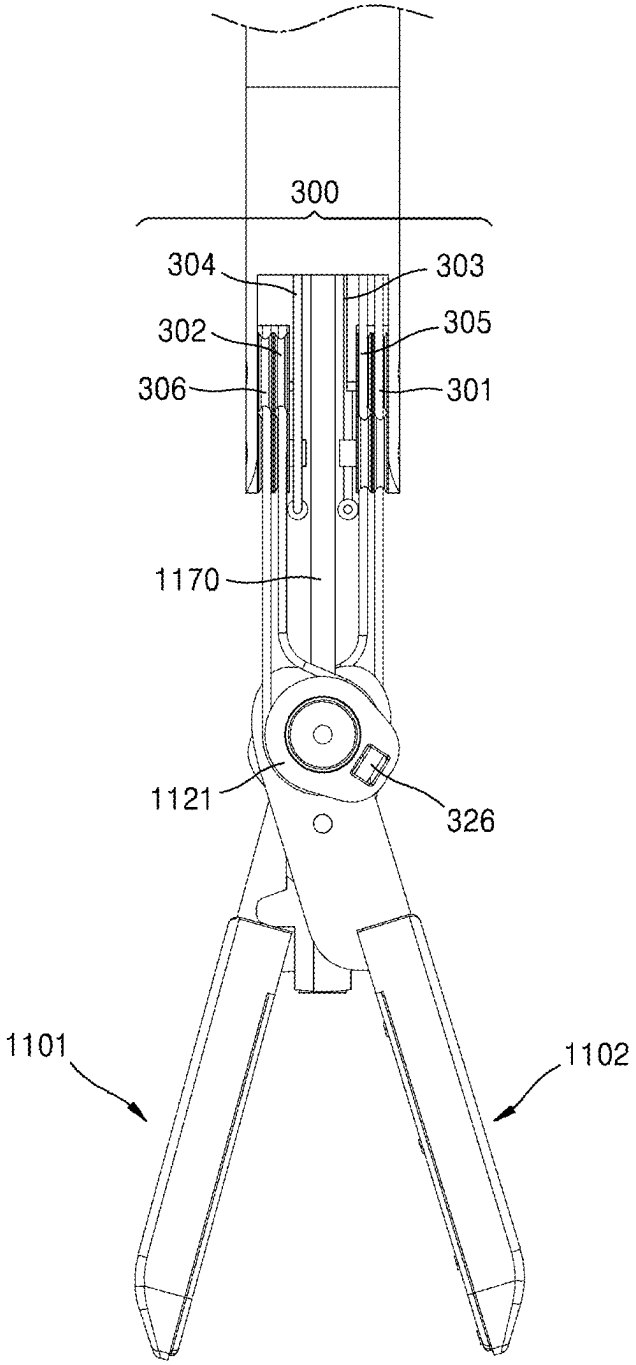

FIG. 146

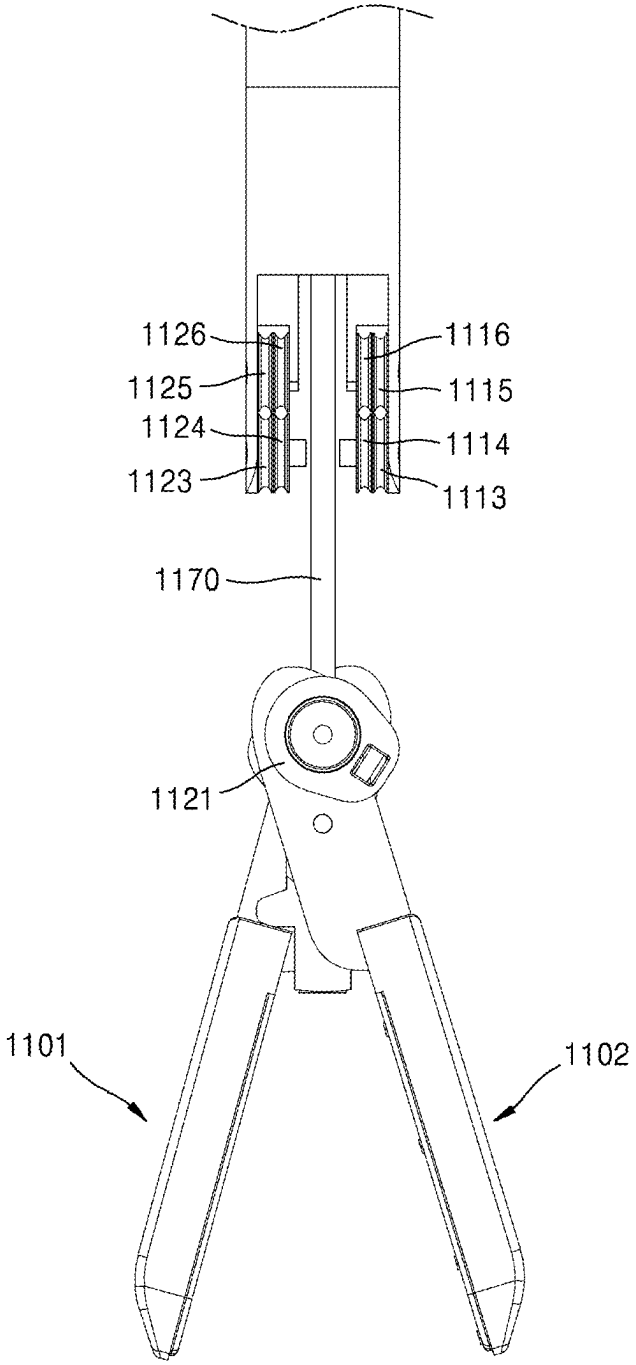

FIG. 147

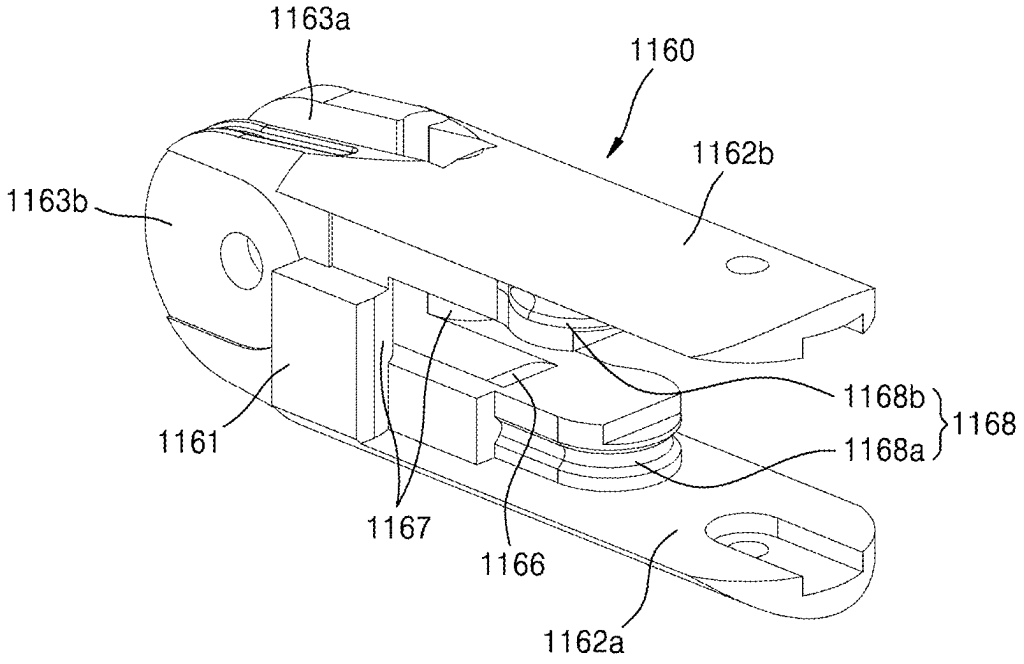
1163a
1160
1162b
1163b
1168b
1168
1168a
1161
1167
1166
1162a

FIG. 148

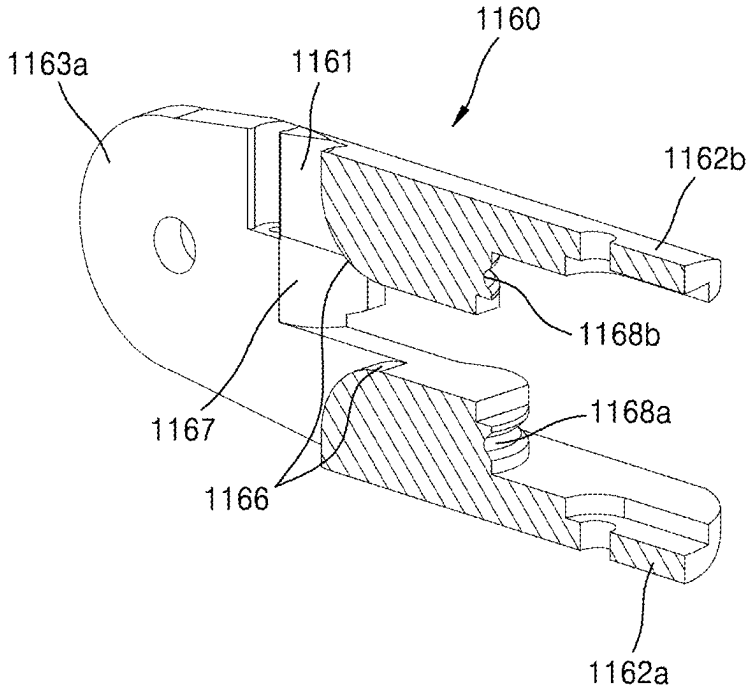

FIG. 149

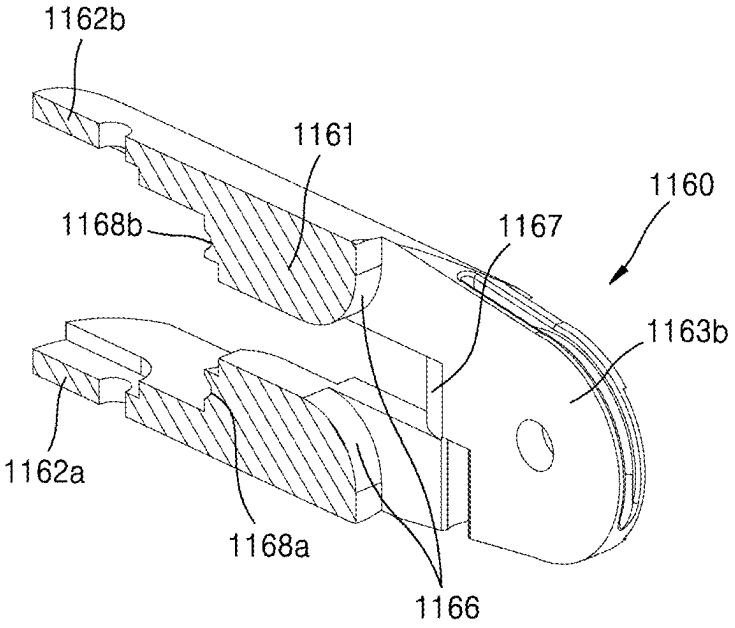

FIG. 150

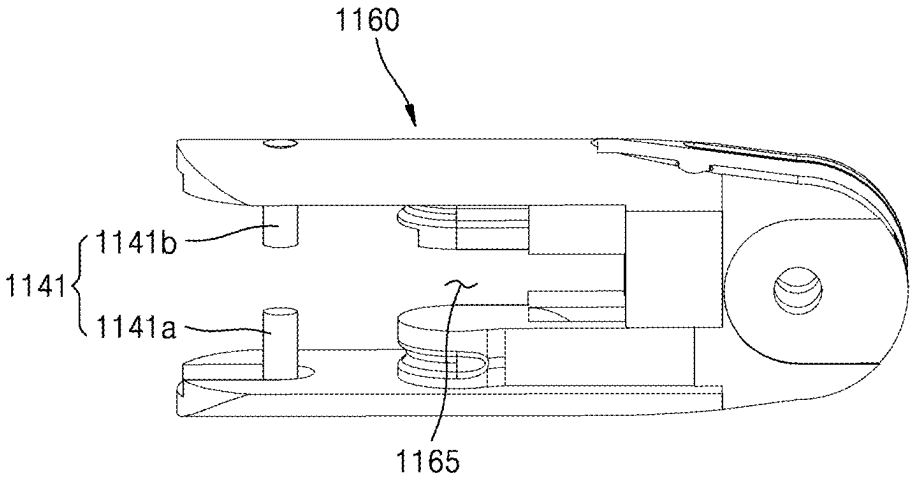

FIG. 151

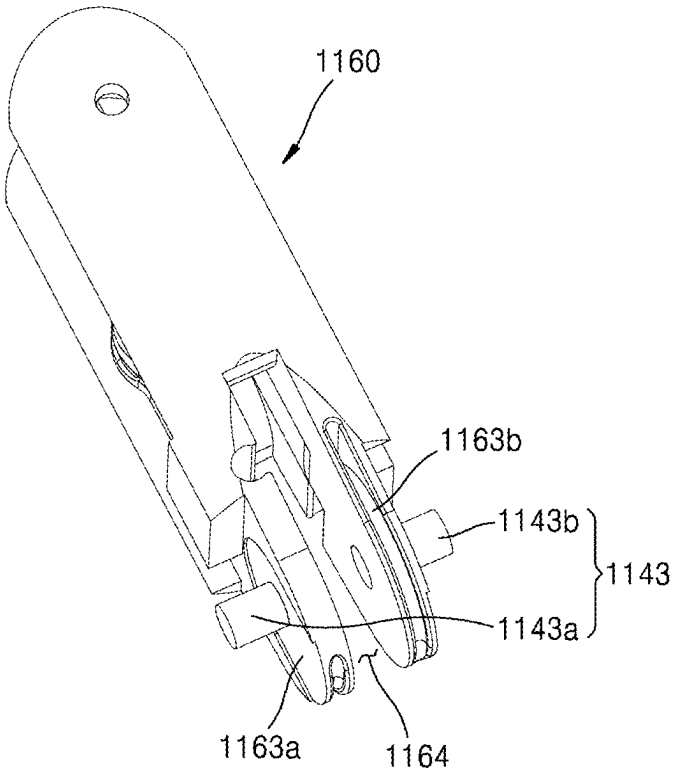

FIG. 152

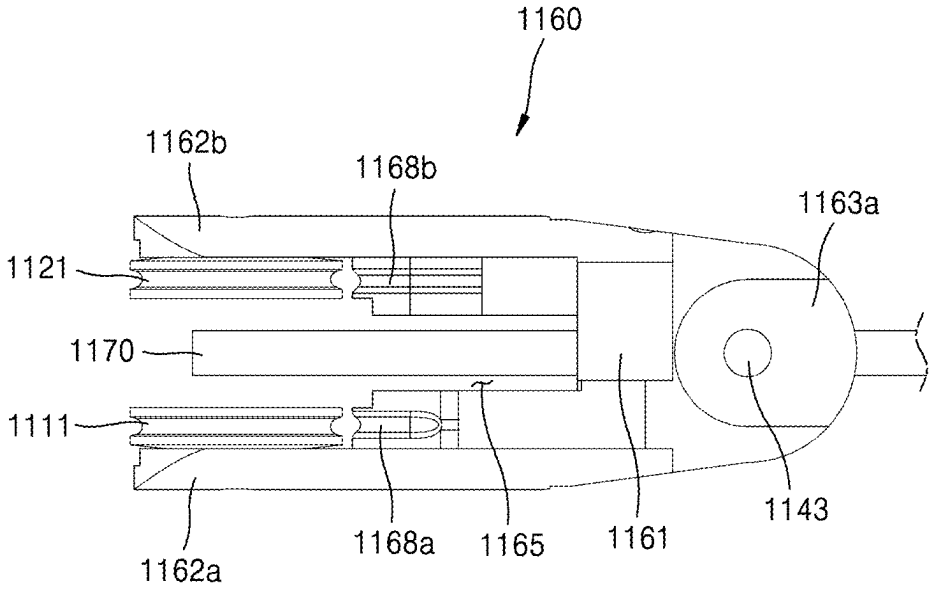
1160
1162b
1168b
1163a
1121
1170
1111
1143
1162a
1168a
1165
1161

FIG. 153

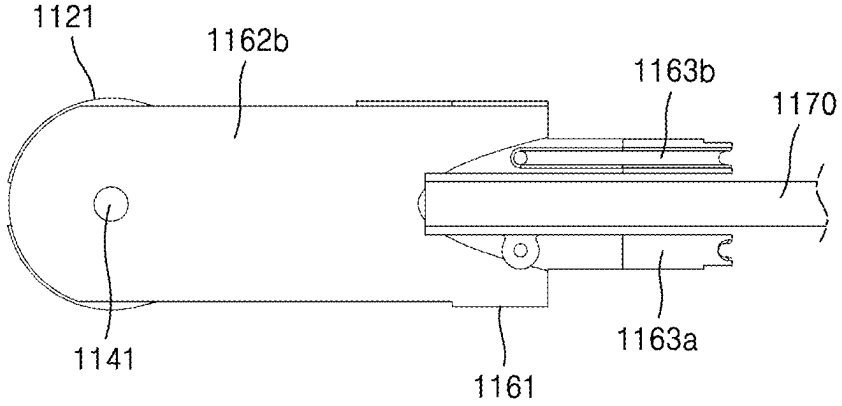

FIG. 154A

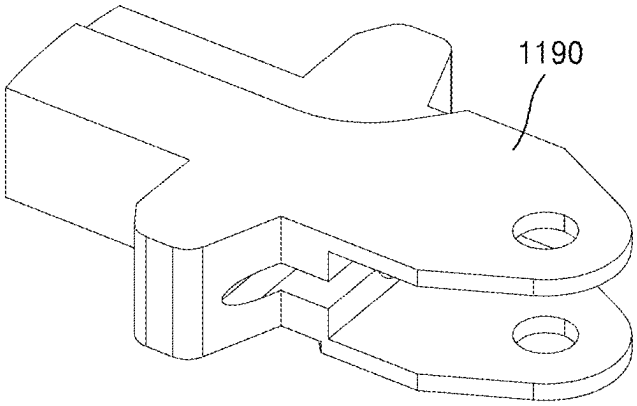

FIG. 154B

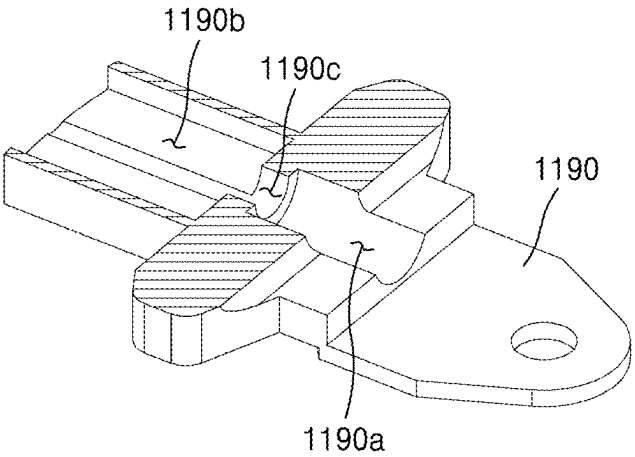

FIG. 155

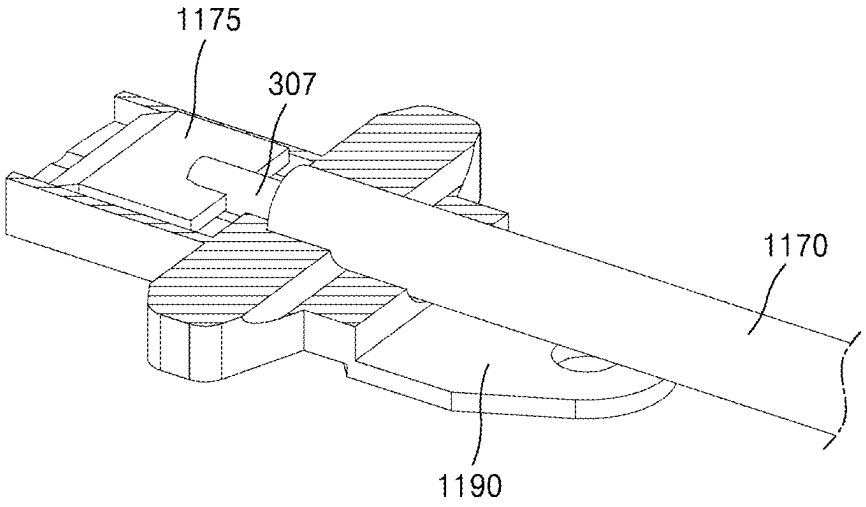

FIG. 156

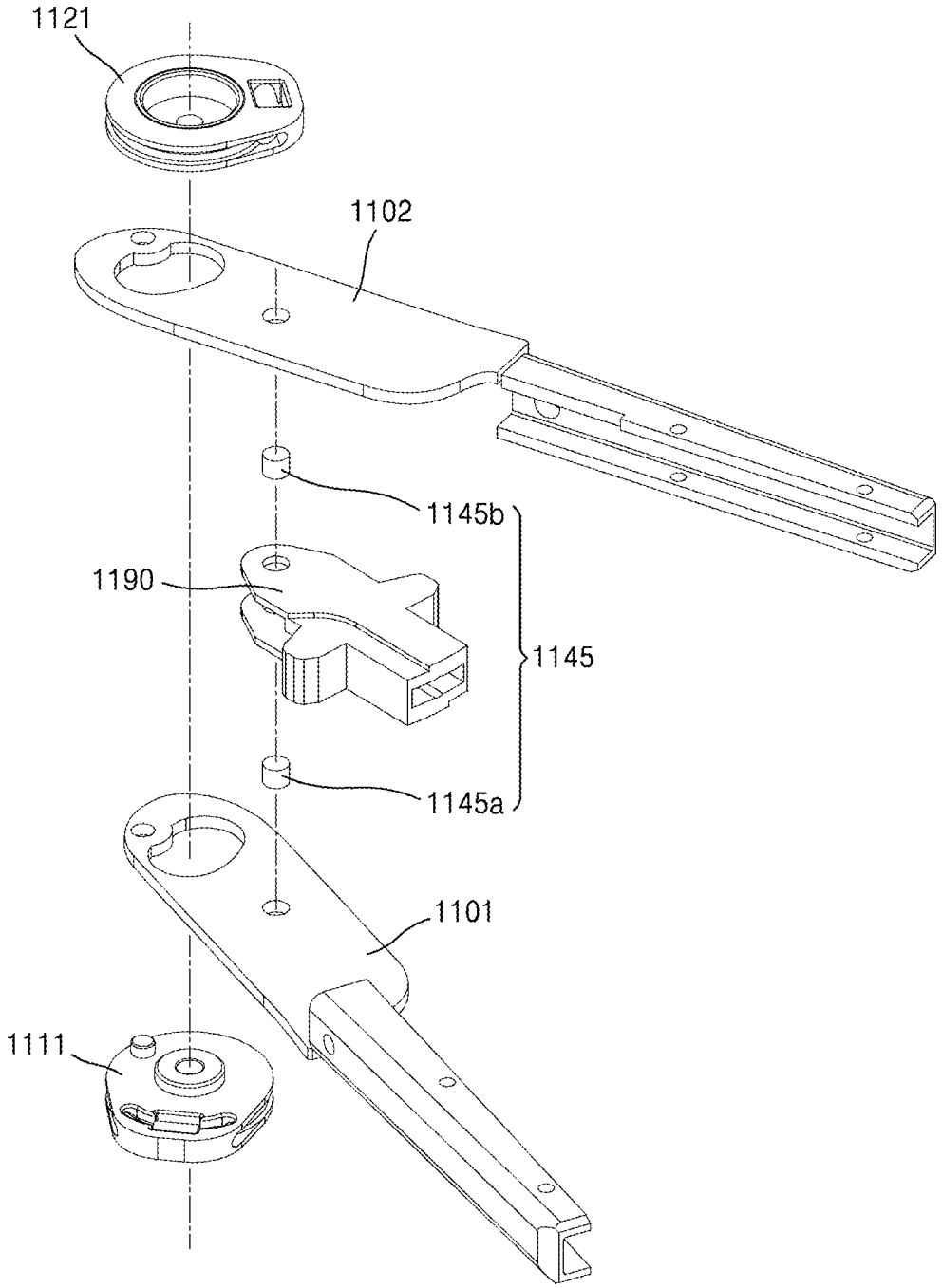

FIG. 157

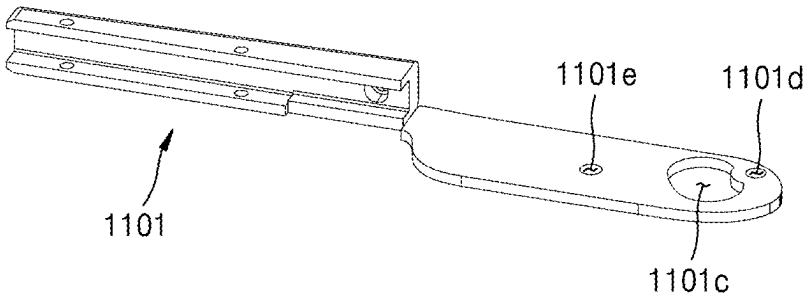

FIG. 158

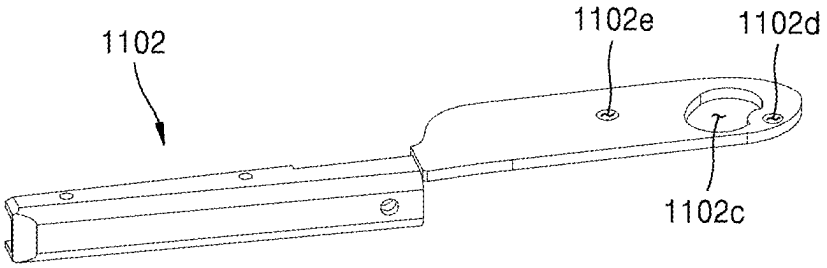

FIG. 159

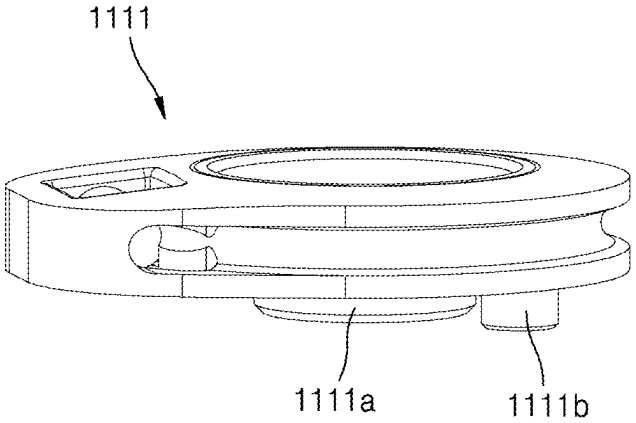

FIG. 160

(a)

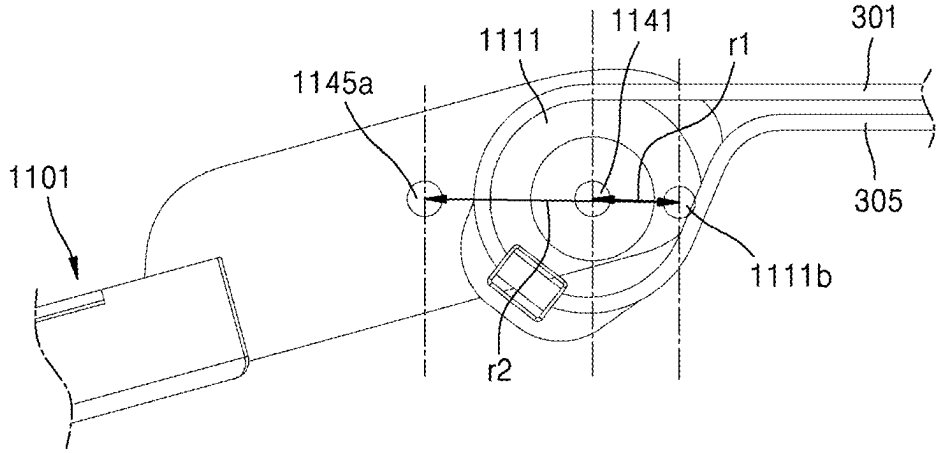
1101
1145a
1111
1141
r1
301
305
1111b
r2

(b)

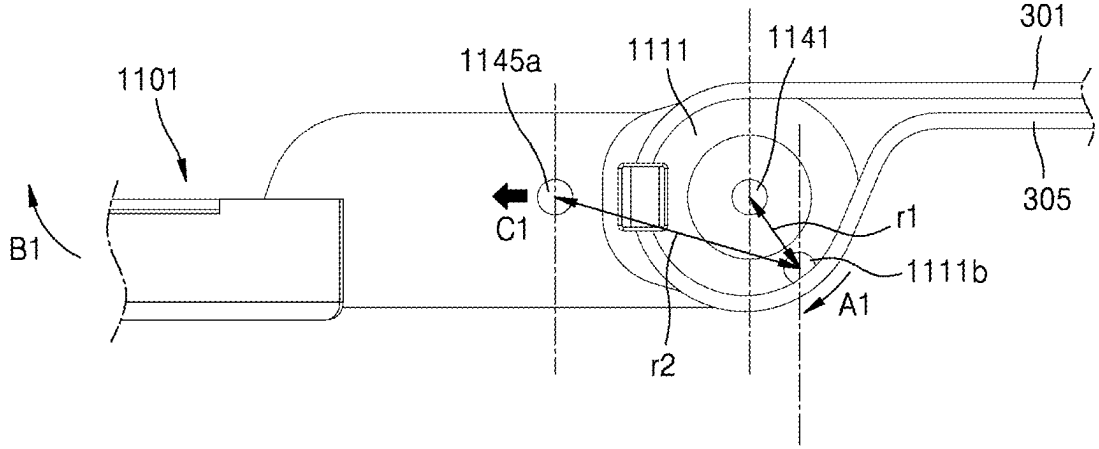
1101
B1
1145a
C1
1111
1141
301
305
r1
1111b
A1
r2

FIG. 161

(a)

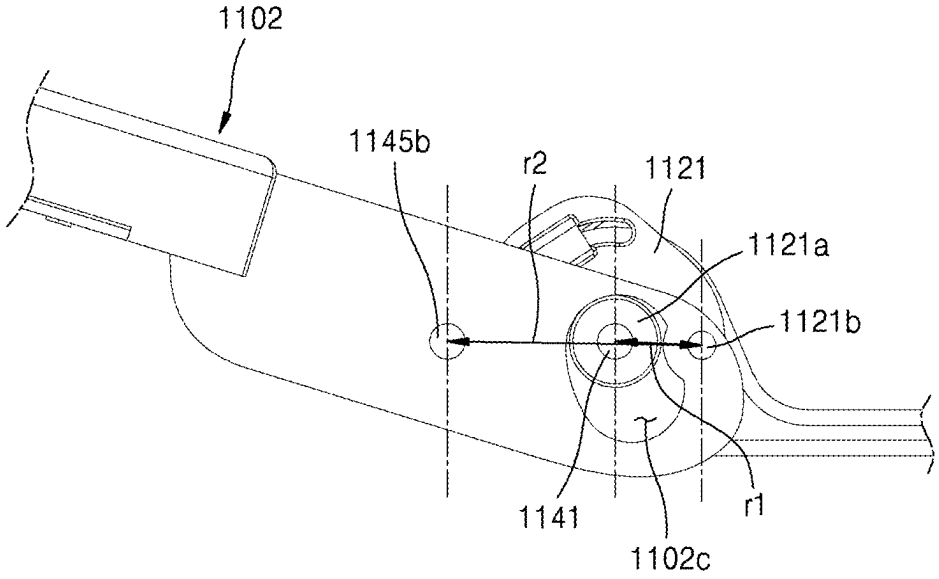
1102
1145b
r2
1121
1121a
1121b
1141
1102c
r1

(b)

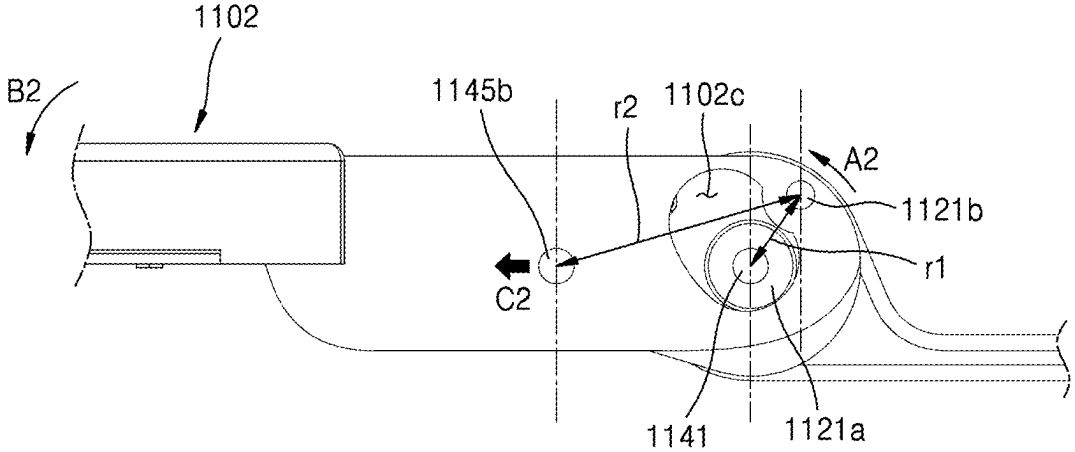
1102
B2
1145b
r2
1102c
A2
1121b
r1
C2
1141
1121a

FIG. 162

(a)

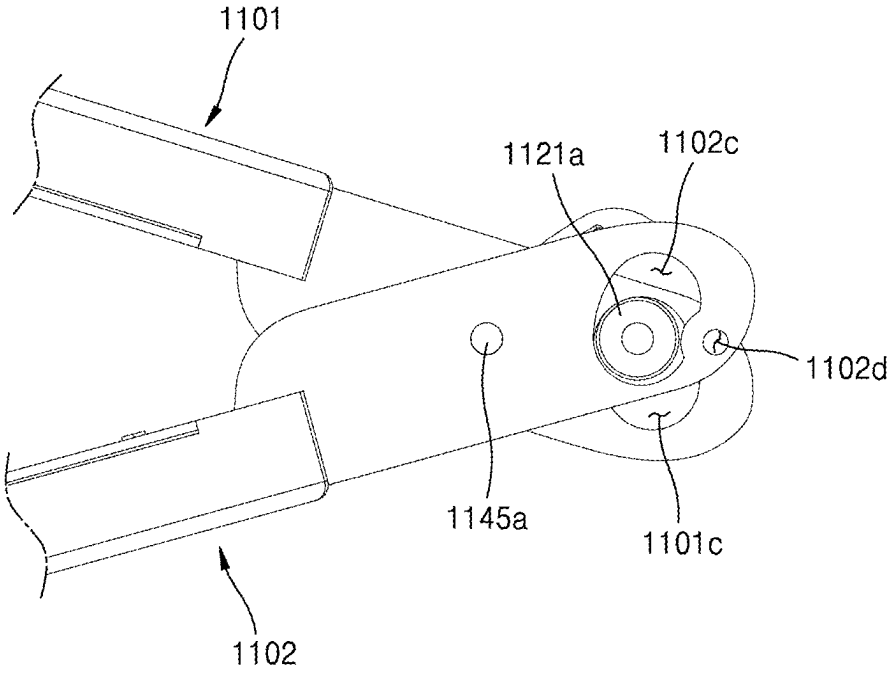
1101
1121a
1102c
1102d
1145a
1101c
1102

(b)

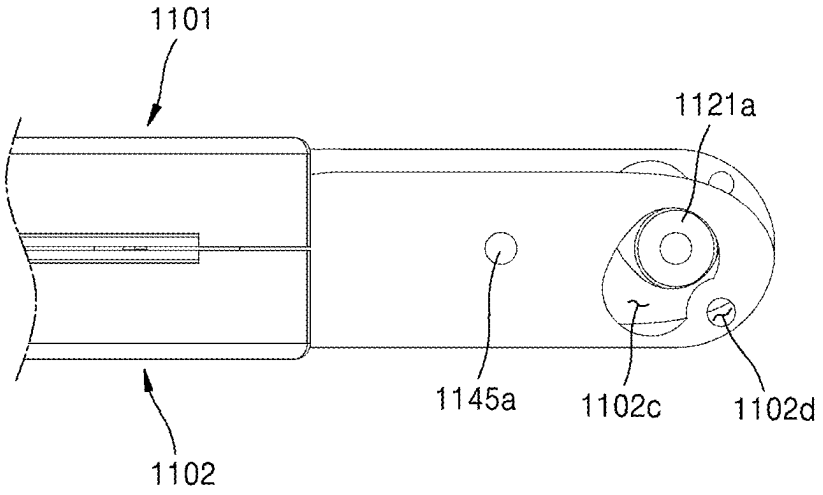
1101
1121a
1145a
1102c
1102d
1102

FIG. 163

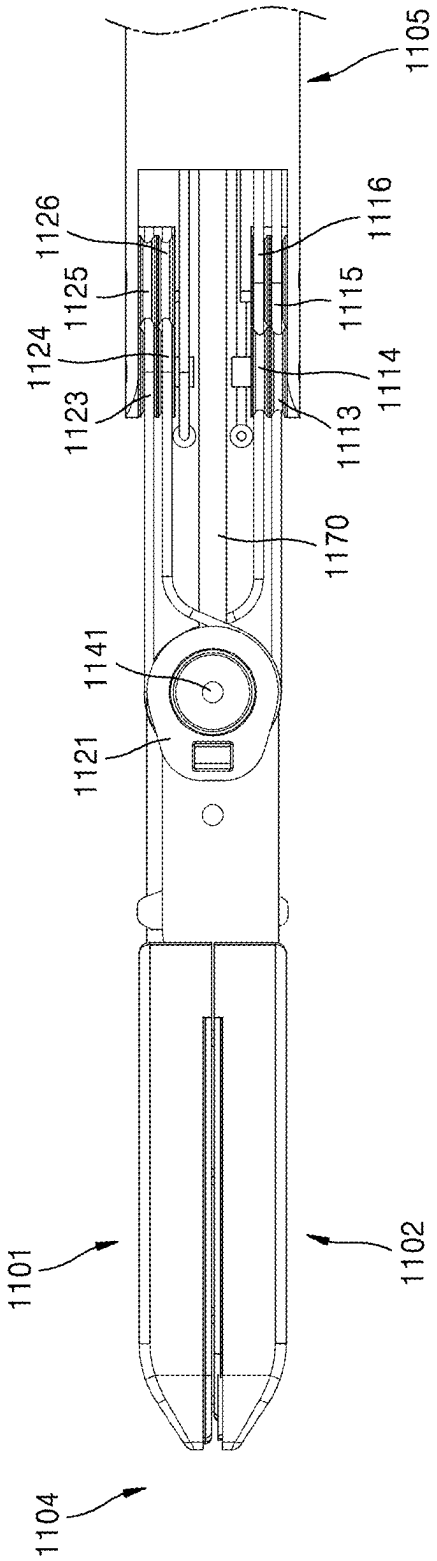
1105
1126
1125
1124
1123
1116
1115
1114
1113
1170
1141
1121
1101
1102
1104

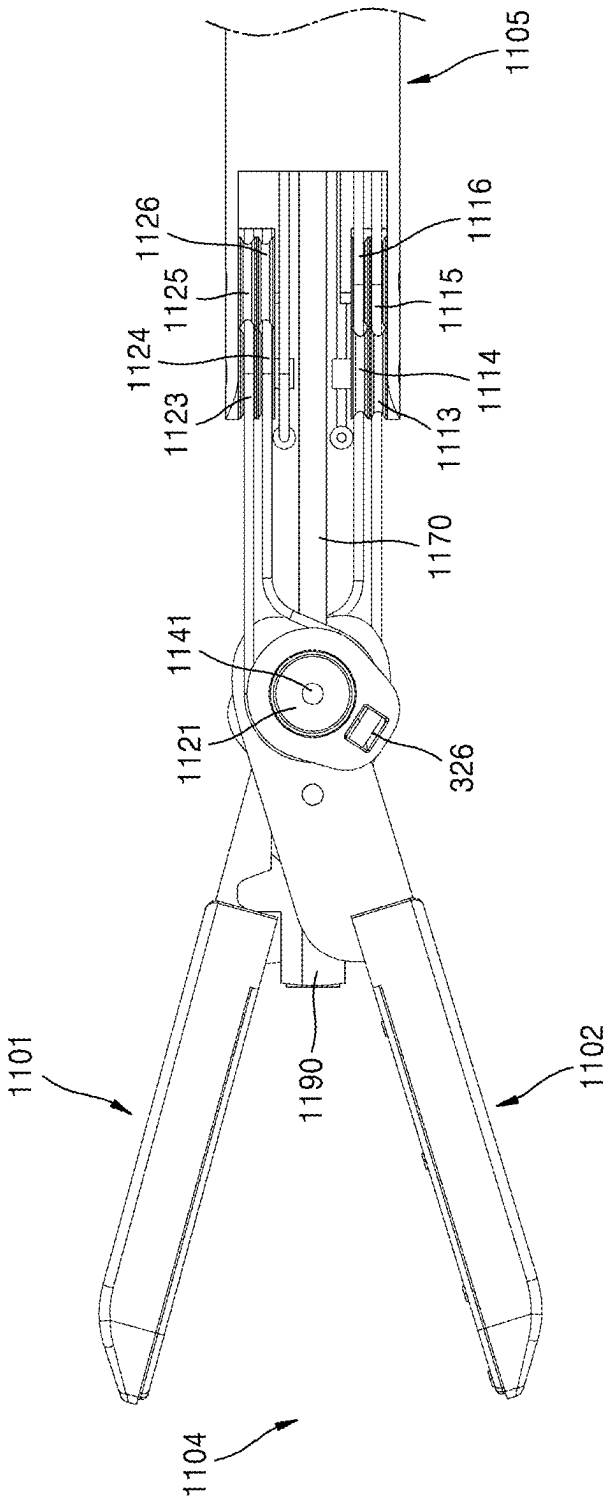
1105
1126
1125
1124
1123
1116
1115
1114
1113
1170
1141
1121
326
1101
1190
1102
1104

FIG. 164

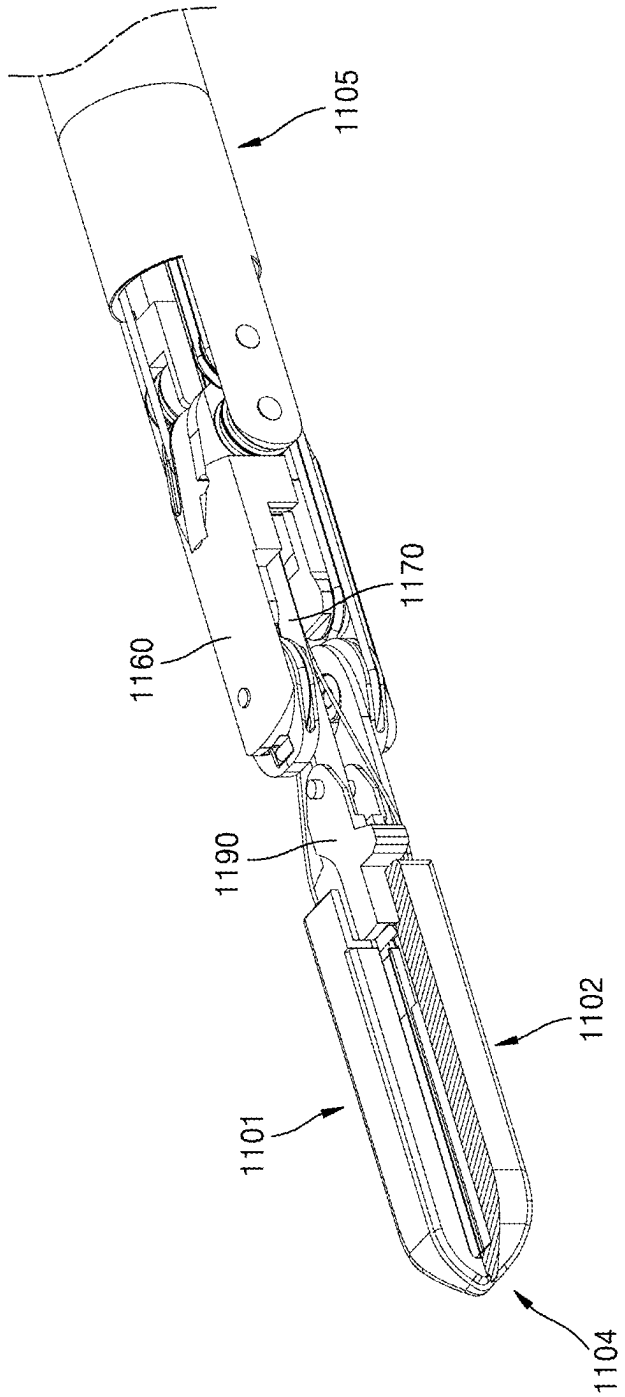

FIG. 165

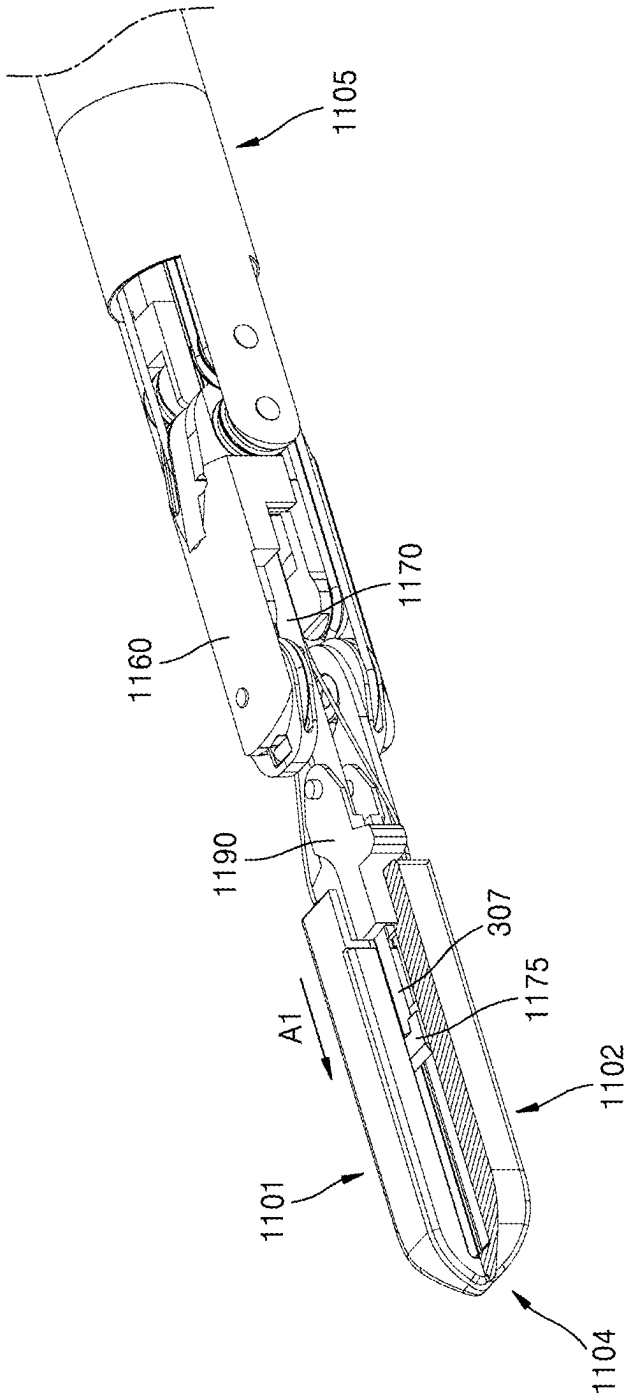

FIG. 166

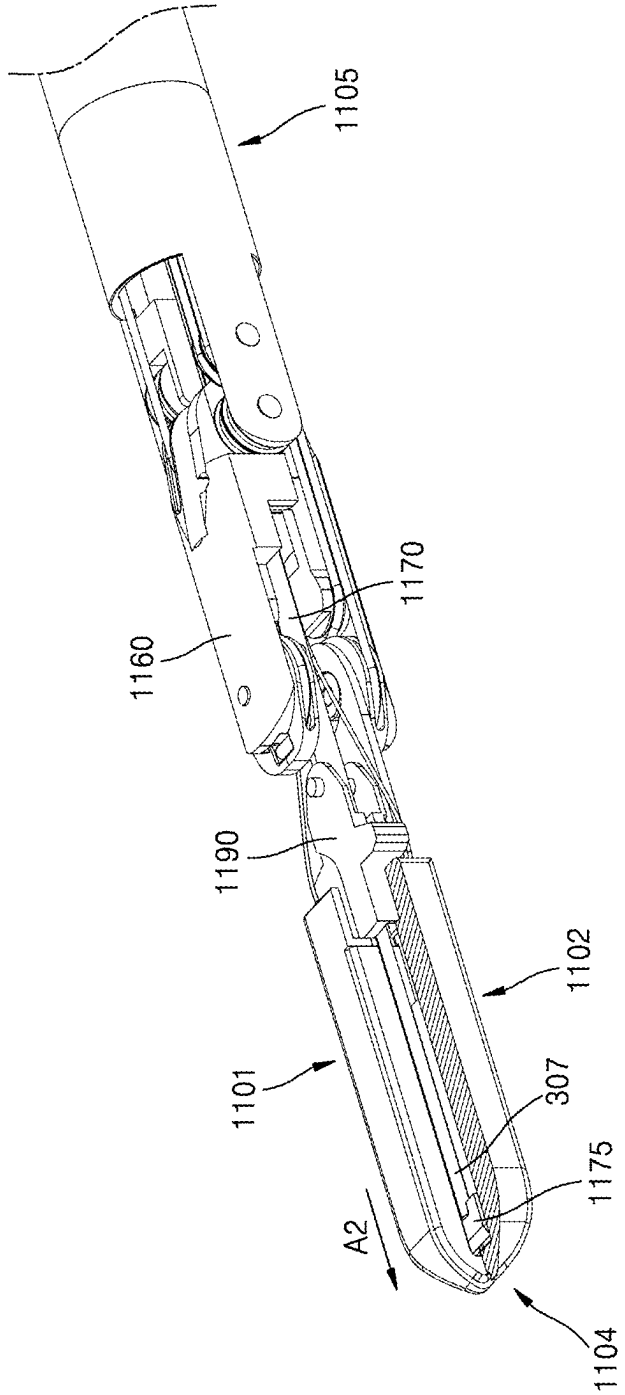

FIG. 167

FIG. 168

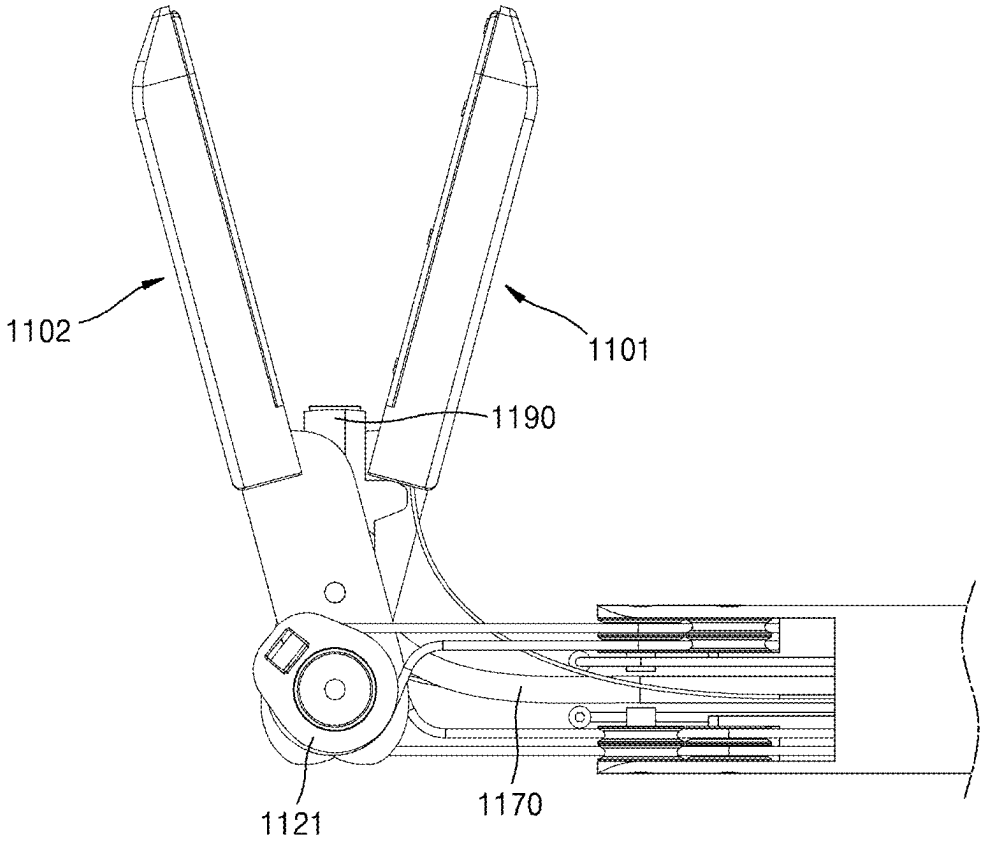

FIG. 169

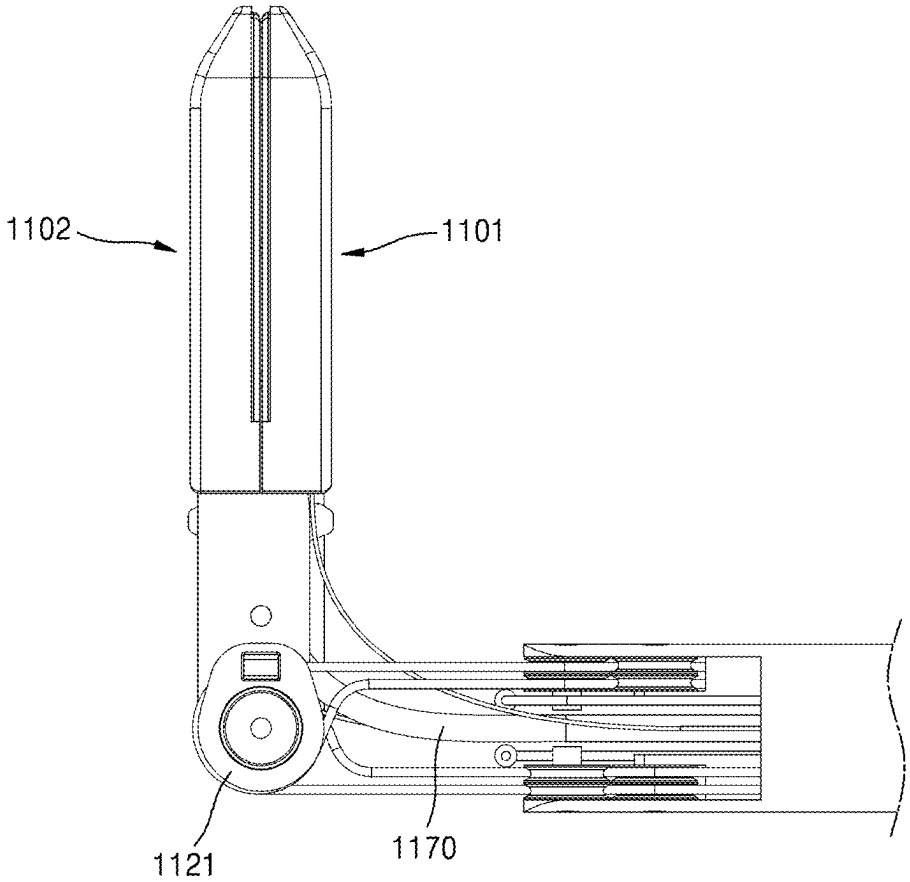

FIG. 170

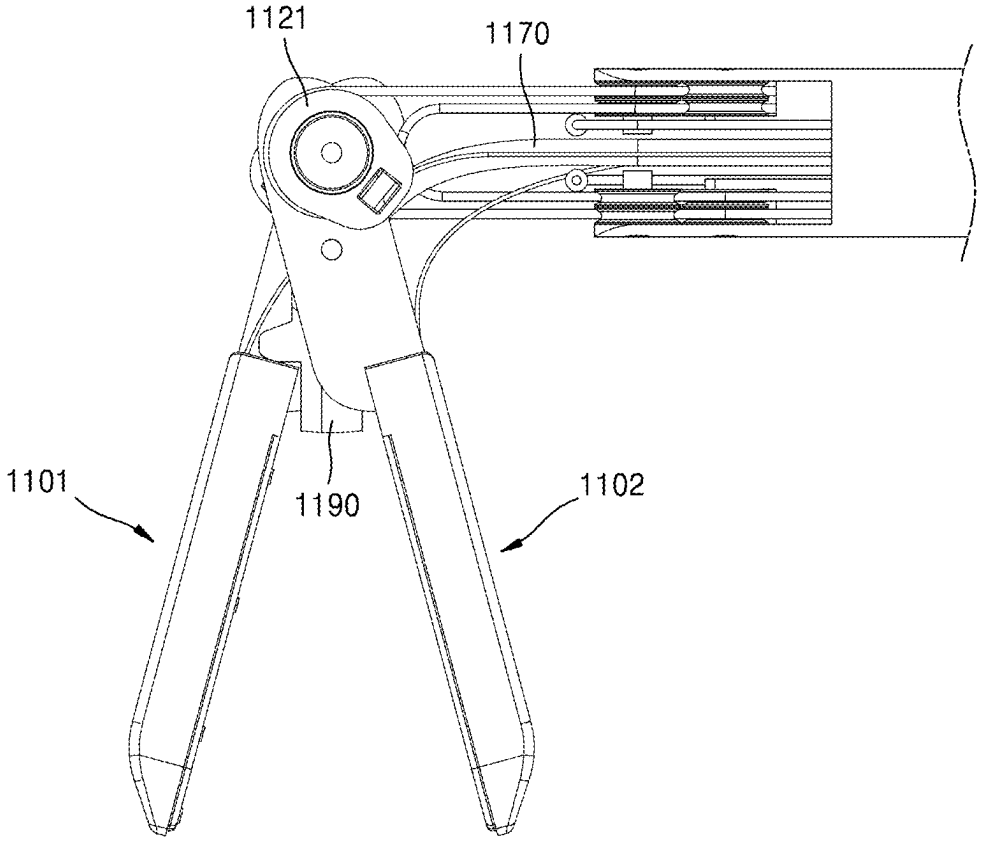

FIG. 171

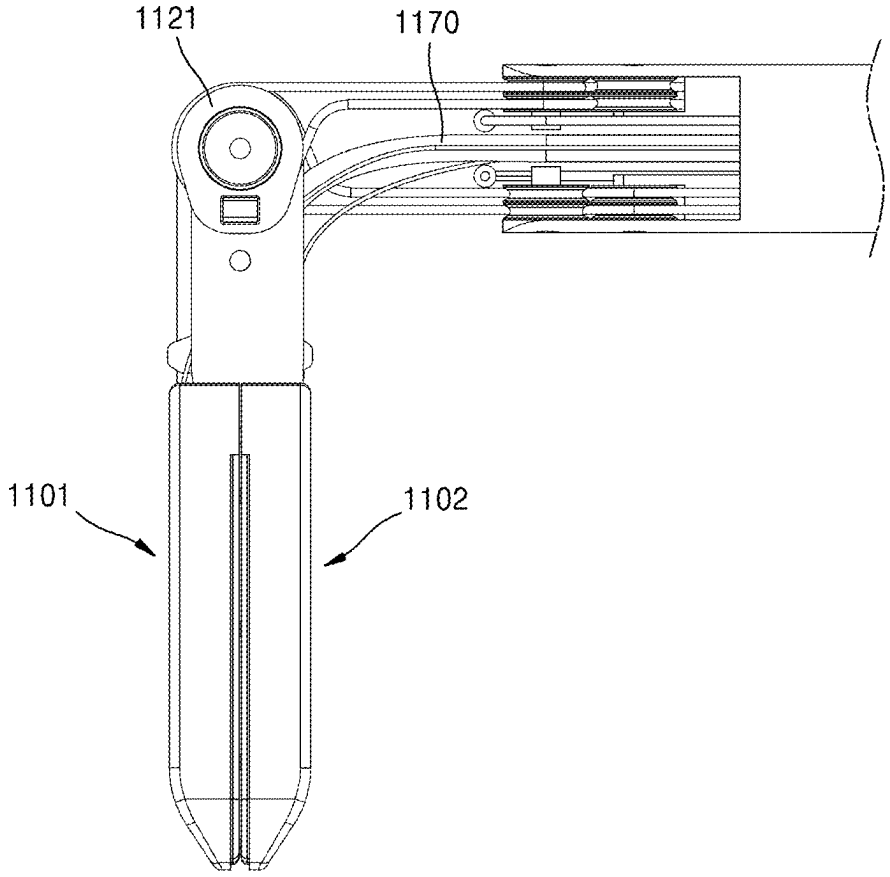

FIG. 172

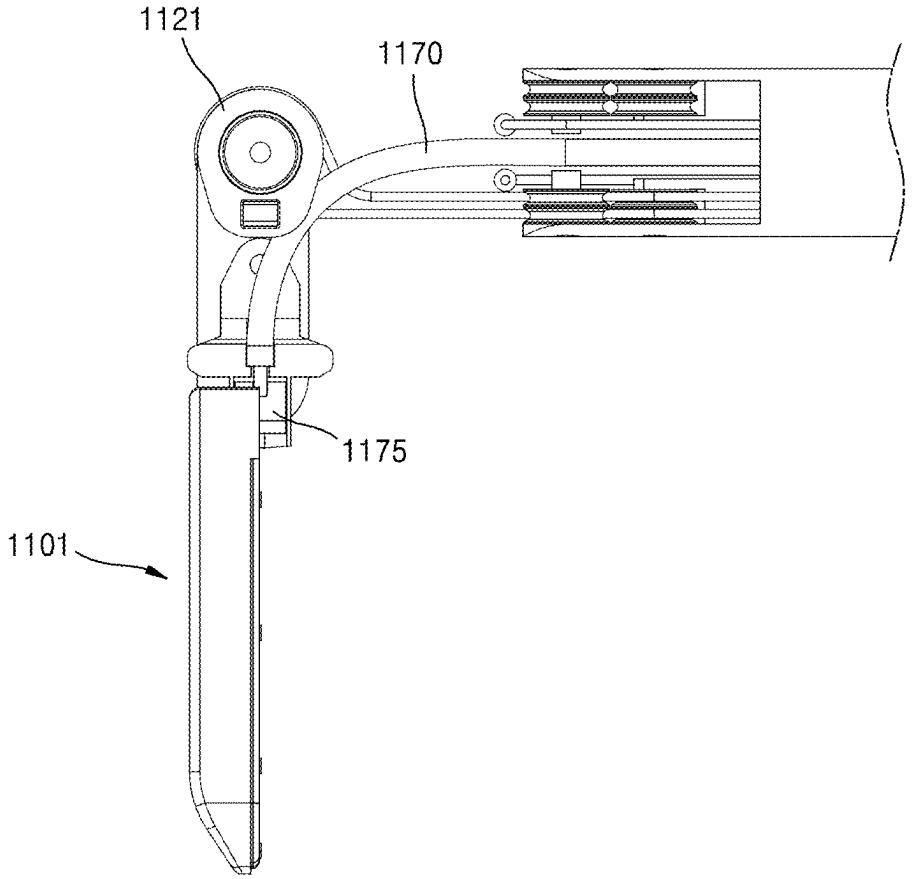

FIG. 173

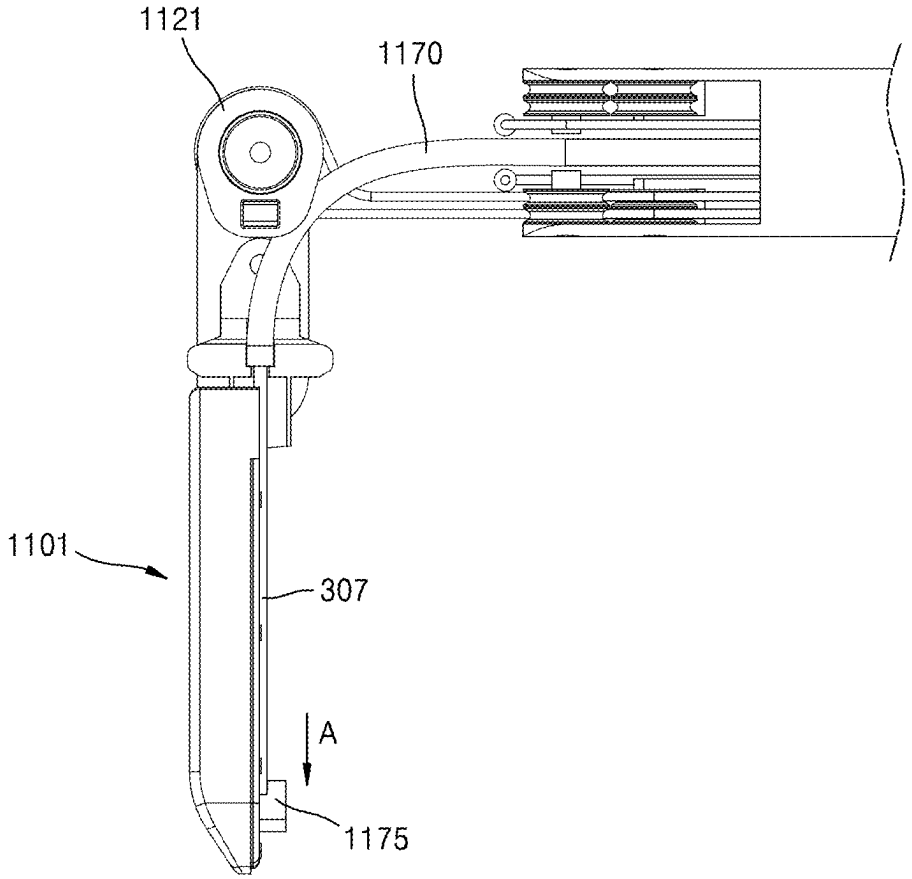

FIG. 174

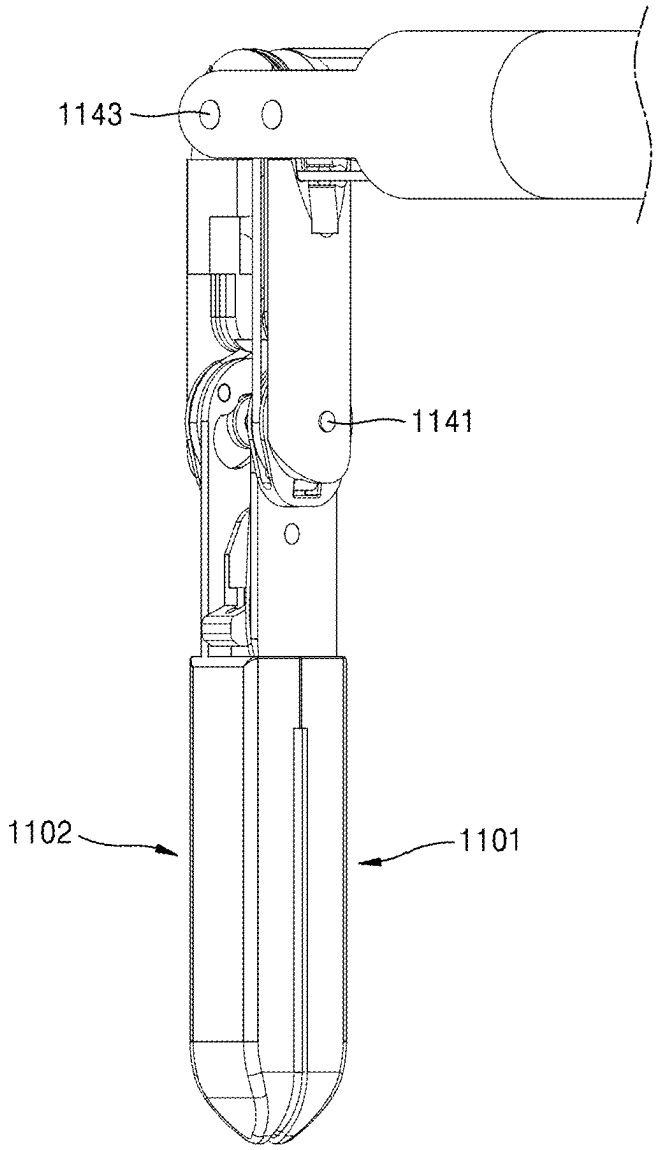

FIG. 175

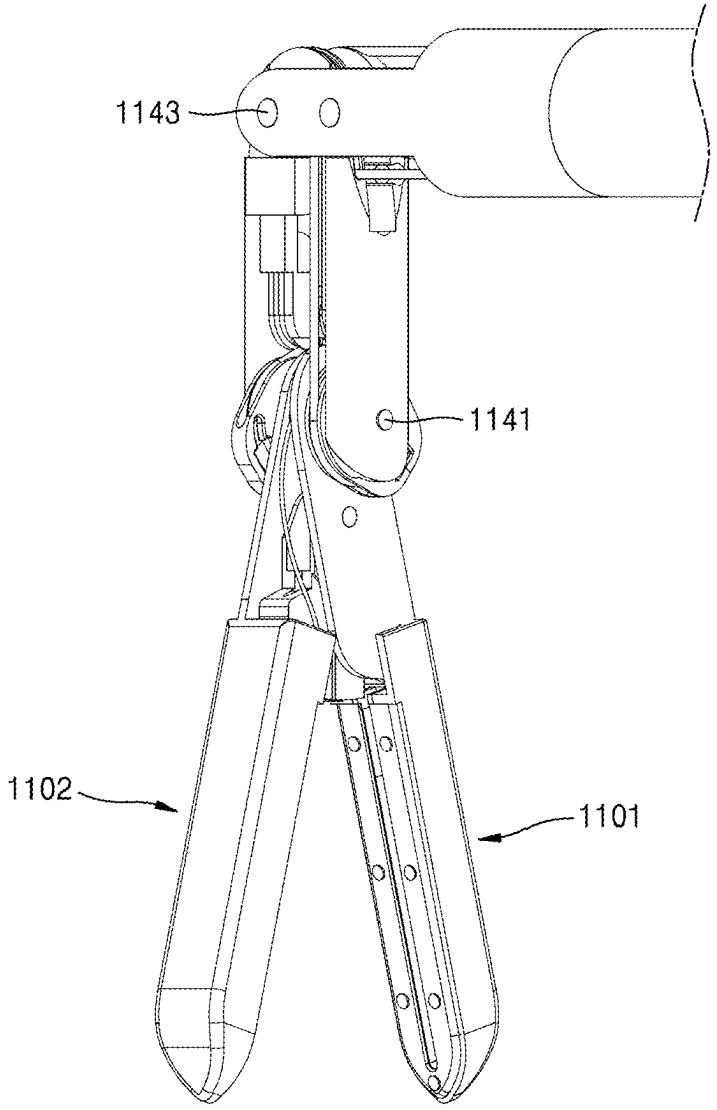

FIG. 176

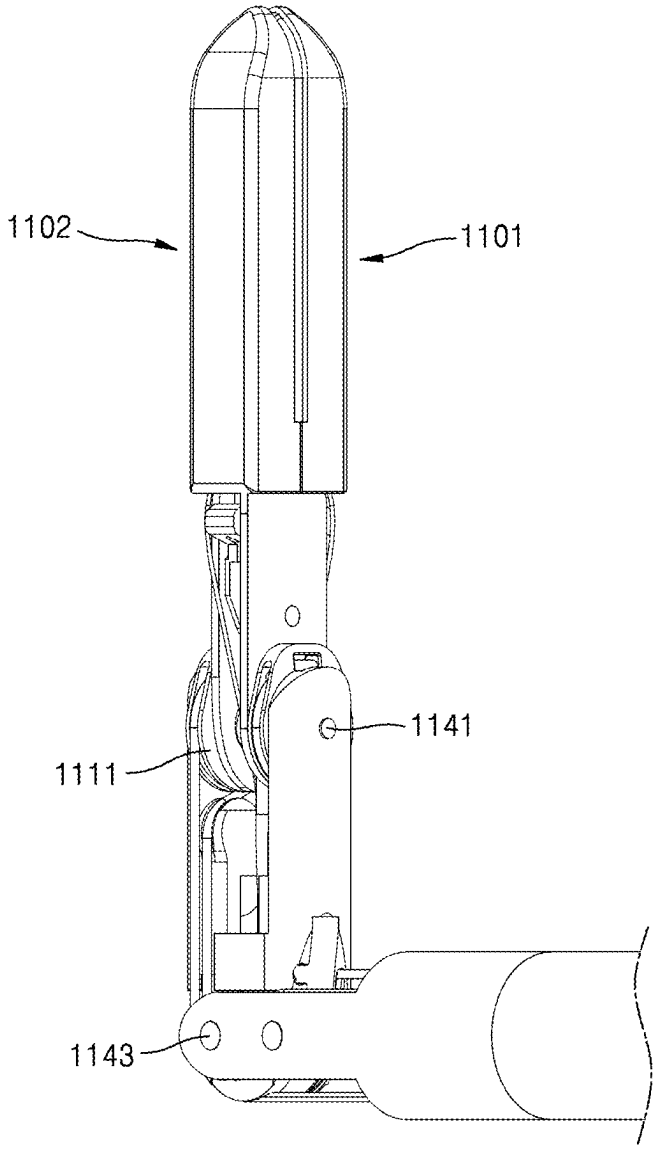

FIG. 177

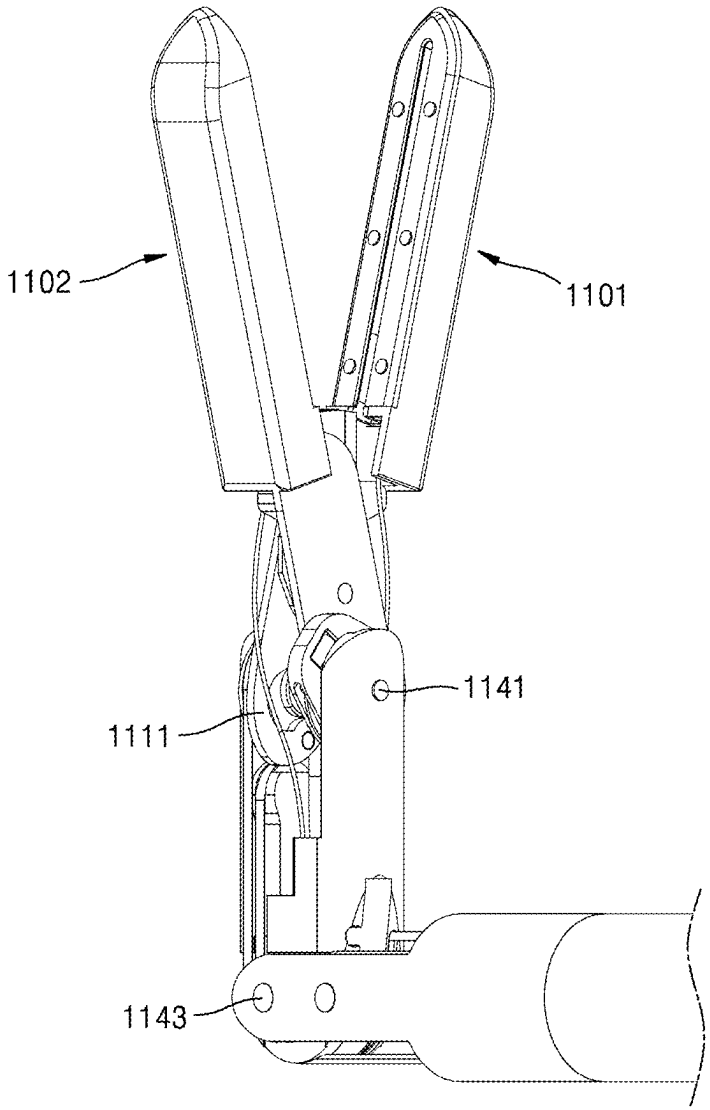

FIG. 178

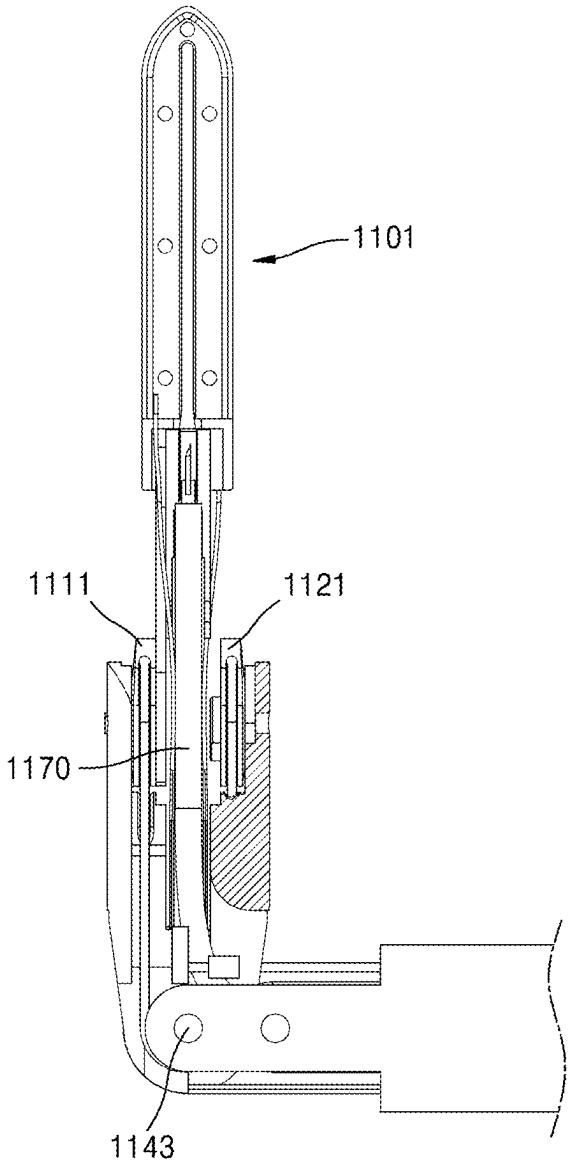

FIG. 179

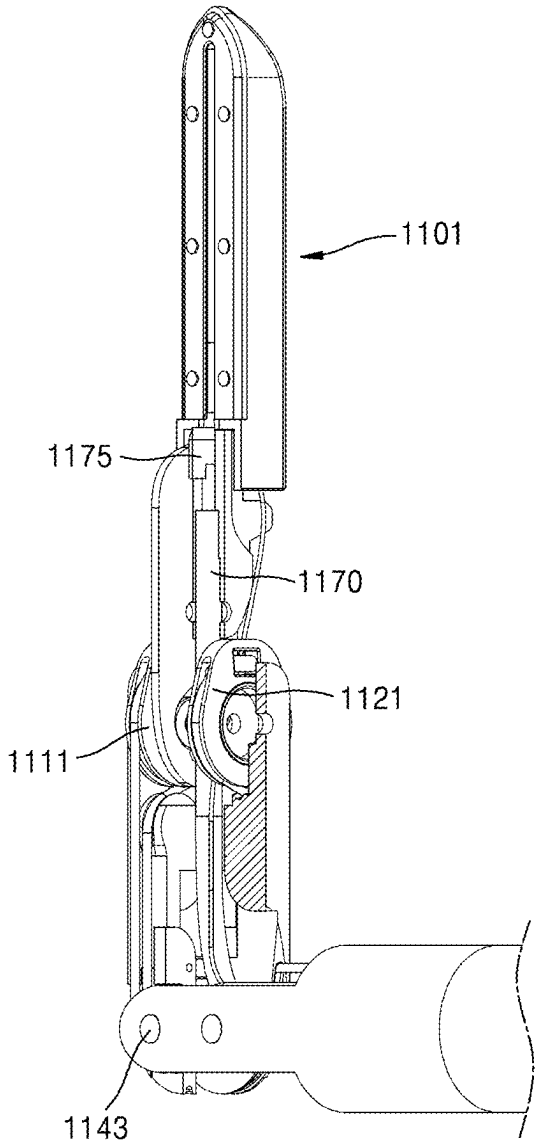

FIG. 180

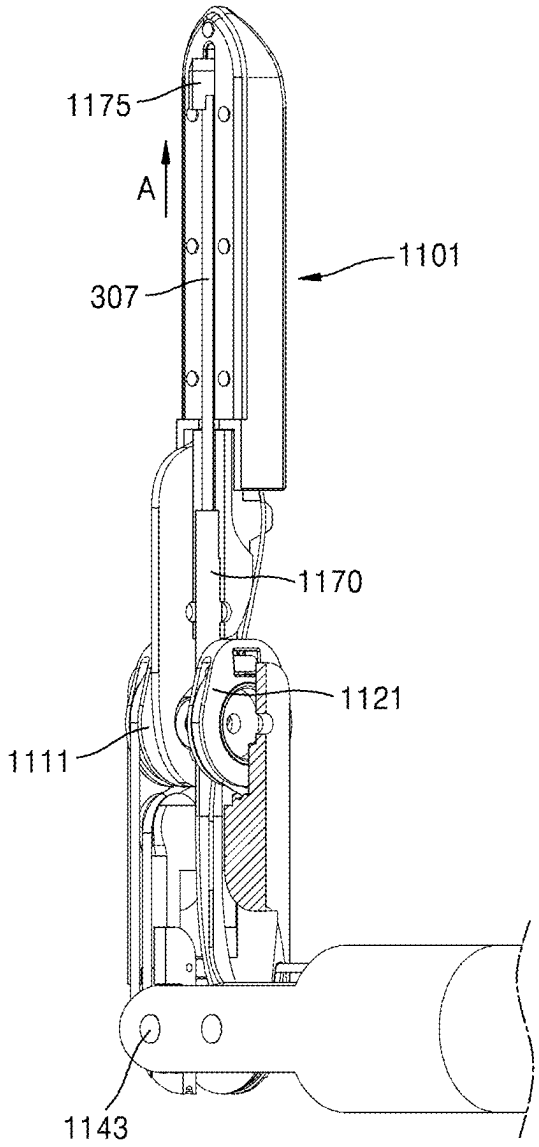

FIG. 181

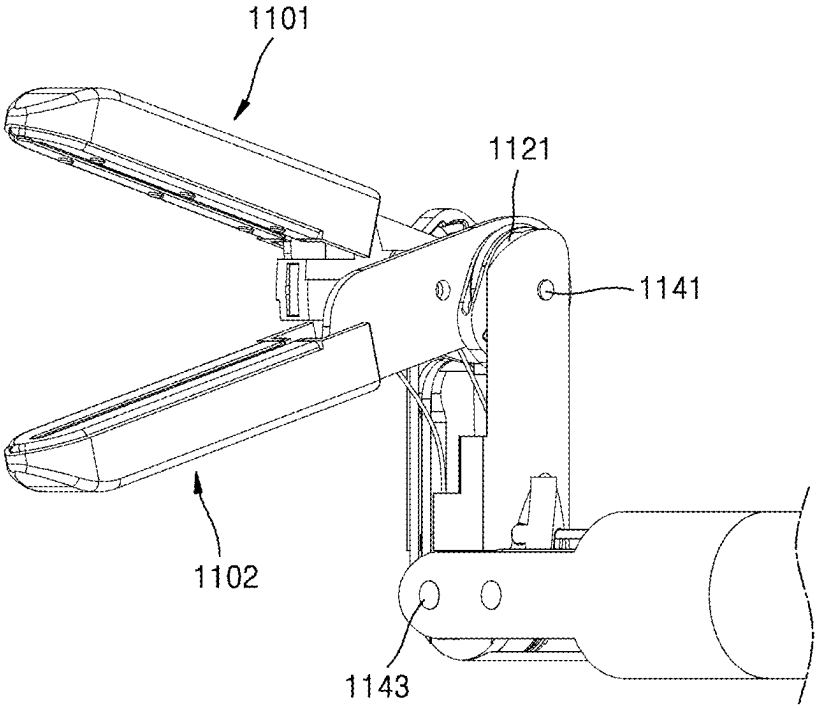

FIG. 182

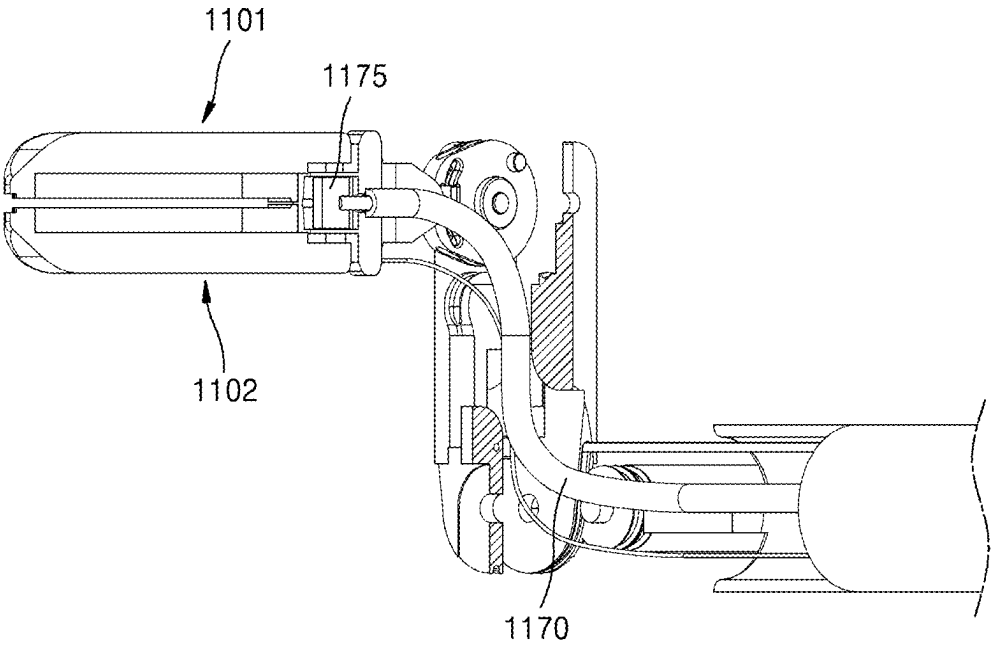

FIG. 183

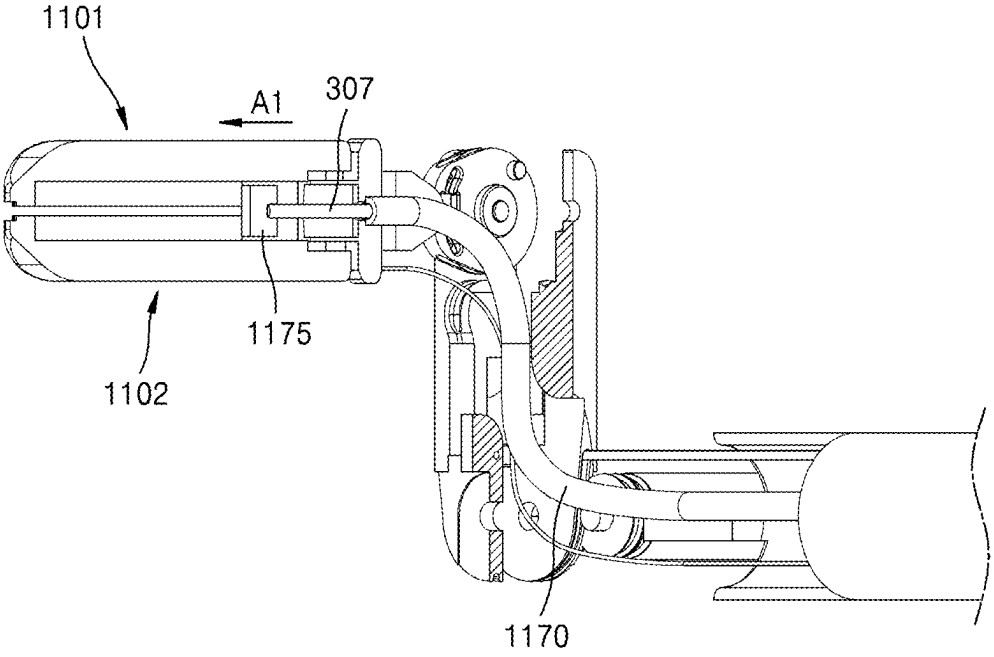

FIG. 184

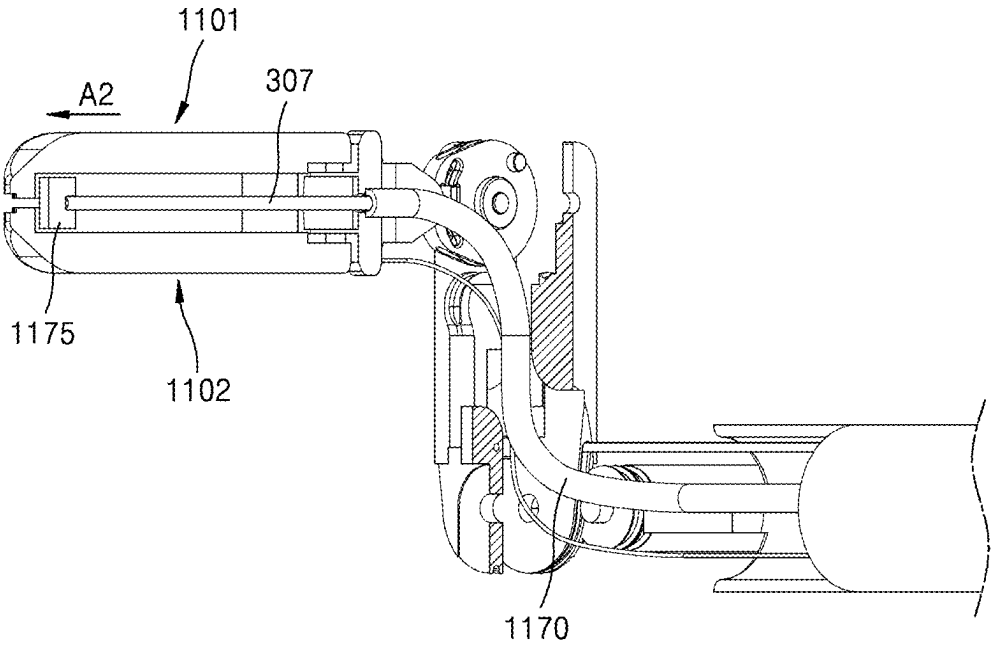

FIG. 185

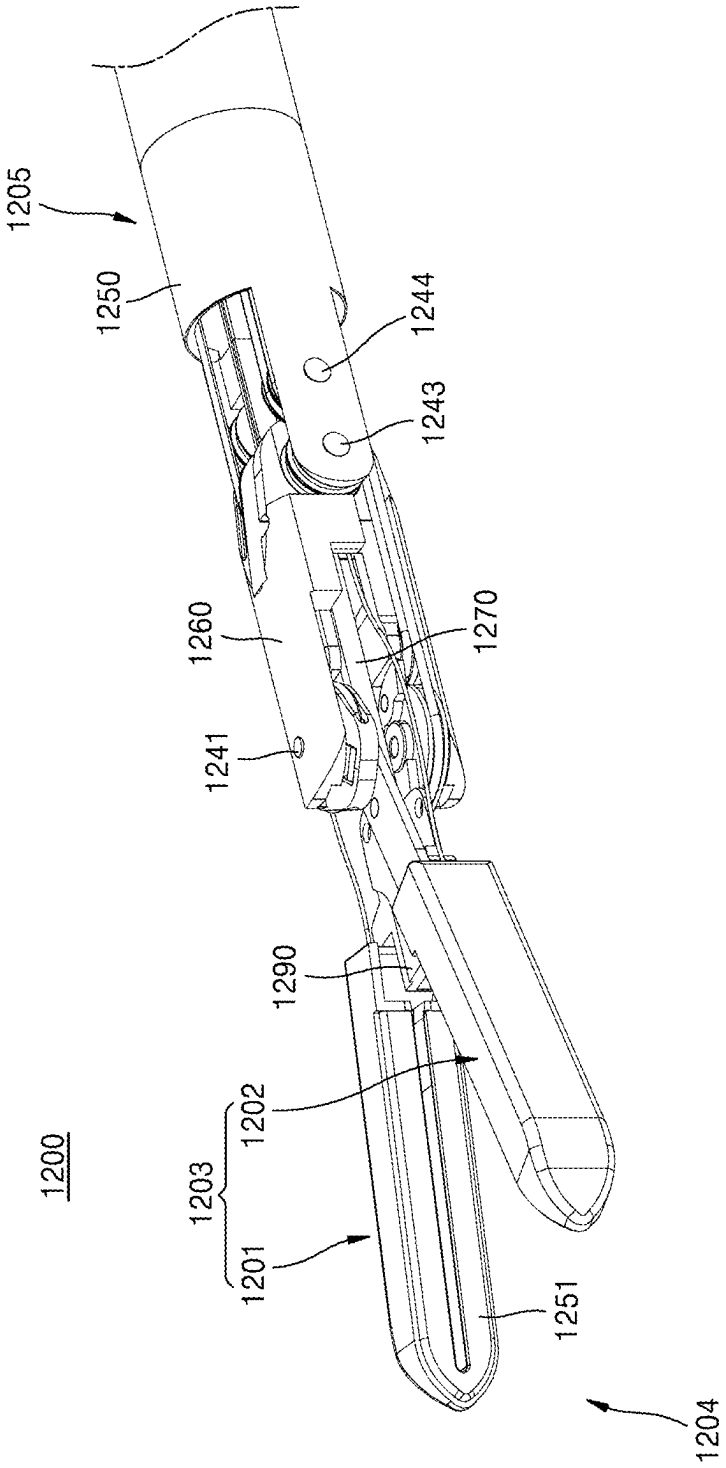
1205
1250
1244
1243
1260
1270
1241
1290
1202
1200
1203
1201
1251
1204

FIG. 186

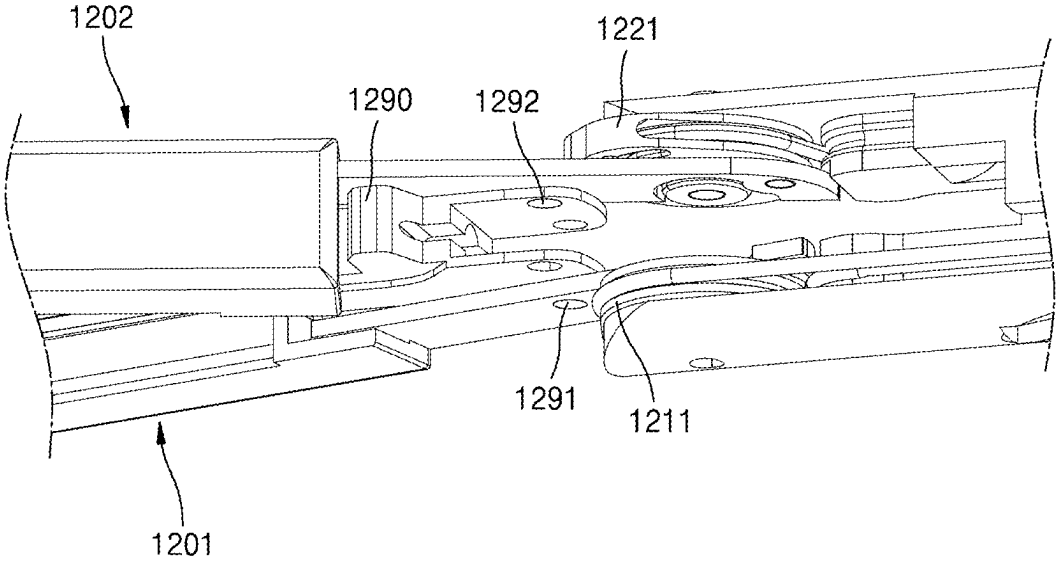

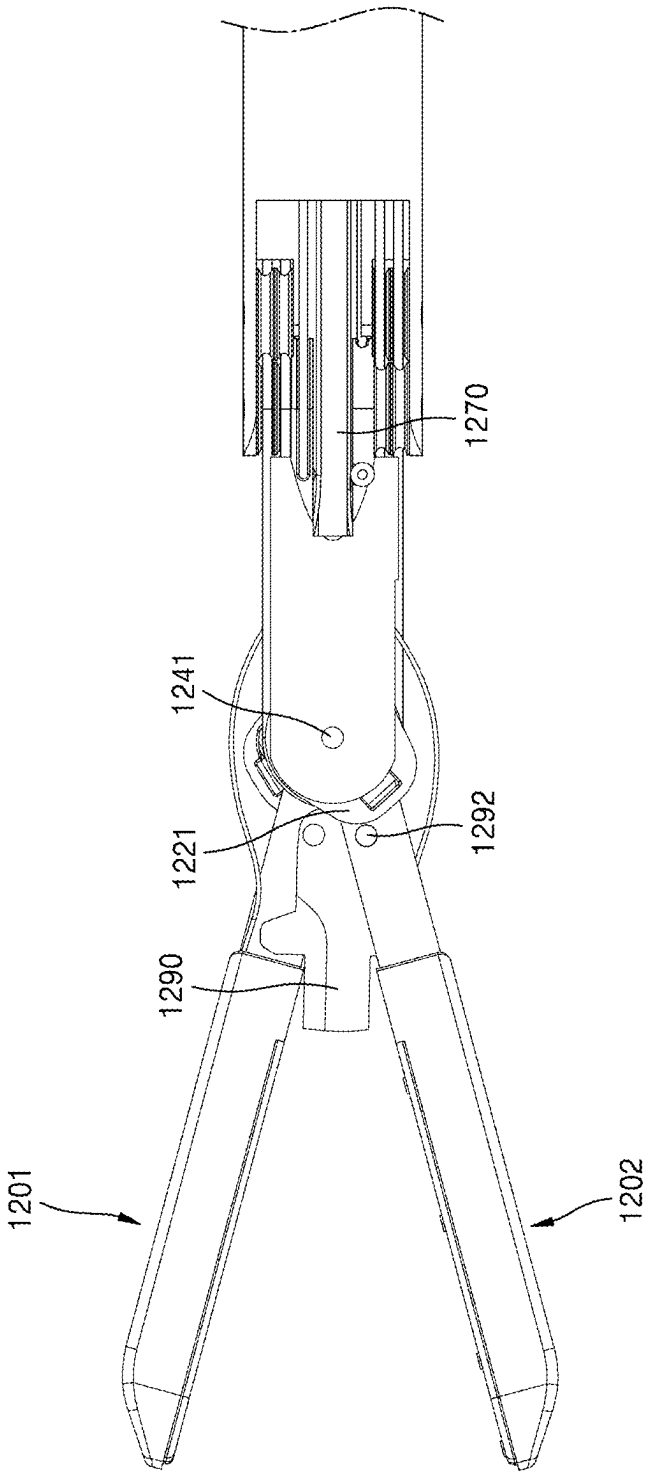

FIG. 187

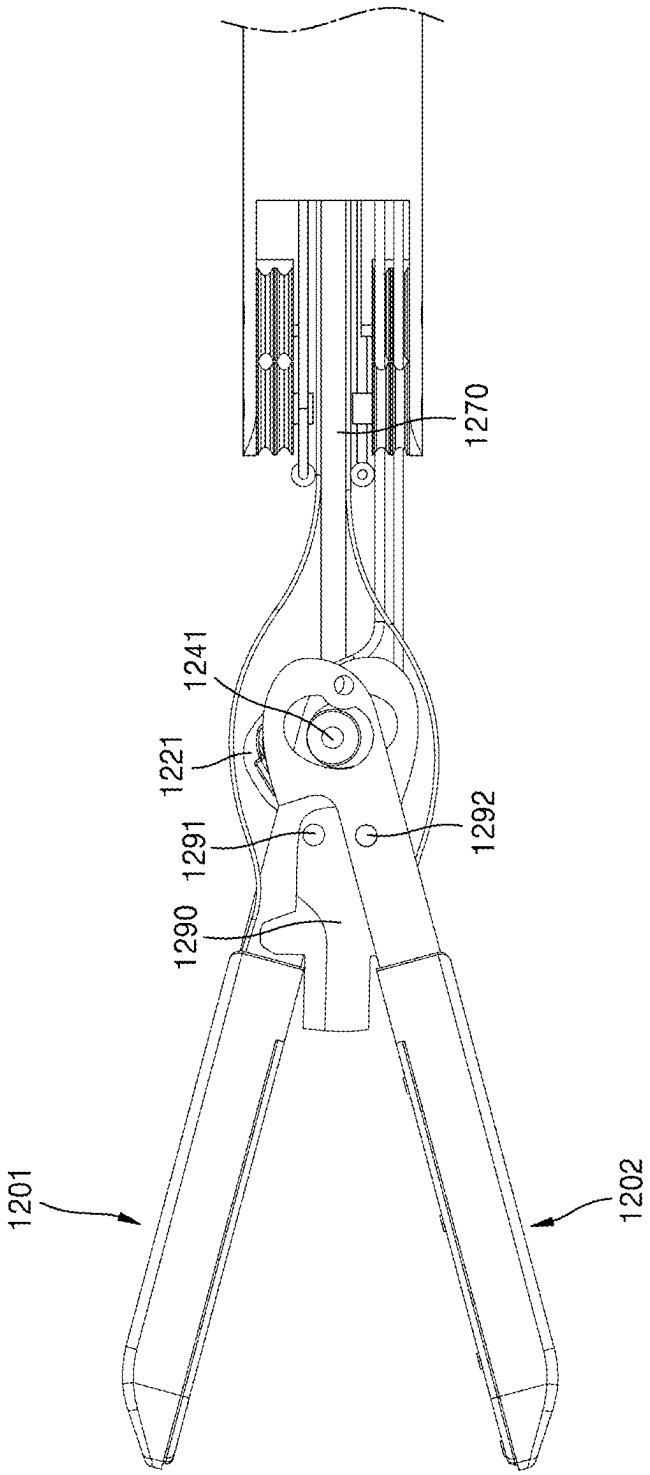

FIG. 188

FIG. 189

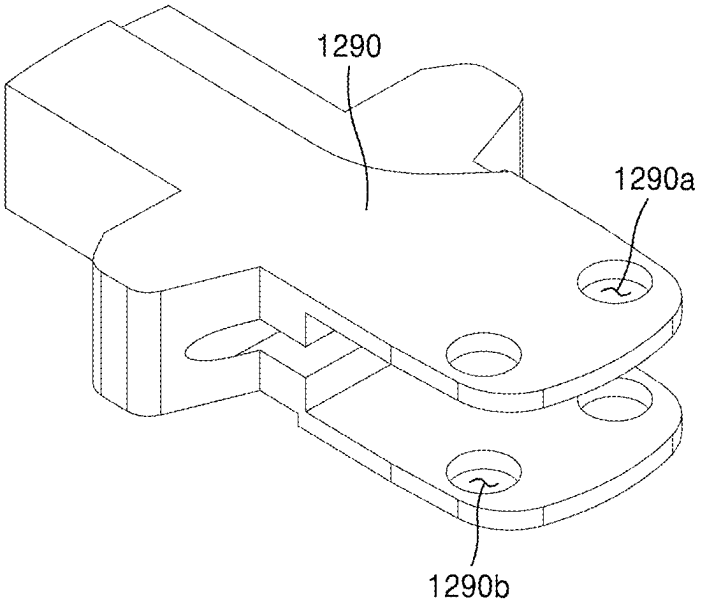

FIG. 190

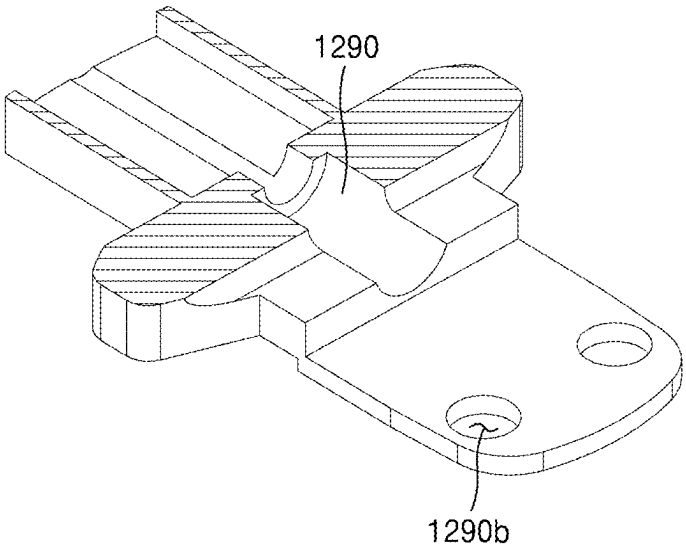

FIG. 191

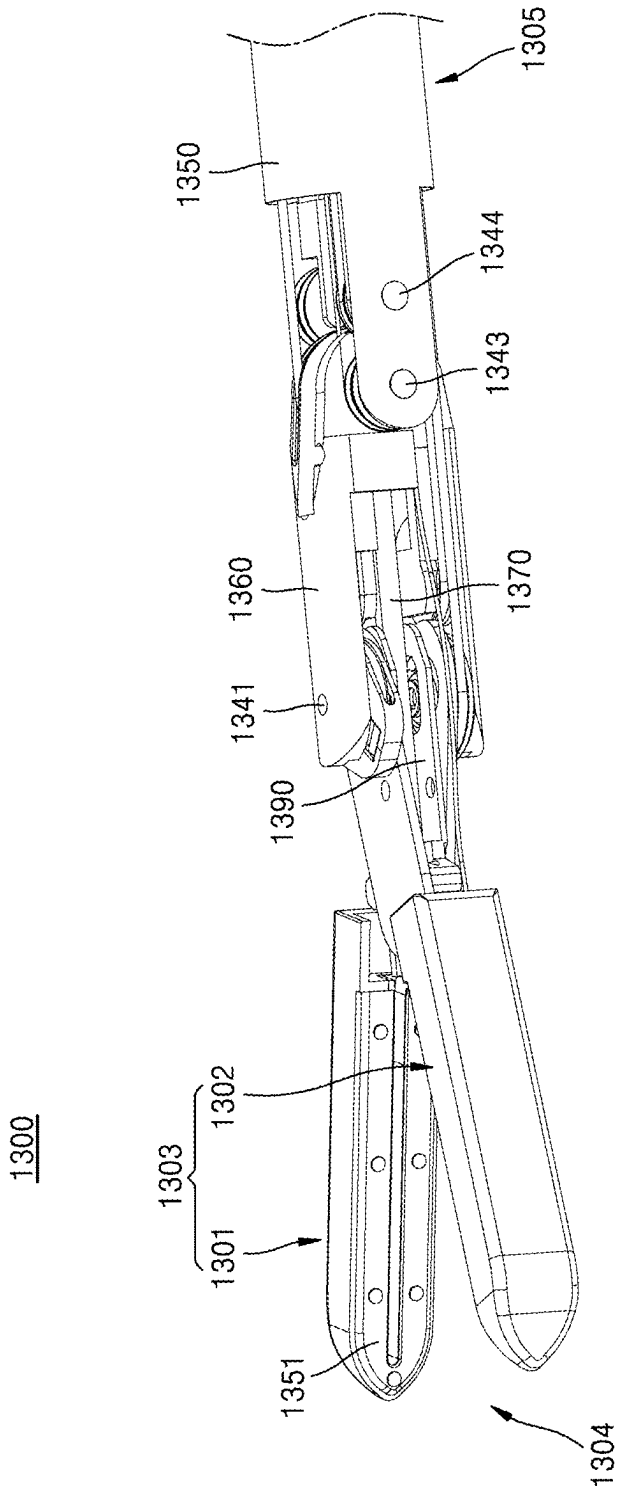
1300
1303
1302
1301
1351
1304
1390
1341
1360
1370
1350
1343
1344
1305

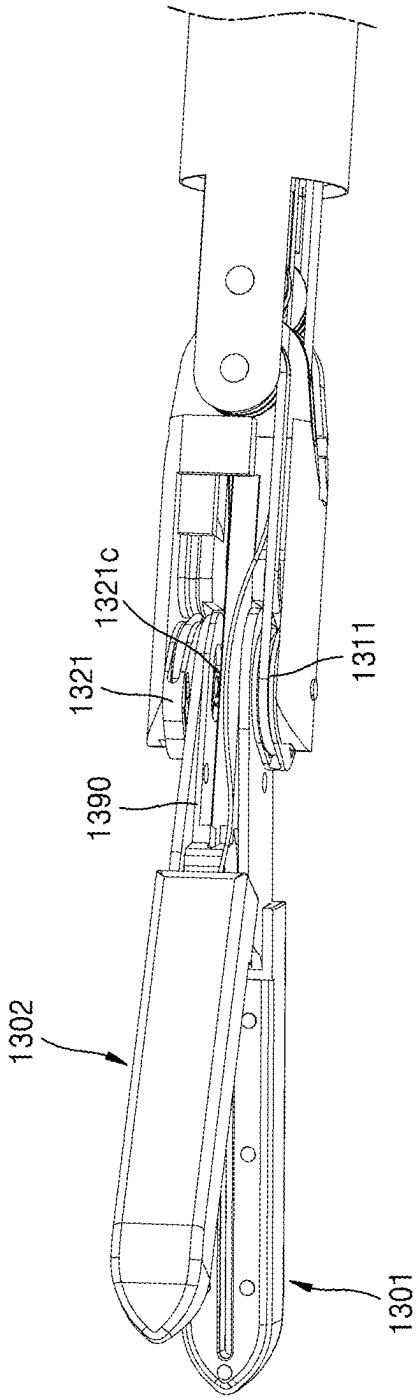

FIG. 192

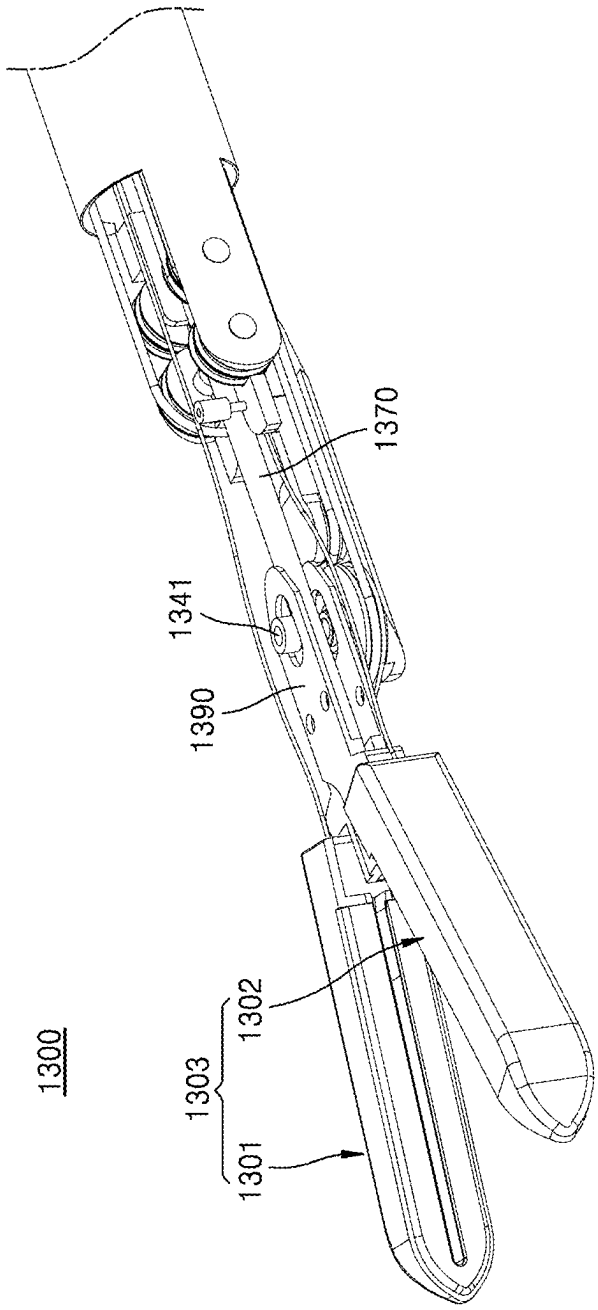

FIG. 193

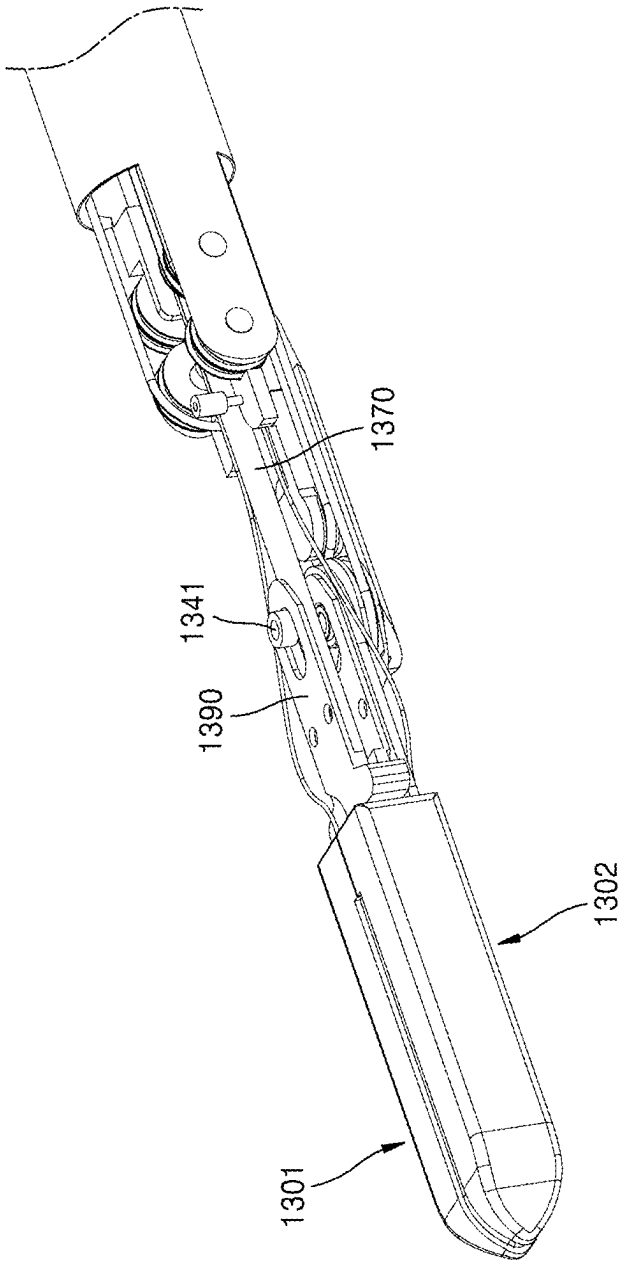

FIG. 194

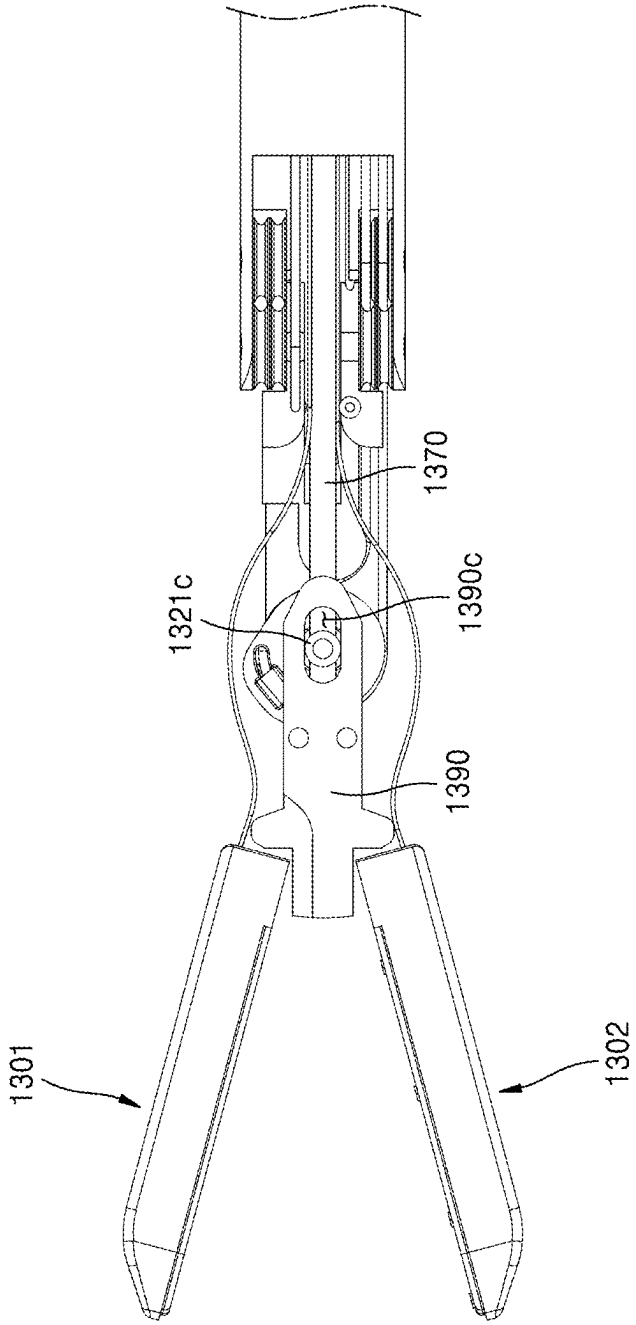

FIG. 195

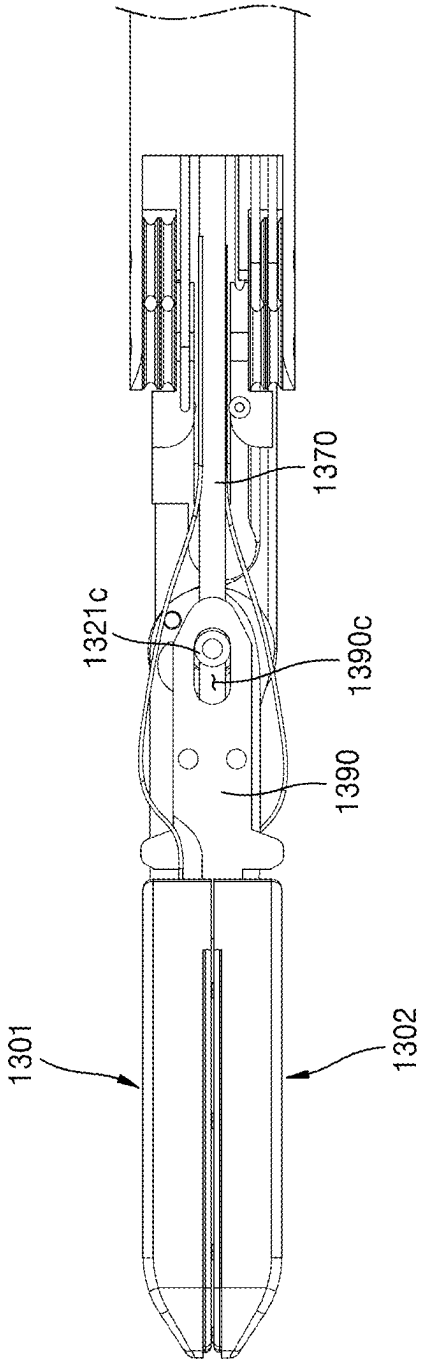

FIG. 196

FIG. 197

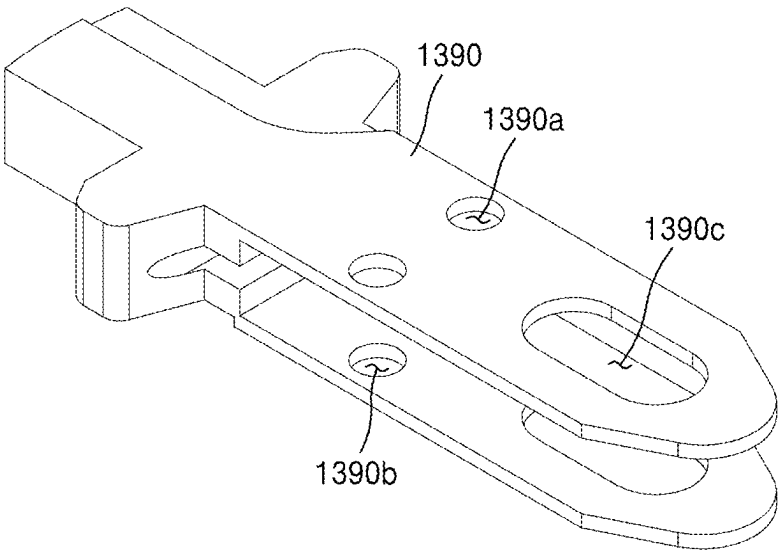

FIG. 198

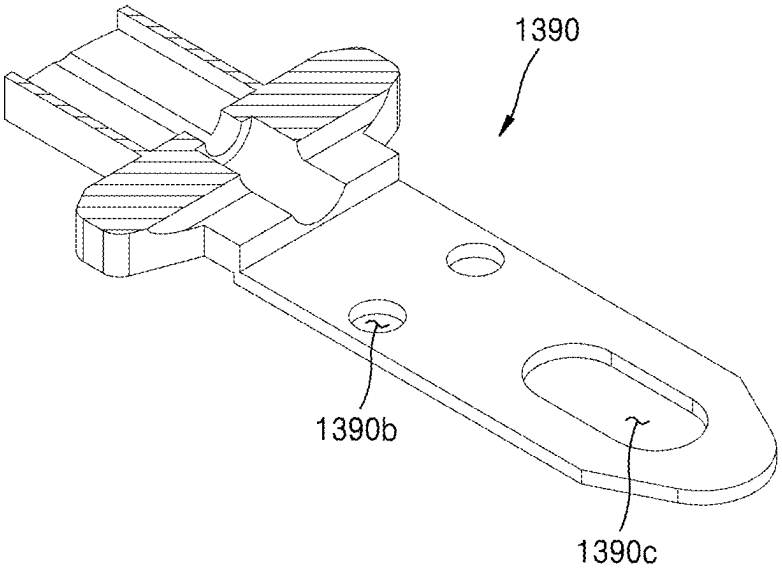

FIG. 199

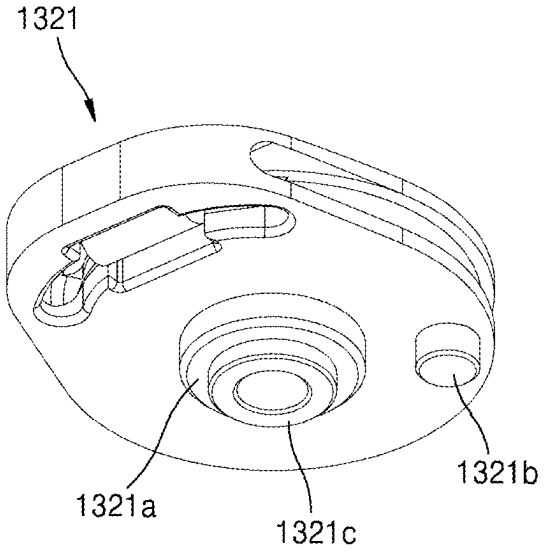

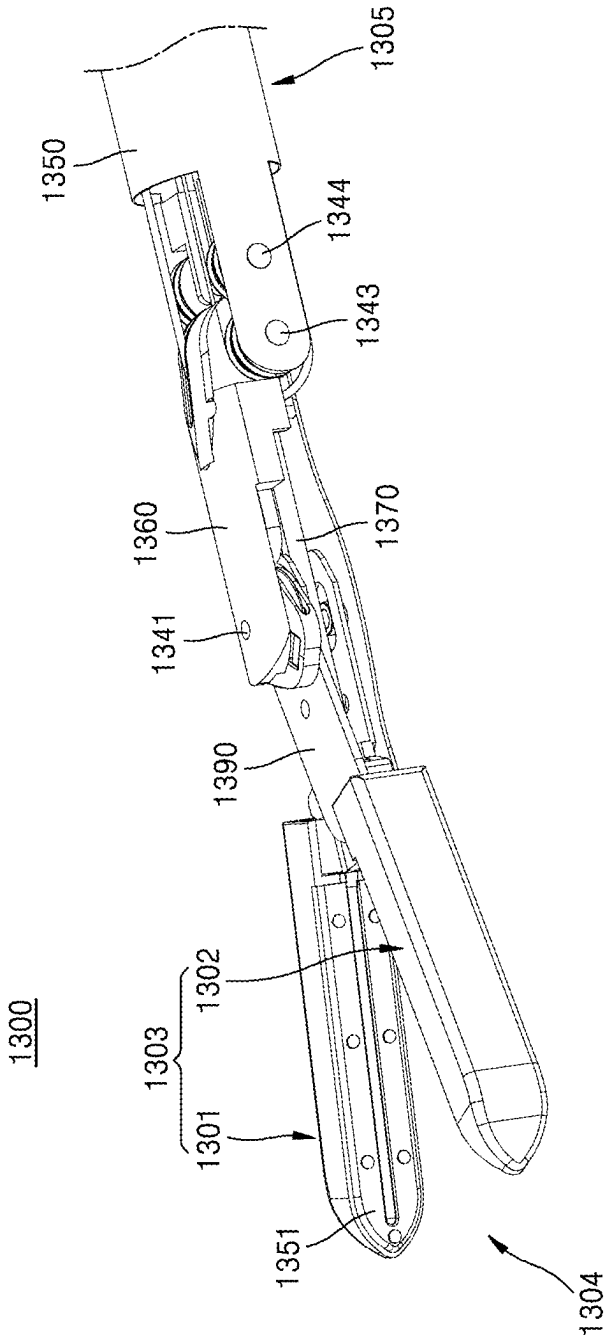
1300
1350
1305
1344
1343
1360
1370
1341
1390
1303
1302
1301
1351
1304

FIG. 200

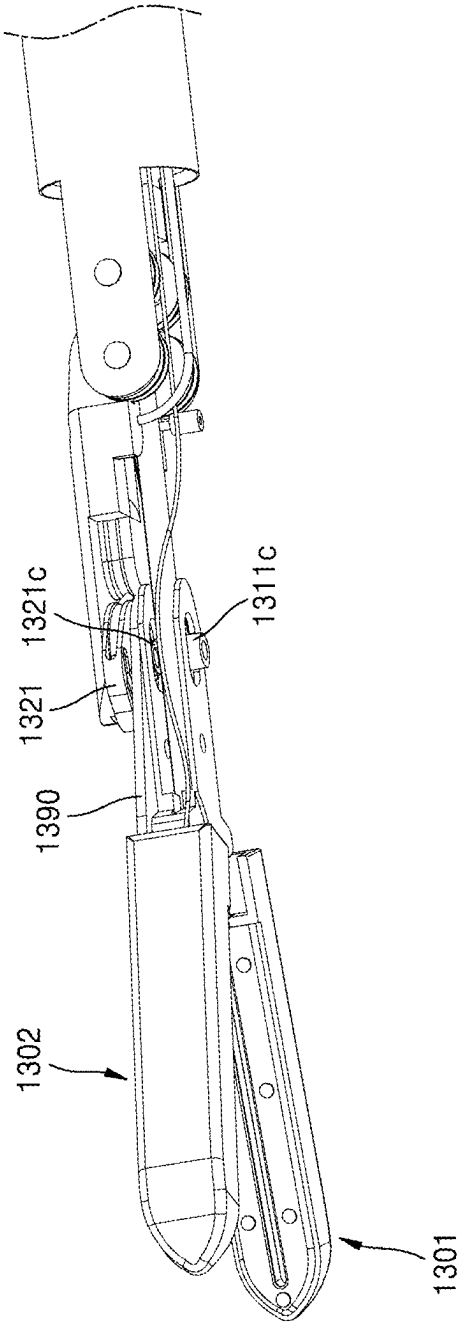

FIG. 201

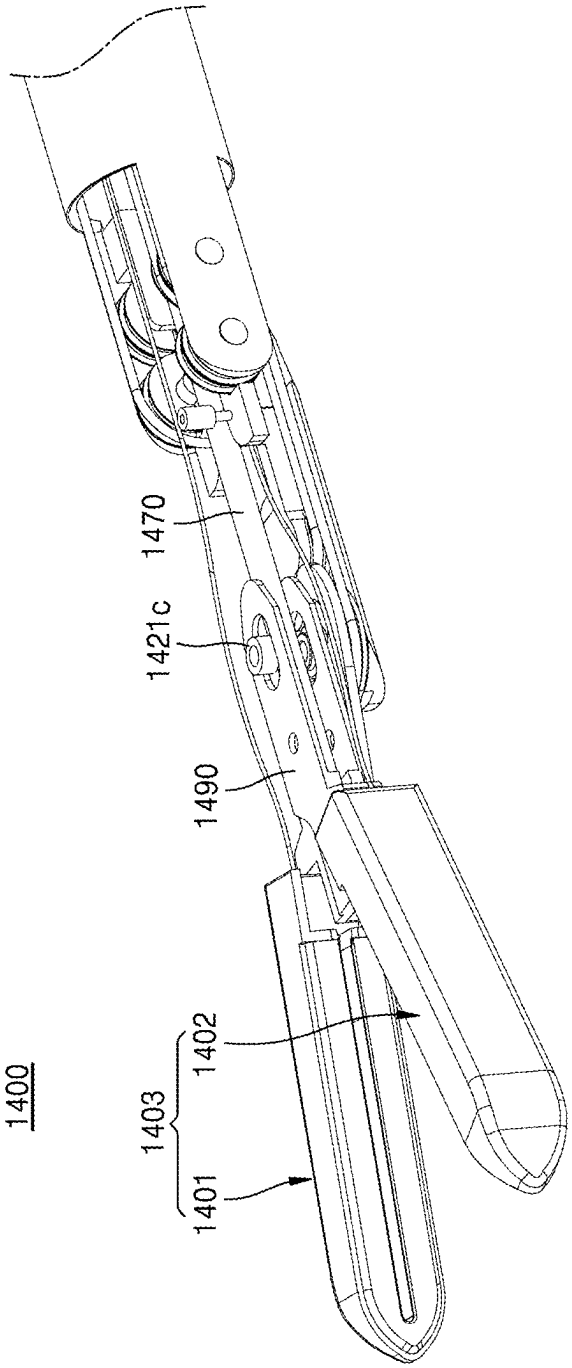

FIG. 202

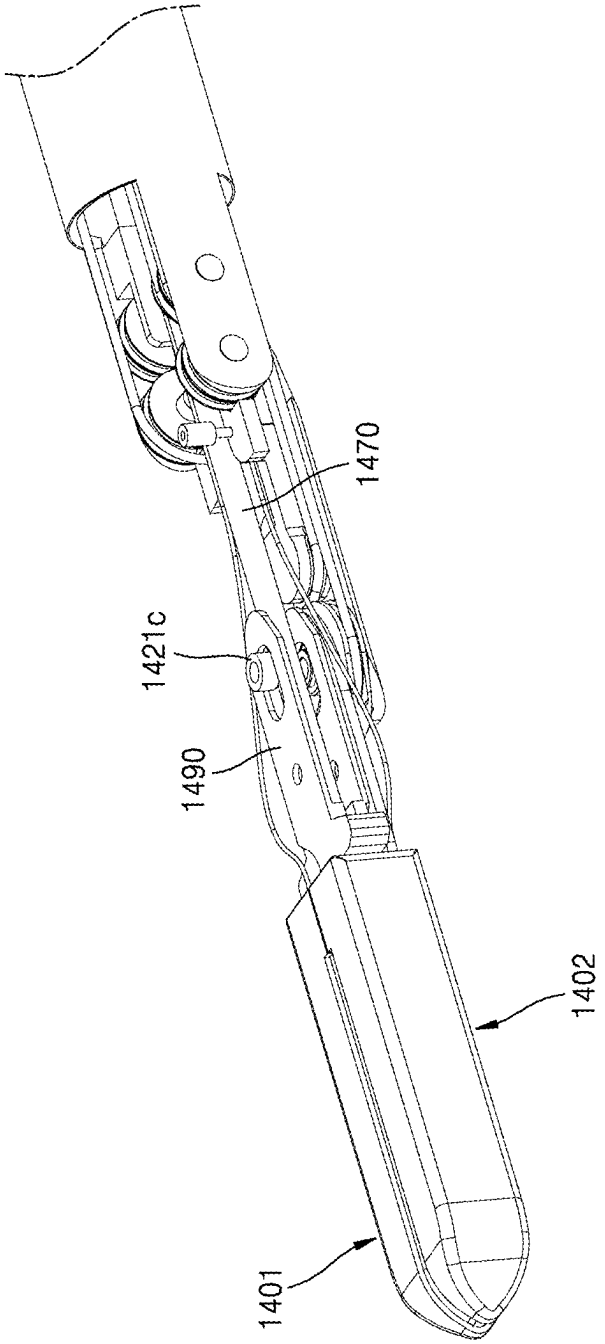

FIG. 203

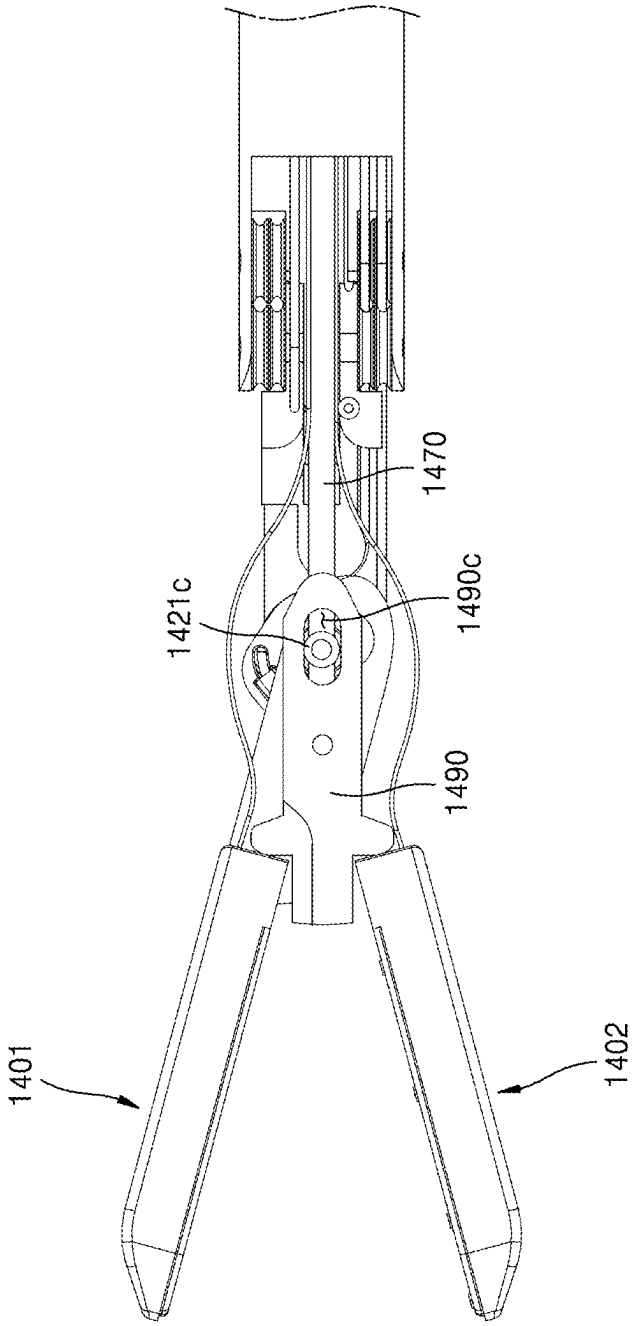

FIG. 204

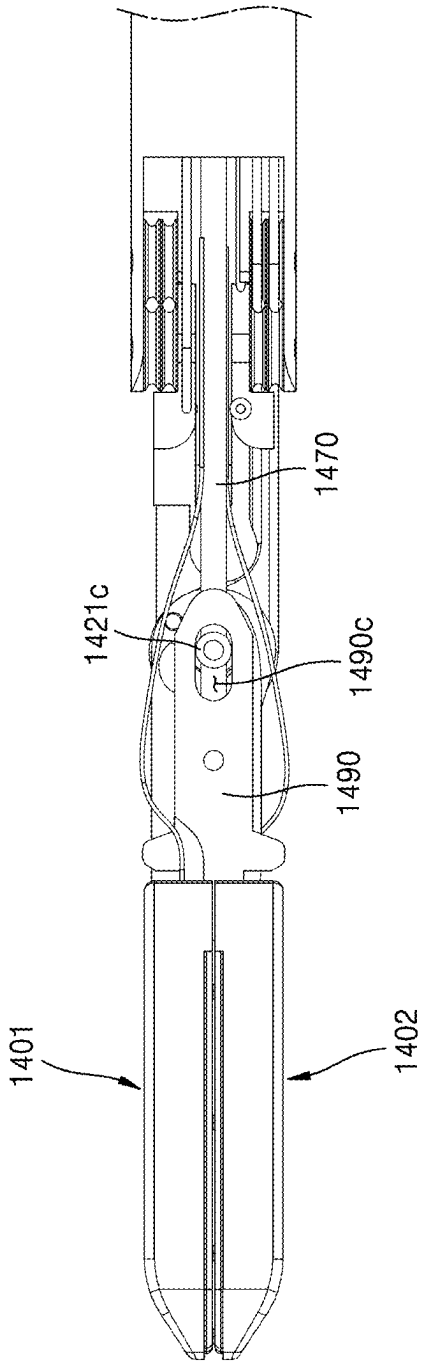

FIG. 205

FIG. 206

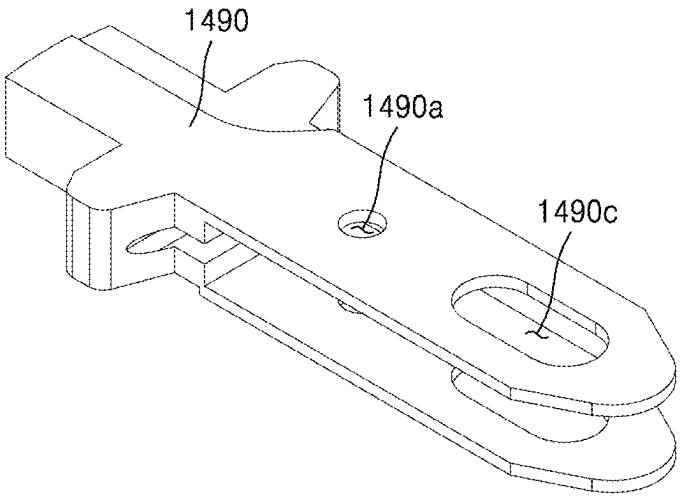

FIG. 207

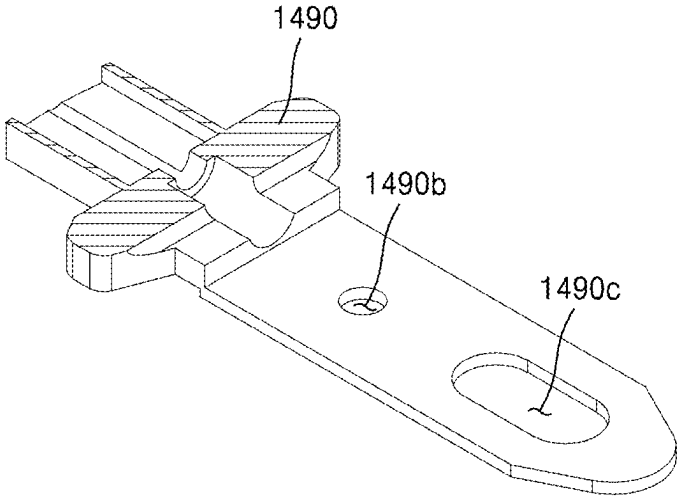

FIG. 208

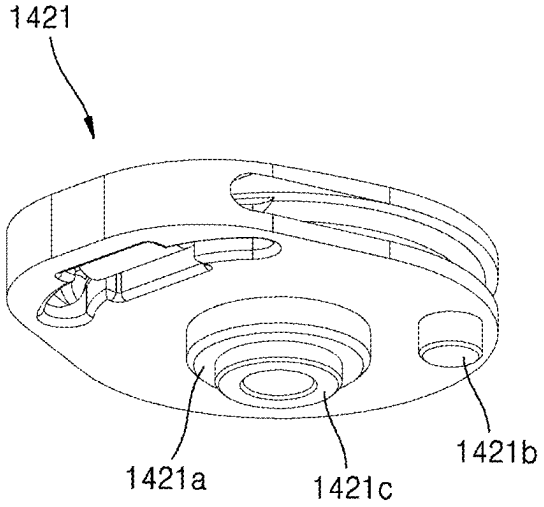

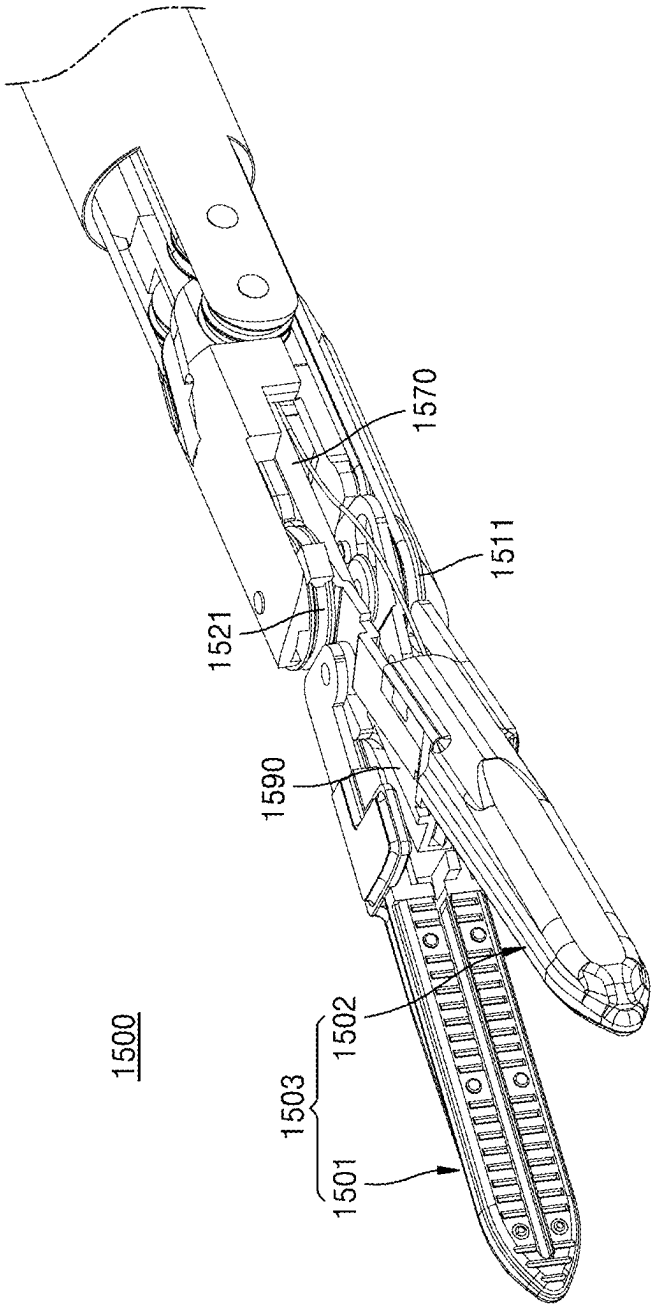

FIG. 209

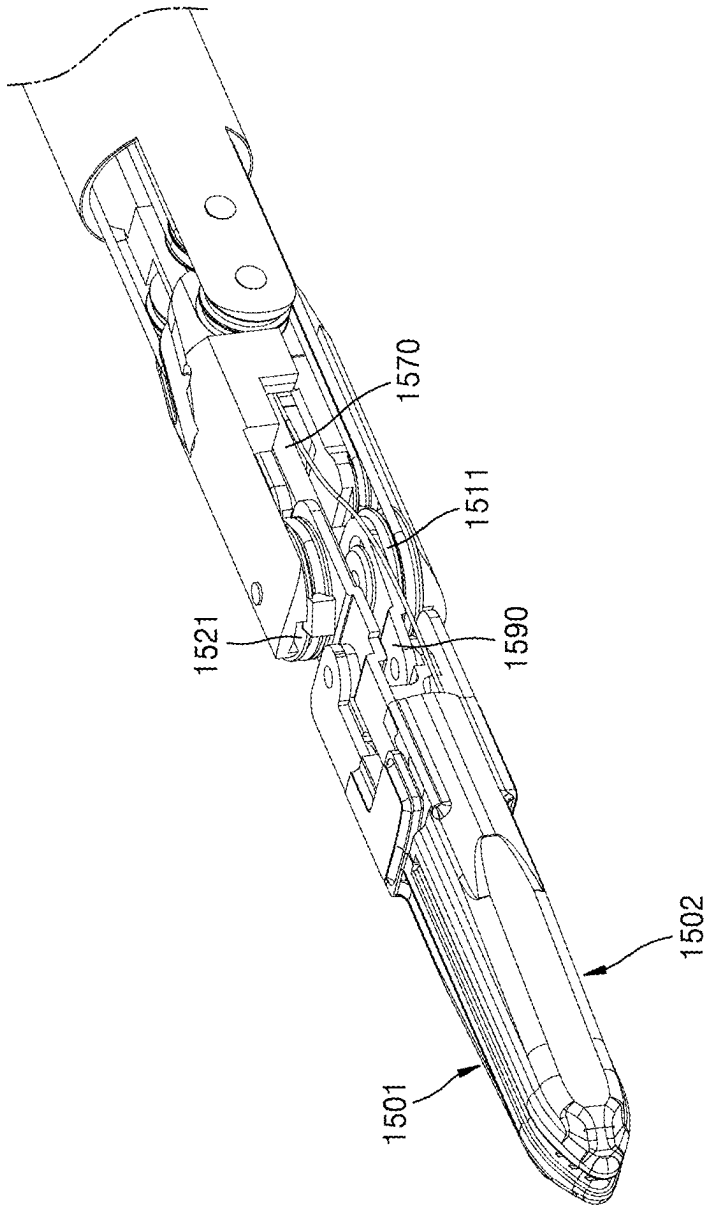

FIG. 210

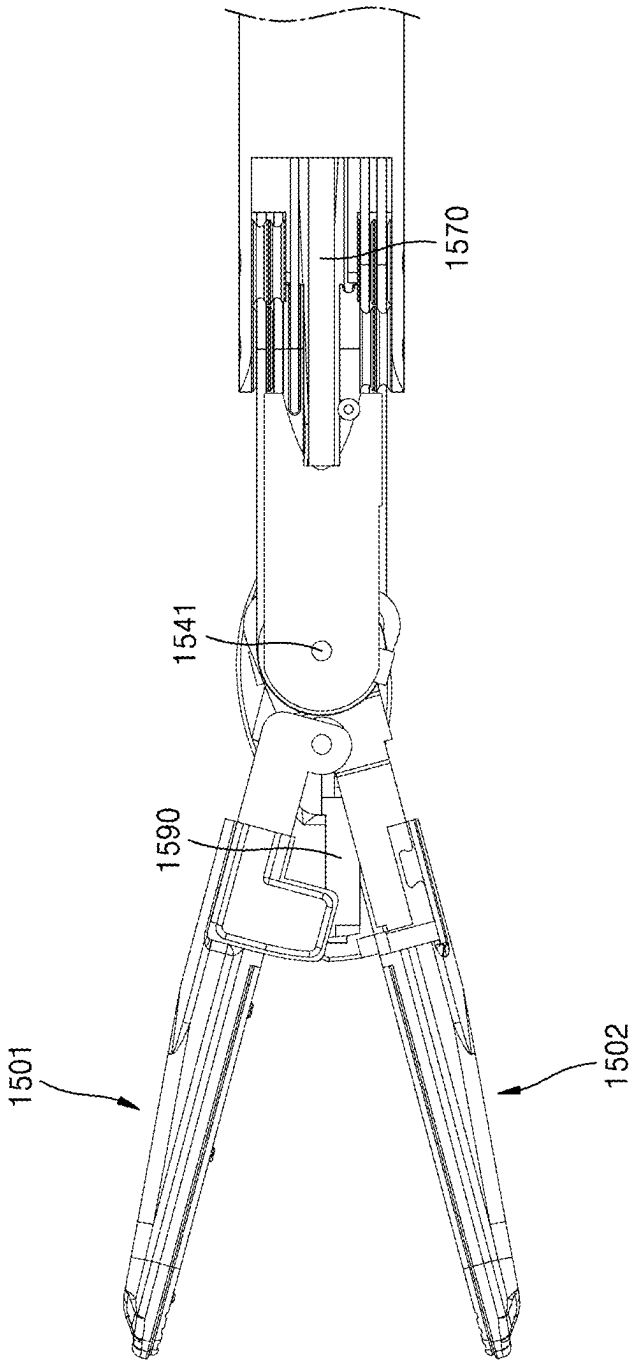

FIG. 211

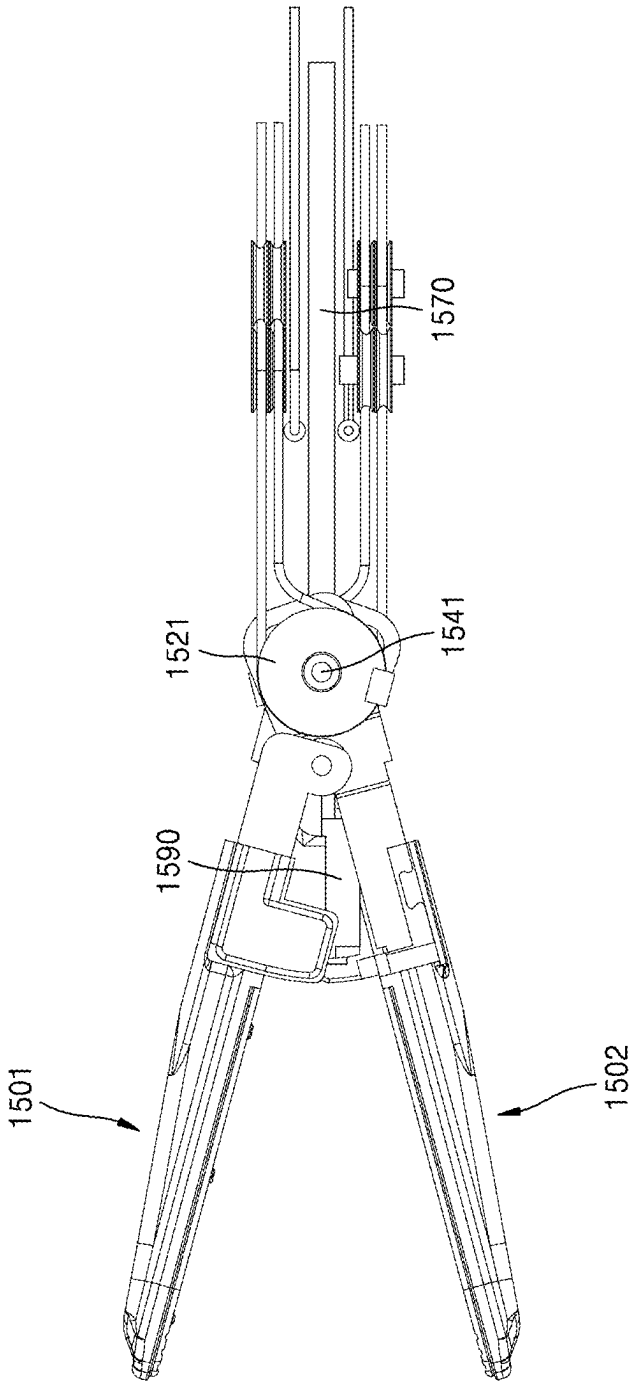

FIG. 212

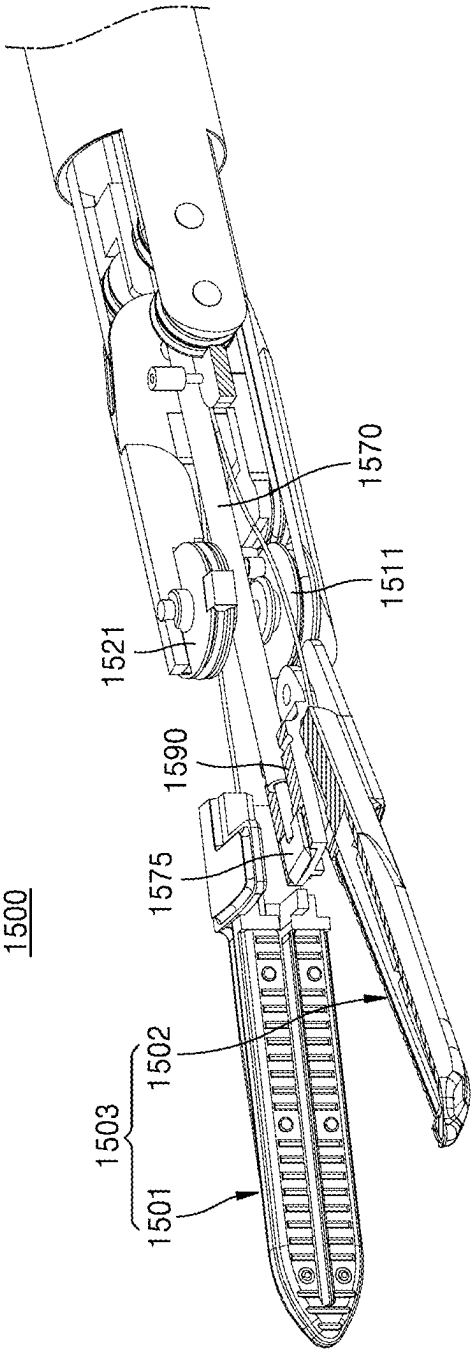

FIG. 213

FIG. 214

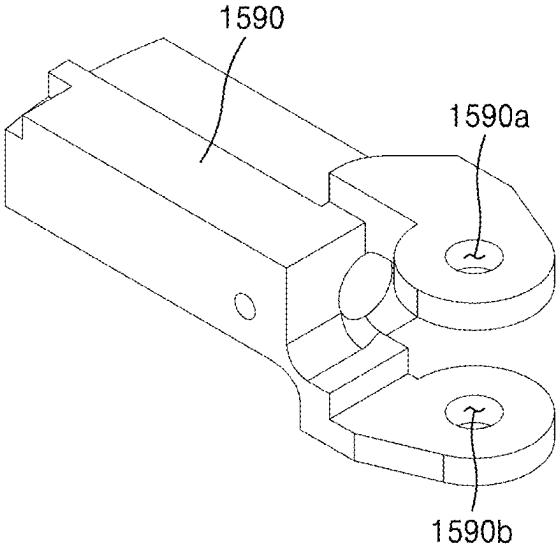

FIG. 215

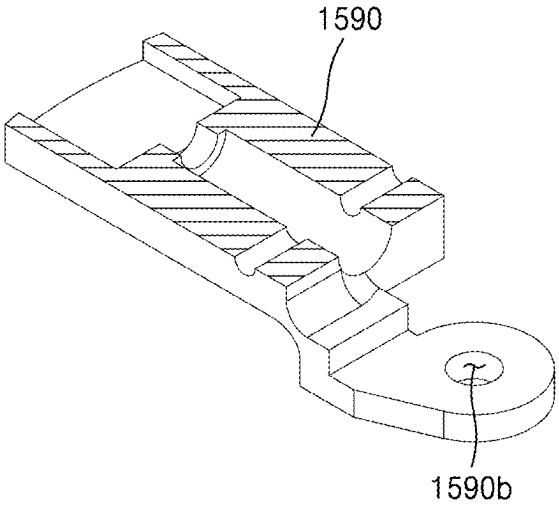

FIG. 216

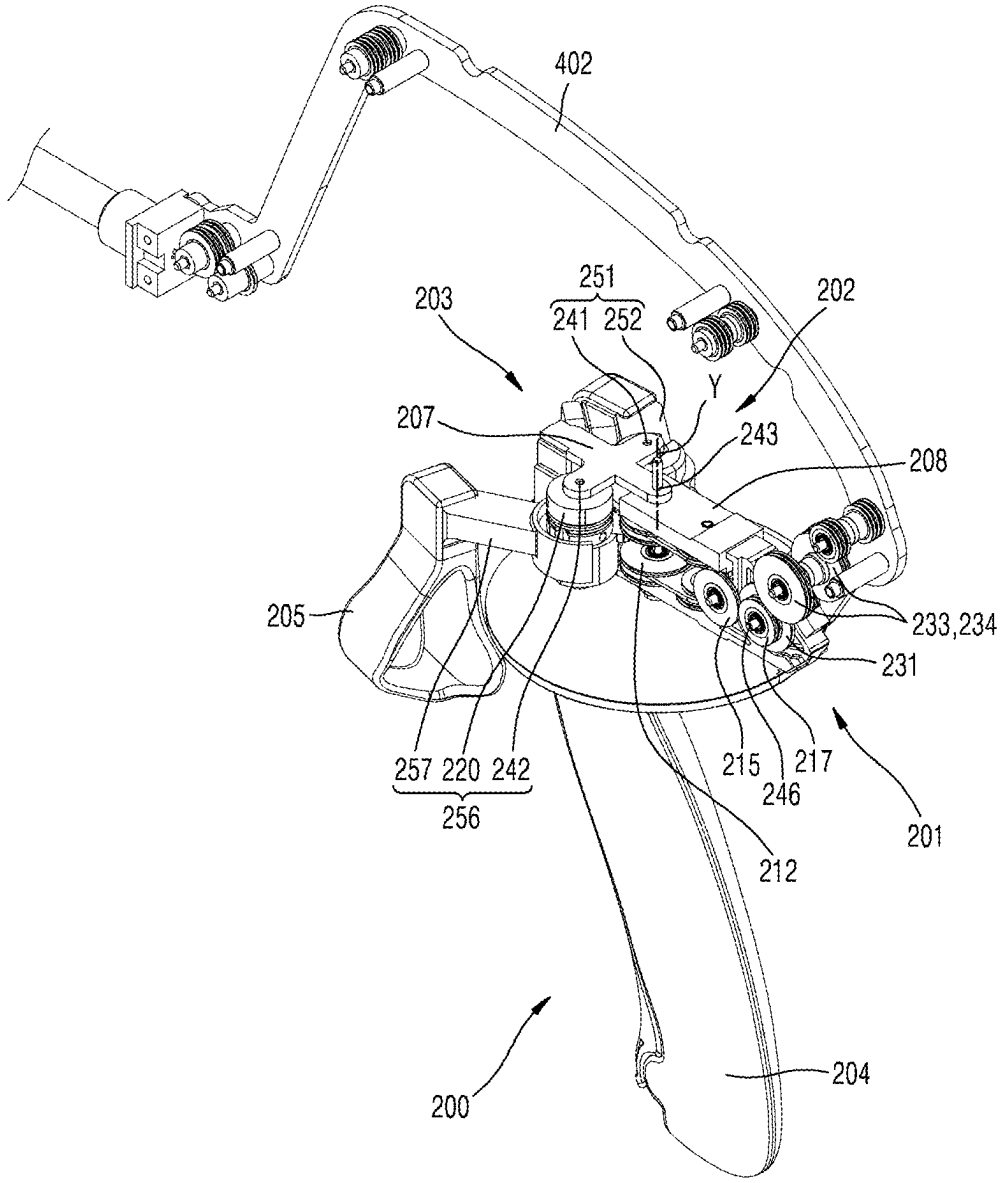
402
251
241 252
203
202
Y
207
243
208
205
233,234
231
257 220 242
256
215
217
246
201
212
200
204

FIG. 217

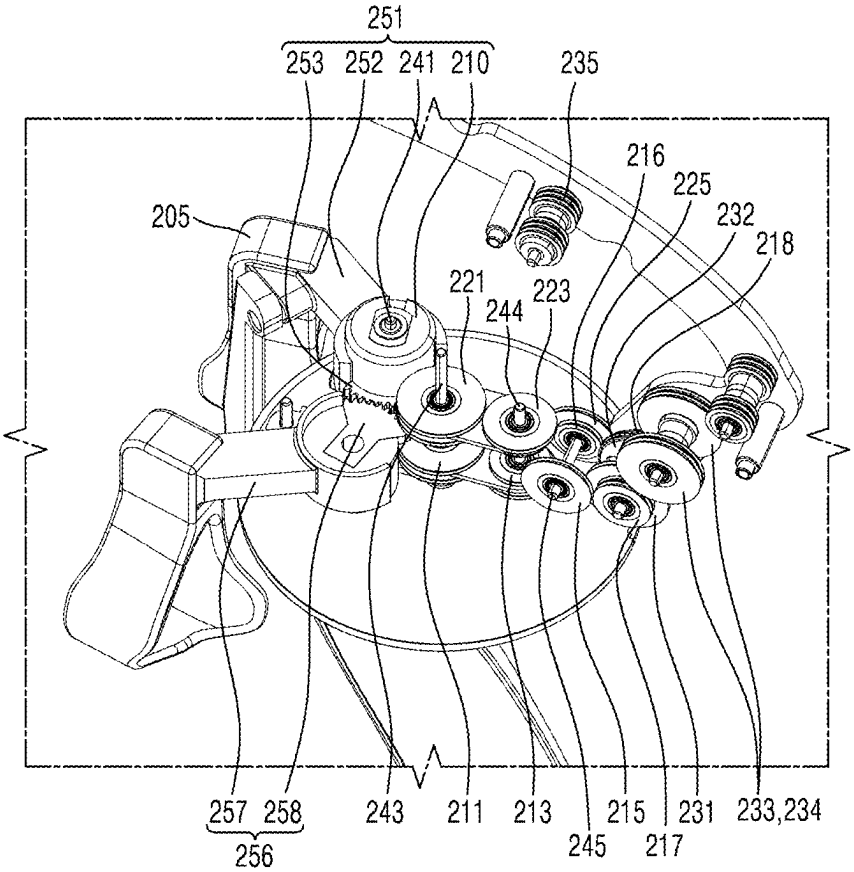
251
253
252
241
210
235
216
225
232
218
205
221
244
223
257
258
256
243
211
213
245
215
217
231
233,234

FIG. 218

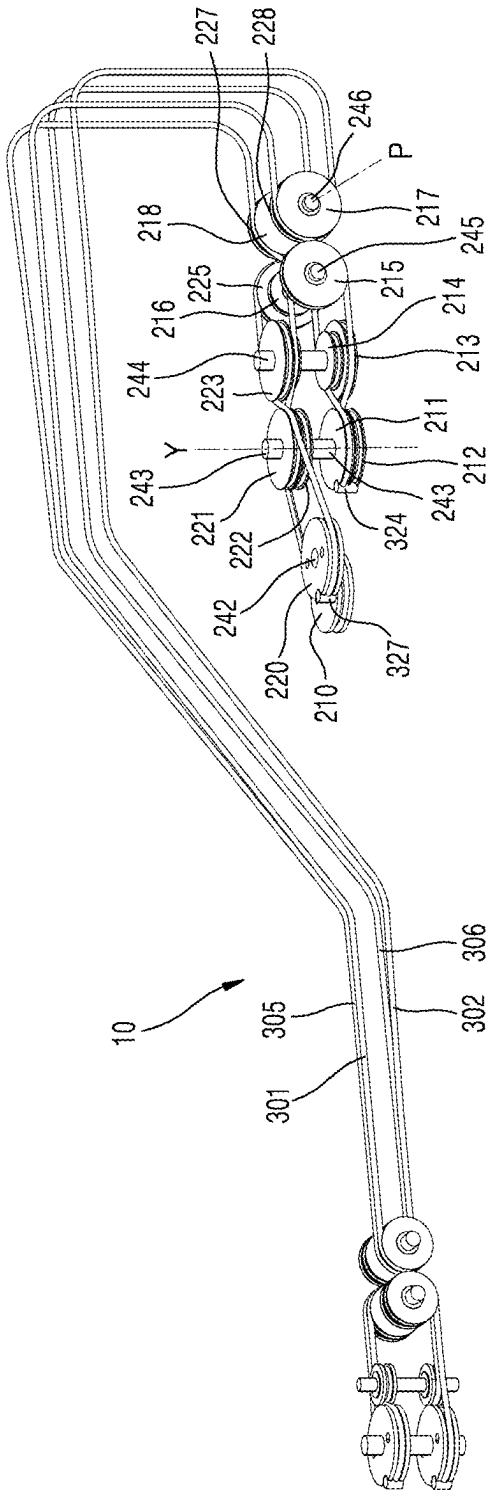
227
228
246
P
217
218
245
225
215
216
214
244
213
223
211
Y
243
212
221
243
222
324
242
327
220
210
306
10
305
302
301

FIG. 219

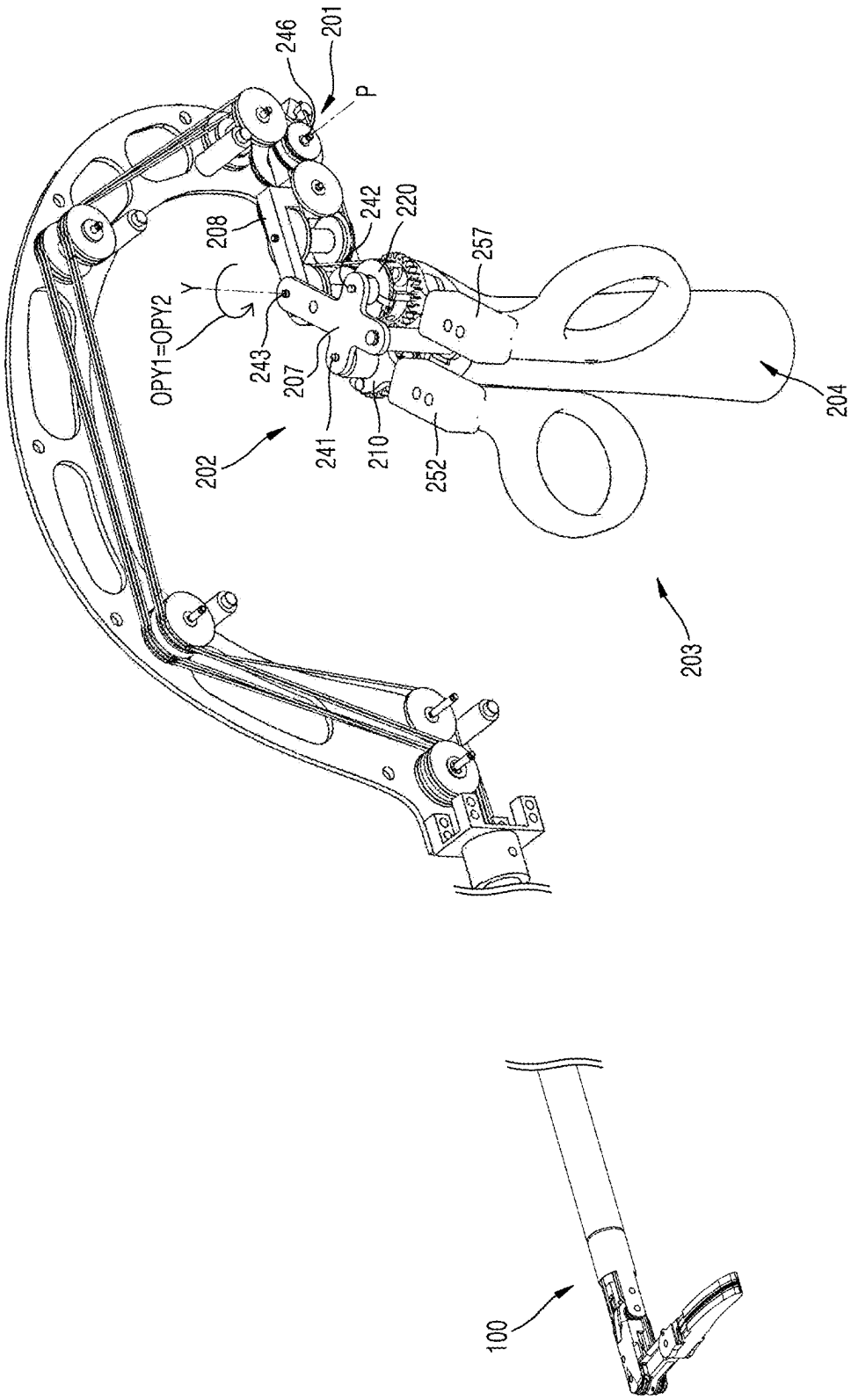
246
201
P
208
242
220
257
Y
OPY1=OPY2
243
207
241
210
252
202
204
203
100

FIG. 220

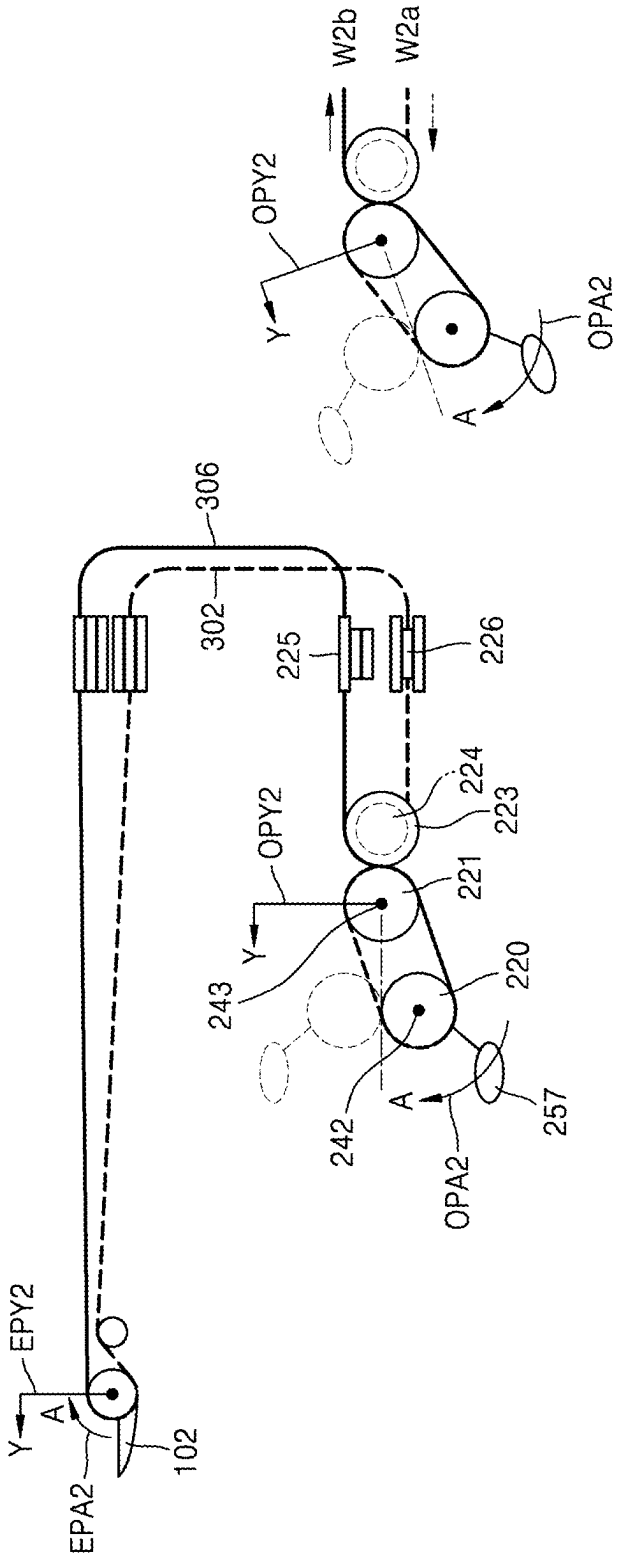
W2b
W2a
OPY2
Y
A
OPA2
306
302
225
226
224
223
OPY2
221
Y
243
220
242
A
257
OPA2
EPY2
Y
A
102
EPA2

FIG. 221

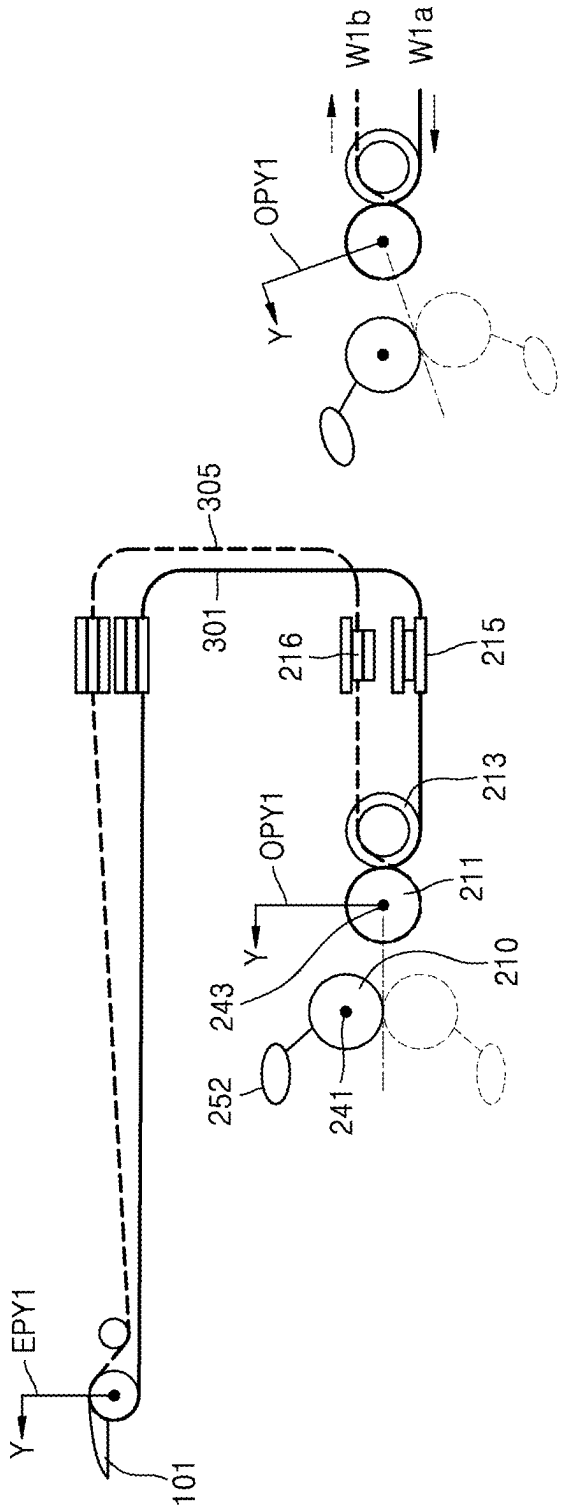
W1b
W1a
OPY1
Y
305
301
216
215
213
OPY1
211
Y
243
210
252
241
EPY1
Y
101

FIG. 222

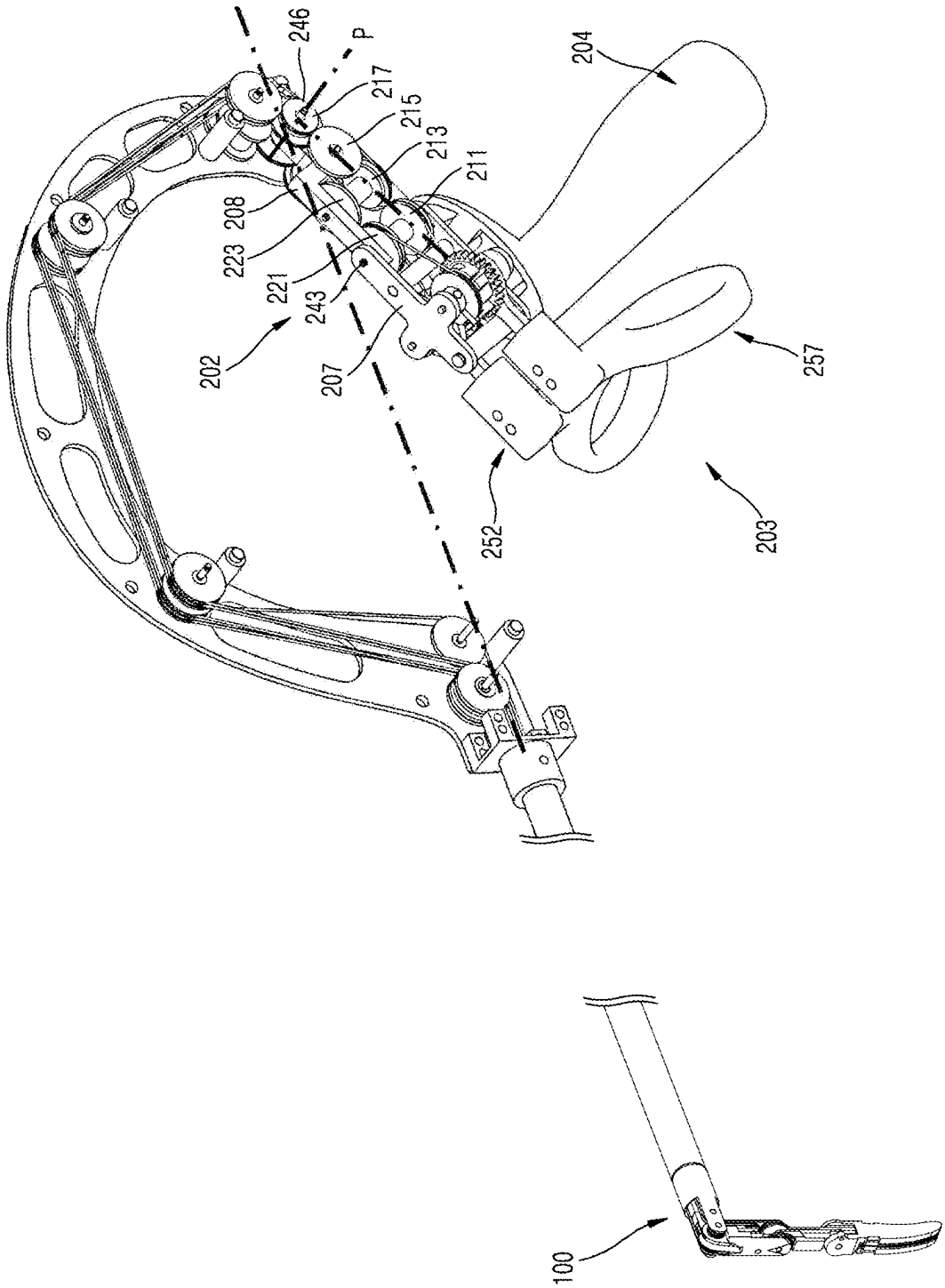

FIG. 223

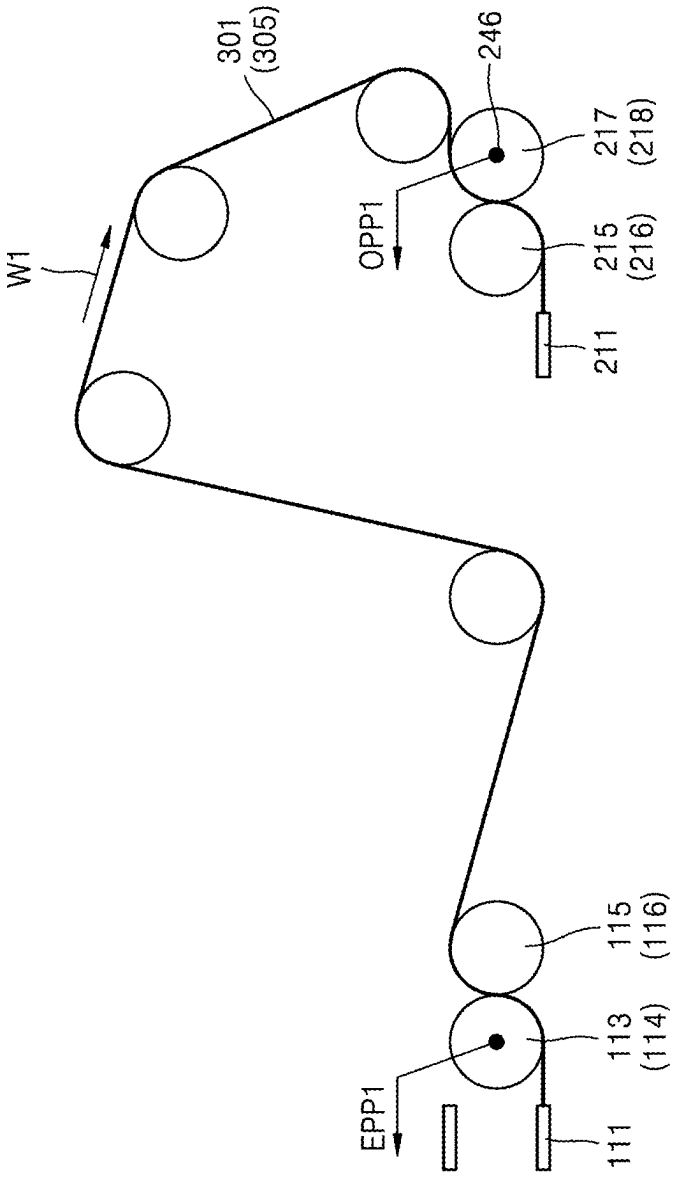

FIG. 224

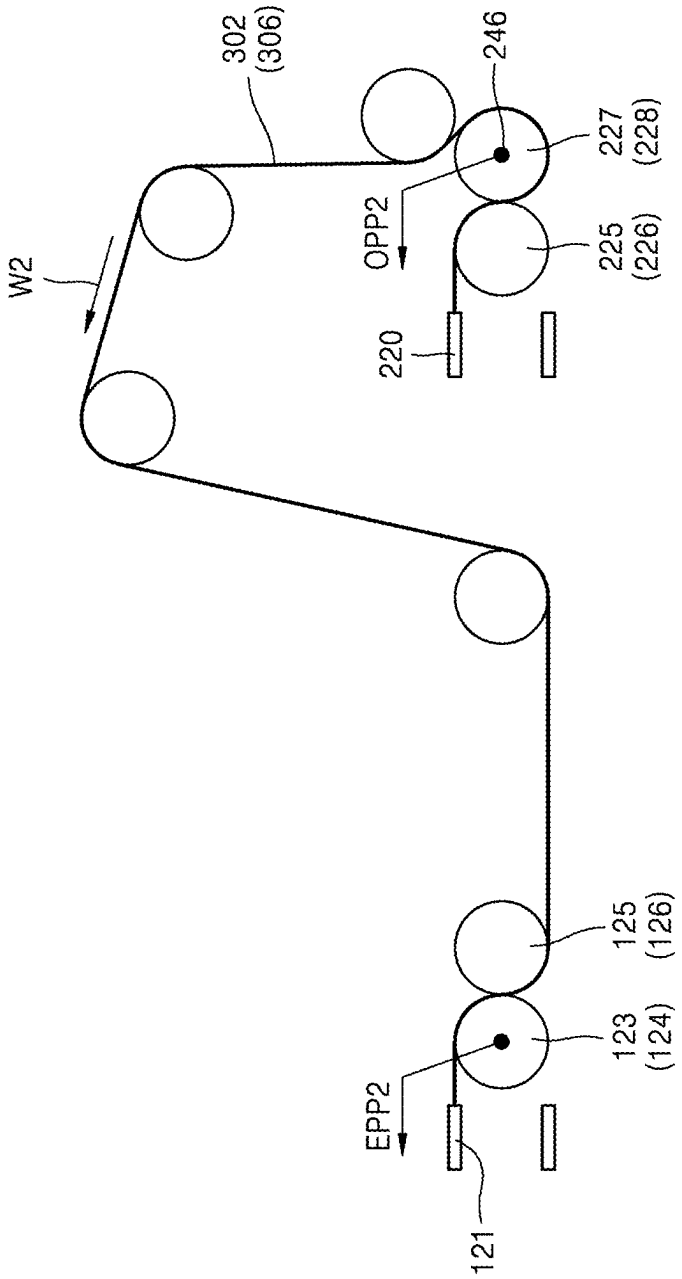

END TOOL OF SURGICAL INSTRUMENT AND ELECTROCAUTERIZATION SURGICAL INSTRUMENT COMPRISING SAME

CROSS-REFERENCE TO RELATED APPLICATION(S)

The instant application is a continuation application of international patent application No. PCT/KR2023/007038, filed on May 23, 2023, which claims priority to Korean Patent Application No. 10-2022-0063142, filed on May 23, 2022, and Korean Patent Application No. 10-2023-0028807, filed on Mar. 3, 2023, with the Korean Intellectual Property Office, the disclosures of which are incorporated herein in their entirety by reference.

TECHNICAL FIELD

One or more embodiments of the present disclosure relate to an end tool of a surgical instrument and a surgical instrument for electrocautery including the same, and in particular, to an end tool of a surgical instrument and a surgical instrument for electrocautery including the end tool that is capable of rotating in two or more directions and intuitively matching a movement of a manipulation portion, wherein the surgical instrument may be installed on a robot arm or manually operable in order to be used in laparoscopic surgery or other various surgeries.

BACKGROUND ART

Surgical operations in many cases require cutting and joining of body tissues including organs, muscular tissues, connective tissues, and blood vessels. Over the centuries, sharp blades and sutures have been used for cutting and joining. However, bleeding occurs when cutting body tissues, in particular, relatively highly vascularized tissue during surgical operation. Therefore, doctors require surgical instruments and methods to slow or reduce bleeding during surgical operations.

Recently, it has become possible to use an electric surgical instrument that uses electrical energy to perform certain surgical tasks. For example, regarding surgical instruments such as graspers, scissors, tweezers, blades, needles, and hooks, electric surgical instruments including one or more electrodes formed to receive electric energy have been developed. Electrical energy supplied through the electrodes may be used to coagulate, bond, or cut the patient's body tissues. In particular, when electrical energy is used, amputation and hemostasis may be performed at the same time.

Electric surgical instruments are typically classified into two types: monopolar and bipolar. In a monopolar electric surgical instrument, electrical energy of a specific polarity is supplied to one or more electrodes of the instrument. And electricity of different polarity is electrically connected to the patient. In a bipolar electric surgical instrument, one or more electrodes are electrically connected to a first polarity electrical energy source, and one or more electrodes are electrically connected to a second polarity electrical energy source opposite to the first polarity.

The above-mentioned background art is technical information possessed by the inventor for the derivation of the present disclosure or acquired during the derivation of the present disclosure, and cannot necessarily be said to be a known technique disclosed to the general public prior to the filing of the present disclosure.

DESCRIPTION OF EMBODIMENTS

Technical Problem

The present disclosure is directed to providing a surgical instrument for electrocautery including an end tool that is capable of rotating in two or more directions, and moving to intuitively match a movement of a manipulation portion, in a manually operable surgical instrument for electrocautery that is installed on a robot arm or manually operable for use in laparoscopic surgery or other various surgeries.

Solution to Problem

Second Embodiment of Surgical Instrument for Electrocautery-Forming X-Shaped Structure of First and Second Jaws

FIG. **41** is a perspective view illustrating a surgical instrument for electrocautery according to a second embodiment of the present disclosure. FIGS. **42** to **47** are views illustrating an end tool of the surgical instrument for electrocautery of FIG. **41**.

Referring to FIG. **41**, an electric cauterization surgical instrument **10** according to the second embodiment of the present disclosure includes an end tool **700**, a manipulation portion **200**, a power transmission portion **300**, and a connection portion **400**.

The electric cauterization surgical instrument **10** according to the second embodiment of the present disclosure is different from the electric cauterization surgical instrument **10** according to the first embodiment in that the end tool **700** has a different configuration, and thus the configuration of the end tool **700** will be described in detail below.

The end tool **700** is formed on the other end portion of the connection portion **400**, and performs necessary motions for surgery by being inserted into a surgical site. In an example of the end tool **700** described above, as illustrated in FIG. **41**, a pair of jaws **703** for performing a grip motion may be used.

However, the concept of the present disclosure is not limited thereto, and various devices for performing surgery may be used as the end tool **700**. For example, a configuration of a cantilever cautery may also be used as the end tool **700**. The end tool **700** is connected to the manipulation portion **200** by the power transmission portion **300**, and receives a driving force of the manipulation portion **200** through the power transmission portion **300** to perform a motion necessary for surgery, such as gripping, cutting, suturing, or the like.

Here, the end tool **700** of the electric cauterization surgical instrument **10** according to the second embodiment of the present disclosure is formed to be rotatable in at least one direction, and for example, the end tool **700** may be formed to perform a pitch motion around a Y-axis of FIG. **41** and simultaneously perform a yaw motion and an actuation motion around a Z-axis of FIG. **41**.

Referring to FIGS. **42** to **47**, **55**, and **56**, the end tool **700** of the electric cauterization surgical instrument **10** according to the second embodiment of the present disclosure includes a first electrode **751**, a second electrode **752**, a pitch hub **750**, an end tool hub **760**, a plurality of rotation shafts **741**, **743**, and **744**, and the like that are the same as those of the first embodiment in configuration and effect, and is different in that a jaw rotation shaft **701***e*, a tube through hole **701***f*, a jaw

pulley coupling hole **701***d*, and a movable coupling hole **701***c* are formed in a first jaw **701**, and a shaft pass-through portion **702***e* through which the rotation shaft **701***e*, which is a jaw rotation shaft formed in the first jaw **701**, is able to pass, a movable coupling hole **702***c*, and a hole **702***d*, which is a jaw pulley coupling hole, are formed in a second jaw **702** that faces and is connectable to the first jaw **701**.

FIG. **48** is a perspective view illustrating the end tool hub of the surgical instrument for electrocautery of FIG. **41**. FIGS. **49** and **50** are cut-away perspective views of the end tool hub of FIG. **48**. FIGS. **51** and **52** are perspective views illustrating the end tool hub of FIG. **48**. FIG. **53** is a side view illustrating the end tool hub of FIG. **48** and a guide tube. FIG. **54** is a plan view illustrating the end tool hub of FIG. **48** and the guide tube.

Referring to FIGS. **48** to **54**, the end tool hub **760** provided in the end tool **700** of the electric cauterization surgical instrument **10** of FIG. **41** has a predetermined radius of curvature on an inner circumferential surface thereof for gentle curved movement of the guide tube **670**, and may include a yaw round portion **767** and a pitch round portion **766** formed in a curved shape.

In addition, a yaw slit **765** passing through the end tool hub **760** may be formed on a plane perpendicular to a first rotation shaft **741** to allow a guide tube **770**, which is configured to guide a movement path of a blade **775** and the blade wire **307** connected to the blade **775**, to stably move through the end tool hub **760**.

In addition, a pitch slit **764**, which is a separation space, may be formed between a first pitch pulley portion **763***a* and a second pitch pulley portion **763***b* facing each other so that the guide tube **670** may pass therethrough, thereby allowing the guide tube **770** to stably move through the pitch slit **764**.

Referring to FIG. **51**, in addition to the yaw slit **765** formed in the end tool hub **760**, the yaw rotation shaft **741** may be divided into two parts and provided as a pair, and the guide tube **670** may move through a space formed between the divided pair of yaw rotation shafts **741**.

Referring to FIGS. **51** to **54**, the end tool hub **760** of the surgical instrument for electrocautery according to the second embodiment has the same configuration as the end tool hub **660** of the surgical instrument for electrocautery according to the first embodiment, and thus a detailed description thereof will be omitted in the overlapping range.

FIG. **55** is a perspective view illustrating the first jaw of the end tool of the surgical instrument for electrocautery of FIG. **41**. FIG. **56** is a perspective view illustrating the second jaw of the end tool of the surgical instrument for electrocautery of FIG. **41**.

Referring to FIG. **55**, the first jaw **701** of the end tool **700** of the surgical instrument for electrocautery of FIG. **41** may include the jaw rotation shaft **701***e*, which has the tube through hole **701***f* formed therein and is formed to protrude, the movable coupling hole **701***c*, and the jaw pulley coupling hole **701***d*.

The first jaw **701** is formed entirely in an elongated bar shape, a path through which the blade **775** is movable is formed in the first jaw **701** at a distal end side (left side based on FIG. **55**), and a pulley **711**, which is a first jaw pulley, is coupled to the first jaw **701** at a proximal end side (right side based on FIG. **55**) and formed to be rotatable around the rotation shaft **741**.

Referring to FIG. **55**, the movable coupling hole **701***c* and the jaw pulley coupling hole **701***d* may be formed in the first jaw **701** at the proximal end side. Here, the movable coupling hole **701***c* may be formed to have a predetermined curvature, and may be formed in an approximately elliptical shape.

A shaft coupling portion **711***a* formed on the first jaw pulley **711** may be fitted into the movable coupling hole **701***c* formed in the first jaw **701**. Here, a short radius of the movable coupling hole **701***c* may be formed to be substantially the same as or slightly greater than a radius of the shaft coupling portion **711***a*.

Referring to FIG. **55**, a long radius of the movable coupling hole **701***c* may be formed to be greater than the radius of the shaft coupling portion **711***a*. Thus, a path may be formed so that the shaft coupling portion **711***a* is movable therethrough to a certain degree in the movable coupling hole **701***c* in a state in which the shaft coupling portion **711***a* of the pulley **711** is fitted into the movable coupling hole **701***c* of the first jaw **701**, This will be described in detail later.

Referring to FIG. **55**, the jaw pulley coupling hole **701***d* formed in the first jaw **701** is formed in the form of a cylindrical hole, and a jaw coupling portion **711***b* of the pulley **711** may be fitted into the jaw pulley coupling hole **701***d*.

Here, a radius of the jaw pulley coupling hole **101***d* may be formed to be substantially the same as or relatively greater than a radius of the jaw coupling portion **711***b*. Thus, the jaw coupling portion **711***b* of the pulley **711** may be formed to be rotatably coupled to the jaw pulley coupling hole **701***d* of the first jaw **701**. This will be described in more detail later.

Referring to FIG. **56**, the second jaw **702** disposed to face the first jaw **701** may include the shaft pass-through portion **702***e*, the movable coupling hole **702***c*, and the jaw pulley coupling hole **702***d*. The second jaw **702** may be formed entirely in an elongated bar shape, the shaft pass-through portion **702***e* may be formed in the distal end, and the jaw pulley coupling hole **702***d* may be formed in the proximal end.

Referring to FIG. **59**, the movable coupling hole **702***c* formed in the second jaw **702** may be formed to have a predetermined curvature and may be formed in an approximately elliptical shape. A shaft coupling portion **721***a* of a pulley **721** may be fitted into the movable coupling hole **702***c*. Here, a short radius of the movable coupling hole **702***c* may be formed to be substantially the same as or slightly greater than a radius of the shaft coupling portion **721***a*.

Meanwhile, a long radius of the movable coupling hole **702***c* may be formed to be relatively greater than the radius of the shaft coupling portion **721***a*. Thus, the shaft coupling portion **721***a* is formed to be movable to a certain degree in the movable coupling hole **702***c* in a state in which the shaft coupling portion **721***a* of the pulley **721** is fitted into the movable coupling hole **702***c* of the second jaw **702**. This will be described in more detail later.

Meanwhile, the jaw pulley coupling hole **702***d* is formed in the form of a cylindrical hole, and a jaw coupling portion **721***b* of the pulley **721** may be fitted into the jaw pulley coupling hole **702***d*. Here, a radius of the jaw pulley coupling hole **702***d* may be formed to be substantially the same as or greater than a radius of the jaw coupling portion **721***b*. Thus, the jaw coupling portion **721***b* of the pulley **721** may be rotatably coupled to the jaw pulley coupling hole **702***d* of the second jaw **702**.

Meanwhile, the shaft pass-through portion **702***e* may be formed in the second jaw **702** at the distal end side relative to the movable coupling hole **702***c* and the jaw pulley coupling hole **702***d*.

Referring to FIGS. **55** and **56**, the shaft pass-through portion **702***e* formed in the second jaw **702** may be formed in a hole shape, and the jaw rotation shaft **701***e* formed in the first jaw **701** may be inserted through the shaft pass-through portion **702***e*.

Referring to FIG. **57**, the pulley **711**, which is a first jaw pulley, may include the shaft coupling portion **711***a* and the jaw coupling portion **711***b*. The pulley **711** is formed entirely in the shape of a rotatable disk and has one surface (lower surface based on FIG. **57**) on which the shaft coupling portion **711***a* and the jaw coupling portion **711***b* may be formed to protrude to a certain degree.

As described above, the shaft coupling portion **711***a* of the pulley **711** may be fitted into the movable coupling hole **701***c* of the first jaw **701**, and the jaw coupling portion **711***b* of the pulley **711** may be fitted into the jaw pulley coupling hole **701***d* of the first jaw **701**. The pulley **711** may be formed to be rotatable with the rotation shaft **741**, which is an end tool jaw pulley rotation shaft, as the center of rotation.

Meanwhile, the pulley **721**, which is a second jaw pulley, may include the shaft coupling portion **721***a* and the jaw coupling portion **721***b*.

The second jaw pulley **721** is formed entirely in the form of a rotatable disk and has one surface on which the shaft coupling portion **721***a* and the jaw coupling portion **721***b* may be formed to protrude to a certain degree. As described above, the shaft coupling portion **712***a* of the pulley **712** may be fitted into the movable coupling hole **702***c* of the second jaw **702**, and the jaw coupling portion **712***b* of the pulley **712** may be fitted into the jaw pulley coupling hole **702***d* of the second jaw **702**. The pulley **721** may be formed to be rotatable with the rotation shaft **741**, which is an end tool jaw pulley rotation shaft, as the center of rotation.

The coupling relationship between the components described above is as follows.

The rotation shaft **741**, which is an end tool jaw pulley rotation shaft, is sequentially inserted through the shaft coupling portion **711***a* of the pulley **711**, the movable coupling hole **701***c* of the first jaw **701**, the movable coupling hole **702***c* of the second jaw **702**, and the shaft coupling portion **721***a* of the pulley **721**.

The rotation shaft **701***e*, which is a jaw rotation shaft, is inserted through the shaft pass-through portion **702***e* of the second jaw **702**.

The shaft coupling portion **711***a* of the pulley **711** is fitted into the movable coupling hole **701***c* of the first jaw **701**, and the jaw coupling portion **711***b* of the pulley **711** is fitted into the jaw pulley coupling hole **701***d* of the first jaw **701**.

At this time, the jaw pulley coupling hole **701***d* of the first jaw **701** and the jaw coupling portion **711***b* of the pulley **711** are axially coupled to each other so as to be rotatable, and the movable coupling hole **701***c* of the first jaw **701** and the shaft coupling portion **711***a* of the pulley **711** are movably coupled to each other.

The shaft coupling portion **721***a* of the pulley **721** is fitted into the movable coupling hole **702***c* of the second jaw **702**, and the jaw coupling portion **721***b* of the pulley **721** is fitted into the jaw pulley coupling hole **702***d* of the second jaw **702**.

At this time, the jaw pulley coupling hole **702***d* of the second jaw **702** and the jaw coupling portion **721***b* of the pulley **721** are axially coupled to each other to be rotatable, and the movable coupling hole **702***c* of the second jaw **702** and the shaft coupling portion **721***a* of the pulley **721** are movably coupled to each other.

Here, the pulley **711** and the pulley **721** rotate around the rotation shaft **741**, which is an end tool jaw pulley rotation shaft. The first jaw **701** and the second jaw **702** rotate around the rotation shaft **701***e*, which is a jaw rotation shaft. That is, the pulley **711** and the first jaw **701** have different shafts of rotation. Similarly, the pulley **721** and the second jaw **702** have different shafts of rotation.

That is, the rotation angle of the first jaw **701** is limited to a certain degree by the movable coupling hole **701***c*, but is essentially rotated about the rotation shaft **701***e*, which is a jaw rotation shaft. Similarly, the rotation angle of the second jaw **702** is limited to a certain degree by the movable coupling hole **702***c*, but is essentially rotated around the rotation shaft **701***c*, which is a jaw rotation shaft.

Amplification of grip force due to the coupling relationship between the above-described components will be described.

FIG. **58** is a plan view illustrating an opening and closing motion of the first jaw of the end tool of the surgical instrument for electrocautery of FIG. **41**. FIG. **59** is a plan view illustrating an opening and closing motion of the second jaw of the end tool of the surgical instrument for electrocautery of FIG. **41**. FIG. **60** is a plan view illustrating an opening and closing motion of the first jaw and the second jaw of the end tool of the surgical instrument for electrocautery of FIG. **41**.

Referring to FIGS. **58** to **60**, in the electric cauterization surgical instrument **10** according to the second embodiment, the coupling structure of the first jaw **701** and the second jaw **702** forms an X-shaped structure, so that when the first jaw **701** and the second jaw **702** rotate in a direction of approaching each other (i.e. when the first jaw **701** and the second jaw **702** are closed), a grip force in a direction of closing the first jaw **701** and the second jaw **702** further increases. This will be described below in more detail.

As described above, in motions of the first jaw **701** and the second jaw **702** being opened and closed, there are two shafts that serve as the centers of rotation for the first jaw **701** and the second jaw **702**.

That is, the first jaw **701** and the second jaw **702** perform an opening and closing motion around two shafts of the rotation shaft **741** and the rotation shaft **701***e*. In this case, the centers of rotation of the first jaw **701** and the second jaw **702** become the rotation shaft **701***c*, and the centers of rotation of rotation of the pulley **711** and the pulley **721** become the rotation shaft **741**.

At this time, the rotation shaft **741** is a shaft whose position is relatively fixed, and the rotation shaft **701***e* is a shaft whose position is relatively moved linearly. In other words, when the pulley **711** and the pulley **721** rotate in a state in which the position of the rotation shaft **741** is fixed, the first jaw **701** and the second jaw **702** are opened/closed while the rotation shaft **701***c*, which is a rotation shaft of the first jaw **701** and the second jaw **702**, is moved backward and forward. This will be described below in more detail.

In FIG. **58**, **r1** is a distance from the jaw coupling portion **711***b* of the pulley **711** to the shaft coupling portion **711***a*, and a length thereof is constant. Thus, a distance from the rotation shaft **741** inserted into the shaft coupling portion **711***a* to the jaw coupling portion **711***b* is also constant as **r1**.

Meanwhile, **r2** of FIG. **58** is a distance from the jaw pulley coupling hole **701***d* of the first jaw **701** to the rotation shaft **701***e* that is a jaw rotation shaft, and a length thereof is constant. Thus, a distance from the jaw coupling portion **711***b* of the pulley **711** inserted into the jaw pulley coupling hole **701***d* to the jaw rotation shaft **701***e* is also constant as **r2**.

Referring to FIG. **58**, the lengths of **r1** and **r2** remain constant. Accordingly, when the pulley **711** and the pulley

721 rotate in the directions of an arrow A1 of FIG. 58 and of an arrow A2 of FIG. 59, respectively, around the rotation shaft 741 to perform a closing motion, the first jaw 701 and the second jaw 702 rotate around the rotation shaft 701*e* as the angle between r1 and r2 changes while the lengths of r1 and r2 remain constant, and at this time, the rotation shaft 701*e* itself is also linearly moved (i.e., is moved forward/backward) by as much as an arrow C1 of FIG. 58 and an arrow C2 of FIG. 59.

That is, assuming that the position of the rotation shaft 741, which is an end tool jaw pulley rotation shaft, is fixed, when the first jaw 701 and the second jaw 702 are closed, a force is applied in a direction in which the rotation shaft 701*e*, which is a jaw rotation shaft, is moved forward (i.e., toward the distal end), and thus the grip force in the direction in which the first jaw 701 and the second jaw 702 are closed becomes larger.

In other words, since the lengths of r1 and r2 remain constant when the second jaw 702 rotates around the jaw rotation shaft 701*e*, when the pulley 721 rotates around the rotation shaft 741, the angle between r1 and r2 changes while the lengths of r1 and r2 remain constant. That is, the angle between r1 and r2 in a state in which the second jaw 702 is open as shown in FIG. 59A is relatively greater than the angle between r1 and r2 in a state in which the second jaw 702 is closed as shown in FIG. 59B.

Thus, when the second jaw 702 rotates from the open state to the close state, the angle between r1 and r2 changes, and a force is applied in a direction in which the jaw rotation shaft 701*e* passing through the shaft pass-through portion 702*e* formed in the second jaw 702 is moved forward.

In this case, since the rotation shaft 741 is a shaft whose position is relatively fixed, the jaw rotation shaft 701*e* is moved forward in the direction of the arrow C1 of FIG. 58 and the direction of an arrow C2 of FIG. 59, and the grip force is further increased in a direction in which the second jaw 702 is closed.

In other words, when the pulley 711 and the pulley 721 rotate around the rotation shaft 741, which is a shaft whose relative position is fixed, the angle between r1 and r2 changes while the distance between r1 and r2 remains constant. In addition, when the angle changes as described above, the first jaw 701 and the second jaw 702 push or pull the rotation shaft 701*c*, and thus the jaw rotation shaft 701*e* is moved forward or backward.

In this case, when the first jaw 701 and the second jaw 702 rotate in the direction of closing, the grip force is further increased as the rotation shaft 701*e* is moved forward in the directions of the arrow C1 of FIG. 58 and the arrow C2 of FIG. 59.

On the contrary, when the first jaw 701 and the second jaw 702 rotate in the direction of opening, the rotation shaft 701*e* is moved backward in directions opposite to the arrow C1 of FIG. 58 and the arrow C2 of FIG. 59.

With this configuration, the grip force becomes stronger when the first jaw 701 and the second jaw 702 are closed, thereby enabling a surgical operator to perform the actuation motion powerfully even with a small force.

That is, as shown in FIG. 60, as the first jaw 701 and the second jaw 702, which have an X-shaped structure, rotate relative to each other around the first rotation shaft 741 that is a fixed shaft, the rotation shaft 701*e*, which is a jaw rotation shaft, is moved forward toward the distal end of the end tool 700, so that the grip force may be amplified.

FIGS. 61 and 62 are plan views illustrating an opening and closing motion of the first jaw 701 and the second jaw 702 in response to an actuation motion of the end tool 700 of the surgical instrument for electrocautery of FIG. 41.

Referring to FIGS. 61 and 62, the first jaw 701 and the second jaw 702 are connected in an X-shaped structure, and the first jaw 701 and the second jaw 702 rotate relative to each other as the first jaw pulley 711 and the second jaw pulley 721 rotate with the fixed rotation shaft 741 as the center of rotation, enabling an actuation motion.

In the end tool 700 of the electric cauterization surgical instrument 10 according to the second embodiment of the present disclosure, as the first jaw 701 and the second jaw 702 rotate relative to each other, a grip force may be amplified when the jaw rotation shaft 701*e* is moved forward/backward, particularly forward.

Referring to FIG. 62, as the pulley 711 and the pulley 721 rotate in opposite directions with the first rotation shaft 741 as the central axis of rotation, the first jaw 701 and the second jaw 702, which are respectively connected to the pulley 711 and the pulley 721, rotate in opposite directions and move away from each other, and thus the end tool 700 may be in an open state.

Referring to FIGS. 61 to 65, it may be said that the tissue between the first jaw 701 and the second jaw 702 is cut as the cutting motion of FIGS. 63 to 65 is performed in a state in which the first jaw 701 and the second jaw 702 are closed as shown in FIG. 61.

Here, a first position shown in FIG. 63 may be defined as a state in which the blade 775 is drawn in toward a proximal end 705 of the end tool as much as possible. Alternatively, the first position may also be defined as a state in which the blade 775 is located adjacent to the pulley 711/pulley 712.

Meanwhile, a third position illustrated in FIG. 65 may be defined as a state in which the blade 775 is withdrawn toward a distal end 704 of the end tool 700 as much as possible. Alternatively, the third position may also be defined as a state in which the blade 775 is spaced away from the pulley 711/pulley 712 as much as possible.

First, as shown in FIG. 62, a tissue to be cut is located between the first jaw 701 and the second jaw 702 in a state in which the first jaw 701 and the second jaw 702 are opened, and then an actuation motion is performed to close the first jaw 701 and the second jaw 702 as shown in FIG. 61.

Next, as shown in FIG. 63, in a state in which the blade wire 307 and the blade 775 are located at the first position, currents of different polarities are applied to the first electrode 751 and the second electrode 752 to cauterize the tissue between the first jaw 701 and the second jaw 702. At this time, a generator (not shown) configured to supply power to the electrodes may itself perform monitoring of at least some of current, voltage, resistance, impedance, and temperature, and may stop supplying power when the cauterization is completed.

In the state in which the cauterization is completed as described above, when the blade wire 307 moves sequentially in the directions of an arrow A1 of FIG. 64 and an arrow A2 of FIG. 65, the blade 775 coupled to the blade wire 307 moves from the first position at the proximal end 705 of the end tool toward the third position at the distal end 704 of the end tool, reaching the positions in FIGS. 64 and 65 in turn.

As such, the blade 775 cuts the tissue located between the first jaw 701 and the second jaw 702 while moving in the X-axis direction.

However, it is to be understood that the linear motion of the blade 775 here does not mean a motion in a completely straight line, but rather means a motion of the blade 775 to

the extent that the blade **775** is able to cut the tissue while achieving a linear motion when viewed as a whole, even though the motion is not in a completely straight line, for example, the middle part of the straight line is bent by a certain angle or there is a section having a gentle curvature in a certain section.

Meanwhile, in this state, when the blade wire **307** is pulled in the opposite direction, the blade **775** coupled to the blade wire **307** also returns to the first position.

According to the present disclosure, the multi-joint/multi-degree-of-freedom surgical instrument capable of pitch/yaw/actuation motions may also perform cauterizing and cutting motions.

Referring to FIGS. **66** and **67**, views are illustrated in which a process of performing an opening and closing motion in a state in which the end tool **700** of the electric cauterization surgical instrument **10** of FIG. **41** is yaw-rotated by +90°.

Referring to FIG. **66**, the pulley **711** and the pulley **721** that faces the pulley **711** may be rotated around the first rotation shaft **741** due to the wires of the power transmission portion **300** in the manipulation portion **200**. In FIG. **66**, when the pulley **711** and the pulley **721** rotate in opposite directions, the first jaw **701** and the second jaw **702** respectively coupled to the pulley **711** and the pulley **721** may rotate relative to each other in a direction of approaching each other to perform an actuation motion, and as shown in FIG. **67**, the first jaw **701** and the second jaw **702** may be in a closed state.

FIGS. **66** and **67** are views illustrating a process of performing an opening and closing motion in a state in which the end tool of the surgical instrument for electrocautery of FIG. **41** is yaw-rotated by −90°.

Referring to FIGS. **66** and **67**, as the pulley **711** and the pulley **711** are yaw rotatable by −90° with the first rotation shaft **741** as the central axis of rotation, and the pulley **711** and the pulley **711** rotates in different directions, an actuation motion is possible in which the first jaw **701** and the second jaw **702** respectively connected to the pulley **711** and the pulley **721** move closer or further away from each other.

Referring to FIGS. **66** to **69**, a blade assembly, specifically, the guide tube **770** is connected to the end tool **700** at the other end portion, which is opposite one end portion connected to the connection portion **400**, and may be of constant length.

The guide tube **770** may be gently curved with a predetermined radius of curvature when the end tool **700**, specifically, the first jaw **701** and the second jaw **702** rotate with the first rotation shaft **741** as the central axis of rotation, and may stably provide a movement path for the blade wire **307** to be movable between the distal end **704** and the proximal end **705** of the end tool **700**.

FIGS. **70** and **71** are views illustrating a path of the guide tube **770** and a movement path of the blade **775** during a cutting motion in a state in which the end tool **700** of the surgical instrument for electrocautery of FIG. **41** is yaw-rotated by +90°.

Referring to FIGS. **70** and **71**, the end tool **700** of the electric cauterization surgical instrument **10** according to the second embodiment of the present disclosure is formed such that the jaws **701** and **702** are able to perform a normal cutting motion even when the jaws are yaw-rotated by +90°.

Specifically, as the blade wire **307** emerges from the inside of the guide tube **770**, and the blade **775** connected to the blade wire **307** moves in the direction of an arrow A, which is a direction from the proximal end **705** toward the distal end **704** of the end tool **700**, a cutting motion may be performed.

FIGS. **72** and **73** are views illustrating a process of performing an opening and closing motion in a state in which the end tool of the surgical instrument for electrocautery of FIG. **41** is pitch-rotated by −90°. FIGS. **74** and **75** are views illustrating a process of performing an opening and closing motion in a state in which the end tool of the surgical instrument for electrocautery of FIG. **41** is pitch-rotated by +90°. FIG. **76** is a view illustrating a path of the guide tube in a state in which the end tool of the surgical instrument for electrocautery of FIG. **41** is pitch-rotated by −90°. FIGS. **77** and **78** are views illustrating a path of the guide tube and a movement path of the blade during a cutting motion in a state in which the end tool of the surgical instrument for electrocautery of FIG. **41** is pitch-rotated by −90°. FIG. **79** is a perspective view illustrating the surgical instrument for electrocautery of FIG. **41** in a pitch-rotated and yaw-rotated state. FIGS. **80** to **82** are views illustrating the end tool of the surgical instrument for electrocautery of FIG. **41** performing a cutting motion in a state in which the end tool is pitch-rotated by −90° and simultaneously yaw-rotated by +90°.

FIGS. **74** and **75** are views illustrating a process of performing an opening and closing motion in a state in which the end tool **700** of the surgical instrument for electrocautery of FIG. **41** is pitch-rotated by +90°. FIG. **76** is a view illustrating a path of the guide tube **770** in a state in which the end tool **700** of the surgical instrument for electrocautery of FIG. **41** is pitch-rotated by −90°. FIGS. **77** and **78** are views illustrating a path of the guide tube and a movement path of the blade during a cutting motion in a state in which the end tool of the surgical instrument for electrocautery of FIG. **41** is pitch-rotated by −90°.

Referring to FIGS. **72** to **78**, the end tool **700** of the electric cauterization surgical instrument **10** according to the second embodiment of the present disclosure is formed such that the jaws **701** and **702** are able to perform a cutting motion normally even when the jaws are pitch-rotated by −90° and +90°.

Meanwhile, FIG. **79** is a view illustrating a state in which the jaws are pitch-rotated by −90° and simultaneously yaw-rotated by +90°, and FIGS. **80** to **82** are views illustrating a state in which the end tool of the surgical instrument for electrocautery of FIG. **41** performs a cutting motion in a state in which the end tool is pitch-rotated by −90° and simultaneously yaw-rotated by +90°.

Referring to FIGS. **79** to **82**, the end tool **700** of the electric cauterization surgical instrument **10** according to the second embodiment of the present disclosure is formed such that the jaws **701** and **702** are able to perform a cutting motion normally even when the jaws are pitch-rotated by −90° and simultaneously yaw-rotated by +90°.

Modified Example of Second Embodiment-Disposing Auxiliary Pulley on End Tool Hub

Hereinafter, an end tool **700** of a surgical instrument according to a modified example of the second embodiment of the present disclosure will be described. Here, the end tool **700** of the surgical instrument according to the modified example of the second embodiment of the present disclosure is different from the end tool of the surgical instrument according to the second embodiment of the present disclosure described above in that the configuration of an end tool

hub **760'** and the configuration of auxiliary pulleys **712** and **722** are different. The configuration changed from the second embodiment as described above will be described in detail later.

FIGS. **83** to **85** are views illustrating the end tool of the surgical instrument for electrocautery according to the modified example of the second embodiment of the present disclosure.

Referring to FIGS. **83** to **85**, the end tool **700** of the modified example of the second embodiment of the present disclosure includes a pair of jaws for performing a grip motion, specifically a first jaw **701** and a second jaw **702**, and here, each of the first jaw **701** and the second jaw **702** or a component encompassing the first jaw **701** and the second jaw **702** may be referred to as a jaw **703**.

The end tool **700** according to the modified example of the second embodiment may include a pulley **711**, the pulley **712**, a pulley **713**, a pulley **714**, a pulley **715**, and a pulley **716** that are associated with a rotational motion of the first jaw **701**. In addition, the end tool **700** may include a pulley **721**, the pulley **722**, a pulley **723**, a pulley **724**, a pulley **725**, and a pulley **726** that are associated with a rotational motion of the second jaw **702**.

Here, the pulleys facing each other are illustrated in the drawings as being formed parallel to each other, but the concept of the present disclosure is not limited thereto, and each of the pulleys may be variously formed with a position and a size suitable for the configuration of the end tool.

The end tool **700** according to the modified example of the second embodiment of the present disclosure may further include the pulley **712** and the pulley **722** as compared to the end tool **700** according to the second embodiment of the present disclosure illustrated with reference to FIG. **43**.

Referring to FIGS. **84** and **85**, the pulley **712** functions as an end tool first jaw auxiliary pulley, and the pulley **722** functions as an end tool second jaw auxiliary pulley, and these two components may collectively be referred to as end tool jaw auxiliary pulleys or simply auxiliary pulleys.

In detail, the pulley **712** and the pulley **722**, which are end tool jaw auxiliary pulleys, may be additionally provided on one side of the pulley **711** and one side of the pulley **721**, respectively. In other words, the pulley **712**, which is an auxiliary pulley, may be disposed between the pulley **711** and the pulley **713**/pulley **714**. In addition, the pulley **722**, which is an auxiliary pulley, may be disposed between the pulley **721** and the pulley **723**/pulley **724**.

The pulley **712** and the pulley **722** may be formed to be rotatable independently of each other around a second rotation shaft **742**.

The pulley **712** and the pulley **722** may serve to increase rotation angles of the first jaw **701** and the second jaw **702**, respectively, by coming into contact with a wire **305**, which is a first jaw wire, and a wire **302**, which is a second jaw wire, and changing the arrangement paths of the wire **305** and the wire **302** to a certain degree.

That is, when the auxiliary pulleys are not disposed, each of the first jaw **701** and the second jaw **702** may rotate only up to a right angle, but in the modified example of the second embodiment, by additionally providing the pulley **712** and the pulley **722**, which are auxiliary pulleys, the effect of increasing the maximum rotation angle by a certain angle can be achieved.

This enables a motion in which two jaws of the end tool **700** have to be spread apart for an actuation motion in a state in which the two jaws are yaw-rotated together by 90° in the clockwise or counterclockwise direction.

In other words, a feature of increasing the range of yaw rotation in which an actuation motion is possible may be obtained through the pulley **712** and the pulley **722**. This will be described below in more detail.

When the auxiliary pulleys are not disposed, since the first jaw wire **305** is fixedly coupled to the end tool first jaw pulley **711**, and the second jaw wire **302** is fixedly coupled to the end tool second jaw pulley **721**, each of the end tool first jaw pulley **711** and the end tool second jaw pulley **721** may rotate up to 90°.

In this case, when the actuation motion is performed in a state in which the first jaw **701** and the second jaw **702** are located at a 90° line, the first jaw **701** may be spread, but the second jaw **702** may not be rotated beyond 90°. Accordingly, when the first jaw **701** and the second jaw **702** perform a yaw motion over a certain angle, there was a problem that an actuation motion is not smoothly performed.

In order to address such a problem, in the electric cauterization surgical instrument **10** of the present disclosure, the pulley **712** and the pulley **722**, which are auxiliary pulleys, are additionally disposed at one side of the pulley **711** and one side of the pulley **721**, respectively. As described above, as the arrangement paths of the wire **305**, which is a first jaw wire, and the wire **302**, which is a second jaw wire, are changed to a certain degree by disposing the pulley **712** and the pulley **722**, a tangential direction of the wires **305** and **302** is changed, and accordingly, a fastening member **324** for coupling the wire **302** and the pulley **721** is additionally rotatable by a certain angle.

That is, a fastening member **326**, which is a coupling portion of the wire **302** and the pulley **721**, is rotatable until being located on a common internal tangent of the pulley **721** and the pulley **722**. Similarly, a fastening member **323**, which is a coupling portion of the wire **305** and the pulley **711**, is rotatable until being located on a common internal tangent of the pulley **711** and the pulley **712**, so that the range of rotation may be increased.

In other words, due to the pulley **712** that is an auxiliary pulley, a wire **301** and a wire **305**, which are two strands of the first jaw wire wound around the pulley **712**, are disposed at one side with respect to a plane perpendicular to the Y-axis and passing through the X-axis. Simultaneously, due to the pulley **722**, the wires **302** and **306**, which are two strands of the second jaw wire wound around the pulley **721**, are disposed at the other side with respect to the plane perpendicular to the Y-axis and passing through the X-axis.

In other words, the pulley **713** and the pulley **714** are disposed at one side with respect to the plane perpendicular to the Y-axis and passing through the X-axis, and the pulley **723** and the pulley **724** are disposed at the other side with respect to the plane perpendicular to the Y-axis and passing through the X-axis.

In other words, the wire **305** is located on the internal tangent of the pulley **711** and the pulley **712**, and the rotation angle of the pulley **711** is increased due to the pulley **712**. In addition, the wire **302** is located on the internal tangent of the pulley **721** and the pulley **722**, and the rotation angle of the pulley **721** is increased due to the pulley **722**.

According to the present disclosure, the rotation radii of the first jaw **701** and the second jaw **702** increase, so that an effect of increasing a yaw motion range in which a normal opening/closing actuation motion can be performed may be obtained.

Referring to FIG. **38**, a first rotation shaft **741** and a second rotation shaft **742** may be inserted through the end tool hub **760'** according to the modified example of the second embodiment of the present disclosure. Instead of

respectively forming the first wire guide portion and the second wire guide portion on the surfaces of a first jaw pulley coupling portion **762***a* and a second jaw pulley coupling portion **762***b* facing each other as in the end tool hub **760** according to the second embodiment of the present disclosure, the pulley **712** and the pulley **722**, which are configured as separate components from the end tool hub **760'** and are able to be axially coupled to the second rotation shaft **742** that is inserted through the end tool hub **760'**, are additionally provided and allowed to function as auxiliary pulleys.

The second rotation shaft **742** inserted through the end tool hub **760'** may include two shafts including a first sub-shaft and a second sub-shaft that face each other and are disposed to be spaced apart from each other by a certain distance. The second rotation shaft **742** is divided into two parts and spaced apart from each other by a certain distance, and thus a guide tube **770** may pass through the end tool hub **760'** and a pitch hub **750** through between the two parts.

Referring to FIG. **83**, the first rotation shaft **741**, the second rotation shaft **742**, a third rotation shaft **743**, and a fourth rotation shaft **744** may be arranged sequentially from a distal end **704** toward a proximal end **705** of the end tool **700**. Accordingly, starting from the distal end **704**, the first rotation shaft **741** may be referred to as a first pin, the second rotation shaft **742** may be referred to as a second pin, the third rotation shaft **743** may be referred to as a third pin, and the fourth rotation shaft **744** may be referred to as a fourth pin.

As compared to the second embodiment, the end tool **700** of the modified example of the second embodiment of the present disclosure has the same configuration as the end tool **700** according to the second embodiment, except that the pulley **721** and the pulley **722**, which are axially coupled to the end tool hub **760'** by the second rotation shaft **742**, are provided as separate components instead of being integrally formed with a body portion **761** in the end tool hub **760'** and function as auxiliary pulleys, and thus a detailed description thereof will be omitted in the overlapping range.

Third Embodiment of Surgical Instrument for Electrocautery

FIG. **86** is a perspective view illustrating a surgical instrument for electrocautery according to a third embodiment of the present disclosure. FIGS. **87** to **92** are plan views illustrating an end tool of the surgical instrument for electrocautery of FIG. **86**.

Referring to FIG. **86**, an electric cauterization surgical instrument **10** according to the third embodiment of the present disclosure includes an end tool **800**, a manipulation portion **200**, a power transmission portion **300**, and a connection portion **400**.

As compared to the electric cauterization surgical instrument **10** according to the second embodiment, the electric cauterization surgical instrument **10** according to the third embodiment of the present disclosure is different from in a configuration of the end tool **800**, specifically, a yaw hub **880**, an actuation link **892**, and the like, which will be described in detail below.

Referring to FIGS. **86** and **87**, the end tool **800** according to the third embodiment of the present disclosure is formed at the other end of the connection portion **400**, and performs necessary motions for surgery by being inserted into a surgical site. In an example of the end tool **800**, as illustrated in FIG. **86**, a pair of jaws **803** for performing a grip motion may be used.

However, the concept of the present disclosure is not limited thereto, and various devices for performing surgery may be used as the end tool **800**. For example, a configuration of a cantilever cautery may also be used as the end tool **800**.

The end tool **800** is connected to the manipulation portion **200** by the power transmission portion **300**, and receives a driving force of the manipulation portion **200** through the power transmission portion **300** to perform a motion necessary for surgery, such as gripping, cutting, suturing, or the like.

Here, the end tool **800** of the electric cauterization surgical instrument **10** according to the third embodiment of the present disclosure is formed to be rotatable in at least one direction, and for example, the end tool **800** may be formed to perform a pitch motion around a Y-axis of FIG. **86** and simultaneously perform a yaw motion and an actuation motion around a Z-axis of FIG. **86**.

End Tool According to Third Embodiment

Hereinafter, the end tool **800** of the electric cauterization surgical instrument **10** of FIG. **86** will be described in more detail.

FIG. **86** is a perspective view illustrating the surgical instrument for electrocautery according to the third embodiment of the present disclosure. FIGS. **87** to **92** are views illustrating the end tool of the surgical instrument for electrocautery of FIG. **86**.

Here, FIG. **87** illustrates a state in which an end tool hub **860** and a pitch hub **850** are coupled, and FIG. **88** illustrates a state in which the end tool hub **860**, the yaw hub **880**, and the pitch hub **850** are removed. FIG. **89** illustrates a state in which the yaw hub **880** and the end tool hub **860** are connected to the end tool, and FIG. **90** illustrates a state in which a first jaw **801** and a second jaw **802** are removed. Meanwhile, FIG. **91** is a view mainly illustrating wires, and FIG. **92** is a view mainly illustrating pulleys.

Referring to FIGS. **87**, **88**, **91**, and **92**, the end tool **800** according to the third embodiment of the present disclosure may include a pair of jaws for performing a grip motion, that is, the first jaw **801** and the second jaw **802**. Here, each of the first jaw **801** and the second jaw **802**, or a component encompassing the first jaw **801** and the second jaw **802** may be referred to as the jaw **803**.

In addition, the end tool **800** may include a pulley **891**, a pulley **813**, a pulley **814**, a pulley **815**, and a pulley **816**, which are associated with a rotational motion of the first jaw **801**. In addition, the end tool **800** may include a pulley **881**, a pulley **823**, a pulley **824**, a pulley **825**, and a pulley **826**, which are associated with a rotational motion of the second jaw **802**.

Here, the pulleys facing each other are illustrated in the drawings as being formed parallel to each other, but the concept of the present disclosure is not limited thereto, and each of the pulleys may be variously formed with a position and a size suitable for the configuration of the end tool.

Referring to FIG. **87**, the end tool **800** of the third embodiment of the present disclosure may include the end tool hub **860**, the pitch hub **850**, and the yaw hub **880**.

A first rotation shaft **841**, which will be described later, may be inserted through the end tool hub **860**, and the end tool hub **860** may internally accommodate at least some of the pulley **891** and the pulley **881**, which are axially coupled to the first rotation shaft **841**.

The end tool hub **860** according to the third embodiment of the present disclosure is the same as the end tool hubs **660**

and **760** according to the first and third embodiments, and thus a detailed description thereof will be omitted in the overlapping range.

Referring to FIG. **87**, the pitch hub **850** may have a third rotation shaft **843** and a fourth rotation shaft **844**, which will be described later, inserted therethrough, and may be axially coupled to a first pitch pulley portion **863***a* and a second pitch pulley portion **863***b* of the end tool hub **860** by the third rotation shaft **843**. Accordingly, the end tool hub **860** may be formed to be rotatable around the third rotation shaft **843** with respect to the pitch hub **850**.

In addition, the pitch hub **850** may internally accommodate at least some of the pulley **813**, the pulley **814**, the pulley **823**, and the pulley **824** that are axially coupled to the third rotation shaft **843**. In addition, the pitch hub **850** may internally accommodate at least some of the pulley **815**, the pulley **816**, the pulley **825**, and the pulley **826** that are axially coupled to the fourth rotation shaft **844**.

One end portion of the pitch hub **850** is connected to the end tool hub **860**, and the other end portion of the pitch hub **850** is connected to the connection portion **400**.

Referring to FIG. **87**, the first rotation shaft **841** may function as an end tool jaw pulley rotation shaft, the third rotation shaft **843** may function as an end tool pitch rotation shaft, and the fourth rotation shaft **844** may function as an end tool pitch auxiliary rotation shaft of the end tool **100**.

Here, each of the rotation shafts may be divided into two parts, and the respective divided rotation shafts may be spaced apart from each other. Each of the rotation shafts is formed by being divided into two parts as described above to allow a guide tube **870** to pass through the end tool hub **860** and the pitch hub **850**.

That is, the guide tube **870** may pass between a first sub-shaft and a second sub-shaft of each of the rotation shafts. This will be described in more detail later. Here, the first sub-shaft and the second sub-shaft may be disposed on the same axis or may be disposed to be offset to a certain degree.

Meanwhile, it is illustrated in the drawings that each of the rotation shafts is formed by being divided into two parts, but the concept of the present disclosure is not limited thereto. That is, each of the rotation shafts is formed to be curved in the middle such that an escape path for the guide tube **870** is formed.

Referring to FIGS. **87** and **88**, an actuation rotation shaft **845** may be further provided in the end tool **800** according to the third embodiment of the present disclosure. In detail, the actuation rotation shaft **845** may be provided in a coupling portion of the first jaw **801** and the second jaw **802**, and the second jaw **802** rotates around the actuation rotation shaft **845** while the first jaw **801** is fixed, thereby performing an actuation motion. Here, the actuation rotation shaft **845** may be disposed closer to a distal end **804** than the first rotation shaft **841** is.

Here, in the end tool **800** of the third embodiment of the present disclosure, the first rotation shaft **841**, which is a yaw rotation shaft, and the actuation rotation shaft **845** are provided separately rather than as the same shaft.

That is, by forming the first rotation shaft **841**, which is a rotation shaft of the pulley **881**/pulley **891** that are jaw pulleys and a rotation shaft of a yaw motion, and the actuation rotation shaft **845**, which is a rotation shaft of the second jaw **802** with respect to the first jaw **801** and a rotation shaft of an actuation motion, to be spaced apart from each other by a certain distance, a space in which the guide tube **870** and the blade wire **307** accommodated therein can be gently bent may be secured. This actuation rotation shaft **845** will be described in more detail later.

The pulley **891** functions as an end tool first jaw pulley, and the pulley **881** functions as an end tool second jaw pulley. The pulley **891** may also be referred to as a first jaw pulley, and the pulley **881** may also be referred to as a second jaw pulley, and these two components may collectively be referred to as end tool jaw pulleys or simply jaw pulleys.

The pulley **891** and the pulley **881**, which are end tool jaw pulleys, are formed to face each other, and are formed to be rotatable independently of each other around the first rotation shaft **841** which is an end tool jaw pulley rotation shaft.

In this case, the pulley **891** and the pulley **881** are formed to be spaced apart from each other by a certain distance, and a blade assembly may be accommodated therebetween.

In other words, the blade assembly including the guide tube **870** may be disposed between the pulley **891** and the pulley **881**.

Meanwhile, the end tool **800** of the third embodiment of the present disclosure may further include components such as a first electrode **851**, a second electrode **852**, the guide tube **870**, and a blade **875** in order to perform a cauterizing motion and a cutting motion.

Here, components related to the driving of the blade, such as the guide tube **870** and the blade **875**, may be collectively referred to as a blade assembly. In one modified example of the present disclosure, by disposing the blade assembly including the blade **875** between the pulley **891**, which is a first jaw pulley, and the pulley **881**, which a second jaw pulley, the end tool **800** is able to perform the cutting motion using the blade in addition to the pitch and yaw motions. Components for performing a cauterizing motion and a cutting motion in the present embodiment are substantially the same as those described in the first and second embodiments, and thus a detailed description thereof will be omitted herein.

The electric cauterization surgical instrument **10** according to the third embodiment of the present disclosure may include a wire **301**, a wire **302**, the wire **303**, the wire **304**, a wire **305**, a wire **306**, and a blade wire **307**, as in the first embodiment of the present disclosure.

(Jaw-Link-Pulley Connection Structure)

Hereinafter, a jaw-link-pulley connection structure in the end tool **800** according to the third embodiment of the present disclosure will be described in more detail.

Referring to FIGS. **87** to **101**, the end tool **800** of the third embodiment of the present disclosure includes the first jaw **801**, the second jaw **802**, the yaw hub **880**, an actuation link **592**, the first jaw pulley **891**, and the second jaw pulley **881**. Hereinafter, the pulley **891** is referred to as the first jaw pulley **891**, and the pulley **881** is referred to as the second jaw pulley **881**.

Referring to FIGS. **97** to **100**, the first jaw pulley **891** may be formed as a kind of multi-layered pulley. In other words, the first jaw pulley **891** may be formed in a form in which two pulleys are combined, and two grooves may be formed on an outer circumferential surface of the first jaw pulley **891**.

In detail, a first coupling portion **891***a* may be formed on one surface of the first jaw pulley **891**, and a second coupling portion **891***b* may be formed in the shape of a groove on the other surface opposite to the one surface on which the first coupling portion **891***a* is formed.

Here, the positions of the first coupling portion **891***a* and the second coupling portion **891***b* are positions allowing the wire **301** and the wire **305** to overlap each other. In other

words, the first coupling portion **891***a* and the second coupling portion **891***b* may be formed so that at least some of the wire **302** and the wire **306** wound around the first jaw pulley **891** overlap each other.

In other words, the first coupling portion **891***a* and the second coupling portion **891***b* are asymmetrically disposed when viewed on an XY plane, so that the first coupling portion **891***a* and the second coupling portion **891***b* are disposed to be biased in any one region of the second jaw pulley **891**.

In other words, the first coupling portion **891***a* may be formed at a position at which the wire **301** may be wound around the outer circumferential surface of the first jaw pulley **891** such that the central angle is an angle between 90° and 360°. Similarly, the second coupling portion **891***b* may be formed at a position at which the wire **305** may be wound around the outer circumferential surface of the second jaw pulley **891** such that the central angle is an angle between 90° and 360°.

In addition, one end portion of the wire **301** is coupled to a fastening member **334***a*, which may be coupled to the first coupling portion **891***a* of the first jaw pulley **891**. One end portion of the wire **305** is coupled to a fastening member **334***b*, which may be coupled to the second coupling portion **891***b* of the first jaw pulley **891**.

When the wire **301** is referred to as a first jaw wire R and the wire **305** is referred to as a first jaw wire L, the first coupling portion **891***a* to which the first jaw wire R(**301**) is coupled is formed on a side opposite to one side to which the first jaw wire R(**301**) is input, so that a rotation angle of the first jaw pulley **891** is increased by increasing the length of the first jaw wire R(**305**) wound around the first jaw pulley **891**.

Also, the second coupling portion **891***b* to which the first jaw wire L(**302**) is coupled is formed on one side opposite to the other side to which the first jaw wire L(**302**) is input, so that the rotation angle of the first jaw pulley **891** may be increased by increasing the length of the first jaw wire L(**302**) wound around the first jaw pulley **891**.

A rotation radius of the second jaw pulley **891** may be increased due to the first coupling portion **891***a* and the second coupling portion **891***b*. In addition, by increasing the length of the wire **301**/wire **305** wound around the first jaw pulley **891** as described above, a long stroke of the actuation link **892** may be secured. This will be described in more detail later. Referring to FIG. **90**, the yaw hub **880** is located between the first and second jaws **801** and **802** and the first and second jaw pulleys **891** and **881**, and may include a yaw hub body **882**.

The first jaw pulley **891** may be formed at one end portion of the yaw hub **880**. A guide slit **883** may be formed on the other end portion of the yaw hub **880** in a longitudinal direction. A guide pin **893** formed to protrude from the actuation link **892** to be described later may be fitted into the guide slit **883**.

Referring to FIGS. **90** and **93**, a through hole through which the actuation rotation shaft **845** is inserted may be formed in the yaw hub **880** at one side of the guide slit **883**. Referring to FIG. **93**, the second jaw pulley **881** is integrally formed on one side of the yaw hub **880**, but the present disclosure is not limited thereto, and various modifications are possible.

Although not shown in the drawings, it is also possible that the second jaw pulley **881** and the yaw hub **880** are each formed as a separate member, and the second jaw pulley **881** may be fixedly coupled to the yaw hub **880**, specifically, the yaw hub body **882**.

In addition, two divided first rotation shafts **841** may be inserted through the first jaw pulley **891** and the second jaw pulley **881**, respectively.

Since the second jaw pulley **881** is integrally formed with or fixedly coupled to the yaw hub **880** as described above, the yaw hub **880** does not rotate with respect to the second jaw pulley **881**, and when the second jaw pulley **881** rotates around the first rotation shaft **841**, the yaw hub **580** may also rotate around the first rotation shaft **841** together with the second jaw pulley **881**.

Referring to FIGS. **90** and **91**, the actuation rotation shaft **845** may be disposed on the yaw hub **880**. The actuation rotation shaft **845** may be divided into two parts, which may be disposed to be spaced apart from each other by a certain distance, and the guide tube **870**, the blade wire **307** accommodated in the guide tube **870**, and the blade **875** may pass through a space formed between the two divided actuation rotation shafts **845**.

Referring to FIG. **90**, the yaw hub **880**, specifically, a guide slit **883** formed in the yaw hub body **882** may be formed to extend in a longitudinal direction between the actuation rotation shaft **845** and the yaw rotation shaft **841**.

Referring to FIG. **90**, the guide slit **883** may be formed to have the same width in the longitudinal direction, and the guide pin **893** formed to protrude from the actuation link **892** is movable, specifically, linearly movable in the guide slit **883**.

Referring to FIG. **93**, on the other side of the yaw hub **880** opposite to one side thereof on which the second jaw pulley **881** is formed, an actuation pulley coupling portion **885** may be formed to protrude so as to be coupled to the first jaw pulley **891**.

The actuation pulley coupling portion **885** may share a central axis with the yaw rotation shaft **841**. However, the present disclosure is not limited thereto, and various modifications are possible, including spacing apart and placing the actuation pulley coupling portion **885** and the yaw hub **880** side by side.

Referring to FIG. **101**, the actuation link **892** may be formed to extend in a longitudinal direction. The actuation link **892** may include a link body **892***a* and a bending portion **892***b*. The link body **892***a* is a portion formed to extend in the longitudinal direction, and the bending portion **892***b* may be connected to the link body **892***a* with at least one bend.

Accordingly, one side of the actuation link **892** in which the bending portion **892***b* is located may be formed in a "U"-shape.

Referring to FIG. **101**, a pin coupling hole (no reference number is assigned) may be formed in one surface of the bending portion **892***b* that is disposed in parallel with the link body **892***a* to be spaced apart therefrom by a certain distance.

A pin coupling hole may also be formed in one surface of the link body **892***a* facing the bending portion **892***b* to correspond to the pin coupling hole of the bending portion **892***b*. The guide pin **893** may be coupled to the pin coupling hole. A plurality of guide pins **893** may be provided, and may be coupled to the pin coupling holes formed in the respective facing surfaces of the bending portion **892***b* and the link body **892***a*.

The plurality of guide pins **893** may be disposed to be spaced apart from each other by a certain distance, and one side region of the U-shaped actuation link **892** formed with the bending portion **892***b* and the link body **892***a* may provide a movement path so that the guide tube **870** can pass therethrough. Due to the 'U' shaped region formed by the bending portion **892***b* and the link body **892***a*, the movement

path of the guide tube **870** moving inside the yaw hub **880** and the end tool hub **860** is not disturbed when the actuation link **892** linearly moves.

Referring to FIG. **101**, a link through-hole **892***c* may be formed on the other side of the link body **892***a* opposite to one side to which the bending portion **892***b* is connected. A protrusion **891***c* formed on the first jaw pulley **891** may be axially coupled to and fitted into the link through-hole **892***c*.

Accordingly, when the first jaw pulley **891** rotates, the actuation link **892** moves while rotating around the protrusion **891***c*.

The guide pin **893** provided in the actuation link **892** is fitted into the guide slit **883** formed in the yaw hub **880** and is movable along the shape of the guide slit **883**.

The guide pin **893** passing through the guide slit **883** may be fitted into each of slots **801***a* and **802***a* respectively formed in the first jaw **801** and the second jaw **802**. The first jaw **801** and the second jaw **802** have an X-shaped structure, and the guide pin **893** may be fitted into the slot **801***a* formed in the first jaw **801** and the slot **801***b* formed in the second jaw **802** at the same time.

The first jaw **801** and the second jaw **802** may perform an actuation motion while moving away from or close to each other with the actuation rotation shaft **845** as the center of rotation.

Referring to FIGS. **102** to **104**, when the first jaw pulley **891** rotates in an A1 direction, the actuation link **892** axially coupled to the protrusion **891***c* formed in the first jaw pulley **891** is moved in a B1 direction. Specifically, the guide pin **893** provided in the actuation link **892** is moved linearly along the guide slit **883** formed in the yaw hub **880**, and the guide pin **893** is fitted into the slots **801***a* and **802***a* respectively formed in the first jaw **801** and the second jaw **802**, so that the guide pin **893** pushes the first jaw **801** and the second jaw **802**. Thus, as the actuation link **892** is moved, the first jaw **801** and the second jaw **802** may perform an actuation motion while rotating around the actuation rotation shaft **845** as the center of rotation.

Referring to FIG. **103**, as the actuation link **892** is moved toward the distal end, the first jaw **801** and the second jaw **802** may perform an actuation motion in C1 directions around the actuation rotation shaft **845** along the C1 directions.

Referring to FIG. **104**, when the guide pin **893** is moved as much as possible toward the distal end in the slots **801***a* and **802***a* respectively formed in the first jaw **801** and the second jaw **802**, the first jaw **801** and the second jaw **802** may be further spread apart in C2 directions.

In addition, the first jaw pulley **891** is formed in a multi-layered structure, and the first jaw wires **301** and **305** are wound so that the first jaw wires **301** and **305** overlap in different layers, and as a result, the length of the winding on the first jaw pulley **891** can be increased, and the rotation angle of the first jaw pulley **891** can be increased.

FIGS. **105** to **108** are perspective views illustrating an actuation motion of the end tool of the surgical instrument for electrocautery of FIG. **86**. The guide pin **893** provided in the actuation link **892** is movable along the slots **801***a* and **802***a* respectively formed in the first jaw **801** and the second jaw **802**, and accordingly, the first jaw **801** and the second jaw **802** may perform an actuation motion with the actuation rotation shaft **845** as the central axis of rotation.

FIGS. **109** to **111** are partial cross-sectional views illustrating an operation of the blade of the end tool of the surgical instrument for electrocautery of FIG. **86**. The operation of the blade **875** is the same as those of the first and second embodiments, and thus a detailed description thereof will be omitted in the overlapping range.

FIGS. **112** and **113** are bottom views illustrating a process of performing an opening and closing motion in a state in which the end tool of the surgical instrument for electrocautery of FIG. **86** is yaw-rotated by +90°.

The guide slit **883** formed in the yaw hub **880** may be formed in a straight line direction, and the actuation rotation shaft **845** may be disposed along a longitudinal central axis of the guide slit **883**.

The slots **801***a* and **802***a* respectively formed in the first jaw **801** and the second jaw **802** may be formed to be inclined at a certain angle with the longitudinal central axis of the guide slit **883** formed in the yaw hub **880**.

This causes the first jaw **801** and second jaw **803** to spread apart from each other as shown in FIG. **113** when the actuation link **892**, specifically the guide pin **893** that is moved by receiving power from the first jaw pulley **891**, is moved forward toward the actuation rotation shaft **845** while the actuation rotation shaft **845** remains fixed.

Referring to FIGS. **114** and **115**, the first jaw pulley **891** rotates in a state in which the end tool of the surgical instrument for electrocautery of FIG. **86** is yaw-rotated by +90°, and the guide pin **893** provided in the actuation link **892** connected to the first jaw pulley **891** is moved through the guide slit **883** formed in the yaw hub **880** and the slots **801***a* and **802***a* respectively formed in the first jaw **801** and the second jaw **802**, so that an actuation motion can be performed even in a yaw rotated state.

Referring to FIGS. **116** to **125**, there is room for problems when the guide tube **870** is in contact with the actuation link **892** while the end tool **800** is yaw-rotated, but the actuation link **892** of the present disclosure includes the link body **892***a* and the bending portion **892***b* connected thereto, which form a "U" shape, to prevent the contact with the guide tube **870**, allowing the blade wire **307** and the guide tube **870** to move stably with respect to yaw, pitch, and actuation motions of the end tool **800**.

Referring to FIGS. **126** to **136**, the end tool **800** of the electric cauterization surgical instrument **10** according to the third embodiment of the present disclosure is formed such that the jaws **801** and **802** are able to perform a cutting motion normally even when the jaws arc pitch-rotated and simultaneously yaw-rotated.

Here, in the end tool **800** of the third embodiment of the present disclosure, a pin/slot-type structure is employed to secure a grip force in the actuation motion.

In detail, in the pin/slot-type structure, the actuation link **892** must move a longer distance to rotate the first jaw **801** by the same amount (that is, the actuation link **892** needs to have a long stroke). In addition, in order for the actuation link **590** to move a longer distance, the first jaw pulley **891** should rotate further. In other words, when the first jaw pulley **891** rotates further to rotate the first jaw **801** by the same amount, a greater force may be applied to the first jaw **801** by as much as the first jaw pulley **891** rotates further, so that a grip force in the actuation motion may be amplified.

In addition, in order to rotate the first jaw pulley **891** further as described above, the first jaw pulley **891** is formed in a multi-layered structure as described above to make the lengths of the wires **301** and **305** wound around the first jaw pulley **891** to be longer, thereby securing a long stroke of the actuation link **892**.

Modified Example of Third Embodiment-Disposing Auxiliary Pulley on End Tool Hub

Hereinafter, an end tool **800** of a surgical instrument according to a modified example of the third embodiment of

the present disclosure will be described. Here, the end tool **300** of the surgical instrument according to the modified example of the third embodiment of the present disclosure is different from the end tool of the surgical instrument according to the third embodiment of the present disclosure described above in that the configuration of an end tool hub **860'** and the configuration of auxiliary pulleys **812** and **822** are different. The configuration changed from the third embodiment as described above will be described in detail later.

FIGS. **137** to **139** are views illustrating the end tool of the surgical instrument for electrocautery according to the modified example of the third embodiment of the present disclosure.

Referring to FIGS. **137** and **138**, the end tool **800** of the modified example of the third embodiment of the present disclosure includes a pair of jaws for performing a grip motion, specifically a first jaw **801** and a second jaw **802**, and here, each of the first jaw **801** and the second jaw **802** or a component encompassing the first jaw **801** and the second jaw **802** may be referred to as a jaw **803**.

The end tool **800** according to the modified example of the third embodiment may include a pulley **811**, the pulley **812**, a pulley **813**, a pulley **814**, a pulley **815**, and a pulley **816** that are associated with a rotational motion of the first jaw **801**. In addition, the end tool **800** may include a pulley **821**, the pulley **822**, a pulley **823**, a pulley **824**, a pulley **825**, and a pulley **826** that are associated with a rotational motion of the second jaw **802**.

Here, the pulleys facing each other are illustrated in the drawings as being formed parallel to each other, but the concept of the present disclosure is not limited thereto, and each of the pulleys may be variously formed with a position and a size suitable for the configuration of the end tool.

The end tool **800** according to the modified example of the third embodiment of the present disclosure may further include the pulley **812** and the pulley **822** as compared to the end tool **800** according to the third embodiment of the present disclosure illustrated with reference to FIG. **86**.

Referring to FIGS. **137** to **139**, the pulley **812** functions as an end tool first jaw auxiliary pulley, and the pulley **822** functions as an end tool second jaw auxiliary pulley, and these two components may collectively be referred to as end tool jaw auxiliary pulleys or simply auxiliary pulleys.

In detail, the pulley **812** and the pulley **822**, which are end tool jaw auxiliary pulleys, may be additionally provided on one side of the pulley **811** and one side of the pulley **821**, respectively. In other words, the pulley **812**, which is an auxiliary pulley, may be disposed between the pulley **811** and the pulley **813**/pulley **814**. In addition, the pulley **822**, which is an auxiliary pulley, may be disposed between the pulley **821** and the pulley **823**/pulley **824**.

The pulley **812** and the pulley **822** may be formed to be rotatable independently of each other around a second rotation shaft **842**.

The pulley **812** and the pulley **822** may serve to increase rotation angles of the first jaw **801** and the second jaw **802**, respectively, by coming into contact with a wire **305**, which is a first jaw wire, and a wire **302**, which is a second jaw wire, and changing the arrangement paths of the wire **305** and the wire **302** to a certain degree.

That is, when the auxiliary pulleys are not disposed, each of the first jaw **801** and the second jaw **802** may rotate only up to a right angle, but in the modified example of the third embodiment, by additionally providing the pulley **812** and the pulley **822**, which are auxiliary pulleys, the effect of increasing the maximum rotation angle by a certain angle can be achieved.

This enables a motion in which two jaws of the end tool **800** have to be spread apart for an actuation motion in a state in which the two jaws are yaw-rotated together by 90° in the clockwise or counterclockwise direction.

In other words, a feature of increasing the range of yaw rotation in which an actuation motion is possible may be obtained through the pulley **812** and the pulley **822**. This will be described below in more detail.

When the auxiliary pulleys are not disposed, since the first jaw wire **305** is fixedly coupled to the end tool first jaw pulley **811**, and the second jaw wire **302** is fixedly coupled to the end tool second jaw pulley **821**, each of the end tool first jaw pulley **811** and the end tool second jaw pulley **821** may rotate up to 90°.

In this case, when the actuation motion is performed in a state in which the first jaw **801** and the second jaw **802** are located at a 90° line, the first jaw **801** may be spread, but the second jaw **802** may not be rotated beyond 90°. Accordingly, when the first jaw **801** and the second jaw **802** perform a yaw motion over a certain angle, there was a problem that an actuation motion is not smoothly performed.

In order to address such a problem, in the electric cauterization surgical instrument **10** of the present disclosure, the pulley **812** and the pulley **822**, which are auxiliary pulleys, are additionally disposed at one side of the pulley **811** and one side of the pulley **821**, respectively. As described above, as the arrangement paths of the wire **305**, which is a first jaw wire, and the wire **302**, which is a second jaw wire, are changed to a certain degree by disposing the pulley **812** and the pulley **822**, a tangential direction of the wires **305** and **302** is changed, and accordingly, a fastening member **324** for coupling the wire **302** and the pulley **821** is additionally rotatable by a certain angle.

That is, a fastening member **326**, which is a coupling portion of the wire **302** and the pulley **821**, is rotatable until being located on a common internal tangent of the pulley **821** and the pulley **822**. Similarly, a fastening member **323**, which is a coupling portion of the wire **305** and the pulley **811**, is rotatable until being located on a common internal tangent of the pulley **811** and the pulley **812**, so that the range of rotation may be increased.

In other words, due to the pulley **812** that is an auxiliary pulley, the wires **301** and **305**, which are two strands of the first jaw wire wound around the pulley **812**, are disposed at one side with respect to a plane perpendicular to the Y-axis and passing through the X-axis. Simultaneously, due to the pulley **822**, the wires **302** and **306**, which are two strands of the second jaw wire wound around the pulley **821**, are disposed at the other side with respect to the plane perpendicular to the Y-axis and passing through the X-axis.

In other words, the pulley **813** and the pulley **814** are disposed at one side with respect to the plane perpendicular to the Y-axis and passing through the X-axis, and the pulley **823** and the pulley **824** are disposed at the other side with respect to the plane perpendicular to the Y-axis and passing through the X-axis.

In other words, the wire **305** is located on the internal tangent of the pulley **811** and the pulley **812**, and the rotation angle of the pulley **811** is increased due to the pulley **812**. In addition, the wire **302** is located on the internal tangent of the pulley **821** and the pulley **822**, and the rotation angle of the pulley **821** is increased due to the pulley **822**.

According to the present disclosure, the rotation radii of the first jaw **801** and the second jaw **802** increase, so that an

effect of increasing a yaw motion range in which a normal opening/closing actuation motion can be performed may be obtained.

As compared to the third embodiment, the end tool **800** of the modified example of the third embodiment of the present disclosure has the same configuration as the end tool **800** according to the third embodiment, except that the pulley **821** and the pulley **822**, which are axially coupled to the end tool hub **860'** by the second rotation shaft **842**, are provided as separate components instead of being integrally formed with a body portion **861** in the end tool hub **860'** and function as auxiliary pulleys, and thus a detailed description thereof will be omitted in the overlapping range

Fourth Embodiment of Surgical Instrument for Electrocautery

FIG. **140** is a perspective view illustrating a surgical instrument for electrocautery according to a fourth embodiment of the present disclosure. FIGS. **141** to **146** are views illustrating an end tool of the surgical instrument for electrocautery of FIG. **140**. FIG. **147** is a perspective view illustrating an end tool hub of the surgical instrument for electrocautery of FIG. **140**. FIGS. **148** and **149** are cut-away perspective views of the end tool hub of FIG. **147**. FIGS. **150** and **151** are perspective views illustrating the end tool hub of FIG. **147**. FIG. **152** is a side view illustrating the end tool hub of FIG. **147** and a guide tube. FIG. **153** is a plan view illustrating the end tool hub of FIG. **147** and the guide tube. FIG. **154** is a perspective view illustrating an actuation hub of the surgical instrument for electrocautery of FIG. **140**. FIG. **155** is a cut-away perspective view of the actuation hub of FIG. **154**. FIG. **156** is an exploded perspective view illustrating the end tool of the surgical instrument for electrocautery of FIG. **140**. FIG. **157** is a perspective view illustrating a first jaw of the end tool of the surgical instrument for electrocautery of FIG. **140**. FIG. **158** is a perspective view illustrating a second jaw of the end tool of the surgical instrument for electrocautery of FIG. **140**. FIG. **159** is a perspective view illustrating a first jaw pulley of the surgical instrument for electrocautery of FIG. **140**. FIG. **160** is a plan view illustrating an opening and closing motion of the first jaw of the end tool of the surgical instrument for electrocautery of FIG. **140**. FIG. **161** is a plan view illustrating an opening and closing motion of the second jaw of the end tool of the surgical instrument for electrocautery of FIG. **140**. FIG. **162** is a plan view illustrating an opening and closing motion of the first jaw and the second jaw of the end tool of the surgical instrument for electrocautery of FIG. **140**.

Referring to FIGS. **140** to **162** and the like, an electric cauterization surgical instrument **10** according to the fourth embodiment of the present disclosure includes an end tool **1100**, a manipulation portion **200**, a power transmission portion **300**, and a connection portion **400**.

Here, the connection portion **400** is formed in the shape of a hollow shaft, and one or more wires and electric wires may be accommodated therein. The manipulation portion **200** is coupled to one end portion of the connection portion **400**, the end tool **1100** is coupled to the other end portion thereof, and the connection portion **400** may serve to connect the manipulation portion **200** and the end tool **1100**. Here, the connection portion **400** of the electric cauterization surgical instrument **10** according to the fourth embodiment of the present disclosure includes a straight portion **401** and a bent portion **402**, wherein the straight portion **401** is formed at a side coupled to the end tool **1100**, and the bent portion **402** is formed at a side to which the manipulation portion **200** is coupled. As such, since the end portion of the connection portion **400** at the side of the manipulation portion **200** is formed to be bent, a pitch manipulation portion **201**, a yaw manipulation portion **202**, and an actuation manipulation portion **203** may be formed along an extension line of the end tool **1100** or adjacent to the extension line. In other words, it may be said that the pitch manipulation portion **201** and the yaw manipulation portion **202** are at least partially accommodated in a concave portion formed by the bent portion **402**. Due to the above-described shape of the bent portion **402**, the shapes and motions of the manipulation portion **200** and the end tool **1100** may be further intuitively matched with each other.

Meanwhile, a plane on which the bent portion **402** is formed may be substantially the same as a pitch plane, that is, an XZ plane of FIG. **140**. As such, as the bent portion **402** is formed on substantially the same plane as the XZ plane, interference with the manipulation portion may be reduced. Of course, for intuitive motions of the end tool and the manipulation portion, any form other than the XZ plane may be possible.

Meanwhile, a connector **410** may be formed on the bent portion **402**. The connector **410** may be connected to an external power supply (not shown), and the connector **410** may be connected to a jaw **1103** through electric wires **411** and **412** to transfer electrical energy supplied from the external power supply (not shown) to the jaw **1103**. Here, the connector **410** may be of a bipolar-type having two electrodes, or the connector **410** may be of a monopolar type having one electrode.

The manipulation portion **200** is formed at the one end portion of the connection portion **400** and provided as an interface to be directly controlled by a medical doctor, for example, a tongs shape, a stick shape, a lever shape, or the like, and when the medical doctor controls the manipulation portion **200**, the end tool **1100**, which is connected to the interface and inserted into the body of a surgical patient, performs a certain motion, thereby performing surgery. Here, the manipulation portion **200** is illustrated in FIG. **140** as being formed in a handle shape that is rotatable while the finger is inserted therein, the concept of the present disclosure is not limited thereto, and various types of manipulation portions that are connected to the end tool **1100** and manipulate the end tool **1100** may be possible.

The end tool **1100** is formed on the other end portion of the connection portion **400**, and performs necessary motions for surgery by being inserted into a surgical site. In an example of the end tool **1100** described above, as shown in FIG. **140**, a pair of jaws **1103** for performing a grip motion may be used. However, the concept of the present disclosure is not limited thereto, and various devices for performing surgery may be used as the end tool **1100**. For example, a configuration of a cantilever cautery may also be used as the end tool. The end tool **1100** is connected to the manipulation portion **200** by the power transmission portion **300**, and receives a driving force of the manipulation portion **200** through the power transmission portion **300** to perform a motion necessary for surgery, such as gripping, cutting, suturing, or the like.

Here, the end tool **1100** of the electric cauterization surgical instrument **10** according to the fourth embodiment of the present disclosure is formed to be rotatable in at least one direction, for example, the end tool **1100** may perform a pitch motion around a Y-axis of FIG. **140** and simultaneously perform a yaw motion and an actuation motion around a Z-axis of FIG. **140**.

The power transmission portion **300** may connect the manipulation portion **200** to the end tool **1100**, transmit the driving force of the manipulation portion **200** to the end tool **1100**, and include a plurality of wires, pulleys, links, sections, gears, or the like.

The end tool **1100**, the manipulation portion **200**, the power transmission portion **300**, and the like of the electric cauterization surgical instrument **10** of FIG. **140** will be described in detail later.

(Power Transmission Portion)

Hereinafter, the power transmission portion **300** of the electric cauterization surgical instrument **10** of FIG. **140** will be described in more detail.

Referring to FIGS. **140** to **146** and the like, the power transmission portion **300** of the electric cauterization surgical instrument **10** according to an embodiment of the present disclosure may include a wire **301**, a wire **302**, a wire **303**, a wire **304**, a wire **305**, a wire **306**, and a blade wire **307**.

Here, the wire **301** and the wire **305** may be paired to serve as first jaw wires. The wire **302** and the wire **306** may be paired to serve as second jaw wires. Here, the components encompassing the wires **301** and **305**, which are first jaw wires, and the wires **302** and **306**, which are second jaw wires, may be referred to as jaw wires. In addition, the wires **303** and **304** may be paired to serve as pitch wires.

In addition, the power transmission portion **300** of the electric cauterization surgical instrument **10** according to an embodiment of the present disclosure may include a fastening member **321**, a fastening member **322**, a fastening member **323**, a fastening member **324**, a fastening member **326**, and a fastening member **327** that are coupled to respective end portions of the wires to respectively couple the wires and the pulleys. Here, each of the fastening members may have various shapes as necessary, such as a ball shape, a tube shape, and the like.

Here, at the end tool **1100** side, the fastening member **321**/fastening member **322** may serve as pitch wire-end tool fastening members, the fastening member **323** may serve as a first jaw wire-end tool fastening member, and the fastening member **326** may serve as a second jaw wire-end tool fastening member.

Further, at the manipulation portion **200** side, the fastening member **324** may serve as a first jaw wire-manipulation portion fastening member, and the fastening member **327** may serve as a second jaw wire-manipulation portion fastening member. In addition, although not shown in the drawings, a pitch wire-manipulation portion fastening member and a blade wire-manipulation portion fastening member may be further formed at the manipulation portion **200** side.

The coupling relationship between the wires, the fastening members, and the respectively pulleys will be described in detail as follows.

First, the wires **301** and **305**, which are first jaw wires, may be a single wire. The fastening member **323**, which is a first jaw wire-end tool fastening member, is inserted at an intermediate point of the first jaw wire, which is a single wire, and the fastening member **323** is crimped and fixed, and then, both strands of the first jaw wire centered on the fastening member **323** may be referred to as the wire **301** and the wire **305**, respectively.

Alternatively, the wires **301** and **305**, which are first jaw wires, may also be formed as separate wires, and connected by the fastening member **323**.

In addition, by coupling the fastening member **323** to a pulley **1111**, the wires **301** and **305** may be fixedly coupled to the pulley **1111**. This allows the pulley **1111** to rotate as the wires **301** and **305** are pulled and released.

Meanwhile, the first jaw wire-manipulation portion fastening member **324** may be coupled to the other end portions of the wires **301** and **305**, which are opposite to one end portions to which the fastening member **323** is fastened.

In addition, by coupling the first jaw wire-manipulation portion fastening member **324** to a pulley **211**, the wires **301** and **305** may be fixedly coupled to the pulley **211**. As a result, when the pulley **211** is rotated by a motor or human power, the wire **301** and the wire **305** are pulled and released, allowing the pulley **1111** of the end tool **1100** to rotate.

In the same manner, the wire **302** and the wire **306**, which are second jaw wires, are coupled to each of the fastening member **326**, which is a second jaw wire-end tool fastening member, and the second jaw wire-manipulation portion fastening member **327**. In addition, the fastening member **326** is coupled to a pulley **1121**, and the second jaw wire-manipulation portion fastening member is coupled to a pulley **220**. As a result, when the pulley **220** is rotated by a motor or a human force, the pulley **1121** of the end tool **1100** may be rotated as the wire **302** and the wire **306** are pulled and released.

In the same manner, the wire **304**, which is a pitch wire, is coupled to the fastening member **321**, which is a pitch wire-end tool fastening member, and the pitch wire-manipulation portion fastening member (not shown). In addition, the wire **303**, which is a pitch wire, is coupled to a fastening member **322**, which is a pitch wire-end tool fastening member, and the pitch wire-manipulation portion fastening member (not shown).

In addition, the fastening member **321** is coupled to a first pitch pulley portion **1163***a* of an end tool hub **1160**, the fastening member **322** is coupled to a second pitch pulley portion **1163***b* of the end tool hub **1160**, and the pitch wire-manipulation portion fastening member (not shown) is coupled to a pulley **231**. As a result, when the pulley **231** is rotated by a motor or human force, the wire **303** and the wire **304** are pulled and released, allowing the end tool hub **1160** of the end tool **1100** to rotate.

Meanwhile, one end portion of the blade wire **307** is coupled to a blade **1175** to be described later, and the other end portion thereof is coupled to a blade manipulation portion **260** of the manipulation portion **200**. By the manipulation of the blade manipulation portion **260**, a cutting motion may be performed as the blade wire **307** is moved from a proximal end **1105** toward a distal end **1104** of the end tool **1100**, or the blade wire **307** may return from the distal end **1104** toward the proximal end **1105** of the end tool **1100**.

At this time, at least a part of the blade wire **307** may be accommodated in a guide tube **1170** to be described later. Accordingly, when the guide tube **1170** is bent in response to a pitch motion or yaw motion of the end tool **1100**, the blade wire **307** accommodated therein may also be bent together with the guide tube **1170**. The guide tube **1170** will be described in more detail later.

In addition, the blade wire **307** is formed in a longitudinal direction of the connection portion **400** to be linearly movable in the connection portion **400**. In addition, since one end portion of the blade wire **307** is coupled to the blade **1175**, when the blade wire **307** is linearly moved in the longitudinal direction of the connection portion **400**, the blade **1175** connected thereto is also linearly moved. That is, when the blade wire **307** is linearly moved in the longitudinal direction of the connection portion **400**, a cutting motion is performed as the blade **1175** connected thereto is moved

toward the distal end **1104** or the proximal end **1105** of the end tool **1100**. This will be described in more detail later.

(End Tool)

Hereinafter, the end tool **1100** of the electric cauterization surgical instrument **10** of FIG. **140** will be described in more detail.

FIG. **140** is a perspective view illustrating the surgical instrument for electrocautery according to the fourth embodiment of the present disclosure. FIGS. **141** to **146** are views illustrating the end tool of the surgical instrument for electrocautery of FIG. **140**.

Here, FIG. **141** illustrates a state in which the end tool hub **1160** and a pitch hub **1150** are coupled, and FIG. **142** illustrates a state in which the end tool hub **1160** and pitch hub **1150** are removed. FIG. **143** illustrates a state in which a first jaw **1101** and a second jaw **1102** are removed, and FIG. **144** illustrates a state in which the first jaw **1101**, the second jaw **1102**, the pulley **1111**, the pulley **1121**, and the like are removed. Meanwhile, FIG. **145** is a view mainly illustrating the wires, and FIG. **146** is a view mainly illustrating the pulleys.

Referring to FIGS. **140** to **162** and the like, the end tool **1100** of the fourth embodiment of the present disclosure includes a pair of jaws for performing a grip motion, that is, the first jaw **1101** and a second jaw **1102**. Here, each of the first jaw **1101** and the second jaw **1102**, or a component encompassing the first jaw **1101** and the second jaw **1102** may be referred to as the jaw **1103**.

Further, the end tool **1100** may include the pulley **1111**, a pulley **1113**, a pulley **1114**, a pulley **1115**, and a pulley **1116** associated with a rotational motion of the first jaw **1101**. In addition, the end tool **1100** may include the pulley **1121**, a pulley **1123**, a pulley **1124**, a pulley **1125**, and a pulley **1126**, which are associated with a rotational motion of the second jaw **1102**.

Here, the pulleys facing each other are illustrated in the drawings as being formed parallel to each other, but the concept of the present disclosure is not limited thereto, and each of the pulleys may be variously formed with a position and a size suitable for the configuration of the end tool.

Further, the end tool **1100** of the fourth embodiment of the present disclosure may include the end tool hub **1160** and the pitch hub **1150**.

A first rotation shaft **1141** to be described later may be inserted through the end tool hub **1160**, and the pulley **1111** and the pulley **1121** axially coupled to the first rotation shaft **1141** and at least some of the first jaw **1101** and the second jaw **1102** coupled to the pulley **1111** and the pulley **1121** may be accommodated inside the end tool hub **1160**. Here, in an embodiment of the present disclosure, a wire guide portion **1168** serving as an auxiliary pulley is formed in the end tool hub **1160**. That is, a first wire guide portion **1168***a* and a second wire guide portion **1168***b* for guiding paths of the wire **305** and the wire **302** may be formed in the end tool hub **1160**. The wire guide portions **1168** of the end tool hub **1160** may serve as auxiliary pulleys (see **612** and **622** of FIG. **39**) of the first embodiment and change the paths of the wires, and the first wire guide portion **1168***a* and the second wire guide portion **1168***b* of the end tool hub **1160** serving as auxiliary pulleys will be described in more detail later.

Meanwhile, the first pitch pulley portion **1163***a* and the second pitch pulley portion **1163***b*, which serve as end tool pitch pulleys, may be formed at one end portion of the end tool hub **1160**. The wire **303** and the wire **304**, which are pitch wires, are coupled to the first pitch pulley portion **1163***a* and the second pitch pulley portion **1163***b*, which serve as end tool pitch pulleys, and a pitch motion is performed while the end tool hub **1160** rotates around a third rotation shaft **1143**.

The third rotation shaft **1143** and a fourth rotation shaft **1144** may be inserted through the pitch hub **1150**, and the pitch hub **1150** may be axially coupled to the end tool hub **1160** by the third rotation shaft **1143**. Accordingly, the end tool hub **1160** may be formed to be pitch-rotatable around the third rotation shaft **1143** with respect to the pitch hub **1150**.

Further, the pitch hub **1150** may internally accommodate at least some of the pulley **1113**, the pulley **1114**, the pulley **1123**, and the pulley **1124** that are axially coupled to the third rotation shaft **1143**. Further, the pitch hub **1150** may internally accommodate at least some of the pulley **1115**, the pulley **1116**, the pulley **1125**, and the pulley **1126** that are axially coupled to the fourth rotation shaft **1144**.

One end portion of the pitch hub **1150** is connected to the end tool hub **1160**, and the other end portion of the pitch hub **1150** is connected to the connection portion **400**.

Here, the end tool **1100** of the fourth embodiment of the present disclosure may include the first rotation shaft **1141**, the third rotation shaft **1143**, and the fourth rotation shaft **1144**. As described above, the first rotation shaft **1141** may be inserted through the end tool hub **1160**, and the third rotation shaft **1143** and the fourth rotation shaft **1144** may be inserted through the pitch hub **1150**.

The first rotation shaft **1141**, the third rotation shaft **1143**, and the fourth rotation shaft **1144** may be arranged sequentially from the distal end **1104** toward the proximal end **1105** of the end tool **1100**. Accordingly, starting from the distal end **1104**, the first rotation shaft **1141** may be referred to as a first pin, the third rotation shaft **1143** may be referred to as a third pin, and the fourth rotation shaft **1144** may be referred to as a fourth pin.

Here, the first rotation shaft **1141** may function as an end tool jaw pulley rotation shaft, the third rotation shaft **1143** may function as an end tool pitch rotation shaft, and the fourth rotation shaft **1144** may function as an end tool pitch auxiliary rotation shaft of the end tool **1100**.

Here, each of the rotation shafts may include two shafts of a first sub-shaft and a second sub-shaft. Alternatively, it may be said that each of the rotation shafts is formed by being divided into two parts.

For example, the first rotation shaft **1141** may include two shafts of a first sub-shaft **1141***a* and a second sub-shaft **1141***b*. In addition, the third rotation shaft **1143** may include two shafts of a first sub-shaft **1143***a* and a second sub-shaft **1143***b*. The fourth rotation shaft **1144** may include two shafts of a first sub-shaft and a second sub-shaft.

Each of the rotation shafts is formed by being divided into two parts as described above to allow the guide tube **1170** to be described later to pass through the end tool hub **1160** and the pitch hub **1150**. That is, the guide tube **1170** may pass between the first sub-shaft and the second sub-shaft of each of the rotation shafts. This will be described in more detail later. Here, the first sub-shaft and the second sub-shaft may be disposed on the same axis or may be disposed to be offset to a certain degree.

Meanwhile, it is illustrated in the drawings that each of the rotation shafts is formed by being divided into two parts, but the concept of the present disclosure is not limited thereto. That is, each of the rotation shafts is formed to be curved in the middle such that an escape path for the guide tube **1170** is formed.

Each of the rotation shafts **1141**, **1143**, and **1144** may be fitted into one or more pulleys, which will be described in detail below.

Meanwhile, the end tool **1100** may further include an actuation rotation shaft **1145**. In detail, the first jaw **1101** and the second jaw **1102** may be axially coupled by the actuation rotation shaft **1145**, and in this state, an actuation motion may be performed while the first jaw **1101** and the second jaw **1102** rotate around the actuation rotation shaft **1145**. Here, the actuation rotation shaft **1145** may be disposed closer to the distal end **1104** than the first rotation shaft **1141** is.

Here, in the end tool **1100** of the fourth embodiment of the present disclosure, the first rotation shaft **1141**, which is a yaw rotation shaft, and the actuation rotation shaft **1145** are provided separately rather than as the same shaft. That is, by forming the first rotation shaft **1141**, which is a rotation shaft of the pulley **1111**/pulley **1121** that are jaw pulleys and a rotation shaft of a yaw motion, and the actuation rotation shaft **1145**, which is a rotation shaft of the second jaw **1102** with respect to the first jaw **1101** and a rotation shaft of an actuation motion, to be spaced apart from each other by a certain distance, a space in which the guide tube **1170** and the blade wire **307** accommodated therein can be gently bent may be secured. The actuation rotation shaft **1145** will be described in detail later.

The pulley **1111** functions as an end tool first jaw pulley, and the pulley **1121** functions as an end tool second jaw pulley. The pulley **1111** may also be referred to as a first jaw pulley, and the pulley **1121** may also be referred to as a second jaw pulley, and these two components may collectively be referred to as end tool jaw pulleys or simply jaw pulleys.

The pulley **1111** and the pulley **1121**, which are end tool jaw pulleys, are formed to face each other, and are formed to be rotatable independently of each other around the first rotation shaft **1141** which is an end tool jaw pulley rotation shaft. In this case, the pulley **1111** and pulley **1121** are formed to be spaced apart by a certain distance, and a blade assembly accommodation portion may be accommodated therebetween. In addition, at least a part of a blade assembly to be described later may be disposed in the blade assembly accommodation portion. In other words, the blade assembly including the guide tube **1170** may be disposed between the pulley **1111** and the pulley **1121**.

Here, since the pulley **1111** is connected to the first jaw **1101**, when the pulley **1111** rotates around the first rotation shaft **1141**, the first jaw **1101** may also rotate around the first rotation shaft **1141** together with the pulley **1111**.

Meanwhile, since the pulley **1121** is connected to the second jaw **1102**, when the pulley **1121** rotates around the first rotation shaft **1141**, the second jaw **1102** connected to the pulley **1121** may rotate around the first rotation shaft **1141**.

In addition, a yaw motion and an actuation motion of the end tool **1100** are performed in response to the rotation of the pulley **1111** and the pulley **1121**. That is, when the pulley **1111** and the pulley **1121** rotate in the same direction around the first rotation shaft **1141**, the yaw motion is performed as the first jaw **1101** and the second jaw **1102** rotate with the first rotation shaft **1141** as the center of rotation. Meanwhile, when the pulley **1111** and the pulley **1121** rotate in opposite directions around the first rotation shaft **1141**, the actuation motion is performed as the first jaw **1101** and the second jaw **1102** rotate around the actuation rotation shaft **1145**.

The pulley **1113** and the pulley **1114** function as end tool first jaw pitch main pulleys, and the pulley **1123** and the pulley **1124** function as end tool second jaw pitch main pulleys, and these two components may collectively be referred to as end tool jaw pitch main pulleys.

The pulley **1115** and the pulley **1116** function as end tool first jaw pitch sub-pulleys, and the pulley **1125** and the pulley **1126** function as end tool second jaw pitch sub-pulleys, and these two components collectively may be referred to as end tool jaw pitch sub-pulleys.

Hereinafter, components associated with the rotation of the pulley **1111** will be described.

The pulley **1113** and the pulley **1114** function as end tool first jaw pitch main pulleys. That is, the pulley **1113** and the pulley **1114** function as main rotation pulleys for a pitch motion of the first jaw **1101**. Here, the wire **301**, which is a first jaw wire, is wound around the pulley **1113**, and the wire **305**, which is a first jaw wire, is wound around the pulley **1114**.

The pulley **1115** and the pulley **1116** function as end tool first jaw pitch sub-pulleys. That is, the pulley **1115** and the pulley **1116** function as sub-rotation pulleys for a pitch motion of the first jaw **1101**. Here, the wire **301**, which is a first jaw wire, is wound around the pulley **1115**, and the wire **305**, which is a first jaw wire, is wound around the pulley **1116**.

Here, the pulley **1113** and the pulley **1114** are disposed on one side of the pulley **1111** to face each other. Here, the pulley **1113** and the pulley **1114** are formed to be rotatable independently of each other around the third rotation shaft **1143** that is an end tool pitch rotation shaft. In addition, the pulley **1115** and the pulley **1116** are disposed on one side of the pulley **1113** and one side of the pulley **1114**, respectively, to face each other. Here, the pulley **1115** and the pulley **1116** are formed to be rotatable independently of each other around the fourth rotation shaft **1144** that is an end tool pitch auxiliary rotation shaft. Here, in the drawings, it is illustrated that the pulley **1113**, the pulley **1115**, the pulley **1114**, and the pulley **1116** are all formed to be rotatable around a Y-axis direction, but the concept of the present disclosure is not limited thereto, and the rotation axes of the respective pulleys may be formed in various directions according to configurations thereof.

The wire **301**, which is a first jaw wire, is sequentially wound to make contact with at least portions of the pulley **1115**, the pulley **1113**, and the pulley **1111**. In addition, the wire **305** connected to the wire **301** by the fastening member **323** is sequentially wound to make contact with at least portions of the pulley **1111**, the first wire guide portion **1168***a* of the end tool hub **1160**, the pulley **1114**, and the pulley **1116**.

In other words, the wire **301** and the wire **305**, which are the first jaw wire, are sequentially wound to make contact with at least portions of the pulley **1115**, the pulley **1113**, the pulley **1111**, the first wire guide portion **1168***a* of the end tool hub **1160**, the pulley **1114**, and the pulley **1116**, and the wire **301** and the wire **305** formed to move along the above pulleys while rotating the above pulleys.

Accordingly, when the wire **301** is pulled in the direction of an arrow **301** of FIG. **145**, the fastening member **323** to which the wire **301** is coupled and the pulley **1111** coupled to the fastening member **323** are rotated in the counterclockwise direction. On the contrary, when the wire **305** is pulled in the direction of an arrow **305** of FIG. **145**, the fastening member **323** to which the wire **305** is coupled and the pulley **1111** coupled to the fastening member **323** are rotated in the clockwise direction in the FIG. **145**.

Next, components associated with the rotation of the pulley **1121** will be described.

The pulley **1123** and the pulley **1124** function as end tool second jaw pitch main pulleys. That is, the pulley **1123** and the pulley **1124** function as main rotation pulleys for a pitch motion of the second jaw **1102**. Here, the wire **306**, which is a second jaw wire, is wound around the pulley **1123**, and the wire **302**, which is a second jaw wire, is wound around the pulley **1124**.

The pulley **1125** and the pulley **1126** function as end tool second jaw pitch sub-pulleys. That is, the pulley **1125** and the pulley **1126** function as sub-rotation pulleys for a pitch motion of the second jaw **1102**. Here, the wire **306**, which is a second jaw wire, is wound around the pulley **1125**, and the wire **302**, which is a second jaw wire, is wound around the pulley **1126**.

Here, the pulley **1123** and the pulley **1124** are disposed on one side of the pulley **1121** to face each other. Here, the pulley **1123** and the pulley **1124** are formed to be rotatable independently of each other around the third rotation shaft **1143** that is an end tool pitch rotation shaft. In addition, the pulley **1125** and the pulley **1126** are disposed on one side of the pulley **1123** and one side of the pulley **1124**, respectively, to face each other. Here, the pulley **1125** and the pulley **1126** are formed to be rotatable independently of each other around the fourth rotation shaft **1144** that is an end tool pitch auxiliary rotation shaft. Here, in the drawings, it is illustrated that all of the pulley **1123**, the pulley **1125**, the pulley **1124**, and the pulley **1126** are formed to be rotatable around the Y-axis direction, but the concept of the present disclosure is not limited thereto, and the rotating axes of the respective pulleys may be formed in various directions according to configurations thereof.

The wire **306**, which is a second jaw wire, is sequentially wound to make contact with at least portions of the pulley **1125**, the pulley **1123**, and the pulley **1121**. In addition, the wire **302** connected to the wire **306** by the fastening member **326** is sequentially wound to make contact with at least portions of the pulley **1121**, the second wire guide portion **1168***b* of the end tool hub **1160**, the pulley **1124**, and the pulley **1126**.

In other words, the wire **306** and the wire **302**, which are the second jaw wire, are sequentially wound to make contact with at least portions of the pulley **1125**, the pulley **1123**, the pulley **1121**, the second wire guide portion **1168***b* of the end tool hub **1160**, the pulley **1124**, and the pulley **1126**, and the wire **306** and the wire **302** are formed to move along the above pulleys while rotating the above pulleys.

Accordingly, when the wire **306** is pulled in the direction of an arrow **306** of FIG. **145**, the fastening member **326** to which the wire **306** is coupled and the pulley **1121** coupled to the fastening member **326** are rotated in the clockwise direction in FIG. **145**. On the contrary, when the wire **302** is pulled toward the arrow **302** of FIG. **145**, the fastening member **326** coupled to the wire **302** and the pulley **1121** coupled to the fastening member **326** may rotate in the counterclockwise direction in FIG. **145**.

Hereinafter, a pitch motion of the present disclosure will be described in more detail.

Meanwhile, when the wire **301** is pulled in the direction of the arrow **301** of FIG. **145**, and simultaneously, the wire **305** is pulled in the direction of the arrow **305** of FIG. **145** (that is, when both strands of the first jaw wire are pulled), as shown in FIG. **144**, since the wires **301** and **305** are wound around lower portions of the pulley **1113** and the pulley **1114** rotatable around the third rotation shaft **1143**, which is an end tool pitch rotation shaft, the pulley **1111** to which the wires **301** and **305** are fixedly coupled and the end tool hub **1160** to which the pulley **1111** is coupled rotate as a whole in the counterclockwise direction around the third rotation shaft **1143**, and as a result, the end tool **1100** may rotate downward to perform the pitch motion. At this time, since the second jaw **1102** and the wires **302** and **306** fixedly coupled thereto are wound around upper portions of the pulley **1123** and the pulley **1124** rotatable around the third rotation shaft **1143**, the wires **302** and **306** are released in the opposite directions of the arrows **302** and **306**, respectively.

On the contrary, when the wire **302** is pulled in the direction of the arrow **302** of FIG. **145**, and simultaneously, the wire **306** is pulled in the direction of the arrow **306** of FIG. **145**, as shown in FIG. **144**, since the wires **302** and **306** are wound around the upper portions of the pulley **1123** and the pulley **1124** rotatable around the third rotation shaft **1143**, which is an end tool pitch rotation shaft, the pulley **1121** to which the wires **302** and **306** are fixedly coupled and the end tool hub **1160** to which the pulley **1121** is coupled rotate as a whole in the clockwise direction around the third rotation shaft **1143**, and as a result, the end tool **1100** may rotate upward to perform the pitch motion. At this time, since the first jaw **1101** and the wires **301** and **305** fixedly coupled thereto are wound around lower portions of the pulley **1113** and the pulley **1114** rotatable around the third rotation shaft **1143**, the wires **302** and **306** are moved in the opposite directions of the arrows **301** and **305**, respectively.

Meanwhile, the end tool hub **1160** of the end tool **1100** of the electric cauterization surgical instrument **10** of the present disclosure may further include the first pitch pulley portion **1163***a* and the second pitch pulley portion **1163***b* serving as end tool pitch pulleys, the manipulation portion **200** may further include the pulley **231** and a pulley **232**, which are manipulation portion pitch pulleys, and the power transmission portion **300** may further include the wire **303** and the wire **304** which are pitch wires.

In detail, the end tool hub **1160** including the first pitch pulley portion **1163***a* and the second pitch pulley portion **1163***b* may be formed to be rotatable around the third rotation shaft **1143** that is an end tool pitch rotation shaft. In addition, the wires **303** and **304** may serve to connect the first and second pitch pulley portions **1163***a* and **1163***b* of the end tool **1100** and the pulleys **231** and **232** of the manipulation portion **200**.

Thus, when the pulleys **231** and **232** of the manipulation portion **200** rotate, the rotation of the pulleys **231** and **232** is transmitted to the end tool hub **1160** of the end tool **1100** through the wires **303** and **304**, causing the end tool hub **1160** to rotate as well, and as a result, the end tool **1100** performs a pitch motion while rotating.

That is, the electric cauterization surgical instrument **10** according to the fourth embodiment of the present disclosure includes the first and second pitch pulley portions **1163***a* and **1163***b* of the end tool **1100**, the pulleys **231** and **232** of the manipulation portion **200**, and the wires **303** and **304** of the power transmission portion **300** in order to transmit driving force for a pitch motion, and thus, the driving force for the pitch motion of the manipulation portion **200** is more completely transmitted to the end tool **1100**, thereby improving operation reliability.

(Blade Wire and Guide Tube)

Hereinafter, the blade wire **307** and the guide tube **1170** of the present disclosure will be described in more detail.

The guide tube **1170** according to the present disclosure is formed to surround the blade wire **307** in a certain section, and at this time, the blade wire **307** is movable inside the guide tube **1170**. In other words, in a state in which in which the blade wire **307** is inserted into the guide tube **1170**, the blade wire **307** is movable relative to the guide tube **1170**.

Here, the guide tube **1170** serves to guide the path of the blade wire **307** by preventing the blade wire **307** from being curved in an unintended direction when the blade wire **307** is pushed or pulled. A cutting motion may be smoothly performed by the guide tube **1170**.

Meanwhile, one end portion of the guide tube **1170** may be fixedly coupled to an actuation hub **1190** to be described later. Here, the actuation hub **1190** may serve as a first coupling portion. In addition, the other end portion of the guide tube **1170** may be fixedly coupled to a second coupling portion (not shown) in the connection portion **400**. Since both end portions of the guide tube **1170** are fixedly coupled to certain points (the first coupling portion and the second coupling portion) as described above, respectively, the entire length of the guide tube **1170** may remain constant. Accordingly, the length of the blade wire **307** inserted into the guide tube **1170** may also remain constant.

Meanwhile, the guide tube **1170** according to the present disclosure may be formed of a flexible material and formed to be bendable. Accordingly, when the end tool **1100** performs a yaw motion around the first rotation shaft **1141** or a pitch motion around the third rotation shaft **1143**, the guide tube **1170** may be bent while being deformed in shape corresponding thereto. In addition, when the guide tube **1170** is bent, the blade wire **307** placed thereinside is also bent.

Here, although the length of the guide tube **1170** is constant, the relative position and distance of the first coupling portion (i.e., the actuation hub **1190**) and the second coupling portion (not shown) may be changed as the end tool **1100** is pitch-rotated or yaw-rotated, and thus a space for the guide tube **1170** to move by the changed distance is required. To this end, a pitch slit **1164** and a yaw slit **1165** may be provided in the end tool hub **1160** to form spaces for movement of the guide tube **1170**. Such a configuration of the end tool hub **1160** will be described in detail later.

Meanwhile, as described above, the blade wire **307** is inserted through the guide tube **1170**, and the blade wire **307** is relatively movable inside the guide tube **1170** with respect to the guide tube **1170**. That is, when the blade wire **307** is pulled in a state in which the guide tube **1170** is fixed, the blade **1175** connected to the blade wire **307** is moved toward the proximal end **1105**, and when the blade wire **307** is pushed, the blade **1175** connected to the blade wire **307** is moved toward the distal end **1104**.

This will be described below in more detail.

The most reliable way to perform a cutting motion using the blade **1175** is by pushing and pulling the blade **1175** with the blade wire **307**. In addition, in order for the blade wire **307** to push and pull the blade **1175**, the guide tube **1170** that can guide the path of the blade wire **307** should be provided. When the guide tube **1170** does not guide the path of the blade wire **307** (i.e., does not hold the blade wire **307**), a phenomenon may occur in which cutting is not performed and a middle portion of the blade wire **307** is curved even when the blade wire **307** is pushed. Accordingly, in order to reliably perform the cutting motion using the blade **1175**, the blade wire **307** and the guide tube **1170** should be essentially included.

However, when the blade wire **307** is used to drive a cutting motion, the cutting should be performed while pushing the blade wire **307**, and in this case, in order for the blade wire **307** to receive a force, a relatively stiff (i.e., non-bendable) wire should be used for the blade wire **307**. However, the stiff (i.e., non-bendable) wire may have a small bendable range and may be permanently deformed when a force equal to or greater than a certain degree is applied.

In other words, in the case of a stiff (i.e., non-bendable) wire, there is a minimum radius of curvature that may be bent and spread without permanent deformation. In other words, when the wire or the guide tube is curved below a specific radius of curvature, both the wire and the guide tube may undergo permanent deformation while being bent, thereby restricting the capacity to perform cutting while moving backward and forward. Thus, it is necessary to keep the blade wire **307** curved while having a gentle curvature.

Thus, in order to prevent the blade wire **307** from being rapidly bent while passing through the pulleys, a space, in which the blade wire **307** can be gently bent, is required between the jaw **1103** (i.e., the actuation rotation shaft **1145**) and the end tool hub **1160** (i.e., the first rotation shaft **1141** that is a yaw shaft).

To this end, according to the present disclosure, the first rotation shaft **1141**, which is a yaw rotation shaft, and the actuation rotation shaft **1145** are separately provided, and the first rotation shaft **1141** and the actuation rotation shaft **1145** are spaced apart from each other by a certain distance, thereby forming a space in which the blade wire **307** and the guide tube **1170** can be gently bent.

As described above, since the blade wire **307** and the guide tube **1170** need to be connected to the blade **1175** through the end tool hub **1160**, and a space in which the blade wire **307** and the guide tube **1170** can be bent in the end tool hub **1160** is necessary, in the present disclosure, 1) spaces, through which the blade wire **307**/the guide tube **1170** can pass and simultaneously are bendable, that is, the pitch slit **1164** and the yaw slit **1165**, are formed in the end tool hub **1160**, 2) each of the rotation shafts is formed by being divided into two parts, and 3) a pitch round portion **1166** and a yaw round portion **1167** are additionally formed to guide the bending of the blade wire **307** and the guide tube **1170**.

In other words, when one end portion of the guide tube **1170** is fixed in the connection portion **400**, and the other end portion thereof is moved while performing pitch and yaw motions, the guide tube **1170** is curved in a direction, in which the gentlest curvature (hereinafter, referred to as "maximum gentle curvature") can be achieved in response to a change in a distance between both end portions thereof. As such, by achieving the maximum gentle curvature of the natural state, the motion of the blade wire **307** is smooth and the permanent deformation does not occur.

Thus, in order to secure the maximum gentle curvature, the pitch slit **1164** and the yaw slit **1165** are formed on the path of the guide tube **1170**, and furthermore, the pitch round portion **1166** and the yaw round portion **1167** may be additionally formed in the end tool hub **1160**. Accordingly, the guide tube **1170** may have such a shape that is the most similar to the maximum gentle curvature (although not having the maximum gentle curvature).

Hereinafter, the end tool hub **1160** will be described in more detail.

(End Tool Hub)

FIG. **147** is a perspective view illustrating the end tool hub of the surgical instrument for electrocautery of FIG. **140**. FIGS. **148** and **149** are cut-away perspective views of the end tool hub of FIG. **147**. FIGS. **150** and **151** are perspective views illustrating the end tool hub of FIG. **147**. FIG. **152** is a side view illustrating the end tool hub of FIG. **147** and the guide tube. FIG. **153** is a plan view illustrating the end tool hub of FIG. **147** and the guide tube.

Referring to FIGS. **147** to **153**, the end tool hub **1160** includes a body portion **1161**, a first jaw pulley coupling portion **1162***a*, a second jaw pulley coupling portion **1162***b*, the first pitch pulley portion **1163***a*, the second pitch pulley portion **1163***b*, the pitch slit **1164**, the yaw slit **1165**, the pitch round portion **1166**, the yaw round portion **1167**, and the wire guide portion **1168**. In addition, the wire guide portion **1168** includes the first wire guide portion **1168***a* and the second wire guide portion **1168***b*.

The first jaw pulley coupling portion **1162***a* and the second jaw pulley coupling portion **1162***b* may be formed in the end tool hub **1160** at the distal end side. Here, the first jaw pulley coupling portion **1162***a* and the second jaw pulley coupling portion **1162***b* are formed to face each other, and the pulley **1111** and the pulley **1121** are accommodated therein. Here, the first jaw pulley coupling portion **1162***a* and the second jaw pulley coupling portion **1162***b* may be formed to be approximately parallel to a plane perpendicular to the first rotation shaft **1141** that is a yaw rotation shaft.

The first jaw pulley coupling portion **1162***a* and the second jaw pulley coupling portion **1162***b* are connected by the body portion **1161**. That is, the first jaw pulley coupling portion **1162***a* and the second jaw pulley coupling portion **1162***b*, which are parallel to each other, are coupled by the body portion **1161** formed in a direction approximately perpendicular to the first jaw pulley coupling portion **1162***a* and the second jaw pulley coupling portion **1162***b*, so that the first jaw pulley coupling portion **1162***a*, the second jaw pulley coupling portion **1162***b*, and the body portion **1161** form an approximately U-shape, in which the pulley **1111** and the pulley **1121** are accommodated.

In other words, it may be said that the first jaw pulley coupling portion **1162***a* and the second jaw pulley coupling portion **1162***b* are formed to extend in the X-axis direction from the body portion **1161**.

Here, the pulley **1111**, which is a first jaw pulley, is disposed close to the first jaw pulley coupling portion **1162***a* of the end tool hub **1160**, and the pulley **1121**, which is a second jaw pulley, is disposed close to the second jaw pulley coupling portion **1162***b* of the end tool hub **1160**, and thus the yaw slit **1165** may be formed between the first jaw pulley coupling portion **1162***a* and the second jaw pulley coupling portion **1162***b*. In addition, at least a part of the blade assembly to be described later may be disposed in the yaw slit **1165**. In other words, it may be said that at least a part of the guide tube **1170** of the blade assembly may be disposed between the first jaw pulley coupling portion **1162***a* and the second jaw pulley coupling portion **1162***b*. As such, by disposing the blade assembly including the guide tube **1170** between the pulley **1111**, which is a first jaw pulley, and the pulley **1121**, which is a second jaw pulley, the end tool **1100** is able to perform the cutting motion using the blade **1175** in addition to the pitch and yaw motions. This will be described in more detail later.

Meanwhile, a through hole is formed in the first jaw pulley coupling portion **1162***a* such that the first rotation shaft **1141** passes through the first jaw pulley coupling portion **1162***a* and the pulley **1111** and axially couples the first jaw pulley coupling portion **1162***a* and the pulley **1111**. In addition, a through hole is formed in the second jaw pulley coupling portion **1162***b* such that the first rotation shaft **1141** passes through the second jaw pulley coupling portion **1162***b* and the pulley **1121** and axially couples the second jaw pulley coupling portion **1162***b* and the pulley **1121**.

Here, as described above, the first rotation shaft **1141**, which is a yaw rotation shaft, may be formed by being divided into two parts of the first sub-shaft **1141***a* and the second sub-shaft **1141***b*, and the guide tube **1170** may pass between the first sub-shaft **1141***a* and the second sub-shaft **1141***b* of the first rotation shaft **1141**.

In addition, the yaw slit **1165** may be formed between the first jaw pulley coupling portion **1162***a* and the second jaw pulley coupling portion **1162***b*. Since the yaw slit **1165** is formed in the end tool hub **1160** as described above, the guide tube **1170** may pass through the inside of the end tool hub **1160**.

In other words, the first rotation shaft **1141** is vertically separated into two parts without passing through the end tool hub **1160**, and the yaw slit **1165** may be formed on a plane perpendicular to the first rotation shaft **1141** in the vicinity of the first rotation shaft **1141**. Accordingly, the guide tube **1170** is movable (i.e., movable left and right) in the yaw slit **1165** while passing through the vicinity of the first rotation shaft **1141**.

Meanwhile, the yaw round portion **1167** may be further formed in the body portion **1161**. The yaw round portion **1167** may be formed to be rounded so as to have a predetermined curvature. In detail, when viewed from a plane perpendicular to the first rotation shaft **1141** that is a yaw rotation shaft, the yaw round portion **1167** may be formed to be rounded so as to have a predetermined curvature. For example, the yaw round portion **1167** may be formed in a fan shape, and may be formed along a path in which the guide tube **1170** is bent on an XY plane. The yaw round portion **1167** as described above may serve to guide the path of the guide tube **1170** when the end tool **1100** yaw-rotates.

The wire guide portion **1168**, which guides a path of the wire passing through the inside of the end tool hub **1160**, is formed at one side of the body portion **1161**. Here, the wire guide portion **1168** includes the first wire guide portion **1168***a* and the second wire guide portion **1168***b*. Here, the first wire guide portion **1168***a* may be formed on an inner side surface of the first jaw pulley coupling portion **1162***a*. In addition, the second wire guide portion **1168***b* may be formed on an inner side surface of the second jaw pulley coupling portion **1162***b*.

Here, the wire guide portion **1168** may be formed in a cylindrical shape with a cross section that is approximately semi-circular. In addition, the semi-circular portion may be disposed to protrude toward the pulley **1111** and the pulley **1121**. In other words, it may be said that the wire guide portion **1168** is formed to protrude toward a space formed by the first jaw pulley coupling portion **1162***a*, the second jaw pulley coupling portion **1162***b*, and the body portion **1161**. In other words, it may be said that, in the wire guide portion **1168**, a region adjacent to the first jaw pulley coupling portion **1162***a* and the second jaw pulley coupling portion **1162***b* is formed to have a cross section that is curved with a predetermined curvature.

Alternatively, in other words, it may be also said that the wire guide portion **1168** functions as a kind of pulley member, which guides the paths of the wire **305** and the wire **302** by winding the wire **305** and the wire **302** around an outer circumferential surface thereof. However, here, the wire guide portion **1168** is not a member that rotates around a certain shaft as the original meaning pulley does, and it may be said that the wire guide portion **1168** is formed to be fixed as a portion of the end tool hub **1160** and performs some similar functions of a pulley by winding a wire therearound.

Here, the wire guide portion **1168** is illustrated in the drawing as being formed in a cylindrical shape with a cross section that is approximately semi-circular. That is, at least

a part of the cross section of the wire guide portion **1168** on the XY plane is illustrated as having a certain arc shape. However, the concept of the present disclosure is not limited thereto, and the cross section may have a predetermined curvature like an oval or a parabola, or a corner of a polygonal column is rounded to a certain degree, so that the cross section may have various shapes and sizes suitable for guiding the paths of the wire **305** and the wire **302**.

Here, a guide groove for guiding the paths of the wire **305** and the wire **302** well may be further formed in a portion of the wire guide portion **1168**, which is in contact with the wire **305** and the wire **302**. The guide groove may be formed in the form of a groove recessed to a certain degree from a protruding surface of the wire guide portion **1168**.

Here, although the guide groove is illustrated in the drawing as being formed in the entire arc surface of the wire guide portion **1168**, the concept of the present disclosure is not limited thereto, and the guide groove may be formed only in a portion of the arc surface of the wire guide portion **1168** as necessary.

As described above, by further forming the guide groove in the wire guide portion **1168**, unnecessary friction between the wires is reduced, so that durability of the wires may be improved.

The first pitch pulley portion **1163***a* and the second pitch pulley portion **1163***b*, which serve as end tool pitch pulleys, may be formed on the end tool hub **1160** at the proximal end side. Here, the first pitch pulley portion **1163***a* and the second pitch pulley portion **1163***b* may be formed to face each other. Here, the first pitch pulley portion **1163***a* and the second pitch pulley portion **1163***b* may be formed to be approximately parallel to a plane perpendicular to the third rotation shaft **1143**, which is a pitch rotation shaft.

In detail, one end portion of the end tool hub **1160** is formed in a disk shape similar to a pulley, and grooves around which a wire may be wound may be formed on an outer circumferential surface of the one end portion, thereby forming the first pitch pulley portion **1163***a* and the second pitch pulley portion **1163***b* The wire **303** and the wire **304** described above are coupled to the first pitch pulley portion **1163***a* and the second pitch pulley portion **1163***b*, which serve as end tool pitch pulleys, and a pitch motion is performed while the end tool hub **1160** rotates around the third rotation shaft **1143**.

Meanwhile, although not shown in the drawings, the pitch pulley may be formed as a separate member from the end tool hub **1160** and coupled to the end tool hub **1160**.

The first pitch pulley portion **1163***a* and the second pitch pulley portion **1163***b* may be connected by the body portion **1161**. That is, the first pitch pulley portion **1163***a* and the second pitch pulley portion **1163***b*, which are parallel to each other, are coupled by the body portion **1161** formed in a direction approximately perpendicular to the first pitch pulley portion **1163***a* and the second pitch pulley portion **1163***b*, and thus the first pitch pulley portion **1163***a*, the second pitch pulley portion **1163***b*, and the body portion **1161** may form an approximately U-shape.

In other words, it may be said that the first pitch pulley portion **1163***a* and the second pitch pulley portion **1163***b* are formed to extend from the body portion **1161** in the X-axis direction.

Meanwhile, a through hole is formed in the first pitch pulley portion **1163***a* so that the third rotation shaft **1143** may pass through the first pitch pulley portion **1163***a*. In addition, a through hole is formed in the second pitch pulley portion **1163***b* so that the third rotation shaft **1143** may pass through the second pitch pulley portion **1163***b*.

In this case, as described above, the third rotation shaft **1143**, which is a pitch rotation shaft, may be formed by being divided into two parts of the first sub-shaft **1143***a* and the second sub-shaft **1143***b*, and the guide tube **1170** may pass between the first sub-shaft **1143***a* and the second sub-shaft **1143***b* of the third rotation shaft **1143**.

The pitch slit **1164** may be formed between the first pitch pulley portion **1163***a* and the second pitch pulley portion **1163***b*. Since the pitch slit **1164** is formed in the end tool hub **1160** as described above, the guide tube **1170** may pass through the inside of the end tool hub **1160**.

In other words, the third rotation shaft **1143** is horizontally separated into two parts without passing through the end tool hub **1160**, and the pitch slit **1164** may be formed on a plane perpendicular to the third rotation shaft **1143** in the vicinity of the third rotation shaft **1143**. Accordingly, the guide tube **1170** is movable (movable up and down) in the pitch slit **1164** while passing through the vicinity of the third rotation shaft **1143**.

Meanwhile, the pitch round portion **1166** may be further formed in the body portion **1161**. The pitch round portion **1166** may be formed to be rounded to have a predetermined curvature. In detail, when viewed from a plane perpendicular to the third rotation shaft **1143**, which is a pitch rotation shaft, the pitch round portion **1166** may be formed to be rounded to have a predetermined curvature. For example, the pitch round portion **1166** may be formed in a fan shape, and formed along a path in which the guide tube **1170** is bent on the XZ plane. The pitch round portion **1166** as described above may serve to guide the path of the guide tube **1170** when the end tool **1100** pitch-rotates.

Here, the pitch slit **1164** and the yaw slit **1165** may be formed to be connected to each other. Accordingly, the guide tube **1170** and the blade wire **307** located therein may be disposed to completely pass through the inside of the end tool hub **1160**. In addition, the blade **1175** coupled to one end portion of the blade wire **307** may linearly reciprocate inside the first jaw **1101** and the second jaw **1102**.

As described above, since the blade wire **307** and the guide tube **1170** need to be connected to the blade **1175** through the end tool hub **1160**, and a space in which the blade wire **307** and the guide tube **1170** can be bent in the end tool hub **1160** is necessary, in the present disclosure, 1) spaces, through which the blade wire **307**/the guide tube **1170** can pass and simultaneously are bendable, that is, the pitch slit **1164** and the yaw slit **1165**, are formed in the end tool hub **1160**, **2**) the rotation shafts are formed by being divided into two parts, and 3) the pitch round portion **1166** and the yaw round portion **1167** are additionally formed to guide the bending of the blade wire **307**/the guide tube **1170**.

Hereinafter, the role and function of the wire guide portion **1168** will be described in more detail.

The wire guide portion **1168** may be in contact with the wire **305** and the wire **302** and may change the arrangement path of the wire **305** and the wire **302** to a certain degree to serve to increase a rotation radius of each of the first jaw **1101** and the second jaw **1102**.

That is, when the auxiliary pulleys are not disposed, each of the pulley **1111**, which is a first jaw pulley, and the pulley **1121**, which is a second jaw pulley, may rotate up to a right angle, but in the fourth embodiment of the present disclosure, by additionally providing the wire guide portion **1168** in the end tool hub **1160**, the maximum rotation angle of each pulley may be increased.

This enables a motion in which two jaws of the end tool **1100** have to be spread apart for an actuation motion in a state in which the two jaws are yaw-rotated together by 90°.

In other words, the range of yaw rotation in which an actuation motion is possible may be increased through the configuration of the wire guide portion **1168** of the end tool hub **1160**. In other words, the range of yaw rotation in which an actuation motion is possible may be increased through the configuration of the wire guide portion **1168** of the end tool hub **1160**.

Furthermore, by forming the wire guide portion **1168** in the end tool hub **1160**, which already exists, without adding a separate structure such as an auxiliary pulley, the range of rotation may be increased without adding a component and a manufacturing process.

As described above, since there is no need to additionally dispose a separate structure for increasing the rotation angle, the number of components is decreased and the manufacturing process is simplified, and also, the length of the end tool is shortened by as much as the size of the auxiliary pulley, so that the length of the end tool is shortened during a pitch motion. Accordingly, a surgical motion may be more easily performed in a narrow space.

This will be described below in more detail.

In the end tool **1100** of the surgical instrument according to the fourth embodiment of the present disclosure, the arrangement path of the wires may be changed without a separate structure by forming the wire guide portion **1168** capable of changing the path of the wire on an inner side wall of the end tool hub **1160**. As described above, as the arrangement path of the wire **305** and the wire **302** is changed to a certain degree by forming the wire guide portion **1168** in the end tool hub **1160**, a tangential direction of the wire **305** and the wire **302** is changed, and accordingly, rotation angles of the fastening member **323** and the fastening member **326** that couple respective wires and pulleys may be increased.

That is, the fastening member **326** that couples the wire **302** and the pulley **1121** is rotatable until being located on a common internal tangent of the pulley **1121** and the wire guide portion **1168**. Similarly, the fastening member (see **323** of FIG. **6**) that couples the wire **305** and the pulley **1111** is rotatable until being located on a common internal tangent of the pulley **1111** and the wire guide portion **1168**, so that a rotation angle of the fastening member (see **323** of FIG. **6**) may be increased.

In other words, the wire **301** and the wire **305** wound around the pulley **1111** by the wire guide portion **1168** are disposed on one side with respect to a plane perpendicular to the Y-axis and passing through the X-axis. Simultaneously, the wire **302** and the wire **306** wound around the pulley **1121** by the wire guide portion **1168** are disposed on the other side with respect to the plane perpendicular to the Y-axis and passing through the X-axis.

In other words, the pulley **1113** and the pulley **1114** are disposed at one side with respect to the plane perpendicular to the Y-axis and passing through the X-axis, and the pulley **1123** and the pulley **1124** are disposed at the other side with respect to the plane perpendicular to the Y-axis and passing through the X-axis.

In other words, the wire **305** is located on the internal tangent of the pulley **1111** and the wire guide portion **1168**, and a rotation angle of the pulley **1111** is increased due to the wire guide portion **1168**. In addition, the wire **302** is located on the internal tangent of the pulley **1121** and the wire guide portion **1168**, and the rotation angle of the pulley **1121** is increased due to the wire guide portion **1168**.

In the present embodiment in which an auxiliary pulley is not formed and the wire guide portion **1168** capable of changing the path of a wire is formed on the inner side wall of the end tool hub **1160**, the length of the end tool of the surgical instrument may be shortened as compared to the surgical instrument of the first embodiment in which a separate auxiliary pulley is formed. Since the length of the end tool is shortened as described above, a surgical operator may easily manipulate a surgical instrument, and a side effect of surgery may be reduced when the surgery is performed in a narrow surgical space in the human body.

According to the present disclosure as described above, the rotation radii of the pulley **1111**, which is a first jaw pulley, and the pulley **1121**, which is a second jaw pulley, increase, so that a yaw motion range in which a normal opening/closing actuation motion and a normal cutting motion can be performed may be increased.

(Actuation Hub)

FIGS. **154**A and **154**B are a perspective view and a cut-away perspective view illustrating an actuation hub of the surgical instrument for electrocautery of FIG. **147** of FIG. **140**. FIG. **155** is a view illustrating a state in which the guide tube, the blade wire, and the blade are mounted on the actuation hub illustrated in the cut-away perspective view of FIG. **154**. FIG. **156** is an exploded perspective view illustrating the end tool of the surgical instrument for electrocautery of FIG. **140**.

Referring to FIGS. **154** to **156**, the actuation hub **1190** may be formed in the form of a box having a hollow therein. In addition, the actuation hub **1190** is coupled to each of the first jaw **1101** and the second jaw **1102**. In detail, the actuation hub **1190** is axially coupled to the first jaw **1101** by a first actuation rotation shaft **1145***a*. In addition, the actuation hub **1190** is axially coupled to the second jaw **1102** by a second actuation rotation shaft **1145***b*. In this case, the first actuation rotation shaft **1145***a* and the second actuation rotation shaft **1145***b* may be disposed on the same line in a Z-axis direction.

In addition, a tube seating portion **1190***a* may be formed inside the actuation hub **1190**, and one end portion of the guide tube **1170** may be fixedly coupled to the tube seating portion **1190***a*.

Meanwhile, a blade accommodation portion **1190***b* may be formed inside the actuation hub **1190**, and the blade **1175** may be accommodated in the blade accommodation portion **1190***b*.

In addition, a wire through-hole **1190***c* may be formed between the tube seating portion **1190***a* and the blade accommodation portion **1190***b* inside the actuation hub **1190**.

That is, the tube seating portion **1190***a*, the wire through-hole **1190***c*, and the blade accommodation portion **1190***b* are sequentially formed inside the actuation hub **1190**, and the blade wire **307** may pass through the inside of the actuation hub **1190** to be connected to the blade **1175**.

As described above, by providing the actuation hub **1190** to which the guide tube **1170** is coupled between the first jaw **1101** and the second jaw **1102**, the guide tube **1170** may not be curved, or the angle at which the guide tube **1170** is curved may be reduced, even when the first jaw **1101** or the second jaw **1102** rotates around the first rotation shaft **1141** or the actuation rotation shaft **1145**.

In detail, in a case in which the guide tube **1170** is directly coupled to the first jaw **1101** or the second jaw **1102**, when the first jaw **1101** or the second jaw **1102** rotates, one end portion of the guide tube **1170** also rotates together with the first jaw **1101** or the second jaw **1102**, causing the guide tube **1170** to be curved.

On the other hand, in a case in which the guide tube **1170** is coupled to the actuation hub **1190**, which is independent

of the rotation of the jaw **1103**, as in the present embodiment, even when the first jaw **1101** or the second jaw **1102** rotates, the guide tube **1170** may not be curved, or the angle at which the guide tube **1170** is curved may be reduced even when the guide tube **1170** is curved.

That is, by changing the direct connection between the guide tube **1170** and the jaw **1103** by the actuation hub **1190** to an indirect connection, the degree to which the guide tube **1170** is curved by the rotation of the jaw **1103** may be reduced.

(First and Second Jaws and Actuation Motion)

Hereinafter, a coupling structure of the first jaw **1101** and the second jaw **1102** of the end tool **1100** of the surgical instrument **10** of FIG. **140** will be described in more detail.

Referring to FIGS. **157** to **162** and the like, the first jaw **1101** includes a movable coupling hole **1101***c*, a jaw pulley coupling hole **1101***d*, and a shaft pass-through portion **1101***c*.

The first jaw **1101** is formed entirely in an elongated bar shape, and formed to be rotatable together with the pulley **1111** by being coupled to the pulley **1111** at one end portion thereof.

Meanwhile, the movable coupling hole **1101***c*, the jaw pulley coupling hole **1101***d*, and the shaft pass-through portion **1101***e* may be formed in the first jaw **1101** at a side coupled to the pulley **1111**, that is, at the proximal end side.

Here, the movable coupling hole **1101***c* may be formed to have a predetermined curvature, and may be formed in an approximately elliptical shape. A shaft coupling portion **1111***a* of the pulley **1111**, which will be described later, may be fitted into the movable coupling hole **1101***c*. Here, a short radius of the movable coupling hole **1101***c* may be formed to be substantially the same as or slightly greater than a radius of the shaft coupling portion **1111***a*. Meanwhile, a long radius of the movable coupling hole **1101***c* may be formed to be greater than the radius of the shaft coupling portion **1111***a*. Thus, in a state in which the shaft coupling portion **1111***a* of the pulley **1111** is fitted into the movable coupling hole **1101***c* of the first jaw **1101**, the shaft coupling portion **1111***a* is movable to a certain degree in the movable coupling hole **1101***c*. This will be described in more detail below.

Meanwhile, the jaw pulley coupling hole **1101***d* is formed in the form of a cylindrical hole, and a jaw coupling portion **1111***b* of the pulley **1111**, which will be described later, may be fitted into the jaw pulley coupling hole **1101***d*. Here, a radius of the jaw pulley coupling hole **1101***d* may be formed to be substantially the same as or slightly greater than a radius of the jaw coupling portion **1111***b*. Thus, the jaw coupling portion **1111***b* of the pulley **1111** may be formed to be rotatably coupled to the jaw pulley coupling hole **1101***d* of the first jaw **1101**. This will be described in more detail below.

Meanwhile, the shaft pass-through portion **1101***e* may be formed in the first jaw **1101** at the distal end side relative to the movable coupling hole **1101***c* and the jaw pulley coupling hole **1101***d*. The shaft pass-through portion **1101***e* may be formed in the form of a hole, and the actuation rotation shaft **1145**, which is a jaw rotation shaft, may be inserted through the shaft pass-through portion **1101***c*.

The second jaw **1102** includes a movable coupling hole **1102***c*, a jaw pulley coupling hole **1102***d*, and a shaft pass-through portion **1102***c*.

The second jaw **1102** is formed entirely in an elongated bar shape, and formed to be rotatable together with the pulley **1121** by being coupled to the pulley **1121** at one end portion thereof.

Meanwhile, the movable coupling hole **1102***c*, the jaw pulley coupling hole **1102***d*, and the shaft pass-through portion **1102***e* may be formed in the second jaw **1102** at a side coupled to the pulley **1111**, that is, at the proximal end side.

Here, the movable coupling hole **1102***c* may be formed to have a predetermined curvature, and may be formed in an approximately elliptical shape. A shaft coupling portion **1121***a* of the pulley **1121**, which will be described later, may be fitted into the movable coupling hole **1102***c*. Here, a short radius of the movable coupling hole **1102***c* may be formed to be substantially the same as or slightly greater than a radius of the shaft coupling portion **1121***a*. Meanwhile, a long radius of the movable coupling hole **1102***c* may be formed to be greater than the radius of the shaft coupling portion **1121***a*. Thus, in a state in which the shaft coupling portion **1121***a* of the pulley **1121** is fitted into the movable coupling hole **1102***c* of the second jaw **1102**, the shaft coupling portion **1121***a* is movable to a certain degree in the movable coupling hole **1102***c*. This will be described in more detail below.

Meanwhile, the jaw pulley coupling hole **1102***d* is formed in the form of a cylindrical hole, and a jaw coupling portion **1121***b* of the pulley **1121**, which will be described later, may be fitted into the jaw pulley coupling hole **1102***d*. Here, a radius of the jaw pulley coupling hole **1102***d* may be formed to be substantially the same as or slightly greater than a radius of the jaw coupling portion **1121***b*. Thus, the jaw coupling portion **1121***b* of the pulley **1121** may be formed to be rotatably coupled to the jaw pulley coupling hole **1102***d* of the second jaw **1102**. This will be described in more detail below.

Meanwhile, the shaft pass-through portion **1102***e* may be formed in the second jaw **1102** at the distal end side relative to the movable coupling hole **1102***c* and the jaw pulley coupling hole **1102***d*. The shaft pass-through portion **1102***e* may be formed in the form of a hole, and the actuation rotation shaft **1145**, which is a jaw rotation shaft, may be inserted through the shaft pass-through portion **1102***c*.

The pulley **1111**, which is a first jaw pulley, may include the shaft coupling portion **1111***a* and the jaw coupling portion **1111***b*. The pulley **1111** is formed entirely in the form of a rotatable disk, and the shaft coupling portion **1111***a* and the jaw coupling portion **1111***b* may be formed to protrude to a certain degree from one surface of the pulley **1111**. As described above, the shaft coupling portion **1111***a* of the pulley **1111** may be fitted into the movable coupling hole **1101***c* of the first jaw **1101**, and the jaw coupling portion **1111***b* of the pulley **1111** may be fitted into the jaw pulley coupling hole **1101***d* of the first jaw **1101**. The pulley **1111** may be formed to be rotatable with the first rotation shaft **1141**, which is an end tool jaw pulley rotation shaft, as the center of rotation.

Meanwhile, the pulley **1121**, which is a second jaw pulley, may include the shaft coupling portion **1121***a* and the jaw coupling portion **1121***b*. The pulley **1121** is formed entirely in the form of a rotatable disk, and the shaft coupling portion **1121***a* and the jaw coupling portion **1121***b* may be formed to protrude to a certain degree from one surface of the pulley **1121**. As described above, the shaft coupling portion **1112***a* of the pulley **1112** may be inserted into the movable coupling hole **1102***c* of the second jaw **1102**, and the jaw coupling portion **1112***b* of the pulley **1112** may be inserted into the jaw pulley coupling hole **1102***d* of the second jaw **1102**. The pulley **1121** may be formed to be rotatable with the first rotation shaft **1141**, which is an end tool jaw pulley rotation shaft, as the center of rotation.

The coupling relationship between the components described above is as follows.

The first rotation shaft **1141**, which is an end tool jaw pulley rotation shaft, is sequentially inserted through the shaft coupling portion **1111***a* of the pulley **1111**, the movable coupling hole **1101***c* of the first jaw **1101**, the movable coupling hole **1102***c* of the second jaw **1102**, and the shaft coupling portion **1121***a* of the pulley **1121**.

The first actuation rotation shaft **1145***a* is sequentially inserted through the shaft pass-through portion **1101***e* of the first jaw **1101** and the actuation hub **1190** The second actuation rotation shaft **1145***b* is sequentially inserted through the shaft pass-through portion **1102***e* of the second jaw **1102** and the actuation hub **1190**.

The shaft coupling portion **1111***a* of the pulley **1111** is fitted into the movable coupling hole **1101***c* of the first jaw **1101**, and the jaw coupling portion **1111***b* of the pulley **1111** is fitted into the jaw pulley coupling hole **1101***d* of the first jaw **1101**.

At this time, the jaw pulley coupling hole **1101***d* of the first jaw **1101** and the jaw coupling portion **1111***b* of the pulley **1111** are axially coupled to each other so as to be rotatable, and the movable coupling hole **1101***c* of the first jaw **1101** and the shaft coupling portion **1111***a* of the pulley **1111** are movably coupled to each other (here, "movably coupled" means that the shaft coupling portion **1111***a* of the pulley **1111** is coupled so as to be movable to a certain degree in the movable coupling hole **1101***c* of the first jaw **1101**).

The shaft coupling portion **1121***a* of the pulley **1121** is fitted into the movable coupling hole **1102***c* of the second jaw **1102**, and the jaw coupling portion **1121***b* of the pulley **1121** is fitted into the jaw pulley coupling hole **1102***d* of the second jaw **1102**.

At this time, the jaw pulley coupling hole **1102***d* of the second jaw **1101** and the jaw coupling portion **1121***b* of the pulley **1121** are axially coupled to each other to be rotatable, and the movable coupling hole **1102***c* of the second jaw **1102** and the shaft coupling portion **1121***a* of the pulley **1121** are movably coupled to each other.

Here, the pulley **1111** and the pulley **1121** rotate around the first rotation shaft **1141**, which is an end tool jaw pulley rotation shaft. Meanwhile, the first jaw **1101** and the second jaw **1102** rotate around the actuation rotation shaft **1145**, which is a jaw rotation shaft. That is, the pulley **1111** and the first jaw **1101** have different shafts of rotation. Similarly, the pulley **1121** and the second jaw **1102** have different shafts of rotation.

That is, the rotation angle of the first jaw **1101** is limited to a certain degree by the movable coupling hole **1101***c*, but the first jaw **1101** essentially rotates around the actuation rotation shaft **1145**, which is a jaw rotation shaft. Similarly, the rotation angle of the second jaw **1102** is limited to a certain degree by the movable coupling hole **1102***c*, but the second jaw **1102** essentially rotates around the actuation rotation shaft **1145**, which is a jaw rotation shaft.

Amplification of a grip force due to the coupling relationship between the above-described components will be described.

In the surgical instrument **110** according to an embodiment of the present disclosure, the coupling structure of the first jaw **1101** and the second jaw **1102** forms an X-shaped structure, and thus, when the first jaw **1101** and the second jaw **1102** rotate in a direction of approaching each other (i.e., when the first jaw **1101** and the second jaw **1102** are closed), the grip force is greater in a direction in which the first jaw **1101** and the second jaw **1102** are closed. This will be described below in more detail.

As described above, in motions of the first jaw **1101** and the second jaw **1102** being opened and closed, there are two shafts that serve as the centers of rotation for the first jaw **1101** and the second jaw **1102**. That is, the first jaw **1101** and the second jaw **1102** perform the opening and closing motion around two shafts including the first rotation shaft **1141** and the actuation rotation shaft **1145**. At this time, the centers of rotation of the first jaw **1101** and the second jaw **1102** become the actuation rotation shaft **1145**, and the centers of rotation of rotation of the pulley **1111** and the pulley **1121** become the first rotation shaft **1141**. At this time, the first rotation shaft **1141** is a shaft whose position is relatively fixed, and the actuation rotation shaft **1145** is a shaft whose position is relatively moved linearly. In other words, when the pulley **1111** and the pulley **1121** rotate in a state in which the position of the first rotation shaft **1141** is fixed, the first jaw **1101** and the second jaw **1102** are opened/closed while the actuation rotation shaft **1145**, which is a rotation shaft of the first jaw **1101** and the second jaw **1102**, is moved backward and forward. This will be described below in more detail.

In FIG. **161**, r**1** is a distance from the jaw coupling portion **1121***b* of the pulley **1121** to the shaft coupling portion **1121***a*, and a length thereof is constant. Thus, a distance from the first rotation shaft **1141** inserted into the shaft coupling portion **1121***a* to the jaw coupling portion **1121***b* is also constant as r**1**.

Meanwhile, r**2** of FIG. **161** is a distance from the jaw pulley coupling hole **1102***d* of the second jaw **1102** to the shaft pass-through portion **1102***e*, and a length thereof is constant. Thus, a distance from the jaw coupling portion **1121***b* of the pulley **1121** inserted into the jaw pulley coupling hole **1102***d* to the rotation shaft **1145** inserted into the shaft pass-through portion **1102***e* is also constant as r**2**.

That is, the lengths of r**1** and r**2** remain constant. Accordingly, when the pulley **1111** and the pulley **1121** rotate in the directions of an arrow B**1** of FIG. **160** and an arrow B**2** of FIG. **161**, respectively, around the first rotation shaft **1141** to perform a closing motion, the first jaw **1101** and the second jaw **1102** rotate around the actuation rotation shaft **1145** as the angle between r**1** and r**2** changes while the lengths of r**1** and r**2** remain constant, and at this time, the actuation rotation shaft **1145** itself is also linearly moved (i.e., is moved forward/backward) by as much as an arrow C**1** of FIG. **160** and an arrow C**2** of FIG. **161**.

That is, assuming that the position of the first rotation shaft **1141**, which is an end tool jaw pulley rotation shaft, is fixed, when the first jaw **1101** and the second jaw **1102** are closed, a force is applied in a direction in which the actuation rotation shaft **1145**, which is a jaw rotation shaft, is moved forward (i.e., toward the distal end), and thus the grip force in the direction in which the first jaw **1101** and the second jaw **1102** are closed becomes larger.

In other words, since the lengths of r**1** and r**2** remain constant when the second jaw **1102** rotates around the actuation rotation shaft **1145**, when the pulley **1121** rotates around the first rotation shaft **1141**, the angle between r**1** and r**2** changes while the lengths of r**1** and r**2** remain constant. That is, **02**, which is the angle between r**1** and r**2** in a state in which the second jaw **1102** is open as shown in FIG. **161**A, is greater than 01, which is the angle between r**1** and r**2** in a state in which the second jaw **1102** is closed as shown in FIG. **161**B.

Thus, when the second jaw **1102** rotates from the open state to the close state, the angle between r**1** and r**2** changes,

and a force is applied in a direction in which the actuation rotation shaft **1145** is moved forward.

In this case, since the first rotation shaft **1141** is a shaft whose position is relatively fixed, the actuation rotation shaft **1145** is moved forward in the direction of the arrow C**1** of FIG. **160** and the direction of the arrow C**2** of FIG. **161**, and the grip force is further increased in a direction in which the second jaw **1102** is closed.

In other words, when the pulley **1111** and the pulley **1121** rotate around the first rotation shaft **1141**, which is a shaft whose relative position is fixed, the angle θ between r**1** and r**2** changes while the distance between r**1** and r**2** remains constant. In addition, when the angle θ changes as described above, the first jaw **1101** and the second jaw **1102** push or pull the actuation rotation shaft **1145**, and thus the actuation rotation shaft **1145** is moved forward or backward. In this case, when the first jaw **1101** and the second jaw **1102** are rotated in the direction of closing, the grip force is further increased as the actuation rotation shaft **1145** is moved forward in the directions of the arrow C**1** of FIG. **160** and the arrow C**2** of FIG. **161**. On the contrary, when the first jaw **1101** and the second jaw **1102** are rotated in the direction of opening, the actuation rotation shaft **1145** is moved backward in directions opposite to the arrow C**1** of FIG. **160** and the arrow C**2** of FIG. **161**.

With this configuration, the grip force becomes stronger when the first jaw **1101** and the second jaw **1102** are closed, thereby enabling a surgical operator to perform the actuation motion powerfully even with a small force.

(Components Associated with Cautery and Cutting)

Subsequently, referring to FIGS. **140** to **162** and the like, the end tool **1100** of the fourth embodiment of the present disclosure may include the first jaw **1101**, the second jaw **1102**, a first electrode **1151**, a second electrode **1152**, the guide tube **1170**, and the blade **1175** in order to perform cauterizing and cutting motions.

Here, components related to the driving of the blade, such as the guide tube **1170** and the blade **1175**, may be collectively referred to as a blade assembly. In an embodiment of the present disclosure, by disposing the blade assembly including the guide tube **1170** and the blade **1175** between the pulley **1111**, which is a first jaw pulley, and the pulley **1121**, which a second jaw pulley, the end tool **1100** is able to perform the cutting motion using the blade **1175** in addition to the pitch and yaw motions. This will be described in more detail.

As described above, the first jaw **1101** is connected to the first jaw pulley **1111** and rotates around the first rotation shaft **1141** together with the first jaw pulley **1111** when the first jaw pulley **1111** rotates around the first rotation shaft **1141**.

Meanwhile, the first electrode **1151** may be formed on a surface of the first jaw **1101** facing the second jaw **1102**. In addition, the second electrode **1152** may be formed on a surface of the second jaw **1102** facing the first jaw **1101**.

At this time, a slit **1151***a* may be formed in the first electrode **1151**, and the blade **1175** may move along the slit **1151***a*. In addition, a slit **1152***a* may be formed in the second electrode **1152**, and the blade **1175** may move along the slit **1152***a*.

Meanwhile, although not shown in the drawings, a spacer (not shown) may be formed between the first jaw **1101** and the first electrode **1151**, and a spacer (not shown) may be formed between the second jaw **1102** and the second electrode **1152**. The spacer (not shown) may include an insulating material such as ceramic. Alternatively, the first jaw **1101** and the second jaw **1102** may themselves be made of a nonconductor such that the first electrode **1151** and the second electrode **1152** may be maintained to be insulated from each other without a separate insulator until the first electrode **1151** and the second electrode **1152** are in contact with each other.

Meanwhile, although not shown in the drawings, one or more sensors (not shown) may be further formed on at least one of the first jaw **1101** or the second jaw **1102**. The sensor (not shown) may be formed to measure at least some of current, voltage, resistance, impedance, and temperature during the cautery by locating tissue between the first jaw **1101** and the second jaw **1102** and passing a current through the first electrode **1151** and the second electrode **1152**.

Alternatively, instead of providing a separate sensor, monitoring and controlling of at least some of current, voltage, resistance, impedance, and temperature may be directly performed by a generator (not illustrated) which supplies power to the electrodes.

An edge portion formed sharply and configured to cut tissue may be formed in one region of the blade **1175**. The tissue disposed between the first jaw **1101** and the second jaw **1102** may be cut as at least a part of the blade **1175** moves between the distal end **1104** and the proximal end **1105** of the end tool **1100**.

Here, the guide tube **1170** and the blade **1175** disposed between the pulley **1111** and the pulley **1121** are provided in the end tool **1100** of the electric cauterization surgical instrument **10** according to an embodiment of the present disclosure. In addition, by providing the guide tube **1170** and the blade **1175**, a multi-joint/multi-degree-of-freedom surgical instrument capable of pitch/yaw/actuation motions may also perform cauterizing and cutting motions. This will be described below in more detail.

So far, various types of surgical instruments for electrocautery have been developed. Among the various types of surgical instruments for electrocautery, a blood vessel resection device called "Advanced Energy Device" or "Vessel Sealer" has a sensing function added to the existing bipolar cautery method, so that power of different polarities may be supplied to two electrodes, and after denaturing a vessel with the heat generated therefrom for hemostasis, the stanched part may be cut with a blade. At this time, the impedance of the tissue (or blood vessel) while the current is flowing is measured to determine whether the cauterization is completed, and when the cauterization is completed, the current supply is automatically stopped, and the tissue is cut with the blade.

In the case of such a bipolar-type blood vessel resection device, it is essential to have a blade to cut the tissue after cauterization, and the end tool needs to be equipped with a mechanism for facilitating a linear motion of the blade, and thus joint movements such as pitch/yaw movements are not possible in most cases.

Meanwhile, there have been attempts to implement joint movements using flexible joints with multiple nodes connected in the bipolar-type blood vessel resection device, but in this case, a rotation angle is limited and it is difficult to achieve accurate motion control of the end tool.

On the other hand, in the case of a method that utilizes vibration of ultrasonic waves to perform hemostasis and cutting, it is not feasible to provide joints due to the physical properties of ultrasonic waves.

To address these problems, the end tool **1100** of the electric cauterization surgical instrument **10** according to an embodiment of the present disclosure includes the guide tube **1170** disposed between the pulley **1111** and the pulley **1121**, and the blade **1175** that moves between a first position

and a second position in response to the movement of the blade wire **307** disposed inside the guide tube **1170**. In addition, by providing the guide tube **1170** and the blade **1175** as described above, pitch/yaw/actuation motions may also be performed using a pulley/wire in a bipolar-type surgical instrument for cauterizing and cutting tissue.

FIG. **163** is a view illustrating a state in which the end tool of the surgical instrument for electrocautery of FIG. **140** is closed, and FIG. **164** is a view illustrating a state in which the end tool of the surgical instrument for electrocautery of FIG. **140** is opened. In addition, FIG. **165** is a view illustrating a state in which the blade wire **307** and the blade **1175** are located at a first position, FIG. **166** is a view illustrating a state in which the blade wire **307** and the blade **1175** are located at a second position, and FIG. **167** is a view illustrating a state in which the blade wire **307** and the blade **1175** are located at a third position.

Referring to FIGS. **163** to **167**, it may be said that the tissue between the first jaw **1101** and the second jaw **1102** is cut as the cutting motion of FIGS. **165** to **167** is performed in a state in which the first jaw **1101** and the second jaw **1102** are closed as shown in FIG. **163**.

Here, the first position illustrated in FIG. **165** may be defined as a state in which the blade **1175** is drawn in toward the proximal end **1105** of the end tool **1100** as much as possible. Alternatively, the first position may be defined as a state in which the blade **1175** is located adjacent to the pulley **1111**/pulley **1121**.

Meanwhile, the third position illustrated in FIG. **167** may be defined as a state in which the blade **1175** is withdrawn toward the distal end **1104** of the end tool **1100** as much as possible. Alternatively, the third position may be defined as a state in which the blade **1175** is spaced away from the pulley **1111**/pulley **1121** as much as possible.

First, as shown in FIG. **164**, a tissue to be cut is located between the first jaw **1101** and the second jaw **1102** in a state in which the first jaw **1101** and the second jaw **1102** are opened, and then an actuation motion is performed to close the first jaw **1101** and the second jaw **1102** as shown in FIG. **163**.

Next, as shown in FIG. **165**, in a state in which the blade wire **307** and the blade **1175** are located at the first position, currents of different polarities are applied to the first electrode **1151** and the second electrode **1152** to cauterize the tissue between the first jaw **1101** and the second jaw **1102**. At this time, a generator (not shown) configured to supply power to the electrodes may itself perform monitoring of at least some of current, voltage, resistance, impedance, and temperature, and may stop supplying power when the cauterization is completed.

In the state in which the cautery is completed as described above, when the blade wire **307** moves sequentially in the directions of an arrow A**1** of FIG. **155** and an arrow A**2** of FIG. **167**, the blade **1175** coupled to the blade wire **307** moves from the first position at the proximal end **1105** of the end tool **1100** toward the third position at the distal end **1104** of the end tool **1100**, reaching the positions in FIGS. **166** and **167** in turn.

As such, the blade **1175** cuts the tissue between the first jaw **1101** and the second jaw **1102** while moving in the X-axis direction.

However, it is to be understood that the linear motion of the blade **1175** here does not mean a motion in a completely straight line, but rather means a motion of the blade **1175** to the extent that the blade **1175** is able to cut the tissue while achieving a linear motion when viewed as a whole, even though the motion is not in a completely straight line, for example, the middle part of the straight line is bent by a certain angle or there is a section having a gentle curvature in a certain section.

Meanwhile, in this state, when the blade wire **307** is pulled in the opposite direction, the blade **1175** coupled to the blade wire **307** also returns to the first position.

According to the present disclosure, the multi-joint/multi-degree-of-freedom surgical instrument capable of pitch/yaw/actuation motions may also perform cauterizing and cutting motions.

(Manipulation Portion)

FIGS. **216** and **217** are perspective views illustrating the manipulation portion **200** of the surgical instrument of FIG. **140**. FIG. **218** is a diagram schematically illustrating only the pulleys and the wires constituting the joint of the surgical instrument for electrocautery of FIG. **140**.

With reference to FIGS. **140** to **162** and FIGS. **216** to **218**, the manipulation portion **200** of the electric cauterization surgical instrument **10** according to the fourth embodiment may include the first handle **204** which a user may hold, the actuation manipulation portion **203** configured to control the actuation motion of the end tool **1100**, the yaw manipulation portion **202** configured to control the yaw motion of the end tool **1100**, and the pitch manipulation portion **201** configured to control the pitch motion of the end tool **1100**. FIGS. **216** and **217** illustrate components only associated with the pitch/yaw/actuation motions of the electric cauterization surgical instrument **10**.

In addition, the manipulation portion **200** of the electric cauterization surgical instrument **10** may further include a blade manipulation portion **260** performing cutting by controlling the movement of the blade **171** of the end tool **1100**, and a cautery manipulation portion **270** performing cautery by supplying electrical energy to the first electrode **1151** and the second electrode **1152** of the end tool **1100**.

The manipulation portion **200** may include a pulley **210**, a pulley **211**, a pulley **212**, a pulley **213**, a pulley **214**, a pulley **215**, a pulley **216**, a pulley **217**, and a pulley **218**, which are associated with the rotational motion of the first jaw **1101**. In addition, the manipulation portion **200** may include a pulley **220**, a pulley **221**, a pulley **222**, a pulley **223**, a pulley **224**, a pulley **225**, a pulley **226**, a pulley **227**, and a pulley **228**, which are associated with the rotational motion of the second jaw **1102**. In one embodiment, the manipulation portion **200** may include a pulley **231**, a pulley **232**, a pulley **233**, and a pulley **234**, which are associated with the pitch motion. The manipulation portion **200** may include a pulley **235** which is an intermediate pulley arranged in some positions of the bent portion **402** of the connection portion **400**.

Here, the drawings illustrate that the pulleys facing each other are arranged in parallel with each other; however, the technical concepts of the present disclosure are not limited thereto, and each pulley may be formed in various positions and sizes suitable for the configuration of the manipulation portion **200**.

In addition, the manipulation portion **200** of the fourth embodiment may include a rotation shaft **241**, a rotation shaft **242**, a rotation shaft **243**, a rotation shaft **244**, a rotation shaft **245**, and a rotation shaft **246**. Here, the rotation shaft **241** may function as a manipulation portion first jaw actuation rotation shaft, and the rotation shaft **242** may function as a manipulation portion second jaw actuation rotation shaft. In addition, the rotation shaft **243** may function as a manipulation portion yaw main rotation shaft, and the rotation shaft **244** may function as a manipulation portion yaw subsidiary rotation shaft. The rotation shaft **245** may func-

tion as a manipulation portion pitch subsidiary rotation shaft, and the rotation shaft **246** may function as a manipulation portion pitch main rotation shaft.

The rotation shaft **241**, the rotation shaft **242**, the rotation shaft **243**, the rotation shaft **244**, the rotation shaft **245**, and the rotation shaft **246** may be sequentially arranged in a direction towards a proximal end **206** from a distal end **205**.

One or more pulleys may be fit into each of the rotation shafts **241**, **242**, **243**, **244**, **245**, and **246** which will be described in detail below.

The pulley **210** may function as a manipulation portion first jaw actuation pulley, the pulley **220** may function as a manipulation portion second jaw actuation pulley, and these components may be collectively referred to as a manipulation portion actuation pulley.

The pulley **211** and the pulley **212** may function as a manipulation portion first jaw yaw main pulley, the pulley **221** and the pulley **222** may function as a manipulation portion second jaw yaw main pulley, and these two components may collectively be referred to as a manipulation portion yaw main pulley.

The pulley **213** and the pulley **214** may function as a manipulation portion first jaw yaw subsidiary pulley, the pulley **223** and the pulley **224** may function as a manipulation portion second jaw yaw subsidiary pulley, and these two components may collectively be referred to as a manipulation portion yaw subsidiary pulley.

The pulley **215** and the pulley **216** may function as a manipulation portion first jaw pitch subsidiary pulley, the pulley **225** and the pulley **226** may function as a manipulation portion second jaw pitch subsidiary pulley, and these two components may collectively be referred to as a manipulation portion pitch subsidiary pulley.

The pulley **217** and the pulley **218** may function as a manipulation portion first jaw pitch main pulley, the pulley **227** and the pulley **228** may function as a manipulation portion second jaw pitch main pulley, and these two components may collectively be referred to as a manipulation portion pitch main pulley.

The pulley **231** and the pulley **232** may function as a manipulation portion pitch wire main pulley, and the pulley **233** and the pulley **234** may function as a manipulation portion pitch wire subsidiary pulley.

The components may be classified from the viewpoint of the manipulation portion in connection with each motion (i.e., pitch/yaw/actuation) as follows.

The pitch manipulation portion **201** controlling the pitch motion of the end tool **1100** may include a pulley **215**, a pulley **216**, a pulley **217**, a pulley **218**, a pulley **225**, a pulley **226**, and a pulley **227**, a pulley **228**, a pulley **231**, a pulley **232**, and a pulley **234**. In addition, the pitch manipulation portion **201** may include the rotation shaft **245** and the rotation shaft **246**. In one embodiment, the pitch manipulation portion **201** may further include a pitch frame **208**.

The yaw manipulation portion **202** controlling the yaw motion of the end tool **1100** may include a pulley **211**, a pulley **212**, a pulley **213**, a pulley **214**, a pulley **221**, a pulley **222**, a pulley **223**, and a pulley **224**. In addition, the yaw manipulation portion **202** may include the rotation shaft **243** and the rotation shaft **244**. In one embodiment, the yaw manipulation portion **202** may further include a yaw frame **207**.

The actuation manipulation portion **203** controlling the actuation motion of the end tool **1100** may include the pulley **210**, the pulley **220**, the rotation shaft **241**, and the rotation shaft **242**. In one embodiment, the actuation manipulation portion **203** may further include a first actuation manipulation portion **251** and a second actuation manipulation portion **256**.

Hereinafter, each component of the manipulation portion **200** will be described in more detail.

The first handle **204** may be held by a user, and more particularly, a user may hold the first handle **204** by wrapping it with his or her hand. The actuation manipulation portion **203** and the yaw manipulation portion **202** may be formed on the first handle **204**, and the pitch manipulation portion **201** may be formed on one side of the yaw manipulation portion **202**. In addition, another end of the pitch manipulation portion **201** may be connected to the bent portion **402** of the connection portion **400**.

The actuation manipulation portion **203** may include the first actuation manipulation portion **251** and the second actuation manipulation portion **256**. The first actuation manipulation portion **251** may include the rotation shaft **241**, the pulley **210**, a first actuation extension portion **252**, and a first actuation gear **253**. The second actuation manipulation portion **256** may include the rotation shaft **242**, the pulley **220**, a second actuation extension portion **257**, and a second actuation gear **258**. Here, ends of the first actuation extension portion **252** and the second actuation extension portion **257** may be formed in the shape of a hand ring, and may operate as a second handle.

The rotation shaft **241** and the rotation shaft **242**, which are the actuation rotation shaft, may be formed to have a certain angle with the XY plane on which the connection portion **400** is formed. For example, the rotation shaft **241** and the rotation shaft **242** may be formed in a direction parallel with the Z-axis, and when the pitch manipulation portion **201** or the yaw manipulation portion **203** rotates, a coordinate system of the actuation manipulation portion **203** may be changed relatively. However, the technical ides of the present disclosure are not limited thereto, and by an ergonomic design, the rotation shaft **241** and the rotation shaft **242** may be formed in various directions suitable for a hand structure of a user holding the actuation manipulation portion **203**.

The pulley **210**, the first actuation extension portion **252**, and the first actuation gear **253** may be fixedly coupled to each other and rotatable together around the rotation shaft **241**. Here, the pulley **210** may include one pulley or two pulleys fixedly coupled to each other.

Likewise, the pulley **220**, the second actuation extension portion **257**, and the second actuation gear **258** may be fixedly coupled to each other and rotatable together around the rotation shaft **242**. Here, the pulley **220** may include one pulley or two pulleys fixedly coupled to each other.

The first actuation gear **253** and the second actuation gear **258** may be formed to engage with each other, and when either one of them rotates in one direction, the other one may rotate concurrently in the opposite direction.

The yaw manipulation portion **202** may include the rotation shaft **243**, the pulley **211** and the pulley **212**, which are the manipulation portion first jaw yaw main pulley, the pulley **211** and the pulley **212**, which are the manipulation portion second jaw yaw main pulley, and the yaw frame **207**. In addition, the yaw manipulation portion **202** may further include the pulley **213** and the pulley **214**, which are the manipulation portion first jaw yaw subsidiary pulley and arranged on one side of the pulley **211** and the pulley **212**, and the pulley **223** and the pulley **224**, which are the manipulation portion second jaw yaw subsidiary pulley and arranged on one side of the pulley **221** and the pulley **222**.

Here, the pulley **213**, the pulley **214**, the pulley **223**, and the pulley **224** may be coupled to the pitch frame **208** to be described later.

The drawings illustrate that the yaw manipulation portion **202** includes the pulley **211**, the pulley **212**, the pulley **221**, and the pulley **222**, and as the pulley **211** faces the pulley **212** and the pulley **221** faces the pulley **222**, two pulleys may be rotatable independently of each other; however the technical concepts of the present disclosure are not limited thereto. That is, one or more pulleys having the same diameter or different diameters may be provided according to the configuration of the yaw manipulation portion **202**.

More specifically, on the first handle **204**, the rotation shaft **243**, which is the manipulation portion yaw main rotation shaft, may be formed on one side of the actuation manipulation portion **203**. In this case, the first handle **204** may be formed to be rotatable around the rotation shaft **243**.

Here, the rotation shaft **243** may be formed to have a certain angle with the XY plane on which the connection portion **400** is formed. For example, the rotation shaft **243** may be formed in a direction parallel with the Z-axis, and when the pitch manipulation portion **201** rotates, the coordinate system of the rotation shaft **243** may be changed relatively as described above. However, the technical ides of the present disclosure are not limited thereto, and by an ergonomic design, the rotation shaft **243** may be formed in various directions suitable for a hand structure of a user holding the manipulation portion **200**.

The pulley **211**, the pulley **212**, the pulley **221**, and the pulley **222** may be coupled to the rotation shaft **243** to be rotatable around the rotation shaft **243**. In addition, the wire **301** or the wire **305**, which is the first jaw wire, may be wound around the pulley **211** and the pulley **212**, and the wire **302** or the wire **306**, which is the second jaw wire, may be wound around the pulley **221** and the pulley **222**. At this time, as the pulley **211** faces the pulley **212**, and the pulley **221** faces the pulley **222**, there may be two pulleys which are rotatable independently. Accordingly, as the wire wound inward and the wire wound outward may be respectively wound around separate pulleys, the pulleys may operate without interfering with each other.

The yaw frame **207** may rigidly connect the first handle **204**, the rotation shaft **241**, the rotation shaft **242**, and the rotation shaft **243**, and accordingly, the first handle **204**, the yaw manipulation portion **202**, and the actuation manipulation portion **203** may yaw-rotate around the rotation shaft **243** in an integrated manner.

The pitch manipulation portion **201** may include the rotation shaft **246**, the pulley **217** and the pulley **218**, which are the manipulation portion first jaw pitch main pulley, the pulley **227** and the pulley **228**, which are the manipulation portion second jaw pitch main pulley, and the pitch frame **208**. In addition, the pitch manipulation portion **201** may further include the rotation shaft **245**, the pulley **215** and the pulley **216**, which are the manipulation portion first jaw pitch subsidiary pulley and arranged on one side of the pulley **217** and the pulley **218**, and the pulley **225** and the pulley **226**, which are the manipulation portion second jaw pitch subsidiary pulley and arranged on one side of the pulley **227** and pulley **228**. The pitch manipulation portion **201** may be connected to the bent portion **402** of the connection portion **400** through the rotation shaft **246**.

More specifically, the pitch frame **208** may be a base frame of the pitch manipulation portion **201**, and one end of the pitch frame **208** may be rotatably coupled to the rotation shaft **243**. That is, the yaw frame **207** may be formed to be rotatable around the rotation shaft **243** with respect to the pitch frame **208**.

As described above, the yaw frame **207** may connect the first handle **204**, the rotation shaft **243**, the rotation shaft **241**, and the rotation shaft **242**, and as the yaw frame **207** is axially coupled to the pitch frame **208**, when the pitch frame **208** pitch-rotates around the rotation shaft **246**, the yaw frame **207**, the first handle **204**, the rotation shaft **241**, the rotation shaft **242**, and the rotation shaft **243**, which are connected to the pitch frame **208**, may also pitch rotate. That is, when the pitch manipulation portion **201** rotates around the rotation shaft **246**, the actuation manipulation portion **203** and the yaw manipulation portion **202** may be rotated together with the pitch manipulation portion **201**. In other words, when the user pitch-rotates the first handle **204** around the rotation shaft **246**, the actuation manipulation portion **203**, the yaw manipulation portion **202**, and the pitch manipulation portion **201** may also move together with the first handle **204**.

The pulley **217**, the pulley **218**, the pulley **227**, and the pulley **228** may be coupled to the rotation shaft **246** so that they are rotatable around the rotation shaft **246** of the pitch frame **208**.

Here, the pulley **217** and the pulley **218** may face each other and rotate independently. Accordingly, as the wire wound inward and the wire wound outward may be respectively wound around separate pulleys, the pulleys may operate without interfering with each other. Likewise, the pulley **227** and the pulley **228** may face each other and rotate independently. Accordingly, as the wire wound inward and the wire wound outward may be respectively wound around separate pulleys, the pulleys may operate without interfering with each other.

Next, the motions of the wire **303** and the wire **304** which are the pitch wire are described below.

In the end tool **1100**, the pulley **1131**, which is the end tool pitch pulley, may be fixedly coupled to the end tool hub **1180**, and in the manipulation portion **200**, the pulley **231** and the pulley **232**, which are the manipulation portion pitch pulley, may be fixedly coupled to the pitch frame **208**. These pulleys may be connected to each other by the wire **303** and the wire **304**, which are the pitch wire, to facilitate the pitch motion of the end tool **1100** according to the pitch manipulation of the manipulation portion **200**. Here, the wire **303** may be fixedly coupled to the pitch frame **208** via the pulley **231** and the pulley **233**, and the wire **304** may be fixedly coupled to the pitch frame **208** via the pulley **232** and the pulley **234**. That is, the pitch frame **208**, the pulley **231**, and the pulley **232** may rotate together around the rotation shaft **246** by the pitch rotation of the manipulation portion **200**. As a result, the wire **303** and the wire **304** may also move, and separately from the pitch motion of the end tool **1100** by the wire **301**, the wire **302**, the wire **305**, and the wire **306**, which are the jaw wire, additional pitch rotation power may be transmitted.

The connection relation among the first handle **204**, the pitch manipulation portion **201**, the yaw manipulation portion **202**, and the actuation manipulation portion **203** is described below. On the first handle **204**, the rotation shaft **241**, the rotation shaft **242**, the rotation shaft **243**, the rotation shaft **244**, the rotation shaft **245**, and the rotation shaft **246** may be formed. At this time, as the rotation shaft **241** and the rotation shaft **242** are directly formed on the first handle **204**, the first handle **204** and the actuation manipulation portion **203** may be directly connected to each other. As the rotation shaft **243** is directly formed on the first

handle **204**, the first handle **204** and the yaw manipulation portion **202** may be directly connected to each other. As the pitch manipulation portion **201** is arranged on one side of the yaw manipulation portion **202** and connected to the yaw manipulation portion **202**, the pitch manipulation portion **201** may not be directly connected to the first handle **204** and the pitch manipulation portion **201** and the first handle **204** may be indirectly connected to each other through the yaw manipulation portion **202**.

With reference to the drawings, in the electric cauterization surgical instrument **10** according to the first embodiment, the pitch manipulation portion **201** and the end tool **1100** may be formed on the same or parallel axis (i.e., the X-axis). That is, the rotation shaft **246** of the pitch manipulation portion **201** may be formed at one end of the bent portion **402** of the connection portion **400**, and the end tool **1100** may be formed at the other end of the connection portion **400**.

In addition, one or more intermediate pulleys **235** changing or guiding a path of the wires may be arranged in some positions of the connection portion **400**, in particular, in positions on the bent portion **402**. At least a part of the wires may be wound around the intermediate pulleys **235** to guide the path of the wires so that the wires are arranged along the bent shape of the bent portion **402**.

Here, the drawings illustrate that the connection portion **400** includes the bent portion **402** and thus is formed in a curved manner with a certain curvature; however, the technical concepts of the present disclosure are not limited thereto, and the connection portion **400** may be formed straightly, if necessary, or curved in one or more points. Even in such cases, the pitch manipulation portion **201** and the end tool **1100** may be formed on the substantially same or parallel axis. In addition, although FIG. **3** illustrates that the pitch manipulation portion **201** and the end tool **1100** are respectively formed on an axis parallel with the X-axis, the technical concepts of the present disclosure are not limited thereto, and the pitch manipulation portion **201** and the end tool **1100** may be formed on different axes.

(Actuation Motion, Yaw Motion, Pitch Motion)

Actuation motion, yaw motion, and pitch motion in this embodiment will be described as follows.

First, the actuation motion is as follows.

When a user puts the index finger in a hand ring formed at the first actuation extension **252**, puts the thumb in a hand ring formed at the second actuation extension **257**, and rotates the first actuation extension **252** and the second actuation extension **257** using any one of or both the fingers, the pulley **210** and the first actuation gear **253** fixedly coupled to the first actuation extension **252** rotate around the rotation shaft **241**, and the pulley **220** and the second actuation gear **258** fixedly coupled to the second actuation extension **257** rotate around the rotation shaft **242**. At this time, the pulley **210** and the pulley **220** rotate in opposite directions, and thus the wire **301** and the wire **305** each having one end fixedly coupled to and wound around the pulley **210** and the wire **302** and the wire **306** each having one end fixedly coupled to and wound around the pulley **220** move in opposite directions as well. This rotational force is transmitted to an end tool **1100** through a power transmission portion **300**, two jaws **1103** of the end tool **1100** perform the actuation motion.

Here, the actuation motion refers to an action of opening or closing the jaws **1102** while the two jaws **1102** rotate in opposite directions to each other, as described above. In other words, when the actuation extensions **252** and **257** of the actuation manipulation portion **203** are rotated in directions toward each other, the first jaw **1101** rotates counterclockwise and the second jaw **1102** rotates clockwise, and thus the end tool **1100** is closed. Conversely, when the actuation extensions **252** and **257** of the actuation manipulation portion **203** are rotated in directions away from each other, the first jaw **1101** rotates clockwise and the second jaw **1102** rotates counterclockwise, and thus the end tool **1100** is opened.

In this embodiment, for the above-described actuation manipulation, the first actuation extension **252** and the second actuation extension **257** were provided to constitute a second handle, and two fingers were gripped to enable manipulation. However, unlike the above, the actuation manipulation portion **203** for actuation manipulation to open and close the two jaws of the end tool **1100** with each other may be configured differently so that, for example, two actuation pulleys (the pulley **210** and the pulley **220**) operate opposite to each other by one actuation rotating portion.

Next, the yaw motion is as follows.

When the user rotates a first handle **204** around a rotation shaft **243** while holding the first handle **204**, the actuation manipulation portion **203** and the yaw manipulation portion **202** yaw-rotates around the rotation shaft **243**. In other words, when the pulley **210** of the first actuation manipulation portion **251** to which the wire **301** and the wire **305** are fixedly coupled rotates about the rotation shaft **243**, the wire **301** and the wire **305** respectively wound around the pulley **211** and the pulley **212** move. Likewise, when the pulley **220** of the second actuation manipulation portion **256** to which the wire **302** and the wire **306** are fixedly coupled rotates about the rotation shaft **243**, the wire **302** and the wire **306** respectively wound around the pulley **221** and the pulley **222** move. At this time, the wire **301** and the wire **305** connected to the first jaw **1101** and the wire **302** and the wire **306** connected to the second jaw **1102** are respectively wound around the pulley **211** and the pulley **212** and the pulley **221** and the pulley **222**, such that the first jaw **1101** and the second jaw **1102** rotate in the same direction during a yaw rotation. And, this rotational force is transmitted to the end tool **1100** through the power transmission portion **300**, the two jaws **1103** of the end tool **1100** performs the yaw motion that rotates in the same direction.

At this time, since the yaw frame **207** connects the first handle **204**, the rotation shaft **241**, the rotation shaft **242**, and the rotation shaft **243**, the first handle **204**, the yaw manipulation portion **202**, and the actuation manipulation portion **203** rotate together around the rotation shaft **243**.

Next, the pitch motion is as follows.

When the user rotates a first handle **204** around a rotation shaft **246** while holding the first handle **204**, the actuation manipulation portion **203**, the yaw manipulation portion **202**, and the pitch manipulation portion **201** make pitch rotation around the rotation shaft **243**. In other words, when the pulley **210** of the first actuation manipulation portion **251** to which the wire **301** and the wire **305** are fixedly coupled rotates about the rotation shaft **246**, the wire **301** and the wire **305** respectively wound around the pulley **217** and the pulley **218** move. Likewise, when the pulley **220** of the second actuation manipulation portion **256** to which the wire **302** and the wire **306** are fixedly coupled rotates about the rotation shaft **246**, the wire **302** and the wire **306** respectively wound around the pulley **227** and the pulley **228** move. Here, as described above with reference to FIG. **5**, the wire **301**, the wire **305**, the wire **302**, and the wire **306**, which are jaw wires, are wound around the pulley **217**, the pulley **218**, the pulley **227**, and the pulley **228**, which are manipulation portion pitch main pulleys, such that the wire

301 and wire 305, which are first jaw wires, move in the same direction and the wire 302 and the wire 306, which are second jaw wires, move in the same direction to enable pitch rotation of the first jaw 1101 and the second jaw 1102. And, this rotational force is transmitted to an end tool 1100 through a power transmission portion 300, two jaws 1103 of the end tool 1100 perform the pitch motion.

At this time, the pitch frame 208 is connected to the yaw frame 207 and the yaw frame 207 connects the first handle 204, the rotation shaft 241, the rotation shaft 242, and the rotation shaft 243. Therefore, when the pitch frame 208 rotates around the rotation shaft 246, the yaw frame 207 connected to the pitch frame 208, the first handle 204, the rotation shaft 241, the rotation shaft 242, and the rotation shaft 243 rotate together. That is, when a pitch manipulation portion 201 rotates around the rotation shaft 246, the actuation manipulation portion 203 and the yaw manipulation portion 202 are rotated together with the pitch manipulation portion 201.

In summary, in an electric cauterization surgical instrument 10 according to an embodiment of the present disclosure, it is characterized that pulleys are formed at each joint point (actuation joint, yaw joint, pitch joint), wire (first jaw wire or second jaw wire) is wound on the pulley, and rotational manipulation of the manipulation portion (actuation rotation, yaw rotation, pitch rotation) causes movement of each wire, as a result, a desired motion of the end tool 1100 is induced. Furthermore, auxiliary pulleys may be formed on one side of each pulley, and the wire may not be wound several times on one pulley by these auxiliary pulleys.

FIG. 218 is a schematic view of only the configuration of pulleys and wires constituting joints of the electric cauterization surgical instrument 10 according to an embodiment of the present disclosure shown in FIG. 140. In FIG. 218, intermediate pulleys that are for changing paths of wires and are not associated with joint motions are omitted.

Referring to FIG. 218, the manipulation portion 200 may include the pulley 210, the pulley 211, the pulley 212, the pulley 213, the pulley 214, the pulley 215, the pulley 216, the pulley 217, and the pulley 218 that are associated with the rotational motion of the first jaw 1101.

Also, the manipulation portion 200 may include the pulley 220, the pulley 221, the pulley 222, the pulley 223, the pulley 224, the pulley 225, the pulley 226, the pulley 227, and the pulley 228 associated with the rotational motion of the second jaw 1102. (The arrangement and the configuration of pulleys in the manipulation portion 200 are the same as the arrangement and the configuration of the pulleys in the end tool 1100 in principle, and thus some of the reference numerals thereof will be omitted in the drawings.)

The pulley 211 and the pulley 212 and the pulley 221 and the pulley 222 may be formed to be rotatable independently of each other around the same axis, that is, the rotation shaft 243. At this time, the pulley 211 and the pulley 212 may be formed to face the pulley 221 and the pulley 222, respectively, thereby forming two independently rotatable pulleys.

The pulley 213 and the pulley 214 and the pulley 223 and the pulley 224 may be formed to be rotatable independently of each other around the same axis, that is, the rotation shaft 244. At this time, the pulley 213 and the pulley 214 may be formed to face each other as two independently rotatable pulleys, and, in this case, the two pulleys may be formed to have different diameters. Likewise, the pulley 223 and the pulley 224 may be formed to face each other as two independently rotatable pulleys, and, in this case, the two pulleys may be formed to have different diameters.

The pulley 215 and the pulley 216 and the pulley 225 and the pulley 226 may be formed to be rotatable independently of each other around the same axis, that is, the rotation shaft 245. In this case, the pulley 215 and the pulley 216 may be formed to have different diameters. Also, the pulley 225 and the pulley 226 may be formed to have different diameters.

The pulley 217 and the pulley 218 and the pulley 227 and the pulley 228 may be formed to be rotatable independently of each other around the same axis, that is, the rotation shaft 246.

The wire 301 sequentially passes through the pulley 217, the pulley 215, the pulley 213, and the pulley 211 of the manipulation portion 200, is wound around the pulley 210, and then is coupled to the pulley 210 by a fastening member 324. Meanwhile, the wire 305 sequentially passes through the pulley 218, the pulley 216, the pulley 214, and the pulley 212 of the manipulation portion 200 and is coupled to the pulley 210 by the fastening member 324. Therefore, as the pulley 210 rotates, the wire 301 and the wire 305 are wound around or unwound from the pulley 210, and thus the first jaw 1101 rotates.

The wire 306 sequentially passes through the pulley 227, the pulley 225, the pulley 223, and the pulley 221 of the manipulation portion 200, is wound around the pulley 220, and then is coupled to the pulley 220 by a fastening member 327. Meanwhile, the wire 302 sequentially passes through the pulley 228, the pulley 226, the pulley 224, and the pulley 222 of the manipulation portion 200 and is coupled to the pulley 220 by the fastening member 327. Therefore, as the pulley 220 rotates, the wire 302 and the wire 306 are wound around or unwound from the pulley 220, and thus the second jaw 1102 rotates.

(Conceptual Diagram of Pulleys and Wires)

FIGS. 220 and 221 are diagrams illustrating a configuration of pulleys and wires, which are associated with an actuation motion and a yaw motion of the electric cauterization surgical instrument 10 according to an embodiment of the present disclosure illustrated in FIG. 140, in detail for each of the first jaw and the second jaw. FIG. 220 is a diagram illustrating only pulleys and wires related to the second jaw, and FIG. 221 is a diagram illustrating only pulleys and wires related to the first jaw. In addition, FIG. 219 is a perspective view illustrating a yaw motion of the surgical instrument shown in FIG. 140. Here, in FIG. 219, components associated with a cutting motion are omitted.

First, a wire operation in an actuation motion will be described.

Referring to FIG. 221, when the first actuation extension 252 rotates around the rotation shaft 241 in the direction of an arrow OPA1, the pulley 210 connected to the first actuation extension 252 is rotated, and the wire 301 and the wire 305 wound around the pulley 210 are moved in directions W1*a* and W1*b*, respectively, and as a result, the first jaw 1101 of the end tool 1100 is rotated in the direction of an arrow EPA1.

Referring to FIG. 220, when the second actuation extension 257 rotates around the rotation shaft 242 in the direction of an arrow OPA2, the pulley 220 connected to the second actuation extension 257 is rotated, and thus both strands of the wires 302 and 306 wound around the pulley 220 are moved in directions W2*a* and W2*b*, respectively, and as a result, the second jaw 1102 of the end tool 1100 is rotated in the direction of an arrow EPA2. Accordingly, when a user manipulates the first actuation extension 252 and the second actuation extension 257 in directions close to each other, a motion of the first jaw 1101 and the second jaw 1102 of the end tool being close to each other is performed.

Next, a wire operation in a yaw motion will be described.

First, since the rotation shaft **243** is connected to the rotation shafts **241** and **242** by the yaw frame (see **207** of FIG. **216**), the rotation shaft **243** and the rotation shafts **241** and **242** are integrally rotated together.

Referring to FIG. **221**, when the first handle **204** rotates around the rotation shaft **243** in the direction of an arrow OPY**1**, the pulley **210** and the pulleys **211** and **212** and the wires **301** and **305** wound therearound are rotated as a whole around the rotation shaft **243**, and as a result, the wires **301** and **305** wound around the pulleys **211** and **212** are moved in the directions W**1***a* and W**1***b*, respectively, which in turn causes the first jaw **1101** of the end tool **1100** to rotate in the direction of an arrow EPY**1**.

Referring to FIG. **220**, when the first handle **204** rotates around the rotation shaft **243** in the direction of an arrow OPY**2**, the pulley **220** and the pulleys **221** and **222** and the wires **302** and **306** wound therearound are rotated as a whole around the rotation shaft **243**, and as a result, the wires **302** and **306** wound around the pulleys **221** and **222** are respectively moved in a direction opposite to the direction W**1***a* and a direction opposite to the direction W**1***b*, which in turn causes the first jaw **1101** of the end tool **1100** to rotate in the direction of an arrow EPY**2**.

FIGS. **223** and **224** are diagrams illustrating a configuration of pulleys and wires, which are associated with a pitch motion of the electric cauterization surgical instrument **10** according to an embodiment of the present disclosure illustrated in FIG. **140**, in detail for each of the first jaw and the second jaw. FIG. **223** is a diagram illustrating only pulleys and wires related to the second jaw, and FIG. **224** is a diagram illustrating only pulleys and wires related to the first jaw. As shown in FIG. **140** and elsewhere herein, there are two pulleys related to the pitch motion, and both strands of each wire are wound in the same path, which is illustrated with one line in FIG. **223**. In addition, FIG. **222** is a perspective view illustrating a pitch motion of the surgical instrument of FIG. **140**. Here, in FIG. **222**, components associated with a cutting motion are omitted.

Referring to FIG. **223**, when the first handle **204** rotates around the rotation shaft **246** in the direction of an arrow OPP**1**, the pulley **210**, the pulley **215**, the pulley **217**, and the like, and the wire **301** and the like wound therearound are rotated as a whole around the rotation shaft **246**. At this time, since the wires **301** and **305**, which are first jaw wires, are wound around upper portions of the pulley **217** and the pulley **218**, the wires **301** and **305** are moved in the direction of an arrow W**1**. As a result, the first jaw **1101** of the end tool **1100** rotates in the direction of an arrow EPP**1**.

Referring to FIG. **224**, when the first handle **204** rotates around the rotation shaft **246** in the direction of an arrow OPP**2**, the pulley **220**, the pulley **225**, the pulley **227**, and the like, and the wire **302** and the like wound therearound are rotated as a whole around the rotation shaft **246**. At this time, since the wires **302** and **306**, which are second jaw wires, are wound around lower portions of the pulley **227** and the pulley **228**, the wires **302** and **306** are moved in the direction of an arrow W**2**. As a result, the second jaw **1102** of the end tool **1100** rotates in the direction of an arrow EPP**2**.

Thus, the actuation, yaw, and pitch manipulations are manipulatable independent of each other.

As described with reference to FIG. **140**, the actuation manipulation portion **203**, the yaw manipulation portion **202**, and the pitch manipulation portion **201** are configured such that the respective rotation shafts are located at the rear thereof to be identical to the joint configuration of the end tool, so that a user may intuitively perform matching manipulations.

In particular, in the electric cauterization surgical instrument **10** according to an embodiment of the present disclosure, the pulleys are formed on respective joint points (an actuation joint, a yaw joint, and a pitch joint), the wires (the first jaw wire or the second jaw wire) are formed to be wound around the pulleys, the rotational manipulations (actuation rotation, yaw rotation, and pitch rotation) of the manipulation portion cause the movement of each wire, which in turn induces the desired motion of the end tool **1100**. Furthermore, the auxiliary pulleys may be formed on one side of the respective pulleys, and these auxiliary pulleys may prevent the wire from being wound around one pulley multiple times, so that the wires wound around the pulley do not come into contact with each other, and paths of the wire being wound around the pulley and the wire being released from the pulley are safely formed, so that safety and efficiency in the transmission of driving force of a wire may be improved.

Meanwhile, as described above, the yaw manipulation portion **202** and the actuation manipulation portion **203** are directly formed on the first handle **204**. Thus, when the first handle **204** rotates around the rotation shaft **246**, the yaw manipulation portion **202** and the actuation manipulation portion **203** are also rotated together with the first handle **204**. Accordingly, the coordinate systems of the yaw manipulation portion **202** and the actuation manipulation portion **203** are not fixed, but are continuously changed relative to the rotation of the first handle **204**. That is, in FIG. **140** or the like, the yaw manipulation portion **202** and the actuation manipulation portion **203** are illustrated as being parallel to the Z-axis. However, when the first handle **204** is rotated, the yaw manipulation portion **202** and the actuation manipulation portion **203** are not parallel to the Z-axis any longer. That is, the coordinate systems of the yaw manipulation portion **202** and the actuation manipulation portion **203** are changed according to the rotation of the first handle **204**. However, in the present specification, for convenience of description, unless described otherwise, the coordinate systems of the yaw manipulation portion **202** and the actuation manipulation portion **203** are described on the basis of a state in which the first handle **204** is located perpendicular to the connection portion **400** as illustrated in FIG. **2**.

(Pitch, Yaw, and Cutting Motions of End Tool)

FIGS. **168** and **169** are views illustrating a process of performing an opening and closing motion in a state in which the end tool of the surgical instrument for electrocautery of FIG. **140** is yaw-rotated by +90°. In addition, FIGS. **170** and **171** are views illustrating a process of performing an opening and closing motion in a state in which the end tool of the surgical instrument for electrocautery of FIG. **140** is yaw-rotated by −90°.

As shown in FIGS. **168** to **171**, the end tool of the surgical instrument for electrocautery according to the fourth embodiment of the present disclosure is formed to be able to normally perform an opening and closing motion, that is, an actuation motion even in a state in which the jaws are yaw-rotated by +90° or −90°.

FIGS. **172** and **173** are views illustrating a process of performing a cutting motion in a state in which the end tool of the surgical instrument for electrocautery of FIG. **140** is yaw-rotated by +90°.

As shown in FIGS. **172** and **173**, the end tool of the surgical instrument for electrocautery according to the

fourth embodiment of the present disclosure is formed to be able to normally perform a cutting motion even in a state in which the jaws are yaw-rotated by +90°.

FIGS. **174** and **175** are views illustrating a process of performing an opening and closing motion in a state in which the end tool of the surgical instrument for electrocautery of FIG. **140** is pitch-rotated by +90°. FIGS. **176** and **177** are views illustrating a process of performing an opening and closing motion in a state in which the end tool of the surgical instrument for electrocautery of FIG. **140** is pitch-rotated by −90°. In addition, FIG. **178** is a cut-away perspective view of the end tool of the surgical instrument for electrocautery of FIG. **176**. In addition, FIGS. **179** and **180** are views illustrating a process of performing a cutting motion in a state in which the end tool of the surgical instrument for electrocautery of FIG. **140** is pitch-rotated by −90°.

As shown in FIGS. **174** to **180**, the end tool of the surgical instrument for electrocautery according to the fourth embodiment of the present disclosure is formed to be able to normally perform a cutting motion even in a state in which the jaws are pitch-rotated by −90°.

Meanwhile, FIG. **181** is a view illustrating a state in which the jaws are pitch-rotated by −90° and simultaneously yaw-rotated by +90°, and FIGS. **182**, **183**, and **184** are perspective views illustrating a cutting motion of the end tool of the surgical instrument for electrocautery of FIG. **140** and illustrate a state of performing a cutting motion while the jaws are pitch-rotated by −90° and simultaneously yaw-rotated by +90°.

As shown in FIGS. **181** to **184**, the end tool of the surgical instrument for electrocautery according to the fourth embodiment of the present disclosure is formed to be able to normally perform a cutting motion even in a state in which the jaws are pitch-rotated by −90° and simultaneously yaw-rotated by +90°.

First Modified Example of Fourth Embodiment

Hereinafter, an end tool **1200** of a surgical instrument according to a first modified example of the fourth embodiment of the present disclosure will be described. Here, the end tool **1200** of the surgical instrument according to the first modified example of the fourth embodiment of the present disclosure is different from the end tool (see **1100** in FIG. **140** or the like) of the surgical instrument according to the fourth embodiment of the present disclosure described above in that the configuration of an actuation hub **1290** is different. The configuration changed from the fourth embodiment as described above will be described in detail later.

FIGS. **185** and **186** are perspective views illustrating the end tool of the surgical instrument for electrocautery according to the first modified example of the fourth embodiment of the present disclosure. FIGS. **187** and **188** are plan views illustrating the end tool of the surgical instrument for electrocautery according to the first modified example of the fourth embodiment of the present disclosure. FIGS. **189** and **190** are views illustrating an actuation hub of the surgical instrument for electrocautery according to the first modified example of the fourth embodiment of the present disclosure.

Referring to FIGS. **185** to **190**, the end tool **1200** of the first modified example of the fourth embodiment of the present disclosure includes a pair of jaws for performing a grip motion, that is, a first jaw **1201** and a second jaw **1202**, and herein, each of the first jaw **1201** and the second jaw **1202** or a component encompassing the first jaw **1201** and the second jaw **1202** may be referred to as a jaw **1203**.

Meanwhile, the end tool **1200** includes a plurality of pulleys including a pulley **1211**, a pulley **1213**, and a pulley **1214** that are associated with a rotational motion of the first jaw **1201**. Meanwhile, the end tool **1200** includes a plurality of pulleys including a pulley **1221** associated with a rotational motion of the second jaw **1202**.

In addition, the end tool **1200** of the first modified example of the fourth embodiment of the present disclosure may include a rotation shaft **1241**, a rotation shaft **1243**, and a rotation shaft **1244**. Here, the rotation shaft **1241** may be inserted through an end tool hub **1260**, and the rotation shaft **1243** and the rotation shaft **1244** may be inserted through a pitch hub **1250**. The rotation shaft **1241**, the rotation shaft **1243**, and the rotation shaft **1244** may be arranged sequentially from a distal end **1204** toward a proximal end **1205** of the end tool **1200**.

Further, the end tool **1200** of the first modified example of the fourth embodiment of the present disclosure may include the end tool hub **1260** and the pitch hub **1250**.

The rotation shaft **1241** is inserted through the end tool hub **1260**, and the pulley **1211** and the pulley **1221**, which are axially coupled to the rotation shaft **1241**, and at least some of the first jaw **1201** and the second jaw **1202** coupled the pulley **1211** and the pulley **1221** may be accommodated inside the end tool hub **1260**.

Meanwhile, a first pitch pulley portion **1263***a* and a second pitch pulley portion **1263***b*, which serve as end tool pitch pulleys, may be formed at one end portion of the end tool hub **1260**. A wire (see **303** of FIG. **146**) and a wire **304** (see **304** of FIG. **146**) are coupled to the first pitch pulley portion **1263***a* and the second pitch pulley portion **1263***b*, which serve as end tool pitch pulleys, and a pitch motion is performed while the end tool hub **1260** rotates around the rotation shaft **1243**.

The rotation shaft **1243** and the rotation shaft **1244** may be inserted through the pitch hub **1250**, and the pitch hub **1250** may be axially coupled to the end tool hub **1260** by the rotation shaft **1243**. Accordingly, the end tool hub **1260** may be formed to be pitch-rotatable around the rotation shaft **1243** with respect to the pitch hub **1250**.

Meanwhile, the end tool **1200** of the fourth embodiment of the present disclosure may further include components such as a first electrode **1251**, a second electrode **1252**, a guide tube **1271**, and a blade **1275** in order to perform a cauterizing motion and a cutting motion. Here, components related to the driving of the blade, such as the guide tube **1271** and the blade **1275**, may be collectively referred to as a blade assembly. Components for performing a cauterizing motion and a cutting motion in the present embodiment are substantially the same as those described in the fourth embodiment, and thus a detailed description thereof will be omitted herein.

The surgical instrument for electrocautery according to the first modified example of the fourth embodiment of the present disclosure may include a wire **301**, a wire **302**, a wire **303**, a wire **304**, a wire **305**, a wire **306**, and a blade wire **307**, as in the fourth embodiment of the present disclosure described with reference to FIG. **140** or the like.

Hereinafter, the actuation hub **1290** of the first modified example of the fourth embodiment of the present disclosure will be described in more detail.

Referring to FIGS. **185** to **190**, the actuation hub **1290** may be formed in the form of a box having a hollow therein. Here, a first coupling hole **1290***a* is formed in any one surface of the actuation hub **1290**, specifically, a surface

coming into contact with the first jaw **1201**, and a second coupling hole **1290***b* may be formed in the other surface of the actuation hub **1290**, specifically, a surface coming into contact with the second jaw **1202**.

In this case, the first coupling hole **1290***a* may be formed to be offset to a certain degree in one direction from the center line in the X-axis direction. In addition, the second coupling hole **1290***b* may be formed by being offset to a certain degree in another one direction from the center line in the X-axis direction.

In other words, it may be said that the first coupling hole **1290***a* and the second coupling hole **1290***b* are not on the same line in the Z-axis direction but are formed to be offset to a certain degree.

In addition, the actuation hub **1290** is coupled to each of the first jaw **1201** and the second jaw **1202**. In detail, a first actuation rotation shaft **1291** is inserted through the first jaw **1201** and the first coupling hole **1290***a* of the actuation hub **1290**, so that the actuation hub **1290** and the first jaw **1201** are axially coupled. Further, a second actuation rotation shaft **1292** is inserted through the second jaw **1202** and the second coupling hole **1290**B of the actuation hub **1290**, so that the actuation hub **1290** and the second jaw **1202** are axially coupled.

Meanwhile, as described with reference to FIG. **154** or the like, a tube seating portion, a wire through-hole, and a blade accommodation portion are sequentially formed inside the actuation hub **1290**, and the blade wire **307** may pass through the inside of the actuation hub **1290** to be connected to the blade **1275**.

As described above, by providing the actuation hub **1290** to which the guide tube **1270** is coupled between the first jaw **1201** and the second jaw **1202**, the guide tube **1270** may not be curved, or the angle at which the guide tube **1270** is curved may be reduced, even when the first jaw **1201** or the second jaw **1202** rotates around the first rotation shaft **1241** or the actuation rotation shaft **1245**.

In detail, in a case in which the guide tube **1270** is directly coupled to the first jaw **1201** or the second jaw **1202**, when the first jaw **1201** or the second jaw **1202** rotates, one end portion of the guide tube **1270** also rotates together with the first jaw **1201** or the second jaw **1202**, causing the guide tube **1270** to be curved.

On the other hand, in a case in which the guide tube **1270** is coupled to the actuation hub **1290**, which is independent of the rotation of the jaw **1203**, as in the present embodiment, even when the first jaw **1201** or the second jaw **1202** rotates, the guide tube **1270** may not be curved, or the angle at which the guide tube **1270** is curved may be reduced even when the guide tube **1270** is curved.

That is, by changing the direct connection between the guide tube **1270** and the jaw **1203** by the actuation hub **1290** to an indirect connection, the degree to which the guide tube **1270** is curved by the rotation of the jaw **1203** may be reduced.

In particular, in the end tool **1200** of the first modified example of the fourth embodiment of the present disclosure, when the actuation hub **1290** is coupled to the first jaw **1201** and the second jaw **1202**, the first actuation rotation shaft **1291** and the second actuation rotation shaft **1292** are not on the same line in the Z-axis direction but are offset from each other to a certain degree. Thus, when the first jaw **1201** and the second jaw **1202** perform an actuation motion, the first actuation rotation shaft **1291** and the second actuation rotation shaft **1292** form a kind of two-point support, thereby obtaining an effect of more stably performing an actuation motion.

Second Modified Example of Fourth Embodiment

Hereinafter, an end tool **1300** of a surgical instrument according to a second modified example of the fourth embodiment of the present disclosure will be described. Here, the end tool **1300** of the surgical instrument according to the second modified example of the fourth embodiment of the present disclosure is different from the end tool (see **1100** in FIG. **140** or the like) of the surgical instrument according to the fourth embodiment of the present disclosure described above in that the configuration of an actuation hub **1390** is different. The configuration changed from the fourth embodiment as described above will be described in detail later.

FIGS. **191** to **196** are views illustrating the end tool of the surgical instrument for electrocautery according to the second modified example of the fourth embodiment of the present disclosure. FIGS. **197** and **198** are views illustrating an actuation hub of the end tool of the surgical instrument for electrocautery of FIG. **191**. FIG. **199** is a perspective view illustrating a second jaw pulley of the end tool of the surgical instrument for electrocautery of FIG. **191**. FIGS. **200** and **201** are views illustrating the end tool of the surgical instrument for electrocautery of FIG. **191**.

Referring to FIGS. **191** to **201**, the end tool **1300** of the second modified example of the fourth embodiment of the present disclosure includes a pair of jaws for performing a grip motion, that is, a first jaw **1301** and a second jaw **1302**, and herein, each of the first jaw **1301** and the second jaw **1302** or a component encompassing the first jaw **1301** and the second jaw **1302** may be referred to as a jaw **1303**.

Meanwhile, the end tool **1300** includes a plurality of pulleys including a pulley **1311**, a pulley **1313**, and a pulley **1314** associated with a rotational motion of a first jaw **1301**. Meanwhile, the end tool **1300** includes a plurality of pulleys including a pulley **1321** associated with a rotational motion of the second jaw **1302**.

In addition, the end tool **1300** of the second modified example of the fourth embodiment of the present disclosure may include a rotation shaft **1341**, a rotation shaft **1343**, and a rotation shaft **1344**. Here, the rotation shaft **1341** may be inserted through an end tool hub **1360**, and the rotation shaft **1343** and the rotation shaft **1344** may be inserted through a pitch hub **1350**.

In addition, the end tool **1300** of the second modified example of the fourth embodiment of the present disclosure may include the end tool hub **1360** and the pitch hub **1350**.

Meanwhile, the end tool **1300** of the second modified example of the fourth embodiment of the present disclosure may further include components such as a first electrode **1351**, a second electrode **1352**, a guide tube **1371**, and a blade **1375** in order to perform a cauterizing motion and a cutting motion.

The surgical instrument for electrocautery according to the second modified example of the fourth embodiment of the present disclosure may include a wire **301**, a wire **302**, a wire **303**, a wire **304**, a wire **305**, a wire **306**, and a blade wire **307**, as in the fourth embodiment of the present disclosure described with reference to FIG. **140** or the like.

Since components of the present modified example described above are substantially the same as the components described in the fourth embodiment, a detailed description thereof will be omitted herein.

Hereinafter, the actuation hub **1390** of the second modified example of the fourth embodiment of the present disclosure will be described in more detail.

Referring to FIGS. **191** to **201**, the actuation hub **1390** may be formed in the form of a box having a hollow therein.

Here, a first coupling hole **1390***a* is formed in any one surface of the actuation hub **1390**, specifically, a surface coming into contact with the first jaw **1301**, and a second coupling hole **1390***b* may be formed in the other surface of the actuation hub **1390**, specifically, a surface coming into contact with the second jaw **1302**.

In this case, the first coupling hole **1390***a* may be formed to be offset to a certain degree in one direction from the center line in the X-axis direction. In addition, the second coupling hole **1390***b* may be formed by being offset to a certain degree in another one direction from the center line in the X-axis direction.

In other words, it may be said that the first coupling hole **1390***a* and the second coupling hole **1390***b* are not on the same line in the Z-axis direction but are formed to be offset to a certain degree.

In addition, the actuation hub **1390** is coupled to each of the first jaw **1301** and the second jaw **1302**. In detail, a first actuation rotation shaft **1391** is inserted through the first jaw **1301** and the first coupling hole **1390***a* of the actuation hub **1390**, so that the actuation hub **1390** and the first jaw **1301** are axially coupled. Further, a second actuation rotation shaft **1392** is inserted through the second jaw **1302** and the second coupling hole **1390***b* of the actuation hub **1390**, so that the actuation hub **1390** and the second jaw **1302** are axially coupled.

Meanwhile, as described with reference to FIG. **154** or the like, a tube seating portion, a wire through-hole, and a blade accommodation portion are sequentially formed inside the actuation hub **1390**, and the blade wire **307** may pass through the inside of the actuation hub **1390** to be connected to the blade **1375**.

In addition, a guide slit **1390***c* may be formed in any one surface of the actuation hub **1390** or in both surfaces thereof in a longitudinal direction thereof (i.e., the X-axis direction). In addition, a slit coupling portion **1321***c* formed on the pulley **1321** may be fitted into the guide slit **1390***c*, so that a linear movement of the pulley **1321** in the X-axis direction may be guided by the guide slit **1390***c*.

In detail, a shaft coupling portion **1321***a*, a jaw coupling portion **1321***b*, and the slit coupling portion **1321***c* may be formed on the pulley **1321**. Here, the shaft coupling portion **1321***a* and the jaw coupling portion **1321***b* may be formed in the same manner as described in the fourth embodiment or the like. The slit coupling portion **1321***c* may be formed to protrude to a certain degree further from the shaft coupling portion **1321***a*. The above-described slit coupling portion **1321***c* is fitted into the guide slit **1390***c* of the actuation hub **1390**.

Meanwhile, although not shown in the drawings, a slit coupling portion (not shown) may also be formed in the pulley **1311**.

As described above, by providing the actuation hub **1390** to which the guide tube **1370** is coupled between the first jaw **1301** and the second jaw **1302**, the guide tube **1370** may not be curved, or the angle at which the guide tube **1370** is curved may be reduced, even when the first jaw **1301** or the second jaw **1302** rotates around the first rotation shaft **1341** or the actuation rotation shaft **1345**.

In detail, in a case in which the guide tube **1370** is directly coupled to the first jaw **1301** or the second jaw **1302**, when the first jaw **1301** or the second jaw **1302** rotates, one end portion of the guide tube **1370** also rotates together with the first jaw **1301** or the second jaw **1302**, causing the guide tube **1370** to be curved.

On the other hand, in a case in which the guide tube **1370** is coupled to the actuation hub **1390**, which is independent of the rotation of the jaw **1303**, as in the present embodiment, even when the first jaw **1301** or the second jaw **1302** rotates, the guide tube **1370** may not be curved, or the angle at which the guide tube **1370** is curved may be reduced even when the guide tube **1370** is curved.

That is, by changing the direct connection between the guide tube **1370** and the jaw **1303** by the actuation hub **1390** to an indirect connection, the degree to which the guide tube **1370** is curved by the rotation of the jaw **1303** may be reduced.

In particular, in the end tool **1300** of the second modified example of the fourth embodiment of the present disclosure, when the actuation hub **1390** is coupled to the first jaw **1301** and the second jaw **1302**, the first actuation rotation shaft **1391** and the second actuation rotation shaft **1392** are not on the same line in the Z-axis direction but are offset to a certain degree. Thus, when the first jaw **1301** and the second jaw **1302** perform an actuation motion, the first actuation rotation shaft **1391** and the second actuation rotation shaft **1392** form a kind of two point support, thereby obtaining an effect of more stably performing an actuation motion.

In addition, in the end tool **1300** of the second modified example of the fourth embodiment of the present disclosure, the slit coupling portion **1321***c* formed on the pulley **1321** is fitted into the guide slit **1390***c* of the actuation hub **1390** so that the linear movement of the pulley **1321** in the X-axis direction may be guided by the guide slit **1390***c*. That is, when the first jaw **1301** and the second jaw **1302** perform an actuation motion, the first jaw **1301** and the second jaw **1302** move along the guide slit **1390***c* of the actuation hub **1390**, thereby obtaining an effect of more stably performing the actuation motion.

Third Modified Example of Fourth Embodiment

Hereinafter, an end tool **1400** of a surgical instrument according to a third modified example of the fourth embodiment of the present disclosure will be described. Here, the end tool **1400** of the surgical instrument according to the third modified example of the fourth embodiment of the present disclosure is different from the end tool (see **1100** in FIG. **140** or the like) of the surgical instrument according to the fourth embodiment of the present disclosure described above in that the configuration of an actuation hub **1490** is different. The configuration changed from the fourth embodiment as described above will be described in detail later.

FIGS. **202** to **205** are views illustrating the end tool of the surgical instrument for electrocautery according to the third modified example of the fourth embodiment of the present disclosure. FIGS. **206** and **207** are views illustrating an actuation hub of the end tool of the surgical instrument for electrocautery of FIG. **202**. FIG. **208** is a perspective view illustrating a second jaw pulley of the end tool of the surgical instrument for electrocautery of FIG. **202**.

Referring to FIGS. **202** to **208**, the end tool **1400** of the third modified example of the fourth embodiment of the present disclosure includes a pair of jaws for performing a grip motion, that is, a first jaw **1401** and a second jaw **1402**, and herein, each of the first jaw **1401** and the second jaw **1402** or a component encompassing the first jaw **1401** and the second jaw **1402** may be referred to as a jaw **1403**.

Meanwhile, the end tool **1400** includes a plurality of pulleys including a pulley **1411**, a pulley **1413**, and a pulley **1414** that are associated with a rotational motion of the first

jaw **1401**. Meanwhile, the end tool **1400** includes a plurality of pulleys including a pulley **1421** associated with a rotational motion of the second jaw **1402**.

In addition, the end tool **1400** of the third modified example of the fourth embodiment of the present disclosure may include a rotation shaft **1441**, a rotation shaft **1443**, and a rotation shaft **1444**. Here, the rotation shaft **1441** may be inserted through an end tool hub **1460**, and the rotation shaft **1443** and the rotation shaft **1444** may be inserted through a pitch hub **1450**.

In addition, the end tool **1400** of the third modified example of the fourth embodiment of the present disclosure may include the end tool hub **1460** and the pitch hub **1450**.

Meanwhile, the end tool **1400** of the third modified example of the fourth embodiment of the present disclosure may further include components such as a first electrode **1451**, a second electrode **1452**, a guide tube **1471**, and a blade **1475** in order to perform a cauterizing motion and a cutting motion.

The surgical instrument for electrocautery according to the third modified example of the fourth embodiment of the present disclosure may include a wire **301**, a wire **302**, a wire **303**, a wire **304**, a wire **305**, a wire **306**, and a blade wire **307**, as in the fourth embodiment of the present disclosure described with reference to FIG. **140** or the like.

Since components of the present modified example described above are substantially the same as the components described in the fourth embodiment, a detailed description thereof will be omitted herein.

Hereinafter, the actuation hub **1490** of the third modified example of the fourth embodiment of the present disclosure will be described in more detail.

Referring to FIGS. **202** to **208**, the actuation hub **1490** may be formed in the form of a box having a hollow therein.

Here, a first coupling hole **1490***a* is formed in any one surface of the actuation hub **1490**, specifically, a surface coming into contact with the first jaw **1401**, and a second coupling hole **1490***b* may be formed in the other surface of the actuation hub **1490**, specifically, a surface coming into contact with the second jaw **1402**.

Here, the first coupling hole **1490***a* and the second coupling hole **1490***b* may be located on the same line in the Z-axis direction.

In addition, the actuation hub **1490** is coupled to each of the first jaw **1401** and the second jaw **1402**. In detail, a first actuation rotation shaft **1491** is inserted through the first jaw **1401** and the first coupling hole **1490***a* of the actuation hub **1490**, so that the actuation hub **1490** and the first jaw **1401** are axially coupled. Further, a second actuation rotation shaft **1492** is inserted through the second jaw **1402** and the second coupling hole **1490***b* of the actuation hub **1490**, so that the actuation hub **1490** and the second jaw **1402** are axially coupled.

Meanwhile, as described with reference to FIG. **154** or the like, a tube seating portion, a wire through-hole, and a blade accommodation portion are sequentially formed inside the actuation hub **1490**, and the blade wire **307** may pass through the inside of the actuation hub **1490** to be connected to the blade **1475**.

In addition, a guide slit **1490***c* may be formed in any one surface of the actuation hub **1490** or in both surfaces thereof in a longitudinal direction thereof (i.e., the X-axis direction). In addition, a slit coupling portion **1421***c* formed on the pulley **1421** may be fitted into the guide slit **1490***c*, so that a linear movement of the pulley **1421** in the X-axis direction may be guided by the guide slit **1490***c*.

In detail, a shaft coupling portion **1421***a*, a jaw coupling portion **1421***b*, and the slit coupling portion **1421***c* may be formed on the pulley **1421**. Here, the shaft coupling portion **1421***a* and the jaw coupling portion **1421***b* may be formed in the same manner as described in the fourth embodiment or the like. The slit coupling portion **1421***c* may be formed to protrude to a certain degree further from the shaft coupling portion **1421***a*. The above-described slit coupling portion **1421***c* is fitted into the guide slit **1490***c* of the actuation hub **1490**.

Meanwhile, although not shown in the drawings, a slit coupling portion (not shown) may also be formed in the pulley **1411**.

As described above, by providing the actuation hub **1490** to which the guide tube **1470** is coupled between the first jaw **1401** and the second jaw **1402**, the guide tube **1470** may not be curved, or the angle at which the guide tube **1470** is curved may be reduced, even when the first jaw **1401** or the second jaw **1402** rotates around the first rotation shaft **1441** or the actuation rotation shaft **1445**.

In detail, in a case in which the guide tube **1470** is directly coupled to the first jaw **1401** or the second jaw **1402**, when the first jaw **1401** or the second jaw **1402** rotates, one end portion of the guide tube **1470** also rotates together with the first jaw **1401** or the second jaw **1402**, causing the guide tube **1470** to be curved.

On the other hand, in a case in which the guide tube **1470** is coupled to the actuation hub **1490**, which is independent of the rotation of the jaw **1403**, as in the present embodiment, even when the first jaw **1401** or the second jaw **1402** rotates, the guide tube **1470** may not be curved, or the angle at which the guide tube **1470** is curved may be reduced even when the guide tube **1470** is curved.

That is, by changing the direct connection between the guide tube **1470** and the jaw **1403** by the actuation hub **1490** to an indirect connection, the degree to which the guide tube **1470** is curved by the rotation of the jaw **1403** may be reduced.

In addition, in the end tool **1400** of the third modified example of the fourth embodiment of the present disclosure, the slit coupling portion **1421***c* formed on the pulley **1421** is fitted into the guide slit **1490***c* of the actuation hub **1490** so that the linear movement of the pulley **1421** in the X-axis direction may be guided by the guide slit **1490***c*. That is, when the first jaw **1401** and the second jaw **1402** perform an actuation motion, the first jaw **1401** and the second jaw **1402** move along the guide slit **1490***c* of the actuation hub **1490**, thereby obtaining an effect of more stably performing the actuation motion.

Fourth Modified Example of Fourth Embodiment

Hereinafter, an end tool **1500** of a surgical instrument according to a fourth modified example of the fourth embodiment of the present disclosure will be described. Here, the end tool **1500** of the surgical instrument according to the fourth modified example of the fourth embodiment of the present disclosure is different from the end tool (see **1100** in FIG. **140** or the like) of the surgical instrument according to the fourth embodiment of the present disclosure described above in that the configuration of an actuation hub **1590** is different. The configuration changed from the fourth embodiment as described above will be described in detail later.

FIGS. **209** to **213** are views illustrating the end tool of the surgical instrument for electrocautery according to the fourth modified example of the fourth embodiment of the

present disclosure. FIGS. **214** and **215** are views illustrating an actuation hub of the end tool of the surgical instrument for electrocautery of FIG. **209**.

Referring to FIGS. **209** to **215**, the end tool **1500** of the fourth modified example of the fourth embodiment of the present disclosure includes a pair of jaws for performing a grip motion, that is, a first jaw **1501** and a second jaw **1502**, and herein, each of the first jaw **1501** and the second jaw **1502** or a component encompassing the first jaw **1501** and the second jaw **1502** may be referred to as a jaw **1503**.

Meanwhile, the end tool **1500** includes a plurality of pulleys including a pulley **1511** and a pulley **1513**, and a pulley **1514** that are associated with a rotational motion of the first jaw **1501**. Meanwhile, the end tool **1500** includes a plurality of pulleys including a pulley **1521** associated with a rotational motion of the second jaw **1502**.

In addition, the end tool **1500** of the fourth modified example of the fourth embodiment of the present disclosure may include a rotation shaft **1541**, a rotation shaft **1543**, and a rotation shaft **1544**. Here, the rotation shaft **1541** may be inserted through an end tool hub **1560**, and the rotation shaft **1543** and the rotation shaft **1544** may be inserted through a pitch hub **1550**. The rotation shaft **1541**, the rotation shaft **1543**, and the rotation shaft **1544** may be arranged sequentially from a distal end **1504** toward a proximal end **1505** of the end tool **1500**.

In addition, the end tool **1500** of the fourth modified example of the fourth embodiment of the present disclosure may include the end tool hub **1560** and the pitch hub **1550**.

The rotation shaft **1541** is inserted through the end tool hub **1560**, and the pulley **1511** and the pulley **1521**, which are axially coupled to the rotation shaft **1541**, and at least some of the first jaw **1501** and the second jaw **1502** coupled the pulley **1511** and the pulley **1521** may be accommodated inside the end tool hub **1560**.

Meanwhile, a first pitch pulley portion **1563***a* and a second pitch pulley portion **1563***b*, which serve as end tool pitch pulleys, may be formed at one end portion of the end tool hub **1560**. A wire (see **303** of FIG. **146**) and a wire **304** (see **304** of FIG. **146**) are coupled to the first pitch pulley portion **1563***a* and the second pitch pulley portion **1563***b*, which serve as end tool pitch pulleys, and a pitch motion is performed while the end tool hub **1560** rotates around the rotation shaft **1543**.

The rotation shaft **1543** and the rotation shaft **1544** may be inserted through the pitch hub **1550**, and the pitch hub **1550** may be axially coupled to the end tool hub **1560** by the rotation shaft **1543**. Accordingly, the end tool hub **1560** may be formed to be pitch-rotatable around the rotation shaft **1543** with respect to the pitch hub **1550**.

Meanwhile, the end tool **1500** of the fourth modified example of the fourth embodiment of the present disclosure may further include components such as a first electrode **1551**, a second electrode **1552**, a guide tube **1571**, and a blade **1575** in order to perform a cauterizing motion and a cutting motion. Here, components related to the driving of the blade, such as the guide tube **1571** and the blade **1575**, may be collectively referred to as a blade assembly. Components for performing a cauterizing motion and a cutting motion in the present embodiment are substantially the same as those described in the fourth embodiment, and thus a detailed description thereof will be omitted herein.

The surgical instrument for electrocautery according to the fourth modified example of the fourth embodiment of the present disclosure may include a wire **301**, a wire **302**, a wire **303**, a wire **304**, a wire **305**, a wire **306**, and a blade wire **307**, as in the fourth embodiment of the present disclosure described with reference to FIG. **140** or the like.

Hereinafter, the actuation hub **1590** of the fourth modified example of the fourth embodiment of the present disclosure will be described in more detail.

Referring to FIGS. **209** to **215**, the actuation hub **1590** may be formed in the form of a box having a hollow therein. Here, a first coupling hole **1590***a* is formed in any one surface of the actuation hub **1590**, specifically, a surface coming into contact with the first jaw **1501**, and a second coupling hole **1590***b* may be formed in the other surface of the actuation hub **1590**, specifically, a surface coming into contact with the second jaw **1502**. Here, the first coupling hole **1590***a* and the second coupling hole **1590***b* may be disposed on the same line in the Z-axis direction.

In addition, the actuation hub **1590** is coupled to each of the first jaw **1501** and the second jaw **1502**. In detail, a first actuation rotation shaft **1591** is inserted through the first jaw **1501** and the first coupling hole **1590***a* of the actuation hub **1590**, so that the actuation hub **1590** and the first jaw **1501** are axially coupled. Further, a second actuation rotation shaft **1592** is inserted through the second jaw **1502** and the second coupling hole **1590***b* of the actuation hub **1590**, so that the actuation hub **1590** and the second jaw **1502** are axially coupled.

Meanwhile, as described with reference to FIG. **154** or the like, a tube seating portion, a wire through-hole, and a blade accommodation portion are sequentially formed inside the actuation hub **1590**, and the blade wire **307** may pass through the inside of the actuation hub **1590** to be connected to the blade **1575**.

As described above, by providing the actuation hub **1590** to which the guide tube **1570** is coupled between the first jaw **1501** and the second jaw **1502**, the guide tube **1570** may not be curved, or the angle at which the guide tube **1570** is curved may be reduced, even when the first jaw **1501** or the second jaw **1502** rotates around the first rotation shaft **1541** or the actuation rotation shaft **1545**.

In detail, in a case in which the guide tube **1570** is directly coupled to the first jaw **1501** or the second jaw **1502**, when the first jaw **1501** or the second jaw **1502** rotates, one end portion of the guide tube **1570** also rotates together with the first jaw **1501** or the second jaw **1502**, causing the guide tube **1570** to be curved.

On the other hand, in a case in which the guide tube **1570** is coupled to the actuation hub **1590**, which is independent of the rotation of the jaw **1503**, as in the present embodiment, even when the first jaw **1501** or the second jaw **1502** rotates, the guide tube **1570** may not be curved, or the angle at which the guide tube **1570** is curved may be reduced even when the guide tube **1570** is curved.

That is, by changing the direct connection between the guide tube **1570** and the jaw **1503** by the actuation hub **1590** to an indirect connection, the degree to which the guide tube **1570** is curved by the rotation of the jaw **1503** may be reduced.

As such, the present disclosure has been described with reference to the embodiments described with reference to the drawings, but it will be understood that this is merely exemplary, and those of ordinary skill in the art will understand that various modifications and variations of the embodiments are possible therefrom. Accordingly, the true technical protection scope of the present disclosure should be defined by the technical spirit of the appended claims.

Advantageous Effects of Disclosure

According to the present disclosure, a manipulation direction of a manipulation portion by an operator and an

operating direction of an end tool are intuitively identical to each other, so that the operator's convenience can be improved, and the accuracy, reliability and speed of surgery can be improved.

BRIEF DESCRIPTION OF DRAWINGS

FIG. **1**A is a conceptual diagram of a pitch motion of a conventional surgical instrument, and FIG. **1**B is a conceptual diagram of a yaw motion thereof.

FIG. **1**C is a conceptual diagram of a pitch motion of another conventional surgical instrument, and FIG. **1**D is a conceptual diagram of a yaw motion thereof.

FIG. **1**E is a conceptual diagram of a pitch motion of a surgical instrument according to the present disclosure, and FIG. **1**F is a conceptual diagram of a yaw motion thereof.

FIG. **2** is a perspective view illustrating a surgical instrument for electrocautery according to a first embodiment of the present disclosure.

FIGS. **3**, **4**, **5**, and **6** are perspective views illustrating an end tool of the surgical instrument for electrocautery of FIG. **2**.

FIGS. **7** and **8** are plan views illustrating the end tool of the surgical instrument for electrocautery of FIG. **2**.

FIG. **9** is a perspective view illustrating an end tool hub of the surgical instrument for electrocautery of FIG. **2**.

FIGS. **10** and **11** are cut-away perspective views of the end tool hub of FIG. **9**.

FIGS. **12** and **13** are perspective views illustrating the end tool hub of FIG. **9**.

FIG. **14** is a side view illustrating the end tool hub of FIG. **9** and a guide tube.

FIG. **15** is a plan view illustrating the end tool hub of FIG. **9** and the guide tube.

FIGS. **16** and **17** are plan views illustrating an opening and closing motion of the end tool of the surgical instrument for electrocautery of FIG. **2**.

FIGS. **18** to **20** are partial cross-sectional views illustrating an operation of a blade of the end tool of the surgical instrument for electrocautery of FIG. **2**.

FIGS. **21** and **22** are bottom views illustrating a process of performing an opening and closing motion in a state in which the end tool of the surgical instrument for electrocautery of FIG. **2** is yaw-rotated by −90°.

FIGS. **23** and **24** are bottom views illustrating a process of performing an opening and closing motion in a state in which the end tool of the surgical instrument for electrocautery of FIG. **2** is yaw-rotated by +90°.

FIGS. **25** and **26** are views illustrating a path of the guide tube and a movement path of the blade during a cutting motion in a state in which the end tool of the surgical instrument for electrocautery of FIG. **2** is yaw-rotated by +90°.

FIGS. **27** and **28** are views illustrating a process of performing an opening and closing motion in a state in which the end tool of the surgical instrument for electrocautery of FIG. **2** is pitch-rotated by −90°.

FIGS. **29** and **30** are views illustrating a process of performing an opening and closing motion in a state in which the end tool of the surgical instrument for electrocautery of FIG. **2** is pitch-rotated by +90°.

FIG. **31** is a view illustrating a path of the guide tube in a state in which the end tool of the surgical instrument for electrocautery of FIG. **2** is pitch-rotated by −90°.

FIGS. **32** and **33** are views illustrating a path of the guide tube and a movement path of the blade during a cutting motion in a state in which the end tool of the surgical instrument for electrocautery of FIG. **2** is pitch-rotated by −90°.

FIG. **34** is a perspective view illustrating the surgical instrument for electrocautery of FIG. **2** in a pitch-rotated and yaw-rotated state.

FIGS. **35** to **37** are views illustrating the end tool of the surgical instrument for electrocautery of FIG. **2** performing a cutting motion in a state in which the end tool is pitch-rotated by −90° and simultaneously yaw-rotated by +90°.

FIGS. **38** to **40** are views illustrating an end tool of a surgical instrument for electrocautery according to a modified example of the first embodiment of the present disclosure.

FIG. **41** is a perspective view illustrating a surgical instrument for electrocautery according to a second embodiment of the present disclosure.

FIGS. **42** to **47** are views illustrating an end tool of the surgical instrument for electrocautery of FIG. **41**.

FIG. **48** is a perspective view illustrating an end tool hub of the surgical instrument for electrocautery of FIG. **41**.

FIGS. **49** and **50** are cut-away perspective views of the end tool hub of FIG. **48**.

FIGS. **51** and **52** are perspective views illustrating the end tool hub of FIG. **48**.

FIG. **53** is a side view illustrating the end tool hub of FIG. **48** and a guide tube.

FIG. **54** is a plan view illustrating the end tool hub of FIG. **48** and the guide tube.

FIG. **55** is a perspective view illustrating a first jaw of the end tool of the surgical instrument for electrocautery of FIG. **41**.

FIG. **56** is a perspective view illustrating a second jaw of the end tool of the surgical instrument for electrocautery of FIG. **41**.

FIG. **57** is a perspective view illustrating a first jaw pulley of the end tool of the surgical instrument for electrocautery of FIG. **41**.

FIG. **58** is a plan view illustrating an opening and closing motion of the first jaw of the end tool of the surgical instrument for electrocautery of FIG. **41**.

FIG. **59** is a plan view illustrating an opening and closing motion of the second jaw of the end tool of the surgical instrument for electrocautery of FIG. **41**.

FIG. **60** is a plan view illustrating an opening and closing motion of the first jaw and the second jaw of the end tool of the surgical instrument for electrocautery of FIG. **41**.

FIGS. **61** and **62** are plan views illustrating an opening and closing motion of the first jaw and the second jaw in response to an actuation motion of the end tool of the surgical instrument for electrocautery of FIG. **41**.

FIGS. **63** to **65** are partial cross-sectional view illustrating an operation of a blade of the end tool of the surgical instrument for electrocautery of FIG. **41**.

FIGS. **66** and **67** are views illustrating a process of performing an opening and closing motion in a state in which the end tool of the surgical instrument for electrocautery of FIG. **41** is yaw-rotated by +90°.

FIGS. **68** and **69** are views illustrating a process of performing an opening and closing motion in a state in which the end tool of the surgical instrument for electrocautery of FIG. **41** is yaw-rotated by −90°.

FIGS. **70** and **71** are views illustrating a path of the guide tube and a movement path of the blade during a cutting motion in a state in which the end tool of the surgical instrument for electrocautery of FIG. **41** is yaw-rotated by +90°.

FIGS. **72** and **73** are views illustrating a process of performing an opening and closing motion in a state in which the end tool of the surgical instrument for electrocautery of FIG. **41** is pitch-rotated by −90°.

FIGS. **74** and **75** are views illustrating a process of performing an opening and closing motion in a state in which the end tool of the surgical instrument for electrocautery of FIG. **41** is pitch-rotated by +90°.

FIG. **76** is a view illustrating a path of the guide tube in a state in which the end tool of the surgical instrument for electrocautery of FIG. **41** is pitch-rotated by −90°.

FIGS. **77** and **78** are views illustrating a path of the guide tube and a movement path of the blade during a cutting motion in a state in which the end tool of the surgical instrument for electrocautery of FIG. **41** is pitch-rotated by −90°.

FIG. **79** is a perspective view illustrating the surgical instrument for electrocautery of FIG. **41** in a pitch-rotated and yaw-rotated state.

FIGS. **80** to **82** are views illustrating the end tool of the surgical instrument for electrocautery of FIG. **41** performing a cutting motion in a state in which the end tool is pitch-rotated by −90° and simultaneously yaw-rotated by +90°.

FIGS. **83** to **85** are views illustrating an end tool of a surgical instrument for electrocautery according to a modified example of the second embodiment of the present disclosure.

FIG. **86** is a perspective view illustrating a surgical instrument for electrocautery according to a third embodiment of the present disclosure.

FIGS. **87** to **92** are views illustrating an end tool of the surgical instrument for electrocautery of FIG. **86**.

FIG. **93** is a perspective view illustrating a yaw hub of the end tool of the surgical instrument for electrocautery of FIG. **86**.

FIG. **94** is cut-away perspective view illustrating the yaw hub of the end tool of the surgical instrument for electrocautery of FIG. **86**.

FIGS. **95** and **96** are perspective views illustrating the yaw hub of the end tool of the surgical instrument for electrocautery of FIG. **86**.

FIGS. **97** and **98** are perspective views illustrating an actuation pulley of the end tool of the surgical instrument for electrocautery of FIG. **86** and wires.

FIGS. **99** and **100** are perspective views illustrating the actuation pulley of the end tool of the surgical instrument for electrocautery of FIG. **86**.

FIG. **101** is a perspective view illustrating an actuation link of the end tool of the surgical instrument for electrocautery of FIG. **86**.

FIGS. **102** to **104** are views illustrating an opening and closing motion of a first jaw and a second jaw of the end tool of the surgical instrument for electrocautery of FIG. **86**.

FIGS. **105** to **108** are perspective views illustrating an actuation motion of the end tool of the surgical instrument for electrocautery of FIG. **86**.

FIGS. **109** to **111** are partial cross-sectional views illustrating an operation of a blade of the end tool of the surgical instrument for electrocautery of FIG. **86**.

FIGS. **112** and **113** are bottom views illustrating a process of performing an opening and closing motion in a state in which the end tool of the surgical instrument for electrocautery of FIG. **86** is yaw-rotated by +90°.

FIGS. **114** and **115** are bottom views illustrating a process of performing an opening and closing motion in a state in which the end tool of the surgical instrument for electrocautery of FIG. **86** is yaw-rotated by +90°.

FIGS. **116** to **119** are views illustrating a path of a guide tube and a movement path of the blade during a cutting motion in a state in which the end tool of the surgical instrument for electrocautery of FIG. **86** is yaw-rotated by +90°.

FIGS. **120** to **123** are views illustrating the actuation link and the guide tube in a state in which the end tool of the surgical instrument for electrocautery of FIG. **86** is yaw-rotated by +90°.

FIGS. **124** and **125** are views illustrating the actuation link and the guide tube in a state in which the end tool of the surgical instrument for electrocautery of FIG. **86** is yaw-rotated by +90°.

FIGS. **126** and **127** are views illustrating a process of performing an opening and closing motion in a state in which the end tool of the surgical instrument for electrocautery of FIG. **86** is pitch-rotated by −90°.

FIGS. **128** and **129** are views illustrating a process of performing an opening and closing motion in a state in which the end tool of the surgical instrument for electrocautery of FIG. **86** is pitch-rotated by +90°.

FIG. **130** is a view illustrating a path of the guide tube in a state in which the end tool of the surgical instrument for electrocautery of FIG. **86** is pitch-rotated by −90°.

FIGS. **131** and **132** are views illustrating a path of the guide tube and a movement path of the blade during a cutting motion in a state in which the end tool of the surgical instrument for electrocautery of FIG. **86** is pitch-rotated by +90°.

FIG. **133** is a perspective view illustrating the surgical instrument for electrocautery of FIG. **86** in a pitch-rotated and yaw-rotated state.

FIGS. **134** to **136** are views illustrating the end tool of the surgical instrument for electrocautery of FIG. **86** performing a cutting motion in a state in which the end tool is pitch-rotated by −90° and simultaneously yaw-rotated by +90°.

FIGS. **137** to **139** are views illustrating an end tool of a surgical instrument for electrocautery according to a modified example of the third embodiment of the present disclosure.

FIG. **140** is a perspective view illustrating a surgical instrument for electrocautery according to a fourth embodiment of the present disclosure.

FIGS. **141** to **146** are views illustrating an end tool of the surgical instrument for electrocautery of FIG. **140**.

FIG. **147** is a perspective view illustrating an end tool hub of the surgical instrument for electrocautery of FIG. **140**.

FIGS. **148** and **149** are cut-away perspective views of the end tool hub of FIG. **147**.

FIGS. **150** and **151** are perspective views illustrating the end tool hub of FIG. **147**.

FIG. **152** is a side view illustrating the end tool hub of FIG. **147** and a guide tube.

FIG. **153** is a plan view illustrating the end tool hub of FIG. **147** and the guide tube.

FIGS. **154**A and **154**B are a perspective view and a cut-away perspective view illustrating an actuation hub of the surgical instrument for electrocautery of FIG. **147** of FIG. **140**.

FIG. **155** is a view illustrating a state in which the guide tube, a blade wire, and a blade are mounted on the actuation hub illustrated in the cut-away perspective view of FIG. **154**.

FIG. **156** is an exploded perspective view illustrating the end tool of the surgical instrument for electrocautery of FIG. **140**.

FIG. **157** is a perspective view illustrating a first jaw of the end tool of the surgical instrument for electrocautery of FIG. **140**.

FIG. **158** is a perspective view illustrating a second jaw of the end tool of the surgical instrument for electrocautery of FIG. **140**.

FIG. **159** is a perspective view illustrating a first jaw pulley of the surgical instrument for electrocautery of FIG. **140**.

FIG. **160** is a plan view illustrating an opening and closing motion of the first jaw of the end tool of the surgical instrument for electrocautery of FIG. **140**.

FIG. **161** is a plan view illustrating an opening and closing motion of the second jaw of the end tool of the surgical instrument for electrocautery of FIG. **140**.

FIG. **162** is a plan view illustrating an opening and closing motion of the first jaw and the second jaw of the end tool of the surgical instrument for electrocautery of FIG. **140**.

FIGS. **163** and **164** are plan views illustrating an opening and closing motion of the end tool of the surgical instrument for electrocautery of FIG. **140**.

FIGS. **165** to **167** are partial cross-sectional views illustrating an operation of the blade of the end tool of the surgical instrument for electrocautery of FIG. **140**.

FIGS. **168** and **169** are views illustrating a process of performing an opening and closing motion in a state in which the end tool of the surgical instrument for electrocautery of FIG. **140** is yaw-rotated by −90°.

FIGS. **170** and **171** are bottom views illustrating a process of performing an opening and closing motion in a state in which the end tool of the surgical instrument for electrocautery of FIG. **140** is yaw-rotated by +90°.

FIGS. **172** and **173** are views illustrating a path of the guide tube and a movement path of a blade during a cutting motion in a state in which the end tool of the surgical instrument for electrocautery of FIG. **140** is yaw-rotated.

FIGS. **174** and **175** are views illustrating a process of performing an opening and closing motion in a state in which the end tool of the surgical instrument for electrocautery of FIG. **140** is pitch-rotated by +90°.

FIGS. **176** and **177** are views illustrating a process of performing an opening and closing motion in a state in which the end tool of the surgical instrument for electrocautery of FIG. **140** is pitch-rotated by −90°.

FIG. **178** is a view illustrating a path of the guide tube in a state in which the end tool of the surgical instrument for electrocautery of FIG. **140** is pitch-rotated by −90°.

FIGS. **179** and **180** are views illustrating a path of the guide tube and a movement path of the blade during a cutting motion in a state in which the end tool of the surgical instrument for electrocautery of FIG. **140** is pitch-rotated by −90°.

FIG. **181** is a perspective view illustrating the surgical instrument for electrocautery of FIG. **140** in a pitch-rotated and yaw-rotated state.

FIGS. **182** to **184** are views illustrating the end tool of the surgical instrument for electrocautery of FIG. **140** performing a cutting motion in a state in which the end tool is pitch-rotated by −90° and simultaneously yaw-rotated by +90°.

FIGS. **185** and **186** are perspective views illustrating an end tool of a surgical instrument for electrocautery according to a first modified example of the fourth embodiment of the present disclosure.

FIGS. **187** and **188** are plan views illustrating the end tool of the surgical instrument for electrocautery according to the first modified example of the fourth embodiment of the present disclosure.

FIGS. **189** and **190** are views illustrating an actuation hub of the surgical instrument for electrocautery according to the first modified example of the fourth embodiment of the present disclosure.

FIGS. **191** to **196** are views illustrating an end tool of a surgical instrument for electrocautery according to a second modified example of the fourth embodiment of the present disclosure.

FIGS. **197** and **198** are views illustrating an actuation hub of the end tool of the surgical instrument for electrocautery of FIG. **191**.

FIG. **199** is a perspective view illustrating a second jaw pulley of the end tool of the surgical instrument for electrocautery of FIG. **191**.

FIGS. **200** and **201** are views illustrating the end tool of the surgical instrument for electrocautery of FIG. **191**.

FIGS. **202** to **205** are views illustrating an end tool of a surgical instrument for electrocautery according to a third modified example of the fourth embodiment of the present disclosure.

FIGS. **206** and **207** are views illustrating an actuation hub of the end tool of the surgical instrument for electrocautery of FIG. **202**.

FIG. **208** is a perspective view illustrating a second jaw pulley of the end tool of the surgical instrument for electrocautery of FIG. **202**.

FIGS. **209** to **213** are views illustrating an end tool of a surgical instrument for electrocautery according to a fourth modified example of the fourth embodiment of the present disclosure.

FIGS. **214** and **215** are views illustrating an actuation hub of the end tool of the surgical instrument for electrocautery of FIG. **209**.

FIGS. **216** and **217** are perspective views illustrating a manipulation portion of the surgical instrument for electrocautery of FIG. **140**.

FIG. **218** is a view schematically illustrating only a configuration of pulleys and wires constituting joints of the surgical instrument for electrocautery illustrated in FIG. **140**.

FIG. **219** is a perspective view illustrating a yaw motion of the surgical instrument for electrocautery of FIG. **140**.

FIGS. **220** and **221** are diagrams illustrating a configuration of pulleys and wires, which are associated with an actuation motion and a yaw motion of the surgical instrument for electrocautery illustrated in FIG. **140**, in detail for each of the first jaw and the second jaw.

FIG. **222** is a perspective view illustrating a pitch motion of the surgical instrument for electrocautery of FIG. **140**.

FIGS. **223** and **224** are diagrams illustrating a configuration of pulleys and wires, which are associated with a pitch motion of the surgical instrument for electrocautery illustrated in FIG. **140**, in detail for each of the first jaw and the second jaw.

MODE OF DISCLOSURE

As the present disclosure allows for various changes and numerous embodiments, example embodiments will be illustrated in the drawings and described in detail. However, this is not intended to limit the present disclosure to particular modes of practice, and it is to be appreciated that all modifications, equivalents, and/or alternatives that do not depart from the spirit and technical scope are encompassed in the disclosure. In the description of embodiments, certain

detailed explanations of the related art are omitted when they are deemed as unnecessarily obscuring the essence of the present disclosure.

While such terms as "first," "second," etc., may be used to describe various components, such components must not be limited by the above terms. The above terms are used only to distinguish one component from another.

The terms used in the present application are merely used to describe example embodiments, and are not intended to limit the present disclosure. As used herein, the singular forms "a," "an" and "the" are intended to include the plural forms as well, unless the context clearly indicates otherwise. In the present specification, it is to be understood that the terms such as "including," "having," and "comprising" are intended to indicate the existence of the features, numbers, steps, actions, components, parts, or combinations thereof disclosed in the specification, and are not intended to preclude the possibility that one or more other features, numbers, steps, actions, components, parts, or combinations thereof may exist or may be added.

Hereinafter, embodiments of the present disclosure are described in detail with reference to the attached drawings. Like or corresponding reference numerals in the drawings denote like elements, and any redundant descriptions thereon will be omitted.

In addition, in describing various embodiments of the present disclosure, each embodiment does not have to be interpreted or practiced independently, and It should be understood that the technical concepts described in each embodiment may be interpreted or implemented in combination with other embodiments described individually.

In the surgical instrument for electrocautery according to the present disclosure, with respect to one or more motions from a pitch motion, a yaw motion, and an actuation motion, when a manipulation portion is rotated in one direction, an end tool may rotate in a direction intuitively the same as the manipulation direction of the manipulation portion.

(a) of FIG. **1** is a conceptual diagram of pitch motion of a conventional surgical instrument, and (b) of FIG. **1** is a conceptual diagram of yaw motion.

With reference to (a) of FIG. **1**, in performing a pitch motion of a conventional surgical instrument, with an end tool **120***a* formed in front of a rotation center **121***a* of the end tool **120***a* and a manipulation portion **110***a* formed behind a rotation center **111***a* of the manipulation portion **110***a*, when the manipulation portion **110***a* is rotated in the clockwise direction, the end tool **120***a* may also be rotated in the clockwise direction, and when the manipulation portion **110***a* is rotated in the counterclockwise direction, the end tool **120***a* may also be rotated in the counterclockwise direction. With reference to (b) of FIG. **1**, in performing a yaw motion of a conventional surgical instrument, with the end tool **120***a* formed in front of the rotation center **121***a* of the end tool **120***a* and the manipulation portion **110***a* formed behind the rotation center **111***a* of the manipulation portion **110***a*, when the manipulation portion **110***a* is rotated in the clockwise direction, the end tool **120***a* may also be rotated in the clockwise direction, and when the manipulation portion **110***a* is rotated in the counterclockwise direction, the end tool **120***a* may also be rotated in the counterclockwise direction. In this case, from the viewpoint of left and right sides of a user, when the user moves the manipulation portion **110***a* to the left, the end tool **120***a* may move to the right, and when the user moves the manipulation portion **110***a* to the right, the end tool **120***a* may move to the left. As a result, as the user manipulation direction is opposite to the end tool operation direction, the user may make a mistake, and have difficulty in manipulating the instrument.

(c) of FIG. **1** is a conceptual diagram of pitch motion of another conventional surgical instrument, and (d) of FIG. **1** is a conceptual diagram of yaw motion.

With reference to (c) of FIG. **1**, some of the conventional surgical instruments may be formed in a mirror-symmetrical manner, and in performing a pitch motion, in a state where an end tool **120***b* is formed in front of a rotation center **121***b* of the end tool **120***b*, and a manipulation portion **110***b* is formed behind a rotation center **111***b* of the manipulation portion **110***b*, when the manipulation portion **110***b* is rotated in the clockwise direction, the end tool **120***b* may rotate in the counterclockwise direction, and when the manipulation portion **110***b* is rotated in the counterclockwise direction, the end tool **120***b* may rotate in the clockwise direction. In this case, from the viewpoint of rotation direction of the manipulation portion **110***b* and the end tool **120***b*, a rotation direction in which a user rotates the manipulation portion **110***b* may be opposite to a resulting rotation direction of the end tool **120***b*. Not only this may result in causing confusion about the manipulation direction to a user, but also movements of joints are not intuitive, which may lead to a mistake. In addition, with reference to (d) FIG. **1**, in performing a yaw motion, in a state where the end tool **120***b* is formed in front of the rotation center **121***b* of the end tool **120***b*, and the manipulation portion **110***b* is formed behind the rotation center **111***b* of the manipulation portion **110***b*, when the manipulation portion **110***b* is rotated in the clockwise direction, the end tool **120***b* may rotate in the counterclockwise direction, and when the manipulation portion **110***b* is rotated in the counterclockwise direction, the end tool **120***b* may rotate in the clockwise direction. In this case, from the viewpoint of rotation direction of the manipulation portion **110***b* and the end tool **120***b*, a rotation direction in which a user rotates the manipulation portion **110***b* may be opposite to a resulting rotation direction of the end tool **120***b*. Not only this may result in causing confusion about the manipulation direction to a user, but also movements of joints are not intuitive, which may lead to a mistake. As such, in the pitch or yaw manipulation by a user of the conventional surgical instruments, there may be a discrepancy between the user manipulation direction and the operation direction of the end tool in terms of rotation direction or left and right direction. This is due to a configuration difference between the end tool and the manipulation portion in the joint configuration of the conventional surgical instruments. That is, the end tool may be formed in front of the rotation center of the end tool, whereas the manipulation portion may be formed behind the rotation center of the manipulation portion. To overcome such issue, in the surgical instrument according to an embodiment of the present disclosure shown in (c) and (f) of FIG. **1**, an end tool **120***c* may be formed in front of a rotation center **121***c* of the end tool **120***c*, and a manipulation portion **110***c* may also be formed in front of a rotation center **111***c* of the manipulation portion **110***c* so that motions of the manipulation portion **110***c* and the end tool **120***c* are intuitively matched. In other words, unlike the existing examples of a configuration in which a manipulation portion approaches a user with respect to its joint (i.e., away from an end tool) as shown in (a), (b), (c), (d) of FIG. **1**, in the surgical instrument according to an embodiment shown in (c) and (f) of FIG. **1**, at least a part of the manipulation portion may become closer to the end tool than the joint of the manipulation portion in more than one moments during a manipulation process.

In other words, in the case of the conventional surgical instruments shown in (a), (b), (c), and (d) of FIG. **1**, as the end tool may be formed in front of its rotation center whereas the manipulation portion may be formed behind its rotation center, the end tool of which front portion moves when its rear portion is fixed may move through a motion of the manipulation portion of which rear portion moves when its front portion is fixed, which is an intuitively unmatching structure. For this reason, a discrepancy in an aspect of left and right direction or an aspect of rotation direction in manipulation of a manipulation portion and motion of an end tool may occur, causing confusion to a user, and the manipulation of the manipulation portion may not be intuitively and quickly performed, which may lead to a mistake. On the contrary, in a surgical instrument according to an embodiment, as both of an end tool and a manipulation portion move based on rotation centers formed behind the end tool and the manipulation portion, respectively, structurally speaking, the motions thereof may intuitively match. In other words, as a moving portion of the end tool moves based on its rotation center formed therebehind, and similarly, a moving portion of the manipulation portion also moves based on its rotation center formed therebehind, structurally, the motions thereof may match intuitively. According to the foregoing, the user may intuitively and quickly control the direction of the end tool, and the possibility of causing a mistake may be significantly reduced. Hereinafter, a detailed mechanism enabling such function will be described.

First Embodiment of a Surgical Instrument for Electrocautery

FIG. **2** is a perspective view illustrating a surgical instrument for electrocautery according to a first embodiment of the present disclosure. FIGS. **3**, **4**, **5**, and **6** are perspective views illustrating an end tool of the surgical instrument for electrocautery of FIG. **2**. FIGS. **7** and **8** are plan views illustrating the end tool of the surgical instrument for electrocautery of FIG. **2**. FIG. **9** is a perspective view illustrating an end tool hub of the surgical instrument for electrocautery of FIG. **2**. FIGS. **10** and **11** are cut-away perspective views of the end tool hub of FIG. **9**. FIGS. **12** and **13** are perspective views illustrating the end tool hub of FIG. **9**. FIG. **14** is a side view illustrating the end tool hub of FIG. **9** and a guide tube. FIG. **15** is a plan view illustrating the end tool hub of FIG. **9** and the guide tube. FIGS. **16** and **17** are plan views illustrating an opening and closing motion of the end tool of the surgical instrument for electrocautery of FIG. **2**. First, with reference to FIG. **2**, the electric cauterization surgical instrument **10** according to the first embodiment may include an end tool **600**, a manipulation portion **200**, a power transmission portion **300**, and a connection portion **400**.

Here, the connection portion **400** may be formed in the shape of a hollow shaft, and one or more wires and electric wires may be accommodated therein. As the manipulation portion **200** is coupled to one end of the connection portion **400**, and the end tool **600** is coupled to the other end, the connection portion **400** may connect the manipulation portion **200** to the end tool **600**. The connection portion **400** of the electric cauterization surgical instrument **10** according to the first embodiment may include a straight portion **401** and a curved portion **402**. The straight portion **401** may be formed at a part of the connection portion **400** to which the end tool **600** is coupled, and the curved portion **402** may be formed at another part of the connection portion **400** to which the manipulation portion **200** is coupled. As such, as the end of the connection portion **400** coupled to the manipulation portion **200** is curved, a pitch manipulation portion **201**, a yaw manipulation portion **202**, and an actuation manipulation portion **203** may be arranged on an extension line of the end tool **600** or adjacent to the extension line of the end tool **600**. In other words, at least a part of the pitch manipulation portion **201** and the yaw manipulation portion **202** may be accommodated in a concave portion formed by the curved portion **402**. According to the shape of the curved portion **402** described above, the shape and motion of the manipulation portion **200** and the end tool **600** may match each other more intuitively.

Meanwhile, a plane on which the curved portion **402** is formed may be a pitch plane which is substantially the same as the XZ plane of FIG. **2**. As such, as the curved portion **402** is formed on the plane substantially identical to the XZ plane, interference between the manipulation portions may be reduced. For intuitive operation of the end tool **600** and the manipulation portion **200**, the plane may be configured otherwise in addition to the foregoing (i.e., the XZ plane).

Meanwhile, a connector **410** may be formed at the curved portion **402**. The connector **410** may be connected to an external power supply (not illustrated), and the connector **410** may be connected to a jaw **603** through electric wires **411** and **412** to transfer electrical energy supplied from the external power supply (not illustrated) to the jaw **603**. The connector **410** may be of a bipolar type having two electrodes, or the connector **410** may be of a monopolar type having one electrode.

The manipulation portion **200** may be formed at one end of the connection portion **400** and may include an interface which can be directly manipulated by a doctor, e.g., an interface in the shape of a pincer, a stick, a lever, etc. When the doctor manipulates the interface, the end tool **600**, which is connected to the interface and inserted into the body of a patient, may be operated and perform a surgery. Here, although FIG. **2** illustrates that the manipulation portion **200** is formed in the shape of a handle which may be rotated while fingers are inserted, the present disclosure is not limited thereto, and various types of manipulation portions connected to the end tool **600** and manipulating the end tool **600** may be applicable.

The end tool **600** may be formed at the other end of the connection portion **400** and may be inserted into a body of a patient to perform operations required for a surgery. As an example of the end tool **600**, a pair of jaws **603** for performing a grip motion may be used as illustrated in FIG. **2**. However, the technical concepts of the present disclosure are not limited thereto, and various other surgical instruments may be used as the end tool **600**. For example, a one-armed cautery may be used as the end tool **600**. As the end tool **600** is connected to the manipulation portion **200** by the power transmission portion **300**, the end tool **600** may receive driving power of the manipulation portion **200** through the power transmission portion **300** and perform motions required for a surgery, such as a grip motion, a cutting motion, a suturing motion, etc.

Here, the end tool **600** of the electric cauterization surgical instrument **10** according to the first embodiment may be formed to be rotatable in at least one direction, and for example, the end tool **600** may be formed to perform a yaw movement and an actuation movement around the Z-axis of FIG. **2** simultaneously with performing a pitch movement around the Y-axis of FIG. **2**.

Each of the pitch, yaw, and actuation motions used in the present disclosure are defined as follows.

First, the pitch motion may refer to a motion that the end tool **600** rotates up and down with respect to a direction in which the connection portion **400** extends (i.e., the X-axis direction of FIG. **2**), that is, a movement of rotating around the Y-axis of FIG. **2**. In other words, the pitch motion may refer to a movement that the end tool **600** extending from the connection portion **400** in the direction in which the connection portion **400** extends (i.e., the X-axis direction in FIG. **2**) rotates up and down around the Y-axis with respect to the connection portion **400**.

Next, the yaw motion may refer to a motion that the end tool **600** rotates left and right with respect to the direction in which the connection portion **400** extends (i.e., the X-axis direction of FIG. **2**), that is, a motion of rotating around the Z-axis of FIG. **2**. In other words, the yaw motion may refer to a movement that the end tool **600** extending from the connection portion **400** in the direction in which the connection portion **400** extends (i.e., the X-axis direction in FIG. **2**) rotates left and right around the Z-axis with respect to the connection portion **400**. That is, the yaw motion means a movement that the two jaws **603** formed at the end tool **600** rotate around the Z-axis in the same direction.

The actuation motion may refer to a motion that the end tool **600** rotates around the same rotation shaft as in the yaw motion or a rotation shaft that is parallel to that in the yaw motion, or and two jaws **603** rotate in opposite directions by which the jaws **603** are closed together or opened up. That is, the actuation motion may refer to a movement that the two jaws **603** formed at the end tool **600** rotate in opposite directions around the Z-axis. In an embodiment, the actuation motion may refer to a motion in which, while one of the jaws is stopped, the other jaw rotates with respect to the jaw that is stopped. That is, the actuation motion may refer to a motion in which one jaw rotates with respect to the other jaw.

The power transmission portion **300** may transfer the driving power of the manipulation portion **200** to the end tool **600** by connecting the manipulation portion **200** to the end tool **600**, and may include a plurality of wires, pulleys, links, joints, gears, etc.

The end tool **600**, the manipulation portion **200**, the power transmission portion **300**, etc. of the electric cauterization surgical instrument **10** of FIG. **2** will be described in detail later.

(Intuitive Driving)

Hereinafter, the intuitive driving of the electric cauterization surgical instrument **10** of the present disclosure is described.

First, a user may hold with his or her palm and rotate a first handle **204** around the Y-axis to perform the pitch motion, and may rotate the first handle **204** around the Z-axis to perform the yaw motion. In addition, the user may insert his or her thumb and index finger into a first actuation extension portion and/or a second actuation extension portion formed in the shape of a handle at one end of the actuation manipulation portion **203** and manipulate the actuation manipulation portion **203** to perform the actuation motion.

In the electric cauterization surgical instrument **10** according to the first embodiment of the present disclosure, when the manipulation portion **200** rotates in one direction with respect to the connection portion **400**, the end tool **600** may rotate in a direction intuitively the same as a manipulation direction of the manipulation portion **200**. In other words, when the first handle **204** of the manipulation portion **200** rotates in one direction, the end tool **600** may also rotate in a direction intuitively the same as the aforementioned direction to perform a pitch motion or a yaw motion. Here, the intuitively the same direction may indicate that the moving direction of a finger of a user holding the manipulation portion **200** is substantially the same as the moving direction of an end portion of the end tool **600**. The same direction may not be a perfectly matching direction on three-dimensional (3D) coordinates. For example, the sameness of the direction may be understood as a certain degree of sameness, with which, when the finger of the user moves to the left, the end portion of the end tool **600** may also move to the left, and when the finger of the user moves downwards, the end portion of the end tool **600** may also move downwards.

To this end, in the electric cauterization surgical instrument **10** according to the first embodiment, the manipulation portion **200** and the end tool **600** may be formed in the same direction with respect to a plane perpendicular to the extension axis (the X-axis) of the connection portion **400**. That is, when seen based on the YZ plane of FIG. **2**, the manipulation portion **200** may be formed to extend in the +X-axis direction, and at the same time, the end tool **600** may also be formed to extend in the +X-axis direction. In other words, the formation direction of the end tool **600** at one end of the connection portion **400** and the formation direction of the manipulation portion **200** at the other end of the connection portion **400** may be described as the same direction based on the YZ plane. Alternatively, the manipulation portion **200** may be formed in a direction proceeding away from a body of a user holding the manipulation portion **200**, i.e., a direction towards the end tool **600**. That is, in the first handle **204**, the first actuation manipulation portion, and the second actuation manipulation portion, etc., which are held and moved by a user for the actuation motion, the yaw motion, and the pitch motion, the moving portions thereof for the respective motions may extend in the +X axis direction in comparison with the rotation centers of each joint for the respective motions. Based on the foregoing, the moving portion of the end tool **600** may extend in the +X axis direction in comparison with the rotation center of each joint for the respective motions, and the manipulation portion **200** may also be configured in the same manner. Then, as described above with reference to FIG. **1**, the user manipulation direction may match the operation direction of the end tool in terms of rotation direction and left and right direction, which leads to intuitively matching manipulation.

More specifically, in the case of a conventional surgical instrument, as a direction in which the user manipulates the manipulation portion and an actual operation direction of the end tool are different and not intuitively the same, an operator may have difficulty in intuitive operation, and may need to use much time to become familiar with directing the end tool in a desired direction. In one embodiment, in some cases, a malfunction may occur, which can cause a damage to a patient.

To overcome such issue, in the electric cauterization surgical instrument **10** according to the first embodiment, the manipulation direction of the manipulation portion **200** may be intuitively identical to the operation direction of the end tool **600**, and to this end, a portion of the manipulation portion **200** which actually moves for the actuation motion, the yaw motion, and the pitch motion may extend in the +X-axis direction in comparison with a rotation center of a joint for the respective motions as in the end tool **600**.

Hereinafter, the end tool **600**, the manipulation portion **200**, the power transmission portion **300**, etc. of the electric cauterization surgical instrument **10** of FIG. **2** will be described in more detail.

(Power Transmission Portion)

Hereinafter, the power transmission portion **300** of the electric cauterization surgical instrument **10** of FIG. **2** will be described in more detail. surgical instrument for electrocautery

Referring to FIGS. **2** to **4**, **6**, **7**, **19**, **20**, **26**, **33**, **36**, and **37**, the power transmission portion **300** of the electric cauterization surgical instrument **10** according to an embodiment of the present disclosure may include a wire **301**, a wire **302**, a wire **303**, a wire **304**, a wire **305**, a wire **306**, and a blade wire **307**.

Here, the wires **301** and **305** may be paired to serve as first jaw wires. The wires **302** and **306** may be paired to serve as second jaw wires. Here, the components encompassing the wires **301** and **305**, which are first jaw wires, and the wires **302** and **306**, which are second jaw wires, may be referred to as jaw wires. In addition, the wires **303** and **304** may be paired to serve as pitch wires.

In addition, the power transmission portion **300** of the electric cauterization surgical instrument **10** according to an embodiment of the present disclosure may include a fastening member **321**, a fastening member **322**, a fastening member **323**, and a fastening member **324** that are coupled to respective end portions of the wires to respectively couple the wires and the pulleys. Here, each of the fastening members may have various shapes as necessary, such as a ball shape, a tube shape, and the like.

Here, at the end tool **600** side, the fastening member **321**/fastening member **322** may serve as pitch wire-end tool fastening members, the fastening member **323** may serve as a first jaw wire-end tool fastening member, and the fastening member **324** may serve as a second jaw wire-end tool fastening member.

In addition, although not shown in the drawings, the manipulation portion **200** may further include a fastening member configured to fasten the first jaw wire—the manipulation portion, and a fastening member configured to fasten the second jaw wire—the manipulation portion.

In addition, although not shown in the drawings, a pitch wire-manipulation portion fastening member and a blade wire-manipulation portion fastening member may be further formed at the manipulation portion **200** side.

The coupling relationship between the wires, the fastening members, and the respectively pulleys will be described in detail as follows.

First, the wires **301** and **305**, which are first jaw wires, may be a single wire. The fastening member **323**, which is a first jaw wire-end tool fastening member, is inserted at an intermediate point of the first jaw wire, which is a single wire, and the fastening member **323** is crimped and fixed, and then, both strands of the first jaw wire centered on the fastening member **323** may be referred to as the wire **301** and the wire **305**, respectively.

Alternatively, the wires **301** and **305**, which are first jaw wires, may also be formed as separate wires and connected by the fastening member **323**.

In addition, by coupling the fastening member **323** to a pulley **611**, the wires **301** and **305** may be fixedly coupled to the pulley **611**. This allows the pulley **611** to rotate as the wires **301** and **305** are pulled and released.

Meanwhile, a first jaw wire-manipulation portion fastening member (not shown in the drawings) may be coupled to the other end portions of the wires **301** and **305**, which are opposite to one end portions to which the fastening member **323** is fastened.

As a result, when a pulley of the manipulation portion **200** is rotated by a motor or a human force, the pulley **611** of the end tool **600** may be rotated as the wire **301** and the wire **305** are pulled and released.

In the same manner, the wire **302** and the wire **306**, which are second jaw wires, are coupled to each of the fastening member **324**, which is a second jaw wire-end tool fastening member, and a second jaw wire-manipulation portion fastening member (not shown in the drawings).

In addition, the fastening member **324** is coupled to a pulley **621**, and the second jaw wire-manipulation portion fastening member is coupled to a pulley. As a result, when the pulley is rotated by a motor or a human force, the pulley **621** of the end tool may be rotated as the wire **302** and the wire **306** are pulled and released.

In the same manner, the wire **304**, which is a pitch wire, is coupled to the fastening member **321**, which is a pitch wire-end tool fastening member, and the pitch wire-manipulation portion fastening member (not shown). In addition, the wire **303**, which is a pitch wire, is coupled to a fastening member **322**, which is a pitch wire-end tool fastening member, and the pitch wire-manipulation portion fastening member (not shown).

In addition, the fastening member **321** is coupled to a first pitch pulley portion **663***a* of an end tool hub **660**, the fastening member **322** is coupled to a second pitch pulley portion **663***b* of the end tool hub **660**, and the pitch wire-manipulation portion fastening member (not shown) is coupled to a pulley provided in the manipulation portion **200**. As a result, when the pulley provided in the manipulation portion **200** is rotated by a motor or a human force, the end tool hub **660** of the end tool **600** may be rotated as the wire **303** and the wire **304** are pulled and released.

Meanwhile, one end portion of the blade wire **307** is coupled to a blade **675** to be described later, and the other end portion thereof is coupled to a blade manipulation portion (not shown in the drawings) of the manipulation portion **200**. By the manipulation of the blade manipulation portion, a cutting motion may be performed as the blade wire **307** is moved from a proximal end **605** toward a distal end **604** of the end tool, or the blade wire **307** may return from the distal end **604** toward the proximal end **605** of the end tool.

At this time, at least a part of the blade wire **307** may be accommodated in a guide tube **670** to be described later. Accordingly, when the guide tube **670** is bent in response to a pitch motion or yaw motion of the end tool **600**, the blade wire **307** accommodated therein may also be bent together with the guide tube **670**. The guide tube **670** will be described in more detail later.

In addition, the blade wire **307** is formed in a longitudinal direction of the connection portion **400** so as to be linearly movable in the connection portion **400**. In addition, since one end portion of the blade wire **307** is coupled to the blade **675**, when the blade wire **307** is linearly moved in the longitudinal direction of the connection portion **400**, the blade **675** connected thereto is also linearly moved.

That is, when the blade wire **307** is linearly moved in the longitudinal direction of the connection portion **400**, a cutting motion is performed as the blade **675** connected thereto is moved toward the distal end **604** or the proximal end **605** of the end tool **600**. This will be described in more detail later.

(End Tool)

Hereinafter, the end tool **600** of the electric cauterization surgical instrument **10** of FIG. **2** will be described in more detail.

FIG. **2** is a perspective view illustrating the surgical instrument for electrocautery according to the first embodiment of the present disclosure. FIGS. **3**, **4**, **5**, and **6** are perspective views illustrating the end tool of the surgical instrument for electrocautery of FIG. **2**. FIGS. **7** and **8** are plan views illustrating the end tool of the surgical instrument for electrocautery of FIG. **2**. FIG. **9** is a perspective view illustrating the end tool hub of the surgical instrument for electrocautery of FIG. **2**. FIGS. **10** and **11** are cut-away perspective views of the end tool hub of FIG. **9**. FIGS. **12** and **13** are perspective views illustrating the end tool hub of FIG. **9**. FIG. **14** is a side view illustrating the end tool hub and the guide tube of FIG. **9**. FIG. **15** is a plan view illustrating the end tool hub and the guide tube of FIG. **9**. FIGS. **16** and **17** are plan views illustrating an opening and closing motion of the end tool of the surgical instrument for electrocautery of FIG. **2**.

Here, FIG. **3** illustrates a state in which the end tool hub **660** and a pitch hub **650** are coupled, and FIG. **4** illustrates a state in which the end tool hub **660** and pitch hub **650** are removed. FIG. **5** illustrates a state in which a first jaw **601** and a second jaw **602** are removed, and FIG. **6** illustrates a state in which the first jaw **601**, the second jaw **602**, a first electrode **651**, a second electrode **652**, and the like are removed. Meanwhile, FIG. **7** is a view mainly illustrating the wires, and FIG. **8** is a view mainly illustrating the pulleys.

Referring to FIGS. **2** to **17** and the like, the end tool **600** according to the first embodiment of the present disclosure may include a pair of jaws **603** for performing a grip motion, that is, the first jaw **601** and the second jaw **602**. Here, each of the first jaw **601** and the second jaw **602**, or a component encompassing the first jaw **601** and the second jaw **602** may be referred to as the jaw **603**.

In addition, the end tool may include the pulley **611**, a pulley **613**, a pulley **614**, a pulley **615**, and a pulley **616**, which are associated with a rotational motion of the first jaw **601**. In addition, the end tool may include the pulley **621**, a pulley **623**, a pulley **624**, a pulley **625**, and a pulley **626**, which are associated with a rotational motion of the second jaw **602**.

Here, the pulleys facing each other are illustrated in the drawings as being formed parallel to each other, but the concept of the present disclosure is not limited thereto, and each of the pulleys may be variously formed with a position and a size suitable for the configuration of the end tool.

Further, the end tool **600** of the first embodiment of the present disclosure may include the end tool hub **660** and the pitch hub **650**.

Referring to FIG. **12**, the end tool hub **660** may have a first rotation shaft **641** to be described later and a second rotation shaft **642** of a modified example of the first embodiment to be described later inserted therethrough, and may internally accommodate at least some of the pulley **611** and the pulley **621** that are axially coupled to the first rotation shaft **641**. The end tool hub **660** will be described in more detail below.

Referring to FIG. **3**, the pitch hub **650** may have a third rotation shaft **643** and a fourth rotation shaft **644**, which will be described later, inserted therethrough, and may be axially coupled to a first pitch pulley portion **663***a* and a second pitch pulley portion **663***b* of the end tool hub **660** by the third rotation shaft **643**. Accordingly, the end tool hub **660** may be formed to be rotatable around the third rotation shaft **643** with respect to the pitch hub **650**.

In addition, the pitch hub **650** may internally accommodate at least some of the pulley **613**, the pulley **614**, the pulley **623**, and the pulley **624** that are axially coupled to the third rotation shaft **643**. Further, the pitch hub **650** may internally accommodate at least some of the pulley **615**, the pulley **616**, the pulley **625**, and the pulley **626** that are axially coupled to the fourth rotation shaft **644**.

One end portion of the pitch hub **650** is connected to the end tool hub **660**, and the other end portion of the pitch hub **650** is connected to the connection portion **400**.

Here, the end tool **600** of the first embodiment of the present disclosure may include the first rotation shaft **641**, the third rotation shaft **643**, and the fourth rotation shaft **644**. As described above, the first rotation shaft **641** may be inserted through the end tool hub **660**, and the third rotation shaft **643** and the fourth rotation shaft **644** may be inserted through the pitch hub **650**.

Referring to FIG. **3**, the first rotation shaft **641**, the third rotation shaft **643**, and the fourth rotation shaft **644** may be arranged sequentially from the distal end **604** toward the proximal end **605** of the end tool. Accordingly, starting from the distal end **604**, the first rotation shaft **641** may be referred to as a first pin, the third rotation shaft **643** may be referred to as a third pin, and the fourth rotation shaft **644** may be referred to as a fourth pin.

The second rotation shaft **642** of the end tool **600** of the electric cauterization surgical instrument **10** according to the modified example of the first embodiment, which will be described later, may be inserted through the end tool hub **660** and may be referred to as a second pin.

Here, the first rotation shaft **641** may function as an end tool jaw pulley rotation shaft, the third rotation shaft **643** may function as an end tool pitch rotation shaft, and the fourth rotation shaft **644** may function as an end tool pitch auxiliary rotation shaft of the end tool.

Here, each of the rotation shafts may include two shafts of a first sub-shaft and a second sub-shaft. Alternatively, it may be said that each of the rotation shafts is formed by being divided into two parts.

For example, the first rotation shaft **641** may include two shafts of a first sub-shaft and a second sub-shaft, which face each other and are disposed to be spaced apart from each other by a certain distance. In addition, the third rotation shaft **643** may include two shafts of a first sub-shaft and a second sub-shaft, which face each other and are disposed to be spaced apart from each other by a certain distance. In addition, the fourth rotation shaft **644** may include two shafts of a first sub-shaft and a second sub-shaft, which face each other and are disposed to be spaced apart from each other by a certain distance.

Each of the rotation shafts is formed by being divided into two parts as described above to allow the guide tube **670** to be described later to pass through the end tool hub **660** and the pitch hub **650**. That is, the guide tube **670** may pass between the first sub-shaft and the second sub-shaft of each of the rotation shafts.

This will be described in more detail later. Here, the first sub-shaft and the second sub-shaft may be formed such that longitudinal central axes thereof are disposed on the same axis or may be disposed to be offset to a certain degree.

Meanwhile, it is illustrated in the drawings that each of the rotation shafts is formed by being divided into two parts, but the concept of the present disclosure is not limited thereto. That is, each of the rotation shafts is formed to be curved in the middle such that an escape path for the guide tube **670** is formed.

Each of the rotation shafts **641**, **642**, and **644** may be fitted into one or more pulleys, which will be described in detail below.

Meanwhile, the first rotation shaft **641** provided in the end tool **600** may be an actuation rotation shaft. In detail, the first rotation shaft **641** may be provided in a coupling portion of the first jaw **601** and the second jaw **602**, and may act as a yaw rotation shaft and an actuation rotation shaft.

That is, in the end tool **600** of the electric cauterization surgical instrument **10** according to the first embodiment of the present disclosure, a yaw rotation shaft and an actuation rotation shaft may be formed of the same rotation shaft, that is, the first rotation shaft **641**.

In detail, the first rotation shaft **641**, which is a yaw rotation shaft and an actuation rotation shaft, may be provided in the coupling portion of the first jaw **601** and the second jaw **602**, and the first jaw **601** and the second jaw **602** may perform an actuation motion while rotating with the first rotation shaft **641** as the actuation rotation shaft.

Referring to FIGS. **4** to **7**, the pulley **611** functions as an end tool first jaw pulley, and the pulley **621** functions as an end tool second jaw pulley. The pulley **611** may also be referred to as a first jaw pulley, and the pulley **621** may also be referred to as a second jaw pulley, and these two components may collectively be referred to as "end tool jaw pulleys" or simply "jaw pulleys."

The pulley **611** and the pulley **621**, which are end tool jaw pulleys, are formed to face each other, and are formed to be rotatable independently of each other around the first rotation shaft **641**, which is an end tool jaw pulley rotation shaft.

In this case, referring to FIG. **14**, the pulley **611** and the pulley **621** are formed to be spaced apart from each other by a certain distance, and a blade assembly accommodation portion (no reference number is assigned) may be formed between the pulley **611** and the pulley **621**. In addition, at least a part of the blade assembly (no reference number is assigned) to be described later may be disposed in the blade assembly accommodation portion. In other words, the blade assembly including the guide tube **670** may be disposed between the pulley **611** and the pulley **621**.

In addition, a yaw motion and an actuation motion of the end tool are performed in response to the rotation of the pulley **611** and the pulley **621**.

That is, when the pulley **611** and the pulley **621** rotate in the same direction around the first rotation shaft **641**, the yaw motion is performed as the first jaw **601** and the second jaw **602** rotate with the first rotation shaft **641** as the central axis of rotation.

Meanwhile, when the pulley **611** and the pulley **621** rotate in opposite directions around the first rotation shaft **641**, the actuation motion is performed in a state in which the first jaw **601** and the second jaw **602** rotate around the first rotation shaft **641**, of which a central axis of rotation is shared by the yaw rotation shaft and the actuation rotation shaft.

Referring to FIGS. **4**, **6**, and **8**, the pulley **613** and the pulley **614** function as end tool first jaw pitch main pulleys, and the pulley **623** and the pulley **624** function as end tool second jaw pitch main pulleys, and these two components may collectively be referred to as end tool jaw pitch main pulleys.

The pulley **615** and the pulley **616** function as end tool first jaw pitch sub-pulleys, and the pulley **625** and the pulley **626** function as end tool second jaw pitch sub-pulleys, and these two components may collectively be referred to as end tool jaw pitch sub-pulleys.

Hereinafter, components associated with the rotation of the pulley **611** will be described.

The pulley **613** and the pulley **614** function as end tool first jaw pitch main pulleys. That is, the pulley **613** and the pulley **614** may function as main rotation pulleys for the pitch motion of the first jaw **601**. Here, the wire **301**, which is a first jaw wire, is wound around the pulley **613**, and the wire **305**, which is a first jaw wire, is wound around the pulley **614**.

The pulley **615** and the pulley **616** function as end tool first jaw pitch sub-pulleys. That is, the pulley **615** and the pulley **616** function as sub-rotation pulleys for the pitch motion of the first jaw **601**. Here, the wire **301**, which is a first jaw wire, is wound around the pulley **615**, and the wire **305**, which is a first jaw wire, is wound around the pulley **616**.

Here, the pulley **613** and the pulley **614** are disposed on one side of the pulley **611** and the pulley **612** to face each other. Here, the pulley **613** and the pulley **614** are formed to be rotatable independently of each other around the third rotation shaft **643** that is an end tool pitch rotation shaft.

In addition, the pulley **615** and the pulley **616** are disposed on one side of the pulley **613** and one side of the pulley **614**, respectively, to face each other. Here, the pulley **615** and the pulley **616** are formed to be rotatable independently of each other around the fourth rotation shaft **644** that is an end tool pitch auxiliary rotation shaft.

Here, in the drawings, it is illustrated that the pulley **613**, the pulley **615**, the pulley **614**, and the pulley **616** are all formed to be rotatable around a Y-axis direction, but the concept of the present disclosure is not limited thereto, and the rotation shafts of the respective pulleys may be formed in various directions according to configurations thereof.

Referring to FIG. **6**, the wire **301**, which is a first jaw wire, is sequentially wound to make contact with at least portions of the pulley **615**, the pulley **613**, and the pulley **611**. In addition, the wire **305** connected to the wire **301** by the fastening member **323** is sequentially wound to make contact with at least portions of the pulley **611**, a first wire guide portion **668***a* of the end tool hub **680**, the pulley **614**, and the pulley **616**.

In other words, the wire **301** and the wire **305**, which are the first jaw wire, are sequentially wound to make contact with at least portions of the pulley **615**, the pulley **613**, the pulley **611**, the first wire guide portion **668***a* of the end tool hub **680**, the pulley **614**, and the pulley **616**, and the wire **301** and the wire **305** formed to move along the above pulleys while rotating the above pulleys.

Accordingly, referring to FIG. **7**, when the wire **301** is pulled in a direction from the distal end **604** toward the proximal end **605** of the end tool **600** (upward direction from a lower side based on FIG. **7**), the fastening member **323**, to which the wire **301** is coupled, and the pulley **611** coupled to the fastening member **323** and disposed facing the pulley **621** rotate in a first direction (a counterclockwise direction based on FIG. **7**).

On the contrary, when the wire **305** is pulled in the direction from the distal end **604** toward the proximal end **605** of the end tool **600** (upward direction from the lower side based on FIG. **7**), the fastening member **323** to which the wire **305** is coupled and the pulley **611** coupled to the fastening member **323** are rotated in a second direction (a clockwise direction based on FIG. **7**) opposite to the first direction.

Next, components associated with the rotation of the pulley **621** will be described.

The pulley **623** and the pulley **624** function as end tool second jaw pitch main pulleys. That is, the pulley **623** and the pulley **624** function as main rotation pulleys for a pitch motion of the second jaw **602**. Here, the wire **306**, which is

a second jaw wire, is wound around the pulley **623**, and the wire **302**, which is a second jaw wire, is wound around the pulley **624**.

Referring to FIG. **7**, the pulley **625** and the pulley **626** function as end tool second jaw pitch sub-pulleys. That is, the pulley **625** and the pulley **626** function as sub-rotation pulleys for a pitch motion of the second jaw **602**. Here, the wire **306**, which is a second jaw wire, is wound around the pulley **625**, and the wire **302**, which is a second jaw wire, is wound around the pulley **626**.

Here, the pulley **623** and the pulley **624** are disposed on one side of the pulley **621** to face each other. Here, the pulley **623** and the pulley **624** are formed to be rotatable independently of each other around the third rotation shaft **643** that is an end tool pitch rotation shaft. In addition, the pulley **625** and the pulley **626** are disposed on one side of the pulley **623** and one side of the pulley **624**, respectively, to face each other.

Here, the pulley **625** and the pulley **626** are formed to be rotatable independently of each other around the fourth rotation shaft **644** that is an end tool pitch auxiliary rotation shaft. Here, in the drawings, it is illustrated that all of the pulley **623**, the pulley **625**, the pulley **624**, and the pulley **626** are formed to be rotatable around the Y-axis direction, but the concept of the present disclosure is not limited thereto, and the rotation shafts of the respective pulleys may be formed in various directions according to configurations thereof.

The wire **306**, which is a second jaw wire, is sequentially wound to make contact with at least portions of the pulley **625**, the pulley **623**, and the pulley **621**. In addition, the wire **302** connected to the wire **306** by the fastening member **324** is sequentially wound to make contact with at least portions of the pulley **621**, a second wire guide portion **668***b* of the end tool hub **680**, the pulley **624**, and the pulley **626**.

In other words, the wire **306** and the wire **302**, which are the second jaw wire, are sequentially wound to make contact with at least portions of the pulley **625**, the pulley **623**, the pulley **621**, the second wire guide portion **668***b* of the end tool hub **680**, the pulley **624**, and the pulley **626**, and the wire **306** and the wire **302** are formed to move along the above pulleys while rotating the above pulleys.

Accordingly, referring to FIG. **7**, when the wire **306** is pulled in the direction from the distal end **604** toward the proximal end **605** of the end tool **600** (upward direction from the lower side based on FIG. **7**), the fastening member **324**, to which the wire **306** is coupled, and the pulley **621** coupled to the fastening member **324** and disposed facing the pulley **611** are rotated in the first direction (the clockwise direction based on FIG. **7**).

On the contrary, when the wire **302** is pulled in the direction from the distal end **604** toward the proximal end **605** of the end tool **600** (upward direction from the lower side based on FIG. **7**), the fastening member **324** to which the wire **302** is coupled and the pulley **621** coupled to the fastening member **324** are rotated in the second direction (the counterclockwise direction based on FIG. **7**) opposite to the first direction.

Hereinafter, a pitch motion of the present disclosure will be described in more detail.

Meanwhile, when the wire **301** is pulled in the direction of an arrow **301** of FIG. **7**, and simultaneously, the wire **305** is pulled in the direction of an arrow **305** of FIG. **7** (that is, when both strands of the first jaw wire are pulled), as shown in FIG. **6**, since the wires **301** and **305** are wound around lower portions of the pulley **613** and the pulley **614** rotatable around the third rotation shaft **643**, which is an end tool pitch rotation shaft, the pulley **611** to which the wires **301** and **305** are fixedly coupled and the end tool hub **660** to which the pulley **611** is coupled rotate as a whole in the counterclockwise direction around the third rotation shaft **643**, and as a result, the end tool may rotate downward to perform the pitch motion.

At this time, since the second jaw **602** and the wires **302** and **306** fixedly coupled thereto are wound around upper portions of the pulley **623** and the pulley **624** rotatable around the third rotation shaft **643**, the wires **302** and **306** are released in the opposite directions of the arrows **302** and **306**, respectively.

On the contrary, when the wire **302** is pulled in the direction of an arrow **302** of FIG. **7**, and simultaneously, the wire **306** is pulled in the direction of an arrow **306** of FIG. **7**, as shown in FIG. **6**, since the wires **302** and **306** are wound around the upper portions of the pulley **623** and the pulley **624** rotatable around the third rotation shaft **643**, which is an end tool pitch rotation shaft, the pulley **621** to which the wires **302** and **306** are fixedly coupled and the end tool hub **660** to which the pulley **621** is coupled rotate as a whole in the clockwise direction around the third rotation shaft **643**, and as a result, the end tool may rotate upward to perform the pitch motion.

At this time, since the first jaw **601** and the wires **301** and **305** fixedly coupled thereto are wound around lower portions of the pulley **613** and the pulley **614** rotatable around the third rotation shaft **643**, the wires **302** and **306** are moved in the opposite directions of the arrows **301** and **305**, respectively.

Meanwhile, the end tool hub **660** of the end tool **600** of the electric cauterization surgical instrument **10** of the present disclosure may further include the first pitch pulley portion **663***a* and the second pitch pulley portion **663***b* serving as end tool pitch pulleys, the manipulation portion **200** may further include a manipulation portion pitch pulley (not shown in the drawings), and the power transmission portion **300** may further include the wire **303** and the wire **304** which are pitch wires.

In detail, the end tool hub **660** including the first pitch pulley portion **663***a* and the second pitch pulley portion **663***b* may be formed to be rotatable around the third rotation shaft **643** which is an end tool pitch rotation shaft. In addition, the wire **303** and the wire **304** may serve to connect the first pitch pulley portion **663***a* and the second pitch pulley portion **663***b* of the end tool to the manipulation portion pitch pulley of the manipulation portion **200**.

Thus, when the manipulation portion pitch pulley of the manipulation portion **200** rotates, the rotation of the manipulation portion pitch pulley is transmitted to the end tool hub **660** of the end tool **600** via the wire **303** and the wire **304** so that the end tool hub **660** rotates together with the manipulation portion pitch pulley, and as a result, the end tool **600** performs the pitch motion while rotating.

That is, the electric cauterization surgical instrument **10** according to the first embodiment of the present disclosure includes the first pitch pulley portion **663***a* and the second pitch pulley portion **663***b* of the end tool **600**, the manipulation portion pitch pulley of the manipulation portion **200**, and the wire **303** and the wire **304** of the power transmission portion **300** in order to transmit driving force for a pitch motion, and thus, the driving force for the pitch motion of the manipulation portion **200** is more completely transmitted to the end tool, thereby improving operation reliability.

(Blade Wire and Guide Tube)

Hereinafter, the blade assembly, specifically the blade wire **307** and the guide tube **670** of the present disclosure, will be described in more detail.

Referring to FIGS. **3**, **4**, and **6**, the guide tube **670** according to the present disclosure is formed to surround the blade wire **307** in a certain section, and in this case, the blade wire **307** is movable inside the guide tube **670**.

In other words, in a state in which the blade wire **307** is inserted into the guide tube **670**, the blade wire **307** may move relative to the guide tube **670**.

Here, the guide tube **670** has a certain degree of rigidity, and serves to guide the path of the blade wire **307** by preventing the blade wire **307** from being curved in an unintended direction when the blade wire **307** is pushed or pulled. A cutting motion on tissue may be smoothly performed by the guide tube **670**.

Meanwhile, one end portion of the guide tube **670** may be fixedly coupled to the end tool hub **660** or a preset region (a first coupling portion) of the first jaw **601** or the second jaw **602**, which will be described later. In addition, the other end portion of the guide tube **670** may be fixedly coupled to a second coupling portion (not shown) in the connection portion **400**.

As described above, since both end portions of the guide tube **670** are fixedly coupled to certain points (the first coupling portion and the second coupling portion), respectively, the entire length of the guide tube **670** may remain constant. Accordingly, the length of the blade wire **307** inserted into the guide tube **670** may also remain constant.

In addition, the blade wire **307** may be prevented from moving in an unintended direction inside the end tool **600**, which is caused by the blade wire **307** being able to move inside the guide tube **670**.

Meanwhile, the guide tube **670** according to the present disclosure may be formed of a flexible material and formed to be bendable. Accordingly, when the end tool performs a yaw motion around the first rotation shaft **641** or a pitch motion around the third rotation shaft **643**, the guide tube **670** may be bent while being deformed in shape corresponding thereto. In addition, when the guide tube **670** is bent, the blade wire **307** thereinside is also bent.

Here, although the length of the guide tube **670** is constant, the relative position and distance of the first coupling portion (not shown) and second coupling portion (not shown) may be changed as the end tool **600** is pitch-rotated or yaw-rotated, and thus a space for the guide tube **670** to move by the changed distance is required.

To this end, a pitch slit **664** and a yaw slit **665**, which are separation spaces, may be provided in the end tool hub **660** to form spaces for movement of the guide tube **670**. Such a configuration of the end tool hub **660** will be described in detail later.

Meanwhile, as described above, the blade wire **307** is inserted through the guide tube **670**, and the blade wire **307** is relatively movable inside the guide tube **670** with respect to the guide tube **670**. That is, in a state in which the guide tube **670** is fixed, when the blade wire **307** is pulled in a first direction (in a direction from left to right based on FIG. **6**), the blade **675** connected to the blade wire **307** is moved toward the proximal end **605**, and when the blade wire **307** is pushed in a second direction (in a direction from right to left based on in FIG. **6**), the blade **675** connected to the blade wire **307** is moved toward the distal end **604**.

This will be described below in more detail.

The most reliable way to perform a cutting motion using the blade **675** is by pushing and pulling the blade **675** with the blade wire **307**. In addition, in order for the blade wire **307** to push and pull the blade **675**, the guide tube **670** that can guide the path of the blade wire **307** should be provided.

When the guide tube **670** does not guide the path of the blade wire **307** (i.e., does not hold the blade wire **307**), a phenomenon may occur in which cutting is not performed and a middle part of the blade wire **307** is curved even when the blade wire **307** is pushed. Accordingly, in order to reliably perform the cutting motion using the blade **675**, the blade wire **307** and the guide tube **670** should be essentially included.

However, when the blade wire **307** is used to drive a cutting motion, the cutting should be performed while pushing the blade wire **307**, and in this case, in order for the blade wire **307** to receive a force, a relatively stiff (i.e., non-bendable) wire should be used for the blade wire **307**. However, the stiff (i.e., non-bendable) wire may have a small bendable range and may be permanently deformed when a force equal to or greater than a certain degree is applied.

In other words, in the case of a stiff (i.e., non-bendable) wire, there is a minimum radius of curvature that may be bent and spread without permanent deformation. In other words, when the wire or the guide tube is curved below a specific radius of curvature, both the wire and the guide tube may undergo permanent deformation while being bent, thereby restricting the capacity to perform cutting while moving backward and forward. Thus, it is necessary to keep the blade wire **307** curved while having a gentle curvature.

Accordingly, to prevent the blade wire **307** from being rapidly bent while passing through the pulleys, a space is needed in the end tool hub **660** to be described below in order to ensure that bending or shape changes in the guide tube **670**, in which the blade wire **307** is accommodated, do not interfere with the end tool hub **660**.

The blade wire **307** and the guide tube **670** need to be connected to the blade **675** through the end tool hub **660**, and a space is needed in which the blade wire **307** and the guide tube **670** are bendable in the end tool hub **660**, and thus, to this end, in the present disclosure, 1) the pitch slit **664** and the yaw slit **665** are formed in the end tool hub **660**, wherein the pitch slit **664** and the yaw slit **665** correspond to a space in which the blade wire **307** and the guide tube **670** in which the blade wire **307** is accommodated can pass therethrough, and at the same time, are bendable, 2) each of the rotation shafts, specifically, the first rotation shaft **641**, the third rotation shaft **643**, and the fourth rotation shaft **644** is formed by being divided into two parts that are formed to face each other and to be spaced apart from each other by a certain distance, wherein the first rotation shaft **641** is a yaw rotation shaft and also is an actuation rotation shaft, the third rotation shaft **643** is a pitch rotation shaft, and the fourth rotation shaft **644** is an end tool pitch auxiliary rotation shaft of the end tool **600**, and 3) a pitch round portion **666** and a yaw round portion **667** are additionally formed to guide the bending of the blade wire **307** and the guide tube **670**.

In other words, when one end portion of the guide tube **670** is fixed in the connection portion **400**, and the other end portion thereof is moved while performing pitch and yaw motions, the guide tube **670** is curved in a direction, in which the gentlest curvature (hereinafter, referred to as "maximum gentle curvature") can be achieved in response to a change in a distance between both end portions thereof. As such, by achieving the maximum gentle curvature of the natural state, the motion of the blade wire **307** is smooth and the permanent deformation does not occur.

Accordingly, in order to secure the maximum gentle curvature, the pitch slit **664** and the yaw slit **665** are formed on the path of the guide tube **670** and, furthermore, the pitch round portion **666** and the yaw round portion **667**, each of which has a curved surface with a certain degree of curvature formed at each surface facing the guide tube **670**, may be additionally formed in the end tool hub **660**. Accordingly, the guide tube **670** may have such a shape that is the most similar to the maximum gentle curvature (although not having the maximum gentle curvature).

Hereinafter, the end tool hub **660** will be described.

(End Tool Hub)

Referring to FIGS. **9** to **15**, the end tool hub **660** of the present disclosure may include a body portion **661**, a first jaw pulley coupling portion **662***a*, a second jaw pulley coupling portion **662***b*, the first pitch pulley portion **663***a*, the second pitch pulley portion **663***b*, the pitch slit **664**, the yaw slit **665**, the pitch round portion **666**, the yaw round portion **667**, the first wire guide portion **668***a*, and the second wire guide portion **668***b*.

Referring to FIG. **9**, the first jaw pulley coupling portion **662***a* and the second jaw pulley coupling portion **662***b* may be formed on the end tool hub at the distal end **604** side. The first jaw pulley coupling portion **662***a* and the second jaw pulley coupling portion **662***b* may be formed to face each other, and may respectively accommodate the end tool first jaw pulley **611** and the end tool second jaw pulley **612** therein.

Here, the first jaw pulley coupling portion **662***a* and the second jaw pulley coupling portion **662***b* may be formed to be approximately parallel to a plane perpendicular to the first rotation shaft **641** that is a yaw rotation shaft. However, the first jaw pulley coupling portion **662***a* and the second jaw pulley coupling portion **662***b* are not limited thereto, and may be disposed to face each other and formed at a certain angle with the plane perpendicular to the first rotation shaft **641**, which is a yaw rotation shaft, in any technical concept in which the pulleys **611** and **612** may be accommodated.

Referring to FIGS. **9** and **10**, the first jaw pulley coupling portion **662***a* and the second jaw pulley coupling portion **662***b* may be connected by the body portion **661**. That is, the first jaw pulley coupling portion **662***a* and the second jaw pulley coupling portion **662***b*, which are parallel to each other, are coupled to each other by the body portion **661** formed in a direction approximately perpendicular thereto, so that the first jaw pulley coupling portion **662***a*, the second jaw pulley coupling portion **662***b*, and the body portion form an approximately "U" shape, in which each of the end tool first jaw pulley **611** and the end tool second jaw pulley **612** may be accommodated.

In other words, it may be said that the first jaw pulley coupling portion **662***a* and the second jaw pulley coupling portion **662***b* are formed to extend in the X-axis direction from the body portion **661**.

Referring to FIGS. **9** and **12**, a through hole (no reference number is assigned) is formed in the first jaw pulley coupling portion **662***a* to allow the first rotation shaft **641** to pass through and axially couple the first jaw pulley coupling portion **662***a* and the pulley **611**, which is an end tool first jaw pulley.

In addition, similar to the first jaw pulley coupling portion **662***a*, a through hole (no reference number is assigned) is formed in the second jaw pulley coupling portion **662***b* to allow the first rotation shaft **641** to pass through and axially couple the second jaw pulley coupling portion **662***b* and the pulley **621**, which is an end tool second jaw pulley.

Referring to FIG. **12**, the first rotation shaft **641**, which is a yaw rotation shaft, may be formed by being divided into two parts, and the two divided parts of the first rotation shaft **641** are connected to the through holes formed in the first jaw pulley coupling portion **662***a* and the second jaw pulley coupling portion **662***b*, respectively, and disposed to be spaced apart from each other by a certain distance.

As a result, a space is formed between the pair of first rotation shafts **641** that are connected to the facing first jaw pulley coupling portion **662***a* and second jaw pulley coupling portion **662***b*, respectively, and a space through which the guide tube **670** may pass may be formed between the pair of first rotation shafts **641**.

In other words, by disposing the blade assembly including the guide tube **670** and the blade **675** between the pulley **611**, which is a first jaw pulley, and the pulley **621**, which is a second jaw pulley, the end tool **600** is able to perform the cutting motion using the blade **675** in addition to the pitch and yaw motions.

Referring to FIGS. **9** to **11**, the first wire guide portion **668***a* may be formed on an inner side surface of the first jaw pulley coupling portion **662***a*, and the second wire guide portion **668***b* may be formed on an inner side surface of the second jaw pulley coupling portion **662***b*.

The first wire guide portion **668***a* and the second wire guide portion **668***b* may serve as auxiliary pulleys, and may increase a rotation angle of the end tool **600**.

The wire guide portions, specifically the first wire guide portion **668***a* and the second wire guide portion **668***b*, are in contact with the wire **305** and the wire **302**, respectively, to change the arrangement path of the wire **305** and the wire **302** to a certain degree, thereby increasing a rotation radius of each of the first jaw **601** and the second jaw **602**.

That is, when the auxiliary pulleys are not disposed, each of the first jaw pulley **611** and the second jaw pulley **621** can be yaw-rotated up to a right angle, but by forming the first wire guide portion **668***a* and the second wire guide portion **668***b* formed on the end tool hub **660**, the effect of increasing the maximum rotation angle of each pulley may be obtained.

This enables a motion in which the two jaws **601** and **602** of the end tool **600** should be spread for an actuation motion while yaw-rotated by 90°.

In other words, the range of yaw rotation in which an actuation motion is possible may be increased through the configuration of the wire guide portions **668***a* and **668***b* of the end tool hub **660**. In other words, the range of yaw rotation in which an actuation motion is possible may be increased through the configuration of the wire guide portions **668***a* and **668***b* of the end tool hub **660**.

Furthermore, by forming the wire guide portions **668***a* and **668***b* in the end tool hub **660**, which already exists, without adding a separate structure such as an auxiliary pulley, the range of rotation may be increased without adding a component and a manufacturing process.

As described above, since there is no need to additionally dispose a separate structure for increasing the rotation angle, the number of components is decreased and the manufacturing process is simplified, and also, the length of the end tool is shortened by as much as the size of the auxiliary pulley, so that the length of the end tool is shortened during a pitch motion. Accordingly, a surgical motion may be more easily performed in a narrow space.

According to the present disclosure as described above, the rotation radii of the pulley **611**, which is a first jaw pulley, and the pulley **621**, which is a second jaw pulley, increase, so that a yaw motion range in which a normal

opening/closing actuation motion and a normal cutting motion can be performed may be increased.

The first wire guide portion **668***a* and the second wire guide portion **668***b* may be formed parallel to a plane perpendicular to the first rotation shaft **641** that is a yaw rotation shaft. However, the first wire guide portion **668***a* and the second wire guide portion **668***b* are not limited thereto, and may be formed to have a certain angle with a plane perpendicular to the first rotation shaft **641**, which is a yaw rotation shaft, within the technical concept in which the first wire guide portion **668***a* and the second wire guide portion **668***b* are disposed to face each other.

The yaw slit **665** may be formed between the first jaw pulley coupling portion **662***a* and the second jaw pulley coupling portion **662***b*, and between the first wire guide portion **668***a* and the second wire guide portion **668***b*. Since the yaw slit **665** is formed in the end tool hub **660** as described above, the guide tube **670** may pass through the inside of the end tool hub **660**.

In other words, a pair of divided first rotation shafts **641** are vertically separated from each other without passing through the end tool hub **660**, and the yaw slit **665** is formed near the first rotation shaft **641** on a plane perpendicular to the first rotation shaft **641**, thereby allowing the guide tube **670** to move in the yaw slit **665** while passing near the first rotation shaft **641**.

Referring to FIGS. **9** and **10**, a yaw round portion **667** may be formed on the body portion **661**. The yaw round portion **667** may be formed to be rounded so as to have a certain degree of curvature. Specifically, when viewed from a plane perpendicular to the first rotation shaft **641**, which is a yaw rotation shaft, the yaw round portion may be formed to have a predetermined curvature. The yaw round portion **667** as described above may serve to guide the path of the guide tube **670** when the end tool **600** yaw-rotates.

For example, the yaw round portion **667** may be formed in a fan shape, and may be formed along a path in which the guide tube **670** is bent on an XY plane. The yaw round portion **667** as described above may serve to guide the path of the guide tube **670** when the end tool **600** yaw-rotates.

The first pitch pulley portion **663***a* and the second pitch pulley portion **663***b* may be formed on the end tool hub **660** at the proximal end **605** side.

In detail, the proximal end **605** of the end tool hub **660** is formed in a disk shape similar to a pulley, and grooves around which a wire may be wound may be formed on an outer circumferential surface of the proximal end **605**, thereby forming the first pitch pulley portion **663***a* and the second pitch pulley portion **663***b*.

The wire **303** and the wire **304** described above are coupled to the first pitch pulley portion **663***a* and the second pitch pulley portion **663***b*, which serve as end tool pitch pulleys, and a pitch motion is performed while the end tool hub **660** rotates around the third rotation shaft **643**.

Meanwhile, although not shown in the drawings, various modifications are possible, e.g., the pitch pulley is formed as a separate member from the end tool hub **660** and coupled to the end tool hub **660**.

The first pitch pulley portion **663***a* and the second pitch pulley portion **663***b* may be formed to face each other. Here, the first pitch pulley portion **663***a* and the second pitch pulley portion **663***b* may be formed to be approximately parallel to a plane perpendicular to the third rotation shaft **643**, which is a pitch rotation shaft.

The first pitch pulley portion **663***a* and the second pitch pulley portion **663***b* may be connected by the body portion **661**. That is, the first pitch pulley portion **663***a* and the second pitch pulley portion **663***b*, which are parallel to each other, are coupled by the body portion **661** formed in a direction approximately perpendicular to the first pitch pulley portion **663***a* and the second pitch pulley portion **663***b*, and thus the first pitch pulley portion **663***a*, the second pitch pulley portion **663***b*, and the body portion **661** may form an approximately U-shape.

In other words, the first pitch pulley portion **663***a* and the second pitch pulley portion **663***b* may be formed to extend side by side from the body portion **661** to face each other in the X-axis direction.

Meanwhile, a through hole (no reference number is assigned) is formed in the first pitch pulley portion **663***a* so that the third rotation shaft **643** may pass through and be connected to the first pitch pulley portion **663***a*. A through hole may be formed in the second pitch pulley portion **663***b* as in the first pitch pulley portion **663***a*, and the third rotation shaft **643** may pass through the second pitch pulley portion **663***b*.

At this time, the third rotation shaft **643**, which is a pitch rotation shaft, may be divided into two parts and may be disposed to be spaced apart from each other, and the guide tube **670** may move while passing through a space formed between the pair of third rotation shafts **643**.

Referring to FIG. **13**, the pitch slit **664** may be formed between the first pitch pulley portion **663***a* and the second pitch pulley portion **663***b*. Since the pitch slit **664** is formed in the end tool hub **660** as described above, the guide tube **670** may pass through the inside of the end tool hub **660**.

Meanwhile, the pitch round portion **666** may be further formed in the body portion **661**. A curved surface may be formed on the pitch round portion **666** to have a predetermined curvature. In detail, when viewed from a plane perpendicular to the third rotation shaft **643**, which is a pitch rotation shaft, the pitch round portion **666** may be formed to be rounded to have a predetermined curvature.

For example, the pitch round portion **666** may be formed in a fan shape, and may be formed along a path in which the guide tube **670** is bent on the XZ plane. The pitch round portion **666** as described above may serve to guide the path of the guide tube **670** when the end tool **600** pitch-rotates.

Accordingly, since the path of the guide tube **670** may be guided when the end tool **600** pitch-rotates, and the pitch round portion **666** having a predetermined curvature and formed to be rounded is formed on the inner side surface of the end tool hub **660** that may be in contact with the guide tube **670**, a sudden path change of the guide tube **670** may be prevented, and the guide tube **670** and the blade wire **307** moving inside the guide tube **670** may be stably moved while having a gently curved path.

That is, the pitch round portion **666** may serve to guide the path of the guide tube **670** when the end tool **600** pitch-rotates.

Referring to FIG. **9**, the pitch slit **664** and the yaw slit **665** may be formed to be connected to each other. That is, on an outer side with respect to a longitudinal central axis of the guide tube **670** located inside the end tool hub **660**, the pitch slit **664** and the yaw slit **665** may be alternately formed along a circumferential direction of the end tool hub **660**.

As a result, the guide tube **670** and the blade wire **307** located therein may be disposed to pass through the inside of the end tool hub **660**. In addition, the blade **675** located at one end portion of the blade wire **307** may linearly reciprocate inside the first jaw **601** and the second jaw **602**.

As described above, since the blade wire **307** and the guide tube **670** need to be connected to the blade **675** through the end tool hub **660**, and a space is needed in which

the blade wire **307** and the guide tube **670** are able to be bent in the end tool hub **660**, in the present disclosure, 1) the pitch slit **664** and the yaw slit **665** are formed in the end tool hub **660**, wherein the pitch slit **664** and the yaw slit **665** correspond to a space in which the blade wire **307**/guide tube **670** can pass through the end tool hub **660** without interfering the end tool hub **660**, and at the same time, are bendable, 2) each of the rotation shafts, specifically, the first rotation shaft **641** and the third rotation shaft **643** is formed by being divided into two parts, and 3) the pitch round portion **666** and the yaw round portion **667** are additionally formed to guide the bending of the blade wire **307** and the guide tube **670**.

(Components Associated with Cautery and Cutting)

Referring to FIGS. **3** to **5**, **18** to **20**, **25**, **26**, **31** to **33**, and **35** to **37**, the end tool **600** of the first embodiment of the present disclosure may include the first jaw **601**, the second jaw **602**, the first electrode **651**, the second electrode **652**, the guide tube **670**, and the blade **675** to perform cauterizing and cutting motions.

Here, components associated with the driving of the blade **675**, such as the guide tube **670** and the blade **675**, may be collectively referred to as a blade assembly. In an embodiment of the present disclosure, by disposing the blade assembly including the guide tube **670** and the blade **675** in the yaw slit **665** formed between the pulley **611**, which is a first jaw pulley, and the pulley **621**, which a second jaw pulley, the end tool **600** is able to perform the cutting motion using the blade **675** in addition to the pitch and yaw motions. This will be described in more detail.

As described above, the first jaw **601** is connected to the first jaw pulley **611**, and rotates around the first rotation shaft **641** integrally with the first jaw pulley **611** when the first jaw pulley **611** rotates around the first rotation shaft **641**.

Meanwhile, the first electrode **651** may be formed on a surface of the first jaw **601** facing the second jaw **602**. In addition, the second electrode **652** may be formed on a surface of the second jaw **602** facing the first jaw **601**.

Referring to FIG. **5**, a slit **651***a* may be formed in the first electrode **651**, and the blade **675** may move along the slit **651***a*. In addition, a slit **652***a* may be formed in the second electrode **652**, and the blade **675** may move along the slit **652***a* in a preset direction.

In an optional embodiment, a spacer (not shown in the drawings) may be formed between the first jaw **601** and the first electrode **651**, and a spacer may also be formed between the second jaw **602** and the second electrode **652**. The spacer may include an insulating material such as ceramic. Alternatively, the first jaw **601** and the second jaw **602** may themselves be made of a nonconductor such that the first electrode **651** and the second electrode **652** may be maintained to be insulated from each other without a separate insulator until the first electrode **651** and the second electrode **652** are in contact with each other.

Meanwhile, although not shown in the drawings, one or more sensors (not shown) may be further formed on at least one of the first jaw **601** or the second jaw **602**. The sensor (not shown) may be formed to measure at least some of current, voltage, resistance, impedance, and temperature during the cauterization by locating tissue between the first jaw **601** and the second jaw **602** and passing a current through the first electrode **651** and the second electrode **652**.

Alternatively, instead of providing a separate sensor, monitoring and controlling of at least some of current, voltage, resistance, impedance, and temperature may be directly performed by a generator (not shown) which supplies power to the electrodes.

An edge portion formed sharply and configured to cut tissue may be formed in one region of the blade **675**. The tissue disposed between the first jaw **601** and the second jaw **602** may be cut as at least a part of the blade **675** moves between the distal end **604** and the proximal end **605** of the end tool.

Here, the guide tube **670** and the blade **675** disposed between the pulley **611** and the pulley **621** are provided in the end tool **600** of an electric cauterization surgical instrument **10** according to an embodiment of the present disclosure.

In addition, by providing the guide tube **670** and the blade **675**, a multi-joint/multi-degree-of-freedom surgical instrument capable of pitch/yaw/actuation motions may also perform cauterizing and cutting motions. This will be described below in more detail.

So far, various types of surgical instruments for electrocautery have been developed. Among the various types of surgical instruments for electrocautery, a blood vessel resection device called "Advanced Energy Device" or "Vessel Sealer" has a sensing function added to the existing bipolar cautery method, so that power of different polarities may be supplied to two electrodes, and after denaturing a vessel with the heat generated therefrom for hemostasis, the stanched part may be cut with a blade. At this time, the impedance of the tissue (or blood vessel) while the current is flowing is measured to determine whether the cauterization is completed, and when the cauterization is completed, the current supply is automatically stopped, and the tissue is cut with the blade.

In the case of such a bipolar-type blood vessel resection device, it is essential to have a blade to cut the tissue after cauterization, and the end tool needs to be equipped with a mechanism for facilitating a linear motion of the blade, and thus joint movements such as pitch/yaw movements are not possible in most cases.

Meanwhile, there have been attempts to implement joint movements using flexible joints with multiple nodes connected in the bipolar-type blood vessel resection device, but in this case, a rotation angle is limited and it is difficult to achieve accurate motion control of the end tool.

On the other hand, in the case of a method that utilizes vibration of ultrasonic waves to perform hemostasis and cutting, it is not feasible to provide joints due to the physical properties of ultrasonic waves.

To address these problems, the end tool **600** of the electric cauterization surgical instrument **10** according to an embodiment of the present disclosure includes the guide tube **670** disposed between the pulley **611** and the pulley **621**, and the blade **675** that moves between a first position and a second position in response to the movement of the blade wire **307** disposed inside the guide tube **670**. In addition, by providing the guide tube **670** and the blade **675** as described above, pitch/yaw/actuation motions may also be performed using a pulley/wire in a bipolar-type surgical instrument for cauterizing and cutting tissue.

FIG. **16** is a view illustrating the end tool **600** of the electric cauterization surgical instrument **10** of FIG. **2** in an open state, and FIG. **17** is a view illustrating the end tool **600** in a closed state. In addition, FIG. **18** is a view illustrating a state in which the blade wire **307** and the blade **675** connected to the blade wire **307** are located at the first position, FIG. **19** is a view illustrating a state in which the blade wire **307** and the blade **675** are located at the second position, and FIG. **20** is a view illustrating a state in which the blade wire **307** and the blade **675** are located at a third position.

Referring to FIGS. **16** to **20**, it may be said that the tissue between the first jaw **601** and the second jaw **602** is cut as the cutting motion of FIGS. **18** to **20** is performed in a state in which the first jaw **601** and the second jaw **602** are closed as shown in FIG. **16**.

Here, the first position illustrated in FIG. **18** may be defined as a state in which the blade **675** is drawn in toward the proximal end **605** of the end tool as much as possible. Alternatively, the first position may also be defined as a state in which the blade **675** is located adjacent to the pulley **611**/pulley **612**.

Meanwhile, the third position illustrated in FIG. **20** may be defined as a state in which the blade **675** is withdrawn toward the distal end **604** of the end tool **600** as much as possible. Alternatively, the third position may also be defined as a state in which the blade **675** is spaced away from the pulley **611**/pulley **612** as much as possible.

First, as shown in FIG. **17**, a tissue to be cut is located between the first jaw **601** and the second jaw **602** in a state in which the first jaw **601** and the second jaw **602** are opened, and then an actuation motion is performed to close the first jaw **601** and the second jaw **602** as shown in FIG. **16**.

Next, as shown in FIG. **18**, in a state in which the blade wire **307** and the blade **675** are located at the first position, currents of different polarities are applied to the first electrode **651** and the second electrode **652** to cauterize the tissue between the first jaw **601** and the second jaw **602**. At this time, a generator (not shown) configured to supply power to the electrodes may itself perform monitoring of at least some of current, voltage, resistance, impedance, and temperature, and may stop supplying power when the cauterization is completed.

In the state in which the cauterization is completed as described above, when the blade wire **307** moves sequentially in the directions of an arrow A**1** of FIG. **19** and an arrow A**2** of FIG. **20**, the blade **675** coupled to the blade wire **307** moves from the first position at the proximal end **605** of the end tool toward the third position at the distal end **604** of the end tool, reaching the positions in FIGS. **19** and **20** in turn.

As such, the blade **675** cuts the tissue located between the first jaw **601** and the second jaw **602** while moving in the X-axis direction.

However, it is to be understood that the linear motion of the blade **675** here does not mean a motion in a completely straight line, but rather means a motion of the blade **675** to the extent that the blade **675** is able to cut the tissue while achieving a linear motion when viewed as a whole, even though the motion is not in a completely straight line, for example, the middle part of the straight line is bent by a certain angle or there is a section having a gentle curvature in a certain section.

Meanwhile, in this state, when the blade wire **307** is pulled in the opposite direction, the blade **675** coupled to the blade wire **307** also returns to the first position.

According to the present disclosure, the multi-joint/multi-degree-of-freedom surgical instrument capable of pitch/yaw/actuation motions may also perform cauterizing and cutting motions.

(Pitch, Yaw, Actuation, and Cutting Motions of End Tool)

FIGS. **16** and **17** are plan views illustrating an opening and closing motion of the end tool of the surgical instrument for electrocautery of FIG. **2**. The first jaw **601** may be coupled to the pulley **611** and the second jaw **602** may be coupled to the pulley **621**.

The pulley **611** functions as an end tool first jaw pulley, and the pulley **621** functions as an end tool second jaw pulley. The pulley **611** may also be referred to as a first jaw pulley, and the pulley **621** may also be referred to as a second jaw pulley, and these two components may collectively be referred to as end tool jaw pulleys or simply jaw pulleys.

The pulley **611** and the pulley **621**, which are end tool jaw pulleys, are formed to face each other, and are formed to be rotatable independently of each other around the first rotation shaft **641** which is an end tool jaw pulley rotation shaft. In this case, the pulley **611** and the pulley **621** are formed to be spaced apart from each other by a certain distance, and the blade assembly, specifically the guide tube **670** accommodating the blade wire **307** therein may be disposed therebetween.

That is, at least a part of the blade assembly (no reference number is assigned) may be disposed between the pulley **611** and the pulley **621**, and the blade assembly including the guide tube **670** may be disposed between the pulley **611** and the pulley **621**.

Referring to FIGS. **16** and **17**, when the pulley **621** rotates around the first rotation shaft **641**, the second jaw **602** may also rotate around the first rotation shaft **641** together with the pulley **621**.

Meanwhile, the pulley **611** is connected to the first jaw **601**, and when the pulley **611** rotates around the first rotation shaft **641**, the first jaw **601** connected to the pulley **611** may rotate around the first rotation shaft **641**.

In the end tool **600** of the electric cauterization surgical instrument **10** according to an embodiment of the present disclosure, the first rotation shaft **641**, which is a yaw rotation shaft, may function as an actuation rotation shaft.

That is, a yaw motion may be performed when the pulley **611** and the pulley **621**, which are connected to the first jaw **601** and the second jaw **602**, respectively, rotate in the same direction with the first rotation shaft **641**, which is a yaw rotation shaft and an actuation rotation shaft, as the center of rotation, and an actuation motion may be performed when the pulley **611** and the pulley **621** rotate in different directions.

Referring to FIG. **17**, as the pulley **611** and the pulley **621** rotate in opposite directions with the first rotation shaft **641** as the central axis of rotation, the first jaw **601** and second jaw **602**, which are connected to the pulley **611** and the pulley **621**, respectively, rotate in opposite directions and move away from each other, and thus the end tool **600** may be in an open state.

Referring to FIGS. **21** and **22**, bottom views are illustrated in which a process of performing an opening and closing motion in a state in which the end tool **600** of the electric cauterization surgical instrument **10** of FIG. **2** is yaw-rotated by −90°.

In FIG. **21**, the pulley **611** and the pulley **621** that faces the pulley **611** may rotate around the first rotation shaft **641** through the power transmission portion **300** in the manipulation portion **200**. In FIG. **21**, when the pulley **611** and the pulley **621** rotate in opposite directions, the first jaw **601** and the second jaw **602** respectively coupled to the pulley **611** and the pulley **621** may rotate relative to each other in a direction of approaching each other to perform an actuation motion, and as shown in FIG. **22**, the first jaw **601** and the second jaw **602** may be in a closed state.

FIGS. **23** and **24** are bottom views illustrating a process of performing an opening and closing motion in a state in which the end tool of the surgical instrument for electrocautery of FIG. **2** is yaw-rotated by +90°. Referring to FIGS.

23 and 24, as the pulley 611 and the pulley 611 are yaw rotatable by +90° with the first rotation shaft 641 as the central axis of rotation, and the pulley 611 and the pulley 611 rotates in different directions, an actuation motion is possible in which the first jaw 601 and the second jaw 602 respectively connected to the pulley 611 and the pulley 621 move closer or further away from each other.

Referring to FIGS. 21 to 24, the blade assembly, specifically, the guide tube 670 is connected to the end tool 600 at the other end portion, which is opposite one end portion connected to the connection portion 400, and may be of constant length.

The guide tube 670 may be gently curved with a predetermined radius of curvature when the end tool 600, specifically, the first jaw 601 and the second jaw 602 rotate with the first rotation shaft 641 as the central axis of rotation, and may stably provide a movement path for the blade wire 307 to be movable between the distal end 604 and the proximal end 605 of the end tool 600.

FIGS. 25 and 26 are views illustrating a path of the guide tube 670 and a movement path of the blade 675 during a cutting motion in a state in which the end tool 600 of the surgical instrument for electrocautery of FIG. 2 is yaw-rotated by +90°.

Referring to FIGS. 25 and 26, the end tool 600 of the electric cauterization surgical instrument 10 according to the first embodiment of the present disclosure is formed such that the jaws 601 and 602 are able to perform a normal cutting motion even when the jaws are yaw-rotated by +90°.

Specifically, as the blade wire 307 emerges from the inside of the guide tube 670, and the blade 675 connected to the blade wire 307 moves in the direction of an arrow A, which is a direction from the proximal end 605 toward the distal end 604 of the end tool 600, a cutting motion may be performed.

FIGS. 27 and 28 are views illustrating a process of performing an opening and closing motion in a state in which the end tool of the surgical instrument for electrocautery of FIG. 2 is pitch-rotated by −90°. FIGS. 29 and 30 are views illustrating a process of performing an opening and closing motion in a state in which the end tool of the surgical instrument for electrocautery of FIG. 2 is pitch-rotated by +90°. FIG. 31 is a view illustrating a path of the guide tube in a state in which the end tool of the surgical instrument for electrocautery of FIG. 2 is pitch-rotated by −90°. FIGS. 32 and 33 are views illustrating a path of the guide tube and a movement path of the blade during a cutting motion in a state in which the end tool of the surgical instrument for electrocautery of FIG. 2 is pitch-rotated by −90°.

Referring to FIGS. 27 to 33, the end tool 600 of the electric cauterization surgical instrument 10 according to the first embodiment of the present disclosure is formed such that the jaws 601 and 602 are able to perform a cutting motion normally even when the jaws are pitch-rotated by −90° and +90°.

Meanwhile, FIG. 34 is a view illustrating a state in which the jaws are pitch-rotated by −90° and simultaneously yaw-rotated by +90°, and FIGS. 35 to 37 are views illustrating the end tool of the surgical instrument for electrocautery of FIG. 2 performing a cutting motion in a state in which the end tool is pitch-rotated by −90° and simultaneously yaw-rotated by +90°.

Referring to FIGS. 34 to 37, the end tool 600 of the electric cauterization surgical instrument 10 according to the first embodiment of the present disclosure is formed such that the jaws 601 and 602 are able to perform a cutting motion normally even when the jaws are pitch-rotated by −90° and simultaneously yaw-rotated by +90°.

Modified Example of First Embodiment-Disposing Auxiliary Pulley on End Tool Hub

Hereinafter, an end tool 600 of a surgical instrument according to a modified example of the first embodiment of the present disclosure will be described. Here, the end tool 600 of the surgical instrument according to the modified example of the first embodiment of the present disclosure is different from the end tool of the surgical instrument according to the first embodiment of the present disclosure described above in that the configuration of an end tool hub 660' and the configuration of auxiliary pulleys 612 and 622 are different. The configuration changed from the first embodiment as described above will be described in detail later.

FIGS. 38 to 40 are views illustrating the end tool of the surgical instrument for electrocautery according to the modified example of the first embodiment of the present disclosure.

Referring to FIGS. 38 to 40, the end tool 600 of the modified example of the first embodiment of the present disclosure includes a pair of jaws for performing a grip motion, specifically a first jaw 601 and a second jaw 602, and here, each of the first jaw 601 and the second jaw 602 or a component encompassing the first jaw 601 and the second jaw 602 may be referred to as a jaw 603.

The end tool 600 according to the modified example of the first embodiment may include a pulley 611, the pulley 612, a pulley 613, a pulley 614, a pulley 615, and a pullcy 616 that are associated with a rotational motion of the first jaw 601. In addition, the end tool 600 may include a pulley 621, the pulley 622, a pulley 623, a pulley 624, a pulley 625, and a pulley 626 that are associated with a rotational motion of the second jaw 602.

Here, the pulleys facing each other are illustrated in the drawings as being formed parallel to each other, but the concept of the present disclosure is not limited thereto, and each of the pulleys may be variously formed with a position and a size suitable for the configuration of the end tool.

The end tool 600 according to the modified example of the first embodiment of the present disclosure may further include the pulley 612 and the pulley 622 as compared to the end tool 600 according to the first embodiment of the present disclosure illustrated with reference to FIG. 6.

Referring to FIGS. 39 and 40, the pulley 612 functions as an end tool first jaw auxiliary pulley, and the pulley 622 functions as an end tool second jaw auxiliary pulley, and these two components may collectively be referred to as end tool jaw auxiliary pulleys or simply auxiliary pulleys.

In detail, the pulley 612 and the pulley 622, which are end tool jaw auxiliary pulleys, may be additionally provided on one side of the pulley 611 and one side of the pulley 621, respectively. In other words, the pulley 612, which is an auxiliary pulley, may be disposed between the pulley 611 and the pulley 613/pulley 614. In addition, the pulley 622, which is an auxiliary pulley, may be disposed between the pulley 621 and the pulley 623/pulley 624.

The pulley 612 and the pulley 622 may be formed to be rotatable independently of each other around the second rotation shaft 642.

The pulley 612 and the pulley 622 may serve to increase rotation angles of the first jaw 601 and the second jaw 602, respectively, by coming into contact with the wire 305, which is a first jaw wire, and the wire 302, which is a second

jaw wire, and changing the arrangement paths of the wire **305** and the wire **302** to a certain degree.

That is, when the auxiliary pulleys are not disposed, each of the first jaw **601** and the second jaw **602** may rotate only up to a right angle, but in the modified example of the first embodiment, by additionally providing the pulley **612** and the pulley **622**, which are auxiliary pulleys, the effect of increasing the maximum rotation angle by a certain angle can be achieved.

This enables a motion in which two jaws of the end tool **600** have to be spread apart for an actuation motion in a state in which the two jaws are yaw-rotated together by 90° in the clockwise or counterclockwise direction.

In other words, a feature of increasing the range of yaw rotation in which an actuation motion is possible may be obtained through the pulley **612** and the pulley **622**. This will be described below in more detail.

When the auxiliary pulleys are not disposed, since the first jaw wire **305** is fixedly coupled to the end tool first jaw pulley **611**, and the second jaw wire **302** is fixedly coupled to the end tool second jaw pulley **621**, each of the end tool first jaw pulley **611** and the end tool second jaw pulley **621** may rotate up to 90°.

In this case, when the actuation motion is performed in a state in which the first jaw **601** and the second jaw **602** are located at a 90° line, the first jaw **601** may be spread, but the second jaw **602** may not be rotated beyond 90°. Accordingly, when the first jaw **601** and the second jaw **602** perform a yaw motion over a certain angle, there was a problem that an actuation motion is not smoothly performed.

In order to address such a problem, in the electric cauterization surgical instrument **10** of the present disclosure, the pulley **612** and the pulley **622**, which are auxiliary pulleys, are additionally disposed at one side of the pulley **611** and one side of the pulley **621**, respectively. As described above, as the arrangement paths of the wire **305**, which is a first jaw wire, and the wire **302**, which is a second jaw wire, are changed to a certain degree by disposing the pulley **612** and the pulley **622**, a tangential direction of the wires **305** and **302** is changed, and accordingly, a fastening member **324** for coupling the wire **302** and the pulley **621** is additionally rotatable by a certain angle.

That is, a fastening member **326**, which is a coupling portion of the wire **302** and the pulley **621**, is rotatable until being located on a common internal tangent of the pulley **621** and the pulley **622**. Similarly, a fastening member **323**, which is a coupling portion of the wire **305** and the pulley **611**, is rotatable until being located on a common internal tangent of the pulley **611** and the pulley **612**, so that the range of rotation may be increased.

In other words, due to the pulley **612** that is an auxiliary pulley, the wires **301** and **305**, which are two strands of the first jaw wire wound around the pulley **612**, are disposed at one side with respect to a plane perpendicular to the Y-axis and passing through the X-axis. Simultaneously, due to the pulley **622**, the wires **302** and **306**, which are two strands of the second jaw wire wound around the pulley **621**, are disposed at the other side with respect to the plane perpendicular to the Y-axis and passing through the X-axis.

In other words, the pulley **613** and the pulley **614** are disposed at one side with respect to the plane perpendicular to the Y-axis and passing through the X-axis, and the pulley **623** and the pulley **624** are disposed at the other side with respect to the plane perpendicular to the Y-axis and passing through the X-axis.

In other words, the wire **305** is located on the internal tangent of the pulley **611** and the pulley **612**, and the rotation angle of the pulley **611** is increased due to the pulley **612**. In addition, the wire **302** is located on the internal tangent of the pulley **621** and the pulley **622**, and the rotation angle of the pulley **621** is increased due to the pulley **622**.

According to the present disclosure, the rotation radii of the first jaw **601** and the second jaw **602** increase, so that an effect of increasing a yaw motion range in which a normal opening/closing actuation motion can be performed may be obtained.

Referring to FIG. **38**, a first rotation shaft **641** and a second rotation shaft **642** may be inserted through the end tool hub **660'** according to the modified example of the first embodiment of the present disclosure. Instead of respectively forming the first wire guide portion and the second wire guide portion on the surfaces of the first jaw pulley coupling portion **662***a* and the second jaw pulley coupling portion **662***b* facing each other as in the end tool hub **660** according to the first embodiment of the present disclosure, the pulley **612** and the pulley **622**, which are configured as separate components from the end tool hub **660'** and are able to be axially coupled to the second rotation shaft **642** that is inserted through the end tool hub **660'**, are additionally provided and allowed to function as auxiliary pulleys.

The second rotation shaft **642** inserted through the end tool hub **660'** may include two shafts including a first sub-shaft and a second sub-shaft that face each other and are disposed to be spaced apart from each other by a certain distance. The second rotation shaft is divided into two parts and spaced apart from each other by a certain distance, and thus the guide tube **670** may pass through the end tool hub **660'** and the pitch hub **650** through between the two parts.

Referring to FIG. **38**, the first rotation shaft **641**, the second rotation shaft **642**, a third rotation shaft **643**, and a fourth rotation shaft **644** may be arranged sequentially from a distal end **604** toward a proximal end **605** of the end tool **600**. Accordingly, starting from the distal end **604**, the first rotation shaft **641** may be referred to as a first pin, the second rotation shaft **642** may be referred to as a second pin, the third rotation shaft **643** may be referred to as a third pin, and the fourth rotation shaft **644** may be referred to as a fourth pin.

As compared to the first embodiment, the end tool **600** of the modified example of the first embodiment of the present disclosure has the same configuration as the end tool **600** according to the first embodiment, except that the pulley **621** and the pulley **622**, which are axially coupled to the end tool hub **660'** by the second rotation shaft **642**, are provided as separate components instead of being integrally formed with a body portion **661** in the end tool hub **660'** and function as auxiliary pulleys, and thus a detailed description thereof will be omitted in the overlapping range.

Second Embodiment of Surgical Instrument for Electrocautery-Forming X-Shaped Structure of First and Second Jaws

FIG. **41** is a perspective view illustrating a surgical instrument for electrocautery according to a second embodiment of the present disclosure. FIGS. **42** to **47** are views illustrating an end tool of the surgical instrument for electrocautery of FIG. **41**.

Referring to FIG. **41**, an electric cauterization surgical instrument **10** according to the second embodiment of the present disclosure includes an end tool **700**, a manipulation portion **200**, a power transmission portion **300**, and a connection portion **400**.

The electric cauterization surgical instrument **10** according to the second embodiment of the present disclosure is different from the electric cauterization surgical instrument **10** according to the first embodiment in that the end tool **700** has a different configuration, and thus the configuration of the end tool **700** will be described in detail below.

The end tool **700** is formed on the other end portion of the connection portion **400**, and performs necessary motions for surgery by being inserted into a surgical site. In an example of the end tool **700** described above, as illustrated in FIG. **41**, a pair of jaws **703** for performing a grip motion may be used.

However, the concept of the present disclosure is not limited thereto, and various devices for performing surgery may be used as the end tool **700**. For example, a configuration of a cantilever cautery may also be used as the end tool **700**. The end tool **700** is connected to the manipulation portion **200** by the power transmission portion **300**, and receives a driving force of the manipulation portion **200** through the power transmission portion **300** to perform a motion necessary for surgery, such as gripping, cutting, suturing, or the like.

Here, the end tool **700** of the electric cauterization surgical instrument **10** according to the second embodiment of the present disclosure is formed to be rotatable in at least one direction, and for example, the end tool **700** may be formed to perform a pitch motion around a Y-axis of FIG. **41** and simultaneously perform a yaw motion and an actuation motion around a Z-axis of FIG. **41**.

Referring to FIGS. **42** to **47**, **55**, and **56**, the end tool **700** of the electric cauterization surgical instrument **10** according to the second embodiment of the present disclosure includes a first electrode **751**, a second electrode **752**, a pitch hub **750**, an end tool hub **760**, a plurality of rotation shafts **741**, **743**, and **744**, and the like that are the same as those of the first embodiment in configuration and effect, and is different in that a jaw rotation shaft **701***c*, a tube through hole **701***f*, a jaw pulley coupling hole **701***d*, and a movable coupling hole **701***c* are formed in a first jaw **701**, and a shaft pass-through portion **702***e* through which the rotation shaft **701***c*, which is a jaw rotation shaft formed in the first jaw **701**, is able to pass, a movable coupling hole **702***c*, and a hole **702***d*, which is a jaw pulley coupling hole, are formed in a second jaw **702** that faces and is connectable to the first jaw **701**.

FIG. **48** is a perspective view illustrating the end tool hub of the surgical instrument for electrocautery of FIG. **41**. FIGS. **49** and **50** are cut-away perspective views of the end tool hub of FIG. **48**. FIGS. **51** and **52** are perspective views illustrating the end tool hub of FIG. **48**. FIG. **53** is a side view illustrating the end tool hub of FIG. **48** and a guide tube. FIG. **54** is a plan view illustrating the end tool hub of FIG. **48** and the guide tube.

Referring to FIGS. **48** to **54**, the end tool hub **760** provided in the end tool **700** of the electric cauterization surgical instrument **10** of FIG. **41** has a predetermined radius of curvature on an inner circumferential surface thereof for gentle curved movement of the guide tube **670**, and may include a yaw round portion **767** and a pitch round portion **766** formed in a curved shape.

In addition, a yaw slit **765** passing through the end tool hub **760** may be formed on a plane perpendicular to a first rotation shaft **741** to allow a guide tube **770**, which is configured to guide a movement path of a blade **775** and the blade wire **307** connected to the blade **775**, to stably move through the end tool hub **760**.

In addition, a pitch slit **764**, which is a separation space, may be formed between a first pitch pulley portion **763***a* and a second pitch pulley portion **763***b* facing each other so that the guide tube **670** may pass therethrough, thereby allowing the guide tube **770** to stably move through the pitch slit **764**.

Referring to FIG. **51**, in addition to the yaw slit **765** formed in the end tool hub **760**, the yaw rotation shaft **741** may be divided into two parts and provided as a pair, and the guide tube **670** may move through a space formed between the divided pair of yaw rotation shafts **741**.

Referring to FIGS. **51** to **54**, the end tool hub **760** of the surgical instrument for electrocautery according to the second embodiment has the same configuration as the end tool hub **660** of the surgical instrument for electrocautery according to the first embodiment, and thus a detailed description thereof will be omitted in the overlapping range.

FIG. **55** is a perspective view illustrating the first jaw of the end tool of the surgical instrument for electrocautery of FIG. **41**. FIG. **56** is a perspective view illustrating the second jaw of the end tool of the surgical instrument for electrocautery of FIG. **41**.

Referring to FIG. **55**, the first jaw **701** of the end tool **700** of the surgical instrument for electrocautery of FIG. **41** may include the jaw rotation shaft **701***e*, which has the tube through hole **701***f* formed therein and is formed to protrude, the movable coupling hole **701***c*, and the jaw pulley coupling hole **701***d*.

The first jaw **701** is formed entirely in an elongated bar shape, a path through which the blade **775** is movable is formed in the first jaw **701** at a distal end side (left side based on FIG. **55**), and a pulley **711**, which is a first jaw pulley, is coupled to the first jaw **701** at a proximal end side (right side based on FIG. **55**) and formed to be rotatable around the rotation shaft **741**.

Referring to FIG. **55**, the movable coupling hole **701***c* and the jaw pulley coupling hole **701***d* may be formed in the first jaw **701** at the proximal end side. Here, the movable coupling hole **701***c* may be formed to have a predetermined curvature, and may be formed in an approximately elliptical shape.

A shaft coupling portion **711***a* formed on the first jaw pulley **711** may be fitted into the movable coupling hole **701***c* formed in the first jaw **701**. Here, a short radius of the movable coupling hole **701***c* may be formed to be substantially the same as or slightly greater than a radius of the shaft coupling portion **711***a*.

Referring to FIG. **55**, a long radius of the movable coupling hole **701***c* may be formed to be greater than the radius of the shaft coupling portion **711***a*. Thus, a path may be formed so that the shaft coupling portion **711***a* is movable therethrough to a certain degree in the movable coupling hole **701***c* in a state in which the shaft coupling portion **71** la of the pulley **711** is fitted into the movable coupling hole **701***c* of the first jaw **701**, This will be described in detail later.

Referring to FIG. **55**, the jaw pulley coupling hole **701***d* formed in the first jaw **701** is formed in the form of a cylindrical hole, and a jaw coupling portion **711***b* of the pulley **711** may be fitted into the jaw pulley coupling hole **701***d*.

Here, a radius of the jaw pulley coupling hole **101***d* may be formed to be substantially the same as or relatively greater than a radius of the jaw coupling portion **711***b*. Thus, the jaw coupling portion **711***b* of the pulley **711** may be formed to be rotatably coupled to the jaw pulley coupling hole **701***d* of the first jaw **701**. This will be described in more detail later.

Referring to FIG. **56**, the second jaw **702** disposed to face the first jaw **701** may include the shaft pass-through portion **702***e*, the movable coupling hole **702***c*, and the jaw pulley

coupling hole **702***d*. The second jaw **702** may be formed entirely in an elongated bar shape, the shaft pass-through portion **702***e* may be formed in the distal end, and the jaw pulley coupling hole **702***d* may be formed in the proximal end.

Referring to FIG. **59**, the movable coupling hole **702***c* formed in the second jaw **702** may be formed to have a predetermined curvature and may be formed in an approximately elliptical shape. A shaft coupling portion **721***a* of a pulley **721** may be fitted into the movable coupling hole **702***c*. Here, a short radius of the movable coupling hole **702***c* may be formed to be substantially the same as or slightly greater than a radius of the shaft coupling portion **721***a*.

Meanwhile, a long radius of the movable coupling hole **702***c* may be formed to be relatively greater than the radius of the shaft coupling portion **721***a*. Thus, the shaft coupling portion **721***a* is formed to be movable to a certain degree in the movable coupling hole **702***c* in a state in which the shaft coupling portion **721***a* of the pulley **721** is fitted into the movable coupling hole **702***c* of the second jaw **702**. This will be described in more detail later.

Meanwhile, the jaw pulley coupling hole **702***d* is formed in the form of a cylindrical hole, and a jaw coupling portion **721***b* of the pulley **721** may be fitted into the jaw pulley coupling hole **702***d*. Here, a radius of the jaw pulley coupling hole **702***d* may be formed to be substantially the same as or greater than a radius of the jaw coupling portion **721***b*. Thus, the jaw coupling portion **721***b* of the pulley **721** may be rotatably coupled to the jaw pulley coupling hole **702***d* of the second jaw **702**.

Meanwhile, the shaft pass-through portion **702***e* may be formed in the second jaw **702** at the distal end side relative to the movable coupling hole **702***c* and the jaw pulley coupling hole **702***d*.

Referring to FIGS. **55** and **56**, the shaft pass-through portion **702***e* formed in the second jaw **702** may be formed in a hole shape, and the jaw rotation shaft **701***e* formed in the first jaw **701** may be inserted through the shaft pass-through portion **702***c*.

Referring to FIG. **57**, the pulley **711**, which is a first jaw pulley, may include the shaft coupling portion **71** la and the jaw coupling portion **711***b*. The pulley **711** is formed entirely in the shape of a rotatable disk and has one surface (lower surface based on FIG. **57**) on which the shaft coupling portion **711***a* and the jaw coupling portion **711***b* may be formed to protrude to a certain degree.

As described above, the shaft coupling portion **711***a* of the pulley **711** may be fitted into the movable coupling hole **701***c* of the first jaw **701**, and the jaw coupling portion **711***b* of the pulley **711** may be fitted into the jaw pulley coupling hole **701***d* of the first jaw **701**. The pulley **711** may be formed to be rotatable with the rotation shaft **741**, which is an end tool jaw pulley rotation shaft, as the center of rotation.

Meanwhile, the pulley **721**, which is a second jaw pulley, may include the shaft coupling portion **721***a* and the jaw coupling portion **721***b*.

The second jaw pulley **721** is formed entirely in the form of a rotatable disk and has one surface on which the shaft coupling portion **721***a* and the jaw coupling portion **721***b* may be formed to protrude to a certain degree. As described above, the shaft coupling portion **712***a* of the pulley **712** may be fitted into the movable coupling hole **702***c* of the second jaw **702**, and the jaw coupling portion **712***b* of the pulley **712** may be fitted into the jaw pulley coupling hole **702***d* of the second jaw **702**. The pulley **721** may be formed to be rotatable with the rotation shaft **741**, which is an end tool jaw pulley rotation shaft, as the center of rotation.

The coupling relationship between the components described above is as follows.

The rotation shaft **741**, which is an end tool jaw pulley rotation shaft, is sequentially inserted through the shaft coupling portion **711***a* of the pulley **711**, the movable coupling hole **701***c* of the first jaw **701**, the movable coupling hole **702***c* of the second jaw **702**, and the shaft coupling portion **721***a* of the pulley **721**.

The rotation shaft **701***e*, which is a jaw rotation shaft, is inserted through the shaft pass-through portion **702***e* of the second jaw **702**.

The shaft coupling portion **711***a* of the pulley **711** is fitted into the movable coupling hole **701***c* of the first jaw **701**, and the jaw coupling portion **711***b* of the pulley **711** is fitted into the jaw pulley coupling hole **701***d* of the first jaw **701**.

At this time, the jaw pulley coupling hole **701***d* of the first jaw **701** and the jaw coupling portion **711***b* of the pulley **711** are axially coupled to each other so as to be rotatable, and the movable coupling hole **701***c* of the first jaw **701** and the shaft coupling portion **711***a* of the pulley **711** are movably coupled to each other.

The shaft coupling portion **721***a* of the pulley **721** is fitted into the movable coupling hole **702***c* of the second jaw **702**, and the jaw coupling portion **721***b* of the pulley **721** is fitted into the jaw pulley coupling hole **702***d* of the second jaw **702**.

At this time, the jaw pulley coupling hole **702***d* of the second jaw **702** and the jaw coupling portion **721***b* of the pulley **721** are axially coupled to each other to be rotatable, and the movable coupling hole **702***c* of the second jaw **702** and the shaft coupling portion **721***a* of the pulley **721** are movably coupled to each other.

Here, the pulley **711** and the pulley **721** rotate around the rotation shaft **741**, which is an end tool jaw pulley rotation shaft. The first jaw **701** and the second jaw **702** rotate around the rotation shaft **701***e*, which is a jaw rotation shaft. That is, the pulley **711** and the first jaw **701** have different shafts of rotation. Similarly, the pulley **721** and the second jaw **702** have different shafts of rotation.

That is, the rotation angle of the first jaw **701** is limited to a certain degree by the movable coupling hole **701***c*, but is essentially rotated about the rotation shaft **701***e*, which is a jaw rotation shaft. Similarly, the rotation angle of the second jaw **702** is limited to a certain degree by the movable coupling hole **702***c*, but is essentially rotated around the rotation shaft **701***e*, which is a jaw rotation shaft.

Amplification of grip force due to the coupling relationship between the above-described components will be described.

FIG. **58** is a plan view illustrating an opening and closing motion of the first jaw of the end tool of the surgical instrument for electrocautery of FIG. **41**. FIG. **59** is a plan view illustrating an opening and closing motion of the second jaw of the end tool of the surgical instrument for electrocautery of FIG. **41**. FIG. **60** is a plan view illustrating an opening and closing motion of the first jaw and the second jaw of the end tool of the surgical instrument for electrocautery of FIG. **41**.

Referring to FIGS. **58** to **60**, in the electric cauterization surgical instrument **10** according to the second embodiment, the coupling structure of the first jaw **701** and the second jaw **702** forms an X-shaped structure, so that when the first jaw **701** and the second jaw **702** rotate in a direction of approaching each other (i.e. when the first jaw **701** and the second jaw **702** are closed), a grip force in a direction of closing the first jaw **701** and the second jaw **702** further increases. This will be described below in more detail.

As described above, in motions of the first jaw **701** and the second jaw **702** being opened and closed, there are two shafts that serve as the centers of rotation for the first jaw **701** and the second jaw **702**.

That is, the first jaw **701** and the second jaw **702** perform an opening and closing motion around two shafts of the rotation shaft **741** and the rotation shaft **701***e*. In this case, the centers of rotation of the first jaw **701** and the second jaw **702** become the rotation shaft **701***e*, and the centers of rotation of rotation of the pulley **711** and the pulley **721** become the rotation shaft **741**.

At this time, the rotation shaft **741** is a shaft whose position is relatively fixed, and the rotation shaft **701***e* is a shaft whose position is relatively moved linearly. In other words, when the pulley **711** and the pulley **721** rotate in a state in which the position of the rotation shaft **741** is fixed, the first jaw **701** and the second jaw **702** are opened/closed while the rotation shaft **701***e*, which is a rotation shaft of the first jaw **701** and the second jaw **702**, is moved backward and forward. This will be described below in more detail.

In FIG. **58**, r**1** is a distance from the jaw coupling portion **711***b* of the pulley **711** to the shaft coupling portion **711***a*, and a length thereof is constant. Thus, a distance from the rotation shaft **741** inserted into the shaft coupling portion **711***a* to the jaw coupling portion **711***b* is also constant as r**1**.

Meanwhile, r**2** of FIG. **58** is a distance from the jaw pulley coupling hole **701***d* of the first jaw **701** to the rotation shaft **701***e* that is a jaw rotation shaft, and a length thereof is constant. Thus, a distance from the jaw coupling portion **711***b* of the pulley **711** inserted into the jaw pulley coupling hole **701***d* to the jaw rotation shaft **701***e* is also constant as r**2**.

Referring to FIG. **58**, the lengths of r**1** and r**2** remain constant. Accordingly, when the pulley **711** and the pulley **721** rotate in the directions of an arrow A**1** of FIG. **58** and of an arrow A**2** of FIG. **59**, respectively, around the rotation shaft **741** to perform a closing motion, the first jaw **701** and the second jaw **702** rotate around the rotation shaft **701***e* as the angle between r**1** and r**2** changes while the lengths of r**1** and r**2** remain constant, and at this time, the rotation shaft **701***e* itself is also linearly moved (i.e., is moved forward/backward) by as much as an arrow C**1** of FIG. **58** and an arrow C**2** of FIG. **59**.

That is, assuming that the position of the rotation shaft **741**, which is an end tool jaw pulley rotation shaft, is fixed, when the first jaw **701** and the second jaw **702** are closed, a force is applied in a direction in which the rotation shaft **701***e*, which is a jaw rotation shaft, is moved forward (i.e., toward the distal end), and thus the grip force in the direction in which the first jaw **701** and the second jaw **702** are closed becomes larger.

In other words, since the lengths of r**1** and r**2** remain constant when the second jaw **702** rotates around the jaw rotation shaft **701***e*, when the pulley **721** rotates around the rotation shaft **741**, the angle between r**1** and r**2** changes while the lengths of r**1** and r**2** remain constant. That is, the angle between r**1** and r**2** in a state in which the second jaw **702** is open as shown in FIG. **59**A is relatively greater than the angle between r**1** and r**2** in a state in which the second jaw **702** is closed as shown in FIG. **59**B.

Thus, when the second jaw **702** rotates from the open state to the close state, the angle between r**1** and r**2** changes, and a force is applied in a direction in which the jaw rotation shaft **701***e* passing through the shaft pass-through portion **702***e* formed in the second jaw **702** is moved forward.

In this case, since the rotation shaft **741** is a shaft whose position is relatively fixed, the jaw rotation shaft **701***e* is moved forward in the direction of the arrow C**1** of FIG. **58** and the direction of an arrow C**2** of FIG. **59**, and the grip force is further increased in a direction in which the second jaw **702** is closed.

In other words, when the pulley **711** and the pulley **721** rotate around the rotation shaft **741**, which is a shaft whose relative position is fixed, the angle between r**1** and r**2** changes while the distance between r**1** and r**2** remains constant. In addition, when the angle changes as described above, the first jaw **701** and the second jaw **702** push or pull the rotation shaft **701***e*, and thus the jaw rotation shaft **701***e* is moved forward or backward.

In this case, when the first jaw **701** and the second jaw **702** rotate in the direction of closing, the grip force is further increased as the rotation shaft **701***e* is moved forward in the directions of the arrow C**1** of FIG. **58** and the arrow C**2** of FIG. **59**.

On the contrary, when the first jaw **701** and the second jaw **702** rotate in the direction of opening, the rotation shaft **701***e* is moved backward in directions opposite to the arrow C**1** of FIG. **58** and the arrow C**2** of FIG. **59**.

With this configuration, the grip force becomes stronger when the first jaw **701** and the second jaw **702** are closed, thereby enabling a surgical operator to perform the actuation motion powerfully even with a small force.

That is, as shown in FIG. **60**, as the first jaw **701** and the second jaw **702**, which have an X-shaped structure, rotate relative to each other around the first rotation shaft **741** that is a fixed shaft, the rotation shaft **701***e*, which is a jaw rotation shaft, is moved forward toward the distal end of the end tool **700**, so that the grip force may be amplified.

FIGS. **61** and **62** are plan views illustrating an opening and closing motion of the first jaw **701** and the second jaw **702** in response to an actuation motion of the end tool **700** of the surgical instrument for electrocautery of FIG. **41**.

Referring to FIGS. **61** and **62**, the first jaw **701** and the second jaw **702** are connected in an X-shaped structure, and the first jaw **701** and the second jaw **702** rotate relative to each other as the first jaw pulley **711** and the second jaw pulley **721** rotate with the fixed rotation shaft **741** as the center of rotation, enabling an actuation motion.

In the end tool **700** of the electric cauterization surgical instrument **10** according to the second embodiment of the present disclosure, as the first jaw **701** and the second jaw **702** rotate relative to each other, a grip force may be amplified when the jaw rotation shaft **70** le is moved forward/backward, particularly forward.

Referring to FIG. **62**, as the pulley **711** and the pulley **721** rotate in opposite directions with the first rotation shaft **741** as the central axis of rotation, the first jaw **701** and the second jaw **702**, which are respectively connected to the pulley **711** and the pulley **721**, rotate in opposite directions and move away from each other, and thus the end tool **700** may be in an open state.

Referring to FIGS. **61** to **65**, it may be said that the tissue between the first jaw **701** and the second jaw **702** is cut as the cutting motion of FIGS. **63** to **65** is performed in a state in which the first jaw **701** and the second jaw **702** are closed as shown in FIG. **61**.

Here, a first position shown in FIG. **63** may be defined as a state in which the blade **775** is drawn in toward a proximal end **705** of the end tool as much as possible. Alternatively, the first position may also be defined as a state in which the blade **775** is located adjacent to the pulley **711**/pulley **712**.

Meanwhile, a third position illustrated in FIG. **65** may be defined as a state in which the blade **775** is withdrawn toward a distal end **704** of the end tool **700** as much as

possible. Alternatively, the third position may also be defined as a state in which the blade **775** is spaced away from the pulley **711**/pulley **712** as much as possible.

First, as shown in FIG. **62**, a tissue to be cut is located between the first jaw **701** and the second jaw **702** in a state in which the first jaw **701** and the second jaw **702** are opened, and then an actuation motion is performed to close the first jaw **701** and the second jaw **702** as shown in FIG. **61**.

Next, as shown in FIG. **63**, in a state in which the blade wire **307** and the blade **775** are located at the first position, currents of different polarities are applied to the first electrode **751** and the second electrode **752** to cauterize the tissue between the first jaw **701** and the second jaw **702**. At this time, a generator (not shown) configured to supply power to the electrodes may itself perform monitoring of at least some of current, voltage, resistance, impedance, and temperature, and may stop supplying power when the cauterization is completed.

In the state in which the cauterization is completed as described above, when the blade wire **307** moves sequentially in the directions of an arrow A**1** of FIG. **64** and an arrow A**2** of FIG. **65**, the blade **775** coupled to the blade wire **307** moves from the first position at the proximal end **705** of the end tool toward the third position at the distal end **704** of the end tool, reaching the positions in FIGS. **64** and **65** in turn.

As such, the blade **775** cuts the tissue located between the first jaw **701** and the second jaw **702** while moving in the X-axis direction.

However, it is to be understood that the linear motion of the blade **775** here does not mean a motion in a completely straight line, but rather means a motion of the blade **775** to the extent that the blade **775** is able to cut the tissue while achieving a linear motion when viewed as a whole, even though the motion is not in a completely straight line, for example, the middle part of the straight line is bent by a certain angle or there is a section having a gentle curvature in a certain section.

Meanwhile, in this state, when the blade wire **307** is pulled in the opposite direction, the blade **775** coupled to the blade wire **307** also returns to the first position.

According to the present disclosure, the multi-joint/multi-degree-of-freedom surgical instrument capable of pitch/yaw/actuation motions may also perform cauterizing and cutting motions.

Referring to FIGS. **66** and **67**, views are illustrated in which a process of performing an opening and closing motion in a state in which the end tool **700** of the electric cauterization surgical instrument **10** of FIG. **41** is yaw-rotated by +90°.

Referring to FIG. **66**, the pulley **711** and the pulley **721** that faces the pulley **711** may be rotated around the first rotation shaft **741** due to the wires of the power transmission portion **300** in the manipulation portion **200**. In FIG. **66**, when the pulley **711** and the pulley **721** rotate in opposite directions, the first jaw **701** and the second jaw **702** respectively coupled to the pulley **711** and the pulley **721** may rotate relative to each other in a direction of approaching each other to perform an actuation motion, and as shown in FIG. **67**, the first jaw **701** and the second jaw **702** may be in a closed state.

FIGS. **66** and **67** are views illustrating a process of performing an opening and closing motion in a state in which the end tool of the surgical instrument for electrocautery of FIG. **41** is yaw-rotated by −90°.

Referring to FIGS. **66** and **67**, as the pulley **711** and the pulley **711** are yaw rotatable by −90° with the first rotation shaft **741** as the central axis of rotation, and the pulley **711** and the pulley **711** rotates in different directions, an actuation motion is possible in which the first jaw **701** and the second jaw **702** respectively connected to the pulley **711** and the pulley **721** move closer or further away from each other.

Referring to FIGS. **66** to **69**, a blade assembly, specifically, the guide tube **770** is connected to the end tool **700** at the other end portion, which is opposite one end portion connected to the connection portion **400**, and may be of constant length.

The guide tube **770** may be gently curved with a predetermined radius of curvature when the end tool **700**, specifically, the first jaw **701** and the second jaw **702** rotate with the first rotation shaft **741** as the central axis of rotation, and may stably provide a movement path for the blade wire **307** to be movable between the distal end **704** and the proximal end **705** of the end tool **700**.

FIGS. **70** and **71** are views illustrating a path of the guide tube **770** and a movement path of the blade **775** during a cutting motion in a state in which the end tool **700** of the surgical instrument for electrocautery of FIG. **41** is yaw-rotated by +90°.

Referring to FIGS. **70** and **71**, the end tool **700** of the electric cauterization surgical instrument **10** according to the second embodiment of the present disclosure is formed such that the jaws **701** and **702** are able to perform a normal cutting motion even when the jaws are yaw-rotated by +90°.

Specifically, as the blade wire **307** emerges from the inside of the guide tube **770**, and the blade **775** connected to the blade wire **307** moves in the direction of an arrow A, which is a direction from the proximal end **705** toward the distal end **704** of the end tool **700**, a cutting motion may be performed.

FIGS. **72** and **73** are views illustrating a process of performing an opening and closing motion in a state in which the end tool of the surgical instrument for electrocautery of FIG. **41** is pitch-rotated by −90°. FIGS. **74** and **75** are views illustrating a process of performing an opening and closing motion in a state in which the end tool of the surgical instrument for electrocautery of FIG. **41** is pitch-rotated by +90°. FIG. **76** is a view illustrating a path of the guide tube in a state in which the end tool of the surgical instrument for electrocautery of FIG. **41** is pitch-rotated by −90°. FIGS. **77** and **78** are views illustrating a path of the guide tube and a movement path of the blade during a cutting motion in a state in which the end tool of the surgical instrument for electrocautery of FIG. **41** is pitch-rotated by −90°. FIG. **79** is a perspective view illustrating the surgical instrument for electrocautery of FIG. **41** in a pitch-rotated and yaw-rotated state. FIGS. **80** to **82** are views illustrating the end tool of the surgical instrument for electrocautery of FIG. **41** performing a cutting motion in a state in which the end tool is pitch-rotated by −90° and simultaneously yaw-rotated by +90°.

FIGS. **74** and **75** are views illustrating a process of performing an opening and closing motion in a state in which the end tool **700** of the surgical instrument for electrocautery of FIG. **41** is pitch-rotated by +90°. FIG. **76** is a view illustrating a path of the guide tube **770** in a state in which the end tool **700** of the surgical instrument for electrocautery of FIG. **41** is pitch-rotated by −90°. FIGS. **77** and **78** are views illustrating a path of the guide tube and a movement path of the blade during a cutting motion in a state in which the end tool of the surgical instrument for electrocautery of FIG. **41** is pitch-rotated by −90°.

Referring to FIGS. **72** to **78**, the end tool **700** of the electric cauterization surgical instrument **10** according to the second embodiment of the present disclosure is formed such that the jaws **701** and **702** are able to perform a cutting motion normally even when the jaws are pitch-rotated by −90° and +90°.

Meanwhile, FIG. **79** is a view illustrating a state in which the jaws are pitch-rotated by −90° and simultaneously yaw-rotated by +90°, and FIGS. **80** to **82** are views illustrating a state in which the end tool of the surgical instrument for electrocautery of FIG. **41** performs a cutting motion in a state in which the end tool is pitch-rotated by −90° and simultaneously yaw-rotated by +90°.

Referring to FIGS. **79** to **82**, the end tool **700** of the electric cauterization surgical instrument **10** according to the second embodiment of the present disclosure is formed such that the jaws **701** and **702** are able to perform a cutting motion normally even when the jaws are pitch-rotated by −90° and simultaneously yaw-rotated by +90°.

Modified Example of Second Embodiment-Disposing Auxiliary Pulley on End Tool Hub

Hereinafter, an end tool **700** of a surgical instrument according to a modified example of the second embodiment of the present disclosure will be described. Here, the end tool **700** of the surgical instrument according to the modified example of the second embodiment of the present disclosure is different from the end tool of the surgical instrument according to the second embodiment of the present disclosure described above in that the configuration of an end tool hub **760'** and the configuration of auxiliary pulleys **712** and **722** are different. The configuration changed from the second embodiment as described above will be described in detail later.

FIGS. **83** to **85** are views illustrating the end tool of the surgical instrument for electrocautery according to the modified example of the second embodiment of the present disclosure.

Referring to FIGS. **83** to **85**, the end tool **700** of the modified example of the second embodiment of the present disclosure includes a pair of jaws for performing a grip motion, specifically a first jaw **701** and a second jaw **702**, and here, each of the first jaw **701** and the second jaw **702** or a component encompassing the first jaw **701** and the second jaw **702** may be referred to as a jaw **703**.

The end tool **700** according to the modified example of the second embodiment may include a pulley **711**, the pulley **712**, a pulley **713**, a pulley **714**, a pulley **715**, and a pulley **716** that are associated with a rotational motion of the first jaw **701**. In addition, the end tool **700** may include a pulley **721**, the pulley **722**, a pulley **723**, a pulley **724**, a pulley **725**, and a pulley **726** that are associated with a rotational motion of the second jaw **702**.

Here, the pulleys facing each other are illustrated in the drawings as being formed parallel to each other, but the concept of the present disclosure is not limited thereto, and each of the pulleys may be variously formed with a position and a size suitable for the configuration of the end tool.

The end tool **700** according to the modified example of the second embodiment of the present disclosure may further include the pulley **712** and the pulley **722** as compared to the end tool **700** according to the second embodiment of the present disclosure illustrated with reference to FIG. **43**.

Referring to FIGS. **84** and **85**, the pulley **712** functions as an end tool first jaw auxiliary pulley, and the pulley **722** functions as an end tool second jaw auxiliary pulley, and these two components may collectively be referred to as end tool jaw auxiliary pulleys or simply auxiliary pulleys.

In detail, the pulley **712** and the pulley **722**, which are end tool jaw auxiliary pulleys, may be additionally provided on one side of the pulley **711** and one side of the pulley **721**, respectively. In other words, the pulley **712**, which is an auxiliary pulley, may be disposed between the pulley **711** and the pulley **713**/pulley **714**. In addition, the pulley **722**, which is an auxiliary pulley, may be disposed between the pulley **721** and the pulley **723**/pulley **724**.

The pulley **712** and the pulley **722** may be formed to be rotatable independently of each other around a second rotation shaft **742**.

The pulley **712** and the pulley **722** may serve to increase rotation angles of the first jaw **701** and the second jaw **702**, respectively, by coming into contact with a wire **305**, which is a first jaw wire, and a wire **302**, which is a second jaw wire, and changing the arrangement paths of the wire **305** and the wire **302** to a certain degree.

That is, when the auxiliary pulleys are not disposed, each of the first jaw **701** and the second jaw **702** may rotate only up to a right angle, but in the modified example of the second embodiment, by additionally providing the pulley **712** and the pulley **722**, which are auxiliary pulleys, the effect of increasing the maximum rotation angle by a certain angle can be achieved.

This enables a motion in which two jaws of the end tool **700** have to be spread apart for an actuation motion in a state in which the two jaws are yaw-rotated together by 90° in the clockwise or counterclockwise direction.

In other words, a feature of increasing the range of yaw rotation in which an actuation motion is possible may be obtained through the pulley **712** and the pulley **722**. This will be described below in more detail.

When the auxiliary pulleys are not disposed, since the first jaw wire **305** is fixedly coupled to the end tool first jaw pulley **711**, and the second jaw wire **302** is fixedly coupled to the end tool second jaw pulley **721**, each of the end tool first jaw pulley **711** and the end tool second jaw pulley **721** may rotate up to 90°.

In this case, when the actuation motion is performed in a state in which the first jaw **701** and the second jaw **702** are located at a 90° line, the first jaw **701** may be spread, but the second jaw **702** may not be rotated beyond 90°. Accordingly, when the first jaw **701** and the second jaw **702** perform a yaw motion over a certain angle, there was a problem that an actuation motion is not smoothly performed.

In order to address such a problem, in the electric cauterization surgical instrument **10** of the present disclosure, the pulley **712** and the pulley **722**, which are auxiliary pulleys, are additionally disposed at one side of the pulley **711** and one side of the pulley **721**, respectively. As described above, as the arrangement paths of the wire **305**, which is a first jaw wire, and the wire **302**, which is a second jaw wire, are changed to a certain degree by disposing the pulley **712** and the pulley **722**, a tangential direction of the wires **305** and **302** is changed, and accordingly, a fastening member **324** for coupling the wire **302** and the pulley **721** is additionally rotatable by a certain angle.

That is, a fastening member **326**, which is a coupling portion of the wire **302** and the pulley **721**, is rotatable until being located on a common internal tangent of the pulley **721** and the pulley **722**. Similarly, a fastening member **323**, which is a coupling portion of the wire **305** and the pulley **711**, is rotatable until being located on a common internal

tangent of the pulley **711** and the pulley **712**, so that the range of rotation may be increased.

In other words, due to the pulley **712** that is an auxiliary pulley, a wire **301** and a wire **305**, which are two strands of the first jaw wire wound around the pulley **712**, are disposed at one side with respect to a plane perpendicular to the Y-axis and passing through the X-axis. Simultaneously, due to the pulley **722**, the wires **302** and **306**, which are two strands of the second jaw wire wound around the pulley **721**, are disposed at the other side with respect to the plane perpendicular to the Y-axis and passing through the X-axis.

In other words, the pulley **713** and the pulley **714** are disposed at one side with respect to the plane perpendicular to the Y-axis and passing through the X-axis, and the pulley **723** and the pulley **724** are disposed at the other side with respect to the plane perpendicular to the Y-axis and passing through the X-axis.

In other words, the wire **305** is located on the internal tangent of the pulley **711** and the pulley **712**, and the rotation angle of the pulley **711** is increased due to the pulley **712**. In addition, the wire **302** is located on the internal tangent of the pulley **721** and the pulley **722**, and the rotation angle of the pulley **721** is increased due to the pulley **722**.

According to the present disclosure, the rotation radii of the first jaw **701** and the second jaw **702** increase, so that an effect of increasing a yaw motion range in which a normal opening/closing actuation motion can be performed may be obtained.

Referring to FIG. **38**, a first rotation shaft **741** and a second rotation shaft **742** may be inserted through the end tool hub **760'** according to the modified example of the second embodiment of the present disclosure. Instead of respectively forming the first wire guide portion and the second wire guide portion on the surfaces of a first jaw pulley coupling portion **762***a* and a second jaw pulley coupling portion **762***b* facing each other as in the end tool hub **760** according to the second embodiment of the present disclosure, the pulley **712** and the pulley **722**, which are configured as separate components from the end tool hub **760'** and are able to be axially coupled to the second rotation shaft **742** that is inserted through the end tool hub **760'**, are additionally provided and allowed to function as auxiliary pulleys.

The second rotation shaft **742** inserted through the end tool hub **760'** may include two shafts including a first sub-shaft and a second sub-shaft that face each other and are disposed to be spaced apart from each other by a certain distance. The second rotation shaft **742** is divided into two parts and spaced apart from each other by a certain distance, and thus a guide tube **770** may pass through the end tool hub **760'** and a pitch hub **750** through between the two parts.

Referring to FIG. **83**, the first rotation shaft **741**, the second rotation shaft **742**, a third rotation shaft **743**, and a fourth rotation shaft **744** may be arranged sequentially from a distal end **704** toward a proximal end **705** of the end tool **700**. Accordingly, starting from the distal end **704**, the first rotation shaft **741** may be referred to as a first pin, the second rotation shaft **742** may be referred to as a second pin, the third rotation shaft **743** may be referred to as a third pin, and the fourth rotation shaft **744** may be referred to as a fourth pin.

As compared to the second embodiment, the end tool **700** of the modified example of the second embodiment of the present disclosure has the same configuration as the end tool **700** according to the second embodiment, except that the pulley **721** and the pulley **722**, which are axially coupled to the end tool hub **760'** by the second rotation shaft **742**, are provided as separate components instead of being integrally formed with a body portion **761** in the end tool hub **760'** and function as auxiliary pulleys, and thus a detailed description thereof will be omitted in the overlapping range.

Third Embodiment of Surgical Instrument for Electrocautery

FIG. **86** is a perspective view illustrating a surgical instrument for electrocautery according to a third embodiment of the present disclosure. FIGS. **87** to **92** are plan views illustrating an end tool of the surgical instrument for electrocautery of FIG. **86**.

Referring to FIG. **86**, an electric cauterization surgical instrument **10** according to the third embodiment of the present disclosure includes an end tool **800**, a manipulation portion **200**, a power transmission portion **300**, and a connection portion **400**.

As compared to the electric cauterization surgical instrument **10** according to the second embodiment, the electric cauterization surgical instrument **10** according to the third embodiment of the present disclosure is different from in a configuration of the end tool **800**, specifically, a yaw hub **880**, an actuation link **892**, and the like, which will be described in detail below.

Referring to FIGS. **86** and **87**, the end tool **800** according to the third embodiment of the present disclosure is formed at the other end of the connection portion **400**, and performs necessary motions for surgery by being inserted into a surgical site. In an example of the end tool **800**, as illustrated in FIG. **86**, a pair of jaws **803** for performing a grip motion may be used.

However, the concept of the present disclosure is not limited thereto, and various devices for performing surgery may be used as the end tool **800**. For example, a configuration of a cantilever cautery may also be used as the end tool **800**.

The end tool **800** is connected to the manipulation portion **200** by the power transmission portion **300**, and receives a driving force of the manipulation portion **200** through the power transmission portion **300** to perform a motion necessary for surgery, such as gripping, cutting, suturing, or the like.

Here, the end tool **800** of the electric cauterization surgical instrument **10** according to the third embodiment of the present disclosure is formed to be rotatable in at least one direction, and for example, the end tool **800** may be formed to perform a pitch motion around a Y-axis of FIG. **86** and simultaneously perform a yaw motion and an actuation motion around a Z-axis of FIG. **86**.

End Tool According to Third Embodiment

Hereinafter, the end tool **800** of the electric cauterization surgical instrument **10** of FIG. **86** will be described in more detail.

FIG. **86** is a perspective view illustrating the surgical instrument for electrocautery according to the third embodiment of the present disclosure. FIGS. **87** to **92** are views illustrating the end tool of the surgical instrument for electrocautery of FIG. **86**.

Here, FIG. **87** illustrates a state in which an end tool hub **860** and a pitch hub **850** are coupled, and FIG. **88** illustrates a state in which the end tool hub **860**, the yaw hub **880**, and the pitch hub **850** are removed. FIG. **89** illustrates a state in which the yaw hub **880** and the end tool hub **860** are connected to the end tool, and FIG. **90** illustrates a state in

which a first jaw **801** and a second jaw **802** are removed. Meanwhile, FIG. **91** is a view mainly illustrating wires, and FIG. **92** is a view mainly illustrating pulleys.

Referring to FIGS. **87**, **88**, **91**, and **92**, the end tool **800** according to the third embodiment of the present disclosure may include a pair of jaws for performing a grip motion, that is, the first jaw **801** and the second jaw **802**. Here, each of the first jaw **801** and the second jaw **802**, or a component encompassing the first jaw **801** and the second jaw **802** may be referred to as the jaw **803**.

In addition, the end tool **800** may include a pulley **891**, a pulley **813**, a pulley **814**, a pulley **815**, and a pulley **816**, which are associated with a rotational motion of the first jaw **801**. In addition, the end tool **800** may include a pulley **881**, a pulley **823**, a pulley **824**, a pulley **825**, and a pulley **826**, which are associated with a rotational motion of the second jaw **802**.

Here, the pulleys facing each other are illustrated in the drawings as being formed parallel to each other, but the concept of the present disclosure is not limited thereto, and each of the pulleys may be variously formed with a position and a size suitable for the configuration of the end tool.

Referring to FIG. **87**, the end tool **800** of the third embodiment of the present disclosure may include the end tool hub **860**, the pitch hub **850**, and the yaw hub **880**.

A first rotation shaft **841**, which will be described later, may be inserted through the end tool hub **860**, and the end tool hub **860** may internally accommodate at least some of the pulley **891** and the pulley **881**, which are axially coupled to the first rotation shaft **841**.

The end tool hub **860** according to the third embodiment of the present disclosure is the same as the end tool hubs **660** and **760** according to the first and third embodiments, and thus a detailed description thereof will be omitted in the overlapping range.

Referring to FIG. **87**, the pitch hub **850** may have a third rotation shaft **843** and a fourth rotation shaft **844**, which will be described later, inserted therethrough, and may be axially coupled to a first pitch pulley portion **863***a* and a second pitch pulley portion **863***b* of the end tool hub **860** by the third rotation shaft **843**. Accordingly, the end tool hub **860** may be formed to be rotatable around the third rotation shaft **843** with respect to the pitch hub **850**.

In addition, the pitch hub **850** may internally accommodate at least some of the pulley **813**, the pulley **814**, the pulley **823**, and the pulley **824** that are axially coupled to the third rotation shaft **843**. In addition, the pitch hub **850** may internally accommodate at least some of the pulley **815**, the pulley **816**, the pulley **825**, and the pulley **826** that are axially coupled to the fourth rotation shaft **844**.

One end portion of the pitch hub **850** is connected to the end tool hub **860**, and the other end portion of the pitch hub **850** is connected to the connection portion **400**.

Referring to FIG. **87**, the first rotation shaft **841** may function as an end tool jaw pulley rotation shaft, the third rotation shaft **843** may function as an end tool pitch rotation shaft, and the fourth rotation shaft **844** may function as an end tool pitch auxiliary rotation shaft of the end tool **100**.

Here, each of the rotation shafts may be divided into two parts, and the respective divided rotation shafts may be spaced apart from each other. Each of the rotation shafts is formed by being divided into two parts as described above to allow a guide tube **870** to pass through the end tool hub **860** and the pitch hub **850**.

That is, the guide tube **870** may pass between a first sub-shaft and a second sub-shaft of each of the rotation shafts. This will be described in more detail later. Here, the first sub-shaft and the second sub-shaft may be disposed on the same axis or may be disposed to be offset to a certain degree.

Meanwhile, it is illustrated in the drawings that each of the rotation shafts is formed by being divided into two parts, but the concept of the present disclosure is not limited thereto. That is, each of the rotation shafts is formed to be curved in the middle such that an escape path for the guide tube **870** is formed.

Referring to FIGS. **87** and **88**, an actuation rotation shaft **845** may be further provided in the end tool **800** according to the third embodiment of the present disclosure. In detail, the actuation rotation shaft **845** may be provided in a coupling portion of the first jaw **801** and the second jaw **802**, and the second jaw **802** rotates around the actuation rotation shaft **845** while the first jaw **801** is fixed, thereby performing an actuation motion. Here, the actuation rotation shaft **845** may be disposed closer to a distal end **804** than the first rotation shaft **841** is.

Here, in the end tool **800** of the third embodiment of the present disclosure, the first rotation shaft **841**, which is a yaw rotation shaft, and the actuation rotation shaft **845** are provided separately rather than as the same shaft.

That is, by forming the first rotation shaft **841**, which is a rotation shaft of the pulley **881**/pulley **891** that are jaw pulleys and a rotation shaft of a yaw motion, and the actuation rotation shaft **845**, which is a rotation shaft of the second jaw **802** with respect to the first jaw **801** and a rotation shaft of an actuation motion, to be spaced apart from each other by a certain distance, a space in which the guide tube **870** and the blade wire **307** accommodated therein can be gently bent may be secured. This actuation rotation shaft **845** will be described in more detail later.

The pulley **891** functions as an end tool first jaw pulley, and the pulley **881** functions as an end tool second jaw pulley. The pulley **891** may also be referred to as a first jaw pulley, and the pulley **881** may also be referred to as a second jaw pulley, and these two components may collectively be referred to as end tool jaw pulleys or simply jaw pulleys.

The pulley **891** and the pulley **881**, which are end tool jaw pulleys, are formed to face each other, and are formed to be rotatable independently of each other around the first rotation shaft **841** which is an end tool jaw pulley rotation shaft.

In this case, the pulley **891** and the pulley **881** are formed to be spaced apart from each other by a certain distance, and a blade assembly may be accommodated therebetween.

In other words, the blade assembly including the guide tube **870** may be disposed between the pulley **891** and the pulley **881**.

Meanwhile, the end tool **800** of the third embodiment of the present disclosure may further include components such as a first electrode **851**, a second electrode **852**, the guide tube **870**, and a blade **875** in order to perform a cauterizing motion and a cutting motion.

Here, components related to the driving of the blade, such as the guide tube **870** and the blade **875**, may be collectively referred to as a blade assembly. In one modified example of the present disclosure, by disposing the blade assembly including the blade **875** between the pulley **891**, which is a first jaw pulley, and the pulley **881**, which a second jaw pulley, the end tool **800** is able to perform the cutting motion using the blade in addition to the pitch and yaw motions. Components for performing a cauterizing motion and a cutting motion in the present embodiment are substantially

the same as those described in the first and second embodiments, and thus a detailed description thereof will be omitted herein.

The electric cauterization surgical instrument **10** according to the third embodiment of the present disclosure may include a wire **301**, a wire **302**, the wire **303**, the wire **304**, a wire **305**, a wire **306**, and a blade wire **307**, as in the first embodiment of the present disclosure.

(Jaw-Link-Pulley Connection Structure)

Hereinafter, a jaw-link-pulley connection structure in the end tool **800** according to the third embodiment of the present disclosure will be described in more detail.

Referring to FIGS. **87** to **101**, the end tool **800** of the third embodiment of the present disclosure includes the first jaw **801**, the second jaw **802**, the yaw hub **880**, an actuation link **592**, the first jaw pulley **891**, and the second jaw pulley **881**. Hereinafter, the pulley **891** is referred to as the first jaw pulley **891**, and the pulley **881** is referred to as the second jaw pulley **881**.

Referring to FIGS. **97** to **100**, the first jaw pulley **891** may be formed as a kind of multi-layered pulley. In other words, the first jaw pulley **891** may be formed in a form in which two pulleys are combined, and two grooves may be formed on an outer circumferential surface of the first jaw pulley **891**.

In detail, a first coupling portion **891***a* may be formed on one surface of the first jaw pulley **891**, and a second coupling portion **891***b* may be formed in the shape of a groove on the other surface opposite to the one surface on which the first coupling portion **891***a* is formed.

Here, the positions of the first coupling portion **891***a* and the second coupling portion **891***b* are positions allowing the wire **301** and the wire **305** to overlap each other. In other words, the first coupling portion **891***a* and the second coupling portion **891***b* may be formed so that at least some of the wire **302** and the wire **306** wound around the first jaw pulley **891** overlap each other.

In other words, the first coupling portion **891***a* and the second coupling portion **891***b* are asymmetrically disposed when viewed on an XY plane, so that the first coupling portion **891***a* and the second coupling portion **891***b* are disposed to be biased in any one region of the second jaw pulley **891**.

In other words, the first coupling portion **891***a* may be formed at a position at which the wire **301** may be wound around the outer circumferential surface of the first jaw pulley **891** such that the central angle is an angle between 90° and 360°. Similarly, the second coupling portion **891***b* may be formed at a position at which the wire **305** may be wound around the outer circumferential surface of the second jaw pulley **891** such that the central angle is an angle between 90° and 360°.

In addition, one end portion of the wire **301** is coupled to a fastening member **334***a*, which may be coupled to the first coupling portion **891***a* of the first jaw pulley **891**. One end portion of the wire **305** is coupled to a fastening member **334***b*, which may be coupled to the second coupling portion **891***b* of the first jaw pulley **891**.

When the wire **301** is referred to as a first jaw wire R and the wire **305** is referred to as a first jaw wire L, the first coupling portion **891***a* to which the first jaw wire R(**301**) is coupled is formed on a side opposite to one side to which the first jaw wire R(**301**) is input, so that a rotation angle of the first jaw pulley **891** is increased by increasing the length of the first jaw wire R(**305**) wound around the first jaw pulley **891**.

Also, the second coupling portion **891***b* to which the first jaw wire L(**302**) is coupled is formed on one side opposite to the other side to which the first jaw wire L(**302**) is input, so that the rotation angle of the first jaw pulley **891** may be increased by increasing the length of the first jaw wire L(**302**) wound around the first jaw pulley **891**.

A rotation radius of the second jaw pulley **891** may be increased due to the first coupling portion **891***a* and the second coupling portion **891***b*. In addition, by increasing the length of the wire **301**/wire **305** wound around the first jaw pulley **891** as described above, a long stroke of the actuation link **892** may be secured. This will be described in more detail later.

Referring to FIG. **90**, the yaw hub **880** is located between the first and second jaws **801** and **802** and the first and second jaw pulleys **891** and **881**, and may include a yaw hub body **882**.

The first jaw pulley **891** may be formed at one end portion of the yaw hub **880**. A guide slit **883** may be formed on the other end portion of the yaw hub **880** in a longitudinal direction. A guide pin **893** formed to protrude from the actuation link **892** to be described later may be fitted into the guide slit **883**.

Referring to FIGS. **90** and **93**, a through hole through which the actuation rotation shaft **845** is inserted may be formed in the yaw hub **880** at one side of the guide slit **883**. Referring to FIG. **93**, the second jaw pulley **881** is integrally formed on one side of the yaw hub **880**, but the present disclosure is not limited thereto, and various modifications are possible.

Although not shown in the drawings, it is also possible that the second jaw pulley **881** and the yaw hub **880** are each formed as a separate member, and the second jaw pulley **881** may be fixedly coupled to the yaw hub **880**, specifically, the yaw hub body **882**.

In addition, two divided first rotation shafts **841** may be inserted through the first jaw pulley **891** and the second jaw pulley **881**, respectively.

Since the second jaw pulley **881** is integrally formed with or fixedly coupled to the yaw hub **880** as described above, the yaw hub **880** does not rotate with respect to the second jaw pulley **881**, and when the second jaw pulley **881** rotates around the first rotation shaft **841**, the yaw hub **580** may also rotate around the first rotation shaft **841** together with the second jaw pulley **881**.

Referring to FIGS. **90** and **91**, the actuation rotation shaft **845** may be disposed on the yaw hub **880**. The actuation rotation shaft **845** may be divided into two parts, which may be disposed to be spaced apart from each other by a certain distance, and the guide tube **870**, the blade wire **307** accommodated in the guide tube **870**, and the blade **875** may pass through a space formed between the two divided actuation rotation shafts **845**.

Referring to FIG. **90**, the yaw hub **880**, specifically, a guide slit **883** formed in the yaw hub body **882** may be formed to extend in a longitudinal direction between the actuation rotation shaft **845** and the yaw rotation shaft **841**.

Referring to FIG. **90**, the guide slit **883** may be formed to have the same width in the longitudinal direction, and the guide pin **893** formed to protrude from the actuation link **892** is movable, specifically, linearly movable in the guide slit **883**.

Referring to FIG. **93**, on the other side of the yaw hub **880** opposite to one side thereof on which the second jaw pulley **881** is formed, an actuation pulley coupling portion **885** may be formed to protrude so as to be coupled to the first jaw pulley **891**.

The actuation pulley coupling portion **885** may share a central axis with the yaw rotation shaft **841**. However, the present disclosure is not limited thereto, and various modifications are possible, including spacing apart and placing the actuation pulley coupling portion **885** and the yaw hub **880** side by side.

Referring to FIG. **101**, the actuation link **892** may be formed to extend in a longitudinal direction. The actuation link **892** may include a link body **892***a* and a bending portion **892***b*. The link body **892***a* is a portion formed to extend in the longitudinal direction, and the bending portion **892***b* may be connected to the link body **892***a* with at least one bend.

Accordingly, one side of the actuation link **892** in which the bending portion **892***b* is located may be formed in a "U"-shape.

Referring to FIG. **101**, a pin coupling hole (no reference number is assigned) may be formed in one surface of the bending portion **892***b* that is disposed in parallel with the link body **892***a* to be spaced apart therefrom by a certain distance.

A pin coupling hole may also be formed in one surface of the link body **892***a* facing the bending portion **892***b* to correspond to the pin coupling hole of the bending portion **892***b*. The guide pin **893** may be coupled to the pin coupling hole. A plurality of guide pins **893** may be provided, and may be coupled to the pin coupling holes formed in the respective facing surfaces of the bending portion **892***b* and the link body **892***a*.

The plurality of guide pins **893** may be disposed to be spaced apart from each other by a certain distance, and one side region of the U-shaped actuation link **892** formed with the bending portion **892***b* and the link body **892***a* may provide a movement path so that the guide tube **870** can pass therethrough. Due to the 'U' shaped region formed by the bending portion **892***b* and the link body **892***a*, the movement path of the guide tube **870** moving inside the yaw hub **880** and the end tool hub **860** is not disturbed when the actuation link **892** linearly moves.

Referring to FIG. **101**, a link through-hole **892***c* may be formed on the other side of the link body **892***a* opposite to one side to which the bending portion **892***b* is connected. A protrusion **891***c* formed on the first jaw pulley **891** may be axially coupled to and fitted into the link through-hole **892***c*.

Accordingly, when the first jaw pulley **891** rotates, the actuation link **892** moves while rotating around the protrusion **891***c*.

The guide pin **893** provided in the actuation link **892** is fitted into the guide slit **883** formed in the yaw hub **880** and is movable along the shape of the guide slit **883**.

The guide pin **893** passing through the guide slit **883** may be fitted into each of slots **801***a* and **802***a* respectively formed in the first jaw **801** and the second jaw **802**. The first jaw **801** and the second jaw **802** have an X-shaped structure, and the guide pin **893** may be fitted into the slot **801***a* formed in the first jaw **801** and the slot **801***b* formed in the second jaw **802** at the same time.

The first jaw **801** and the second jaw **802** may perform an actuation motion while moving away from or close to each other with the actuation rotation shaft **845** as the center of rotation.

Referring to FIGS. **102** to **104**, when the first jaw pulley **891** rotates in an A**1** direction, the actuation link **892** axially coupled to the protrusion **891***c* formed in the first jaw pulley **891** is moved in a B**1** direction. Specifically, the guide pin **893** provided in the actuation link **892** is moved linearly along the guide slit **883** formed in the yaw hub **880**, and the guide pin **893** is fitted into the slots **801***a* and **802***a* respectively formed in the first jaw **801** and the second jaw **802**, so that the guide pin **893** pushes the first jaw **801** and the second jaw **802**. Thus, as the actuation link **892** is moved, the first jaw **801** and the second jaw **802** may perform an actuation motion while rotating around the actuation rotation shaft **845** as the center of rotation.

Referring to FIG. **103**, as the actuation link **892** is moved toward the distal end, the first jaw **801** and the second jaw **802** may perform an actuation motion in C**1** directions around the actuation rotation shaft **845** along the C**1** directions.

Referring to FIG. **104**, when the guide pin **893** is moved as much as possible toward the distal end in the slots **801***a* and **802***a* respectively formed in the first jaw **801** and the second jaw **802**, the first jaw **801** and the second jaw **802** may be further spread apart in C**2** directions.

In addition, the first jaw pulley **891** is formed in a multi-layered structure, and the first jaw wires **301** and **305** are wound so that the first jaw wires **301** and **305** overlap in different layers, and as a result, the length of the winding on the first jaw pulley **891** can be increased, and the rotation angle of the first jaw pulley **891** can be increased.

FIGS. **105** to **108** are perspective views illustrating an actuation motion of the end tool of the surgical instrument for electrocautery of FIG. **86**. The guide pin **893** provided in the actuation link **892** is movable along the slots **801***a* and **802***a* respectively formed in the first jaw **801** and the second jaw **802**, and accordingly, the first jaw **801** and the second jaw **802** may perform an actuation motion with the actuation rotation shaft **845** as the central axis of rotation.

FIGS. **109** to **111** are partial cross-sectional views illustrating an operation of the blade of the end tool of the surgical instrument for electrocautery of FIG. **86**. The operation of the blade **875** is the same as those of the first and second embodiments, and thus a detailed description thereof will be omitted in the overlapping range.

FIGS. **112** and **113** are bottom views illustrating a process of performing an opening and closing motion in a state in which the end tool of the surgical instrument for electrocautery of FIG. **86** is yaw-rotated by +90°.

The guide slit **883** formed in the yaw hub **880** may be formed in a straight line direction, and the actuation rotation shaft **845** may be disposed along a longitudinal central axis of the guide slit **883**.

The slots **801***a* and **802***a* respectively formed in the first jaw **801** and the second jaw **802** may be formed to be inclined at a certain angle with the longitudinal central axis of the guide slit **883** formed in the yaw hub **880**.

This causes the first jaw **801** and second jaw **803** to spread apart from each other as shown in FIG. **113** when the actuation link **892**, specifically the guide pin **893** that is moved by receiving power from the first jaw pulley **891**, is moved forward toward the actuation rotation shaft **845** while the actuation rotation shaft **845** remains fixed.

Referring to FIGS. **114** and **115**, the first jaw pulley **891** rotates in a state in which the end tool of the surgical instrument for electrocautery of FIG. **86** is yaw-rotated by +90°, and the guide pin **893** provided in the actuation link **892** connected to the first jaw pulley **891** is moved through the guide slit **883** formed in the yaw hub **880** and the slots **801***a* and **802***a* respectively formed in the first jaw **801** and the second jaw **802**, so that an actuation motion can be performed even in a yaw rotated state.

Referring to FIGS. **116** to **125**, there is room for problems when the guide tube **870** is in contact with the actuation link **892** while the end tool **800** is yaw-rotated, but the actuation link **892** of the present disclosure includes the link body

892*a* and the bending portion 892*b* connected thereto, which form a "U" shape, to prevent the contact with the guide tube **870**, allowing the blade wire **307** and the guide tube **870** to move stably with respect to yaw, pitch, and actuation motions of the end tool **800**.

Referring to FIGS. **126** to **136**, the end tool **800** of the electric cauterization surgical instrument **10** according to the third embodiment of the present disclosure is formed such that the jaws **801** and **802** are able to perform a cutting motion normally even when the jaws are pitch-rotated and simultaneously yaw-rotated.

Here, in the end tool **800** of the third embodiment of the present disclosure, a pin/slot-type structure is employed to secure a grip force in the actuation motion.

In detail, in the pin/slot-type structure, the actuation link **892** must move a longer distance to rotate the first jaw **801** by the same amount (that is, the actuation link **892** needs to have a long stroke). In addition, in order for the actuation link **590** to move a longer distance, the first jaw pulley **891** should rotate further. In other words, when the first jaw pulley **891** rotates further to rotate the first jaw **801** by the same amount, a greater force may be applied to the first jaw **801** by as much as the first jaw pulley **891** rotates further, so that a grip force in the actuation motion may be amplified.

In addition, in order to rotate the first jaw pulley **891** further as described above, the first jaw pulley **891** is formed in a multi-layered structure as described above to make the lengths of the wires **301** and **305** wound around the first jaw pulley **891** to be longer, thereby securing a long stroke of the actuation link **892**.

Modified Example of Third Embodiment-Disposing Auxiliary Pulley on End Tool Hub

Hereinafter, an end tool **800** of a surgical instrument according to a modified example of the third embodiment of the present disclosure will be described. Here, the end tool **300** of the surgical instrument according to the modified example of the third embodiment of the present disclosure is different from the end tool of the surgical instrument according to the third embodiment of the present disclosure described above in that the configuration of an end tool hub **860'** and the configuration of auxiliary pulleys **812** and **822** are different. The configuration changed from the third embodiment as described above will be described in detail later.

FIGS. **137** to **139** are views illustrating the end tool of the surgical instrument for electrocautery according to the modified example of the third embodiment of the present disclosure.

Referring to FIGS. **137** and **138**, the end tool **800** of the modified example of the third embodiment of the present disclosure includes a pair of jaws for performing a grip motion, specifically a first jaw **801** and a second jaw **802**, and here, each of the first jaw **801** and the second jaw **802** or a component encompassing the first jaw **801** and the second jaw **802** may be referred to as a jaw **803**.

The end tool **800** according to the modified example of the third embodiment may include a pulley **811**, the pulley **812**, a pulley **813**, a pulley **814**, a pulley **815**, and a pulley **816** that are associated with a rotational motion of the first jaw **801**. In addition, the end tool **800** may include a pulley **821**, the pulley **822**, a pulley **823**, a pulley **824**, a pulley **825**, and a pulley **826** that are associated with a rotational motion of the second jaw **802**.

Here, the pulleys facing each other are illustrated in the drawings as being formed parallel to each other, but the concept of the present disclosure is not limited thereto, and each of the pulleys may be variously formed with a position and a size suitable for the configuration of the end tool.

The end tool **800** according to the modified example of the third embodiment of the present disclosure may further include the pulley **812** and the pulley **822** as compared to the end tool **800** according to the third embodiment of the present disclosure illustrated with reference to FIG. **86**.

Referring to FIGS. **137** to **139**, the pulley **812** functions as an end tool first jaw auxiliary pulley, and the pulley **822** functions as an end tool second jaw auxiliary pulley, and these two components may collectively be referred to as end tool jaw auxiliary pulleys or simply auxiliary pulleys.

In detail, the pulley **812** and the pulley **822**, which are end tool jaw auxiliary pulleys, may be additionally provided on one side of the pulley **811** and one side of the pulley **821**, respectively. In other words, the pulley **812**, which is an auxiliary pulley, may be disposed between the pulley **811** and the pulley **813**/pulley **814**. In addition, the pulley **822**, which is an auxiliary pulley, may be disposed between the pulley **821** and the pulley **823**/pulley **824**.

The pulley **812** and the pulley **822** may be formed to be rotatable independently of each other around a second rotation shaft **842**.

The pulley **812** and the pulley **822** may serve to increase rotation angles of the first jaw **801** and the second jaw **802**, respectively, by coming into contact with a wire **305**, which is a first jaw wire, and a wire **302**, which is a second jaw wire, and changing the arrangement paths of the wire **305** and the wire **302** to a certain degree.

That is, when the auxiliary pulleys are not disposed, each of the first jaw **801** and the second jaw **802** may rotate only up to a right angle, but in the modified example of the third embodiment, by additionally providing the pulley **812** and the pulley **822**, which are auxiliary pulleys, the effect of increasing the maximum rotation angle by a certain angle can be achieved.

This enables a motion in which two jaws of the end tool **800** have to be spread apart for an actuation motion in a state in which the two jaws are yaw-rotated together by 90° in the clockwise or counterclockwise direction.

In other words, a feature of increasing the range of yaw rotation in which an actuation motion is possible may be obtained through the pulley **812** and the pulley **822**. This will be described below in more detail.

When the auxiliary pulleys are not disposed, since the first jaw wire **305** is fixedly coupled to the end tool first jaw pulley **811**, and the second jaw wire **302** is fixedly coupled to the end tool second jaw pulley **821**, each of the end tool first jaw pulley **811** and the end tool second jaw pulley **821** may rotate up to 90°.

In this case, when the actuation motion is performed in a state in which the first jaw **801** and the second jaw **802** are located at a 90° line, the first jaw **801** may be spread, but the second jaw **802** may not be rotated beyond 90°. Accordingly, when the first jaw **801** and the second jaw **802** perform a yaw motion over a certain angle, there was a problem that an actuation motion is not smoothly performed.

In order to address such a problem, in the electric cauterization surgical instrument **10** of the present disclosure, the pulley **812** and the pulley **822**, which are auxiliary pulleys, are additionally disposed at one side of the pulley **811** and one side of the pulley **821**, respectively. As described above, as the arrangement paths of the wire **305**, which is a first jaw wire, and the wire **302**, which is a second jaw wire, are changed to a certain degree by disposing the pulley **812** and the pulley **822**, a tangential direction of the

wires **305** and **302** is changed, and accordingly, a fastening member **324** for coupling the wire **302** and the pulley **821** is additionally rotatable by a certain angle.

That is, a fastening member **326**, which is a coupling portion of the wire **302** and the pulley **821**, is rotatable until being located on a common internal tangent of the pulley **821** and the pulley **822**. Similarly, a fastening member **323**, which is a coupling portion of the wire **305** and the pulley **811**, is rotatable until being located on a common internal tangent of the pulley **811** and the pulley **812**, so that the range of rotation may be increased.

In other words, due to the pulley **812** that is an auxiliary pulley, the wires **301** and **305**, which are two strands of the first jaw wire wound around the pulley **812**, are disposed at one side with respect to a plane perpendicular to the Y-axis and passing through the X-axis. Simultaneously, due to the pulley **822**, the wires **302** and **306**, which are two strands of the second jaw wire wound around the pulley **821**, are disposed at the other side with respect to the plane perpendicular to the Y-axis and passing through the X-axis.

In other words, the pulley **813** and the pulley **814** are disposed at one side with respect to the plane perpendicular to the Y-axis and passing through the X-axis, and the pulley **823** and the pulley **824** are disposed at the other side with respect to the plane perpendicular to the Y-axis and passing through the X-axis.

In other words, the wire **305** is located on the internal tangent of the pulley **811** and the pulley **812**, and the rotation angle of the pulley **811** is increased due to the pulley **812**. In addition, the wire **302** is located on the internal tangent of the pulley **821** and the pulley **822**, and the rotation angle of the pulley **821** is increased due to the pulley **822**.

According to the present disclosure, the rotation radii of the first jaw **801** and the second jaw **802** increase, so that an effect of increasing a yaw motion range in which a normal opening/closing actuation motion can be performed may be obtained.

As compared to the third embodiment, the end tool **800** of the modified example of the third embodiment of the present disclosure has the same configuration as the end tool **800** according to the third embodiment, except that the pulley **821** and the pulley **822**, which are axially coupled to the end tool hub **860'** by the second rotation shaft **842**, are provided as separate components instead of being integrally formed with a body portion **861** in the end tool hub **860'** and function as auxiliary pulleys, and thus a detailed description thereof will be omitted in the overlapping range

Fourth Embodiment of Surgical Instrument for Electrocautery

FIG. **140** is a perspective view illustrating a surgical instrument for electrocautery according to a fourth embodiment of the present disclosure. FIGS. **141** to **146** are views illustrating an end tool of the surgical instrument for electrocautery of FIG. **140**. FIG. **147** is a perspective view illustrating an end tool hub of the surgical instrument for electrocautery of FIG. **140**. FIGS. **148** and **149** are cut-away perspective views of the end tool hub of FIG. **147**. FIGS. **150** and **151** are perspective views illustrating the end tool hub of FIG. **147**. FIG. **152** is a side view illustrating the end tool hub of FIG. **147** and a guide tube. FIG. **153** is a plan view illustrating the end tool hub of FIG. **147** and the guide tube. FIG. **154** is a perspective view illustrating an actuation hub of the surgical instrument for electrocautery of FIG. **140**. FIG. **155** is a cut-away perspective view of the actuation hub of FIG. **154**. FIG. **156** is an exploded perspective view illustrating the end tool of the surgical instrument for electrocautery of FIG. **140**. FIG. **157** is a perspective view illustrating a first jaw of the end tool of the surgical instrument for electrocautery of FIG. **140**. FIG. **158** is a perspective view illustrating a second jaw of the end tool of the surgical instrument for electrocautery of FIG. **140**. FIG. **159** is a perspective view illustrating a first jaw pulley of the surgical instrument for electrocautery of FIG. **140**. FIG. **160** is a plan view illustrating an opening and closing motion of the first jaw of the end tool of the surgical instrument for electrocautery of FIG. **140**. FIG. **161** is a plan view illustrating an opening and closing motion of the second jaw of the end tool of the surgical instrument for electrocautery of FIG. **140**. FIG. **162** is a plan view illustrating an opening and closing motion of the first jaw and the second jaw of the end tool of the surgical instrument for electrocautery of FIG. **140**.

Referring to FIGS. **140** to **162** and the like, an electric cauterization surgical instrument **10** according to the fourth embodiment of the present disclosure includes an end tool **1100**, a manipulation portion **200**, a power transmission portion **300**, and a connection portion **400**.

Here, the connection portion **400** is formed in the shape of a hollow shaft, and one or more wires and electric wires may be accommodated therein. The manipulation portion **200** is coupled to one end portion of the connection portion **400**, the end tool **1100** is coupled to the other end portion thereof, and the connection portion **400** may serve to connect the manipulation portion **200** and the end tool **1100**. Here, the connection portion **400** of the electric cauterization surgical instrument **10** according to the fourth embodiment of the present disclosure includes a straight portion **401** and a bent portion **402**, wherein the straight portion **401** is formed at a side coupled to the end tool **1100**, and the bent portion **402** is formed at a side to which the manipulation portion **200** is coupled. As such, since the end portion of the connection portion **400** at the side of the manipulation portion **200** is formed to be bent, a pitch manipulation portion **201**, a yaw manipulation portion **202**, and an actuation manipulation portion **203** may be formed along an extension line of the end tool **1100** or adjacent to the extension line. In other words, it may be said that the pitch manipulation portion **201** and the yaw manipulation portion **202** are at least partially accommodated in a concave portion formed by the bent portion **402**. Due to the above-described shape of the bent portion **402**, the shapes and motions of the manipulation portion **200** and the end tool **1100** may be further intuitively matched with each other.

Meanwhile, a plane on which the bent portion **402** is formed may be substantially the same as a pitch plane, that is, an XZ plane of FIG. **140**. As such, as the bent portion **402** is formed on substantially the same plane as the XZ plane, interference with the manipulation portion may be reduced. Of course, for intuitive motions of the end tool and the manipulation portion, any form other than the XZ plane may be possible.

Meanwhile, a connector **410** may be formed on the bent portion **402**. The connector **410** may be connected to an external power supply (not shown), and the connector **410** may be connected to a jaw **1103** through electric wires **411** and **412** to transfer electrical energy supplied from the external power supply (not shown) to the jaw **1103**. Here, the connector **410** may be of a bipolar-type having two electrodes, or the connector **410** may be of a monopolar type having one electrode.

The manipulation portion **200** is formed at the one end portion of the connection portion **400** and provided as an

interface to be directly controlled by a medical doctor, for example, a tongs shape, a stick shape, a lever shape, or the like, and when the medical doctor controls the manipulation portion **200**, the end tool **1100**, which is connected to the interface and inserted into the body of a surgical patient, performs a certain motion, thereby performing surgery. Here, the manipulation portion **200** is illustrated in FIG. **140** as being formed in a handle shape that is rotatable while the finger is inserted therein, the concept of the present disclosure is not limited thereto, and various types of manipulation portions that are connected to the end tool **1100** and manipulate the end tool **1100** may be possible.

The end tool **1100** is formed on the other end portion of the connection portion **400**, and performs necessary motions for surgery by being inserted into a surgical site. In an example of the end tool **1100** described above, as shown in FIG. **140**, a pair of jaws **1103** for performing a grip motion may be used. However, the concept of the present disclosure is not limited thereto, and various devices for performing surgery may be used as the end tool **1100**. For example, a configuration of a cantilever cautery may also be used as the end tool. The end tool **1100** is connected to the manipulation portion **200** by the power transmission portion **300**, and receives a driving force of the manipulation portion **200** through the power transmission portion **300** to perform a motion necessary for surgery, such as gripping, cutting, suturing, or the like.

Here, the end tool **1100** of the electric cauterization surgical instrument **10** according to the fourth embodiment of the present disclosure is formed to be rotatable in at least one direction, for example, the end tool **1100** may perform a pitch motion around a Y-axis of FIG. **140** and simultaneously perform a yaw motion and an actuation motion around a Z-axis of FIG. **140**.

The power transmission portion **300** may connect the manipulation portion **200** to the end tool **1100**, transmit the driving force of the manipulation portion **200** to the end tool **1100**, and include a plurality of wires, pulleys, links, sections, gears, or the like.

The end tool **1100**, the manipulation portion **200**, the power transmission portion **300**, and the like of the electric cauterization surgical instrument **10** of FIG. **140** will be described in detail later.

(Power Transmission Portion)

Hereinafter, the power transmission portion **300** of the electric cauterization surgical instrument **10** of FIG. **140** will be described in more detail.

Referring to FIGS. **140** to **146** and the like, the power transmission portion **300** of the electric cauterization surgical instrument **10** according to an embodiment of the present disclosure may include a wire **301**, a wire **302**, a wire **303**, a wire **304**, a wire **305**, a wire **306**, and a blade wire **307**.

Here, the wire **301** and the wire **305** may be paired to serve as first jaw wires. The wire **302** and the wire **306** may be paired to serve as second jaw wires. Here, the components encompassing the wires **301** and **305**, which are first jaw wires, and the wires **302** and **306**, which are second jaw wires, may be referred to as jaw wires. In addition, the wires **303** and **304** may be paired to serve as pitch wires.

In addition, the power transmission portion **300** of the electric cauterization surgical instrument **10** according to an embodiment of the present disclosure may include a fastening member **321**, a fastening member **322**, a fastening member **323**, a fastening member **324**, a fastening member **326**, and a fastening member **327** that are coupled to respective end portions of the wires to respectively couple the wires and the pulleys. Here, each of the fastening members may have various shapes as necessary, such as a ball shape, a tube shape, and the like.

Here, at the end tool **1100** side, the fastening member **321**/fastening member **322** may serve as pitch wire-end tool fastening members, the fastening member **323** may serve as a first jaw wire-end tool fastening member, and the fastening member **326** may serve as a second jaw wire-end tool fastening member.

Further, at the manipulation portion **200** side, the fastening member **324** may serve as a first jaw wire-manipulation portion fastening member, and the fastening member **327** may serve as a second jaw wire-manipulation portion fastening member. In addition, although not shown in the drawings, a pitch wire-manipulation portion fastening member and a blade wire-manipulation portion fastening member may be further formed at the manipulation portion **200** side.

The coupling relationship between the wires, the fastening members, and the respectively pulleys will be described in detail as follows.

First, the wires **301** and **305**, which are first jaw wires, may be a single wire. The fastening member **323**, which is a first jaw wire-end tool fastening member, is inserted at an intermediate point of the first jaw wire, which is a single wire, and the fastening member **323** is crimped and fixed, and then, both strands of the first jaw wire centered on the fastening member **323** may be referred to as the wire **301** and the wire **305**, respectively.

Alternatively, the wires **301** and **305**, which are first jaw wires, may also be formed as separate wires, and connected by the fastening member **323**.

In addition, by coupling the fastening member **323** to a pulley **1111**, the wires **301** and **305** may be fixedly coupled to the pulley **1111**. This allows the pulley **1111** to rotate as the wires **301** and **305** are pulled and released.

Meanwhile, the first jaw wire-manipulation portion fastening member **324** may be coupled to the other end portions of the wires **301** and **305**, which are opposite to one end portions to which the fastening member **323** is fastened.

In addition, by coupling the first jaw wire-manipulation portion fastening member **324** to a pulley **211**, the wires **301** and **305** may be fixedly coupled to the pulley **211**. As a result, when the pulley **211** is rotated by a motor or human power, the wire **301** and the wire **305** are pulled and released, allowing the pulley **1111** of the end tool **1100** to rotate.

In the same manner, the wire **302** and the wire **306**, which are second jaw wires, are coupled to each of the fastening member **326**, which is a second jaw wire-end tool fastening member, and the second jaw wire-manipulation portion fastening member **327**. In addition, the fastening member **326** is coupled to a pulley **1121**, and the second jaw wire-manipulation portion fastening member is coupled to a pulley **220**. As a result, when the pulley **220** is rotated by a motor or a human force, the pulley **1121** of the end tool **1100** may be rotated as the wire **302** and the wire **306** are pulled and released.

In the same manner, the wire **304**, which is a pitch wire, is coupled to the fastening member **321**, which is a pitch wire-end tool fastening member, and the pitch wire-manipulation portion fastening member (not shown). In addition, the wire **303**, which is a pitch wire, is coupled to a fastening member **322**, which is a pitch wire-end tool fastening member, and the pitch wire-manipulation portion fastening member (not shown).

In addition, the fastening member **321** is coupled to a first pitch pulley portion **1163*a*** of an end tool hub **1160**, the fastening member **322** is coupled to a second pitch pulley

portion **1163***b* of the end tool hub **1160**, and the pitch wire-manipulation portion fastening member (not shown) is coupled to a pulley **231**. As a result, when the pulley **231** is rotated by a motor or human force, the wire **303** and the wire **304** are pulled and released, allowing the end tool hub **1160** of the end tool **1100** to rotate.

Meanwhile, one end portion of the blade wire **307** is coupled to a blade **1175** to be described later, and the other end portion thereof is coupled to a blade manipulation portion **260** of the manipulation portion **200**. By the manipulation of the blade manipulation portion **260**, a cutting motion may be performed as the blade wire **307** is moved from a proximal end **1105** toward a distal end **1104** of the end tool **1100**, or the blade wire **307** may return from the distal end **1104** toward the proximal end **1105** of the end tool **1100**.

At this time, at least a part of the blade wire **307** may be accommodated in a guide tube **1170** to be described later. Accordingly, when the guide tube **1170** is bent in response to a pitch motion or yaw motion of the end tool **1100**, the blade wire **307** accommodated therein may also be bent together with the guide tube **1170**. The guide tube **1170** will be described in more detail later.

In addition, the blade wire **307** is formed in a longitudinal direction of the connection portion **400** to be linearly movable in the connection portion **400**. In addition, since one end portion of the blade wire **307** is coupled to the blade **1175**, when the blade wire **307** is linearly moved in the longitudinal direction of the connection portion **400**, the blade **1175** connected thereto is also linearly moved. That is, when the blade wire **307** is linearly moved in the longitudinal direction of the connection portion **400**, a cutting motion is performed as the blade **1175** connected thereto is moved toward the distal end **1104** or the proximal end **1105** of the end tool **1100**. This will be described in more detail later.

(End Tool)

Hereinafter, the end tool **1100** of the electric cauterization surgical instrument **10** of FIG. **140** will be described in more detail.

FIG. **140** is a perspective view illustrating the surgical instrument for electrocautery according to the fourth embodiment of the present disclosure. FIGS. **141** to **146** are views illustrating the end tool of the surgical instrument for electrocautery of FIG. **140**.

Here, FIG. **141** illustrates a state in which the end tool hub **1160** and a pitch hub **1150** are coupled, and FIG. **142** illustrates a state in which the end tool hub **1160** and pitch hub **1150** are removed. FIG. **143** illustrates a state in which a first jaw **1101** and a second jaw **1102** are removed, and FIG. **144** illustrates a state in which the first jaw **1101**, the second jaw **1102**, the pulley **1111**, the pulley **1121**, and the like are removed. Meanwhile, FIG. **145** is a view mainly illustrating the wires, and FIG. **146** is a view mainly illustrating the pulleys.

Referring to FIGS. **140** to **162** and the like, the end tool **1100** of the fourth embodiment of the present disclosure includes a pair of jaws for performing a grip motion, that is, the first jaw **1101** and a second jaw **1102**. Here, each of the first jaw **1101** and the second jaw **1102**, or a component encompassing the first jaw **1101** and the second jaw **1102** may be referred to as the jaw **1103**.

Further, the end tool **1100** may include the pulley **1111**, a pulley **1113**, a pulley **1114**, a pulley **1115**, and a pulley **1116** associated with a rotational motion of the first jaw **1101**. In addition, the end tool **1100** may include the pulley **1121**, a pulley **1123**, a pulley **1124**, a pulley **1125**, and a pulley **1126**, which are associated with a rotational motion of the second jaw **1102**.

Here, the pulleys facing each other are illustrated in the drawings as being formed parallel to each other, but the concept of the present disclosure is not limited thereto, and each of the pulleys may be variously formed with a position and a size suitable for the configuration of the end tool.

Further, the end tool **1100** of the fourth embodiment of the present disclosure may include the end tool hub **1160** and the pitch hub **1150**.

A first rotation shaft **1141** to be described later may be inserted through the end tool hub **1160**, and the pulley **1111** and the pulley **1121** axially coupled to the first rotation shaft **1141** and at least some of the first jaw **1101** and the second jaw **1102** coupled to the pulley **1111** and the pulley **1121** may be accommodated inside the end tool hub **1160**. Here, in an embodiment of the present disclosure, a wire guide portion **1168** serving as an auxiliary pulley is formed in the end tool hub **1160**. That is, a first wire guide portion **1168***a* and a second wire guide portion **1168***b* for guiding paths of the wire **305** and the wire **302** may be formed in the end tool hub **1160**. The wire guide portions **1168** of the end tool hub **1160** may serve as auxiliary pulleys (see **612** and **622** of FIG. **39**) of the first embodiment and change the paths of the wires, and the first wire guide portion **1168***a* and the second wire guide portion **1168***b* of the end tool hub **1160** serving as auxiliary pulleys will be described in more detail later.

Meanwhile, the first pitch pulley portion **1163***a* and the second pitch pulley portion **1163***b*, which serve as end tool pitch pulleys, may be formed at one end portion of the end tool hub **1160**. The wire **303** and the wire **304**, which are pitch wires, are coupled to the first pitch pulley portion **1163***a* and the second pitch pulley portion **1163***b*, which serve as end tool pitch pulleys, and a pitch motion is performed while the end tool hub **1160** rotates around a third rotation shaft **1143**.

The third rotation shaft **1143** and a fourth rotation shaft **1144** may be inserted through the pitch hub **1150**, and the pitch hub **1150** may be axially coupled to the end tool hub **1160** by the third rotation shaft **1143**. Accordingly, the end tool hub **1160** may be formed to be pitch-rotatable around the third rotation shaft **1143** with respect to the pitch hub **1150**.

Further, the pitch hub **1150** may internally accommodate at least some of the pulley **1113**, the pulley **1114**, the pulley **1123**, and the pulley **1124** that are axially coupled to the third rotation shaft **1143**. Further, the pitch hub **1150** may internally accommodate at least some of the pulley **1115**, the pulley **1116**, the pulley **1125**, and the pulley **1126** that are axially coupled to the fourth rotation shaft **1144**.

One end portion of the pitch hub **1150** is connected to the end tool hub **1160**, and the other end portion of the pitch hub **1150** is connected to the connection portion **400**.

Here, the end tool **1100** of the fourth embodiment of the present disclosure may include the first rotation shaft **1141**, the third rotation shaft **1143**, and the fourth rotation shaft **1144**. As described above, the first rotation shaft **1141** may be inserted through the end tool hub **1160**, and the third rotation shaft **1143** and the fourth rotation shaft **1144** may be inserted through the pitch hub **1150**.

The first rotation shaft **1141**, the third rotation shaft **1143**, and the fourth rotation shaft **1144** may be arranged sequentially from the distal end **1104** toward the proximal end **1105** of the end tool **1100**. Accordingly, starting from the distal end **1104**, the first rotation shaft **1141** may be referred to as

a first pin, the third rotation shaft **1143** may be referred to as a third pin, and the fourth rotation shaft **1144** may be referred to as a fourth pin.

Here, the first rotation shaft **1141** may function as an end tool jaw pulley rotation shaft, the third rotation shaft **1143** may function as an end tool pitch rotation shaft, and the fourth rotation shaft **1144** may function as an end tool pitch auxiliary rotation shaft of the end tool **1100**.

Here, each of the rotation shafts may include two shafts of a first sub-shaft and a second sub-shaft. Alternatively, it may be said that each of the rotation shafts is formed by being divided into two parts.

For example, the first rotation shaft **1141** may include two shafts of a first sub-shaft **1141***a* and a second sub-shaft **1141***b*. In addition, the third rotation shaft **1143** may include two shafts of a first sub-shaft **1143***a* and a second sub-shaft **1143***b*. The fourth rotation shaft **1144** may include two shafts of a first sub-shaft and a second sub-shaft.

Each of the rotation shafts is formed by being divided into two parts as described above to allow the guide tube **1170** to be described later to pass through the end tool hub **1160** and the pitch hub **1150**. That is, the guide tube **1170** may pass between the first sub-shaft and the second sub-shaft of each of the rotation shafts. This will be described in more detail later. Here, the first sub-shaft and the second sub-shaft may be disposed on the same axis or may be disposed to be offset to a certain degree.

Meanwhile, it is illustrated in the drawings that each of the rotation shafts is formed by being divided into two parts, but the concept of the present disclosure is not limited thereto. That is, each of the rotation shafts is formed to be curved in the middle such that an escape path for the guide tube **1170** is formed.

Each of the rotation shafts **1141**, **1143**, and **1144** may be fitted into one or more pulleys, which will be described in detail below.

Meanwhile, the end tool **1100** may further include an actuation rotation shaft **1145**. In detail, the first jaw **1101** and the second jaw **1102** may be axially coupled by the actuation rotation shaft **1145**, and in this state, an actuation motion may be performed while the first jaw **1101** and the second jaw **1102** rotate around the actuation rotation shaft **1145**. Here, the actuation rotation shaft **1145** may be disposed closer to the distal end **1104** than the first rotation shaft **1141** is.

Here, in the end tool **1100** of the fourth embodiment of the present disclosure, the first rotation shaft **1141**, which is a yaw rotation shaft, and the actuation rotation shaft **1145** are provided separately rather than as the same shaft. That is, by forming the first rotation shaft **1141**, which is a rotation shaft of the pulley **1111**/pulley **1121** that are jaw pulleys and a rotation shaft of a yaw motion, and the actuation rotation shaft **1145**, which is a rotation shaft of the second jaw **1102** with respect to the first jaw **1101** and a rotation shaft of an actuation motion, to be spaced apart from each other by a certain distance, a space in which the guide tube **1170** and the blade wire **307** accommodated therein can be gently bent may be secured. The actuation rotation shaft **1145** will be described in detail later.

The pulley **1111** functions as an end tool first jaw pulley, and the pulley **1121** functions as an end tool second jaw pulley. The pulley **1111** may also be referred to as a first jaw pulley, and the pulley **1121** may also be referred to as a second jaw pulley, and these two components may collectively be referred to as end tool jaw pulleys or simply jaw pulleys.

The pulley **1111** and the pulley **1121**, which are end tool jaw pulleys, are formed to face each other, and are formed to be rotatable independently of each other around the first rotation shaft **1141** which is an end tool jaw pulley rotation shaft. In this case, the pulley **1111** and pulley **1121** are formed to be spaced apart by a certain distance, and a blade assembly accommodation portion may be accommodated therebetween. In addition, at least a part of a blade assembly to be described later may be disposed in the blade assembly accommodation portion. In other words, the blade assembly including the guide tube **1170** may be disposed between the pulley **1111** and the pulley **1121**.

Here, since the pulley **1111** is connected to the first jaw **1101**, when the pulley **1111** rotates around the first rotation shaft **1141**, the first jaw **1101** may also rotate around the first rotation shaft **1141** together with the pulley **1111**.

Meanwhile, since the pulley **1121** is connected to the second jaw **1102**, when the pulley **1121** rotates around the first rotation shaft **1141**, the second jaw **1102** connected to the pulley **1121** may rotate around the first rotation shaft **1141**.

In addition, a yaw motion and an actuation motion of the end tool **1100** are performed in response to the rotation of the pulley **1111** and the pulley **1121**. That is, when the pulley **1111** and the pulley **1121** rotate in the same direction around the first rotation shaft **1141**, the yaw motion is performed as the first jaw **1101** and the second jaw **1102** rotate with the first rotation shaft **1141** as the center of rotation. Meanwhile, when the pulley **1111** and the pulley **1121** rotate in opposite directions around the first rotation shaft **1141**, the actuation motion is performed as the first jaw **1101** and the second jaw **1102** rotate around the actuation rotation shaft **1145**.

The pulley **1113** and the pulley **1114** function as end tool first jaw pitch main pulleys, and the pulley **1123** and the pulley **1124** function as end tool second jaw pitch main pulleys, and these two components may collectively be referred to as end tool jaw pitch main pulleys.

The pulley **1115** and the pulley **1116** function as end tool first jaw pitch sub-pulleys, and the pulley **1125** and the pulley **1126** function as end tool second jaw pitch sub-pulleys, and these two components collectively may be referred to as end tool jaw pitch sub-pulleys.

Hereinafter, components associated with the rotation of the pulley **1111** will be described.

The pulley **1113** and the pulley **1114** function as end tool first jaw pitch main pulleys. That is, the pulley **1113** and the pulley **1114** function as main rotation pulleys for a pitch motion of the first jaw **1101**. Here, the wire **301**, which is a first jaw wire, is wound around the pulley **1113**, and the wire **305**, which is a first jaw wire, is wound around the pulley **1114**.

The pulley **1115** and the pulley **1116** function as end tool first jaw pitch sub-pulleys. That is, the pulley **1115** and the pulley **1116** function as sub-rotation pulleys for a pitch motion of the first jaw **1101**. Here, the wire **301**, which is a first jaw wire, is wound around the pulley **1115**, and the wire **305**, which is a first jaw wire, is wound around the pulley **1116**.

Here, the pulley **1113** and the pulley **1114** are disposed on one side of the pulley **1111** to face each other. Here, the pulley **1113** and the pulley **1114** are formed to be rotatable independently of each other around the third rotation shaft **1143** that is an end tool pitch rotation shaft. In addition, the pulley **1115** and the pulley **1116** are disposed on one side of the pulley **1113** and one side of the pulley **1114**, respectively, to face each other. Here, the pulley **1115** and the pulley **1116** are formed to be rotatable independently of each other

around the fourth rotation shaft **1144** that is an end tool pitch auxiliary rotation shaft. Here, in the drawings, it is illustrated that the pulley **1113**, the pulley **1115**, the pulley **1114**, and the pulley **1116** are all formed to be rotatable around a Y-axis direction, but the concept of the present disclosure is not limited thereto, and the rotation axes of the respective pulleys may be formed in various directions according to configurations thereof.

The wire **301**, which is a first jaw wire, is sequentially wound to make contact with at least portions of the pulley **1115**, the pulley **1113**, and the pulley **1111**. In addition, the wire **305** connected to the wire **301** by the fastening member **323** is sequentially wound to make contact with at least portions of the pulley **1111**, the first wire guide portion **1168***a* of the end tool hub **1160**, the pulley **1114**, and the pulley **1116**.

In other words, the wire **301** and the wire **305**, which are the first jaw wire, are sequentially wound to make contact with at least portions of the pulley **1115**, the pulley **1113**, the pulley **1111**, the first wire guide portion **1168***a* of the end tool hub **1160**, the pulley **1114**, and the pulley **1116**, and the wire **301** and the wire **305** formed to move along the above pulleys while rotating the above pulleys.

Accordingly, when the wire **301** is pulled in the direction of an arrow **301** of FIG. **145**, the fastening member **323** to which the wire **301** is coupled and the pulley **1111** coupled to the fastening member **323** are rotated in the counterclockwise direction. On the contrary, when the wire **305** is pulled in the direction of an arrow **305** of FIG. **145**, the fastening member **323** to which the wire **305** is coupled and the pulley **1111** coupled to the fastening member **323** are rotated in the clockwise direction in the FIG. **145**.

Next, components associated with the rotation of the pulley **1121** will be described.

The pulley **1123** and the pulley **1124** function as end tool second jaw pitch main pulleys. That is, the pulley **1123** and the pulley **1124** function as main rotation pulleys for a pitch motion of the second jaw **1102**. Here, the wire **306**, which is a second jaw wire, is wound around the pulley **1123**, and the wire **302**, which is a second jaw wire, is wound around the pulley **1124**.

The pulley **1125** and the pulley **1126** function as end tool second jaw pitch sub-pulleys. That is, the pulley **1125** and the pulley **1126** function as sub-rotation pulleys for a pitch motion of the second jaw **1102**. Here, the wire **306**, which is a second jaw wire, is wound around the pulley **1125**, and the wire **302**, which is a second jaw wire, is wound around the pulley **1126**.

Here, the pulley **1123** and the pulley **1124** are disposed on one side of the pulley **1121** to face each other. Here, the pulley **1123** and the pulley **1124** are formed to be rotatable independently of each other around the third rotation shaft **1143** that is an end tool pitch rotation shaft. In addition, the pulley **1125** and the pulley **1126** are disposed on one side of the pulley **1123** and one side of the pulley **1124**, respectively, to face each other. Here, the pulley **1125** and the pulley **1126** are formed to be rotatable independently of each other around the fourth rotation shaft **1144** that is an end tool pitch auxiliary rotation shaft. Here, in the drawings, it is illustrated that all of the pulley **1123**, the pulley **1125**, the pulley **1124**, and the pulley **1126** are formed to be rotatable around the Y-axis direction, but the concept of the present disclosure is not limited thereto, and the rotating axes of the respective pulleys may be formed in various directions according to configurations thereof.

The wire **306**, which is a second jaw wire, is sequentially wound to make contact with at least portions of the pulley **1125**, the pulley **1123**, and the pulley **1121**. In addition, the wire **302** connected to the wire **306** by the fastening member **326** is sequentially wound to make contact with at least portions of the pulley **1121**, the second wire guide portion **1168***b* of the end tool hub **1160**, the pulley **1124**, and the pulley **1126**.

In other words, the wire **306** and the wire **302**, which are the second jaw wire, are sequentially wound to make contact with at least portions of the pulley **1125**, the pulley **1123**, the pulley **1121**, the second wire guide portion **1168***b* of the end tool hub **1160**, the pulley **1124**, and the pulley **1126**, and the wire **306** and the wire **302** are formed to move along the above pulleys while rotating the above pulleys.

Accordingly, when the wire **306** is pulled in the direction of an arrow **306** of FIG. **145**, the fastening member **326** to which the wire **306** is coupled and the pulley **1121** coupled to the fastening member **326** are rotated in the clockwise direction in FIG. **145**. On the contrary, when the wire **302** is pulled toward the arrow **302** of FIG. **145**, the fastening member **326** coupled to the wire **302** and the pulley **1121** coupled to the fastening member **326** may rotate in the counterclockwise direction in FIG. **145**.

Hereinafter, a pitch motion of the present disclosure will be described in more detail.

Meanwhile, when the wire **301** is pulled in the direction of the arrow **301** of FIG. **145**, and simultaneously, the wire **305** is pulled in the direction of the arrow **305** of FIG. **145** (that is, when both strands of the first jaw wire are pulled), as shown in FIG. **144**, since the wires **301** and **305** are wound around lower portions of the pulley **1113** and the pulley **1114** rotatable around the third rotation shaft **1143**, which is an end tool pitch rotation shaft, the pulley **1111** to which the wires **301** and **305** are fixedly coupled and the end tool hub **1160** to which the pulley **1111** is coupled rotate as a whole in the counterclockwise direction around the third rotation shaft **1143**, and as a result, the end tool **1100** may rotate downward to perform the pitch motion. At this time, since the second jaw **1102** and the wires **302** and **306** fixedly coupled thereto are wound around upper portions of the pulley **1123** and the pulley **1124** rotatable around the third rotation shaft **1143**, the wires **302** and **306** are released in the opposite directions of the arrows **302** and **306**, respectively.

On the contrary, when the wire **302** is pulled in the direction of the arrow **302** of FIG. **145**, and simultaneously, the wire **306** is pulled in the direction of the arrow **306** of FIG. **145**, as shown in FIG. **144**, since the wires **302** and **306** are wound around the upper portions of the pulley **1123** and the pulley **1124** rotatable around the third rotation shaft **1143**, which is an end tool pitch rotation shaft, the pulley **1121** to which the wires **302** and **306** are fixedly coupled and the end tool hub **1160** to which the pulley **1121** is coupled rotate as a whole in the clockwise direction around the third rotation shaft **1143**, and as a result, the end tool **1100** may rotate upward to perform the pitch motion. At this time, since the first jaw **1101** and the wires **301** and **305** fixedly coupled thereto are wound around lower portions of the pulley **1113** and the pulley **1114** rotatable around the third rotation shaft **1143**, the wires **302** and **306** are moved in the opposite directions of the arrows **301** and **305**, respectively.

Meanwhile, the end tool hub **1160** of the end tool **1100** of the electric cauterization surgical instrument **10** of the present disclosure may further include the first pitch pulley portion **1163***a* and the second pitch pulley portion **1163***b* serving as end tool pitch pulleys, the manipulation portion **200** may further include the pulley **231** and a pulley **232**, which are manipulation portion pitch pulleys, and the power

transmission portion **300** may further include the wire **303** and the wire **304** which are pitch wires.

In detail, the end tool hub **1160** including the first pitch pulley portion **1163***a* and the second pitch pulley portion **1163***b* may be formed to be rotatable around the third rotation shaft **1143** that is an end tool pitch rotation shaft. In addition, the wires **303** and **304** may serve to connect the first and second pitch pulley portions **1163***a* and **1163***b* of the end tool **1100** and the pulleys **231** and **232** of the manipulation portion **200**.

Thus, when the pulleys **231** and **232** of the manipulation portion **200** rotate, the rotation of the pulleys **231** and **232** is transmitted to the end tool hub **1160** of the end tool **1100** through the wires **303** and **304**, causing the end tool hub **1160** to rotate as well, and as a result, the end tool **1100** performs a pitch motion while rotating.

That is, the electric cauterization surgical instrument **10** according to the fourth embodiment of the present disclosure includes the first and second pitch pulley portions **1163***a* and **1163***b* of the end tool **1100**, the pulleys **231** and **232** of the manipulation portion **200**, and the wires **303** and **304** of the power transmission portion **300** in order to transmit driving force for a pitch motion, and thus, the driving force for the pitch motion of the manipulation portion **200** is more completely transmitted to the end tool **1100**, thereby improving operation reliability.

(Blade Wire and Guide Tube)

Hereinafter, the blade wire **307** and the guide tube **1170** of the present disclosure will be described in more detail.

The guide tube **1170** according to the present disclosure is formed to surround the blade wire **307** in a certain section, and at this time, the blade wire **307** is movable inside the guide tube **1170**. In other words, in a state in which in which the blade wire **307** is inserted into the guide tube **1170**, the blade wire **307** is movable relative to the guide tube **1170**.

Here, the guide tube **1170** serves to guide the path of the blade wire **307** by preventing the blade wire **307** from being curved in an unintended direction when the blade wire **307** is pushed or pulled. A cutting motion may be smoothly performed by the guide tube **1170**.

Meanwhile, one end portion of the guide tube **1170** may be fixedly coupled to an actuation hub **1190** to be described later. Here, the actuation hub **1190** may serve as a first coupling portion. In addition, the other end portion of the guide tube **1170** may be fixedly coupled to a second coupling portion (not shown) in the connection portion **400**. Since both end portions of the guide tube **1170** are fixedly coupled to certain points (the first coupling portion and the second coupling portion) as described above, respectively, the entire length of the guide tube **1170** may remain constant. Accordingly, the length of the blade wire **307** inserted into the guide tube **1170** may also remain constant.

Meanwhile, the guide tube **1170** according to the present disclosure may be formed of a flexible material and formed to be bendable. Accordingly, when the end tool **1100** performs a yaw motion around the first rotation shaft **1141** or a pitch motion around the third rotation shaft **1143**, the guide tube **1170** may be bent while being deformed in shape corresponding thereto. In addition, when the guide tube **1170** is bent, the blade wire **307** placed thereinside is also bent.

Here, although the length of the guide tube **1170** is constant, the relative position and distance of the first coupling portion (i.e., the actuation hub **1190**) and the second coupling portion (not shown) may be changed as the end tool **1100** is pitch-rotated or yaw-rotated, and thus a space for the guide tube **1170** to move by the changed distance is required. To this end, a pitch slit **1164** and a yaw slit **1165** may be provided in the end tool hub **1160** to form spaces for movement of the guide tube **1170**. Such a configuration of the end tool hub **1160** will be described in detail later.

Meanwhile, as described above, the blade wire **307** is inserted through the guide tube **1170**, and the blade wire **307** is relatively movable inside the guide tube **1170** with respect to the guide tube **1170**. That is, when the blade wire **307** is pulled in a state in which the guide tube **1170** is fixed, the blade **1175** connected to the blade wire **307** is moved toward the proximal end **1105**, and when the blade wire **307** is pushed, the blade **1175** connected to the blade wire **307** is moved toward the distal end **1104**.

This will be described below in more detail.

The most reliable way to perform a cutting motion using the blade **1175** is by pushing and pulling the blade **1175** with the blade wire **307**. In addition, in order for the blade wire **307** to push and pull the blade **1175**, the guide tube **1170** that can guide the path of the blade wire **307** should be provided. When the guide tube **1170** does not guide the path of the blade wire **307** (i.e., does not hold the blade wire **307**), a phenomenon may occur in which cutting is not performed and a middle portion of the blade wire **307** is curved even when the blade wire **307** is pushed. Accordingly, in order to reliably perform the cutting motion using the blade **1175**, the blade wire **307** and the guide tube **1170** should be essentially included.

However, when the blade wire **307** is used to drive a cutting motion, the cutting should be performed while pushing the blade wire **307**, and in this case, in order for the blade wire **307** to receive a force, a relatively stiff (i.e., non-bendable) wire should be used for the blade wire **307**. However, the stiff (i.e., non-bendable) wire may have a small bendable range and may be permanently deformed when a force equal to or greater than a certain degree is applied.

In other words, in the case of a stiff (i.e., non-bendable) wire, there is a minimum radius of curvature that may be bent and spread without permanent deformation. In other words, when the wire or the guide tube is curved below a specific radius of curvature, both the wire and the guide tube may undergo permanent deformation while being bent, thereby restricting the capacity to perform cutting while moving backward and forward. Thus, it is necessary to keep the blade wire **307** curved while having a gentle curvature.

Thus, in order to prevent the blade wire **307** from being rapidly bent while passing through the pulleys, a space, in which the blade wire **307** can be gently bent, is required between the jaw **1103** (i.e., the actuation rotation shaft **1145**) and the end tool hub **1160** (i.e., the first rotation shaft **1141** that is a yaw shaft).

To this end, according to the present disclosure, the first rotation shaft **1141**, which is a yaw rotation shaft, and the actuation rotation shaft **1145** are separately provided, and the first rotation shaft **1141** and the actuation rotation shaft **1145** are spaced apart from each other by a certain distance, thereby forming a space in which the blade wire **307** and the guide tube **1170** can be gently bent.

As described above, since the blade wire **307** and the guide tube **1170** need to be connected to the blade **1175** through the end tool hub **1160**, and a space in which the blade wire **307** and the guide tube **1170** can be bent in the end tool hub **1160** is necessary, in the present disclosure, 1) spaces, through which the blade wire **307**/the guide tube **1170** can pass and simultaneously are bendable, that is, the pitch slit **1164** and the yaw slit **1165**, are formed in the end tool hub **1160**, 2) each of the rotation shafts is formed by

being divided into two parts, and 3) a pitch round portion **1166** and a yaw round portion **1167** are additionally formed to guide the bending of the blade wire **307** and the guide tube **1170**.

In other words, when one end portion of the guide tube **1170** is fixed in the connection portion **400**, and the other end portion thereof is moved while performing pitch and yaw motions, the guide tube **1170** is curved in a direction, in which the gentlest curvature (hereinafter, referred to as "maximum gentle curvature") can be achieved in response to a change in a distance between both end portions thereof. As such, by achieving the maximum gentle curvature of the natural state, the motion of the blade wire **307** is smooth and the permanent deformation does not occur.

Thus, in order to secure the maximum gentle curvature, the pitch slit **1164** and the yaw slit **1165** are formed on the path of the guide tube **1170**, and furthermore, the pitch round portion **1166** and the yaw round portion **1167** may be additionally formed in the end tool hub **1160**. Accordingly, the guide tube **1170** may have such a shape that is the most similar to the maximum gentle curvature (although not having the maximum gentle curvature).

Hereinafter, the end tool hub **1160** will be described in more detail.

(End Tool Hub)

FIG. **147** is a perspective view illustrating the end tool hub of the surgical instrument for electrocautery of FIG. **140**. FIGS. **148** and **149** are cut-away perspective views of the end tool hub of FIG. **147**. FIGS. **150** and **151** are perspective views illustrating the end tool hub of FIG. **147**. FIG. **152** is a side view illustrating the end tool hub of FIG. **147** and the guide tube. FIG. **153** is a plan view illustrating the end tool hub of FIG. **147** and the guide tube.

Referring to FIGS. **147** to **153**, the end tool hub **1160** includes a body portion **1161**, a first jaw pulley coupling portion **1162***a*, a second jaw pulley coupling portion **1162***b*, the first pitch pulley portion **1163***a*, the second pitch pulley portion **1163***b*, the pitch slit **1164**, the yaw slit **1165**, the pitch round portion **1166**, the yaw round portion **1167**, and the wire guide portion **1168**. In addition, the wire guide portion **1168** includes the first wire guide portion **1168***a* and the second wire guide portion **1168***b*.

The first jaw pulley coupling portion **1162***a* and the second jaw pulley coupling portion **1162***b* may be formed in the end tool hub **1160** at the distal end side. Here, the first jaw pulley coupling portion **1162***a* and the second jaw pulley coupling portion **1162***b* are formed to face each other, and the pulley **1111** and the pulley **1121** are accommodated therein. Here, the first jaw pulley coupling portion **1162***a* and the second jaw pulley coupling portion **1162***b* may be formed to be approximately parallel to a plane perpendicular to the first rotation shaft **1141** that is a yaw rotation shaft.

The first jaw pulley coupling portion **1162***a* and the second jaw pulley coupling portion **1162***b* are connected by the body portion **1161**. That is, the first jaw pulley coupling portion **1162***a* and the second jaw pulley coupling portion **1162***b*, which are parallel to each other, are coupled by the body portion **1161** formed in a direction approximately perpendicular to the first jaw pulley coupling portion **1162***a* and the second jaw pulley coupling portion **1162***b*, so that the first jaw pulley coupling portion **1162***a*, the second jaw pulley coupling portion **1162***b*, and the body portion **1161** form an approximately U-shape, in which the pulley **1111** and the pulley **1121** are accommodated.

In other words, it may be said that the first jaw pulley coupling portion **1162***a* and the second jaw pulley coupling portion **1162***b* are formed to extend in the X-axis direction from the body portion **1161**.

Here, the pulley **1111**, which is a first jaw pulley, is disposed close to the first jaw pulley coupling portion **1162***a* of the end tool hub **1160**, and the pulley **1121**, which is a second jaw pulley, is disposed close to the second jaw pulley coupling portion **1162***b* of the end tool hub **1160**, and thus the yaw slit **1165** may be formed between the first jaw pulley coupling portion **1162***a* and the second jaw pulley coupling portion **1162***b*. In addition, at least a part of the blade assembly to be described later may be disposed in the yaw slit **1165**. In other words, it may be said that at least a part of the guide tube **1170** of the blade assembly may be disposed between the first jaw pulley coupling portion **1162***a* and the second jaw pulley coupling portion **1162***b*. As such, by disposing the blade assembly including the guide tube **1170** between the pulley **1111**, which is a first jaw pulley, and the pulley **1121**, which is a second jaw pulley, the end tool **1100** is able to perform the cutting motion using the blade **1175** in addition to the pitch and yaw motions. This will be described in more detail later.

Meanwhile, a through hole is formed in the first jaw pulley coupling portion **1162***a* such that the first rotation shaft **1141** passes through the first jaw pulley coupling portion **1162***a* and the pulley **1111** and axially couples the first jaw pulley coupling portion **1162***a* and the pulley **1111**. In addition, a through hole is formed in the second jaw pulley coupling portion **1162***b* such that the first rotation shaft **1141** passes through the second jaw pulley coupling portion **1162***b* and the pulley **1121** and axially couples the second jaw pulley coupling portion **1162***b* and the pulley **1121**.

Here, as described above, the first rotation shaft **1141**, which is a yaw rotation shaft, may be formed by being divided into two parts of the first sub-shaft **1141***a* and the second sub-shaft **1141***b*, and the guide tube **1170** may pass between the first sub-shaft **1141***a* and the second sub-shaft **1141***b* of the first rotation shaft **1141**.

In addition, the yaw slit **1165** may be formed between the first jaw pulley coupling portion **1162***a* and the second jaw pulley coupling portion **1162***b*. Since the yaw slit **1165** is formed in the end tool hub **1160** as described above, the guide tube **1170** may pass through the inside of the end tool hub **1160**.

In other words, the first rotation shaft **1141** is vertically separated into two parts without passing through the end tool hub **1160**, and the yaw slit **1165** may be formed on a plane perpendicular to the first rotation shaft **1141** in the vicinity of the first rotation shaft **1141**. Accordingly, the guide tube **1170** is movable (i.e., movable left and right) in the yaw slit **1165** while passing through the vicinity of the first rotation shaft **1141**.

Meanwhile, the yaw round portion **1167** may be further formed in the body portion **1161**. The yaw round portion **1167** may be formed to be rounded so as to have a predetermined curvature. In detail, when viewed from a plane perpendicular to the first rotation shaft **1141** that is a yaw rotation shaft, the yaw round portion **1167** may be formed to be rounded so as to have a predetermined curvature. For example, the yaw round portion **1167** may be formed in a fan shape, and may be formed along a path in which the guide tube **1170** is bent on an XY plane. The yaw round portion **1167** as described above may serve to guide the path of the guide tube **1170** when the end tool **1100** yaw-rotates.

The wire guide portion **1168**, which guides a path of the wire passing through the inside of the end tool hub **1160**, is formed at one side of the body portion **1161**. Here, the wire guide portion **1168** includes the first wire guide portion **1168***a* and the second wire guide portion **1168***b*. Here, the first wire guide portion **1168***a* may be formed on an inner side surface of the first jaw pulley coupling portion **1162***a*. In addition, the second wire guide portion **1168***b* may be formed on an inner side surface of the second jaw pulley coupling portion **1162***b*.

Here, the wire guide portion **1168** may be formed in a cylindrical shape with a cross section that is approximately semi-circular. In addition, the semi-circular portion may be disposed to protrude toward the pulley **1111** and the pulley **1121**. In other words, it may be said that the wire guide portion **1168** is formed to protrude toward a space formed by the first jaw pulley coupling portion **1162***a*, the second jaw pulley coupling portion **1162***b*, and the body portion **1161**. In other words, it may be said that, in the wire guide portion **1168**, a region adjacent to the first jaw pulley coupling portion **1162***a* and the second jaw pulley coupling portion **1162***b* is formed to have a cross section that is curved with a predetermined curvature.

Alternatively, in other words, it may be also said that the wire guide portion **1168** functions as a kind of pulley member, which guides the paths of the wire **305** and the wire **302** by winding the wire **305** and the wire **302** around an outer circumferential surface thereof. However, here, the wire guide portion **1168** is not a member that rotates around a certain shaft as the original meaning pulley does, and it may be said that the wire guide portion **1168** is formed to be fixed as a portion of the end tool hub **1160** and performs some similar functions of a pulley by winding a wire therearound.

Here, the wire guide portion **1168** is illustrated in the drawing as being formed in a cylindrical shape with a cross section that is approximately semi-circular. That is, at least a part of the cross section of the wire guide portion **1168** on the XY plane is illustrated as having a certain arc shape. However, the concept of the present disclosure is not limited thereto, and the cross section may have a predetermined curvature like an oval or a parabola, or a corner of a polygonal column is rounded to a certain degree, so that the cross section may have various shapes and sizes suitable for guiding the paths of the wire **305** and the wire **302**.

Here, a guide groove for guiding the paths of the wire **305** and the wire **302** well may be further formed in a portion of the wire guide portion **1168**, which is in contact with the wire **305** and the wire **302**. The guide groove may be formed in the form of a groove recessed to a certain degree from a protruding surface of the wire guide portion **1168**.

Here, although the guide groove is illustrated in the drawing as being formed in the entire arc surface of the wire guide portion **1168**, the concept of the present disclosure is not limited thereto, and the guide groove may be formed only in a portion of the arc surface of the wire guide portion **1168** as necessary.

As described above, by further forming the guide groove in the wire guide portion **1168**, unnecessary friction between the wires is reduced, so that durability of the wires may be improved.

The first pitch pulley portion **1163***a* and the second pitch pulley portion **1163***b*, which serve as end tool pitch pulleys, may be formed on the end tool hub **1160** at the proximal end side. Here, the first pitch pulley portion **1163***a* and the second pitch pulley portion **1163***b* may be formed to face each other. Here, the first pitch pulley portion **1163***a* and the second pitch pulley portion **1163***b* may be formed to be approximately parallel to a plane perpendicular to the third rotation shaft **1143**, which is a pitch rotation shaft.

In detail, one end portion of the end tool hub **1160** is formed in a disk shape similar to a pulley, and grooves around which a wire may be wound may be formed on an outer circumferential surface of the one end portion, thereby forming the first pitch pulley portion **1163***a* and the second pitch pulley portion **1163***b* The wire **303** and the wire **304** described above are coupled to the first pitch pulley portion **1163***a* and the second pitch pulley portion **1163***b*, which serve as end tool pitch pulleys, and a pitch motion is performed while the end tool hub **1160** rotates around the third rotation shaft **1143**.

Meanwhile, although not shown in the drawings, the pitch pulley may be formed as a separate member from the end tool hub **1160** and coupled to the end tool hub **1160**.

The first pitch pulley portion **1163***a* and the second pitch pulley portion **1163***b* may be connected by the body portion **1161**. That is, the first pitch pulley portion **1163***a* and the second pitch pulley portion **1163***b*, which are parallel to each other, are coupled by the body portion **1161** formed in a direction approximately perpendicular to the first pitch pulley portion **1163***a* and the second pitch pulley portion **1163***b*, and thus the first pitch pulley portion **1163***a*, the second pitch pulley portion **1163***b*, and the body portion **1161** may form an approximately U-shape.

In other words, it may be said that the first pitch pulley portion **1163***a* and the second pitch pulley portion **1163***b* are formed to extend from the body portion **1161** in the X-axis direction.

Meanwhile, a through hole is formed in the first pitch pulley portion **1163***a* so that the third rotation shaft **1143** may pass through the first pitch pulley portion **1163***a*. In addition, a through hole is formed in the second pitch pulley portion **1163***b* so that the third rotation shaft **1143** may pass through the second pitch pulley portion **1163***b*.

In this case, as described above, the third rotation shaft **1143**, which is a pitch rotation shaft, may be formed by being divided into two parts of the first sub-shaft **1143***a* and the second sub-shaft **1143***b*, and the guide tube **1170** may pass between the first sub-shaft **1143***a* and the second sub-shaft **1143***b* of the third rotation shaft **1143**.

The pitch slit **1164** may be formed between the first pitch pulley portion **1163***a* and the second pitch pulley portion **1163***b*. Since the pitch slit **1164** is formed in the end tool hub **1160** as described above, the guide tube **1170** may pass through the inside of the end tool hub **1160**.

In other words, the third rotation shaft **1143** is horizontally separated into two parts without passing through the end tool hub **1160**, and the pitch slit **1164** may be formed on a plane perpendicular to the third rotation shaft **1143** in the vicinity of the third rotation shaft **1143**. Accordingly, the guide tube **1170** is movable (movable up and down) in the pitch slit **1164** while passing through the vicinity of the third rotation shaft **1143**.

Meanwhile, the pitch round portion **1166** may be further formed in the body portion **1161**. The pitch round portion **1166** may be formed to be rounded to have a predetermined curvature. In detail, when viewed from a plane perpendicular to the third rotation shaft **1143**, which is a pitch rotation shaft, the pitch round portion **1166** may be formed to be rounded to have a predetermined curvature. For example, the pitch round portion **1166** may be formed in a fan shape, and formed along a path in which the guide tube **1170** is bent on the XZ plane. The pitch round portion **1166** as described

above may serve to guide the path of the guide tube **1170** when the end tool **1100** pitch-rotates.

Here, the pitch slit **1164** and the yaw slit **1165** may be formed to be connected to each other. Accordingly, the guide tube **1170** and the blade wire **307** located therein may be disposed to completely pass through the inside of the end tool hub **1160**. In addition, the blade **1175** coupled to one end portion of the blade wire **307** may linearly reciprocate inside the first jaw **1101** and the second jaw **1102**.

As described above, since the blade wire **307** and the guide tube **1170** need to be connected to the blade **1175** through the end tool hub **1160**, and a space in which the blade wire **307** and the guide tube **1170** can be bent in the end tool hub **1160** is necessary, in the present disclosure, 1) spaces, through which the blade wire **307**/the guide tube **1170** can pass and simultaneously are bendable, that is, the pitch slit **1164** and the yaw slit **1165**, are formed in the end tool hub **1160**, 2) the rotation shafts are formed by being divided into two parts, and 3) the pitch round portion **1166** and the yaw round portion **1167** are additionally formed to guide the bending of the blade wire **307**/the guide tube **1170**.

Hereinafter, the role and function of the wire guide portion **1168** will be described in more detail.

The wire guide portion **1168** may be in contact with the wire **305** and the wire **302** and may change the arrangement path of the wire **305** and the wire **302** to a certain degree to serve to increase a rotation radius of each of the first jaw **1101** and the second jaw **1102**.

That is, when the auxiliary pulleys are not disposed, each of the pulley **1111**, which is a first jaw pulley, and the pulley **1121**, which is a second jaw pulley, may rotate up to a right angle, but in the fourth embodiment of the present disclosure, by additionally providing the wire guide portion **1168** in the end tool hub **1160**, the maximum rotation angle of each pulley may be increased.

This enables a motion in which two jaws of the end tool **1100** have to be spread apart for an actuation motion in a state in which the two jaws are yaw-rotated together by 90°. In other words, the range of yaw rotation in which an actuation motion is possible may be increased through the configuration of the wire guide portion **1168** of the end tool hub **1160**. In other words, the range of yaw rotation in which an actuation motion is possible may be increased through the configuration of the wire guide portion **1168** of the end tool hub **1160**. Furthermore, by forming the wire guide portion **1168** in the end tool hub **1160**, which already exists, without adding a separate structure such as an auxiliary pulley, the range of rotation may be increased without adding a component and a manufacturing process.

As described above, since there is no need to additionally dispose a separate structure for increasing the rotation angle, the number of components is decreased and the manufacturing process is simplified, and also, the length of the end tool is shortened by as much as the size of the auxiliary pulley, so that the length of the end tool is shortened during a pitch motion. Accordingly, a surgical motion may be more easily performed in a narrow space.

This will be described below in more detail.

In the end tool **1100** of the surgical instrument according to the fourth embodiment of the present disclosure, the arrangement path of the wires may be changed without a separate structure by forming the wire guide portion **1168** capable of changing the path of the wire on an inner side wall of the end tool hub **1160**. As described above, as the arrangement path of the wire **305** and the wire **302** is changed to a certain degree by forming the wire guide portion **1168** in the end tool hub **1160**, a tangential direction of the wire **305** and the wire **302** is changed, and accordingly, rotation angles of the fastening member **323** and the fastening member **326** that couple respective wires and pulleys may be increased.

That is, the fastening member **326** that couples the wire **302** and the pulley **1121** is rotatable until being located on a common internal tangent of the pulley **1121** and the wire guide portion **1168**. Similarly, the fastening member (see **323** of FIG. **6**) that couples the wire **305** and the pulley **1111** is rotatable until being located on a common internal tangent of the pulley **1111** and the wire guide portion **1168**, so that a rotation angle of the fastening member (see **323** of FIG. **6**) may be increased.

In other words, the wire **301** and the wire **305** wound around the pulley **1111** by the wire guide portion **1168** are disposed on one side with respect to a plane perpendicular to the Y-axis and passing through the X-axis. Simultaneously, the wire **302** and the wire **306** wound around the pulley **1121** by the wire guide portion **1168** are disposed on the other side with respect to the plane perpendicular to the Y-axis and passing through the X-axis.

In other words, the pulley **1113** and the pulley **1114** are disposed at one side with respect to the plane perpendicular to the Y-axis and passing through the X-axis, and the pulley **1123** and the pulley **1124** are disposed at the other side with respect to the plane perpendicular to the Y-axis and passing through the X-axis.

In other words, the wire **305** is located on the internal tangent of the pulley **1111** and the wire guide portion **1168**, and a rotation angle of the pulley **1111** is increased due to the wire guide portion **1168**. In addition, the wire **302** is located on the internal tangent of the pulley **1121** and the wire guide portion **1168**, and the rotation angle of the pulley **1121** is increased due to the wire guide portion **1168**.

In the present embodiment in which an auxiliary pulley is not formed and the wire guide portion **1168** capable of changing the path of a wire is formed on the inner side wall of the end tool hub **1160**, the length of the end tool of the surgical instrument may be shortened as compared to the surgical instrument of the first embodiment in which a separate auxiliary pulley is formed. Since the length of the end tool is shortened as described above, a surgical operator may easily manipulate a surgical instrument, and a side effect of surgery may be reduced when the surgery is performed in a narrow surgical space in the human body.

According to the present disclosure as described above, the rotation radii of the pulley **1111**, which is a first jaw pulley, and the pulley **1121**, which is a second jaw pulley, increase, so that a yaw motion range in which a normal opening/closing actuation motion and a normal cutting motion can be performed may be increased.

(Actuation Hub)

FIGS. **154**A and **154**B are a perspective view and a cut-away perspective view illustrating an actuation hub of the surgical instrument for electrocautery of FIG. **147** of FIG. **140**. FIG. **155** is a view illustrating a state in which the guide tube, the blade wire, and the blade are mounted on the actuation hub illustrated in the cut-away perspective view of FIG. **154**. FIG. **156** is an exploded perspective view illustrating the end tool of the surgical instrument for electrocautery of FIG. **140**.

Referring to FIGS. **154** to **156**, the actuation hub **1190** may be formed in the form of a box having a hollow therein. In addition, the actuation hub **1190** is coupled to each of the first jaw **1101** and the second jaw **1102**. In detail, the actuation hub **1190** is axially coupled to the first jaw **1101** by a first actuation rotation shaft **1145***a*. In addition, the actua-

tion hub **1190** is axially coupled to the second jaw **1102** by a second actuation rotation shaft **1145***b*. In this case, the first actuation rotation shaft **1145***a* and the second actuation rotation shaft **1145***b* may be disposed on the same line in a Z-axis direction.

In addition, a tube seating portion **1190***a* may be formed inside the actuation hub **1190**, and one end portion of the guide tube **1170** may be fixedly coupled to the tube seating portion **1190***a*.

Meanwhile, a blade accommodation portion **1190***b* may be formed inside the actuation hub **1190**, and the blade **1175** may be accommodated in the blade accommodation portion **1190***b*.

In addition, a wire through-hole **1190***c* may be formed between the tube seating portion **1190***a* and the blade accommodation portion **1190***b* inside the actuation hub **1190**.

That is, the tube seating portion **1190***a*, the wire through-hole **1190***c*, and the blade accommodation portion **1190***b* are sequentially formed inside the actuation hub **1190**, and the blade wire **307** may pass through the inside of the actuation hub **1190** to be connected to the blade **1175**.

As described above, by providing the actuation hub **1190** to which the guide tube **1170** is coupled between the first jaw **1101** and the second jaw **1102**, the guide tube **1170** may not be curved, or the angle at which the guide tube **1170** is curved may be reduced, even when the first jaw **1101** or the second jaw **1102** rotates around the first rotation shaft **1141** or the actuation rotation shaft **1145**.

In detail, in a case in which the guide tube **1170** is directly coupled to the first jaw **1101** or the second jaw **1102**, when the first jaw **1101** or the second jaw **1102** rotates, one end portion of the guide tube **1170** also rotates together with the first jaw **1101** or the second jaw **1102**, causing the guide tube **1170** to be curved.

On the other hand, in a case in which the guide tube **1170** is coupled to the actuation hub **1190**, which is independent of the rotation of the jaw **1103**, as in the present embodiment, even when the first jaw **1101** or the second jaw **1102** rotates, the guide tube **1170** may not be curved, or the angle at which the guide tube **1170** is curved may be reduced even when the guide tube **1170** is curved.

That is, by changing the direct connection between the guide tube **1170** and the jaw **1103** by the actuation hub **1190** to an indirect connection, the degree to which the guide tube **1170** is curved by the rotation of the jaw **1103** may be reduced.

(First and Second Jaws and Actuation Motion)

Hereinafter, a coupling structure of the first jaw **1101** and the second jaw **1102** of the end tool **1100** of the surgical instrument **10** of FIG. **140** will be described in more detail.

Referring to FIGS. **157** to **162** and the like, the first jaw **1101** includes a movable coupling hole **1101***c*, a jaw pulley coupling hole **1101***d*, and a shaft pass-through portion **1101***c*.

The first jaw **1101** is formed entirely in an elongated bar shape, and formed to be rotatable together with the pulley **1111** by being coupled to the pulley **1111** at one end portion thereof.

Meanwhile, the movable coupling hole **1101***c*, the jaw pulley coupling hole **1101***d*, and the shaft pass-through portion **1101***e* may be formed in the first jaw **1101** at a side coupled to the pulley **1111**, that is, at the proximal end side.

Here, the movable coupling hole **1101***c* may be formed to have a predetermined curvature, and may be formed in an approximately elliptical shape. A shaft coupling portion **1111***a* of the pulley **1111**, which will be described later, may be fitted into the movable coupling hole **1101***c*. Here, a short radius of the movable coupling hole **1101***c* may be formed to be substantially the same as or slightly greater than a radius of the shaft coupling portion **1111***a*. Meanwhile, a long radius of the movable coupling hole **1101***c* may be formed to be greater than the radius of the shaft coupling portion **1111***a*. Thus, in a state in which the shaft coupling portion **1111***a* of the pulley **1111** is fitted into the movable coupling hole **1101***c* of the first jaw **1101**, the shaft coupling portion **1111***a* is movable to a certain degree in the movable coupling hole **1101***c*. This will be described in more detail below.

Meanwhile, the jaw pulley coupling hole **1101***d* is formed in the form of a cylindrical hole, and a jaw coupling portion **1111***b* of the pulley **1111**, which will be described later, may be fitted into the jaw pulley coupling hole **1101***d*. Here, a radius of the jaw pulley coupling hole **1101***d* may be formed to be substantially the same as or slightly greater than a radius of the jaw coupling portion **1111***b*. Thus, the jaw coupling portion **1111***b* of the pulley **1111** may be formed to be rotatably coupled to the jaw pulley coupling hole **1101***d* of the first jaw **1101**. This will be described in more detail below.

Meanwhile, the shaft pass-through portion **1101***e* may be formed in the first jaw **1101** at the distal end side relative to the movable coupling hole **1101***c* and the jaw pulley coupling hole **1101***d*. The shaft pass-through portion **1101***e* may be formed in the form of a hole, and the actuation rotation shaft **1145**, which is a jaw rotation shaft, may be inserted through the shaft pass-through portion **1101***e*.

The second jaw **1102** includes a movable coupling hole **1102***c*, a jaw pulley coupling hole **1102***d*, and a shaft pass-through portion **1102***c*.

The second jaw **1102** is formed entirely in an elongated bar shape, and formed to be rotatable together with the pulley **1121** by being coupled to the pulley **1121** at one end portion thereof.

Meanwhile, the movable coupling hole **1102***c*, the jaw pulley coupling hole **1102***d*, and the shaft pass-through portion **1102***e* may be formed in the second jaw **1102** at a side coupled to the pulley **1111**, that is, at the proximal end side.

Here, the movable coupling hole **1102***c* may be formed to have a predetermined curvature, and may be formed in an approximately elliptical shape. A shaft coupling portion **1121***a* of the pulley **1121**, which will be described later, may be fitted into the movable coupling hole **1102***c*. Here, a short radius of the movable coupling hole **1102***c* may be formed to be substantially the same as or slightly greater than a radius of the shaft coupling portion **1121***a*. Meanwhile, a long radius of the movable coupling hole **1102***c* may be formed to be greater than the radius of the shaft coupling portion **1121***a*. Thus, in a state in which the shaft coupling portion **1121***a* of the pulley **1121** is fitted into the movable coupling hole **1102***c* of the second jaw **1102**, the shaft coupling portion **1121***a* is movable to a certain degree in the movable coupling hole **1102***c*. This will be described in more detail below.

Meanwhile, the jaw pulley coupling hole **1102***d* is formed in the form of a cylindrical hole, and a jaw coupling portion **1121***b* of the pulley **1121**, which will be described later, may be fitted into the jaw pulley coupling hole **1102***d*. Here, a radius of the jaw pulley coupling hole **1102***d* may be formed to be substantially the same as or slightly greater than a radius of the jaw coupling portion **1121***b*. Thus, the jaw coupling portion **1121***b* of the pulley **1121** may be formed to

be rotatably coupled to the jaw pulley coupling hole **1102***d* of the second jaw **1102**. This will be described in more detail below.

Meanwhile, the shaft pass-through portion **1102***e* may be formed in the second jaw **1102** at the distal end side relative to the movable coupling hole **1102***c* and the jaw pulley coupling hole **1102***d*. The shaft pass-through portion **1102***e* may be formed in the form of a hole, and the actuation rotation shaft **1145**, which is a jaw rotation shaft, may be inserted through the shaft pass-through portion **1102***c*.

The pulley **1111**, which is a first jaw pulley, may include the shaft coupling portion **1111***a* and the jaw coupling portion **1111***b*. The pulley **1111** is formed entirely in the form of a rotatable disk, and the shaft coupling portion **1111***a* and the jaw coupling portion **1111***b* may be formed to protrude to a certain degree from one surface of the pulley **1111**. As described above, the shaft coupling portion **1111***a* of the pulley **1111** may be fitted into the movable coupling hole **1101***c* of the first jaw **1101**, and the jaw coupling portion **1111***b* of the pulley **1111** may be fitted into the jaw pulley coupling hole **1101***d* of the first jaw **1101**. The pulley **1111** may be formed to be rotatable with the first rotation shaft **1141**, which is an end tool jaw pulley rotation shaft, as the center of rotation.

Meanwhile, the pulley **1121**, which is a second jaw pulley, may include the shaft coupling portion **1121***a* and the jaw coupling portion **1121***b*. The pulley **1121** is formed entirely in the form of a rotatable disk, and the shaft coupling portion **1121***a* and the jaw coupling portion **1121***b* may be formed to protrude to a certain degree from one surface of the pulley **1121**. As described above, the shaft coupling portion **1112***a* of the pulley **1112** may be inserted into the movable coupling hole **1102***c* of the second jaw **1102**, and the jaw coupling portion **1112***b* of the pulley **1112** may be inserted into the jaw pulley coupling hole **1102***d* of the second jaw **1102**. The pulley **1121** may be formed to be rotatable with the first rotation shaft **1141**, which is an end tool jaw pulley rotation shaft, as the center of rotation.

The coupling relationship between the components described above is as follows.

The first rotation shaft **1141**, which is an end tool jaw pulley rotation shaft, is sequentially inserted through the shaft coupling portion **1111***a* of the pulley **1111**, the movable coupling hole **1101***c* of the first jaw **1101**, the movable coupling hole **1102***c* of the second jaw **1102**, and the shaft coupling portion **1121***a* of the pulley **1121**.

The first actuation rotation shaft **1145***a* is sequentially inserted through the shaft pass-through portion **1101***e* of the first jaw **1101** and the actuation hub **1190** The second actuation rotation shaft **1145***b* is sequentially inserted through the shaft pass-through portion **1102***e* of the second jaw **1102** and the actuation hub **1190**.

The shaft coupling portion **1111***a* of the pulley **1111** is fitted into the movable coupling hole **1101***c* of the first jaw **1101**, and the jaw coupling portion **1111***b* of the pulley **1111** is fitted into the jaw pulley coupling hole **1101***d* of the first jaw **1101**.

At this time, the jaw pulley coupling hole **1101***d* of the first jaw **1101** and the jaw coupling portion **1111***b* of the pulley **1111** are axially coupled to each other so as to be rotatable, and the movable coupling hole **1101***c* of the first jaw **1101** and the shaft coupling portion **1111***a* of the pulley **1111** are movably coupled to each other (here, "movably coupled" means that the shaft coupling portion **1111***a* of the pulley **1111** is coupled so as to be movable to a certain degree in the movable coupling hole **1101***c* of the first jaw **1101**).

The shaft coupling portion **1121***a* of the pulley **1121** is fitted into the movable coupling hole **1102***c* of the second jaw **1102**, and the jaw coupling portion **1121***b* of the pulley **1121** is fitted into the jaw pulley coupling hole **1102***d* of the second jaw **1102**.

At this time, the jaw pulley coupling hole **1102***d* of the second jaw **1101** and the jaw coupling portion **1121***b* of the pulley **1121** are axially coupled to each other to be rotatable, and the movable coupling hole **1102***c* of the second jaw **1102** and the shaft coupling portion **1121***a* of the pulley **1121** are movably coupled to each other.

Here, the pulley **1111** and the pulley **1121** rotate around the first rotation shaft **1141**, which is an end tool jaw pulley rotation shaft. Meanwhile, the first jaw **1101** and the second jaw **1102** rotate around the actuation rotation shaft **1145**, which is a jaw rotation shaft. That is, the pulley **1111** and the first jaw **1101** have different shafts of rotation. Similarly, the pulley **1121** and the second jaw **1102** have different shafts of rotation.

That is, the rotation angle of the first jaw **1101** is limited to a certain degree by the movable coupling hole **1101***c*, but the first jaw **1101** essentially rotates around the actuation rotation shaft **1145**, which is a jaw rotation shaft. Similarly, the rotation angle of the second jaw **1102** is limited to a certain degree by the movable coupling hole **1102***c*, but the second jaw **1102** essentially rotates around the actuation rotation shaft **1145**, which is a jaw rotation shaft.

Amplification of a grip force due to the coupling relationship between the above-described components will be described.

In the surgical instrument **110** according to an embodiment of the present disclosure, the coupling structure of the first jaw **1101** and the second jaw **1102** forms an X-shaped structure, and thus, when the first jaw **1101** and the second jaw **1102** rotate in a direction of approaching each other (i.e., when the first jaw **1101** and the second jaw **1102** are closed), the grip force is greater in a direction in which the first jaw **1101** and the second jaw **1102** are closed. This will be described below in more detail.

As described above, in motions of the first jaw **1101** and the second jaw **1102** being opened and closed, there are two shafts that serve as the centers of rotation for the first jaw **1101** and the second jaw **1102**. That is, the first jaw **1101** and the second jaw **1102** perform the opening and closing motion around two shafts including the first rotation shaft **1141** and the actuation rotation shaft **1145**. At this time, the centers of rotation of the first jaw **1101** and the second jaw **1102** become the actuation rotation shaft **1145**, and the centers of rotation of rotation of the pulley **1111** and the pulley **1121** become the first rotation shaft **1141**. At this time, the first rotation shaft **1141** is a shaft whose position is relatively fixed, and the actuation rotation shaft **1145** is a shaft whose position is relatively moved linearly. In other words, when the pulley **1111** and the pulley **1121** rotate in a state in which the position of the first rotation shaft **1141** is fixed, the first jaw **1101** and the second jaw **1102** are opened/closed while the actuation rotation shaft **1145**, which is a rotation shaft of the first jaw **1101** and the second jaw **1102**, is moved backward and forward. This will be described below in more detail.

In FIG. **161**, **r1** is a distance from the jaw coupling portion **1121***b* of the pulley **1121** to the shaft coupling portion **1121***a*, and a length thereof is constant. Thus, a distance from the first rotation shaft **1141** inserted into the shaft coupling portion **1121***a* to the jaw coupling portion **1121***b* is also constant as **r1**.

Meanwhile, r2 of FIG. **161** is a distance from the jaw pulley coupling hole **1102***d* of the second jaw **1102** to the shaft pass-through portion **1102***e*, and a length thereof is constant. Thus, a distance from the jaw coupling portion **1121***b* of the pulley **1121** inserted into the jaw pulley coupling hole **1102***d* to the rotation shaft **1145** inserted into the shaft pass-through portion **1102***e* is also constant as r2.

That is, the lengths of r1 and r2 remain constant. Accordingly, when the pulley **1111** and the pulley **1121** rotate in the directions of an arrow B1 of FIG. **160** and an arrow B2 of FIG. **161**, respectively, around the first rotation shaft **1141** to perform a closing motion, the first jaw **1101** and the second jaw **1102** rotate around the actuation rotation shaft **1145** as the angle between r1 and r2 changes while the lengths of r1 and r2 remain constant, and at this time, the actuation rotation shaft **1145** itself is also linearly moved (i.e., is moved forward/backward) by as much as an arrow C1 of FIG. **160** and an arrow C2 of FIG. **161**.

That is, assuming that the position of the first rotation shaft **1141**, which is an end tool jaw pulley rotation shaft, is fixed, when the first jaw **1101** and the second jaw **1102** are closed, a force is applied in a direction in which the actuation rotation shaft **1145**, which is a jaw rotation shaft, is moved forward (i.e., toward the distal end), and thus the grip force in the direction in which the first jaw **1101** and the second jaw **1102** are closed becomes larger.

In other words, since the lengths of r1 and r2 remain constant when the second jaw **1102** rotates around the actuation rotation shaft **1145**, when the pulley **1121** rotates around the first rotation shaft **1141**, the angle between r1 and r2 changes while the lengths of r1 and r2 remain constant. That is, **02**, which is the angle between r1 and r2 in a state in which the second jaw **1102** is open as shown in FIG. **161**A, is greater than 01, which is the angle between r1 and r2 in a state in which the second jaw **1102** is closed as shown in FIG. **161**B.

Thus, when the second jaw **1102** rotates from the open state to the close state, the angle between r1 and r2 changes, and a force is applied in a direction in which the actuation rotation shaft **1145** is moved forward.

In this case, since the first rotation shaft **1141** is a shaft whose position is relatively fixed, the actuation rotation shaft **1145** is moved forward in the direction of the arrow C1 of FIG. **160** and the direction of the arrow C2 of FIG. **161**, and the grip force is further increased in a direction in which the second jaw **1102** is closed.

In other words, when the pulley **1111** and the pulley **1121** rotate around the first rotation shaft **1141**, which is a shaft whose relative position is fixed, the angle θ between r1 and r2 changes while the distance between r1 and r2 remains constant. In addition, when the angle θ changes as described above, the first jaw **1101** and the second jaw **1102** push or pull the actuation rotation shaft **1145**, and thus the actuation rotation shaft **1145** is moved forward or backward. In this case, when the first jaw **1101** and the second jaw **1102** are rotated in the direction of closing, the grip force is further increased as the actuation rotation shaft **1145** is moved forward in the directions of the arrow C1 of FIG. **160** and the arrow C2 of FIG. **161**. On the contrary, when the first jaw **1101** and the second jaw **1102** are rotated in the direction of opening, the actuation rotation shaft **1145** is moved backward in directions opposite to the arrow C1 of FIG. **160** and the arrow C2 of FIG. **161**.

With this configuration, the grip force becomes stronger when the first jaw **1101** and the second jaw **1102** are closed, thereby enabling a surgical operator to perform the actuation motion powerfully even with a small force.

(Components Associated with Cautery and Cutting)

Subsequently, referring to FIGS. **140** to **162** and the like, the end tool **1100** of the fourth embodiment of the present disclosure may include the first jaw **1101**, the second jaw **1102**, a first electrode **1151**, a second electrode **1152**, the guide tube **1170**, and the blade **1175** in order to perform cauterizing and cutting motions.

Here, components related to the driving of the blade, such as the guide tube **1170** and the blade **1175**, may be collectively referred to as a blade assembly. In an embodiment of the present disclosure, by disposing the blade assembly including the guide tube **1170** and the blade **1175** between the pulley **1111**, which is a first jaw pulley, and the pulley **1121**, which a second jaw pulley, the end tool **1100** is able to perform the cutting motion using the blade **1175** in addition to the pitch and yaw motions. This will be described in more detail.

As described above, the first jaw **1101** is connected to the first jaw pulley **1111** and rotates around the first rotation shaft **1141** together with the first jaw pulley **1111** when the first jaw pulley **1111** rotates around the first rotation shaft **1141**.

Meanwhile, the first electrode **1151** may be formed on a surface of the first jaw **1101** facing the second jaw **1102**. In addition, the second electrode **1152** may be formed on a surface of the second jaw **1102** facing the first jaw **1101**.

At this time, a slit **1151***a* may be formed in the first electrode **1151**, and the blade **1175** may move along the slit **1151***a*. In addition, a slit **1152***a* may be formed in the second electrode **1152**, and the blade **1175** may move along the slit **1152***a*.

Meanwhile, although not shown in the drawings, a spacer (not shown) may be formed between the first jaw **1101** and the first electrode **1151**, and a spacer (not shown) may be formed between the second jaw **1102** and the second electrode **1152**. The spacer (not shown) may include an insulating material such as ceramic. Alternatively, the first jaw **1101** and the second jaw **1102** may themselves be made of a nonconductor such that the first electrode **1151** and the second electrode **1152** may be maintained to be insulated from each other without a separate insulator until the first electrode **1151** and the second electrode **1152** are in contact with each other.

Meanwhile, although not shown in the drawings, one or more sensors (not shown) may be further formed on at least one of the first jaw **1101** or the second jaw **1102**. The sensor (not shown) may be formed to measure at least some of current, voltage, resistance, impedance, and temperature during the cautery by locating tissue between the first jaw **1101** and the second jaw **1102** and passing a current through the first electrode **1151** and the second electrode **1152**.

Alternatively, instead of providing a separate sensor, monitoring and controlling of at least some of current, voltage, resistance, impedance, and temperature may be directly performed by a generator (not illustrated) which supplies power to the electrodes.

An edge portion formed sharply and configured to cut tissue may be formed in one region of the blade **1175**. The tissue disposed between the first jaw **1101** and the second jaw **1102** may be cut as at least a part of the blade **1175** moves between the distal end **1104** and the proximal end **1105** of the end tool **1100**.

Here, the guide tube **1170** and the blade **1175** disposed between the pulley **1111** and the pulley **1121** are provided in the end tool **1100** of the electric cauterization surgical instrument **10** according to an embodiment of the present disclosure. In addition, by providing the guide tube **1170** and

the blade **1175**, a multi-joint/multi-degree-of-freedom surgical instrument capable of pitch/yaw/actuation motions may also perform cauterizing and cutting motions. This will be described below in more detail.

So far, various types of surgical instruments for electrocautery have been developed. Among the various types of surgical instruments for electrocautery, a blood vessel resection device called "Advanced Energy Device" or "Vessel Sealer" has a sensing function added to the existing bipolar cautery method, so that power of different polarities may be supplied to two electrodes, and after denaturing a vessel with the heat generated therefrom for hemostasis, the stanched part may be cut with a blade. At this time, the impedance of the tissue (or blood vessel) while the current is flowing is measured to determine whether the cauterization is completed, and when the cauterization is completed, the current supply is automatically stopped, and the tissue is cut with the blade.

In the case of such a bipolar-type blood vessel resection device, it is essential to have a blade to cut the tissue after cauterization, and the end tool needs to be equipped with a mechanism for facilitating a linear motion of the blade, and thus joint movements such as pitch/yaw movements are not possible in most cases.

Meanwhile, there have been attempts to implement joint movements using fexible joints with multiple nodes connected in the bipolar-type blood vessel resection device, but in this case, a rotation angle is limited and it is difficult to achieve accurate motion control of the end tool.

On the other hand, in the case of a method that utilizes vibration of ultrasonic waves to perform hemostasis and cutting, it is not feasible to provide joints due to the physical properties of ultrasonic waves.

To address these problems, the end tool **1100** of the electric cauterization surgical instrument **10** according to an embodiment of the present disclosure includes the guide tube **1170** disposed between the pulley **1111** and the pulley **1121**, and the blade **1175** that moves between a first position and a second position in response to the movement of the blade wire **307** disposed inside the guide tube **1170**. In addition, by providing the guide tube **1170** and the blade **1175** as described above, pitch/yaw/actuation motions may also be performed using a pulley/wire in a bipolar-type surgical instrument for cauterizing and cutting tissue.

FIG. **163** is a view illustrating a state in which the end tool of the surgical instrument for electrocautery of FIG. **140** is closed, and FIG. **164** is a view illustrating a state in which the end tool of the surgical instrument for electrocautery of FIG. **140** is opened. In addition, FIG. **165** is a view illustrating a state in which the blade wire **307** and the blade **1175** are located at a first position, FIG. **166** is a view illustrating a state in which the blade wire **307** and the blade **1175** are located at a second position, and FIG. **167** is a view illustrating a state in which the blade wire **307** and the blade **1175** are located at a third position.

Referring to FIGS. **163** to **167**, it may be said that the tissue between the first jaw **1101** and the second jaw **1102** is cut as the cutting motion of FIGS. **165** to **167** is performed in a state in which the first jaw **1101** and the second jaw **1102** are closed as shown in FIG. **163**.

Here, the first position illustrated in FIG. **165** may be defined as a state in which the blade **1175** is drawn in toward the proximal end **1105** of the end tool **1100** as much as possible. Alternatively, the first position may be defined as a state in which the blade **1175** is located adjacent to the pulley **1111**/pulley **1121**.

Meanwhile, the third position illustrated in FIG. **167** may be defined as a state in which the blade **1175** is withdrawn toward the distal end **1104** of the end tool **1100** as much as possible. Alternatively, the third position may be defined as a state in which the blade **1175** is spaced away from the pulley **1111**/pulley **1121** as much as possible.

First, as shown in FIG. **164**, a tissue to be cut is located between the first jaw **1101** and the second jaw **1102** in a state in which the first jaw **1101** and the second jaw **1102** are opened, and then an actuation motion is performed to close the first jaw **1101** and the second jaw **1102** as shown in FIG. **163**.

Next, as shown in FIG. **165**, in a state in which the blade wire **307** and the blade **1175** are located at the first position, currents of different polarities are applied to the first electrode **1151** and the second electrode **1152** to cauterize the tissue between the first jaw **1101** and the second jaw **1102**. At this time, a generator (not shown) configured to supply power to the electrodes may itself perform monitoring of at least some of current, voltage, resistance, impedance, and temperature, and may stop supplying power when the cauterization is completed.

In the state in which the cautery is completed as described above, when the blade wire **307** moves sequentially in the directions of an arrow A**1** of FIG. **155** and an arrow A**2** of FIG. **167**, the blade **1175** coupled to the blade wire **307** moves from the first position at the proximal end **1105** of the end tool **1100** toward the third position at the distal end **1104** of the end tool **1100**, reaching the positions in FIGS. **166** and **167** in turn.

As such, the blade **1175** cuts the tissue between the first jaw **1101** and the second jaw **1102** while moving in the X-axis direction.

However, it is to be understood that the linear motion of the blade **1175** here does not mean a motion in a completely straight line, but rather means a motion of the blade **1175** to the extent that the blade **1175** is able to cut the tissue while achieving a linear motion when viewed as a whole, even though the motion is not in a completely straight line, for example, the middle part of the straight line is bent by a certain angle or there is a section having a gentle curvature in a certain section.

Meanwhile, in this state, when the blade wire **307** is pulled in the opposite direction, the blade **1175** coupled to the blade wire **307** also returns to the first position.

According to the present disclosure, the multi-joint/multi-degree-of-freedom surgical instrument capable of pitch/yaw/actuation motions may also perform cauterizing and cutting motions.

(Manipulation Portion)

FIGS. **216** and **217** are perspective views illustrating the manipulation portion **200** of the surgical instrument of FIG. **140**. FIG. **218** is a diagram schematically illustrating only the pulleys and the wires constituting the joint of the surgical instrument for electrocautery of FIG. **140**.

With reference to FIGS. **140** to **162** and FIGS. **216** to **218**, the manipulation portion **200** of the electric cauterization surgical instrument **10** according to the fourth embodiment may include the first handle **204** which a user may hold, the actuation manipulation portion **203** configured to control the actuation motion of the end tool **1100**, the yaw manipulation portion **202** configured to control the yaw motion of the end tool **1100**, and the pitch manipulation portion **201** configured to control the pitch motion of the end tool **1100**. FIGS. **216** and **217** illustrate components only associated with the pitch/yaw/actuation motions of the electric cauterization surgical instrument **10**.

In addition, the manipulation portion **200** of the electric cauterization surgical instrument **10** may further include a blade manipulation portion **260** performing cutting by controlling the movement of the blade **171** of the end tool **1100**, and a cautery manipulation portion **270** performing cautery by supplying electrical energy to the first electrode **1151** and the second electrode **1152** of the end tool **1100**.

The manipulation portion **200** may include a pulley **210**, a pulley **211**, a pulley **212**, a pulley **213**, a pulley **214**, a pulley **215**, a pulley **216**, a pulley **217**, and a pulley **218**, which are associated with the rotational motion of the first jaw **1101**. In addition, the manipulation portion **200** may include a pulley **220**, a pulley **221**, a pulley **222**, a pulley **223**, a pulley **224**, a pulley **225**, a pulley **226**, a pulley **227**, and a pulley **228**, which are associated with the rotational motion of the second jaw **1102**. In one embodiment, the manipulation portion **200** may include a pulley **231**, a pulley **232**, a pulley **233**, and a pulley **234**, which are associated with the pitch motion. The manipulation portion **200** may include a pulley **235** which is an intermediate pulley arranged in some positions of the bent portion **402** of the connection portion **400**.

Here, the drawings illustrate that the pulleys facing each other are arranged in parallel with each other; however, the technical concepts of the present disclosure are not limited thereto, and each pulley may be formed in various positions and sizes suitable for the configuration of the manipulation portion **200**.

In addition, the manipulation portion **200** of the fourth embodiment may include a rotation shaft **241**, a rotation shaft **242**, a rotation shaft **243**, a rotation shaft **244**, a rotation shaft **245**, and a rotation shaft **246**. Here, the rotation shaft **241** may function as a manipulation portion first jaw actuation rotation shaft, and the rotation shaft **242** may function as a manipulation portion second jaw actuation rotation shaft. In addition, the rotation shaft **243** may function as a manipulation portion yaw main rotation shaft, and the rotation shaft **244** may function as a manipulation portion yaw subsidiary rotation shaft. The rotation shaft **245** may function as a manipulation portion pitch subsidiary rotation shaft, and the rotation shaft **246** may function as a manipulation portion pitch main rotation shaft.

The rotation shaft **241**, the rotation shaft **242**, the rotation shaft **243**, the rotation shaft **244**, the rotation shaft **245**, and the rotation shaft **246** may be sequentially arranged in a direction towards a proximal end **206** from a distal end **205**.

One or more pulleys may be fit into each of the rotation shafts **241**, **242**, **243**, **244**, **245**, and **246** which will be described in detail below.

The pulley **210** may function as a manipulation portion first jaw actuation pulley, the pulley **220** may function as a manipulation portion second jaw actuation pulley, and these components may be collectively referred to as a manipulation portion actuation pulley.

The pulley **211** and the pulley **212** may function as a manipulation portion first jaw yaw main pulley, the pulley **221** and the pulley **222** may function as a manipulation portion second jaw yaw main pulley, and these two components may collectively be referred to as a manipulation portion yaw main pulley.

The pulley **213** and the pulley **214** may function as a manipulation portion first jaw yaw subsidiary pulley, the pulley **223** and the pulley **224** may function as a manipulation portion second jaw yaw subsidiary pulley, and these two components may collectively be referred to as a manipulation portion yaw subsidiary pulley.

The pulley **215** and the pulley **216** may function as a manipulation portion first jaw pitch subsidiary pulley, the pulley **225** and the pulley **226** may function as a manipulation portion second jaw pitch subsidiary pulley, and these two components may collectively be referred to as a manipulation portion pitch subsidiary pulley.

The pulley **217** and the pulley **218** may function as a manipulation portion first jaw pitch main pulley, the pulley **227** and the pulley **228** may function as a manipulation portion second jaw pitch main pulley, and these two components may collectively be referred to as a manipulation portion pitch main pulley.

The pulley **231** and the pulley **232** may function as a manipulation portion pitch wire main pulley, and the pulley **233** and the pulley **234** may function as a manipulation portion pitch wire subsidiary pulley.

The components may be classified from the viewpoint of the manipulation portion in connection with each motion (i.e., pitch/yaw/actuation) as follows.

The pitch manipulation portion **201** controlling the pitch motion of the end tool **1100** may include a pulley **215**, a pulley **216**, a pulley **217**, a pulley **218**, a pulley **225**, a pulley **226**, and a pulley **227**, a pulley **228**, a pulley **231**, a pulley **232**, and a pulley **234**. In addition, the pitch manipulation portion **201** may include the rotation shaft **245** and the rotation shaft **246**. In one embodiment, the pitch manipulation portion **201** may further include a pitch frame **208**.

The yaw manipulation portion **202** controlling the yaw motion of the end tool **1100** may include a pulley **211**, a pulley **212**, a pulley **213**, a pulley **214**, a pulley **221**, a pulley **222**, a pulley **223**, and a pulley **224**. In addition, the yaw manipulation portion **202** may include the rotation shaft **243** and the rotation shaft **244**. In one embodiment, the yaw manipulation portion **202** may further include a yaw frame **207**.

The actuation manipulation portion **203** controlling the actuation motion of the end tool **1100** may include the pulley **210**, the pulley **220**, the rotation shaft **241**, and the rotation shaft **242**. In one embodiment, the actuation manipulation portion **203** may further include a first actuation manipulation portion **251** and a second actuation manipulation portion **256**.

Hereinafter, each component of the manipulation portion **200** will be described in more detail.

The first handle **204** may be held by a user, and more particularly, a user may hold the first handle **204** by wrapping it with his or her hand. The actuation manipulation portion **203** and the yaw manipulation portion **202** may be formed on the first handle **204**, and the pitch manipulation portion **201** may be formed on one side of the yaw manipulation portion **202**. In addition, another end of the pitch manipulation portion **201** may be connected to the bent portion **402** of the connection portion **400**.

The actuation manipulation portion **203** may include the first actuation manipulation portion **251** and the second actuation manipulation portion **256**. The first actuation manipulation portion **251** may include the rotation shaft **241**, the pulley **210**, a first actuation extension portion **252**, and a first actuation gear **253**. The second actuation manipulation portion **256** may include the rotation shaft **242**, the pulley **220**, a second actuation extension portion **257**, and a second actuation gear **258**. Here, ends of the first actuation extension portion **252** and the second actuation extension portion **257** may be formed in the shape of a hand ring, and may operate as a second handle.

The rotation shaft **241** and the rotation shaft **242**, which are the actuation rotation shaft, may be formed to have a

certain angle with the XY plane on which the connection portion **400** is formed. For example, the rotation shaft **241** and the rotation shaft **242** may be formed in a direction parallel with the Z-axis, and when the pitch manipulation portion **201** or the yaw manipulation portion **203** rotates, a coordinate system of the actuation manipulation portion **203** may be changed relatively. However, the technical ides of the present disclosure are not limited thereto, and by an ergonomic design, the rotation shaft **241** and the rotation shaft **242** may be formed in various directions suitable for a hand structure of a user holding the actuation manipulation portion **203**.

The pulley **210**, the first actuation extension portion **252**, and the first actuation gear **253** may be fixedly coupled to each other and rotatable together around the rotation shaft **241**. Here, the pulley **210** may include one pulley or two pulleys fixedly coupled to each other.

Likewise, the pulley **220**, the second actuation extension portion **257**, and the second actuation gear **258** may be fixedly coupled to each other and rotatable together around the rotation shaft **242**. Here, the pulley **220** may include one pulley or two pulleys fixedly coupled to each other.

The first actuation gear **253** and the second actuation gear **258** may be formed to engage with each other, and when either one of them rotates in one direction, the other one may rotate concurrently in the opposite direction.

The yaw manipulation portion **202** may include the rotation shaft **243**, the pulley **211** and the pulley **212**, which are the manipulation portion first jaw yaw main pulley, the pulley **211** and the pulley **212**, which are the manipulation portion second jaw yaw main pulley, and the yaw frame **207**. In addition, the yaw manipulation portion **202** may further include the pulley **213** and the pulley **214**, which are the manipulation portion first jaw yaw subsidiary pulley and arranged on one side of the pulley **211** and the pulley **212**, and the pulley **223** and the pulley **224**, which are the manipulation portion second jaw yaw subsidiary pulley and arranged on one side of the pulley **221** and the pulley **222**. Here, the pulley **213**, the pulley **214**, the pulley **223**, and the pulley **224** may be coupled to the pitch frame **208** to be described later.

The drawings illustrate that the yaw manipulation portion **202** includes the pulley **211**, the pulley **212**, the pulley **221**, and the pulley **222**, and as the pulley **211** faces the pulley **212** and the pulley **221** faces the pulley **222**, two pulleys may be rotatable independently of each other; however the technical concepts of the present disclosure are not limited thereto. That is, one or more pulleys having the same diameter or different diameters may be provided according to the configuration of the yaw manipulation portion **202**.

More specifically, on the first handle **204**, the rotation shaft **243**, which is the manipulation portion yaw main rotation shaft, may be formed on one side of the actuation manipulation portion **203**. In this case, the first handle **204** may be formed to be rotatable around the rotation shaft **243**.

Here, the rotation shaft **243** may be formed to have a certain angle with the XY plane on which the connection portion **400** is formed. For example, the rotation shaft **243** may be formed in a direction parallel with the Z-axis, and when the pitch manipulation portion **201** rotates, the coordinate system of the rotation shaft **243** may be changed relatively as described above. However, the technical ides of the present disclosure are not limited thereto, and by an ergonomic design, the rotation shaft **243** may be formed in various directions suitable for a hand structure of a user holding the manipulation portion **200**.

The pulley **211**, the pulley **212**, the pulley **221**, and the pulley **222** may be coupled to the rotation shaft **243** to be rotatable around the rotation shaft **243**. In addition, the wire **301** or the wire **305**, which is the first jaw wire, may be wound around the pulley **211** and the pulley **212**, and the wire **302** or the wire **306**, which is the second jaw wire, may be wound around the pulley **221** and the pulley **222**. At this time, as the pulley **211** faces the pulley **212**, and the pulley **221** faces the pulley **222**, there may be two pulleys which are rotatable independently. Accordingly, as the wire wound inward and the wire wound outward may be respectively wound around separate pulleys, the pulleys may operate without interfering with each other.

The yaw frame **207** may rigidly connect the first handle **204**, the rotation shaft **241**, the rotation shaft **242**, and the rotation shaft **243**, and accordingly, the first handle **204**, the yaw manipulation portion **202**, and the actuation manipulation portion **203** may yaw-rotate around the rotation shaft **243** in an integrated manner.

The pitch manipulation portion **201** may include the rotation shaft **246**, the pulley **217** and the pulley **218**, which are the manipulation portion first jaw pitch main pulley, the pulley **227** and the pulley **228**, which are the manipulation portion second jaw pitch main pulley, and the pitch frame **208**. In addition, the pitch manipulation portion **201** may further include the rotation shaft **245**, the pulley **215** and the pulley **216**, which are the manipulation portion first jaw pitch subsidiary pulley and arranged on one side of the pulley **217** and the pulley **218**, and the pulley **225** and the pulley **226**, which are the manipulation portion second jaw pitch subsidiary pulley and arranged on one side of the pulley **227** and pulley **228**. The pitch manipulation portion **201** may be connected to the bent portion **402** of the connection portion **400** through the rotation shaft **246**.

More specifically, the pitch frame **208** may be a base frame of the pitch manipulation portion **201**, and one end of the pitch frame **208** may be rotatably coupled to the rotation shaft **243**. That is, the yaw frame **207** may be formed to be rotatable around the rotation shaft **243** with respect to the pitch frame **208**.

As described above, the yaw frame **207** may connect the first handle **204**, the rotation shaft **243**, the rotation shaft **241**, and the rotation shaft **242**, and as the yaw frame **207** is axially coupled to the pitch frame **208**, when the pitch frame **208** pitch-rotates around the rotation shaft **246**, the yaw frame **207**, the first handle **204**, the rotation shaft **241**, the rotation shaft **242**, and the rotation shaft **243**, which are connected to the pitch frame **208**, may also pitch rotate. That is, when the pitch manipulation portion **201** rotates around the rotation shaft **246**, the actuation manipulation portion **203** and the yaw manipulation portion **202** may be rotated together with the pitch manipulation portion **201**. In other words, when the user pitch-rotates the first handle **204** around the rotation shaft **246**, the actuation manipulation portion **203**, the yaw manipulation portion **202**, and the pitch manipulation portion **201** may also move together with the first handle **204**.

The pulley **217**, the pulley **218**, the pulley **227**, and the pulley **228** may be coupled to the rotation shaft **246** so that they are rotatable around the rotation shaft **246** of the pitch frame **208**.

Here, the pulley **217** and the pulley **218** may face each other and rotate independently. Accordingly, as the wire wound inward and the wire wound outward may be respectively wound around separate pulleys, the pulleys may operate without interfering with each other. Likewise, the pulley **227** and the pulley **228** may face each other and rotate

independently. Accordingly, as the wire wound inward and the wire wound outward may be respectively wound around separate pulleys, the pulleys may operate without interfering with each other.

Next, the motions of the wire **303** and the wire **304** which are the pitch wire are described below.

In the end tool **1100**, the pulley **1131**, which is the end tool pitch pulley, may be fixedly coupled to the end tool hub **1180**, and in the manipulation portion **200**, the pulley **231** and the pulley **232**, which are the manipulation portion pitch pulley, may be fixedly coupled to the pitch frame **208**. These pulleys may be connected to each other by the wire **303** and the wire **304**, which are the pitch wire, to facilitate the pitch motion of the end tool **1100** according to the pitch manipulation of the manipulation portion **200**. Here, the wire **303** may be fixedly coupled to the pitch frame **208** via the pulley **231** and the pulley **233**, and the wire **304** may be fixedly coupled to the pitch frame **208** via the pulley **232** and the pulley **234**. That is, the pitch frame **208**, the pulley **231**, and the pulley **232** may rotate together around the rotation shaft **246** by the pitch rotation of the manipulation portion **200**. As a result, the wire **303** and the wire **304** may also move, and separately from the pitch motion of the end tool **1100** by the wire **301**, the wire **302**, the wire **305**, and the wire **306**, which are the jaw wire, additional pitch rotation power may be transmitted.

The connection relation among the first handle **204**, the pitch manipulation portion **201**, the yaw manipulation portion **202**, and the actuation manipulation portion **203** is described below. On the first handle **204**, the rotation shaft **241**, the rotation shaft **242**, the rotation shaft **243**, the rotation shaft **244**, the rotation shaft **245**, and the rotation shaft **246** may be formed. At this time, as the rotation shaft **241** and the rotation shaft **242** are directly formed on the first handle **204**, the first handle **204** and the actuation manipulation portion **203** may be directly connected to each other. As the rotation shaft **243** is directly formed on the first handle **204**, the first handle **204** and the yaw manipulation portion **202** may be directly connected to each other. As the pitch manipulation portion **201** is arranged on one side of the yaw manipulation portion **202** and connected to the yaw manipulation portion **202**, the pitch manipulation portion **201** may not be directly connected to the first handle **204** and the pitch manipulation portion **201** and the first handle **204** may be indirectly connected to each other through the yaw manipulation portion **202**.

With reference to the drawings, in the electric cauterization surgical instrument **10** according to the first embodiment, the pitch manipulation portion **201** and the end tool **1100** may be formed on the same or parallel axis (i.e., the X-axis). That is, the rotation shaft **246** of the pitch manipulation portion **201** may be formed at one end of the bent portion **402** of the connection portion **400**, and the end tool **1100** may be formed at the other end of the connection portion **400**.

In addition, one or more intermediate pulleys **235** changing or guiding a path of the wires may be arranged in some positions of the connection portion **400**, in particular, in positions on the bent portion **402**. At least a part of the wires may be wound around the intermediate pulleys **235** to guide the path of the wires so that the wires are arranged along the bent shape of the bent portion **402**.

Here, the drawings illustrate that the connection portion **400** includes the bent portion **402** and thus is formed in a curved manner with a certain curvature; however, the technical concepts of the present disclosure are not limited thereto, and the connection portion **400** may be formed straightly, if necessary, or curved in one or more points. Even in such cases, the pitch manipulation portion **201** and the end tool **1100** may be formed on the substantially same or parallel axis. In addition, although FIG. **3** illustrates that the pitch manipulation portion **201** and the end tool **1100** are respectively formed on an axis parallel with the X-axis, the technical concepts of the present disclosure are not limited thereto, and the pitch manipulation portion **201** and the end tool **1100** may be formed on different axes.

(Actuation Motion, Yaw Motion, Pitch Motion)

Actuation motion, yaw motion, and pitch motion in this embodiment will be described as follows.

First, the actuation motion is as follows.

When a user puts the index finger in a hand ring formed at the first actuation extension **252**, puts the thumb in a hand ring formed at the second actuation extension **257**, and rotates the first actuation extension **252** and the second actuation extension **257** using any one of or both the fingers, the pulley **210** and the first actuation gear **253** fixedly coupled to the first actuation extension **252** rotate around the rotation shaft **241**, and the pulley **220** and the second actuation gear **258** fixedly coupled to the second actuation extension **257** rotate around the rotation shaft **242**. At this time, the pulley **210** and the pulley **220** rotate in opposite directions, and thus the wire **301** and the wire **305** each having one end fixedly coupled to and wound around the pulley **210** and the wire **302** and the wire **306** each having one end fixedly coupled to and wound around the pulley **220** move in opposite directions as well. This rotational force is transmitted to an end tool **1100** through a power transmission portion **300**, two jaws **1103** of the end tool **1100** perform the actuation motion.

Here, the actuation motion refers to an action of opening or closing the jaws **1102** while the two jaws **1102** rotate in opposite directions to each other, as described above. In other words, when the actuation extensions **252** and **257** of the actuation manipulation portion **203** are rotated in directions toward each other, the first jaw **1101** rotates counterclockwise and the second jaw **1102** rotates clockwise, and thus the end tool **1100** is closed. Conversely, when the actuation extensions **252** and **257** of the actuation manipulation portion **203** are rotated in directions away from each other, the first jaw **1101** rotates clockwise and the second jaw **1102** rotates counterclockwise, and thus the end tool **1100** is opened.

In this embodiment, for the above-described actuation manipulation, the first actuation extension **252** and the second actuation extension **257** were provided to constitute a second handle, and two fingers were gripped to enable manipulation. However, unlike the above, the actuation manipulation portion **203** for actuation manipulation to open and close the two jaws of the end tool **1100** with each other may be configured differently so that, for example, two actuation pulleys (the pulley **210** and the pulley **220**) operate opposite to each other by one actuation rotating portion.

Next, the yaw motion is as follows.

When the user rotates a first handle **204** around a rotation shaft **243** while holding the first handle **204**, the actuation manipulation portion **203** and the yaw manipulation portion **202** yaw-rotates around the rotation shaft **243**. In other words, when the pulley **210** of the first actuation manipulation portion **251** to which the wire **301** and the wire **305** are fixedly coupled rotates about the rotation shaft **243**, the wire **301** and the wire **305** respectively wound around the pulley **211** and the pulley **212** move. Likewise, when the pulley **220** of the second actuation manipulation portion **256** to which the wire **302** and the wire **306** are fixedly coupled rotates

about the rotation shaft **243**, the wire **302** and the wire **306** respectively wound around the pulley **221** and the pulley **222** move. At this time, the wire **301** and the wire **305** connected to the first jaw **1101** and the wire **302** and the wire **306** connected to the second jaw **1102** are respectively wound around the pulley **211** and the pulley **212** and the pulley **221** and the pulley **222**, such that the first jaw **1101** and the second jaw **1102** rotate in the same direction during a yaw rotation. And, this rotational force is transmitted to the end tool **1100** through the power transmission portion **300**, the two jaws **1103** of the end tool **1100** performs the yaw motion that rotates in the same direction.

At this time, since the yaw frame **207** connects the first handle **204**, the rotation shaft **241**, the rotation shaft **242**, and the rotation shaft **243**, the first handle **204**, the yaw manipulation portion **202**, and the actuation manipulation portion **203** rotate together around the rotation shaft **243**.

Next, the pitch motion is as follows.

When the user rotates a first handle **204** around a rotation shaft **246** while holding the first handle **204**, the actuation manipulation portion **203**, the yaw manipulation portion **202**, and the pitch manipulation portion **201** make pitch rotation around the rotation shaft **243**. In other words, when the pulley **210** of the first actuation manipulation portion **251** to which the wire **301** and the wire **305** are fixedly coupled rotates about the rotation shaft **246**, the wire **301** and the wire **305** respectively wound around the pulley **217** and the pulley **218** move. Likewise, when the pulley **220** of the second actuation manipulation portion **256** to which the wire **302** and the wire **306** are fixedly coupled rotates about the rotation shaft **246**, the wire **302** and the wire **306** respectively wound around the pulley **227** and the pulley **228** move. Here, as described above with reference to FIG. **5**, the wire **301**, the wire **305**, the wire **302**, and the wire **306**, which are jaw wires, are wound around the pulley **217**, the pulley **218**, the pulley **227**, and the pulley **228**, which are manipulation portion pitch main pulleys, such that the wire **301** and wire **305**, which are first jaw wires, move in the same direction and the wire **302** and the wire **306**, which are second jaw wires, move in the same direction to enable pitch rotation of the first jaw **1101** and the second jaw **1102**. And, this rotational force is transmitted to an end tool **1100** through a power transmission portion **300**, two jaws **1103** of the end tool **1100** perform the pitch motion.

At this time, the pitch frame **208** is connected to the yaw frame **207** and the yaw frame **207** connects the first handle **204**, the rotation shaft **241**, the rotation shaft **242**, and the rotation shaft **243**. Therefore, when the pitch frame **208** rotates around the rotation shaft **246**, the yaw frame **207** connected to the pitch frame **208**, the first handle **204**, the rotation shaft **241**, the rotation shaft **242**, and the rotation shaft **243** rotate together. That is, when a pitch manipulation portion **201** rotates around the rotation shaft **246**, the actuation manipulation portion **203** and the yaw manipulation portion **202** are rotated together with the pitch manipulation portion **201**.

In summary, in an electric cauterization surgical instrument **10** according to an embodiment of the present disclosure, it is characterized that pulleys are formed at each joint point (actuation joint, yaw joint, pitch joint), wire (first jaw wire or second jaw wire) is wound on the pulley, and rotational manipulation of the manipulation portion (actuation rotation, yaw rotation, pitch rotation) causes movement of each wire, as a result, a desired motion of the end tool **1100** is induced. Furthermore, auxiliary pulleys may be formed on one side of each pulley, and the wire may not be wound several times on one pulley by these auxiliary pulleys.

FIG. **218** is a schematic view of only the configuration of pulleys and wires constituting joints of the electric cauterization surgical instrument **10** according to an embodiment of the present disclosure shown in FIG. **140**. In FIG. **218**, intermediate pulleys that are for changing paths of wires and are not associated with joint motions are omitted.

Referring to FIG. **218**, the manipulation portion **200** may include the pulley **210**, the pulley **211**, the pulley **212**, the pulley **213**, the pulley **214**, the pulley **215**, the pulley **216**, the pulley **217**, and the pulley **218** that are associated with the rotational motion of the first jaw **1101**.

Also, the manipulation portion **200** may include the pulley **220**, the pulley **221**, the pulley **222**, the pulley **223**, the pulley **224**, the pulley **225**, the pulley **226**, the pulley **227**, and the pulley **228** associated with the rotational motion of the second jaw **1102**. (The arrangement and the configuration of pulleys in the manipulation portion **200** are the same as the arrangement and the configuration of the pulleys in the end tool **1100** in principle, and thus some of the reference numerals thereof will be omitted in the drawings.)

The pulley **211** and the pulley **212** and the pulley **221** and the pulley **222** may be formed to be rotatable independently of each other around the same axis, that is, the rotation shaft **243**. At this time, the pulley **211** and the pulley **212** may be formed to face the pulley **221** and the pulley **222**, respectively, thereby forming two independently rotatable pulleys.

The pulley **213** and the pulley **214** and the pulley **223** and the pulley **224** may be formed to be rotatable independently of each other around the same axis, that is, the rotation shaft **244**. At this time, the pulley **213** and the pulley **214** may be formed to face each other as two independently rotatable pulleys, and, in this case, the two pulleys may be formed to have different diameters. Likewise, the pulley **223** and the pulley **224** may be formed to face each other as two independently rotatable pulleys, and, in this case, the two pulleys may be formed to have different diameters.

The pulley **215** and the pulley **216** and the pulley **225** and the pulley **226** may be formed to be rotatable independently of each other around the same axis, that is, the rotation shaft **245**. In this case, the pulley **215** and the pulley **216** may be formed to have different diameters. Also, the pulley **225** and the pulley **226** may be formed to have different diameters.

The pulley **217** and the pulley **218** and the pulley **227** and the pulley **228** may be formed to be rotatable independently of each other around the same axis, that is, the rotation shaft **246**.

The wire **301** sequentially passes through the pulley **217**, the pulley **215**, the pulley **213**, and the pulley **211** of the manipulation portion **200**, is wound around the pulley **210**, and then is coupled to the pulley **210** by a fastening member **324**. Meanwhile, the wire **305** sequentially passes through the pulley **218**, the pulley **216**, the pulley **214**, and the pulley **212** of the manipulation portion **200** and is coupled to the pulley **210** by the fastening member **324**. Therefore, as the pulley **210** rotates, the wire **301** and the wire **305** are wound around or unwound from the pulley **210**, and thus the first jaw **1101** rotates.

The wire **306** sequentially passes through the pulley **227**, the pulley **225**, the pulley **223**, and the pulley **221** of the manipulation portion **200**, is wound around the pulley **220**, and then is coupled to the pulley **220** by a fastening member **327**. Meanwhile, the wire **302** sequentially passes through the pulley **228**, the pulley **226**, the pulley **224**, and the pulley **222** of the manipulation portion **200** and is coupled to the

pulley **220** by the fastening member **327**. Therefore, as the pulley **220** rotates, the wire **302** and the wire **306** are wound around or unwound from the pulley **220**, and thus the second jaw **1102** rotates.

(Conceptual Diagram of Pulleys and Wires)

FIGS. **220** and **221** are diagrams illustrating a configuration of pulleys and wires, which are associated with an actuation motion and a yaw motion of the electric cauterization surgical instrument **10** according to an embodiment of the present disclosure illustrated in FIG. **140**, in detail for each of the first jaw and the second jaw. FIG. **220** is a diagram illustrating only pulleys and wires related to the second jaw, and FIG. **221** is a diagram illustrating only pulleys and wires related to the first jaw. In addition, FIG. **219** is a perspective view illustrating a yaw motion of the surgical instrument shown in FIG. **140**. Here, in FIG. **219**, components associated with a cutting motion are omitted.

First, a wire operation in an actuation motion will be described.

Referring to FIG. **221**, when the first actuation extension **252** rotates around the rotation shaft **241** in the direction of an arrow OPA**1**, the pulley **210** connected to the first actuation extension **252** is rotated, and the wire **301** and the wire **305** wound around the pulley **210** are moved in directions W**1***a* and W**1***b*, respectively, and as a result, the first jaw **1101** of the end tool **1100** is rotated in the direction of an arrow EPA**1**.

Referring to FIG. **220**, when the second actuation extension **257** rotates around the rotation shaft **242** in the direction of an arrow OPA**2**, the pulley **220** connected to the second actuation extension **257** is rotated, and thus both strands of the wires **302** and **306** wound around the pulley **220** are moved in directions W**2***a* and W**2***b*, respectively, and as a result, the second jaw **1102** of the end tool **1100** is rotated in the direction of an arrow EPA**2**. Accordingly, when a user manipulates the first actuation extension **252** and the second actuation extension **257** in directions close to each other, a motion of the first jaw **1101** and the second jaw **1102** of the end tool being close to each other is performed.

Next, a wire operation in a yaw motion will be described.

First, since the rotation shaft **243** is connected to the rotation shafts **241** and **242** by the yaw frame (see **207** of FIG. **216**), the rotation shaft **243** and the rotation shafts **241** and **242** are integrally rotated together.

Referring to FIG. **221**, when the first handle **204** rotates around the rotation shaft **243** in the direction of an arrow OPY**1**, the pulley **210** and the pulleys **211** and **212** and the wires **301** and **305** wound therearound are rotated as a whole around the rotation shaft **243**, and as a result, the wires **301** and **305** wound around the pulleys **211** and **212** are moved in the directions W**1***a* and W**1***b*, respectively, which in turn causes the first jaw **1101** of the end tool **1100** to rotate in the direction of an arrow EPY**1**.

Referring to FIG. **220**, when the first handle **204** rotates around the rotation shaft **243** in the direction of an arrow OPY**2**, the pulley **220** and the pulleys **221** and **222** and the wires **302** and **306** wound therearound are rotated as a whole around the rotation shaft **243**, and as a result, the wires **302** and **306** wound around the pulleys **221** and **222** are respectively moved in a direction opposite to the direction W**1***a* and a direction opposite to the direction W**1***b*, which in turn causes the first jaw **1101** of the end tool **1100** to rotate in the direction of an arrow EPY**2**.

FIGS. **223** and **224** are diagrams illustrating a configuration of pulleys and wires, which are associated with a pitch motion of the electric cauterization surgical instrument **10** according to an embodiment of the present disclosure illustrated in FIG. **140**, in detail for each of the first jaw and the second jaw. FIG. **223** is a diagram illustrating only pulleys and wires related to the second jaw, and FIG. **224** is a diagram illustrating only pulleys and wires related to the first jaw. As shown in FIG. **140** and elsewhere herein, there are two pulleys related to the pitch motion, and both strands of each wire are wound in the same path, which is illustrated with one line in FIG. **223**. In addition, FIG. **222** is a perspective view illustrating a pitch motion of the surgical instrument of FIG. **140**. Here, in FIG. **222**, components associated with a cutting motion are omitted.

Referring to FIG. **223**, when the first handle **204** rotates around the rotation shaft **246** in the direction of an arrow OPP**1**, the pulley **210**, the pulley **215**, the pulley **217**, and the like, and the wire **301** and the like wound therearound are rotated as a whole around the rotation shaft **246**. At this time, since the wires **301** and **305**, which are first jaw wires, are wound around upper portions of the pulley **217** and the pulley **218**, the wires **301** and **305** are moved in the direction of an arrow W**1**. As a result, the first jaw **1101** of the end tool **1100** rotates in the direction of an arrow EPP**1**.

Referring to FIG. **224**, when the first handle **204** rotates around the rotation shaft **246** in the direction of an arrow OPP**2**, the pulley **220**, the pulley **225**, the pulley **227**, and the like, and the wire **302** and the like wound therearound are rotated as a whole around the rotation shaft **246**. At this time, since the wires **302** and **306**, which are second jaw wires, are wound around lower portions of the pulley **227** and the pulley **228**, the wires **302** and **306** are moved in the direction of an arrow W**2**. As a result, the second jaw **1102** of the end tool **1100** rotates in the direction of an arrow EPP**2**.

Thus, the actuation, yaw, and pitch manipulations are manipulatable independent of each other.

As described with reference to FIG. **140**, the actuation manipulation portion **203**, the yaw manipulation portion **202**, and the pitch manipulation portion **201** are configured such that the respective rotation shafts are located at the rear thereof to be identical to the joint configuration of the end tool, so that a user may intuitively perform matching manipulations.

In particular, in the electric cauterization surgical instrument **10** according to an embodiment of the present disclosure, the pulleys are formed on respective joint points (an actuation joint, a yaw joint, and a pitch joint), the wires (the first jaw wire or the second jaw wire) are formed to be wound around the pulleys, the rotational manipulations (actuation rotation, yaw rotation, and pitch rotation) of the manipulation portion cause the movement of each wire, which in turn induces the desired motion of the end tool **1100**. Furthermore, the auxiliary pulleys may be formed on one side of the respective pulleys, and these auxiliary pulleys may prevent the wire from being wound around one pulley multiple times, so that the wires wound around the pulley do not come into contact with each other, and paths of the wire being wound around the pulley and the wire being released from the pulley are safely formed, so that safety and efficiency in the transmission of driving force of a wire may be improved.

Meanwhile, as described above, the yaw manipulation portion **202** and the actuation manipulation portion **203** are directly formed on the first handle **204**. Thus, when the first handle **204** rotates around the rotation shaft **246**, the yaw manipulation portion **202** and the actuation manipulation portion **203** are also rotated together with the first handle **204**. Accordingly, the coordinate systems of the yaw manipulation portion **202** and the actuation manipulation portion **203** are not fixed, but are continuously changed

relative to the rotation of the first handle **204**. That is, in FIG. **140** or the like, the yaw manipulation portion **202** and the actuation manipulation portion **203** are illustrated as being parallel to the Z-axis. However, when the first handle **204** is rotated, the yaw manipulation portion **202** and the actuation manipulation portion **203** are not parallel to the Z-axis any longer. That is, the coordinate systems of the yaw manipulation portion **202** and the actuation manipulation portion **203** arc changed according to the rotation of the first handle **204**. However, in the present specification, for convenience of description, unless described otherwise, the coordinate systems of the yaw manipulation portion **202** and the actuation manipulation portion **203** are described on the basis of a state in which the first handle **204** is located perpendicular to the connection portion **400** as illustrated in FIG. **2**.

(Pitch, Yaw, and Cutting Motions of End Tool)

FIGS. **168** and **169** are views illustrating a process of performing an opening and closing motion in a state in which the end tool of the surgical instrument for electrocautery of FIG. **140** is yaw-rotated by +90°. In addition, FIGS. **170** and **171** are views illustrating a process of performing an opening and closing motion in a state in which the end tool of the surgical instrument for electrocautery of FIG. **140** is yaw-rotated by −90°.

As shown in FIGS. **168** to **171**, the end tool of the surgical instrument for electrocautery according to the fourth embodiment of the present disclosure is formed to be able to normally perform an opening and closing motion, that is, an actuation motion even in a state in which the jaws are yaw-rotated by +90° or −90°.

FIGS. **172** and **173** are views illustrating a process of performing a cutting motion in a state in which the end tool of the surgical instrument for electrocautery of FIG. **140** is yaw-rotated by +90°.

As shown in FIGS. **172** and **173**, the end tool of the surgical instrument for electrocautery according to the fourth embodiment of the present disclosure is formed to be able to normally perform a cutting motion even in a state in which the jaws are yaw-rotated by +90°.

FIGS. **174** and **175** are views illustrating a process of performing an opening and closing motion in a state in which the end tool of the surgical instrument for electrocautery of FIG. **140** is pitch-rotated by +90°. FIGS. **176** and **177** are views illustrating a process of performing an opening and closing motion in a state in which the end tool of the surgical instrument for electrocautery of FIG. **140** is pitch-rotated by −90°. In addition, FIG. **178** is a cut-away perspective view of the end tool of the surgical instrument for electrocautery of FIG. **176**. In addition, FIGS. **179** and **180** are views illustrating a process of performing a cutting motion in a state in which the end tool of the surgical instrument for electrocautery of FIG. **140** is pitch-rotated by −90°.

As shown in FIGS. **174** to **180**, the end tool of the surgical instrument for electrocautery according to the fourth embodiment of the present disclosure is formed to be able to normally perform a cutting motion even in a state in which the jaws are pitch-rotated by −90°.

Meanwhile, FIG. **181** is a view illustrating a state in which the jaws are pitch-rotated by −90° and simultaneously yaw-rotated by +90°, and FIGS. **182**, **183**, and **184** are perspective views illustrating a cutting motion of the end tool of the surgical instrument for electrocautery of FIG. **140** and illustrate a state of performing a cutting motion while the jaws are pitch-rotated by −90° and simultaneously yaw-rotated by +90°.

As shown in FIGS. **181** to **184**, the end tool of the surgical instrument for electrocautery according to the fourth embodiment of the present disclosure is formed to be able to normally perform a cutting motion even in a state in which the jaws are pitch-rotated by −90° and simultaneously yaw-rotated by +90°.

First Modified Example of Fourth Embodiment

Hereinafter, an end tool **1200** of a surgical instrument according to a first modified example of the fourth embodiment of the present disclosure will be described. Here, the end tool **1200** of the surgical instrument according to the first modified example of the fourth embodiment of the present disclosure is different from the end tool (see **1100** in FIG. **140** or the like) of the surgical instrument according to the fourth embodiment of the present disclosure described above in that the configuration of an actuation hub **1290** is different. The configuration changed from the fourth embodiment as described above will be described in detail later.

FIGS. **185** and **186** are perspective views illustrating the end tool of the surgical instrument for electrocautery according to the first modified example of the fourth embodiment of the present disclosure. FIGS. **187** and **188** are plan views illustrating the end tool of the surgical instrument for electrocautery according to the first modified example of the fourth embodiment of the present disclosure. FIGS. **189** and **190** are views illustrating an actuation hub of the surgical instrument for electrocautery according to the first modified example of the fourth embodiment of the present disclosure.

Referring to FIGS. **185** to **190**, the end tool **1200** of the first modified example of the fourth embodiment of the present disclosure includes a pair of jaws for performing a grip motion, that is, a first jaw **1201** and a second jaw **1202**, and herein, each of the first jaw **1201** and the second jaw **1202** or a component encompassing the first jaw **1201** and the second jaw **1202** may be referred to as a jaw **1203**.

Meanwhile, the end tool **1200** includes a plurality of pulleys including a pulley **1211**, a pulley **1213**, and a pulley **1214** that are associated with a rotational motion of the first jaw **1201**. Meanwhile, the end tool **1200** includes a plurality of pulleys including a pulley **1221** associated with a rotational motion of the second jaw **1202**.

In addition, the end tool **1200** of the first modified example of the fourth embodiment of the present disclosure may include a rotation shaft **1241**, a rotation shaft **1243**, and a rotation shaft **1244**. Here, the rotation shaft **1241** may be inserted through an end tool hub **1260**, and the rotation shaft **1243** and the rotation shaft **1244** may be inserted through a pitch hub **1250**. The rotation shaft **1241**, the rotation shaft **1243**, and the rotation shaft **1244** may be arranged sequentially from a distal end **1204** toward a proximal end **1205** of the end tool **1200**.

Further, the end tool **1200** of the first modified example of the fourth embodiment of the present disclosure may include the end tool hub **1260** and the pitch hub **1250**.

The rotation shaft **1241** is inserted through the end tool hub **1260**, and the pulley **1211** and the pulley **1221**, which are axially coupled to the rotation shaft **1241**, and at least some of the first jaw **1201** and the second jaw **1202** coupled the pulley **1211** and the pulley **1221** may be accommodated inside the end tool hub **1260**.

Meanwhile, a first pitch pulley portion **1263***a* and a second pitch pulley portion **1263***b*, which serve as end tool pitch pulleys, may be formed at one end portion of the end tool hub **1260**. A wire (see **303** of FIG. **146**) and a wire **304**

(see **304** of FIG. **146**) are coupled to the first pitch pulley portion **1263***a* and the second pitch pulley portion **1263***b*, which serve as end tool pitch pulleys, and a pitch motion is performed while the end tool hub **1260** rotates around the rotation shaft **1243**.

The rotation shaft **1243** and the rotation shaft **1244** may be inserted through the pitch hub **1250**, and the pitch hub **1250** may be axially coupled to the end tool hub **1260** by the rotation shaft **1243**. Accordingly, the end tool hub **1260** may be formed to be pitch-rotatable around the rotation shaft **1243** with respect to the pitch hub **1250**.

Meanwhile, the end tool **1200** of the fourth embodiment of the present disclosure may further include components such as a first electrode **1251**, a second electrode **1252**, a guide tube **1271**, and a blade **1275** in order to perform a cauterizing motion and a cutting motion. Here, components related to the driving of the blade, such as the guide tube **1271** and the blade **1275**, may be collectively referred to as a blade assembly. Components for performing a cauterizing motion and a cutting motion in the present embodiment are substantially the same as those described in the fourth embodiment, and thus a detailed description thereof will be omitted herein.

The surgical instrument for electrocautery according to the first modified example of the fourth embodiment of the present disclosure may include a wire **301**, a wire **302**, a wire **303**, a wire **304**, a wire **305**, a wire **306**, and a blade wire **307**, as in the fourth embodiment of the present disclosure described with reference to FIG. **140** or the like.

Hereinafter, the actuation hub **1290** of the first modified example of the fourth embodiment of the present disclosure will be described in more detail.

Referring to FIGS. **185** to **190**, the actuation hub **1290** may be formed in the form of a box having a hollow therein. Here, a first coupling hole **1290***a* is formed in any one surface of the actuation hub **1290**, specifically, a surface coming into contact with the first jaw **1201**, and a second coupling hole **1290***b* may be formed in the other surface of the actuation hub **1290**, specifically, a surface coming into contact with the second jaw **1202**.

In this case, the first coupling hole **1290***a* may be formed to be offset to a certain degree in one direction from the center line in the X-axis direction. In addition, the second coupling hole **1290***b* may be formed by being offset to a certain degree in another one direction from the center line in the X-axis direction.

In other words, it may be said that the first coupling hole **1290***a* and the second coupling hole **1290***b* are not on the same line in the Z-axis direction but are formed to be offset to a certain degree.

In addition, the actuation hub **1290** is coupled to each of the first jaw **1201** and the second jaw **1202**. In detail, a first actuation rotation shaft **1291** is inserted through the first jaw **1201** and the first coupling hole **1290***a* of the actuation hub **1290**, so that the actuation hub **1290** and the first jaw **1201** are axially coupled. Further, a second actuation rotation shaft **1292** is inserted through the second jaw **1202** and the second coupling hole **1290**B of the actuation hub **1290**, so that the actuation hub **1290** and the second jaw **1202** are axially coupled.

Meanwhile, as described with reference to FIG. **154** or the like, a tube seating portion, a wire through-hole, and a blade accommodation portion are sequentially formed inside the actuation hub **1290**, and the blade wire **307** may pass through the inside of the actuation hub **1290** to be connected to the blade **1275**.

As described above, by providing the actuation hub **1290** to which the guide tube **1270** is coupled between the first jaw **1201** and the second jaw **1202**, the guide tube **1270** may not be curved, or the angle at which the guide tube **1270** is curved may be reduced, even when the first jaw **1201** or the second jaw **1202** rotates around the first rotation shaft **1241** or the actuation rotation shaft **1245**.

In detail, in a case in which the guide tube **1270** is directly coupled to the first jaw **1201** or the second jaw **1202**, when the first jaw **1201** or the second jaw **1202** rotates, one end portion of the guide tube **1270** also rotates together with the first jaw **1201** or the second jaw **1202**, causing the guide tube **1270** to be curved.

On the other hand, in a case in which the guide tube **1270** is coupled to the actuation hub **1290**, which is independent of the rotation of the jaw **1203**, as in the present embodiment, even when the first jaw **1201** or the second jaw **1202** rotates, the guide tube **1270** may not be curved, or the angle at which the guide tube **1270** is curved may be reduced even when the guide tube **1270** is curved.

That is, by changing the direct connection between the guide tube **1270** and the jaw **1203** by the actuation hub **1290** to an indirect connection, the degree to which the guide tube **1270** is curved by the rotation of the jaw **1203** may be reduced.

In particular, in the end tool **1200** of the first modified example of the fourth embodiment of the present disclosure, when the actuation hub **1290** is coupled to the first jaw **1201** and the second jaw **1202**, the first actuation rotation shaft **1291** and the second actuation rotation shaft **1292** are not on the same line in the Z-axis direction but are offset from each other to a certain degree. Thus, when the first jaw **1201** and the second jaw **1202** perform an actuation motion, the first actuation rotation shaft **1291** and the second actuation rotation shaft **1292** form a kind of two-point support, thereby obtaining an effect of more stably performing an actuation motion.

Second Modified Example of Fourth Embodiment

Hereinafter, an end tool **1300** of a surgical instrument according to a second modified example of the fourth embodiment of the present disclosure will be described. Here, the end tool **1300** of the surgical instrument according to the second modified example of the fourth embodiment of the present disclosure is different from the end tool (see **1100** in FIG. **140** or the like) of the surgical instrument according to the fourth embodiment of the present disclosure described above in that the configuration of an actuation hub **1390** is different. The configuration changed from the fourth embodiment as described above will be described in detail later.

FIGS. **191** to **196** are views illustrating the end tool of the surgical instrument for electrocautery according to the second modified example of the fourth embodiment of the present disclosure. FIGS. **197** and **198** are views illustrating an actuation hub of the end tool of the surgical instrument for electrocautery of FIG. **191**. FIG. **199** is a perspective view illustrating a second jaw pulley of the end tool of the surgical instrument for electrocautery of FIG. **191**. FIGS. **200** and **201** are views illustrating the end tool of the surgical instrument for electrocautery of FIG. **191**.

Referring to FIGS. **191** to **201**, the end tool **1300** of the second modified example of the fourth embodiment of the present disclosure includes a pair of jaws for performing a grip motion, that is, a first jaw **1301** and a second jaw **1302**, and herein, each of the first jaw **1301** and the second jaw

1302 or a component encompassing the first jaw 1301 and the second jaw 1302 may be referred to as a jaw 1303.

Meanwhile, the end tool 1300 includes a plurality of pulleys including a pulley 1311, a pulley 1313, and a pulley 1314 associated with a rotational motion of a first jaw 1301. Meanwhile, the end tool 1300 includes a plurality of pulleys including a pulley 1321 associated with a rotational motion of the second jaw 1302.

In addition, the end tool 1300 of the second modified example of the fourth embodiment of the present disclosure may include a rotation shaft 1341, a rotation shaft 1343, and a rotation shaft 1344. Here, the rotation shaft 1341 may be inserted through an end tool hub 1360, and the rotation shaft 1343 and the rotation shaft 1344 may be inserted through a pitch hub 1350.

In addition, the end tool 1300 of the second modified example of the fourth embodiment of the present disclosure may include the end tool hub 1360 and the pitch hub 1350.

Meanwhile, the end tool 1300 of the second modified example of the fourth embodiment of the present disclosure may further include components such as a first electrode 1351, a second electrode 1352, a guide tube 1371, and a blade 1375 in order to perform a cauterizing motion and a cutting motion.

The surgical instrument for electrocautery according to the second modified example of the fourth embodiment of the present disclosure may include a wire 301, a wire 302, a wire 303, a wire 304, a wire 305, a wire 306, and a blade wire 307, as in the fourth embodiment of the present disclosure described with reference to FIG. 140 or the like.

Since components of the present modified example described above are substantially the same as the components described in the fourth embodiment, a detailed description thereof will be omitted herein.

Hereinafter, the actuation hub 1390 of the second modified example of the fourth embodiment of the present disclosure will be described in more detail.

Referring to FIGS. 191 to 201, the actuation hub 1390 may be formed in the form of a box having a hollow therein.

Here, a first coupling hole 1390*a* is formed in any one surface of the actuation hub 1390, specifically, a surface coming into contact with the first jaw 1301, and a second coupling hole 1390*b* may be formed in the other surface of the actuation hub 1390, specifically, a surface coming into contact with the second jaw 1302.

In this case, the first coupling hole 1390*a* may be formed to be offset to a certain degree in one direction from the center line in the X-axis direction. In addition, the second coupling hole 1390*b* may be formed by being offset to a certain degree in another one direction from the center line in the X-axis direction.

In other words, it may be said that the first coupling hole 1390*a* and the second coupling hole 1390*b* are not on the same line in the Z-axis direction but are formed to be offset to a certain degree.

In addition, the actuation hub 1390 is coupled to each of the first jaw 1301 and the second jaw 1302. In detail, a first actuation rotation shaft 1391 is inserted through the first jaw 1301 and the first coupling hole 1390*a* of the actuation hub 1390, so that the actuation hub 1390 and the first jaw 1301 are axially coupled. Further, a second actuation rotation shaft 1392 is inserted through the second jaw 1302 and the second coupling hole 1390*b* of the actuation hub 1390, so that the actuation hub 1390 and the second jaw 1302 are axially coupled.

Meanwhile, as described with reference to FIG. 154 or the like, a tube seating portion, a wire through-hole, and a blade accommodation portion are sequentially formed inside the actuation hub 1390, and the blade wire 307 may pass through the inside of the actuation hub 1390 to be connected to the blade 1375.

In addition, a guide slit 1390*c* may be formed in any one surface of the actuation hub 1390 or in both surfaces thereof in a longitudinal direction thereof (i.e., the X-axis direction). In addition, a slit coupling portion 1321*c* formed on the pulley 1321 may be fitted into the guide slit 1390*c*, so that a linear movement of the pulley 1321 in the X-axis direction may be guided by the guide slit 1390*c*.

In detail, a shaft coupling portion 1321*a*, a jaw coupling portion 1321*b*, and the slit coupling portion 1321*c* may be formed on the pulley 1321. Here, the shaft coupling portion 1321*a* and the jaw coupling portion 1321*b* may be formed in the same manner as described in the fourth embodiment or the like. The slit coupling portion 1321*c* may be formed to protrude to a certain degree further from the shaft coupling portion 1321*a*. The above-described slit coupling portion 1321*c* is fitted into the guide slit 1390*c* of the actuation hub 1390.

Meanwhile, although not shown in the drawings, a slit coupling portion (not shown) may also be formed in the pulley 1311.

As described above, by providing the actuation hub 1390 to which the guide tube 1370 is coupled between the first jaw 1301 and the second jaw 1302, the guide tube 1370 may not be curved, or the angle at which the guide tube 1370 is curved may be reduced, even when the first jaw 1301 or the second jaw 1302 rotates around the first rotation shaft 1341 or the actuation rotation shaft 1345.

In detail, in a case in which the guide tube 1370 is directly coupled to the first jaw 1301 or the second jaw 1302, when the first jaw 1301 or the second jaw 1302 rotates, one end portion of the guide tube 1370 also rotates together with the first jaw 1301 or the second jaw 1302, causing the guide tube 1370 to be curved.

On the other hand, in a case in which the guide tube 1370 is coupled to the actuation hub 1390, which is independent of the rotation of the jaw 1303, as in the present embodiment, even when the first jaw 1301 or the second jaw 1302 rotates, the guide tube 1370 may not be curved, or the angle at which the guide tube 1370 is curved may be reduced even when the guide tube 1370 is curved.

That is, by changing the direct connection between the guide tube 1370 and the jaw 1303 by the actuation hub 1390 to an indirect connection, the degree to which the guide tube 1370 is curved by the rotation of the jaw 1303 may be reduced.

In particular, in the end tool 1300 of the second modified example of the fourth embodiment of the present disclosure, when the actuation hub 1390 is coupled to the first jaw 1301 and the second jaw 1302, the first actuation rotation shaft 1391 and the second actuation rotation shaft 1392 are not on the same line in the Z-axis direction but are offset to a certain degree. Thus, when the first jaw 1301 and the second jaw 1302 perform an actuation motion, the first actuation rotation shaft 1391 and the second actuation rotation shaft 1392 form a kind of two point support, thereby obtaining an effect of more stably performing an actuation motion.

In addition, in the end tool 1300 of the second modified example of the fourth embodiment of the present disclosure, the slit coupling portion 1321*c* formed on the pulley 1321 is fitted into the guide slit 1390*c* of the actuation hub 1390 so that the linear movement of the pulley 1321 in the X-axis direction may be guided by the guide slit 1390*c*. That is, when the first jaw 1301 and the second jaw 1302 perform an

actuation motion, the first jaw **1301** and the second jaw **1302** move along the guide slit **1390***c* of the actuation hub **1390**, thereby obtaining an effect of more stably performing the actuation motion.

Third Modified Example of Fourth Embodiment

Hereinafter, an end tool **1400** of a surgical instrument according to a third modified example of the fourth embodiment of the present disclosure will be described. Here, the end tool **1400** of the surgical instrument according to the third modified example of the fourth embodiment of the present disclosure is different from the end tool (see **1100** in FIG. **140** or the like) of the surgical instrument according to the fourth embodiment of the present disclosure described above in that the configuration of an actuation hub **1490** is different. The configuration changed from the fourth embodiment as described above will be described in detail later.

FIGS. **202** to **205** are views illustrating the end tool of the surgical instrument for electrocautery according to the third modified example of the fourth embodiment of the present disclosure. FIGS. **206** and **207** are views illustrating an actuation hub of the end tool of the surgical instrument for electrocautery of FIG. **202**. FIG. **208** is a perspective view illustrating a second jaw pulley of the end tool of the surgical instrument for electrocautery of FIG. **202**.

Referring to FIGS. **202** to **208**, the end tool **1400** of the third modified example of the fourth embodiment of the present disclosure includes a pair of jaws for performing a grip motion, that is, a first jaw **1401** and a second jaw **1402**, and herein, each of the first jaw **1401** and the second jaw **1402** or a component encompassing the first jaw **1401** and the second jaw **1402** may be referred to as a jaw **1403**.

Meanwhile, the end tool **1400** includes a plurality of pulleys including a pulley **1411**, a pulley **1413**, and a pulley **1414** that are associated with a rotational motion of the first jaw **1401**. Meanwhile, the end tool **1400** includes a plurality of pulleys including a pulley **1421** associated with a rotational motion of the second jaw **1402**.

In addition, the end tool **1400** of the third modified example of the fourth embodiment of the present disclosure may include a rotation shaft **1441**, a rotation shaft **1443**, and a rotation shaft **1444**. Here, the rotation shaft **1441** may be inserted through an end tool hub **1460**, and the rotation shaft **1443** and the rotation shaft **1444** may be inserted through a pitch hub **1450**.

In addition, the end tool **1400** of the third modified example of the fourth embodiment of the present disclosure may include the end tool hub **1460** and the pitch hub **1450**.

Meanwhile, the end tool **1400** of the third modified example of the fourth embodiment of the present disclosure may further include components such as a first electrode **1451**, a second electrode **1452**, a guide tube **1471**, and a blade **1475** in order to perform a cauterizing motion and a cutting motion.

The surgical instrument for electrocautery according to the third modified example of the fourth embodiment of the present disclosure may include a wire **301**, a wire **302**, a wire **303**, a wire **304**, a wire **305**, a wire **306**, and a blade wire **307**, as in the fourth embodiment of the present disclosure described with reference to FIG. **140** or the like.

Since components of the present modified example described above are substantially the same as the components described in the fourth embodiment, a detailed description thereof will be omitted herein.

Hereinafter, the actuation hub **1490** of the third modified example of the fourth embodiment of the present disclosure will be described in more detail.

Referring to FIGS. **202** to **208**, the actuation hub **1490** may be formed in the form of a box having a hollow therein.

Here, a first coupling hole **1490***a* is formed in any one surface of the actuation hub **1490**, specifically, a surface coming into contact with the first jaw **1401**, and a second coupling hole **1490***b* may be formed in the other surface of the actuation hub **1490**, specifically, a surface coming into contact with the second jaw **1402**.

Here, the first coupling hole **1490***a* and the second coupling hole **1490***b* may be located on the same line in the Z-axis direction.

In addition, the actuation hub **1490** is coupled to each of the first jaw **1401** and the second jaw **1402**. In detail, a first actuation rotation shaft **1491** is inserted through the first jaw **1401** and the first coupling hole **1490***a* of the actuation hub **1490**, so that the actuation hub **1490** and the first jaw **1401** are axially coupled. Further, a second actuation rotation shaft **1492** is inserted through the second jaw **1402** and the second coupling hole **1490***b* of the actuation hub **1490**, so that the actuation hub **1490** and the second jaw **1402** are axially coupled.

Meanwhile, as described with reference to FIG. **154** or the like, a tube seating portion, a wire through-hole, and a blade accommodation portion are sequentially formed inside the actuation hub **1490**, and the blade wire **307** may pass through the inside of the actuation hub **1490** to be connected to the blade **1475**.

In addition, a guide slit **1490***c* may be formed in any one surface of the actuation hub **1490** or in both surfaces thereof in a longitudinal direction thereof (i.e., the X-axis direction). In addition, a slit coupling portion **1421***c* formed on the pulley **1421** may be fitted into the guide slit **1490***c*, so that a linear movement of the pulley **1421** in the X-axis direction may be guided by the guide slit **1490***c*.

In detail, a shaft coupling portion **1421***a*, a jaw coupling portion **1421***b*, and the slit coupling portion **1421***c* may be formed on the pulley **1421**. Here, the shaft coupling portion **1421***a* and the jaw coupling portion **1421***b* may be formed in the same manner as described in the fourth embodiment or the like. The slit coupling portion **1421***c* may be formed to protrude to a certain degree further from the shaft coupling portion **1421***a*. The above-described slit coupling portion **1421***c* is fitted into the guide slit **1490***c* of the actuation hub **1490**.

Meanwhile, although not shown in the drawings, a slit coupling portion (not shown) may also be formed in the pulley **1411**.

As described above, by providing the actuation hub **1490** to which the guide tube **1470** is coupled between the first jaw **1401** and the second jaw **1402**, the guide tube **1470** may not be curved, or the angle at which the guide tube **1470** is curved may be reduced, even when the first jaw **1401** or the second jaw **1402** rotates around the first rotation shaft **1441** or the actuation rotation shaft **1445**.

In detail, in a case in which the guide tube **1470** is directly coupled to the first jaw **1401** or the second jaw **1402**, when the first jaw **1401** or the second jaw **1402** rotates, one end portion of the guide tube **1470** also rotates together with the first jaw **1401** or the second jaw **1402**, causing the guide tube **1470** to be curved.

On the other hand, in a case in which the guide tube **1470** is coupled to the actuation hub **1490**, which is independent of the rotation of the jaw **1403**, as in the present embodiment, even when the first jaw **1401** or the second jaw **1402**

rotates, the guide tube **1470** may not be curved, or the angle at which the guide tube **1470** is curved may be reduced even when the guide tube **1470** is curved.

That is, by changing the direct connection between the guide tube **1470** and the jaw **1403** by the actuation hub **1490** to an indirect connection, the degree to which the guide tube **1470** is curved by the rotation of the jaw **1403** may be reduced.

In addition, in the end tool **1400** of the third modified example of the fourth embodiment of the present disclosure, the slit coupling portion **1421***c* formed on the pulley **1421** is fitted into the guide slit **1490***c* of the actuation hub **1490** so that the linear movement of the pulley **1421** in the X-axis direction may be guided by the guide slit **1490***c*. That is, when the first jaw **1401** and the second jaw **1402** perform an actuation motion, the first jaw **1401** and the second jaw **1402** move along the guide slit **1490***c* of the actuation hub **1490**, thereby obtaining an effect of more stably performing the actuation motion.

Fourth Modified Example of Fourth Embodiment

Hereinafter, an end tool **1500** of a surgical instrument according to a fourth modified example of the fourth embodiment of the present disclosure will be described. Here, the end tool **1500** of the surgical instrument according to the fourth modified example of the fourth embodiment of the present disclosure is different from the end tool (see **1100** in FIG. **140** or the like) of the surgical instrument according to the fourth embodiment of the present disclosure described above in that the configuration of an actuation hub **1590** is different. The configuration changed from the fourth embodiment as described above will be described in detail later.

FIGS. **209** to **213** are views illustrating the end tool of the surgical instrument for electrocautery according to the fourth modified example of the fourth embodiment of the present disclosure. FIGS. **214** and **215** are views illustrating an actuation hub of the end tool of the surgical instrument for electrocautery of FIG. **209**.

Referring to FIGS. **209** to **215**, the end tool **1500** of the fourth modified example of the fourth embodiment of the present disclosure includes a pair of jaws for performing a grip motion, that is, a first jaw **1501** and a second jaw **1502**, and herein, each of the first jaw **1501** and the second jaw **1502** or a component encompassing the first jaw **1501** and the second jaw **1502** may be referred to as a jaw **1503**.

Meanwhile, the end tool **1500** includes a plurality of pulleys including a pulley **1511** and a pulley **1513**, and a pulley **1514** that are associated with a rotational motion of the first jaw **1501**. Meanwhile, the end tool **1500** includes a plurality of pulleys including a pulley **1521** associated with a rotational motion of the second jaw **1502**.

In addition, the end tool **1500** of the fourth modified example of the fourth embodiment of the present disclosure may include a rotation shaft **1541**, a rotation shaft **1543**, and a rotation shaft **1544**. Here, the rotation shaft **1541** may be inserted through an end tool hub **1560**, and the rotation shaft **1543** and the rotation shaft **1544** may be inserted through a pitch hub **1550**. The rotation shaft **1541**, the rotation shaft **1543**, and the rotation shaft **1544** may be arranged sequentially from a distal end **1504** toward a proximal end **1505** of the end tool **1500**.

In addition, the end tool **1500** of the fourth modified example of the fourth embodiment of the present disclosure may include the end tool hub **1560** and the pitch hub **1550**.

The rotation shaft **1541** is inserted through the end tool hub **1560**, and the pulley **1511** and the pulley **1521**, which are axially coupled to the rotation shaft **1541**, and at least some of the first jaw **1501** and the second jaw **1502** coupled the pulley **1511** and the pulley **1521** may be accommodated inside the end tool hub **1560**.

Meanwhile, a first pitch pulley portion **1563***a* and a second pitch pulley portion **1563***b*, which serve as end tool pitch pulleys, may be formed at one end portion of the end tool hub **1560**. A wire (see **303** of FIG. **146**) and a wire **304** (see **304** of FIG. **146**) are coupled to the first pitch pulley portion **1563***a* and the second pitch pulley portion **1563***b*, which serve as end tool pitch pulleys, and a pitch motion is performed while the end tool hub **1560** rotates around the rotation shaft **1543**.

The rotation shaft **1543** and the rotation shaft **1544** may be inserted through the pitch hub **1550**, and the pitch hub **1550** may be axially coupled to the end tool hub **1560** by the rotation shaft **1543**. Accordingly, the end tool hub **1560** may be formed to be pitch-rotatable around the rotation shaft **1543** with respect to the pitch hub **1550**.

Meanwhile, the end tool **1500** of the fourth modified example of the fourth embodiment of the present disclosure may further include components such as a first electrode **1551**, a second electrode **1552**, a guide tube **1571**, and a blade **1575** in order to perform a cauterizing motion and a cutting motion. Here, components related to the driving of the blade, such as the guide tube **1571** and the blade **1575**, may be collectively referred to as a blade assembly. Components for performing a cauterizing motion and a cutting motion in the present embodiment are substantially the same as those described in the fourth embodiment, and thus a detailed description thereof will be omitted herein.

The surgical instrument for electrocautery according to the fourth modified example of the fourth embodiment of the present disclosure may include a wire **301**, a wire **302**, a wire **303**, a wire **304**, a wire **305**, a wire **306**, and a blade wire **307**, as in the fourth embodiment of the present disclosure described with reference to FIG. **140** or the like.

Hereinafter, the actuation hub **1590** of the fourth modified example of the fourth embodiment of the present disclosure will be described in more detail.

Referring to FIGS. **209** to **215**, the actuation hub **1590** may be formed in the form of a box having a hollow therein. Here, a first coupling hole **1590***a* is formed in any one surface of the actuation hub **1590**, specifically, a surface coming into contact with the first jaw **1501**, and a second coupling hole **1590***b* may be formed in the other surface of the actuation hub **1590**, specifically, a surface coming into contact with the second jaw **1502**. Here, the first coupling hole **1590***a* and the second coupling hole **1590***b* may be disposed on the same line in the Z-axis direction.

In addition, the actuation hub **1590** is coupled to each of the first jaw **1501** and the second jaw **1502**. In detail, a first actuation rotation shaft **1591** is inserted through the first jaw **1501** and the first coupling hole **1590***a* of the actuation hub **1590**, so that the actuation hub **1590** and the first jaw **1501** are axially coupled. Further, a second actuation rotation shaft **1592** is inserted through the second jaw **1502** and the second coupling hole **1590***b* of the actuation hub **1590**, so that the actuation hub **1590** and the second jaw **1502** are axially coupled.

Meanwhile, as described with reference to FIG. **154** or the like, a tube seating portion, a wire through-hole, and a blade accommodation portion are sequentially formed inside the

actuation hub **1590**, and the blade wire **307** may pass through the inside of the actuation hub **1590** to be connected to the blade **1575**.

As described above, by providing the actuation hub **1590** to which the guide tube **1570** is coupled between the first jaw **1501** and the second jaw **1502**, the guide tube **1570** may not be curved, or the angle at which the guide tube **1570** is curved may be reduced, even when the first jaw **1501** or the second jaw **1502** rotates around the first rotation shaft **1541** or the actuation rotation shaft **1545**.

In detail, in a case in which the guide tube **1570** is directly coupled to the first jaw **1501** or the second jaw **1502**, when the first jaw **1501** or the second jaw **1502** rotates, one end portion of the guide tube **1570** also rotates together with the first jaw **1501** or the second jaw **1502**, causing the guide tube **1570** to be curved.

On the other hand, in a case in which the guide tube **1570** is coupled to the actuation hub **1590**, which is independent of the rotation of the jaw **1503**, as in the present embodiment, even when the first jaw **1501** or the second jaw **1502** rotates, the guide tube **1570** may not be curved, or the angle at which the guide tube **1570** is curved may be reduced even when the guide tube **1570** is curved.

That is, by changing the direct connection between the guide tube **1570** and the jaw **1503** by the actuation hub **1590** to an indirect connection, the degree to which the guide tube **1570** is curved by the rotation of the jaw **1503** may be reduced.

As such, the present disclosure has been described with reference to the embodiments described with reference to the drawings, but it will be understood that this is merely exemplary, and those of ordinary skill in the art will understand that various modifications and variations of the embodiments are possible therefrom. Accordingly, the true technical protection scope of the present disclosure should be defined by the technical spirit of the appended claims.

INDUSTRIAL APPLICABILITY

The present invention relates to a surgical instrument. More specifically, the surgical instrument can be operated manually or automatically for use in laparoscopic surgery or various other surgeries, including a locking device capable of locking and/or unlocking for at least one operation.

The invention claimed is:

1. An end tool of a surgical instrument, the end tool comprising:

a first jaw and a second jaw configured to be rotatable independently of each other;

a first jaw pulley connected to the first jaw and formed to be rotatable around a first rotation shaft;

a second jaw pulley connected to the second jaw, formed to be rotatable around the first rotation shaft, and formed to be spaced a predetermined distance from the first jaw pulley;

a blade assembly configured to receive a driving force and linearly move between a proximal end and a distal end of the first jaw, and having at least a part formed between the first jaw pulley and the second jaw pulley, the blade assembly including a blade and a guide tube;

a blade wire at least partially in contact with the blade assembly and configured to transfer the driving force to the blade assembly and allow the blade to linearly move in a longitudinal direction; and

an end tool hub including a first jaw pulley coupling portion, a second jaw pulley coupling portion, and a guide portion configured to connect the first jaw pulley coupling portion and the second jaw pulley coupling portion, the first jaw pulley coupling portion and the second jaw pulley coupling portion disposed to face each other,

wherein the first jaw pulley and the second jaw pulley perform a yaw motion while rotating around the first rotation shaft, and the first jaw and the second jaw perform an actuation motion while rotating around an actuation rotation shaft spaced apart by a predetermined distance from the first rotation shaft,

wherein the guide tube is configured to internally accommodate at least a part of the blade wire and is disposed to be bent to a predetermined degree, and

wherein the first jaw pulley is disposed adjacent to the first jaw pulley coupling portion of the end tool hub and the second jaw pulley is disposed adjacent to the second jaw pulley coupling portion of the end tool hub, and at least a part of the blade assembly is disposed between the first jaw pulley and the second jaw pulley.

2. The end tool of claim **1**, wherein the blade wire passes through an inside of the guide tube and is connected to the blade.

3. The end tool of claim **1**, wherein when the guide tube is bent to the predetermined degree, the blade wire inside the guide tube is also bent together with the guide tube.

4. The end tool of claim **1**, wherein the blade wire is formed to be movable along the guide tube in the guide tube.

5. The end tool of claim **1**, wherein the guide tube is formed to extend toward the blade by passing between central axes of rotation of the first jaw pulley and the second jaw pulley.

6. The end tool of claim **1**, wherein the guide tube is formed to extend toward the first jaw or the second jaw by passing through the end tool hub.

7. The end tool of claim **6**, wherein a round portion having a predetermined curvature and rounded outward is formed on an inner circumferential surface of the end tool hub, the inner circumferential surface facing the guide tube passing through the end tool hub.

8. The end tool of claim **1**, wherein, when the first jaw pulley and the second jaw pulley rotate in a same direction around the first rotation shaft, a yaw motion in which the first jaw and the second jaw rotate in a same direction is performed.

9. The end tool of claim **1**, wherein, when the second jaw pulley rotates around the first rotation shaft relative to the first jaw pulley, an actuation motion in which the second jaw rotates relative to the first jaw is performed.

10. The end tool of claim **1**, comprising:

a pair of end tool first jaw pitch main pulleys formed at one side of the first jaw pulley, and formed to be rotatable around a third rotation shaft forming a predetermined angle with the first rotation shaft; and

a pair of end tool second jaw pitch main pulleys formed on one side of the second jaw pulley and formed to be rotatable around the third rotation shaft.

11. The end tool of claim **10**, wherein the end tool is formed to be yaw-rotatable around the first rotation shaft and simultaneously pitch-rotatable around the third rotation shaft.

12. The end tool of claim **10**, further comprising:

a first jaw wire at least a part of which is wound around the first jaw pulley and the pair of end tool first jaw pitch main pulleys; and

a second jaw wire at least a part of which is wound around the second jaw pulley and the pair of end tool second jaw pitch main pulleys.

13. The end tool of claim **1**, wherein the blade is configured to move between the proximal end and the distal end of the end tool by the blade wire.

* * * * *