US 20250257907A1

(19) United States
(12) Patent Application Publication
Christie et al.
(10) Pub. No.: US 2025/0257907 A1
(43) Pub. Date: Aug. 14, 2025

(54) **GEOTHERMAL ENERGY SYSTEM**

(71) Applicant: **Stoic Transitional Resources Inc.**, Calgary (CA)

(72) Inventors: **Grant John Christie**, Calgary (CA); **Philip A. Keele**, Calgary (CA); **Joseph Tarrant**, Calgary (CA)

(73) Assignee: **Stoic Transitional Resources Inc.**, Calgary (CA)

(21) Appl. No.: **19/172,478**

(22) Filed: **Apr. 7, 2025**

Related U.S. Application Data

(63) Continuation-in-part of application No. 18/908,701, filed on Oct. 7, 2024.

(60) Provisional application No. 63/543,021, filed on Oct. 6, 2023.

Publication Classification

(51) **Int. Cl.**

F24T 10/17	(2018.01)
F24T 10/15	(2018.01)
F24T 10/30	(2018.01)

(52) **U.S. Cl.**

CPC ***F24T 10/17*** (2018.05); ***F24T 10/15*** (2018.05); ***F24T 10/30*** (2018.05)

(57) **ABSTRACT**

A system for geothermal heating comprising: a forced geothermal circuit in communication with a well bore; a well bore heat exchanger; a multilateral channel; a channel casing design; and a pump. A method for geothermal heating comprising: passing a fluid into a thermal circulation system; passing the fluid into a well bore heat exchanger; heating the fluid; passing the heated fluid through a multilateral channel comprising a multilateral channel design casing; and passing a reservoir fluid and the fluid into a heat exchanger. A method for a loop recovery process comprising: passing a circulation fluid into a system for geothermal heating; passing the circulation fluid into a well bore heat exchanger; heating the circulation fluid; passing the heated circulation fluid out of the system for geothermal heating; passing the heated circulation fluid through a heat exchanger of an organic Rankine cycle; and cooling the circulation fluid.

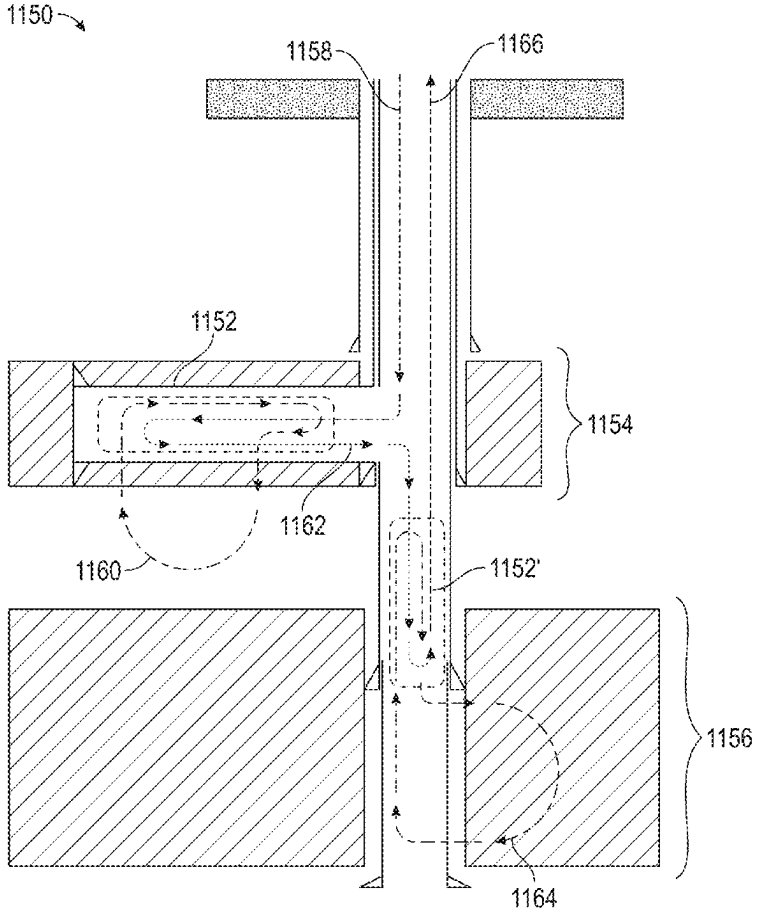

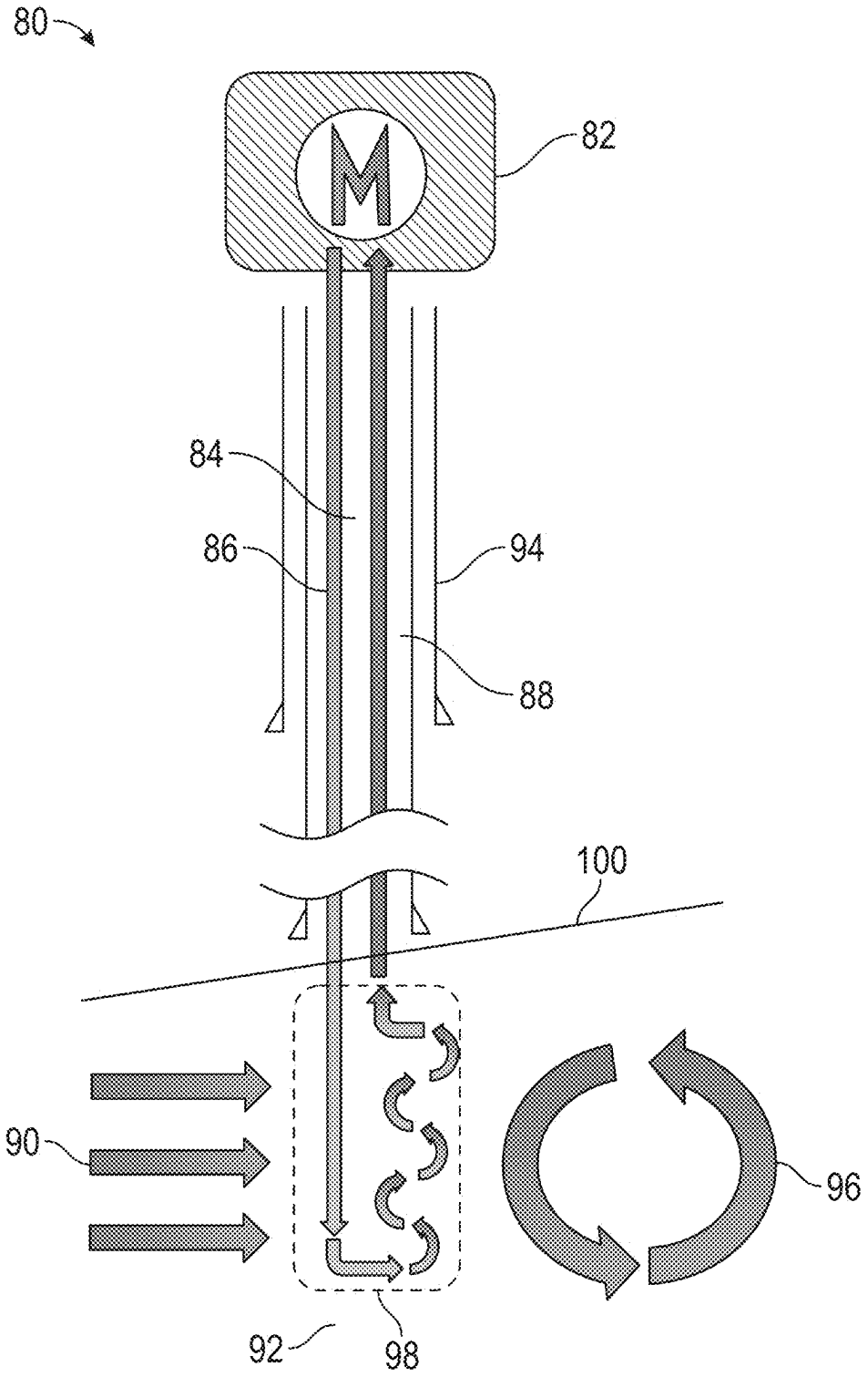

FIG. 1
(Prior Art)

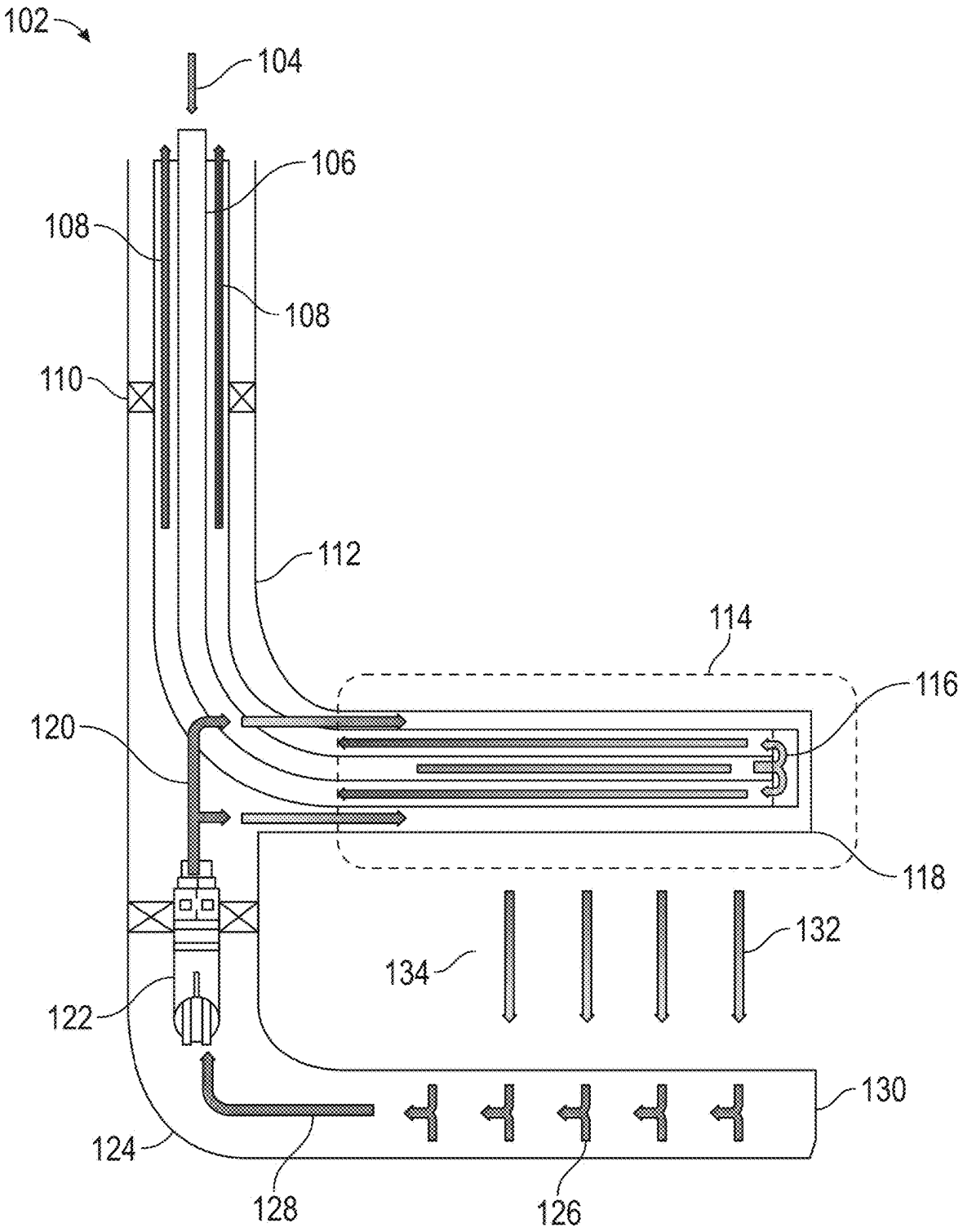
102
104
106
108
108
110
112
114
116
120
118
132
134
122
130
124
128
126

FIG. 2

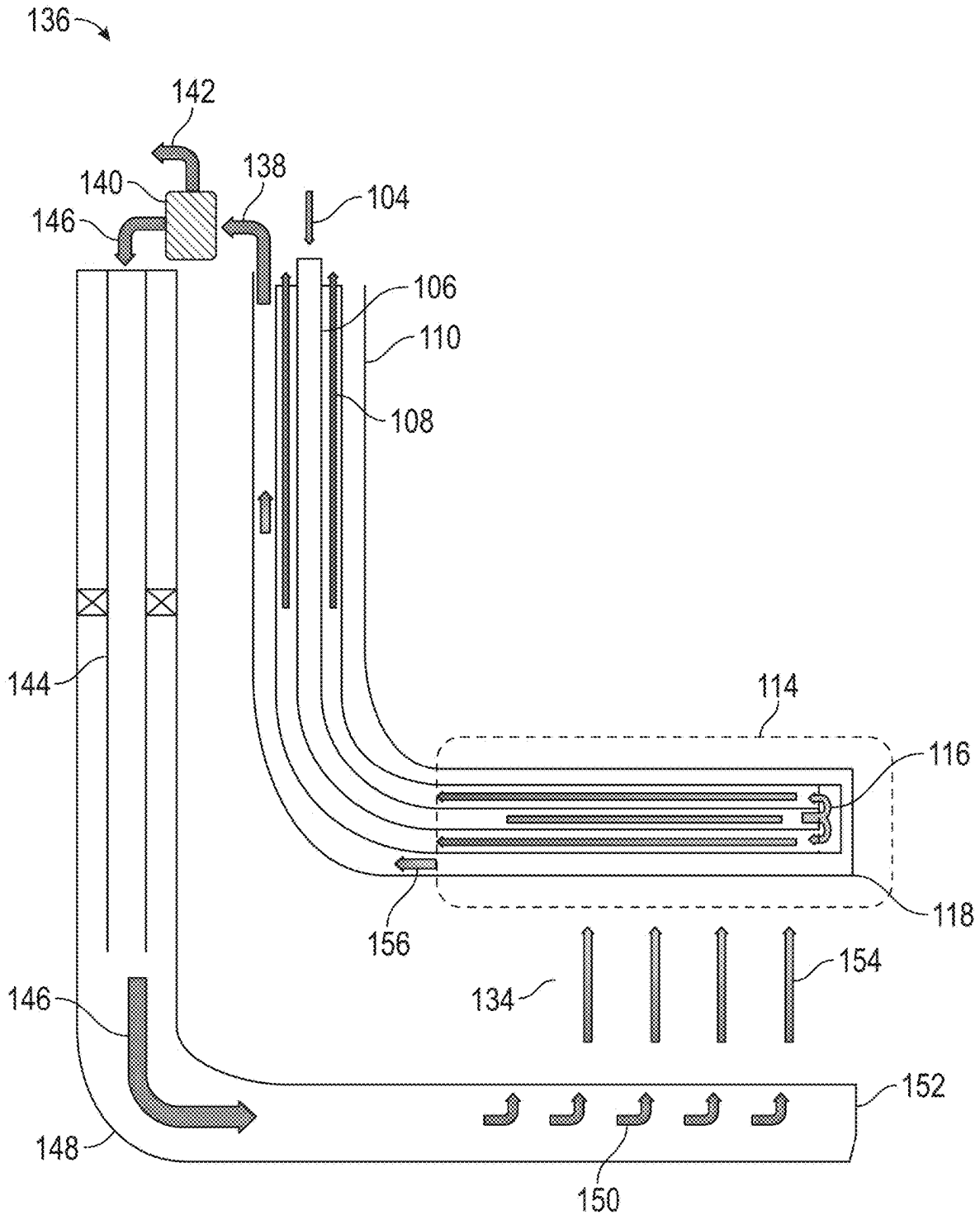
136
142
140
138
146
104
106
110
108
144
114
116
118
156
154
134
146
152
148
150

FIG. 3

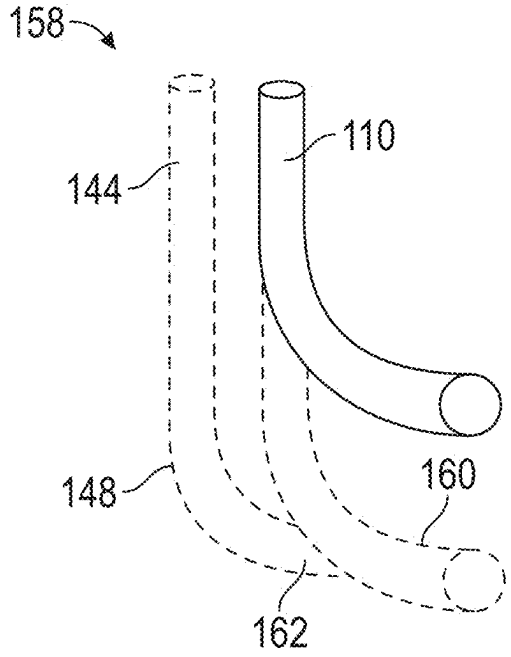
158
110
144
148
160
162

FIG. 4

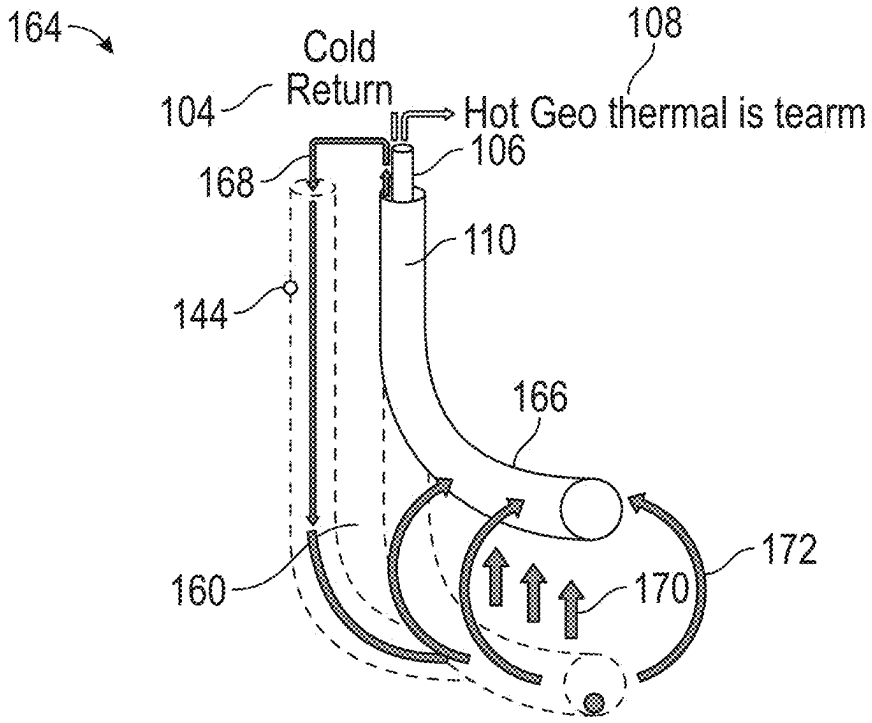
164
Cold
Return
108
104
Hot Geo thermal is tearm
106
168
110
144
166
172
160
170

FIG. 5

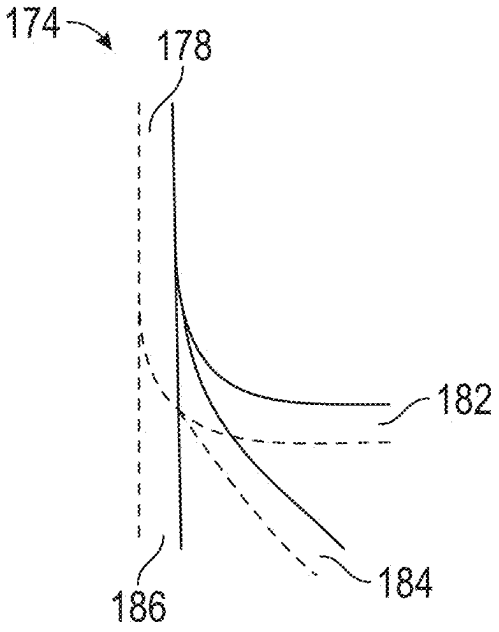

FIG. 6A

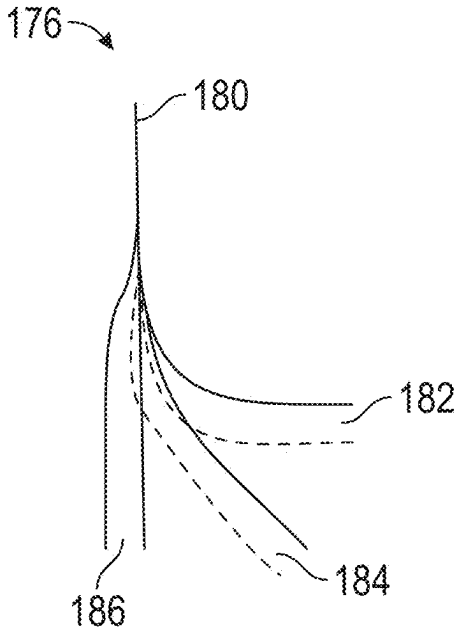

FIG. 6B

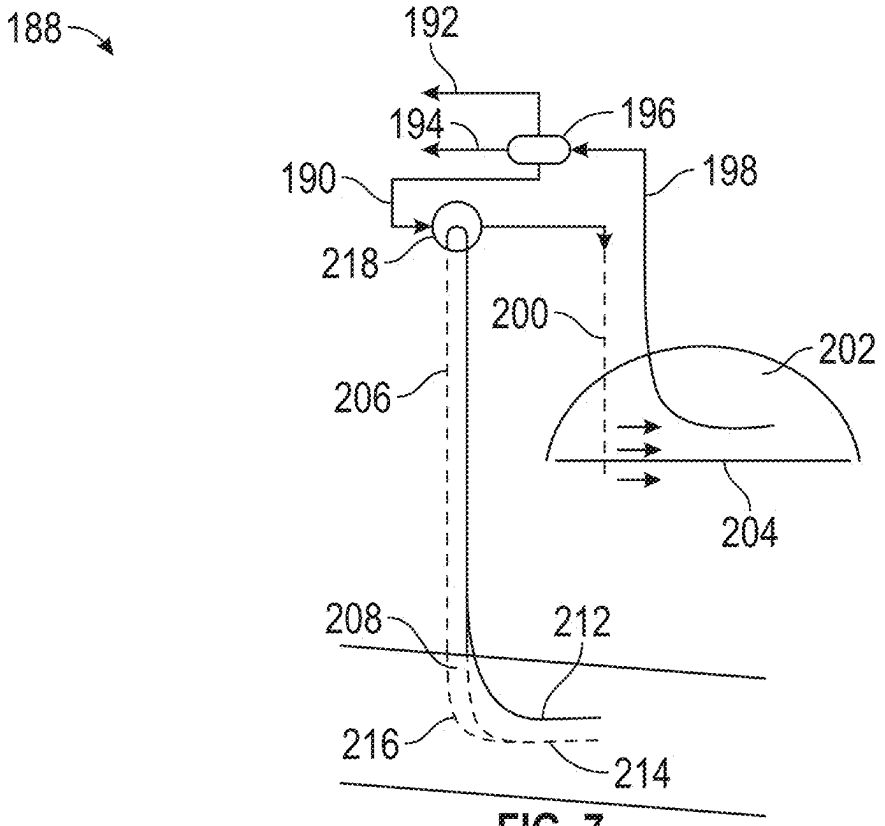

FIG. 7

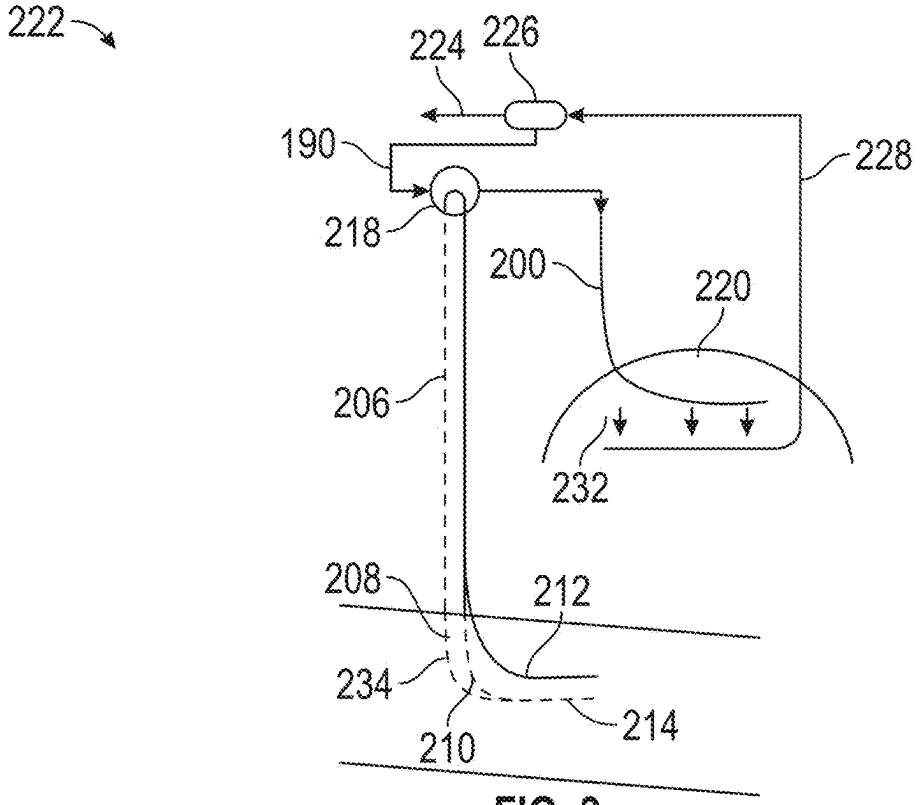
222
224
226
190
228
218
200
220
206
232
208
212
234
214
210

FIG. 8

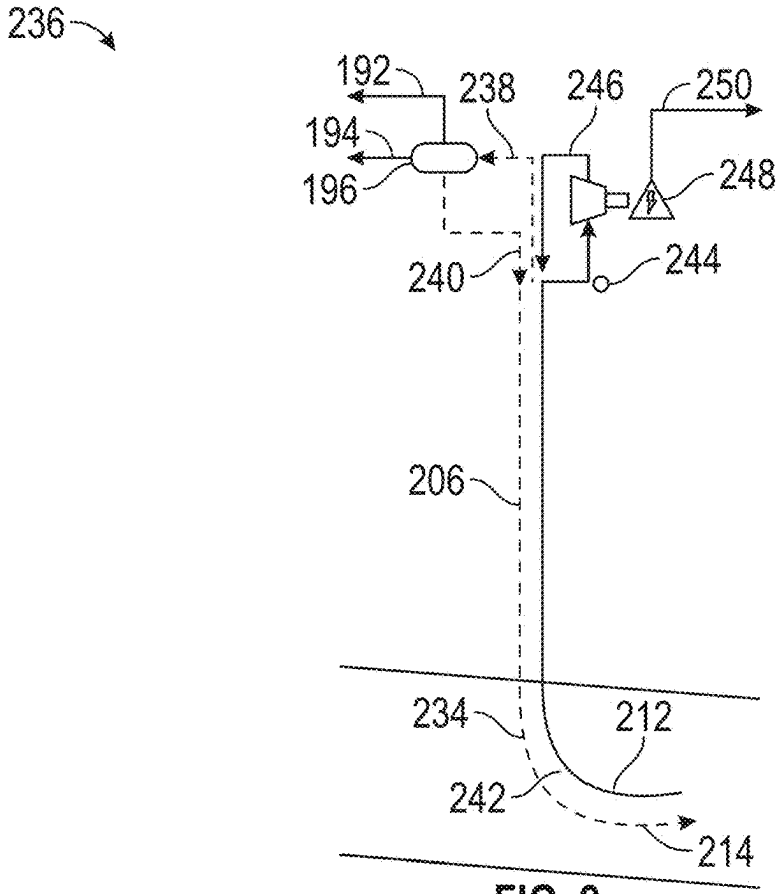
236
192
238
246
250
194
196
248
240
244
206
234
212
242
214

FIG. 9

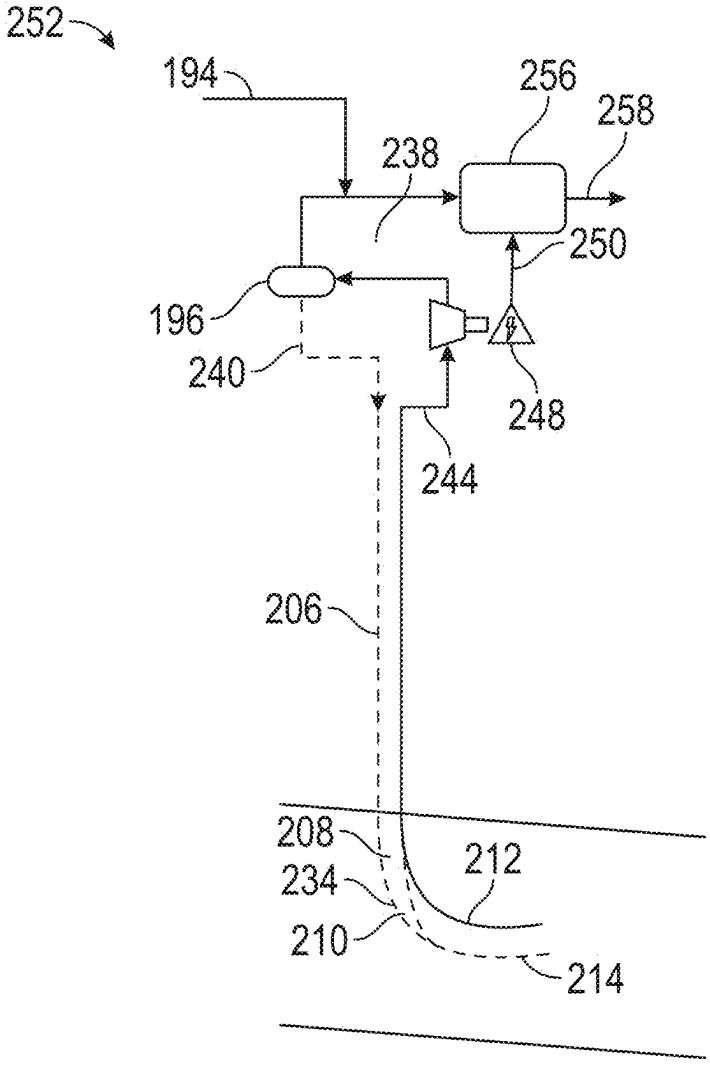

FIG. 10

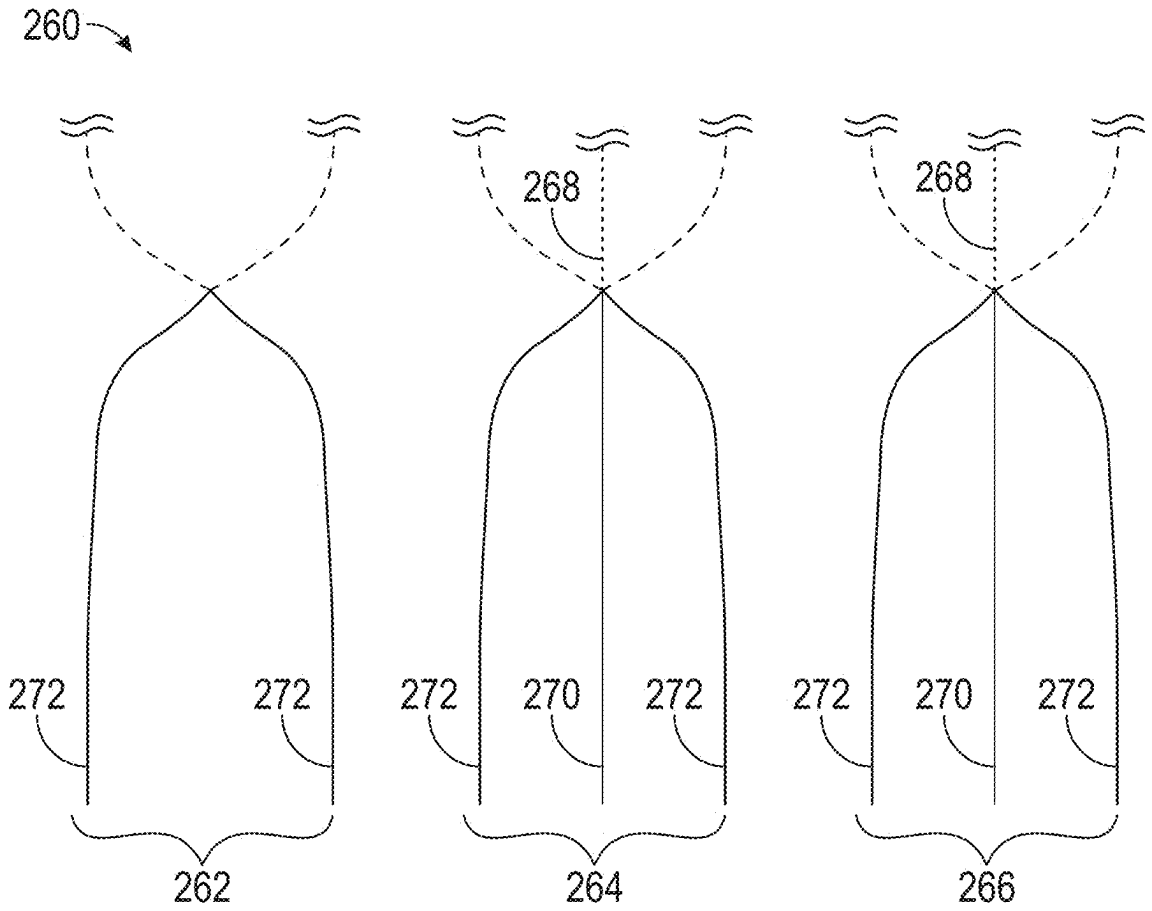

FIG. 11A

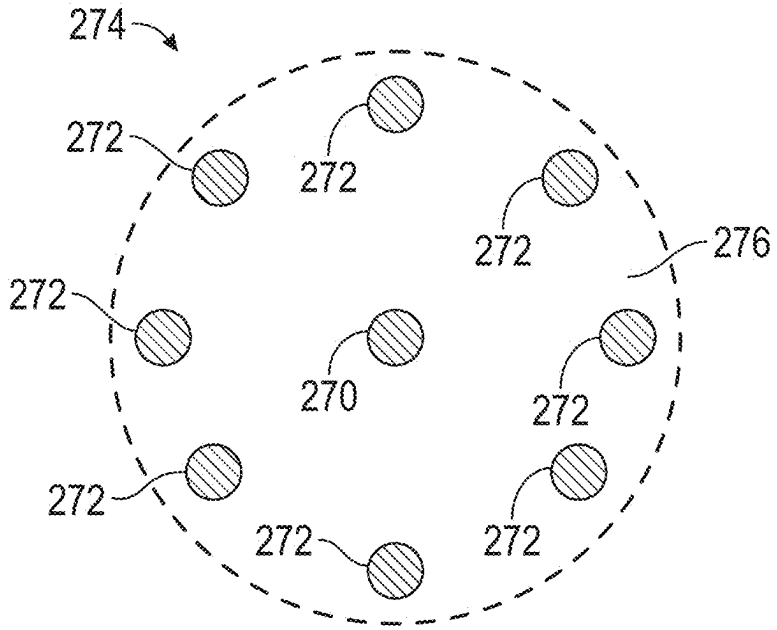

FIG. 11B

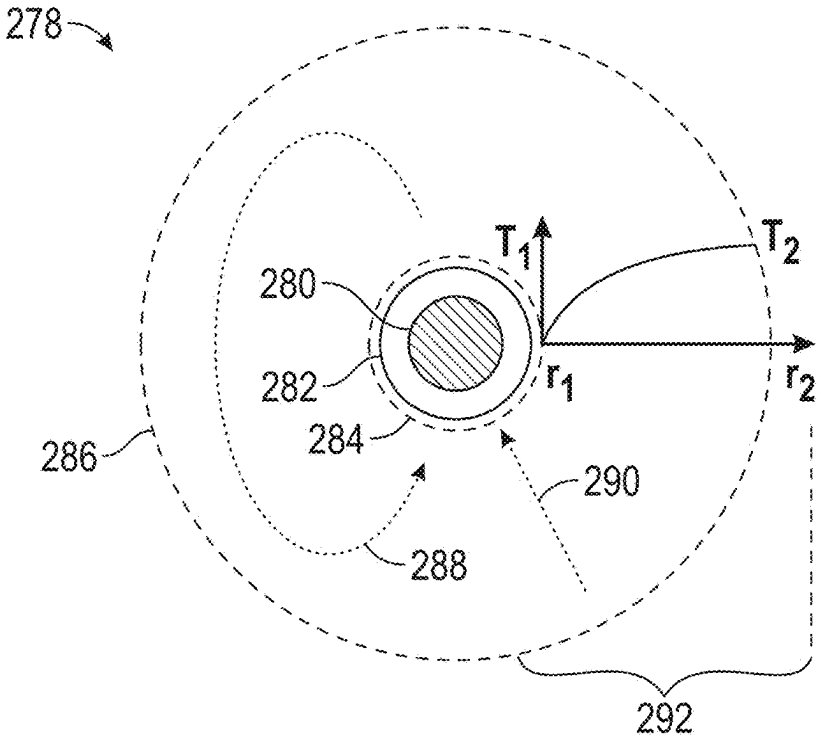
278
280
282
284
286
288
290
292
T_1
T_2
r_1
r_2

FIG. 12

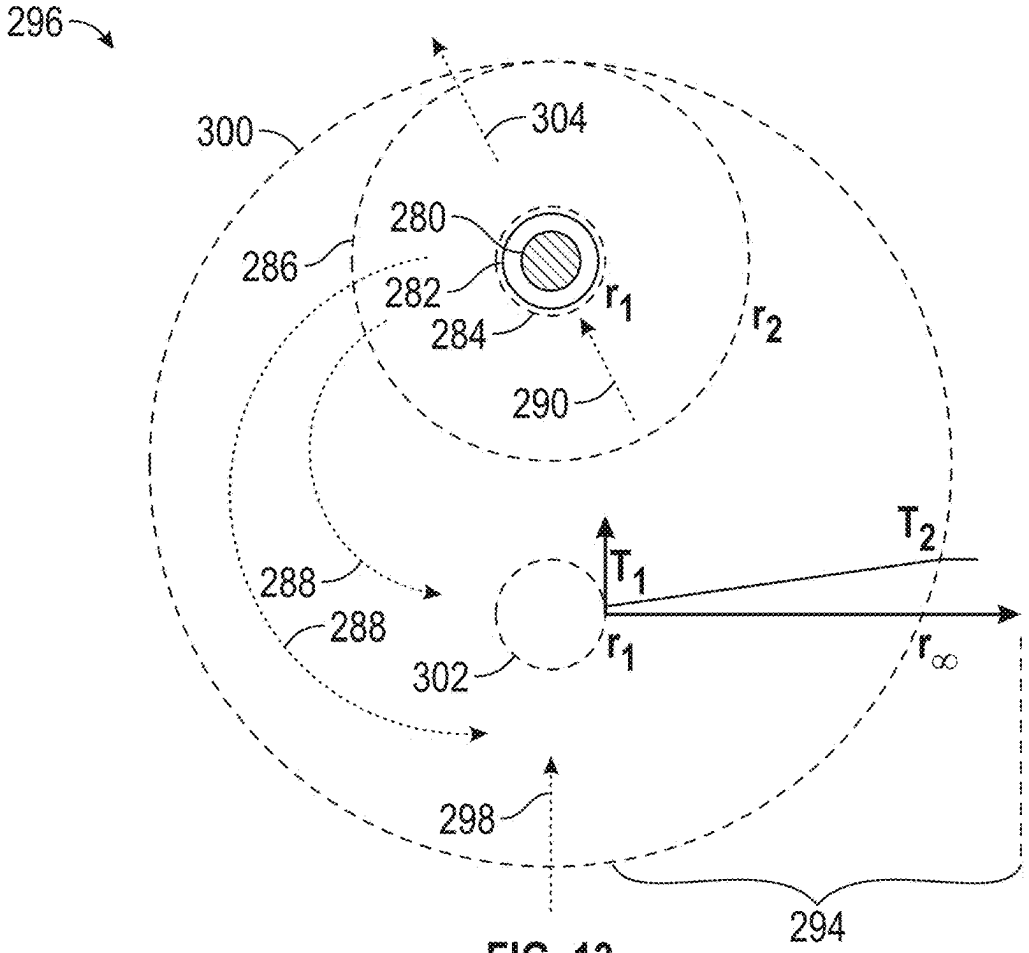
296
300
304
280
282
284
286
288
288
290
298
302
294
T_1
T_2
r_1
r_2
r_∞

FIG. 13

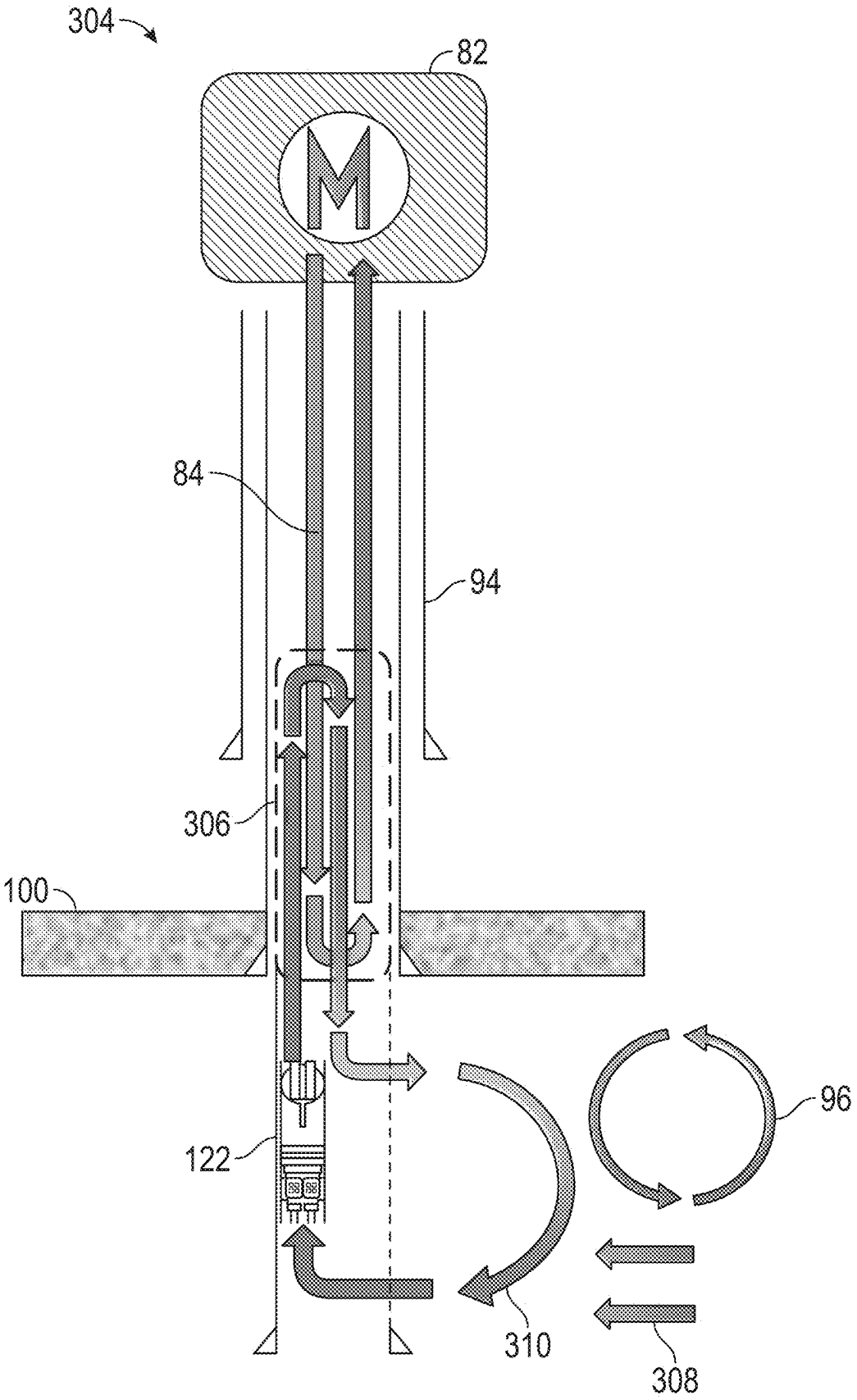

FIG. 14

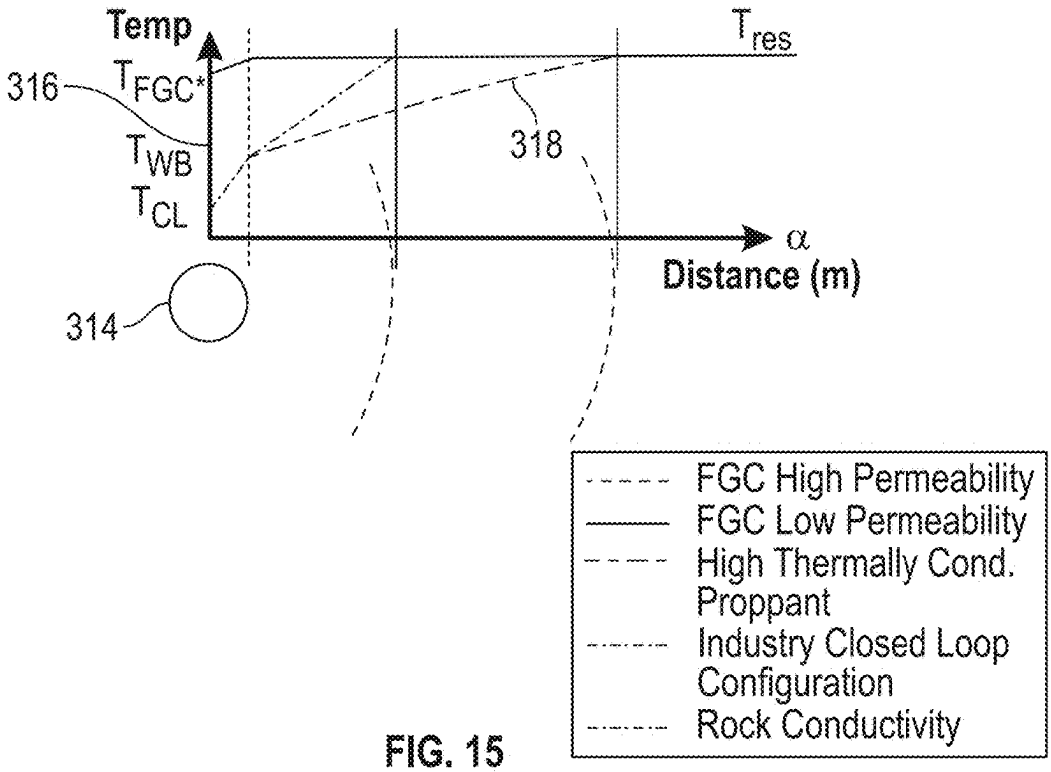
Temp
T_{res}
316
T_{FGC^*}
T_{WB}
T_{CL}
318
α
Distance (m)
314
FGC High Permeability
FGC Low Permeability
High Thermally Cond. Proppant
Industry Closed Loop Configuration
Rock Conductivity

FIG. 15

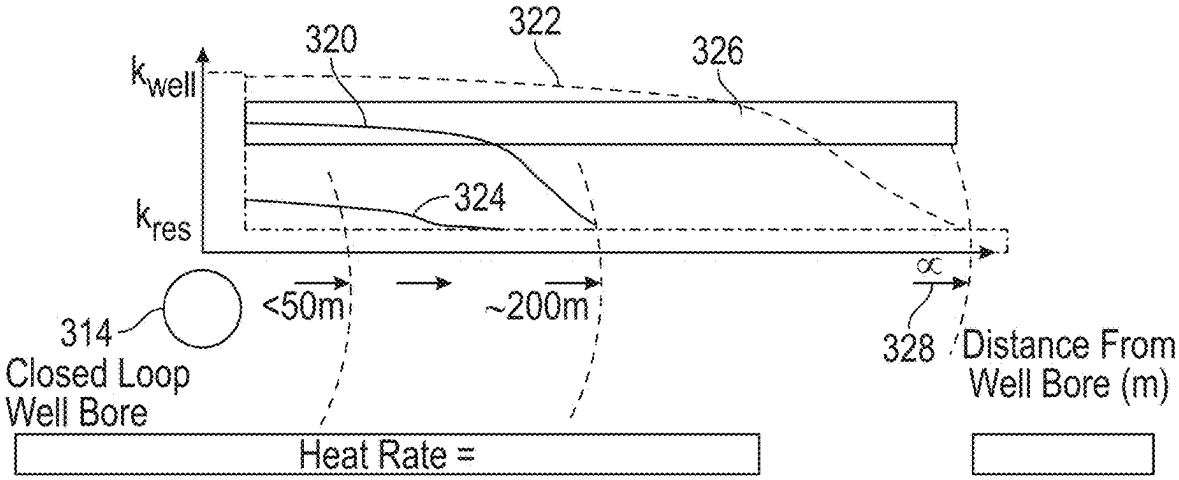
320
322
326
k_{well}
324
k_{res}
<50m
~200m
α
314
Closed Loop Well Bore
328
Distance From Well Bore (m)
Heat Rate =

FIG. 16

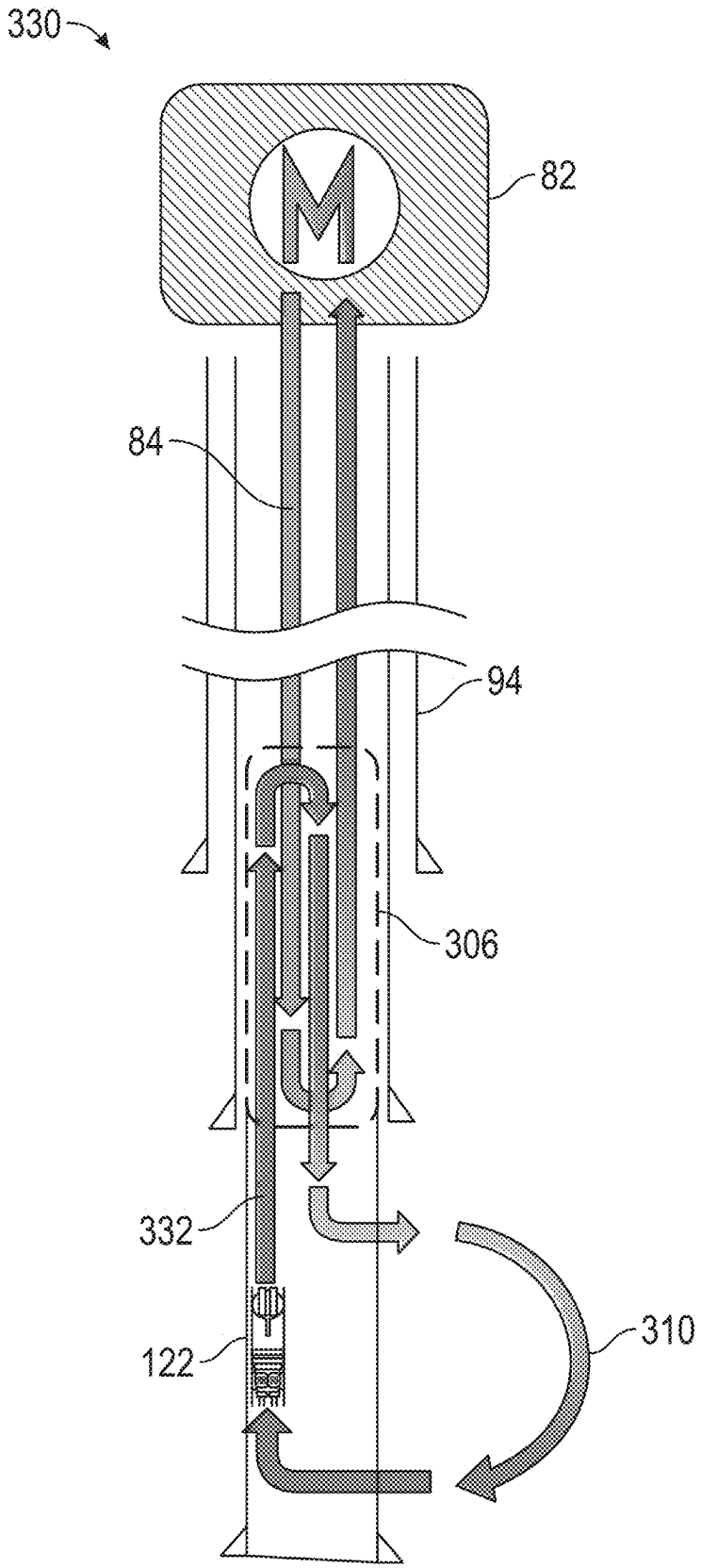

FIG. 17

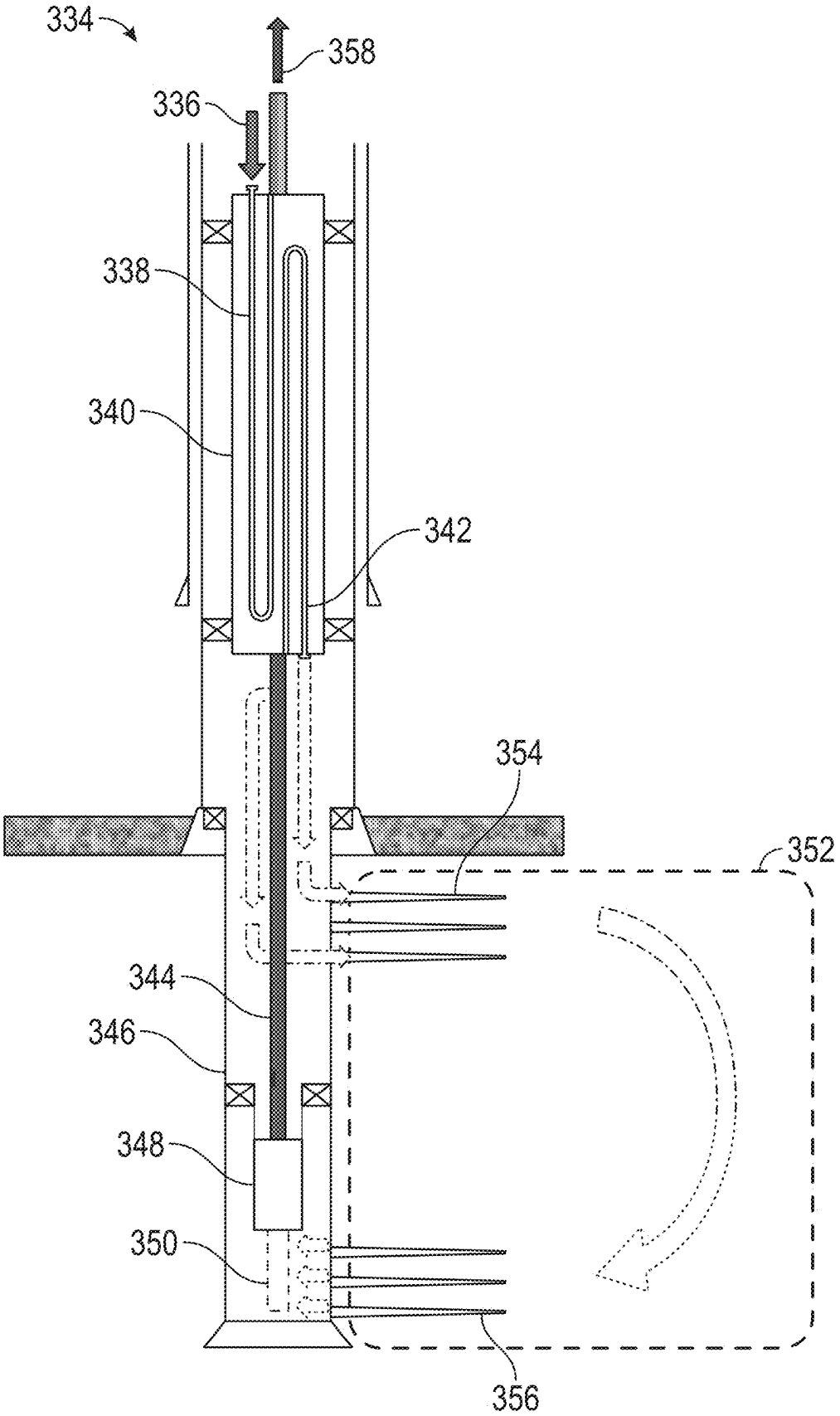

FIG. 18

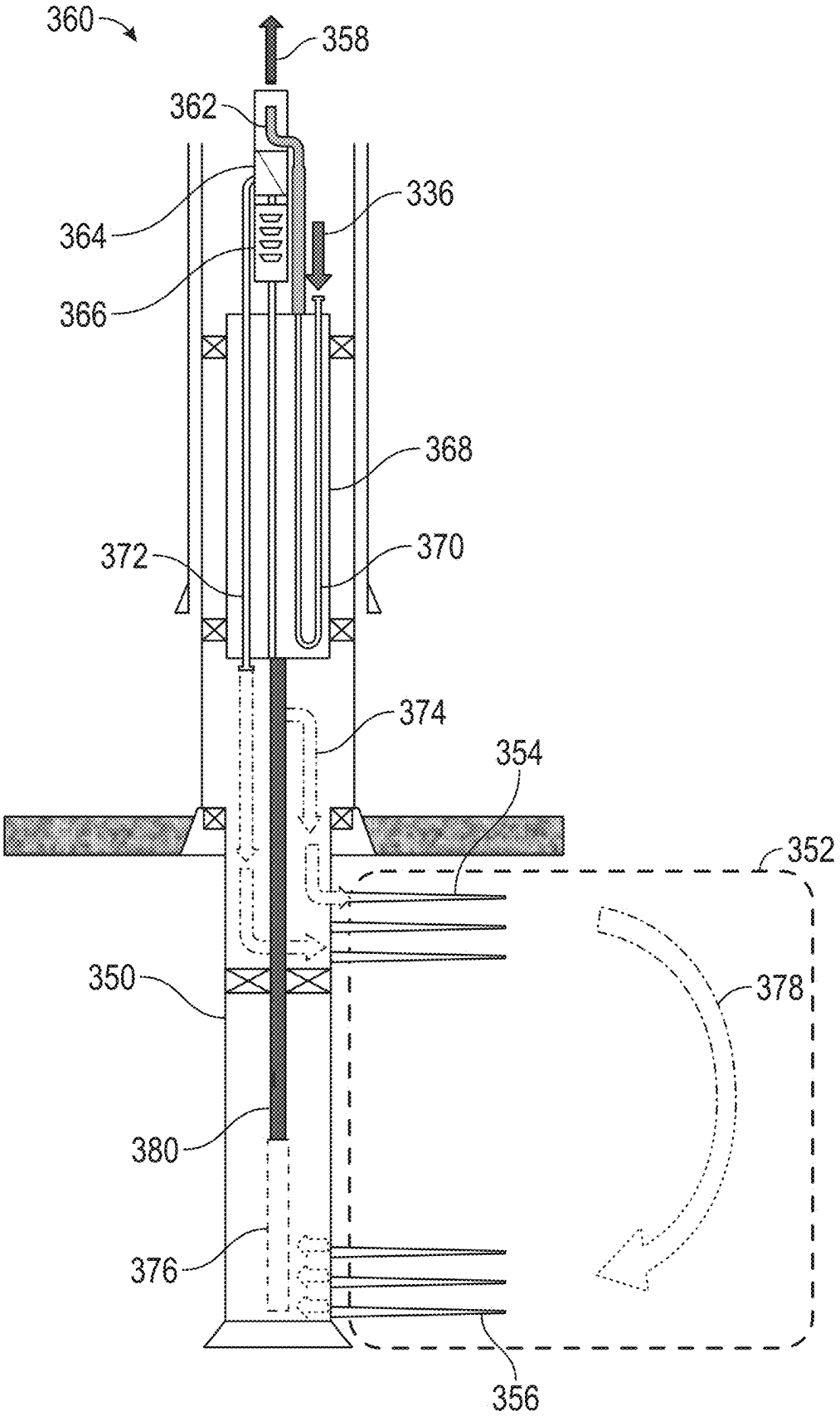
360
358
362
364
336
366
368
372
370
374
354
352
350
378
380
376
356

FIG. 19

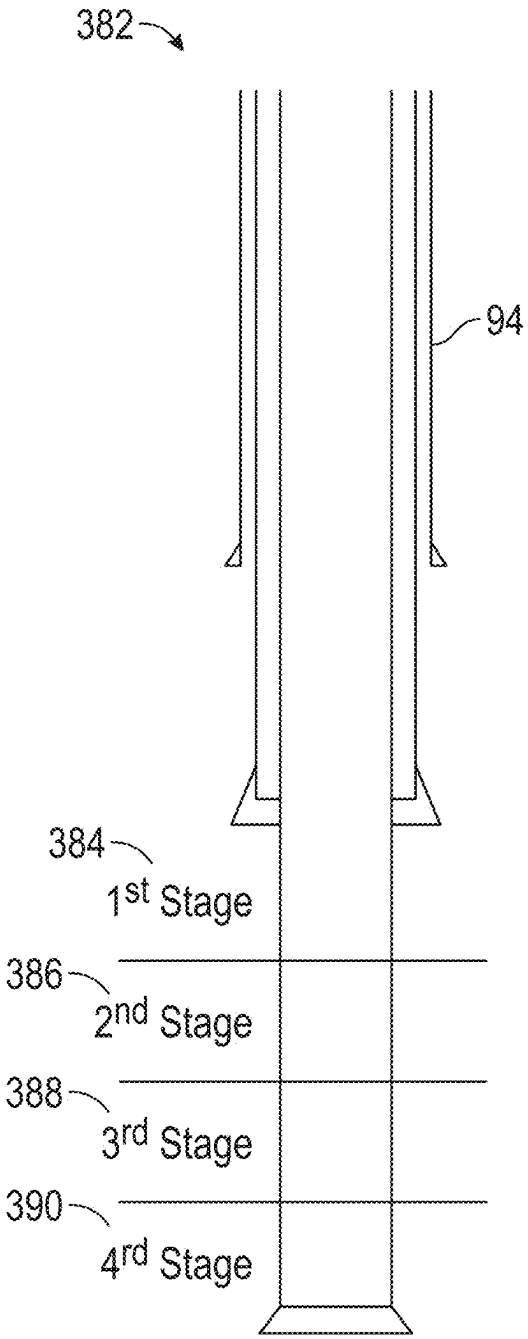
382
94
384
1st Stage
386
2nd Stage
388
3rd Stage
390
4rd Stage

FIG. 20

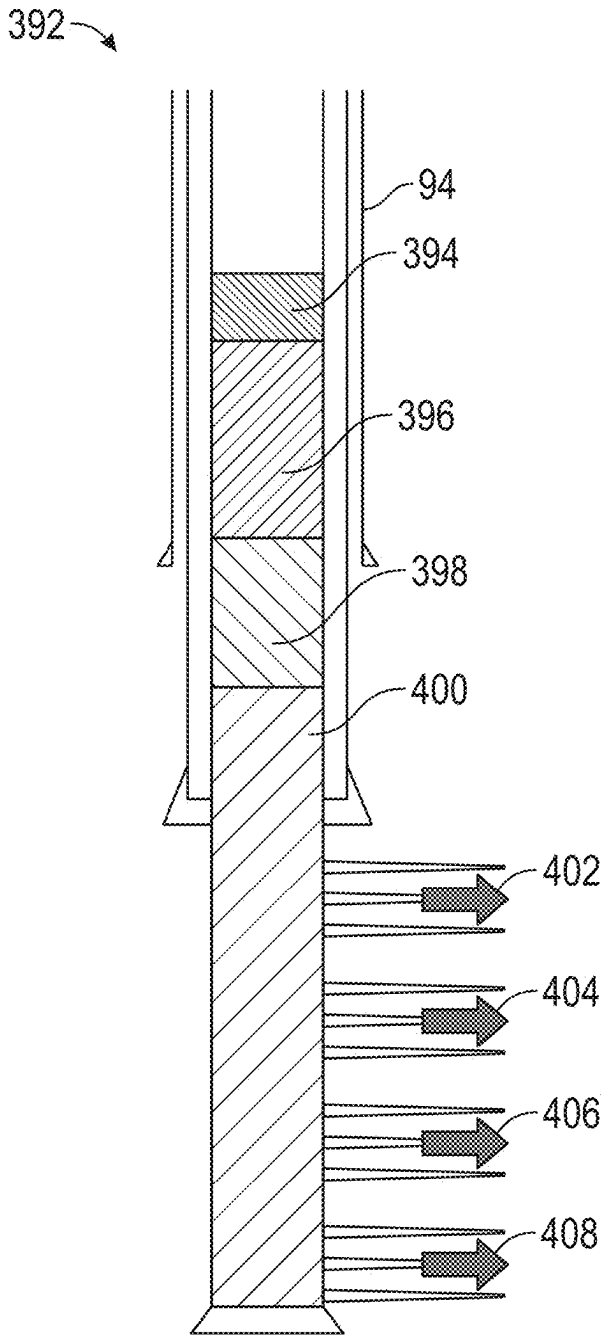
392
94
394
396
398
400
402
404
406
408

FIG. 21

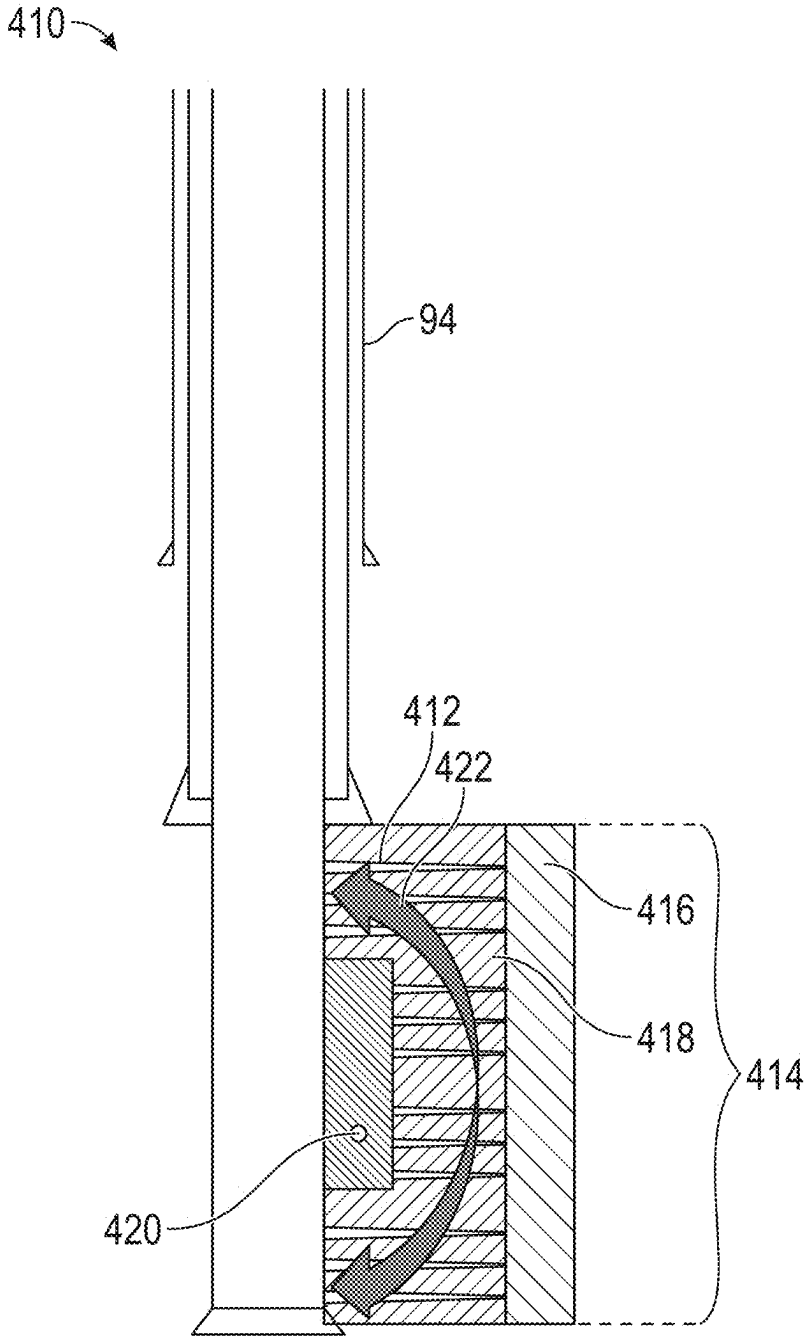

FIG. 22

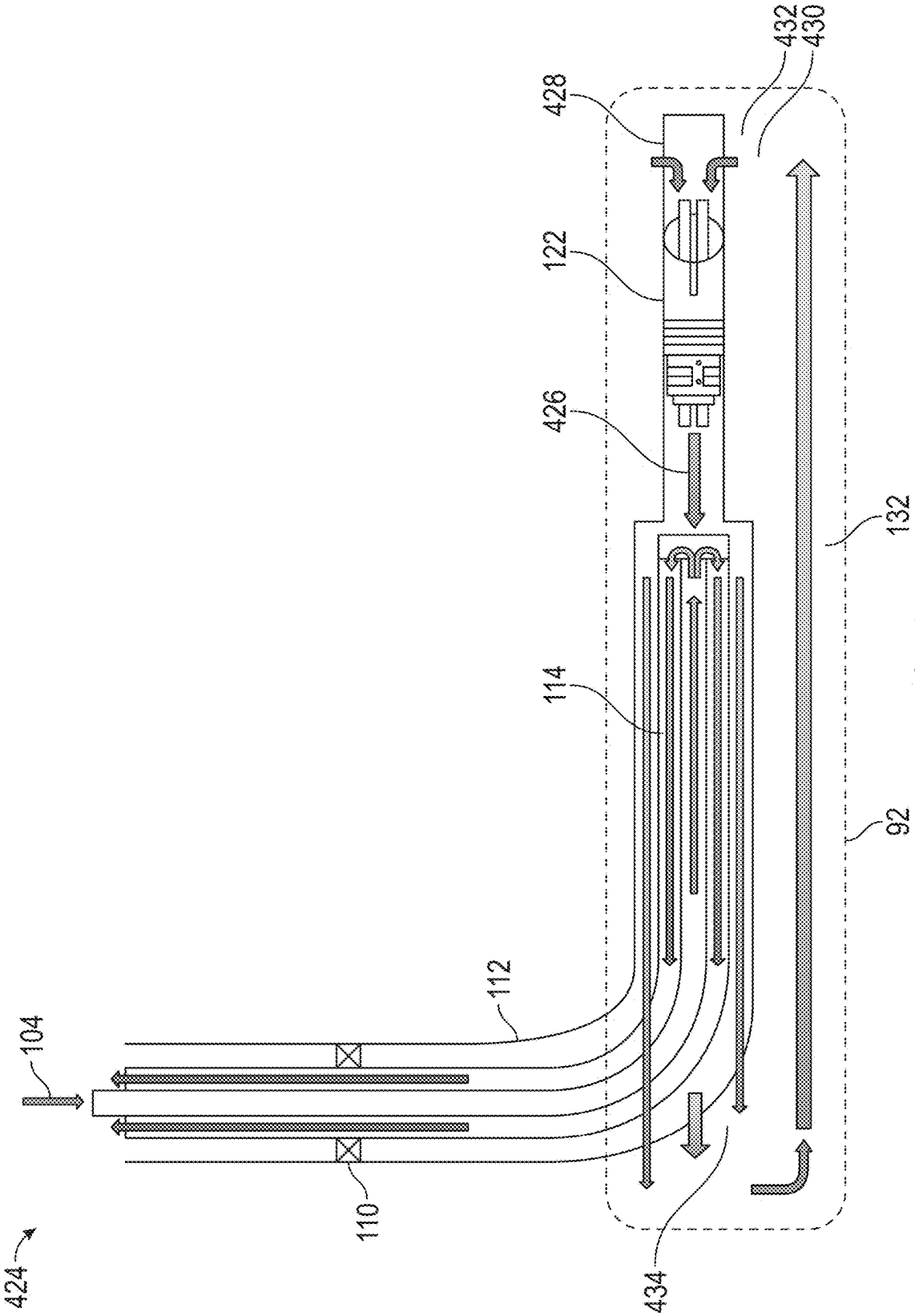

FIG. 23

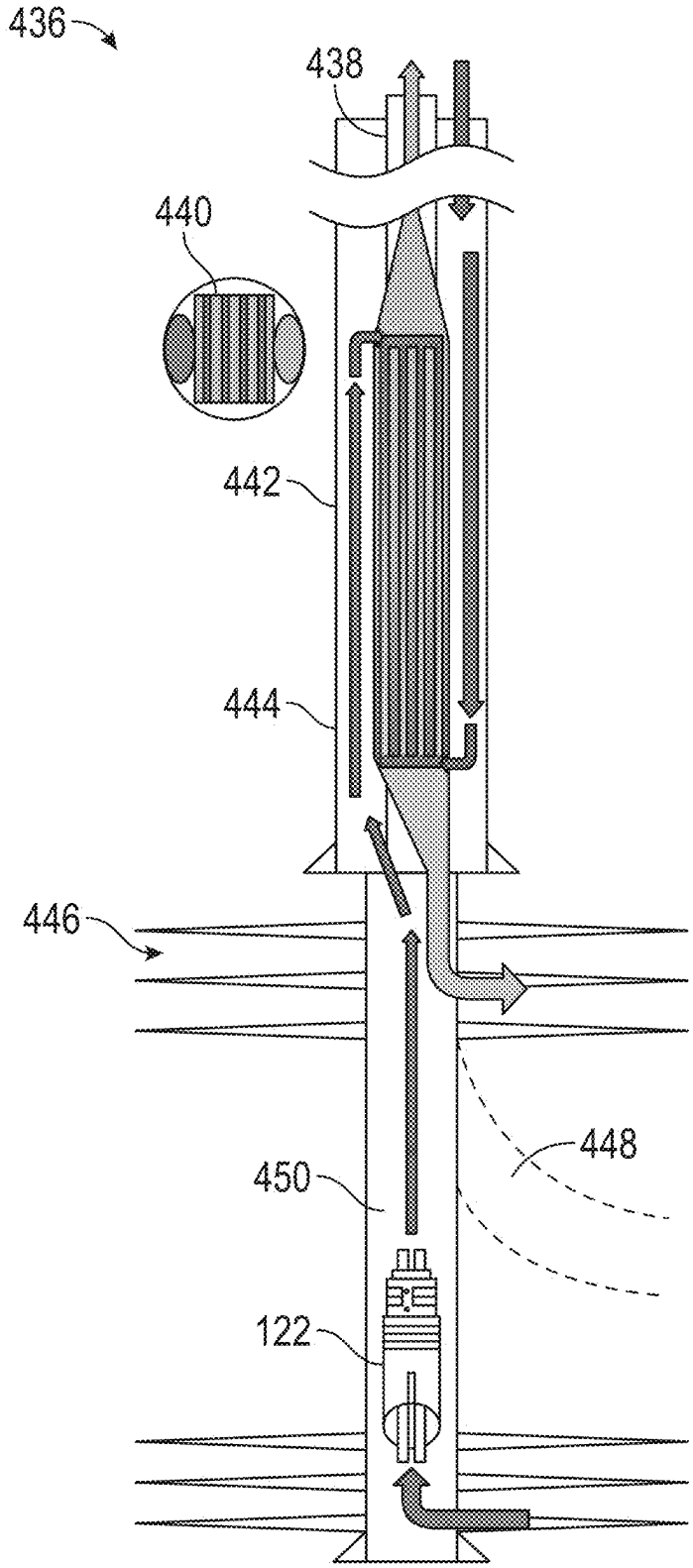

FIG. 24

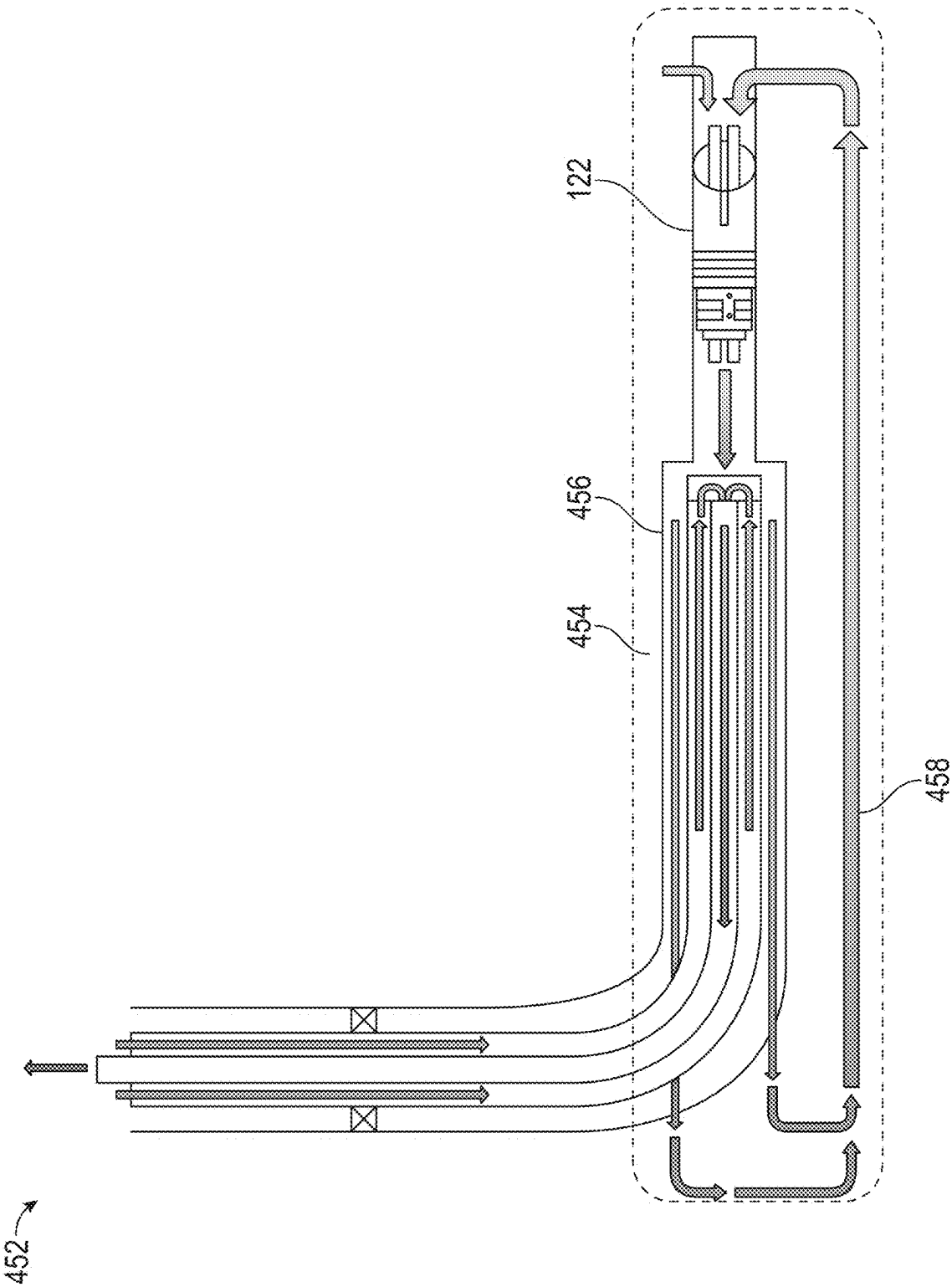

FIG. 25

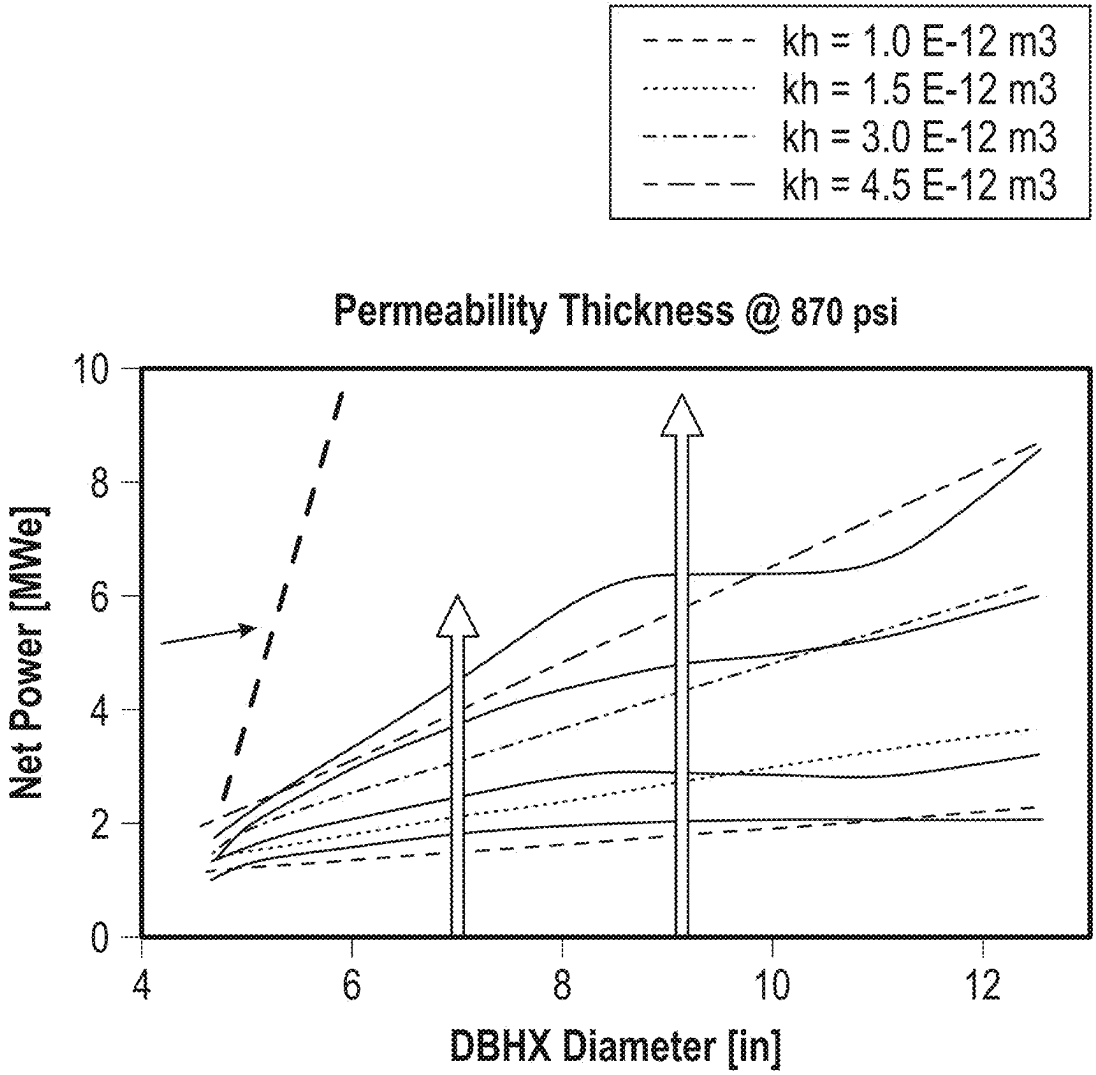
kh = 1.0 E-12 m3
kh = 1.5 E-12 m3
kh = 3.0 E-12 m3
kh = 4.5 E-12 m3
Permeability Thickness @ 870 psi
Net Power [MWe]
0
2
4
6
8
10
4
6
8
10
12
DBHX Diameter [in]

FIG. 26

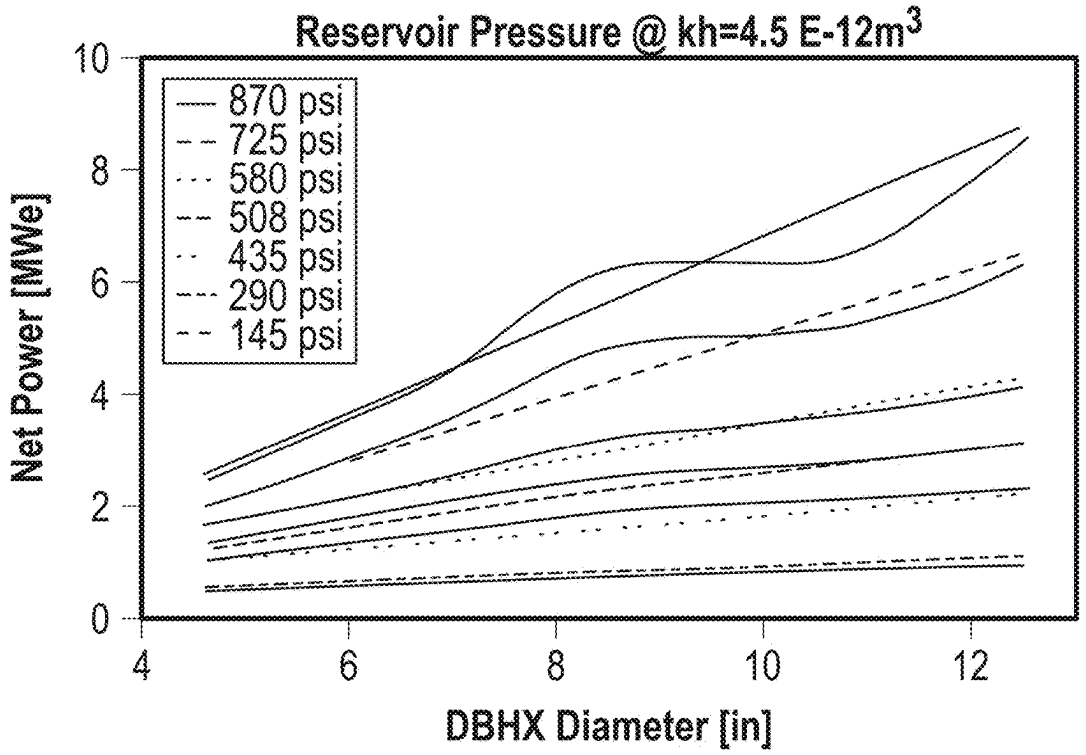
Reservoir Pressure @ kh=4.5 E-12m3
870 psi
725 psi
580 psi
508 psi
435 psi
290 psi
145 psi
Net Power [MWe]
0
2
4
6
8
10
4
6
8
10
12
DBHX Diameter [in]

FIG. 27

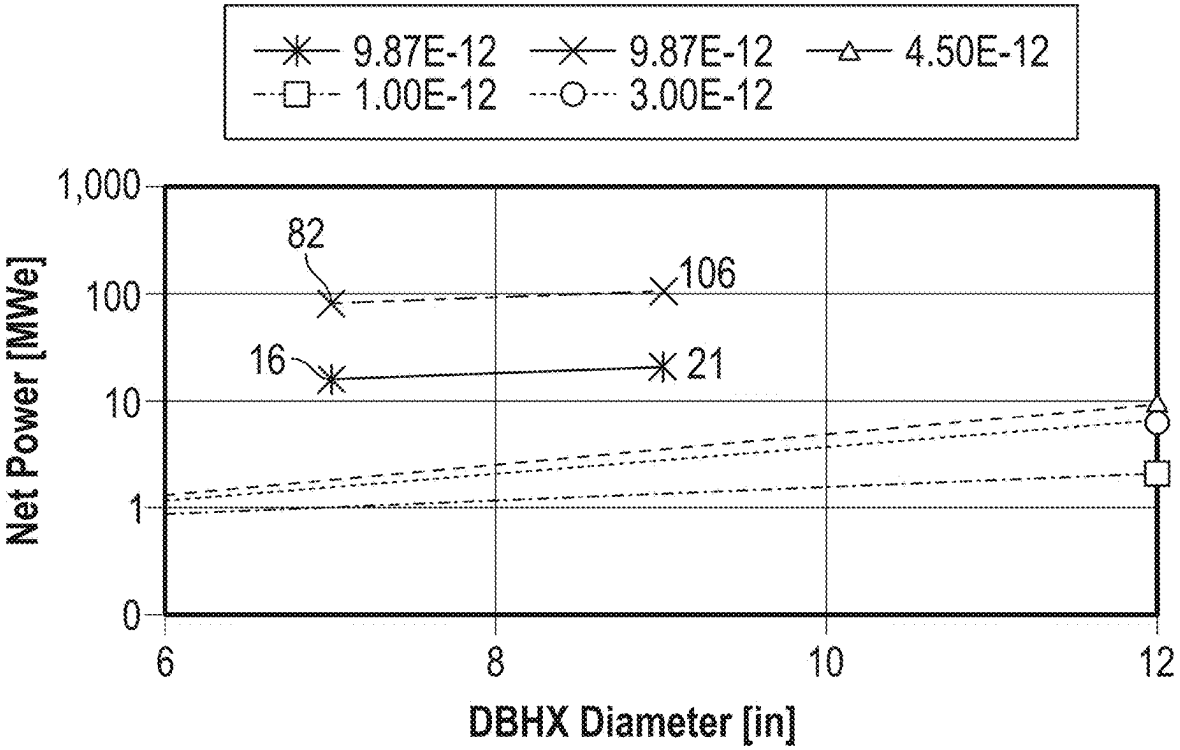
9.87E-12
9.87E-12
4.50E-12
1.00E-12
3.00E-12
Net Power [MWe]
1,000
100
10
1
0
82
106
16
21
6
8
10
12
DBHX Diameter [in]

FIG. 28

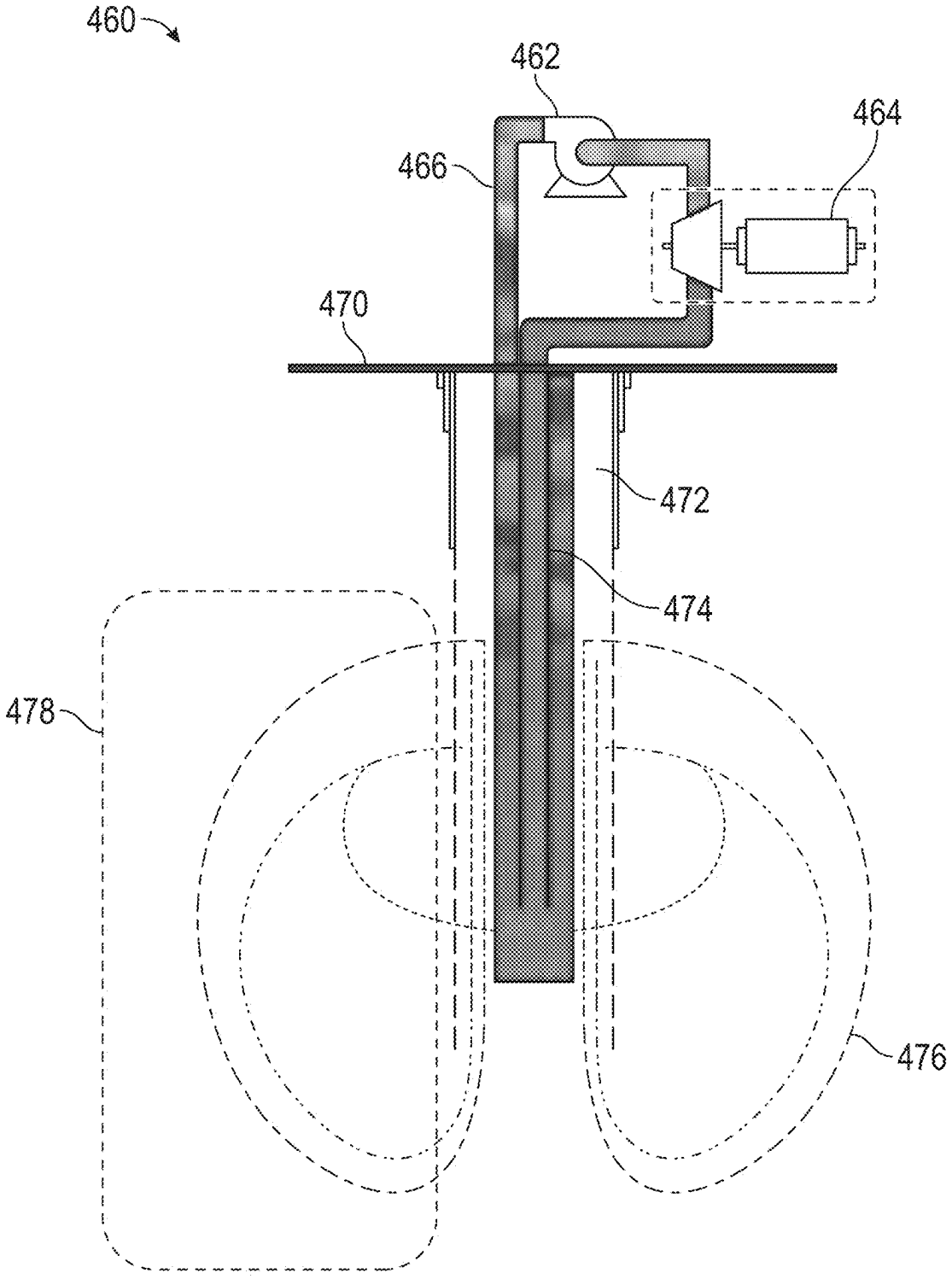

FIG. 29

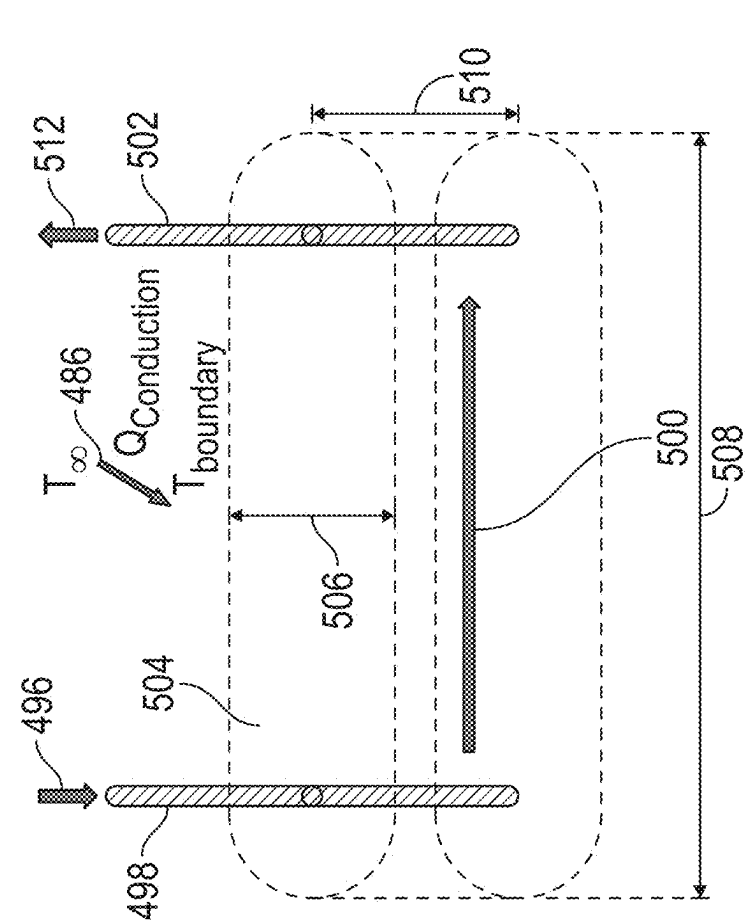

FIG. 30B

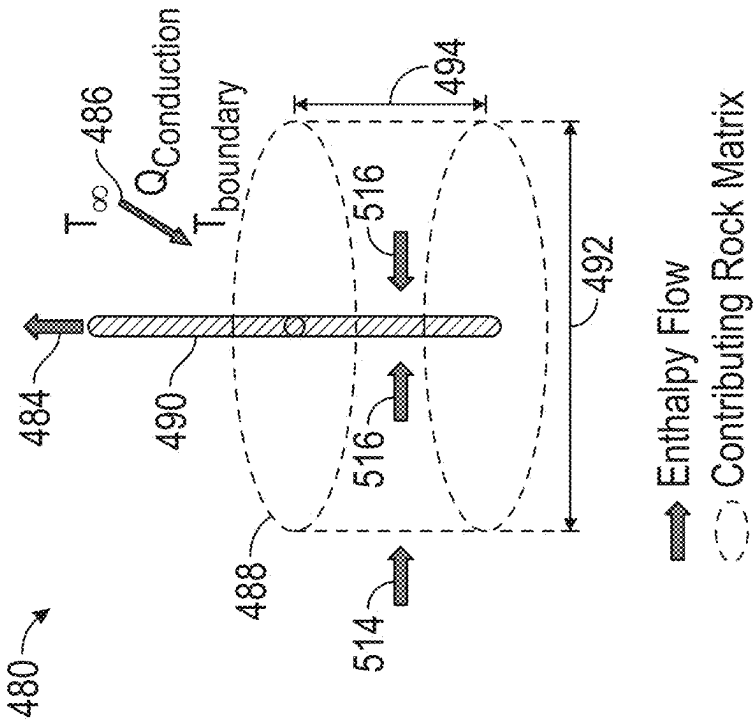

FIG. 30A

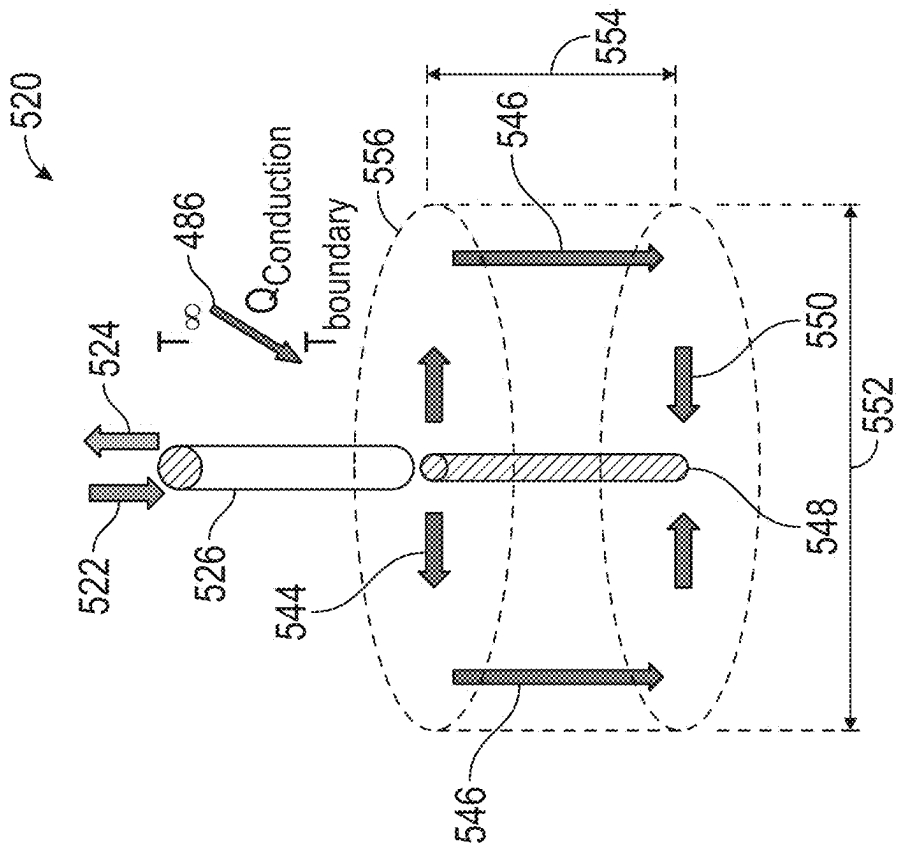

FIG. 31B

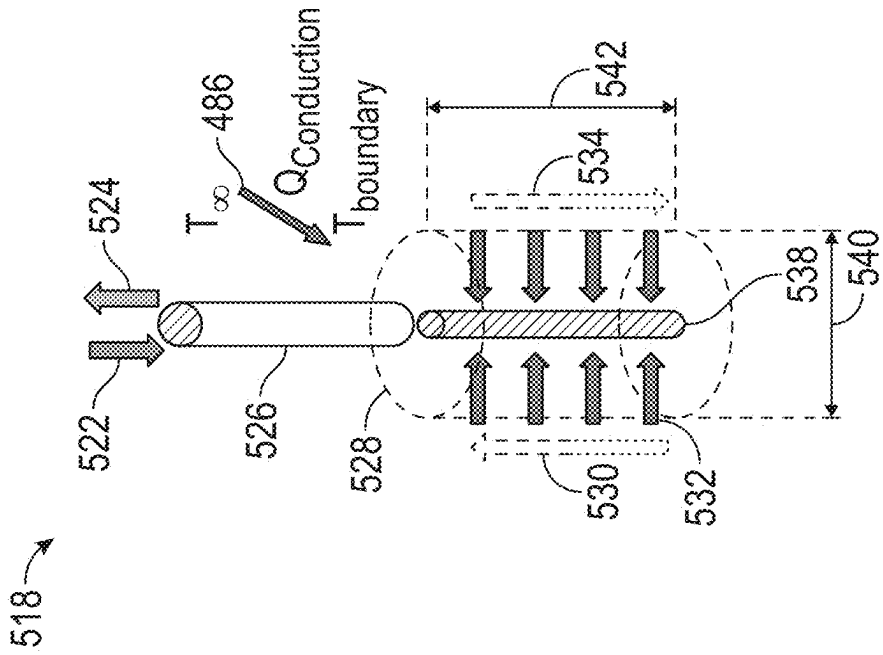

FIG. 31A

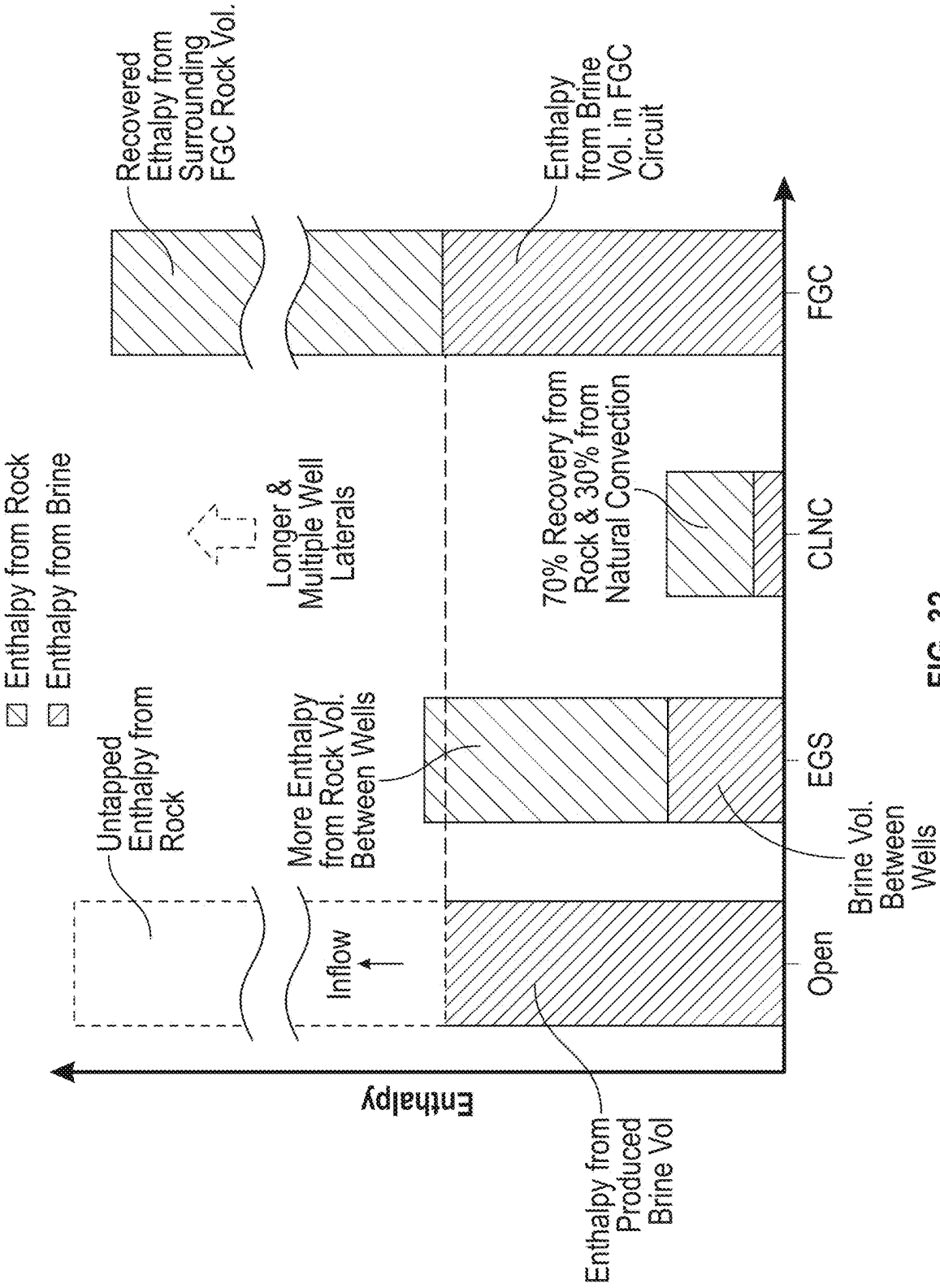
Enthalpy from Rock
Enthalpy from Brine
Untapped Enthalpy from Rock
Inflow
More Enthalpy from Rock Vol. Between Wells
Longer & Multiple Well Laterals
Recovered Ethalpy from Surrounding FGC Rock Vol.
Enthalpy from Produced Brine Vol
Brine Vol. Between Wells
70% Recovery from Rock & 30% from Natural Convection
Enthalpy from Brine Vol. in FGC Circuit
Enthalpy
Open
EGS
CLNC
FGC

FIG. 32

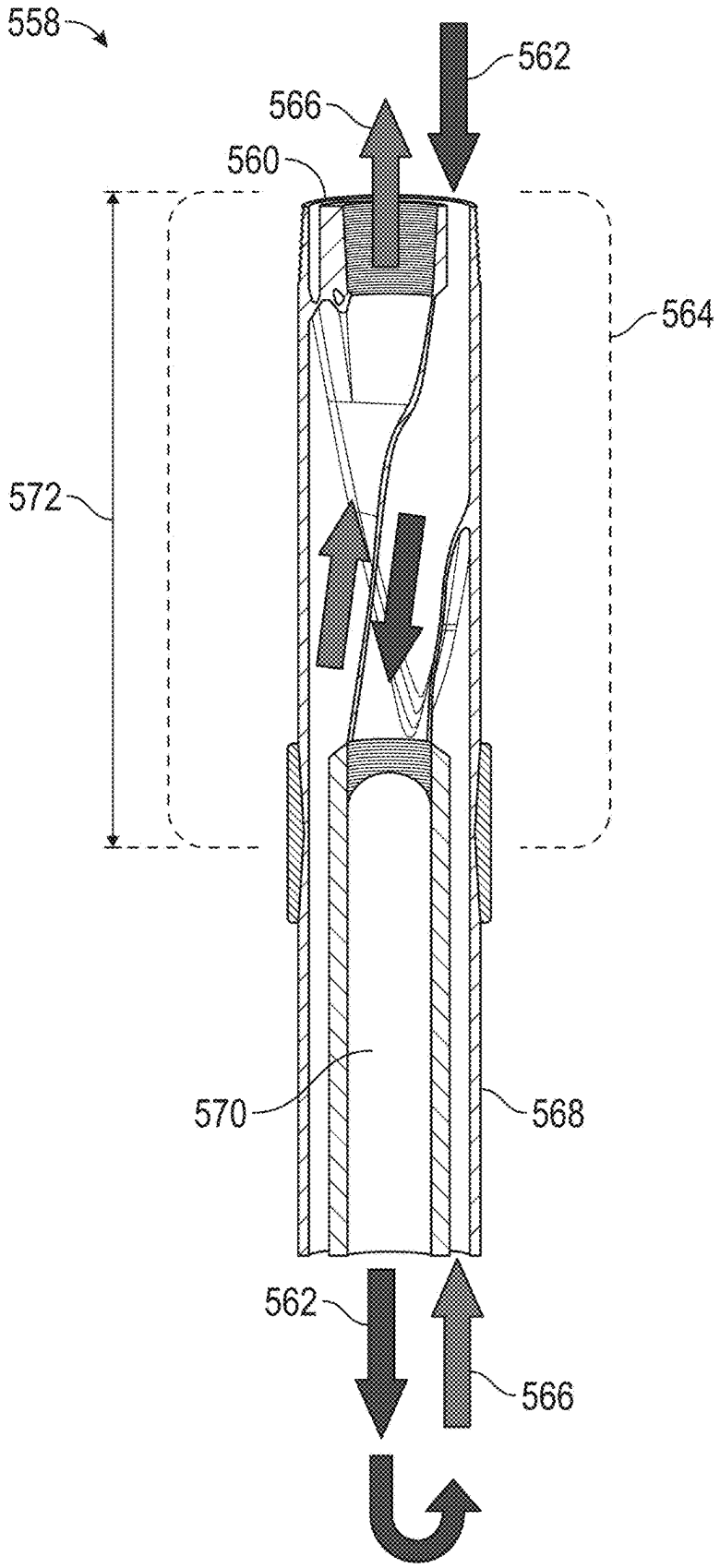

FIG. 33

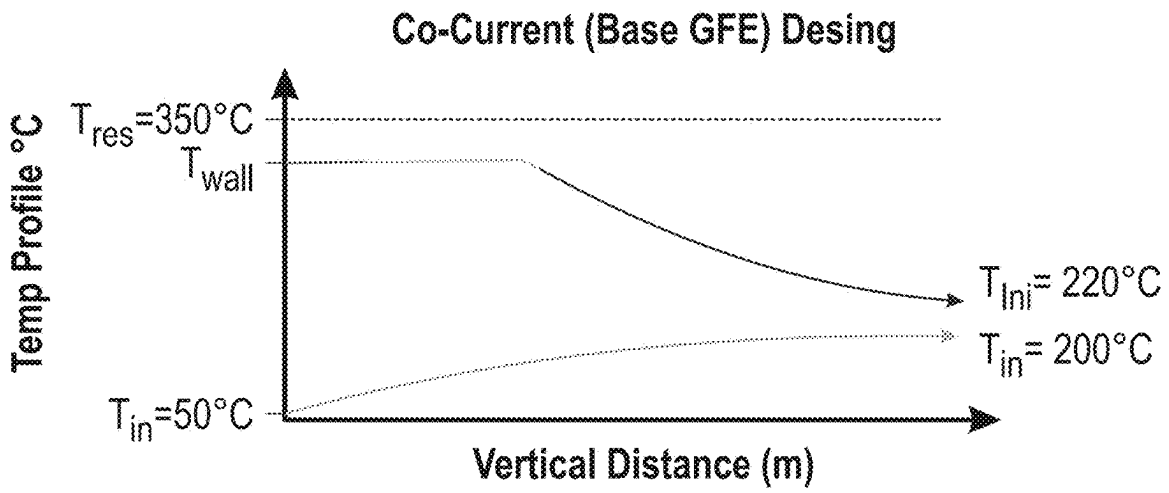
Co-Current (Base GFE) Desing
Temp Profile °C
Tres=350°C
Twall
TIni= 220°C
Tin= 200°C
Tin=50°C
Vertical Distance (m)

FIG. 34

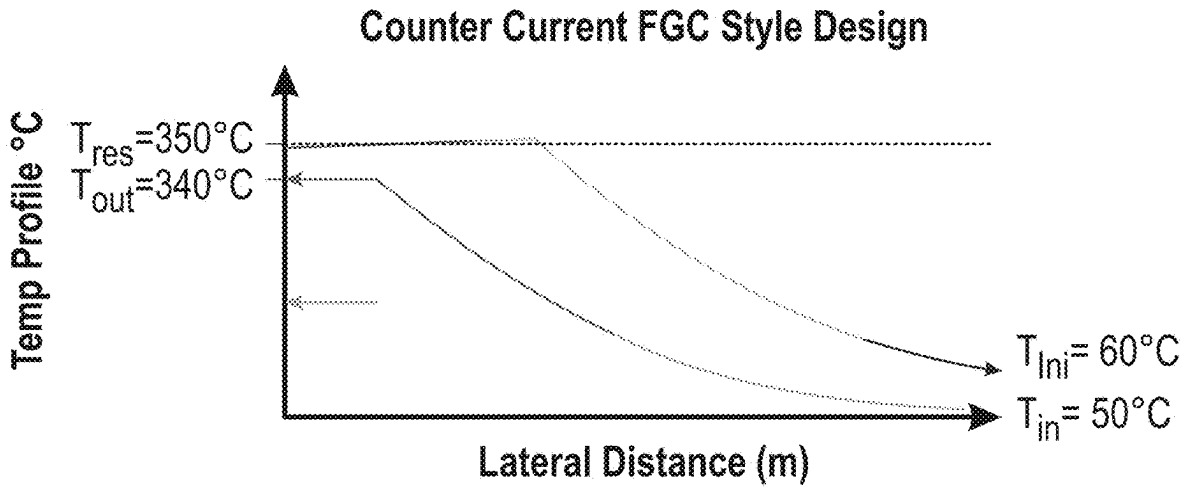
Counter Current FGC Style Design
Temp Profile °C
Tres=350°C
Tout=340°C
TIni= 60°C
Tin= 50°C
Lateral Distance (m)

FIG. 35

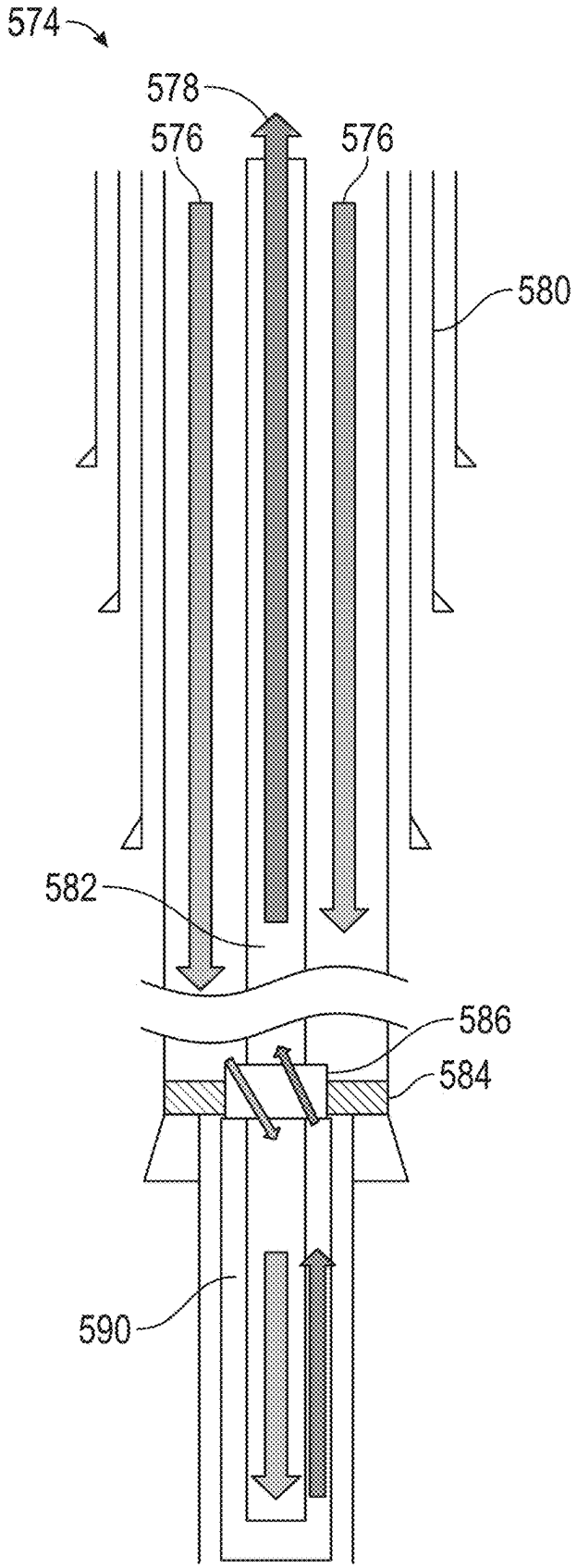

FIG. 36

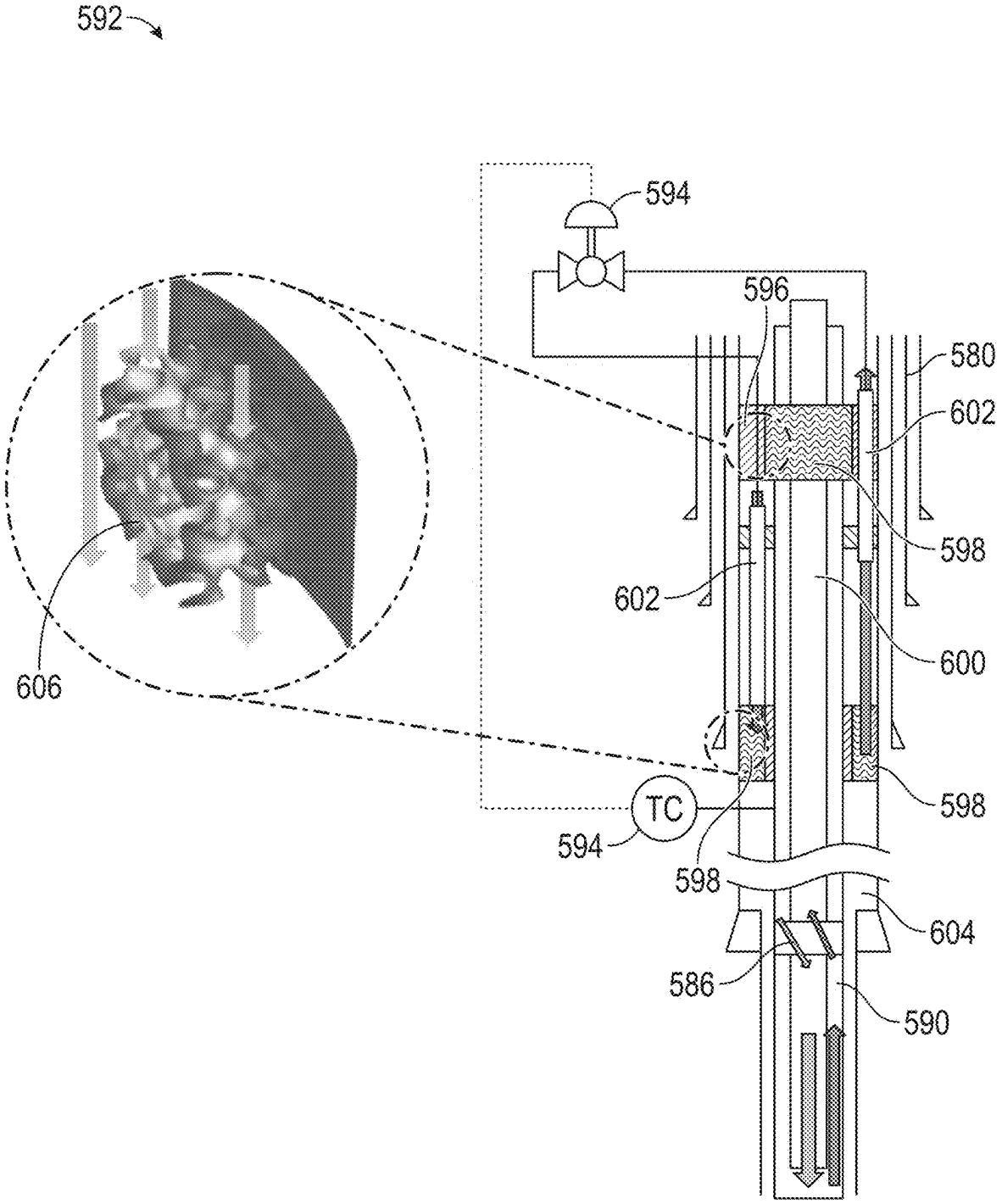

FIG. 37

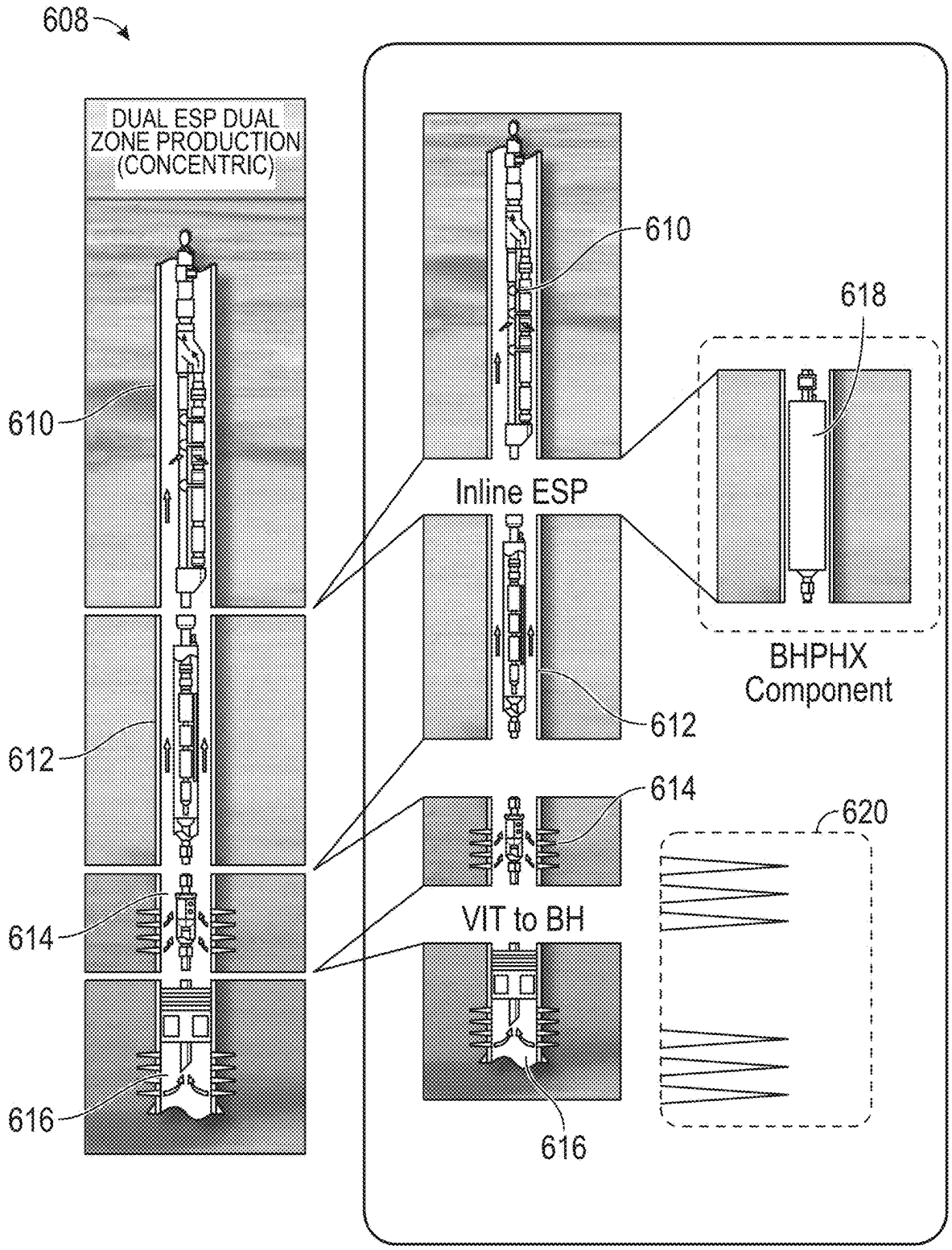
608
DUAL ESP DUAL ZONE PRODUCTION (CONCENTRIC)
610
612
614
616
610
618
Inline ESP
BHPHX Component
612
614
620
VIT to BH
616

FIG. 38

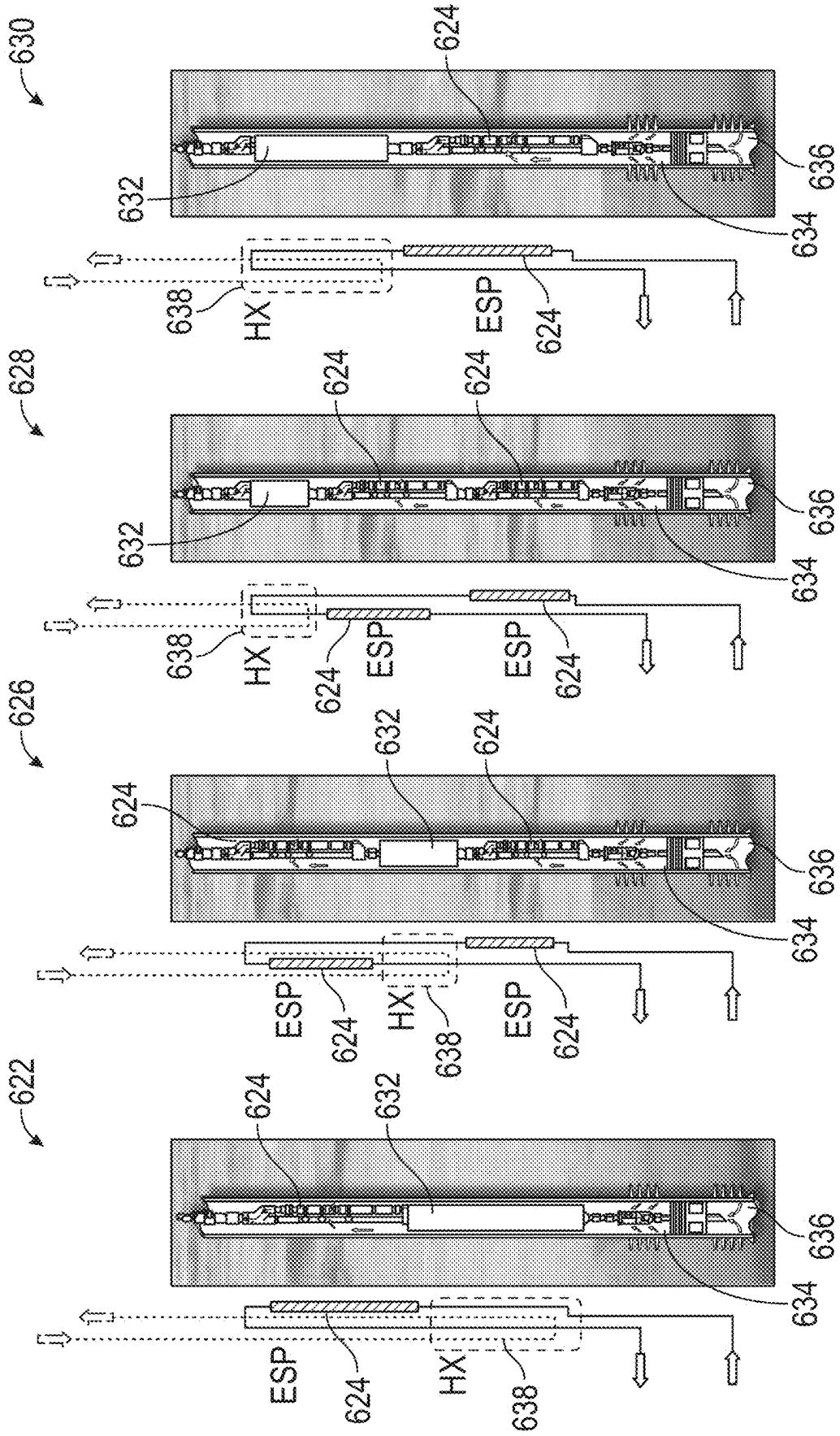

FIG. 39D

FIG. 39C

FIG. 39B

FIG. 39A

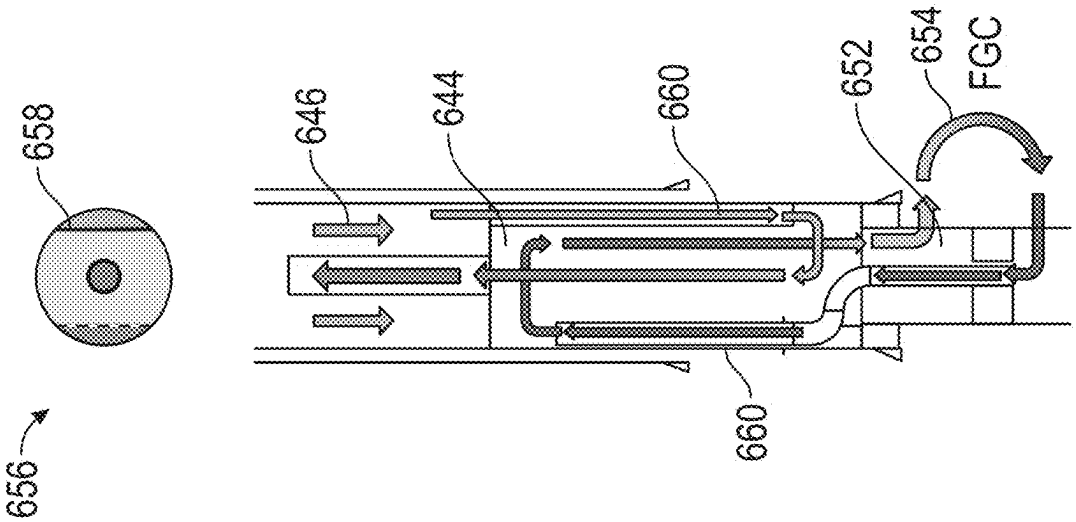
656
658
646
644
660
652
654
FGC
660

FIG. 41

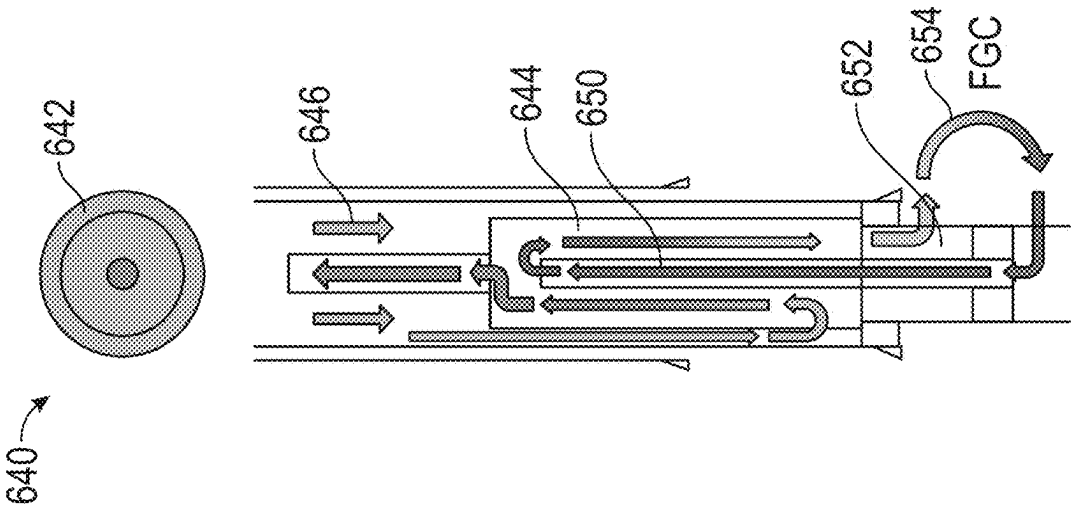
640
642
646
644
650
652
654
FGC

FIG. 40

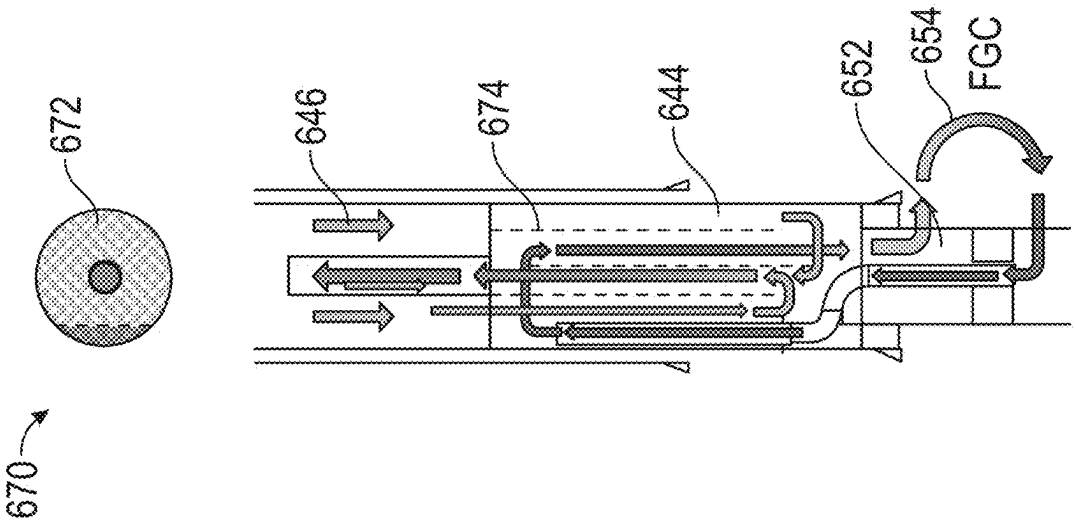
670
672
646
674
644
652
654
FGC

FIG. 43

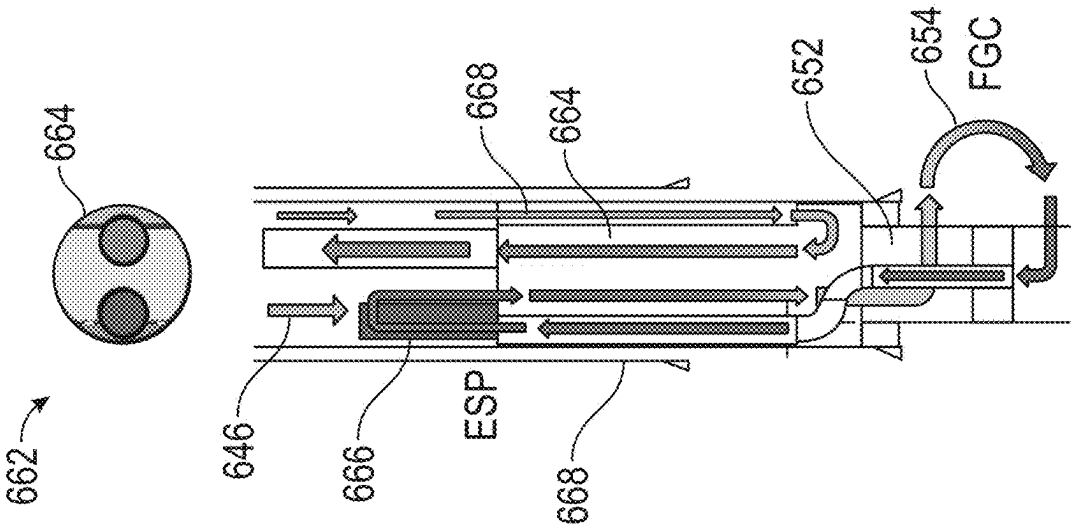
662
664
646
666
ESP
668
668
664
652
654
FGC

FIG. 42

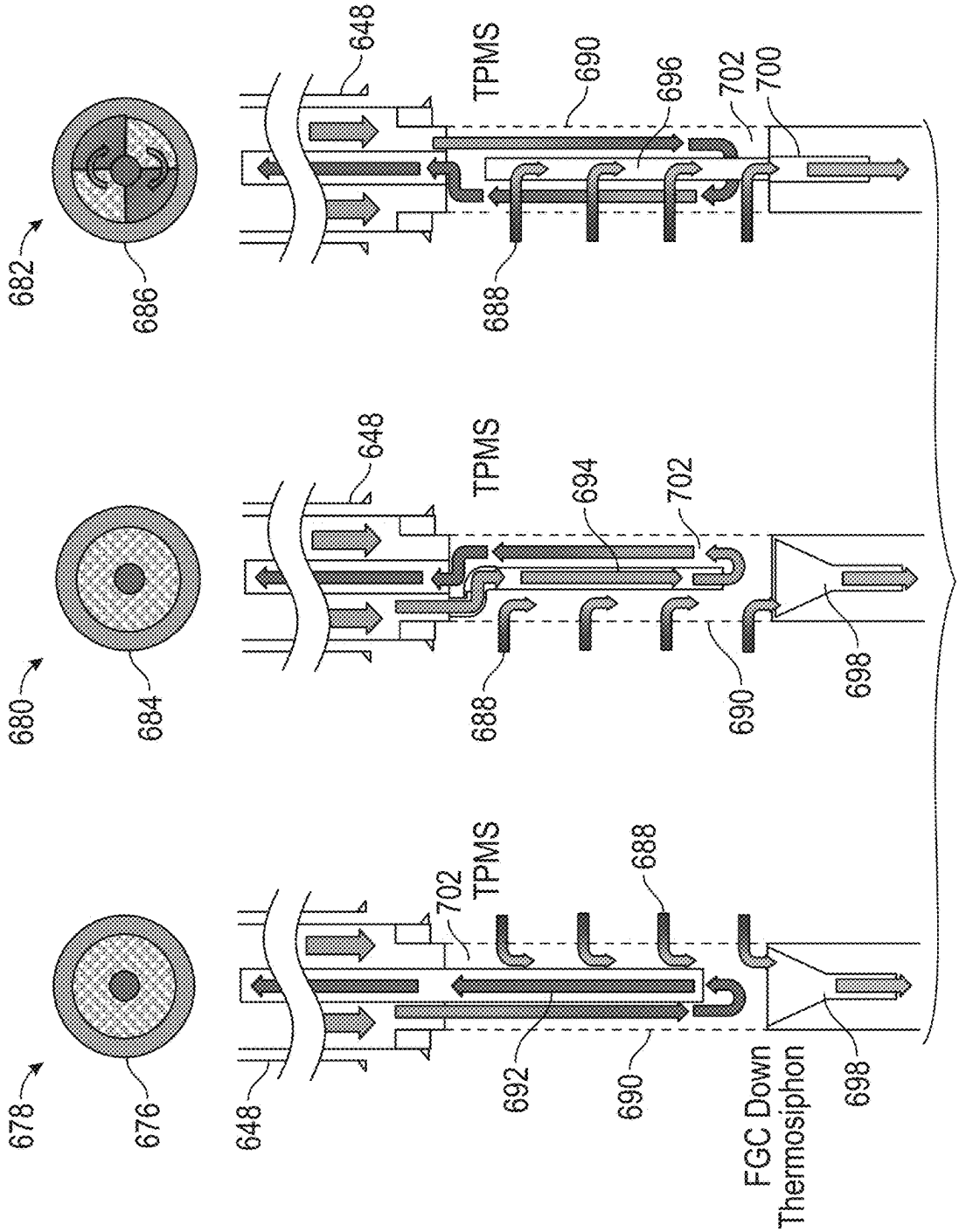
682
686
648
TPMS
690
696
702
700
688
680
684
648
TPMS
694
702
688
690
698
678
676
648
702
TPMS
688
692
690
FGC Down
Thermosiphon
698
704

FIG. 44

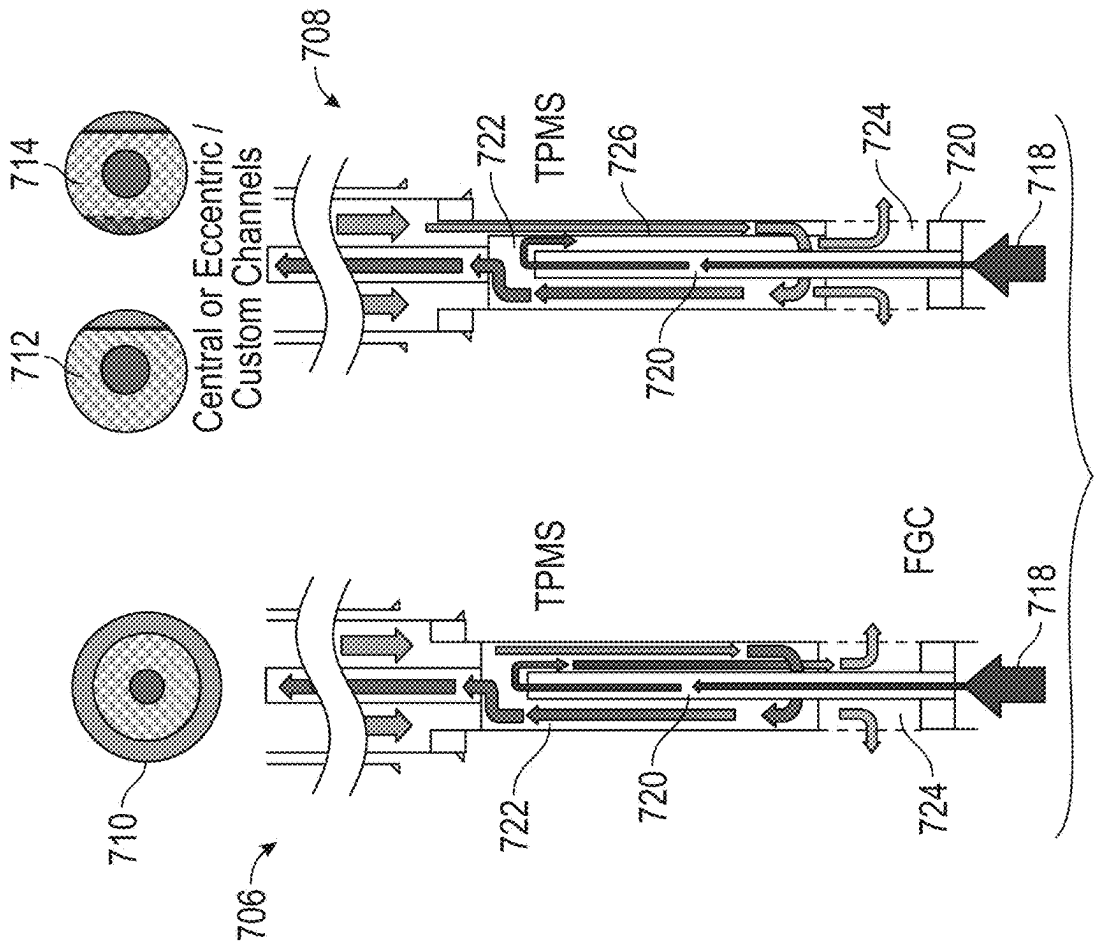
714
712
Central or Eccentric /
Custom Channels
708
722
TPMS
726
724
720
718
720
704
710
706
722
TPMS
720
FGC
718
724

FIG. 45

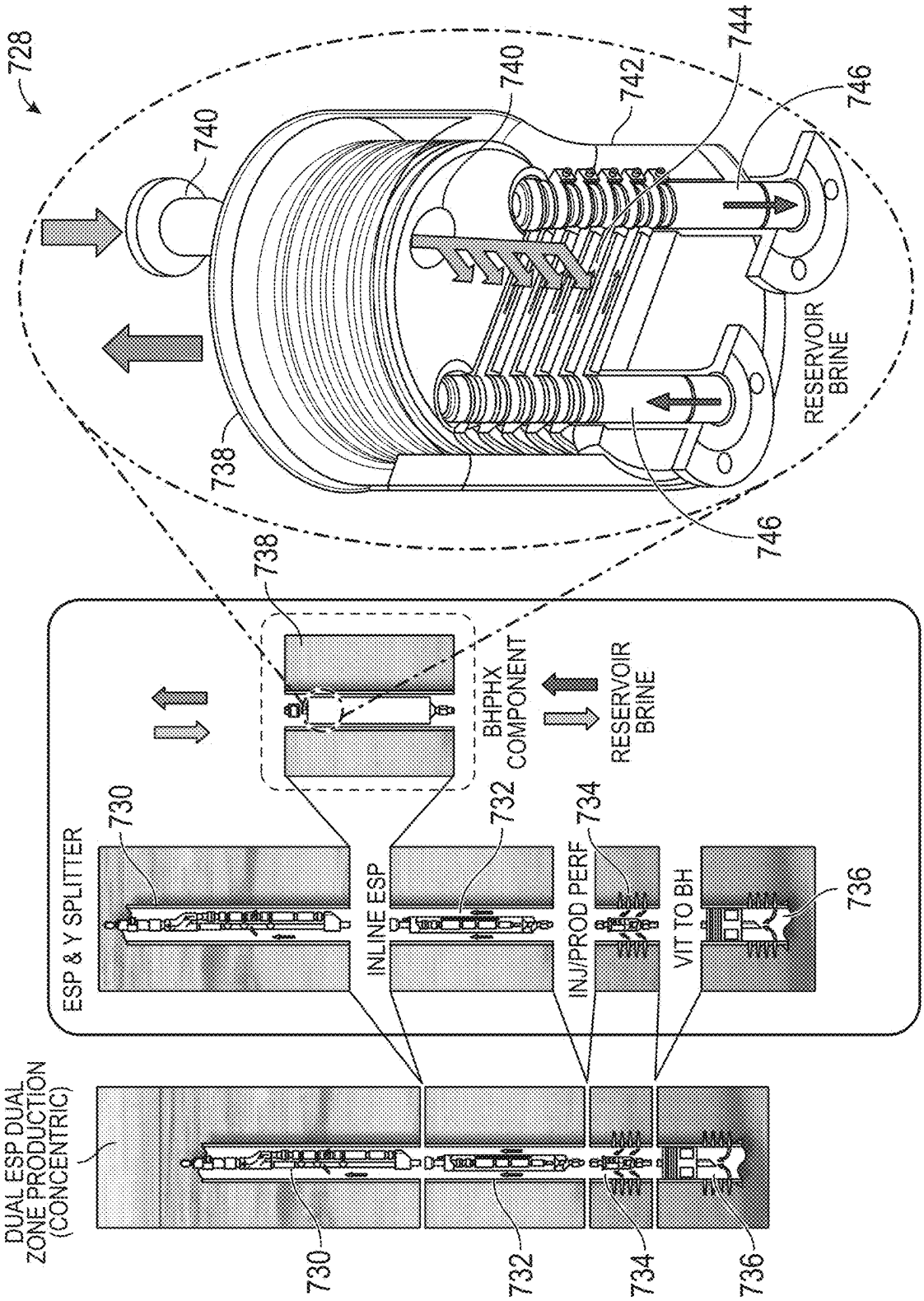
728
740
740
742
744
746
746
738
RESERVOIR BRINE
738
BHPHX COMPONENT
RESERVOIR BRINE
730
732
734
736
ESP & Y SPLITTER
INLINE ESP
INJ/PROD PERF
VIT TO BH
DUAL ESP DUAL ZONE PRODUCTION (CONCENTRIC)
730
732
734
736

FIG. 46

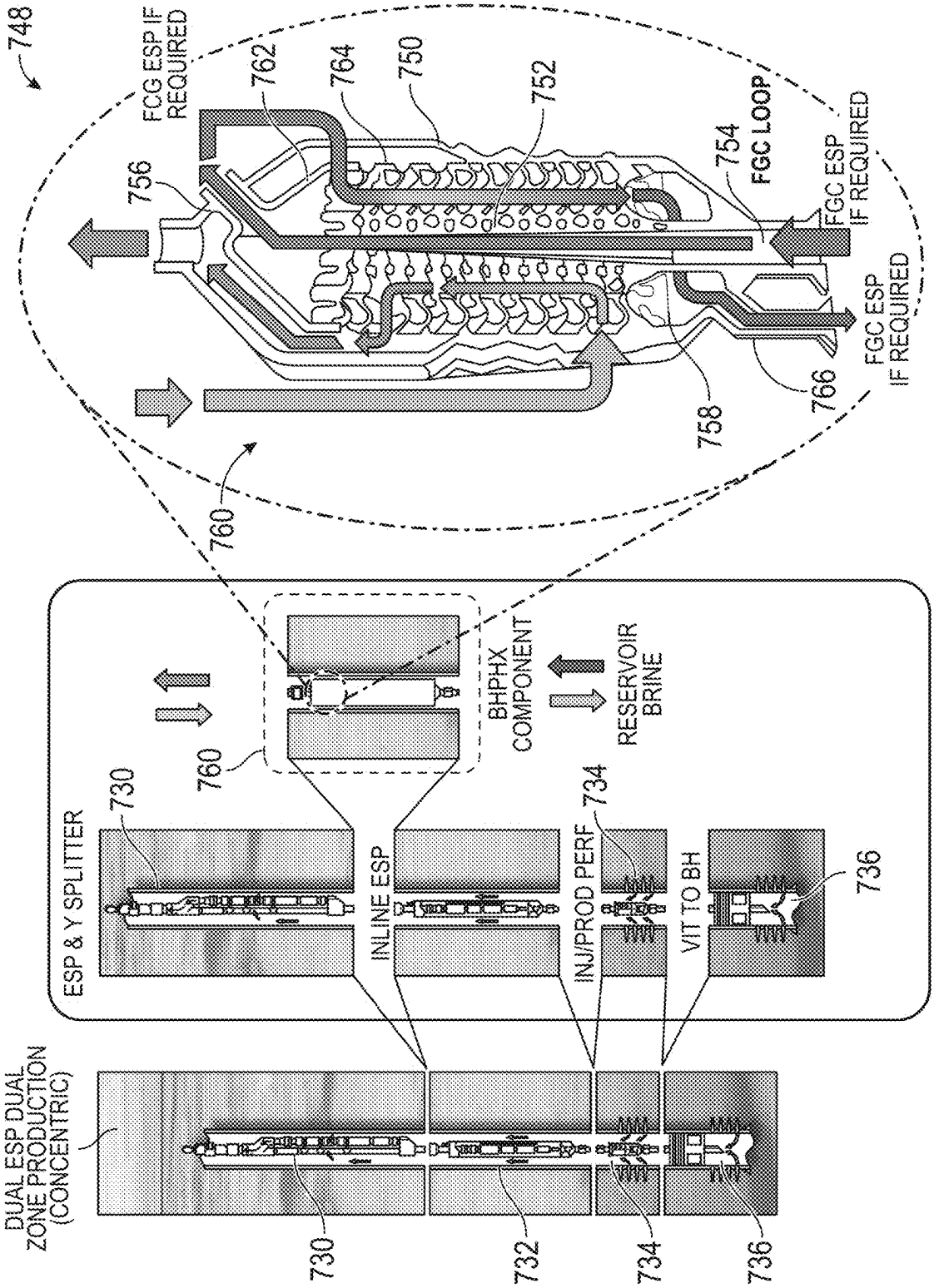
748
FCG ESP IF REQUIRED
762
764
750
752
756
754
FGC LOOP
FGC ESP IF REQUIRED
FGC ESP IF REQUIRED
758
766
760
ESP & Y SPLITTER
730
760
BHPHX COMPONENT
RESERVOIR BRINE
INLINE ESP
INJ/PROD PERF
734
VIT TO BH
736
DUAL ESP DUAL ZONE PRODUCTION (CONCENTRIC)
730
732
734
736

FIG. 47

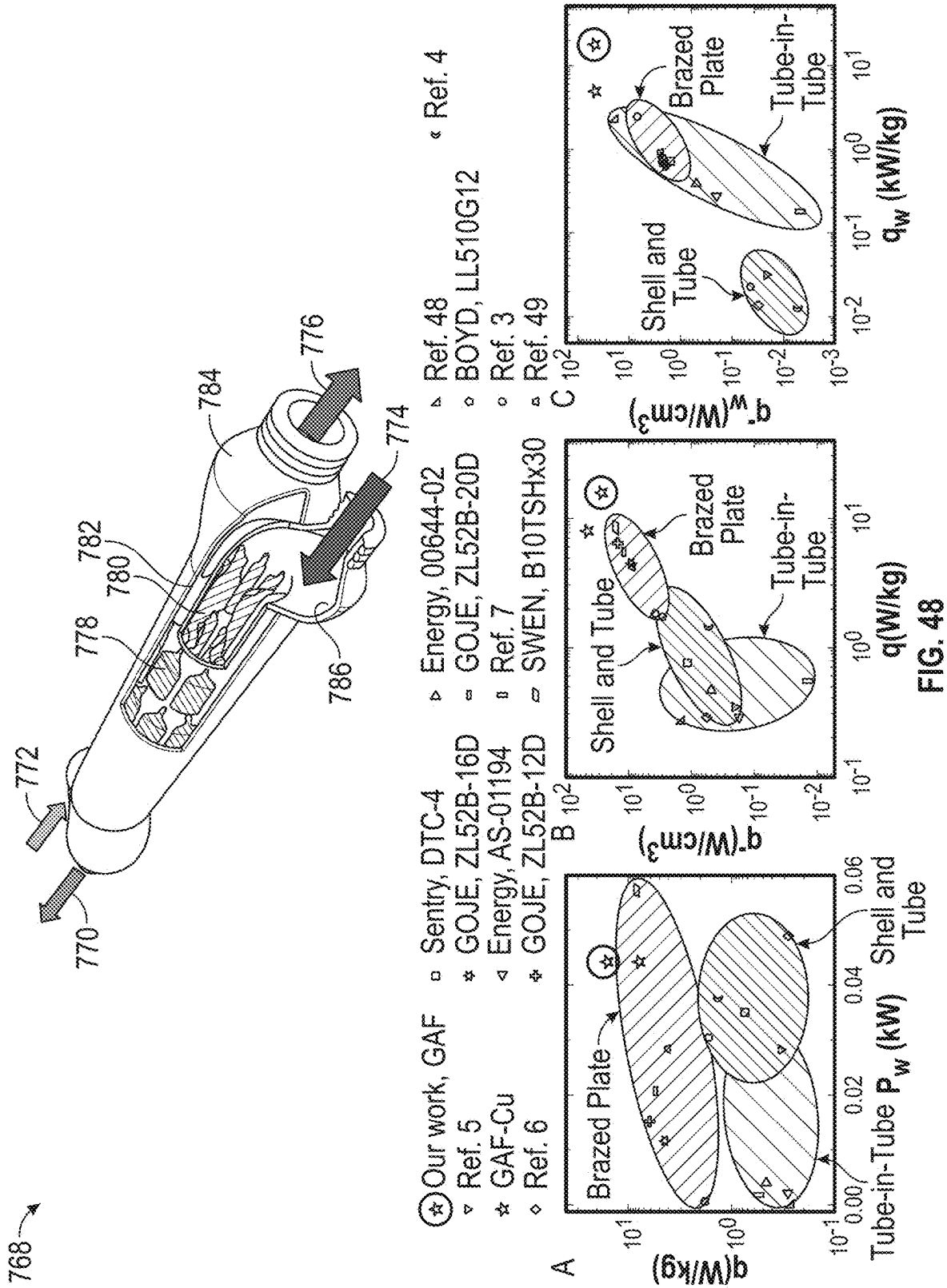
768
770
772
774
776
778
780
782
784
786
Our work, GAF
Ref. 5
GAF-Cu
Ref. 6
Sentry, DTC-4
GOJE, ZL52B-16D
Energy, AS-01194
GOJE, ZL52B-12D
Energy, 00644-02
GOJE, ZL52B-20D
Ref. 7
SWEN, B10TSHx30
Ref. 48
BOYD, LL510G12
Ref. 3
Ref. 49
Ref. 4
A
q(W/kg)
Brazed Plate
Shell and Tube
Tube-in-Tube P_w (kW)
B
q(W/cm³)
Shell and Tube
Brazed Plate
Tube-in-Tube
q(W/kg)
C
q"w(W/cm³)
Shell and Tube
Brazed Plate
Tube-in-Tube
q_w (kW/kg)

FIG. 48

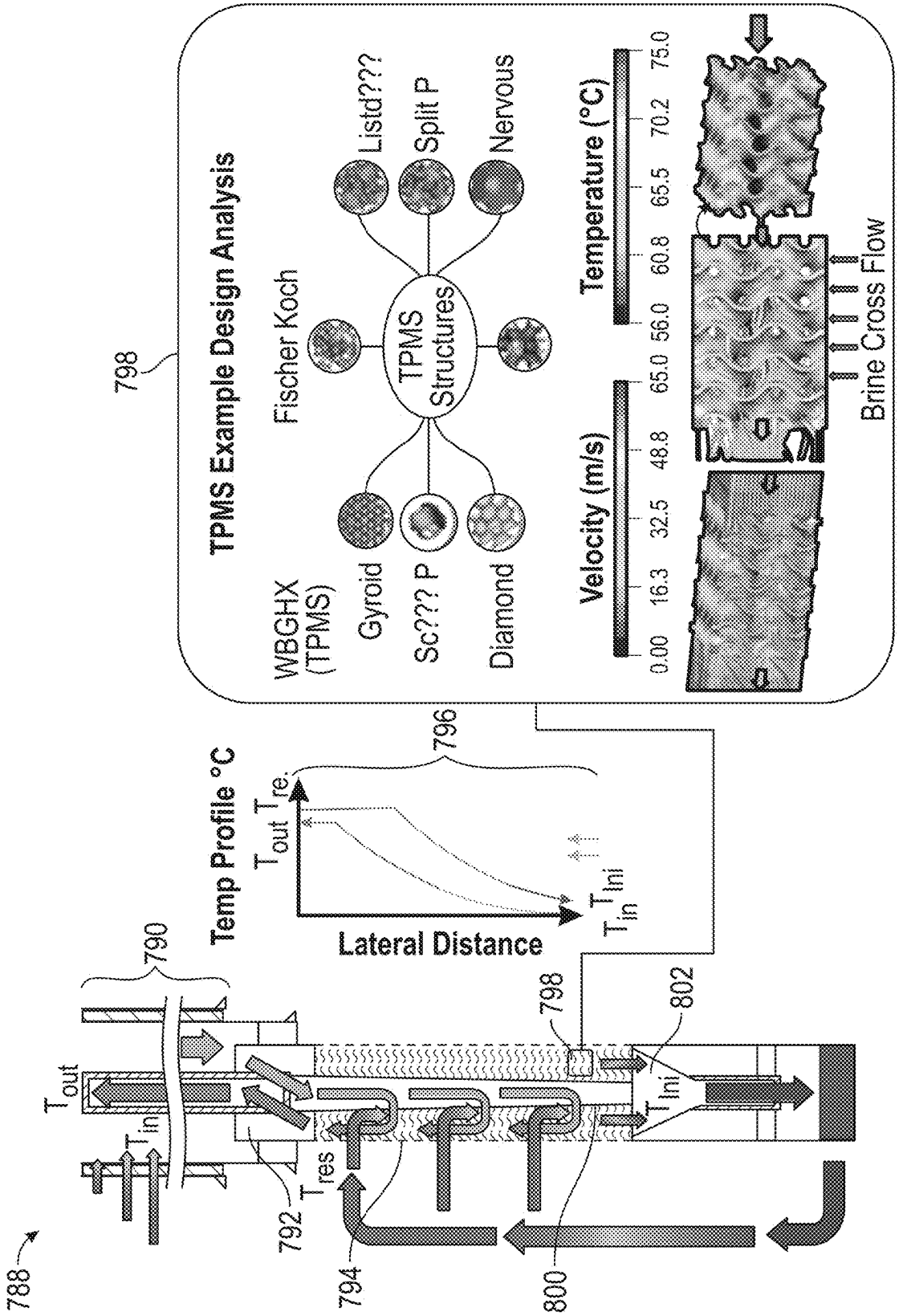
788
790
792
794
796
798
800
802
T_{out}
T_{in}
T_{res}
T_{Ini}
Temp Profile °C
T_{out} $T_{re.}$
T_{in} T_{Ini}
Lateral Distance
TPMS Example Design Analysis
WBGHX (TPMS)
Gyroid
Sc??? P
Diamond
Fischer Koch
TPMS Structures
Listd???
Split P
Nervous
Velocity (m/s)
0.00 16.3 32.5 48.8 65.0
Temperature (°C)
56.0 60.8 65.5 70.2 75.0
Brine Cross Flow

FIG. 49

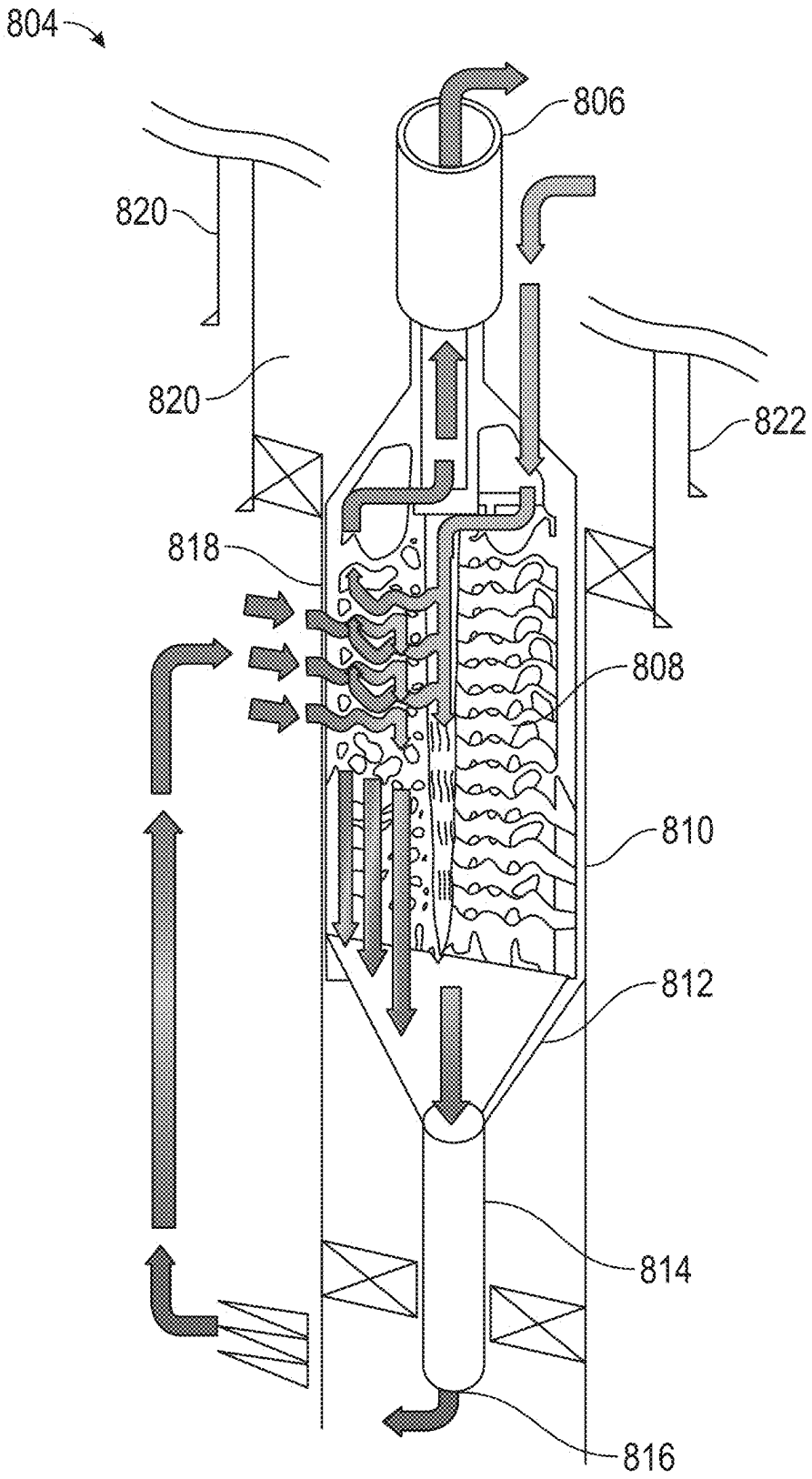

FIG. 50

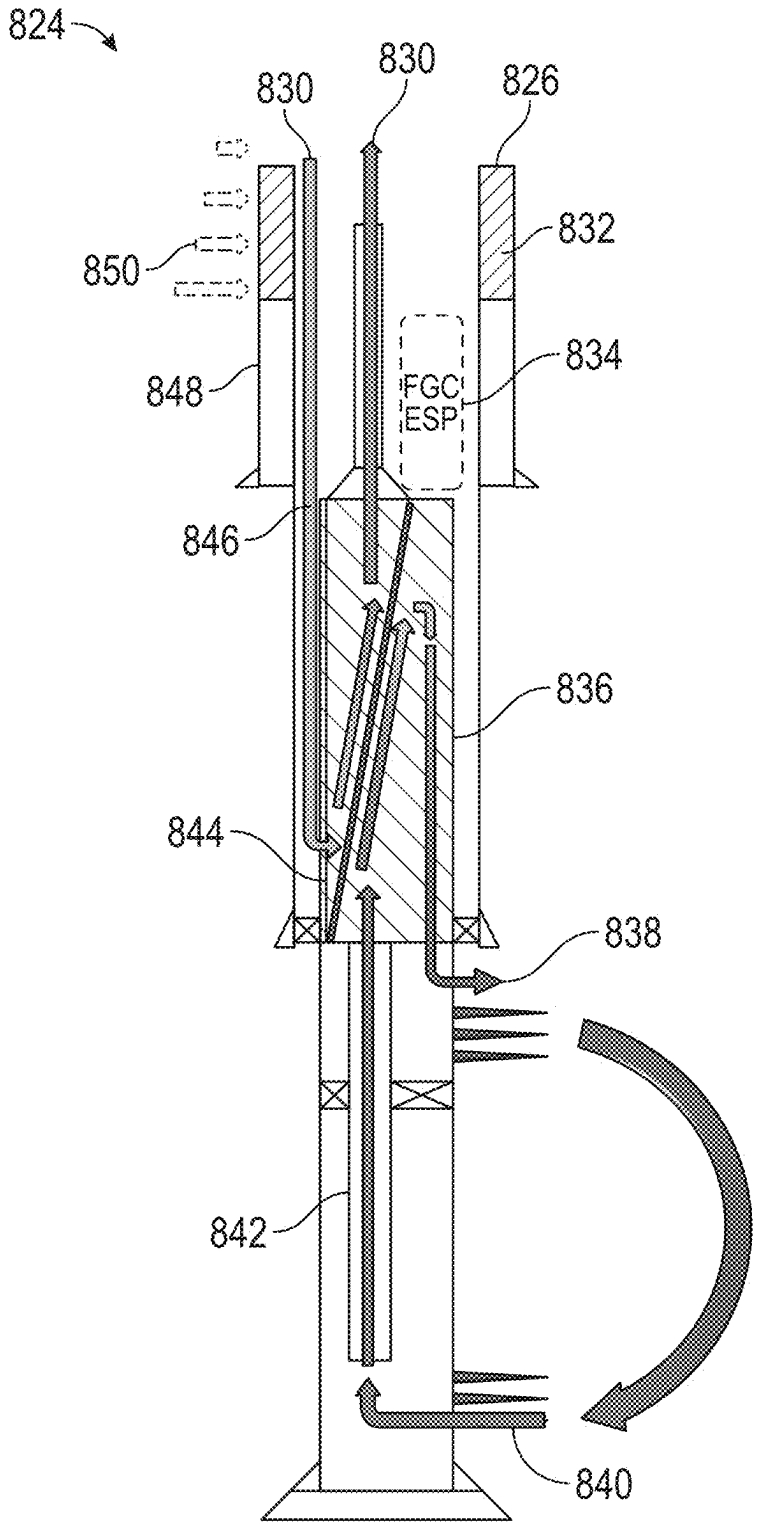

FIG. 51

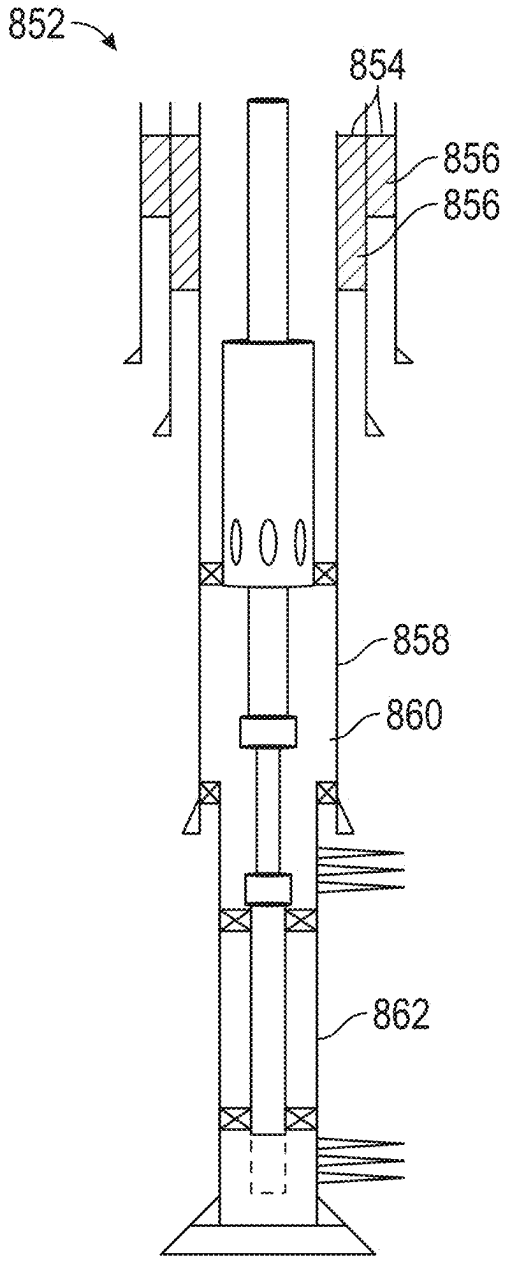

FIG. 52

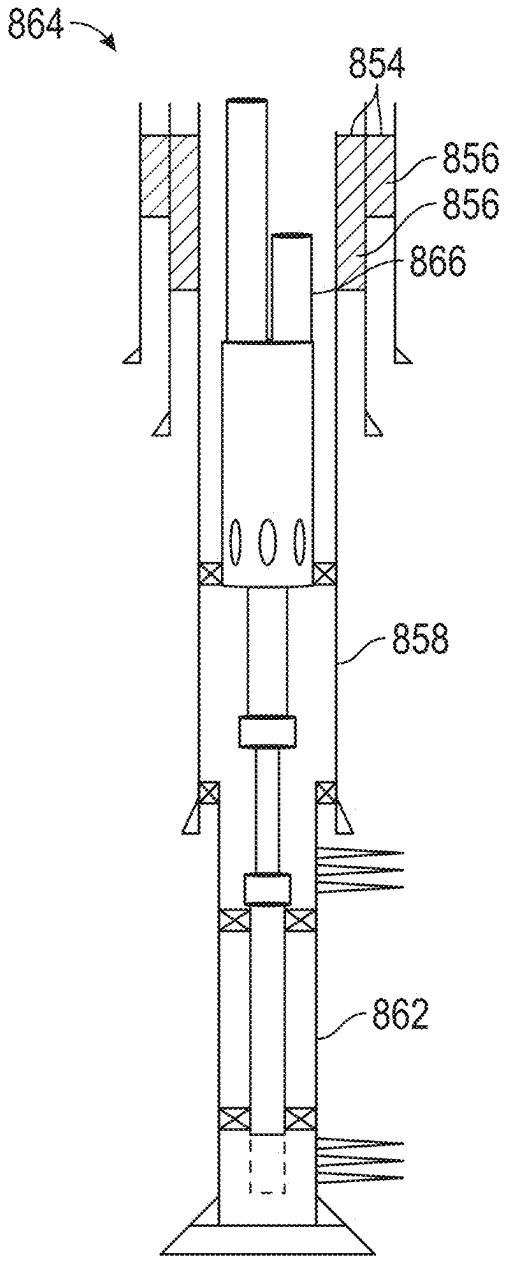

FIG. 53

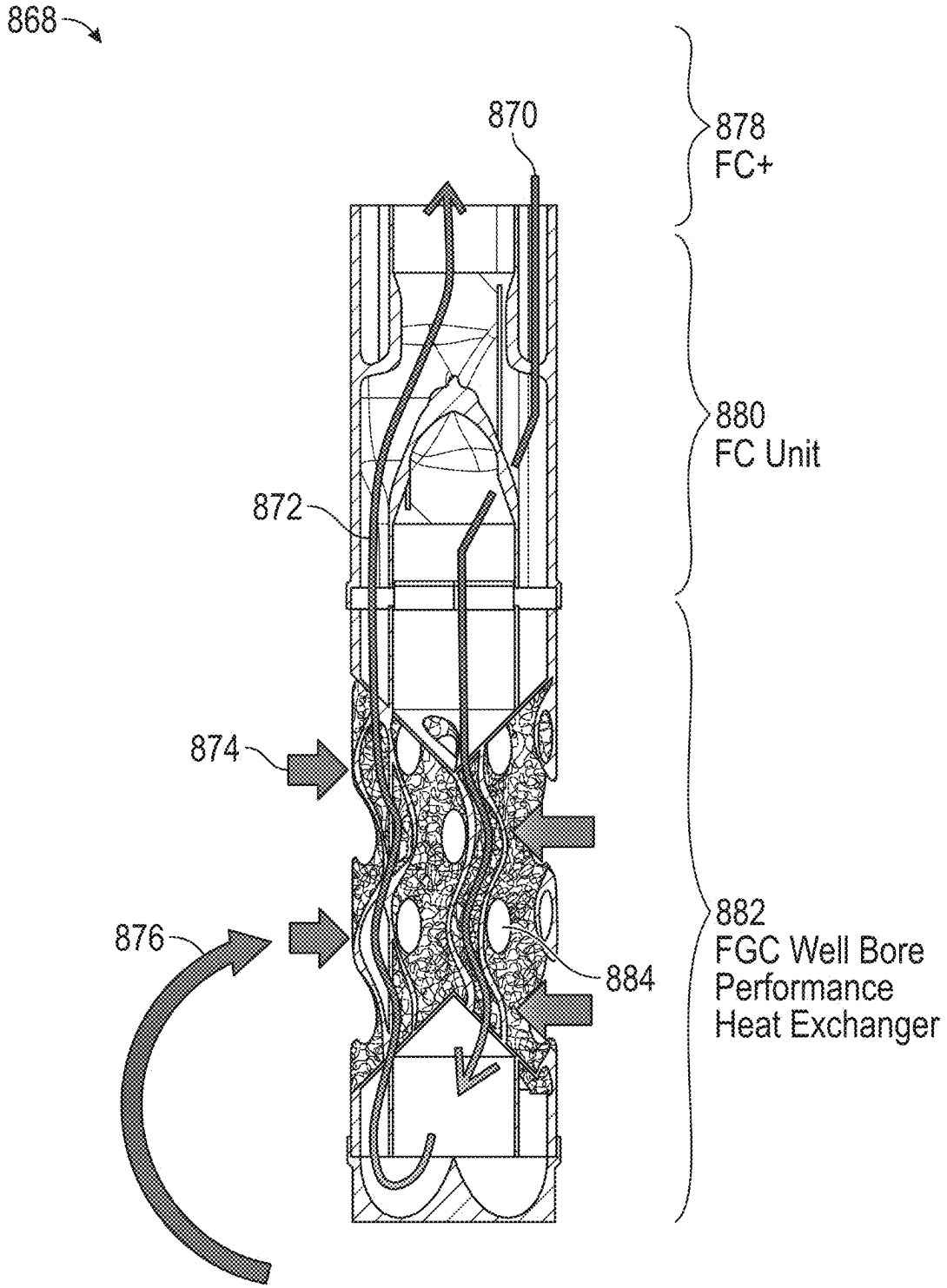
868
870
878
FC+
880
FC Unit
872
874
876
884
882
FGC Well Bore
Performance
Heat Exchanger

FIG. 54

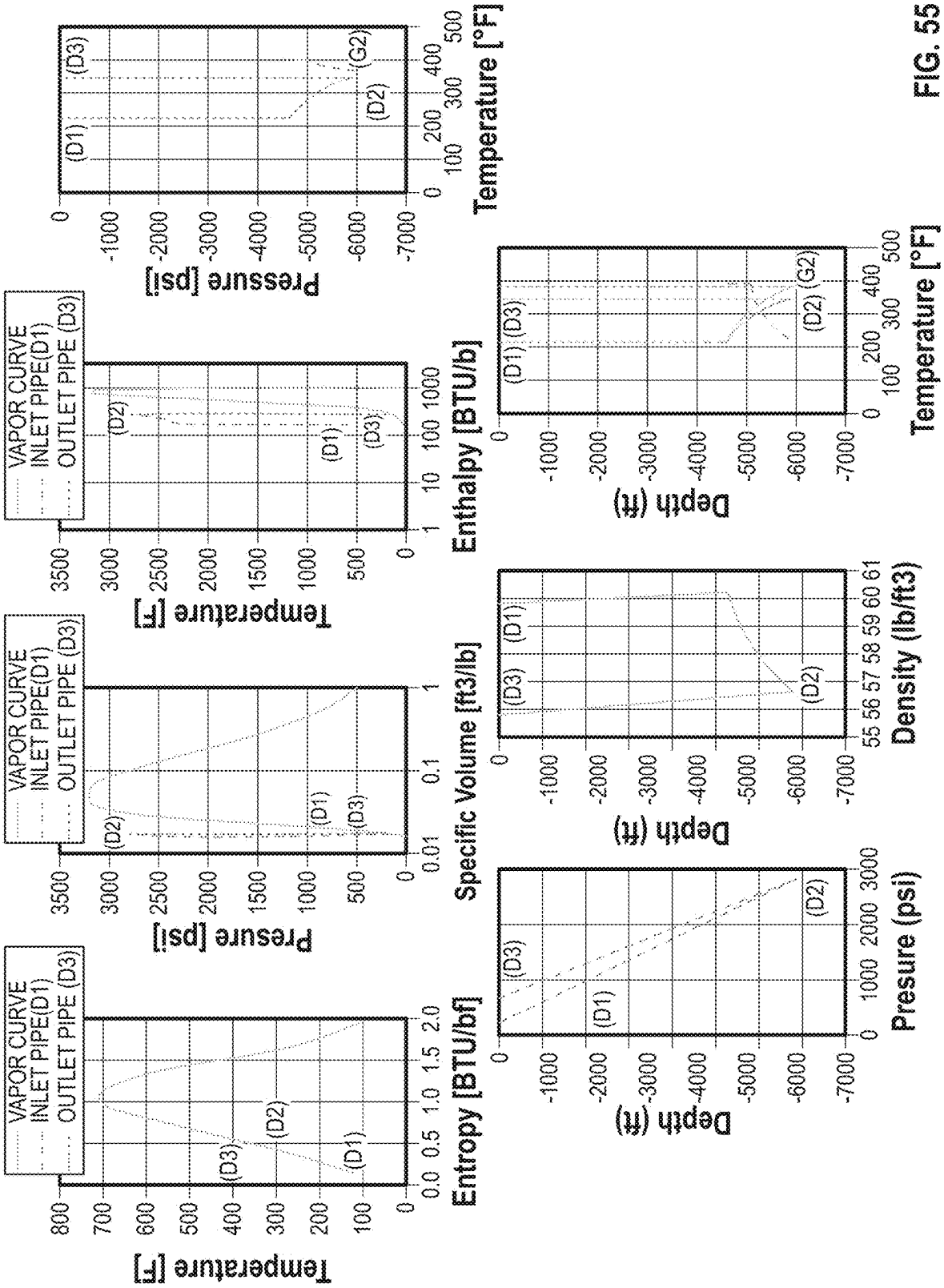
VAPOR CURVE
INLET PIPE(D1)
OUTLET PIPE (D3)
Temperature [°F]
Entropy [BTU/bf]
Pressure [psi]
Specific Volume [ft3/lb]
Enthalpy [BTU/b]
Depth (ft)
Presure (psi)
Density (lb/ft3)
(D1)
(D2)
(D3)
(G2)

FIG. 55

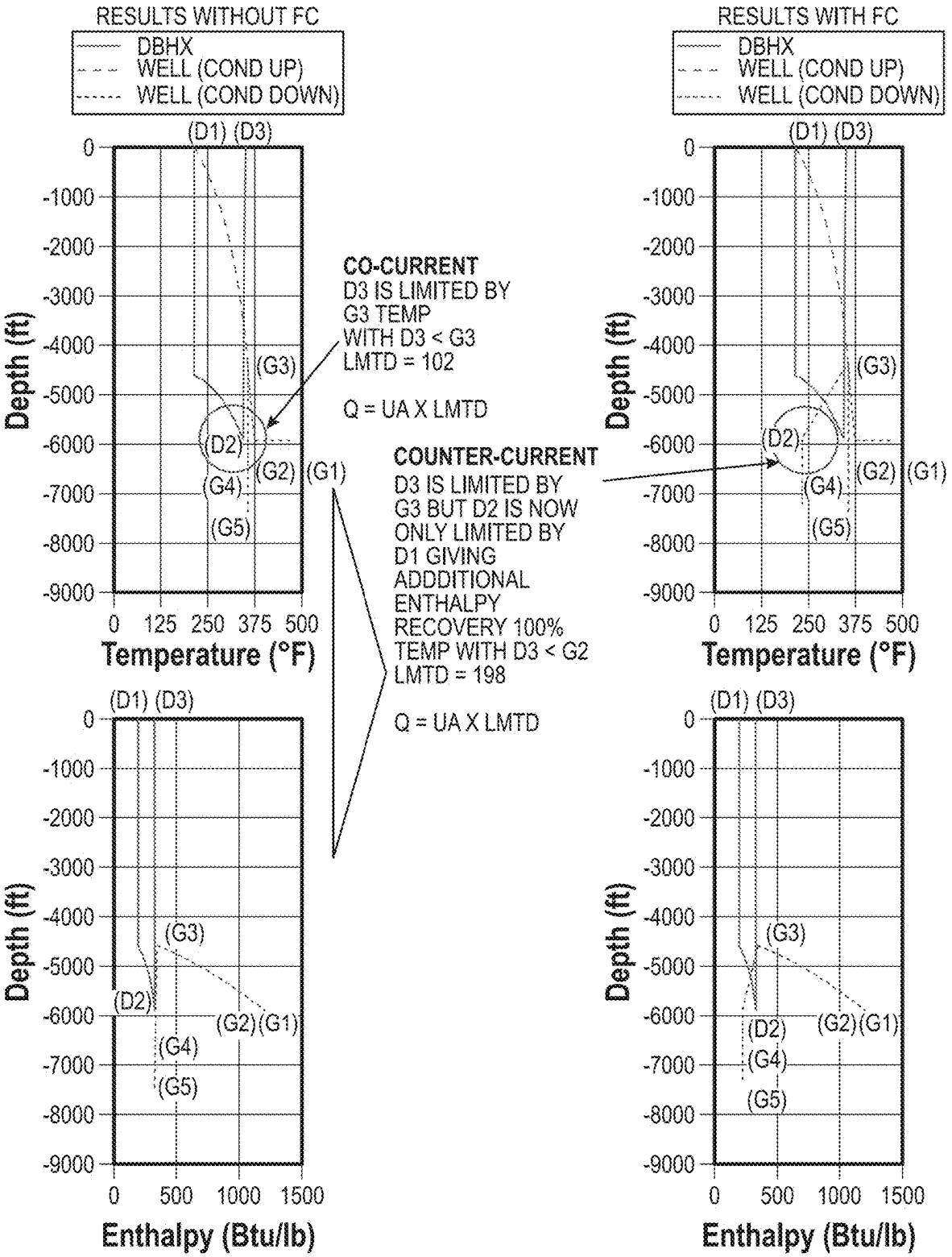
RESULTS WITHOUT FC
DBHX
WELL (COND UP)
WELL (COND DOWN)
RESULTS WITH FC
DBHX
WELL (COND UP)
WELL (COND DOWN)
(D1) (D3)
(G1)
(G2)
(G3)
(G4)
(G5)
(D2)
Depth (ft)
Temperature (°F)
Enthalpy (Btu/lb)
CO-CURRENT
D3 IS LIMITED BY
G3 TEMP
WITH D3 < G3
LMTD = 102
Q = UA X LMTD
COUNTER-CURRENT
D3 IS LIMITED BY
G3 BUT D2 IS NOW
ONLY LIMITED BY
D1 GIVING
ADDDITIONAL
ENTHALPY
RECOVERY 100%
TEMP WITH D3 < G2
LMTD = 198
Q = UA X LMTD

FIG. 56

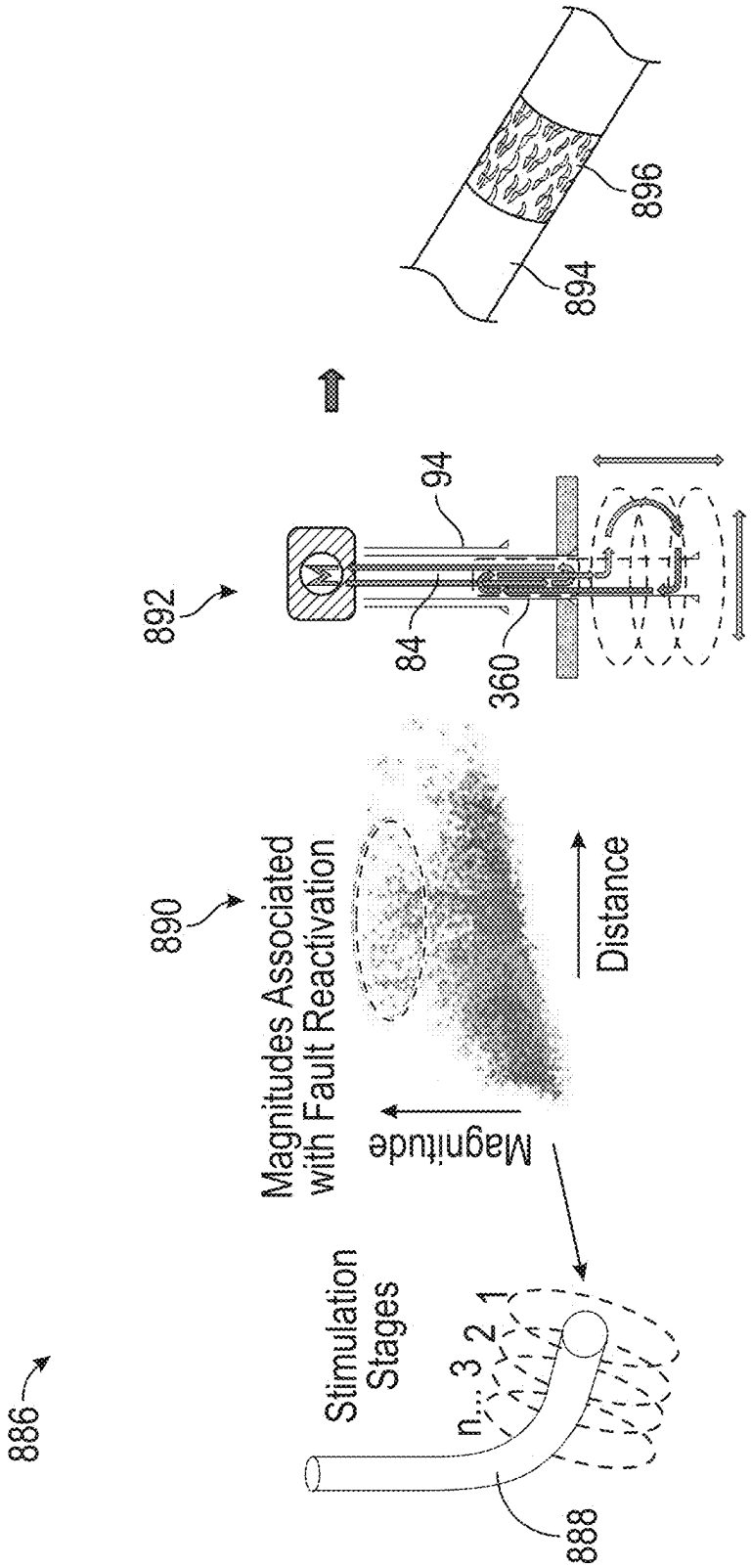
886
Stimulation Stages
n...3 2 1
888
890
Magnitudes Associated with Fault Reactivation
Magnitude
Distance
892
84
94
360
894
896

FIG. 57

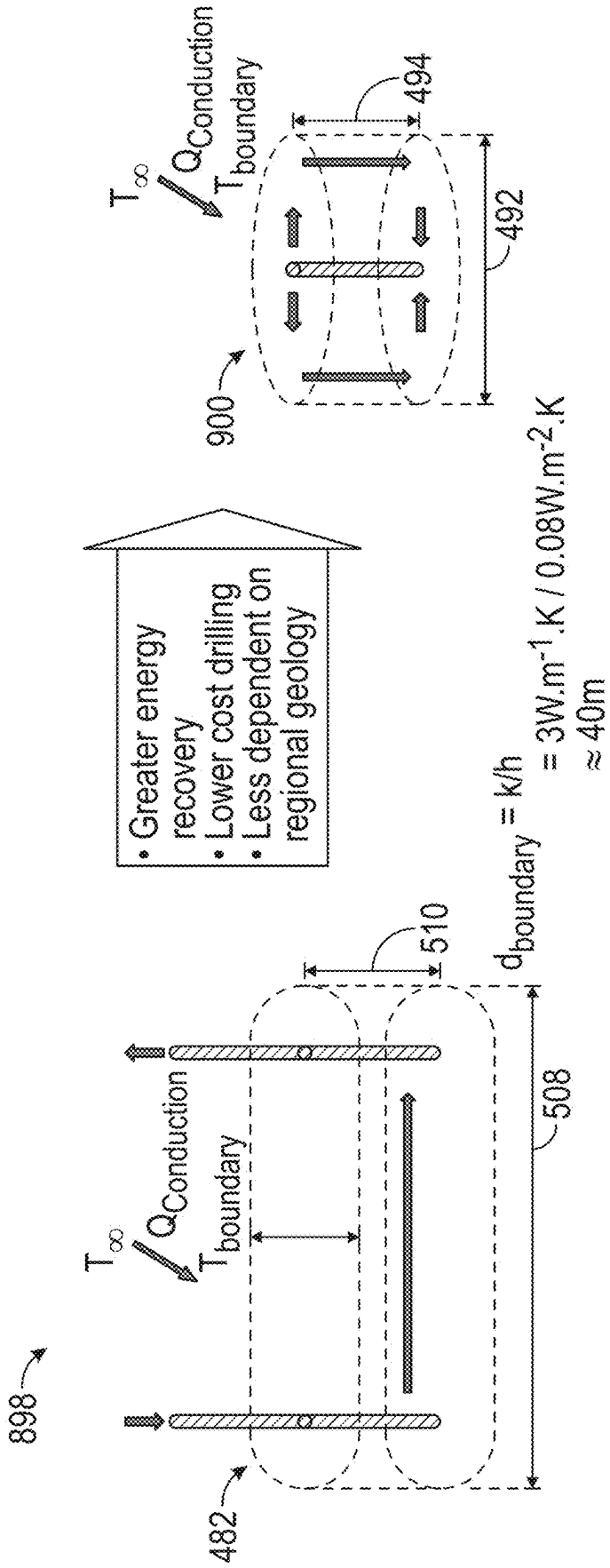
898
482
T_∞
$Q_{Conduction}$
$T_{boundary}$
508
510
$d_{boundary} = k/h$
$= 3W.m^{-1}.K / 0.08W.m^{-2}.K$
$\approx 40m$
• Greater energy recovery
• Lower cost drilling
• Less dependent on regional geology
900
T_∞
$Q_{Conduction}$
$T_{boundary}$
492
494

FIG. 58

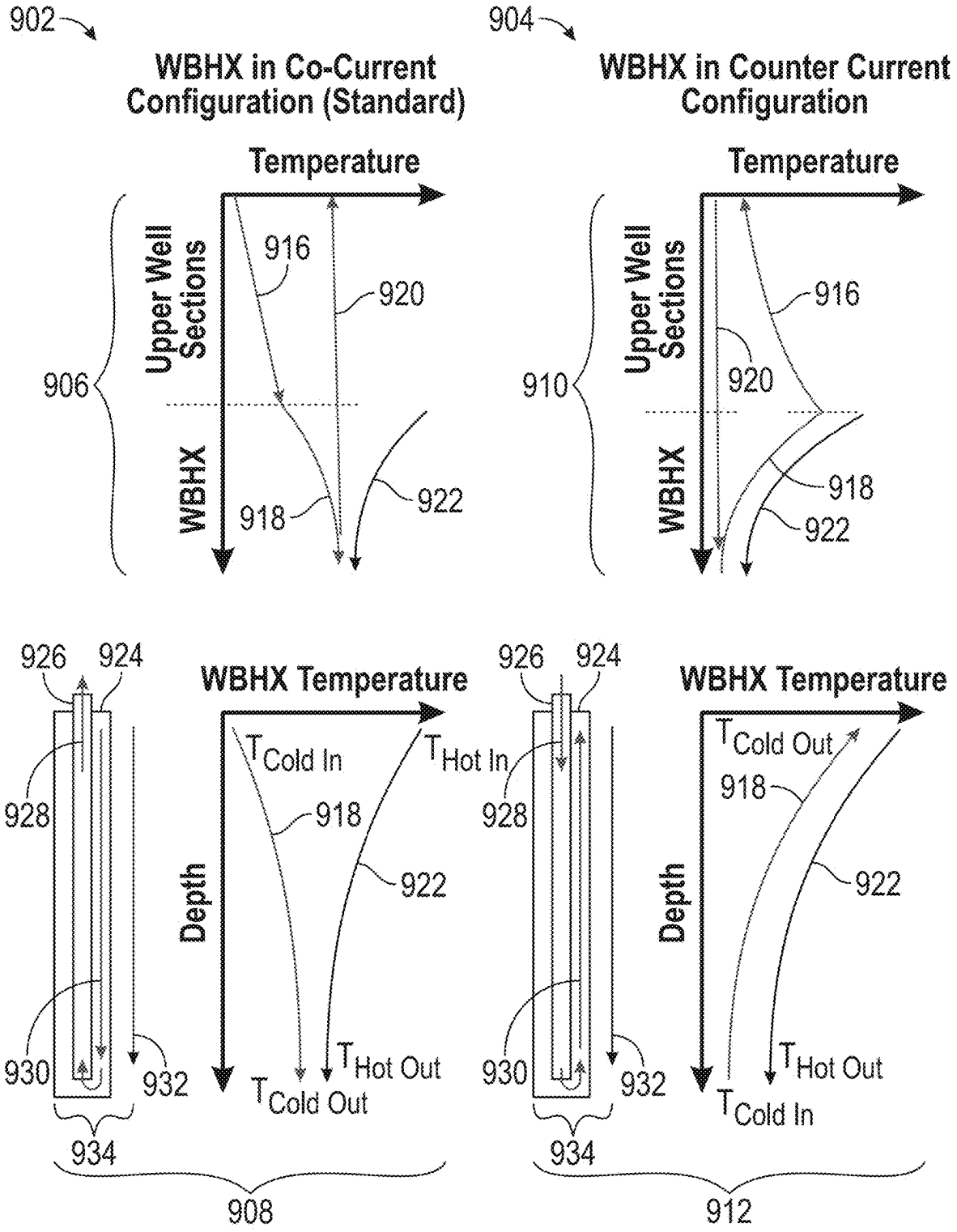
902
WBHX in Co-Current Configuration (Standard)
Temperature
Upper Well Sections
WBHX
906
916
920
918
922
904
WBHX in Counter Current Configuration
Temperature
Upper Well Sections
WBHX
910
916
920
918
922
926
924
928
930
932
934
908
WBHX Temperature
Depth
T Cold In
T Hot In
T Hot Out
T Cold Out
918
922
926
924
928
930
932
934
912
WBHX Temperature
Depth
T Cold Out
T Hot Out
T Cold In
918
922

FIG. 59

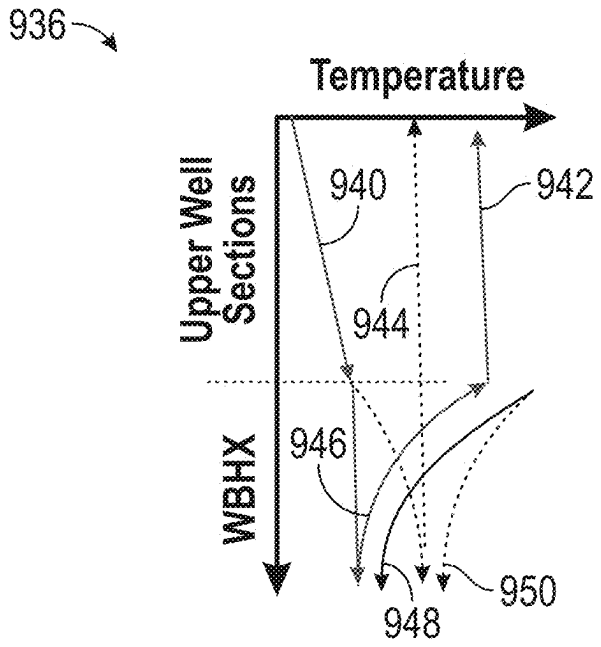

FIG. 60A

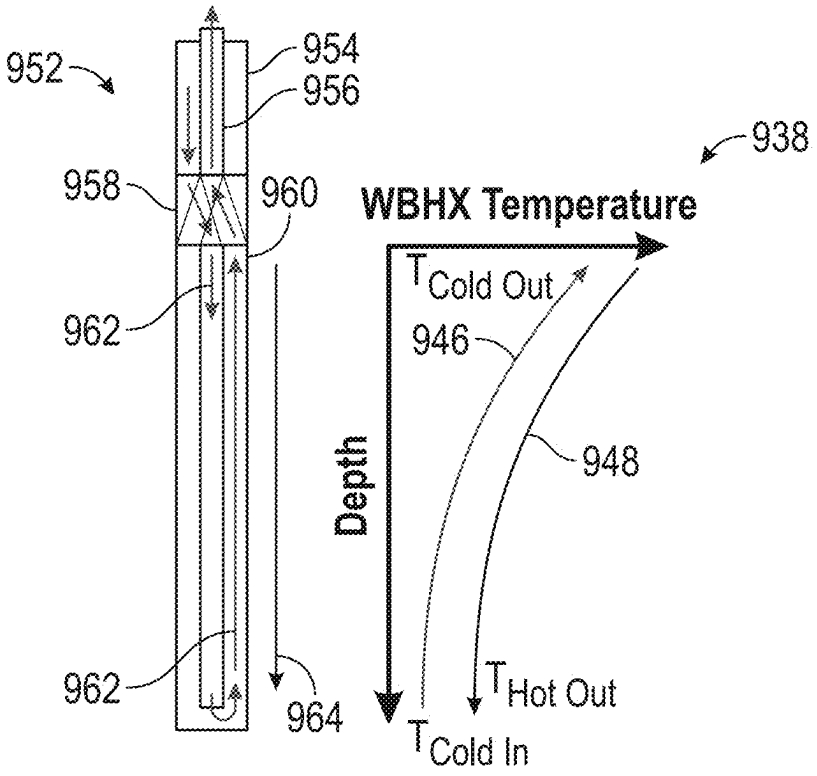

FIG. 60B

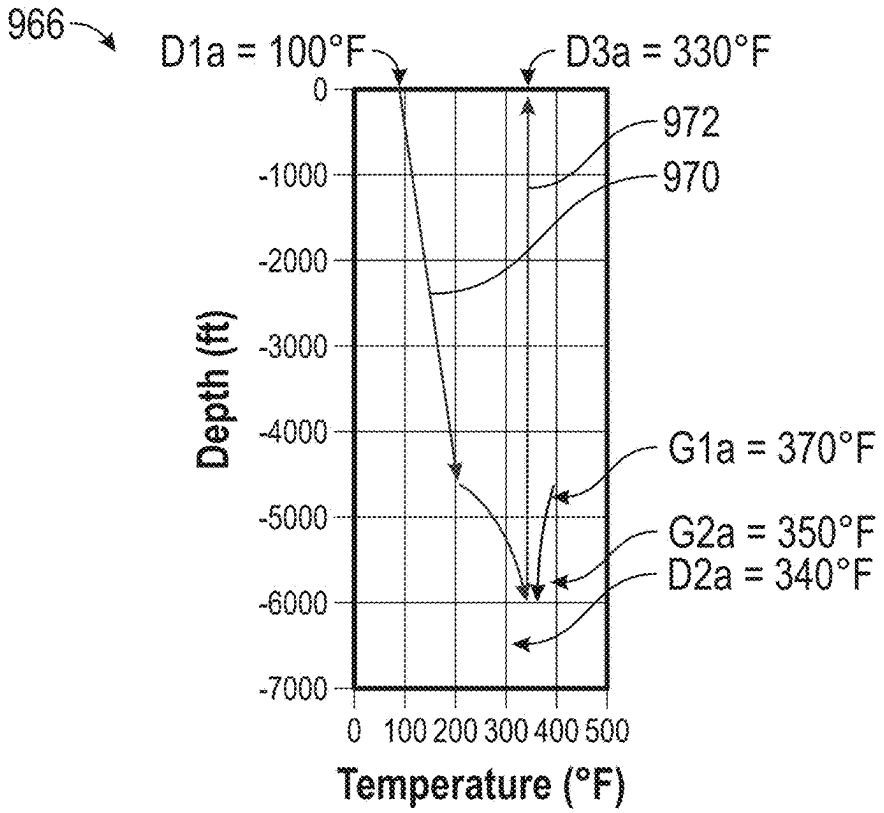

FIG. 61A

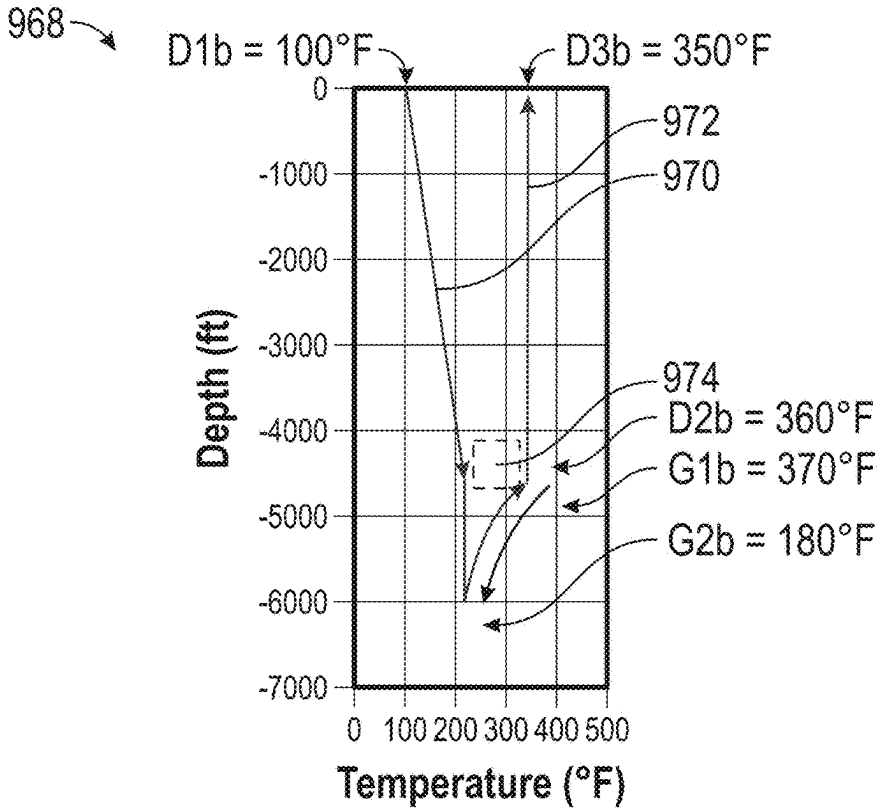

FIG. 61B

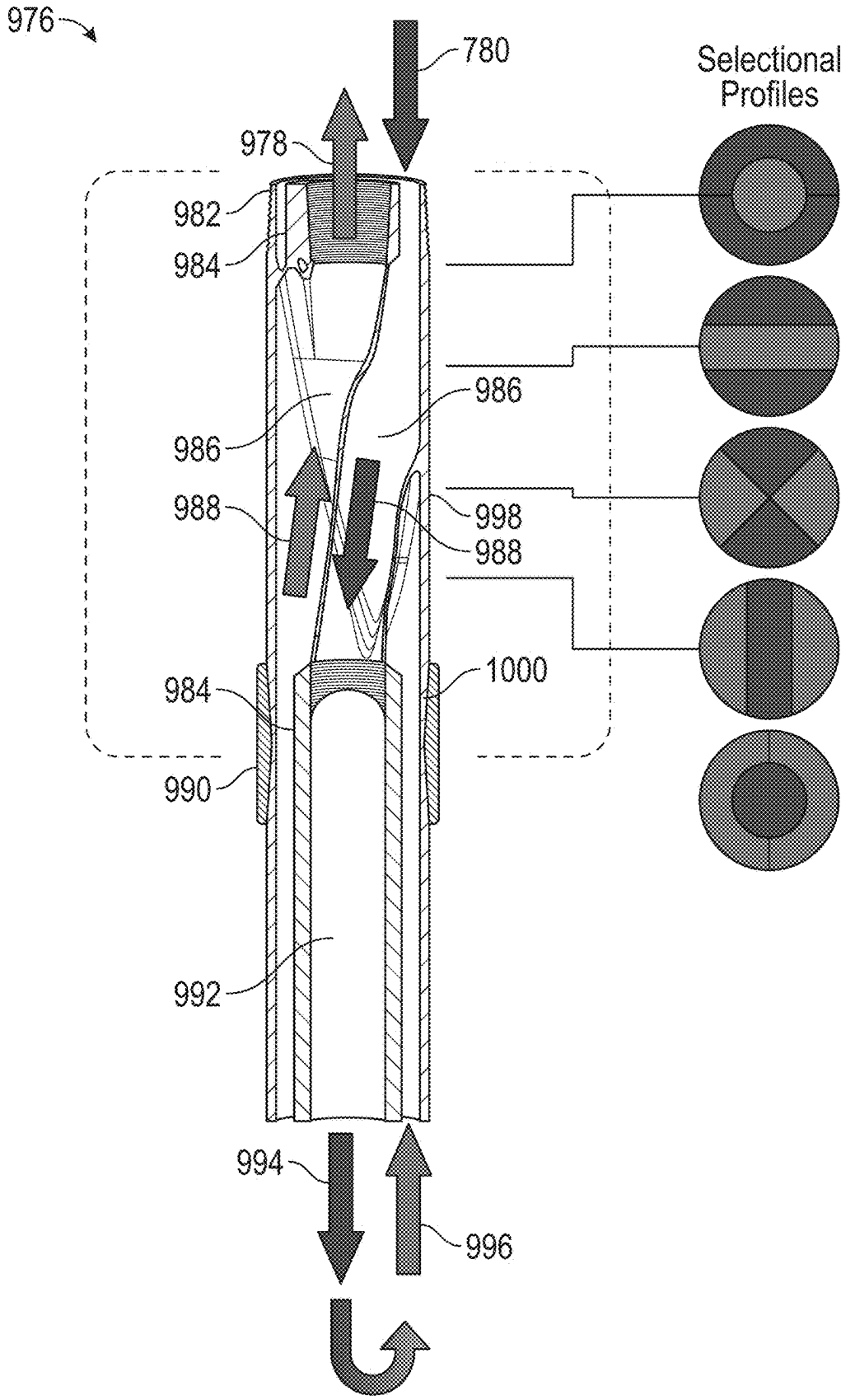
976
780
Selectional Profiles
978
982
984
986
986
988
998
988
1000
984
990
992
994
996

FIG. 62

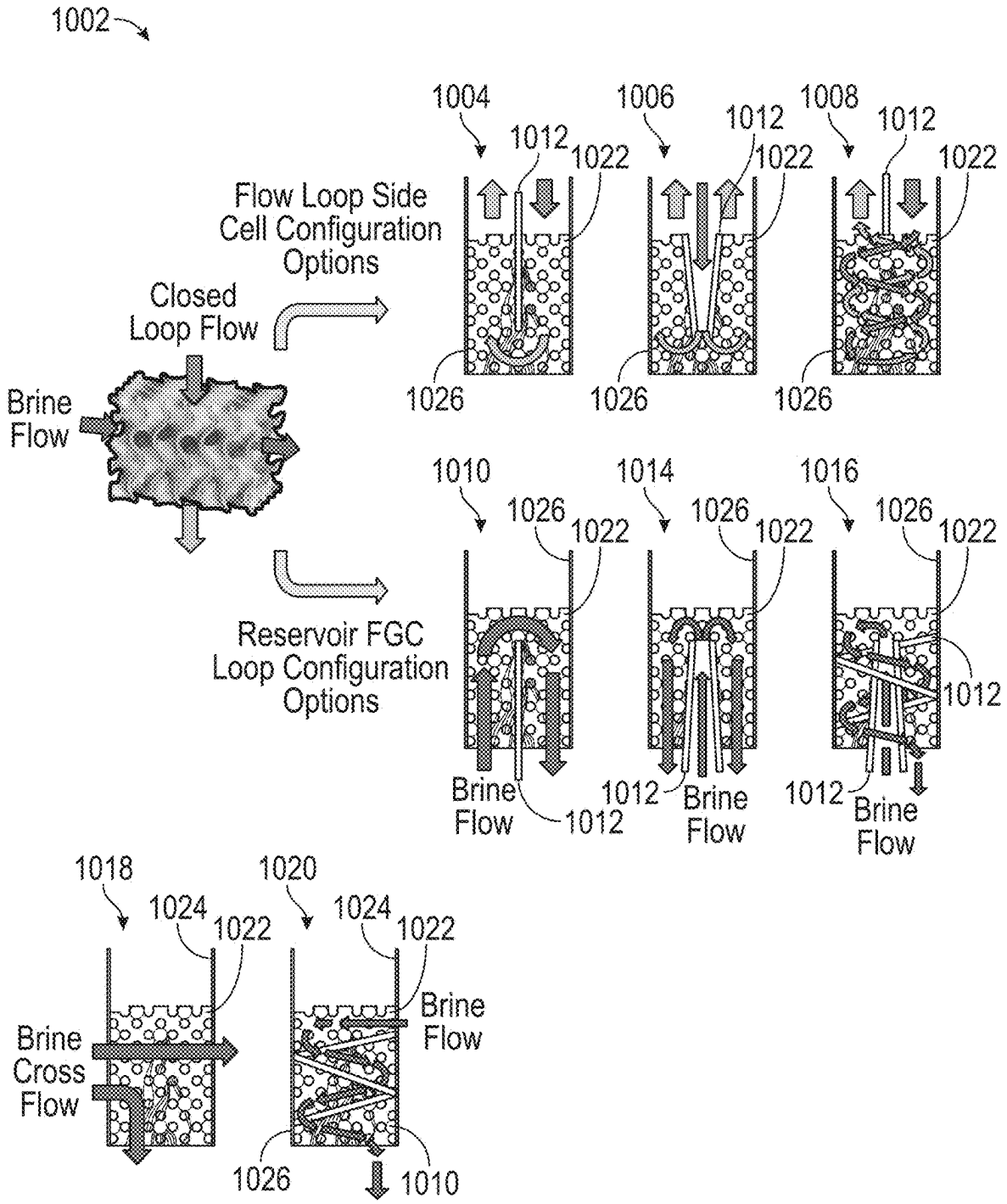
1002
1004
1006
1008
1012
1022
1026
Flow Loop Side Cell Configuration Options
Closed Loop Flow
Brine Flow
1010
1014
1016
Reservoir FGC Loop Configuration Options
Brine Flow
1018
1020
1024
Brine Cross Flow
Brine Flow
1010

FIG. 63

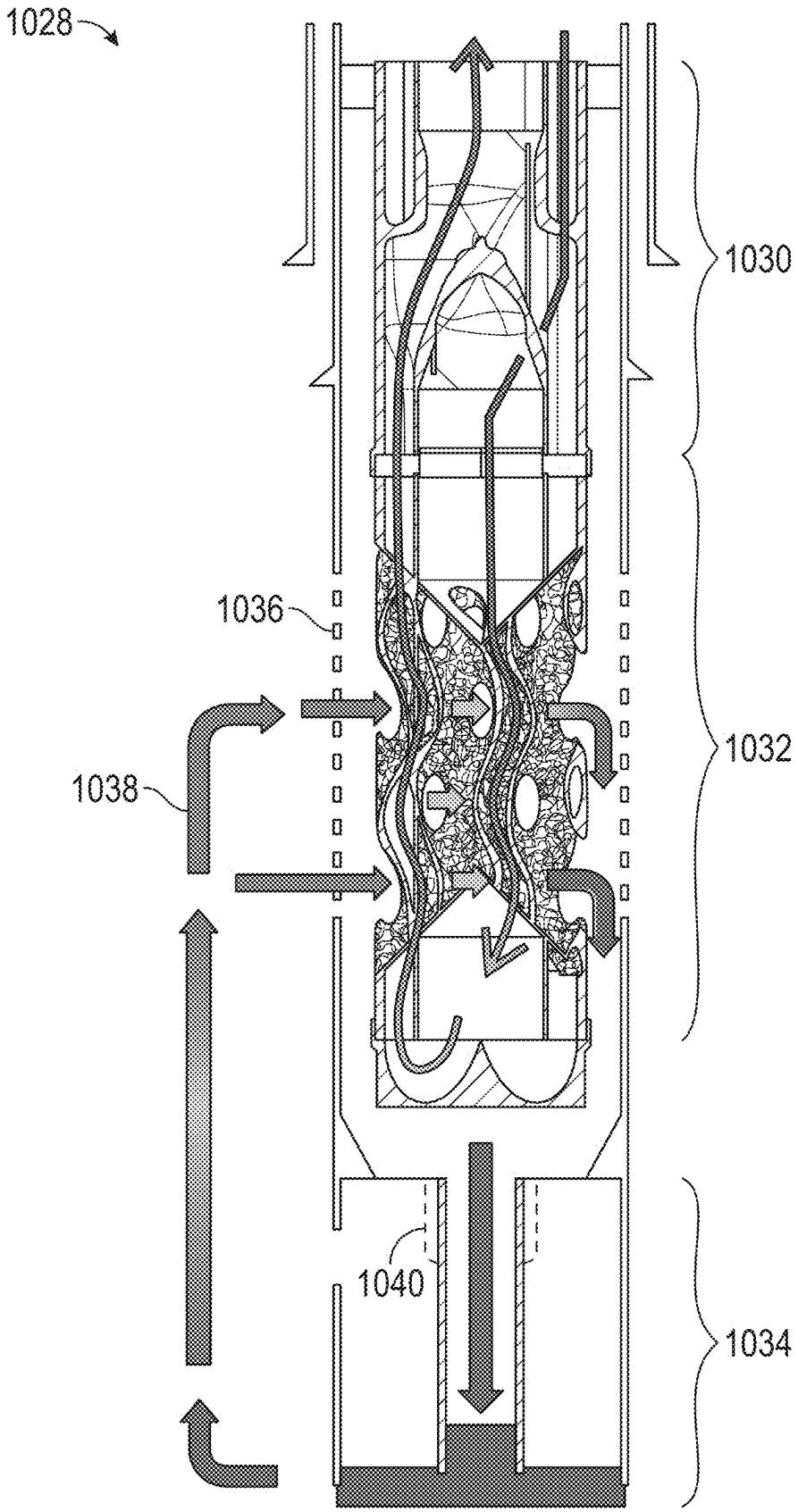

FIG. 64

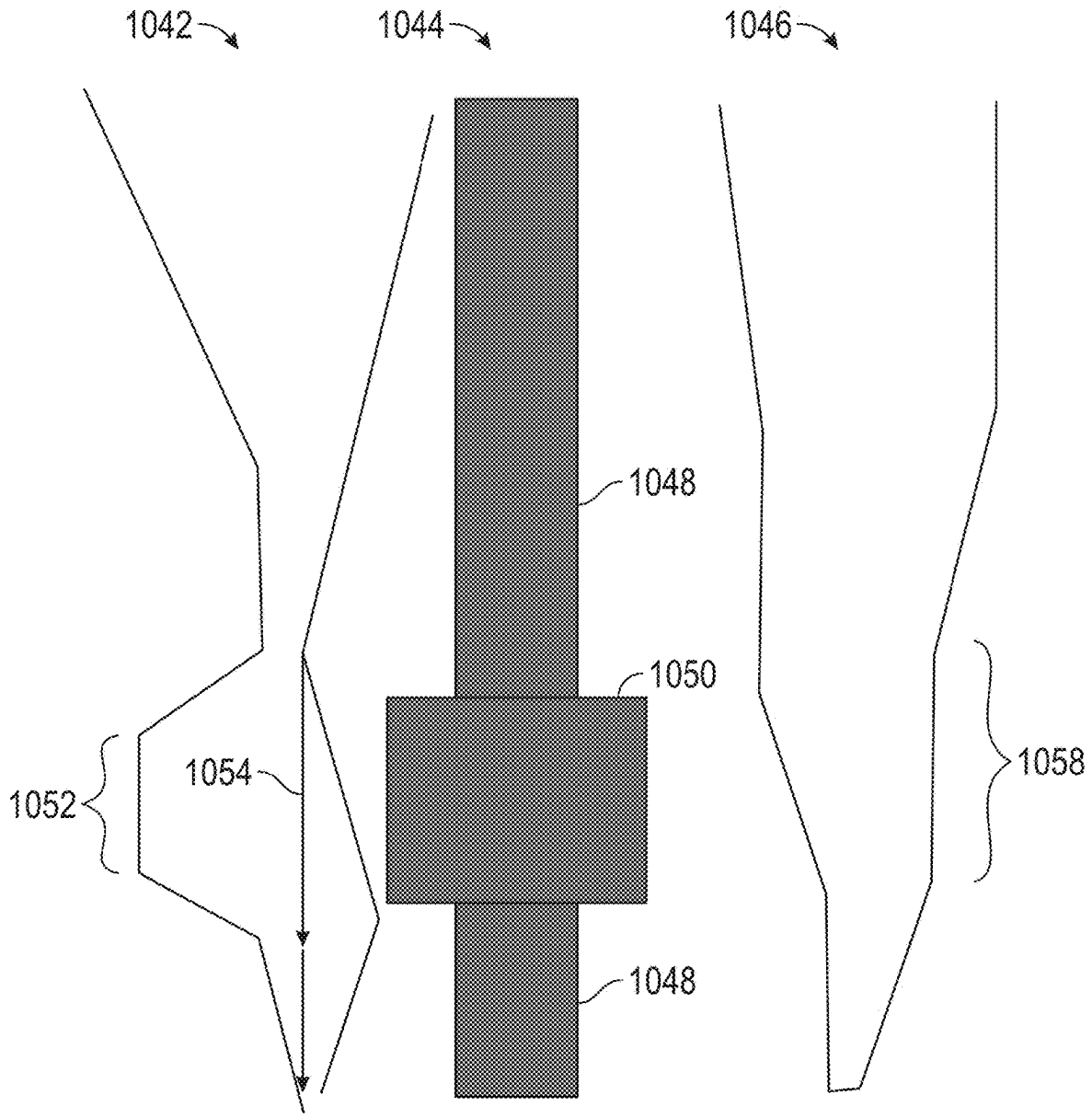

FIG. 65

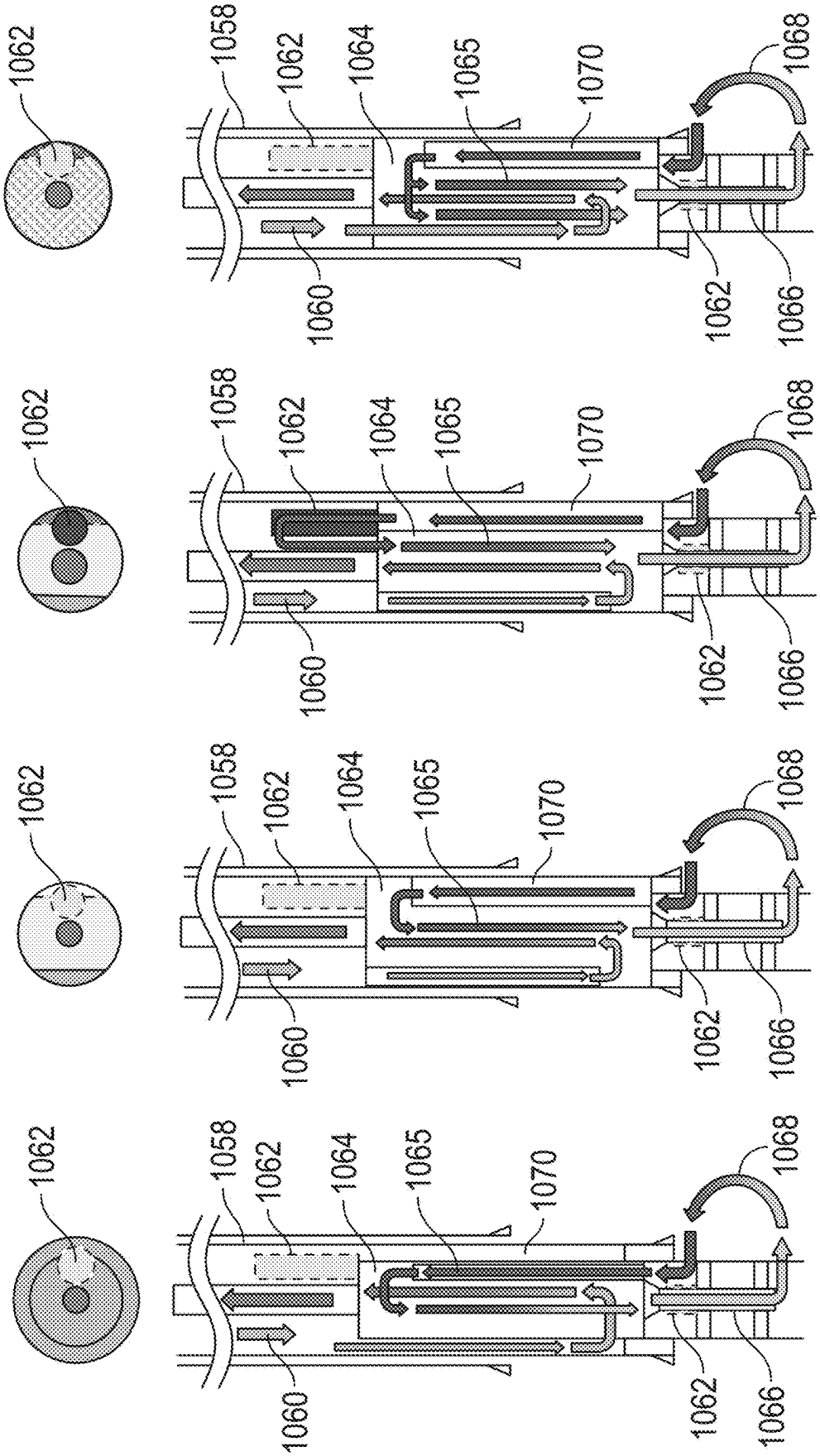

FIG. 66A

FIG. 66B

FIG. 66C

FIG. 66D

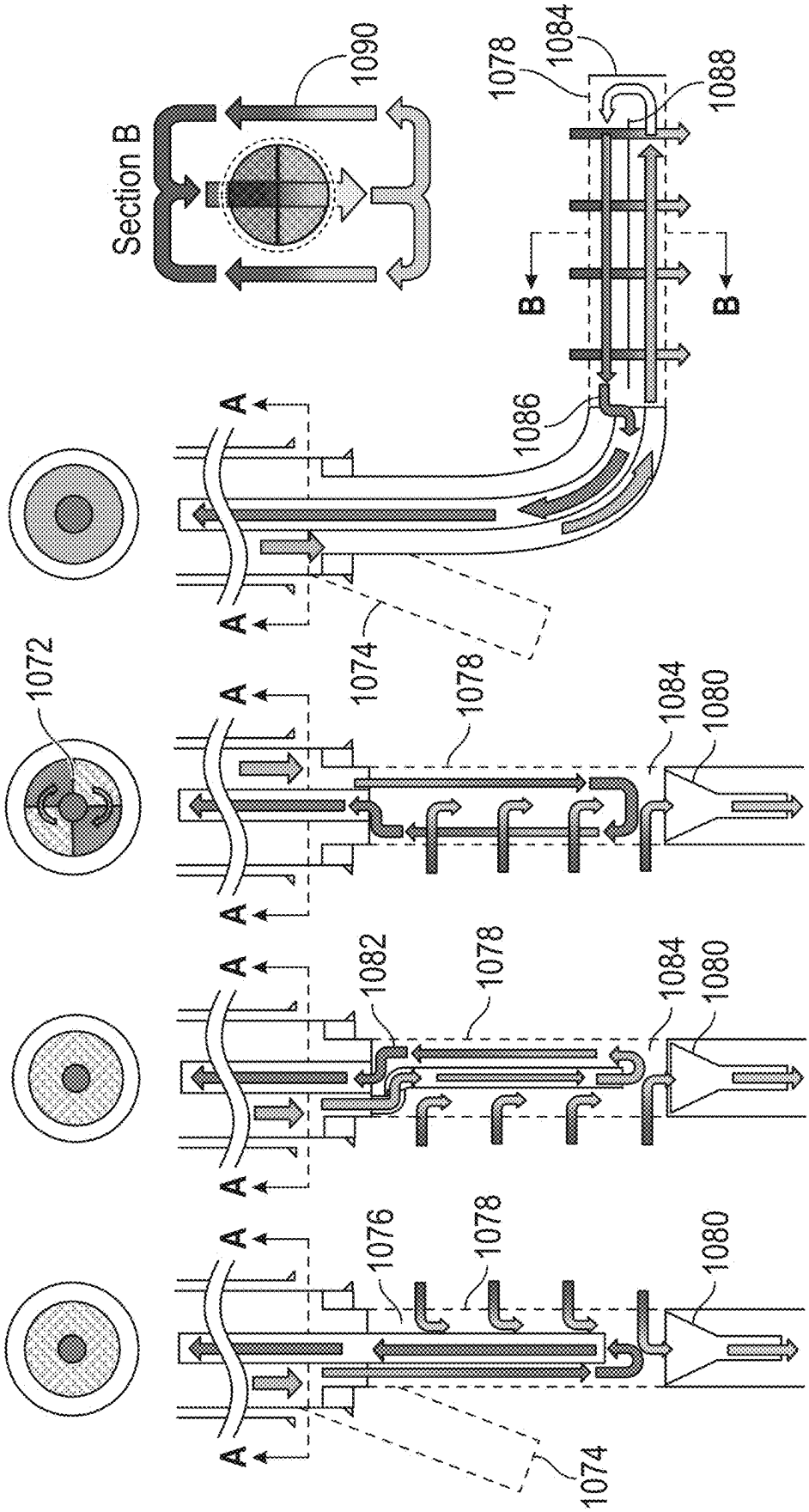
Section B
1090
1078
1084
1088
B
B
1086
A
A
1074
1072
1078
1084
1080
1082
1076
FIG. 67A
FIG. 67B
FIG. 67C
FIG. 67D

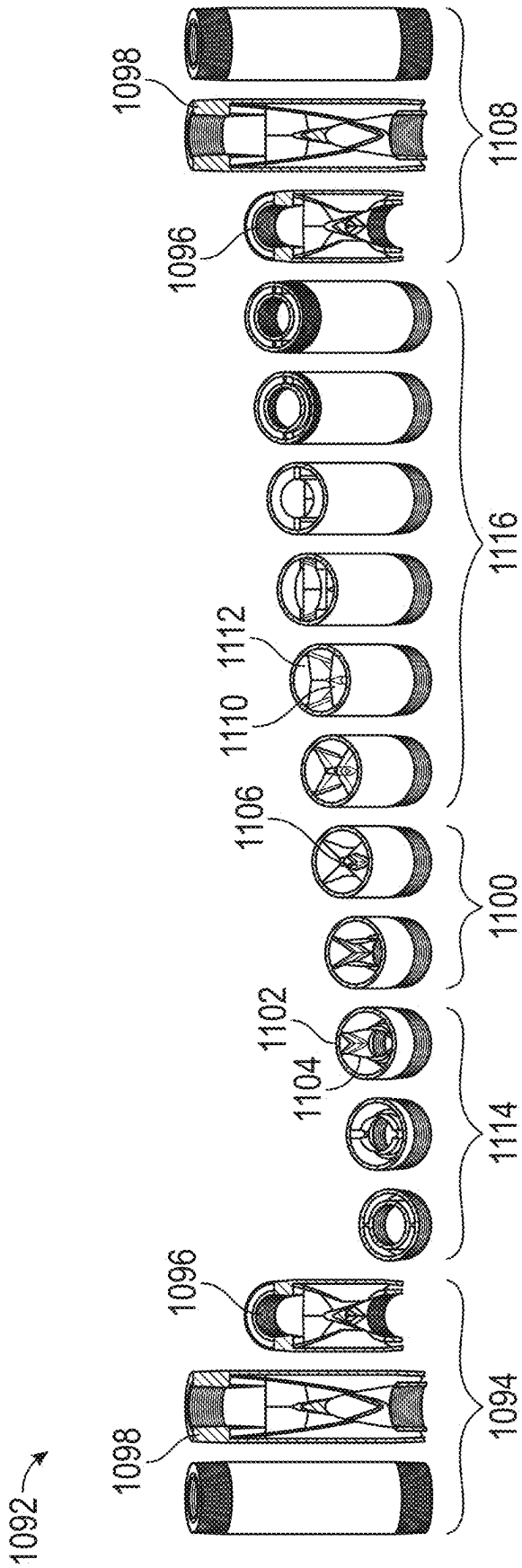
1092
1098
1096
1094
1114
1104
1102
1100
1106
1110
1112
1116
1096
1098
1108

FIG. 68

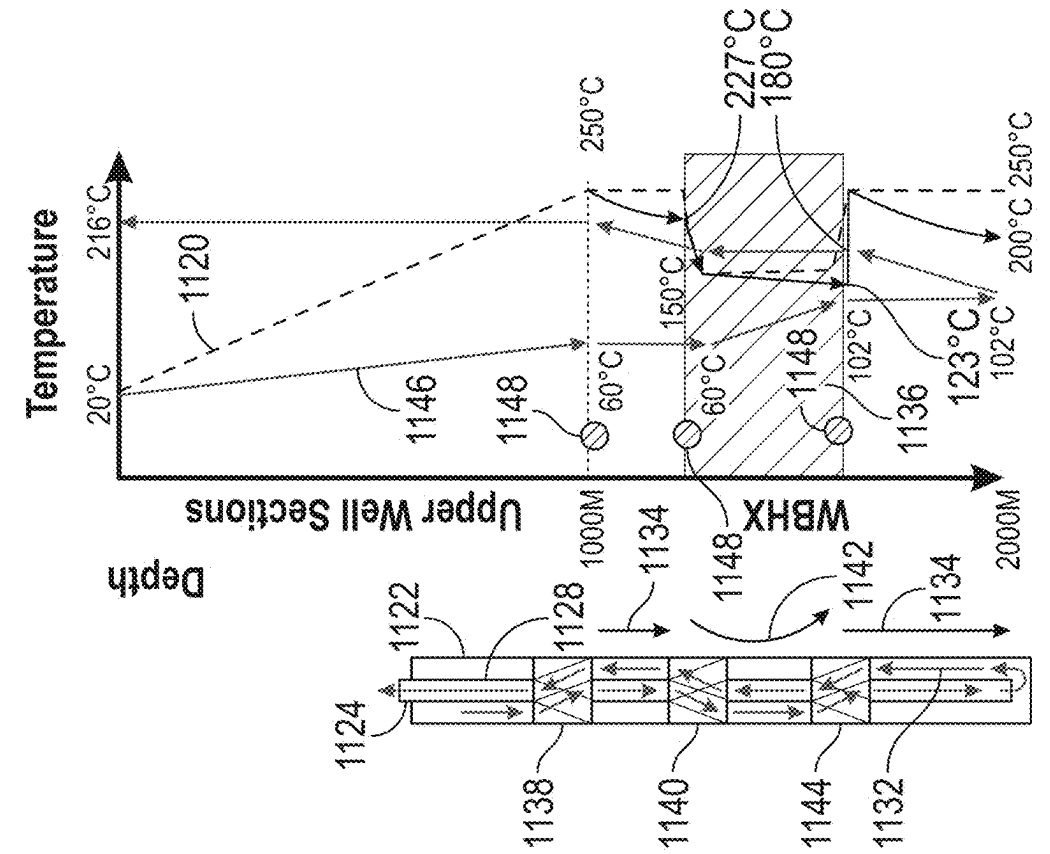
Temperature
20°C
216°C
1120
1146
1148
60°C
250°C
150°C
60°C
227°C
180°C
102°C
1148
1136
123°C
102°C
200°C
250°C
Upper Well Sections
1000M
WBHX
2000M
Depth
1134
1148
1142
1134
1122
1128
1124
1138
1140
1144
1132

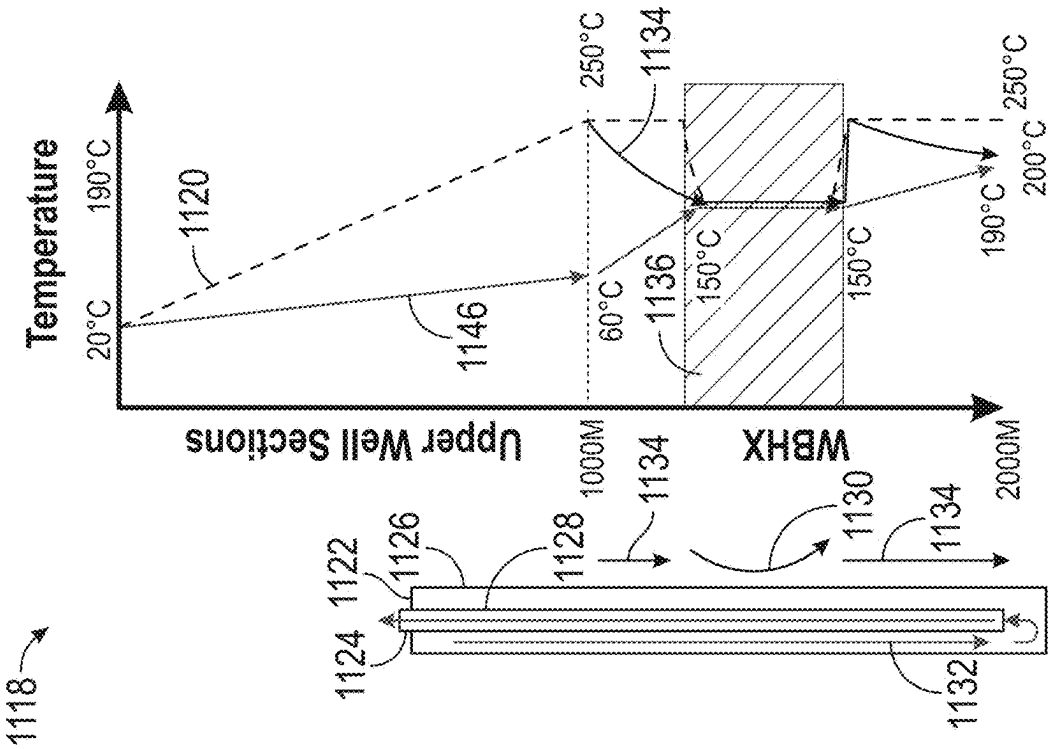
1118
Temperature
20°C
190°C
1120
1146
60°C
1136
150°C
250°C
1134
150°C
190°C
200°C
250°C
Upper Well Sections
1000M
WBHX
2000M
1134
1130
1134
1124
1122
1126
1128
1132

FIG. 69

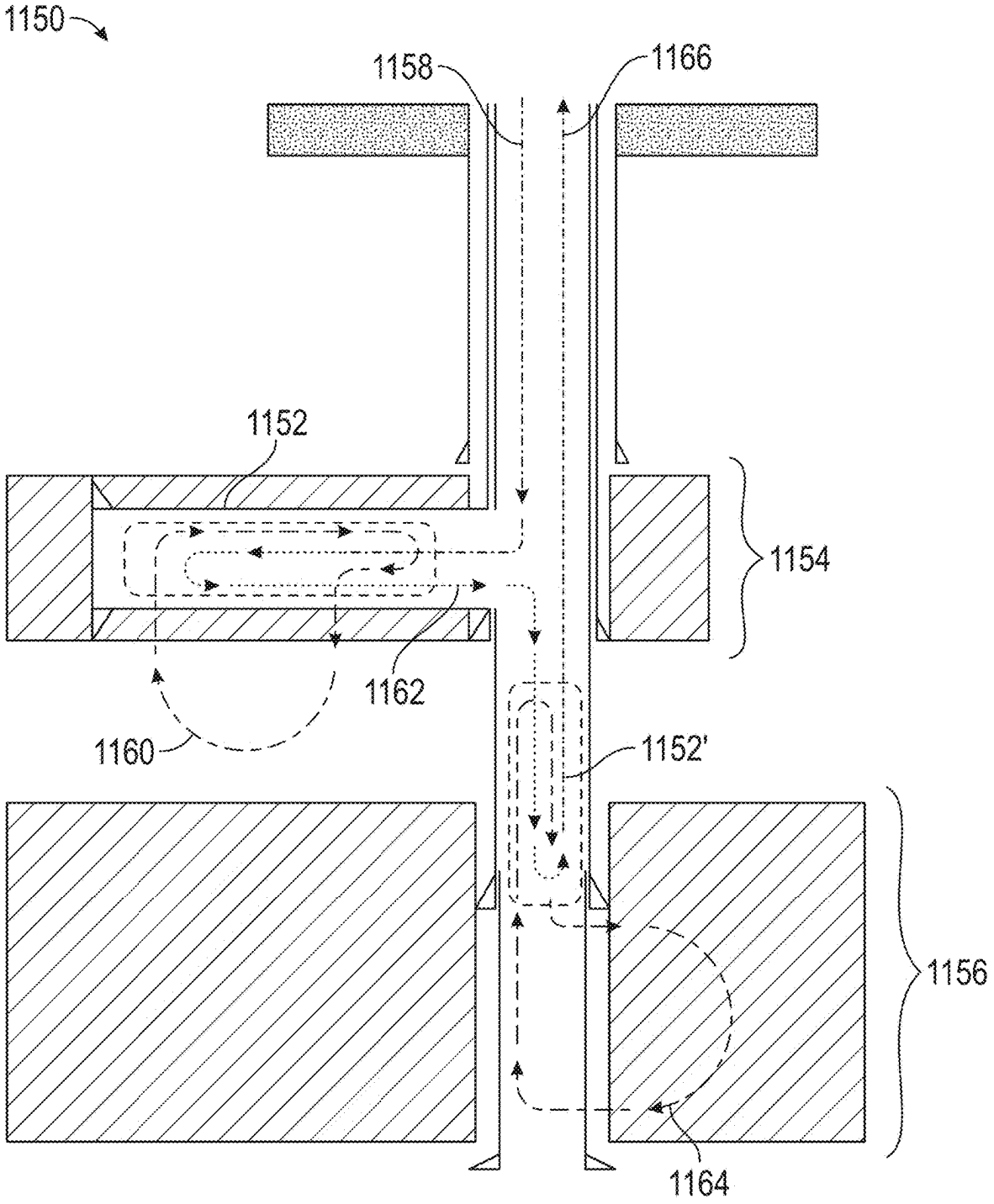

FIG. 70

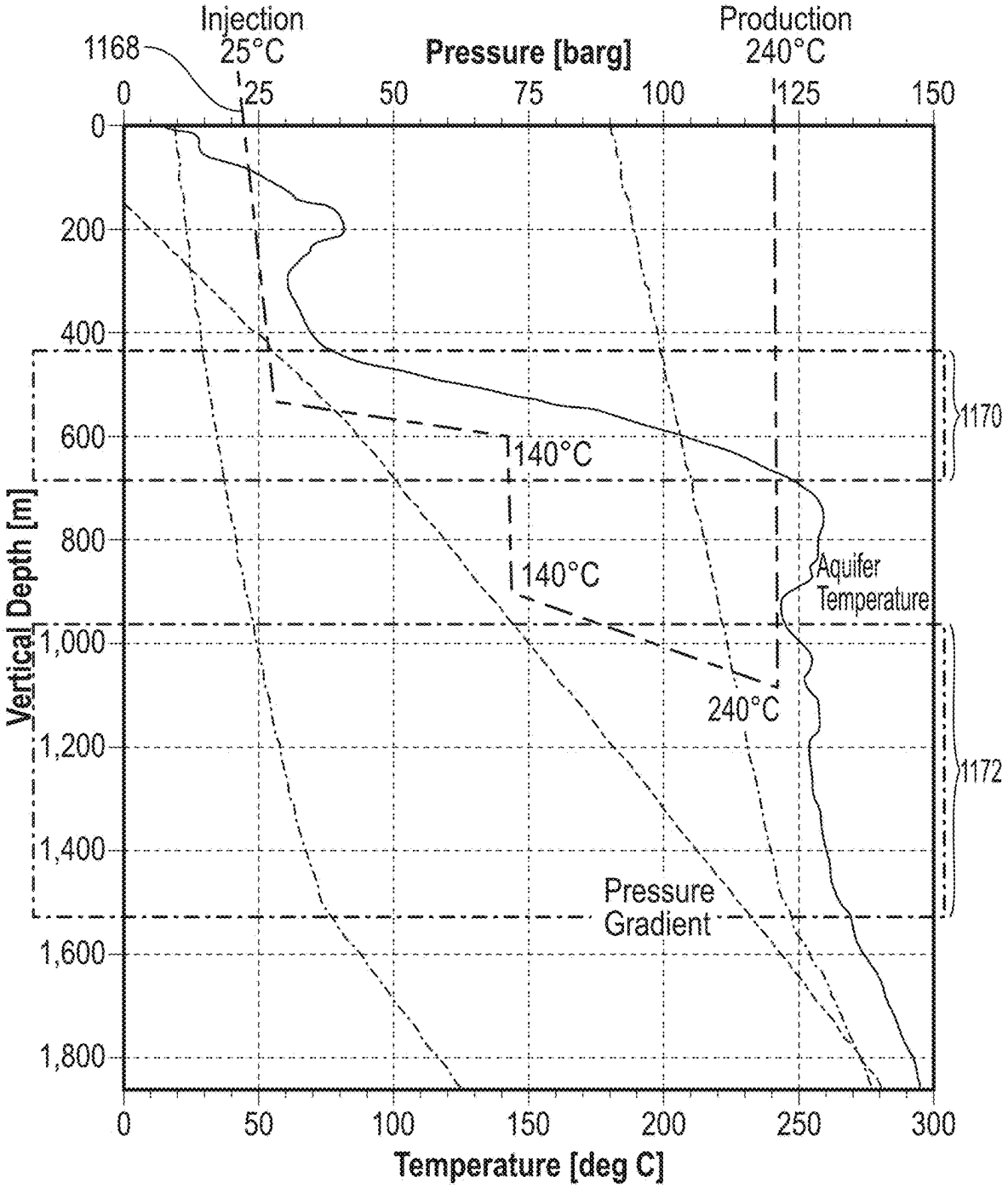
Injection
25°C
1168
Pressure [barg]
Production
240°C
0
25
50
75
100
125
150
0
200
400
600
800
1,000
1,200
1,400
1,600
1,800
Vertical Depth [m]
1170
140°C
140°C
Aquifer
Temperature
240°C
1172
Pressure
Gradient
0
50
100
150
200
250
300
Temperature [deg C]

FIG. 71

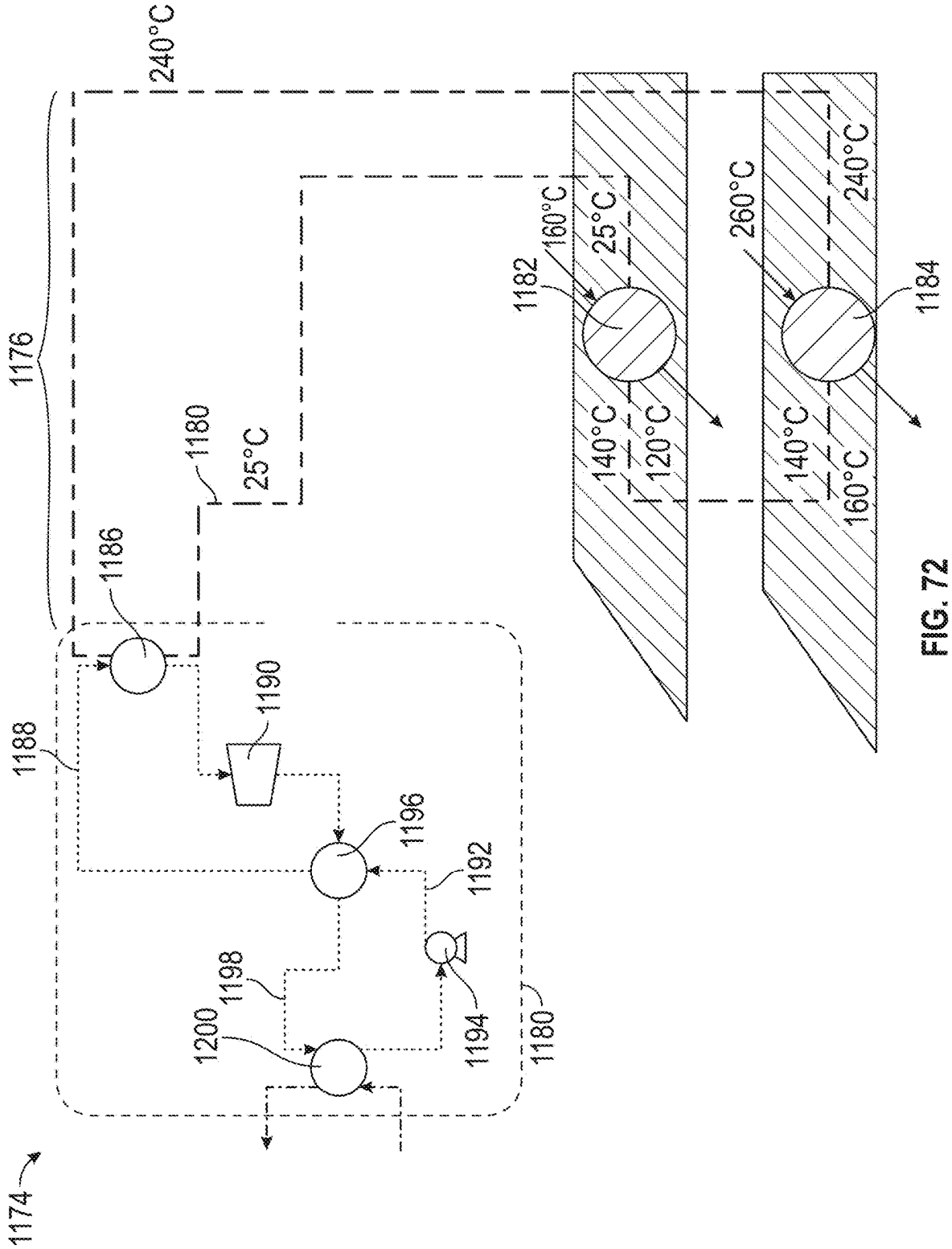
1174
1176
1188
1186
1180
25°C
240°C
1190
1196
1192
1198
1200
1194
1180
1182
160°C
25°C
140°C
120°C
260°C
240°C
1184
140°C
160°C

FIG. 72

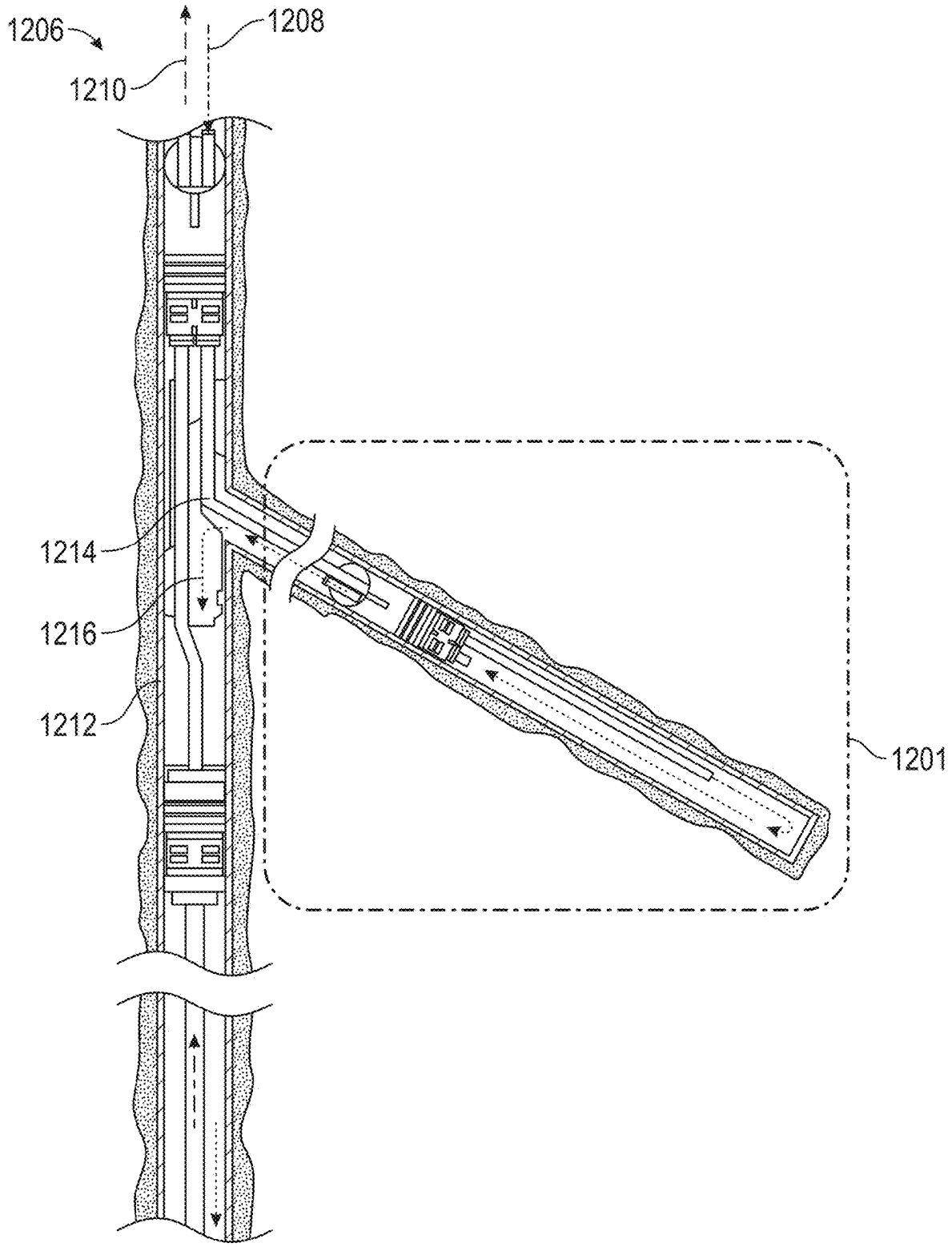

FIG. 73A

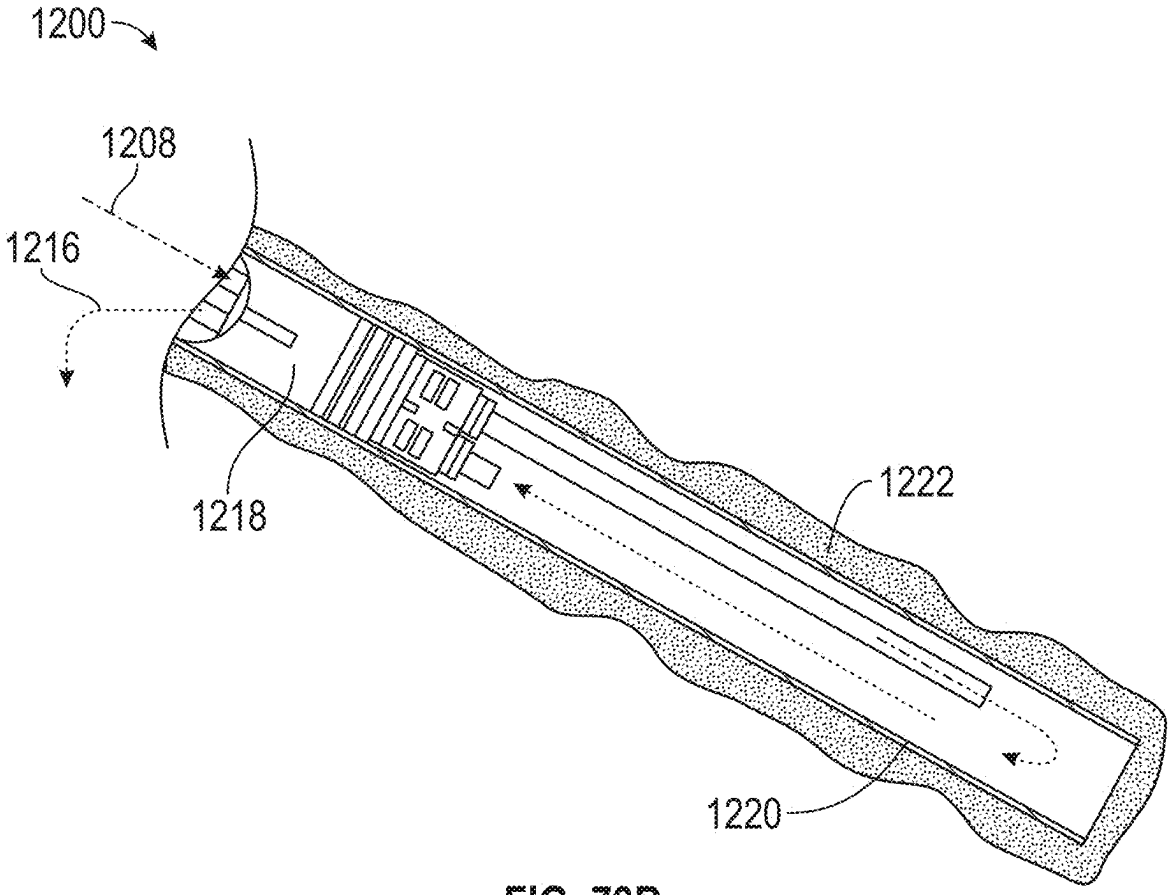

FIG. 73B

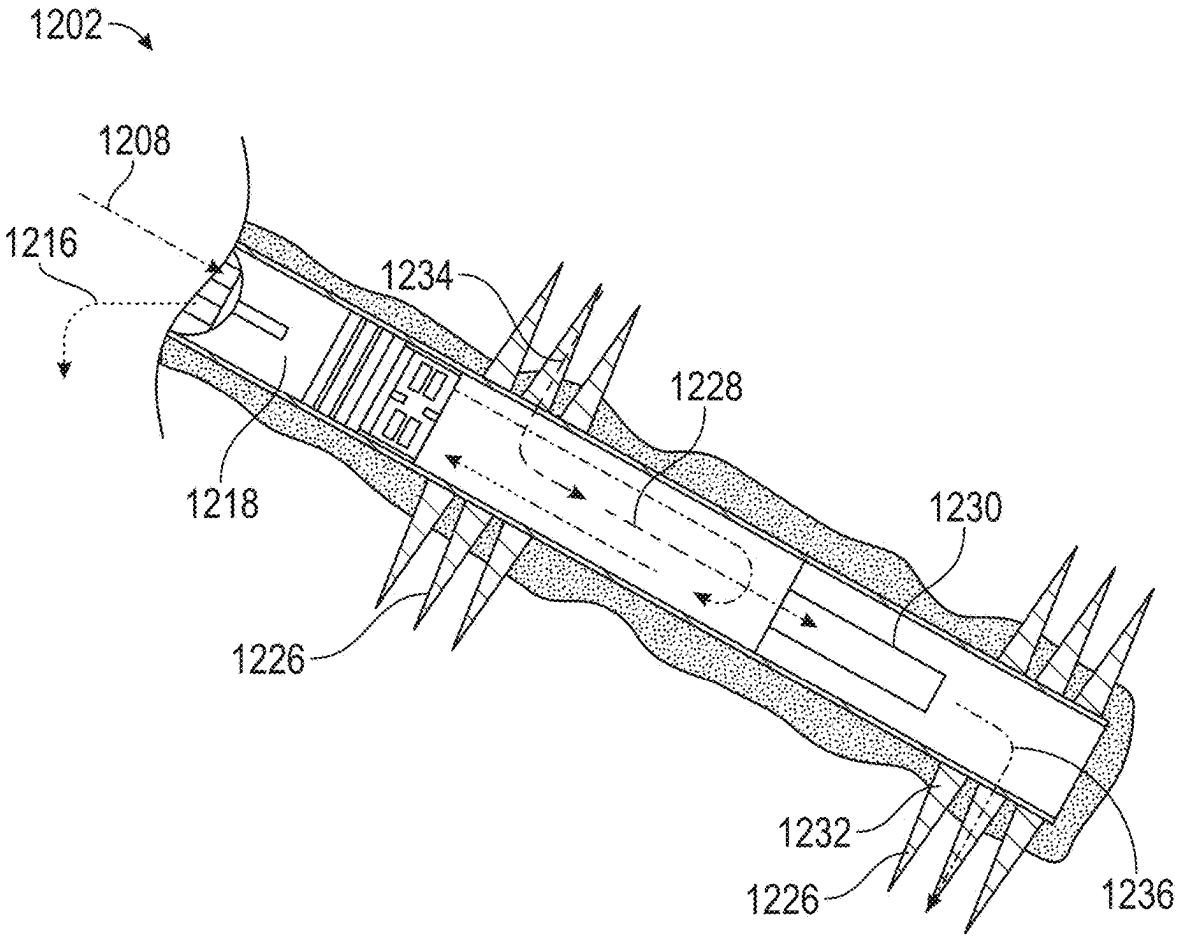

FIG. 73C

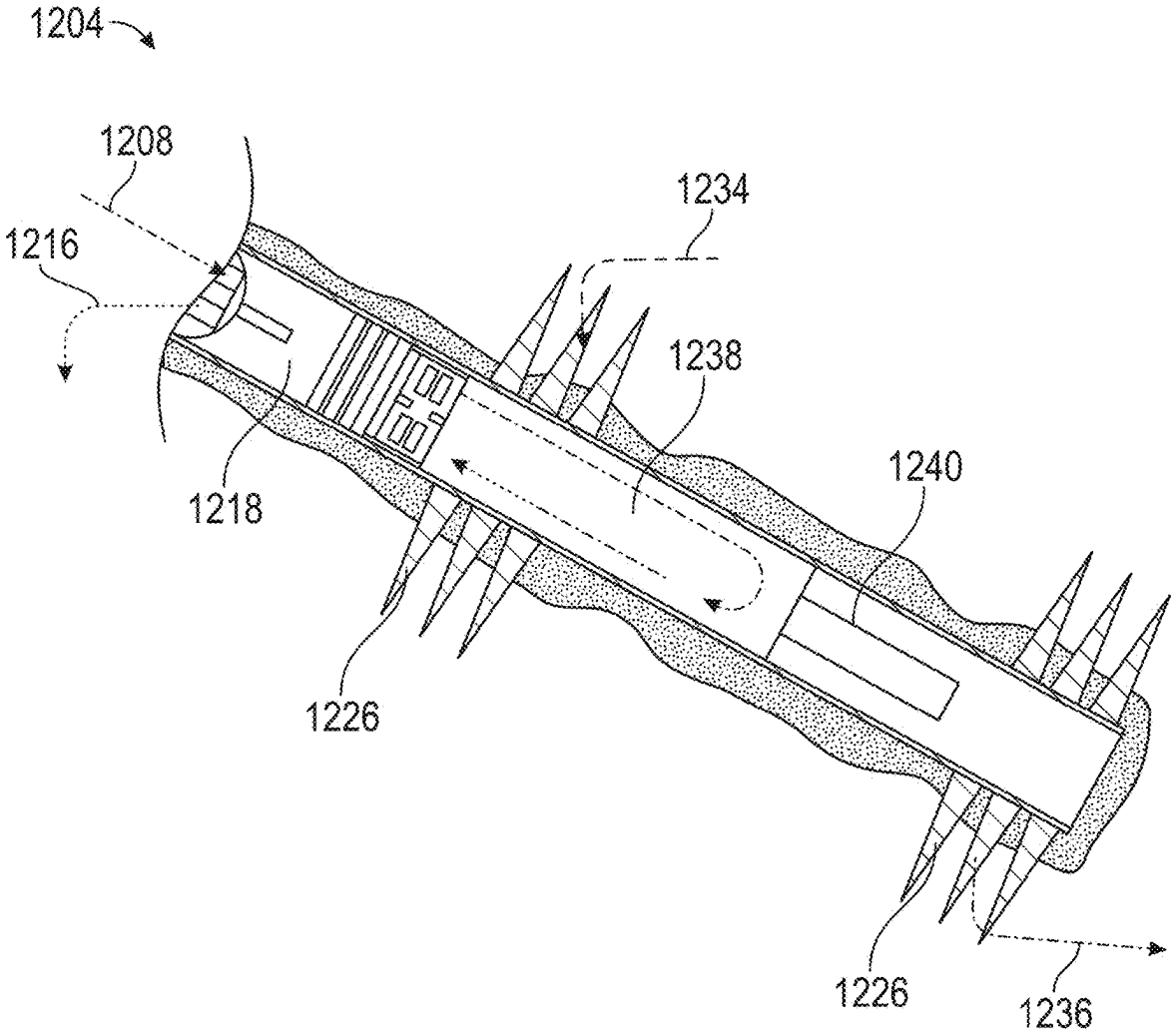

FIG. 73D

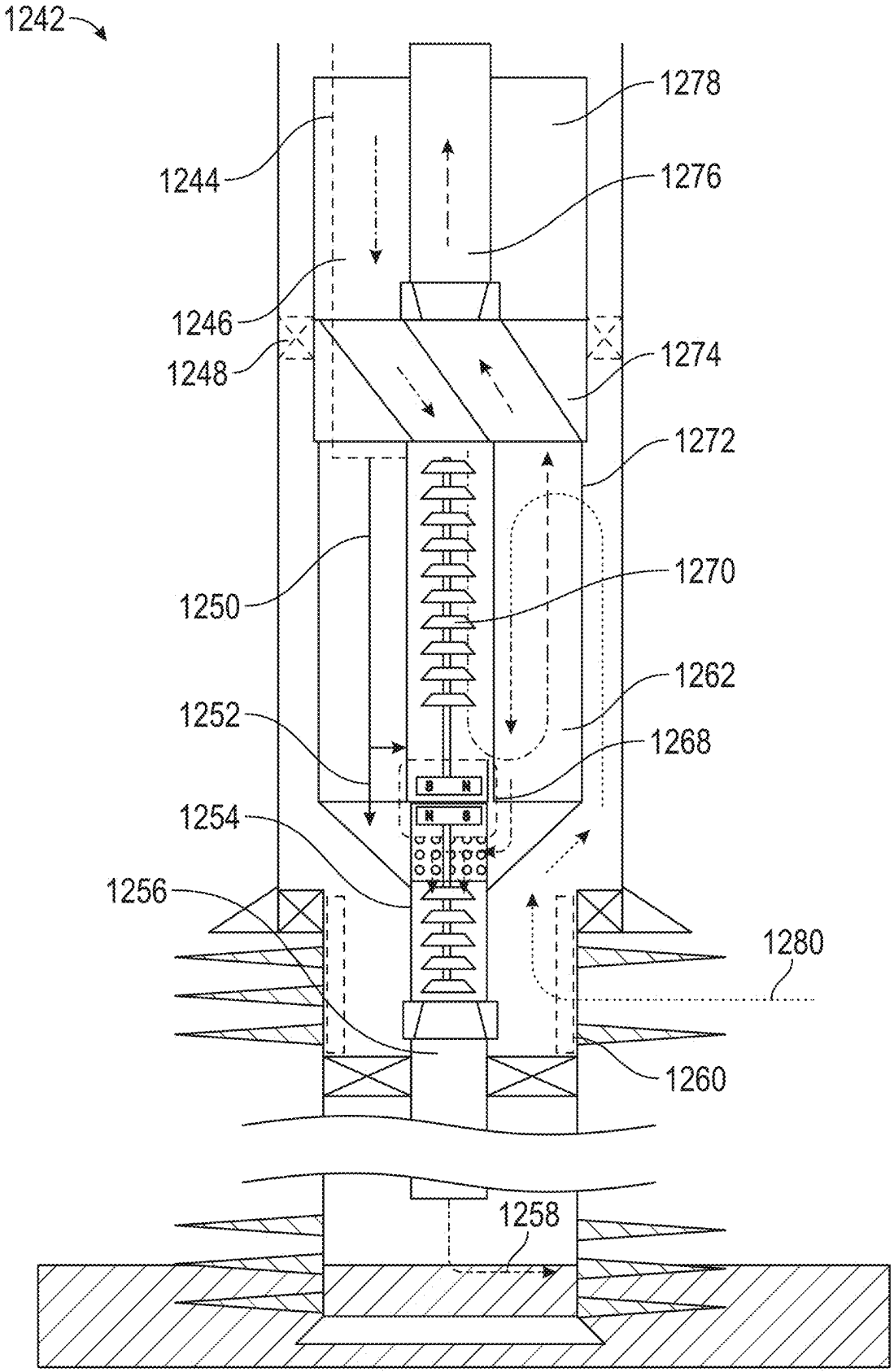
1242
1278
1244
1276
1246
1248
1274
1272
1250
1270
1262
1252
1268
1254
1256
1280
1260
1258

FIG. 74

GEOTHERMAL ENERGY SYSTEM

CROSS-REFERENCE TO RELATED APPLICATIONS

[0001] This application is a continuation-in-part application of U.S. patent application Ser. No. 18/908,701, entitled "Geothermal Energy System", filed on Oct. 7, 2024, which claims priority to and the benefit of the filing of U.S. Provisional Patent Application No. 63/543,021 entitled "Geothermal Energy System", filed on Oct. 6, 2023 and the specification and claims thereof are incorporated herein by reference.

BACKGROUND OF THE INVENTION

Field of the Invention (Technical Field)

[0002] Embodiments of the present invention relate to a system and method for producing geothermal energy preferably using a closed loop system.

BACKGROUND

[0003] Current binary geothermal processes recover energy by producing hot subterranean water to the surface and flashing it to steam to drive a turbine, for electricity, or to heat a utility thermal medium. The higher the mass flow and temperature of the steam produced the more energy that can be extracted. By extracting energy, the produced steam is condensed and the resulting water stream is returned to the aquifer at a lower temperature. The injected water stream eventually migrates back to the production well bore through the reservoir gathering geothermal energy in the process. This process extracts latent heat from the rock matrix between the injector and producer wells along with the enthalpy from the surrounding aquifer fluid.

[0004] Along with the produced steam in the binary process, greenhouse gases ("GHG") are also produced and are invariably vented to the atmosphere in this process. These systems also face challenges from the deposition of minerals as the aquifer water flashes to steam resulting in plugging of the reservoir rock, well bore, and surface facilities. In addition, the flashing and condensing process conditions result in high rates of corrosion within the facility.

[0005] Traditional binary geothermal systems produce hot water from deep geological layers that convert to steam at the surface as the pressure is reduced. A common use for the steam produced is to drive a turbine and produce electricity or to provide direct utility heat. The resulting condensed steam is cooled before being re-injected. However, during this process, significant quantities of CO_2 and other harmful gases are produced. These gases are unable to be condensed and are often vented. Typical gas emission quantities from open geothermal systems vary from 75 kilograms per megawatt hours ("kg/MWh") up to 1300 kg/MWh depending on the geological zone being produced. Furthermore, in producing the geothermal steam, silicates and other scale forming minerals are created in the reservoir or within the associated wells and facilities. Scale buildup significantly impacts the productivity and operating cost of any open geothermal system. The scale buildup leads to additional drilling cost to extend wells to new unplugged zones, and to higher maintenance costs for the surface facilities.

[0006] An alternative to the binary process in the art is the closed loop geothermal system. This comprises a well bore, a closed loop heat medium circuit, and a well bore heat exchanger ("WBHX") at the base of the well to collect geothermal heat from the reservoir. These systems aim to avoid the production of GHG and mitigate mineral deposition in the reservoir by avoiding flashing of the aquifer water. However, closed loop systems tend to recover an order of magnitude less energy than binary processes based on current designs.

[0007] The primary factor governing energy recovery in closed loop systems is the rate of heat transfer from the surrounding rock matrix to the WBHX. In closed systems, there are two heat transfer mechanisms that govern energy recovery, conduction and natural convection. These mechanisms are highly-dependent on the porosity, permeability, saturation, and temperature of the geothermal reservoir. Industry approaches to maximize energy recovery with closed loop systems focus on location selection, with high subsurface temperatures, permeability, and water saturation. In addition, closed loop systems look to maximize the surface area of the WBHX by increasing the well bore diameter or by applying multi laterals to increase the number of legs. These constraints limit the number of viable locations for geothermal energy recovery and the amount of energy that can be recovered from any given system. In addition, the relatively small reservoir foot print of the WBHX, when compared to binary production and injector wells, limits the potential rock volume available for latent heat recovery, thus further limiting the energy recovery potential.

[0008] Closed loop geothermal systems offer significant benefits over traditional open hole or dry steam systems. The basic principle is that a heat transfer fluid is circulated in a closed loop from the surface to the target geothermal zone where it heats up before being returned to the surface. The resulting hot heat transfer fluid is then used to produce electricity or provide utility heat. These designs do not produce carbon dioxide or other potentially environmentally harmful gases. They significantly reduce the impact from silicate and mineral plugging in the reservoir and eliminate scale buildup within surface equipment, reducing operating costs.

[0009] Closed loop geothermal energy systems rely on recovering stored latent heat energy from the immediately surrounding reservoir rock as well as from continual heat transfer from the surrounding rock matrix. The heat transfer is delivered by a combination of conduction and convection mechanisms. The latent heat recovery and heat transfer performance are affected by several factors, including rock composition, fluid saturation, porosity, and permeability. The main driver for heat transfer from convection is determined by the permeability, porosity and the degree of saturation of the rock matrix. The main heat transfer mechanism for closed loop geothermal systems is from thermal conduction. The equation describing the heat transfer is shown in Equation ("Eq.") (1).

$$Q_{cond} = \frac{2\pi(T_2 - T_1)}{\frac{k}{hr_2}\ln\left(\frac{r_2}{r_1}\right)} \tag{1}$$

Wherein:

[0010] Q_{cond} is the enthalpy from conduction in watts ("W"));

[0011] k is the average thermal conductivity in watts per meters Kelvin ("W/m·K");

[0012] h is the overall heat transfer coefficient in watts per meters squared Kelvin ("W/m^2·K");

[0013] T_1 is the Well Bore Heat Exchanger ("WBHX") temperature in Kelvin ("K");

[0014] T_2 is the Reservoir Temperature (K); r_2 is the effective infinite radius of the heat effected zone around the geothermal well; and

[0015] r_1 is the radius of the WBHX.

[0016] Based on Eq. (1), for a system in equilibrium between thermal conduction and convection, it can be shown that r_2 for the heat effected zone can be approximated by Eq. (2):

$$r_2 = \frac{k}{h} \tag{2}$$

[0017] Heat transfer via conduction is driven by the average thermal conductivity of the rock, determined by chemical composition, saturation, and porosity of the rock, the radius of the WBHX, and the temperature differential between the reservoir and the WBHX. Conductivity for typical reservoir rocks can vary from as low as 0.5 W/m·K up to 10 W/m·K while the heat transfer coefficient can vary from <50 milliwatts per meters squared Kelvin ("mW/m^2·K") for tight low permeability zones, with permeability less than 10 millidarcy ("mD"), to over 2000 mW/m^2·K for 1000 mD course sandstone. These values play a significant role in determining the performance of a closed loop geothermal system.

[0018] While heat conduction is mainly determined by the physical parameters of the reservoir rock, convection heat transfer involves more dynamic parameters. The rate of heat transfer via convection is described by Equations 3 to 8.

$$Qconv = h \cdot A' \cdot (T_2 - T_1) \tag{3}$$

$$h = \frac{Nu \cdot k}{r_1} \tag{4}$$

$$Nu = 0.989\, Re^{0.33} Pr^{0.33} \tag{5}$$

$$Re = \frac{U \cdot r_1}{v} \tag{6}$$

$$Pr = \frac{\mu \cdot Cp_f}{k} \tag{7}$$

$$U = \frac{2\pi \cdot K \cdot L_w (P_2 - P_1)}{\mu \cdot \phi \cdot \ln\left(\frac{r_2}{r_1}\right) A} \tag{8}$$

Wherein:

[0019] A' is the surface area of the WBHX in meters squared ("m^2");

[0020] Nu is the Nusselt number for low flow conditions where Reynolds number ("Re")<0.4;

[0021] Re is the Reynolds number;

[0022] Pr is the Prandtl number;

[0023] U is the Darcy velocity of fluid passing through a course medium in meters per second ("m/sec");

[0024] A is the cross sectional flow path area simplified to r_1 times well lateral length (m^2);

[0025] k is the course medium permeability factor (m^2);

[0026] P_2 is the reservoir pressure in Pascals ("Pa");

[0027] P_1 is the pressure at WBHX (Pa);

[0028] μ is the dynamic viscosity of the reservoir fluid in Newton seconds per meter squared ("Ns/m^2");

[0029] ∪ is the kinematic viscosity of the reservoir fluid in meters squared per second ("m^2/s");

[0030] L is the distance between r_1 and r_2 for close circuit designs and r_1 and FGC wellbore for FGC design in meters ("m");

[0031] L_w is the effective well lateral length (m); and

[0032] ϕ is the rock porosity percentage.

[0033] In currently deployed closed loop geothermal systems the heat transfer is dominated by conductive heat transfer mechanisms. Convection heat transfer contributes between 3% to 10% of the total recovered heat at the WBHX depending on the reservoir permeability. The lower the permeability the lower the contribution from convection heat transfer. Conductive heat transfer relies on induced fluid movement, expressed as U in Eq. 6, for the calculation of the fluid Reynolds number. However, with current closed loop geothermal systems, the only driving force for fluid movement in the reservoir, absent of a mobile aquifer, is from an induced buoyancy effect caused by cooling the reservoir fluid adjacent to the WBHX. While reducing the WBHX temperature increases the heat transfer rate, for both conductive and convective mechanisms, this approach results in lower inlet temperatures to surface facilities for heat extraction. Lower surface inlet temperatures result in a reduced overall efficiency of the geothermal system. While optimization is required to balance the rate of heat extraction, surface inlet temperature, energy recovery efficiency, and the ultimate life of the geothermal system, the solution space is limited.

[0034] Over time the total available energy that can be recovered from a geothermal system is the sum of the latent heat and the heat transferred to the WBHX as mentioned above. The equation governing the available heat recovery from latent heat is as follows:

$$Q_{total} = Q_{latent} + Q_{Conv} + Q_{cond} \tag{9}$$

$$Q_{latent} = m_r \cdot Cp_r \cdot \frac{(T_2 - T_1)}{2} \tag{10}$$

$$m_r = \pi \cdot \left(r_2^2 - r_1^2\right) \cdot Lw \cdot (1 - \phi) \tag{11}$$

Wherein:

[0035] Q_{total} is the total energy available for geothermal extraction (W);

[0036] Q_{latent} is the energy from the stored latent heat energy within the thermal extraction zone (W);

[0037] m_r is the rock mass within the thermal extraction zone in kilograms ("kg"); and

[0038] Cp_r is the thermal heat capacity of the reservoir rock in watts per kilogram Kelvin ("W/kg·K").

[0039] The primary drivers governing the recoverable heat from stored latent heat energy in the reservoir are deter-

mined by the temperature drop between the WBHX and r_2 and the total rock volume that experiences the resulting thermal gradient (the heat-affected zone). The sum energy production over the life of the geothermal well is made up from a combination of latent, conduction, and convection heat energy. However, once the thermal gradient in the reservoir reaches a radial distance of r_2 from the WBHX, the available energy, and/or the heat transfer fluid surface temperature, will decline due to an increase in thermal resistance over the available conductive capacity of the reservoir to supply heat.

[0040] As the permeability of the reservoir increases, reservoir fluid becomes more mobile to transport heat energy. Consequently, the convection heat transfer coefficient h also increases for the system. As described in equation (2) as h is increased, r_2 for the closed loop systems decreases. Consequently, closed loop systems in high permeability reservoirs have less latent heat available for extraction over the life of the well. Wells in high permeability reservoirs will produce at a higher energy output due to the high h value as predicted by Eq. 3, however, the production rate will reach a point of decline faster. A mobile aquifer in the reservoir can largely mitigate a reduced heat effected zone, however, aquifer mobility is not easily predicted and can vary significantly based on geology. The requirement for a mobile aquifer to sustain production becomes another limiting factor for locating viable sites for closed loop technology.

[0041] Closed loop geothermal technologies look to overcome the limitations of heat transfer from the reservoir rock by primarily increasing the total area of the casing exposed to the rock matrix to collect the energy. These approaches result in longer or larger casing designs or designs that incorporate multi lateral well construction to increase the total area. Alternatively, technologies look to optimize their energy production by adjusting the target depth for geothermal energy extraction. The deeper the geothermal system is installed the higher the temperature and the greater the available thermal gradient to drive heat transfer. However, the deeper the target layer the less permeable the rock matrix becomes, quickly diminishing the benefits of higher temperature.

[0042] Closed loop geothermal technologies Operators do not reverse the flow direction of closed loop system because vacuum insulated tubing ("VIT") would have to be used outside casing of the loop. Operators do not use vacuum insulated tubing and instead use normal casing because it is cheaper and comes in larger sizes. Operators would still need VIT for the inner core to keep the cold fluid from cross exchanging with the hot fluid. VIT tubing does not exist come in large enough sizes to be used as the outer casing. Therefore, operators would lose more net heat and experienced reduce throughput performance if the flow direction was reversed. The cost of operating a closed loop system with a reverse flow direction would also be highly cost prohibitive. Operators also do not use oil and gas packer systems to achieve a reverse flow because reverse flow would be difficult to implement and still maintain a pipe-in-pipe structure.

[0043] This geothermal heating system of the present invention provides an economic optimization opportunity between drilling cost, surface facility cost for power production, and total recoverable energy. Generally, the shallower the target zone, the lower the drilling costs and the higher the permeability. However, while the higher permeability allows for higher heat transfer, the lower recovery temperatures drive the surface facility costs up, rapidly overwhelming the benefits of reduced drilling costs on shallower targets. Conversely, deeper targets will yield a higher temperature and reduce the cost for power generation facilities. However, the lower permeability at depth and higher well costs undermine the benefits of higher temperature.

[0044] The geothermal heating system of the present invention overcomes the limitations of the prior art by incorporating a recirculation circuit into a WBHX to activate reservoir fluid to transport cooled reservoir fluid away from the WBHX and transport fresh reservoir fluid to the WBHX.

BRIEF SUMMARY OF THE INVENTION

[0045] Embodiments of the present invention relate to a system for geothermal heating, the system comprising: a forced geothermal circuit in communication with a well bore; a well bore heat exchanger; a multilateral channel; a channel casing design; and a pump. In another embodiment, the pump is a submersible pump. In another embodiment, the system further comprises a circulation fluid. In another embodiment, the circulation fluid comprises brine. In another embodiment, the circulation fluid comprises carbon dioxide. In another embodiment, the system is in communication with an organic Rankine cycle. In another embodiment, the system further comprises a plurality of multilateral channels. In another embodiment, one of the plurality of multilateral channels is disposed above another of the plurality of multilateral channels. In another embodiment, the system further comprises a thermosiphon. In another embodiment, the well bore heat exchanger is a well bore gyroid heat exchanger. In another embodiment, the system further comprises a hydraulic drive.

[0046] Embodiments of the present invention also relate to a method for geothermal heating, the method comprising: passing a fluid into a thermal circulation system; passing the fluid into a well bore heat exchanger; heating the fluid; passing the heated fluid through a multilateral channel comprising a multilateral channel design casing; and passing a reservoir fluid and the fluid into a heat exchanger. In another embodiment, the method further comprises passing the heated fluid through a second multilateral channel comprising a multilateral channel design casing. In another embodiment, the method further comprises sequentially heating the heated fluid by passing the heated fluid through the second multilateral channel. In another embodiment, the method further comprises passing the heated fluid through a plurality of heating zones.

[0047] Embodiments of the present invention also relate to a method for a loop recovery process, the method comprising: passing a circulation fluid into a system for geothermal heating; passing the circulation fluid into a well bore heat exchanger; heating the circulation fluid; passing the heated circulation fluid out of the system for geothermal heating; passing the heated circulation fluid through a heat exchanger of an organic Rankine cycle; and cooling the circulation fluid. In another embodiment, the method further comprises heating a liquid flow of an organic Rankine cycle by contact with the circulation fluid. In another embodiment, the method further comprises passing the liquid flow into an evaporator. In another embodiment, the method further comprises cooling the liquid flow. In another embodiment,

the method further comprises returning the circulation fluid to the system for geothermal heating.

[0048] Objects, advantages and novel features, and further scope of applicability of the present invention will be set forth in part in the detailed description to follow, taken in conjunction with the accompanying drawings, and in part will become apparent to those skilled in the art upon examination of the following, or may be learned by practice of the invention. The objects and advantages of the invention may be realized and attained by means of the instrumentalities and combinations particularly pointed out in the appended claims.

BRIEF DESCRIPTION OF THE SEVERAL VIEWS OF THE DRAWINGS

[0049] The accompanying drawings, which are incorporated into and form a part of the specification, illustrate one or more embodiments of the present invention and, together with the description, serve to explain the principles of the invention. The drawings are only for the purpose of illustrating one or more embodiments of the invention and are not to be construed as limiting the invention. In the drawings:

[0050] FIG. **1** is a diagram showing a closed loop geothermal system known in the art;

[0051] FIG. **2** is a diagram showing a geothermal heating system comprising a sidetrack, according to an embodiment of the present invention;

[0052] FIG. **3** is a diagram showing a geothermal heating system comprising a proximate wellbore, according to an embodiment of the present invention;

[0053] FIG. **4** is a diagram showing well bore configurations, according to an embodiment of the present invention;

[0054] FIG. **5** is a diagram showing a well bore configuration with fluid flow path, according to an embodiment of the present invention;

[0055] FIGS. **6**A and **6**B are diagrams showing spatial configuration for a geothermal heating system, according to an embodiment of the present invention;

[0056] FIG. **7** is a diagram showing a geothermal heating system configured for oil and gas recovery, according to an embodiment of the present invention;

[0057] FIG. **8** is a diagram showing a geothermal heating system configured for oil sand production, according to an embodiment of the present invention;

[0058] FIG. **9** is a diagram showing a geothermal heating system converted from an oil and natural gas well, according to an embodiment of the present invention;

[0059] FIG. **10** is a diagram showing a geothermal heating system configured for green hydrogen production, according to an embodiment of the present invention;

[0060] FIGS. **11**A and **11**B are diagrams showing field layouts for a geothermal heating system, according to an embodiment of the present invention;

[0061] FIG. **12** is a diagram showing the structural and thermodynamic elements for a WBHX, according to an embodiment of the present invention;

[0062] FIG. **13** is a diagram showing structural and thermodynamic elements for a geothermal heating system, according to an embodiment of the present invention

[0063] FIG. **14** is a diagram showing a geothermal heating system comprising a forced geothermal circuit, according to an embodiment of the present invention;

[0064] FIG. **15** is a graph showing temperature against distance from a wellbore, according to an embodiment of the present invention;

[0065] FIG. **16** is a diagram showing thermal conductivity against distance from a wellbore, according to an embodiment of the present invention;

[0066] FIG. **17** is a diagram showing a geothermal heating system, according to an embodiment of the present invention;

[0067] FIG. **18** is a diagram showing a geothermal heating system comprising a well bore performance heat exchanger ("WBPHX"), according to an embodiment of the present invention;

[0068] FIG. **19** is a diagram showing a geothermal heating system comprising a WBPHX and WBPHX outlet, according to an embodiment of the present invention;

[0069] FIG. **20** is a diagram showing a multi-stage geothermal well bore, according to an embodiment of the present invention;

[0070] FIG. **21** is a diagram showing a multi-stage geothermal well bore with stimulation fluids, according to an embodiment of the present invention;

[0071] FIG. **22** is a diagram showing a multi-stage FGC stimulation configuration, according to an embodiment of the present invention;

[0072] FIG. **23** is a diagram showing a geothermal heating system comprising an FGC mono-bore, according to an embodiment of the present invention;

[0073] FIG. **24** is a diagram showing a geothermal heating system comprising a well bore heat exchanger ("WBHX"), according to an embodiment of the present invention;

[0074] FIG. **25** is a diagram showing geothermal heating system comprising an FGC mono-bore with a horizontal alignment, according to an embodiment of the present invention;

[0075] FIG. **26** is a graph showing permeability thickness, according to an embodiment of the present invention;

[0076] FIG. **27** is a graph showing reservoir pressure, according to an embodiment of the present invention;

[0077] FIG. **28** is a graph showing permeability thickness, according to an embodiment of the present invention;

[0078] FIG. **29** is a diagram showing a geothermal heating system comprising a Down Bore Heat Exchanger ("DBHX"), according to an embodiment of the present invention;

[0079] FIG. **30**A and FIG. **30**B are diagrams showing enthalpy flows for open loop geothermal heating systems, according to an embodiment of the present invention;

[0080] FIG. **31**A and FIG. **31**B are diagrams showing loosed loop geothermal heating systems, according to an embodiment of the present invention;

[0081] FIG. **32** is a graph showing enthalpy recover per well, according to an embodiment of the present invention;

[0082] FIG. **33** is a diagram showing a geothermal heating system comprising a counter-current flux co-inverter ("FC"), according to an embodiment of the present invention;

[0083] FIG. **34** is a graph showing a temperature profile for a co-current geothermal heating system, according to an embodiment of the present invention;

[0084] FIG. **35** is a graph showing temperature profile for a co-current geothermal heating system, according to an embodiment of the present invention;

[0085] FIG. **36** is a diagram showing a geothermal heating system comprising a flux co-inverter and a packer material, according to an embodiment of the present invention;

[0086] FIG. **37** is a diagram showing a geothermal heating system comprising a flux co-inverter and a triple propagating minimal structures ("TPMS"), according to an embodiment of the present invention;

[0087] FIG. **38** is a diagram showing a geothermal heating system comprising an electrical submersible pump and configured for an oil and gas extraction application, according to an embodiment of the present invention;

[0088] FIGS. **39**A, **39**B, **39**C, and **39**D are diagrams showing different designs of a geothermal heating system comprising an electrical submersible pump ("ESP") and configured for an oil and gas extraction application, according to an embodiment of the present invention;

[0089] FIG. **40** is a diagram showing a geothermal heating system comprising a single pass counter current FGC configuration, according to an embodiment of the present invention;

[0090] FIG. **41** is a diagram showing a geothermal heating system comprising a single pass counter current FGC configuration with a side channel, according to an embodiment of the present invention;

[0091] FIG. **42** is a diagram showing a geothermal heating system comprising a single pass counter current FGC configuration with an ESP, according to an embodiment of the present invention;

[0092] FIG. **43** is a diagram showing a geothermal heating system comprising a single pass counter current FGC configuration with an internal baffle, according to an embodiment of the present invention;

[0093] FIG. **44** is a series of diagrams showing geothermal heating systems comprising a falling film thermosiphon, according to an embodiment of the present invention;

[0094] FIG. **45** is a diagram showing geothermal heating systems comprising an FGC thermosiphon, according to an embodiment of the present invention;

[0095] FIG. **46** is a diagram showing a geothermal heating system comprising a well bore performance heat exchanger, according to an embodiment of the present invention;

[0096] FIG. **47** is a diagram showing a geothermal heating system comprising a down bore performance heat exchanger, according to an embodiment of the present invention;

[0097] FIG. **48** is a diagram showing a geothermal heating system comprising a 3-D printed heat exchanger, according to an embodiment of the present invention;

[0098] FIG. **49** is a diagram showing a geothermal heating system comprising an FGC and a down thermosiphon and a well bore gyroid heat exchanger ("WBGHX"), according to an embodiment of the present invention;

[0099] FIG. **50** is a diagram showing a geothermal heating system comprising a WBGHX and a thermosiphon generator, according to an embodiment of the present invention;

[0100] FIG. **51** is a diagram showing a geothermal heating system comprising an FGC and thermosiphon, according to an embodiment of the present invention;

[0101] FIG. **52** is a diagram showing a geothermal heating system comprising an FGC with side track window, according to an embodiment of the present invention;

[0102] FIG. **53** is a diagram showing a geothermal heating system comprising an FGC, with side track window and ESP mount, according to an embodiment of the present invention;

[0103] FIG. **54** is a diagram showing a geothermal heating system comprising an FGC with well bore performance heat exchanger, an FC, and an FC+ unit, according to an embodiment of the present invention;

[0104] FIG. **55** is a series of graphs showing thermodynamic properties for a DBHX, according to an embodiment of the present invention;

[0105] FIG. **56** is a series of graphs showing a temperature and enthalpy versus depth comparison for geothermal heating systems without and with and FC, according to an embodiment of the present invention;

[0106] FIG. **57** is a series of graphs showing a retrofitting process for an unconventional depleted gas well to a geothermal asset, according to an embodiment of the present invention;

[0107] FIG. **58** is a series of diagrams and graphs showing a comparison of the physics of a conventional geothermal heating system compared to a geothermal heating system comprising an FGC, according to an embodiment of the present invention;

[0108] FIG. **59** is a series of graphs showing a comparison of a WBHX in co-current configuration to a WBHX in counter current configuration, according to an embodiment of the present invention;

[0109] FIGS. **60**A and **60**B are a graph and diagram, respectively, showing the temperature profiles for upper well sections and a WBHX, according to an embodiment of the present invention;

[0110] FIGS. **61**A and **61**B are graphs showing the temperature profiles for a closed loop co-current geothermal heating system and a WBHX flux crossover counter current geothermal heating system, respectively, according to an embodiment of the present invention;

[0111] FIG. **62** is a series of graphs showing an FC cell design, according to an embodiment of the present invention;

[0112] FIG. **63** is a diagram showing TPMS flow channel configurations, according to an embodiment of the present invention;

[0113] FIG. **64** is a series of diagrams showing a geothermal heating system comprising an FC cell, according to an embodiment of the present invention;

[0114] FIG. **65** are graphs and a diagrams showing a comparison of temperature profiles for a standard geothermal heating system and a geothermal heating system comprising a TPMS, according to an embodiment of the present invention;

[0115] FIGS. **66**A, **66**B, **66**C, and **66**D are a series of diagrams showing configurations of geothermal heating systems comprising an FGC disposed around a heat exchanger, a heat exchanger along the diameter of the well bore, a side channel with an ESP, and internal baffles, according to an embodiment of the present invention;

[0116] FIGS. **67**A, **67**B, **67**C, and **67**D are a series of diagrams showing configurations of geothermal heating systems comprising a kickoff point, a FGC thermosiphon tube, vertical flow compartments in a TPMS structure, and a horizontal well bore with a TPMS structure, according to an embodiment of the present invention;

[0117] FIG. **68** is a series of diagrams showing cross sections of an FC, according to an embodiment of the present invention;

[0118] FIG. **69** is a series of graphs and diagrams showing temperature profiles for a co-current well bore and FC counter current well bore, according to an embodiment of the present invention;

[0119] FIG. **70** is a diagram showing geothermal heating system comprising a lateral closed loop, according to an embodiment of the invention;

[0120] FIG. **71** is a graph showing the temperature and pressure profiles for a closed loop multilateral design for the FGC system, according to an embodiment of the invention;

[0121] FIG. **72** is a diagram showing a stack loop recovery process using a geothermal heating system, according to an embodiment of the invention;

[0122] FIGS. **73**A, **73**B, **73**C, and **73**D are diagrams showing multilateral channel casing designs for a geothermal heating system, according to an embodiment of the current invention; and

[0123] FIG. **74** is a diagram showing a geothermal heating system comprising a hydraulic driver; according to an embodiment of the current invention.

DETAILED DESCRIPTION OF THE INVENTION

[0124] Embodiments of the present invention relate to a geothermal heating system comprising a forced geothermal circuit ("FGC") and well bore heat exchanger. The FGC may comprise a closed loop system.

[0125] The term "well bore" as used herein means a hole in the ground to extract minerals from a mineral reservoir or generate geothermal heat.

[0126] The term "heat exchanger" as used herein means an apparatus to extract geothermal heat.

[0127] The term "closed loop system" as used herein means a geothermal heat generating system wherein a heat transfer fluid, e.g., circulation fluid, and/or thermal transfer fluid, is circulated in a closed loop from the surface to the target geothermal zone where the fluid heats up before being returned to the surface.

[0128] The terms "mineral" or "minerals" as used herein mean oil; bitumen; natural gas; oil sands; hydrocarbon; aqueous solution comprising a hydrocarbon; produced water; viscous heterogenous mixture; rock; stone; clay; metal, including but not limited to, a rare earth element, a base metal, a precious metal, a platinum group metal, or a combination thereof; sand; radioactive element; or a material or combination thereof.

[0129] The terms "fluid" or "fluids" as used herein means any liquid, aqueous solution, gas, or combination thereof.

[0130] Embodiments of the present invention may address the issues of limited energy recovery and viable locations for closed loop systems. The FGC may be used in combination with a closed loop geothermal WBHX to force circulation of the surrounding reservoir fluid between the WBHX and the surrounding matrix. An additional proximate well bore may be drilled or a sidetrack leg may be drilled proximate to an existing geothermal. A pumping mechanism may be used to circulate fluid between the FGC well and/or sidetrack and the immediate annulus space around the WBHX to increase and/or improve the reservoir heat extraction surface area; the overall heat transfer coefficient; the temperature of the fluid contacting the WBHX; the effective rock volume available for latent heat energy recovery; or a combination thereof. The rate of heat recovery, compared to an equivalent closed loop system, may be increased by at least about 200%, about 200% to 1,200%, about 300% to about 1,100%, about 400% to about 1,000%, about 500% to about 900%, about 600% to about 800%, or about 1,200%. The FGC may improve the economics for a new or existing mineral location and may apply closed loop geothermal energy production towards new applications.

[0131] The geothermal heating system of the present invention may enhance the performance of existing geothermal energy recovery systems; reduce GHG; increase energy recovery; increase the geothermal well operating temperature at surface; or a combination thereof relative to other heating systems. Heated aqueous solution generated by the geothermal heating system may be used to enhance oil recovery water flood schemes and improve oil and gas recovery efficiency. The geothermal heating system may provide hot water for injection into shallow wells and mobilizing in situ oil while leaving fines and other particulates in place, thereby replacing mining operations for oil sands production.

[0132] The geothermal heating system may convert existing oil and gas wells in low permeability geological zones to geothermal energy production and extract hydrocarbons from tight reservoirs and shale. Hydrocarbons can be extracted from the surrounding matrix while simultaneously recovering geothermal energy by circulating a hydrocarbon leaching geothermal fluid in the FGC.

[0133] The geothermal heating system may produce hydrogen by combining hydrocarbon extraction and geothermal power generation from a closed loop FGC. The geothermal heating system may produce emission-free petrochemical products and carbon based materials combining hydrocarbon extraction and geothermal power generation from a closed loop FGC.

[0134] The geothermal heating system may reduced the overall pressure drop and energy requirements of the surface loop as the fluid no longer is required to go to the toe of the well. The surface loop surface pump may be downsized or eliminated to allow fluid density differences to drive the surface loop.

[0135] The geothermal heating system allows closed loop geothermal systems to increase their heat recovery to at least match and exceed binary system well performance. Geothermal heating system may be retrofit to existing oil and gas wells to allow them to become economically viable as there is no side track required to form the FGC.

[0136] Smaller bottom hole casing size requirements may allow the FGC to be applied to oil and gas wells, in addition to geothermal wells, and take advantage of depleted and oil and gas reservoirs.

[0137] Table 1 below shows exemplary geothermal well characteristics. The table shows low, baseline, and high measurements for a geothermal well.

TABLE 1

	LOW	BASELINE	HIGH
Enthalpy, kilojoules/kilogram (kJ/kg)	<800	1,200	>2,700

TABLE 1-continued

	LOW	BASELINE	HIGH
Reservoir Temperature, degrees Celsius (° C.)	<180	200	>230
Reservoir Pressure, bar	Steam-Dominated Reservoir	50	Liquid-Dominated Reservoir > 100
Production Liner Diameter, inches	7	9 and ⅝	10 and ¾
Feed Zone Depth and/or Location, meters	<1,000	1,400	>2,000
Feed Zone Permeability, millidarcy	1	60	200
Well Bottom (TD), meters	1,500	2,000	3,000

[0138] Turning now to the figures, FIG. **1** shows an existing closed loop geothermal system **80** comprising heat exchanger **82**, thermal circulation system **84**, well bore **94**, and bottom hole heat exchanger **98**. Thermal circulation system **84** is disposed in well bore **94** and comprises conduits for transporting heated and non-heated fluid. Bottom hole heat exchanger **98** is disposed in geothermal reservoir rock matrix **92** below surface **100** and is in contact with an aquifer fluid. Non-heated fluid **86** flows through thermal circulation system **84** disposed in well bore **94** and enters bottom hole heat exchanger **98**. Reservoir heat **90** is transferred to fluid disposed in bottom hole heat exchanger **98**. Reservoir heat is transferred to the fluid disposed in bottom hole heat exchanger **98** via convection cycle **96** produced by the aquifer fluid.

[0139] FIG. **2** shows geothermal heating system comprising sidetrack **102** comprising thermal circulation system **106**, vertical geothermal well bore **110**, pump **122**, sidetrack **124**, sidetrack bore hole **130**, WBHX **114** comprising heat exchanger **116**, and WBHX well bore **112**. Pump **122** may comprise an electric submersible pump ("ESP"). Thermal circulation system **106** is disposed within vertical geothermal well bore **110**. High-permeability reservoir rock **134** is disposed between sidetrack bore hole **130** and WBHX **114**. Fluid **104** enters thermal circulation system **106** and flows into heat exchanger **116** of WBHX **114**. Heated fluid stream **108** flows out of heat exchanger **116** to the surface via thermal circulation system **106**. Hot reservoir fluid from pump **122** enters anulus space **118** to increase the temperature of fluid **104**. Circulated reservoir fluid **132** flows out of anulus space **118**, passes through high-permeability reservoir rock **134**, and enters sidetrack bore hole **130** where it mixes with non-circulated reservoir fluid **126**. Mixed reservoir fluid **128** then enters pump **122**, which exits as fluid flow **120**.

[0140] FIG. **3** shows geothermal heating system comprising a proximate wellbore **136** comprising thermal circulation system **106**, vertical geothermal well bore **110**, proximate well bore **144**, matching kickoff segment **148**, bore hole **152**, WBHX **114** comprising heat exchanger **116**, separation and pumping module **140**, and WBHX wellbore leg **156**. Thermal circulation system **106** is disposed within vertical geothermal well bore **110**. High-permeability reservoir rock **134** is disposed between bore hole **152** and WBHX **114**. Fluid **104** enters thermal circulation system **106** and flows into comprising heat exchanger **116** of WBHX **114**. Circulation fluid **154** flows through high-permeability reservoir rock **134** and enters annulus space **118** to increase the temperature of fluid **104**. Heated circulation fluid **154** contacts and captures minerals sequestered in high-permeability reservoir rock **134** while flowing through high-permeability reservoir rock **134**. Heated fluid stream **108** flows out of heat exchanger **116** to the surface via thermal circulation system **106**. Mineral-containing circulation fluid **138** passes through thermal circulation system **106** and enters separation and pumping module **140**. Separation and pumping module **140** separates circulation fluid **138** into minerals **142** and purified circulation fluid **146**. Purified circulation fluid **146** flows through proximate well bore **144** and matching kickoff segment **148**, and enters bore hole **152**. Purified circulation fluid **146** flows out of bore hole **152** along path **150**.

[0141] FIG. **4** shows well bore configurations **158** comprising vertical geothermal well **110**, proximate well bore **144**, matching kickoff segment **148**, sidetrack **160**, leg intersection **162**. Vertical geothermal well **110** is in communication with sidetrack **160**. Proximate well bore **144** is disposed beside vertical geothermal well **110** comprising matching kickoff segment **148**. Optionally, matching kickoff segment **148** may be in communication with sidetrack **160**.

[0142] FIG. **5** shows well bore configuration with fluid flow path **164** comprising thermal circulation system **106**, vertical geothermal well **110**, proximate well bore **144**, and well bore **166**. Optionally, well bore configuration with fluid flow path **164** may comprise sidetrack **160** instead of proximate well bore **144**. Circulation fluid **168** may flow in a co-current or counter-current direction and recirculates between vertical geothermal well **110** and proximate well bore **144** or sidetrack **160**. Circulation fluid **168** flows from sidetrack **160** to vertical geothermal well **110** according to paths **170** and **172**. Fluid **104** enters thermal circulation system **106**, absorbs heat from circulation fluid **168** and exits thermal circulation system **106** as heated fluid stream **108**.

[0143] FIGS. **6**A and **6**B show spatial configurations **174** and **176** for a geothermal heating system of the present invention. Spatial configuration **174** shows proximate well configuration **178** that may be oriented into horizontal well configuration **182**, deviated well configuration **184**, or vertical well configuration **186**. Spatial configuration **176** shows sidetrack well configuration **180** that may be oriented into horizontal well configuration **182**, deviated well configuration **184**, or vertical well configuration **186**.

[0144] FIG. **7** shows geothermal heating system configured for oil and gas recovery **188** comprising surface separation module **196**, oil and natural gas production well **198**, injection well **200**, FGC well bore **206**, WBHX **212**, and FGC injection leg **214**, and heat exchanger **218**. Oil and natural gas production well **198** is at least partially disposed into existing oil and gas reservoir **202**. FGC well bore **206**, WBHX **212**, and FGC injection leg **214** are partially disposed into reservoir for geothermal energy recovery **216**. FGC well bore **206** may comprise proximate well bore **208** or sidetrack **210**. Heat exchanger **218** receives heated circulation fluid generated by FGC well bore **206** and WBHX **212**. Heated circulation fluid flows into injection well **200** and is injected into existing oil and gas reservoir **202** and is dispersed according to path **204**. Heated circulation fluid contacts and mixes with oil and/or natural gas in existing oil and gas reservoir **202** and the mixture flows through oil and natural gas production well **198** and into surface separation module **196**. Surface separation module **196** separates the mixture comprising the circulation fluid and oil and/or

natural gas into circulation fluid **190**, natural gas **192**, and hydrocarbons **194**. Circulation fluid **190** then flows into heat exchanger **218** and is returned to FGC well bore **206**.

[0145] FIG. **8** shows geothermal heating system configured for oil sands production **222** comprising surface separation module **226**, bitumen horizontal production well **228**, geothermal hot water injection well **230**, FGC well bore **206**, WBHX **212**, FGC injection leg **214**, and heat exchanger **218**. Bitumen horizontal production well **228** is at least partially disposed into existing in situ shallow bitumen resource **220**. FGC well bore **206**, WBHX **212**, and FGC injection leg **214** are partially disposed into reservoir for geothermal energy and/or mineral recovery **234**. FGC well bore **206** may comprise proximate well bore **208** or sidetrack **210**. Heat exchanger **218** receives heated circulation fluid generated by FGC well bore **206** and WBHX **212**. Heated circulation fluid contacts and mixes with bitumen in existing in situ shallow bitumen resource **220**. Injected hot water **232** mobilizes in situ bitumen-retaining sand and fines in existing in situ shallow bitumen resource **220**. Heated circulation fluid contacts and mixes with bitumen in in situ shallow bitumen resource **220** and the mixture flows through bitumen horizontal production well **228** and into surface separation module **226**. Surface separation module **226** separates the mixture comprising bitumen **224** and circulation fluid **190**. Circulation fluid **190** then flows into heat exchanger **218** and is returned to FGC well bore **206**.

[0146] FIG. **9** shows geothermal heating system converted from an oil and natural gas well **236** comprising FGC well bore **206**, WBHX **212**, FGC injection leg **214**, surface separation module **196**, and geothermal energy conversion module **248**. FGC well bore **206**, WBHX **212**, and FGC injection leg **214** are at least partially disposed into reservoir for geothermal and/or mineral recovery **234**. Geothermal energy conversion module **248** receives and separates geothermal closed loop hot heat transfer fluid **244** into energy **250** and geothermal closed loop cold heat transfer fluid **246**. Geothermal closed loop cold heat transfer fluid **246** is returned to WBHX **212**. FGC thermal transfer fluid **238** exits WBHX **212** and enters surface separation module **196**. FGC thermal transfer fluid **238** comprises hydrocarbons. Surface separation module **196** separates FGC thermal transfer fluid **238** comprising hydrocarbons into FGC thermal transfer injection fluid **240**, natural gas **192**, and hydrocarbons **194**. FGC thermal transfer injection fluid **240** enters FGC well bore **206** and into FGC injection leg **214**. FGC thermal transfer injection fluid **240** enters stimulated rock zone **242** between FGC injection leg **214** and WBHX **212**.

[0147] FIG. **10** shows geothermal heating system configured for green hydrogen production **252** comprising FGC well bore **206**, WBHX **212**, FGC injection leg **214**, geothermal energy conversion module **248**, hydrocarbon conversion module **256**, surface separation module **196**. FGC well bore **206**, WBHX **212**, and FGC injection leg **214** are at least partially disposed into reservoir for geothermal and/or mineral recovery **234**. FGC well bore **206** may comprise proximate well bore **208** or sidetrack **210**. Geothermal energy conversion module **248** receives and separates geothermal closed loop hot heat transfer fluid **244** into energy **250** and FGC thermal transfer fluid **238**. FGC thermal transfer fluid **238** comprises hydrocarbons. FGC thermal transfer fluid **238** exits geothermal energy conversion module **248** and enters surface separation module **196**. Surface separation module **196** separates FGC thermal transfer fluid **238** into FGC thermal transfer injection fluid **240** and hydrocarbons **194**. FGC thermal transfer injection fluid **240** enters FGC well bore **206**. Hydrocarbon conversion module **256** receives energy **250** and hydrocarbons **194** to produce hydrogen and/or petrochemical products **258**.

[0148] FIGS. **11**A and **11**B show field layouts **260** and **274** for a geothermal heating system. Individual layouts **262**, **264**, and **266** comprise WBHX well bores **270**, FGC well bores **272**, and sidetracks **268**. Individual layout **262** comprises WBHX well bore **270** disposed proximate to FGC well bore **272**. Individual layout **264** comprises WBHX well bores **270** disposed around FGC well bore **272**. Sidetrack **268** mirrors FGC well bore to expand the available area for thermal energy extraction. Individual layout **266** comprises FGC well bores **272** disposed around WBHX well bore **270**. Sidetrack **268** mirrors WBHX well bore **270** to expand the available area for thermal energy extraction.

[0149] Field layout **274** comprises WBHX well bore **270**, FGC well bores **272**, and stimulated zone **276**. Stimulated zone **276** is a fractured, stimulated, and/or permeable zone around WBHX well bore **270** to allow FGC fluid circulation. FGC well bores **272** are disposed around WBHX well bore **270**. WBHX well bore **270** and FGC well bores **272** are disposed within stimulated zone **276**.

[0150] FIG. **12** shows structural and thermodynamic elements for WBHX **278**. WBHX **278** comprises inner casing **280**, outer casing **282**, well bore casing and open hole boundary **284**. Boundary **286** is the effective maximum boundary for heater transfer based on k/h. Path **288** is the natural convection path of reservoir fluid. The orientation of path **288** is dependent on well bore orientation. Path **290** is the path of conduction heat transfer to WBHX **278**. Profile **292** is the reservoir thermal profile from r_1, r_2 to r_∞, the reservoir temperature.

[0151] FIG. **13** shows structural and thermodynamic elements for geothermal heating system **296**. Geothermal heating system **296** comprises inner casing **280**, outer casing **282**, well bore casing and open hole boundary **284**, and FGC proximate or sidetrack well bore **302**. Boundary **286** is the effective maximum boundary for heater transfer based on k/h. Boundary **300** is the effective flow path (r_∞) of the FGC. Paths **288** are the forced convection paths for FGC circulated reservoir fluid. Path **290** is the path of conduction heat transfer to WBHX **278**. Profile **294** is the reservoir thermal profile from r_1, r_2 to r_∞, the reservoir temperature. Path **298** is the path of the aquifer fluid migration into the FGC. Path **304** is the path of forced convection fluid out of the FGC.

[0152] FIG. **14** shows geothermal heating system comprising a forced geothermal circuit **310** comprising heat exchanger **82**, thermal circulation system **84**, well bore **94**, FGC with pump **122**, and WBPHX **306**. Thermal circulation system **84** is disposed in well bore **94** and comprises conduits for transporting heated and non-heated fluid. Bottom hole heat exchanger **98** is disposed below surface **100** and is in contact with an aquifer fluid. Fluid flows through thermal circulation system **84** disposed in well bore **94** and enters bottom hole heat exchanger **98**. Reservoir heat **308** is transferred to fluid disposed in bottom hole heat exchanger **98**. Reservoir heat is transferred to the fluid disposed in bottom hole heat exchanger **98** via convection cycle **96** produced by the aquifer fluid.

[0153] FIG. **15** shows temperature against distance from a wellbore **314**. FGC system in a low permeability material

316 shows the highest temperature over the greatest distance followed by high-thermally conductive proppant **318**.

[0154] FIG. **16** shows thermal conductivity against distance from wellbore **314**. Effective thermal conductivity from FGC convection in low permeability **320** shows thermal conductivity up to about 200 meters. Effective conductivity in high permeability and fractured reservoirs **322** shows thermal conductivity up to distance **328**. Enhanced thermal conductivity from high conductive proppant **324** shows thermal conductivity between 50 meters and 200 meters. Effective thermal conductivity of open loop and or binary systems is shown by region **326**.

[0155] FIG. **17** shows geothermal heating system **330** comprising heat exchanger **82**, thermal circulation system **84**, well bore **94**, WBPHX **306**, FGC **332**, and pump **122**. Heat exchanger **82** extracts energy for commercial application. Pump **122** provides fluid isolation and heat transfer between the surface and a subsurface geothermal fluid. WBPHX **306** is located proximate to the geothermal production zone down the well bore. Reservoir heat **310** is transferred via conduction and convection or direct fluid exchange mechanisms.

[0156] FIG. **18** shows geothermal heating system comprising a well bore performance heat exchanger ("WBPHX") **334** comprising cold return annulus **336**, surface geothermal loop flow path **338**, well bore performance heat exchanger **340**, FGC subsurface flow loop path **342**, FGC well bore **346**, pump **348**, slotted liner **350**, injection perforations **354**, and pump intake perforations **356**. Cold fluid enters cold return annulus **336** and flows through well bore performance heat exchanger **340**. Fluid enters stimulation region **352** through injection perforations **354** and enters pump intake perforations **356**. Fluid flows through pump **348** and exits as hot stream VIT **344** and exits geothermal heating system comprising a well bore performance heat exchanger ("WBPHX") **334** as hot stream VIT to surface **358**.

[0157] FIG. **19** shows a geothermal heating system comprising a WBPHX and WBPHX outlet **360** comprising duel completion joint **362**, sliding sleeve valve **364**, pump **366**, well bore performance heat exchanger **368**, surface geothermal loop flow path **370**, FGC subsurface flow loop path **372**, slotted liner **350**, inlet screen **376**, injection perforations **354**, and pump intake perforations **356**. Duel completion joint **362** accommodates a single bore VIT completion to surface and to accommodate greater flexibility and easier retrieval of pump **366** for maintenance. Sliding sleeve valve **364** diverts pump **366** flow and accommodate pump **366** being located at the top of the WBPHX unit for maintenance and performance requirements. Optionally, slotted liner **350** may be configured in multiple orientations including but not limited to vertical, deviated, or horizontal to provide sufficient rock volume contact area. The number and size of injection perforations **354** depends on flow configuration. The number and size of pump intake perforations **356** depend on flow configurations. Optionally, pump intake perforations **356** may be located at the toe and heal of the well or at multiple locations along the well bore to facilitate efficient and effective enthalpy recover. well bore performance heat exchanger **368** comprises. Cold return annulus **336** returns from the surface geothermal energy recovery facility via the to the WBPHX which also provides cooling for pump **366**. WBPHX outlet **374** directs reservoir fluid to return to the reservoir through injection perforations **354**. Reservoir fluid enter stimulated region **352** and circulating according to path **378** before entering pump intake perforations **356**. Pump **366** pumps fluid through VIT inlet tubing **380**, which conveys hot reservoir fluid to be exchanged with the geothermal loop for heat recovery.

[0158] FIG. **20** shows multi-stage geothermal well bore **382** comprising well bore **94**. Well bore **94** comprises first stage region **384**, second stage region **386**, third stage region **388**, and fourth stage region **390**. Stimulation fluid (not shown) may exit well bore **94** at any stage.

[0159] FIG. **21** shows multi-stage geothermal well bore with stimulation fluids **392** comprising well bore **94**. Initiation fluid **400** is disposed below high-thermal conductive proppant **398**. High-thermal conductive proppant **398** is disposed below high-flow proppant **396**. High-flow proppant **396** is disposed below low-permeability proppant **394**. Initiation fluid **400**, high-thermal conductive proppant **398**, and/or high-flow proppant **396** exits through fissures and/or capillaries **402** and/or **408**. Initiation fluid **400**, high-thermal conductive proppant **398**, high-flow proppant **396**, and/or low-permeability proppant **394** exits through fissures and/or capillaries **404** and/or **406**.

[0160] FIG. **22** shows multi-stage FGC stimulation configuration **410** comprising well bore **94**. Stimulation fluids exiting well bore **94** through fissures and/or capillaries **412** form region **414** comprising high thermal conduction layer **416**, high permeability region **418**, low permeability region **420**. FGC fluid flows through region **414** according to path **422**.

[0161] FIG. **23** shows geothermal heating system comprising an FGC mono-bore **424** comprising vertical geothermal well **110**, WBHX well bore **112**, WBHX **114**, pump **122**, well foot **428**, ingress point **430**, and side-track borehole **432**. Geothermal circulation fluid **104** enters vertical geothermal well **110**, WBHX well bore **112**, and WBHX **114** where it heated by circulated reservoir fluid **132**. Circulated reservoir fluid **132** exits WBHX **114** along path **434** through geothermal reservoir rock matrix **92** and enters well foot **428** by side-track borehole **432**. Non-circulated reservoir fluid also enters side-track borehole **432** through ingress point **430**. Pump **122** flows circulated reservoir fluid **132** and non-circulated reservoir fluid into WBHX **114** via flow **426**.

[0162] FIG. **24** shows geothermal heating system **436** comprising VIT tubing **438**, single pass heat exchanger **442**, well bore heat exchanger ("WBHX") **444**, reinjection point **446**, FGC leg **448**, slim hole section **450**, and pump **122**. Optionally, the single pass heat exchanger **442** may comprise plate configuration **440** to maximize surface area. WBHX **444** is the component within geothermal heating system **436**, located in a well bore, that facilitates enthalpy transfer between the reservoir fluid, vapor, or rock surface and geothermal heating system **436** medium. Geothermal heating system **436** circulates fluid between WBHX **444** and the surface and allows the geothermal energy to be recovered for various purposes at the surface. VIT tubing **438** delivers hot fluid to the surface. Single pass heat exchanger **442** provides minimized approach temperature, e.g., 5° C., that maximizes surface temps and energy extraction. Disposing of WBHX **444** to well heal/vertical section minimizes VIT and allows for a larger WBHX **444**. Reinjection point **446** are located at well heal or geothermal reservoir caprock. Potential horizontal/deviated FGC leg **448** minimizes draw down and maximizes energy recovery. Slim hole section **450** penetrates the geothermal zone with VIT supply

fluid to WBHX **444**. Pump **122** is located at well shoe for maximum depth and distance from reinjection point **446**. The reservoir fluid is circulated via thermosiphon effect and is boosted by pump **122** between WBHX **444** and the reservoir matrix. Depending on the reservoir conditions and geothermal energy recovery goals, pump **122** may draw from the reservoir and convey through WBHX **444** or the fluid may be drawn through WBHX **444** and pumped back into the reservoir matrix. Enthalpy is recovered to surface via a secondary loop that flows from the surface through WBHX **444**, separated from the reservoir fluid, and returns to the surface via VIT tubing **438**. The operation of the surface loop is driven by process equipment at surface depending on the energy recovery goals.

[0163] FIG. **25** shows geothermal heating system comprising an FGC mono-bore with a horizontal alignment **452** comprising horizontal leg **454**, closed loop geothermal heat exchanger **456**, and pump **122**. Horizontal leg **454** may have a length of at least about 1000 meters, about 1000 meters to about 10000 meters, about 2000 meters to about 9000 meters, about 3000 meters to about 8000 meters, about 4000 meters to about 7000 meters, about 5000 meters to about 6000 meters, or about 10000 meters. Heated fluid is recirculated along path **458** from horizontal leg **454** to pump **122** before reentering closed loop geothermal heat exchanger **456**.

[0164] FIG. **26** shows permeability thickness at 870 pounds per square inch ("psi"). The dotted line shows the estimated Kh ranges 30 e-12 to 500 e-12 due to longer laterals, forced circulation, and enhanced permeability.

[0165] FIG. **27** shows prior art reservoir pressure values at a kh value of 4.5 E-12 m^3 for a down bore heat exchanger ("DBHX"). Net power increases with increasing diameter at all pressures. The DBHX is a closed loop geothermal heat exchanger configuration. The design of a DBHX is a pipe in pipe configuration with an outer casing and inner vacuum insulated tubing. The bottom of the DBHX, located at the bottom of the well, is closed to the reservoir. However, the VIT within the casing is not sealed so fluid that flows in the casing annular space down the DBHX can return up the VIT or vice versa. The outer casing also provides surface area for heat exchange and enthalpy recovery from the surrounding reservoir fluid and or rock matrix.

[0166] FIG. **28** shows permeability thickness at 870 psi. Net power increases with increasing WBHX diameter at all permeability thicknesses.

[0167] FIG. **29** shows a geothermal heating system **460** comprising a down bore heat exchanger ("DBHX") comprising tube-in-tube heat exchanger **474**, well bore casing **472**, cold fluid conduit **466**, pump **462**, heat extractor **464**, and well bore casing **472**. Tube-in-tube heat exchanger **474** well bore casing **472** are disposed below surface **470**, with tube-in-tube heat exchanger **474** dispose within well bore casing **472**. Tube-in-tube heat exchanger **474** and heat extractor **464** are in communication with a hot fluid conduit and cold fluid conduit **466**. Hot fluid enters heat extractor **464** from tube-in-tube heat exchanger **474** and cold fluid enters cold fluid conduit **466** where it conveyed by pump **462** into tube-in-tube heat exchanger **474**. Condensation in reservoir **478** that descends to the bottom of geothermal heating system **460**, forms heat cycle **476**.

[0168] FIGS. **30**A and **30**B show enthalpy flows for open loop geothermal heating systems **480** and **482**. Open loop geothermal heating system **480** is a binary/open loop system comprising well bore **490** and contributing rock matrix **488**. Contributing rock matrix **488** comprises diameter **492** and height **494**. Enthalpy flows **514** and **486** enter contributing rock matrix **488**. Enthalpy flows **516** within contributing rock matrix **488** enter well bore **490**. Enthalpy flow **484** exits well bore **490** towards a surface. Open loop geothermal heating system **482** is an enhanced geothermal system comprising well bores **498** and **502**, and contributing rock matrix **504**. Contributing rock matrix **504** comprises length **508**, width **506**, and height **510**. Low-value enthalpy flow **496** enters well bore **498**. Enthalpy flow **486** also enters contributing rock matrix **504**. Enthalpy flow **500** traverses from well bore **498** to well bore **502** while increasing in value before entering well bore **502**. High-value enthalpy flow **512** exits well bore **502**.

[0169] FIGS. **31**A and **31**B show loosed loop geothermal heating systems **518** and **520**. Loosed loop geothermal heating system **518** is a closed loop conduction and natural convection system. Loosed loop geothermal heating system **520** is a forced geothermal circuit. Loosed loop geothermal heating system **518** comprises conduit **526**, well bore **538**, and contributing rock formation **528**. Contributing rock formation **528** comprises diameter **540** and height **542**. Enthalpy flow **486** enters contributing rock formation **528**. Enthalpy flows **532** enter well bore **538** and conduit **526**. Enthalpy flows **532** may have values that increase or decrease with increasing well bore depth as shown by gradients **530** and **534**. Loosed loop geothermal heating system **520** comprises conduit **526**, well bore **548**, and contributing rock formation **556**. Contributing rock formation **556** comprises diameter **552** and height **554**. Enthalpy flow **486** enters contributing rock formation **556**. Enthalpy flows **546** increase in value with decreasing height **554**. Low-value enthalpy flows **544** move away from well bore **548** and high-value enthalpy flows **550** move towards well bore **548**. Cold fluid **522** enters conduit **526** and hot fluid **524** exits conduits **526** in loosed loop geothermal heating systems **518** and **520**.

[0170] FIG. **32** shows enthalpy recover per well for an Open Loop System ("Open"), an Enhanced Geothermal System ("EGS"), a Closed Loop Natural Convection ("CLNC"), and a forced geothermal circuit ("FGC").

[0171] FIG. **33** shows geothermal heating system **558** comprising counter-current Flux Co-inverter ("FC") **564**. FC **564** is disposed along length **572** of geothermal heating system **558**. Optionally, length **572** may be up to 500 mm. Geothermal heating system **558** also comprises vacuum-insulated tubing ("VIT") **560**, internal tubing **570**, and casing **568**. Cold fluid **562** enters FC **564**, exits internal tubing **570**, and is converted to hot fluid **566** which exits FC **564**.

[0172] FIG. **34** shows a temperature profile for a co-current geothermal heating system, where temperature converges as vertical distance increases.

[0173] FIG. **35** shows a temperature profile for a co-current geothermal heating system, where temperature decreases as lateral distance increases.

[0174] FIG. **36** shows geothermal heating system **574** comprising Flux Co-inverter **586** and packer material **584**. Geothermal heating system **574** also comprises well bore casing **580**, upper FGC **582**, and lower DBHX **590**. Packer material **584** seals the upper FGC **582** and separates it from lower DBHX **590**. Cold fluid flows **576** enter well bore

casing **580**, are heated by lower DBHX **590** to become hot fluid flow **578**, which exits upper FGC **582**.

[0175] FIG. **37** shows geothermal heating system **592** comprising flux co-inverter **586**, triple propagating minimal structures ("TPMS") **598**. Geothermal heating system **592** also comprises well bore casing **580** forming cavity **604**, upper FGC **600**, lower DBHX **590**, insulation **596**, insulated small bore tubing **602**, and temperature control valves **594**. TPMS **598** comprises multichannel passive heating element **606**, which heats the FC and allows for a siphon flow. TPMS **598** disposed along upper FGC **600** to drive upper FGC **600** thermosiphon. TPMS **598** is attached to, and insulated from, well bore casing **580** with insulation **596**. TPMS **598** is used to increase well bore casing **580** heat transfer. Temperature control valves **594** prevent excessive cooling and maintain the target temperature between well bore casing **580** and upper FGC **600**.

[0176] FIG. **38** shows geothermal heating system **608** comprising electrical submersible pump **610** and **612** and configured for an oil and gas extraction application. Geothermal heating system **608** also comprises inflow ports **614** and **616**, region **620**, and bottom hole performance heat exchanger ("BHPHX") **618**.

[0177] FIGS. **39**A, **39**B, **39**C, and **39**D show geothermal heating systems **622**, **626**, **628**, and **630** configured for an oil and gas extraction application and comprising ESPs **624**, heat exchangers **632**, and inflow regions **634** and **636**.

[0178] FIG. **40** shows geothermal heating system **640** comprising a single pass counter current FGC configuration. Geothermal heating system **640** (top down view shown by diagram **642**) comprises concentric configuration with flow around a heat exchanger and with flow entering at the bottom of geothermal heating system **640**. Flows **646** and **654** circulate through geothermal heating system **640**. Geothermal heating system **640** also comprises TPMS **644**, FGC **652**, and central channel **650**.

[0179] FIG. **41** shows geothermal heating system **656** comprising a single pass counter current FGC configuration with a side channel. Geothermal heating system **656** (top down view shown by diagram **658**) comprises a concentric design with heat exchanger being the diameter of the well bore with the green and FGC loop entering via side channels of geothermal heating system **656**. Flows **646** and **654** circulate through geothermal heating system **656**. Geothermal heating system **656** also comprises TPMS **644**, FGC **652**, and side channels **660**.

[0180] FIG. **42** shows geothermal heating system **662** comprising a single pass counter current FGC configuration with an ESP. Geothermal heating system **656** (top down view shown by diagram **664**) comprises a side channel entry with electrical submersible pump **666** driving the bottom heat circuit. Flows **646** and **654** circulate through geothermal heating system **662**. Geothermal heating system **662** also comprises TPMS **644**, FGC **652**, and side channels **668**.

[0181] FIG. **43** shows geothermal heating system **670** comprising a single pass counter current FGC configuration with an internal baffle. Geothermal heating system **656** (top down view shown by diagram **672**) comprises concentric design with a heat exchanger the diameter of the well bore internal baffles for double pass on the loop single pass FGC. Flows **646** and **654** circulate through geothermal heating system **670**. Geothermal heating system **670** also comprises TPMS **644**, FGC **652**, and internal baffles **674**.

[0182] FIG. **44** shows geothermal heating systems **704** comprising a falling film thermosiphon. Geothermal heating system **678** is a multi pass loop/single pass FGC co/counter current configuration (top down view shown by diagram **676**) comprising casing **648**, TPMS **702**, FGC down thermosiphon **698**, casing with side holes **690**, and insulated core and/or tubing **692**. Flow **688** enters TPMS **702** through casing with side holes **690**. Geothermal heating system **680** is a multi pass loop/single pass FGC co/counter current configuration (top down view shown by diagram **684**) comprising casing **648**, TPMS **702**, FGC down thermosiphon **698**, casing with side holes **690**, and central channel **694**. Flow **688** enters TPMS **702** through casing with side holes **690**. Geothermal heating system **682** is a multi pass loop/single pass FGC co/counter current configuration (top down view shown by diagram **686**) comprising casing **648**, TPMS **702**, FGC down thermosiphon **698**, casing with side holes **690**, central channel **696**, and single/multiple baffled flow loops **700**.

[0183] FIG. **45** shows geothermal heating systems **716** comprising FGC thermosiphons **724**. Geothermal heating system **706** comprises central channel **720**, TPMS **722**, and thermosiphon **724** drawing up flow **718**. Geothermal heating system **708** comprises central channel **720**, side channel **726**, TPMS **722**, and thermosiphon **724** drawing up flow **718**. Geothermal heating system **708** may operate as a bottom up or top down thermosiphon and flows fluid in a counter current up configuration. In geothermal heating systems **716**, thermosiphon **724** draws up lower water and passes it through TPMS **722** and then draining back into a rock formation (not shown). Diagram **710** shows the top down view of geothermal heating system **706**. Diagrams **712** and **714** show the top down view of geothermal heating system **708**.

[0184] FIG. **46** shows geothermal heating system **728** comprising well bore performance heat exchanger **738**. Geothermal heating system **728** also comprises ESP **730** and **732** and inflow regions **734** and **736**. Well bore performance heat exchanger **738** comprises inlet **740**, heat exchange surface **744**, housing **742**, and reservoir fluid conduits **746**.

[0185] FIG. **47** shows geothermal heating system **748** comprising down bore performance heat exchanger **760**. Geothermal heating system **748** also comprises ESP **730** and **732** and inflow regions **734** and **736**. Well bore performance heat exchanger **760** comprises housing **750**, interior housing **762**, inlet **754**, outlet **756** and outlet **766**. Housing **750** and interior housing **762** form cavities **758** and **764**. TPMS **752** is disposed within interior housing **762**.

[0186] FIG. **48** shows a geothermal heating system comprising a 3-D printed heat exchanger **768**. 3-D printed heat exchanger **768** comprises housing **784**, chamber **786**, and chamber **782**. Chamber **786** forms cold flow **780** and chamber **782** forms flow pattern **778**. Fluid flow **774** enters chamber **786** and exits as flow fluid **770**. Fluid flow **772** enters chamber **782** and exits as flow **776**.

[0187] FIG. **49** shows geothermal heating system **788** comprising FGC **790** and a down thermosiphon and Well Bore Gyroid Heat Exchanger ("WBGHX") **796**. Geothermal heating system **788** also comprises permeable casing **794**, FC **792**, central channel **800**, and thermosiphon **802**. WBGHX **796** comprises TPMS **798**. Increased flow path area in WBGHX **796** is due to TPMS **798**, reducing the parasitic load (reduced to ~2%-5%) or enabling two to four times more circulation rate. WBGHX **796** is 160-200 times

more efficient than a standard DBHX exchange (~1 m of WBGHX **796** is 160 m-200 m of 7" liner), thereby reducing the amount of vacuum insulated tubing required by 20-40% per well and increasing energy recover. Counter current flow pattern increases the surface temp to within 5° C. of virgin reservoir temperature and gives up to 20%-100% increase in energy recovery multiplying the effects of increased circulation rates. Thermosiphon **802** funnel and VIT tubing, with a high void space WBGHX **796**, allows mass flow independent of surface or reservoir pressure at rates equal or higher to binary production wells. The siphon system is self-controlling, the higher the rate, the more drawdown is generated. An ESP may be leveraged to enhance and manage drawdown efficiently. Mass flow into WBGHX **796** and within the reservoir allows enthalpy to be recovered from the surrounding reservoir matrix increasing the total productivity of the well.

[0188] FIG. **50** shows geothermal heating system **804** comprising WBHX **808** and thermosiphon generator **812**. WBHX **808** comprises a radial channel design optimized for minimum pressure drop and counter current heat exchange. Thermosiphon generator **812** provides reservoir drawdown and cross flow. Geothermal heating system **804** also comprises annulus **822**, open hole and/or perforation with WBGHX side porting **818**, insulate tubing **806**, WBGHX porting and internal configuration **810**, tubing **814**, and bottom hole perforations **816**. Annulus **822** comprises a high heat transfer fluid (not shown). Annulus **822** forms cavity **820** that allows for the flow of cold fluid. Open hole and/or perforation with WBGHX side porting **818** allow cross and/or counter current heat exchange. Tubing **814** may be VIT tubing for efficient drawdown. Coiled tubing may be used where well space and low drawdown rates permit. Bottom hole perforations **816** are used for injection of cooled brine. Temperature controlled by the circulation rate. Sufficient vertical space enables head pressure to inject brine (about 120% of drawdown pressure).

[0189] FIG. **51** shows geothermal heating system **824** comprising FGC and thermosiphons **842**. Geothermal heating system **824** also comprises surface injection inlet **830**, fluid outlet **828**, annulus **826**, conductive fluid **832**, casing **848**, barrier **844**, and DBGHX inlet **846**. Optionally, geothermal heating system **824** may comprise ESP **834**. Flows **850** enter casing **848** increasing ambient heat transfer (up to two times increase in energy recovery). Cold injection **838** exits geothermal heating system **824** and contacts reservoir fluid to enter geothermal heating system **824** as hot production **840**.

[0190] FIG. **52** shows geothermal heating system **852** comprising FGC with side track window **860**. Geothermal heating system **852** also comprises nitrogen blanket gas **854**, high heat transfer fluid **856**, casing **858**, and liner **862**.

[0191] FIG. **53** shows geothermal heating system **864** comprising FGC, thermosiphon, and ESP mount **866**. Geothermal heating system **864** also comprises nitrogen blanket gas **854**, high heat transfer fluid **856**, casing **858**, and liner **862**.

[0192] FIG. **54** shows geothermal heating system **868** comprising an FGC with well bore performance heat exchanger, an FC, and an FC+ unit. Geothermal heating system **868** comprises FC+ **878**, FC **880**, FGC well bore performance heat exchanger **882**. FGC well bore performance heat exchanger **882** comprises TPMS **884**. Cold fluid flow **870** passes through FC+ **878**, FC **880** and TPMS **884** to contact hot fluid flows **874** and **876**. Hot fluid return flow **872** passes through FC+ **878** and FC **880** to exit geothermal heating system **868**.

[0193] FIG. **55** shows thermodynamic properties for a DBHX where (D1), (D2), (D3) and (G2) are the physical locations representing the surface injection point in the DBHX, the bottom of the VIT within the closed loop, the VIT outlet at surface, and the fluid temperature in the geothermal reservoir outside of the closed loop respectively.

[0194] FIG. **56** shows a temperature and enthalpy versus depth comparison for geothermal heating systems without and with and FC. Enthalpy recover is increased and achieved at lower temperatures relative with an FC relative to without an FC.

[0195] FIG. **57** shows retrofitting process **886** for an unconventional depleted gas well to a geothermal asset. Retrofitting process **886** shows horizontal geothermal well **888**, reservoir fracture network simulation **890**, and geothermal heating system **892**. Geothermal heating system **892** comprises thermal circulation system **84** disposed in well bore **94**, and WBPHX **306**. Fluid **896** flows through geothermal heating system **892** casing **894**.

[0196] FIG. **58** shows a comparison **898** of the physics of open loop geothermal heating system **482** compared to geothermal heating system comprising an FGC **900**. Open loop geothermal heating system **482** comprises diameter **508** and height **510**. Geothermal heating system comprising an FGC **900** comprises diameter **492** and height **494**.

[0197] FIG. **59** shows a comparison of WBHX in co-current configuration **902** to WBHX in counter current configuration **904**. Graphs **906** and **910** show curves for high heat transfer from outer casing **916**, low heat transfer from VIT **920**, closed loop temperature profile **918**, and reservoir medium temperature profile **922**. Graphs **908** and **912** show curves for reservoir medium temperature profile **922** and closed loop temperature profile **918** compared to geothermal heating systems **934** comprising vacuum insulated tubing **926**, WBHX outer casing **924** disposed along depth **932**, closed loop circulation fluid **928**, and cooling reservoir medium **930**.

[0198] FIGS. **60**A and **60**B showing the temperature profiles **936** and **938** for upper well sections and a WBHX. Temperature profile **936** shows closed loop temperature profile **946**, reservoir medium temperature profile **948**, high heat transfer from outer casing **940**, low heat transfer from VIT **942**, co-current performance from known technology **950**, and FC **944**. Temperature profile **938** shows closed loop temperature profile **946** and reservoir medium temperature profile **948** compared to geothermal heating system **952** comprising upper well section **954**, vacuum insulated tubing **956**, outer casing **960** disposed along depth **964**, FC **958**, and closed loop circulation fluid **962**.

[0199] FIGS. **61**A and **61**B show temperature profiles **966** and **968**, for a closed loop co-current geothermal heating system and a WBHX flux crossover counter current geothermal heating system, respectively. Temperature profile **966** shows cold annulus stream WBHX **970** and hot VIT to surface stream **972**, wherein G1a. is reservoir temperature, G2a. cooled reservoir fluid temperature, D1a. co-current annulus flow to WBHX inlet temperature, D2a. co-current bottom of the WBHX VIT inlet return to surface temperature, and D3a. VIT outlet from the WBHX temperature at the surface. Temperature profile **968** shows cold annulus stream WBHX **970**, hot VIT to surface stream **972**, and inline FC

cell (to enable counter current flow) **974**, wherein G1a. is reservoir temperature, G2a. cooled reservoir fluid temperature, D1a. co-current annulus flow to WBHX inlet temperature, D2a. co-current bottom of the WBHX VIT inlet return to surface temperature, and D3a.

[0200] FIG. **62** shows FC cell design **976** comprising FC casing wall **998**, closed loop inner VIT **992**, casing connecting collar **990**, FC internals **986**, FC VIT connection **984**, FC outer casing connection **1000**, cold flow path **994**, hot flow path **996**, and FC flow path to divert anulus to core flow and vis versa **988**. Cold flow **780** enters FC cell design **976** while hot flow **978** exits FC cell design **976**.

[0201] FIG. **63** shows TPMS flow channel configurations **1002**. TPMS flow channel configurations **1002** show plainer split flow barrier for a closed loop path **1004**; annular or planar split flow barrier for closed loop path **1006**; single or double helical flow path at 20-70° pitch angle **1008**; planar split flow barrier for reservoir flow **1010**; annular flow channel for reservoir fluid **1014**; double helical flow path at about 20° to about 70° pitch angle **1016**; reservoir cross flow in with vertical flow path exit **1018**; and single helical flow path at about 20° to about 70° pitch angle **1020**. Each TPMS flow channel configuration **1002** comprises TPMS cell structure **1012**; internal TPMS flow baffling **1022**, permeable casing sidewall **1024**, and housing **1026**. Housing **1026** may be a well, WBHX, WBPHX casing, open hole, production screen, or a combination thereof.

[0202] FIG. **64** shows geothermal heating system **1028** comprising an FC cell. Geothermal heating system **1028** comprising: FC cell component **1030**, TPMS WBHX section design component **1032**, FGC thermosiphon configuration **1034**, reservoir FGC showing reservoir brine or steam flow path (may be in either direction) and assisted with reservoir cross flow **1038**, potential ESP location to drive FGC circuit in addition to thermosiphon **1040**, and slotted or perforated liner to allow reservoir fluid cross flow into the WBPHX **1036**.

[0203] FIG. **65** shows a comparison of temperature profiles for geothermal heating system and a geothermal heating system **1042** comprising a TPMS **1046**. Geothermal heating system **1044** comprises core **1048** and heat exchange region **1050**. Regions **1052** and **1056** indicate the different temperature profiles along heat exchange region **1050**. Line **1054** indicates the temperature profile if heat exchange region **1050** is insulated.

[0204] FIGS. **66**A, **66**B, **66**C, and **66**D shows configurations of geothermal heating systems comprising an FGC disposed around a heat exchanger, a heat exchanger along the diameter of the well bore, a side channel with an ESP, and internal baffles. FIGS. **67**A, **67**B, **67**C, and **67**D show geothermal heating systems comprising upper well casing **1060**, potential ESP locations **1062**, WBHX Cell Sections located above the reservoir production zone in larger casing section **1064**, production liner tubing configuration for FGC thermosiphon drive **1066**, and FGC circulation in the reservoir showing from the toe of the well to the heal **1068**. Flow direction can be reversed and well orientation can range from vertical, deviated too horizontal. FIGS. **67**A, **67**B, **67**C, and **67**D show geothermal heating systems also comprising surface closed loop circulation with hot medium in the central VIT and the cold return in the annulus space **1070**. An FC may be added separately above the WBHX or incorporated in the flow channeling of the WBHX itself. FIGS. **67**A, **67**B, **67**C, and **67**D show concentric design with green loop flowing around HX and entering at the bottom; a concentric design with HX the diameter of the well bore with the green and FGC loop entering via side channels; a side channel entry with an ESP driving the bottom heat circuit; and a concentric design with HX the diameter of the well bore internal baffles for double pass on a loop single pass FGC, respectively.

[0205] FIGS. **67**A, **67**B, **67**C, and **67**D shows configurations of geothermal heating systems comprising a kickoff point, a FGC thermosiphon tube, vertical flow compartments in a TPMS structure, and a horizontal well bore with a TPMS structure. FIGS. **68**A, **68**B, **68**C, and **68**D show geothermal heating systems comprising, TPMS cell structure **1076**, production liner **1084**, open hole or screen section against the reservoir rock **1078** (where the well bore may be oriented vertically, deviated, or horizontally), potential kick-off point for multilateral and duplication of bottom hole section **1074**, FGC thermosiphon tubing configuration **1080** (which may include an ESP to enhanced FGC performance), FC channeling built in to the TPMS structure **1082**, vertical flow compartments in the TPMS structure **1072** (for the surface loop to provide two multi pass channels), split core TPMS structure **1088** (to establish a vertical convection cell at each frac stage in a horizontal stimulated well), cross-section of an FGC convection cell established in a horizontal well **1090** with outflow **1086**. FIGS. **68**A, **68**B, **68**C, and **68**D are multi pass surface loops with single pass FGC co/counter current configurations.

[0206] FIG. **68** shows sequential cross sections of FC **1092**. End section **1094** and **1108** show central and concentric channels **1096** and **1098**. Sections **1114** show the collapse of surfaces **1102** and **1104** into "X" pattern **1106** shown in sections **1100**. Sections **1116** show the separation of surfaces **1110** and **1112** into concentric channels **1096** and **1098**.

[0207] FIG. **69** shows temperature profiles **1118** for a co-current well bore and FC counter current well bore where temperature profiles **1118** show WBHX temperature profile **1146**, reservoir temperature profile **1120**, near wellbore reservoir fluid temperature profile from WBHX **1136**, cold reservoir inflow section **1130**, FC location **1148**, surface loop circulating fluid **1132**, VIT casing to surface **1124** and WBHX outer casing **1128**. Well bore outer casing **1122** encompasses WBHX outer casing **1128** to create cavity **1126**. Temperature profiles **1142** and **1134** are formed by FC counter current well bore region **1138**, **1140**, and **1144**.

[0208] FIG. **70** shows geothermal heating system **1150** comprising heat exchangers **1152** and **1152'**. Heating zones **1154** and **1156** show stacked heating wherein heating zone **1154** is at a lower temperature than heating zone **1156**. Cold circulation fluid **1158** (25° C.) enters geothermal heating system **1150** and flows into heat exchanger **1152** disposed within heating zone **1154**. Cold circulation fluid **1158** (25° C.) is heated in by reservoir fluid **1160** (160° C.) to form heated circulation fluid **1162** (140° C.). Heated circulation fluid **1162** (140° C.) enters heat exchanger **1152'** dispose heating zone **1156** where heated circulation fluid **1162** (140° C.) is heated by reservoir fluid **1164** (240° C.) to form hot circulation fluid **1166** (240° C.).

[0209] FIG. **71** shows a flowing temperature and pressure profile for a geothermal heating system. Circulation fluid temperature **1168** increases with depth and sequentially increases in temperature in heating zones **1170** and **1172**.

[0210] FIG. **72** shows stack loop recovery process **1174** using geothermal heating system **1176** and organic Rankine cycle ("ORC") **1178**. Circulation fluid **1180** in geothermal heating system **1176** is sequentially heated to higher temperatures by heat exchangers **1182** and **1184** before entering evaporator **1186** and heating liquid flow **1188**. Liquid flow **1188** enters evaporator **1186** to form a gas to power turbine **1190**. Fluid flow **1192** is conveyed via pump **1194** to regenerator **1196** to form heated fluid flow **1198**. Heated fluid flow is cooled by heat exchanger **1200**. Spent gas from turbine **1190** enters regenerator **1196** to cool into a liquid and return to evaporator **1186**. Circulation fluid **1180** is returned to geothermal heating system **1176** after passing out of evaporator **1186**. Optionally stack loop recovery process **1174** may be a loop recovery process if sequential heating is not performed.

[0211] FIGS. **73**A, **73**B, **73**C, and **73**D show multilateral channel casing designs **1201**, **1202**, and **1204** for geothermal heating system **1206**. Geothermal heating system **1206** comprises cold circulation fluid **1208**, hot circulation fluid **1210**, well bore **1212**, multilateral channel **1214**, and warmed circulation fluid **1216**. Multilateral channel **1214** recovers energy from a reservoir. Multilateral channel **1214** may be configured for casing designs **1200**, **1202**, and **1204** for a passive loop multilateral channel, an active thermosyphon multilateral channel, and a pump-driven multilateral channel, respectively.

[0212] Casing designs **1200**, **1202**, and **1204** allow surface closed loop fluid **805** to pass to and/or from a multilateral channel. Casing design **1200** comprises multilateral packer **1218**, casing and sealed lateral **1220**, and high thermal conductive cement and/or proppant **1222**. Casing design **1200** is configured to case and seal the reservoir. Multilateral packer **1218** forms an annulus core flow pattern. Casing design **1200** is configured to allow reservoir interaction between hot reservoir fluid **1234** and cold circulation fluid **1208** at the end of conductive cement and/or proppant **1222** to form warmed circulation fluid **1216**. The thermal transfer mechanism is a coaxial pipe-in-pipe surface loop incorporating conduction and induced convection or direct reservoir cross flow. Casing design **1200** may be used in shallow reservoir s lacking integrity for enhanced or driven circulation or in hot dry rock zones.

[0213] Casing design **1202** comprises multilateral packer **1218**, reservoir inlet **1224**, perforations **1226**, WBGHX for thermosiphon **1228**, insulated tubing **1230**, and reservoir outlet **1232**. Casing design **1202** is configured to allow reservoir interaction within WBGHX for thermosiphon **1228** between hot reservoir fluid **1234** and cold circulation fluid **1208** to form warmed circulation fluid **1216** and cold reservoir fluid **1236** which exits perforations **1226**. The thermal transfer mechanism is a WBGHX with multi-flow paths for the surface loop and reservoir fluid for efficient energy exchange.

[0214] Casing design **1204** comprises multilateral packer **1218**, perforations **1126**, WBGHX **1238**, and pump **1240**. Casing design **1204** is configured to case and seal the reservoir. Multilateral packer **1218** creates an annulus core flow pattern. Casing design **1204** is configured to allow reservoir interaction within WBGHX **1238** between hot reservoir fluid **1234** and cold circulation fluid **1208** to form warmed circulation fluid **1216** and cold reservoir fluid **1236** which exits perforations **1226**. The thermal transfer mechanism is WBGHX **1238** with multi flow paths for surface loop and reservoir fluid for efficient energy exchange. Integrated pump **1240** drives reservoir fluid for kick off and/or ongoing operation.

[0215] FIG. **74** shows geothermal heating system **1242** comprising surface control umbilical **1244**, cold surface loop circulation fluid **1246**, production casing **1248**, hydraulic pump bypass port **1250**, hydraulic pump reservoir reject port **1252**, lower FGC pump assembly **1254**, lower FGC tubing **1256**, injection perforations **1258**, slotted liner **1260**, WBGHX **1262**, hydraulic pump cooling and thrust bearing assembly **1264**, hydraulic motor **1270**, reservoir intake **1272**, in-line flux cross over connection **1274**, insulated tubing **1370**, and surface loop casing **1278**. Surface control umbilical **1244** maintains pump speed, torque, and/or reservoir injection. Hot reservoir fluid **1284** circulates to transport thermal energy as well as provide hydraulic driving force in place of an electrical submersible pump. Production casing **1248** fixes the WBGHX to the surface. Hydraulic pump bypass port **1250** control lower FGC pump assembly **1254** or compressor assembly to maintain target speed and torque. Hydraulic pump reservoir reject port **1252** for the circulation fluid assists with reservoir pressure and convection cycle mass flow. Where the circulation fluid is CO_2 the discharge port allows the FGC well to also provide function as a carbon sequestration asset. The CO_2 enhances reservoir convection, including with dry rock geology, and expands the operating envelop for the FGC system. Water makeup may also be provided to the reservoir to assist with a pump startup and or to assist with reservoir pressure maintenance. Lower FGC pump assembly **1254** generates the reservoir convection circuit. Optionally, lower FGC pump assembly **1254** is a pump for hydraulic systems or a compressor for dry rock geology. Lower FGC tubing **1256** reduces short circuiting of the reservoir fluid and to generate thermosiphon effects to minimize injection energy requirements. Injection perforations **1258** allow reservoir fluid to be returned to the reservoir. The direction may be toe to heal or heal to toe depending on design requirements. Slotted liner **1260** allows inflow and maintain reservoir integrity. Optionally, slotted liner **1260** may be replaced with a gravel pack, or open hole, depending on well bore requirements. Hydraulic pump cooling and thrust bearing assembly **12638** transfers power to the pump or compressor subassembly to drive the forced geothermal convection in the reservoir. Coupling may take the form of magnetic, hydraulic, or mechanical mechanism transform the shaft power to match required rotation speed and torque needs. Hydraulic motor **1270** is powered by the surface loop circulation fluid to drive a pump or compressor subassembly on WBGHX **1262**. Reservoir intake **1272** is in communication with WBGHX **1262**. WBGHX **1262** is connected via casing thread to the upper loop casing. A packer can be used to provide additional support for landing to WBGHX **1262**. Insulated tubing **1276** return working medium to the surface. The insulation may be a vacuum or closed cell insulation. Surface loop casing **1287** is used for low-loss higher pressure circulation of circulation fluid.

[0216] The geothermal heating system of the present invention may comprise an FGC comprising a well bore, e.g., leg, proximate to an WBHX comprising an annulus. The distance between the WBHX and the FGC may form a circulation loop. The distance between the WBHX and the FGC may be at least about 1 meter, about 1 meters to about 300 meters, about 10 meters to about 275 meters, about 25 meters to about 250 meters, about 50 meters to about 225

meters, about 75 meters to about 200 meters, about 100 meters to about 175 meters, or about 250 meters. The well bore may comprise a sidetrack disposed proximate to the WBHX. The WBHX may comprise a thermal circulation system, a heat exchanger, a well bore, a fluid conduit, or a combination thereof. The WBHX may comprise a casing and may be screened for wellbore stability. The FGC and WBHX may be oriented into a horizontal well configuration; a deviated well configuration; a vertical well configuration; or a combination thereof.

[0217] The geothermal heating system may be installed into any sub-surface formation including, but not limited to rock including, but not limited to, granite, basalt, sandstone, limestone, shale, marble, schist, gneiss, quartz, volcanic rock, or a combination thereof; igneous, metamorphic, mineral, hydrothermal, sedimentary, glacial, fluvial, lacustrine, marine, volcanic (lava flows and volcanic breccias) formations, or a combination thereof, wind-blown deposits; organic deposits; oil sands; clay beds coal seams; or a combination thereof. The sub-surface formation may be at least partially disposed around the WBHX. The sub-surface formation may be highly permeable.

[0218] The geothermal heating system may comprise a pump, including but not limited to, an electric pump, a centrifugal pump, a rotary vane pump, an axial-flow pump, a piston pump, a screw pump, a peristaltic pump, a submersible pump, a lobe pump, a reciprocating pump, a progressing cavity pump, a plunger pump, a hydraulic pump, a radial piston pump, a flexible impeller, a turbine pump, or a combination thereof.

[0219] The geothermal heating system may also comprise a means to pump fluid between the annulus of the WBHX and the FGC leg. The means to pump fluid may be at least partially disposed in the well bore and/or well bore sidetrack, the WBHX wellbore, or at the surface. The means to pump fluid may comprise a pump.

[0220] The geothermal heating system may comprise a flow path between the FGC and the WBHX well bore through the reservoir rock. The flow path may be naturally occurring and/or artificially-produced. An artificial flow path may be formed by a proppant. The proppant may maintain connectivity and may include, but is not limited to, a sand, a ceramic, a gel, a foam, or a combination thereof.

[0221] The geothermal heating system may comprise energy extraction equipment. The energy extraction equipment may comprise a dry steam power plant or a component thereof; a flash steam power plant or a component thereof; a binary cycle power plant or a component thereof; energy extraction technology; or a combination thereof.

[0222] The geothermal heating system may comprise a heat transfer fluid or medium, e.g., a circulation fluid. The heat transfer fluid or medium in the reservoir rock may be circulated between the FGC and the WBHX. The medium and/or circulation fluid may comprise reservoir brine; produced water; salt water; hydrocarbon fluid, including but not limited to reservoir brine, diesel, or condensate; a gas, including but not limited to, nitrogen, carbon dioxide, a super critical gas, or combination thereof; a polymer, including but not limited to acrylamide, and polyacrylamide; propylene glycol; R-410A refrigerant; other mixtures to optimize energy recovery of the system; or a combination thereof. The geothermal heating system may comprise a well bore in communication with a surface to circulate the heat transfer fluid or medium from the WBHX to the energy extraction equipment.

[0223] The FGC may comprise a plurality of well bores and sidetracks. Each well bore or sidetrack may be a closed cycle geothermal system and may be a WBHX. The FGC may comprise a forced circulation loop between the FGC components and the WBHX. Fluid from the reservoir, or fluid that is introduced and maintained within the geothermal heating system, may be circulated via a pump to increase the rate and efficiency of energy extraction. The circulated fluid may also extract in situ hydrocarbons or minerals. The FGC may comprise a mono-bore. A pump may disposed within the mono-bore above, below, and/or besides the WBHX.

[0224] A pump may be installed in either the WBHX or FGC leg. The pump may reduce and/or minimize flashing of the reservoir fluid and/or reduce scaling or silicate formation. The pump may also reduce and/or eliminate GHG emissions that may occur with circulating reservoir fluid to the surface via a separate FGC wellbore. The pump may be disposed above, below, around, within, and/or beside the WBHX or FGC leg.

[0225] The geothermal heating system may comprise pump intake and/or return perforations that may be separated using deviated or horizontal drilling techniques to increase the energy recovery and take advantage of fracture networks for increased performance.

[0226] Separate FGC wellbores may be drilled. Drilling a secondary FGC well may be directed to the intersection of previously stimulated reservoir zones associated with the primary geothermal well. The previously stimulated reservoir zone may be naturally-occurring or may have been developed as part of the well completion process. Drilling a secondary FGC may convert a shale hydrocarbon wells to a geothermal closed cycle system or a hybrid hydrocarbon geothermal extraction systems. The FGC may be used to simultaneously extract hydrocarbons and circulate fluid to enhance geothermal energy recovery.

[0227] The heat transfer coefficient ("h") may be increased along with the rate of heat transfer from heat conduction and convection mechanisms by inducing a forced circulation of fluid between the WBHX and the FGC leg. The conductive and convective heat transfer rates may be increased by at least about 300%, about 300% to about 1,100%, about 400% to about 1,000%, about 500% to about 900%, about 600% to about 800%, or about 1,100% compared to a base closed loop design. The limiting factor for geothermal heat recovery may be shifted from the reservoir to the WBHX and associated FGC.

[0228] The direction of circulation may be from the FGC leg to WBHX or from the WBHX to the FGC leg. The need for a thermal gradient to drive energy transfer may be reduced or eliminated by flowing fluid from the FGC leg to the WBHX anulus. The temperature of the fluid contacting the WBHX increases to the temperature of the reservoir fluid. The WBHX temperature may be increased by at least about 5° C., about 5° C. to about 55° C., about 10° C. to about 50° C., about 15° C. to about 45° C., about 20° C. to about 40° C., about 25° C. to about 35° C., or about 55° C., over other geothermal heating designs. Energy extraction efficiency may be increased at the surface by at least about 5%, about 5% to about 50%, about 10% to about 45%, about 15% to about 40%, about 20% to about 35%, about 25% to

about 30%, or about 50% compared to other geothermal heating designs. The layout configuration of the FGC leg relative to the WBHX leg may be optimized based on the reservoir properties to balance pumping requirements and the rate of circulation between the WBHX and the FGC.

[0229] The entirety of the latent heat energy of the reservoir may be extracted within the flow path between the FGC and the WBHX by reducing or eliminating the requirement for a driving temperature. This available latent heat energy for the system may be at least 10%, about 10% to about 100%, about 20% to about 90%, about 30% to about 80%, about 40% to about 70%, about 50% to about 60%, or about 100% above the increases in energy recovery from conduction and convection mechanisms. The circulation flow path may be expanded to increasing the total available volume of the reservoir for energy extraction. The circulation flow path may be expanded by increasing the dimensions of the FGC leg or by adding additional legs.

[0230] The same dynamic between thermal resistance and heat transfer coefficient (r_2) may exist for any number of the FGC legs. The flow requirements for fluid circulation in the FGC may be approximately modelled using Darcy's law derived for a radial flow pattern according to Equation 12.

$$q_o = \frac{2\pi \cdot K \cdot L_w (P_2 - P_1)}{\mu \cdot \phi \cdot \ln\left(\frac{r_2}{r_1}\right)} \tag{12}$$

Wherein:

[0231] q_o is the flow rate in meters cubed per second (m^3/s);

[0232] P_1 is the pressure at the WBHX outer annulus (Pa); and

[0233] P_2 is the pressure at distance r_2 the effective drainage radius (Pa).

[0234] The circulation rate from the FGC well, or sidetrack, may be a function of the pressure differential provided to the system; the reservoir properties; the dimensions of the FGC well or sidetrack; or a combination thereof. The length, diameter, and number of the FGC legs may be optimized to maximize the heat recovery capacity of the WBHX and the associated heat medium circulation system.

[0235] The FGC may comprise a well bore performance heat exchanger ("WBPHX"). The WBPHX may comprise at least about three, about three to ten, about four to nine, about five to eight, about six to seven, or about ten times more surface area per linear meter in the pipe in pipe and/or direct casing heat exchange designs. The WBPHX may allows for closer approach temperatures and therefore more energy recovery. The closer approach temperatures may be at least 3° C., about 3° C. to about 10° C., about 4° C. to about 9° C., about 5° C. to about 8° C., about 6° C. to about 7° C., or about 10° C.

[0236] The WBPHX may eliminate the constraint on current closed loop systems that requires the area intersected with the reservoir to provide heat exchange with the geothermal loop. The WBPHX may reduce the amount of intersecting reservoir area for the well bore, reduce drilling and well casing costs, and/or increase the amount of recoverable energy.

[0237] Lower well bore sections below the WBPHX may be downsized to reduce drilling cost. The lower leg may hold the inlet tubing and a screen to prevent ingress of debris. The tubing may comprise vacuum-insulated tubing ("VIT"). The WBPHX location may be optimized to minimize the energy requirements of the surface pump and the FGC pump.

[0238] The WBPHX may comprise an overall heat transfer coefficient between at least about 1000 Watts per meter squared Kelvin ("$W/m^2 \cdot K$"), about 1000 $W/m^2 \cdot K$ to about 4000 $W/m^2 \cdot K$, about 1500 $W/m^2 \cdot K$ to about 3500 $W/m^2 \cdot K$, about 2000 $W/m^2 \cdot K$ to about 3000 $W/m^2 \cdot K$, or about 4000 $W/m^2 \cdot K$. The WBPHX may comprise a utilize plate and/or a tube configurations with a plurality of counter and co-counter flow combinations to match the pressure drop and heat transfer requirements of the system.

[0239] Reservoir fluid in the FGC may be a single pass or multi pass configuration in the WBPHX with the feed or discharge of the pump being included in the circuit at the inlet, intermediary, or the outlet of the WBPHX. In the case of being at the inlet or outlet, the feed may be via a bypass of the WBPHX. A bypass may be required to accommodate the reservoir rock and fluid characteristics to avoid the potential for scaling or precipitation leading to fouling and/or plugging in the WBPHX.

[0240] The WBPHX may comprise a plurality of modules connected to provide the required sizing of the WBPHX. A pump may be configured to be located at the inline, intermediate stage, or outlet of the WBPHX to accommodate the subsurface requirements.

[0241] The FGC may comprise a down bore heat exchanger ("DBHX"). The DBHX may be configured to be least partially disposed within the well bore or a close loop circuit casing. The DBHX may a plurality of flow channels for the reservoir brine, medium, closed loop fluid medium, and/or other fluid to pass each other without mixing and allow for heat to transfer from the reservoir medium to the closed loop. The channels may be configured to generate cross and or counter flow patterns and minimize less efficient co-current flow patterns. The DBHX may comprise a sheet plate with patterns stamped to enhance heat transfer in a stacked configuration such that they may create alternating flow channels for a plurality of fluids to flow.

[0242] The geothermal heating system may comprise a triple propagating minimal structure ("TPMS"). The TPMS may form a compact flow channel with high surface area to volume ratios of at least about 200 m^2/m^3, about 200 m^2/m^3 to about 700 m^2/m^3, about 250 m^2/m^3 to about 650 m^2/m^3, about 300 m^2/m^3 to about 600 m^2/m^3, about 350 m^2/m^3 to about 550 m^2/m^3, about 400 m^2/m^3 to about 500 m^2/m^3, or about 700 m^2/m^3. TPMS structures may comprise a cell. The cell may comprise a matrix, radial, and/or geometric form. The cell may be configured with a height to width aspect ratio ranging from at least about 0.25, about 0.25 to about 4.0, about 0.5 to about 3.5, about 1.0 to about 3.0, about 1.5 to about 2.5, or about 4.0, with 1.0 representing an equally-dimensioned cube. A cell distortion may applied to match design criteria for pressure drop, area, or a combination thereof. Matching cells may be used to fit within the outer geometry boundaries of a WBHX. The WBHX with TPMS structures may have open side walls to allow direct cross flow from the reservoir matrix in to the WBHX or may be encased to direct the reservoir or closed loop media to improve pressure drop, heat exchange, direct flow, or a combination thereof.

[0243] The DBHX may comprise a thermosiphon and an open and/or closed sidewall. The sidewall may be used in

combination with cell geometry to allow liquid hold up in the reservoir medium to enhance heat transfer. The liquid holdup may generate a thermosiphon effect with channeling at the base of the DBHX. The thermosiphon effect may create a draw down pressure across the sidewall of the bore hole producing additional acquirer fluid or steam. This flow may be enhanced with the use of an electrical submersible pump. The DBHX may be at least partially disposed above the reservoir zone where heat energy is being recovered. Reservoir fluid and/or steam may channeled to the DBHX via ESP or via a thermosiphon effect. The height difference between the DBHX and the reservoir allows for increase head to be generated with the cooled reservoir medium to improve injectivity. Injection or production of the reservoir fluid may be driven by thermosiphon or by ESP depending on the reservoir permeability and porosity properties and the desired enthalpy recovery rates.

[0244] The geothermal heating system may comprise a multi-stage stimulation configuration. The multi-stage stimulation configuration may comprise a well bore containing at least two stimulation fluids. The stimulation fluid may include, but is not limited to, a low-permeability proppant, a high-flow proppant, a high-thermal conductive proppant, an initiation fluid, or a combination thereof. The initiation fluid, which may comprise water and/or an aqueous solution, may expand a subsurface fissure and may form capillaries and/or fissures. The high-flow proppant may be a high-flow spherical proppant. The stimulation fluids may exit the well bore in any order. For example, the initiation fluid may exit the well bore first, the high-thermal conductive proppant may exit the well bore second, the high-flow proppant may exit the well bore third, and the a low-permeability proppant may exit the well bore fourth. The stimulation fluids may be disposed on top of one another within the well bore. The high-thermal conductive proppant may form a high thermal conduction layer created in capillary fissures and increasing the effective surface area. The high-flow proppant may form a high permeability zone to enhance convection heat transfer from a high conductive capillary layer. The low-permeability proppant may form a low permeability zone at the root of fissures to avoid short circuiting and improve overall convection heat transfer with the reservoir.

	Proppant Type	Industry Name	Thermal Conductivity (W/m · K)	Metal Content	Compressive Strength (psi)	Flow Conductivity	Flow Productivity (m^3/day/bar)	Roundness	Porosity (%)	Permeability (mD)	Description
High Thermal Conductivity	Metal Proppants	High-Density Metal	~200-300	Very High	30,000+	Very High	10	0.8	5-10	300-700	Heavy proppants providing strength and conductivity in fractures.
	Metalized Proppants	Metalized Proppants	~150-200	High	10,000-20,000	Low	1	0.7	5-10	100-200	Proppants coated with metal for enhanced thermal conductivity and strength.
	Graphite-Based	Graphite Proppants	~100-200	High	10,000-25,000	Very High	8.6	0.8	10-20	150-400	Offers high thermal conductivity and flow characteristics.
	Silicon Carbide	SiC Proppant	~100	Medium	15,000+	Very High	7.6	0.9	10-15	200-600	Extremely strong and thermally conductive, ideal for demanding applications.
High Permeability/ Flow Proppants	Metal Proppants	High-Density Metal	~200-300	Very High	30,000+	Very High	10	0.8	5-10	300-700	Heavy proppants providing strength and conductivity in fractures.
	Graphite-Based	Graphite Proppants	~100-200	High	10,000-25,000	Very High	8.6	0.8	10-20	150-400	Offers high thermal conductivity and flow characteristics.
	Silicon Carbide	SiC Proppant	~100	Medium	15,000+	Very High	7.6	0.9	10-15	200-600	Extremely strong and thermally conductive, ideal for demanding applications.
	Alumina-Based	Alu-Pro ™	~2.5	Medium	10,000-30,000	Very High	7.2	0.7-0.9	10-15	300-800	High-strength proppant suitable for high-pressure environments.
	Ceramic Proppant	Tertiar ™	~1.0	Low	8,000-20,000	High	6	0.8-1.0	15-20	100-500	Engineered for high strength and excellent flow characteristics.

-continued

	Proppant Type	Industry Name	Thermal Conductivity (W/m · K)	Metal Content	Compressive Strength (psi)	Flow Conductivity	Flow Productivity (m^3/day/bar)	Roundness	Porosity (%)	Permeability (mD)	Description
	Resin-Coated Sand	Hybrid ™	~0.6	Low	7,500-12,000	High	3.6	0.5-0.9	20-25	100-300	Sand coated with resin to improve conductivity and reduce fines.
	Silica Sand	Northern White Sand	~0.6	Low	5,000-10,000	Moderate	2.4	0.5-0.8	25-30	50-100	Commonly used proppant with good availability and moderate strength.
Low Flow/ Shutoff	Clay Proppants	Cay-Based Proppants	~0.5	Low	2000-5,000	Low	0.3	N/A	15-30	10-50	Generally lower strength and conductivity, suitable for specific applications.
	Water Shutoff Polymers	Various	~1.0	Low	5,000-15,000	Low	0.2	N/A	5-15	1-10	Used to seal off water-producing zones, enhancing production efficiency.
	Cement	Various	~1.0-1.5	Low	3,000-6,000	Low	0.5	N/A	5-10	1-10	Used for stability but offers low flow characteristics.
Reservoir	Sandstone	Sandstone Reservoir	~1.0-1.5	Low	5,000-15,000	Moderate	5	N/A	15-25	50-300	Common reservoir rock with moderate porosity and permeability.
	Shale	Shale Reservoir	~0.5-1.0	Low	5,000-10,000	Low	0.3	N/A	5-15	1-50	Fine-grained rock often with low permeability, can act as a seal.

[0245] The geothermal heating system may comprise injection and/or production points that may be controlled with sliding sleeves to manage thermal recovery and reservoir temperatures, preventing scale or precipitation in the rock matrix.

[0246] The geothermal heating system may comprise a flux co-inverter ("FC"). The FC may comprise a cylindrical body with a plurality of interior channels separated by interior surfaces forming a cross sectional shape. A first channel may circular and be concentric with the cylindrical body, and a second and third channel maybe semi-circular around the first channel and be separated from each other and the first channel by a continuous surface (the first, second, and third channel configuration). A portion of the continuous surface may be in shapes of two semicircles. The two semicircles of the continuous surface may contract inwardly toward the center of the cylindrical body to form and "X" pattern and form four channels joined at a midpoint separated by the arms of the "X" pattern. The midpoint may separate with the upper and lower "X" patter arms separating and expanding outwardly toward the cylindrical body to reform the first, second, and third channel configuration perpendicular to the beginning first, second, and third channel configuration.

[0247] The FC may invert a coaxial flow. The FC may invert the outer annulus to the inner core and vice versa without mixing. The FC may change the DBHX into a counter-current flow. The hot and cold flows proceed opposite directions in a counter-current flow. The FC may increases the heat exchange efficiency by at least about 15%, about 15% to about 100%, about 20% to about 95%, about 30% to about 90%, about 40% to about 80%, about 50% to about 70%, or about 100%. The FC may allow the temperature difference in the closed loop for the same area to be increases by at least about 10%, about 10% to about 100%, about 20% to about 90%, about 30% to about 80%, about 40% to about 70%, about 50% to about 60%, or about 100%. The FC may allow net power to be increased by at least about 10%, about 10% to about 100%, about 20% to about 90%, about 30% to about 80%, about 40% to about 70%, about 50% to about 60%, or about 100%.

[0248] The counter current flow may allow for a smaller heat exchanger to be used, lowing the cost. The area of the DBHX may be reduce to least about 5%, about 5% to about 50%, about 10% to about 45%, about 15% to about 40%, about 20% to about 35%, about 25% to about 30%, or about 50%.

[0249] The FC unit may allow increased enthalpy extraction from the reservoir and for the configuration of the casing to be optimized. Reservoir cross flow regions my result in "cold" zones in the well bore relative to the geothermal profile. These cooler zones, can result in reversal of thermal energy transfer from the reservoir to the closed loop and with it a loss of overall potential thermal recovery. Using one or more FC units within the DBHX to invert the flow pattern from the core to the annulus in the proximity to the cross flow zone(s) may ensure the temperature difference between the reservoir and the DBHX is always such that the

DBHX continues to recover enthalpy over the entire length. Similarly, the FC unit may also be applied when the cross flow reservoir horizons are hotter than the average geothermal profile in the well to ensure the efficiency of the DBHX is maximized.

[0250] The geothermal heating system comprising an FC may be completely in line with tubing. The geothermal heating system comprising an FC may be configured to avoid use a system of packers and set bypasses. A closed loop casing may be thread and run along the FC.

[0251] Net heat transfer Q is calculated by Equation 12:

$$Q = UA\,LMTD \tag{12}$$

Wherein:

[0252] U is the overall heat transfer coefficient measured in Watts per meters squared Kelvin ("$W/m^2 \cdot K$");

[0253] A is the area of the heat exchanger, measured is meters squared (m^2);

[0254] LMTD is the Log Mean Temperature Difference;

[0255] T1 is the reservoir hot temperature into the heat exchanger, measured in Kelvin ("K");

[0256] T2 is the reservoir cold temperature out of the heat exchanger, measured in Kelvin ("K");

[0257] Ta is the closed loop hot temperature exiting the heat exchanger for the fluid returning to the surface, measured in Kelvin ("K"); and

[0258] Tb is the closed loop cold temperature of the fluid entering into the heat exchanger from the surface, measured in Kelvin ("K").

[0259] The Log Mean Temperature Difference is determined by Equation 13.

$$LMTD = (dT1 - dT2)/\ln(dT1/dT2) \tag{13}$$

[0260] Co-current temperature difference is represented by Equations 14 and 15.

$$dT1 = \text{Reservoir hot fluid temprature in } (T1) - \text{Closed Loop cold fluid temperature in } (Tb) \tag{14}$$

$$dT2 = \text{Reservoir cold fluid temprature out } (T2) - \text{Closed Loop hot fluid temperature out } (Ta) \tag{15}$$

[0261] Counter-current temperature difference is represented by equations 16 and 17.

$$dT1 = \text{Reservoir hot fluid temprature in } (T1) - \text{Closed Loop hot fluid temperature out } (Ta) \tag{16}$$

$$dT2 = \text{Reservoir cold fluid temprature out } (T2) - \text{Closed Loop cold fluid temperature in } (Tb) \tag{17}$$

[0262] For co-current flow, the term Ln (dT1/dT2) may be much higher than that for counter flow resulting in a lower LMTD. Therefore, less heat will be exchanged for the same area. The closed loop hot fluid return temperature may be limited to less than the cold reservoir fluid temperature, thus allowing more energy to be extracted.

[0263] To illustrate, an exemplary system may have a reservoir fluid temperature (T1) of 240° C., a reservoir cold fluid temperature (T2) of 200° C., a closed loop cold fluid temperature (Tb) of 60° C., and a closed loop hot fluid temperature (Ta) of 190° C. Temperature Ta must be lower than the reservoir cold fluid temperature (T2) in a co-current heat system limiting the surface return temperature (Ta). of 190° C. assuming a 10° C. approach temperature. In the case of a counter current configuration, the surface return temperature of the closed loop is limited by the reservoir temperature (T1) and therefore the surface temperature (Ta) may be increased up to 230° C. in this configuration. The exemplary system may have an co-current LMTD of 58.8 and counter current LMTD of 87.4 (49.3 with a closed loop hot fluid temperature of 230° C.). These parameters provide 49% more energy (Q=UA LMTD) for exactly the same reservoir. The closed loop hot fluid return temperature may be increased up to 230° C. to recover additional energy.

[0264] Recovered heat energy Q_r is represented by Equation 18.

$$Q_r = \dot{m}\,Cp\,dT \tag{18}$$

Wherein:

[0265] $\dot{m}$ is the mass flow rate measured in kilograms per second ("kg/s");

[0266] Cp is the latent heat coefficient; and

[0267] dT is the change in the temperature of the medium, measured in K or ° C.

[0268] The change in temperature of the medium dT, is represented by Equation 19.

$$dT = Cl\ \text{Hot} - CL\ \text{Cold} \tag{19}$$

Wherein:

[0269] CL Hot is the closed loop hot fluid temperature; and

[0270] CL Cold is the closed loop cold fluid temperature.

[0271] Using the parameters in the example above, and applying Equation 19, The Co-current temperature difference is 130° C. (190° C.-60° C.), and the counter current temperature difference is 170° C. (230° C.-60° C.), allowing for 30% more energy to be recovered by changing the direction of flow and without changing any other mechanical component. Decreasing the size of the system may also achieve greater energy recovery.

[0272] The geothermal heating system may comprise a reservoir return channel. The reservoir return channel may be a multilateral channel, e.g., one or more lateral channel offshoots from a well bore. The reservoir return channel may

comprise a packer, a casing, cement, a proppant, tubing, an inlet, exchanger, a liner, a thermosiphon, or a combination thereof.

[0273] The geothermal heating system may be used in combination with a system or process using an ORC. The geothermal heating system may be in communication with a condenser. The condenser may be component of a temperature regulation system.

[0274] The geothermal heating system may be used in combination with a system or process using a combined cycle thermal loop. The geothermal heating system may be in communication with a condenser receiving an input form a steam turbine or refrigeration compressor.

[0275] The geothermal heating system may comprise a hydraulic driver that is situated within, above, or below the WBGHX. The hydraulic driver may be driven by a working medium. A high-mechanical-integrity seal may be present between the surface loop and the WBGHX. The WBGHX may be set on its own casing that is installed within the production casing to form the high-mechanical-integrity seal. The hydraulic drive may reject the circulation fluid into the WBGHX where it exchanges thermal energy with the circulated reservoir medium. The hydraulic drive may be coupled with a lower assembly pump or compressor section. The coupling may take the form of a mechanical coupler with seals, a hydraulic system, and/or a magnetic coupling if a high-mechanical-integrity seal is required.

[0276] The geothermal heating system may comprise a plurality of multilateral channels. Each of the plurality of multilateral channel may having a multichannel casing design that is the same as or different another multilateral channel. A multilateral channels may be disposed above another multilateral channel or above an FGC.

[0277] The coupling mechanism may be a direct drive or geared depending on the requirements of the system. The geothermal heating system may operate in either direction depending on the reservoir characteristics and to take advantage of the geothermal gradient for greater energy transfer and minimal parasitic load for reinjection.

[0278] Embodiments of the present invention provide a technology-based solution that overcomes existing problems with the current state of the art in a technical way to satisfy an existing problem for the extraction of thermal energy or minerals. Embodiments of the present invention achieve important benefits over the current state of the art, including but not limited to improved energy and/or mineral production efficiency. Some of the unconventional steps of embodiments of the present invention include the incorporation of an FGC.

[0279] The terms, "a", "an", "the", and "said" mean "one or more" unless context explicitly dictates otherwise. Note that in the specification and claims, "about", "approximately", and/or "substantially" means within twenty percent (20%) of the amount, value, or condition given.

[0280] Embodiments of the present invention can include every combination of features that are disclosed herein independently from each other. Although the invention has been described in detail with particular reference to the disclosed embodiments, other embodiments can achieve the same results. Variations and modifications of the present invention will be obvious to those skilled in the art and this application is intended to cover, in the appended claims, all such modifications and equivalents. The entire disclosures of all references, applications, patents, and publications cited above are hereby incorporated by reference. Unless specifically stated as being "essential" above, none of the various components or the interrelationship thereof are essential to the operation of the invention. Rather, desirable results can be achieved by substituting various components and/or reconfiguring their relationships with one another.

What is claimed is:

1. A system for geothermal heating, the system comprising:
- a forced geothermal circuit in communication with a well bore;
- a well bore heat exchanger;
- a multilateral channel;
- a channel casing design; and
- a pump.

2. The system of claim **1** wherein the pump is a submersible pump.

3. The system of claim **1** further comprising a circulation fluid.

4. The system of claim **3** wherein the circulation fluid comprises brine.

5. The system of claim **3** wherein the circulation fluid comprises carbon dioxide.

6. The system of claim **1** wherein the system for geothermal heating is in communication with an organic Rankine cycle.

7. The system of claim **1** further comprising a plurality of multilateral channels.

8. The system of claim **7** wherein one of the plurality of multilateral channels is disposed above another of the plurality of multilateral channels.

9. The system of claim **1** further comprising a thermosiphon.

10. The system of claim **1** wherein the well bore heat exchanger is a well bore gyroid heat exchanger.

11. The system of claim **1** further comprising a hydraulic drive.

12. A method for geothermal heating, the method comprising:
- passing a fluid into a thermal circulation system;
- passing the fluid into a well bore heat exchanger;
- heating the fluid;
- passing the heated fluid through a multilateral channel comprising a multilateral channel design casing; and
- passing a reservoir fluid and the fluid into a heat exchanger.

13. The method of claim **12** further comprising passing the heated fluid through a second multilateral channel comprising a multilateral channel design casing.

14. The method of claim **13** further comprising sequentially heating the heated fluid by passing the heated fluid through the second multilateral channel.

15. The method of claim **12** further comprising passing the heated fluid through a plurality of heating zones.

16. A method for a loop recovery process, the method comprising:
- passing a circulation fluid into a system for geothermal heating;
- passing the circulation fluid into a well bore heat exchanger;
- heating the circulation fluid;
- passing the heated circulation fluid out of the system for geothermal heating;

passing the heated circulation fluid through a heat exchanger of an organic Rankine cycle; and

cooling the circulation fluid.

17. The method of claim **16** further comprising heating a liquid flow of an organic Rankine cycle by contact with the circulation fluid.

18. The method of claim **17** further comprising passing the liquid flow into an evaporator.

19. The method of claim **17** further comprising cooling the liquid flow.

20. The method of claim **16** further comprising returning the circulation fluid to the system for geothermal heating.

* * * * *