US 20250255546A1

(19) **United States**

(12) **Patent Application Publication** (10) **Pub. No.: US 2025/0255546 A1**

Krause et al. (43) **Pub. Date: Aug. 14, 2025**

(54) **CLOSED LOOP ADJUSTMENT OF HEART FAILURE THERAPY**

(71) Applicant: **Medtronic, Inc.**, Minneapolis, MN (US)

(72) Inventors: **Paul G. Krause**, Mahtomedi, MN (US); **Yong Cho**, Excelsior, MN (US); **Can Cinbis**, Salt Lake City, UT (US); **Jonathan L. Kuhn**, Ham Lake, MN (US); **Tyler W. Stigen**, Brooklyn Park, MN (US); **Amanda D. Taylor**, Roseville, MN (US); **Shantanu Sarkar**, Roseville, MN (US); **Val D. Eisele, III**, Little Canada, MN (US); **Ryan D. Wyszynski**, Oak Grove, MN (US); **David Lanctin**, Minneapolis, MN (US); **Hyun J. Yoon**, Vadnais Heights, MN (US); **Steven G. Nelson**, Raynham, MA (US); **Kate G. Arnebeck**, Shoreview, MN (US); **Nirav A. Patel**, Dublin, OH (US); **Matthew T Reinke**, Roseville, MN (US); **Taylor Uhl**, Plymouth, MN (US); **Matthew J. Hoffman**, St. Paul, MN (US)

(21) Appl. No.: **18/857,066**

(22) PCT Filed: **Apr. 4, 2023**

(86) PCT No.: **PCT/IB2023/053409**

§ 371 (c)(1),
(2) Date: **Oct. 15, 2024**

Related U.S. Application Data

(60) Provisional application No. 63/363,458, filed on Apr. 22, 2022.

Publication Classification

(51) **Int. Cl.**

A61B 5/00	(2006.01)
A61B 5/0538	(2021.01)
A61B 5/364	(2021.01)
A61N 1/39	(2006.01)
G16H 10/60	(2018.01)
G16H 20/40	(2018.01)
G16H 50/30	(2018.01)

(52) **U.S. Cl.**

CPC ***A61B 5/4839*** (2013.01); ***A61B 5/0538*** (2013.01); ***A61B 5/364*** (2021.01); ***A61B 5/686*** (2013.01); ***A61B 5/7275*** (2013.01); ***A61N 1/3925*** (2013.01); ***A61N 1/3956*** (2013.01); ***G16H 10/60*** (2018.01); ***G16H 20/40*** (2018.01); ***G16H 50/30*** (2018.01); *A61B 2560/0468* (2013.01)

(57) **ABSTRACT**

A medical system includes an implantable cardiac device configured to monitor one or more cardio-thoracic parameters of a patient and one or more external devices configured to receive, from the implantable cardiac device, cardio-thoracic data indicative of the one or more cardio-thoracic parameters over a period of time; determine a long term heart failure risk (HFR) score for the patient based on the cardio-thoracic data; based on a change in the long term HFR score for the patient, determine a modification to a therapy plan of a second implanted device in the patient; and cause the second implanted device to implement the modified therapy plan.

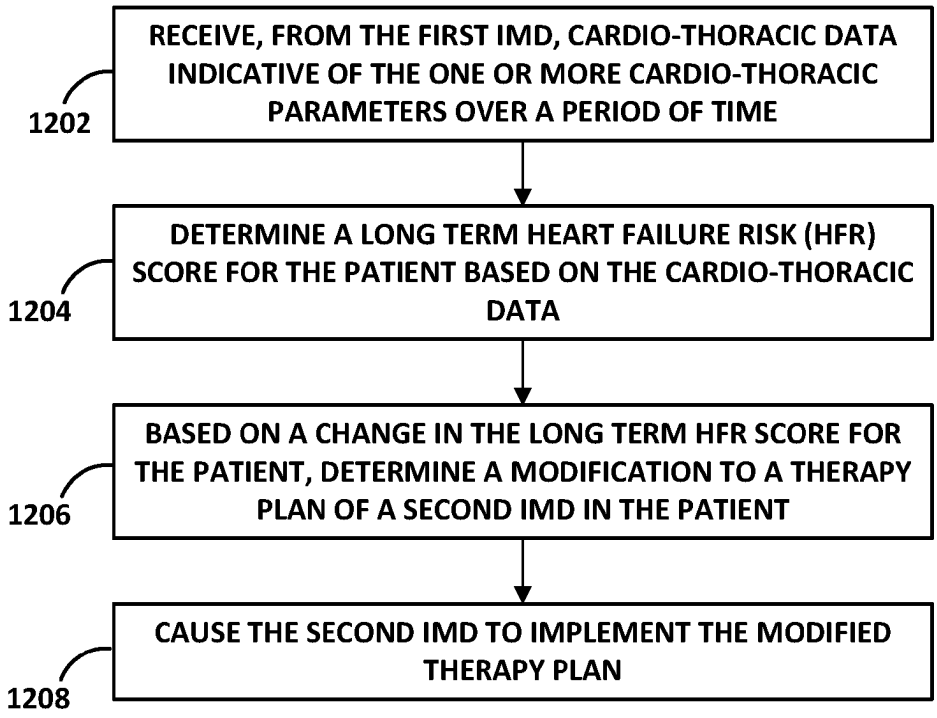

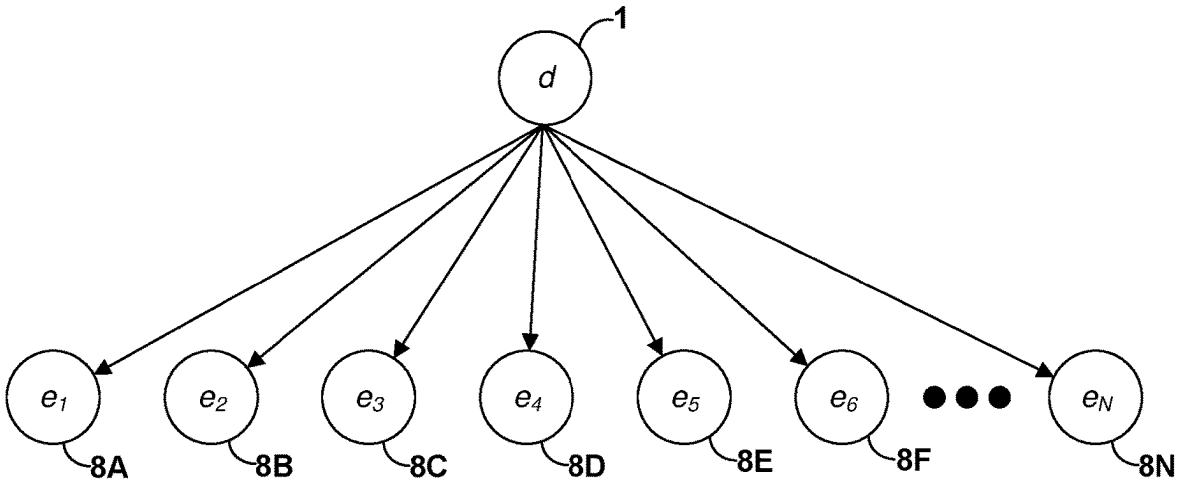

FIG. 1

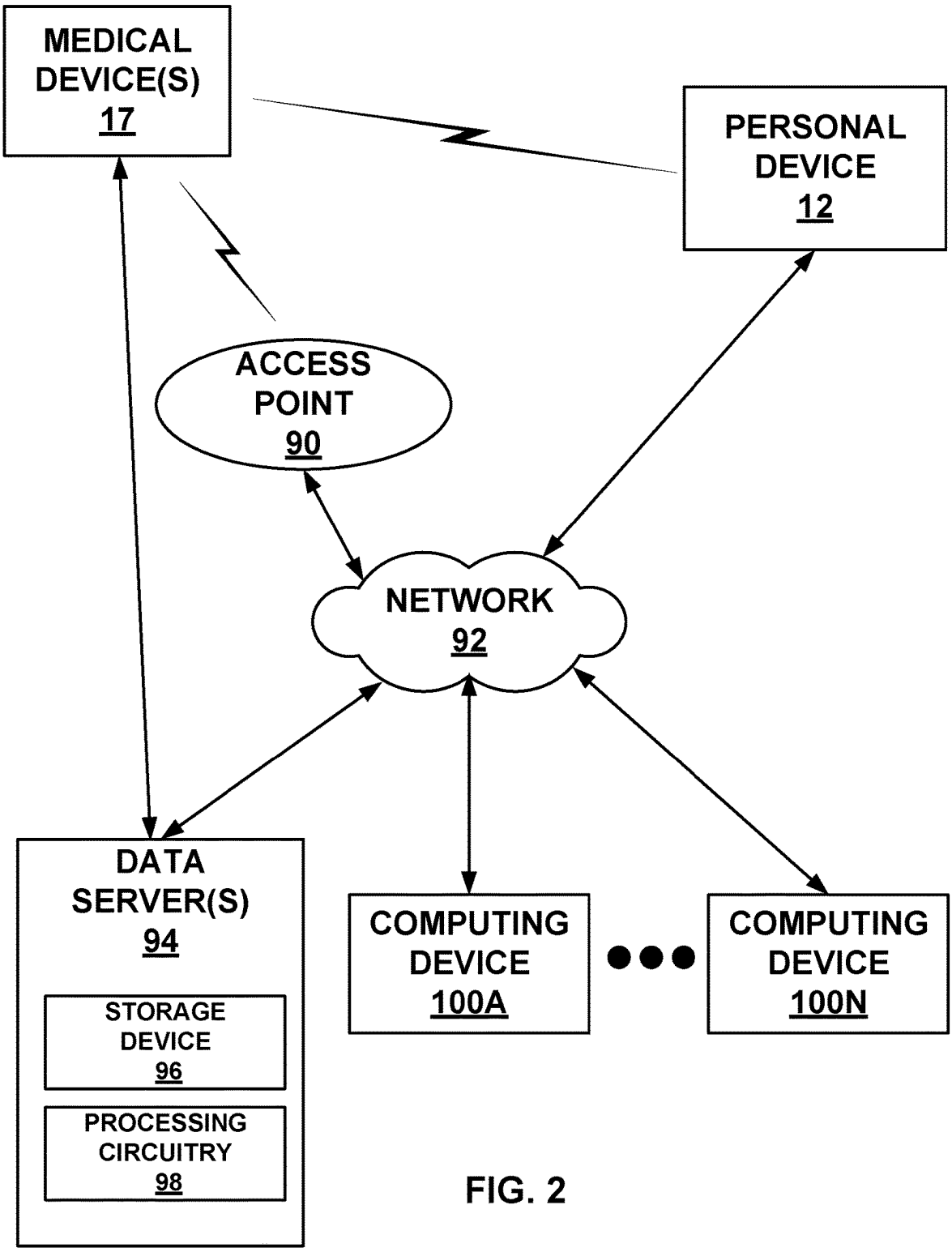
MEDICAL DEVICE(S) 17
PERSONAL DEVICE 12
ACCESS POINT 90
NETWORK 92
DATA SERVER(S) 94
STORAGE DEVICE 96
PROCESSING CIRCUITRY 98
COMPUTING DEVICE 100A
COMPUTING DEVICE 100N

FIG. 2

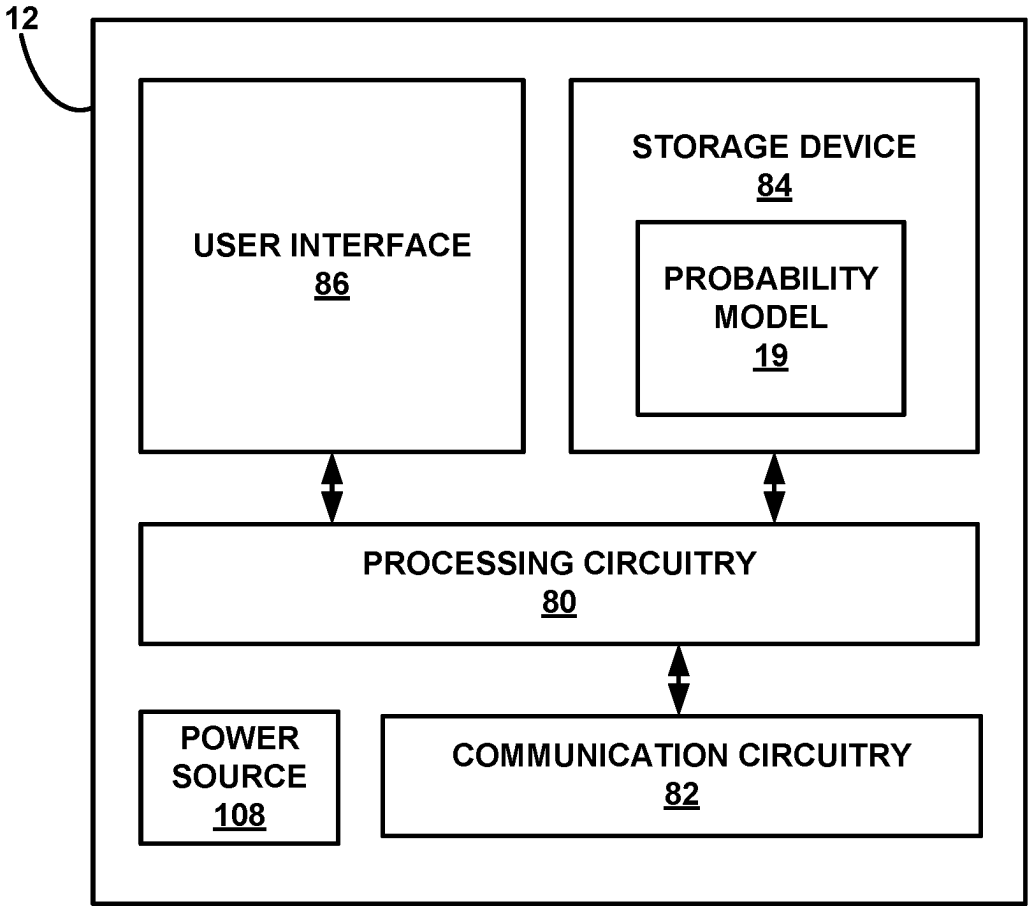
12
USER INTERFACE
86
STORAGE DEVICE
84
PROBABILITY MODEL
19
PROCESSING CIRCUITRY
80
POWER SOURCE
108
COMMUNICATION CIRCUITRY
82

FIG. 3

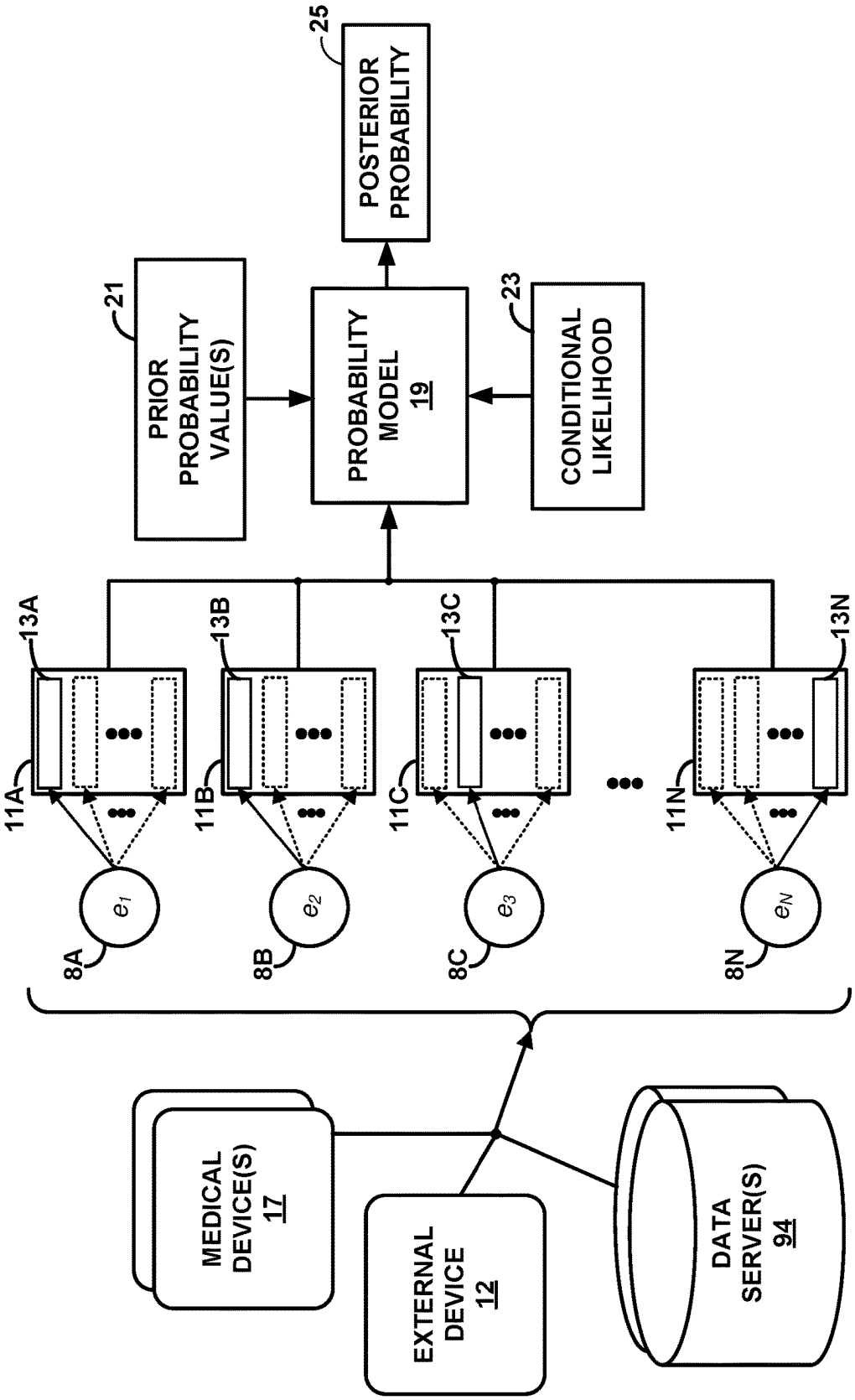
25
POSTERIOR PROBABILITY
21
PRIOR PROBABILITY VALUE(S)
PROBABILITY MODEL 19
23
CONDITIONAL LIKELIHOOD
13A
13B
13C
13N
11A
11B
11C
11N
e1
e2
e3
eN
8A
8B
8C
8N
MEDICAL DEVICE(S) 17
EXTERNAL DEVICE 12
DATA SERVER(S) 94

FIG. 4

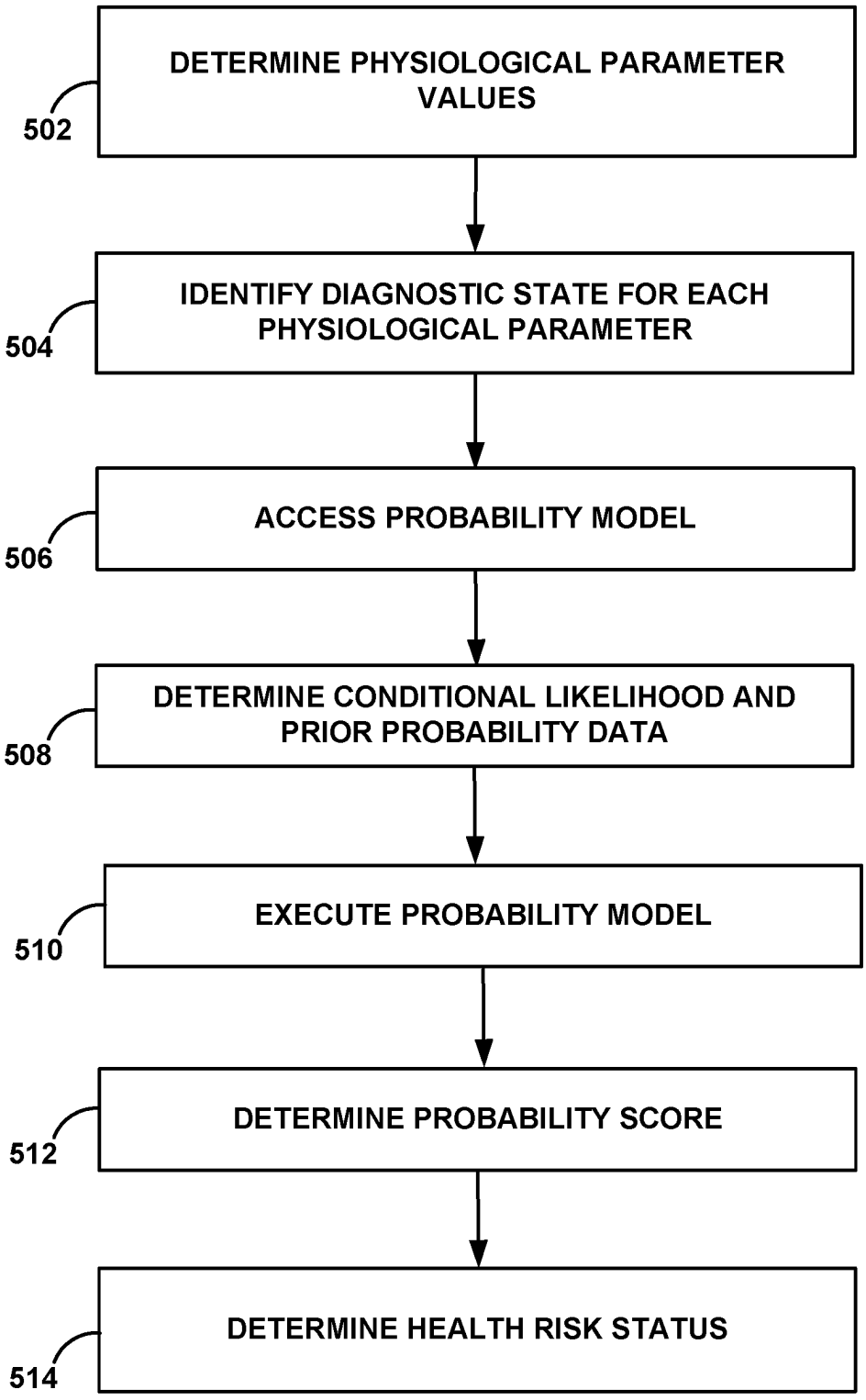
DETERMINE PHYSIOLOGICAL PARAMETER VALUES
502
IDENTIFY DIAGNOSTIC STATE FOR EACH PHYSIOLOGICAL PARAMETER
504
ACCESS PROBABILITY MODEL
506
DETERMINE CONDITIONAL LIKELIHOOD AND PRIOR PROBABILITY DATA
508
EXECUTE PROBABILITY MODEL
510
DETERMINE PROBABILITY SCORE
512
DETERMINE HEALTH RISK STATUS
514

FIG. 5

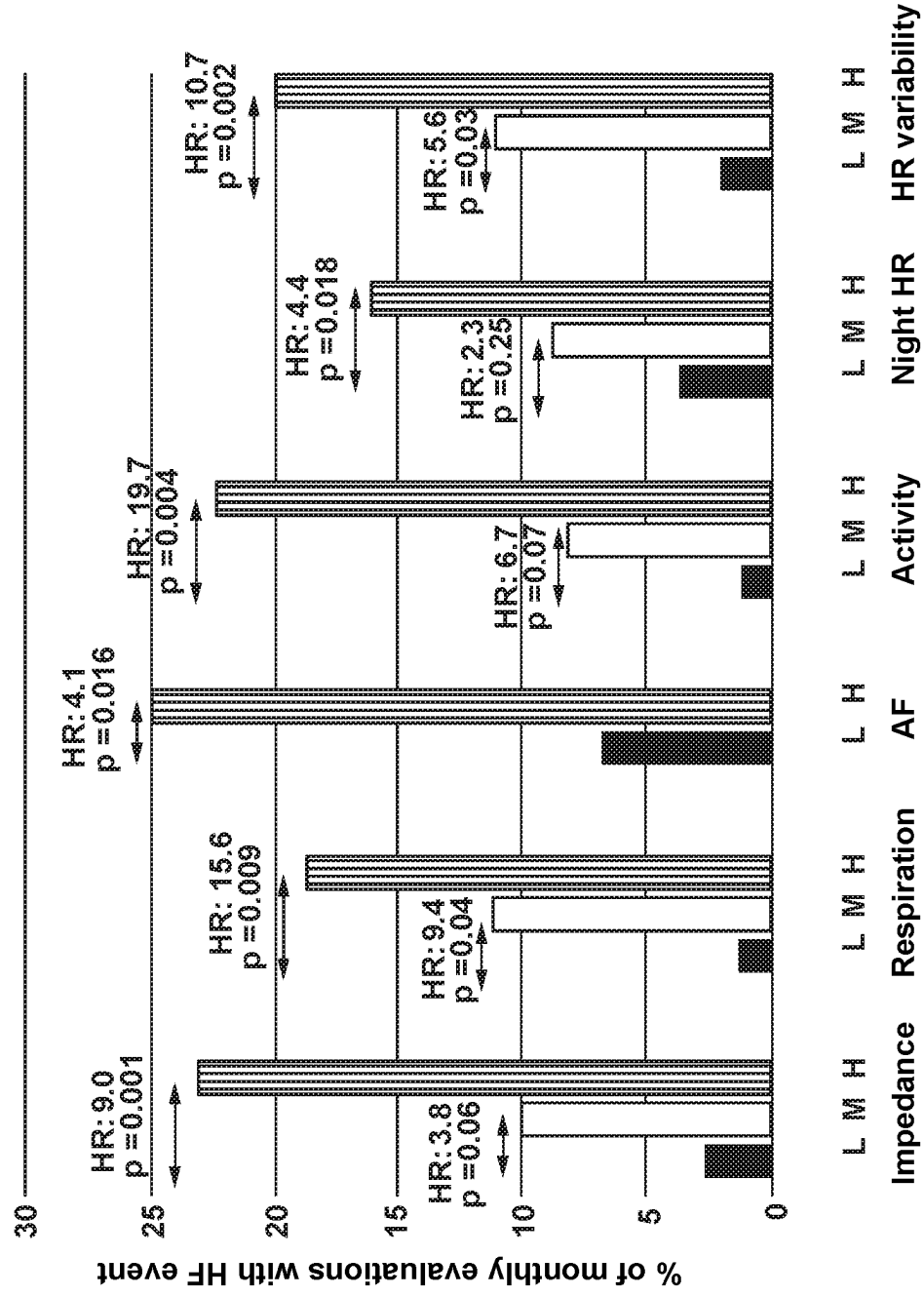
% of monthly evaluations with HF event
30
25
20
15
10
5
0
HR: 9.0
p =0.001
HR: 4.1
p =0.016
HR: 15.6
p =0.009
HR: 19.7
p =0.004
HR: 3.8
p =0.06
HR: 9.4
p =0.04
HR: 6.7
p =0.07
HR: 4.4
p =0.018
HR: 2.3
p =0.25
HR: 10.7
p =0.002
HR: 5.6
p =0.03
L M H
Impedance
L M H
Respiration
L H
AF
L M H
Activity
L M H
Night HR
L M H
HR variability

FIG. 6A

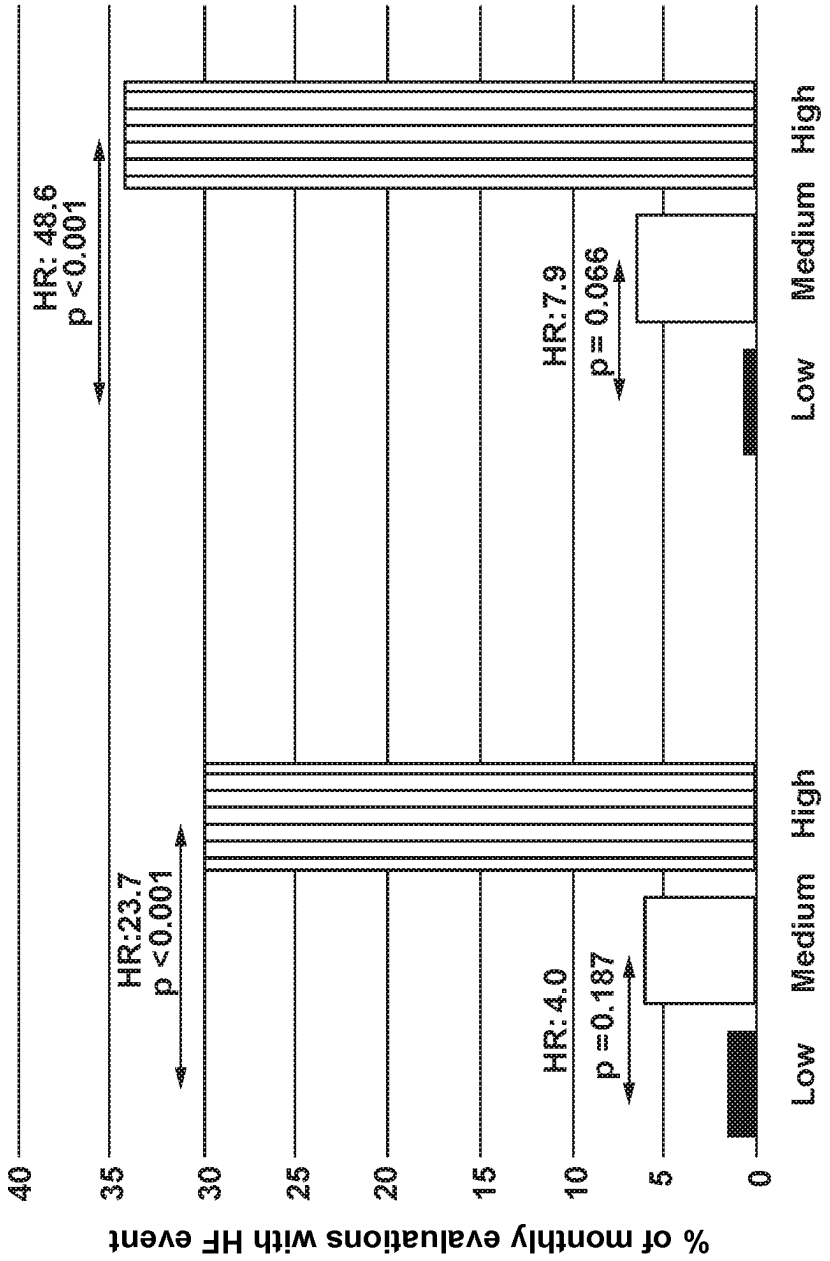
% of monthly evaluations with HF event
40
35
30
25
20
15
10
5
0
HR: 48.6
p <0.001
HR:23.7
p <0.001
HR: 4.0
p =0.187
HR:7.9
p = 0.066
Low
Medium
High
Low
Medium
High
Sum of scores
(Baseline)
Probability Model

FIG. 6B

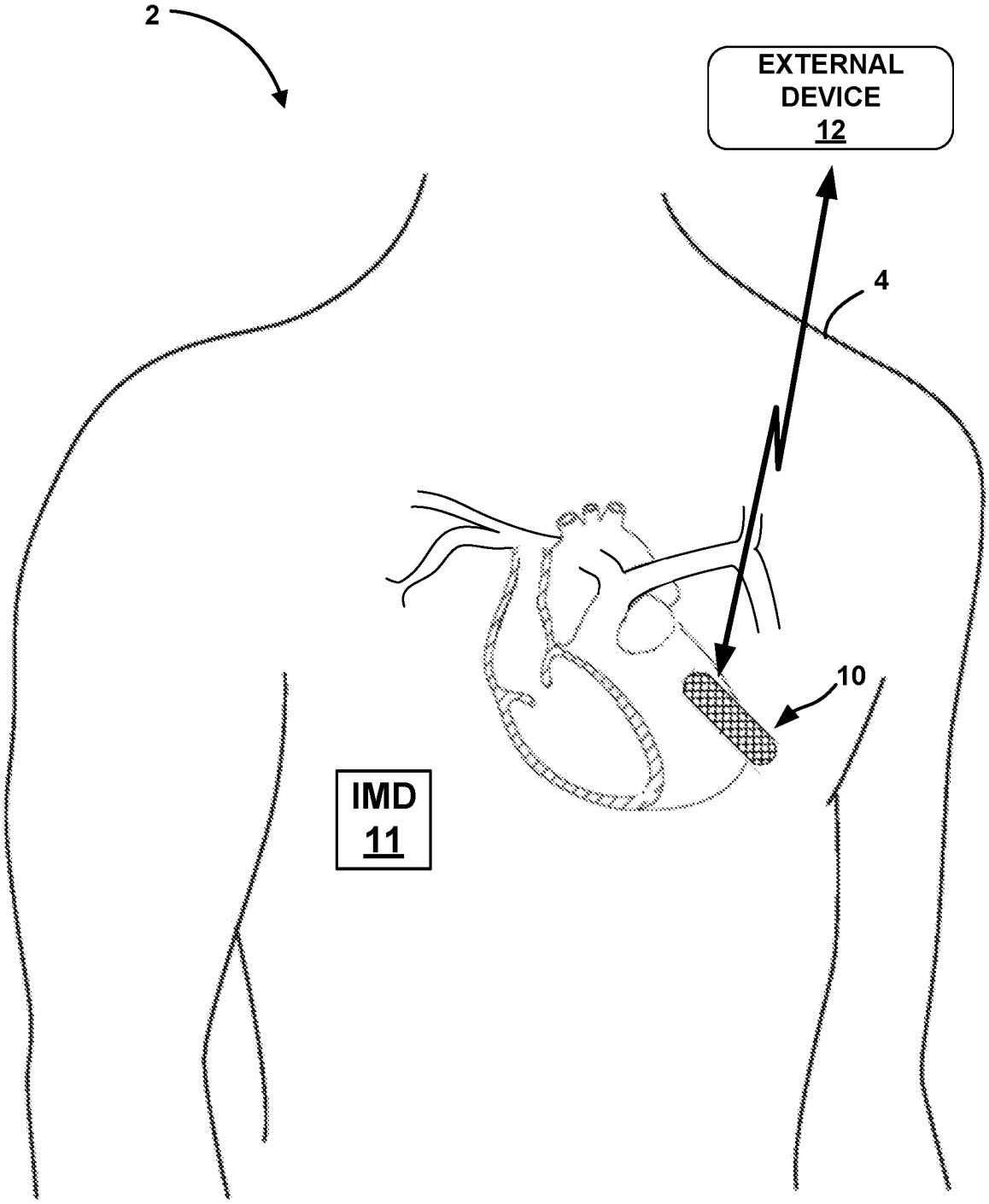

FIG. 7

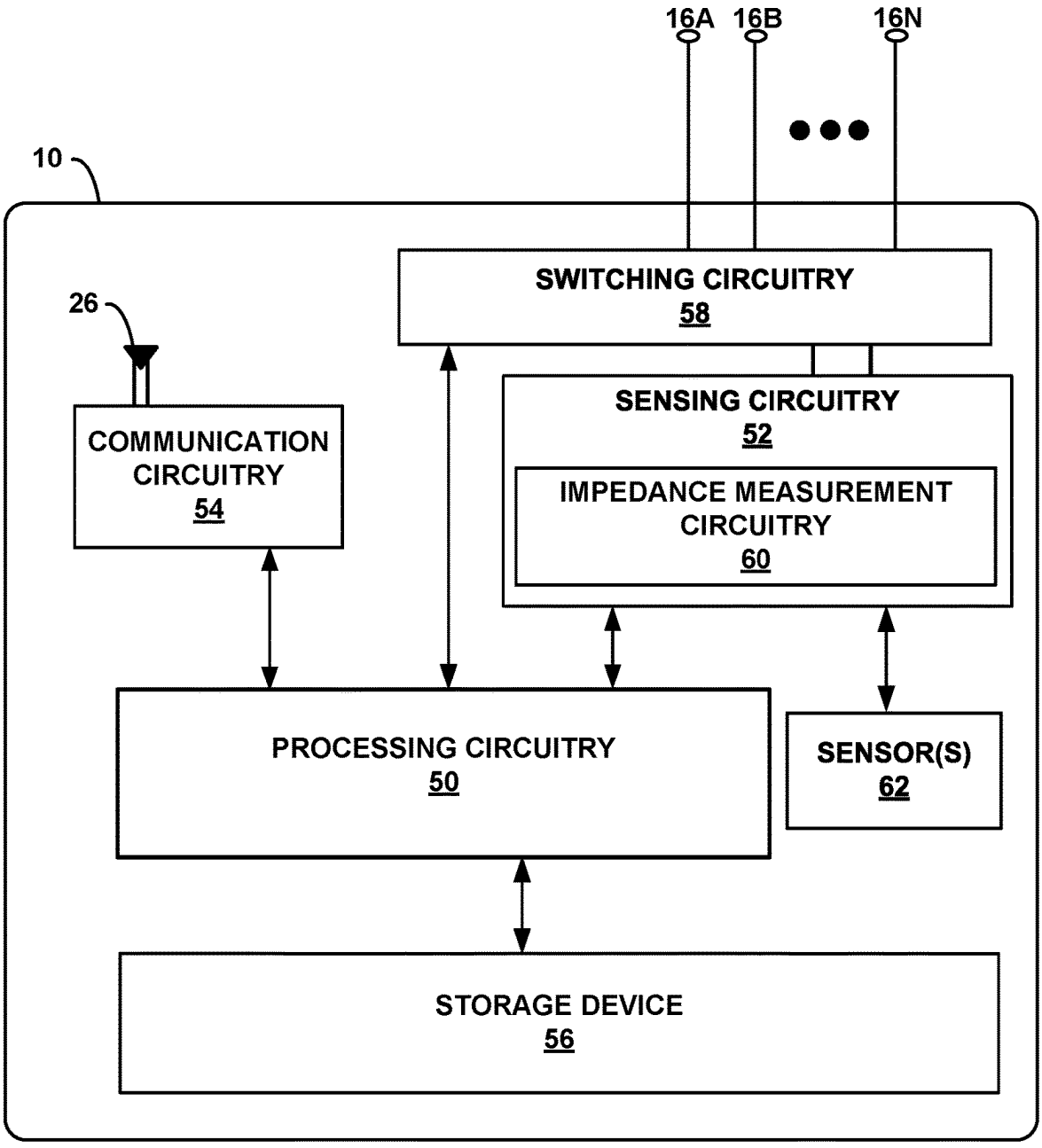
16A
16B
16N
10
26
SWITCHING CIRCUITRY
58
SENSING CIRCUITRY
52
IMPEDANCE MEASUREMENT CIRCUITRY
60
COMMUNICATION CIRCUITRY
54
PROCESSING CIRCUITRY
50
SENSOR(S)
62
STORAGE DEVICE
56

FIG. 8

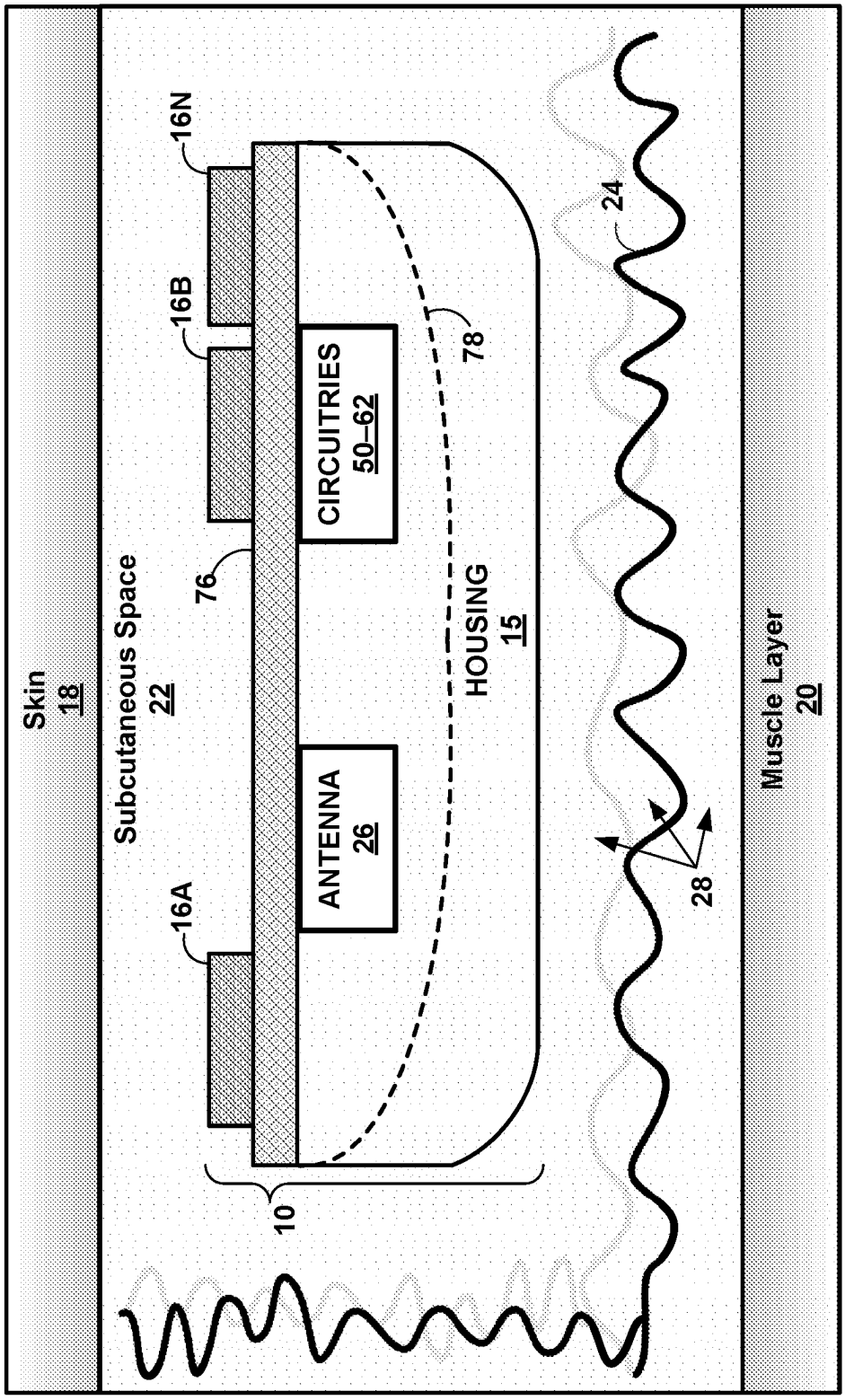
Skin
18
Subcutaneous Space
22
Muscle Layer
20
16A
16B
16N
76
78
ANTENNA
26
CIRCUITRIES
50–62
HOUSING
15
10
24
28

FIG. 9

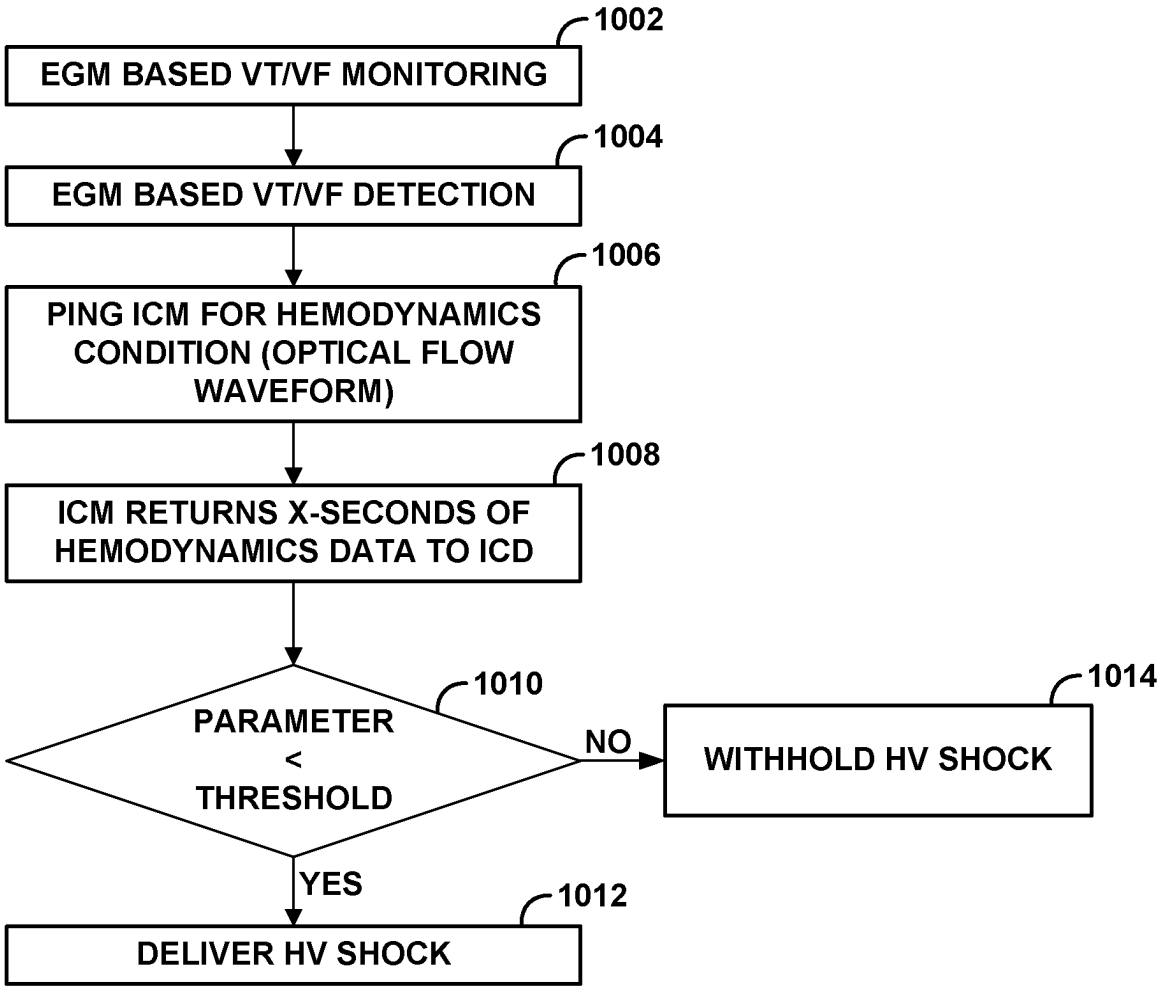
1002
EGM BASED VT/VF MONITORING
1004
EGM BASED VT/VF DETECTION
1006
PING ICM FOR HEMODYNAMICS CONDITION (OPTICAL FLOW WAVEFORM)
1008
ICM RETURNS X-SECONDS OF HEMODYNAMICS DATA TO ICD
1010
PARAMETER < THRESHOLD
NO
1014
WITHHOLD HV SHOCK
YES
1012
DELIVER HV SHOCK

FIG. 10

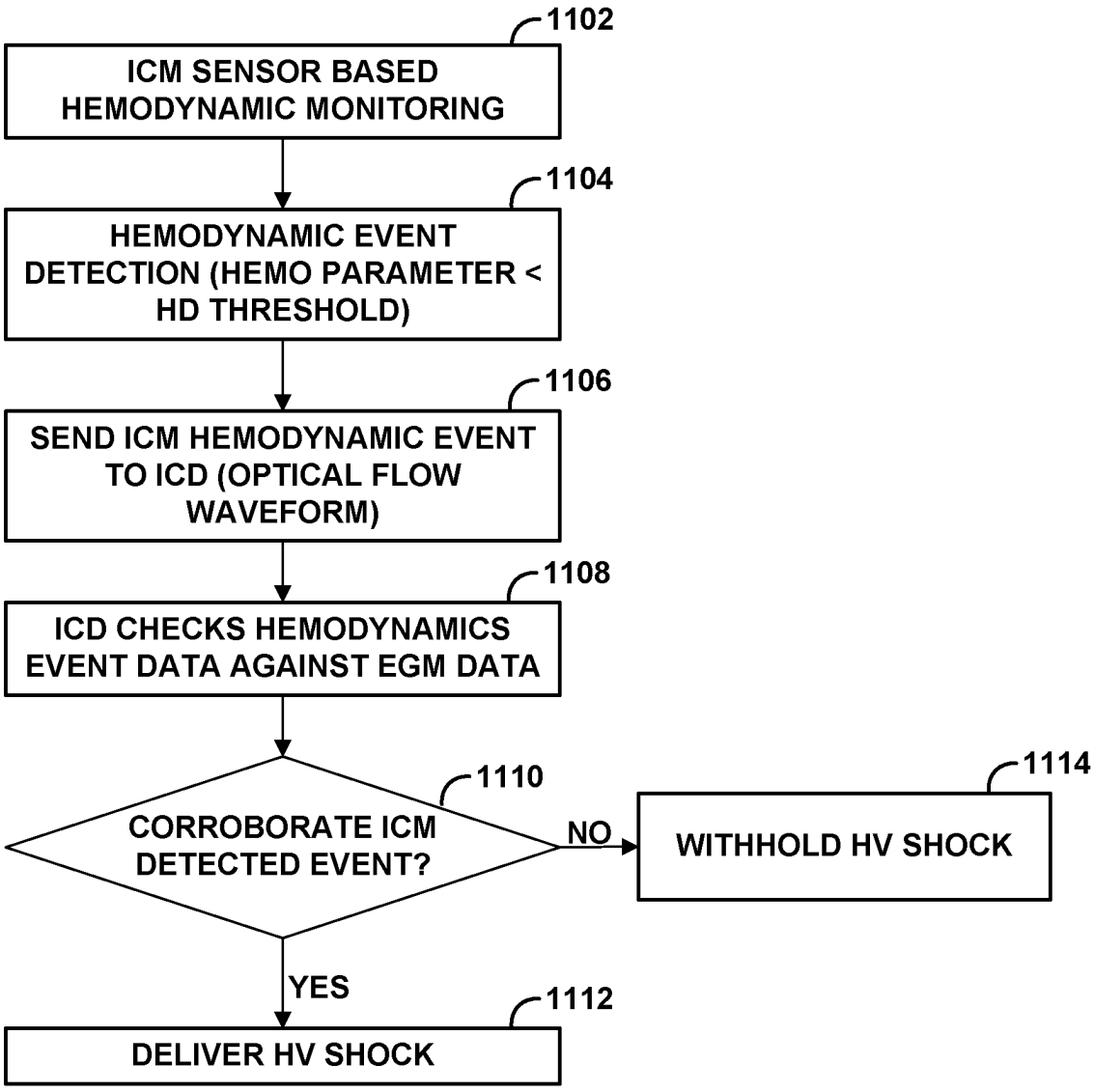
1102
ICM SENSOR BASED HEMODYNAMIC MONITORING
1104
HEMODYNAMIC EVENT DETECTION (HEMO PARAMETER < HD THRESHOLD)
1106
SEND ICM HEMODYNAMIC EVENT TO ICD (OPTICAL FLOW WAVEFORM)
1108
ICD CHECKS HEMODYNAMICS EVENT DATA AGAINST EGM DATA
1110
CORROBORATE ICM DETECTED EVENT?
NO
1114
WITHHOLD HV SHOCK
YES
1112
DELIVER HV SHOCK

FIG. 11

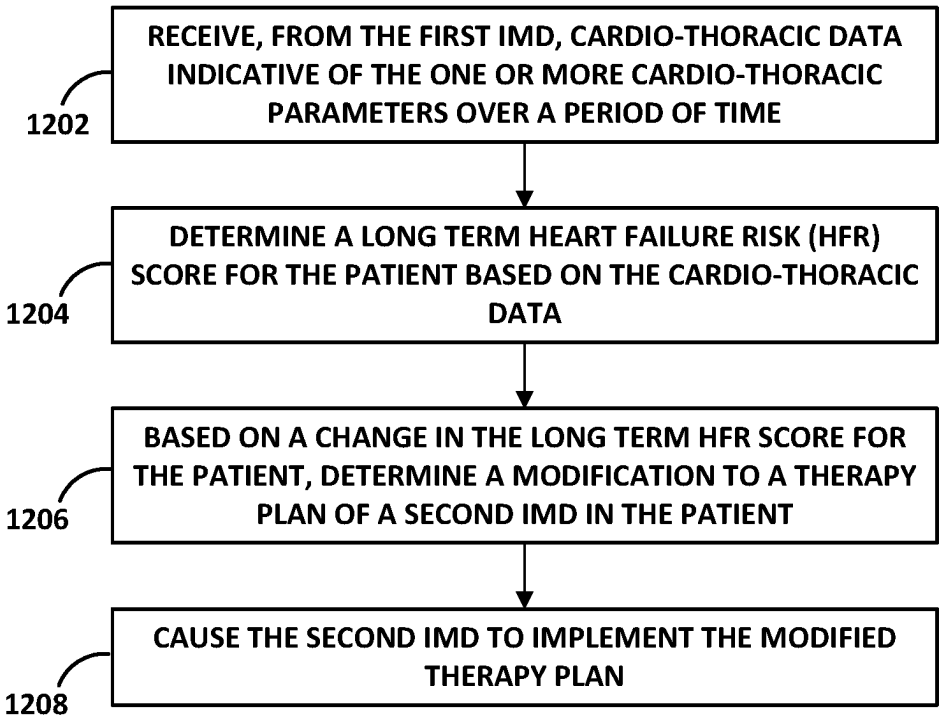
RECEIVE, FROM THE FIRST IMD, CARDIO-THORACIC DATA INDICATIVE OF THE ONE OR MORE CARDIO-THORACIC PARAMETERS OVER A PERIOD OF TIME
1202
DETERMINE A LONG TERM HEART FAILURE RISK (HFR) SCORE FOR THE PATIENT BASED ON THE CARDIO-THORACIC DATA
1204
BASED ON A CHANGE IN THE LONG TERM HFR SCORE FOR THE PATIENT, DETERMINE A MODIFICATION TO A THERAPY PLAN OF A SECOND IMD IN THE PATIENT
1206
CAUSE THE SECOND IMD TO IMPLEMENT THE MODIFIED THERAPY PLAN
1208

FIG. 12

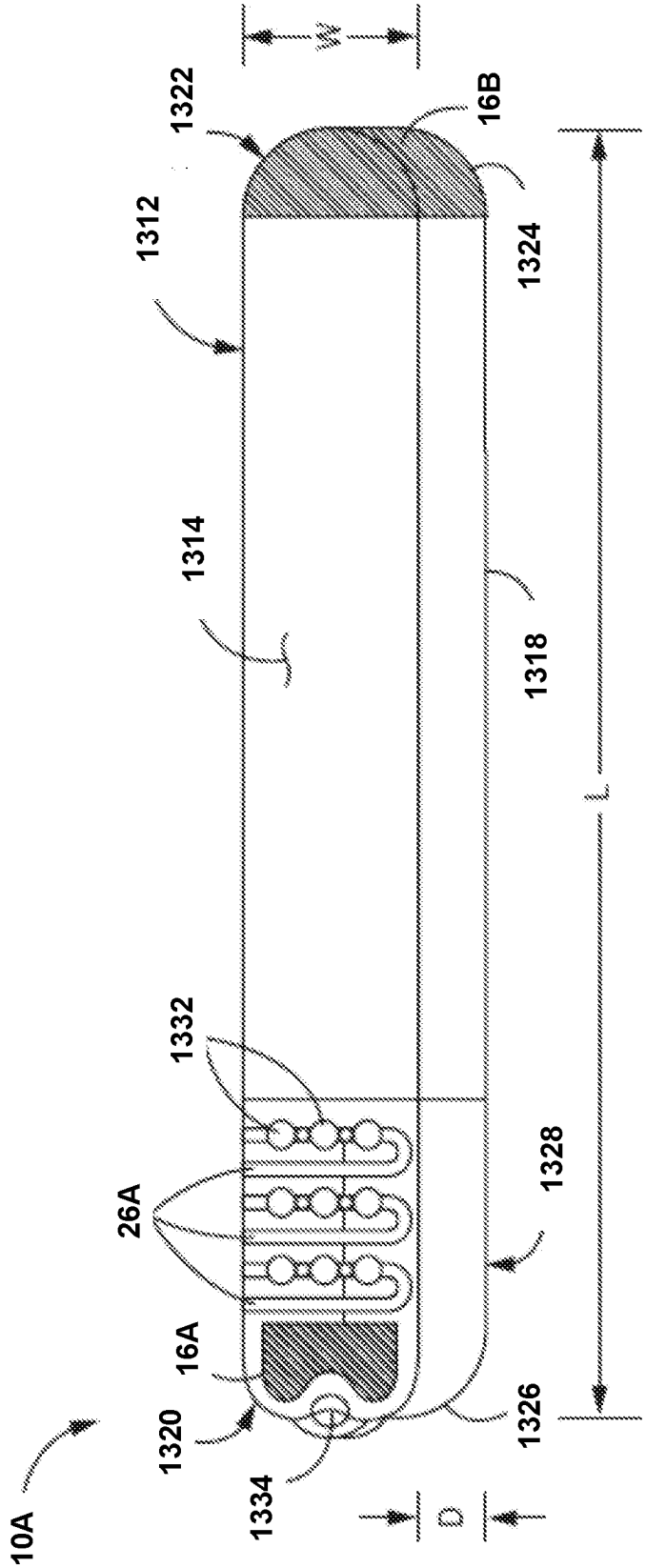
W
1322
16B
1312
1324
1314
1318
L
1332
1328
26A
16A
1320
1326
1334
D
10A

FIG. 13A

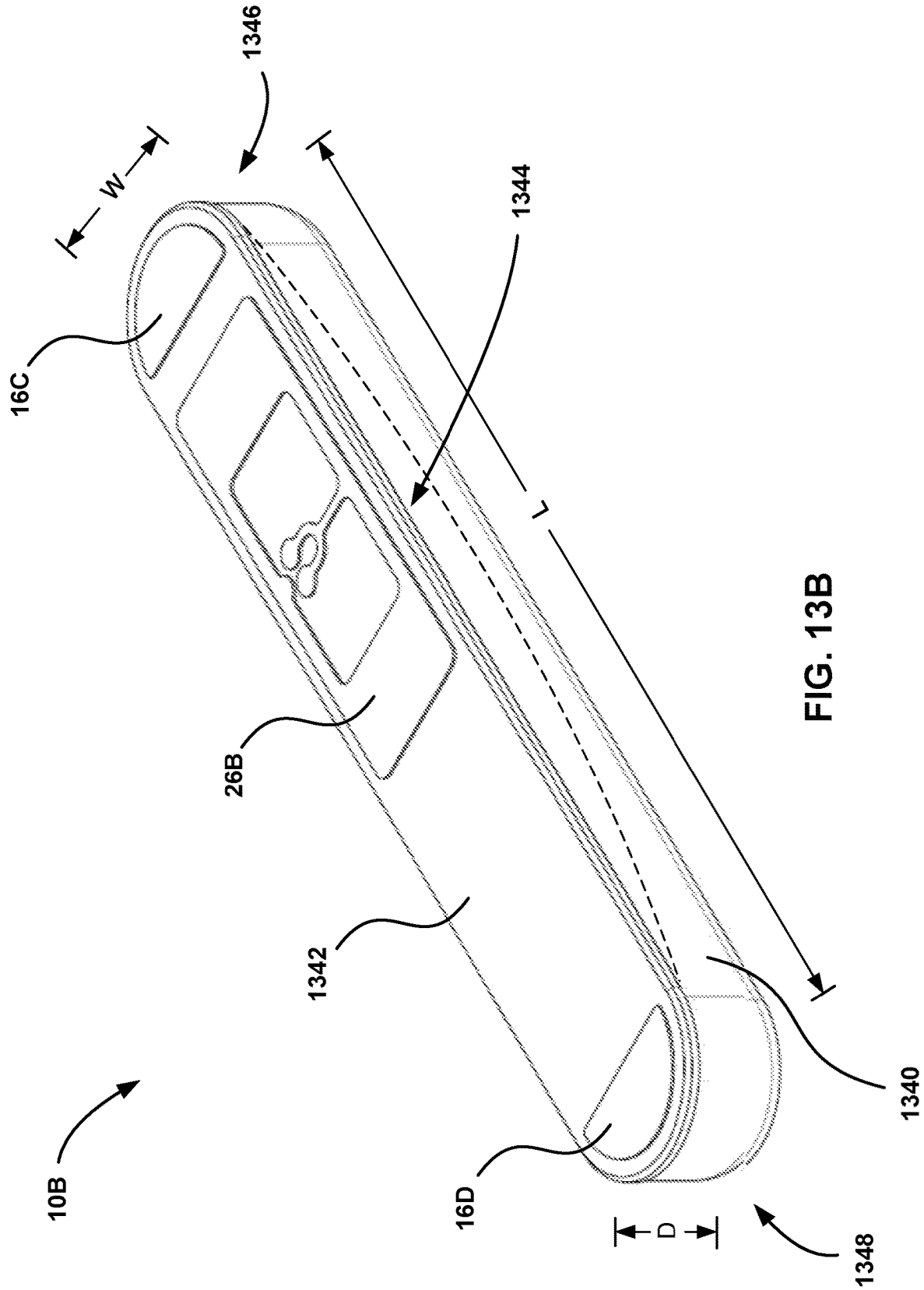

FIG. 13B

CLOSED LOOP ADJUSTMENT OF HEART FAILURE THERAPY

FIELD

[0001] The disclosure relates to medical devices and, more particularly, medical devices for detecting or monitoring heart conditions.

BACKGROUND

[0002] A variety of medical devices have been used or proposed for use to deliver a therapy to and/or monitor a physiological condition of patients. As examples, such medical devices may deliver therapy and/or monitor conditions associated with the heart, muscle, nerve, brain, stomach or other organs or tissue. Medical devices that deliver therapy include medical devices that deliver one or both of electrical stimulation or a therapeutic agent to the patient. Some medical devices have been used or proposed for use to monitor heart failure or to detect heart failure events.

[0003] Heart failure (HF) is the most common cardiovascular disease that causes significant economic burden, morbidity, and mortality. In the United States alone, roughly 5 million people have HF, accounting for a significant number of hospitalizations. HF may result in cardiac chamber dilation, increased pulmonary blood volume, and fluid retention in the lungs. Generally, the first indication that a physician has of HF in a patient is not until it becomes a physical manifestation with swelling or breathing difficulties so overwhelming as to be noticed by the patient who then proceeds to be examined by a physician. This is undesirable since hospitalization at such a time would likely be required for a cardiac heart failure patient to remove excess fluid and relieve symptoms.

SUMMARY

[0004] A system of this disclosure may advantageously improve patient outcomes by using relatively longer term data for a first implanted device to predictively determine, prior to a patient needing hospitalization or other serious intervention, that a patient's heart failure risk is worsening. Moreover, the system of this disclosure may use the relatively longer term data collected by the first implanted device to modify the therapy of a second implanted device in a manner that may lead to a reduction in a patient's heart failure risk. In this regard, this disclosure describes a closed-loop system of multiple implanted devices and one or more external devices that may continually monitor a patient's condition and modify patient therapy based on the monitoring. In this manner, the techniques of this disclosure may provide a clinical advantage in the improvement of the efficacy of therapy delivered to the patient in addressing the current HF condition of the patient.

[0005] In contrast to clinic visit/stay based monitoring of a patient's HF condition and adjustment of a patient's therapy, the techniques of this disclosure may be implemented by systems including implantable medical device (IMDs) and computing devices that can autonomously and continuously (e.g., on a periodic or triggered basis without human intervention) collect physiological parameter data while the implantable medical device is subcutaneously implanted in a patient over months or years and perform numerous operations per second on the data to enable the systems herein to determine HF risk (HFR) scores. Using techniques of this disclosure with an IMD may be advantageous when a physician cannot be continuously present with the patient over weeks or months to evaluate the physiological parameters and/or where performing the operations on the data described herein (e.g., application of a probability model) could not practically be performed in the mind of a physician. Using the techniques of this disclosure with autonomously/continuously operating IMDs and computing devices may provide a clinical advantage in timely detecting changes in a patient's HF condition and timely adjusting therapy to address changes.

[0006] In some examples, the techniques and systems of this disclosure may use a probability model to more accurately determine HFR scores based on physiological data collected by an IMD. In some examples, the probability model is trained with a set of training instances, where one or more of the training instances comprise data that indicate relationships between various input data and HFR scores. Because the probability model is trained with potentially thousands or millions of training instances, the probability model may reduce the amount of error in determining HFR scores. Reducing HFR score errors using the techniques of this disclosure may provide one or more technical and clinical advantages, such as increasing reliability of another device, user, and/or clinician on the accuracy of determining a patient's condition and improve resulting treatment of the patient and patient outcomes.

[0007] According to one example of this disclosure, a medical system includes an implantable cardiac device configured to monitor one or more cardio-thoracic parameters of a patient; and one or more external devices configured to: receive, from the implantable cardiac device, cardio-thoracic data indicative of the one or more cardio-thoracic parameters over a period of time; determine a long term heart failure risk (HFR) score for the patient based on the cardio-thoracic data; based on a change in the long term HFR score for the patient, determine a modification to a therapy plan of a second implanted device in the patient; and cause the second implanted device to implement the modified therapy plan.

[0008] According to another example of this disclosure, a method includes receiving, at an external device and from an implantable cardiac monitor (ICM), one or more cardio-thoracic parameters of a patient; determining based on the one or more cardio-thoracic parameters of the patient, a long term heart failure risk (HFR) score for the patient; based on a change in the long term HFR score for the patient, determining a modification to a therapy plan of a second implanted device in the patient; and causing the second implanted device to implement the modified therapy plan.

[0009] According to another example of this disclosure, a device includes a memory; and processing circuitry coupled to the memory and configured to: receive, from an implantable cardiac monitor (ICM), one or more cardio-thoracic parameters of a patient; determine based on the one or more cardio-thoracic parameters of the patient, a long term heart failure risk (HFR) score for the patient; based on a change in the long term HFR score for the patient, determine a modification to a therapy plan of a second implanted device in the patient; and cause the second implanted device to implement the modified therapy plan.

[0010] According to another example of this disclosure, a medical system comprising: a cardiac monitoring device configured to monitor one or more cardio-thoracic param-

eters of a patient; and one or more external devices configured to: receive, from the cardiac monitoring device, cardio-thoracic data indicative of the one or more cardio-thoracic parameters over a period of time; determine a long term heart failure risk (HFR) score for the patient based on the cardio-thoracic data; based on a change in the long term HFR score for the patient, determine a modification to a therapy plan of an implanted device in the patient; and cause the implanted device to implement the modified therapy plan.

[0011] The summary is intended to provide an overview of the subject matter described in this disclosure. It is not intended to provide an exclusive or exhaustive explanation of the systems, device, and methods described in detail within the accompanying drawings and description herein. Further details of one or more examples of this disclosure are set forth in the accompanying drawings and in the description below. Other features, objects, and advantages will be apparent from the description and drawings, and from the claims.

BRIEF DESCRIPTION OF THE DRAWINGS

[0012] FIG. **1** is an example diagram of a probability framework including evidence nodes from diagnostic states of various physiological parameters and one parent node.

[0013] FIG. **2** is a block diagram illustrating an example system that includes medical device(s) used to obtain diagnostic states from the various physiological parameters for use as evidence nodes.

[0014] FIG. **3** is a functional block diagram illustrating an example configuration of the external device of FIG. **2**.

[0015] FIG. **4** is a functional block diagram illustrating an example framework for a probability model to determine health risk probabilities for a patient using evidence obtained from the system of FIG. **2**.

[0016] FIG. **5** is a flow diagram illustrating an example process that may be performed by one or more medical devices (e.g., IMDs) and/or a computing device, in conjunction with probability model **19** of FIGS. **24**, to determine a probability score with respect to the patient, in accordance with one or more techniques disclosed herein.

[0017] FIG. **6**A illustrates a chart of individual physiological parameters that may serve as evidence nodes to the probability model of FIG. **4**.

[0018] FIG. **6**B illustrates a sum of individual probability scores of FIG. **6**A on the left and a chart of combined probability scores using a probability model based on various evidence nodes of FIG. **4** on the right.

[0019] FIG. **7** illustrates the environment of an example medical system in conjunction with the patient, including an example implantable medical device (IMD) used to determine physiological parameters of the patient.

[0020] FIG. **8** is a functional block diagram illustrating an example configuration of an IMD of FIG. **7**.

[0021] FIG. **9** is a conceptual side-view diagram illustrating an example IMD of the medical system of FIGS. **7** and **8** in greater detail.

[0022] FIG. **10** is a flow diagram illustrating an example process that may be performed by one or more medical devices (e.g., IMDs) and/or a computing device, in accordance with one or more techniques disclosed herein.

[0023] FIG. **11** is a flow diagram illustrating an example process that may be performed by one or more medical devices (e.g., IMDs) and/or a computing device, in accordance with one or more techniques disclosed herein.

[0024] FIG. **12** is a flow diagram illustrating an example process that may be performed by one or more medical devices (e.g., IMDs) and/or a computing device, in accordance with one or more techniques disclosed herein.

[0025] FIG. **13**A is a perspective drawing illustrating an example IMD.

[0026] FIG. **13**B is a perspective drawing illustrating another example IMD.

[0027] Like reference characters denote like elements throughout the description and figures.

DETAILED DESCRIPTION

[0028] In heart failure patients, diagnostic information may be predictive of a worsening or decompensation event that leads to hospitalization or death. In some instances, a heart failure patient may be implanted with multiple implantable medical devices (IMDs). According to the techniques of this disclosure, a multi-IMD system may include an implantable cardiac monitor (ICM), such as a Medtronic LINQ device (e.g., Reveal LINQ™ or LINQ II™), whose diagnostic information may be useful in adjusting the settings of a co-implanted therapy device, such as an implantable pulse generator (IPG), implantable cardioverter-defibrillator (ICD), subcutaneous ICD (S-ICD), extravascular ICD (EV-ICD), ventricular assist device (VAD), drug pump, or neurostimulator, to deliver therapy that reverses the worsening condition to hopefully avoid a medical event. Although this disclosure will largely describe systems that include at least one cardiac device, it should be understood that many of the techniques discloses herein may also be applicable to multi-device systems that do not include a cardiac device.

[0029] An example system of this disclosure includes an ICM, a second IMD, and one or more external devices. The second IMD may, for example, be a co-implanted therapy device. The one or more external devices may, for example, include a user device (e.g., a smartphone) and a cloud-based computing device. The ICM may be configured to collect cardio-thoracic data on a patient. The user device or the cloud-based computing device may analyze the cardio-thoracic data, possibly in conjunction with other patient data, using a predictive algorithm that determines a heart failure risk (HFR) score or otherwise assess a condition of the patient. If the predictive algorithm determines that the patient's medical condition is worsening, then the user device or the cloud-based computing device may signal to the second IMD that a therapy should be initiated or that a therapy parameter setting should be adjusted. The second IMD makes the appropriate adjustment and communicates back to the ICM, via the user device for example, that the adjustment has been completed.

[0030] The ICM may then continue to monitor the cardio-thoracic parameters of the patient to determine if the therapy adjustment was effective, meaning the patient condition has improved, or determine if the therapy adjustment was ineffective, meaning the patient condition did not improve or continued to degrade. If the first therapy adjustment was ineffective, then the system may initiate a second adjustment of the settings of the second IMD. If the system determines that the patient condition did improve to a normal or baseline condition, then the system, e.g., the user device, may signal

to the second IMD to cease delivery of a therapy or change therapy settings to something more appropriate for a normal medical state.

[0031] In one implementation of the techniques of this disclosure, the data is collected exclusively by the ICM and processed by one or more of the ICM, the user device, and the cloud-based computing device. Output from externally processed data may be conveyed back to the ICM and/or the second IMD via wireless (i.e., Bluetooth) communication. In another implementation, data collected by the ICM can be merged with secondary data sources, including wearable data (e.g., a smartwatch), input from the patient (e.g., presence of patient symptoms collected via a questionnaire on the user device), or electronic medical record (EMR) data. Additionally, the second IMD may also collect information that can be merged with the TCM data. All this data may be transmitted to clinicians to enable the clinicians to diagnose or treat the patient, often times before symptoms or before symptoms become severe.

[0032] Additionally, in accordance with the techniques of this disclosure, medical devices (e.g., IMDs including implantable therapy devices) may use in-device sensors within the medical devices to activate algorithms, perform sensing functions, deliver therapies, or the like. This disclosure describes devices, systems, and methods of using sensors from one or more devices separate from an IMD to provide sensor data to the IMD. The one or more devices may include implantable or wearable medical devices. In some examples, the IMD may use the received sensor data to improve the accuracy of detections of a particular signal and/or phenomenon within the body of a patient. In some examples, the IMD may use the received sensor data to optimize the timing of therapy deliveries to the patient.

[0033] In some examples, an IMD (e.g., an ICD) may use sensors in separate devices to enhance detection algorithms of the IMD. In some examples, the optical sensors of an ICM may be used in conjunction with an ICD. The ICD may, for example, request sensor data from the ICM and use the received sensor data to cross-check the outputs of the detection algorithms of the ICD. In other examples, the ICM may send detected event data to the ICD for confirmation of the existence of the event and for delivery of therapy stimulation to the patient.

[0034] In some examples, the IMD and/or separate device may determine the presence of a detectable event (e.g., a hemodynamic event) by comparing predetermined parameters for the sensed signals. The medical device and separate device can use any of a plurality of communications protocols including, but are not limited to, tissue conductive communication (TCC), Bluetooth (e.g., BLE), or the like. The medical device and separate device may have multiple means of communications.

[0035] In existing multi-IMD systems, the multiple IMDs typically use intra-body communication to make real-time therapy decisions. As one example, a patient may have an implanted cardiac device for delivering pacing or defibrillation therapy and may also have a drug pump for delivering drug therapy. In response to detecting an arrhythmia or other adverse event, the implanted cardiac device may cause the drug pump to deliver drug therapy in an attempt to reverse the adverse event. In contrast, using the techniques of this disclosure, an TCM may alternatively or additionally acquire long term data corresponding to one or more cardio-thoracic parameters of a patient and transmit the long term cardio-thoracic data to one or more non-implanted devices to process the data. The non-implanted devices may then modify the therapy delivery of a second implanted device based on the long term cardio-thoracic data. In this context, long term generally means the cardio-thoracic data covers at least multiple days, and more likely multiple weeks or months, as opposed to the near-instantaneous analysis that an ICD performs when making decisions on whether to provide defibrillation therapy.

[0036] A system of this disclosure may advantageously improve patient outcomes by using relatively longer term data for a first implanted device to predictively determine, prior to a patient needing hospitalization or other serious intervention, that a patient's heart failure risk is worsening. Moreover, the system of this disclosure may use the relatively longer term data collected by the first implanted device to modify the therapy of a second implanted device in a manner that may lead to a reduction in a patient's heart failure risk. In this regard, this disclosure describes a closed-loop system of multiple implanted devices and one or more external devices that may continually monitor a patient's condition and modify patient therapy based on the monitoring.

[0037] Additionally, a system of this disclosure may advantageously distribute functionality across multiple implanted devices, such that each implanted device of the system may be relatively smaller and less invasive and have longer battery life. For instance, in one example, implementation, the implanted cardiac device may be a non-therapy device that only monitors patient parameter data, while the second device is a therapy device that lacks the ability to monitor the patient parameters monitored by the implanted cardiac device.

[0038] In one example implementation of the techniques of this disclosure, in response to an external device determining, based on cardio-thoracic data collected by an ICM, that a patient's risk for heart failure has increased, the external device may cause an ICD or an S-ICD to go into a more sensitive mode, such that the ICD or S-ICD will be more likely to determine that the patient has an irregular heart rhythm, and/or more likely to provide defibrillation therapy in response to determining that the patient has an irregular heart rhythm. In another example implementation of the techniques of this disclosure, in response to an external device determining, based on cardio-thoracic data collected by an TCM, that a patient's risk for heart failure ha-s increased, the external device may cause a VAD to pump blood at higher rate. In another example implementation of the techniques of this disclosure, in response to an external device determining, based on cardio-thoracic data collected by an ICM, that a patient's risk for heart failure has increased, the external device may cause a pacemaker to increase a pacing rate or pacing percentage (or other amount) or adjust pace timing for cardiac resynchronization therapy optimization. In another example implementation of the techniques of this disclosure, in response to an external device determining, based on cardio-thoracic data collected by an ICM, that a patient's risk for heart failure has increased, the external device may cause a drug pump to increase a drug delivery rate, or initiate drug delivery.

[0039] As introduced above, in some examples of this disclosure, a monitoring devices, such as an ICM, may be used to monitor parameters that can be used for determining an HFR score, and in turn, the HFR score may be used to

modify operation of the monitoring device or other IMDs. In some examples, the prediction and/or probability modeling described herein for determining an HFR score may include Bayesian Belief Networks (BBN) or Bayesian machine learning (ML) models (these sometimes referred to as Bayesian Networks or Bayesian frameworks herein), Markov random fields, graphical models, artificial intelligence (AI) models (e.g., Naive Bayes classifiers), and/or other belief networks, such as sigmoid belief networks, deep belief networks (DBNs), etc. In other examples, the disclosed technology may leverage non-Bayesian prediction or probability modeling, such as frequentist inference modeling or other statistical models. In addition, known model-selection techniques, such as Bayesian information criterion (BIC) or Akaike information criterion (AIC), may be used to evaluate probability models prior to use.

[0040] In some examples, an integrated diagnostics model may be used to determine a number of criteria that are met based on each physiological parameter. For example, the probability model may determine that X of Y criteria have been met with respect to the physiological parameters. In such examples, Y may be the maximum number of criteria possible given the particular configuration of physiological parameters the probability model is using, and X may be a variable less than or equal to Y that increments based on the physiological parameters meeting certain criteria. In an illustrative example, the probability model may increment X in response to determining that the patient has an impedance score indicating a high diagnostic state and as such, may increment X.

[0041] Processing circuitry of one or more internal or external devices may determine, from the respective physiological parameter values, diagnostic states for each physiological parameter. A subcutaneous tissue impedance score, for example, may be used to determine a diagnostic state for the subcutaneous tissue impedance. Processing circuitry may compare the subcutaneous tissue impedance score to one or more risk thresholds to determine a diagnostic state of high (H) risk, medium (M) risk, or low (L) risk, in some examples. In some examples, processing circuitry may determine a joint diagnostic state based on multiple physiological parameters that are independent of one another.

[0042] In some examples, diagnostic states may include a finite number of potential diagnostic states for each physiological parameter (e.g., very high, high, medium, low, very low, etc.). For example, the diagnostic states may include states of high risk, medium risk, or low risk, for each physiological parameter. In some instances, one or more of the physiological parameters can have a different number of potential diagnostic states (e.g., one state, two states, three states, or more), whereas other physiological parameters may have a greater or lesser number of potential diagnostic states. For example, night heart rate (NHR) may have three diagnostic states (H, M, and L), whereas atrial fibrillation (AF) burden may have less than three diagnostic states (H and L). In other examples, diagnostic states may include a continuum or sliding spectrum of diagnostic state values, rather than discrete states.

[0043] Diagnostic states of the physiological parameters may be independent for each physiological parameter. For example, a diagnostic state for a first set of one or more physiological parameters may be independent of diagnostic states associated with one or more other physiological parameters. In some examples, the probability mode framework, such as a BBN framework, may include additional physiological parameters, where the respective values of the physiological parameters are conditionally independent of one another. In an example, a high NHR may indicate an increase in sympathetic tone associated with a worsening condition. In addition, a decrease in impedance could reflect an increase in retained fluid. In such examples, each of these physiological parameters for impedance and night heart rate may provide indications of a heart failure event. In accordance with techniques of this disclosure, however, each of these conditionally independent parameters may provide stronger evidence when used together to predict an adverse health event.

[0044] In an illustrative example, two example physiological parameters may be conditionally independent of one another in the absence of an adverse health event. To illustrate, in the presence of the adverse health event, such as an HF event or fluid overload, the two example physiological parameter variables may be correlated or dependent on one another, but in the absence of the adverse health event, the two variables may change independently from one another, indicating that the two variables are conditionally independent of one another. For example, in some instances, respiratory rate (RR) will increase, whereas subcutaneous impedance will decrease during an adverse health event, such as HF, because HF may be the cause of these changes but not an effect of such changes. For example, an increase in RR does not cause HF, whereas RR may increase as a result of HF. In another example, RR may increase when a patient has anemia, whereas subcutaneous impedance may not change either way as a result of the anemia.

[0045] In some examples, processing circuitry may identify diagnostic states for physiological parameters that the processing circuitry has deemed relevant to the goal of the probability model. In a non-limiting example, if the goal is to determine the likelihood of a clinically-significant HF event (e.g., meriting a remote-care phone call or clinic visit or hospital admission) in the next 30 days, certain physiological parameters are more relevant to that probability determination than others, whereas a probability model for determining the likelihood of a preeclampsia-onset event in the next 60 days may require more or less physiological parameter inputs and may require a modified version of the previous probability model or a different probability model altogether.

[0046] The diagnostic states may serve as evidence nodes for the probability model. FIG. **1** represents an example probability model framework that includes a parent node **1** and a plurality of evidence nodes **8**A-**8**N (collectively, "evidence nodes **8**"). Parent node **1** represents the posterior probability (e.g., the probability that an adverse health event is to occur based on diagnostic states of evidence nodes **8**). In an example, the adverse health event may include a HF event, where d=H, for illustration purposes. The probability model may include any number of evidence nodes **8**, as illustrated by evidence node **8**N. Each of evidence nodes **8** may correspond to one or more physiological parameters of a patient. As further discussed herein, each one of evidence nodes **8** may include a diagnostic state derived from one or more values that correspond to one or more physiological parameters. In examples involving discrete states of d, the posterior probability for the occurrence of the HF event (d=H) may be expressed as:

$$P(d = H \mid e_1, \ldots, e_N) = \frac{P(d = H) \prod_{i=1}^{N} P(e_i \mid d = H)}{\sum_{d_1} P(d) \prod_{i=1}^{N} P(e_i \mid d)}$$

[0047] In such examples, P(d) may represent a prior probability value, $P(e_i|d)$ may represent a conditional likelihood parameter, d represents parent node **1**, and e_1-e_N represent evidence nodes **8** in FIG. **1**. Processing circuitry may determine the prior probability value and the conditional likelihood from existing physiological parameter values prior to clinical event d in previous clinical study data. In some examples, the conditional likelihood parameter may assume, using previous probability data, what probability distribution is likely to exist, such that the processing circuitry can assume what probability scores are unlikely based on previous probability data. In some examples, the prior probability value may include a probability distribution absent any diagnostic states to use as evidence nodes. In other words, the prior probability value is what processing circuitry may believe at a particular point of time, whereas the posterior probability is what processing circuitry may believe in the presence of incoming diagnostic information.

[0048] In some examples, the probability score may include a joint probability distribution. In an example, for a n-node Bayesian network (where pai is the parent node of node xi), the joint probability distribution may be expressed as:

$$P(x_i, \ldots, x_n) = \prod_{i}^{N} P(x_i \mid pa_i),$$

[0049] For example, a posterior probability may involve determining joint probability distributions and defining multiple combinations of conditional probabilities. A probability model may provide a framework for assumptions regarding the explicit relationship between parameter values to make these determinations more feasible. For example, Bayesian theory may assign explicit relationships between parameter values in order to determine posterior probability scores from the various evidence nodes **8** in FIG. **1**.

[0050] For example, a posterior probability may include a posterior distribution. In some cases, the posterior distribution may include a Gaussian distribution. In other cases, the posterior distribution may include a non-Gaussian distribution.

[0051] In some examples, processing circuitry may determine and/or utilize conditional likelihood tables, BBN tables, prior probability values, etc. For example, the conditional likelihood parameters may take the form of conditional likelihood tables defined for each diagnostic state for each physiological parameter. The posterior probability may then be tabulated for all possible combinations of diagnostic states to determine a posterior probability, or in some instances, a probability table.

[0052] In some instances, a single evidence node may be derived from multiple physiological parameters, such as with a MultiVariable Node (MVN). In an example, MVNs may be based on multiple physiological parameters, such as AF burden as a first physiological parameter and ventricular rate values as a second physiological parameter, where the physiological parameters factor into a single evidence node.

[0053] Processing circuitry may use the evidence nodes as input to a probability model to determine a posterior probability score. In such instances, the posterior probability score indicates a likelihood that a patient will experience an adverse health event within a predetermined period of time (e.g., within 30 days of determining the probability score). As discussed herein, the probability model may use as additional inputs the prior probability value and a conditional likelihood parameter to determine the posterior probability score. In some examples, processing circuitry may then update the probability model using the determined posterior probability score.

[0054] In some examples, the probability score is compared to one threshold for each of one or more risk levels (e.g., high risk threshold, medium risk threshold, low risk threshold). In an example, the probability score may be compared to two thresholds to provide hysteresis in the alert decision. In such examples, an alert may be generated when the probability score crosses a first, higher threshold. The alert is ended when the probability score subsequently crosses a second, lower threshold. By generating alerts in this manner, a device may generate fewer "sporadic" alerts that may be misinterpreted by the patient or a clinician when the probability score fluctuates near the higher, alert threshold value. In addition, the device may provide hysteresis alerts for a plurality of risk levels. For example, medium and/or low risk alerts may also have hysteresis thresholds.

[0055] FIG. **2** is a block diagram illustrating an example system that includes one or more medical device(s) **17**, an access point **90**, a network **92**, external computing devices, such as data servers **94**, and one or more other computing devices **100**A-**100**N (collectively, "computing devices **100**"). In some examples, medical device(s) **17** may include multiple IMDs, including an ICM like that of IMD **10** described with reference to FIGS. **7**-**9**. Medical device(s) **17** may also include an implantable pulse generator, an ICD, an S-ICD, a VAD, or a drug pump. In this example, medical device(s) **17** may use communication circuitry **54** to communicate with personal device **12** via a first wireless connection, and to communicate with an access point **90** via a second wireless connection.

[0056] In one or more of the various example techniques described with reference to FIG. **2**, access point **90**, personal device **12**, data server(s) **94**, and computing devices **100** may be interconnected and may communicate with each other through network **92**. Network **92** may include a local area network, wide area network, or global network, such as the Internet. The example system described with reference to FIG. **2** may be implemented, in some aspects, with general network technology and functionality similar to that provided by the Medtronic CareLink® Network, developed by Medtronic, Inc., of Minneapolis, MN.

[0057] Access point **90** may include a device that connects to network **92** via any of a variety of connections, such as telephone dial-up, digital subscriber line (DSL), or cable modem connections. In other examples, access point **90** may be coupled to network **92** through different forms of connections, including wired or wireless connections. In some examples, access point **90** may be a user device, such as a tablet or smartphone, that may be co-located with the patient.

[0058] Medical device(s) **17** may be configured to transmit data, such as sensed, measured, and/or determined values of physiological parameters (e.g., heart rates, impedance mea-

surements, impedance scores, fluid indices, respiratory rate, activity data, cardiac electrograms (EGMs), historical physiological data, blood pressure values, etc.), to access point **90** and/or personal device **12**. In some examples, medical device(s) **17** may be configured to determine multiple physiological parameters. For example, medical device(s) **17** may include an IMD **10** configured to determine respiration rate values, subcutaneous tissue impedance values, EGM values. In such examples, IMD **10** may provide multiple physiological parameters to serve as evidence nodes to the probability model **19**. Access point **90** and/or personal device **12** may then communicate the retrieved data to data server(s) **94** via network **92**.

[0059] In some instances, one or more of medical device (s) **17** may transmit data over a wired or wireless connection to data server(s) **94** or to personal device **12**. For example, data server(s) **94** may receive data from medical device(s) **17** or from personal device **12**. In another example, personal device **12** may receive data from data server(s) **94** or from medical device(s) **17**, such as physiological parameter values, diagnostic states, or probability scores, via network **92**. In such examples, personal device **12** may determine the data received from data server(s) **94** or from medical device (s) **17** and may store the data to storage device **84** (FIG. **3**) accordingly.

[0060] In addition, one or more of medical device(s) **17** may serve as or include data server(s) **94**. For example, medical device(s) **17** may include enough storage capacity or processing power to perform the techniques disclosed herein on a single one of medical device(s) **17** or on a network of medical device(s) **17** coordinating tasks via network **92** (e.g., over a private or closed network). In some examples, one of medical device(s) **17** may include at least one of the data server(s) **94**. For example, a portable/bedside patient monitor may be able to serve as a data server, as well as serving as one of medical device(s) **17** configured to obtain physiological parameter values from patient **4**. In other examples, data server(s) **94** may communicate with each of medical device(s) **17**, via a wired or wireless connection, to receive physiological parameter values or diagnostic states from medical device(s) **17**. In a non-limiting example, physiological parameter values may be transferred from medical device(s) **17** to data server(s) **94** and/or to personal device **12**.

[0061] In some cases, data server(s) **94** may be configured to provide a secure storage site for data that has been collected from medical device(s) **17** and/or personal device **12**. In some instances, data server(s) **94** may include a database that stores medical- and health-related data. For example, data server(s) **94** may include a cloud server or other remote server that stores data collected from medical device(s) **17** and/or personal device **12**. In some cases, data server(s) **94** may assemble data in web pages or other documents for viewing by trained professionals, such as clinicians, via computing devices **100**. One or more aspects of the example system described with reference to FIG. **2** may be implemented with general network technology and functionality, which may be similar to that provided by the Medtronic CareLink® Network.

[0062] In some examples, one or more of computing devices **100** may be a tablet or other smart device located with a clinician, by which the clinician may program, receive alerts from, and/or interrogate medical device(s) **17**. For example, the clinician may access data collected by medical device(s) **17** through a computing device **100**, such as when patient **4** is in between clinician visits, to check on a status of a medical condition. In some examples, the clinician may enter instructions for a medical intervention for patient **4** into an application executed by computing device **100**, such as based on a status of a patient condition determined by medical device(s) **17**, personal device **12**, data server(s) **94**, or any combination thereof, or based on other patient data known to the clinician.

[0063] One computing device **100** may transmit instructions for medical intervention to another of computing devices **100** located with patient **4** or a caregiver of patient **4**. For example, such instructions for medical intervention may include an instruction to change a drug dosage, timing, or selection, to schedule a visit with the clinician, or to seek medical attention. In further examples, a computing device **100** may generate an alert to patient **4** (or relay an alert determined by a medical device **17**, personal device **12**, or data sever **94**) based on a probability score (e.g., posterior probability) determined from physiological parameter values of patient **4**, which may enable patient **4** proactively to seek medical attention prior to receiving instructions for a medical intervention. In this manner, patient **4** may be empowered to take action, as needed, to address his or her medical status, which may help improve clinical outcomes for patient **4**.

[0064] In the example illustrated by FIG. **2**, data server(s) **94** includes a storage device **96** (e.g., to store data retrieved from medical device(s) **17**) and processing circuitry **98**. Although not illustrated in FIG. **2** computing devices **100** may similarly include a storage device and processing circuitry. Processing circuitry **98** may include one or more processors that are configured to implement functionality and/or process instructions for execution within data server (s) **94**. For example, processing circuitry **98** may be capable of processing instructions stored in memory **96**. Processing circuitry **98** may include, for example, microprocessors, DSPs, ASICs, FPGAs, or equivalent discrete or integrated logic circuitry, or a combination of any of the foregoing devices or circuitry. Accordingly, processing circuitry **98** may include any suitable structure, whether in hardware, software, firmware, or any combination thereof, to perform the functions ascribed herein to processing circuitry **98**. Processing circuitry **98** of data server(s) **94** and/or the processing circuitry of computing devices **100** may implement any of the techniques described herein to analyze physiological parameters received from medical device(s) **17**, e.g., to determine a probability score of patient **4**.

[0065] In some examples, storage device **96** of data server (s) **94** may store a probability model **19**. In some examples, personal device **12** may store probability model **19**. For example, data server(s) **94** may transmit probability model **19** to personal device **12**, where personal device **12** may store the probability model **19** in a memory device of personal device **12** (not shown in FIG. **2**). Personal device **12** and/or data server(s) **94** may use the probability model **19** to determine a probability score with respect to a health risk for patient **4**.

[0066] Processing circuitry **98** of data server(s) **94** and/or the processing circuitry of computing devices **100** may also retrieve instructions for utilizing a selected probability model (e.g., one selected using a known selection technique) and execute the probability model to determine the probability score. Processing circuitry **98** of data server(s) **94**

and/or the processing circuitry of computing devices **100** may retrieve such data and instructions from storage device **96** or in some instances, from another storage device, such as from one of medical devices **17**.

[0067] Storage device **96** may include a computer-readable storage medium or computer-readable storage device. In some examples, memory **96** includes one or more of a short-term memory or a long-term memory. Storage device **96** may include, for example, RAM, DRAM, SRAM, magnetic discs, optical discs, flash memories, or forms of EPROM or EEPROM. In some examples, storage device **96** is used to store data indicative of instructions for execution by processing circuitry **98**.

[0068] In accordance with the techniques of this disclosure, an implantable cardiac device of medical device(s) **17** may be configured to monitor one or more cardio-thoracic parameters of a patient and transmit, to one or more processing devices, cardio-thoracic data indicative of the one or more cardio-thoracic parameters over a period of time. In some examples, the implantable cardiac device may transmit the cardio-thoracic data in response to the implantable cardiac device or the second implanted devices detecting a triggering event. In the example of FIG. **2**, the one or more processing devices may include any combination of personal device **12**, data server(s) **94**, or computing devices **100**. The one or more processing devices may determine a long term HFR score for the patient based on the cardio-thoracic data, using any of the probability modeling described herein or alternative probability modeling. Based on a change in the long term HFR score for the patient, the one or more processing devices may determine a modification to a therapy plan of a second implanted device of medical device(s) **17** and cause the second implanted device to implement the modified therapy plan. To cause the second implanted device to implement the modified therapy plan, the one or more processing devices may be configured to automatically cause the second implanted device to implement the modified therapy plan without human interaction or may be configured to present a recommended modified therapy plan to a clinician for the clinician to approve.

[0069] The one or more processing devices may be configured to store, in data server(s) **94**, results data for the patient. The results data may, for example, include an indication of whether or not the clinician approved the recommended modified therapy plan and an outcome of the patient associated with the recommended modified therapy plan. The one or more processing devices may base future recommended modified therapy plans, for the patient as well as for other patients, based on the results data stored in data server(s) **94**.

[0070] In accordance with the techniques of this disclosure, an implantable cardiac device of medical device(s) **17** may be configured to monitor one or more cardio-thoracic parameters of a patient and in response to a triggering event, transmit, to one or more processing devices, cardio-thoracic data indicative of the one or more cardio-thoracic parameters over a period of time. For example, the implantable cardiac device may collect a continuous buffer of ECG or heart rate intervals (e.g., using a longer and/or higher resolution than the second implanted device. Upon a triggering event (e.g., the second implanted device detects an arrythmia), the second implanted device may cause the implantable cardiac device to uplink the ECG/interval buffer to the external processing devices, which may enable better triage from the physician without compromising the battery life of the second implanted device, which may be a therapy device.

[0071] In accordance with the techniques of this disclosure, a medical device of medical device(s) **17** may detect extracardiac stimulation, via an accelerometer or muscle noise for example, and in response, the one or more external devices may modify a pacing output or vector used by an implanted device of medical device(s) **17**. The system may, for example, identify capture by looking at a far-field ECG or plethysmogram to enhance capture management.

[0072] FIG. **3** is a block diagram illustrating an example configuration of components of personal device **12**. In some examples, personal device **12** includes processing circuitry **80**, communication circuitry **82**, storage device **84**, and user interface **86**.

[0073] Processing circuitry **80** may include one or more processors that are configured to implement functionality and/or process instructions for execution within personal device **12**. For example, processing circuitry **80** may be capable of processing instructions stored in storage device **84**. Processing circuitry **80** may include, for example, microprocessors, DSPs, ASICs, FPGAs, or equivalent discrete or integrated logic circuitry, or a combination of any of the foregoing devices or circuitry. Accordingly, processing circuitry **80** may include any suitable structure, whether in hardware, software, firmware, or any combination thereof, to perform the functions ascribed herein to processing circuitry **80**.

[0074] Communication circuitry **82** may include any suitable hardware, firmware, software or any combination thereof for communicating with another device, such as one of medical device(s) **17** (e.g., IMD **10**). Under the control of processing circuitry **80**, communication circuitry **82** may receive downlink telemetry from, as well as send uplink telemetry to, one of medical device(s) **17** (e.g., IMD **10**), or another device (e.g., data server(s) **94**). Communication circuitry **82** may be configured to transmit or receive signals via inductive coupling, electromagnetic coupling, near-field communication (NFC) technologies (e.g., inductive coupling, NFC or other communication technologies operable at ranges less than 10-20 cm), RF communication, Bluetooth®, Wi-Fi™, or other proprietary or non-proprietary wireless communication schemes. Communication circuitry **82** may also be configured to communicate with devices other than medical device(s) **17** via any of a variety of forms of wired and/or wireless communication and/or network protocols.

[0075] Storage device **84** may be configured to store information within personal device **12** during operation. Storage device **84** may include a computer-readable storage medium or computer-readable storage device. In some examples, storage device **84** includes one or more of a short-term memory or a long-term memory. Storage device **84** may include, for example, RAM, DRAM, SRAM, magnetic discs, optical discs, flash memories, or forms of EPROM or EEPROM. In some examples, storage device **84** is used to store data indicative of instructions for execution by processing circuitry **80**. Storage device **84** may be used by software or applications running on personal device **12** to temporarily store information during program execution.

[0076] Storage device **84** may store one or more probability models **19**. Storage device **84** may also store historical data, diagnostic state data, physiological parameter values, probability scores, etc.

[0077] Data exchanged between personal device **12** and medical device(s) **17** may include operational parameters (e.g., physiological parameter values, diagnostic states, etc.). Personal device **12** may transmit data including computer readable instructions which, when implemented by medical device(s) **17**, may control medical device(s) **17** to change one or more operational parameters and/or export collected data (e.g., physiological parameter values). For example, processing circuitry **80** may transmit an instruction to medical device(s) **17** which requests medical device(s) **17** to export collected data (e.g., impedance data, fluid index values, and/or impedance scores, blood pressure, ECG records, etc.) to personal device **12**.

[0078] In turn, personal device **12** may receive the collected data from medical device(s) **17** and store the collected data in storage device **84**. Processing circuitry **80** may implement any of the techniques described herein to model physiological parameter values received from medical device(s) **17** to determine diagnostic states, probability scores, etc. Using the modeling techniques disclosed herein, processing circuitry **80** may determine a likelihood that the patient is experiencing an adverse health event (e.g., heart failure decompensation) or is likely to experience an adverse health event within a predetermined amount of time (e.g., within the next 3 days, 7 days, 10 days, 30 days, 40 days, etc.). In an illustrative example, the predetermined amount of time may be at least approximately 7 days from when the probability score is determined, such that the probability score indicates the likelihood that an adverse health event will occur in the next 7 days or indicates that the patient is likely already experiencing an adverse health event, such as heart failure decompensation.

[0079] Personal device **12** may be a computing device with a display viewable by a user and an interface for providing input to personal device **12** (i.e., a user input mechanism). The user may be a physician technician, surgeon, electrophysiologist, clinician, or patient **4**. In some examples, personal device **12** may be a notebook computer, tablet computer, computer workstation, one or more servers, cellular phone, personal digital assistant, handheld computing device, networked computing device, or another computing device that may run an application that enables the computing device to interact with IMD **10**. Personal device **12** is configured to communicate with IMD **10** and, optionally, another computing device, via wired or wireless communication. Personal device **12**, for example, may communicate via NFC technologies (e.g., inductive coupling, NFC or other communication technologies operable at ranges less than 10-20 cm) and far-field communication technologies (e.g., Radio Frequency (RF) telemetry according to the 802.11 or Bluetooth® specification sets, or other communication technologies operable at ranges greater than NFC technologies). In some examples, personal device **12** may include a programming head that may be placed proximate to the body of patient **4** near the IMD **10** implant site in order to improve the quality or security of communication between IMD **10** and personal device **12**.

[0080] In one example, a user, such as a clinician or patient **4**, may interact with personal device **12** through user interface **86**. User interface **86** includes a display (not shown), such as a liquid crystal display (LCD) or a light emitting diode (LED) display or other type of screen, with which processing circuitry **80** may present information related to medical device(s) **17** (e.g., cardiac EGMs, blood pressure, subcutaneous impedance values, RR, etc.). In addition, user interface **86** may include an input mechanism to receive input from the user. The input mechanisms may include, for example, any one or more of buttons, a keypad (e.g., an alphanumeric keypad), a peripheral pointing device, a touch screen, or another input mechanism that allows the user to navigate through user interfaces presented by processing circuitry **80** of personal device **12** and provide input. In other examples, user interface **86** also includes audio circuitry for providing audible notifications, instructions or other sounds to the user, receiving voice commands from the user, or both.

[0081] In some examples, user interface **86** of personal device **12** may receive input from the user. The user interface may include for example, a keypad and a display, which may for example, be a cathode ray tube (CRT) display, an LCD, or an LED display. The keypad may take the form of an alphanumeric keypad or a reduced set of keys associated with particular functions. Personal device **12** can additionally or alternatively include a peripheral pointing device, such as a mouse, via which the user may interact with the user interface. In some examples, a display of personal device **12** may include a touch screen display, and a user may interact with personal device **12** via the display. It should be noted that the user may also interact with personal device **12** remotely via a networked computing device.

[0082] Personal device **12** may be coupled to external electrodes, or to implanted electrodes via percutaneous leads. In some examples, personal device **12** may monitor subcutaneous tissue impedance measurements from IMD **10**. Personal device **12** may be used to configure operational parameters for IMD **10**. For example, personal device **12** may provide a parameter resolution for IMD **10** that indicates a resolution of data that IMD **10** should be obtaining. Examples of resolution parameters may include a frequency at which the electrodes process impedance measurements or a frequency at which impedance measurements should be considered in determining a diagnostic state.

[0083] Power source **108** delivers operating power to the components of personal device **12**. Power source **108** may include a battery and a power generation circuit to produce the operating power. In some embodiments, the battery may be rechargeable to allow extended operation. Recharging may be accomplished by electrically coupling power source **108** to a cradle or plug that is connected to an alternating current (AC) outlet. In addition or alternatively, recharging may be accomplished through proximal inductive interaction between an external charger and an inductive charging coil within personal device **12**. In other embodiments, traditional batteries (e.g., nickel cadmium or lithium ion batteries) may be used. In addition, personal device **12** may be directly coupled to an alternating current outlet to power personal device **12**. Power source **108** may include circuitry to monitor power remaining within a battery. In this manner, user interface **86** may provide a current battery level indicator or low battery level indicator when the battery needs to be replaced or recharged. In some cases, power source **108** may be capable of estimating the remaining time of operation using the current battery.

[0084] FIG. **4** illustrates a framework that uses a medical system, such as system **2**, to monitor health events and the

likelihood of health events of patient **4**. The medical system may include personal device **12** or one or more of data server(s) **94**. Although primarily described in terms of one or more data server(s) **94** determining the probability score, it will be understood that any one or more devices (e.g., processing circuitry of such devices), such as personal device **12**, one or more medical devices **17**, or computing devices **100**, may perform the probability determination using probability model **19** as described herein. In any event, FIG. **4** illustrates personal device **12**, medical device(s) **17**, and/or data server(s) **94** as being configured to supply input to probability model **19**.

[0085] In some examples, storage device **96** of data server (s) **94** may store the physiological parameter values that relate to one or more physiological parameters, which may have been received from one or more other devices of the system via network **92**. Data server(s) **94** may store the physiological parameter values as raw data or as conditioned data via signal processing techniques. For example, data server(s) **94** may store, within storage device **96**, fluid index values as values determined from subcutaneous tissue impedance data collected by one or more medical device(s) **17**. In some examples, processing circuitry **98** of data server(s) determines fluid index values or scores based on subcutaneous impedance values measured by one or more medical device(s) **17**. In some examples, processing circuitry of the medical device(s) or processing circuitry **80** of personal device **12** determines the fluid index values or scores.

[0086] Processing circuitry, e.g., processing circuitry **98** of data server(s) **94**, may store data received from medical device(s) **17** (e.g., from IMD **10**) to a storage device, e.g., storage device **96** of data server(s) **94**. In an example, storage device **96** may be configured to store measured and/or determined values of one or more subcutaneous tissue impedance parameters. The one or more subcutaneous tissue impedance parameters may include one or more subcutaneous tissue impedance scores or fluid index values. In some examples, data server **94** may receive impedance value measurements (e.g., raw or conditioned data) from medical device(s) **17**, e.g., IMD **10**, via network **92**. In such examples, processing circuitry **98** of data server(s) **94** may determine the index or score values used to determine inputs to probability model **19**. In some examples, medical device (s) **17**, e.g., IMD **10**, or personal device **12** or another device may determine the index or score values from one or more subcutaneous tissue impedance measurements. IMD **10** (or another medical device **17**) may determine one or more subcutaneous tissue impedance measurements via a plurality of electrodes of the medical device.

[0087] Processing circuitry **98** of data server(s) **94** may determine one or more subcutaneous tissue impedance scores using impedance value measurements. In some examples, data server(s) **94** may receive one or more subcutaneous tissue impedance scores, where another device, such as IMD **10**, may determine the subcutaneous tissue impedance scores prior to transmitting the impedance scores to data server(s) **94**. In any case, data server(s) **94** may receive data from medical device(s) **17** and determine, via probability model **19**, a probability score based on the data.

[0088] With reference still to FIG. **4**, processing circuitry **98** of data server(s) (or processing circuitry of any other device of the system) may, in some examples, perform the probability score determination using probability model **19** in accordance with the following. As described herein, processing circuitry **98** may be coupled to one or more storage devices such that processing circuitry **98** may leverage the various data repositories in order to determine the probability score.

[0089] In some examples, processing circuitry **98** may be configured to determine a respective one or more values for each of a plurality of physiological parameters. For instance, processing circuitry may determine one or more values for a first physiological parameter and one or more values for a second physiological parameter. In one example, the values may correspond to measurement readings determined via medical device(s) **17**. For example, the values may include respiration rate values, ECG values, activity level values, etc. For example, the values may indicate at when patient **4** was active or when patient **4** was inactive. The values may include accelerometer values that indicate a posture of patient **4** or a change in the posture of patient **4** over time (e.g., a posture-change count). Posture change count may be based on z-axis accelerometer values. Other values may include periodic x, y, and z-axis accelerometer measurements.

[0090] In some examples, processing circuitry **98** may adjust the criteria for determining each diagnostic state as more information becomes available to processing circuitry **98** over time. For example, processing circuitry **98** may determine that one or more diagnostic states for one or more physiological parameters may be optimized. In some examples, processing circuitry **98** may determine such optimization potential based on the output of a ML model trained on posterior probability data, diagnostic states, and criteria performance data. In any event, processing circuitry **98** may adjust the criteria used (righthand column below in Table 1) for determining the one or more diagnostic states for one or more physiological parameters.

[0091] In an illustrative and non-limiting example of how diagnostic states may be determined, Table 1 below shows diagnostic states in the lefthand column and criteria values (e.g., physiological parameter values) in the righthand column. The criteria values provided below are merely to illustrate an example of how diagnostic states may correlate to criteria for determining a particular diagnostic state. Likewise, the physiological parameters below are provided as example physiological parameters, and in some examples, other physiological parameters may additionally or alternatively be used, such as heart sounds, stepping out of bed count, or other physiological parameters disclosed herein.

TABLE 1

Diagnostic state	Physiological Parameter Values and Criteria
Impedance score	
H	ImpScore ≥ 7
M	ImpScore ≥ 1 and ImpScore ≤ 6
L	ImpScore = 0

TABLE 1-continued

Diagnostic state	Physiological Parameter Values and Criteria
RR	
H	$maxRR_7 \geq 22$ brpm OR $cvarRR_{30} \geq 23$ OR ND ($RR_{30} > 20$ brpm) ≥ 16
M	$minRR_{30} > 11.5$ brpm and {Not 'H'}
L	{Not 'H' OR 'M'}
AF	
H	[{$avgAFB_7 > 1$ hr OR ND($AFB_{30} > 6$ hrs) ≥ 2} AND ND($AFB_{30} > 23$ hrs) < 30] OR $max2minAFB_7 > 3.5$ hr OR $max2minAFB_{30} > 4.5$ hr OR ND($AFB_{30} > 6$ hrs AND $VRAF_{30} \geq 90$ bpm) ≥ 1 OR ND($AFB_{30} > 23$ hrs AND $VRAF_{30} \geq 90$ bpm) ≥ 1
L	Not 'H'
NHR	
H	ND($NHR_7 \geq 85$ bpm) ≥ 3 OR $maxNHR_7 > 100$ bpm OR $avgNHR_{30} > 90$ bpm OR $avgNHR_7 > 90$ bpm OR $avgDHR\text{-}NHR_7 < -1$ bpm
M	{ND($NHR_{30} \geq 85$ bpm) ≥ 3 OR $maxNHR_{30} > 85$ bpm OR $maxNHR_7 > 85$ bpm OR $minNHR_{30} > 65$ bpm OR $avgDHR\text{-}NHR_7 < 3$ bpm} AND Not 'H'
L	{Not 'H' OR 'M'}
HRV	
H	ND($HRV_{30} \leq 60$ ms) ≥ 25 OR $max2avgHRV_{30} \geq 85\%$ OR $minHRV_7 < 35$ ms OR $CSFRHRV_{30} < -12$
M	{ND($HRV_7 \leq 60$ ms) ≥ 2 OR ND($HRV_{30} \leq 60$ ms) ≥ 6 OR $max2avgHRV_{30} \geq 65\%$ OR $minHRV_{30} < 55$ ms OR $avgHRV_{30} < 65$ ms OR $avgHRV_7 < 75$ ms OR $CSFRHRV_7 < -2$} AND Not 'H'
L	{Not 'H' OR 'M'}
ACT	
H	ND($ACT_7 \leq 30$ min) ≥ 7 OR ND($ACT_{30} \leq 30$ min) ≥ 27 OR $CSFRACT_7 < -43$ OR $avgACT_7 < 10$ min
M	{ND($ACT_{30} \leq 30$ min) ≥ 11 OR $max2avgACT_{30} \geq 150\%$ OR $CSFRACT_{30} < -3$ OR $avgACT_{30} < 30$ min} AND Not 'H'
L	Not 'H' OR 'M'

where ND = number of days; bpm = beats per minute; CSAR = Cumulative Sum Adaptive Reference, IMP = impedance; CSFR = Cumulative Sum Fixed Reference, Thr = Threshold; AdapThr = Adaptive Threshold; Subscripts indicate preceding timeframe (e.g., look-back window) size.

[0092] In some examples, the impedance score (ImpScore) may be determined as follows:

The following elements add a score of 1:

$$CSAR - IMP_{30} \geq 0.6 * AdapThr \text{ for} \geq 1 \text{ day}$$

$$CSAR - IMP_7 \geq 0.6 * AdapThr \text{ for} \geq 1 \text{ day}$$

$$CSAR - IMP_{30} \geq 1.7 * AdapThr \text{ for} \geq 1 \text{ day}$$

$$CSAR - IMP_7 \geq 1.7 * AdapThr \text{ for} \geq 1 \text{ day}$$

$$CSAR - IMP_{30} \geq 3.2 * AdapThr \text{ for} \geq 1 \text{ day}$$

$$CSAR - IMP_7 \geq 1.5 * AdapThr \text{ for} \geq 7 \text{ days}$$

And the following elements add a score of 2:

$$CSARIMP_7 \geq 3.2 * AdapThr \text{ for} \geq 1 \text{ day}$$

$$CSARIMP_{30} \geq 1.5 * AdapThr \text{ for} \geq 24 \text{ days}$$

$$AvgIMP_7 \leq 600\,\Omega$$

$$AvgIMP_{30} \leq 600\,\Omega$$

[0093] Throughout this disclosure a day may generally refer to a 24-hour period. For example, a day may refer to midnight to midnight or some other 24-hour period. The same may generally be said about a week, month, or other time period.

[0094] As described herein, the plurality of physiological parameters may include one or more subcutaneous tissue impedance parameters identified from the one or more subcutaneous tissue impedance measurements. The one or more subcutaneous tissue impedance parameters may include a subcutaneous tissue impedance score, as well as fluid index values. In some examples, the subcutaneous tissue impedance parameters may include subcutaneous tissue impedance measurements, fluid index values, statistical representations of subcutaneous tissue impedance measurements, respiration rate, etc. In some examples, fluid index values may be derived from other sensors, such as intra-cardiac pressure sensors. For example, an intra-cardiac pressure sensor may detect higher pressures, which may be indicative of a higher amount of fluid. The cardiac pressure data may be used to compute one or more fluid index values and/or scores based on fluid index values.

[0095] In some examples, the physiological parameters include at least one value corresponding to a RR of patient **4**. The RR of patient **4** may be determined in a number of different ways (e.g., chest wall movement, acute changes in subcutaneous fluid with respiratory cycle induced venous return changes, etc.). In some examples, processing circuitry **80** is configured to identify, based on the one or more subcutaneous tissue impedance measurements, a periodic variation (e.g., increase and decrease) in subcutaneous tissue

impedance. In such examples, processing circuitry **98** is configured to determine, based on the periodic variation (e.g., increase and decrease) in subcutaneous tissue impedance, the RR of patient **4**. In some examples, one of medical device(s) **17** may determine RR in accordance with other techniques, such as by using R-wave amplitude changes or changes in R-R intervals caused by respiration. For example, one of medical device(s) **17** may use R-R interval parameters (e.g., R-wave to R-wave interval) to determine the RR of patient **4**. R-R intervals may be derived from ECG measurements. In another example, one of medical device(s) **17** may determine RR from PPG, accelerometer, or optical sensors, the signals generated by which may vary with respiration.

[0096] In some examples, IMD **10** or processing circuitry **98** may utilize the impedance measurements to determine a RR of patient **4**. The subcutaneous tissue impedance values may include low-frequency fluctuations that correspond to the RR. Subcutaneous impedance is sensitive to conductivity of fluid around IMD **10**. With each inhalation, the intrathoracic pressure reduces increasing pulmonary blood volume. An increase in pulmonary blood volume tends to lead to a reduction of pulmonary artery pressure. A reduction of pulmonary artery pressure tends to cause a reduction of right arterial pressure and an increase of venous return. This may cause a reduction of extracellular/extra-vascular volume and thus an increase in impedance. The opposite sequence of events leads to reduction of impedance with exhalation. In another example, a movement of the chest wall of patient **4** may lead to changes in measured impedance, as well.

[0097] In some examples, processing circuitry, e.g., processing circuitry **50** of IMD **10**, processing circuitry **80** of personal device **12**, or processing circuitry **98** of server **94**, may identify the occurrence of missing data (e.g., the occurrence of corrupt data, gaps in data series, etc.). For example, processing circuitry **98** may identify the occurrence of missing data. In some examples, processing circuitry **98** may identify the occurrence of missing data, such as when unable to access certain data from an expected storage location of storage device **96** or when a missed transmission from IMD **10** or medical devices **17** has occurred. In another example, processing circuitry **98** may determine that a data series includes a data gap indicating the occurrence of missing data (e.g., corrupt data). Processing circuitry **98** may identify the data gap, for example, based on a known transmission rate. In one example, medical device (s) **17** may transmit impedance values to processing circuitry **98** on a periodic basis (e.g., daily). In such examples, processing circuitry **98** may determine the occurrence of missing data based on data missing for a particular timeframe, where impedance data is available preceding and/or following the particular timeframe. In another example, processing circuitry **98** may determine that certain data is corrupt or that the data contains outlier data that may indicate a transmission error or error in obtaining the data. In any event, processing circuitry **98** may transmit a request to medical device(s) **17** for the missing data or may simply notify medical device(s) **17** of the identified discrepancy.

[0098] Missing data may occur for any number of different reasons, such as a failed data transmission or if one of medical device(s) **17** is unavailable at the time to perform measurements for a particular measurement cycle. For example, IMD **10** may be unavailable to perform certain impedance measurements due to processing circuitry **50** responding to competing measurement requests. Missing data may also occur when a transmission of data fails from one device to another device. In some examples, missing data may include missing diagnostic states for a particular physiological parameter, missing data used to determine the diagnostic states, etc.

[0099] In one example involving missing data, processing circuitry **80** or processing circuitry **98** may determine that certain data was expected to be received from one of medical device(s) **17**, but that the data was not received. In some examples, processing circuitry **80** or processing circuitry **98** may determine that certain data was not received by detecting one or more dropped packets or by identifying gaps in data. In some examples, personal device **12** or server **94** may determine inconsistencies in data indicating corrupt, misleading, or otherwise discrepant data. For example, personal device **12** may compare data received from one of medical devices **17** to data received from another one of medical devices **17** to determine whether the data is aligned or in agreement. In examples where personal device **12** or server **94** identifies missing data, personal device **12** or server **94** may transmit a notification to a particular medical device **17** (e.g., via communication circuitry **54**) identified with the missing data, notifying the medical device **17** of the missing data. In response, the particular medical device **17** may attempt to correct for the discrepancy, for example, by identifying a cause of the missing data and/or attempting to resend the missing data to personal device **12** or server **94**.

[0100] In some examples, upon identifying the occurrence of missing data, processing circuitry, e.g., processing circuitry **50** of IMD **10**, processing circuitry **80** of personal device **12**, or processing circuitry **98** of server **94**, may be configured to determine modified inputs to probability model **19**, for example, based on an amount of data missing when determining average data values (e.g., $avgAFB_7$>1 hr, etc.) or based on threshold comparison types for determining minimum and maximum data values (e.g., $maxRR_7 \geq 22$ brpm, $minHRV_{30}$<55 ms, $minRR_{30}$>11.5 brpm, etc.).

[0101] In an illustrative example with reference to Table 1, processing circuitry **98** may determine average values with respect to a 30-day average or 7-day average. If processing circuitry **98** identifies the occurrence of missing data, processing circuitry **98** may determine how much data is missing. In a non-limiting example, if processing circuitry **98** determines that at least a portion of the data is available for a particular timeframe, processing circuitry **98** may proceed with determining the average for the particular timeframe. For example, processing circuitry **98** may determine that data for a particular parameter is available for at least 10 days out of the last 30 days. As such, processing circuitry **98** may determine that the portion of data available is sufficient to determine the 30-day average.

[0102] In a non-limiting example involving 7-day averages, processing circuitry **98** may determine that data for a particular parameter is available for at least 4 days out of the last 7 days. As such, processing circuitry **98** may determine that the 4-day portion of data for the particular parameter is sufficient to determine the 7-day average for the particular parameter. Various thresholds may be used for determining whether a portion of data is sufficient. In some examples, the various thresholds (e.g., 4 out of 7 days, 3 out of 7 days, etc.) may depend on the particular parameter at issue. In another example, the various thresholds may be set uniformly

regardless of the parameter. In any event, if processing circuitry **98** determines that a threshold is not satisfied for a particular parameter (e.g., 3 days' worth of data available out of 30 days), processing circuitry **98** may exclude the data for the particular parameter from being used to determine the probability score.

[0103] In some examples, processing circuitry **98** may determine whether to use certain physiological parameters in determining the probability score based on the type of threshold comparison used to determine a respective diagnostic state (e.g., Table 1). With the occurrence of missing data, processing circuitry **98** may determine whether a sufficient amount of data is received to determine a diagnostic data based on the type of threshold comparison used. For example, processing circuitry **98** may utilize various types of threshold comparisons when determining diagnostic states, such as (a) whether a maximum data value in the last X number of days is greater than a threshold or (b) whether a minimum data value in the last X number of days is less than a threshold. For example, when determining diagnostic states, processing circuitry **98** may determine (a) whether the $maxRR_7 \geq 22$ brpm; or may determine (b) whether $minHRV_{30} < 55$ ms. For these particular threshold comparison types (e.g., max>threshold, min<threshold, etc.), if a respective threshold is met of this type, processing circuitry **98** may determine that the availability of at least X number of days' worth (e.g., 1 day) of data for the particular parameter is sufficient to use the parameter in determining the probability score. In an illustrative example, if processing circuitry **98** determines that at least 1 day of data is available for maxRR, and that the 1 day of maxRR data satisfies the threshold of ≥22 brpm, then processing circuitry **98** may determine and use the RR diagnostic state as one of the physiological parameter inputs to probability model **19**, assuming no other missing data issues with RR.

[0104] In the second example above, if processing circuitry **98** determines that, for example, 2 days of data are available for minHRV in the past 30 days, but that at least one of the 2 days of minHRV data satisfies the threshold of <55 ms, then processing circuitry **98** may determine and use the HRV diagnostic state as one of the physiological parameter inputs to probability model **19**, assuming no other missing data issues with HRV. In any event, processing circuitry **98** may still use the HRV data or the RR data, in the above examples, to determine diagnostic states regardless of whether the threshold is met

[0105] In addition, processing circuitry **98** may utilize other threshold comparison types when determining diagnostic states that may result in different outcomes with respect to how processing circuitry **98** handles the occurrence of missing data. For example, other types of threshold comparisons may include: (a) whether a minimum data value is greater than a threshold or (b) whether a maximum data value is less than a threshold. In one example, when determining diagnostic states, processing circuitry **98** may determine whether the $minRR_{30} > 11.5$ brpm. In such examples having this type of threshold (e.g., minimum value greater than threshold, maximum data less than threshold, etc.), processing circuitry **98** may determine that if the occurrence of missing data results in the availability of less than X number of days' worth of data in the past 30 days, than the particular physiological parameter may be excluded from being used as one of the physiological parameter inputs to probability model **19**. In such instances, processing circuitry **98** may determine, similar to the example involving averages above, whether at least 10 of 30 days' worth of data is available, whether at least 4 of 7 days' worth of data is available, etc. If not, processing circuitry **98** may exclude the particular physiological parameter from being used as one of the physiological parameter inputs to probability model **19**.

[0106] In some examples, instead of excluding a particular physiological parameter where there is missing data, processing circuitry **98** may skip a particular calculation involving the missing data where the diagnostic states may be based on multiple other calculations. That is, processing circuitry **98** may instead determine the diagnostic state for the physiological parameter without using the particular calculation that may cause skewed results due to the missing data. In any event, processing circuitry **98** may employ one or more of missing data algorithms, in order to avoid skewing results based on overgeneralizations of incomplete data. For example, a determination of whether a maximum data value in the last 30 days is less than a threshold may be skewed in the presence of only one data points for the 30 days, even if the one data point is less than the threshold. In such instances, probability model **19** and the diagnostic state calculations may benefit from one or more missing data algorithms so as to avoid overgeneralizing an incomplete data set or reaching a false conclusion based on the incomplete data set. In another example of missing data algorithms, processing circuitry **98** may utilize interpolation or extrapolation techniques where processing circuitry **98** is missing data for a given physiological parameter, but where a sufficient amount of data is available to interpolate or extrapolate to arrive at a more complete data set.

[0107] In some examples, processing circuitry **98** may be configured to identify diagnostic states **11**A-**11**N (collectively, "diagnostic states **11**") for each of the physiological parameters based on the respective values. For example, various thresholds may be used to determine a diagnostic state of a physiological parameter. In some examples, processing circuitry **80** is configured to select, from at least three potential diagnostic states, a single diagnostic state for each of evidence nodes **8**. For example, the diagnostic state may be high, medium, low, where some physiological parameters may include more or less diagnostic states (H and L). In the example described with reference to FIG. **4**, the diagnostic states are selected from N number of diagnostic states. In a few examples, diagnostic state **13**A has a first diagnostic state (e.g., high or very high), where diagnostic state **13**C has a second diagnostic state, where the first diagnostic state may include a high risk categorization and the second diagnostic state may include a medium risk categorization depending on the respective one or more physiological parameter values. Further, diagnostic state **13**B corresponding to evidence node **8**B may be high or very high and diagnostic state **13**N corresponding to evidence node **8**N may be low or very low.

[0108] The diagnostic states may be determined independently for each physiological parameter. For example, processing circuitry **98** may compare the values obtained for a first physiological parameter to one or more thresholds to determine a diagnostic state for the first physiological parameter independently of processing circuitry comparing values obtained for a second physiological parameter to one or more thresholds to determine a diagnostic state for the second physiological parameter. In some examples, data server(s) **94** may receive the diagnostic state for one or more

of the diagnostic states **11**. In other examples, data server(s) **94** may determine the diagnostic state for the diagnostic state for one or more of the diagnostic states **11** based on the respective values of the physiological parameters. In any event, diagnostic states **11** define evidence nodes **8** for probability model **19**. In other words, diagnostic states **11** serve as evidence nodes **8** for probability model **19**.

[0109] In some examples, the physiological parameters may include long term HRV, NHR, ACT, AF, ventricular rate, post-activity heart rate recovery time (RRT), or a measure of chronotropic incompetence. Moreover, the physiological parameters may include posture, respiratory effort, temperature, short term HRV, R-wave amplitude, heart sound, nighttime rest versus daytime active body angle, chronotropic incompetence, B-type natriuretic peptide (BNP), renal dysfunction, or blood pressure. In addition, physiological parameters may further include RR interval, posture-change count and accelerometer data values. In any event, the physiological parameters may include subcutaneous tissue impedance parameters from IMD **10** or another medical device **17**.

[0110] In some examples, probability model **19** may include a Bayesian framework or BBN. Other suitable probability models may be used to determine probability scores given diagnostic states of physiological parameters. For example, a Bayesian ML model may be used to determine probability scores based on diagnostic states of physiological parameters. Processing circuitry may train probability model **19** on values associated with the physiological parameters. In other examples, processing circuitry may include as input to probability model **19** prior probability value(s) **21** or conditional likelihood **23**. For example, processing circuitry **98** may determine, from the plurality of physiological parameters, prior probability value **21**. The prior probability value **21** may be determined from existing data. Processing circuitry **98** may also determine, from the plurality of physiological parameters, conditional likelihood parameter **23**.

[0111] In some examples, processing circuitry **98** may determine the conditional likelihood, or $P(e_i|d)$, from existing data. Processing circuitry **98** may utilize existing data from one or more patients or subjects, where the existing data is then used to determine conditional likelihood parameters of a model utilizing a probability theorem, such as Bayes rule.

[0112] In one example, the value of 'd' may represent the presence or absence of an HF event or other adverse health event. As such, processing circuitry **98** may use earlier data to determine whether a particular diagnostic criterion was satisfied before an HF event (e.g., $P(e_i|d=1)$) or whether the particular diagnostic criterion was satisfied when there was no HF event (e.g., $P(e_i|d=0)$). In an example, using a first evidence node e_1 as corresponding to 'impedance score', processing circuitry **98** may determine from a plurality of existing data points the conditional likelihood for: $P(e_1=H|d=1)$, $P(e_1=H|d=0)$, $P(e_1=M|d=1)$, $P(e_1=M|d=0)$,$P(e_1=L|d=1)$, and $P(e_1=L|d=0)$. That is, processing circuitry **98** may determine the conditional likelihood from data derived from True Positives, False Positives, False Negatives, and False Positives. In some examples, processing circuitry **98** use the same data to provide a desired sensitivity and specificity of HF detection. That is, posterior probability **25** may represent an estimate of positive predictive value (PPV) based on sensitivity, specificity and event rate (e.g., prior probability **21**). Posterior probability **25** represents one example of an HFR score that is determined based on cardio-thoracic data acquired by an implantable cardiac device of medical device(s) **17** and that may be used by any combination of personal device **12**, data server(s) **94**, or computing devices **100** to determine a modification to a therapy plan of a second implanted device of medical device(s) **17**.

[0113] Processing circuitry **98** may determine the conditional likelihoods for each physiological parameter used as an input evidence node to probability model **19** (e.g., each of et). In some examples, processing circuitry **98** may then utilize the conditional likelihood probabilities to determine the probability model **19**. In such examples, the determined probability model **19** may include a computable joint distribution.

[0114] As such, processing circuitry **98** may identify prior probability value **21** and/or the conditional likelihood parameter **23** as inputs to probability model **19** when determining the probability score. In such examples, the probability model may be expressed as:

$$P(d, e_1, \ldots, e_N) = P(d) \prod_{i=1}^{N} P(e_i \mid d),$$

wherein P(d) represents the prior probability value, $P(e_i|d)$ represents the conditional likelihood parameter, d represents a parent node, and e_1-e_N represent the evidence nodes.

[0115] In some examples, processing circuitry **98** may be configured to determine a probability score from probability model **19** based on evidence nodes **8**. In an example, the BBN may have one or more child nodes (e.g., n-nodes as shown in FIG. **4**) and a parent node, represented by posterior probability **25**.

[0116] The probability score may include a likelihood that the patient is experiencing an adverse health event or is likely to experience the adverse health event within a predetermined amount of time. In an example, the adverse health event could be a worsening HF event (e.g., HF decompensation). The probability score may be expressed in terms of a percentage, a decimal number, or a threshold categorization, such as 50%, 0.5, or medium likelihood, where in this example, 50% corresponds to a threshold categorization of medium likelihood. In some examples, the probability score may be expressed in terms of a range such as >50% or between 50-60%.

[0117] In some examples, processing circuitry **98** may determine the probability score for predetermined amount of time in the future. This may be known as a look-forward period. In some examples, the predetermined amount of time is approximately 30 days relative to when the probability score is determined. For example, the probability score may indicate that patient **4** has a 50% chance of experiencing an adverse health event in the next 30 days. In some instances, the predetermined amount of time may be more or less than 30 days depending on the particular configuration of probability model **19**. As such, probability model may determine a probability score that indicates the likelihood of an adverse health event, such as a heart failure worsening event, occurring within the predetermined timeframe (e.g., next 30 days).

[0118] Processing circuitry **98** may, in some instances, determine the predetermined amount of time, such that the

predetermined amount of time serves as a buffer period. In other words, at the end of the predetermined amount of time (e.g., 30 days), processing circuitry **98** may determine another probability score using data received during a preceding timeframe (e.g., the last 30 or 60 days). Processing circuitry **98** may perform automatic probability determinations using probability model **19** after the predetermined amount of time and after each buffer period thereafter. In other examples, processing circuitry **98** may determine a probability score in response to receiving a command signal (e.g., from a user via a user interface). Processing circuitry **98** may alter the predetermined timeframe slightly to account for the different days in a month. For example, approximately 30 days may include 31 days, 29 days, or 28 days, for convenience of patient **4**. That is, patient **4** may have an easier time tracking buffer periods based on months or weeks rather than based on strict 30-day periods.

[0119] In some examples, processing circuitry, e.g., processing circuitry **50** of IMD **10**, processing circuitry **80** of personal device **12**, or processing circuitry **98** of data server(s) **94**, may determine the probability score on a daily basis. For example, processing circuitry **98** may determine the probability score every day based on data corresponding to a previous X number of days. In some examples, processing circuitry **98** may store in storage device **96** diagnostic states for various parameters each day for a finite number of days, such as in a first in, first out (FIFO) buffer or sliding window. In some examples, processing circuitry **98** may store the last 30 diagnostic states for each parameter determined on a daily basis for the past 30 days. For example, processing circuitry **98** may store the last 30 diagnostic states for impedance scores determined on a daily basis for the past 30 days, store the last 30 diagnostic states for RR determined on a daily basis for the past 30 days, etc. Processing circuitry **98** may determine the probability score at a predefined time interval each day using the previous 30 diagnostic states of each parameter determined over the past 30 days as input to the probability model **19**. In another example, processing circuitry **98** may determine the probability score at a predefined time interval each day using the previous 15 diagnostic states of each parameter determined over the past 15 days as input to the probability model **19**. In any event, processing circuitry **98** may receive data from medical device(s) **17** on a periodic basis, such as on a daily, weekly, or biweekly basis, etc. In such examples, processing circuitry **98** may determine the probability score upon receiving the data from medical device(s) **17** according to the periodic transmission rate of medical device(s) **17** (e.g., daily, weekly, biweekly, etc.). That is, in one example, processing circuitry **98** may determine diagnostic states (e.g., risk states) for each physiological parameter. In such examples, processing circuitry **98** may combine the last X number of days of diagnostic states together to determine a probability score using probability model **19**.

[0120] In another example, processing circuitry **98** may determine the probability score (e.g., risk score) and diagnostic states on a periodic basis. In addition, processing circuitry **98** may determine the status of the health condition of patient **4** using the probability score and a threshold on a periodic basis. In a non-limiting example, processing circuitry **98** may compute the probability score, diagnostic states, and status on a daily basis. In such examples, processing circuitry **98** may store the probability score and/or diagnostic state for the last X number of days, such as for the last 30 days. In some examples, processing circuitry **98** may determine the probability score on a day basis using diagnostic data from the past X number of days, such as the last 30 days. In such examples, processing circuitry **98** may determine, on any given day, that the probability score satisfies a threshold. For example, processing circuitry **98** may determine that the probability score exceeds a threshold. In such examples where processing circuitry **98** determines that probability score satisfies a threshold, processing circuitry **98** may transmit an alert externally, such as to a physician device or patient device.

[0121] Although described with reference to processing circuitry **98**, the techniques of this disclosure are not so limited. In some examples, other processing circuitry (e.g., processing circuitry **80**, processing circuitry **50**, or processing circuitry of another one of medical device(s) **17**, such as a CPU of one of medical device(s) **17**) may perform one or more of the techniques of this disclosure and may coordinate with other devices accordingly. For example, processing circuitry of one of medical device(s) **17** may determine the probability score on a daily basis, compare the probability score to a threshold, and cause the transmission of an alert where the probability score satisfies the threshold. In such examples, a particular medical device from one of medical device(s) **17** may receive data (e.g., diagnostic data) from network **92**, such as from other medical device(s) **17**, personal device **12**, or data server(s) **94**, and may determine the probability score using processing circuitry included with the particular medical device.

[0122] In examples where storage device **96** does not have data corresponding to a particular timeframe, processing circuitry **98** may extrapolate data or interpolate data or in some examples, processing circuitry **98** may determine an extent to which the data for a physiological parameter is missing and determine whether to use the physiological parameter when determining the probability score, as discussed herein.

[0123] In another example, processing circuitry **98** may determine the probability score based on determined values of the physiological parameters that correspond to a preceding timeframe relative to when the probability score is determined. For example, processing circuitry **98** may identify diagnostic states based on physiological parameter values determined during a preceding timeframe prior to determining the probability score. In one example, the preceding timeframe may be approximately 30 days relative to when the probability score is determined. In some examples, the preceding timeframe and the predetermined amount of time may include the same amount of time relative to when the probability score is determined. For example, where the predetermined amount of time is 30 days in the future, the preceding timeframe may be 30 days of past data, and where the predetermined amount of time is 29 days in the future, the preceding timeframe may be 29 days in the past.

[0124] In some examples, the amount of time for each of the predetermined amount of time and the preceding timeframe may be different based on the number of days in each month. For example, processing circuitry **98** may determine a probability score on the last day of each month and for convenience, may forecast for the next month based on the physiological parameters determined for the preceding month, in which case the predetermined amount of time and the preceding timeframe may include a different amount of time. In other examples, the amount of time for each may

remain constant regardless of convenience factors (e.g., 60 days on either end, or 30 days for the predetermined amount of time in the future and 45 days for the preceding timeframe).

[0125] In some examples, the amount of time for the preceding timeframe may be dependent on values associated with the physiological parameters. For example, processing circuitry **98** may determine diagnostic states for subcutaneous tissue impedance scores on a 30-day preceding timeframe basis, whereas processing circuitry **98** may determine diagnostic states for respiration rate on a shorter or longer preceding timeframe basis. In such examples, processing circuitry **98** may use a plurality of preceding timeframes for various physiological parameters. In other examples, processing circuitry **98** may use a common preceding timeframe regardless of any resolution parameters used to determine the physiological parameter values (e.g., impedance scores, NHR, etc.), where resolution parameters may include filters, time constraints, or activity determinations.

[0126] With reference still to FIG. **4**, processing circuitry **98** is configured to identify, from the respective one or more values for each physiological parameter, a plurality of physiological parameter features that encode amplitude, out-of-normal range values, and temporal changes. In the example of amplitude, a physiological parameter feature may encode R-wave amplitudes, accelerometer signal amplitudes, etc. For example, processing circuitry **98** may determine whether a particular physiological parameter satisfies an absolute threshold. In an illustrative example, processing circuitry **98** may determine whether an average NHR of patient **4** is greater than a predefined threshold of 90 bpm. In the example of out of range values, a physiological parameter feature may encode use range values to determine whether a physiological parameter includes out-of-range values to encode. For example, processing circuitry **98** may determine a high heart rate based on expected heart rate values.

[0127] In an illustrative example, processing circuitry **98** may determine NHR out-of-range values by comparing the average NHR to determine how many data NHR has been greater than 90 bpm or less than 55 bpm. In the example of temporal changes, a physiological parameter feature may encode changes in a physiological parameter over time. In one example, processing circuitry **98** may encode a feature of subcutaneous impedance measurements with changes in impedance over a period of days or weeks. Similar to calculating the fluid index using impedance values, processing circuitry **98** may determine relative changes in a physiological parameter value to determine temporal changes, rather than absolute changes. In an illustrative example, processing circuitry **98** may determine whether an average or current-day NHR value has increased in a sustained manner over the last 7 days or 30 days relative to NHR values in the last 7 days or 30 days.

[0128] In such examples, processing circuitry **98** is configured to identify the evidence nodes based at least in part on the plurality of physiological parameter features. For example, processing circuitry **98** may extract features that encode information regarding out-of-normal range values, as well as temporal changes at weekly and monthly time scale for the physiological parameters. In a non-limiting example, processing circuitry **98** may determine diagnostic categories based on a combination of features, such that the HFH rates increase from one category to the next. For example, the category with the largest number of HFH rates may be designed to have the lowest occurrence rate through the feature extraction process.

[0129] In some examples, processing circuitry **98** is configured to identify a plurality of physiological parameter features based on the respective one or more values for each physiological parameter. The physiological parameter features are configured to, upon analysis, yield a same number of potential diagnostic states for each physiological parameter. In some examples, the same number of potential diagnostic states may be three potential diagnostic states (e.g., H, M, and L). In other examples, one or more physiological parameters may have a different number of potential diagnostic states, such as one or two potential diagnostic states. For example, AF may have two diagnostic states of high and low. In such examples, processing circuitry **98** is configured to identify, from the potential diagnostic states, the diagnostic state for each of the physiological parameters.

[0130] Processing circuitry **98** may extract features from the physiological parameters and/or from the physiological parameter values. For example, processing circuitry **98** may analyze a large set of time series data for each physiological parameter for time windows including the number of days the values are outside a normal amplitude range, cumulative sum of difference between the raw measurement and an adaptive reference (CSAR), cumulative sum of difference between the raw measurement in a fixed reference (CSFR), number of days CSAR or CSFR were above a threshold, slope or rate of change of raw measurement values, or mean, median, minimum, and maximum measurement values. Processing circuitry **80** may extract such features for each physiological parameter to encode amplitude and temporal characteristics with respect to particular temporal scales.

[0131] In some examples, processing circuitry **98** may determine a MVN as one of the evidence nodes. For instance, multiple physiological parameters may factor into determining a single child node of evidence nodes **8**. In a non-limiting example, processing circuitry **98** is configured to determine an input to a first child node of evidence nodes **8** based on a combination of one or more values. For example, one evidence node may be based on a combination of an indication of atrial fibrillation (AF) extent in patient **4** during a time period and one or more values indicating a ventricular rate during the time period (e.g., during AF). In addition, processing circuitry **98** may be configured to determine an input to a second child node of the plurality of evidence nodes based on the respective one or more values of the one or more subcutaneous tissue impedance parameters. In such instances, evidence node **8**A may include a combination of an AF extent indication value(s) and ventricular rate value(s), whereas evidence node **8**A may indicate one or more subcutaneous tissue impedance parameter values (e.g., subcutaneous tissue impedance score, fluid indices, etc.).

[0132] With reference still to FIG. **4**, processing circuitry **98** may determine, for each of the plurality of physiological parameters or evidence nodes **8**, the respective one or more parameter values at various frequencies. For example, processing circuitry **98** may determine the values for evidence node **8**A at a different frequency than for evidence node **8**B. Thus, diagnostic states **11** may update at different frequencies. In such examples, processing circuitry **98** may delay execution of probability model **19** until an appropriate

number of diagnostic states are deemed current or updated. In any event, processing circuitry **80** may determine the diagnostic states using the respective one or more values. Processing circuitry **98** may use the diagnostic states to determine posterior probability **25**. Processing circuitry **98** may then store, the respective one or more values and/or the probability score to, as examples, storage device **96**, storage device **84**, and/or storage device **56** of medical device(s) **17** (e.g., IMD **10**).

[0133] FIG. **5** illustrates an example method that may be performed by one or more of medical devices **17**, personal device **12**, and/or data server(s) **94** in conjunction with probability model **19** described with reference to FIGS. **2-4**, to determine a probability score with respect to the patient, in accordance with one or more techniques disclosed herein. Although described as being performed by data server(s) **94**, one or more of the various example techniques described with reference to FIG. **5** may be performed by any one or more of IMD **10**, personal device **12**, or data server(s) **94**, e.g., by the processing circuitry of any one or more of these devices.

[0134] In some examples, processing circuitry, e.g., processing circuitry **50** of IMD **10**, processing circuitry **80** of personal device **12**, or processing circuitry **98** of data server(s) **94**, may determine values of physiological parameters, such as those physiological parameters described herein (**502**). For each of the physiological parameters, processing circuitry **98** may identify diagnostic states **11** (**504**). In some instances, processing circuitry **98** may filter irrelevant physiological parameters or parameter values prior to identifying diagnostic states or after identifying diagnostic states. For example, certain physiological parameters or values thereof may not be relevant to the purpose of deploying probability model **19**. In such instances, those physiological parameters or values may still be available to processing circuitry **80**, but processing circuitry **98** may determine those parameters should not be used as evidence nodes **8**. At any point in time, processing circuitry **98** may access probability model **19** (**506**). For example, processing circuitry **98** may access probability model **19** stored in storage device **96**.

[0135] In some examples, processing circuitry **98** may determine conditional likelihood and prior probability data (**508**). For example, the conditional likelihood parameters may take the form of conditional likelihood tables defined for each diagnostic state for each physiological parameter. The posterior probability may then be tabulated for all possible combinations of diagnostic states to determine a posterior probability.

[0136] In some examples, processing circuitry **98**, or other processing circuitry, may have previously used prior probability value(s) **21** and conditional likelihood **23**, e.g., based on prior data of one or more subjects, to create probability model **19**. For example, probability model **19** may include a look-up table (LUT) that the processing circuitry generated using prior probability value(s) **21** and conditional likelihood **23**. That is, probability value(s) **21** and conditional likelihood **23** may be used to create probability model **19** but not to determine posterior probability **25** for a given patient.

[0137] Processing circuitry **98** may then execute probability model **19** (**510**). Processing circuitry **98** may execute probability model **19** in response to a user command or may do so automatically in response to a triggering event. For example, processing circuitry **98** may determine that all necessary diagnostic states have been determined and that the probability model **19** is ready for execution. In some examples, processing circuitry **98** may receive data for various physiological parameters or processing circuitry **98** may access data from storage device **96**. Processing circuitry **98** may determine the diagnostic state (L/M/H) for each parameter. For the particular set of physiological parameters used (e.g., parameters having sufficient data), processing circuitry **98** may use the diagnostic states to map to a particular row of the LUT. Processing circuitry **98** may identify the posterior probability **25** that is mapped to the particular row. Processing circuitry **98** may subsequently utilize the data that was used to determine the posterior probability **25** to train the probability model **19** for future rounds of determining probability scores. For example, processing circuitry **98** may use the current or incoming data to determine the prior probability value(s) **21**.

[0138] In some examples, processing circuitry **98** may execute probability model a number of times in a finite period of time in order to determine an average probability score for the finite period of time. In some instances, processing circuitry **98** may execute probability model in accordance with a Monte Carlo simulation (e.g., using repeated random sampling to obtain numerical results).

[0139] As such, processing circuitry **98** may determine one or more probability scores from probability model **19** (**512**). Processing circuitry **98** may use evidence nodes **8** as input to probability model **19** to determine a posterior probability score that indicates a likelihood that a patient will experience an adverse health event within a predetermine period of time (e.g., within 30 days of determining the probability score). As discussed herein, the probability model may use the prior probability value and a conditional likelihood parameter as additional inputs to determine the posterior probability score. The probability score (p-value) may be represented as a decimal value. In some examples, processing circuitry may then update the probability model using the determined posterior probability score. In some examples, a Bayesian ML model may determine the probability score, where the ML model may be trained on prior probability values and feedback received regarding the accuracy of the probability score in predicting adverse health events.

[0140] Processing circuitry **98** may compare the probability score to at least one risk threshold. Based on the comparison, processing circuitry **98** may determine one of plurality of discrete risk categorizations. For example, discrete risk categorizations may be high risk, low risk, or medium risk. Although described as being performed by server **94**, one or more of the various example techniques described with reference to FIG. **5** may be performed by any one or more of IMD **10**, personal device **12**, or server **94**, e.g., by the processing circuitry of any one or more of these devices. In this way, processing circuitry **98** may determine a health risk status for a patient based at least in part on the probability score (**514**). In an example, processing circuitry **98** may be configured to monitor a patient, for example, with heart failure for a developing heart failure decompensation in accordance with one or more of the various techniques disclosed herein to then allow for early intervention potentially before clinical symptoms are experienced or hospitalization is needed. As one example, based on the determined health risk status, processing circuitry **98** may determine a modification to a therapy plan of a second implanted device

of medical device(s) **17** and cause the second implanted device to implement the modified therapy plan.

[0141] It should be noted that one or more of the various example techniques described with reference to FIG. **5** may be performed on a periodic basis. For example, the probability score may be determined according to a resolution parameter setting of medical device(s) **17** and/or for patient **4**. In other examples, the probability score may be calculated irrespective of the resolution parameter. Data server(s) **94** may calculate the probability score once a day, each week, every two weeks, each month, etc. In some examples, data server(s) **94** may also calculate the probability score in response to a user command (e.g., from a physician, from a user interface) or in response to a satisfaction of another condition, such as upon receiving or determining a particular number of diagnostic states, or an indication of a change in the condition of patient from a source other than the application of the probability model.

[0142] Data server(s) **94** may also trigger a probability score determination when an activity level or other physiological parameter of patient **4** satisfies a threshold (e.g., low activity when patient **4** is resting or sleeping). In one other example, data server(s) **94** or medical device **17**, e.g., IMD **10**, may determine the probability score of patient **4** on a per measurement basis, such as on a per impedance score determination basis. A person of skill in the art would appreciate that various periods may exist for when IMD **10** or personal device **12** may determine a probability score in accordance with FIG. **5**, transmit a probability score, etc. In some examples, data server(s) **94** may determine the probability score of patient **4** in response to receipt of physiological parameter data for patient via network **92**, e.g., from medical device(s) **17**.

[0143] In addition, although described in terms of data server(s) **94** performing one or more of the various example techniques of this disclosure, it is to be understood that any number of different components described with reference to, for example, FIGS. **4**, **5**, **7**, and **8**, and combinations thereof, may perform one or more of the various example techniques of this disclosure. For example, IMD **10** or personal device **12** may determine diagnostic states **11** or physiological parameter values. In addition, data server(s) **94** may include multiple computing devices (e.g., a remote cloud server) that collectively determines probability scores of patient **4** experiencing an adverse health event within a predetermined period of time. In addition, it is to be understood that the example components described with reference to FIGS. **4**, **5**, **7**, and **8** may perform some or all of the example techniques described with reference to FIGS. **4**, **5**, and **10** in parallel or in conjunction with one another.

[0144] FIG. **6**A illustrates a chart of individual physiological parameters that may serve as evidence nodes to the example probability model described with reference to FIG. **4**. Each physiological parameter is independent of one another meaning processing circuitry **98** could identify from each individual parameter a risk level for patient **4**. However, the accuracy would be less than when using probability model **19** as illustrated in FIG. **6**B and Table 2 below. The values for each physiological parameter from FIG. **6**A are illustrated in Table 1 below.

TABLE 2

Physiological parameter	# evaluations (% of total of 225 evals)	#HF hosp (% of evals in each risk group)	Hazard Ratio (HR)	prob-value ("p-value")
Impedance				0.006
0 (L)	107 (47.6%)	3 (2.8%)	Reference	
1 (M)	79 (35.1%)	8 (10.1%)	3.84 (0.94-15.62)	0.061
2 (H)	39 (17.3%)	9 (23.1%)	9.00 (2.34-34.70)	0.001
Respiration				0.029
0	78 (34.7%)	1 (1.3%)	Reference	
1	115 (51.1%)	13 (11.3%)	9.39 (1.12-78.60)	0.039
2	32 (14.2%)	6 (18.8%)	15.55 (1.97-122.63)	0.009
AF				0.016
0	201 (89.3%)	14 (7.0%)	Reference	
2	24 (10.7%)	6 (25.0%)	4.08 (1.30-12.79)	
Activity				0.004
0	79 (35.1%)	1 (1.3%)	Reference	
1	97 (43.1%)	8 (8.2%)	6.74 (0.87-52.03)	0.067
2	49 (21.8%)	11 (22.4%)	19.65 (2.55-151.46)	0.004
NHR				0.057
0	78 (34.7%)	3 (3.8%)	Reference	
1	91 (40.4%)	8 (8.8%)	2.33 (0.55-9.78)	0.248
2	56 (24.9%)	9 (16.1%)	4.40 (1.29-15.02)	0.018
HRV				0.010
0	96 (42.7%)	2 (2.1%)	Reference	
1	89 (39.6%)	10 (11.2%)	5.59 (1.23-25.37)	0.026
2	40 (17.8%)	8 (20.0%)	10.67 (2.32-49.06)	0.002

[0145] FIG. **6**B illustrates a sum of individual probability scores from FIG. **6**A on the left and a chart of combined probability scores using a probability model based on various evidence nodes of FIG. **4** on the right. For example, FIG. **6**B illustrates the advantage of using probability model **19** to model the risk stratification performance for an integrated set of diagnostic states. In the example of FIG. **6**B, a Bayesian approach was used to model the probability score shown on the right and an unweighted sum of individual diagnostic states(e.g., PARTNERS-HF or sum of scores) was used on the left. In a non-limiting example, sample results may be summarized in a Table 3 as follows showing a Bayesian approach in comparison to a "sum of scores" approach.

TABLE 3

	# evaluations	#HF hosp (% of evals)	Hazard Ratio (HR)	prob-value ("p-value")
Sum of scores				<0.001
0-4	137 (60.9%)	2 (1.5%)	Reference	
5	34 (15.1%)	2 (5.9%)	4.01 (0.51-31.59	0.187
6-12	54 (24.0%)	16 (29.6%)	23.72 (5.15-109.24)	<0.001
Posterior probability				<0.001
<1.1%	119 (59.9%)	1 (0.8%)	Reference	
1.1%-10%	62 (27.6%)	4 (6.5%)	7.86 (0.87-70.99)	0.066
>10%	44 (19.6%)	15 (34.1%)	48.61 (6.5-363.51)	<0.001

[0146] Due to the dynamic nature of the probability score the same patient may have very high evidence at one follow-up and low evidence at another follow-up. The high diagnostic evidence group consisted of evaluations with around the top 20% of risk scores. The combined low evidence group consisted of cases where each or multiple of the diagnostic parameters had low evidence. The results indicate that a patient with a high diagnostic evidence score at a follow-up is 48 times more likely to be have an HF event in the next 30 days compared to patients with a low diagnostic evidence score at a follow-up.

[0147] FIG. **7** illustrates the environment of an example medical system **2** in conjunction with a patient **4**, in accordance ' ' one or more techniques of this disclosure. Patient **4** ordinarily, but not necessarily, will be a human. For example, patient **4** may be an animal needing ongoing monitoring for cardiac conditions.

[0148] In some examples, system **2** may include IMD **10** and IMD **11**. IMDs **10** and **11** represent one example configuration. In other configurations, medical devices of different types, with different functionality, and different implant locations may be sued. IMD **11** may, for example, be any of an implantable pulse generator, an ICD, an S-ICD, a cardiac resynchronization therapy device, a VAD, a drug pump, or other such IMD.

[0149] IMD **10** may include one or more electrodes (not shown) on its housing, or may be coupled to one or more leads that carry one or more electrodes. System **2** may also include personal device **12** and, although not depicted in FIG. **7**, the various other devices illustrated in one or more of the various example techniques described with reference to FIG. **2**. Example system **2** may be used to measure subcutaneous impedance to provide to patient **4** other users an early warning for the onset of a heart failure decompensation event.

[0150] The example techniques may be used with an IMD **10**, which may be in wireless communication with at least one of personal device **12** or data server(s) **94**. In some examples, IMD **10** is implanted outside of a thoracic cavity of patient **4** (e.g., subcutaneously in the pectoral location illustrated in FIG. **7**). IMD **10** may be positioned near the sternum near or just below the level of the heart of patient **4**, e.g., at least partially within the cardiac silhouette. IMD **10** may include a plurality of electrodes and may be configured for subcutaneous implantation outside of a thorax of patient **4**.

[0151] Accordingly, impedance measurements taken via electrodes in the subcutaneous space, e.g., electrodes on a subcutaneously implanted medical device as shown in FIGS. **7-9**, may be measurements of the impedance of interstitial fluid and subcutaneous tissue. In an example, during a heart failure decompensation event, reduction in cardiac output can tend to increase venous pressure. An increase in venous pressure tends to lead to an increase in pressure with respect to capillaries compared to the interstitial space. The combination of such tendencies may then lead to a net outflow of fluid from the capillaries into the interstitium or interstitial space of a patient. In such instances, the interstitium will have an increase in fluid accumulation. An increase in fluid accumulation tends to provide a reduction in impedance measured between electrodes.

[0152] Implantable medical devices (IMDs) can sense and monitor impedance signals and use those signals to determine a health condition status of a patient or other health condition status of a patient (e.g., edema, preeclampsia, hypertension, etc.). The electrodes used by IMDs to sense impedance signals are typically integrated with a housing of the IMD and/or coupled to the IMD via one or more elongated leads. Example IMDs that include electrodes include the Reveal LINQ™ or LINQ II™ Insertable Cardiac Monitor (ICM), developed by Medtronic, Inc., of Minneapolis, MN, which may be inserted subcutaneously. Other example IMDs may include electrodes on a subcutaneous lead connected to another one of medical device(s) **17**, such as an S-ICD or an extravascular ICD. Such IMDs may facilitate relatively longer-term monitoring of patients during normal daily activities and may periodically transmit collected data to a network service, such as the Medtronic CareLink® Network.

[0153] Medical devices configured to measure impedance via implanted electrodes, including the examples identified herein, may implement the techniques of this disclosure for measuring impedance changes in the interstitial fluid of a patient to determine whether the patient is experiencing worsening heart failure or decompensation. The techniques include evaluation of the impedance values using criteria configured to provide a desired sensitivity and specificity of heart failure detection. The techniques of this disclosure for identifying heart failure worsening may facilitate determinations of cardiac wellness and risk of sudden cardiac death and may lead to clinical interventions to suppress heart failure worsening, such as with medications.

[0154] As such, IMD **10** may be configured to measure, in some cases among other physiological parameter values, impedance values within the interstitial fluid of patient **4**. For example, IMD **10** may be configured to receive one or more signals indicative of subcutaneous tissue impedance from electrodes **16**. In some examples, IMD **10** may be a purely diagnostic device. For example, IMD **10** may be a device that only determines subcutaneous impedance

parameters of patient **4**, or a device that determines subcutaneous impedance parameters as well as other physiological parameter values of patient **4**. IMD **10** may use the impedance value measurements to determine one or more fluid index values, impedance scores, and/or various thresholds, such as adaptive thresholds, scoring thresholds, weighting factors for thresholds, and/or cardiac risk thresholds.

[0155] Subcutaneous impedance may be measured by delivering a signal through an electrical path between electrodes. In some examples, the housing of IMD **10** may be used as an electrode in combination with electrodes located on leads. For example, system **2** may measure subcutaneous impedance by creating an electrical path between a lead and one of the electrodes. In additional examples, system **2** may include an additional lead or lead segment having one or more electrodes positioned subcutaneously or within the subcutaneous layer for measuring subcutaneous impedance. In some examples, two or more electrodes useable for measuring subcutaneous impedance may be formed on or integral with the housing of IMD **10**.

[0156] System **2** measures subcutaneous impedance of patient **4** and processes impedance data to accumulate evidence of decreasing impedance. The accumulated evidence is referred to as a fluid index and may be determined as function of the difference between measured impedance values and reference impedance values. The fluid index may then be used to determine impedance scores that are indicative of a heart condition of patient **4**. In an example, an impedance score may be measured against a risk threshold that identifies diagnostic states of the subcutaneous tissue impedance physiological parameters, which may be applied to probability model **19** as described herein. In some examples, subcutaneous impedance may provide information about fluid volume in the subcutaneous space (e.g., subcutaneous space **22** of FIG. **9**), and in some instances, total blood volume, as well. In such examples, subcutaneous impedance measurements allow system **2** via probably model **19** to identify patients that have accumulated threshold levels of peripheral fluid as determined based on a plurality of evidence nodes, where at least one evidence node is based at least in part on a subcutaneous impedance measurement or subcutaneous impedance score.

[0157] In some examples, IMD **10** may also sense cardiac electrogram (EGM) signals via the plurality of electrodes and/or operate as a therapy delivery device. For example, IMD **10** may additionally operate as a therapy delivery device to deliver electrical signals to the heart of patient **4**, such as an implantable pacemaker, a cardioverter, and/or defibrillator, a drug delivery device that delivers therapeutic substances to patient **4** via one or more catheters, or as a combination therapy device that delivers both electrical signals and therapeutic substances.

[0158] In some examples, system **2** may include any suitable number of leads coupled to IMD **10**, and each of the leads may extend to any location within or proximate to a heart or in the chest of patient **4**. For example, other examples therapy systems may include three transvenous leads and an additional lead located within or proximate to a left atrium of a heart. As other examples, a therapy system may include a single lead that extends from IMD **10** into a right atrium or right ventricle, or two leads that extend into a respective one of a right ventricle and a right atrium.

[0159] In some examples, IMD **10** may be implanted subcutaneously in patient **4**. Furthermore, in some examples, personal device **12** may monitor subcutaneous impedance values. In some examples, IMD **10** takes the form of the Reveal LINQ™ or LINQ II™ ICM, or another ICM similar to, e.g., a version or modification of, the LINQ™ or LINQ II™ ICM, which may be inserted subcutaneously. Such IMDs may facilitate relatively longer-term monitoring of patients during normal daily activities, and may periodically transmit collected data to a network service, such as the Medtronic CareLink® Network.

[0160] Although described in the context of examples in which IMD **10** includes an insertable or implantable IMD, example systems including one or more external devices of any type configured to sense subcutaneous tissue impedances may be configured to implement the techniques of this disclosure. In some examples, IMD **10** may be a device configured to measure impedances of a fluid and shifts in impedances of the fluid, such as interstitial fluid. For example, IMD **10** may have one or more electrodes disposed within one layer of patient **4** (e.g., subcutaneous layer), whereas at least one other electrode may be disposed within another layer of patient **4** (e.g., dermis layer, muscle layer, etc.). In such examples, IMD **10** may be able to measure impedances and shifts in impedances of the interstitial fluid of the subcutaneous layer. In another example, IMD **10** may be a cutaneous patch device having electrodes on the outside of the skin. In such examples, IMD **10** may use the cutaneous patch device to measure impedances and shifts in impedances of the interstitial fluid in the subcutaneous layer.

[0161] In examples in which IMD **10** also operates as a pacemaker, a cardioverter, and/or defibrillator, or otherwise monitors the electrical activity of the heart, IMD **10** may sense electrical signals attendant to the depolarization and repolarization of the heart of patient **4** via electrodes of or coupled to IMD **10**, e.g., which may include the electrodes used to determine subcutaneous impedance. In some examples, IMD **10** can provide pacing pulses to the heart of patient **4** based on the electrical signals sensed within the heart of patient **4**. The configurations of electrodes used by IMD **10** for sensing and pacing may be unipolar or bipolar. IMD **10** may also provide defibrillation therapy and/or cardioversion therapy via electrodes located on at least one lead, as well as a housing electrode. IMD **10** may detect tachyarrhythmia of the heart of patient **4**, such as fibrillation of atria or ventricles, and deliver defibrillation or other tachyarrhythmia therapy to the heart of patient **4** in the form of electrical pulses. In some examples, IMD **10** may be programmed to deliver a progression of therapies, e.g., pulses with increasing energy levels, until a fibrillation of the heart of patient **4** is stopped. IMD **10** detects fibrillation or other tachyarrhythmias employing tachyarrhythmia detection techniques known in the art.

[0162] In one example of the techniques of this disclosure, IMD **10** may be configured to monitor one or more cardiothoracic parameters of patient **4** as described above. Personal device **12** may receive, from IMD**10**, cardio-thoracic data indicative of the one or more cardio-thoracic parameters over a period of time. Personal device **12** or another processing device may determine a long term HFR score for patient **4** based on the cardio-thoracic data. Based on a change in the long term HFR score for patient **4**, personal device **12** or the other processing device may determine a modification to a therapy plan for IMD **11** and cause IMD **11** to implement the modified therapy plan.

[0163] FIG. **8** is a functional block diagram illustrating an example configuration of IMD **10**. IMD **10** may include an example of one of medical device(s) **17** described with reference to FIGS. **2-4**. In the illustrated example, IMD **10** includes electrodes **16**A-**16**N (collectively, "electrodes **16**"), antenna **26**, processing circuitry **50**, sensing circuitry **52**, impedance measurement circuitry **60**, communication circuitry **54**, storage device **56**, switching circuitry **58**, sensors **62**. IMD **10**, along with other medical device(s) **17**, may also include a power source. In general, the power source may include a rechargeable or non-rechargeable battery. Each of medical device(s) **17** may include components common to those of IMD **10**. For example, each of medical device(s) **17** may include processing circuitry **50**. For sake of brevity, each configuration of each medical device(s) **17** will not be described in this application. That is, certain components of IMD **10** may serve as representative components of other medical device(s) **17** (e.g., storage device **56**, communication circuitry **54**, sensor(s) **62**, etc.)

[0164] Processing circuitry **50** may include fixed function circuitry and/or programmable processing circuitry. Processing circuitry **50** may include any one or more of a microprocessor, a controller, a digital signal processor (DSP), an application specific integrated circuit (ASIC), a field-programmable gate array (FPGA), or equivalent discrete or analog logic circuitry. In some examples, processing circuitry **50** may include multiple components, such as any combination of one or more microprocessors, one or more controllers, one or more DSPs, one or more ASICs, or one or more FPGAs, as well as other discrete or integrated logic circuitry. The functions attributed to processing circuitry **50** herein may be embodied as software, firmware, hardware or any combination thereof.

[0165] Sensing circuitry **52** may be selectively coupled to electrodes **16** via switching circuitry **58**, e.g., to select the electrodes **16** and polarity, referred to as the sensing vector, used to sense impedance and/or cardiac signals, as controlled by processing circuitry **50**. Sensing circuitry **52** may sense signals from electrodes **16**, e.g., to produce a cardiac EGM, in order to facilitate monitoring the electrical activity of the heart. Sensing circuitry **52** also may monitor signals from sensors **62**, which may include one or more accelerometers, pressure sensors, and/or optical sensors, as examples. In some examples, sensing circuitry **52** may include one or more filters and amplifiers for filtering and amplifying signals received from electrodes **16** and/or sensors **62**.

[0166] In some examples, processing circuitry **50** may use switching circuitry **58** to select, e.g., via a data/address bus, which of the available electrodes are to be used to obtain impedance measurements of interstitial fluid and to sense cardiac signals, and to select the polarities of the electrodes. Switching circuitry **58** may include a switch array, switch matrix, multiplexer, transistor array, microelectromechanical switches, or any other type of switching device suitable to selectively couple sensing circuitry **58** to selected electrodes. In some examples, sensing circuitry **52** includes one or more sensing channels, each of which may include an amplifier. In response to the signals from processing circuitry **50**, switching circuitry **58** may couple the outputs from the selected electrodes to one of the sensing channels.

[0167] In some examples, one or more channels of sensing circuitry **52** may include one or more R-wave amplifiers that receive signals from electrodes **16**. In some examples, the R-wave amplifiers may take the form of an automatic gain-controlled amplifier that provides an adjustable sensing threshold as a function of the measured R-wave amplitude. In addition, in some examples, one or more channels of sensing circuitry **52** may include a P-wave amplifier that receives signals from electrodes **16**. Sensing circuitry may use the received signals for pacing and sensing in the heart of patient **4**. In some examples, the P-wave amplifier may take the form of an automatic gain-controlled amplifier that provides an adjustable sensing threshold as a function of the measured P-wave amplitude. Other amplifiers may also be used.

[0168] In some examples, processing circuitry **50** may be configured to record an R-wave amplitude for an ECG sensed by sensing circuitry **52**. For example, sensing circuitry **52** may be configured to sense a subcutaneous ECG, and processing circuitry **50** may be configured to record an R-wave amplitude of the subcutaneous ECG. In another example, sensing circuitry **52** may be configured to record cardiac electrogram using leads in the heart of patient **4** and as measured between the housing of one of medical device (s) **17** (e.g., a can) and the leads in the heart of patient **4**, and processing circuitry **50** may be configured to record an R-wave amplitude of the cardiac electrogram. Similarly, sensing processing circuitry **50** may record a R-wave slopes or R-wave widths for an ECG or other cardiac electrogram.

[0169] In some examples, sensing circuitry **52** includes a channel that includes an amplifier with a relatively wider pass band than the R-wave or P-wave amplifiers. Signals from the selected sensing electrodes that are selected for coupling to this wide-band amplifier may be provided to a multiplexer, and thereafter converted to multi-bit digital signals by an analog-to-digital converter for storage in storage device **56**. In some examples, processing circuitry **50** may employ digital signal analysis techniques to characterize the digitized signals stored in storage device **56** to detect P-waves (e.g., within ventricular or far-field signals and instead of or in addition to use of P-wave amplifiers) and classify cardiac tachyarrhythmias from the digitized electrical signals.

[0170] Based on the detection R-waves and P-waves, e.g., their rates, processing circuitry **50** may identify atrial and ventricular tachyarrhythmias, such as AF or VF. Processing circuitry may employ digital signal analysis techniques to detect or confirm such tachyarrhythmias in some examples. Processing circuitry **50** may determine values of physiological parameters based on detection of such tachyarrhythmias, and a probability of a health event may be determined based on the physiological parameter values according to the techniques described herein. Example physiological parameters determined based on detection of tachyarrhythmia include an extent, e.g., frequency and/or duration during a time period, of AF or other tachyarrhythmias.

[0171] Processing circuitry **50** may also determine other physiological parameter values that can be used to determine probability of a health event based on the cardiac EGM and detection of depolarizations therein. As examples, processing circuitry **50** may determine one or more heart rate values, such as night heart rate values, one or more heart rate variability values. As other examples, processing circuitry **50** may determine magnitudes of or intervals between features within the cardiac EGM, such as depolarization amplitudes, depolarization widths, or intervals between depolarizations and repolarizations.

[0172] In some examples, sensors **62** include one or more accelerometers or other sensors configured to generate signals that indicate motion and orientation of patient **4**, e.g., that indicate activity level or posture of the patient. In some examples, processing circuitry **50** processes such signals to determine values of one or more physiological parameters that can be used to determine probability of a health event. For example, processing circuitry **50** may quantify duration, frequency, and/or intensity of activity and/or posture changes, e.g., daily or during some other period. In some examples, processing circuitry **50** may determine an amount of time patient spends inactive, e.g., sleeping, but not in a supine posture based on such signals.

[0173] Sensing circuitry **52** includes impedance measurement circuitry **60**. Processing circuitry **50** may control impedance circuitry **60** to periodically measure an electrical parameter to determine an impedance, such as a subcutaneous impedance indicative of fluid found in interstitium **28**. For a subcutaneous impedance measurement, processing circuitry **50** may control impedance measurement circuitry **60** to deliver an electrical signal between selected electrodes **16** and measure a current or voltage amplitude of the signal. Processing circuitry **50** may select any combination of electrodes **16**, e.g., by using switching circuitry **58** and sensing circuitry **52**. Impedance measurement circuitry **60** includes sample and hold circuitry or other suitable circuitry for measuring resulting current and/or voltage amplitudes. Processing circuitry **50** determines an impedance value from the amplitude value(s) received from impedance measurement circuitry **60**.

[0174] Because either IMD **10** or personal device **12** may be configured to include sensing circuitry **52**, impedance measurement circuitry **60** may be implemented in one or more processors, such as processing circuitry **50** of IMD **10** or processing circuitry **80** of personal device **12**. Impedance measurement circuitry **60** is, in this example, shown in conjunction with sensing circuitry **52** of IMD **10**. Impedance measurement circuitry **60** may be embodied as one or more hardware modules, software modules, firmware modules, or any combination thereof. Impedance measurement circuitry **60** may analyze impedance measurement data on a periodic basis to identify a decrease in subcutaneous impedance in patient **4** and alert patient **4** when the decrease indicates onset of a possible heart failure decompensation event.

[0175] In some examples, processing circuitry **50** may perform an impedance measurement by causing impedance measurement circuitry **60** (via switching circuitry **58**) to deliver a voltage pulse between at least two electrodes **16** and examining resulting current amplitude value measured by impedance measurement circuitry **60**. In some examples, switching circuitry **58** delivers signals that do deliver stimulation therapy to the heart of patient **4**. In other examples, these signals may be delivered during a refractory period, in which case they may not stimulate the heart of patient **4**.

[0176] In some examples, processing circuitry **50** may perform an impedance measurement by causing impedance measurement circuitry **60** (via switching circuitry **58**) to deliver a current pulse across at least two selected electrodes **16**. Impedance measurement circuitry **60** holds a measured voltage amplitude value. Processing circuitry **50** determines an impedance value based upon the amplitude of the current pulse and the amplitude of the resulting voltage that is measured by impedance measurement circuitry **60**. IMD **10** may use defined or predetermined pulse amplitudes, widths, frequencies, or electrode polarities for the pulses delivered for these various impedance measurements. In some examples, the amplitudes and/or widths of the pulses may be sub-threshold, e.g., below a threshold necessary to capture or otherwise activate tissue, such as cardiac tissue, subcutaneous tissue, or muscle tissue. In some examples, IMD **10** may use an amplifier circuit to perform physiological signal sensing, impedance sensing, telemetry, etc.

[0177] In certain cases, IMD **10** may measure subcutaneous impedance values that include both a resistive component and a reactive component (e.g., X, XL, XC), such as in an impedance triangle. In such cases, IMD **10** may measure subcutaneous impedance during delivery of a sinusoidal or other time varying signal by impedance measurement circuitry **60**, for example. Thus, as used herein, the term "impedance" is used in a broad sense to indicate any collected, measured, and/or calculated value that may include one or both of resistive and reactive components. In some examples, subcutaneous tissue impedance parameters are derived from subcutaneous tissue impedance signals received from electrodes **16**.

[0178] Sensing circuitry **52** may also provide one or more impedance signals to processing circuitry **50** for analysis, e.g., for analysis to determine respiration and impedance parameters, e.g., impedance scores. In some examples, processing circuitry **50** may store the impedance values, impedance score factors (e.g., fluid indices, average impedance values, reference impedance values, buffer values, etc.), and impedance scores in storage device **56**. Processing circuitry **50** of IMD **10**, and/or processing circuitry of another device that retrieves data from IMD **10**, may analyze the impedance values to determine a diagnostic state of the subcutaneous tissue impedance parameter.

[0179] Communication circuitry **54** may include any suitable hardware, firmware, software or any combination thereof for communicating with another device, such as personal device **12**, another networked computing device, or another IMD or sensor. Under the control of processing circuitry **50**, communication circuitry **54** may receive downlink telemetry from, as well as send uplink telemetry to personal device **12** or another device with the aid of an internal or external antenna, e.g., antenna **26**. In addition, processing circuitry **50** may communicate with a networked computing device via an external device (e.g., personal device **12**) and a computer network, such as the Medtronic CareLink® Network.

[0180] Antenna **26** and communication circuitry **54** may be configured to transmit and/or receive signals via inductive coupling, electromagnetic coupling, NFC technologies, RF communication, Bluetooth®, Wi-Fi™, or other proprietary or non-proprietary wireless communication schemes. In some examples, processing circuitry **50** may provide data to be uplinked to personal device **12** via communication circuitry **54** and control signals using an address/data bus. In another example, communication circuitry **54** may provide received data to processing circuitry **50** via a multiplexer.

[0181] In some examples, processing circuitry **50** may send impedance data to personal device **12** or data server(s) **94** via communication circuitry **54**. For example, IMD **10** may send personal device **12** or data server(s) **94** collected impedance measurements. Personal device **12** and/or data server(s) **94** may then analyze those impedance measurements.

[0182] In some examples, storage device **56** includes computer-readable instructions that, when executed by processing circuitry **50**, cause IMD **10** and processing circuitry **50** to perform various functions attributed to IMD **10** and processing circuitry **50** herein. Storage device **56** may include any volatile, non-volatile, magnetic, optical, or electrical media. For example, storage device **56** may include random access memory (RAM), read-only memory (ROM), non-volatile RAM (NVRAM), electrically-erasable programmable ROM (EEPROM), erasable programmable ROM (EPROM), flash memory, or any other digital media. Storage device **56** may store, as examples, programmed values for one or more operational parameters of IMD **10** and/or data collected by IMD **10** for transmission to another device using communication circuitry **54**. Data stored by storage device **56** and transmitted by communication circuitry **54** to one or more other devices may include impedance values and/or digitized cardiac EGMs, as examples.

[0183] In some examples, processing circuitry, e.g., processing circuitry **50** of IMD **10**, processing circuitry **80** of personal device **12**, or processing circuitry **98** of data server(s) **94**, may determine RRs or other respiration parameters based on analysis of impedance values determined as described herein but, in some cases, sampled at a higher rate than for detecting changes in the fluid status of patient **4**. For example, processing circuitry **50** (or processing circuitry of another device) may employ any of a variety of techniques to detect the frequency, period between, or magnitude of fluctuations in the impedance values associated with respiration of patient **4**. In some examples, processing circuitry **50** may control impedance measurements for determining respiration parameters to occur when certain conditions are satisfied, e.g., time of day, such as night, or patient activity level or posture.

[0184] In some examples, processing circuitry, e.g., processing circuitry **50** of IMD **10**, processing circuitry **80** of personal device **12**, or processing circuitry **98** of data server(s) **94**, may determine an impedance score based on triggering events that indicate a subcutaneous tissue impedance event of patient **4**. For example, processing circuitry **98** may increment the impedance score by a first value in response to a first group of one or more triggering events. In some examples, processing circuitry **98** may increment the impedance score by a second value in response to a second group of one or more triggering events. The first value, in some examples, may increment the impedance score by one point, whereas the second value, in some examples, may increment the impedance score by two points. Other point values may be used that are greater than or less than the first value or the second value. In some examples, processing circuitry **98** may detect multiple triggering events during a single iteration of the scoring cycle, in which case a sum of values may be applied to the impedance score. For example, processing circuitry **98** may increment the impedance score by four points when processing circuitry **98** determines that two triggering events are present, one triggering event corresponding to a two-point incremental value and where another triggering event also corresponds to a two-point incremental value. In some examples, processing circuitry **98** may determine a total impedance score between a value of 0 on the low end and 7 on the high end, as discussed herein.

[0185] In some examples, processing circuitry, e.g., processing circuitry **50** of IMD **10**, processing circuitry **80** of personal device **12**, or processing circuitry **98** of data server(s) **94**, may determine a diagnostic state based on the impedance score. For example, processing circuitry **98** may periodically compare the impedance score to one or more risk thresholds. For example, processing circuitry **98** may perform a comparison of the impedance score to the risk thresholds at a same time each day (e.g., at the end of the day). In some examples, processing circuitry **98** may determine the diagnostic state at multiple intervals each day. In yet another example, processing circuitry **98** may determine the diagnostic state at longer intervals, such as once a week or once every two weeks.

[0186] In some examples, processing circuitry **98** may determine a diagnostic state as a heart failure risk status. The risk status may be determined as low, medium, high, etc. In some examples, processing circuitry **98** may use a different number of risk categories, such as including a category for very high risk in some instances or very low risk. In addition, processing circuitry **98** may not include certain categories, such as the medium risk category, and instead only monitor low and high-risk categories. In some examples, processing circuitry **98** may compare the impedance score to risk thresholds to determine a diagnostic state for the subcutaneous tissue impedance parameter.

[0187] In a non-limiting example, processing circuitry **98** may determine diagnostic states for the subcutaneous tissue impedance parameter as follows: low risk if the impedance score is 0, medium risk if the impedance score is greater than or equal to 1 but less than or equal to 6, and high if the impedance score is greater than or equal to 7. Risk thresholds may be set (e.g., programmably by a user) based on optimization considerations and may be based on the specific values used to determine fluid index values.

[0188] In some examples, processing circuitry, e.g., processing circuitry **50** of IMD **10**, processing circuitry **80** of personal device **12**, or processing circuitry **98** of data server(s) **94**, may determine satisfaction of at least one of: a scoring threshold and an impedance threshold, with respect to one or more time windows. For example, processing circuitry **98** modify the impedance score in response to the one or more fluid index values satisfying one or more scoring thresholds for at least one of: a predetermined amount of time and a predetermined number of times (e.g., number of days, etc.). In an illustrative example, processing circuitry **98** may increment the impedance score by a point value (e.g., a 1 point value) in response to the following example conditions (e.g., scoring thresholds) being satisfied with respect to the first time period: (1) the fluid index values in the last 30 days have been greater than or equal to the adaptive threshold (multiplied by 0.6) for one or more days; (2) the fluid index values in the last 30 days have been greater than or equal to the adaptive threshold (multiplied by 1.7) for one or more days; or (3) the fluid index values in the last 30 days have been greater than or equal to the adaptive threshold (multiplied by 3.2) for one or more days. In this example, processing circuitry **98** determined the weighting factors as 0.6, 1.7, and 3.2. In this example, the first time period is the last 30 days. However, as discussed herein, the time periods and the weighting factors may vary depending on specifics related to patient **4**, for example.

[0189] In another example, processing circuitry **98** may also increment the impedance score by a point value of greater than one (e.g., two points) in response to the average impedance satisfying an impedance value threshold and the

fluid index satisfying scoring thresholds. In some examples, processing circuitry **98** may modify the impedance score in response to the average impedance value satisfying an impedance value threshold. The impedance value threshold may, in some examples, be less than or equal to approximately 600 ohms or another comparable ohm value.

[0190] For example, processing circuitry **98** may increment the impedance score by two points in response to the following example conditions (e.g., scoring thresholds and impedance value thresholds) being met with respect to the first time period: (1) the fluid index values in the last 30 days have been greater than or equal to the adaptive threshold (multiplied by 1.5) for 24 or more days; or (2) the average impedance in the last 30 days has been less than or equal to approximately 600 ohms. For the first condition, the 24 or more days may be consecutive days or instead may be a cumulative 24 days. For the average impedance, the average impedance in the last 30 days may refer to a set of daily average impedances in the last 30 days. In some examples, the average impedance in the last 30 days may refer to a single average of the impedance values measured over time. In another example, the average impedance may refer to a single average of the daily average impedance values determined over time.

[0191] In some examples, processing circuitry **98** may determine anew or modify an impedance score when the fluid index values during the second time period satisfy the adaptive threshold multiplied by the corresponding weighting factors. In addition, processing circuitry **98** may determine anew or modify an impedance score when the average impedance satisfies an impedance threshold during the second time period.

[0192] In an illustrative example, processing circuitry **98** may increment the impedance score by a point value equal to one in response to the following example conditions being satisfied with respect to the second time period: (1) the fluid index values in the last seven days have been greater than or equal to the adaptive threshold (multiplied by 0.6) for one or more days; (2) the fluid index values in the last seven days have been greater than or equal to the adaptive threshold (multiplied by 1.7) for one or more days; or (3) the fluid index values in the last seven days have been greater than or equal to the adaptive threshold (multiplied by 1.5) for seven or more days. In this example, IMD **10** determined the weighting factors as 0.6, 1.7, and 1.5. In this example, the second time period is the last seven days. However, as discussed herein, the time periods and the weighting factors may vary depending on specifics related to patient **4**, for example. In addition, for the last condition, the 7 or more days may be consecutive days or instead may be a cumulative 7 days.

[0193] In another example, IMD **10** may also increment the impedance score by a point value of greater than one (e.g., two points) in response to other example conditions being met with respect to the second time period: (1) the fluid index values in the last seven days have been greater than or equal to the adaptive threshold (multiplied by 3.2) for one or more days; or (2) the average impedance in the last seven days has been less than or equal to approximately 600 ohms. For the average impedance, the average impedance in the last 7 days may refer to a set of daily average impedances in the last 7 days. In some examples, the average impedance in the last 7 days may refer to a single average of the impedance values measured over time. In another example, the average impedance may refer to a single average of the daily average impedance values determined over time.

[0194] In some examples, where overlaps exist between conditions, only the higher point value would be added to the impedance score so as to avoid any compounding affects to the modification of the impedance score. In keeping with the example described above, where two conditions are met (e.g., average impedance in last 7 days and in the last 30 days has been greater than or equal to approximately 600 ohms), the impedance score may only increment by two and not by four. In other examples, where two conditions are met (e.g., average impedance in last 7 days and in the last 30 days has been greater than or equal to approximately 600 ohms), IMD **10** may increment the impedance score based on both conditions being satisfied. The impedance score may be then be used to determine a diagnostic state of the subcutaneous tissue impedance physiological parameter to serve as one of evidence nodes **8**.

[0195] As noted before with reference to FIGS. **4** and **5**, the above techniques of determining an impedance score may also be performed on a periodic basis. For example, the impedance scores may be determined according to a resolution parameter setting of processing circuitry **50** (e.g., the resolution parameter used to signal a frequency at which electrodes **16** should probe for impedance measurements). In other examples, the impedance score may be calculated irrespective of the resolution parameter, which, for example, may apply to the fluid index determination and/or the reference impedance value determination, but not the impedance score determination. For instance, processing circuitry **50** may calculate the impedance scores at several time intervals each day (e.g., once in the morning, once in the afternoon once in the evening, once after meals, etc.). In some examples, processing circuitry **50** may calculate the impedance score once a day, each week, every two weeks, each month, etc. In some examples, processing circuitry **50** may also calculate the impedance score in response to a user command (e.g., from a physician, from a user interface) or in response to a satisfaction of another condition (e.g., based on activity level or other physiological parameters). For example, processing circuitry **50** may determine impedance score on a per measurement basis, such as on a per fluid index determination basis or on a per impedance measurement basis. A person of skill in the art should appreciate that various periods may exist for when IMD **10**, data server(s) **94**, or personal device **12** may transmit impedance scores, receive impedance scores, receive fluid index values, and/or otherwise, calculate impedance scores for subsequent analysis.

[0196] FIG. **9** is a conceptual side-view diagram illustrating an example configuration of an IMD, such as IMD **10** described with reference to FIGS. **7** and **8**. The conceptual side-view diagram illustrates a muscle layer **20** and a skin layer **18** (e.g., dermis layer, epidermis layer). The region between muscle layer **20** and skin layer **18** includes subcutaneous space **22**. Subcutaneous space includes blood vessels **24**, such as capillaries, arteries, or veins, and interstitial fluid in the interstitium **28** of subcutaneous space **22**. Subcutaneous space **22** has interstitial fluid that is commonly found between skin **18** and muscle layer **20**. Subcutaneous space **22** may include interstitial fluid that surrounds blood vessels **24**. For example, interstitial fluid surrounds capil-

laries and allows the passing of capillary elements (e.g., nutrients) between the different layers of a body through interstitium **28**.

[0197] In the example shown in FIG. **9**, IMD **10** may include a leadless, subcutaneously implantable monitoring device having a housing **15** and an insulative cover **76**. Electrodes **16** may be formed or placed on an outer surface of cover **76**. Although the illustrated example includes three electrodes **16**, IMDs including or coupled to more or less than three electrodes **16** may implement the techniques of this disclosure in some examples. In some examples, electrodes **16** may be disposed all within a single layer, such as subcutaneous space **22** and contact interstitial fluid in subcutaneous space **22**.

[0198] Circuitries **50-62** may be formed or placed on an inner surface of cover **76**, or within housing **15**. In the illustrated example antenna **26** is formed or placed on the inner surface of cover **76**, but may be formed or placed on the outer surface in some examples. In some examples, one or more of sensors **62** may be formed or placed on the outer surface of cover **76**. In some examples, insulative cover **76** may be positioned over an open housing **15** such that housing **15** and cover **76** enclose antenna **26** and circuitries **50-62**, and protect antenna **26** and circuitries from fluids such as interstitial fluids or other bodily fluids.

[0199] One or more of antenna **26** or circuitries **50-62** may be formed on the inner side of insulative cover **76**, such as by using flip-chip technology. Insulative cover **76** may be flipped onto a housing **15**. When flipped and placed onto housing **15**, the components of IMD **10** formed on the inner side of insulative cover **76** may be positioned in a gap **78** defined by housing **15**. Electrodes **16** may be electrically connected to switching circuitry **58** through one or more vias (not shown) formed through insulative cover **76**. Insulative cover **76** may be formed of sapphire (i.e., corundum), glass, parylene, and/or any other suitable insulating material. Housing **15** may be formed from titanium or any other suitable material (e.g., a biocompatible material). Electrodes **16** may be formed from any of stainless steel, titanium, platinum, iridium, or alloys thereof. In addition, electrodes **16** may be coated with a material such as titanium nitride or fractal titanium nitride, although other suitable materials and coatings for such electrodes may be used.

[0200] FIG. **10** is a flow diagram illustrating an example process that may be performed by one or more medical devices (e.g., IMDs) and/or a computing device, in accordance with one or more techniques disclosed herein. The example of FIG. **10** will be described with respect to IMD **10** and IMD **11** of FIG. **7**. In the example of FIG. **10**, IMD **11** may be an ICD, and IMD **10** may be an ICM. IMD **10** may, for example, include an optical sensor (PPG, TissueOx) or acoustic sensor (e.g., heart sounds) for hemodynamic data collection that IMD **11** does not include. IMD **11** performs EGM-based VT/VF monitoring (**1002**) and EGM-based VT/VF detection (**1004**). In response to detecting a VT/VF event, IMD **11** may ping IMD **10** for a hemodynamics condition of patient **4** based on an optical flow waveform monitored by IMD **10** (**1006**). IMD **10** may send to IMD **11** X seconds of hemodynamics data acquired by IMD **10** (**1008**). If the hemodynamics data indicates a likelihood of an arrhythmia exceeds a threshold (**1010**, yes), then IMD **11** may deliver a high-voltage shock (**1012**). If the hemodynamics data indicates a likelihood of an arrhythmia does not exceed a threshold (**1010**, no), then IMD **11** may withhold delivering a high-voltage shock (**1014**). In some examples, IMD **10** may determine whether the hemodynamics data indicates an arrhythmia or a suprathreshold likelihood of arrhythmia, and communicate that determination to IMD **11**, e.g., rather than the hemodynamics data. In such examples, IMD **11** may determine whether to deliver or withhold the shock based on the determination communicated by IMD **10**.

[0201] FIG. **11** is a flow diagram illustrating an example process that may be performed by one or more medical devices (e.g., IMDs) and/or a computing device, in accordance with one or more techniques disclosed herein. The example of FIG. **11** will be described with respect to IMD **10** and IMD **11** of FIG. **7**. In the example of FIG. **11**, IMD **11** may be an ICD, and IMD **10** may be an ICM. IMD **10** performs sensor based hemodynamic monitoring (**1102**). In response to IMD **10** detecting a hemodynamic event (**1104**), IMD **10** sends IMD **11** an indication of the hemodynamic event (**1106**). IMD **11** checks the hemodynamics data against EGM data (**1108**), and if the EGM data corroborates the hemodynamics data (**1110**, yes), then IMD **11** may deliver a high-voltage shock (**1112**). If the EGM data does not corroborate the hemodynamics data (**1110**, no), then IMD **11** may withhold delivering a high-voltage shock (**1114**).

[0202] FIG. **12** is a flow diagram illustrating an example process that may be performed by one or more medical devices (e.g., IMDs) and/or a computing device, in accordance with one or more techniques disclosed herein. The example of FIG. **12** will be described with respect to a first IMD, a second IMD, and one or more external processing devices. The first IMD may, for example, be a first IMD capable of a monitoring one or more cardio-thoracic parameters of a patient. The first IMD may, for example, be IMD **10** described above. The second IMD device may be any type of IMD, including but not limited to, an implantable pulse generator, a neuro stimulator, an ICD, an S-ICD, an extravascular ICD, a VAD, a drug pump, or any other such device. In some implementations, the first IMD may be located closer to the heart of the patient than the second IMD, such that the first IMD is more well-suited for monitoring cardio-thoracic parameters of the patient. In some examples, the second IMD may lack the capability to monitor the one or more cardio-thoracic parameters monitored by the first IMD and may, even be a device that is typically not considered to be a cardiac device, but which may still impact the HFR score of the patient. The one or more computing devices may correspond to one or more of personal device **12**, data server(s) **94**, or computing devices **100** described above.

[0203] In FIG. **12**, the one or more processing devices receive, from the first IMD, cardio-thoracic data indicative of the one or more cardio-thoracic parameters over a period of time (**1002**). The one or more cardio-thoracic parameters of the patient may, for example, include subcutaneous tissue impedance values or any of the other parameters described in this disclosure.

[0204] The one or more processing devices determine a long term heart failure risk (HFR) score for the patient based on the cardio-thoracic data (**1004**). The long term HFR score may be based on data collected, for example, for two or more days, two or more weeks, two or more months, or some other such period of time. The one or more processing

devices may, for example, determine the long term HFR score using the techniques described above.

[0205] Based on a change in the long term HFR score for the patient, the one or more processing devices determine a modification to a therapy plan of a second IMD in the patient (**1008**). If, for example, the second IMD is a pacing device, the external devices may modify a rate responsive pacing parameter, a tachycardia pacing rate, a purposeful periods of tachy therapy pacing, a lower rate, and pacing burden (e.g., the duty cycle of the tachy pacing therapy). Additionally, the rate sensitivity, maximum activity rate, and ramp-up and down may also be modified to better mimic the pathophysiology for patients, which may, for example, be valuable for patients with chronotropic incompetence.

[0206] The one or more processing devices cause the second IMD to implement the modified therapy plan (**1010**). To cause the second IMD to implement the modified therapy plan, the one or more external devices may be configured to present a recommended modified therapy plan to a clinician and cause the second IMD to implement the modified therapy plan in response to the clinician approving the recommended modified therapy plan. In other examples, the second IMD may be configured to automatically cause the second IMD to implement the modified therapy plan without human interaction.

[0207] To cause the second IMD to implement the modified therapy plan, the one or more external devices may be configured to modify an operating parameter of the second IMD. To cause the second IMD to implement the modified therapy plan, the one or more external devices may be configured to modify a rule set of the second IMD. In one particular example, the second IMD may be a cardio defibrillator device, and to cause the second IMD to implement the modified therapy plan, the one or more external devices may be configured to increase a sensitivity of the cardio defibrillator device.

[0208] In some implementations, the patient may provide input to the one or more external devices to indicate any improvements or symptoms resulting from the modified therapy plan. The system may then base subsequent modifications to the therapy plan based on the input.

[0209] The one or more external devices may be configured to receive, from the first IMD, second cardio-thoracic data indicative of the one or more cardio-thoracic parameters over a second period of time, determine a second long term HFR score for the patient based on the cardio-thoracic data, and determine, based on the second long term HFR score, if the modified therapy plan improved a condition of the patient. The second period of time may at least partially after the second device implanted device implemented the modified therapy plan.

[0210] FIG. **13**A is a perspective drawing illustrating an IMD **10**A, which may be an example configuration of IMD **10** of FIGS. **7-9** as an ICM. In the example shown in FIG. **13**A, IMD **10**A may be embodied as a monitoring device having housing **1312**, proximal electrode **16**A and distal electrode **16**B. Housing **1312** may further comprise first major surface **1314**, second major surface **1318**, proximal end **1320**, and distal end **1322**. Housing **1312** encloses electronic circuitry located inside the IMD **10**A and protects the circuitry contained therein from body fluids. Housing **1312** may be hermetically sealed and configured for subcutaneous implantation. Electrical feedthroughs provide electrical connection of electrodes **16**A and **16**B.

[0211] In the example shown in FIG. **13**A, IMD **10**A is defined by a length L, a width W and thickness or depth D and is in the form of an elongated rectangular prism wherein the length L is much larger than the width W, which in turn is larger than the depth D. In one example, the geometry of the IMD **10**A—in particular a width W greater than the depth D—is selected to allow IMD **10**A to be inserted under the skin of the patient using a minimally invasive procedure and to remain in the desired orientation during insertion. For example, the device shown in FIG. **13**A includes radial asymmetries (notably, the rectangular shape) along the longitudinal axis that maintains the device in the proper orientation following insertion. For example, the spacing between proximal electrode **16**A and distal electrode **16**B may range from 5 millimeters (mm) to 55 mm, 30 mm to 55 mm, 35 mm to 55 mm, and from 40 mm to 55 mm and may be any range or individual spacing from 5 mm to 60 mm. In addition, IMD **10**A may have a length L that ranges from 30 mm to about 70 mm. In other examples, the length L may range from 5 mm to 60 mm, 40 mm to 60 mm, 45 mm to 60 mm and may be any length or range of lengths between about 30 mm and about 70 mm. In addition, the width W of major surface **14** may range from 3 mm to 15, mm, from 3 mm to 10 mm, or from 5 mm to 15 mm, and may be any single or range of widths between 3 mm and 15 mm. The thickness of depth D of IMD **10**A may range from 2 mm to 15 mm, from 2 mm to 9 mm, from 2 mm to 5 mm, from 5 mm to 15 mm, and may be any single or range of depths between 2 mm and 15 mm. In addition, IMD **10**A according to an example of the present disclosure is has a geometry and size designed for ease of implant and patient comfort. Examples of IMD **10**A described in this disclosure may have a volume of three cubic centimeters (cm) or less, 1.5 cubic cm or less or any volume between three and 1.5 cubic centimeters.

[0212] In the example shown in FIG. **13**A, once inserted within the patient, the first major surface **1314** faces outward, toward the skin of the patient while the second major surface **1318** is located opposite the first major surface **1314**. In addition, in the example shown in FIG. **13**A, proximal end **1320** and distal end **1322** are rounded to reduce discomfort and irritation to surrounding tissue once inserted under the skin of the patient. IMD **10**A, including instrument and method for inserting IMD **10**A is described, for example, in U.S. Patent Publication No. 2014/0276928.

[0213] Proximal electrode **16**A is at or proximate to proximal end **1320**, and distal electrode **16**B is at or proximate to distal end **1322**. Proximal electrode **16**A and distal electrode **16**B are used to sense cardiac EGM signals, e.g., ECG signals, thoracically outside the ribcage, which may be sub-muscularly or subcutaneously. EGM signals may be stored in a memory of IMD **10**A, and data may be transmitted via integrated antenna **26**A to another device, which may be another implantable device or an external device, such as external device **12**. In some example, electrodes **16**A and **16**B may additionally or alternatively be used for sensing any bio-potential signal of interest, which may be, for example, an EGM, EEG, EMG, or a nerve signal, or for measuring impedance, from any implanted location. Housing **1312** may house the circuitry of IMD **10** illustrated in FIG. **8**.

[0214] In the example shown in FIG. **13**A, proximal electrode **16**A is at or in close proximity to the proximal end **1320** and distal electrode **16**B is at or in close proximity to

distal end **1322**. In this example, distal electrode **16**B is not limited to a flattened, outward facing surface, but may extend from first major surface **1314** around rounded edges **1324** and/or end surface **1326** and onto the second major surface **1318** so that the electrode **16**B has a three-dimensional curved configuration. In some examples, electrode **16**B is an uninsulated portion of a metallic, e.g., titanium, part of housing **1312**.

[0215] In the example shown in FIG. **13**A, proximal electrode **16**A is located on first major surface **1314** and is substantially flat, and outward facing. However, in other examples proximal electrode **16**A may utilize the three dimensional curved configuration of distal electrode **16**B, providing a three dimensional proximal electrode (not shown in this example). Similarly, in other examples distal electrode **16**B may utilize a substantially flat, outward facing electrode located on first major surface **1314** similar to that shown with respect to proximal electrode **16**A.

[0216] The various electrode configurations allow for configurations in which proximal electrode **16**A and distal electrode **16**B are located on both first major surface **1314** and second major surface **1318**. In other configurations, such as that shown in FIG. **13**A, only one of proximal electrode **16**A and distal electrode **16**B is located on both major surfaces **1314** and **1318**, and in still other configurations both proximal electrode **16**A and distal electrode **16**B are located on one of the first major surface **1314** or the second major surface **1318** (e.g., proximal electrode **16**A located on first major surface **1314** while distal electrode **16**B is located on second major surface **1318**). In another example, IMD **10**A may include electrodes on both major surface **1314** and **1318** at or near the proximal and distal ends of the device, such that a total of four electrodes are included on IMD **10**A. Electrodes **16**A and **16**B may be formed of a plurality of different types of biocompatible conductive material, e.g. stainless steel, titanium, platinum, iridium, or alloys thereof, and may utilize one or more coatings such as titanium nitride or fractal titanium nitride.

[0217] In the example shown in FIG. **13**A, proximal end **1320** includes a header assembly **1328** that includes one or more of proximal electrode **16**A, integrated antenna **26**A, anti-migration projections **1332**, and/or suture hole **1334**. Integrated antenna **26**A is located on the same major surface (i.e., first major surface **1314**) as proximal electrode **16**A and is also included as part of header assembly **1328**. Integrated antenna **26**A allows IMD **10**A to transmit and/or receive data. In other examples, integrated antenna **26**A may be formed on the opposite major surface as proximal electrode **16**A, or may be incorporated within the housing **1312** of IMD **10**A. In the example shown in FIG. **13**A, anti-migration projections **1132** are located adjacent to integrated antenna **26**A and protrude away from first major surface **1114** to prevent longitudinal movement of the device. In the example shown in FIG. **13**A, anti-migration projections **1332** include a plurality (e.g., nine) small bumps or protrusions extending away from first major surface **1314**. As discussed above, in other examples anti-migration projections **1332** may be located on the opposite major surface as proximal electrode **16**A and/or integrated antenna **26**A. In addition, in the example shown in FIG. **13**A, header assembly **1328** includes suture hole **1334**, which provides another means of securing IMD **10**A to the patient to prevent movement following insertion. In the example shown, suture hole **1334** is located adjacent to proximal electrode **16**A. In one example, header assembly **1328** is a molded header assembly made from a polymeric or plastic material, which may be integrated or separable from the main portion of IMD **10**A.

[0218] FIG. **13**B is a perspective drawing illustrating another IMD **10**B, which may be another example configuration of IMD **10** from FIGS. **7-9** as an ICM. IMD **10**B of FIG. **13**B may be configured substantially similarly to IMD **10**A of FIG. **13**A, with differences between them discussed herein.

[0219] IMD **10**B may include a leadless, subcutaneously-implantable monitoring device, e.g. an ICM. IMD **10**B includes housing having a base **1340** and an insulative cover **1342**. Proximal electrode **16**C and distal electrode **16**D may be formed or placed on an outer surface of cover **1342**. Various circuitries and components of IMD **10**B, e.g., described with respect to FIG. **8**, may be formed or placed on an inner surface of cover **1342**, or within base **1340**. In some examples, a battery or other power source of IMD **10**B may be included within base **1340**. In the illustrated example, antenna **26**B is formed or placed on the outer surface of cover **1342**, but may be formed or placed on the inner surface in some examples. In some examples, insulative cover **1342** may be positioned over an open base **1340** such that base **1340** and cover **1342** enclose the circuitries and other components and protect them from fluids such as body fluids. The housing including base **1340** and insulative cover **1342** may be hermetically sealed and configured for subcutaneous implantation.

[0220] Circuitries and components may be formed on the inner side of insulative cover **1342**, such as by using flip-chip technology. Insulative cover **1342** may be flipped onto a base **1340**. When flipped and placed onto base **1340**, the components of IMD **10**B formed on the inner side of insulative cover **1342** may be positioned in a gap **1344** defined by base **1340**. Electrodes **16**C and **16**D and antenna **26**B may be electrically connected to circuitry formed on the inner side of insulative cover **1342** through one or more vias (not shown) formed through insulative cover **1342**. Insulative cover **1342** may be formed of sapphire (i.e., corundum), glass, parylene, and/or any other suitable insulating material. Base **1340** may be formed from titanium or any other suitable material (e.g., a biocompatible material). Electrodes **16**C and **16**D may be formed from any of stainless steel, titanium, platinum, iridium, or alloys thereof. In addition, electrodes **16**C and **16**D may be coated with a material such as titanium nitride or fractal titanium nitride, although other suitable materials and coatings for such electrodes may be used.

[0221] In the example shown in FIG. **13**B, the housing of IMD **10**B defines a length L, a width W and thickness or depth D and is in the form of an elongated rectangular prism wherein the length L is much larger than the width W, which in turn is larger than the depth D, similar to IMD **10**A of FIG. **13**A. For example, the spacing between proximal electrode **16**C and distal electrode **16**D may range from 5 mm to 50 mm, from 30 mm to 50 mm, from 35 mm to 45 mm, and may be any single spacing or range of spacings from 5 mm to 50 mm, such as approximately 40 mm. In addition, IMD **10**B may have a length L that ranges from 5 mm to about 70 mm. In other examples, the length L may range from 30 mm to 70 mm, 40 mm to 60 mm, 45 mm to 55 mm, and may be any single length or range of lengths from 5 mm to 50 mm, such as approximately 45 mm. In addition, the width W may

range from 3 mm to 15 mm, 5 mm to 15 mm, 5 mm to 10 mm, and may be any single width or range of widths from 3 mm to 15 mm, such as approximately 8 mm. The thickness or depth D of IMD **10**B may range from 2 mm to 15 mm, from 5 mm to 15 mm, or from 3 mm to 5 mm, and may be any single depth or range of depths between 2 mm and 15 mm, such as approximately 4 mm. IMD **10**B may have a volume of three cubic centimeters (cm) or less, or 1.5 cubic cm or less, such as approximately 1.4 cubic cm.

[0222] In the example shown in FIG. **13**B, once inserted subcutaneously within the patient, outer surface of cover **1342** faces outward, toward the skin of the patient. In addition, as shown in FIG. **13**B, proximal end **1346** and distal end **1348** are rounded to reduce discomfort and irritation to surrounding tissue once inserted under the skin of the patient. In addition, edges of IMD **10**B may be rounded.

[0223] The following numbered clauses illustrate one or more aspects of the devices and techniques described in this disclosure.

[0224] Clause 1. A medical system comprising: an implantable cardiac device configured to monitor one or more cardio-thoracic parameters of a patient; and one or more external devices configured to: receive, from the implantable cardiac device, cardio-thoracic data indicative of the one or more cardio-thoracic parameters over a period of time; determine a long term heart failure risk (HFR) score for the patient based on the cardio-thoracic data; based on a change in the long term HFR score for the patient, determine a modification to a therapy plan of a second implanted device in the patient; and cause the second implanted device to implement the modified therapy plan.

[0225] Clause 2. The medical system of clause 1, wherein to cause the second implanted device to implement the modified therapy plan, the one or more external devices are configured to automatically cause the second implanted device to implement the modified therapy plan without human interaction.

[0226] Clause 3. The medical system of clause 1, wherein to cause the second implanted device to implement the modified therapy plan, the one or more external devices are configured to: present a recommended modified therapy plan to a clinician; and cause the second implanted device to implement the modified therapy plan in response to the clinician approving the recommended modified therapy plan.

[0227] Clause 4. The medical system of clause 3, wherein the one or more external devices are configured to store results data for the patient in a database, wherein the results data includes an indication of whether or not the clinician approved the recommended modified therapy plan.

[0228] Clause 5. The medical system of clause 4, wherein the results data further comprises an outcome of the patient associated with the recommended modified therapy plan.

[0229] Clause 6. The medical system of clause 4 or 5, wherein the one or more external devices are configured to determine future recommended modified therapy plans based on the results data.

[0230] Clause 7. The medical system of any of clauses 1-6, wherein the one or more cardio-thoracic parameters of the patient include subcutaneous tissue impedance values, and the one or more one or more external devices are configured to determine the long term HFR score for the patient based on the subcutaneous tissue impedance values.

[0231] Clause 8. The medical system of any of clauses 1-7, wherein to cause the second implanted device to implement the modified therapy plan, the one or more external devices are configured to modify an operating parameter of the second implanted device.

[0232] Clause 9. The medical system of any of clauses 1-8, wherein to cause the second implanted device to implement the modified therapy plan, the one or more external devices are configured to modify a rule set of the second implanted device.

[0233] Clause 10. The medical system of any of clauses 1-9, wherein the second implanted device comprises a cardio defibrillator device, and to cause the second implanted device to implement the modified therapy plan, the one or more external devices are configured to increase a sensitivity of the cardio defibrillator device.

[0234] Clause 11. The medical system of any of clauses 1-10, wherein the long term HFR score is based on data collected for two or more days.

[0235] Clause 12. The medical system of any of clauses 1-10, wherein the long term HFR score is based on data collected for two or more weeks.

[0236] Clause 13. The medical system of any of clauses 1-10, wherein the long term HFR score is based on data collected for two or more months.

[0237] Clause 14. The medical system of any of clauses 1-13, wherein the second implanted device comprises one of an implantable pulse generator; an implantable cardioverter-defibrillator (ICD); a subcutaneous ICD; a ventricular assist device; or a drug pump.

[0238] Clause 15. The medical system of any of clauses 1-9 or 11-13, wherein the second implanted device comprises a non-cardiac device.

[0239] Clause 16. The medical system of any of clauses 1-15, wherein the second implanted device lacks the capability to monitor the one or more cardio-thoracic parameters of the patient.

[0240] Clause 17. The medical system of any of clauses 1-16, wherein the one or more external devices are configured to: receive, from the implantable cardiac device, second cardio-thoracic data indicative of the one or more cardio-thoracic parameters over a second period of time, wherein the second period of time is at least partially after the second device implanted device implemented the modified therapy plan; determine a second long term HFR score for the patient based on the cardio-thoracic data; determine, based on the second long term HFR score, if the modified therapy plan improved a condition of the patient.

[0241] Clause 18. The medical system of any of clauses 1-17, wherein the implantable cardiac device is located closer to the heart of the patient than the second implanted device.

[0242] Clause 19. The medical system of any of clauses 1-18, wherein the one or more external devices comprises a smartphone.

[0243] Clause 20. The medical system of any of clauses 1-19, wherein the one or more external devices comprises a cloud-based device.

[0244] Clause 21. A method comprising: receiving, at an external device and from an implantable cardiac monitor (ICM), one or more cardio-thoracic parameters of a patient; determining based on the one or more cardio-thoracic parameters of the patient, a long term heart failure risk (HFR) score for the patient; based on a change in the long

term HFR score for the patient, determining a modification to a therapy plan of a second implanted device in the patient; and causing the second implanted device to implement the modified therapy plan.

[0245] Clause 22. The method of clause 21, wherein the external device comprises a smartphone.

[0246] Clause 23. The method of clause 21 or 22, wherein the external device comprises a cloud-based device.

[0247] Clause 24. The method of any of clauses 21-23, wherein the long term HFR score is based on data collected for two or more days.

[0248] Clause 25. The method of any of clauses 21-23, wherein the long term HFR score is based on data collected for two or more weeks.

[0249] Clause 26. The method of any of clauses 21-23, wherein the long term HFR score is based on data collected for two or more months.

[0250] Clause 27. The method of any of clauses 21-26, wherein the second implanted device comprises one of: an implantable pulse generator; an implantable cardioverter-defibrillator (ICD); a subcutaneous ICD; a ventricular assist device; or a drug pump.

[0251] Clause 28. A device comprising: a memory; and processing circuitry coupled to the memory and configured to: receive, from an implantable cardiac monitor (ICM), one or more cardio-thoracic parameters of a patient; determine based on the one or more cardio-thoracic parameters of the patient, a long term heart failure risk (HFR) score for the patient; based on a change in the long term HFR score for the patient, determine a modification to a therapy plan of a second implanted device in the patient; and cause the second implanted device to implement the modified therapy plan.

[0252] Clause 29. The device of any of clause 28, wherein the long term HFR score is based on data collected for two or more days.

[0253] Clause 30. The device of clause 28, wherein the long term HFR score is based on data collected for two or more weeks.

[0254] Clause 31. The device of clause 28, wherein the long term HFR score is based on data collected for two or more months.

[0255] Clause 32. The device of clause 28, wherein the second implanted device comprises one of: an implantable pulse generator; an implantable cardioverter-defibrillator (ICD); a subcutaneous ICD; a ventricular assist device; or a drug pump.

[0256] Clause 33. A medical system comprising: a cardiac monitoring device configured to monitor one or more cardio-thoracic parameters of a patient; and one or more external devices configured to: receive, from the cardiac monitoring device, cardio-thoracic data indicative of the one or more cardio-thoracic parameters over a period of time; determine a long term heart failure risk (HFR) score for the patient based on the cardio-thoracic data; based on a change in the long term HFR score for the patient, determine a modification to a therapy plan of an implanted device in the patient; and cause the implanted device to implement the modified therapy plan.

[0257] The techniques described in this disclosure may be implemented, at least in part, in hardware, software, firmware, or any combination thereof. For example, various aspects of the techniques may be implemented within one or more microprocessors, DSPs, ASICs, FPGAs, or any other equivalent integrated or discrete logic QRS circuitry (as in QRS complex), as well as any combinations of such components, embodied in external devices, such as physician or patient programmers, stimulators, or other devices. The terms "processor" and "processing circuitry" may generally refer to any of the foregoing logic circuitry, alone or in combination with other logic circuitry, or any other equivalent circuitry, and alone or in combination with other digital or analog circuitry.

[0258] For aspects implemented in software, at least some of the functionality ascribed to the systems and devices described in this disclosure may be embodied as instructions on a computer-readable storage medium such as RAM, ROM, NVRAM, DRAM, SRAM, Flash memory, magnetic discs, optical discs, flash memories, or forms of EPROM or EEPROM. The instructions may be executed to support one or more aspects of the functionality described in this disclosure.

[0259] In addition, in some aspects, the functionality described herein may be provided within dedicated hardware and/or software modules. Depiction of different features as modules or units is intended to highlight different functional aspects and does not necessarily imply that such modules or units must be realized by separate hardware or software components. Rather, functionality associated with one or more modules or units may be performed by separate hardware or software components, or integrated within common or separate hardware or software components. Also, the techniques could be fully implemented in one or more circuits or logic elements. The techniques of this disclosure may be implemented in a wide variety of devices or apparatuses, including an IMD or other medical device, an external programmer, a combination of a medical device and external programmer, an integrated circuit (IC) or a set of ICs, and/or discrete electrical circuitry, residing in a medical device and/or external programmer.

[0260] Furthermore, although described primarily with reference to examples that provide a probability score to indicate worsening heart failure, other examples may additionally or alternatively automatically modify a therapy in response to the probability score exceeding a predetermined threshold. The therapy may be, as examples, a substance delivered by an implantable pump, cardiac resynchronization therapy, refractory period stimulation, or cardiac potentiation therapy. These and other examples are within the scope of the following claims.

1. A medical system comprising:

an implantable cardiac device configured to monitor one or more cardio-thoracic parameters of a patient; and

one or more external devices configured to:

receive, from the implantable cardiac device, cardio-thoracic data indicative of the one or more cardio-thoracic parameters over a period of time;

determine a long term heart failure risk (HFR) score for the patient based on the cardio-thoracic data;

based on a change in the long term HFR score for the patient, determine a modification to a therapy plan of a second implanted device in the patient, wherein the second implanted device is a separate device than the implantable cardiac device and is implanted at a different location than the implantable cardiac device; and

cause the second implanted device to implement the modified therapy plan.

2. The medical system of claim 1, wherein the one or more external devices are configured to automatically cause the second implanted device to implement the modified therapy plan without human interaction.

3. The medical system of claim 1, wherein the one or more external devices are configured to:

present a recommended modified therapy plan to a clinician; and

cause the second implanted device to implement the modified therapy plan in response to the clinician approving the recommended modified therapy plan.

4. The medical system of claim 3, wherein the one or more external devices are configured to store results data for the patient in a database, wherein the results data includes an indication of whether or not the clinician approved the recommended modified therapy plan.

5. The medical system of claim 4, wherein the results data further comprises an outcome of the patient associated with the recommended modified therapy plan.

6. The medical system of claim 4, wherein the one or more external devices are configured to determine future recommended modified therapy plans based on the results data.

7. The medical system of claim 1, wherein the one or more cardio-thoracic parameters of the patient include subcutaneous tissue impedance values, and the one or more one or more external devices are configured to determine the long term HFR score for the patient based on the subcutaneous tissue impedance values.

8. The medical system of claim 1, wherein to cause the second implanted device to implement the modified therapy plan, the one or more external devices are configured to modify at least one of an operating parameter or a rule set of the second implanted device.

9. The medical system of claim 1, wherein the second implanted device comprises a cardio defibrillator device, and to cause the second implanted device to implement the modified therapy plan, the one or more external devices are configured to increase a sensitivity of arrhythmia detection by the cardio defibrillator device.

10. The medical system of claim 1, wherein the long term HFR score is based on data collected for two or more days.

11. The medical system of claim 1, wherein the long term HFR score is based on data collected for two or more weeks.

12. The medical system of claim 1, wherein the long term HFR score is based on data collected for two or more months.

13. The medical system of claim 1, wherein the second implanted device comprises one of:

an implantable pulse generator;

an implantable cardioverter-defibrillator (ICD);

a subcutaneous ICD;

a ventricular assist device; or

a drug pump.

14. The medical system of claim 1, wherein the second implanted device comprises a non-cardiac device.

15. The medical system of claim 1, wherein the second implanted device lacks the capability to monitor at least one of the one or more cardio-thoracic parameters of the patient.

16. The medical system of claim 1, wherein the one or more external devices are configured to:

receive, from the implantable cardiac device, second cardio-thoracic data indicative of the one or more cardio-thoracic parameters over a second period of time, wherein the second period of time is at least partially after the second implanted device implemented the modified therapy plan;

determine a second long term HFR score for the patient based on the cardio-thoracic data; and

determine, based on the second long term HFR score, if the modified therapy plan improved a condition of the patient.

17. The medical system of claim 1, wherein the implantable cardiac device is configured to be located closer to the heart of the patient than the second implanted device when the implantable cardiac device and the second implanted device are implanted within the patient.

18. The medical system of claim 1, wherein the one or more external devices comprises a smartphone.

19. The medical system of claim 1, wherein the one or more external devices comprises a cloud-based device.

20. The medical system of claim 1, wherein the implantable cardiac device comprises an insertable cardiac monitor comprising:

a housing configured for subcutaneous implantation in a patient, the housing having a length between 40 millimeters (mm) and 60 mm between a first end and a second end, a width less than the length, and a depth less than the width;

a first electrode at or proximate to the first end;

a second electrode at or proximate to the second end;

a memory within the housing; and

processing circuitry within the housing, the processing circuitry configured to generate at least some of the cardio-thoracic data based on one or signals sensed via the first electrode and the second electrode.

* * * * *