US 20250257729A1

(19) United States
(12) Patent Application Publication
Foster et al.
(10) Pub. No.: US 2025/0257729 A1
(43) Pub. Date: Aug. 14, 2025

(54) **FLUID END WITH CLAMPED RETENTION**

(71) Applicant: **Kerr Machine Co.**, Sulphur, OK (US)

(72) Inventors: **Kelcy Jake Foster**, Sulphur, OK (US); **Micheal Cole Thomas**, Azle, TX (US); **Christopher Todd Barnett**, Stratford, OK (US); **Nicholas Son**, Davis, OK (US); **John Keith**, Ardmore, OK (US)

(21) Appl. No.: **19/192,251**

(22) Filed: **Apr. 28, 2025**

Related U.S. Application Data

(63) Continuation of application No. 18/734,303, filed on Jun. 5, 2024, now Pat. No. 12,297,827.

(60) Provisional application No. 63/506,222, filed on Jun. 5, 2023, provisional application No. 63/508,577, filed on Jun. 16, 2023.

Publication Classification

(51) **Int. Cl.**
F04B 53/16 (2006.01)
F04B 53/22 (2006.01)
F16J 15/26 (2006.01)

(52) **U.S. Cl.**
CPC ***F04B 53/164*** (2013.01); ***F04B 53/22*** (2013.01); *F16J 15/26* (2013.01)

(57) **ABSTRACT**

A fluid end section having a clamping system. The clamping system has a primary clamp formed of a number of sections, which, disposed in end-to-end arrangement, form an annular ring. The primary clamp has an angled surface at each of two rims, which interact with complementary surfaces on flanges that form two separate components of the fluid end section. Each of the two separate components have a bore, which when aligned by placement of the clamp, are in alignment with one another. The clamp has an externally-disposed compression ring, which may either be essentially the width of the primary clamp, or may have one or more flexible rods which interact with grooves on the primary clamp. In either case, the compression ring holds the primary clamp in place, therefore joining the components of the fluid end.

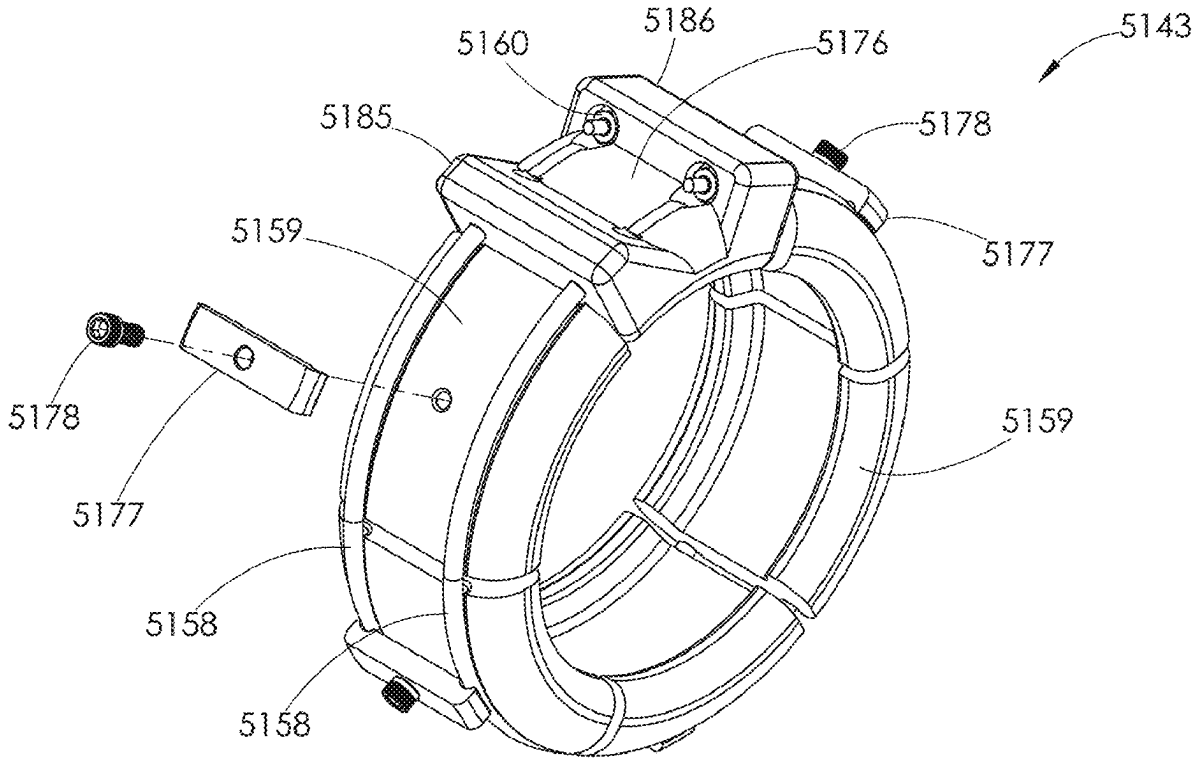

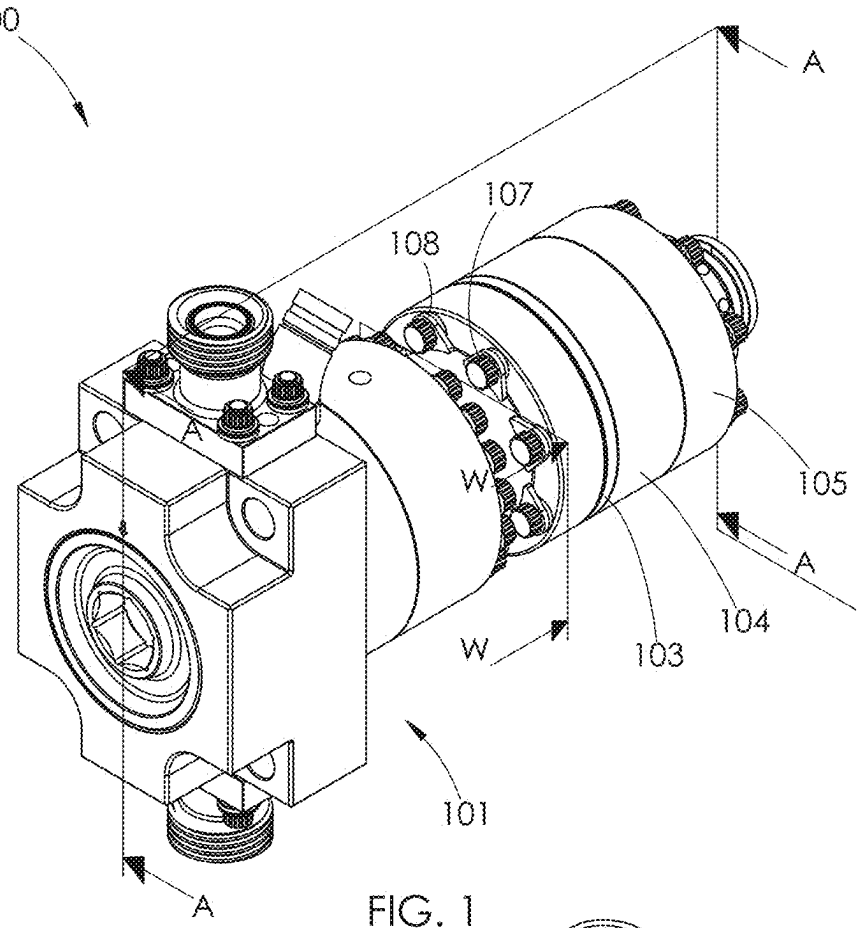
100
A
107
108
A
W
105
A
104
W
103
101
A

FIG. 1

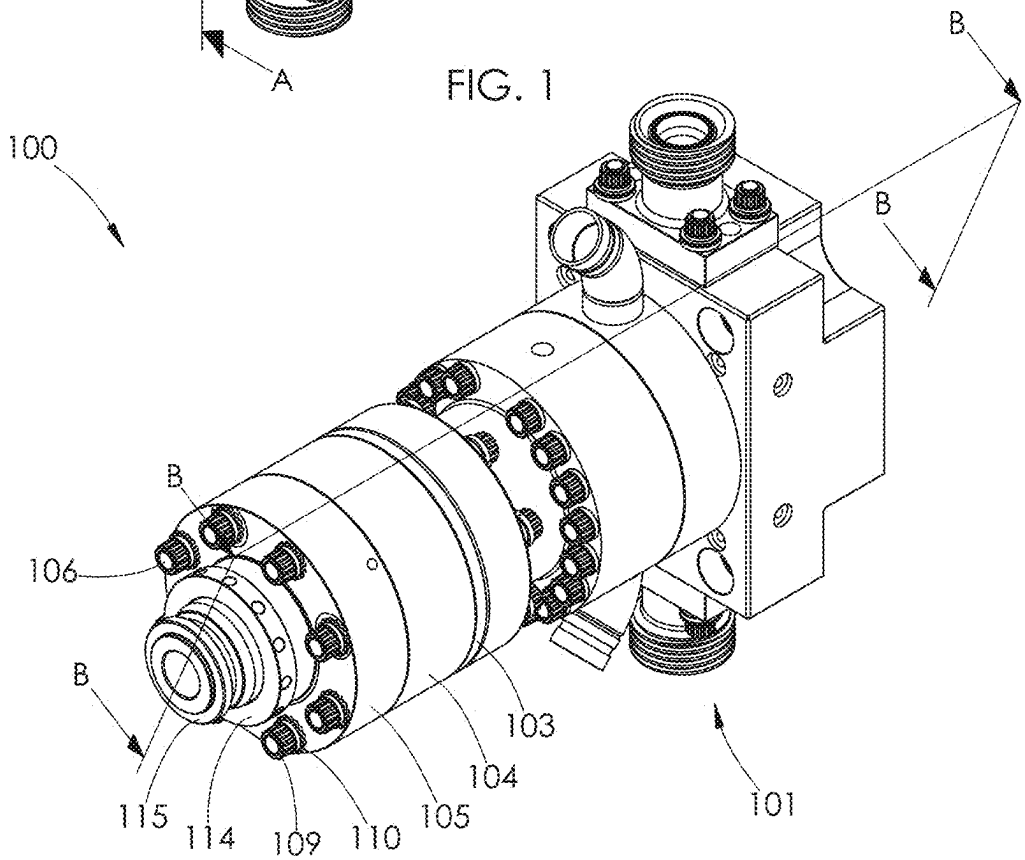
B
100
B
B
106
B
103
104
115
114
109
110
105
101

FIG. 2

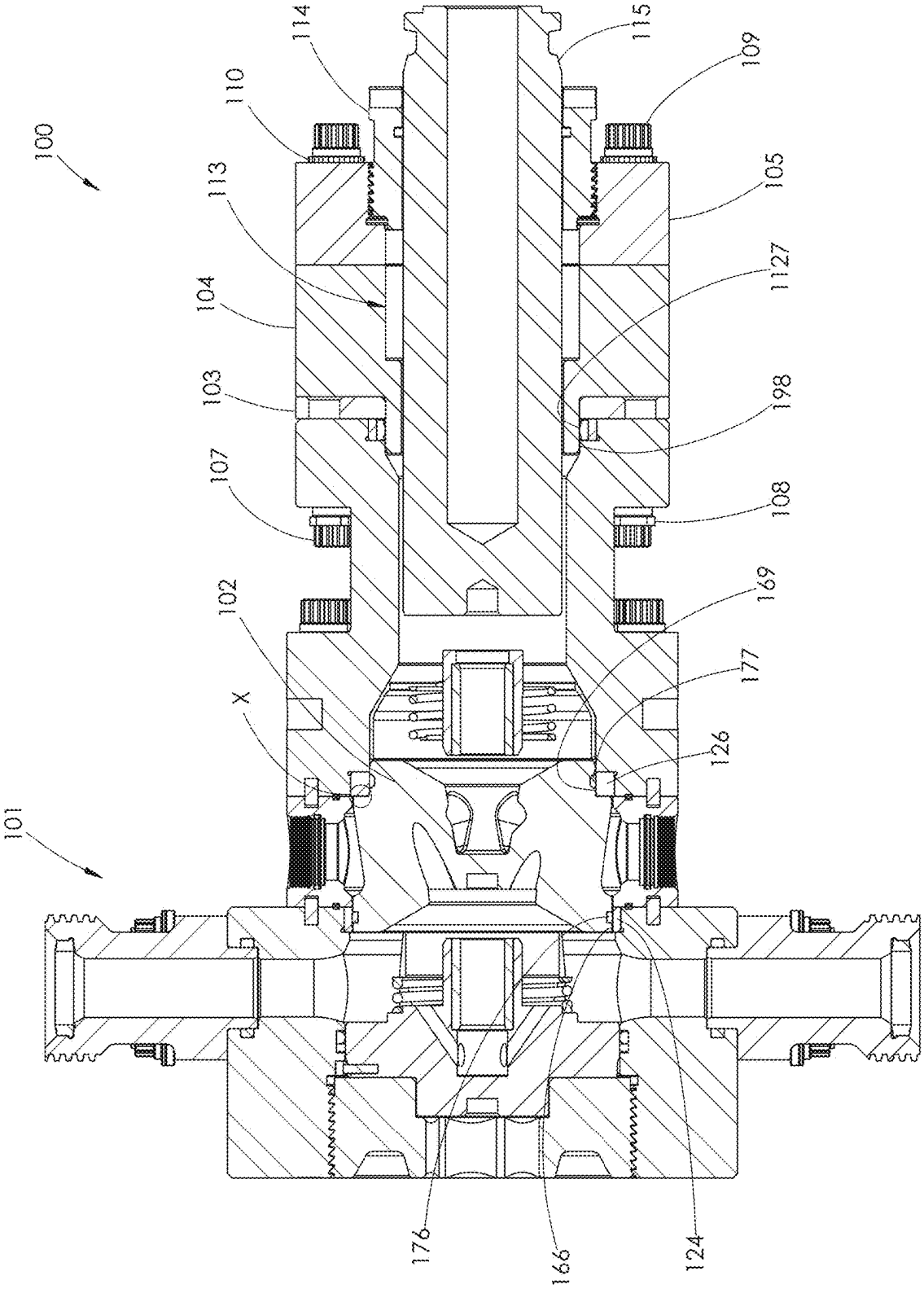
100
101
102
103
104
105
107
108
109
110
113
114
115
1127
124
126
166
169
176
177
198
X

FIG. 3

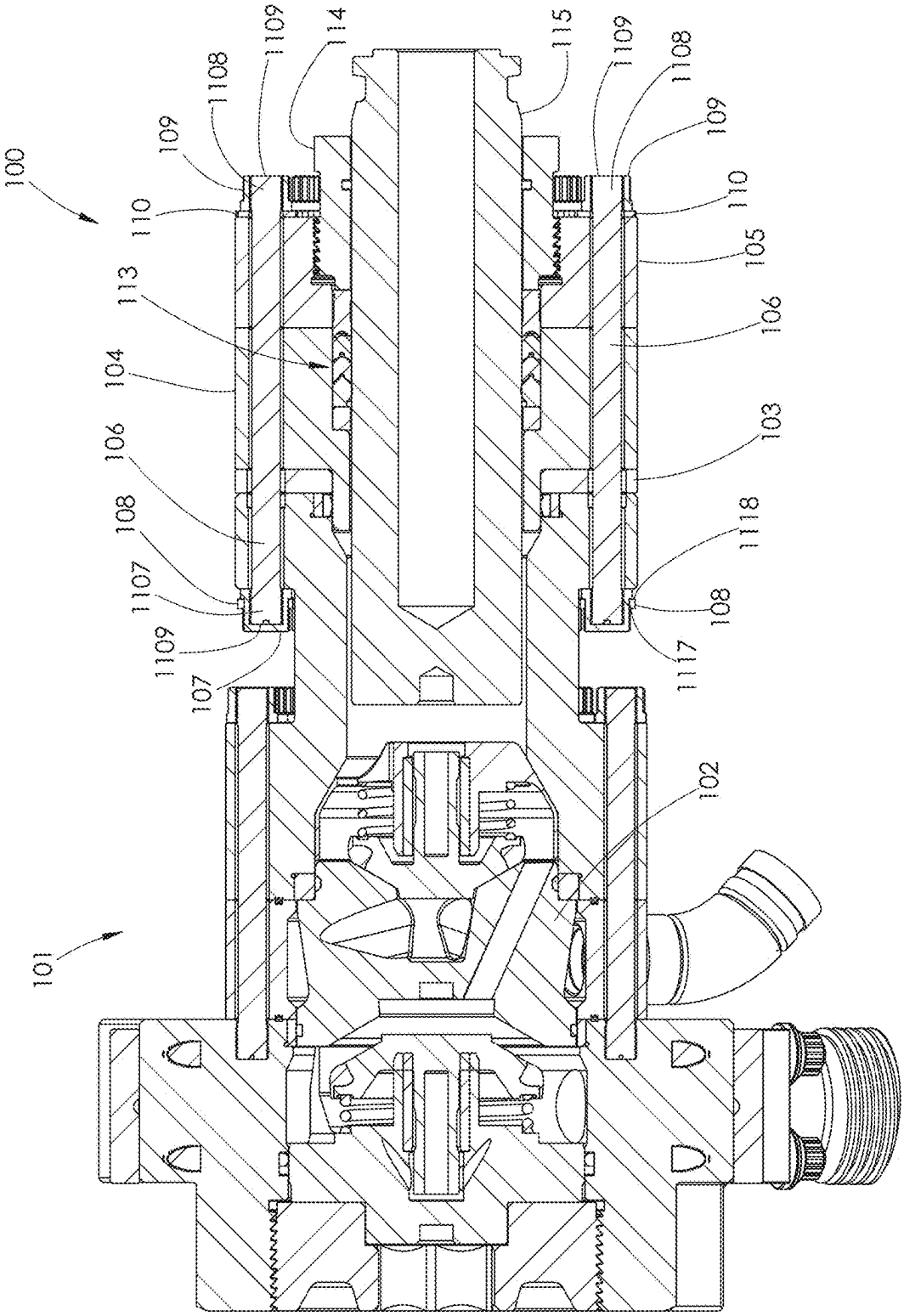
100
101
102
103
104
105
106
106
107
107
108
108
108
109
109
109
109
110
110
113
114
115
1107
1108
1108
1109
1109
1109
1117
1118

FIG. 4

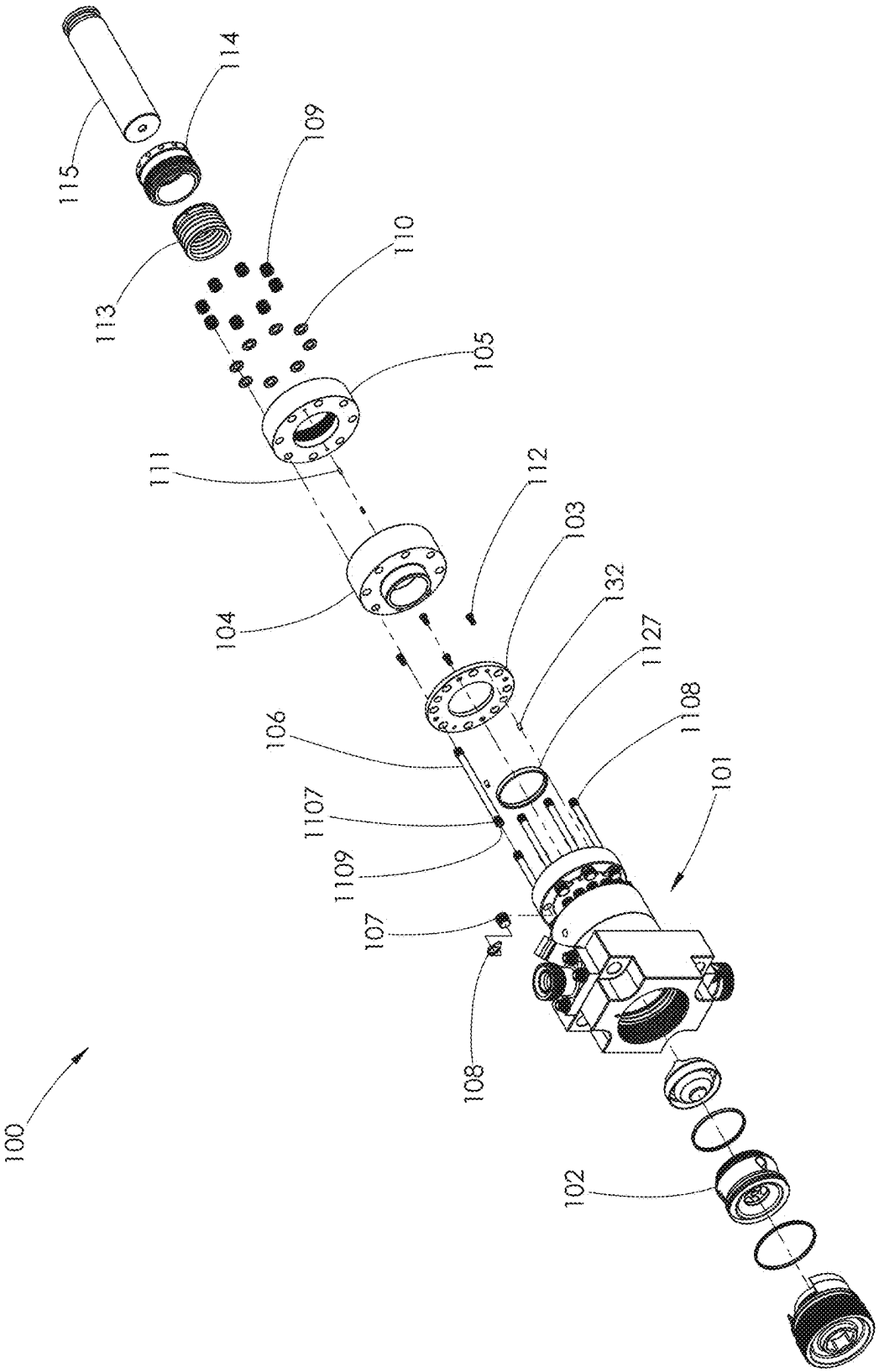
100
115
114
113
109
110
105
111
104
112
103
132
1127
1108
101
106
1107
1109
107
108
102

FIG. 5

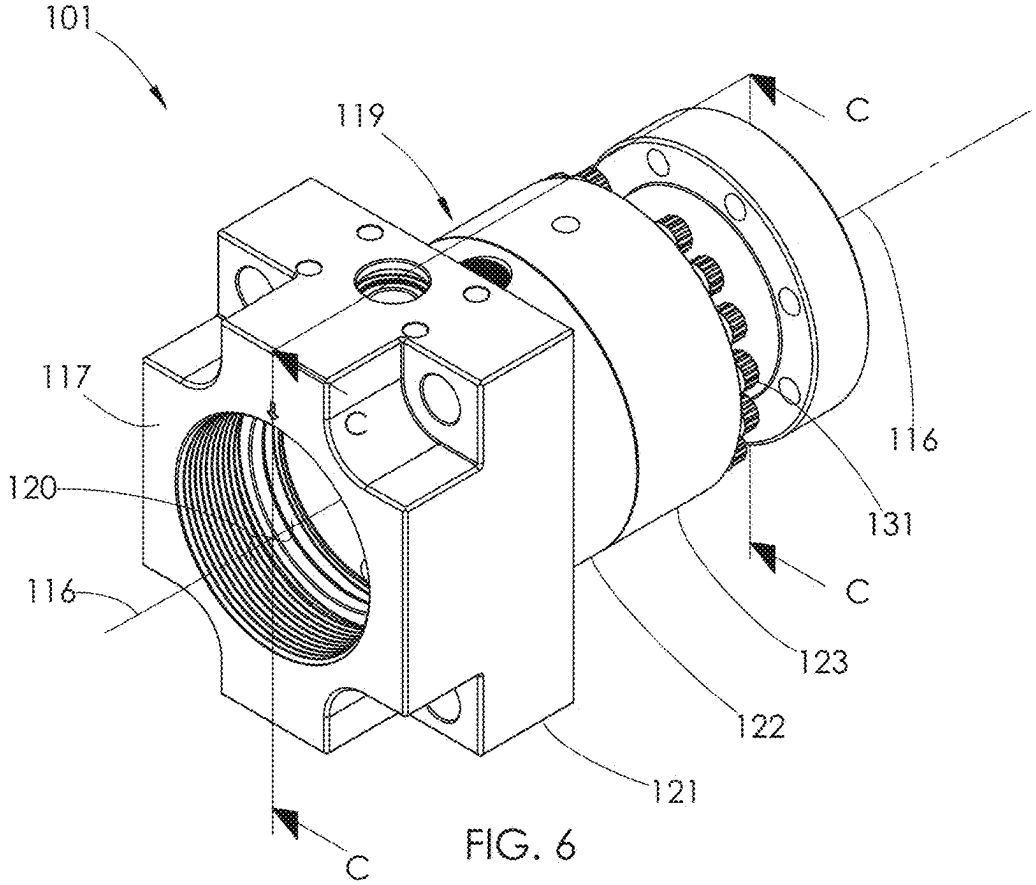
101
119
C
117
C
116
120
131
116
C
123
122
121
C

FIG. 6

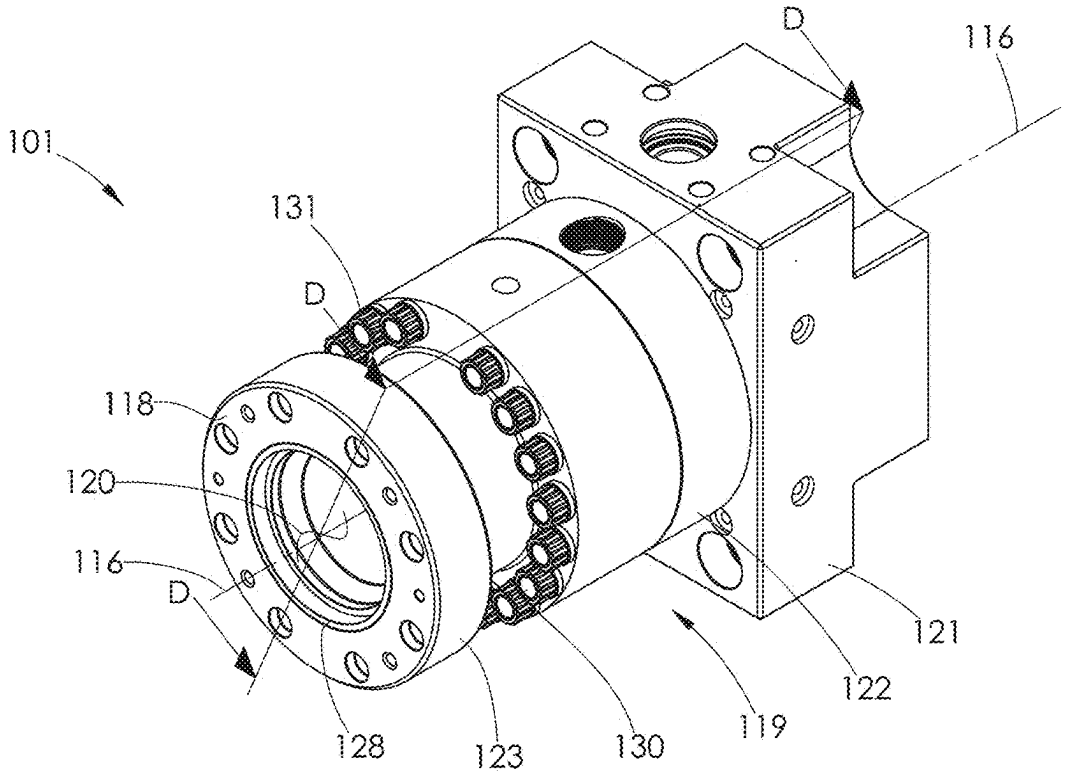
D
116
101
131
D
118
120
116
D
121
122
128
123
130
119

FIG. 7

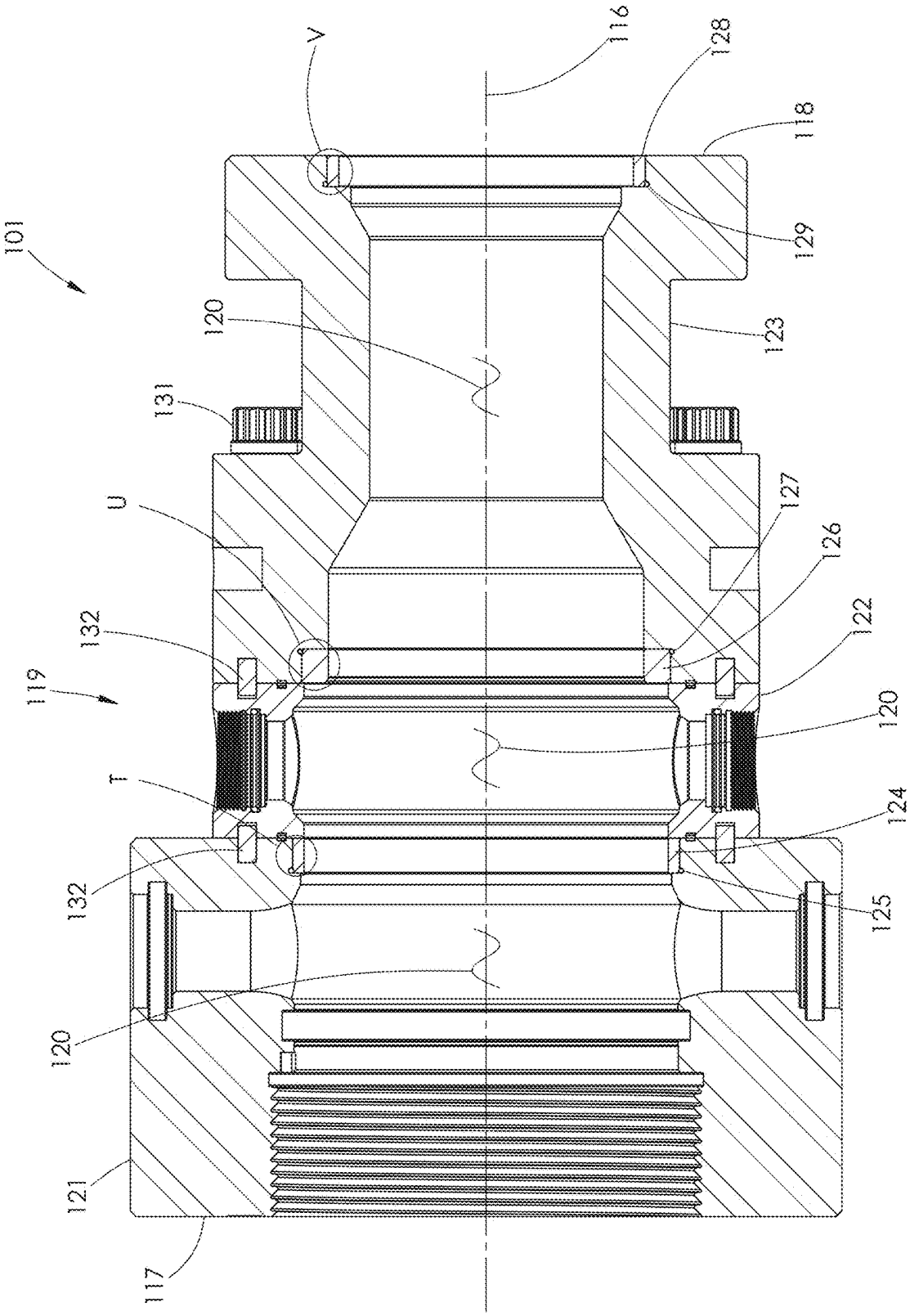
101
V
116
128
118
129
120
123
131
U
127
126
132
122
119
120
T
124
132
125
120
121
117

FIG. 8

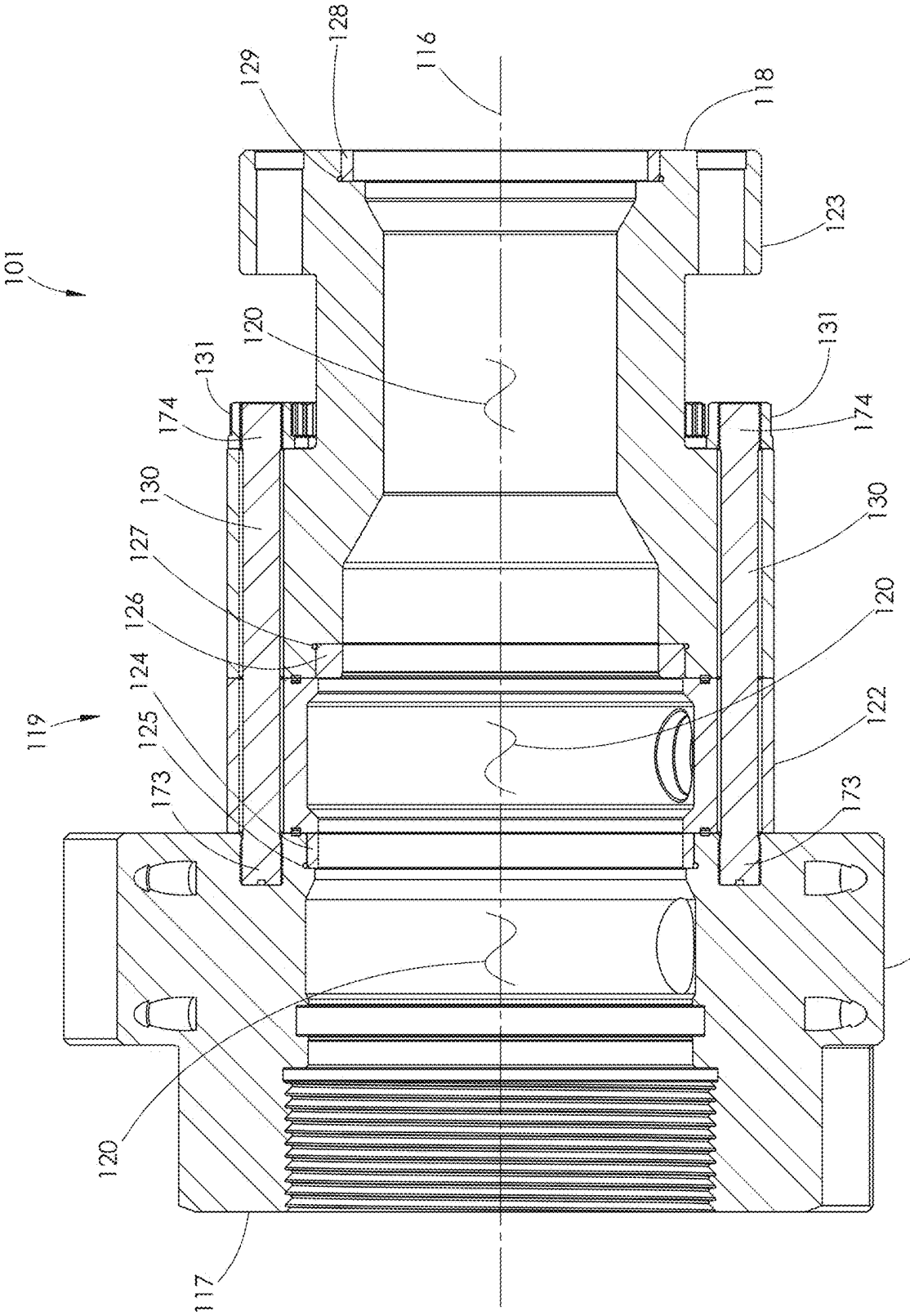
101
119
117
120
173
125
124
126
127
130
174
131
129
128
116
118
123
121
122

FIG. 9

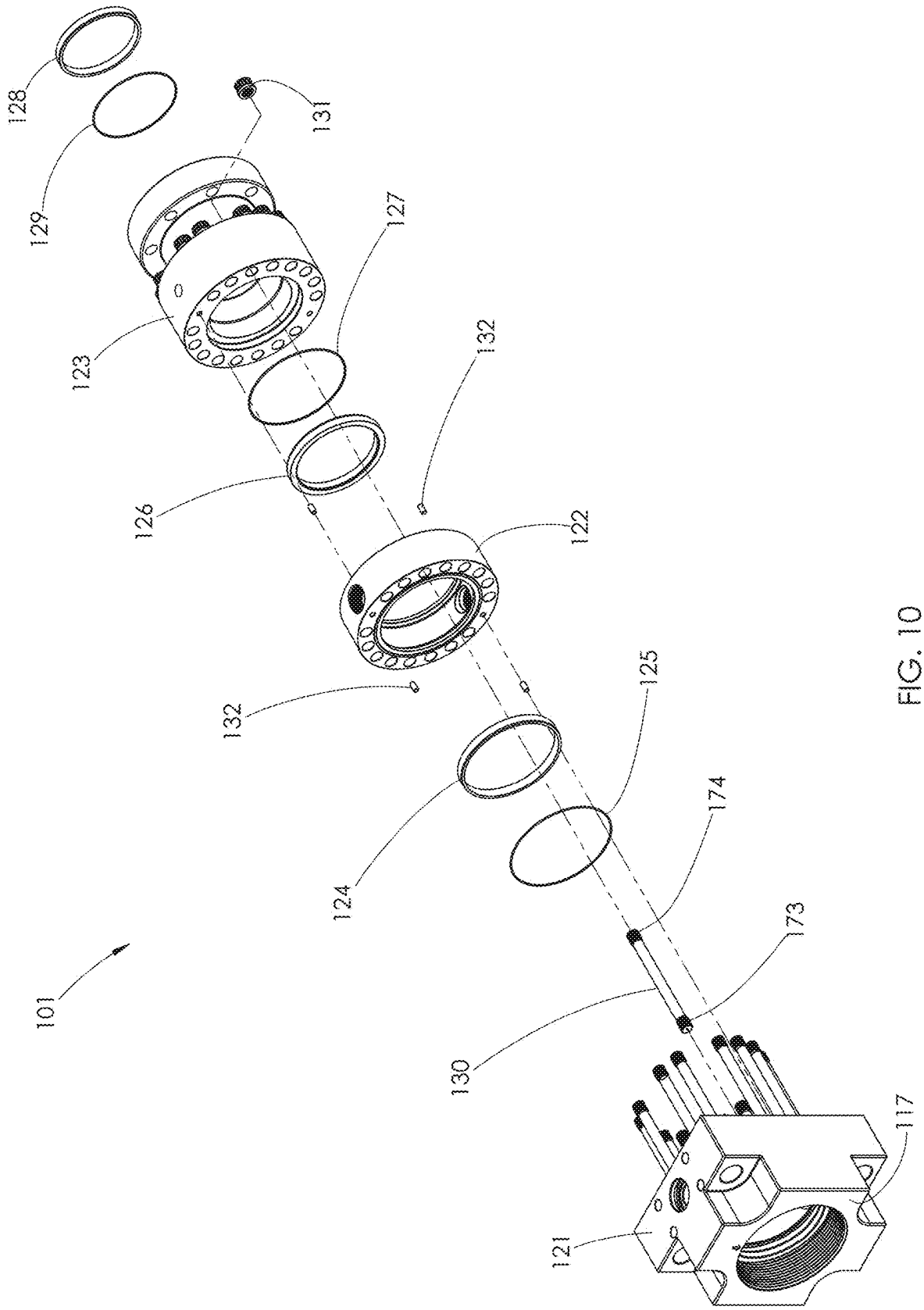
128
129
131
127
123
132
126
122
132
125
124
174
173
101
130
117
121

FIG. 10

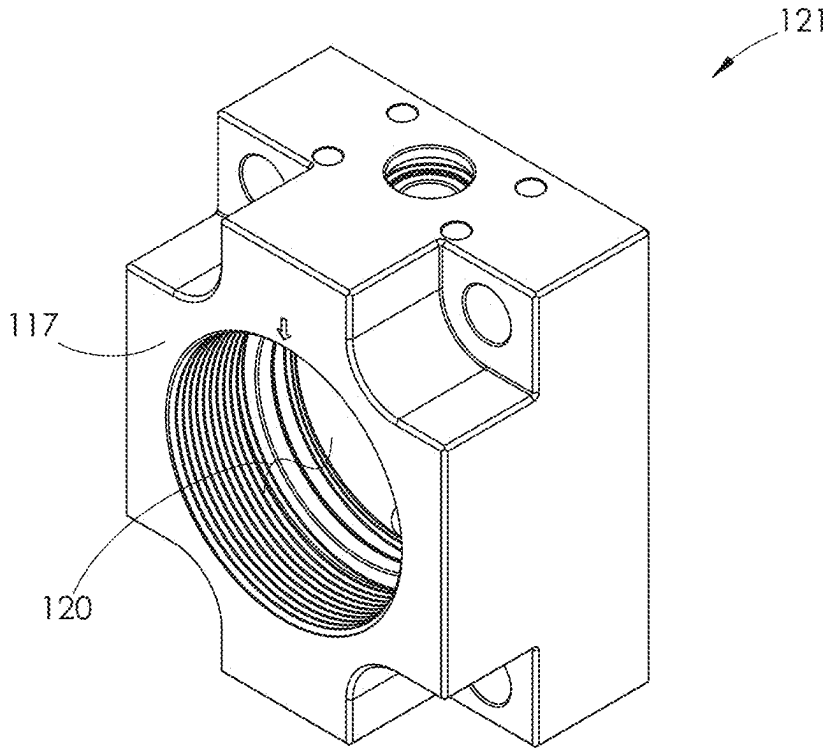

FIG. 11

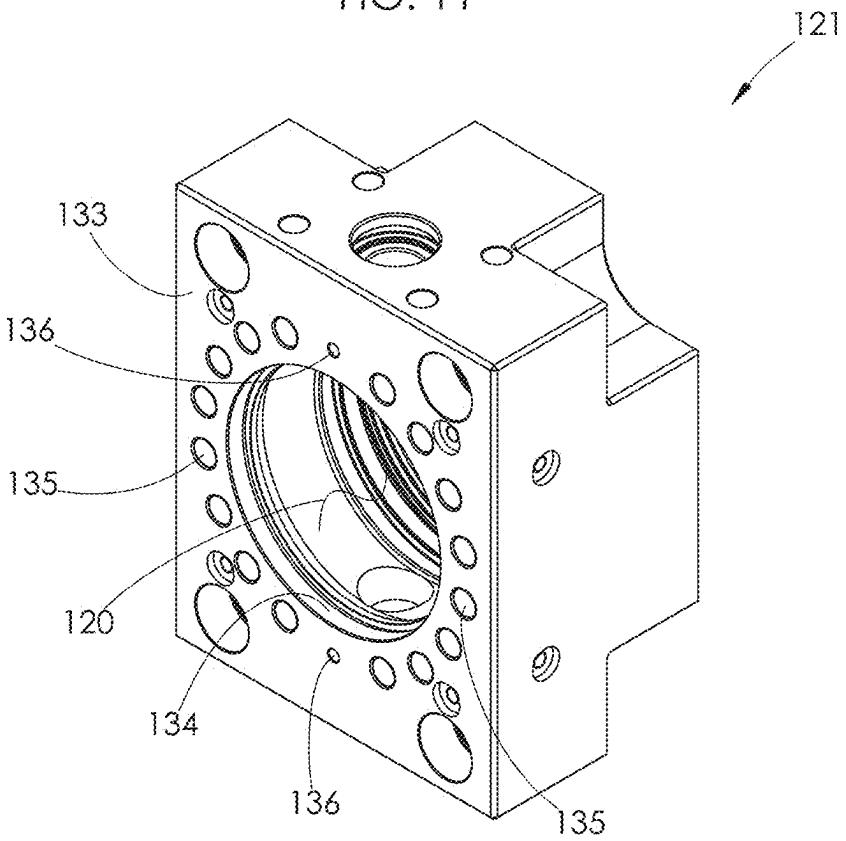

FIG. 12

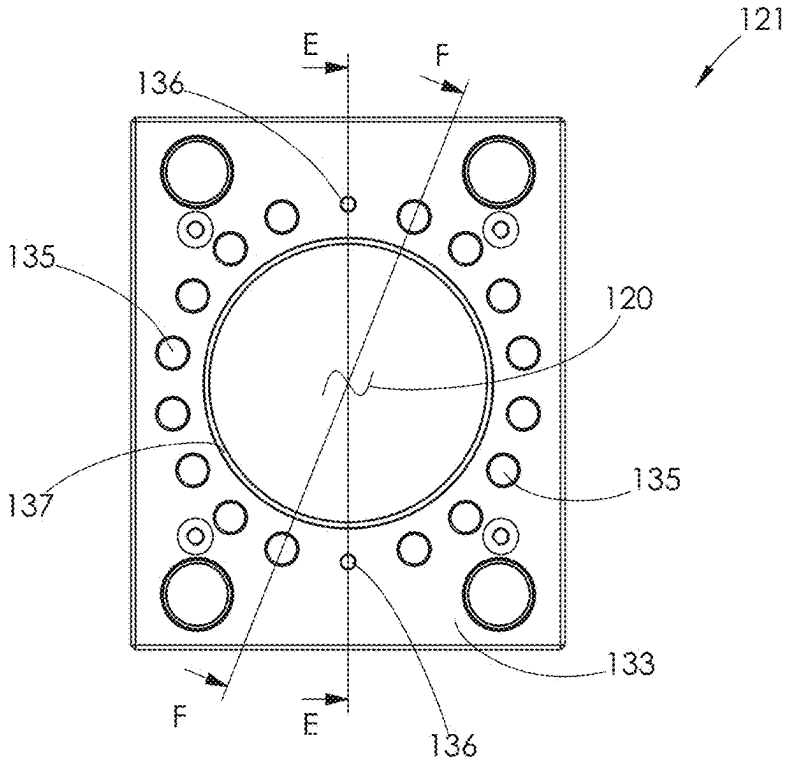

FIG. 13

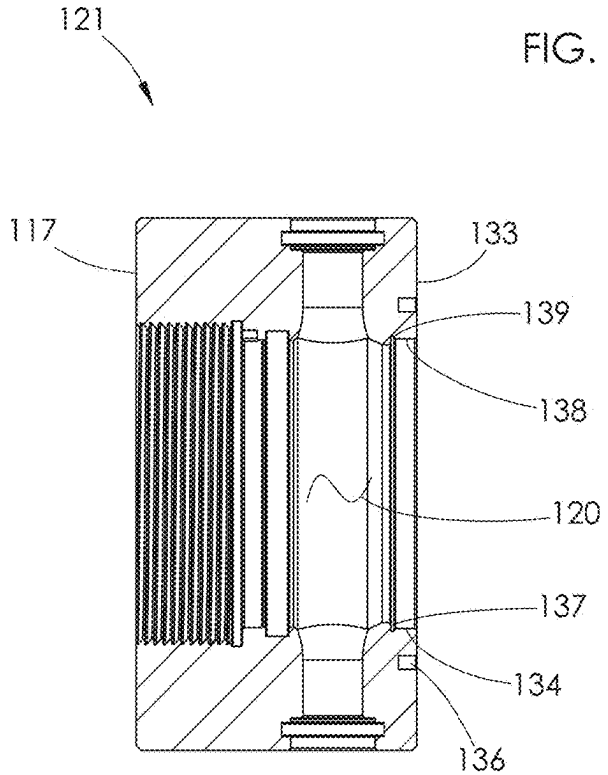

FIG. 14

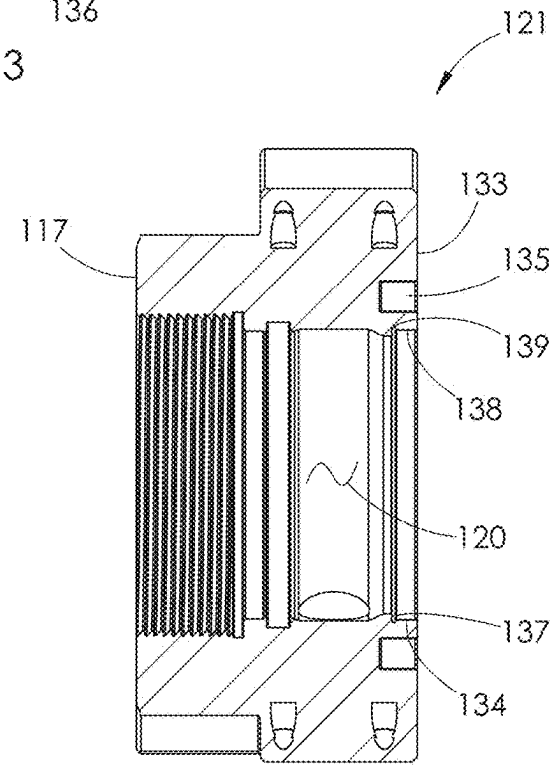

FIG. 15

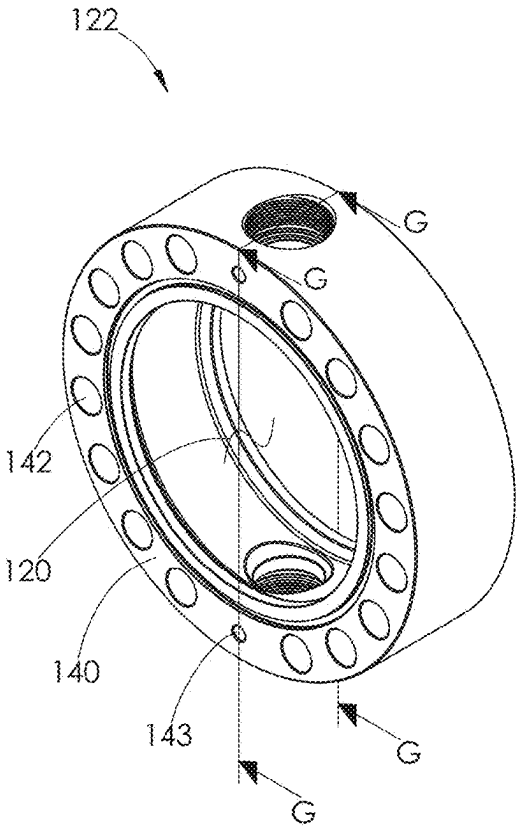

FIG. 16

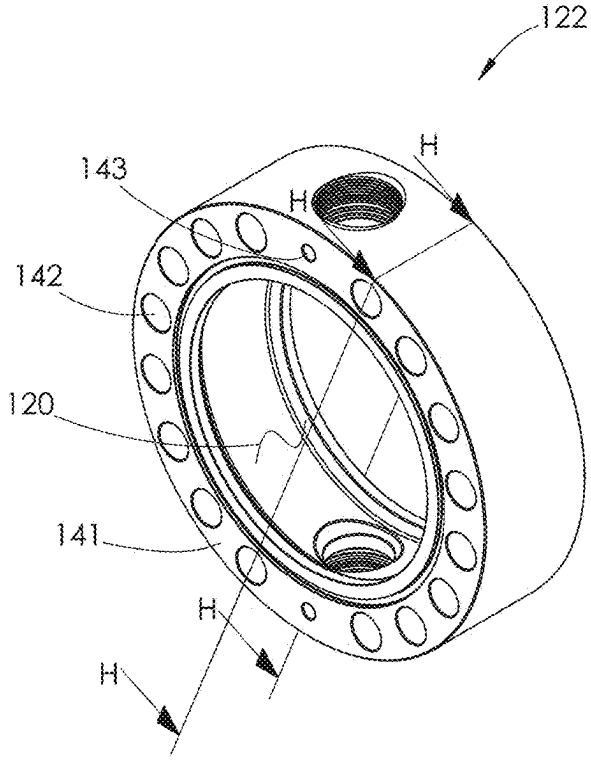

FIG. 17

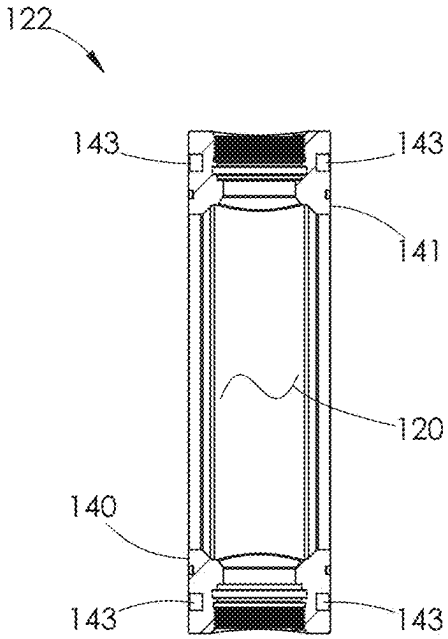

FIG. 18

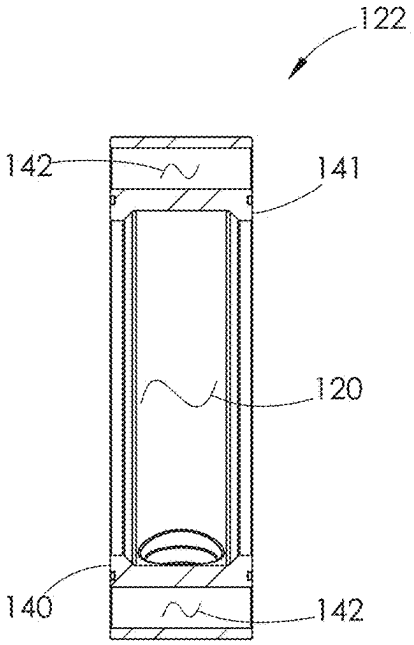

FIG. 19

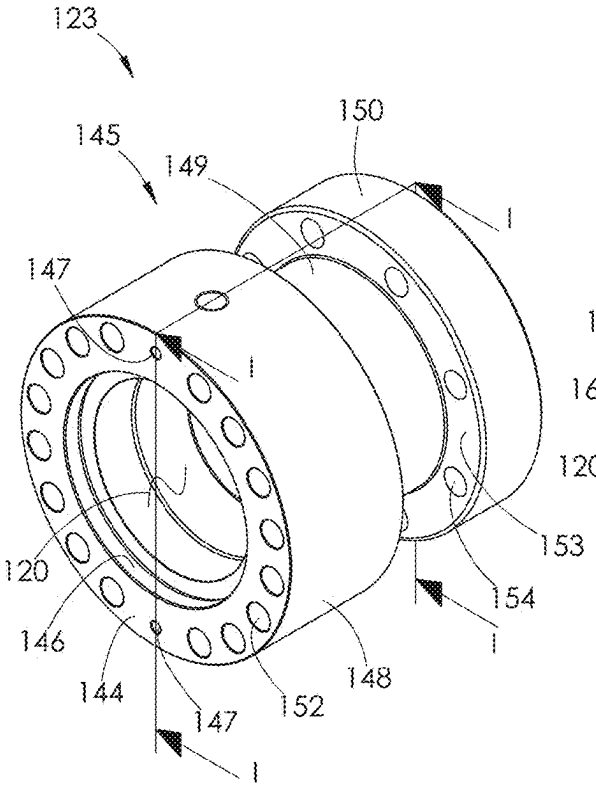

FIG. 20

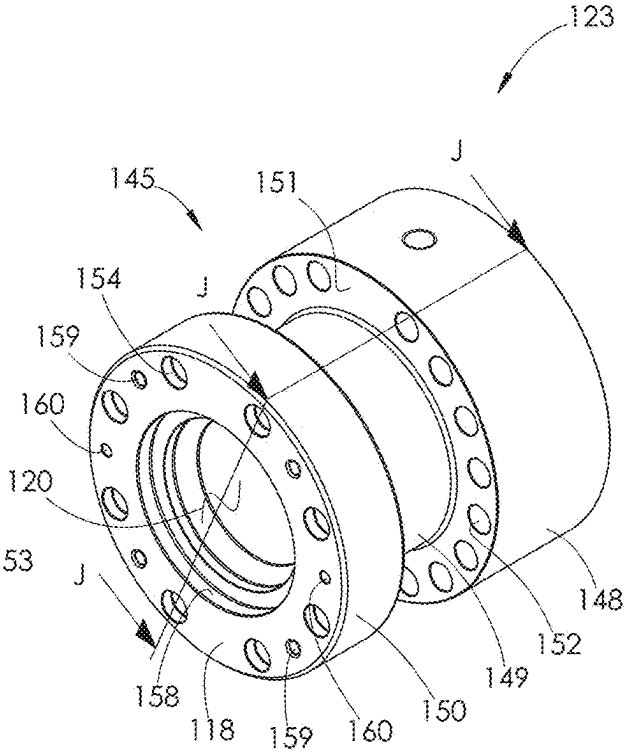

FIG. 21

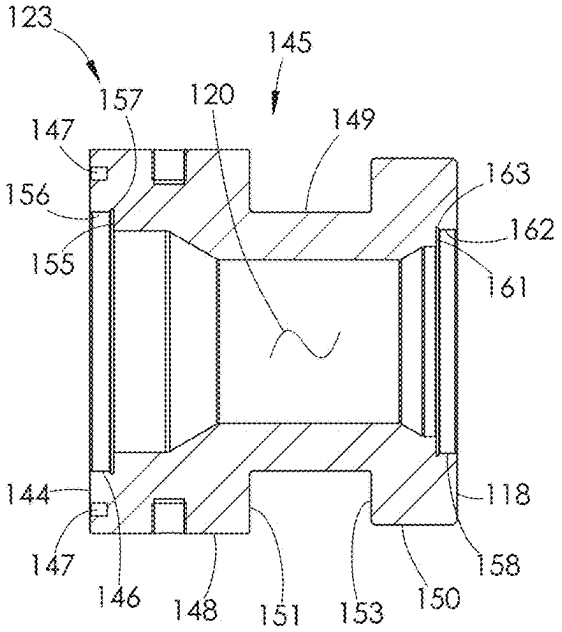

FIG. 22

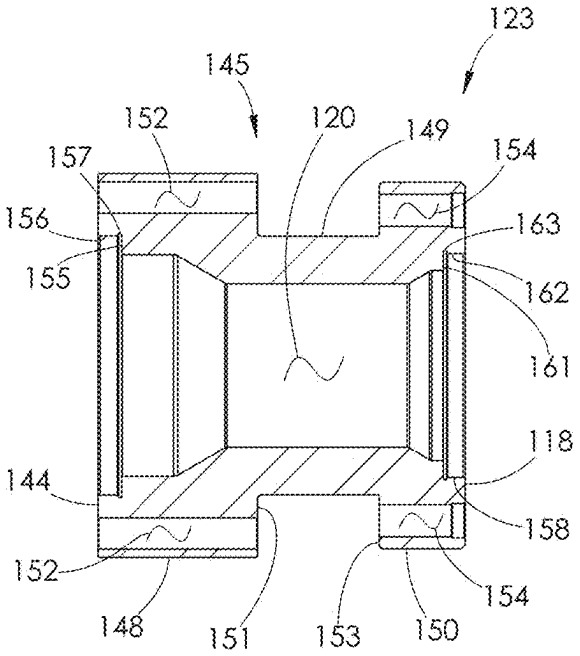

FIG. 23

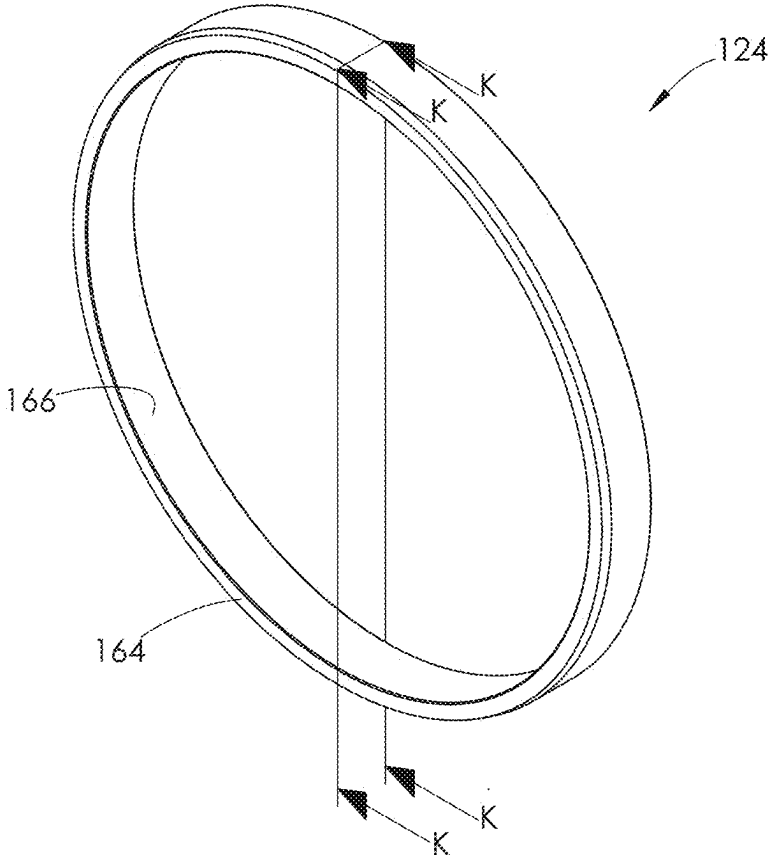

FIG. 24

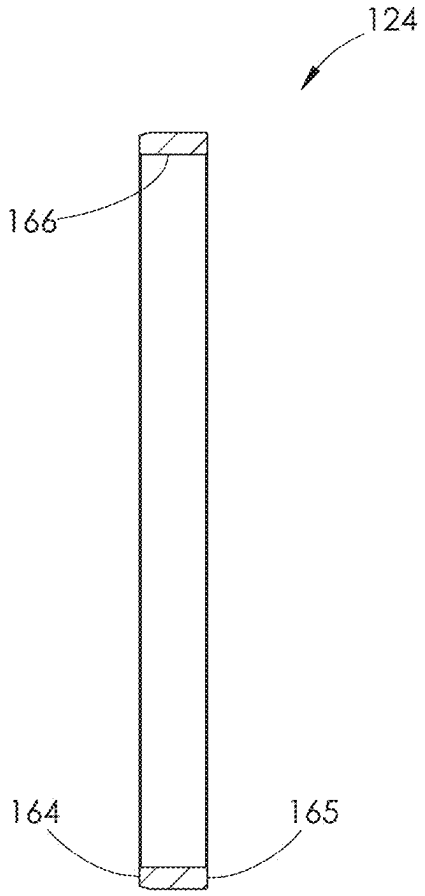

FIG. 25

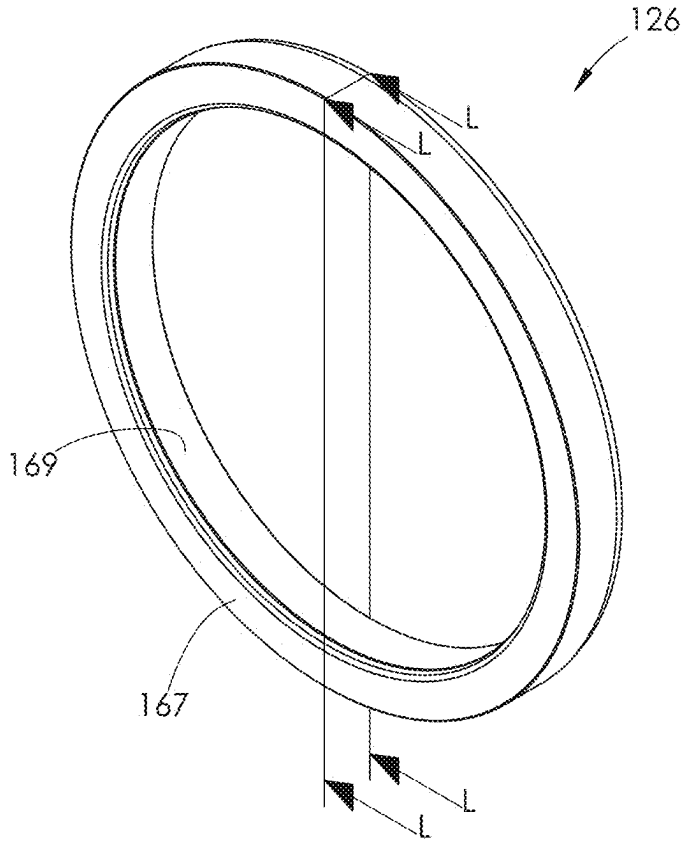

FIG. 26

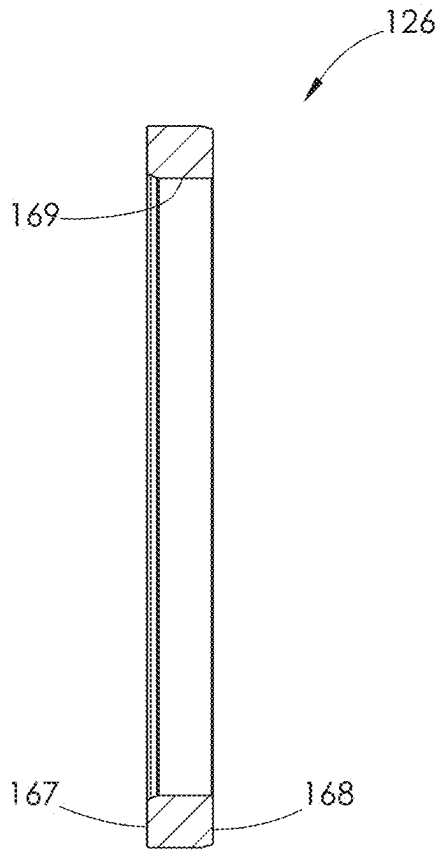

FIG. 27

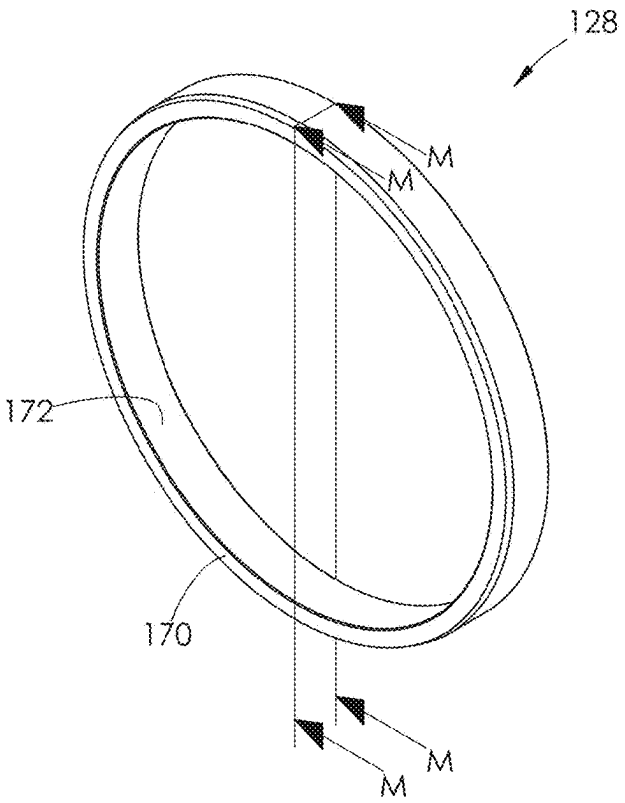

FIG. 28

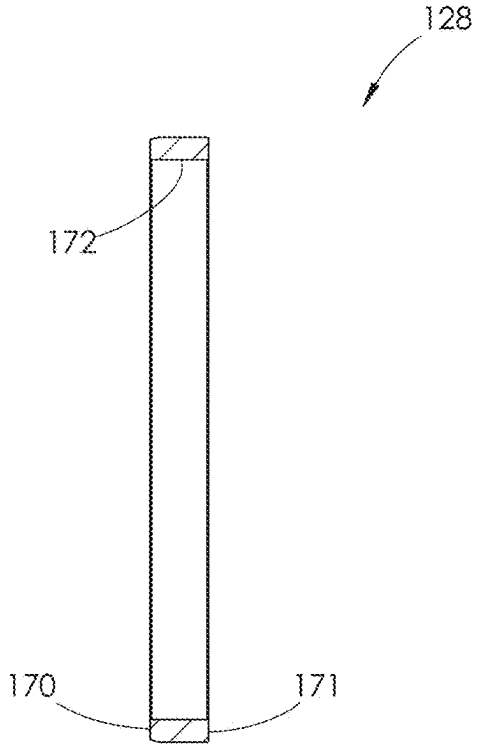

FIG. 29

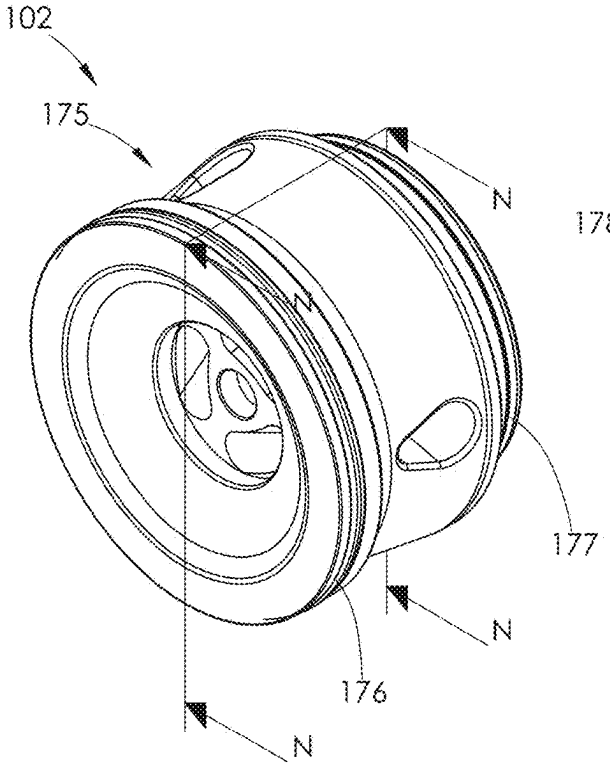

FIG. 30

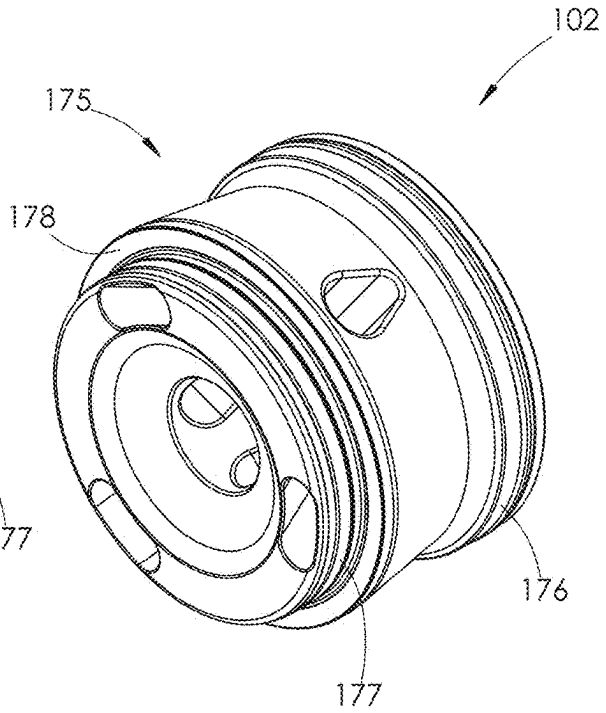

FIG. 31

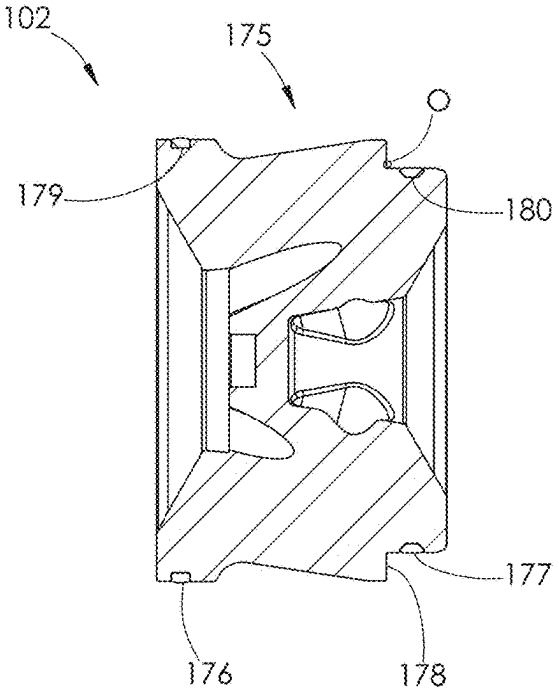

FIG. 32

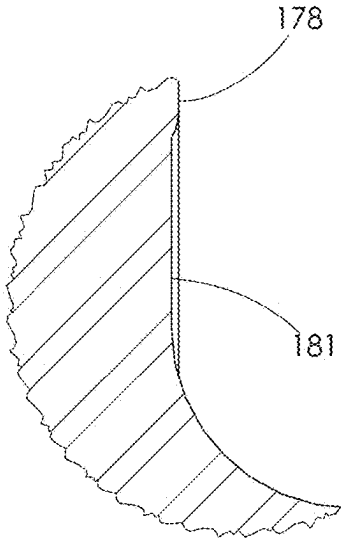

FIG. 33

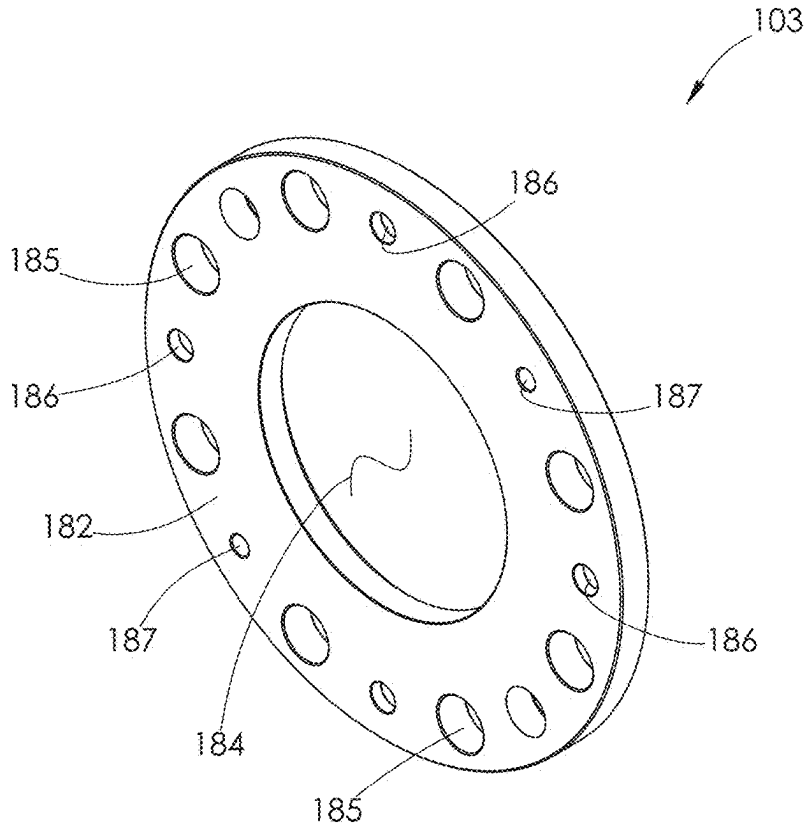
103
186
185
186
187
182
187
186
184
185

FIG. 34

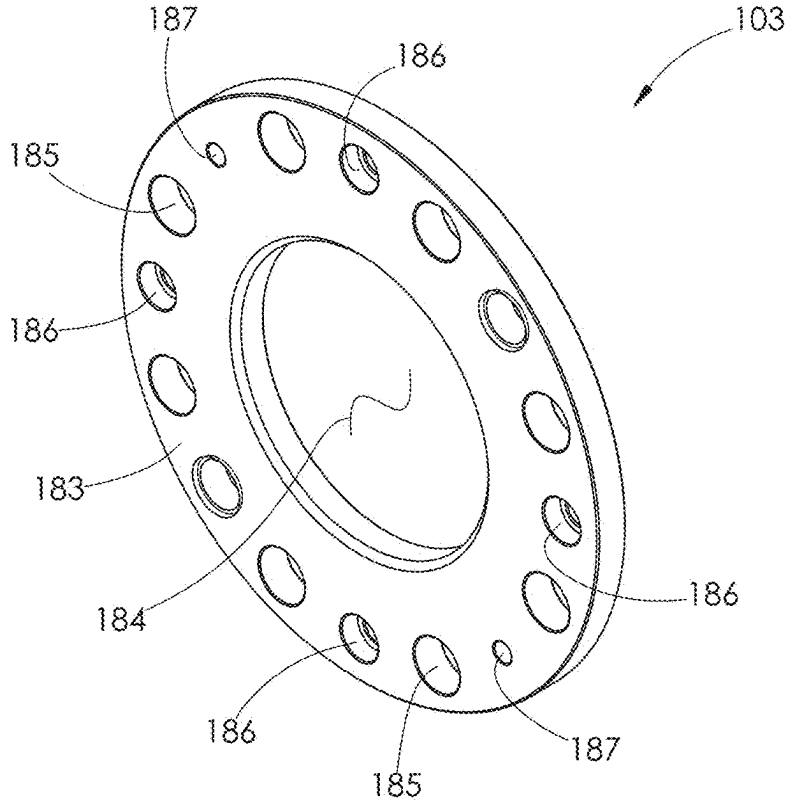
187
186
103
185
186
183
184
186
186
187
185

FIG. 35

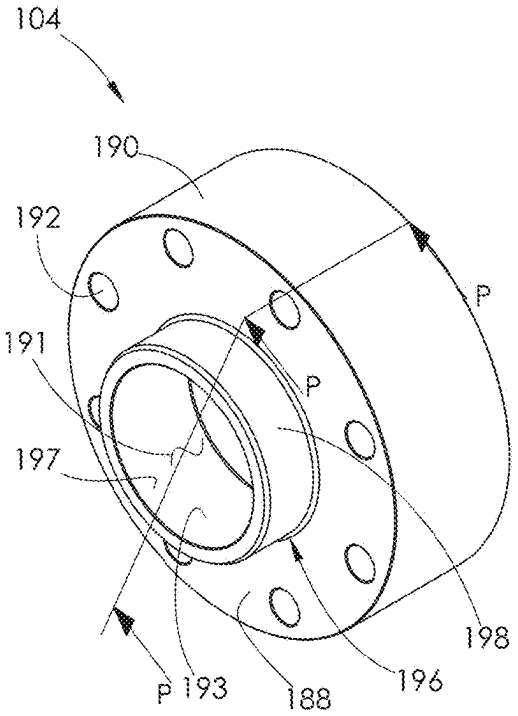

FIG. 36

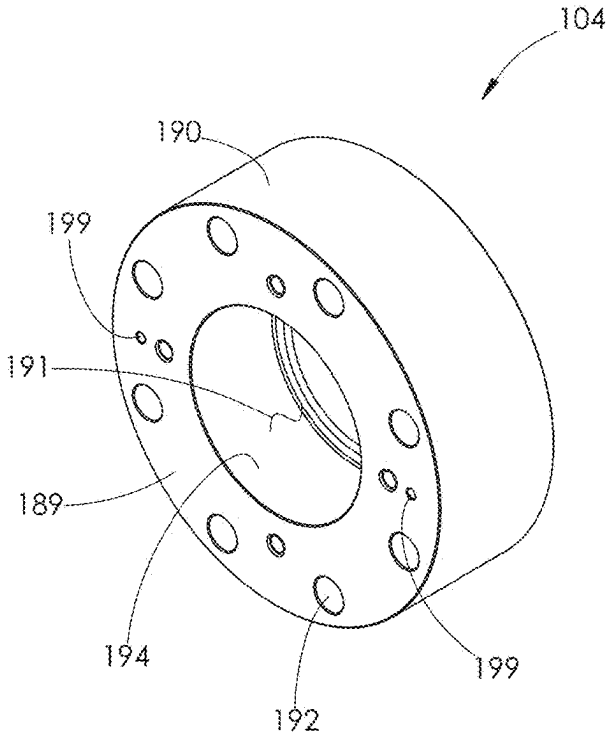

FIG. 37

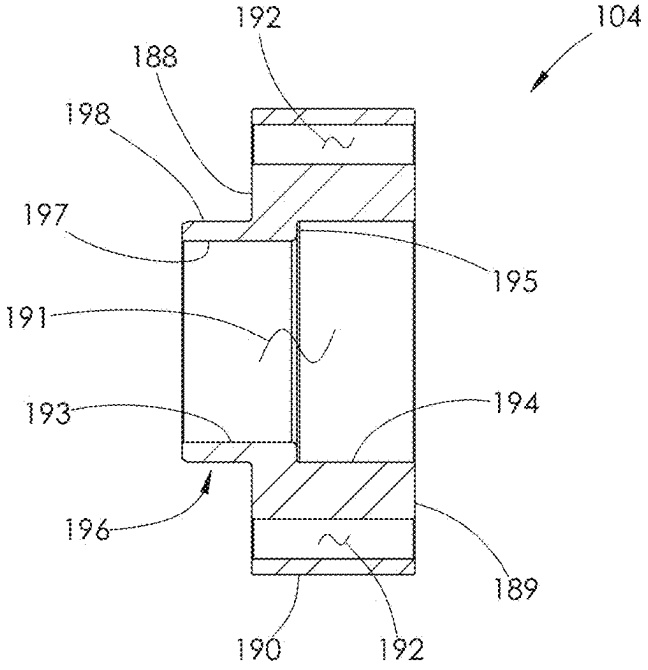

FIG. 38

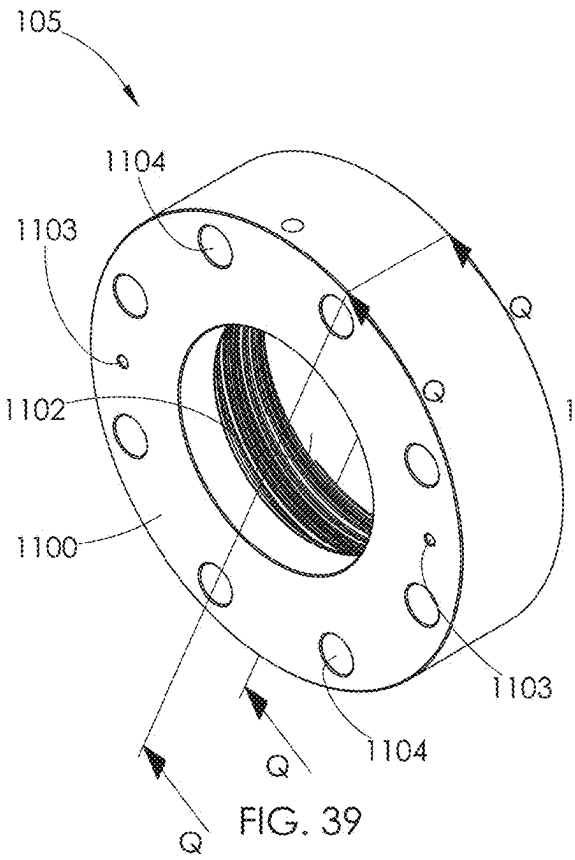

FIG. 39

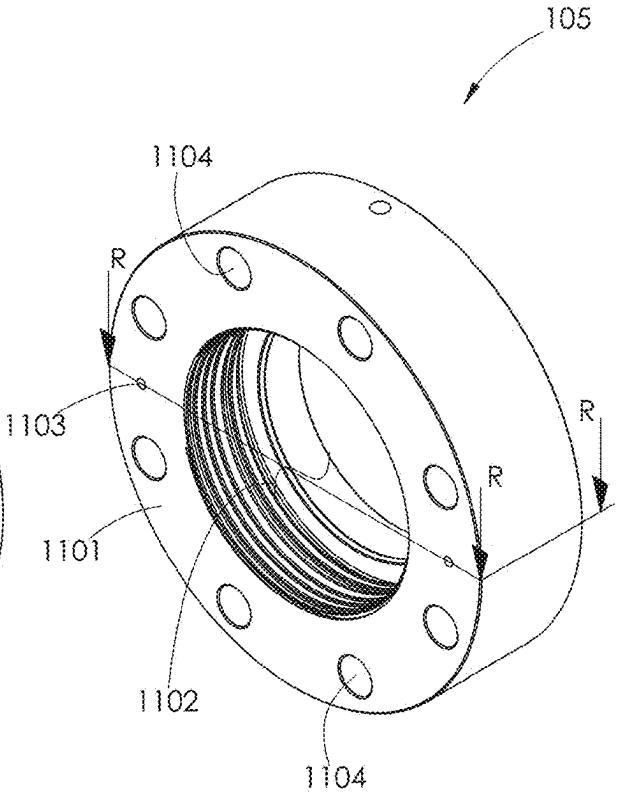

FIG. 40

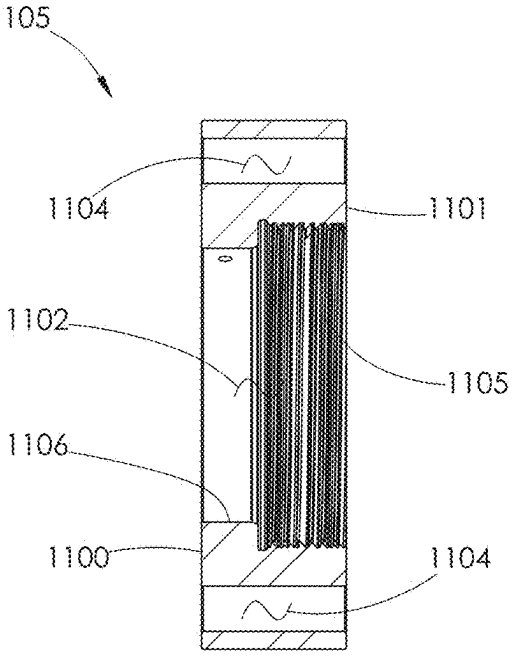

FIG. 41

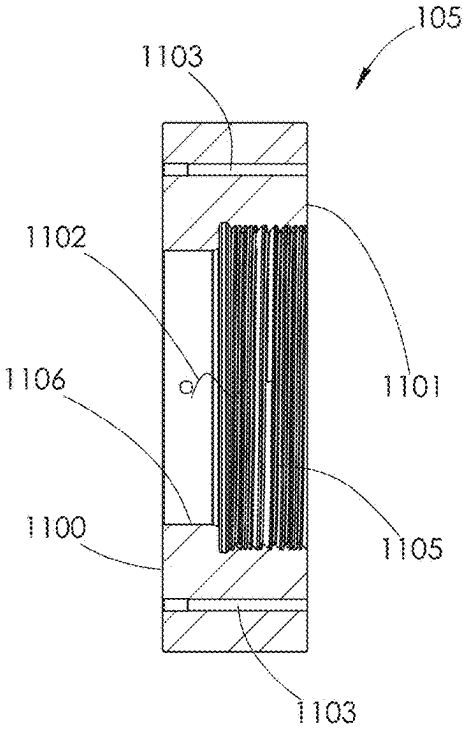

FIG. 42

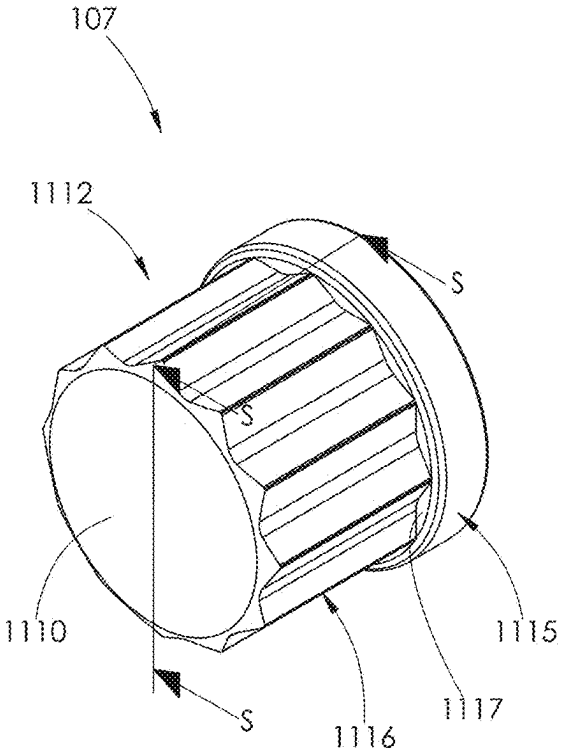

FIG. 43

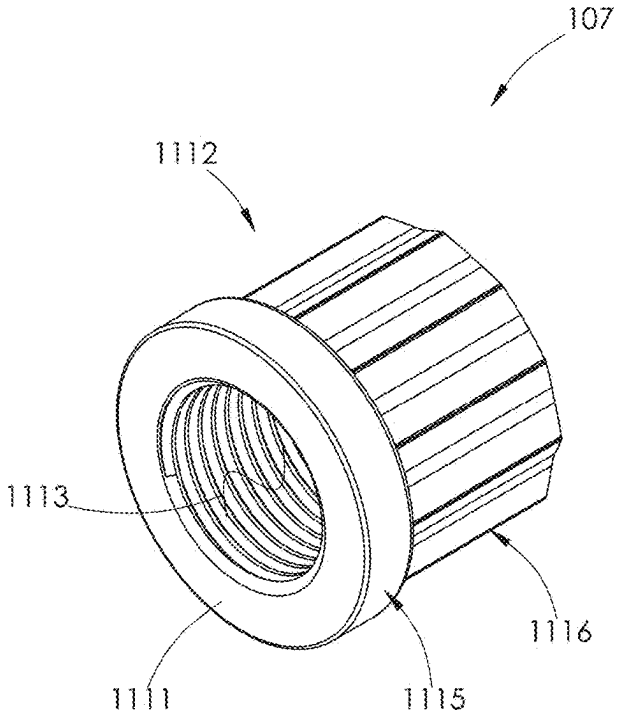

FIG. 44

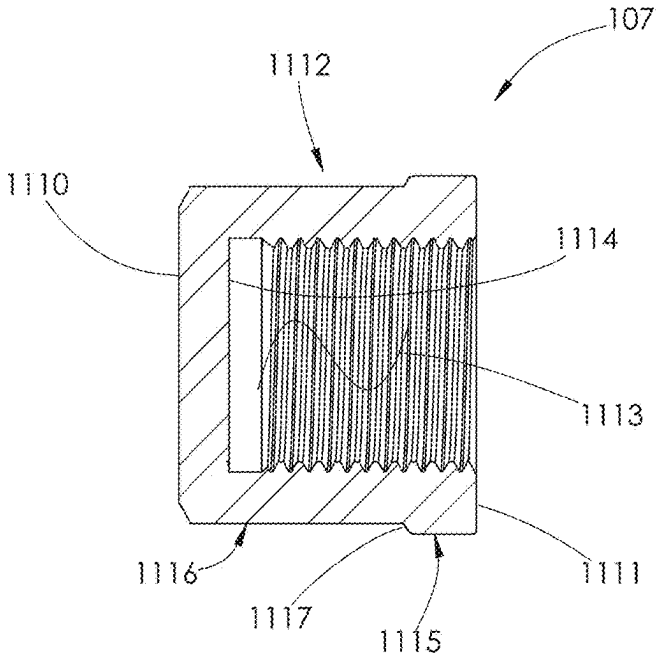

FIG. 45

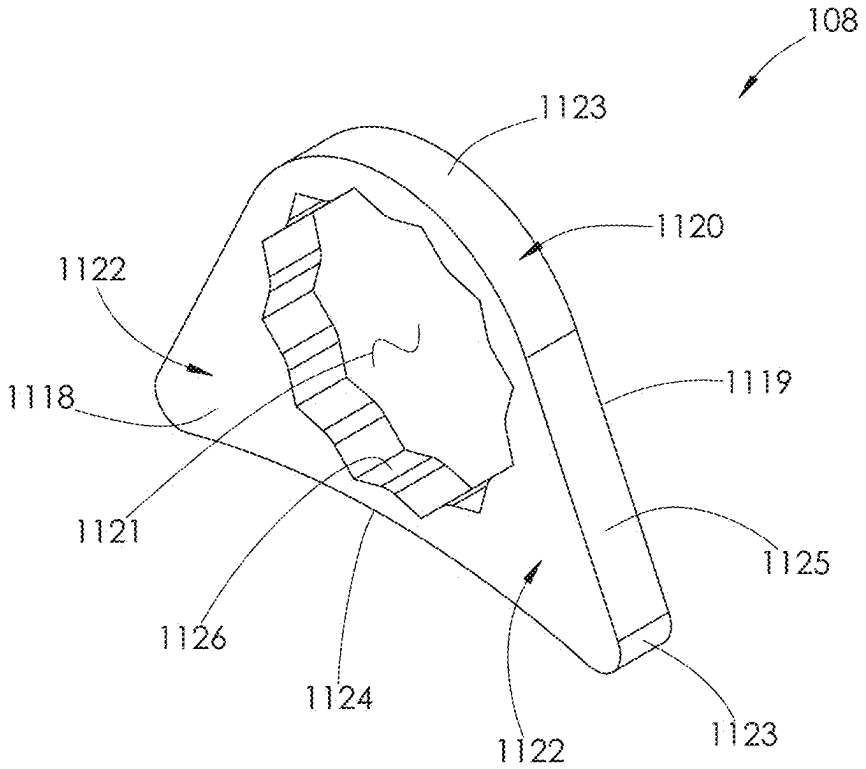
108
1123
1120
1122
1118
1119
1121
1125
1126
1124
1122
1123

FIG. 46

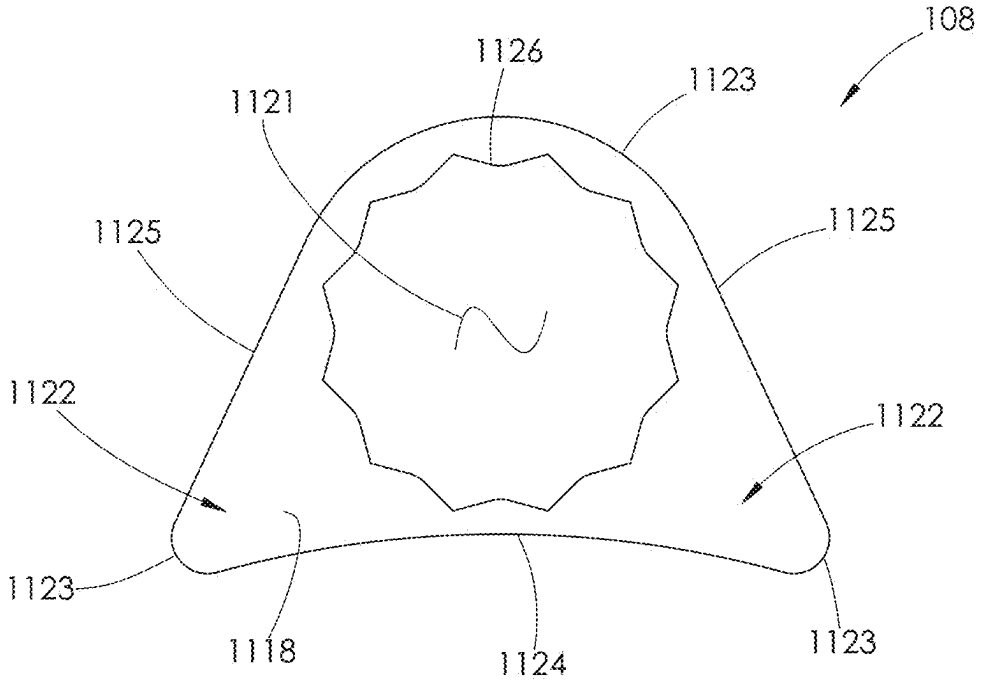
108
1126
1123
1121
1125
1125
1122
1122
1123
1118
1124
1123

FIG. 47

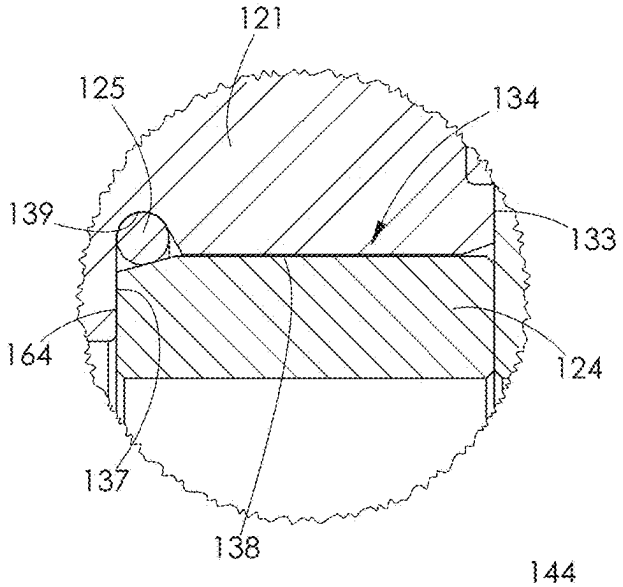

FIG. 48

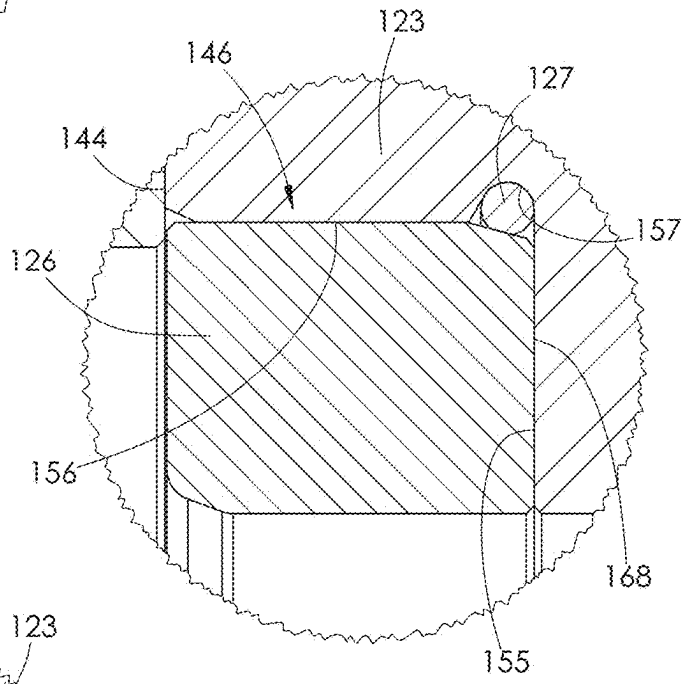

FIG. 49

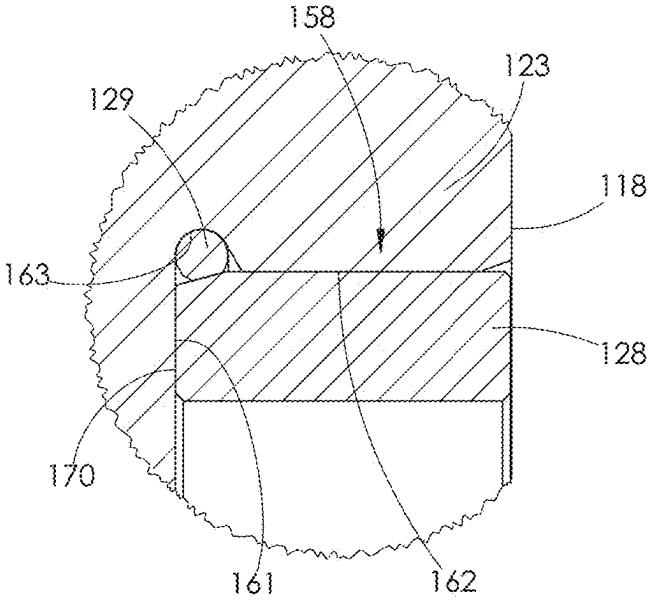

FIG. 50

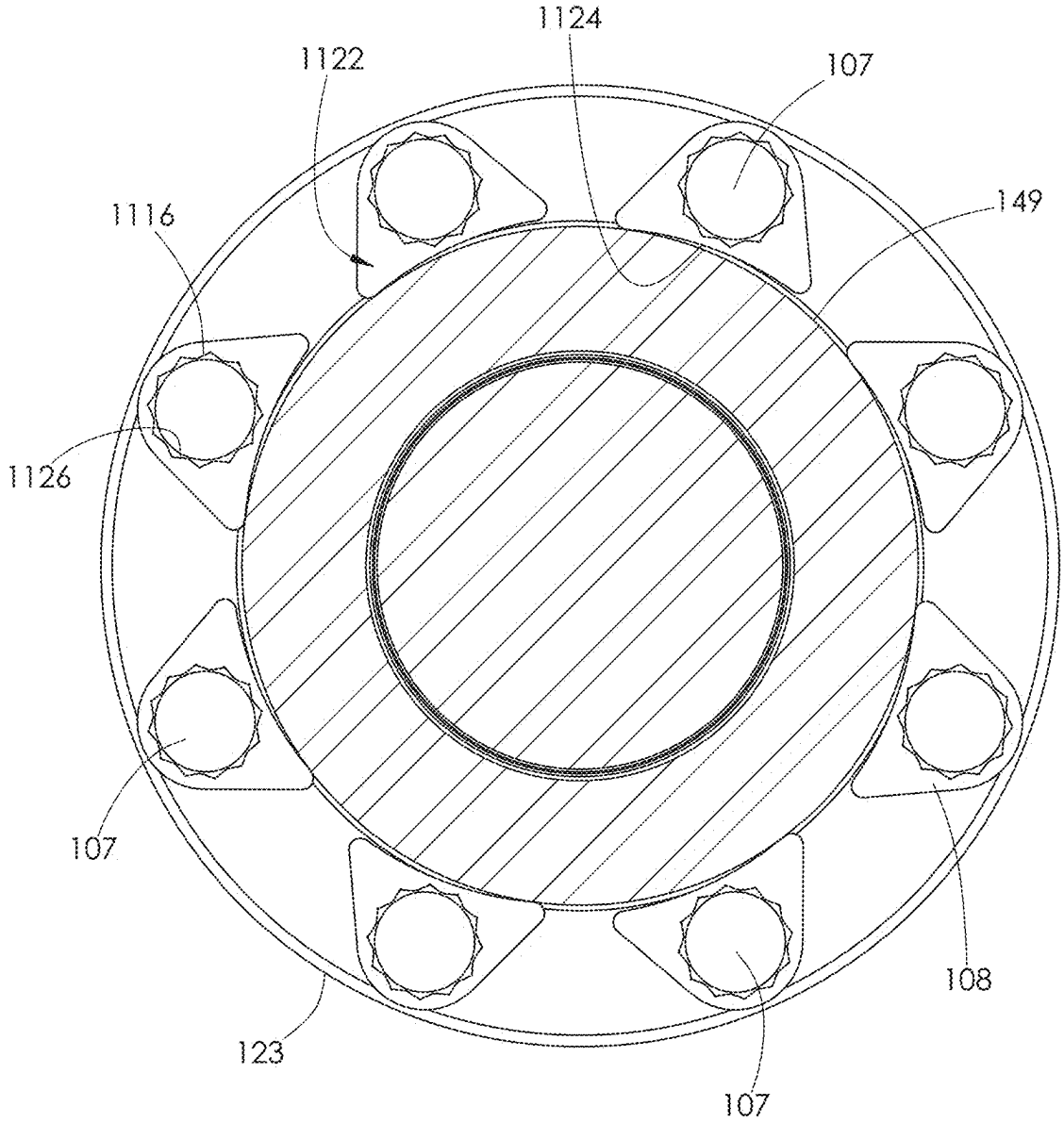

FIG. 51

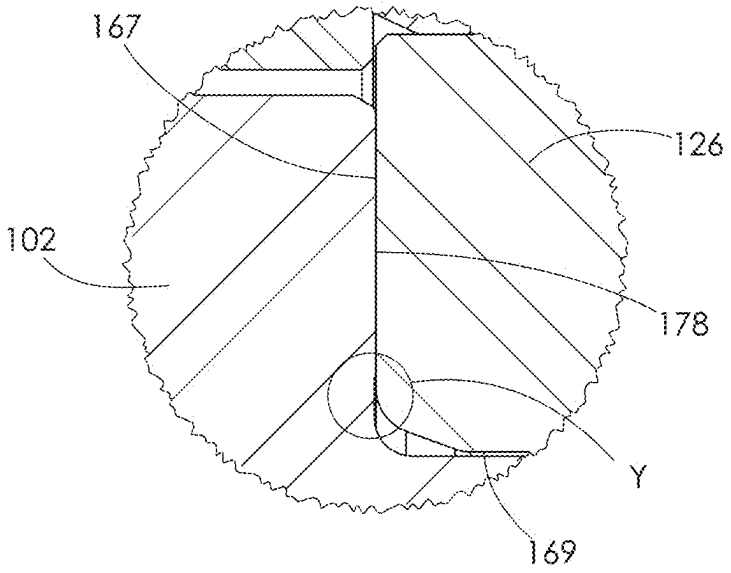

FIG. 52

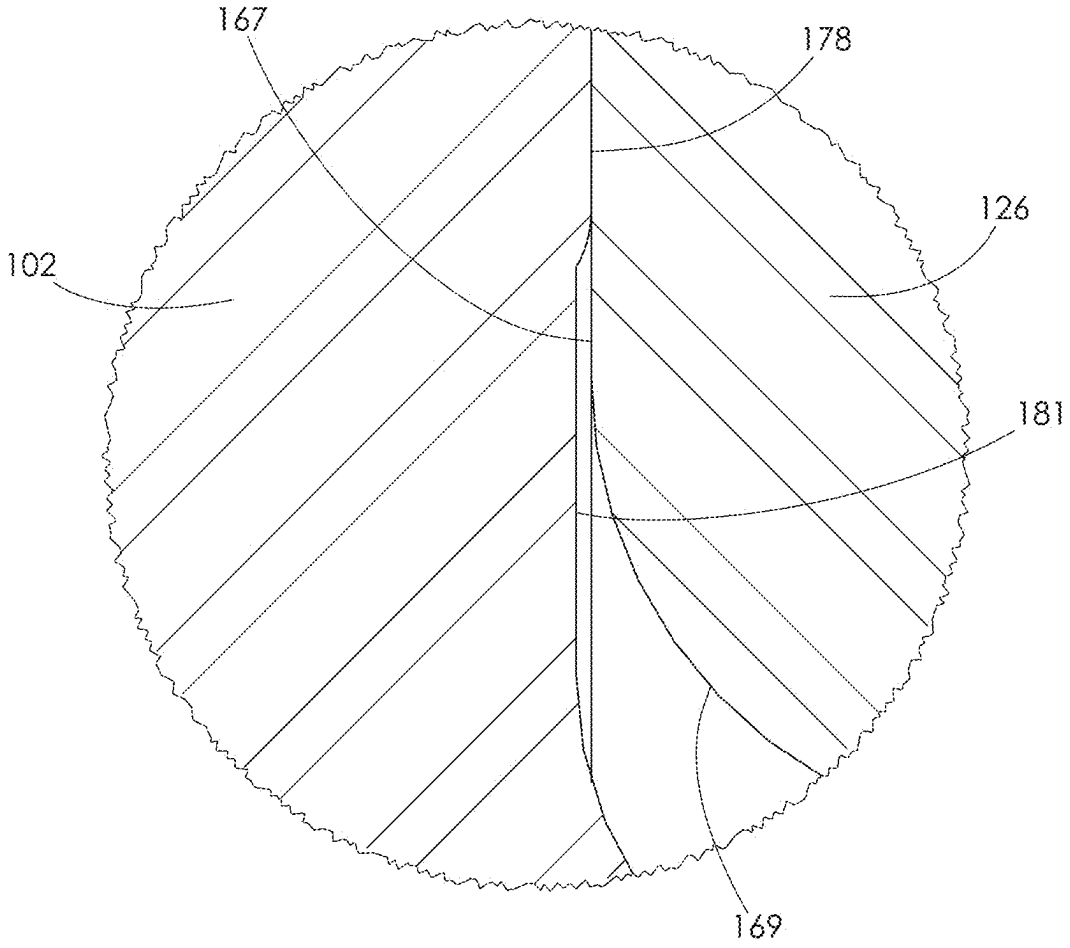

FIG. 53

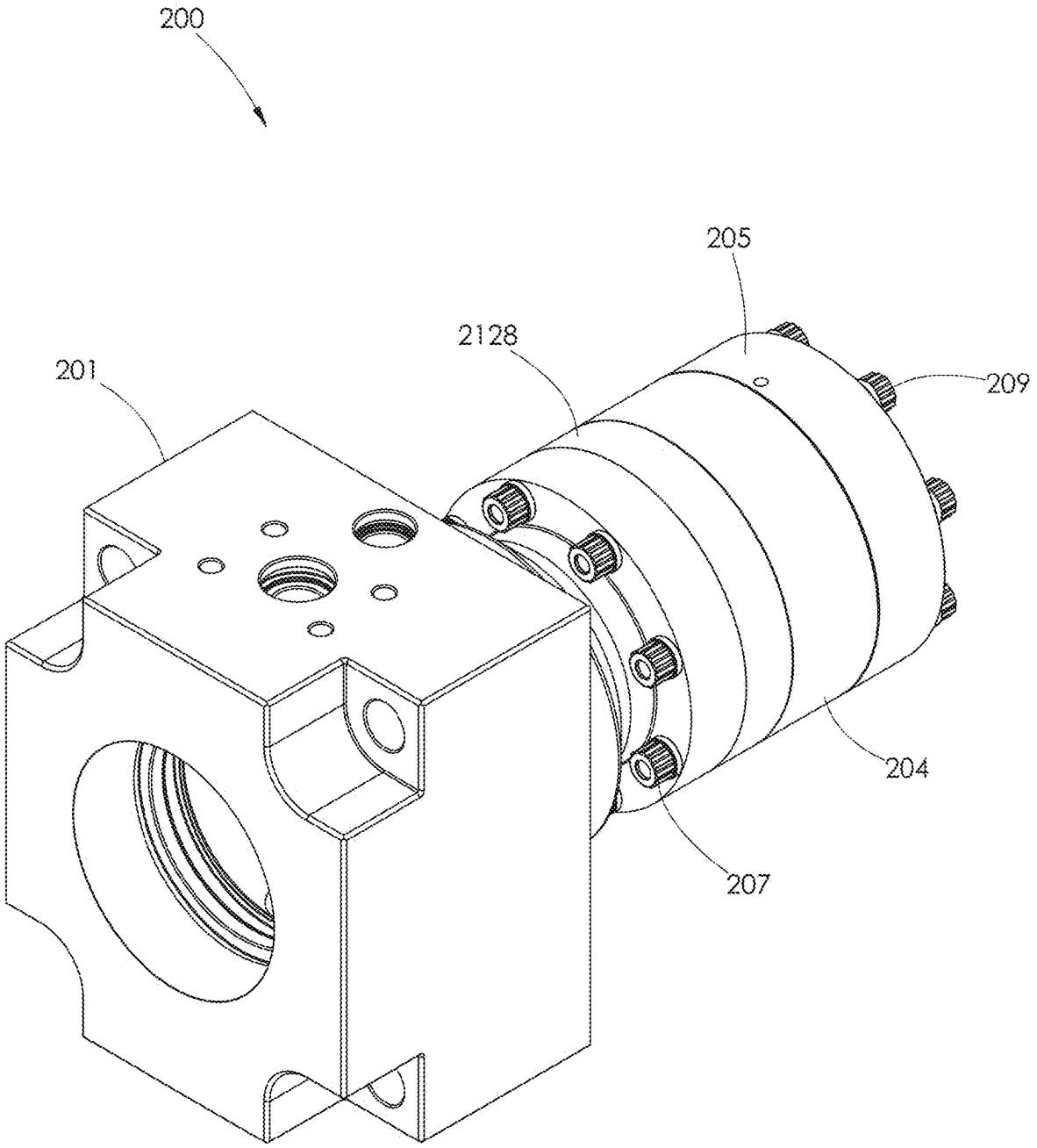

FIG. 54

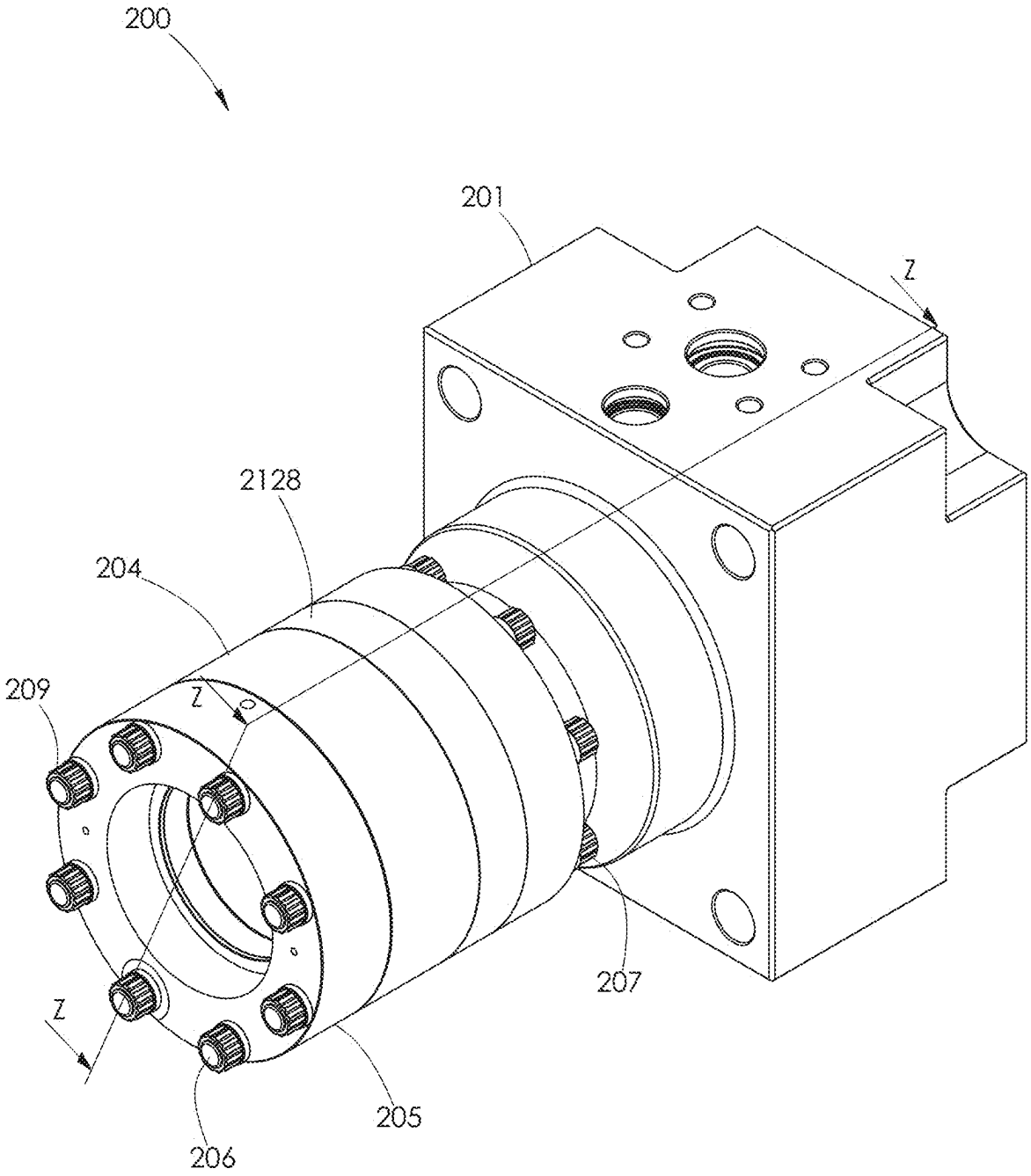

FIG. 55

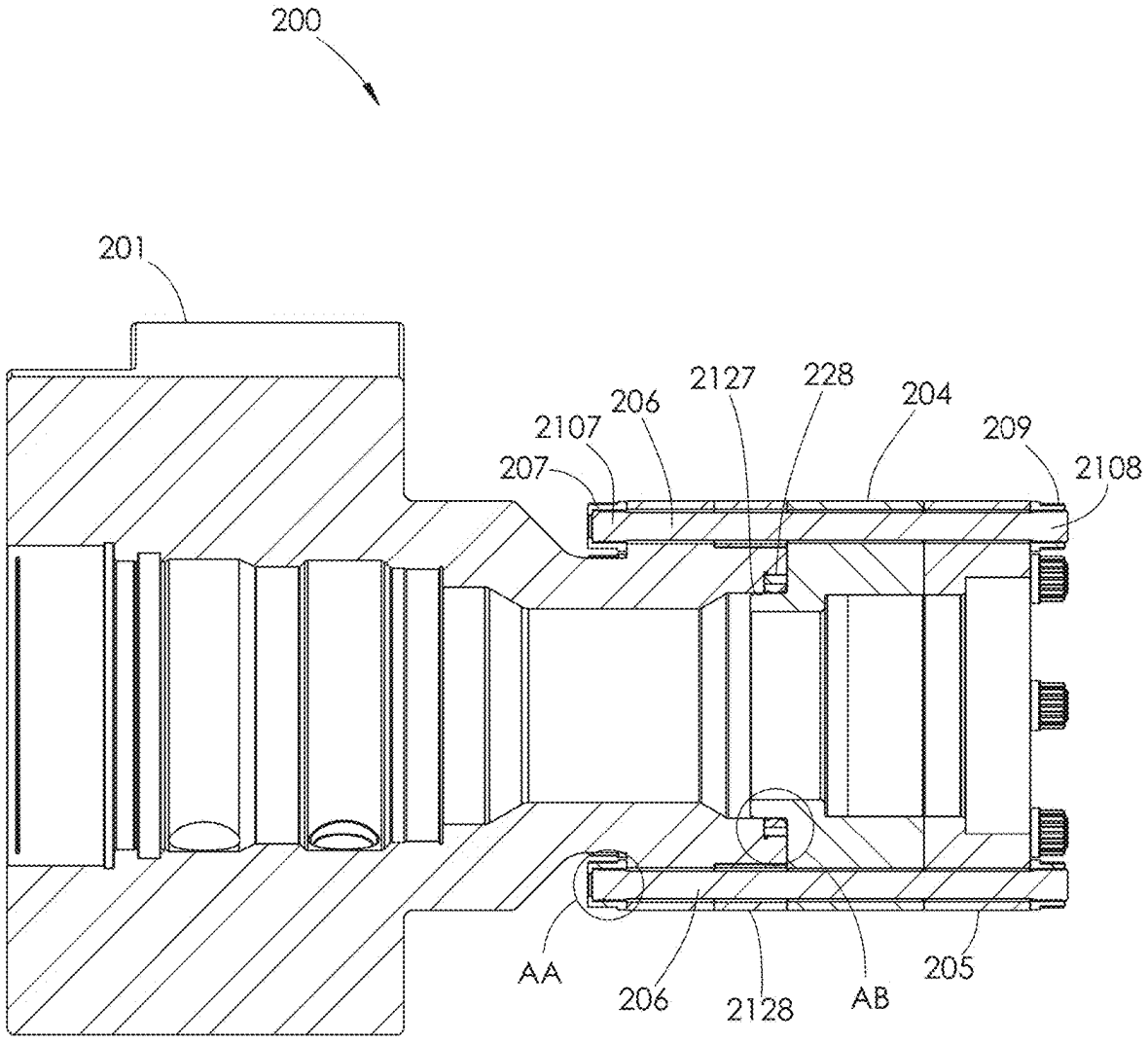

FIG. 56

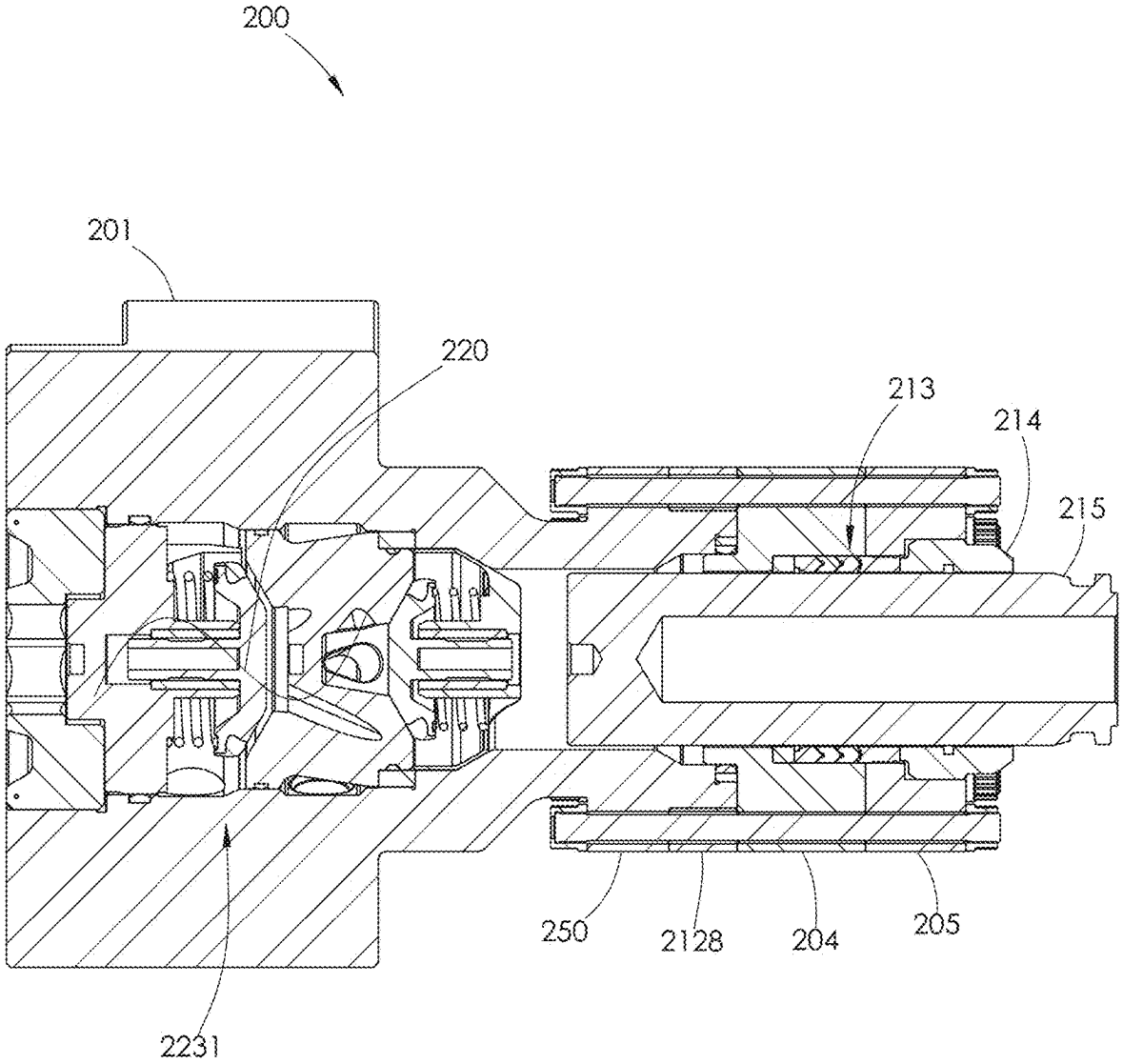

FIG. 56A

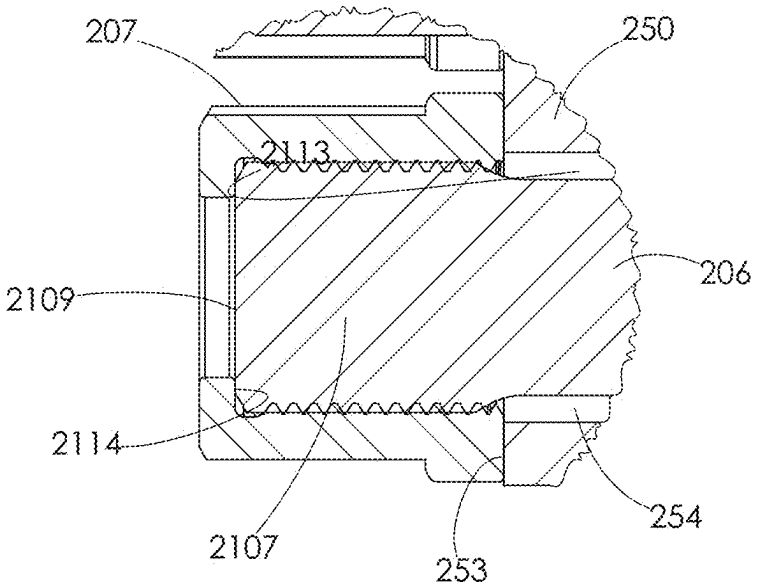
207
250
2113
206
2109
2114
254
2107
253

FIG. 57

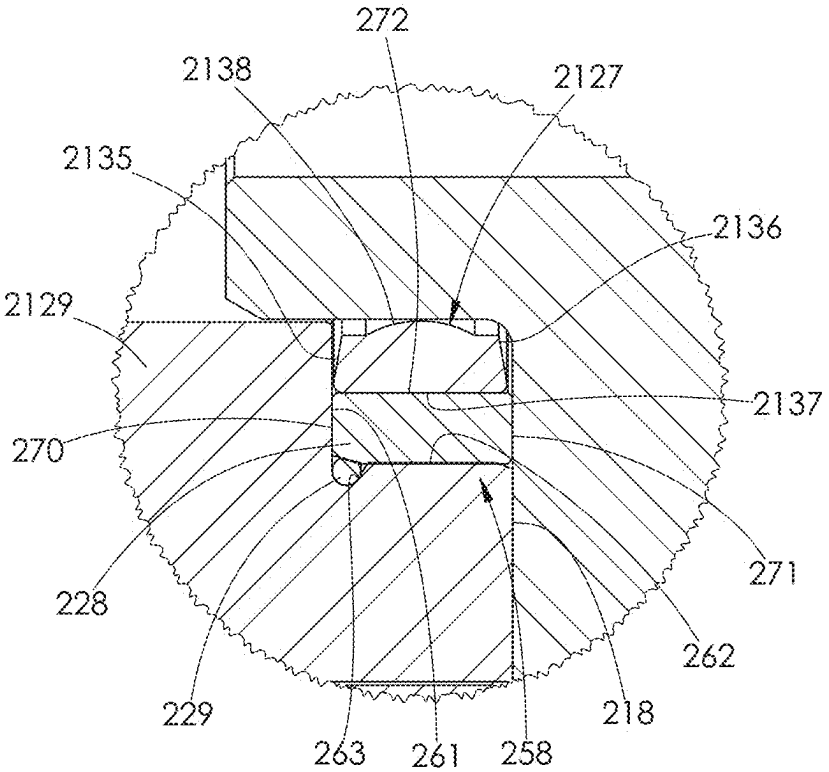
272
2138
2127
2135
2136
2129
2137
270
271
228
262
229
218
263
261
258

FIG. 58

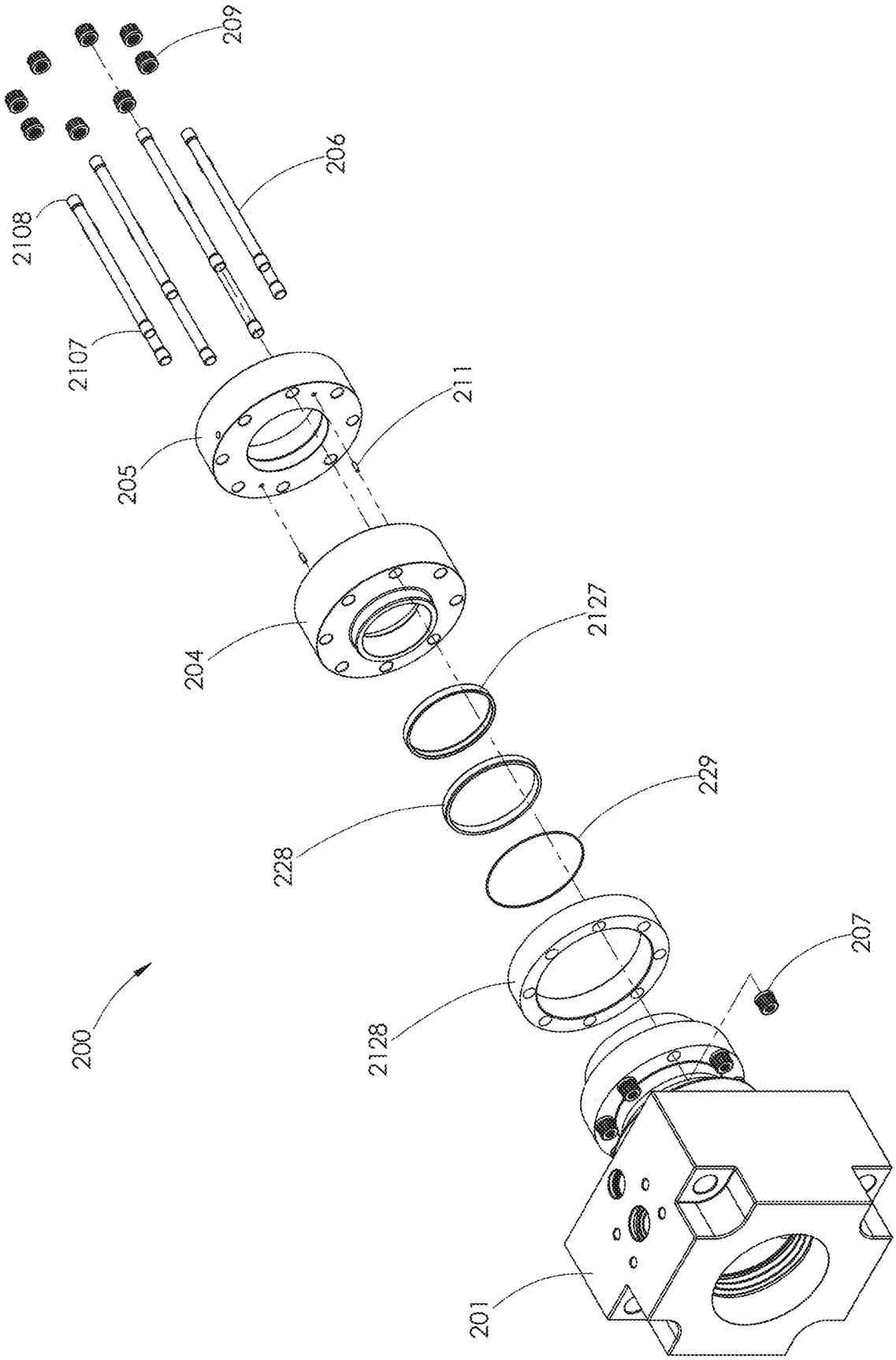

FIG. 59

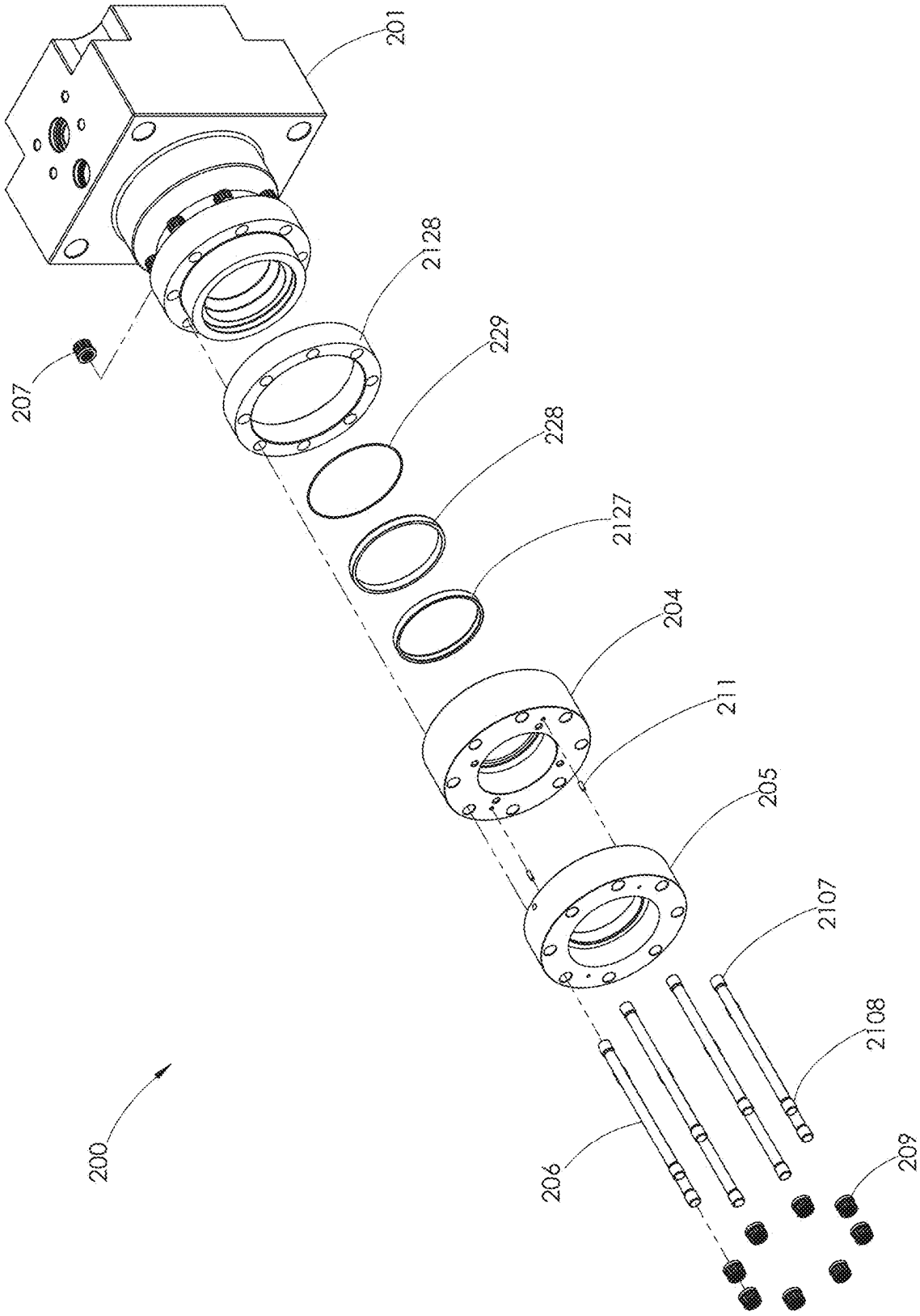

FIG. 60

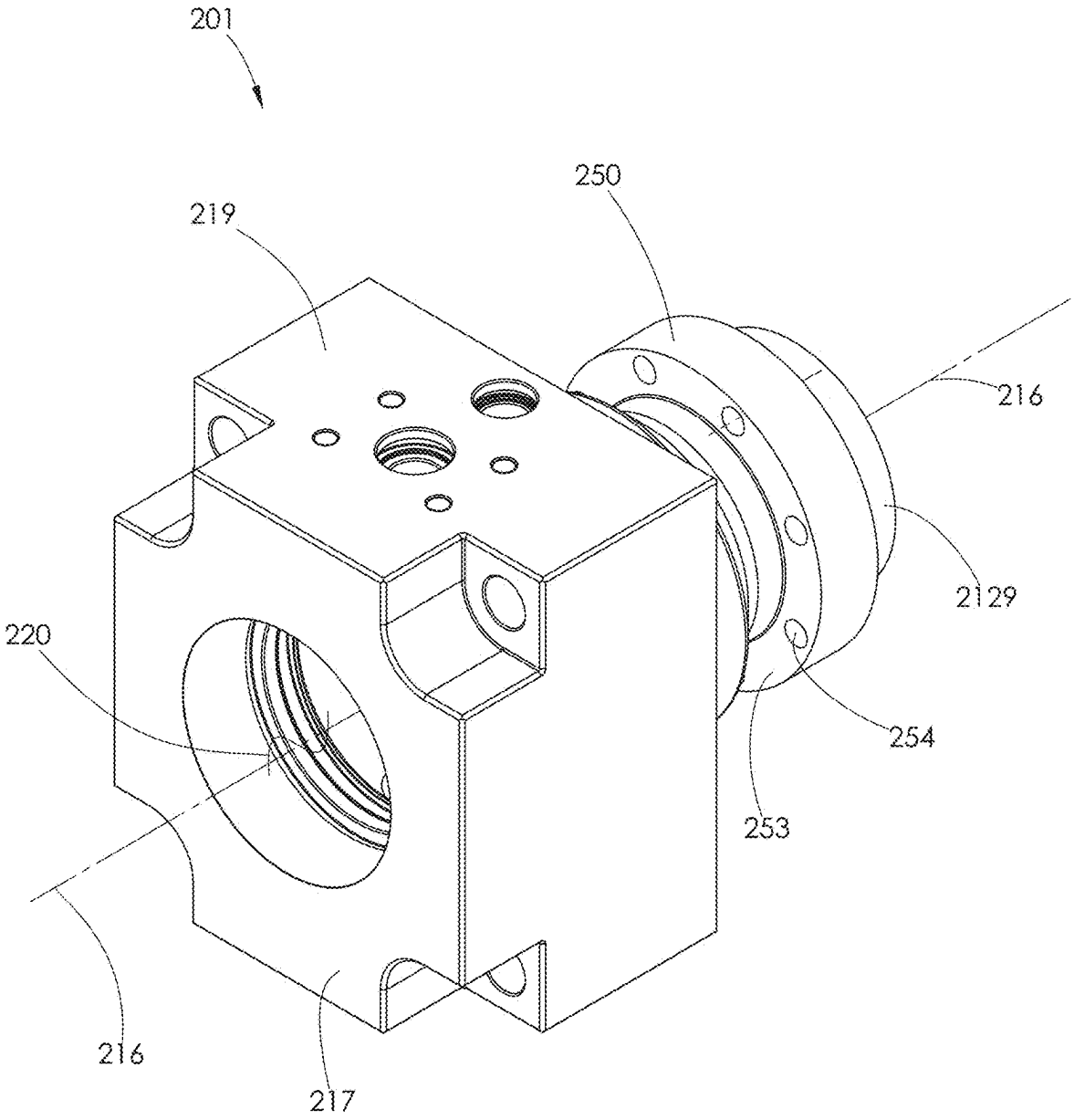

FIG. 61

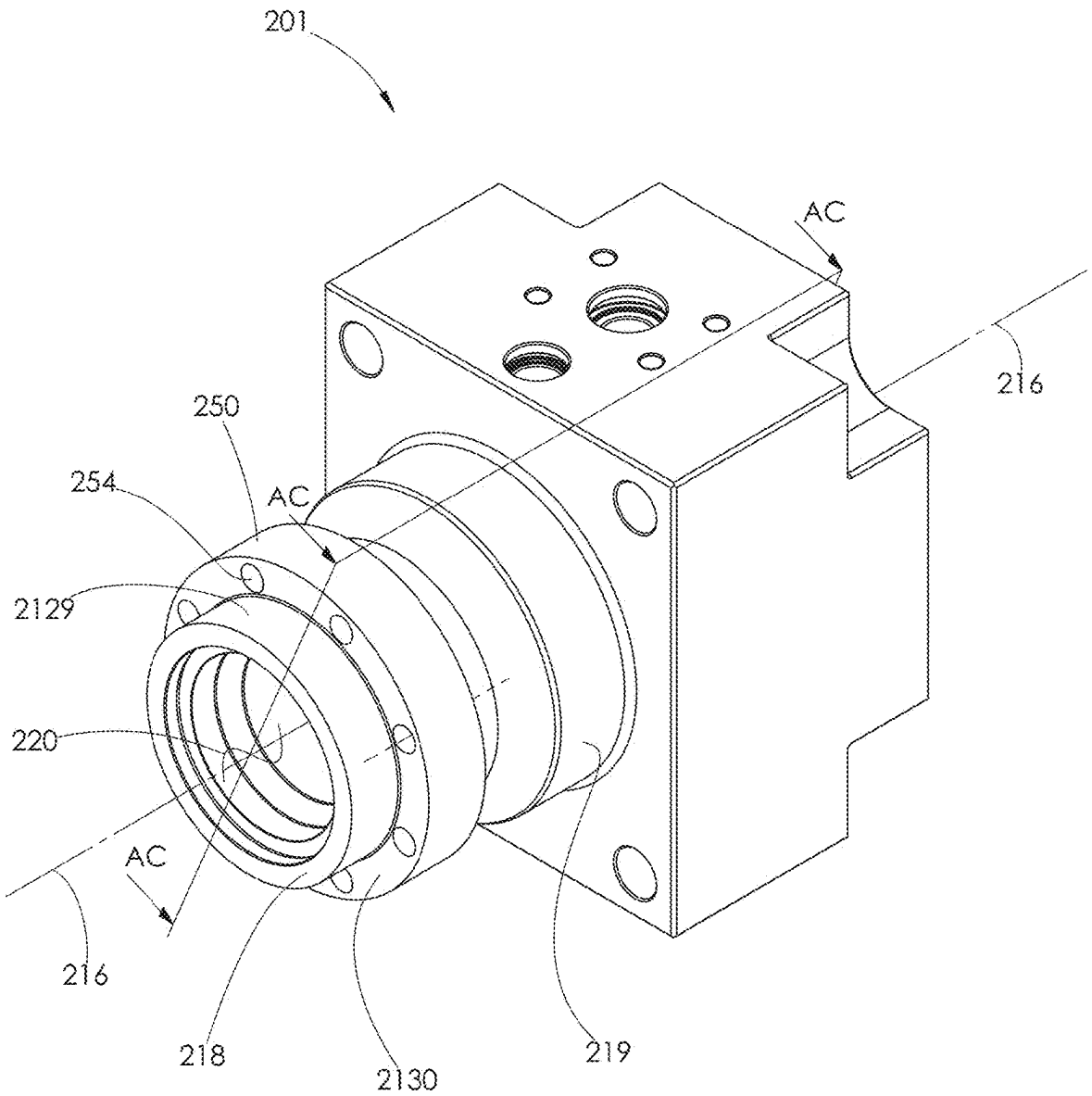

FIG. 62

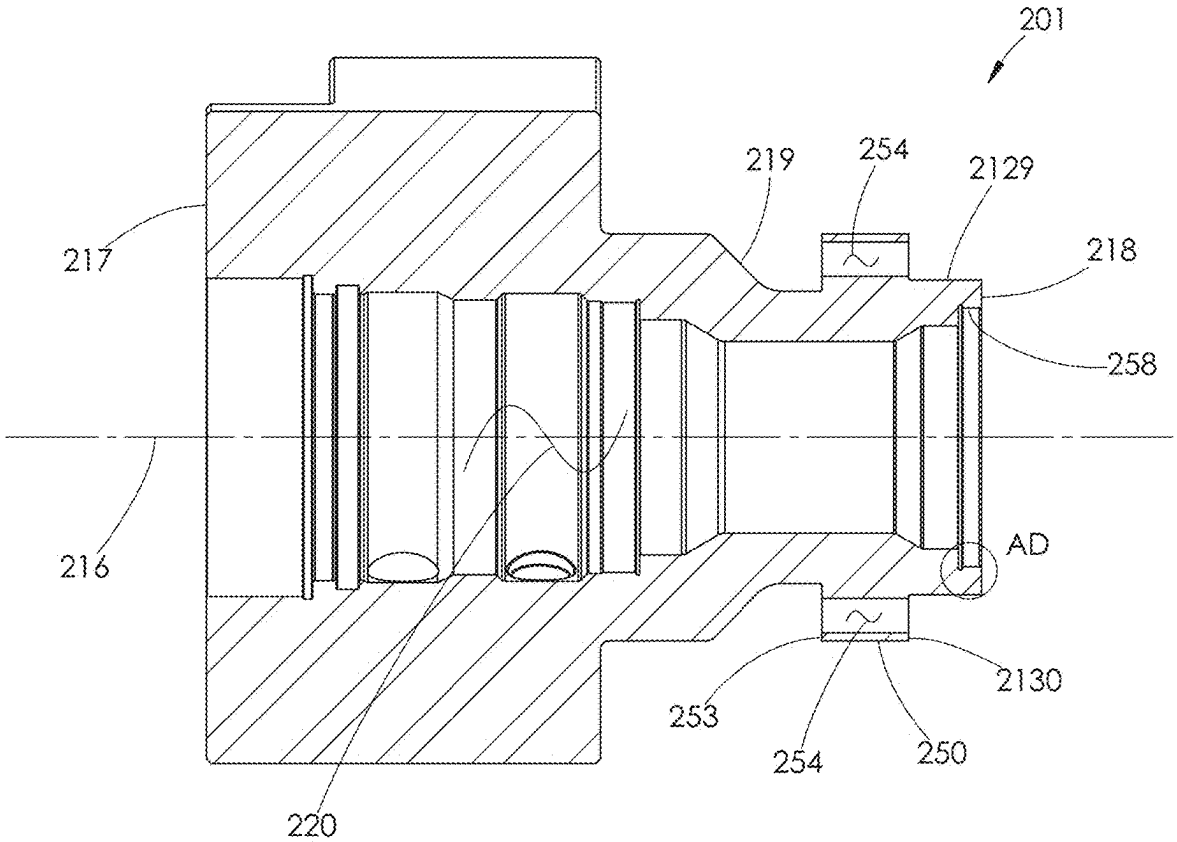
201
219
254
2129
217
218
258
216
AD
2130
253
254
250
220

FIG. 63

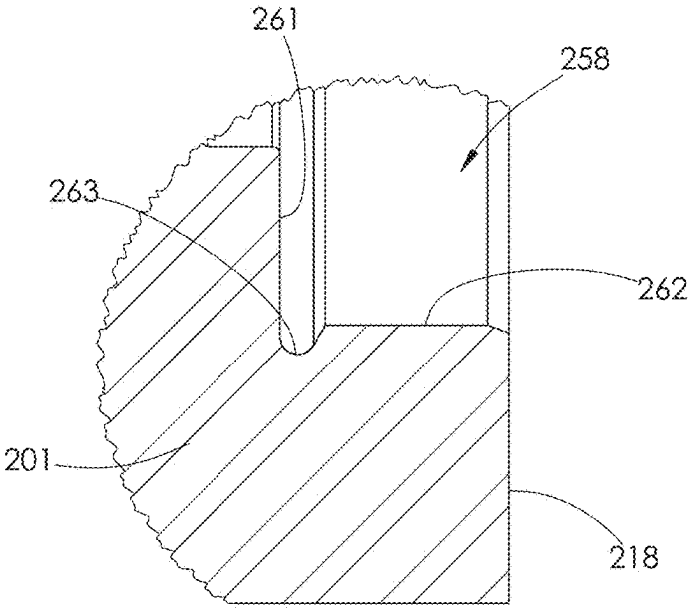
261
258
263
262
201
218

FIG. 64

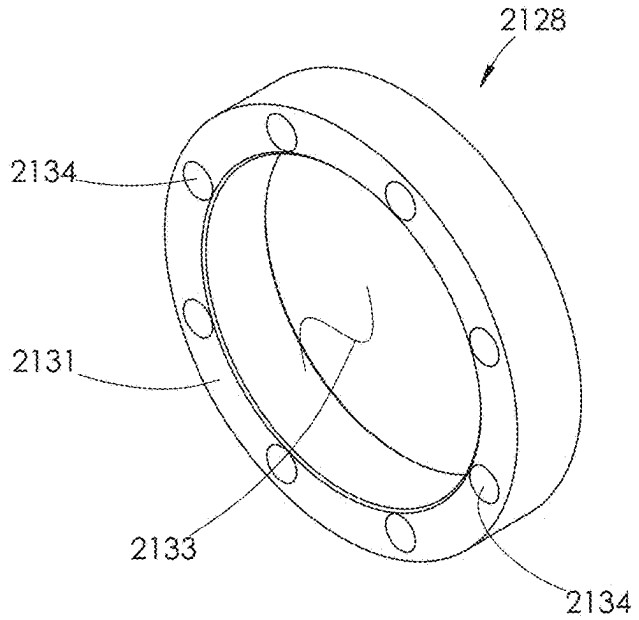

FIG. 65

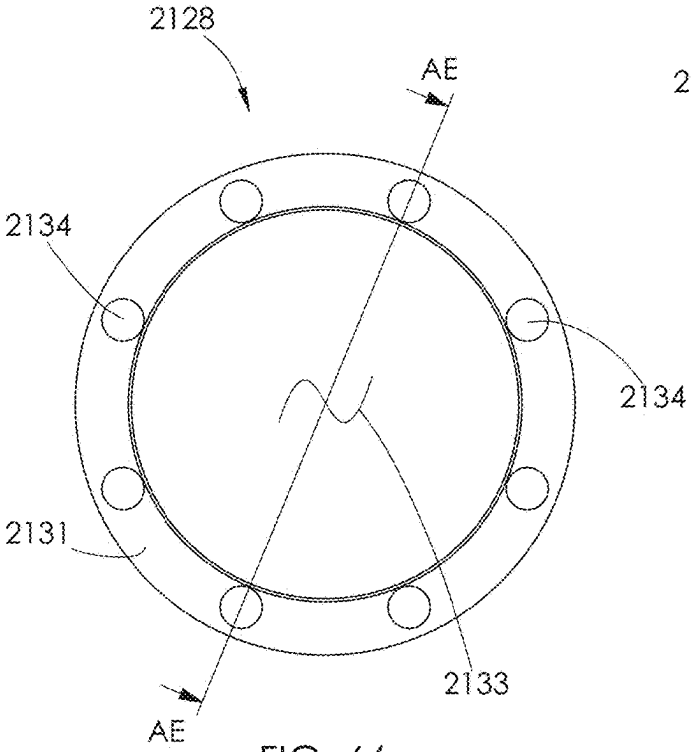

FIG. 66

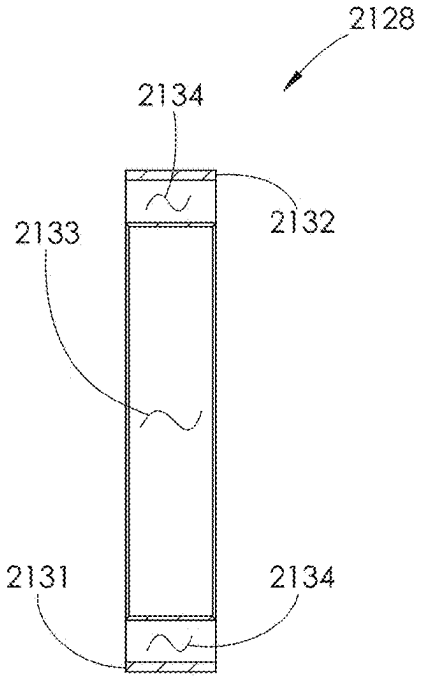

FIG. 67

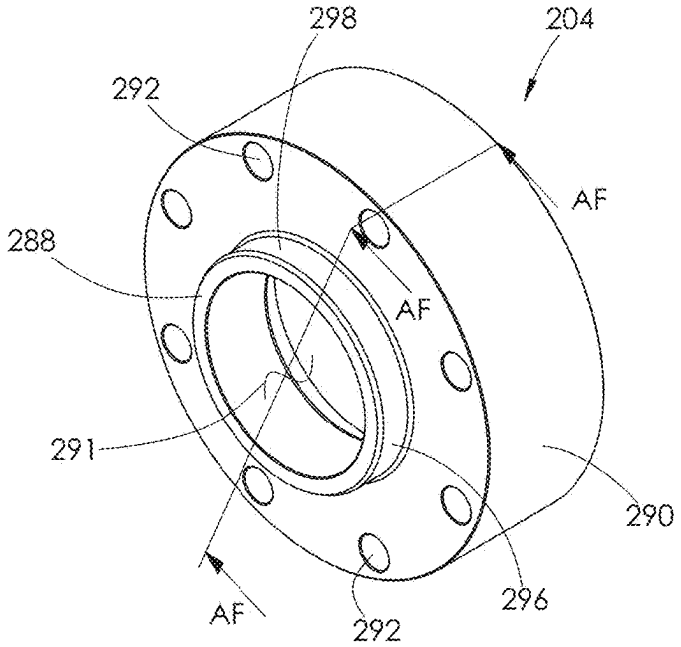

FIG. 68

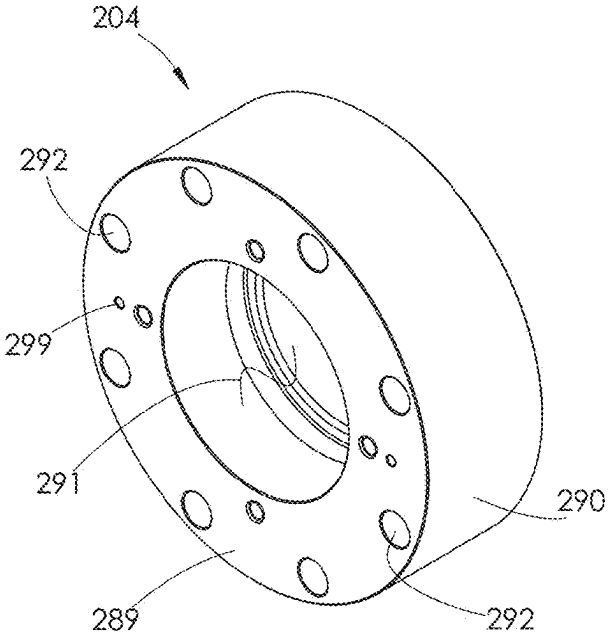

FIG. 69

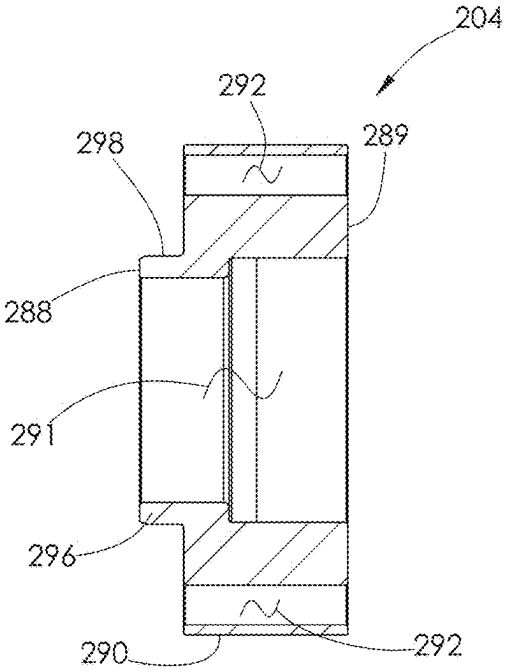

FIG. 70

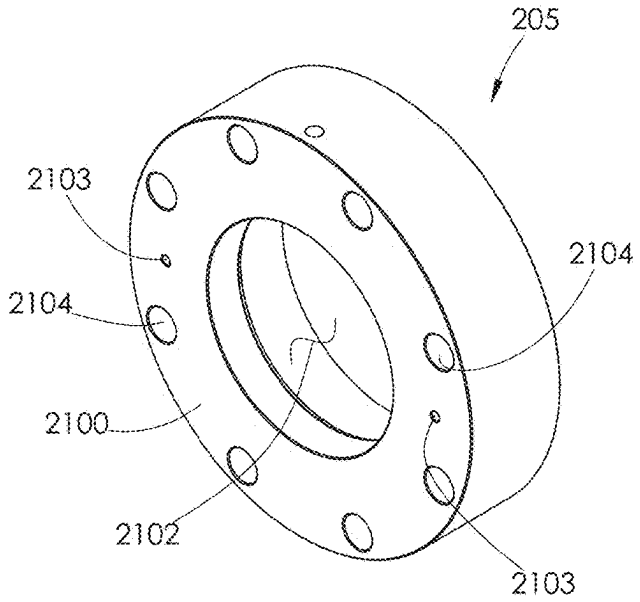

FIG. 71

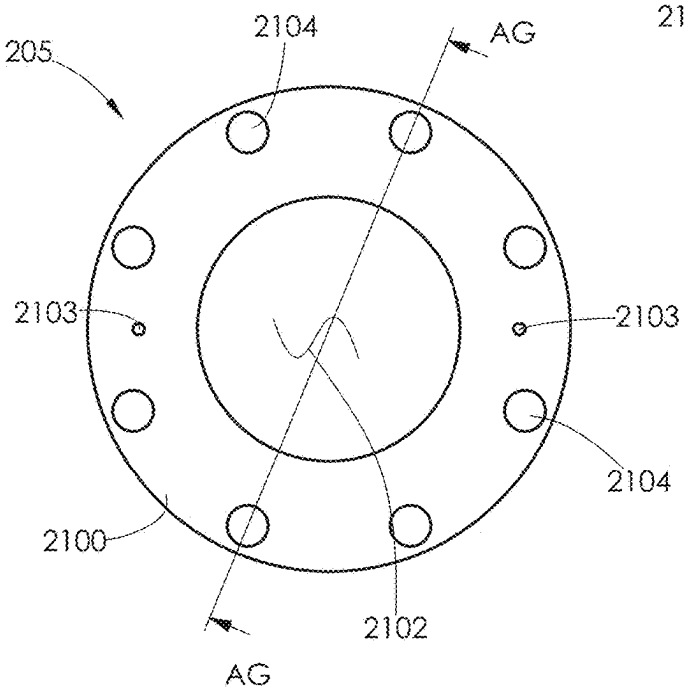

FIG. 72

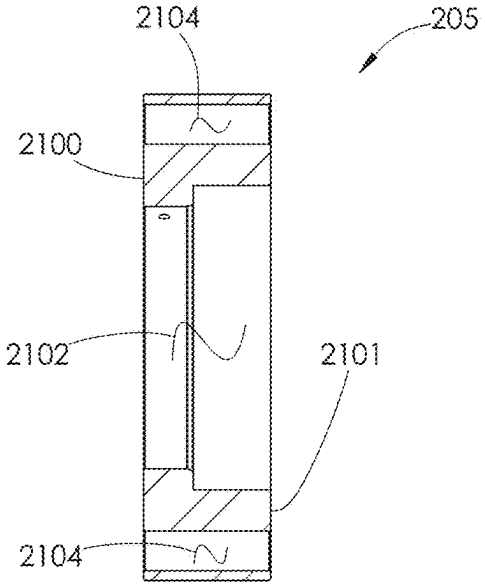

FIG. 73

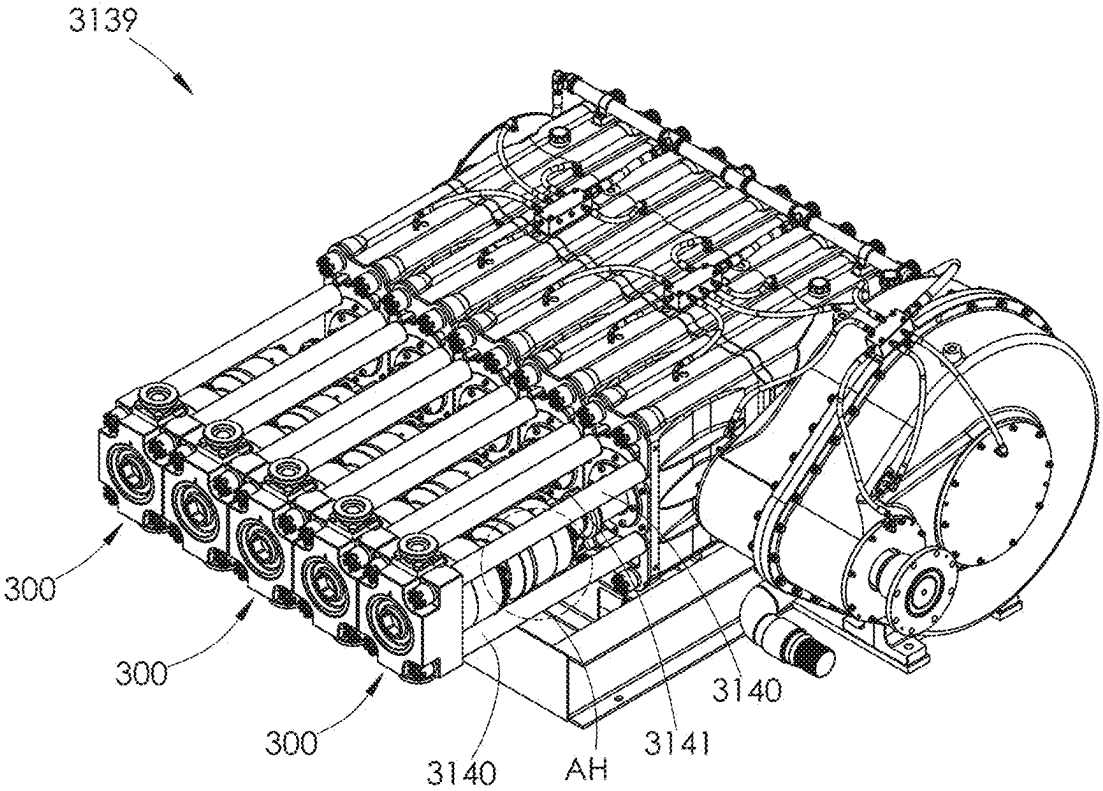

FIG. 74

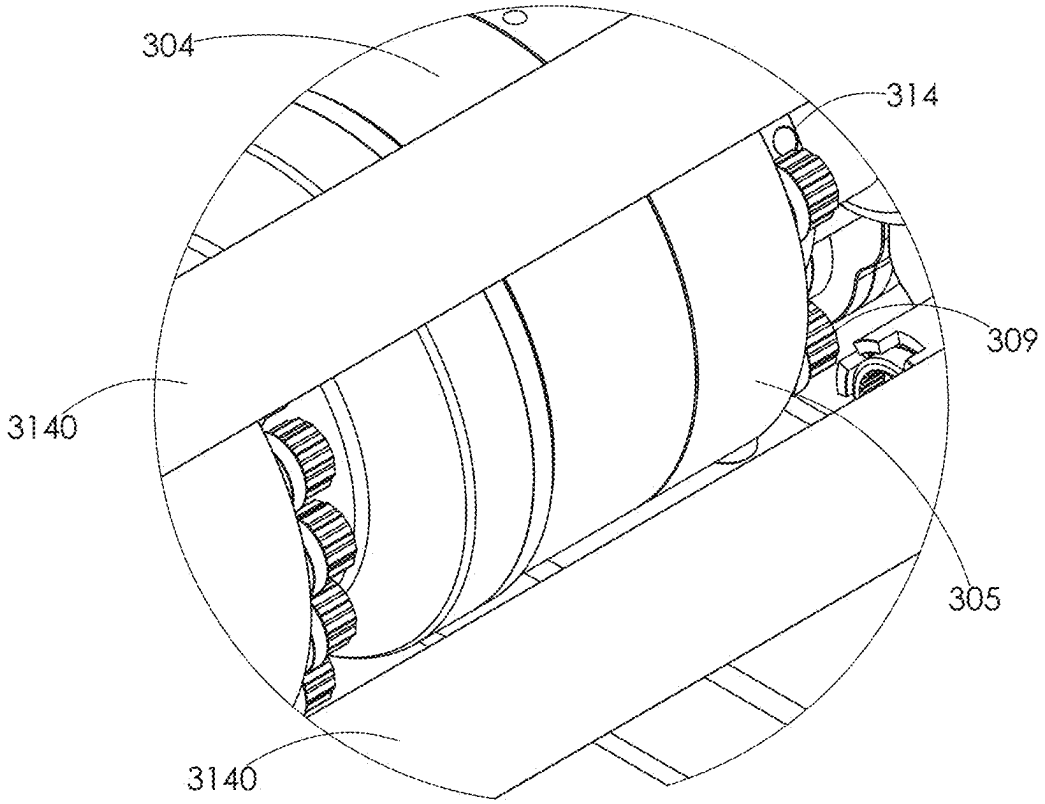

FIG. 75

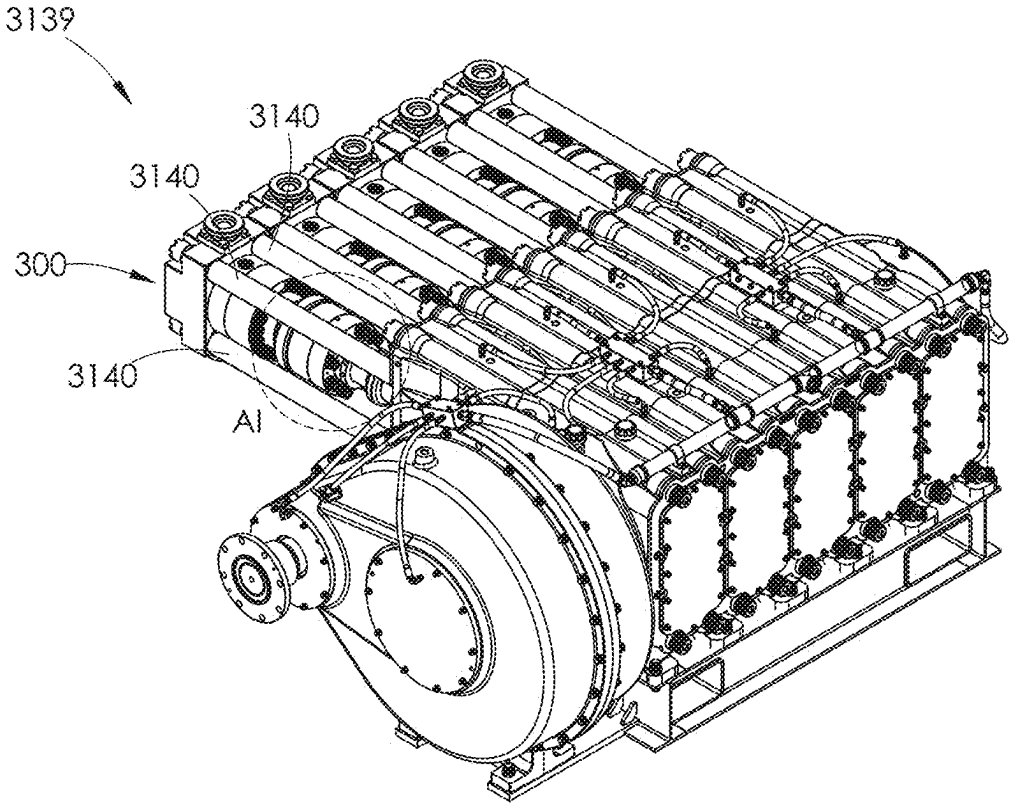

FIG. 76

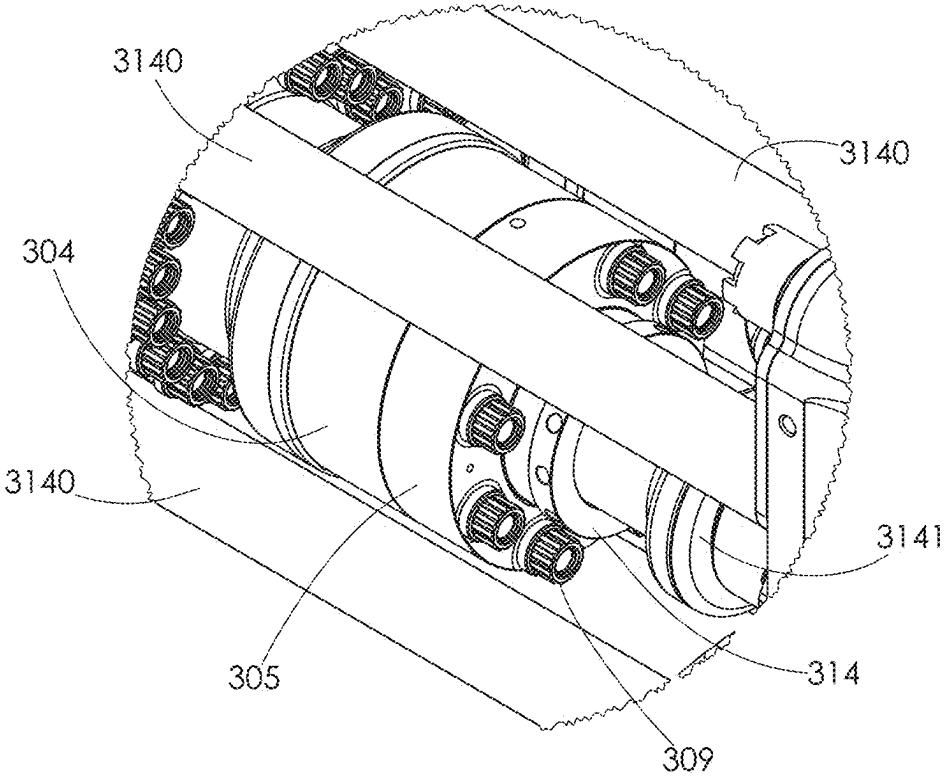

FIG. 77

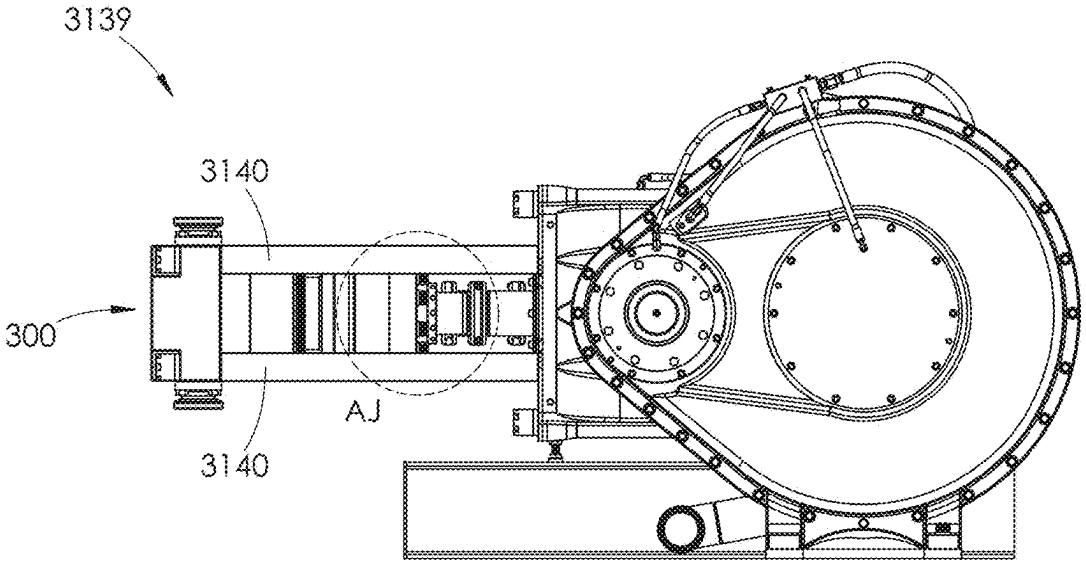

FIG. 78

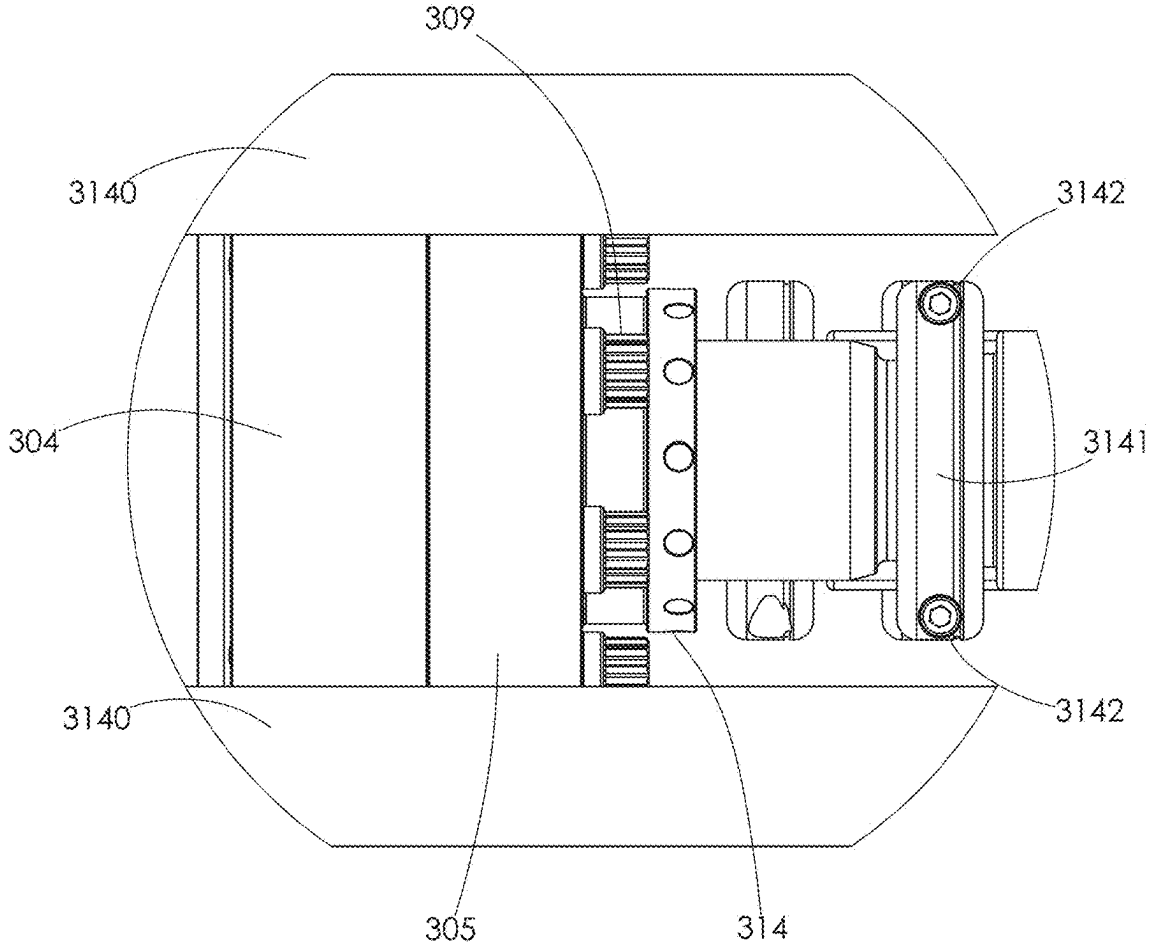

FIG. 79

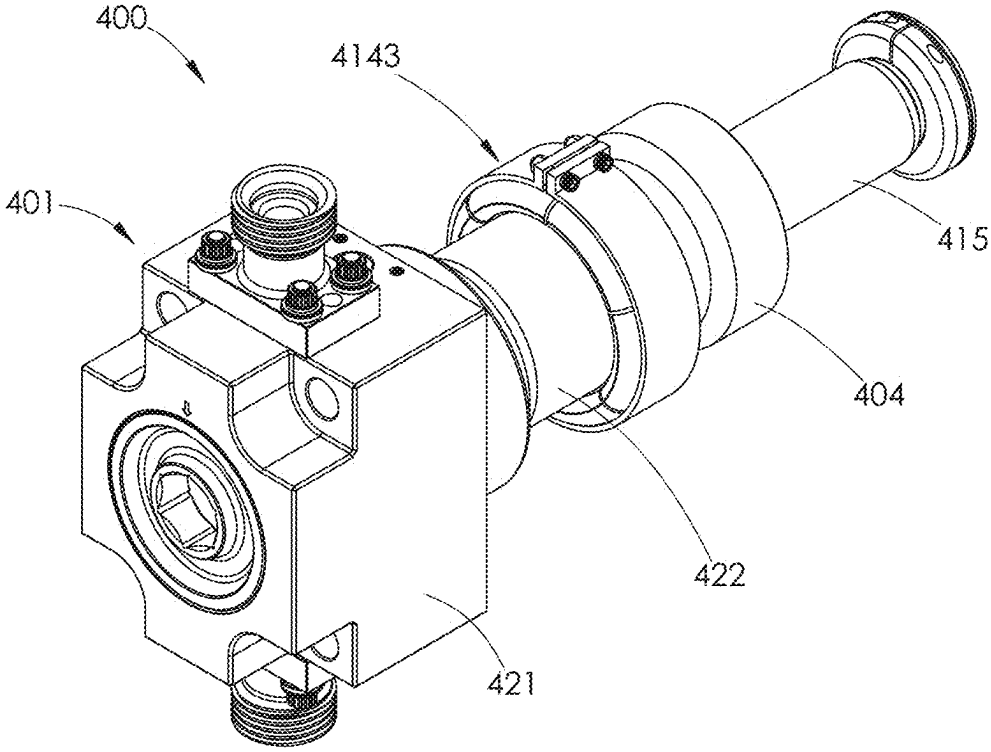

FIG. 80

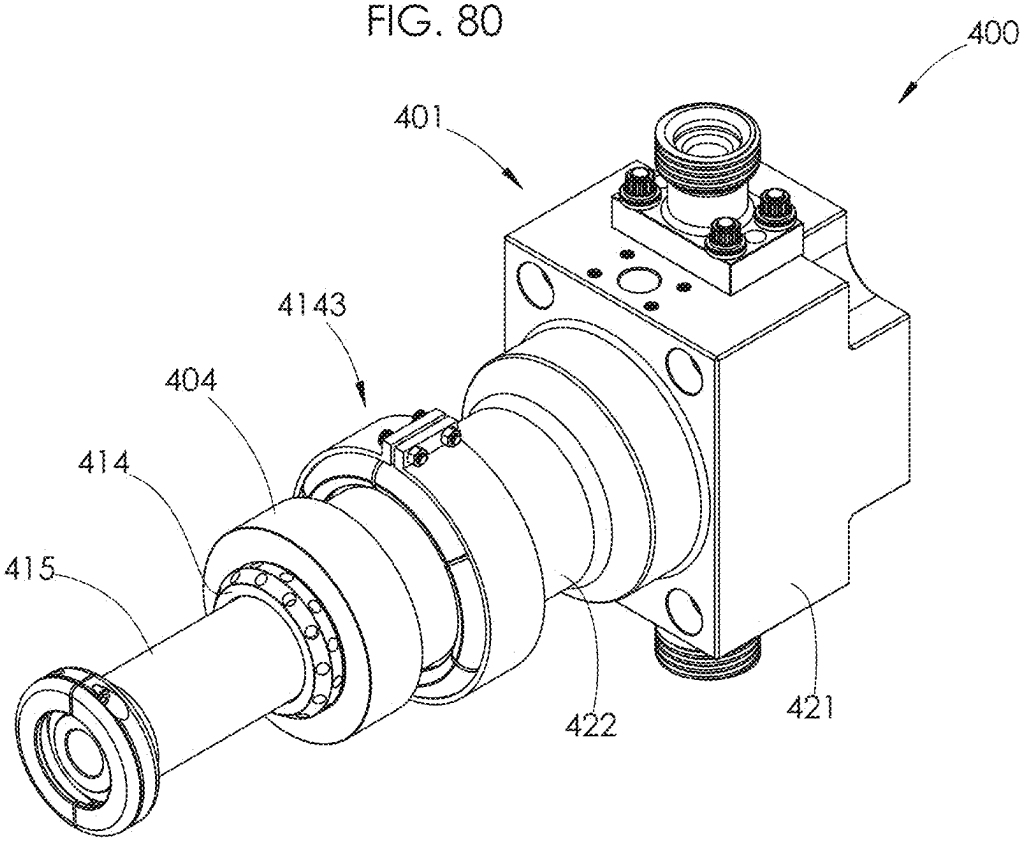

FIG. 81

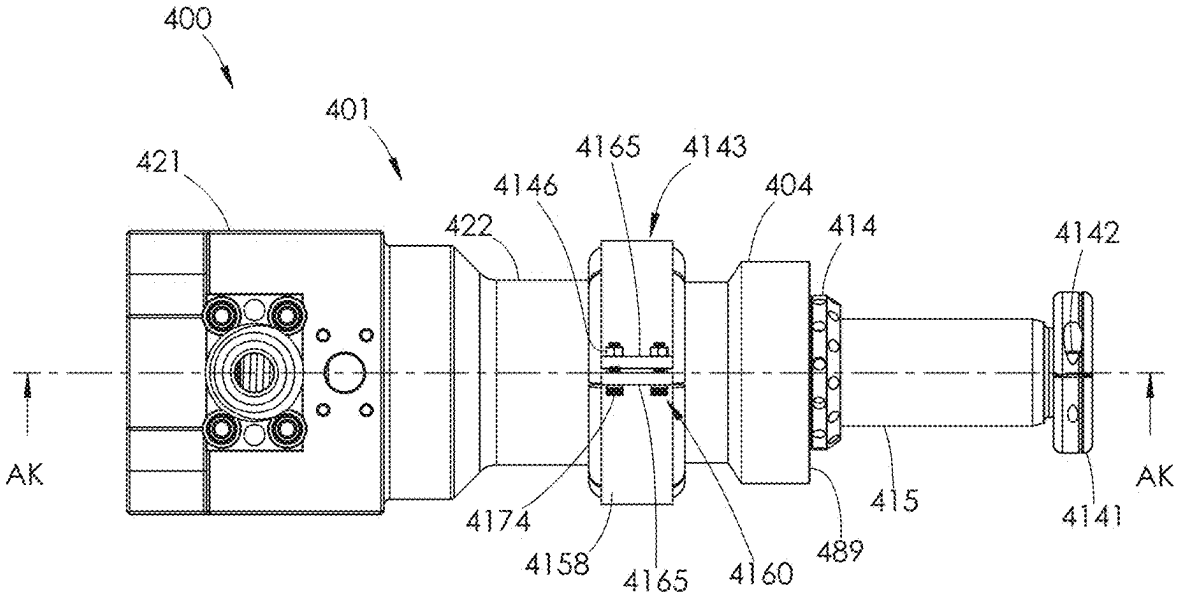
400
401
421
4165
4143
4146
404
422
414
4142
AK
AK
415
4141
4174
489
4158
4165
4160

FIG. 82

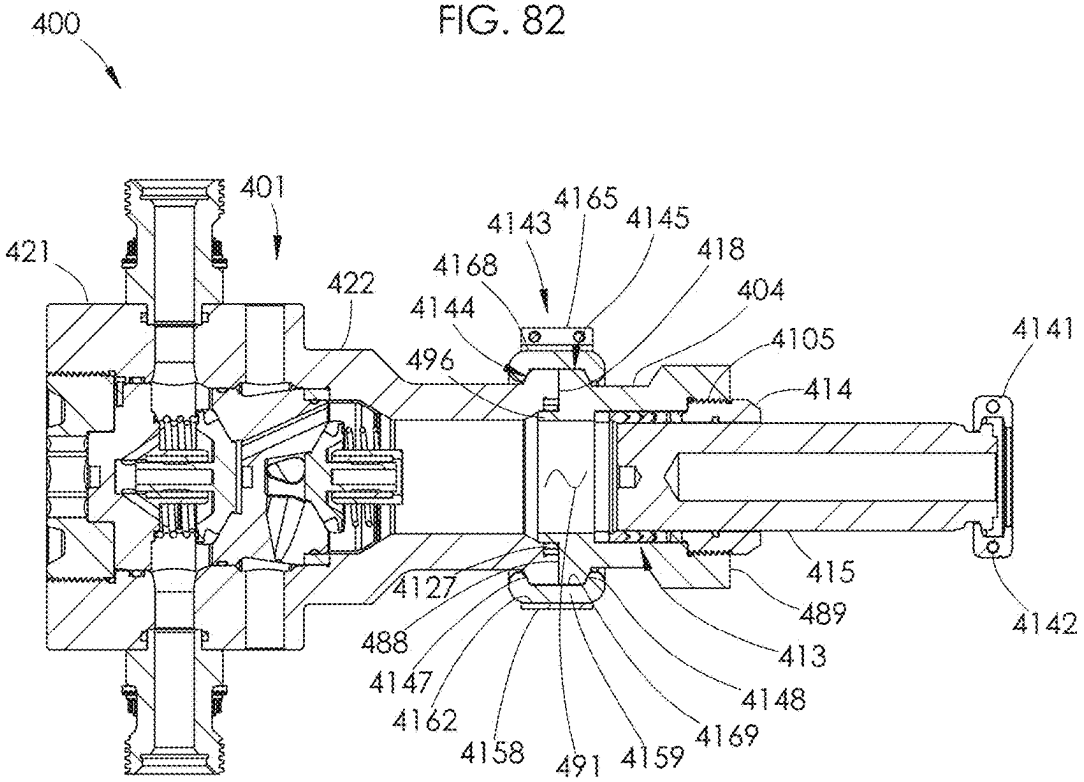
400
401
4165
4143
4145
421
418
4168
422
404
4144
4105
4141
496
414
415
4127
489
4142
488
413
4147
4148
4162
4169
4158
491
4159

FIG. 83

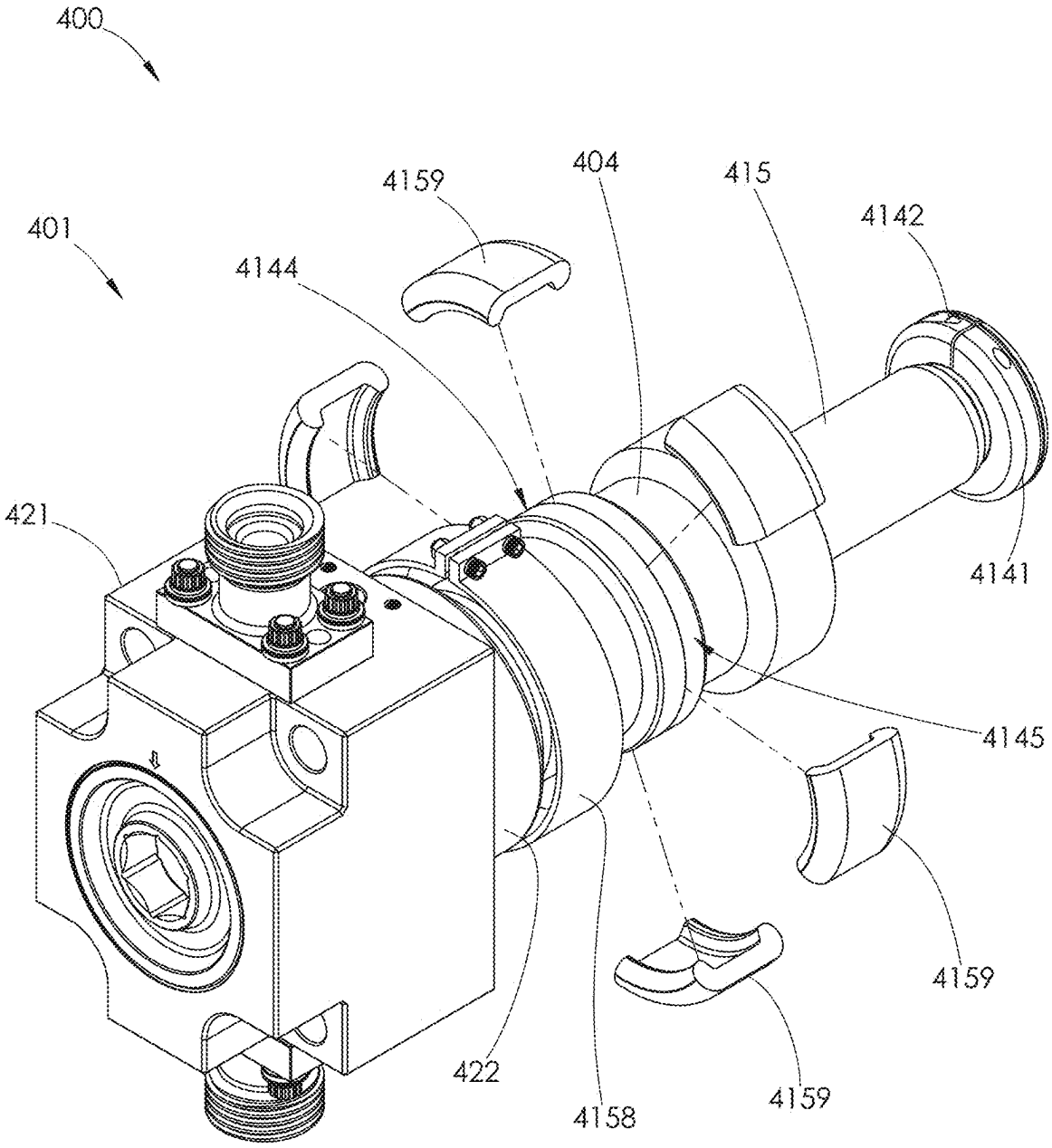
400
401
4159
404
415
4142
4144
421
4141
4145
4159
422
4158
4159

FIG. 84

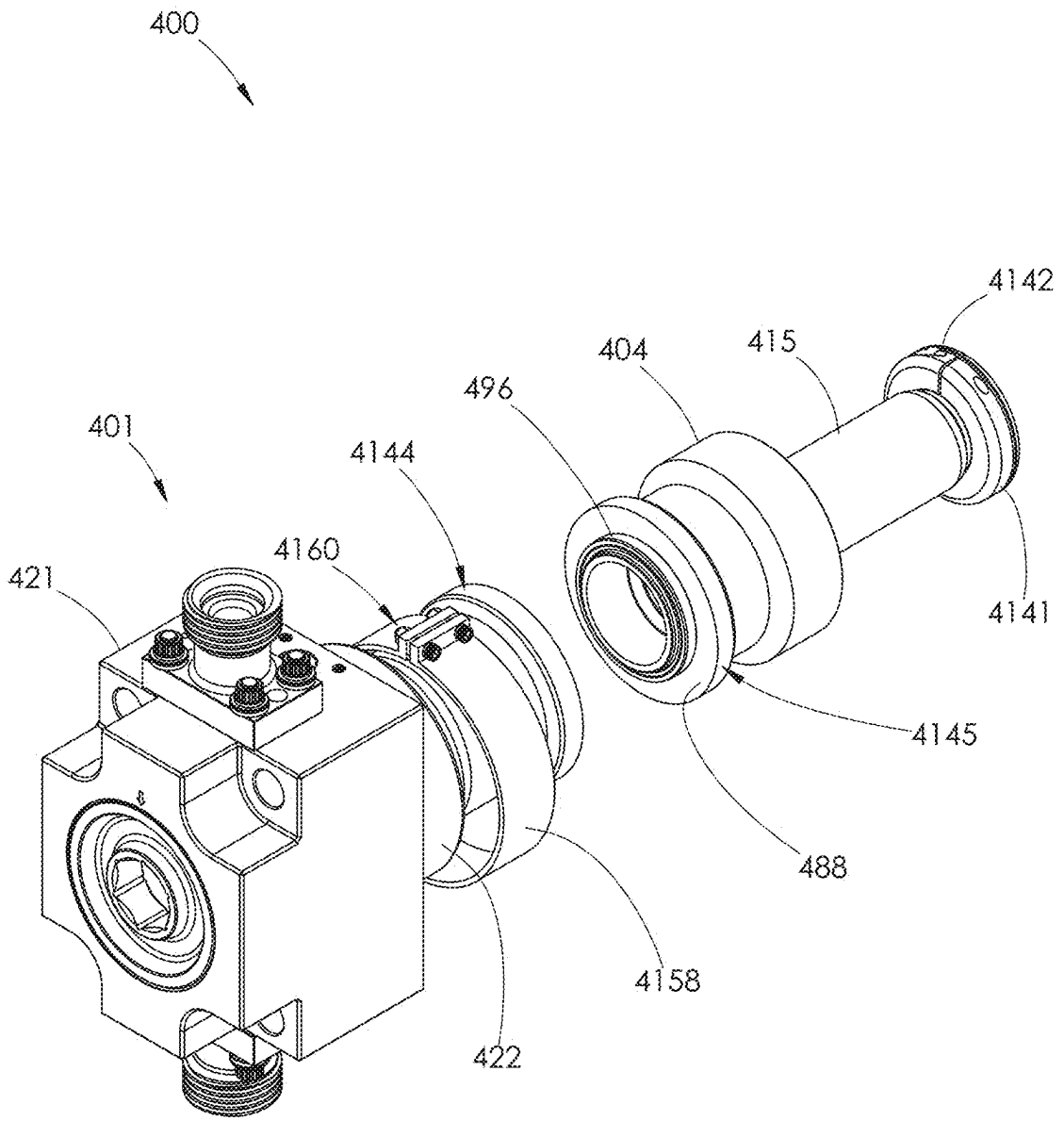

FIG. 85

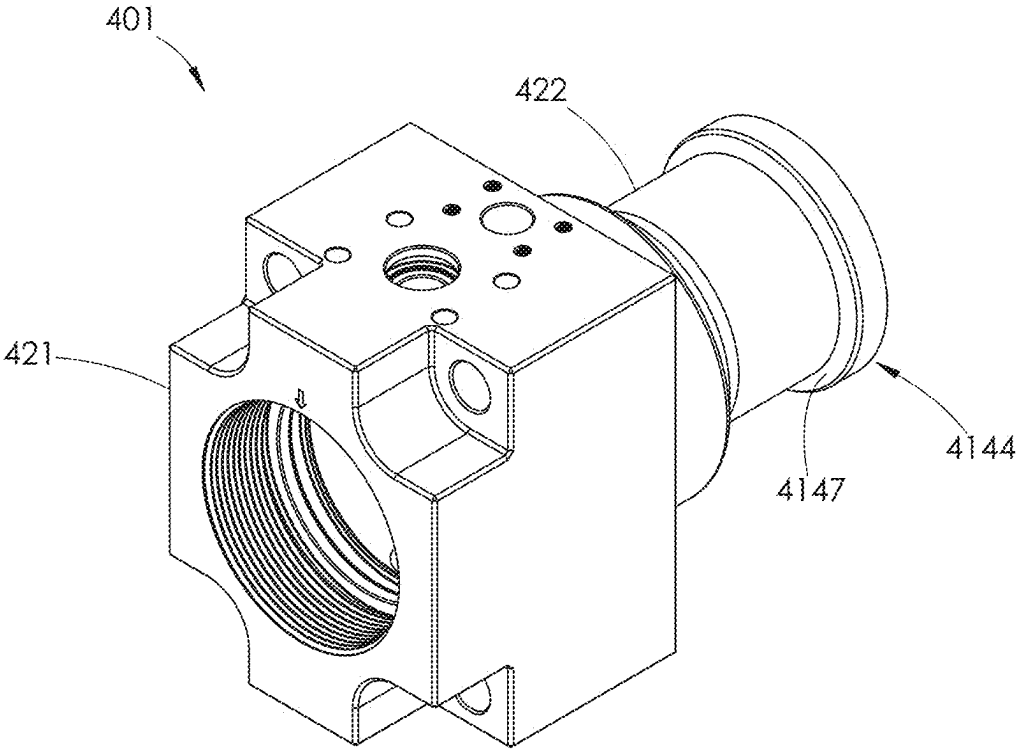

FIG. 86

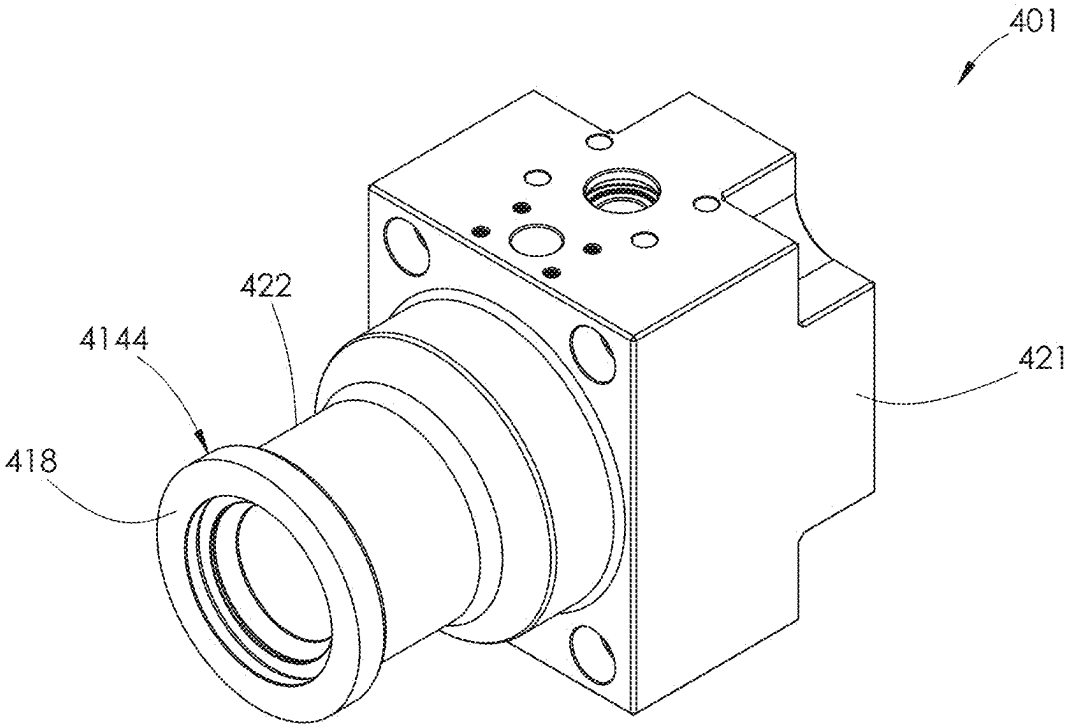

FIG. 87

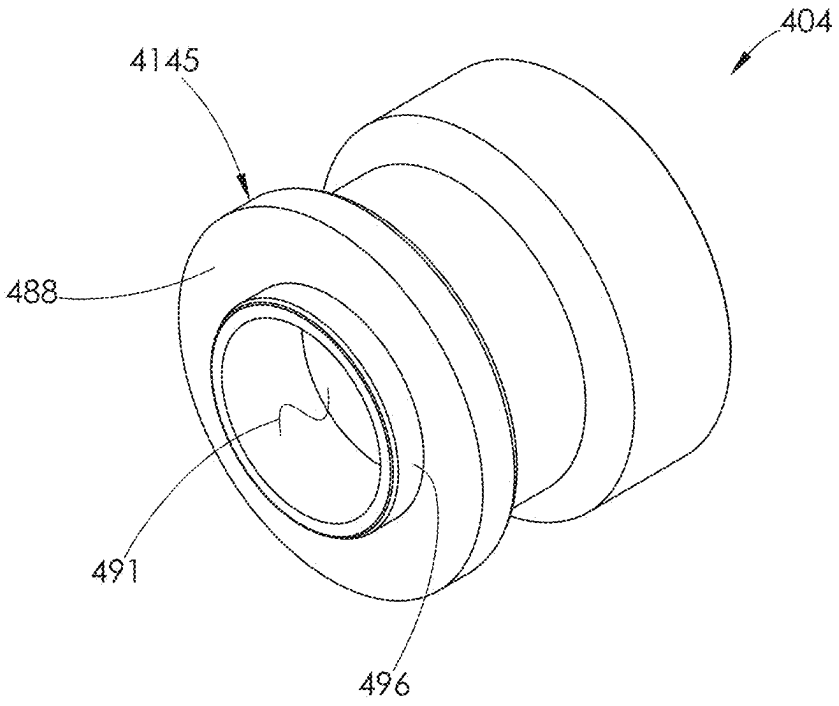

FIG. 88

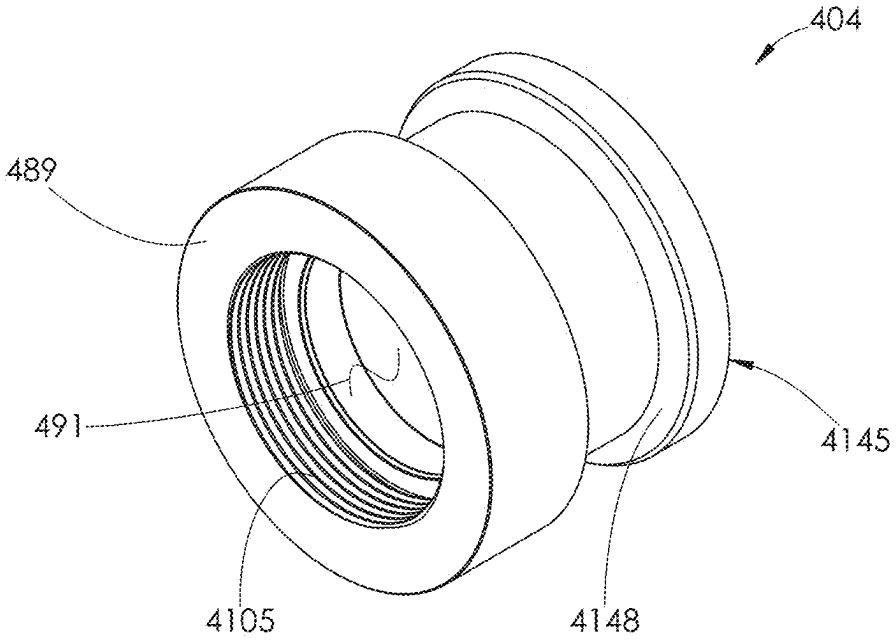

FIG. 89

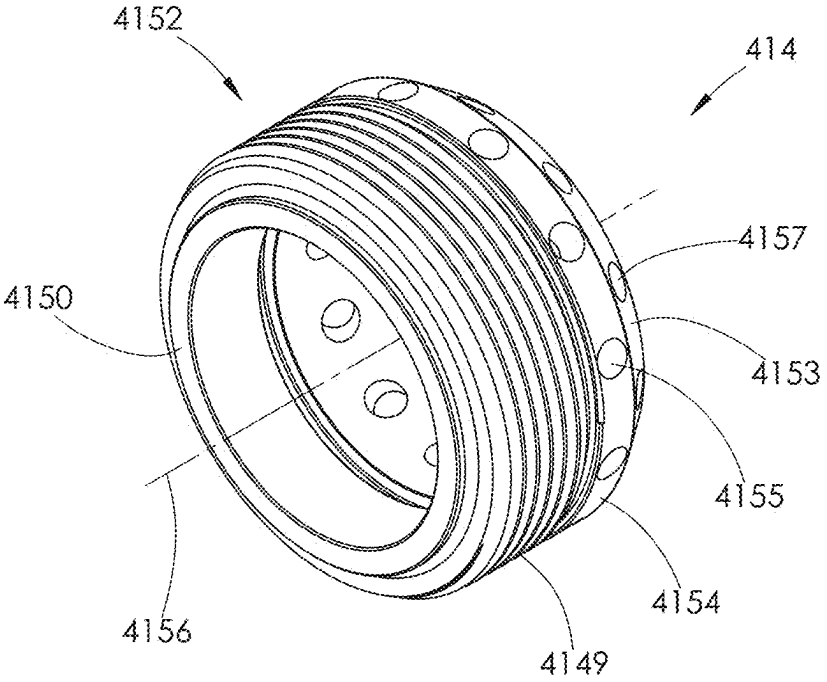
4152
414
4157
4150
4153
4155
4154
4156
4149

FIG. 90

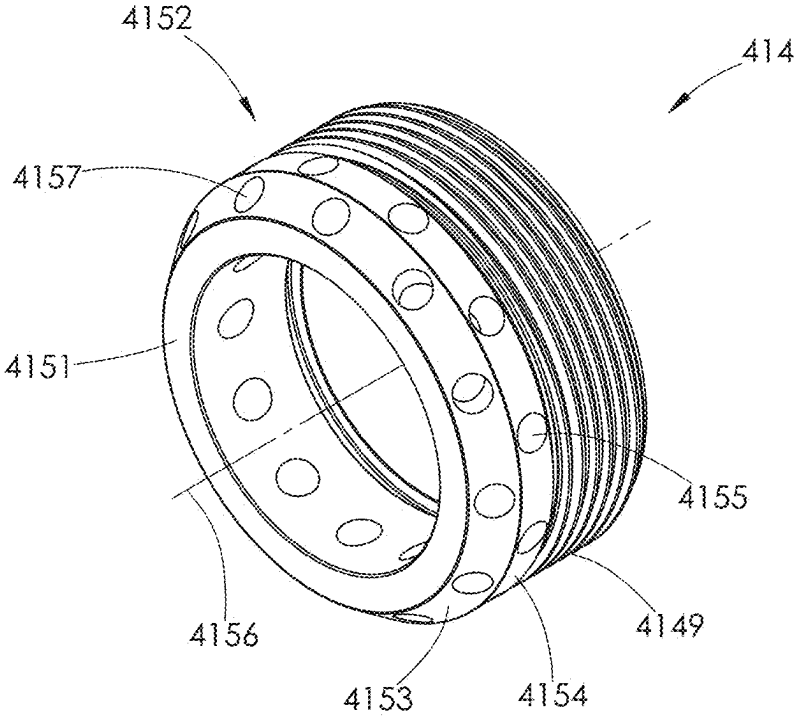
4152
414
4157
4151
4155
4156
4149
4153
4154

FIG. 91

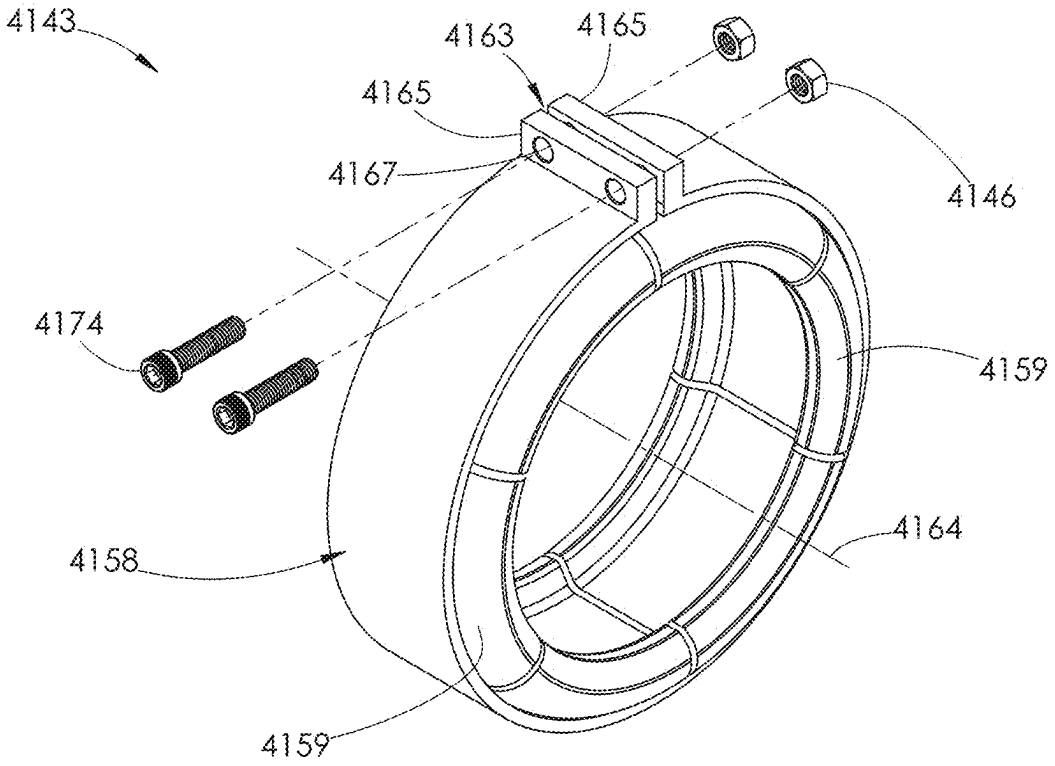
4143
4163
4165
4165
4167
4146
4174
4159
4164
4158
4159

FIG. 92

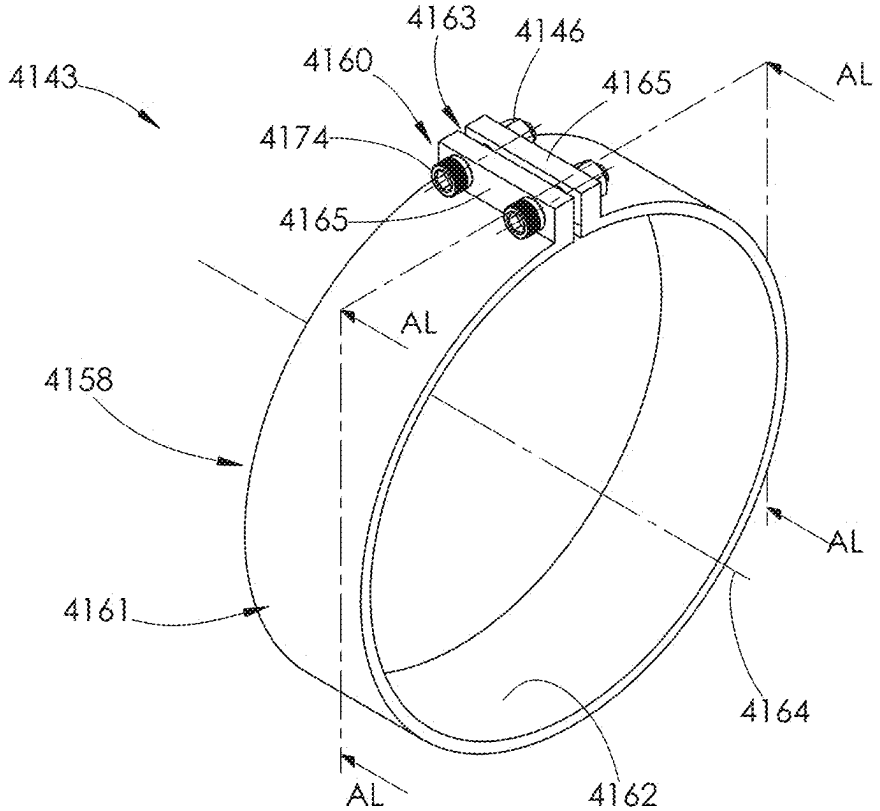
4163
4146
4160
4165
AL
4143
4174
4165
AL
4158
AL
4161
4164
AL
4162

FIG. 93

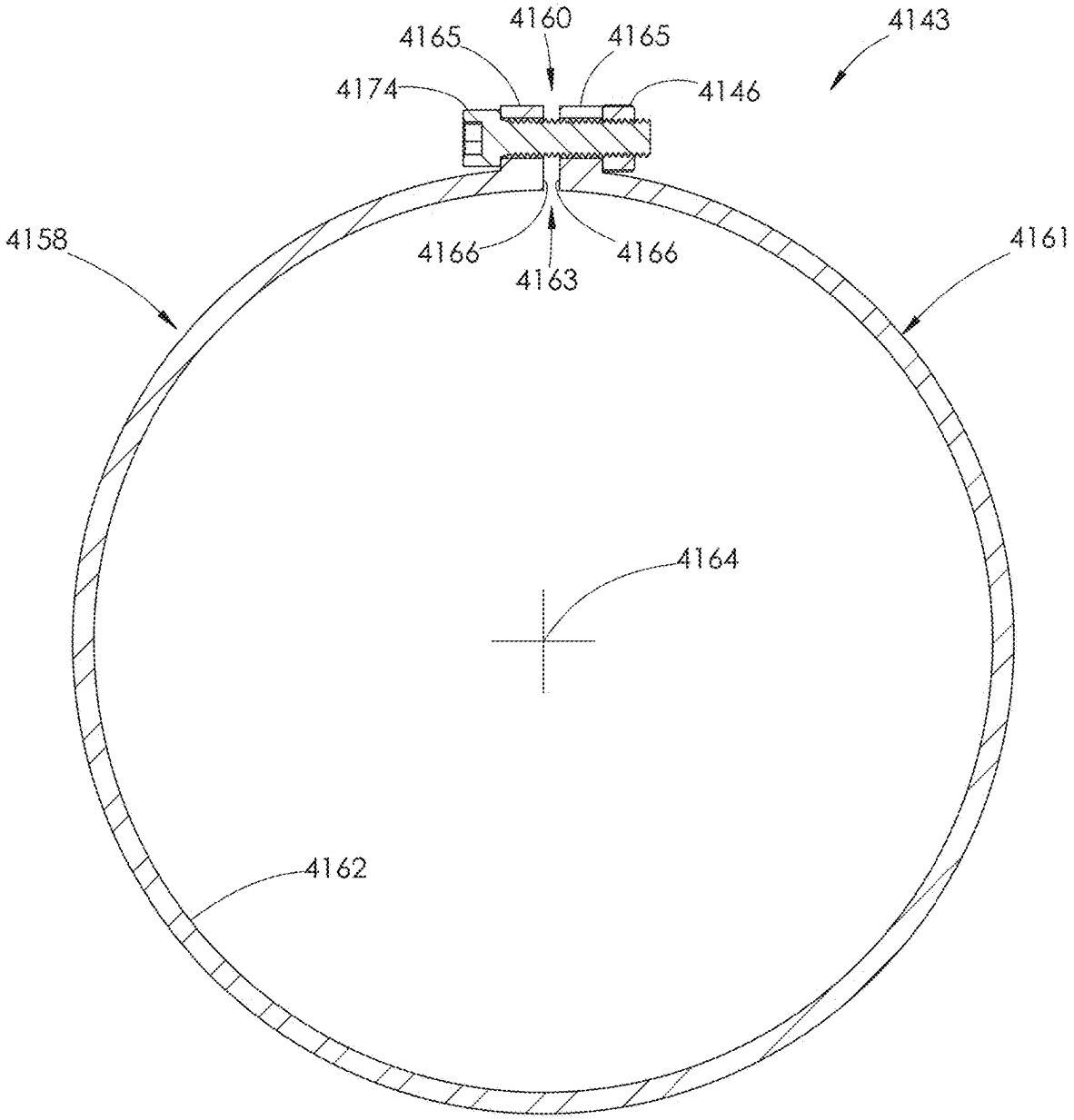
4160
4165
4165
4143
4174
4146
4158
4166
4166
4161
4163
4164
4162

FIG. 94

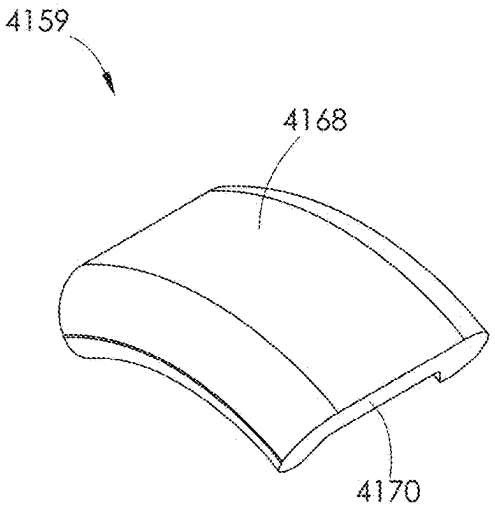

FIG. 95

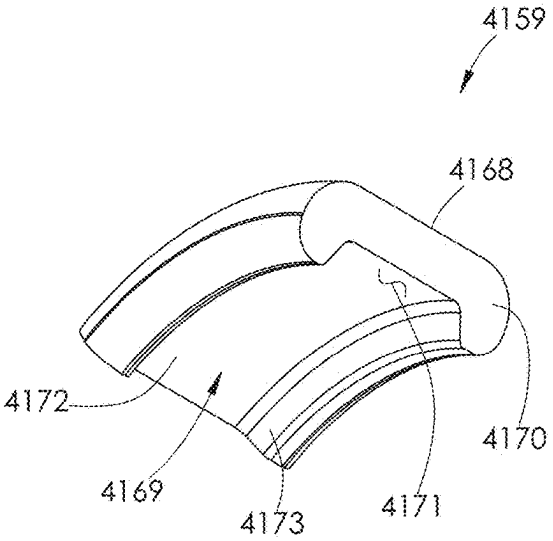

FIG. 96

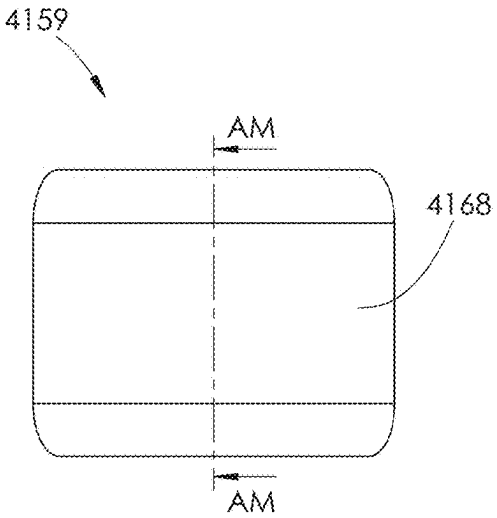

FIG. 97

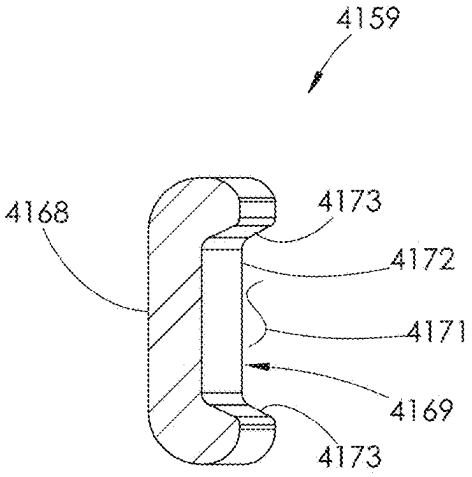

FIG. 98

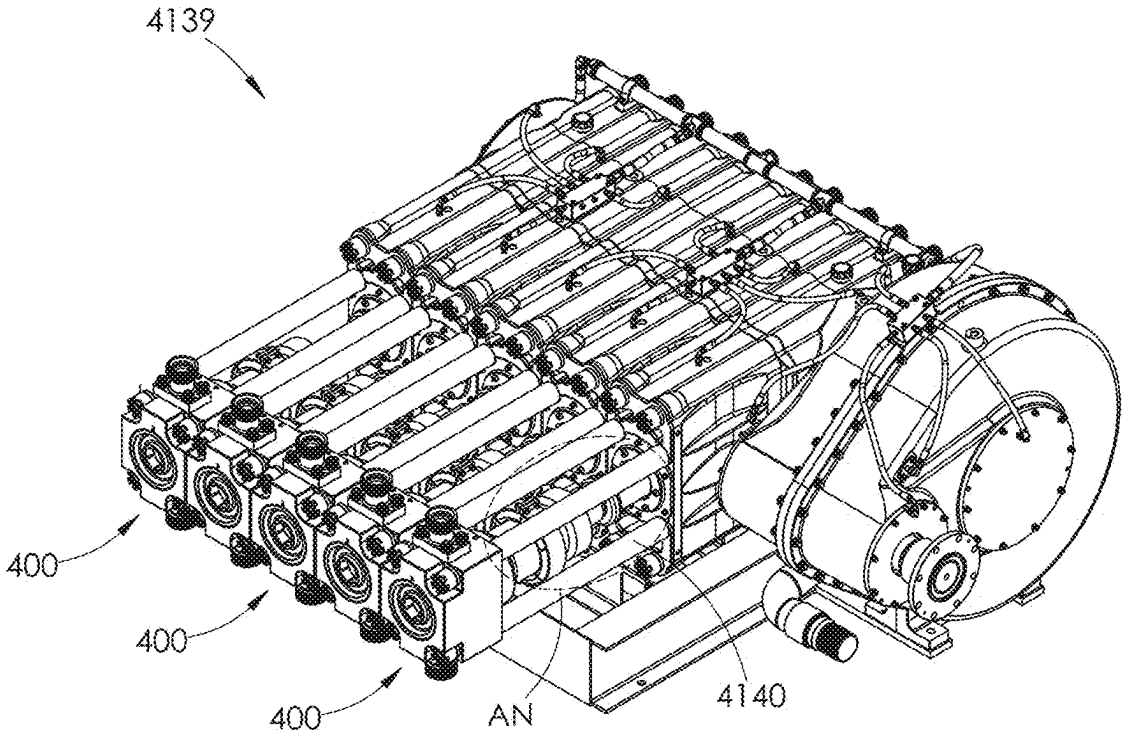

FIG. 99

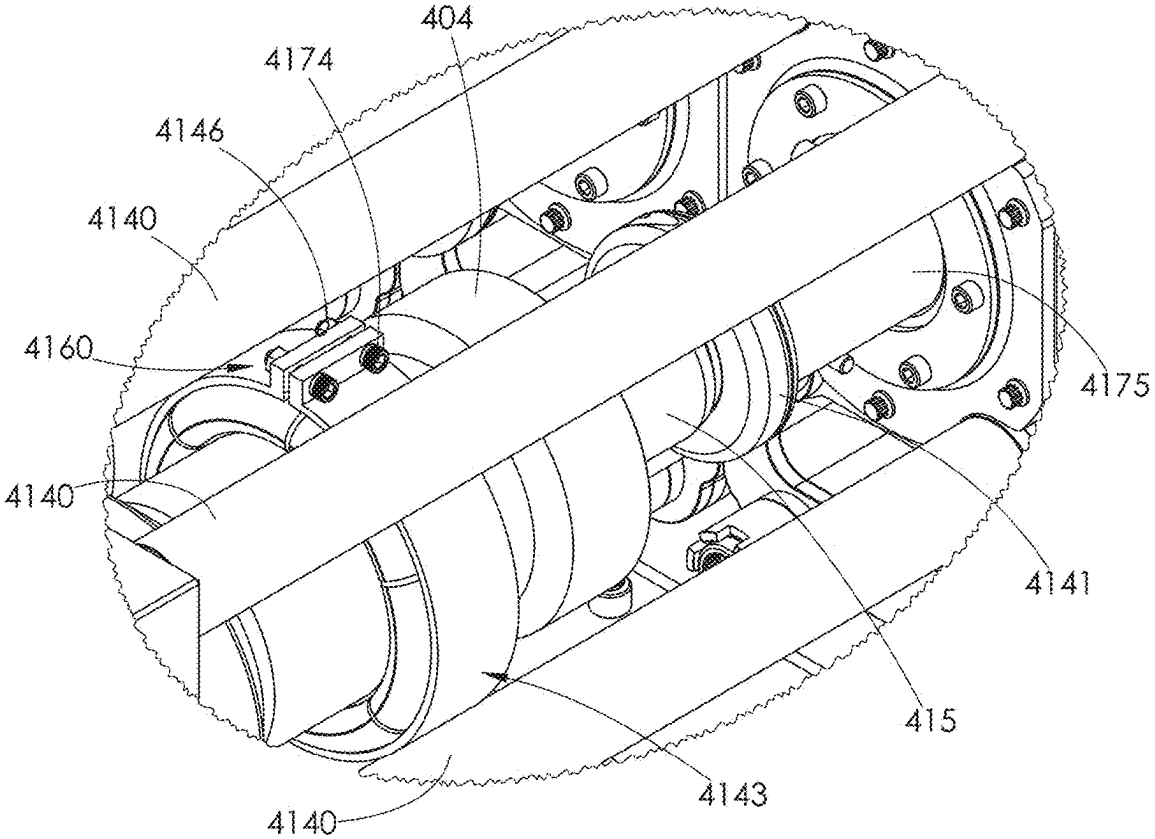

FIG. 100

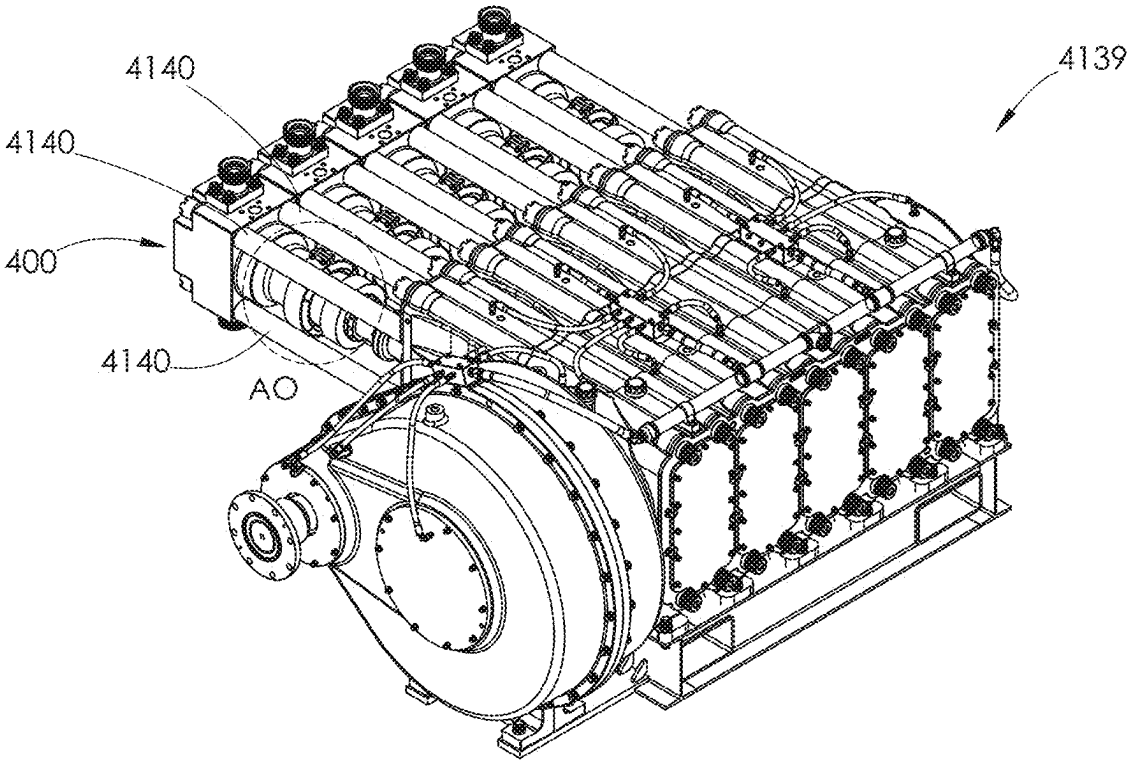

FIG. 101

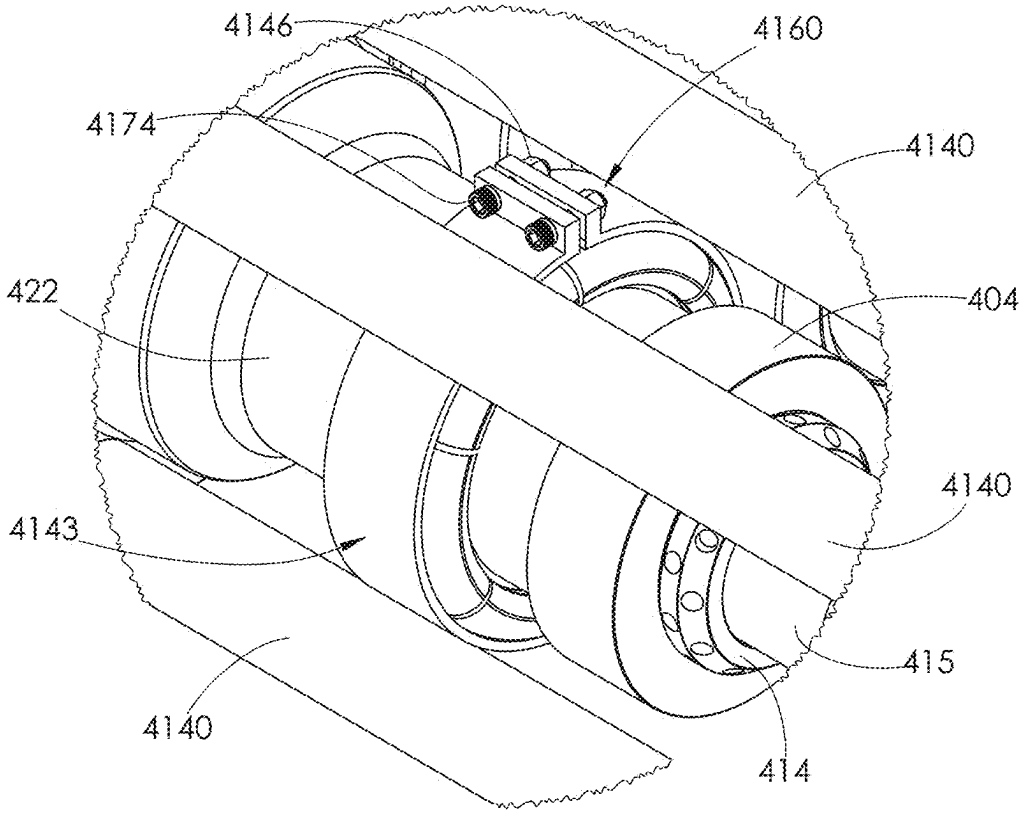

FIG. 102

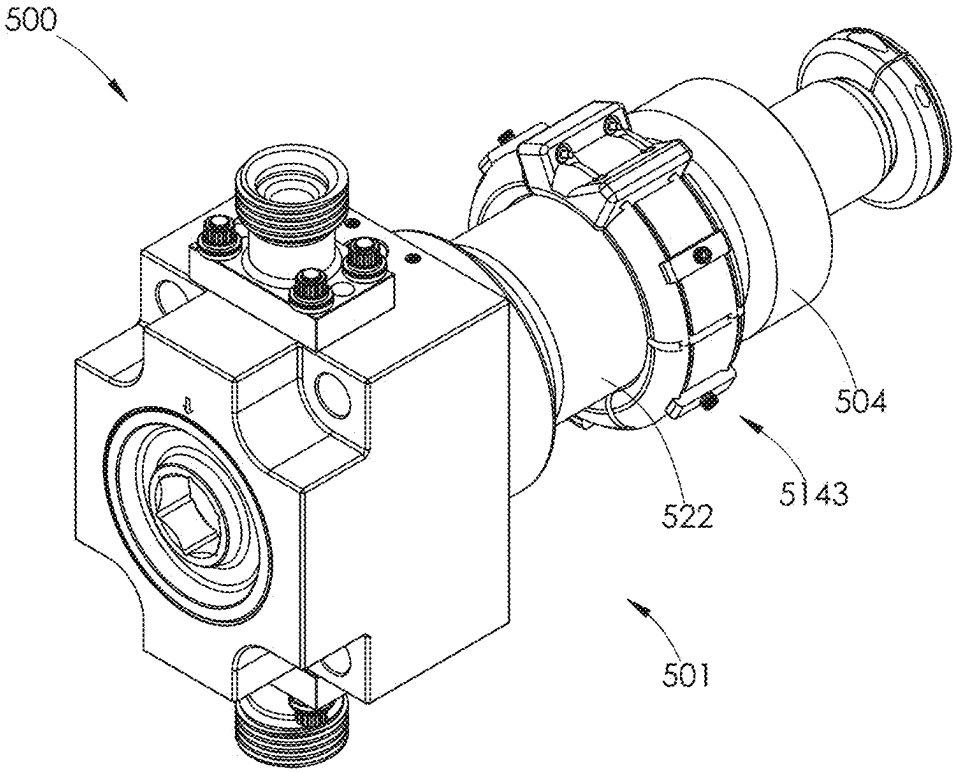

FIG. 103

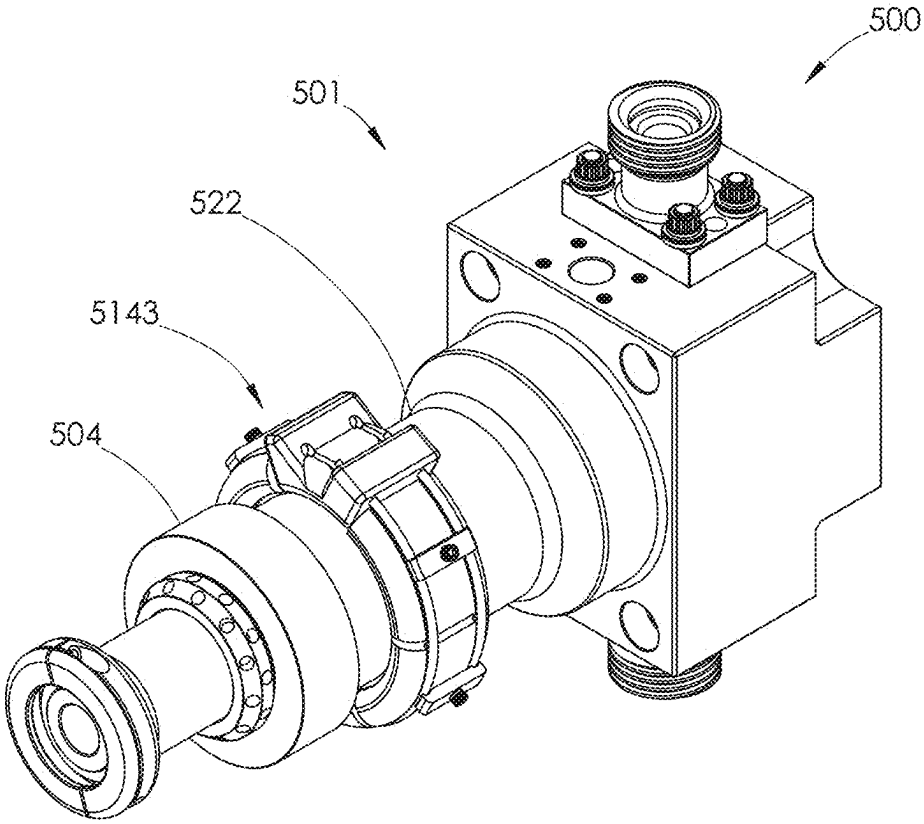

FIG. 104

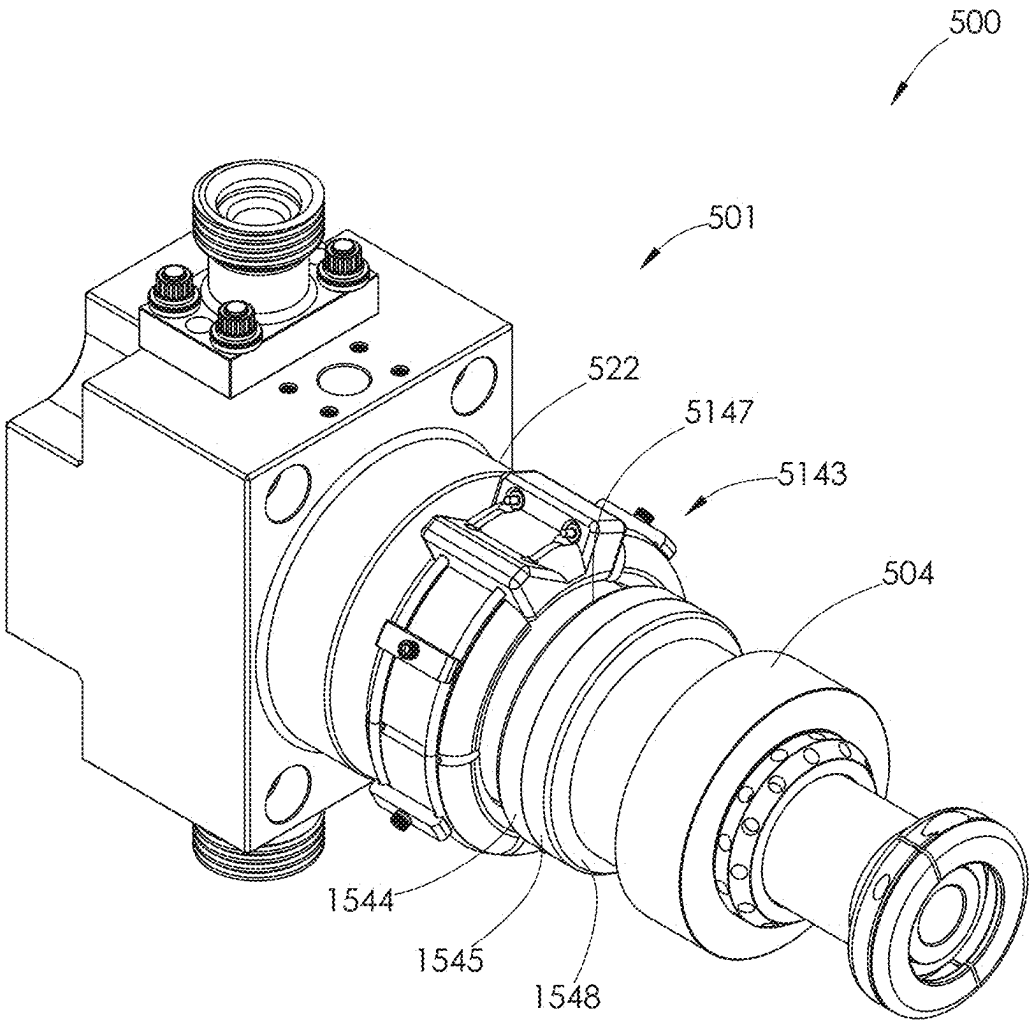

FIG. 105

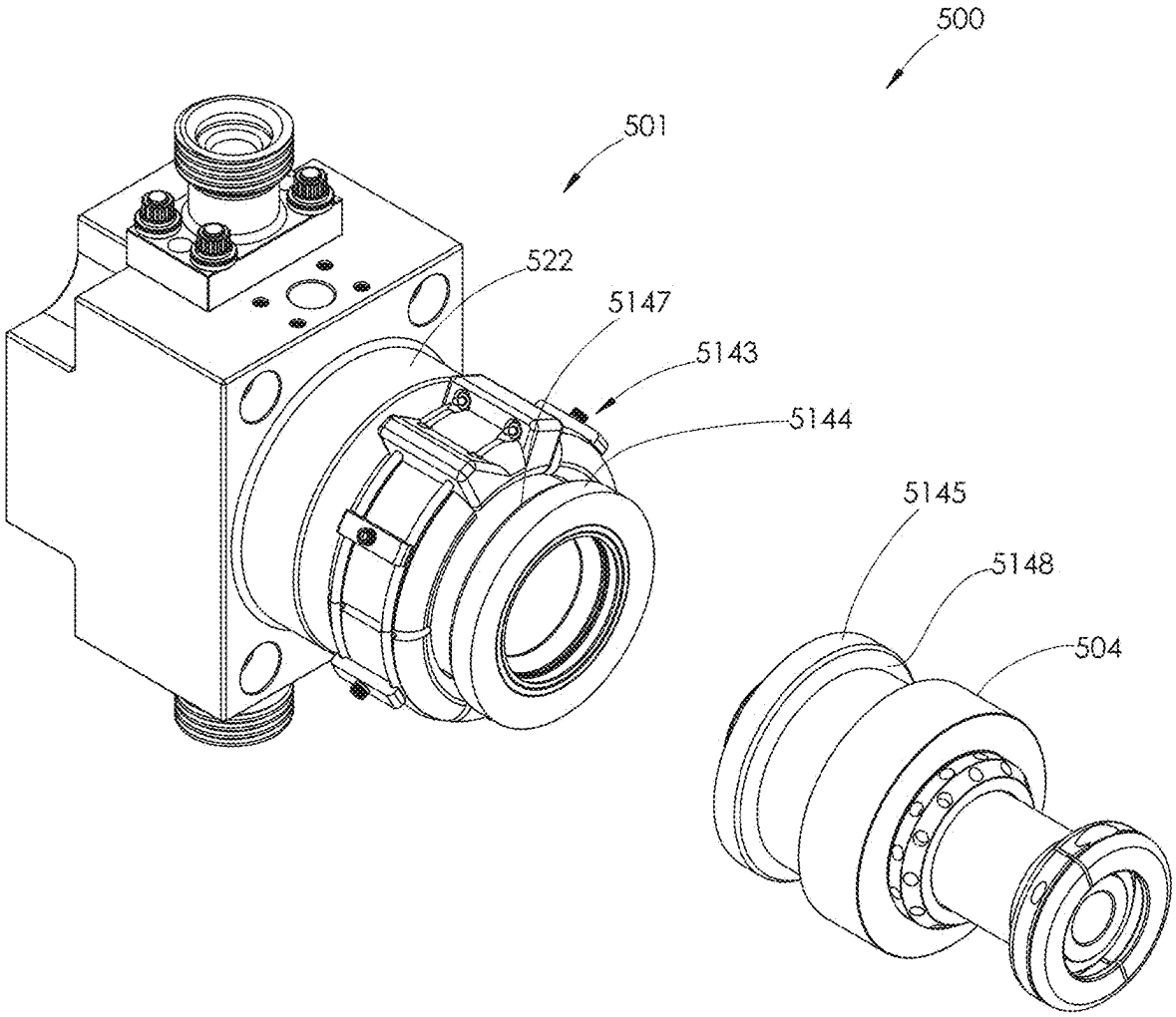

FIG. 106

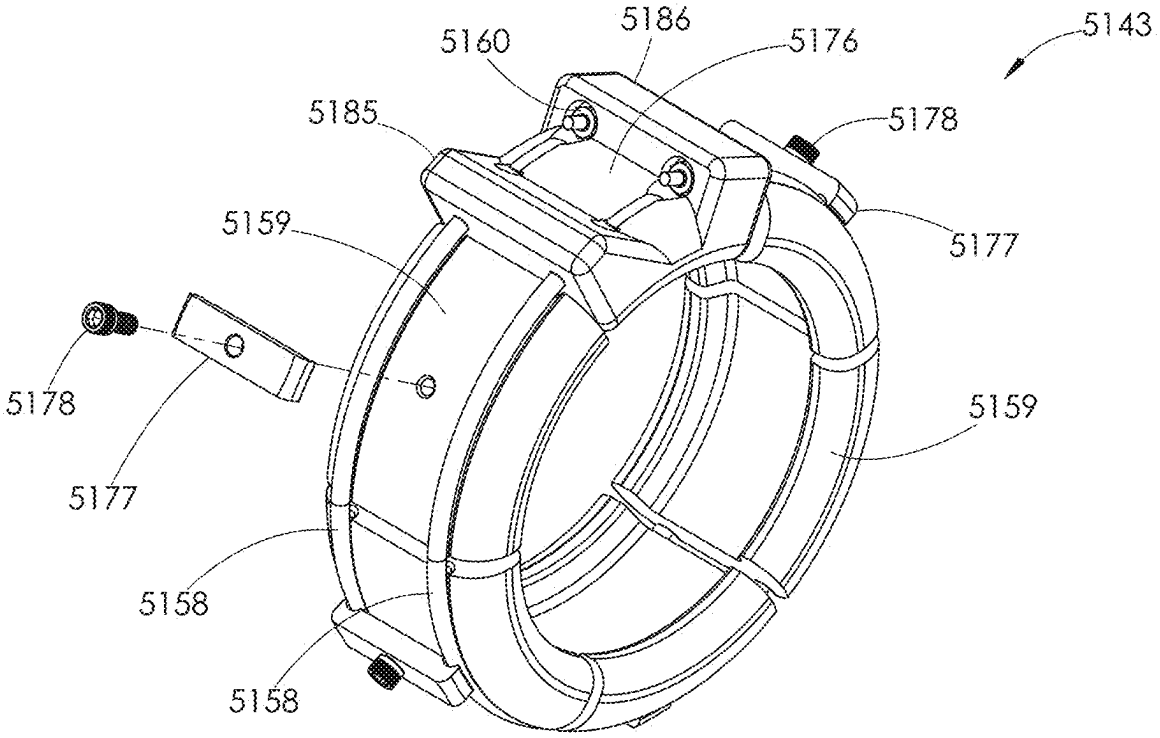

FIG. 107

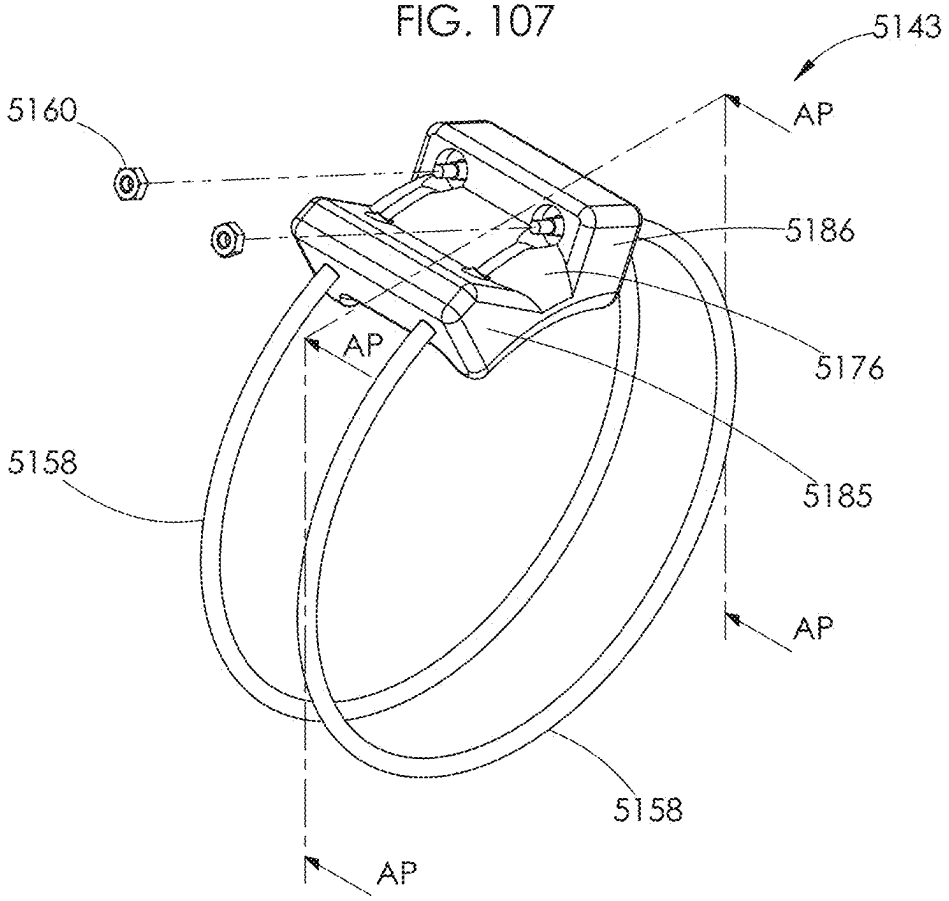

FIG. 108

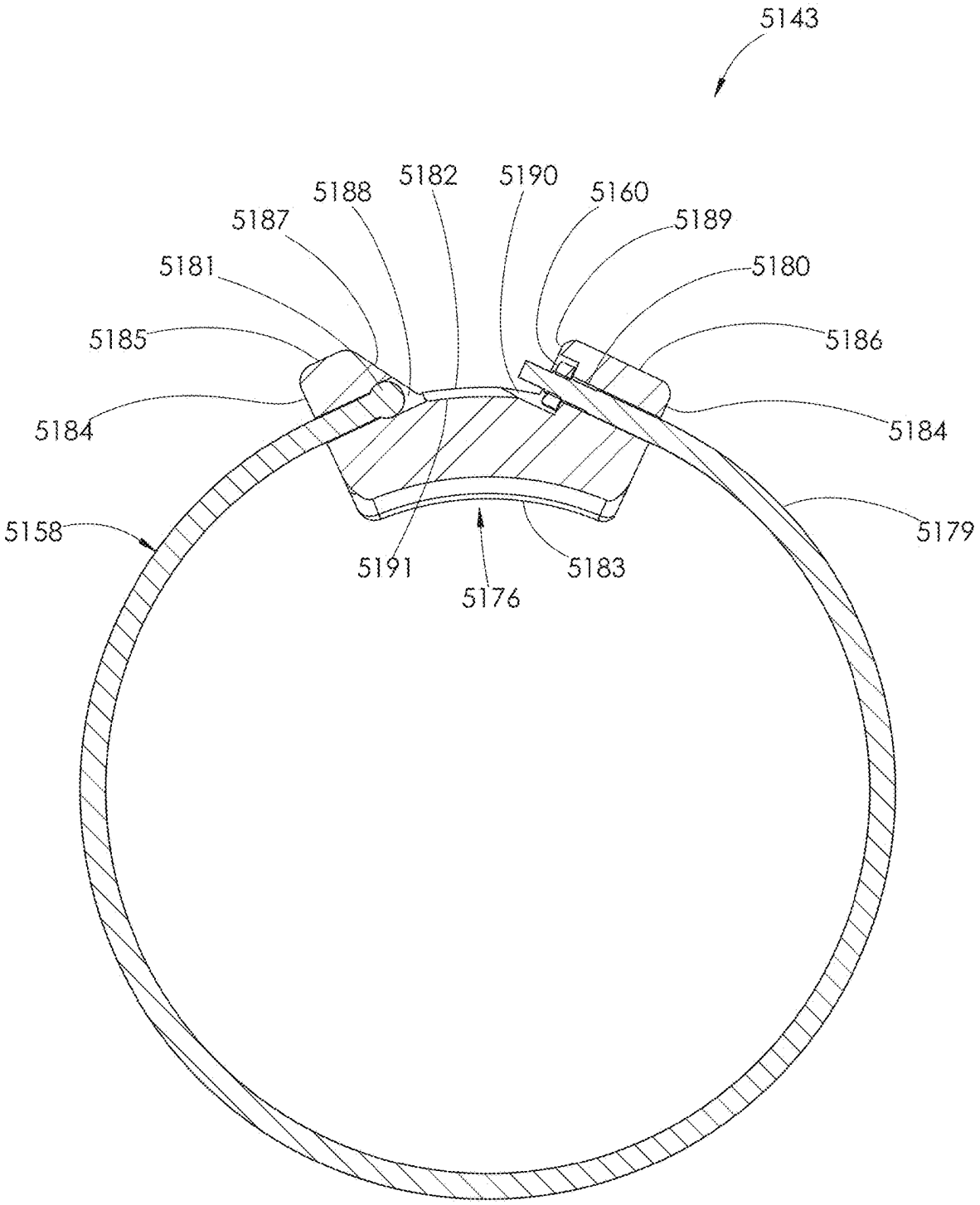
5143
5188
5182
5190
5160
5187
5189
5181
5180
5185
5186
5184
5184
5158
5179
5191
5183
5176

FIG. 109

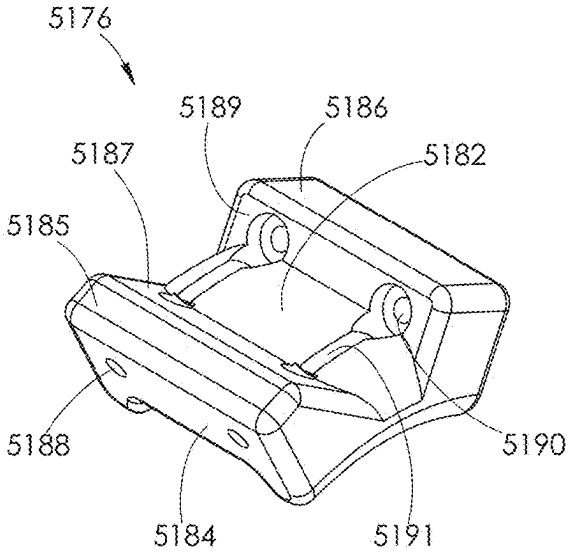

FIG. 110

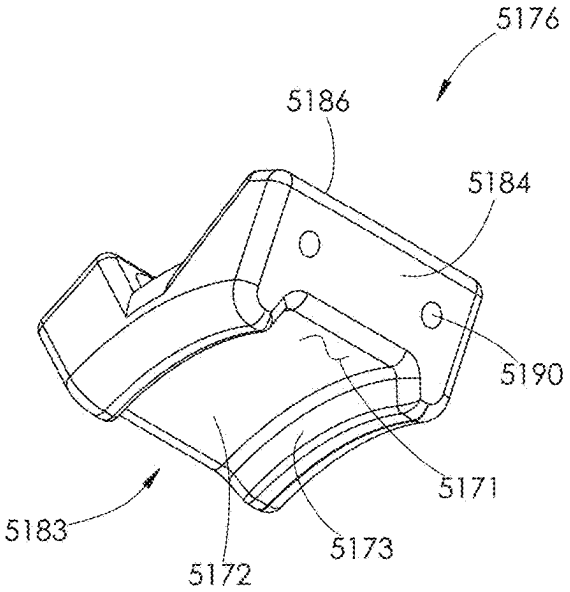

FIG. 111

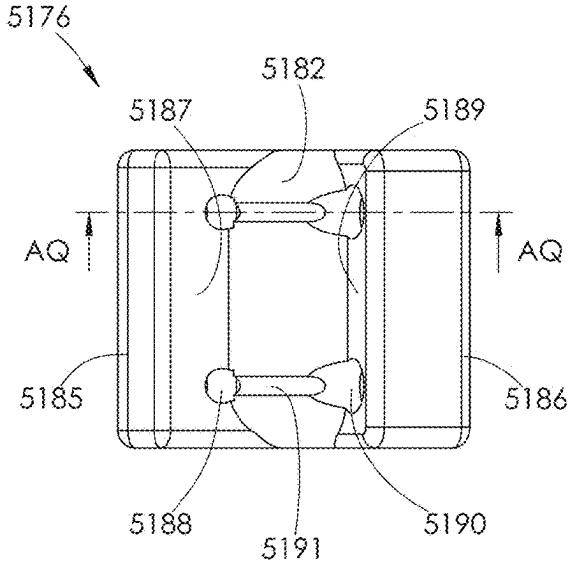

FIG. 112

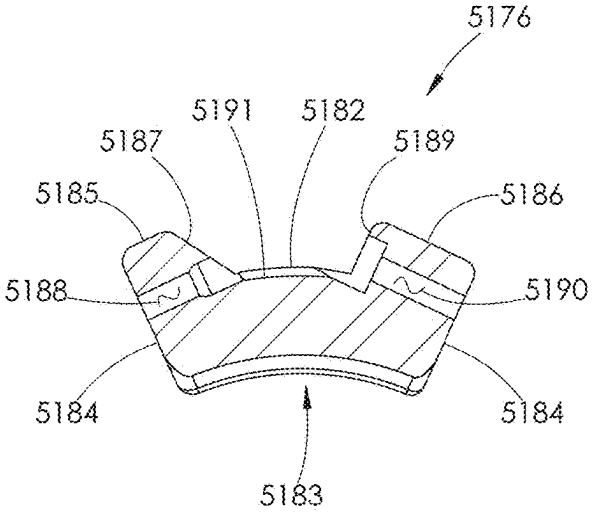

FIG. 113

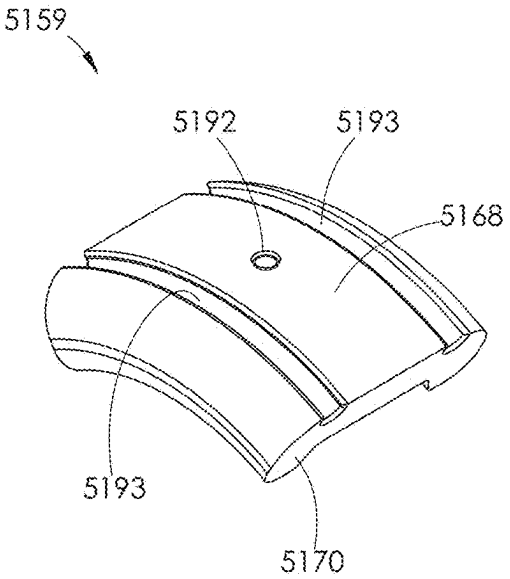

FIG. 114

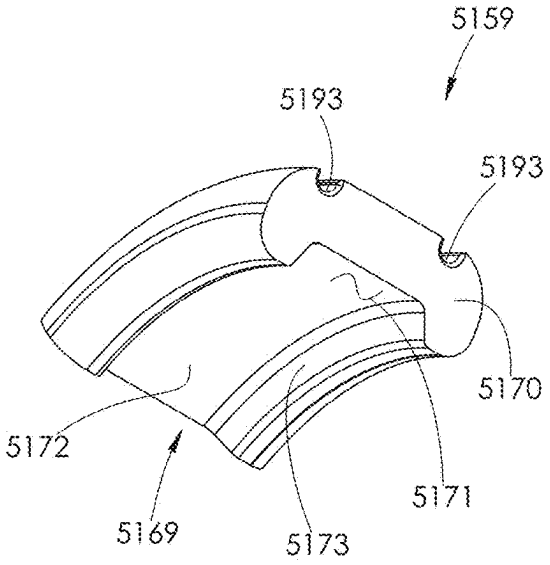

FIG. 115

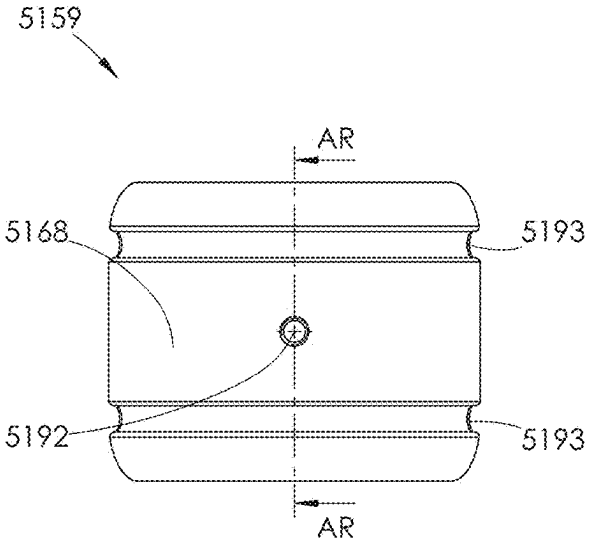

FIG. 116

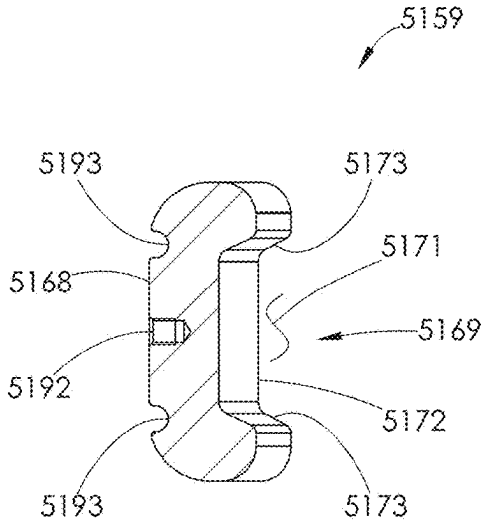

FIG. 117

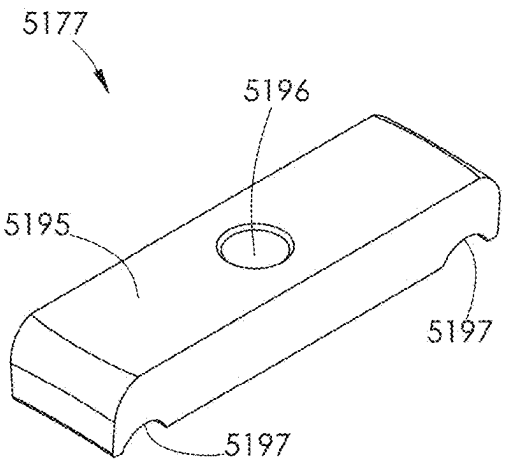

FIG. 118

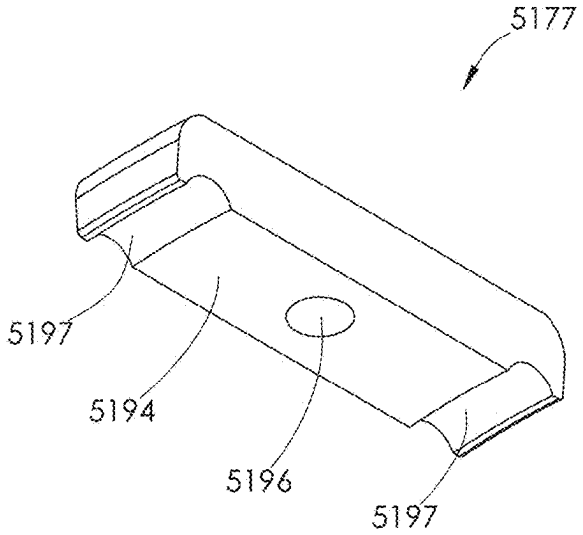

FIG. 119

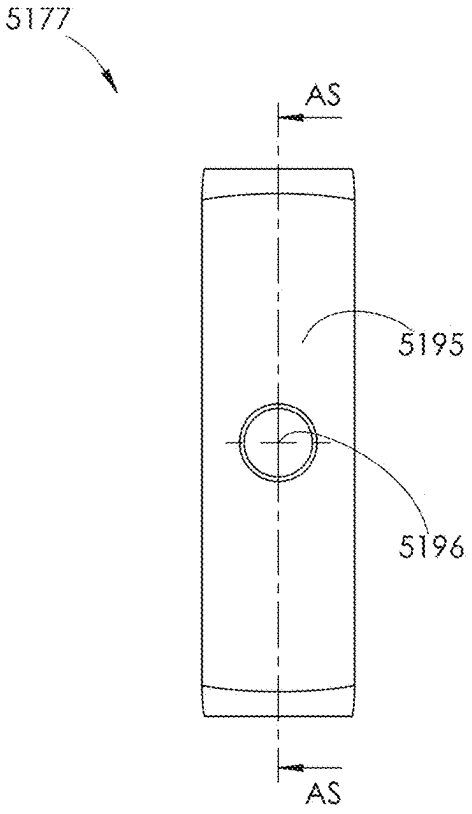

FIG. 120

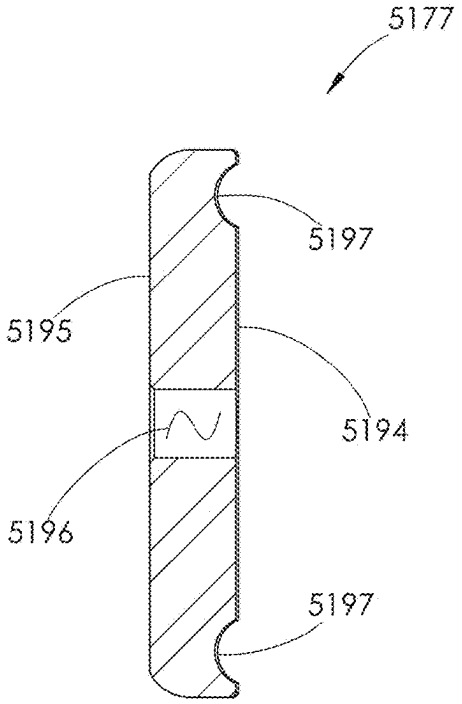

FIG. 121

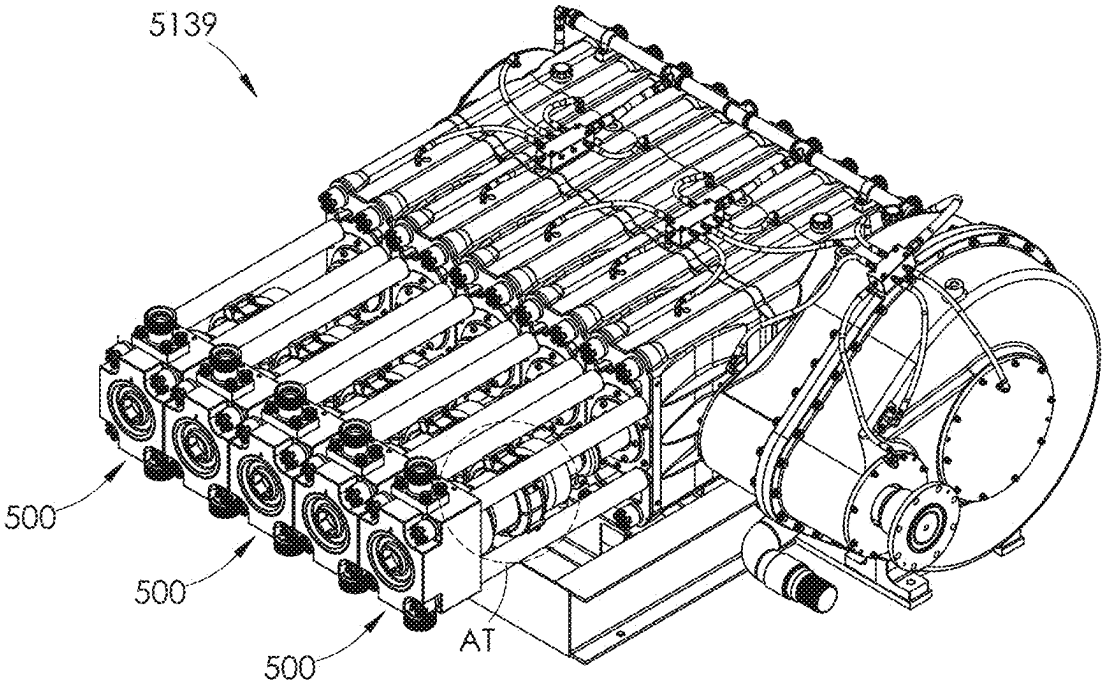

FIG. 122

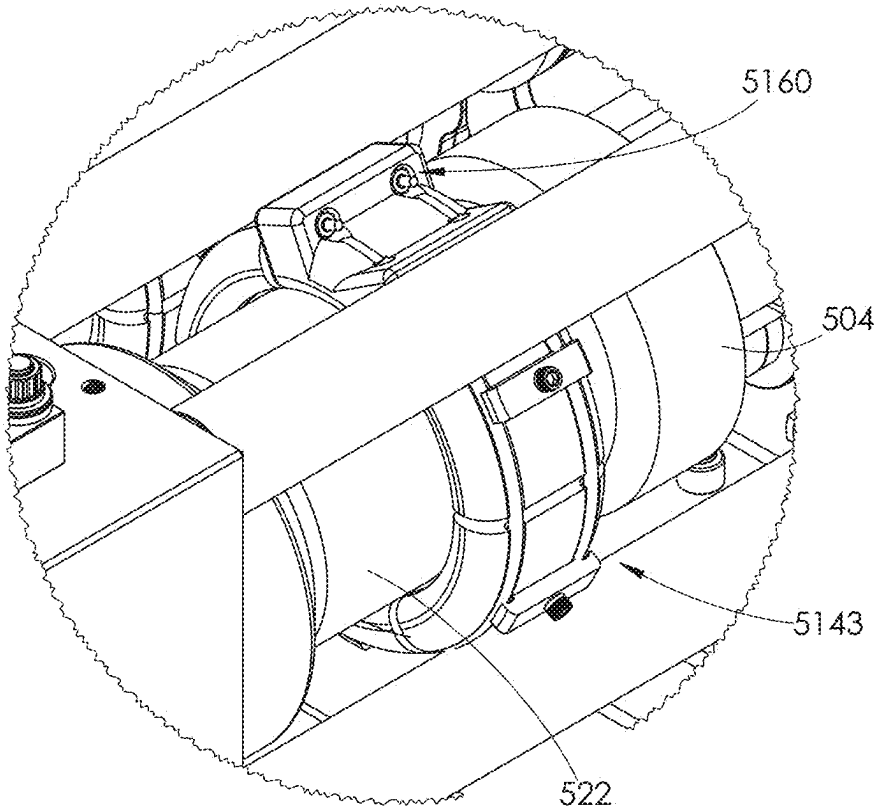

FIG. 123

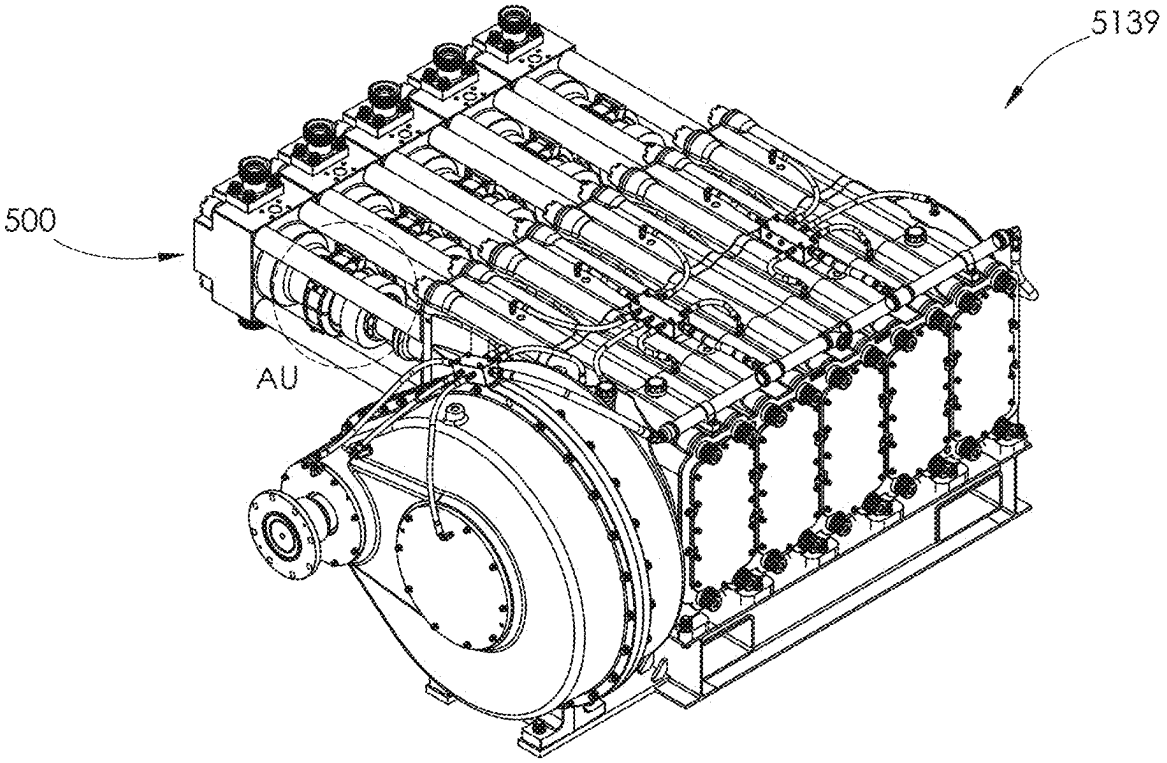

FIG. 124

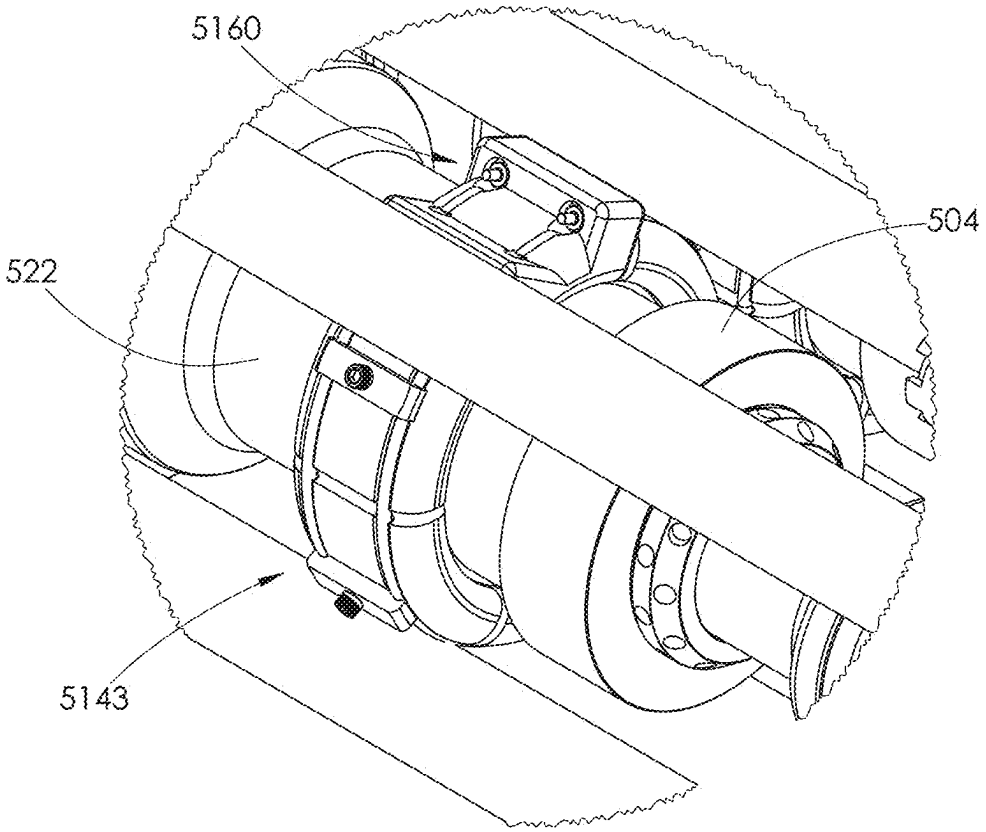

FIG. 125

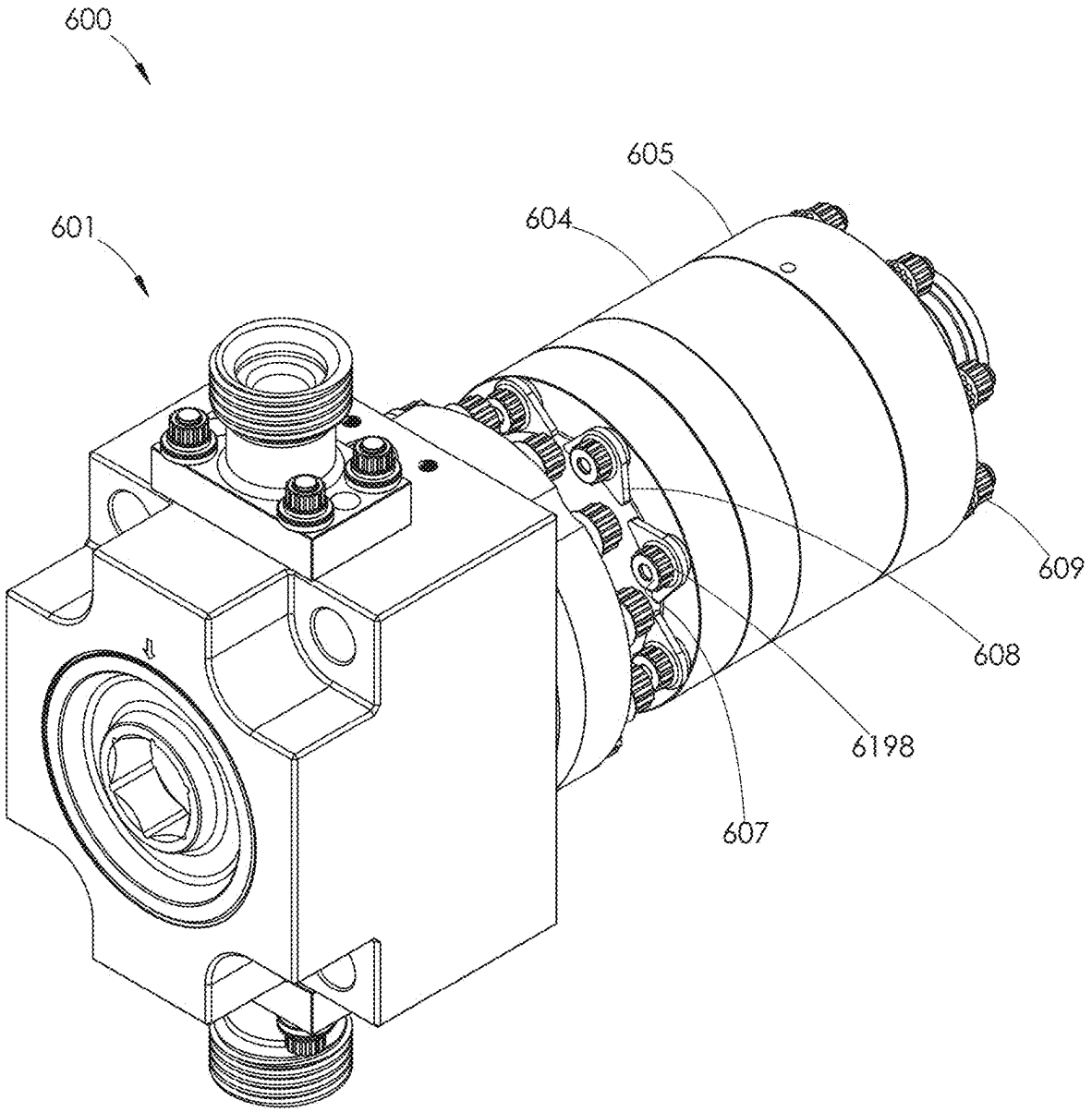

FIG. 126

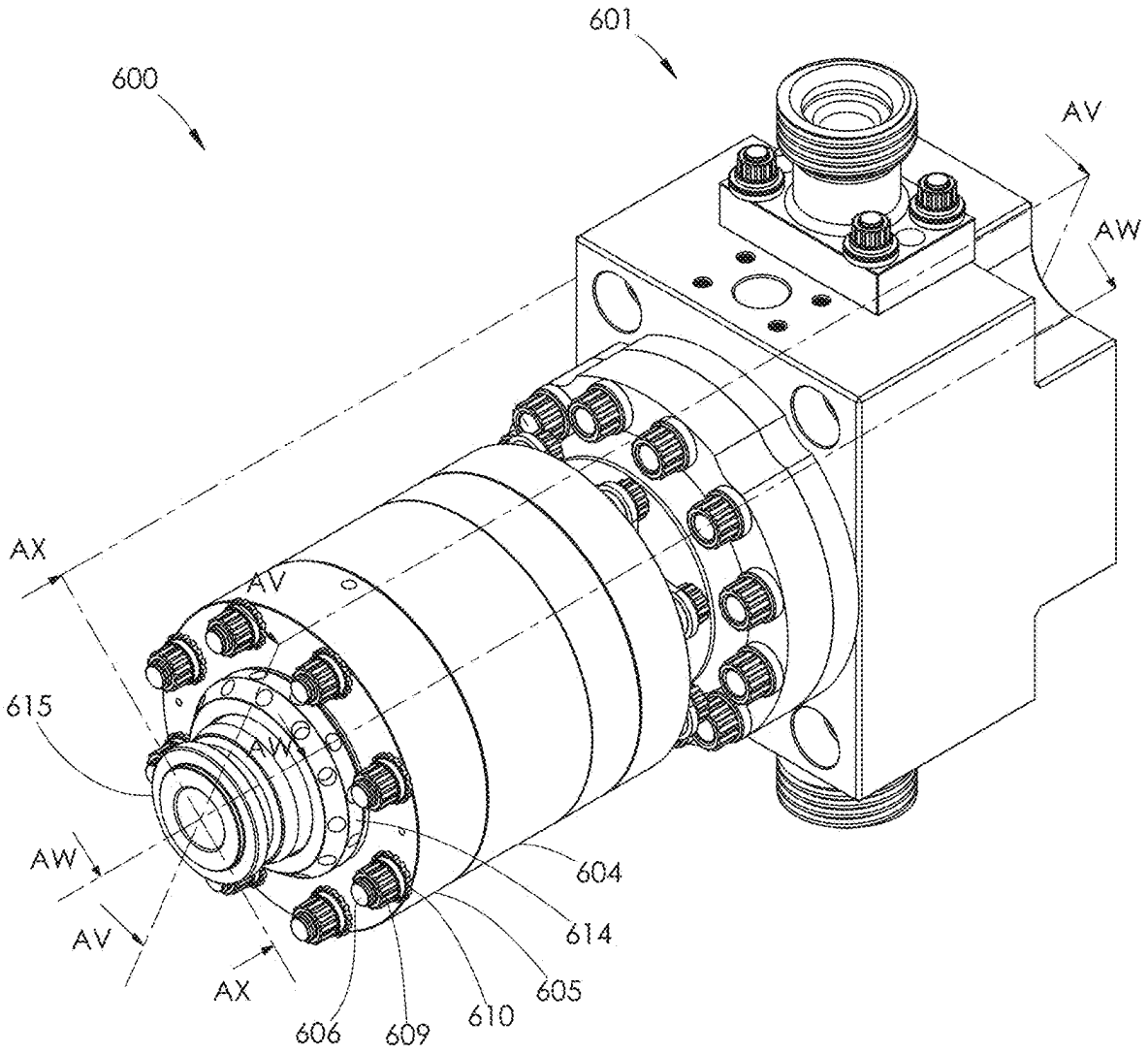

FIG. 127

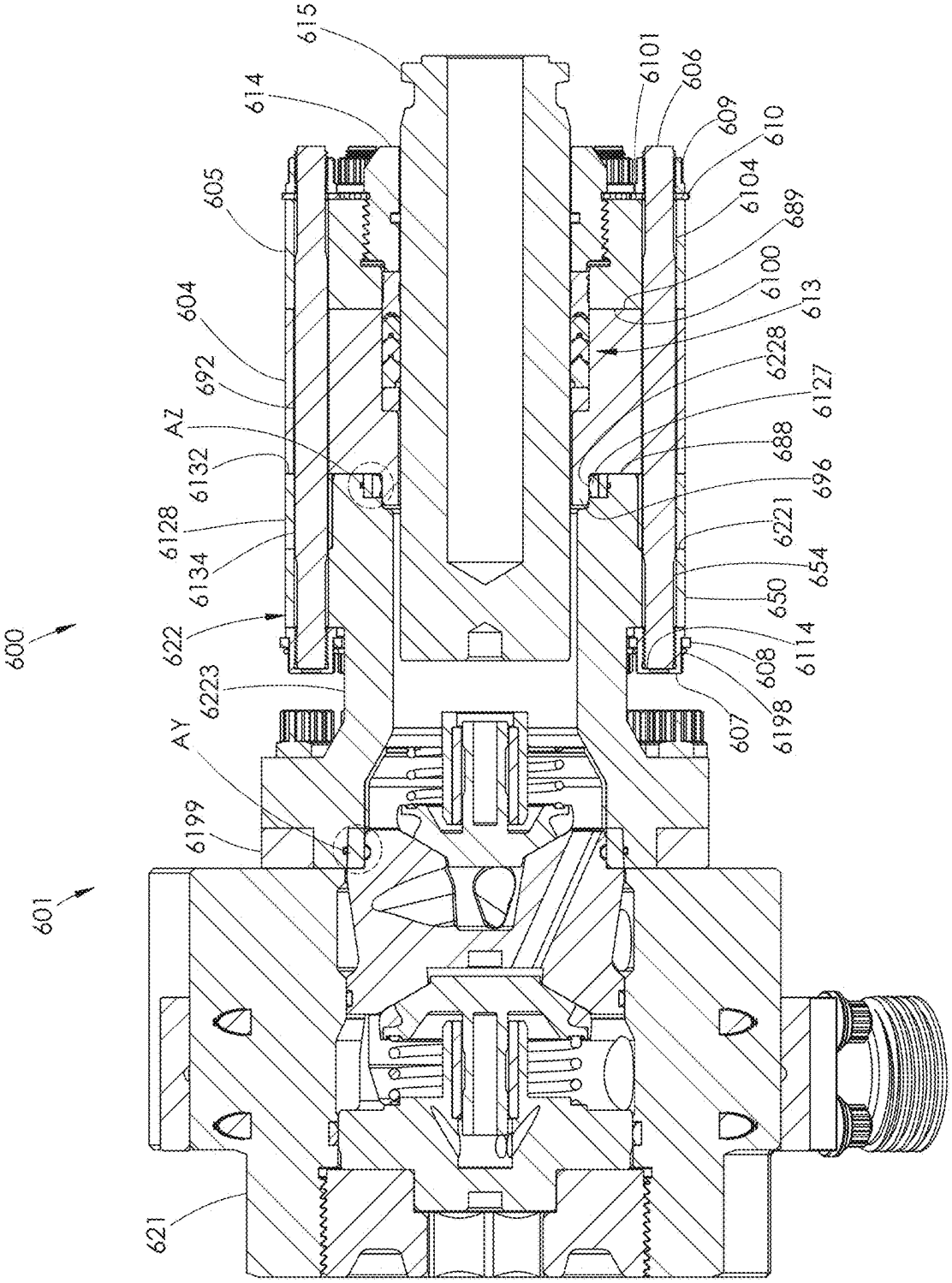
600
601
615
614
605
604
692
AZ
6132
6128
6134
622
6223
AY
6199
621
6101
606
609
610
6104
689
6100
613
6228
6127
688
696
6221
654
650
6114
608
6198
607

FIG. 128

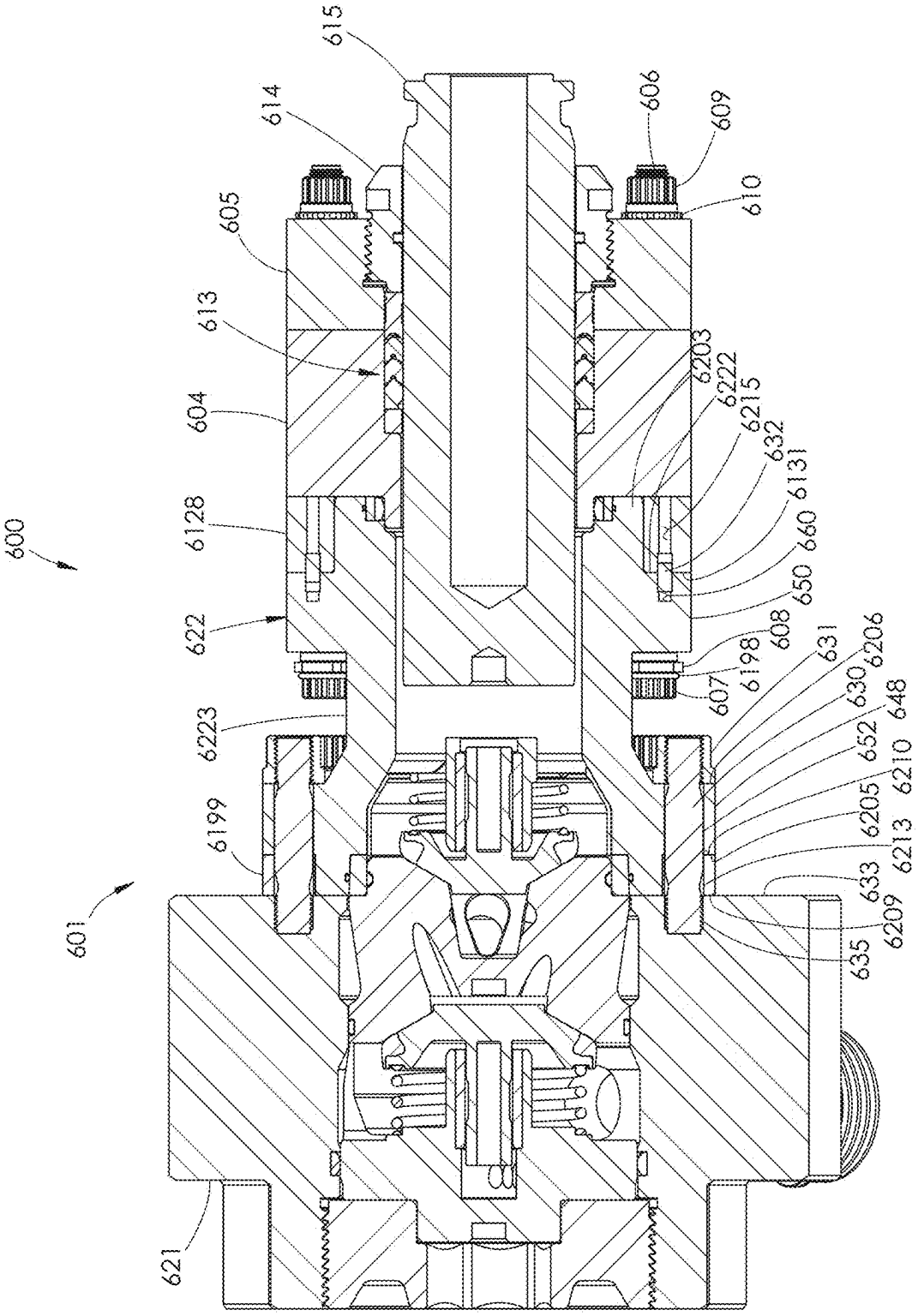
600
601
615
614
605
613
604
6128
622
6223
6199
621
606
609
610
6203
6222
6215
632
6131
660
650
608
607
6198
631
6206
630
648
652
6210
6205
6213
633
6209
635

FIG. 129

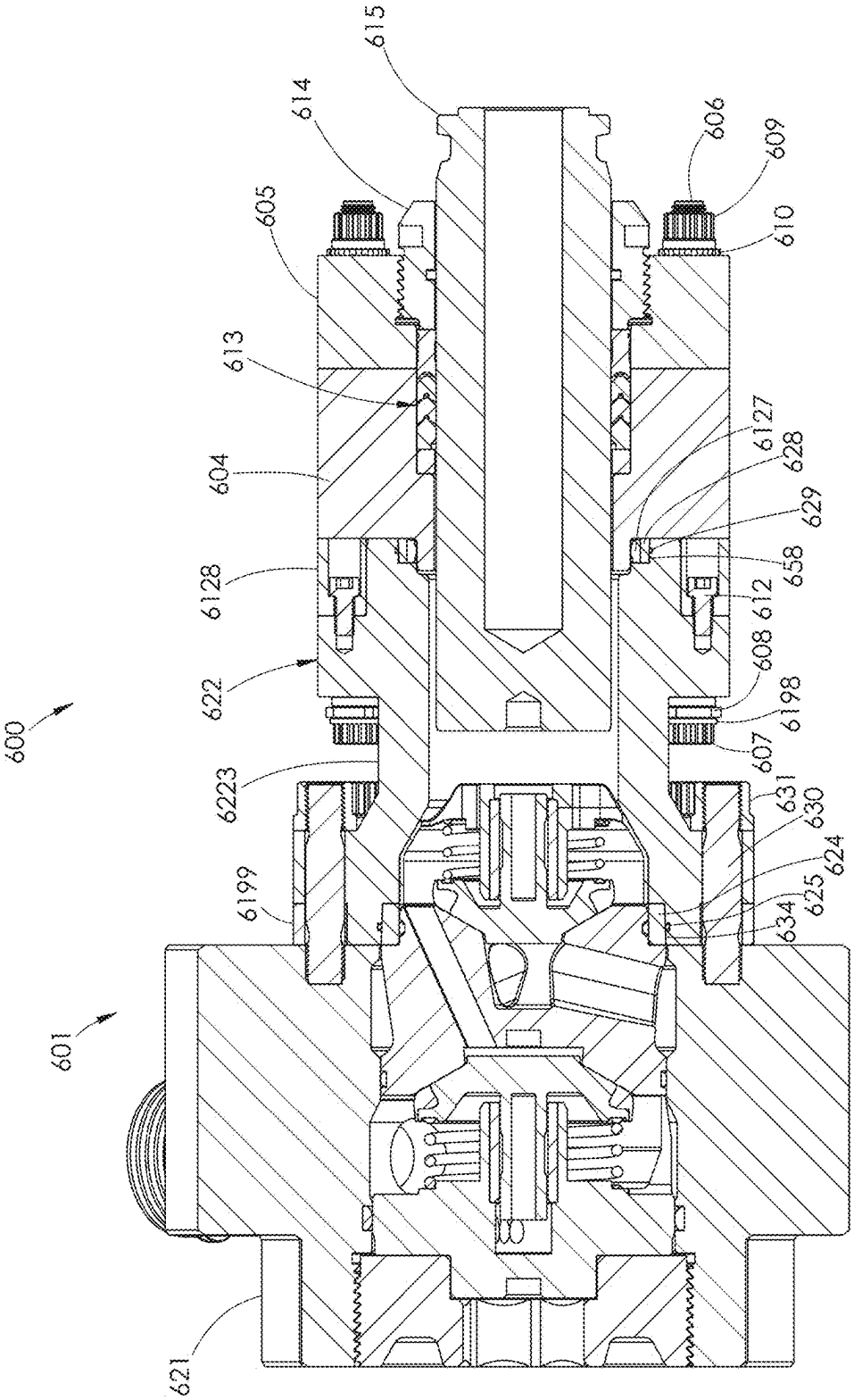
600
601
621
6223
6199
622
6128
604
613
605
614
615
606
609
610
6127
628
629
658
612
608
6198
607
631
630
624
625
634

FIG. 130

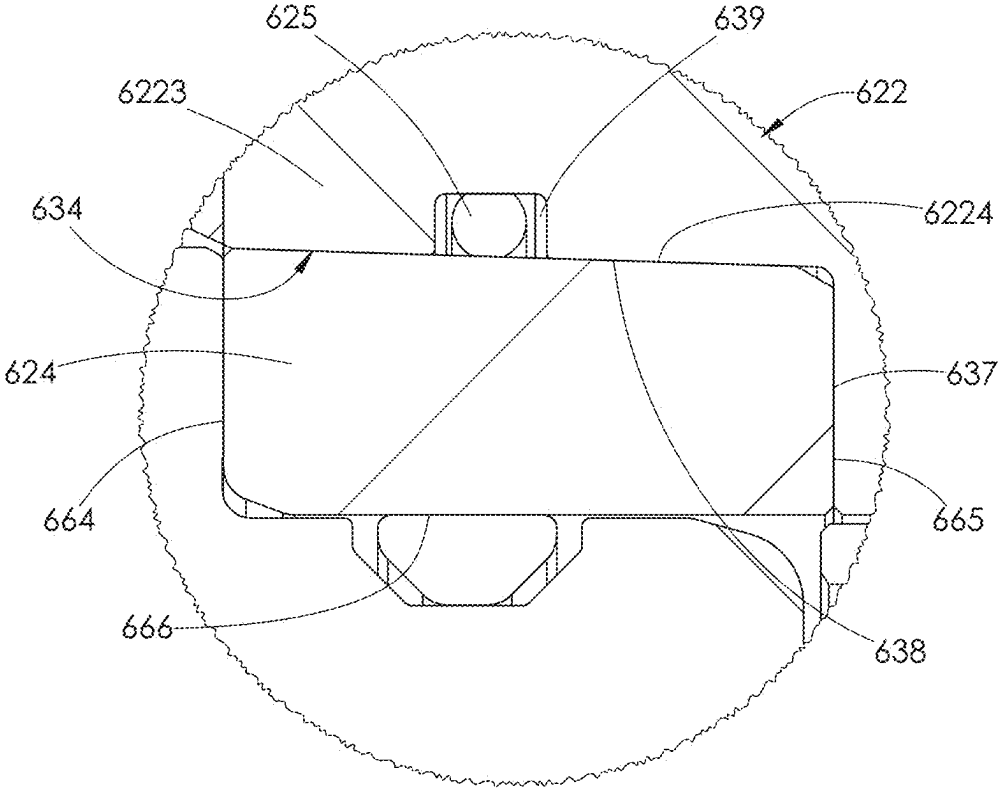

FIG. 131

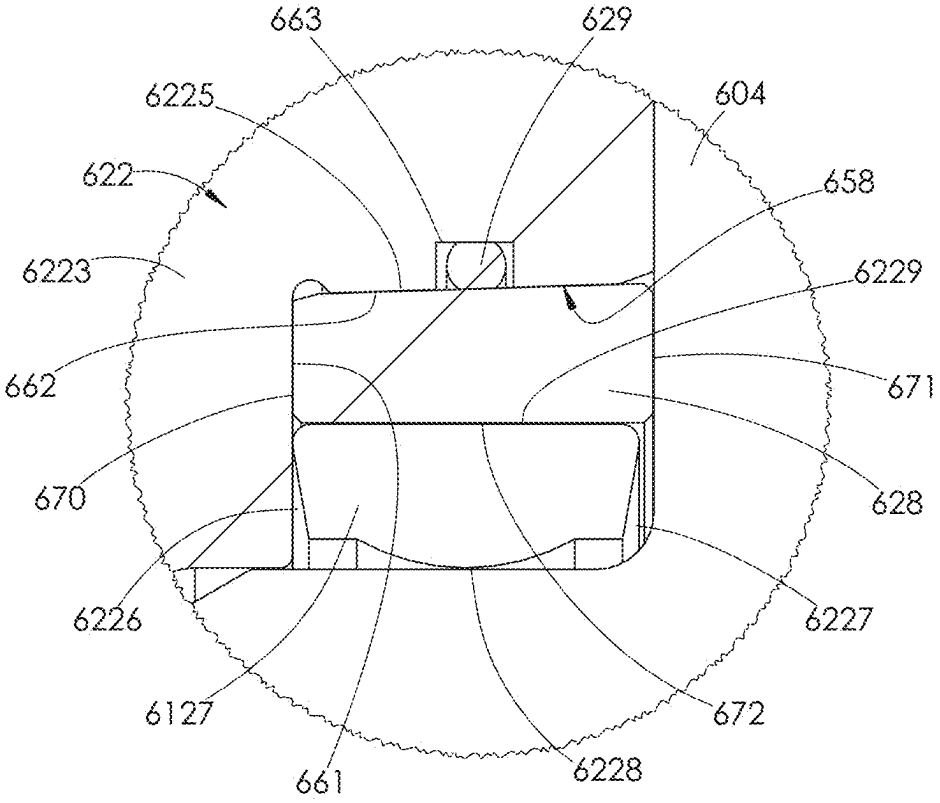

FIG. 132

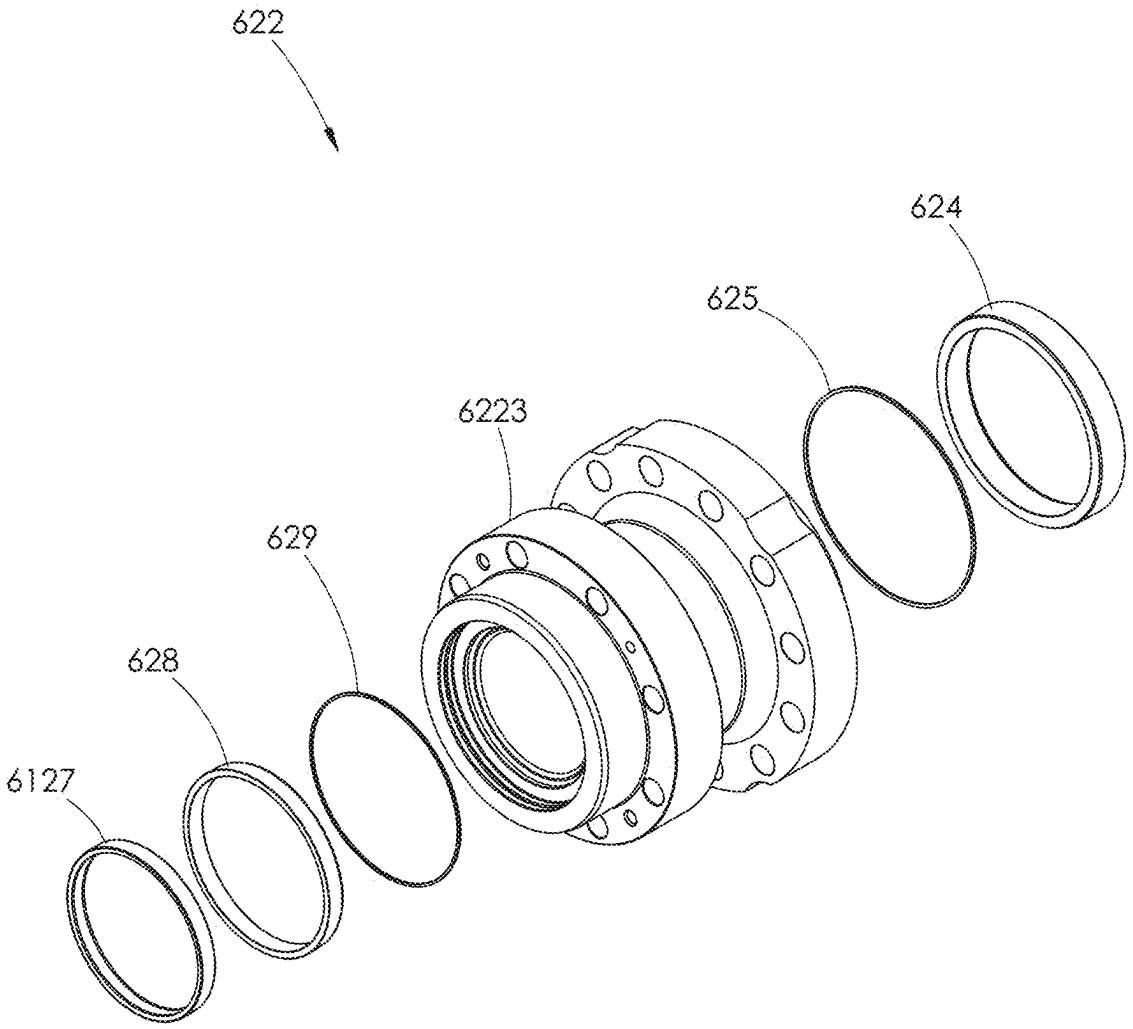

FIG. 133

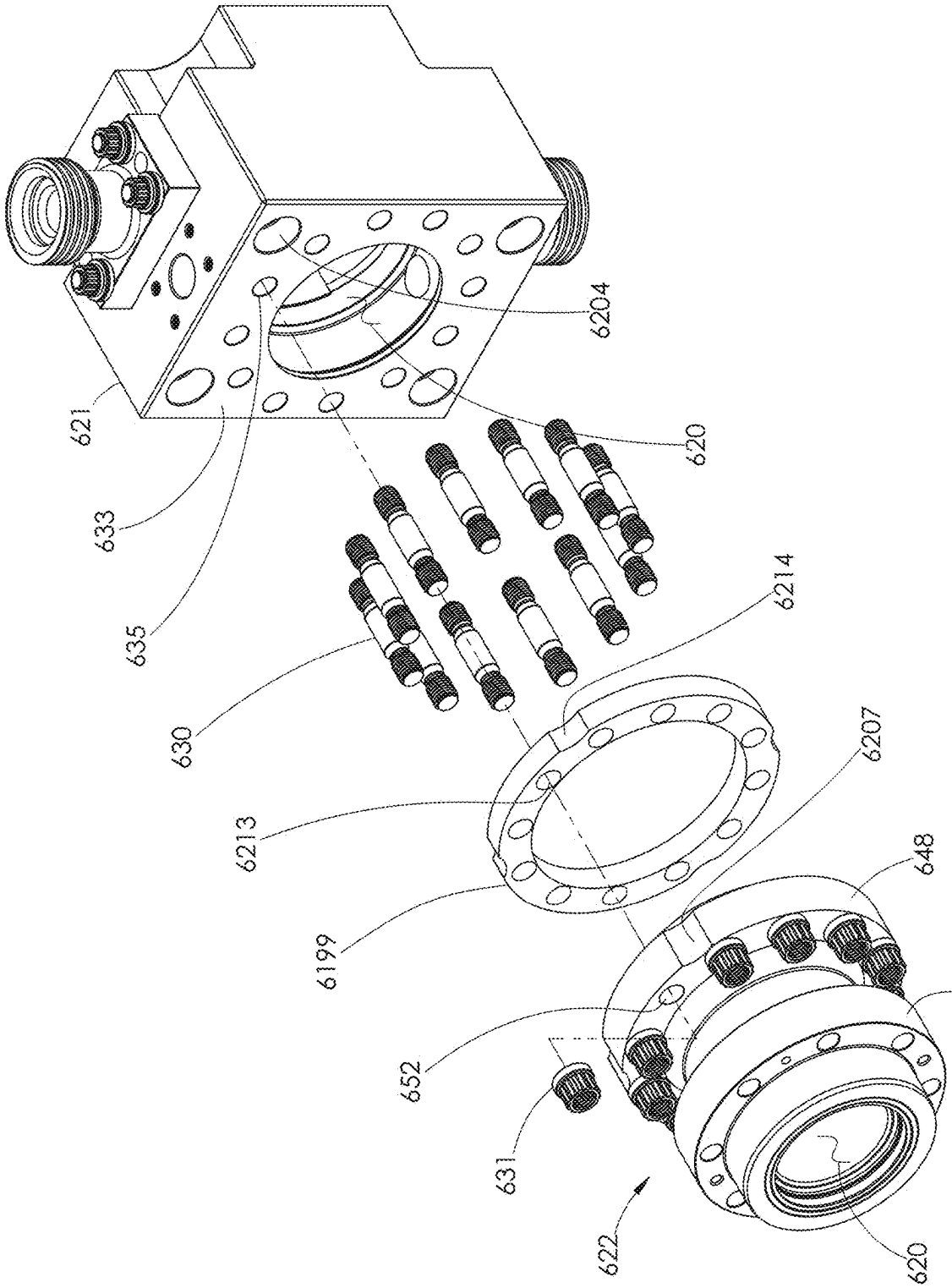
621
633
635
6204
620
630
6214
6213
6199
6207
648
650
652
631
622
620

FIG. 134

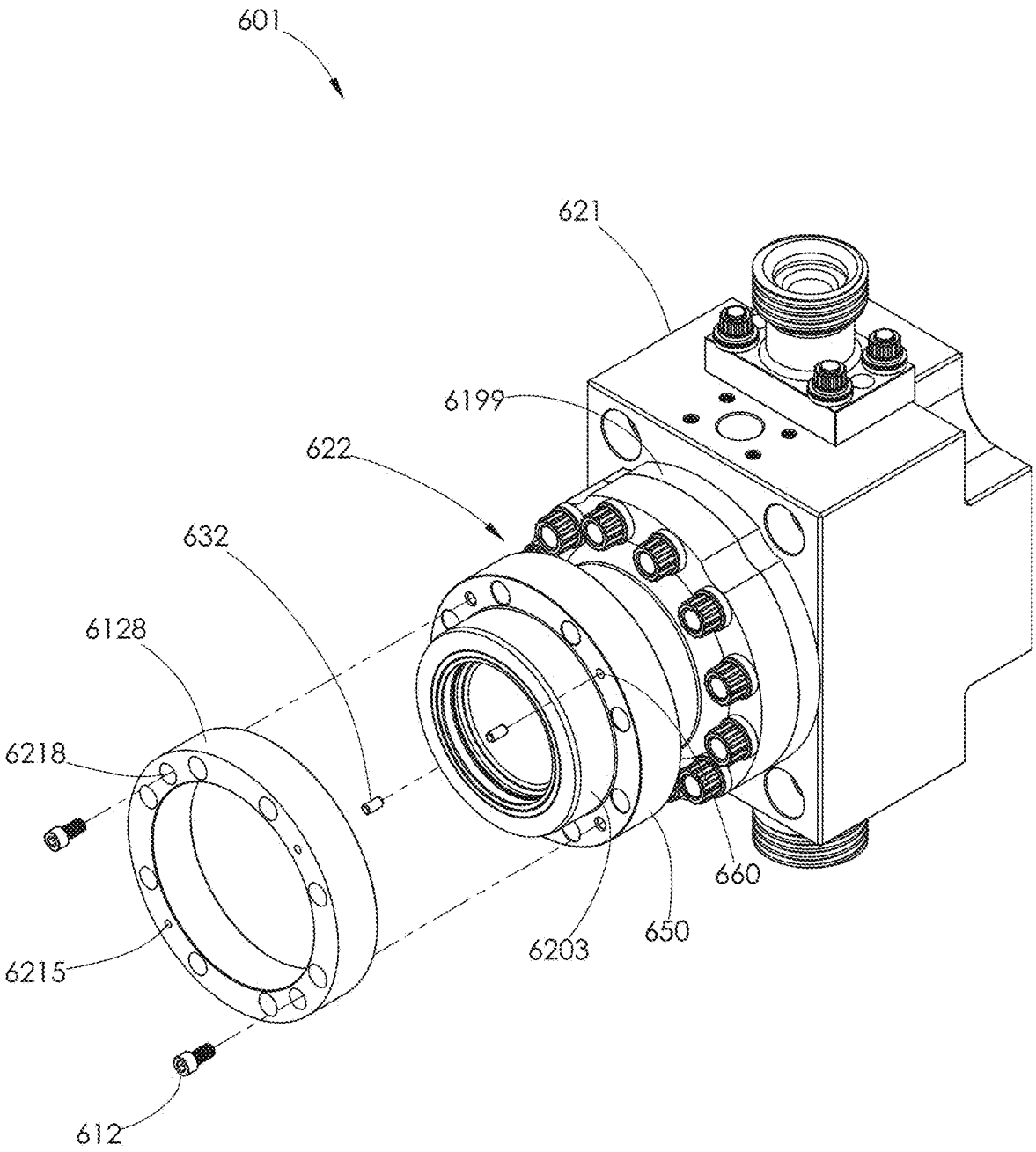

FIG. 135

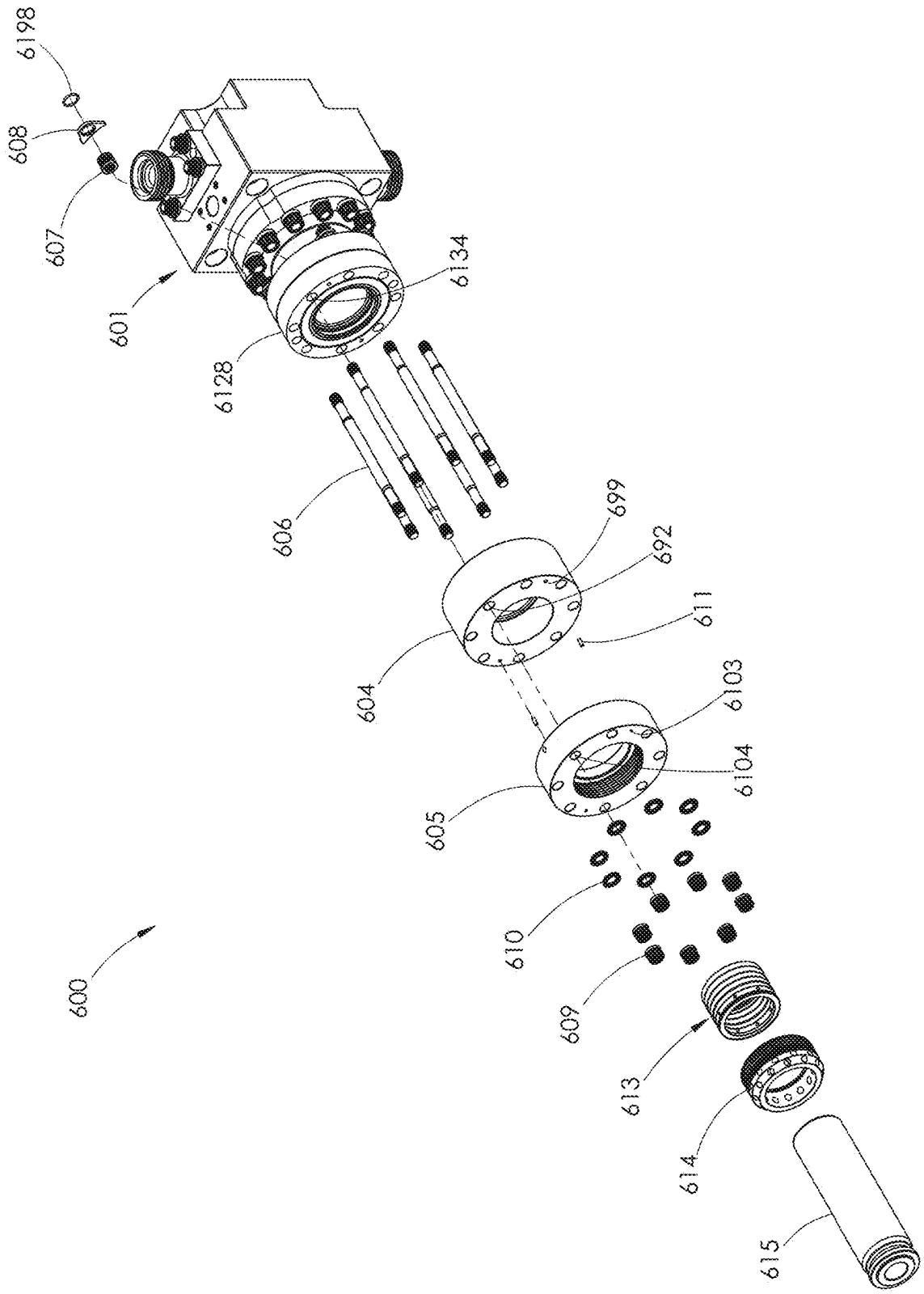
6198
608
607
601
6128
6134
606
604
699
692
611
605
6103
6104
610
609
600
613
614
615

FIG. 136

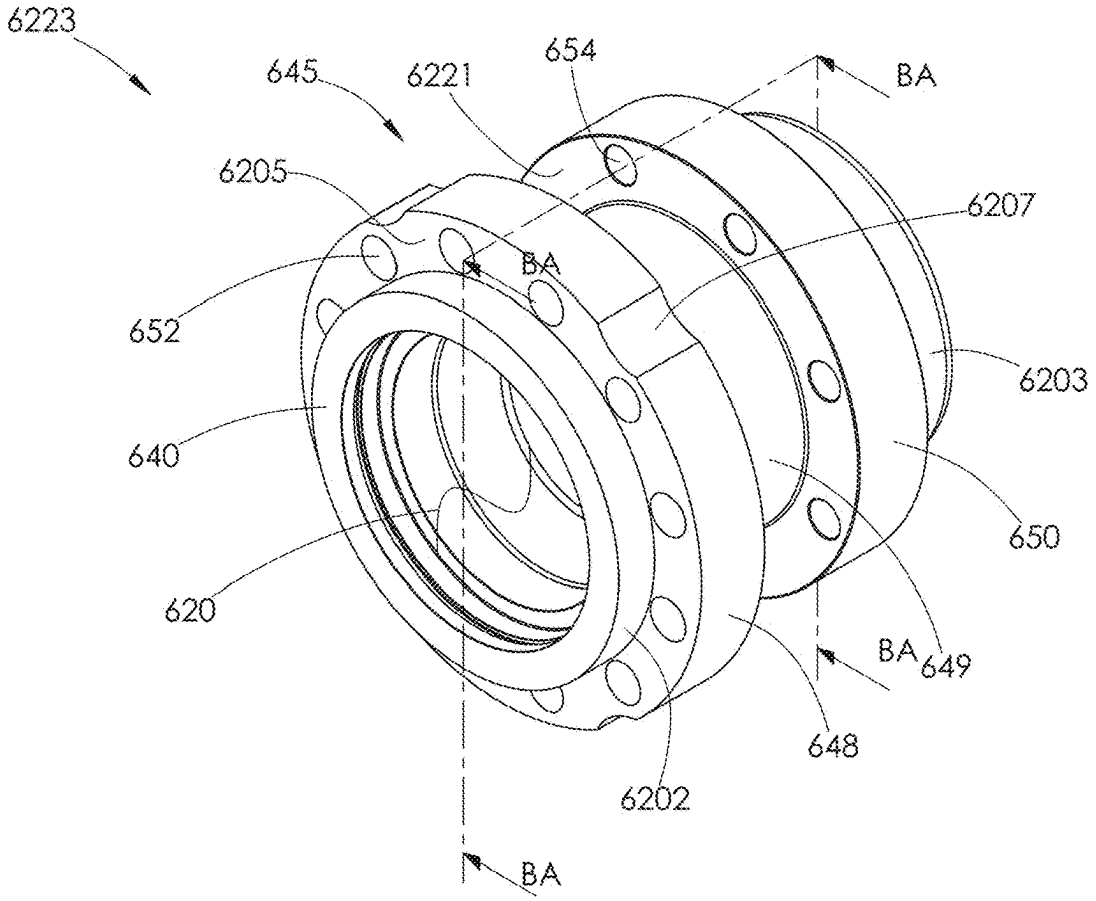

FIG. 137

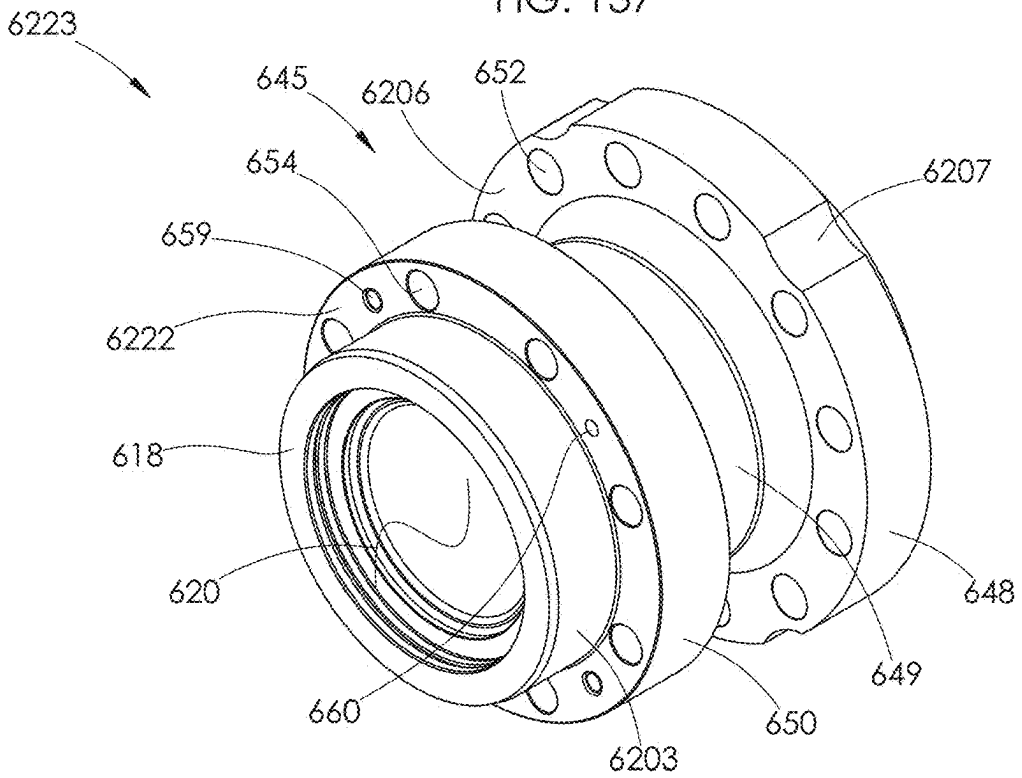

FIG. 138

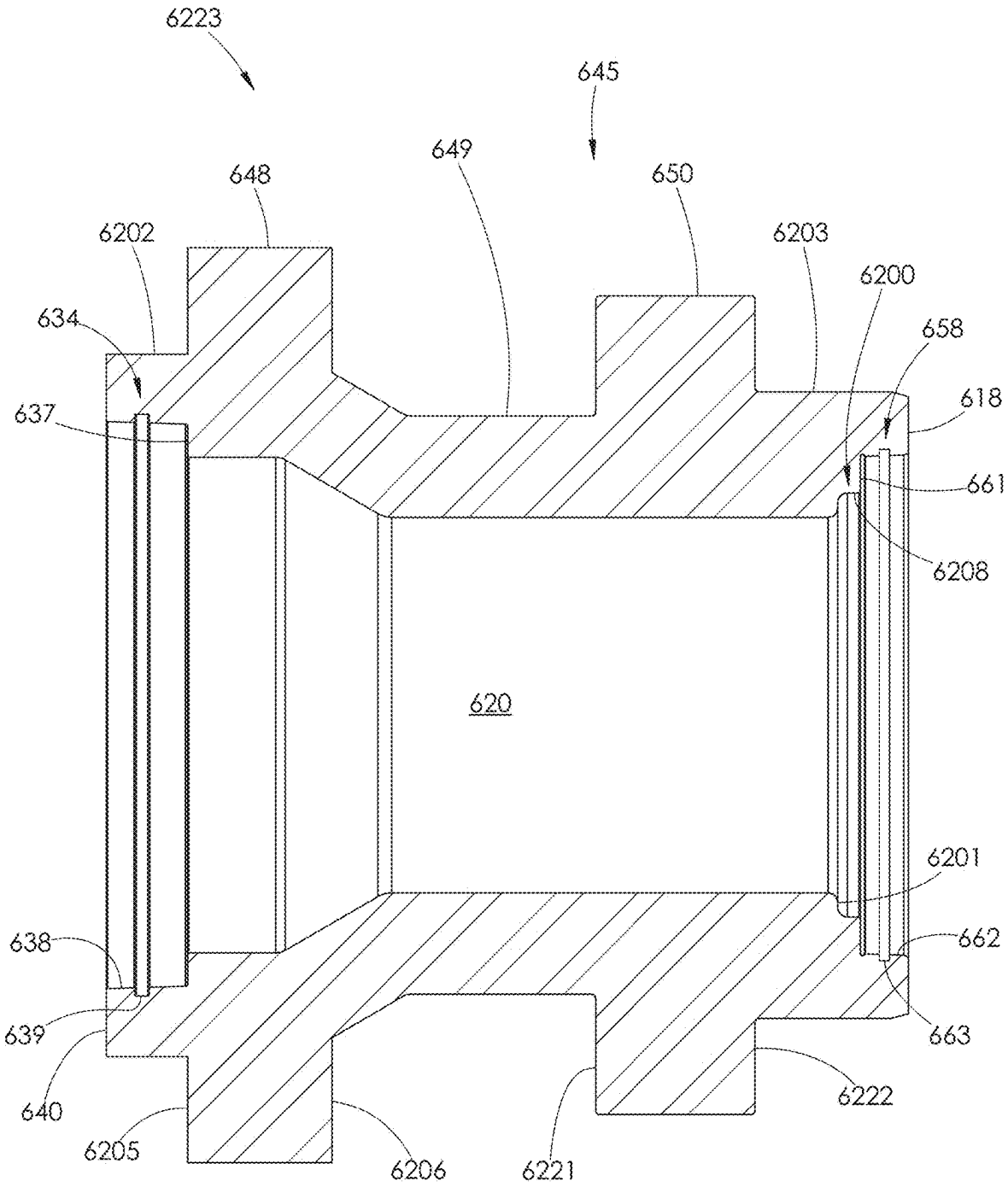
6223
645
649
648
650
6202
6203
6200
634
658
618
637
661
6208
620
6201
638
662
639
663
640
6222
6205
6206
6221

FIG. 139

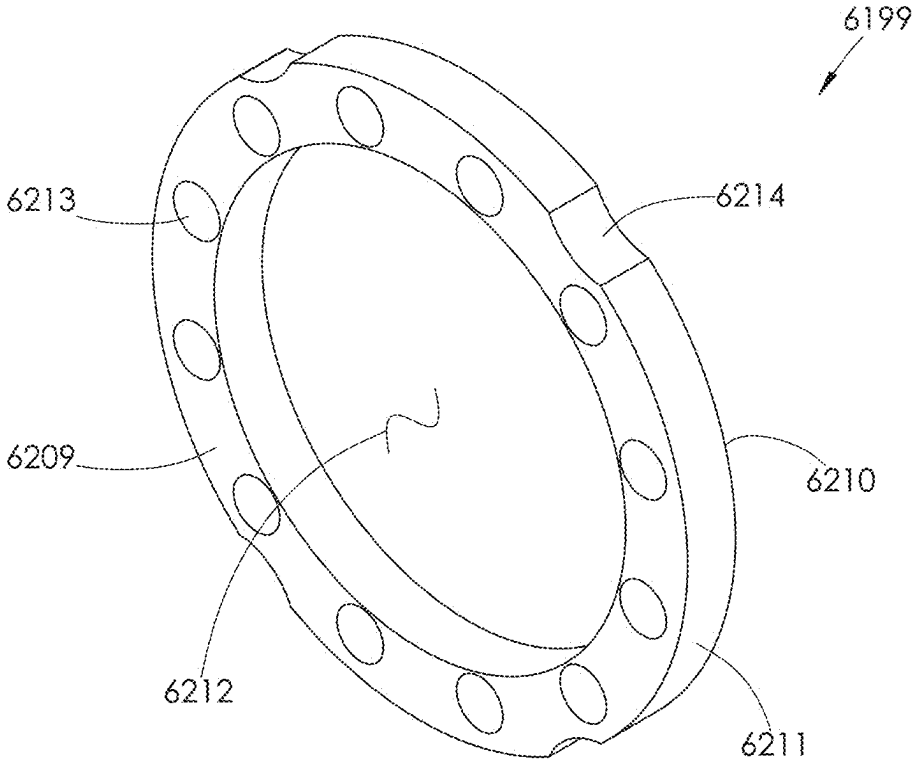

FIG. 140

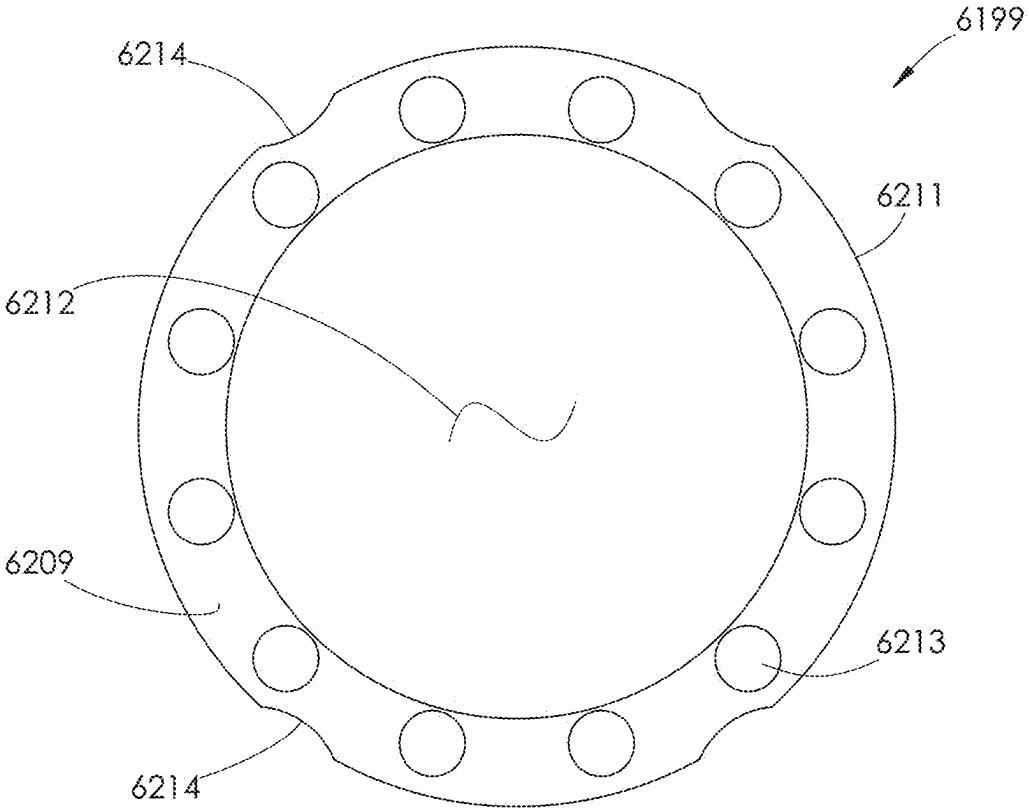

FIG. 141

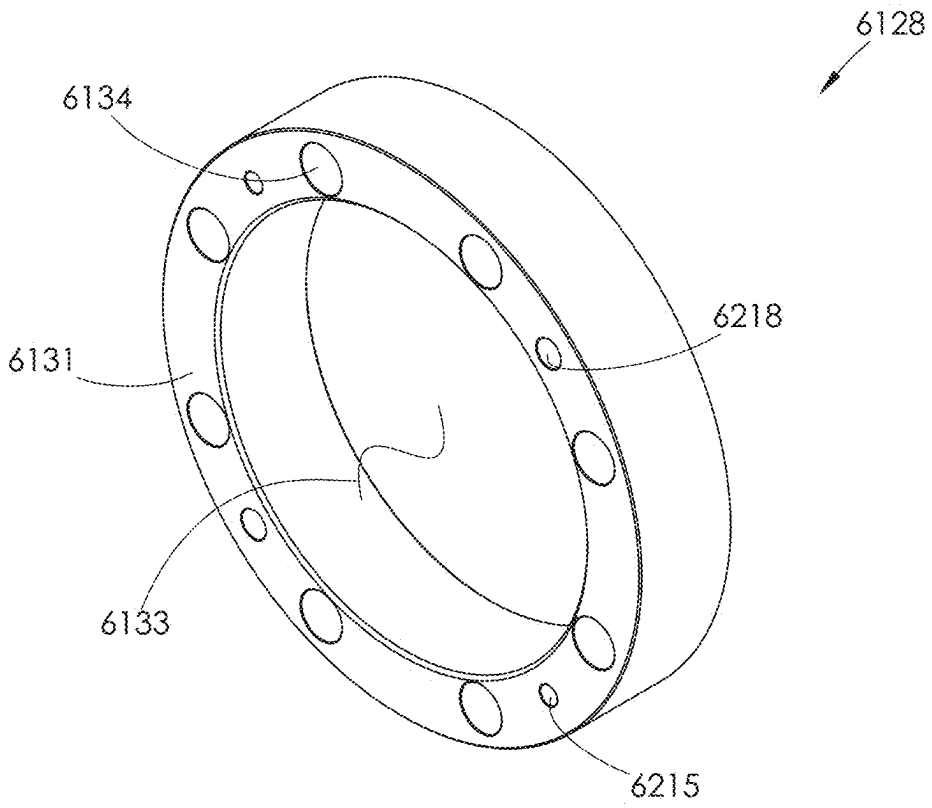

FIG. 142

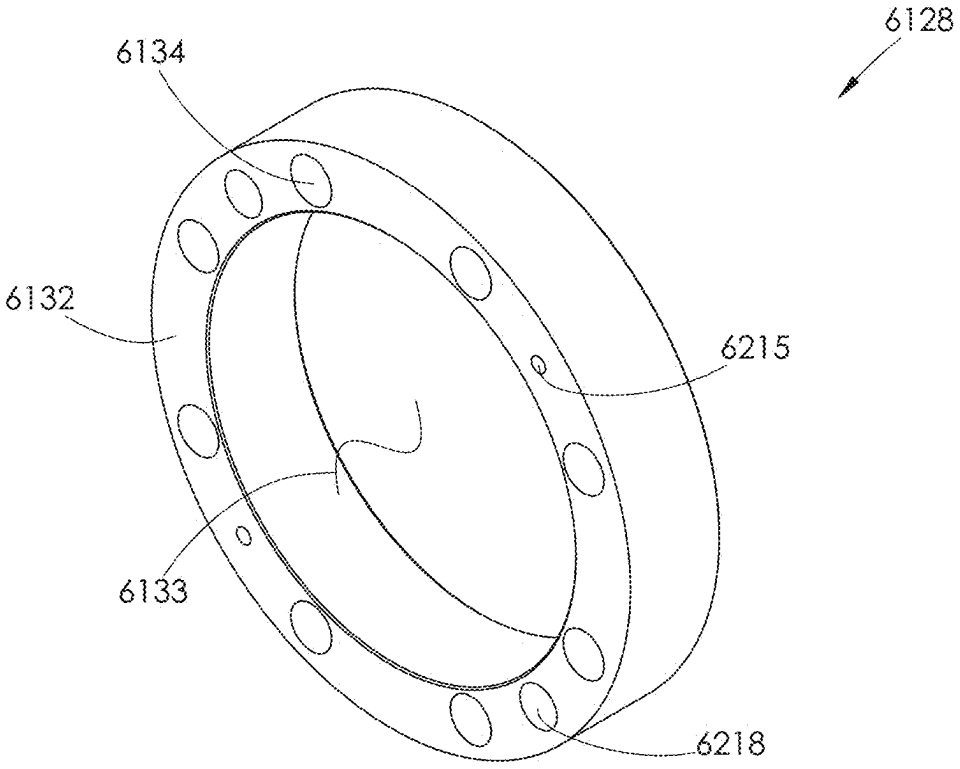

FIG. 143

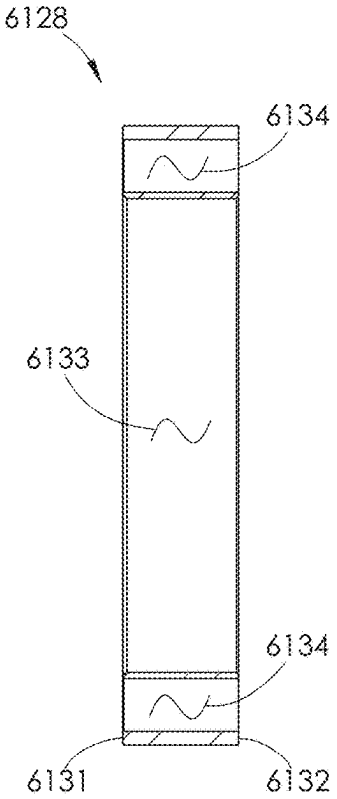

FIG. 145

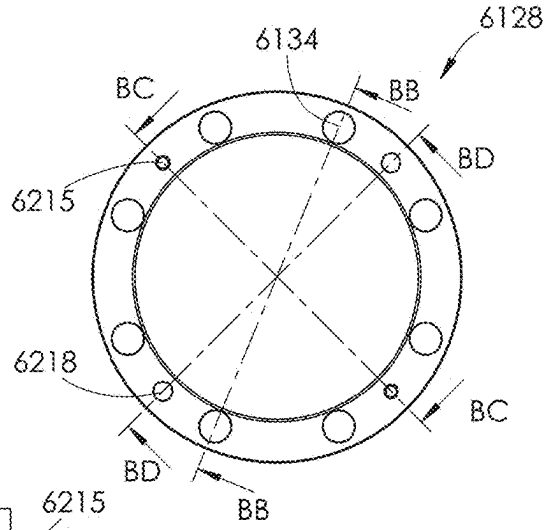

FIG. 144

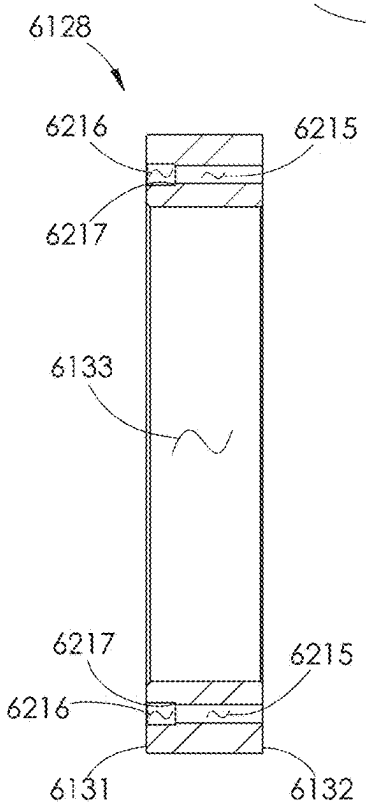

FIG. 146

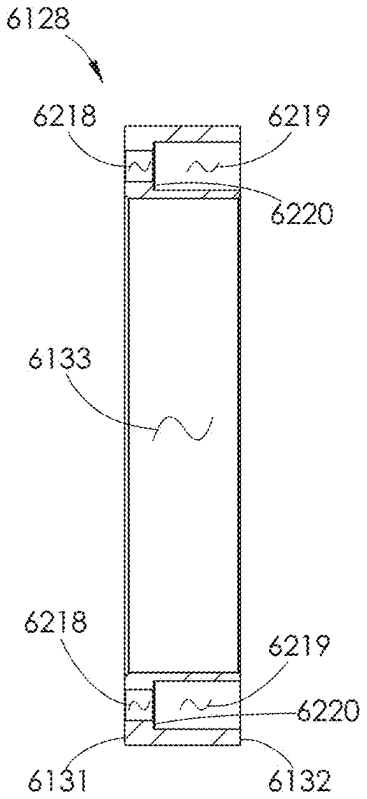

FIG. 147

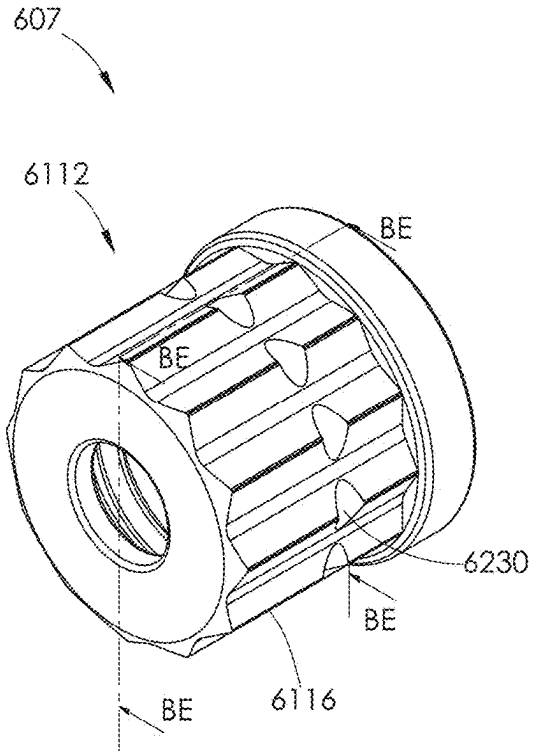

FIG. 148

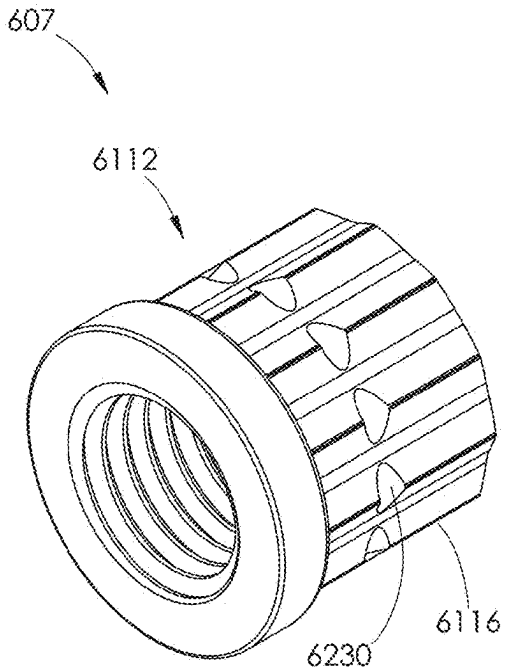

FIG. 149

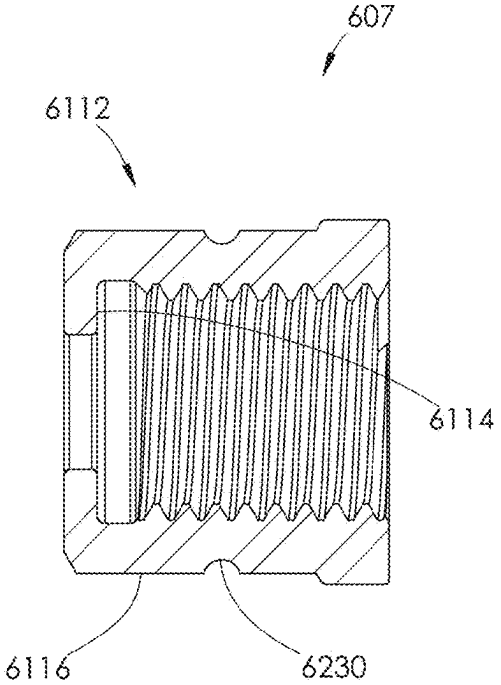

FIG. 150

FLUID END WITH CLAMPED RETENTION

SUMMARY

[0001] The present invention is directed to a fluid end section. The fluid end section comprises a housing having a first longitudinal bore formed therethrough, a stuffing box having a second longitudinal bore formed therethrough, and a clamp surrounding at least a portion of the housing and at least a portion of the stuffing box. The first longitudinal bore and the second longitudinal bore are aligned and the housing abuts the stuffing box.

BRIEF DESCRIPTION OF THE DRAWINGS

[0002] FIG. **1** is a right front perspective view of a fluid end section.

[0003] FIG. **2** is a left rear perspective view of the fluid end section shown in FIG. **1**.

[0004] FIG. **3** is a cross-sectional view of the fluid end section shown in FIG. **1**, taken along line A-A.

[0005] FIG. **4** is a cross-sectional view of the fluid end section shown in FIG. **2**, taken along line B-B.

[0006] FIG. **5** is a partially exploded view of the fluid end section shown in FIG. **1**.

[0007] FIG. **6** is a right front perspective view of a housing.

[0008] FIG. **7** is a left rear perspective view of the housing shown in FIG. **6**.

[0009] FIG. **8** is a cross-sectional view of the housing shown in FIG. **6**, taken along line C-C.

[0010] FIG. **9** is a cross-sectional view of the housing shown in FIG. **7**, taken along line D-D.

[0011] FIG. **10** is an exploded view of the housing shown in FIG. **6**.

[0012] FIG. **11** is a right front perspective view of the first section.

[0013] FIG. **12** is a left rear perspective view of the first section shown in FIG. **11**.

[0014] FIG. **13** is a rear elevation view of the first section shown in FIG. **11**.

[0015] FIG. **14** is a cross-sectional view of the first section shown in FIG. **13**, taken along line E-E.

[0016] FIG. **15** is a cross-sectional view of the first section shown in FIG. **13**, taken along line F-F.

[0017] FIG. **16** is a right front perspective view of the second section.

[0018] FIG. **17** is a left rear perspective view of the second section shown in FIG. **16**.

[0019] FIG. **18** is a cross-sectional view of the second section shown in FIG. **16**, taken along line G-G.

[0020] FIG. **19** is a cross-sectional view of the second section shown in FIG. **17**, taken along line H-H.

[0021] FIG. **20** is a right front perspective view of the third section.

[0022] FIG. **21** is a left rear perspective view of the third section shown in FIG. **20**.

[0023] FIG. **22** is a cross-sectional view of the third section shown in FIG. **20**, taken along line I-I.

[0024] FIG. **23** is a cross-sectional view of the third section shown in FIG. **21**, taken along line J-J.

[0025] FIG. **24** is a front perspective view of the front wear ring.

[0026] FIG. **25** is a cross-sectional view of the front wear ring shown in FIG. **24**, taken along line K-K.

[0027] FIG. **26** is a front perspective view of the center wear ring.

[0028] FIG. **27** is a cross-sectional view of the center wear ring shown in FIG. **26**, taken along line L-L.

[0029] FIG. **28** is a front perspective view of the rear wear ring.

[0030] FIG. **29** is a cross-sectional view of the rear wear ring shown in FIG. **28**, taken along line M-M.

[0031] FIG. **30** is a right front perspective view of the fluid routing plug.

[0032] FIG. **31** is a left rear perspective view of the fluid routing plug shown in FIG. **30**.

[0033] FIG. **32** is a cross-sectional view of the fluid routing plug shown in FIG. **30**, taken along line N-N.

[0034] FIG. **33** is an enlarged view of area O in FIG. **32**.

[0035] FIG. **34** is a right front perspective view of the retention plate.

[0036] FIG. **35** is a left rear perspective view of the retention plate shown in FIG. **34**.

[0037] FIG. **36** is a right front perspective view of the stuffing box.

[0038] FIG. **37** is a left rear perspective view of the stuffing box shown in FIG. **36**.

[0039] FIG. **38** is a cross-sectional view of the stuffing box shown in FIG. **36** taken along line P-P.

[0040] FIG. **39** is a right front perspective view of the rear retainer.

[0041] FIG. **40** is a left rear perspective view of the rear retainer shown in FIG. **39**

[0042] FIG. **41** is a cross-sectional view of the rear retainer shown in FIG. **39**, taken along line Q-Q.

[0043] FIG. **42** is a cross-sectional view of the rear retainer shown in FIG. **40**, taken along line R-R.

[0044] FIG. **43** is a right front perspective view of the blind nut.

[0045] FIG. **44** is a left rear perspective view of the blind nut shown in FIG. **43**.

[0046] FIG. **45** is a cross-sectional view of the blind nut shown in FIG. **43**, taken along line S-S.

[0047] FIG. **46** is a right front perspective view of the reaction washer.

[0048] FIG. **47** is a front elevation view of the reaction washer shown in FIG. **46**.

[0049] FIG. **48** is an enlarged view of area Tin FIG. **8**.

[0050] FIG. **49** is an enlarged view of area U in FIG. **8**.

[0051] FIG. **50** is an enlarged view of area V in FIG. **8**.

[0052] FIG. **51** is a cross-sectional view of the fluid end section shown in FIG. **1**, taken along line W-W.

[0053] FIG. **52** is an enlarged view of area X in FIG. **3**.

[0054] FIG. **53** is an enlarged view of area Y in FIG. **52**.

[0055] FIG. **54** is a right front perspective view of another embodiment of a fluid end section.

[0056] FIG. **55** is a left rear perspective view of the fluid end section shown in FIG. **54**.

[0057] FIG. **56** is a cross-sectional view of the fluid end section shown in FIG. **55**, taken along line Z-Z.

[0058] FIG. **56**A is the cross-sectional view of the fluid end section shown in FIG. **56** with the flow control components, packing, packing nut, and plunger shown.

[0059] FIG. **57** is an enlarged view of area AA of FIG. **56**.

[0060] FIG. **58** is an enlarged view of area AB of FIG. **56**.

[0061] FIG. **59** is an exploded right front perspective view of the fluid end section shown in FIG. **54**.

[0062] FIG. **60** is an exploded left rear perspective view of the fluid end section shown in FIG. **54**.

[0063] FIG. **61** is a right front perspective view of the housing of the fluid end section shown in FIG. **54**.

[0064] FIG. **62** is a left rear perspective view of the housing shown in FIG. **61**.

[0065] FIG. **63** is a cross-sectional view of the housing shown in FIG. **62**, taken along line AC-AC.

[0066] FIG. **64** is an enlarged view of area AD shown in FIG. **63**.

[0067] FIG. **65** is a right front perspective view of the spacer sleeve of the fluid end section shown in FIG. **54**.

[0068] FIG. **66** is a front elevation view of the spacer sleeve shown in FIG. **65**.

[0069] FIG. **67** is a cross-sectional view of the spacer sleeve shown in FIG. **66**, taken along line AE-AE.

[0070] FIG. **68** is a right front perspective view of the stuffing box of the fluid end section shown in FIG. **54**.

[0071] FIG. **69** is a left rear perspective view of the stuffing box shown in FIG. **68**.

[0072] FIG. **70** is a cross-sectional view of the stuffing box shown in FIG. **68**, taken along line AF-AF.

[0073] FIG. **71** is a right front perspective view of the rear retainer of the fluid end section shown in FIG. **54**.

[0074] FIG. **72** is a front elevation view of the rear retainer shown in FIG. **71**.

[0075] FIG. **73** is a cross-sectional view of the rear retainer shown in FIG. **72**, taken along line AG-AG.

[0076] FIG. **74** is a right front perspective view of a prior art high-pressure pump.

[0077] FIG. **75** is an enlarged view of area AH shown in FIG. **74**.

[0078] FIG. **76** is a right rear perspective view of the high-pressure pump shown in FIG. **74**.

[0079] FIG. **77** is an enlarged view of area AI shown in FIG. **76**.

[0080] FIG. **78** is right side elevational view of the high-pressure pump shown in FIG. **74**.

[0081] FIG. **79** is an enlarged view of area AJ shown in FIG. **78**.

[0082] FIG. **80** is a right front perspective view of another embodiment of a fluid end section.

[0083] FIG. **81** is a left rear perspective view of the fluid end section shown in FIG. **80**.

[0084] FIG. **82** is a top plan view of the fluid end section shown in FIG. **80**.

[0085] FIG. **83** is a cross-section view of the fluid end section shown in FIG. **82**, taken along line AK-AK.

[0086] FIG. **84** is a partially exploded right front perspective view of the fluid end section shown in FIG. **80**.

[0087] FIG. **85** is a partially exploded right front perspective view of the fluid end section shown in FIG. **80**. The clamp sections are removed for clarity.

[0088] FIG. **86** is a right front perspective view of a housing of the fluid end section shown in FIG. **80**.

[0089] FIG. **87** is a left rear perspective view of the housing shown in FIG. **86**.

[0090] FIG. **88** is a right front perspective view of a stuffing box of the fluid end section shown in FIG. **80**.

[0091] FIG. **89** is a left rear perspective view of the stuffing box shown in FIG. **88**.

[0092] FIG. **90** is a right front perspective view of a packing nut of the fluid end section shown in FIG. **80**.

[0093] FIG. **91** is a left rear perspective view of the packing nut shown in FIG. **90**.

[0094] FIG. **92** is a partially exploded right rear perspective view of a clamp of the fluid end section shown in FIG. **80**.

[0095] FIG. **93** is a right rear perspective view of the compression ring and compression ring fasteners of the clamp shown in FIG. **92**.

[0096] FIG. **94** is a cross-sectional view of the compression ring and compression ring fasteners shown in FIG. **93**, taken along line AL-AL.

[0097] FIG. **95** is a top front right perspective view of a clamp section.

[0098] FIG. **96** is a bottom front right perspective view of the clamp section shown in FIG. **95**.

[0099] FIG. **97** is a top plan view of the clamp section shown in FIG. **95**.

[0100] FIG. **98** is a cross-sectional view of the clamp section shown in FIG. **97**, taken along line AM-AM.

[0101] FIG. **99** is a right front perspective view of a high-pressure pump.

[0102] FIG. **100** is an enlarged view of area AN of FIG. **99**.

[0103] FIG. **101** is a right rear perspective view of the high-pressure pump shown in FIG. **99**.

[0104] FIG. **102** is an enlarged view of area AO of FIG. **101**.

[0105] FIG. **103** is a right front perspective view of another embodiment of a fluid end section.

[0106] FIG. **104** is a left rear perspective view of the fluid end section shown in FIG. **103**.

[0107] FIG. **105** is a partially exploded, right rear perspective view of the fluid end section shown in FIG. **103**.

[0108] FIG. **106** is a partially exploded, right rear perspective view of the fluid end section shown in FIG. **103**.

[0109] FIG. **107** is a partially exploded, right rear perspective view of another embodiment of a clamp.

[0110] FIG. **108** is a partially exploded, right rear perspective view of the compression rings, first clamp section, and compression ring fasteners of the clamp shown in FIG. **107**.

[0111] FIG. **109** is a cross-sectional view of the compression rings, first clamp section, and compression ring fasteners shown in FIG. **108**, taken along line AP-AP.

[0112] FIG. **110** is a top right front perspective view of a first clamp section.

[0113] FIG. **111** is a bottom right front perspective view of the first clamp section shown in FIG. **110**.

[0114] FIG. **112** is a top plan view of the first clamp section shown in FIG. **110**.

[0115] FIG. **113** is a cross-sectional view of the first clamp section shown in FIG. **112**, taken along line AQ-AQ.

[0116] FIG. **114** is a top right front perspective view of another embodiment of a clamp section.

[0117] FIG. **115** is a bottom right front perspective view of the clamp section shown in FIG. **114**.

[0118] FIG. **116** is a top plan view of the clamp section shown in FIG. **114**.

[0119] FIG. **117** is a cross-sectional view of the clamp section shown in FIG. **116**, taken along line AR-AR.

[0120] FIG. **118** is a top front right perspective view of a ring clamp.

[0121] FIG. **119** is a bottom front right perspective view of the ring clamp shown in FIG. **118**.

[0122] FIG. **120** is a top plan view of the ring clamp shown in FIG. **118**.

[0123] FIG. **121** is a cross-sectional view of the ring clamp shown in FIG. **120**, taken along line AS-AS.

[0124] FIG. **122** is a right front perspective view of a high-pressure pump.

[0125] FIG. **123** is an enlarged view of area AT of FIG. **122**.

[0126] FIG. **124** is a right rear perspective view of the high-pressure pump shown in FIG. **122**.

[0127] FIG. **125** is an enlarged view of area AU of FIG. **124**.

[0128] FIG. **126** is a right front perspective view of another embodiment of a fluid end section.

[0129] FIG. **127** is a left rear perspective view of the fluid end section shown in FIG. **126**.

[0130] FIG. **128** is a cross-sectional view of the fluid end section shown in FIG. **127**, taken along line AV-AV.

[0131] FIG. **129** is a cross-sectional view of the fluid end section shown in FIG. **127**, taken along line AW-AW.

[0132] FIG. **130** is a cross-sectional view of the fluid end section shown in FIG. **127**, taken along line AX-AX.

[0133] FIG. **131** is an enlarged view of area AY of FIG. **128**.

[0134] FIG. **132** is an enlarged view of area AZ of FIG. **128**.

[0135] FIG. **133** is an exploded left rear perspective view of section two of the fluid end section shown in FIG. **126**.

[0136] FIG. **134** is an exploded left rear perspective view of some components of the fluid end section shown in FIG. **126**.

[0137] FIG. **135** is a partially exploded left rear perspective view of the fluid end section shown in FIG. **126**.

[0138] FIG. **136** is a partially exploded left rear perspective view of the fluid end section shown in FIG. **126**.

[0139] FIG. **137** is a right front perspective view of the body of section two of the fluid end section shown in FIG. **126**.

[0140] FIG. **138** is a left rear perspective view of the body shown in FIG. **137**.

[0141] FIG. **139** is a cross-sectional view of the body shown in FIG. **137**, taken along line BA-BA.

[0142] FIG. **140** is right front perspective view of the front spacer of the fluid end section shown in FIG. **126**.

[0143] FIG. **141** is a front elevation view of the front spacer shown in FIG. **140**.

[0144] FIG. **142** is a right front perspective view of the rear spacer of the fluid end section shown in FIG. **126**.

[0145] FIG. **143** is a left rear perspective view of the rear spacer shown in FIG. **142**.

[0146] FIG. **144** is a front elevation view of the rear spacer shown in FIG. **142**.

[0147] FIG. **145** is a cross-sectional view of the rear spacer shown in FIG. **144**, taken along line BB-BB.

[0148] FIG. **146** is a cross-sectional view of the rear spacer shown in FIG. **144**, taken along line BC-BC.

[0149] FIG. **147** is a cross-sectional view of the rear spacer shown in FIG. **144**, taken along line BD-BD.

[0150] FIG. **148** is a right front perspective view of a blind nut of the fluid end shown in FIG. **126**.

[0151] FIG. **149** is a left rear perspective view of the blind nut shown in FIG. **148**.

[0152] FIG. **150** is a cross-sectional view of the blind nut shown in FIG. **148**, taken along line BE-BE.

DETAILED DESCRIPTION

[0153] This application is directed to a clamping system for joining portions of a fluid end section together. Providing ease of disassembly of components along a bore of a fluid end section allows for wear components—such as packing within a stuffing box, valve components, and the like—to be quickly and promptly replaced or refurbished. However, the high pressure, abrasive environment of fluid ends, especially for hydraulic fracturing operations, also requires that such connections be properly made up. Errors in alignment are unacceptable, as they may cause damage to a pumping operation.

[0154] Shown in the attached figures is a fluid end section **100** of the type described in U.S. Patent Publication Number 2022/0397107, authored by Thomas, et. al., published Dec. 15, 2022, which is incorporated herein by reference. Referring now to FIGS. **1-5**, the fluid end section **100** comprises a horizontally positioned housing **101**, a fluid routing plug **102**, retention plate **103**, stuffing box **104**, rear retainer **105**, a plurality of studs **106**, a plurality of blind nuts **107**, a plurality of reaction washers **108**, a plurality of nuts **109** a plurality of washers **110**, a plurality of locating dowel pins **111**, a plurality of retention plate fasteners **112**, packing **113**, a packing nut **114**, a plunger **115**, and a stuffing box seal **1127**.

[0155] Referring now to FIGS. **6-10**, the housing **101** comprises a longitudinal axis **116**, opposed front and rear surfaces **117**, **118** joined by an outer intermediate surface **119**. A horizontal bore **120** is formed within the housing **101** and interconnects the front and rear surfaces **117**, **118**. The longitudinal axis **116** of the horizontal bore **120** is the longitudinal axis **116** of the housing **101**. The horizontal bore **120** is sized to receive various components configured to route fluid through the housing **101**. The various components will be described as necessary. The housing **101** is of multi-piece construction and further comprises a first section **121**, a second section **122**, a third section **123**, a front wear ring **124**, a front wear ring seal **125**, a center wear ring **126**, a center wear ring seal **127**, a rear wear ring **128**, a rear wear ring seal **129**, a plurality of studs **130**, a plurality of nuts **131**, and a plurality of locating dowel pins **132**.

[0156] Referring now to FIGS. **11-15**, the first section **121** comprises a front surface **117**, which is also the front surface **117** of the housing **101**, a rear surface **133**, and a horizontal bore **120** interconnecting the front and rear surfaces **117**, **133**. The horizontal bore **120** of the first section **121** is a portion of the horizontal bore **120** of the housing **101**. The rear surface **133** comprises a front wear ring counterbore **134**, a plurality of threaded blind bores **135**, and a plurality of blind bores **136** for receiving the locating dowel pins **132**. The threaded blind bores **135** and blind bores **136** are spaced around the circumference of the horizontal bore **120** as shown in FIG. **13**. When assembled, the longitudinal axes of the threaded blind bores **135** and blind bores **136** are parallel to the longitudinal axis **116** of the housing **101**. The front wear ring counterbore **134** comprises a base **137** and a wall **138**. The wall **138** comprises a seal groove **139**.

[0157] Referring now to FIGS. **16-19**, the second section **122** comprises a front surface **140**, rear surface **141**, a plurality of through holes **142**, and a horizontal bore **120**. The horizontal bore **120** of the second section **122** is a portion of the horizontal bore **120** of the housing **101**. The plurality of through holes **142** and the horizontal bore **120** interconnect the front and rear surfaces **140**, **141**. The front

and rear surfaces **140**, **141** comprise a plurality of blind bores **143** for receiving locating dowel pins **132**. The through holes **142** and blind bores **143** are spaced around the circumference of the horizontal bore **120** as shown in FIGS. **16-17**. When assembled, the longitudinal axes of the through holes **142** and blind bores **143** are parallel to the longitudinal axis **116** of the housing **101**.

[0158] Referring now to FIGS. **20-23**, the third section **123** comprises a front surface **144**, a rear surface **118**, which is also the rear surface **118** of the housing **101**, an intermediate outer surface **145**, and a horizontal bore **120**. The horizontal bore **120** of the third section **123** is a portion of the horizontal bore **120** of the housing **101**. The horizontal bore **120** interconnects the front and rear surfaces **144**, **118** of the third section **123**. The front surface **144** comprises a center wear ring counterbore **146**, and a plurality of blind bores **147** for receiving locating dowel pins **132**. The intermediate outer surface **145** comprises a front flange **148**, center section **149**, and rear flange **150**. The front flange **148** comprises a front surface **144**, which is also the front surface **144** of the third section **123**, a rear surface **151**, and a plurality of through holes **152** that interconnect the front surface **144** and the rear surface **151** of the front flange **148**. The through holes **152** and blind bores **147** are spaced around the circumference of the horizontal bore **120** as shown in FIG. **20**. When assembled, the longitudinal axes of the through holes **152** and blind bores **147** are parallel to the longitudinal axis **116** of the housing **101**. The center wear ring counterbore **146** comprises a base **155** and a wall **156**. The wall **156** comprises a seal groove **157**. The rear flange **150** comprises a front surface **153**, a rear surface **118**, which is also the rear surface **118** of the third section **123** and the housing **101**, and a plurality of through holes **154** that interconnect the front surface **153** to the rear surface **118** of the rear flange **150**. The rear surface **118** comprises a rear wear ring counterbore **158**, a plurality of threaded blind bores **159** for receiving the retention plate fasteners **112**, and a plurality of blind bores **160** for receiving the locating dowel pins **132**. The rear wear ring counterbore **158** comprises a base **161** and a wall **162**. The wall **162** comprises a seal groove **163**. The through holes **154** are spaced around the circumference of the horizontal bore **120** as shown in FIG. **21**. When assembled, the longitudinal axes of the through holes **154**, threaded blind bores **159**, and blind bores **160** are parallel to the longitudinal axis **116** of the housing **101**.

[0159] The front wear ring **124** comprises a front surface **164**, a rear surface **165**, and an inner intermediate surface **166** as shown in FIGS. **24-25**.

[0160] The center wear ring **126** comprises a front surface **167**, a rear surface **168**, and an inner intermediate surface **169** as shown in FIGS. **26-27**.

[0161] The rear wear ring **128** comprises a front surface **170**, a rear surface **171**, and an inner intermediate surface **172** as shown in FIGS. **28-29**.

[0162] Each stud **130** comprises a first externally threaded end **173** and a second externally threaded end **174** as shown in FIGS. **9-10**.

[0163] Referring now to FIGS. **30-33**, the fluid routing plug **102** comprises an outer intermediate surface **175**, a front seal **176**, and a rear seal **177**. The outer intermediate surface **175** comprises an annular shoulder **178**, front seal groove **179**, and rear seal groove **180**. The annular shoulder **178** comprises a stress relief cutout **181**.

[0164] Referring now to FIGS. **34-35**, the retention plate **103** comprises a front surface **182**, rear surface **183**, a central bore **184**, a plurality of stud through holes **185**, a plurality of fastener through holes **186**, and a plurality of locating dowel pin through holes **187**. When assembled, the central bore **184** is concentric with the horizontal bore **120** of the housing **101**. The through holes **185**, **186**, **187** are spaced around the circumference of the central bore **184** as shown in FIGS. **34-35**.

[0165] Referring now to FIGS. **36-38**, the stuffing box **104** comprises a front surface **188**, rear surface **189**, an intermediate cylindrical outer surface **190**, a central bore **191**, and a plurality of through holes **192**. When assembled, the central bore **191** is concentric with the horizontal bore **120** of the housing **101**. The through holes **192** are spaced around the circumference of the central bore **191** as shown in FIGS. **36-37**. The central bore **191** comprises a smaller diameter section **193**, a larger diameter section **194**, and a shoulder **195**. The smaller diameter section **193** extends from the front surface **188** of the stuffing box **104** to the shoulder **195** formed by the increase in diameter. The larger diameter section **194** extends from the shoulder **195** to the rear surface **189** of the stuffing box **104**. The front surface **188** comprises an annular extension **196**. The annular extension **196** is concentric with the central bore **191** and comprises an inside diameter **197** and an outside diameter **198**. The inside diameter **197** of the annular extension **196** is the same as the smaller diameter section **193** of the central bore **191**. The outside diameter **198** is smaller than the outside diameter of the intermediate cylindrical outer surface **190**. The rear surface **189** comprises a plurality of blind bores **199** for receiving the locating dowel pins **111**.

[0166] Referring now to FIGS. **39-42**, the rear retainer **105** comprises a front surface **1100**, rear surface **1101**, a central bore **1102**, a plurality of locating dowel pin through holes **1103** and a plurality of stud through holes **1104**. When assembled, the central bore **1102** is concentric with the horizontal bore **120** of the housing **101**. The through holes **1103**, **1104** are spaced around the circumference of the central bore **1102** as shown in FIGS. **39-40**. The central bore **1102** comprises a threaded section **1105** and an unthreaded section **1106**.

[0167] Each stud **106** comprises a first externally threaded end **1107**, a second externally threaded end **1108**, and a plurality of end surfaces **1109** as shown in FIGS. **4-5**.

[0168] Referring now to FIGS. **43-45**, each blind nut **107** comprises a front surface **1110**, a rear surface **1111**, and an intermediate outer surface **1112**. The front surface **1110** comprises a threaded blind bore **1113**. The threaded blind bore **1113** comprises a base **1114**. The intermediate outer surface **1112** comprises a flange section **1115** and a drive section **1116**. The flange section **1115** comprises a front surface **1117** that abuts the drive section **1116**, and a rear surface **1111** that is also the rear surface **1111** of the blind nut **107**. The drive section **1116** comprises a standard 12-point drive sometimes called a double hex drive.

[0169] Referring now to FIGS. **46-47**, each reaction washer **108** comprises a front surface **1118**, a rear surface **1119**, an intermediate outer surface **1120**, a through hole **1121**, and a plurality of torque reaction arms **1122**. The intermediate outer surface **1120** comprises a plurality of convex radii **1123**, a concave radius **1124**, and a plurality of connecting sections **1125**. The through hole **1121** comprises

a 12-point wall **1126** which is congruent to the 12-point drive of the drive section **1116** of the blind nut **107**.

[0170] Referring now to FIGS. **3-5**, **8-10**, **48-53**, during assembly of the fluid end section **100** the front wear ring seal **125** is inserted in the seal groove **139** of the wall **138** of the front wear ring counterbore **134** on the rear surface **133** of the first section **121**, FIGS. **8**, **48**. In the same manner the center wear ring seal **127** is inserted in the seal groove **157** of the wall **156** of the center wear ring counterbore **146** on the front surface **144** of the third section **123**, FIGS. **8**, **49**. Likewise, the rear wear ring seal **129** is inserted in the seal groove **163** of the wall **162** of the rear wear ring counterbore **158** on the rear surface **118** of the third section **123**, FIGS. **8**, **50**.

[0171] After installing the seals **125**, **127**, **129** the wear rings **124**, **126**, **128** are installed in their respective wear ring counterbores **134**, **146**, **158**. The front and rear wear rings **124**, **128** are oriented so that when installed their front surfaces **164**, **170** will abut the bases **137**, **161** of their corresponding wear ring counterbores **134**, **158** as shown in FIGS. **8**, **48**, **50**. The center wear ring **126** is oriented so that its rear surface **168** abuts the base **155** of the center wear ring counterbore **146** when installed as shown in FIGS. **8**, **49**.

[0172] Referring now to FIGS. **8-23**, the first, second, and third sections **121**, **122**, **123** are joined by: Inserting the locating dowel pins **132** in the blind bores **136** of the rear surface **133** of the first section **121**. Torquing the first externally threaded end **173** of a stud **130** into each of the plurality of threaded blind bores **135** on the rear surface **133** of the first section **121**. Orienting the second section **122** so that the front surface **140** of the second section **122** will abut the rear surface **133** of the first section **121** when installed. Aligning the through holes **142** of the second section **122** with the second externally threaded ends **174** of the studs **130** now protruding from the rear surface **133** of the first section **121**. Aligning the blind bores **143** of the front surface **140** of the second section **122** with the locating dowel pins **132** now protruding from the rear surface **133** of the first section **121**. Simultaneously inserting the second externally threaded ends **174** of the studs **130** into the through holes **142** and the locating dowel pins **132** in the blind bores **143** of the front surface **140** of the second section **122** until the rear surface **133** of the first section **121** abuts the front surface **140** of the second section **122**. Inserting the locating dowel pins **132** in the blind bores **140** of the rear surface **141** of the second section **122**. Orienting the third section **123** so that the front surface **144** of the third section **123** will abut the rear surface **141** of the second section **122** when installed. Aligning the through holes **152** of the front flange **148** of the third section **123** with the second externally threaded ends **174** of the studs **130** now protruding from the rear surface **141** of the second section **122**. Aligning the blind bores **147** of the front surface **144** of the front flange **148** of the third section **123** with the locating dowel pins **132** now protruding from the rear surface **141** of the second section **122**. Simultaneously inserting the second externally threaded ends **174** of the studs **130** into the through holes **152** and the locating dowel pins **132** in the blind bores **147** of the front surface **144** of the third section **123** until the rear surface **141** of the second section **122** abuts the front surface **144** of the third section **123**. Threading the nuts **131** on the second externally threaded ends **174** of the studs **130** that are now protruding from the rear surface **151** of the front flange **148** of the third section **123** and torquing them to specification. At this point, the assembly of the housing **101** is complete.

[0173] Referring now to FIGS. **1-5**, **30-53**, to continue the assembly of the fluid end section **100** the various components configured to route fluid through the housing **101** are installed in the horizontal bore **120**. One of these components is the fluid routing plug **102**. Prior to installation in the horizontal bore **120** the front seal **176** of the fluid routing plug **102** is installed in the front seal groove **179** of the outer intermediate surface **175** of the fluid routing plug **102** and the rear seal **177** of the fluid routing plug **102** is installed in the rear seal groove **180** of the outer intermediate surface **175** of the fluid routing plug **102**, FIGS. **30-32**. Once the fluid routing plug **102** is installed in the housing **101** the annular shoulder **178** of the outer intermediate surface **175** will abut the front surface **167** of the center wear ring **126** FIGS. **52-53**. Also, the front seal **176** of the fluid routing plug **102** will engage the inner intermediate surface **166** of the front wear ring **124** and the rear seal **177** of the fluid routing plug **102** will engage the inner intermediate surface **169** of the center wear ring **126**, FIG. **3**.

[0174] After installing the fluid routing components: The first externally threaded ends **1107** of the studs **106** are inserted into the through holes **154** of the rear flange **150** of the third section **123**. A blind nut **107** is then torqued onto each of the first externally threaded ends **1107** of the studs **106** until the end surface **1109** of the stud **106** abuts the base **1114** of the threaded blind bore **1113** of the blind nut **107**. The locating dowel pins **111** are inserted in the blind bores **160** on the rear surface **118** of the third section **123**. The retention plate **103** is oriented so that the front surface **182** of the retention plate **103** will abut the rear surface **118** of the third section **123** when assembled. The stud through holes **185** of the retention plate **103** are aligned with the second externally threaded ends **1108** of the studs **106** now protruding from the rear surface **118** of the third section **123**. The locating dowel pin through holes **187** are aligned with the locating dowel pins **111** now protruding from the rear surface **118** of the third section **123**. The retention plate fastener through holes **186** are aligned with the threaded blind bores **159** on the rear surface **118** of the third section **123**. Simultaneously the studs **106** are inserted into the stud through holes **185** and the locating dowel pins **111** are inserted in the locating dowel pin through holes **187**. The retention plate fasteners **112** are inserted in the retention plate fastener through holes **186** from the rear surface **183** of the retention plate **103** and torqued into the threaded blind bores **159** on the rear surface **118** of the third section **123**. This fastens the retention plate **103** to the housing **101**. The stuffing box **104** is oriented so that the front surface **188** of the stuffing box **104** will abut the rear surface **183** of the retention plate **103** when assembled. The through holes **192** of the stuffing box **104** are aligned with the second externally threaded ends **1108** of the studs **106** now protruding from the rear surface **183** of the retention plate **103** and the second externally threaded ends **1108** of the studs **106** are inserted into the through holes **192**. Simultaneously the annular extension **196** is inserted into the stuffing box seal **1127** with the outside diameter **198** of the annular extension **196** engaging the inside diameter of the stuffing box seal **1127**. Locating dowel pins **111** are inserted in the blind bores **199** on the rear surface **189** of the stuffing box **104**. The rear retainer **105** is oriented so that the front surface **1100** of the

rear retainer **105** will abut the rear surface **189** of the stuffing box **104** when assembled. The stud through holes **1104** of the rear retainer **105** are aligned with the studs **106** now protruding from the rear surface **189** of the stuffing box **104**. The locating dowel pin through holes **1103** are aligned with the locating dowel pins **111** now protruding from the rear surface **189** of the stuffing box **104**. Simultaneously the studs **106** are inserted in the stud through holes **1104** and the locating dowel pins **111** are inserted in the locating dowel pin through holes **1103** of the rear retainer **105** until the rear surface **189** of the stuffing box **104** abuts the front surface **1100** of the rear retainer **105**. The washers **110** are placed on the second externally threaded ends **1108** of the studs **106**. The nuts **109** are threaded onto the second externally threaded ends **1108** of the studs **106** now protruding from the rear surface **1101** of the rear retainer **105**. The reaction washers **108** are installed on the blind nuts **107** by orienting the reaction washer **108** so that the concave radius **1124** of the intermediate outer surface **1120** is approximately concentric with the center section **149** of the intermediate outer surface **145** of the third section **123** then sliding the 12-point wall **1126** of the through holes **1121** over the congruent 12-point drive of the drive section **1116** of the blind nut **107** until the front or rear surface **1118**, **1119** of the reaction washer **108** abuts the front surface **1117** of the flange section **1115** of the blind nut **107**. The nuts **109** are then torqued to specification. The packing **113** is installed. The plunger **115** is inserted in the packing **113** and the packing nut **114** is threaded into the internal threads of the rear retainer **105**.

[0175] During assembly and disassembly, the reaction washers **108** provide a mechanism for resisting the torque applied to the nut **109** allowing the nut **109** to be tightened or loosened without the blind nut **107** and stud **106** spinning freely. After assembly, the reaction washers **108** may be removed, however in practice, the left torque reaction arm **1122**, as viewed from the front of the fluid end section **100**, is in contact with the center section **149** of the intermediate outer surface **145** of the third section **123** as shown in FIG. **51**. The contact force is great enough to prevent the reaction washer **108** from sliding off the blind nut **107** and to make it difficult to remove. While the primary advantage of the reaction washers **108** is during assembly and disassembly they also prevent the rotation of the blind nut **107** during operation reducing the likelihood of the fasteners coming loose.

[0176] In operation the front, center, and rear wear ring seals **125**, **127**, **129** prevent fluid from flowing around the outside of the wear rings. While the wear ring seals shown in this embodiment are typical O-ring seals any other suitable seal may be used. Also, the location of the wear ring seals **125**, **127**, **129** in this embodiment is in the walls **138**, **156**, **162** of their respective counterbores **134**, **146**, **158**, engaging the outer surfaces of their respective wear rings **124**, **126**, **128**. The location of the seals **125**, **127**, **129** could be in the bases **137**, **155**, **161** of the counterbores **134**, **146**, **158** engaging the appropriate front surfaces **164**, **167**, **170** or rear surfaces **165**, **168**, **171** of the wear rings. Also, grooves or other provision could be made for the seals to be located in the wear rings.

[0177] Referring now to FIGS. **52-53**, the stress relief cutout **181** on the annular shoulder **178** of the outer intermediate surface **175** of the fluid routing plug **102** does not contact the front surface **167** of the center wear ring **126**. The absence of contact reduces the stress on the inner intermediate surface **169** near the front surface **167** of the center wear ring **126**. In this embodiment the stress relief cutout **181** is formed on the annular shoulder **178** of the fluid routing plug **102** however the stress relief cutout **181** may be formed on the center wear ring **126**.

[0178] Referring now to FIGS. **54-73**, another embodiment of a fluid end section **200** is shown. The fluid end section **200** comprises a horizontally positioned housing **201**, stuffing box **204**, rear retainer **205**, a plurality of studs **206**, a plurality of blind nuts **207**, a plurality of nuts **209**, a plurality of locating dowel pins **211**, a rear wear ring **228**, a rear wear ring seal **229**, a stuffing box seal **2127**, and a spacer sleeve **2128**.

[0179] Referring now to FIGS. **56-60**, the rear wear ring **228** comprises a front surface **270**, a rear surface **271**, and an inner intermediate surface **272**. The stuffing box seal **2127** comprises opposing front and rear surfaces **2135**, **2136**, an outer intermediate surface **2137**, and an inner intermediate surface **2138**. The studs **206** comprise a first externally threaded end **2107**, a second externally threaded end **2108**, and an end surface **2109**. The blind nut **207** comprises a threaded blind bore **2113**. The threaded blind bore **2113** comprises a base **2114**.

[0180] Referring now to FIGS. **61-64**, the housing **201** comprises a longitudinal axis **216**, opposed front and rear surfaces **217**, **218** joined by an outer intermediate surface **219**. A horizontal bore **220** is formed within the housing **201** and interconnects the front and rear surfaces **217**, **218**. The longitudinal axis **216** of the horizontal bore **220** is the longitudinal axis **216** of the housing **201**. The horizontal bore **220** is sized to receive various components, not shown, configured to route fluid through the housing **201**. The housing **201** is of single piece construction.

[0181] The outer intermediate surface **219** of the housing **201** comprises a rear flange **250** and a protruding section **2129**. The rear flange **250** comprises a front surface **253**, a rear surface **2130**, and a plurality of through holes **254** that interconnect the front surface **253** to the rear surface **2130** of the rear flange **250**. As shown in FIGS. **61-62**, the through holes **254** are spaced around the circumference of the rear flange **250** and the longitudinal axes of the through holes **254** are parallel to the longitudinal axis **216** of the housing **201**. The rear surface **218** comprises a rear wear ring counterbore **258**. The rear wear ring counterbore **258** comprises a base **261** and a wall **262**. The wall **262** comprises a seal groove **263** as shown in FIGS. **63-64**.

[0182] Referring now to FIGS. **65-67**, the spacer sleeve **2128** comprises a front surface **2131**, rear surface **2132**, a central bore **2133**, and a plurality of stud through holes **2134**. When assembled, the central bore **2133** is concentric with the horizontal bore **220** of the housing **201**. The stud through holes **2134** are spaced around the circumference of the central bore **2133** as shown.

[0183] Referring now to FIGS. **68-70**, the stuffing box **204** comprises a front surface **288**, rear surface **289**, an intermediate cylindrical outer surface **290**, a central bore **291**, and a plurality of through holes **292**. When assembled, the central bore **291** is concentric with the horizontal bore **220** of the housing **201**. The through holes **292** are spaced around the circumference of the central bore **291** as shown. The front surface **288** comprises an annular extension **296**. The annular extension **296** is concentric with the central bore **291** and comprises an outside diameter **298**. The outside diameter **298** is smaller than the outside diameter of the inter-

mediate cylindrical outer surface **290**. The rear surface **289** comprises a plurality of blind bores **299** for receiving the locating dowel pins **211**.

[0184] Referring now to FIGS. **71-73**, the rear retainer **205** comprises a front surface **2100**, rear surface **2101**, a central bore **2102**, a plurality of locating dowel pin through holes **2103** and a plurality of stud through holes **2104**. When assembled, the central bore **2102** is concentric with the horizontal bore **220** of the housing **201**. The through holes **2103**, **2104** are spaced around the circumference of the central bore **2102** as shown.

[0185] Referring now to FIGS. **56-60**, assembly of the fluid end section **200** begins with the insertion of the rear wear ring seal **229** into the seal groove **263** of the wall **262** of the rear wear ring counterbore **258** on the rear surface **218** of the housing **201**.

[0186] After installing the rear wear ring seal **229** the rear wear ring **228** is installed in the rear wear ring counterbore **258**, this is typically a press fit. The rear wear ring **228** is oriented so that when installed the front surface **270** will abut the base **261** of the wear ring counterbore **258** as shown in FIG. **58**.

[0187] To continue the assembly of the fluid end section **200** the various components **2231** that are configured to route fluid through the housing **201** are installed in the horizontal bore **220** as shown in FIG. **56**A. In contrast to the housing **101** shown in FIG. **3**, the housing **201** does not include the front wear ring **124**. The stuffing box seal **2127** is inserted into the rear wear ring **228** so that the outer intermediate surface **2137** of the stuffing box seal **2127** engages the inner intermediate surface **272** of the rear wear ring **228**, and the front surface **2135** of the stuffing box seal **2127** abuts the base **261** of the rear wear ring counterbore **258**, as shown in FIGS. **56** and **58**.

[0188] Next, the first externally threaded ends **2107** of the studs **206** are inserted into the through holes **254** of the rear flange **250** of the housing **201**. A blind nut **207** is then torqued onto each of the first externally threaded ends **2107** of the studs **206** until the end surface **2109** of the stud **206** abuts the base **2114** of the threaded blind bore **2113** of the blind nut **207**, as shown in FIGS. **56** and **58**.

[0189] The spacer sleeve **2128** is oriented so that the front surface **2131** will abut the rear surface **2130** of the rear flange **250** when assembled. The stud through holes **2134** of the spacer sleeve **2128** are aligned with the second externally threaded ends **2108** of the studs **206** now protruding from the rear surface **2130** of the rear flange **250** and the protruding section **2129** of the outer intermediate surface **219** of the housing **201** is aligned with central bore **2133** of the spacer sleeve **2128**. Next, simultaneously, the second externally threaded ends **2108** of the studs **206** are inserted into the stud through holes **2134** and the protruding section **2129** is inserted into the central bore **2133** of the spacer sleeve **2128** until the rear surface **2130** of the rear flange **250** abuts the front surface **2131** of the spacer sleeve **2128**.

[0190] The stuffing box **204** is oriented so that the front surface **288** of the stuffing box **204** will abut the rear surface **218** of the housing **201** and the rear surface **2132** of the spacer sleeve **2128** when assembled. The through holes **292** of the stuffing box **204** are aligned with the second externally threaded ends **2108** of the studs **206** now protruding from the rear surface **2130** of the spacer sleeve **2128** and the second externally threaded ends **2108** of the studs **206** are inserted into the through holes **292**. Simultaneously the annular extension **296** is inserted into the stuffing box seal **2127** with the outside diameter **298** of the annular extension **296** engaging the inner intermediate surface **2138** of the stuffing box seal **2127**. Locating dowel pins **211** are inserted in the blind bores **299** on the rear surface **289** of the stuffing box **204**. The rear retainer **205** is oriented so that the front surface **2100** of the rear retainer **205** will abut the rear surface **289** of the stuffing box **204** when assembled. The stud through holes **2104** of the rear retainer **205** are aligned with the studs **206** now protruding from the rear surface **289** of the stuffing box **204**. The locating dowel pin through holes **2103** are aligned with the locating dowel pins **211** now protruding from the rear surface **289** of the stuffing box **204**. Simultaneously the studs **206** are inserted in the stud through holes **2104** and the locating dowel pins **211** are inserted in the locating dowel pin through holes **2103** of the rear retainer **205** until the rear surface **289** of the stuffing box **204** abuts the front surface **2100** of the rear retainer **205**. The nuts **209** are threaded onto the second externally threaded ends **2108** of the studs **206** now protruding from the rear surface **2101** of the rear retainer **205**. The nuts **209** are then torqued to specification. Referring now to FIG. **56**A, the packing **213** is inserted in the stuffing box **204** and the plunger **215** is inserted through the packing **213**. Finally, the packing nut **214** is threaded in rear retainer **205** and torqued until the desired compression of the packing **213** is obtained.

[0191] In operation the central bore **2133** of the spacer sleeve **2128** is sized such that the spacer sleeve **2128** never applies any meaningful compressive force to the outer intermediate surface **219** of the housing **201**. Specifically, the spacer sleeve **2128** does not constrain the expansion of the protruding section **2129** when the rear wear ring **228** is pressed into the rear wear ring counterbore **258**. This results in a uniform, or more uniform, deflection of the rear wear ring **228** upon installation. The stress resulting from the deflection is therefore also more uniform. This eliminates, or drastically reduces, stress concentration areas within the rear wear ring **228** increasing the life of the component and the maintenance intervals for the pump.

[0192] Quantitative simulations of the stress distribution in the rear wear ring **228** show a relationship between the length of the protruding section **2129** and the distribution of stress within the rear wear ring **228**. Specifically, the longer the protruding section **2129** is the more uniform the stress distribution is in the rear wear ring **228**. There is, of course, a point at which any further increase in length of the protruding section **2129** results in no measurable change in the stress distribution of the rear wear ring **228**.

[0193] Also, during operation the spacer sleeve **2128** is sized such that the rear surface **2132** shares the compressive load with the rear surface **218** of the housing **201** reducing the stress on the rear surface **218** of the housing **201**. The front surface **2131** of the spacer sleeve **2128** provides a reactionary surface for the rear surface **2130** of the rear flange **250**. This reduces the bending deflection of the rear flange **250** and consequently the bending stress in the rear flange **250**. These benefits again increase the life of the components involved and the maintenance intervals for the pump.

[0194] Referring now to FIGS. **74-79**, a high-pressure pump **3139** with a plurality of prior art fluid end sections **300** is shown. This high-pressure pump **3139** is of a type disclosed in U.S. Patent Publication No. 2022/0389916, authored by Keith et al., and published on Dec. 8, 2022, the

entire contents of which are incorporated herein by reference. While the stay rods **3140** provide a means for simple and quick replacement of completely assembled fluid end sections **300**, any maintenance to be performed on the rear of the fluid end section **300** without completely removing the fluid end section **300** is made more difficult by the minimal clearance between the stay rods **3140**. Therefore, the discussion below provides an improvement over the incorporated Keith reference.

[0195] Specifically, it is desirable to be able to replace or adjust the packing (not shown) without removing the fluid end section **300**. Replacement of the packing requires removing or loosening the packing nut **314**, pony rod clamp **3141**, and at least the rear retainer **305**.

[0196] The packing nut **314** is removed using a spanner wrench (not shown). With the stay rods **3140** in place the usable stroke of the spanner wrench is very small and requires numerous small rotations and resets of the spanner wrench to loosen or remove the packing nut **314**.

[0197] The pony rod clamp **3141** is removed by removing a plurality of pony rod clamp fasteners **3142**. The pony rod clamp fasteners **3142** are removed using a ratchet wrench (not shown) and are accessible using a long extension so are not considered overly difficult to remove.

[0198] The rear retainer **305** is removed by removing the plurality of nuts **309**. In the embodiment shown there are eight nuts **309** holding the retainer **305** to the stuffing box **304**. Again, due to the minimal clearances between the stay rods **3140**, the removal of each nut **309** requires numerous short strokes and resets by the wrench (not shown) used to remove the nut **309**. A method is needed to reduce the time and effort it takes to service the rear end of the fluid end section **300**.

[0199] Referring now to FIGS. **80-102**, an improved fluid end section **400** is shown. This improved fluid end section **400** comprises a stuffing box **404** connected to a fluid end housing **401** by means of a clamp **4143**. The clamp **4143** engages flanges **4144**, **4145** of the fluid end housing **401** and stuffing box **404** to provide the required forces necessary for maintaining the fluid seal and structural integrity between the fluid end housing **401** and stuffing box **404** during operation of the high-pressure pump **4139**, as shown in FIG. **83**. The clamp **4143** may be removed by loosening only two nuts **4146** which are more easily accessible than the eight nuts **309** described in the prior art above. The fluid end section **400** further comprises packing **413**, a packing nut **414**, a plunger **415**, and a stuffing box seal **4127**. This improvement greatly simplifies the servicing of the packing **413** compared to a previous method of clamping on flanges, disclosed in U.S. Pat. No. 11,920,583, issued to Foster et al., issued on Mar. 5, 2024 and published on Sep. 8, 2022, the entire contents of which are incorporated herein by reference. The clamping system of the '583 patent requires the use of four threaded studs, unlike the clamping system disclosed herein.

[0200] Referring now to FIGS. **86-87**, the fluid end housing **401** is shown. The fluid end housing **401** comprises a first section **421** integrally formed to a second section **422**. The first section **421** is generally shaped like a rectangular prism while the second section **422** is generally shaped like a cylinder. The second section **422** comprises a flange **4144** adjacent to the rear surface **418** of the fluid end housing **401** which is also the rear surface **418** of the second section **422** and the flange **4144**. The flange **4144** further comprises an angled front surface **4147**.

[0201] Referring now to FIGS. **88-89**, the stuffing box **404** is shown. The stuffing box **404** shown in this embodiment combines the forms and functions of the stuffing box **304** and rear retainer **305** described in the prior art. The stuffing box **404** comprises a front surface **488**, rear surface **489**, central bore **491**, and an annular extension **496** projecting from the front surface **488**. The annular extension **496** engages the stuffing box seal **4127** when assembled preventing fluid leakage between the fluid end housing **401** and the stuffing box **404**. The stuffing box **404** further comprises a flange **4145** adjacent to the front surface **488** of the stuffing box **404**. The flange **4145** comprises a front surface **488**, that is also the front surface **488** of the stuffing box **404**, and an angled rear surface **4148**. The central bore **491** comprises internal threads **4105** adjacent to the rear surface **489** of the stuffing box **404**. The internal threads **4105** mate with the externally threaded section **4149** of the packing nut **414**.

[0202] Referring now to FIGS. **90-91**, the packing nut **414** is shown. The packing nut **414** comprises a front surface **4150**, rear surface **4151**, and an intermediate outer surface **4152**. The intermediate outer surface **4152** comprises an externally threaded section **4149** adjacent to the front surface **4150**, a tapered, or chamfered, section **4153** adjacent to the rear surface **4151**, and a central section **4154** between the externally threaded section **4149** and the tapered section **4153**. The central section **4154** comprises a plurality of spanner wrench blind holes **4155** bored perpendicular to the longitudinal axis **4156** of the packing nut **414**. The spanner wrench blind holes **4155** are spaced evenly around the circumference of the packing nut **414**. The tapered section **4153** comprises a plurality of spanner wrench through holes **4157**. The bore axes of the spanner wrench through holes **4157** intersect the longitudinal axis **4156** of the packing nut **414** but are bored perpendicular to the surface of the tapered section **4153**. In this embodiment there are the same number of spanner wrench blind holes **4155** as spanner wrench through holes **4157**. The spanner wrench through holes **4157** are also spaced evenly around the circumference of the packing nut **414** but are positioned circumferentially between the spanner wrench blind holes **4155**.

[0203] Referring now to FIGS. **92-98**, the clamp **4143** and its components are shown. The clamp **4143** comprises a compression ring **4158**, a primary clamp made up of a plurality of clamp sections **4159**, and a plurality of compression ring fasteners **4160**. The compression ring **4158** comprises a thin-walled cylindrical body **4161** with an inner surface **4162**. The thin-walled cylindrical body **4161** has a cut **4163** that allows the compression ring **4158** to expand and contract radially. The cut **4163** is made parallel to the longitudinal axis **4164** of the clamp **4143**. A tab **4165** extends radially from each cut end **4166** of the thin-walled cylindrical body **4161**. A plurality of fastener holes **4167** are formed in each tab **4165**. In this embodiment the compression ring fasteners **4160** comprise a nut **4146** and bolt **4174** but may be any type of reusable fasteners.

[0204] Referring now to FIGS. **95-98**, a clamp section **4159** is shown. The clamp section **4159** is generally shaped like a circular sector of a thin-walled cylinder. The clamp section **4159** comprises an outer surface **4168**, inner surface **4169**, and two end surfaces **4170**. The inner surface **4169** comprises a cutout, or groove **4171**, that comprises a con-

stant radius surface **4172** bounded longitudinally by two angled surfaces **4173**, which extend from the inner surface **4169** to form an edge wall or rim. Each of the angled surfaces **4173** is formed at the same angle as the angled front and rear surfaces **4147**, **4148** of the fluid end housing **401** and stuffing box **404**. The two end surfaces **4170** are formed parallel to radii of the circular sector.

[0205] Referring now to FIGS. **80-85**, the stuffing box **404** is assembled to the fluid end housing **401** by first sliding the compression ring **4158** over the second section **422** of the fluid end housing **401**. Second, the annular extension **496** of the stuffing box **404** is inserted into the stuffing box seal **4127** until the front surface **488** of the stuffing box **404** abuts the rear surface **418** of the fluid end housing **401**. Third, the clamp sections **4159** are placed on the flanges **4144**, **4145** such that the angled front and rear surfaces **4147**, **4148** engage the angled surfaces **4173** of the groove **4171** of each clamp section **4159**. The clamp sections **4159** are spaced circumferentially such that the end surfaces **4170** abut, or nearly abut, each other thus completely encircling the flanges **4144**, **4145**. Fourth, while holding the clamp sections **4159** in place, the compression ring **4158** is placed around the clamp sections **4159** such that the inner surface **4162** of the thin-walled cylindrical body **4161** of the compression ring **4158** contacts and envelops the outer surface **4168** of the clamp sections **4159**. Fifth, the compression ring fasteners **4160** are inserted in the fastener holes **4167** of the tabs **4165** and tightened. Tightening the compression ring fasteners **4160** reduces the diameter of the compression ring **4158** and the clamp sections **4159** under the compression ring **4158**. As the diameter of the clamp sections **4159** decreases the angled surfaces **4173** of the groove **4171** of the inner surface **4169** apply a cancelling radial force and a compressive longitudinal force to the flanges **4144**, **4145** thus holding the stuffing box **404** to the fluid end housing **401**. Sixth, the packing **413** is installed, the plunger **415** is inserted in the packing **413**, and the packing nut **414** placed over the plunger **415** and threaded into the stuffing box **404**. Seventh, the plunger **415** is then attached to the pony rod **4175** using the pony rod clamp **4141** and pony rod clamp fasteners **4142** as shown in FIG. **100**. Finally, the packing nut **414** is torqued to apply the desired compression force to the packing **413**.

[0206] With this improvement it is possible, even desirable, to preassemble the packing **413**, plunger **415**, and packing nut **414** in the stuffing box **404** prior to attaching the stuffing box **404** to the fluid end housing **401** with the clamp **4143**. Once the packing nut **414** is torqued to apply the desired compression force to the packing **413** it is very difficult to slide the plunger **415** to the required position for connection to the pony rod **4175**. For this reason, the packing nut **414** is not torqued completely until after the stuffing box **404** is installed and the plunger **415** is attached to the pony rod **4175**.

[0207] Referring now to FIGS. **84-85** and **99-102**, to change the packing **413** in the field the two compression ring fasteners **4160** are removed, or loosened enough, to allow the compression ring **4158** to slide off the clamp sections **4159** toward the first section **421** of the fluid end housing **401**, as shown in FIG. **84**. Next, the clamp sections **4159** are removed, also shown in FIG. **84**. Then the two pony rod fasteners **4142** and pony rod clamp **4141** are removed. This allows the entire stuffing box **404**, packing **413**, packing nut **414**, and plunger **415** assembly to be removed to a more convenient area for maintenance. It is also possible to have a second stuffing box **404**, packing **413**, packing nut **414**, plunger **415** assembly preassembled for replacement further reducing maintenance time. As seen in FIGS. **100** and **102** the location and orientation of the compression ring fasteners **4160** is such that they are easily removeable by a socket wrench with an extension as are the pony rod clamp fasteners **4142**.

[0208] Continuing with FIGS. **100** and **102**, the packing **413** may need to be further compressed during operation. To further compress the packing **413** the packing nut **414** must be torqued and as stated earlier, the location of the stay rods **4140** makes this difficult. The presence of the offset row of spanner wrench through holes **4157** makes it easier to gain access to the packing nut **414** in any rotational orientation always providing a place to engage the spanner wrench (not shown) used to torque the packing nut **414**.

[0209] Referring now to FIGS. **103-125**, another embodiment of a fluid end section **500** is shown. The fluid end section **500** comprises a fluid end housing **501**, stuffing box **504**, and clamp **5143**. The fluid end housing **501** comprises a second section **522** and a flange **5144** with an angled front surface **5147**. The stuffing box **504** comprises a flange **5145** with an angled rear surface **5148**.

[0210] Referring now to FIGS. **107-121**, the clamp **5143** comprises a plurality of compression rings **5158**, a plurality compression ring fasteners **5160**, a primary clamp made up of a first clamp section **5176** and a plurality of clamp sections **5159**, a plurality of ring clamps **5177**, and a plurality of ring clamp fasteners **5178**.

[0211] Referring now to FIG. **109**, a compression ring **5158** is shown. The compression ring **5158** comprises a compression ring rod **5179** with one threaded end **5180** and one expanded end **5181**. The compression ring rod **5179** is formed into a generally circular shape to fit around the fluid end section **500**.

[0212] Referring now to FIGS. **109-113**, the first clamp section **5176** is shown. The first clamp section **5176** is generally shaped like a circular sector of a thin-walled cylinder. The first clamp section **5176** comprises an outer surface **5182**, inner surface **5183**, and two end surfaces **5184**. The inner surface **5183** comprises a cutout, or groove **5171**, that comprises a constant radius surface **5172** bounded longitudinally by two angled surfaces **5173**. Each of the angled surfaces **5173** is formed at the same angle as the angled front and rear surfaces **5147**, **5148** of the fluid end housing **501** and stuffing box **504**. The two end surfaces **5170** are formed parallel to radii of the circular sector. The outer surface **5182** comprises an expanded end tab **5185** extending radially from the outer surface **5182** and adjacent to one end surface **5184** and a threaded end tab **5186** extending radially from the outer surface **5182** and adjacent to the other end surface **5184**. The expanded end tab **5185** comprises a shared end surface **5184** with the first clamp section **5176**, and an opposite end surface **5187**. The expanded end tab **5185** further comprises a pair of counterbored through holes **5188** connecting the two surfaces **5184**, **5187**. The counterbore is on the opposite end surface **5187**. The counterbored through holes **5188** are spaced longitudinally and bored perpendicular to the shared end surface **5184**. The threaded end tab **5186** also comprises a shared end surface **5184** with the first clamp section **5176**. It is the end not shared with the expanded end tab **5185**. The threaded end tab **5186** further comprises an opposite end

surface **5189** and a pair of counterbored through holes **5190** connecting the two surfaces **5184**, **5189**. The counterbore is on the opposite end surface **5189**. The counterbored through holes **5190** are also spaced longitudinally and are aligned with the counterbored through holes **5188** of the expanded end tab **5185**. The counterbored through holes **5190** are bored perpendicular to the shared end surface **5184**. The outer surface **5182** further comprises a pair of grooves **5191** extending circumferentially between the counterbored through holes **5188**, **5190**. The grooves **5191** have a semicircular cross-section.

[0213] Referring now to FIGS. **114-117**, a clamp section **5159** is shown. The clamp section **5159** is generally shaped like a circular sector of a thin-walled cylinder. The clamp section **5159** comprises an outer surface **5168**, inner surface **5169**, and two end surfaces **5170**. The inner surface **5169** comprises a cutout, or groove **5171**, that comprises a constant radius surface **5172** bounded longitudinally by two angled surfaces **5173**. Each of the angled surfaces **5173** is formed at the same angle as the angled front and rear surfaces **5147**, **5148** of the fluid end housing **501** and stuffing box **504**. The two end surfaces **5170** are formed parallel to radii of the circular sector. The outer surface **5168** comprises a threaded blind hole **5192** centered longitudinally and circumferentially, and a pair of semicircular grooves **5193** spaced longitudinally the same as the grooves **5191** in the first clamp section **5176**.

[0214] Referring now to FIGS. **118-121**, a ring clamp **5177** is shown. The ring clamp **5177** is generally shaped like a rectangular prism comprising an inner surface **5194**, an outer surface **5195**, and a through hole **5196** connecting the inner and outer surfaces **5194**, **5195**. The through hole **5196** is centered longitudinally and transversely. The inner surface **5194** comprises a pair of semicircular grooves **5197** spaced longitudinally the same as the grooves **5191**, **5193** of the first clamp section **5176** and clamp sections **5159**.

[0215] Referring to FIGS. **107-109**, the clamp **5143** is assembled by inserting the threaded end **5180** of the compression ring rod **5179** into the counterbored end of one of the counterbored through holes **5188** of the expanded end tab **5185** of the first clamp section **5176**. The compression ring rod **5179** is inserted until the expanded end **5181** of the compression ring rod **5179** contacts the base of the counterbore as shown in FIG. **109**. The threaded end **5180** of the compression ring rod **5179** is then inserted into the non-counterbored end of the counterbored through hole **5190** of the threaded end tab **5186**. A compression ring fastener **5160**, in this embodiment a nut, is then screwed on the threaded end **5180** of the compression ring rod **5179**. The compression ring fastener **5160** is only screwed on enough to keep the threaded end **5180** of the compression ring rod **5179** in the threaded end tab **5186**. It must stay loose to allow the completion of the assembly. The second compression ring **5158** is inserted in the first clamp section **5176** the same way. Next, a clamp section **5159** is placed such that the grooves **5193** in the outer surface **5168** mate with the compression rings **5158**. Next, the through hole **5196** of a ring clamp **5177** is aligned with the threaded blind hole **5192** of the clamp section **5159** and the ring clamp **5177** is oriented so that the grooves **5197** on the inner surface **5194** mate with the compression rings **5158**. Next, the ring clamp fastener **5178** is inserted through the through hole **5196** of the ring clamp **5177** and threaded into the threaded blind hole **5192** of the clamp section **5159**. As with the compression ring fasteners **5160**, the ring clamp fasteners **5178** are not yet tightened completely to allow the completion of assembly. The remaining clamp sections **5159** are attached to the compression rings **5158** in the same manner. As needed, the clamp sections **5159** that are already attached may be moved circumferentially on the compression rings **5158** to make room for the remaining clamp sections **5159**. Once all the clamp sections **5159** are attached to the compression rings **5158** they may be spaced circumferentially such that there is approximately the same distance between each clamp section **5159** and the ring clamp fasteners **5178** may then be tightened such that the clamp sections **5159** are no longer able to be moved relative to the compression rings **5158**.

[0216] Referring now to FIGS. **105-106** and **122-125**, the fluid end section **500** is assembled in the same way as fluid end section **400** described above except the clamp **5143** is preassembled eliminating the need to place and hold the clamp sections **4159** in place while sliding the compression ring **4158** over them. The same advantages are realized during disassembly and reassembly during maintenance of the high-pressure pump **5139** as can be seen in FIGS. **122-125**.

[0217] As with the fluid end section **400**, tightening the compression ring fasteners **5160** reduces the diameter of the compression rings **5158** and the first clamp section **5176** and clamp sections **5159** under the compression rings **5158**. As the diameter of the clamp sections **5159** decreases the angled surfaces **5173** of the groove **5171** of the inner surfaces **5169** apply a cancelling radial force and a compressive longitudinal force to the flanges **5144**, **5145** thus holding the stuffing box **504** to the fluid end housing **501**.

[0218] Referring now to FIGS. **126-150**, another embodiment of a fluid end section **600** is shown. The fluid end section **600** comprises a fluid end housing **601**, a stuffing box **604**, a rear retainer **605**, a plurality of studs **606**, a plurality of blind nuts **607**, a plurality of reaction washers **608**, a plurality of nuts **609**, a plurality of washers **610**, a plurality of locating dowel pins **611**, packing **613**, a packing nut **614**, a plunger **615**, and a plurality of retention O-rings **6198**.

[0219] Referring now to FIGS. **129-136**, the fluid end housing **601** comprises a first section **621**, a second section **622**, a front spacer sleeve **6199**, a plurality of studs **630**, a plurality of nuts **631**, a rear spacer sleeve **6128**, a plurality of rear spacer sleeve locating dowel pins **632**, and a plurality of rear spacer sleeve mounting screws **612**.

[0220] Referring now to FIG. **134**, the first section **621** of the fluid end housing **601** comprises a rear surface **633**, a central horizontal bore **620**, a plurality of threaded blind bores **635**, and a plurality of stay rod through holes **6204**. The threaded blind bores **635** open to the rear surface **633** and are formed around the central horizontal bore **620**.

[0221] Referring now to FIGS. **133** and**137-139**, the second section **622** of the fluid end housing **601** comprises a body **6223**, front wear ring **624**, a front wear ring seal **625**, a rear wear ring **628**, a rear wear ring seal **629**, and a stuffing box seal **6127**. The body **6223** comprises a front surface **640** and a rear surface **618** connected by an outer intermediate surface **645**. The outer intermediate surface **645** comprises a front protruding section **6202**, a front mounting flange **648**, a center section **649**, a rear mounting flange **650**, and a rear protruding section **6203**. The front mounting flange **648** comprises a front surface **6205**, a rear surface **6206**, a plurality of stud through holes **652** spaced evenly around the

central horizontal bore **620**, and a plurality of stay rod cutouts **6207**. The rear mounting flange **650** comprises a front surface **6221**, a rear surface **6222**, a plurality of stud through holes **654** spaced evenly around the central horizontal bore **620**, a pair of diametrically opposed blind bores **660** for the rear spacer sleeve locating dowel pins **632**, and a pair of diametrically opposed threaded blind bores **659** for the rear spacer sleeve mounting screws **612**. The blind bores **660** and threaded blind bores **659** open to the rear surface **6222**.

[0222] Referring now to FIG. **131**, the front wear ring **624** comprises a front surface **664**, an opposing rear surface **665**, an inner intermediate surface **666**, and an outer intermediate surface **6224**. The outer intermediate surface **6224** is tapered from the front surface **664** to the rear surface **665**.

[0223] Referring now to FIG. **132**, the rear wear ring **628** comprises a front surface **670**, an opposing rear surface **671**, an inner intermediate surface **672**, and an outer intermediate surface **6225**. The outer intermediate surface **6225** is tapered from the rear surface **671** to the front surface **670**. Continuing with FIG. **132**, the stuffing box seal **6127** comprises a front surface **6226**, an opposing rear surface **6227**, an inner intermediate surface **6228**, and an outer intermediate surface **6229**.

[0224] Referring now to FIG. **139**, the central horizontal bore **620** of the body **6223** of the second section **622** of the fluid end housing **601** comprises a front wear ring counterbore **634**, a rear wear ring counterbore **658**, and a stuffing box counterbore **6200**. The front wear ring counterbore **634** comprises a base **637** and a tapered bore wall **638** with a seal groove **639** formed in the tapered bore wall **638** at approximately the longitudinal center of the tapered bore wall **638**. The front wear ring counterbore **634** opens to, or originates from, the front surface **640** of the body **6223** of the second section **622**. The rear wear ring counterbore **658** comprises a base **661** and a tapered bore wall **662** with a seal groove **663** formed in the tapered bore wall **662** at approximately the longitudinal center of the tapered bore wall **662**. The rear wear ring counterbore **658** opens to, or originates from, the rear surface **618** of the body **6223** of the second section **622**. The stuffing box counterbore **6200** comprises a base **6201** and a straight bore wall **6208**. The stuffing box counterbore **6200** opens to, or originates from, the base **661** of the rear wear ring counterbore **658**.

[0225] Referring now to FIGS. **140-141**, the front spacer sleeve **6199** is shown. The front spacer sleeve **6199** comprises a front surface **6209**, an opposing rear surface **6210**, an outer intermediate surface **6211**, a central bore **6212**, and a plurality of stud through holes **6213** spaced evenly around, and proximate to, the wall of the central bore **6212**. The outer intermediate surface **6211** comprises a plurality of stay rod cutouts **6214**. When assembled, the central bore **6212** is concentric with the central horizontal bore **620** of the fluid end housing **601**.

[0226] Referring now to FIGS. **142-147**, the rear spacer sleeve **6128** is shown. The rear spacer sleeve **6128** comprises a front surface **6131**, an opposing rear surface **6132**, a central bore **6133**, and a plurality of stud through holes **6134** spaced evenly around, and proximate to, the wall of the central bore **6133**. When assembled, the central bore **6133** is concentric with the central horizontal bore **620** of the fluid end housing **601**. The rear spacer sleeve **6128** further comprises a pair of diametrically opposed counterbored through holes **6215** for the rear spacer sleeve locating dowel pins **632**. The counterbore **6216** of each counterbored through hole **6215** has a base **6217** and is open to, or originates from, the front surface **6131**. The rear spacer sleeve **6128** further comprises a pair of diametrically opposed counterbored through holes **6218** for the rear spacer sleeve mounting screws **612**. The counterbore **6219** of each counterbored through hole **6218** has a base **6220** and is open to, or originates from, the rear surface **6132**.

[0227] Referring now to FIGS. **148-150**, a blind nut **607** is shown. The blind nut **607** comprises a base **6114** and an outer intermediate surface **6112**. The outer intermediate surface **6112** comprises a drive section **6116**. The drive section **6116** comprises a retention O-ring groove **6230**.

[0228] Referring now to FIGS. **130-133**, the assembly of the fluid end section **600** first requires the assembly of the second section **622** of the fluid end housing **601**. The steps for assembly of the second section **622** are: First, insert the front wear ring seal **625** into the seal groove **639** of the tapered bore wall **638** of the front wear ring counterbore **634** of the body **6223**. Second, insert the front wear ring **624**, rear surface **665** first, into the front wear ring counterbore **634** until the rear surface **665** abuts the base **637** of the front wear ring counterbore **634**. The outer intermediate surface **6224** of the front wear ring **624** and the front wear ring counterbore **634** may be sized to provide a press fit once assembled. Third, insert the rear wear ring seal **629** into the seal groove **663** of the tapered bore wall **662** of the rear wear ring counterbore **658** of the body **6223**. Fourth, insert the rear wear ring **628**, front surface **670** first, into the rear wear ring counterbore **658** until the front surface **670** abuts the base **661** of the rear wear ring counterbore **658**. The outer intermediate surface **6225** of the rear wear ring **628** and the rear wear ring counterbore **658** may be sized to provide a press fit once assembled. Fifth, insert the stuffing box seal **6127** into the rear wear ring counterbore **658** until the front surface **6226** abuts the base **661** of the rear wear ring counterbore **658**. The stuffing box seal **6127** may be inserted either front surface **6226** or rear surface **6227** first. This example assumes the front surface **6226** is inserted first. Once the stuffing box seal **6127** is inserted, the outer intermediate surface **6229** will engage the inner intermediate surface **672** of the rear wear ring **628**. This completes the assembly of the second section **622**.

[0229] Referring now to FIGS. **129**, **134**, and **135**, the fluid end housing **601** assembly steps are: First, thread each stud **630** in a threaded blind bore **635** of the first section **621** of the fluid end housing **601** and torque to specification. Second, slide the stud through holes **6213** of the front spacer sleeve **6199** over the ends of the studs **630** now protruding from the first section **621** until the front surface **6209** abuts the rear surface **633** of the first section **621**. The front spacer sleeve **6199** should be oriented so the stay rod cutouts **6214** of the outer intermediate surface **6211** align with the stay rod through holes **6204** of the first section **621**. Third, slide the stud through holes **652** of the front mounting flange **648** of the body **6223** of the second section **622** over the ends of the studs **630** now protruding from the rear surface **6210** of the front spacer sleeve **6199** until the front surface **6205** of the front mounting flange **648** abuts the rear surface **6210** of the front spacer sleeve **6199**. The body **6223** should be oriented so the stay rod cutouts **6207** align with the stay rod cutouts **6214** of the front spacer sleeve **6199**. Fourth, thread nuts **631** onto the studs **630** now protruding from the rear surface **6206** of the front mounting flange **648** and torque to speci-

fication. Fifth, insert the rear spacer sleeve locating dowel pins **632** into the blind bores **660** of the rear mounting flange **650**. Sixth, slide the rear spacer sleeve **6128**, front surface **6131** first, over the rear protruding section **6203** of the body **6223** of the second section **622** until the front surface **6131** of the rear spacer sleeve **6128** abuts the rear surface **6222** of the rear mounting flange **650** of the body **6223**. As the rear spacer sleeve **6128** is moved toward the rear mounting flange **650** the counterbored through holes **6215** must be aligned with the rear spacer sleeve locating dowel pins **632**. Seventh, insert the rear spacer sleeve mounting screws **612** into the counterbored through holes **6218** of the rear spacer sleeve **6128** and torque to specification. The fluid end housing **601** is now assembled.

[0230] Referring now to FIGS. **128** and **136**, the steps required to complete the assembly of the fluid end section **600** are: First, insert a stud **606** into a stud through hole **6134** of the rear spacer sleeve **6128** and further through the aligned stud through hole **654** of the rear mounting flange **650** of the second section **622** of the fluid end housing **601** until the end of the stud **606** protrudes from the front surface **6221** of the rear mounting flange **650**. Second, thread a blind nut **607** on the protruding end of the stud **606** and tighten the blind nut **607** until the end of the stud **606** abuts the base **6114** of the blind nut **607**. Repeat this second step for the remaining studs **606**. Third, slide the stud through holes **692** of the stuffing box **604**, front surface **688** first, over the studs **606** now protruding from the rear surface **6132** of the rear spacer sleeve **6128** until the front surface **688** of the stuffing box **604** abuts the rear surface **6132** of the rear spacer sleeve **6128**. As the stuffing box **604** is moved toward the rear spacer sleeve **6128** the annular extension **696** on the front surface **688** of the stuffing box **604** will be inserted into and engage the inner intermediate surface **6228** of the stuffing box seal **6127**. Fourth, insert the locating dowel pins **611** into the blind bores **699** on the rear surface **689** of the stuffing box **604**. Fifth, slide the stud through holes **6104** of the rear retainer **605**, front surface first **6100**, over the studs **606** now protruding from the rear surface **689** of the stuffing box **604** until the front surface **6100** of the rear retainer **605** abuts the rear surface **689** of the stuffing box **604**. As the rear retainer **605** is moved towards the stuffing box **604** the locating dowel pin through holes **6103** must be aligned with the locating dowel pins **611** now protruding from the rear surface **689** of the stuffing box **604**. Sixth, place the washers **610** over the studs **606** now protruding from the rear surface **6101** of the rear retainer **605**. Seventh, thread the nuts **609** on the protruding studs **606** but do not apply full torque. Eighth, slide the reaction washers **608** over the blind nuts **607** as shown in FIG. **51**. Ninth, stretch and slide the retention O-rings **6198** over the outer intermediate surface **6112** of the blind nuts **607** until the retention O-rings **6198** engage the retention O-ring groove **6230** in the drive section **6116** of the outer intermediate surface **6112** of the blind nut **607**. Tenth, torque the nuts **609** to specification. Eleventh, insert the packing **613** in the stuffing box **604**. Twelfth, insert the plunger **615** in the packing **613**. Lastly, insert and tighten the packing nut **614**.

[0231] During operation the front and rear spacer sleeves **6199** and **6128** provide the advantages described above, specifically, the spacer sleeves **6199** and **6128** do not constrain the expansion of the protruding sections **6202**, **6203** of the second section **622** of the fluid end housing **601** when the wear rings **624**, **628** are pressed into the wear ring counterbores **634**, **658**. Resulting in a uniform, or more uniform, deflection of the wear rings **624**, **628** upon installation and during operation. The stress resulting from the deflection is therefore also more uniform. This eliminates, or drastically reduces, stress concentration areas within the wear rings **624**, **628** increasing the life of the components and the maintenance intervals for the pump. The tapered wear rings **624**, **628** are easier to assemble and replace, if necessary, since the tapered outer surfaces **6224**, **6225** have a smaller length of engagement.

[0232] The retention O-rings **6198** prevent the reaction washers **608** from coming off the blind nuts **607**. Thus, when maintenance of the packing **613** requires the removal of the stuffing box **604** and rear retainer **605** the reaction washers **608** are present to provide back-up while removing the nuts **609**.

[0233] The various features and alternative details of construction of the apparatuses described herein for the practice of the present technology will readily occur to the skilled artisan in view of the foregoing discussion, and it is to be understood that even though numerous characteristics and advantages of various embodiments of the present technology have been set forth in the foregoing description, together with details of the structure and function of various embodiments of the technology, this detailed description is illustrative only, and changes may be made in detail, especially in matters of structure and arrangements of parts within the principles of the present technology to the full extent indicated by the broad general meaning.

1. A fluid end section, comprising:
a housing having a first longitudinal bore formed therethrough;
a stuffing box having a second longitudinal bore formed therethrough; and
a clamp surrounding at least a portion of the housing and at least a portion of the stuffing box, such that the first longitudinal bore and the second longitudinal bore are aligned and the housing abuts the stuffing box.

2. The fluid end section of claim **1**, in which the clamp comprises:
a plurality of clamp sections surrounded by an outer compression ring.

3. The fluid end section of claim **1**, in which the first longitudinal bore and the second longitudinal bore are horizontal.

4. The fluid end section of claim **1**, further comprising a plunger, in which the plunger is at least partially disposed within the second longitudinal bore.

5. A fluid end, comprising:
a plurality of fluid end sections;
in which each of the fluid end sections is the fluid end section of claim **1**.

6. The fluid end section of claim **1**, in which the at least a portion of the housing is a first flange; and in which the at least a portion of the stuffing box is a second flange.

7. A fluid end section, comprising:
a housing, comprising:
a first longitudinal bore formed therethrough; and
a first flange portion;
a stuffing box, comprising:
a second longitudinal bore formed therethrough; and
a second flange portion abutting the first flange portion; and

a clamp surrounding both the first and second flange portions and securing the stuffing box to the housing.

8. The fluid end section of claim **7**, further comprising a stuffing box seal situated between at least a portion of the stuffing box and at least a portion of the housing.

9. The fluid end section of claim **7**, further comprising:

a packing assembly situated within the stuffing box; and

a packing nut attached to the stuffing box, the packing nut engaging the packing assembly and securing the packing assembly within the stuffing box.

10. The fluid end section of claim **9**, in which the packing nut is threaded into the second longitudinal bore.

11. The fluid end section of claim **7**, in which the stuffing box further comprises an annular extension projecting from the second flange portion.

12. The fluid end section of claim **11**, in which the annular extension is sized to be received within at least a portion of the housing.

13. The fluid end section of claim **12**, further comprising an annular seal situated between the annular extension and the at least a portion of the housing.

14. The fluid end section of claim **13**, further comprising a wear ring situated between the annular seal and the at least a portion of the housing.

15. The fluid end section of claim **7**, in which the clamp comprises:

a plurality of clamp sections configured to engage the first and second flanges;

a compression ring surrounding the plurality of clamp sections; and

a plurality of fasteners securing the compression ring around the plurality of clamp sections.

16. The fluid end section of claim **15**, in which the compression ring is a single integrally formed thin-walled cylindrical body.

17. The fluid end section of claim **16**, in which the compression ring comprises a cut that passes through a portion of the compression ring.

18. The fluid end section of claim **7**, in which the stuffing box is a single integrally formed piece.

19. The fluid end section of claim **7**, in which the housing is a single integrally formed piece.

20. The fluid end section of claim **7**, further comprising a packing nut threaded into the stuffing box, the packing nut comprising:

a first surface configured to engage a packing assembly;

an opposed second surface having a plurality of holes formed thereon; and

an intermediate outer surface having external threads formed thereon.

* * * * *