US012391445B2

(12) **United States Patent**
Taguchi et al.

(10) **Patent No.: US 12,391,445 B2**
(45) **Date of Patent: Aug. 19, 2025**

(54) **BINDING TAPE, BINDING METHOD, TAPE WINDING BODY AND REEL**

(71) Applicant: **Max Co., Ltd.**, Tokyo (JP)

(72) Inventors: **Satoshi Taguchi**, Tokyo (JP); **Mizuki Kataniwa**, Tokyo (JP)

(73) Assignee: **Max Co., Ltd.**, Tokyo (JP)

(*) Notice: Subject to any disclaimer, the term of this patent is extended or adjusted under 35 U.S.C. 154(b) by 0 days.

(21) Appl. No.: **18/418,696**

(22) Filed: **Jan. 22, 2024**

(65) **Prior Publication Data**

US 2024/0199294 A1 Jun. 20, 2024

Related U.S. Application Data

(62) Division of application No. 17/260,620, filed as application No. PCT/JP2019/028363 on Jul. 18, 2019.

(30) **Foreign Application Priority Data**

Jul. 18, 2018	(JP)	2018-134750
Mar. 1, 2019	(JP)	2019-037192
Mar. 1, 2019	(JP)	2019-037411
Jun. 18, 2019	(JP)	2019-112599

(51) **Int. Cl.**

B32B 3/00	(2006.01)
A01G 9/12	(2006.01)
B32B 5/02	(2006.01)
B32B 27/12	(2006.01)
B32B 27/30	(2006.01)

(Continued)

(52) **U.S. Cl.**

CPC ***B65D 63/14*** (2013.01); ***A01G 9/128*** (2013.01); ***B32B 5/024*** (2013.01); ***B32B 5/026*** (2013.01); ***B32B 27/12*** (2013.01); ***B32B 27/304*** (2013.01); ***B32B 27/32*** (2013.01); ***B65B 13/345*** (2013.01); *B32B 2250/03* (2013.01);

(Continued)

(58) **Field of Classification Search**

CPC B32B 27/12; B32B 5/024; B32B 5/026; B32B 5/028; B65D 63/00; B65D 63/10; B65D 63/14

See application file for complete search history.

(56) **References Cited**

U.S. PATENT DOCUMENTS

2,607,709	A	8/1952	Simpson et al.
3,099,414	A	7/1963	Kuika

(Continued)

FOREIGN PATENT DOCUMENTS

CN	201439461	U	4/2010
CN	104684796	A	6/2015

(Continued)

OTHER PUBLICATIONS

KR-20100010248-U (Year: 2010).*

(Continued)

Primary Examiner — Elizabeth E Mulvaney
(74) *Attorney, Agent, or Firm* — Banner & Witcoff, Ltd.

(57) **ABSTRACT**

A binding tape (**10**) includes an intermediate layer (**11**), and a first surface layer (**16**) covering one surface of the intermediate layer (**11**). The intermediate layer (**11**) has a plurality of first linear members (**12**) arranged side by side at an angle with respect to a longitudinal direction (D**1**) of the binding tape (**10**).

5 Claims, 57 Drawing Sheets

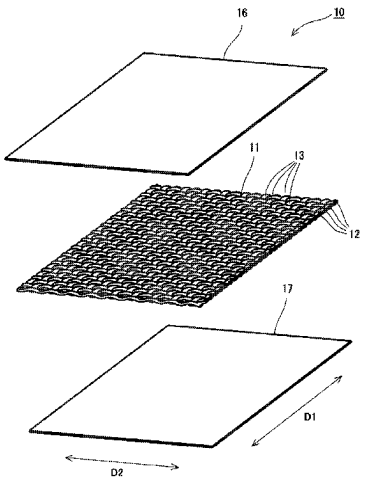

(51) **Int. Cl.**
B32B 27/32 (2006.01)
B65B 13/34 (2006.01)
B65D 63/14 (2006.01)

(52) **U.S. Cl.**
CPC *B32B 2250/40* (2013.01); *B32B 2405/00* (2013.01); *B32B 2410/00* (2013.01); *C09J 2301/10* (2020.08)

(56) **References Cited**

U.S. PATENT DOCUMENTS

3,101,846	A	8/1963	Eifrid	
3,587,840	A	6/1971	Marshall	
3,700,099	A	10/1972	Heroux	
4,770,490	A *	9/1988	Gruenewald	B32B 27/36 385/115
5,171,397	A	12/1992	Arnold	
5,698,067	A	12/1997	Packard	
5,941,387	A	8/1999	Rasel	
6,418,998	B1	7/2002	Tuoriniemi	
6,589,648	B1	7/2003	Schurig	
D669,618	S	10/2012	Ormsbee et al.	
D669,619	S	10/2012	Ormsbee et al.	
8,387,216	B1	3/2013	Martinson	
D774,879	S	12/2016	Martinson	
10,407,265	B1	9/2019	Liles	
D863,945	S	10/2019	Martinson	
D863,946	S	10/2019	Martinson	
2002/0145073	A1	10/2002	Swanson et al.	
2003/0029962	A1	2/2003	Sieber et al.	
2004/0226857	A1	11/2004	Wright et al.	
2008/0290201	A1	11/2008	Klick	
2009/0230233	A1	9/2009	Ochi et al.	
2009/0283167	A1	11/2009	Nakagawa et al.	
2009/0283625	A1	11/2009	Ochi et al.	
2011/0005688	A1	1/2011	Chang	
2011/0021100	A1	1/2011	Doi et al.	
2011/0286217	A1	11/2011	Martinson et al.	
2011/0300326	A1	12/2011	Tatsuzawa et al.	
2012/0015126	A1	1/2012	Tatsuzawa et al.	
2012/0055831	A1	3/2012	Vulpitta	
2013/0026316	A1	1/2013	Case et al.	
2013/0174382	A1	7/2013	Martinson	
2015/0197409	A1	7/2015	Caldieri	
2015/0284160	A1	10/2015	Case et al.	
2017/0275129	A1	9/2017	Takahashi	
2017/0361957	A1	12/2017	Takemura et al.	
2017/0361960	A1	12/2017	Taguchi et al.	
2021/0053705	A1	2/2021	Taguchi et al.	
2023/0339720	A1	10/2023	Hamazaki et al.	

FOREIGN PATENT DOCUMENTS

EP	1430971	A1	6/2004
EP	2684828	A1	1/2014
ES	2536582	A1	5/2015
JP	S48-040688	Y1	11/1973
JP	S52-014673	A	2/1977
JP	S54-096760	U	7/1979
JP	S54-153140	A	12/1979
JP	S58-176936	U	11/1983
JP	S59-033867	U	3/1984
JP	H02-080669	U	6/1990
JP	H03-006931	U	1/1991
JP	H06-010169	A	1/1994
JP	2002-046765	A	2/2002
JP	2002-101766	A	4/2002
JP	2004-203430	A	7/2004
JP	2004-224412	A	8/2004
JP	2005-176616	A	7/2005
JP	2009-255983	A	11/2009
JP	2011-026717	A	2/2011
JP	2015-046293	A	3/2015
JP	2017-222400	A	12/2017
KR	20080103400	A	11/2008
PL	188661	B1	3/2005
TW	201000365	A	1/2010
TW	202122334	A	6/2021
WO	9704358	A1	2/1997
WO	2012091061	A1	7/2012
WO	2013084797	A1	6/2013
WO	2014007114	A1	1/2014
WO	2018-061567	A1	4/2018

OTHER PUBLICATIONS

Dec. 6, 2024—(US) Final Office Action—U.S. Appl. No. 17/260,620.
Sep. 12, 2023—(NZ) Examination Report 2—App 771973.
Australian Office Action dated Mar. 24, 2023, issued by the Australian Patent Office in the corresponding Australian Patent Aplication No. 2019305815. (6 pages).
Japanese Office Action (Notice of Reasons for Refusal) dated Jan. 6, 2023, issued by the Japanese Patent Office in the corresponding Japanese Patent No. 2019-112599. (with English translation) (9 pages).
Extended European Search Report dated Jul. 6, 2022, issued by the European Patent Office in the corresponding European Patent Application No. 19838460.4 (12 pages).
Chinese Office Action for Chinese Application No. 201980047651.7 dated Mar. 3, 2022. (12 pages).
International Search Report issued in Application No. PCT/JP2019-028363 dated Oct. 8, 2019, 5 pages.
Jun. 6, 2024—(US)—Non-final Office Action—U.S. Appl. No. 17/260,620.
Apr. 22, 2025—(NZ) Examination Report 1—App 803791.
Apr. 1, 2025—(US) Notice of Allowance—U.S. Appl. No. 17/260,620.

* cited by examiner

FIG.1

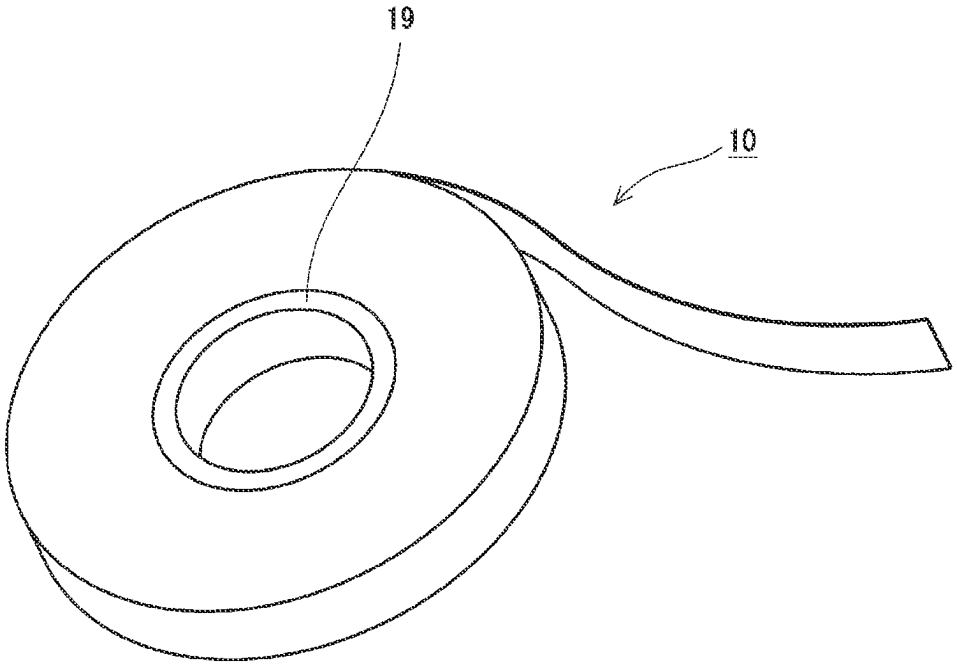

FIG. 2

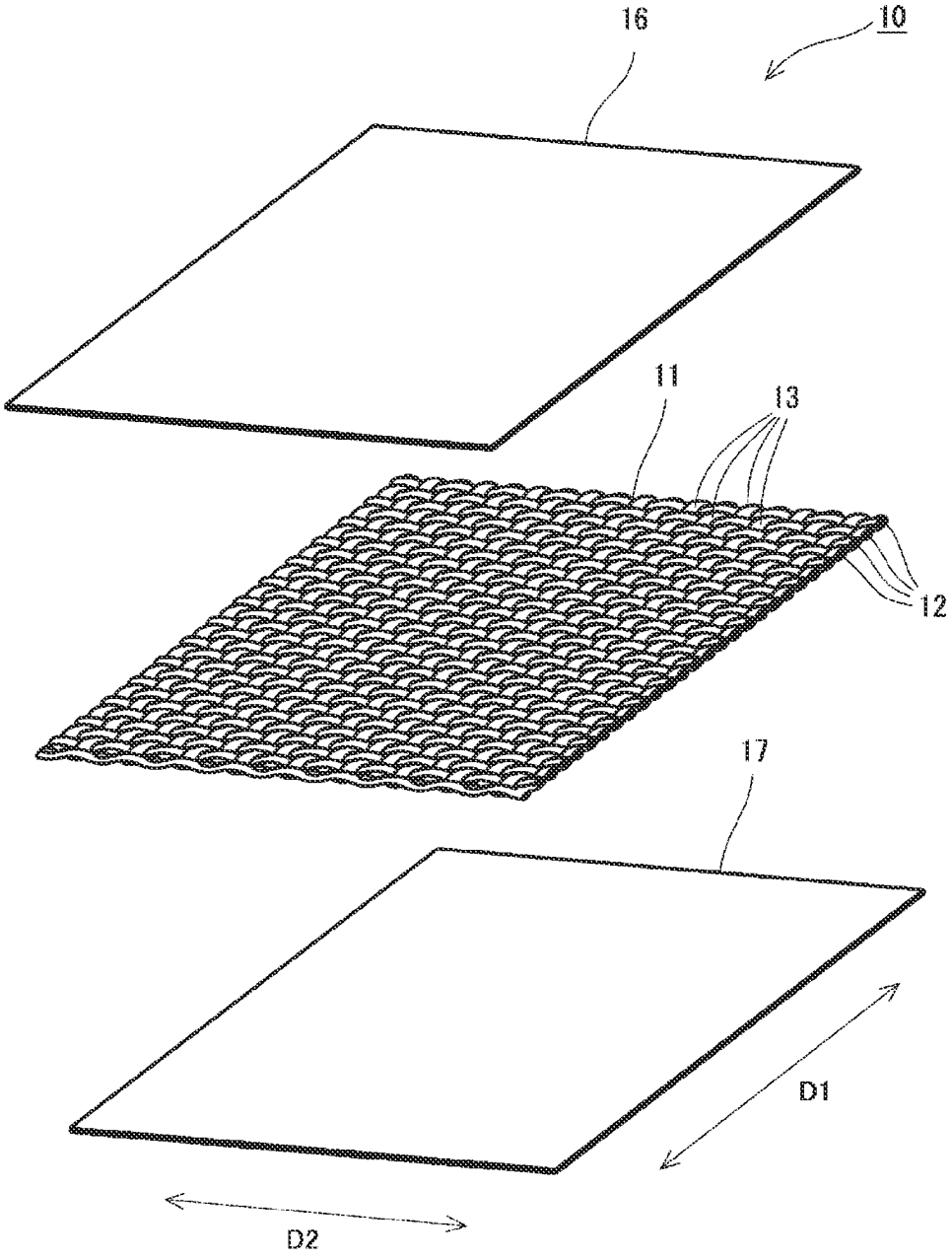

FIG.3

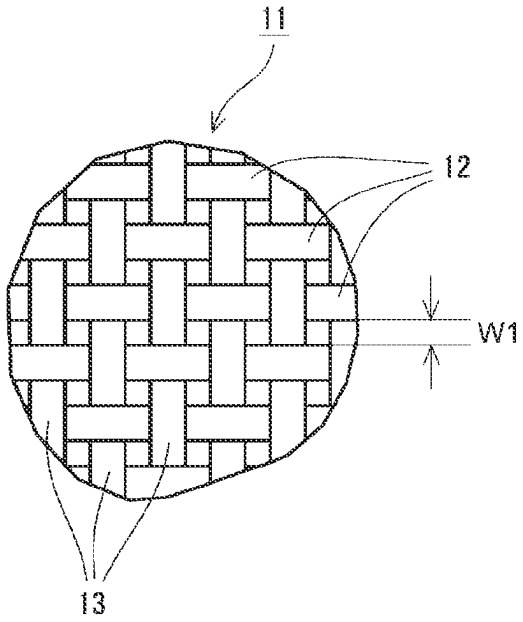

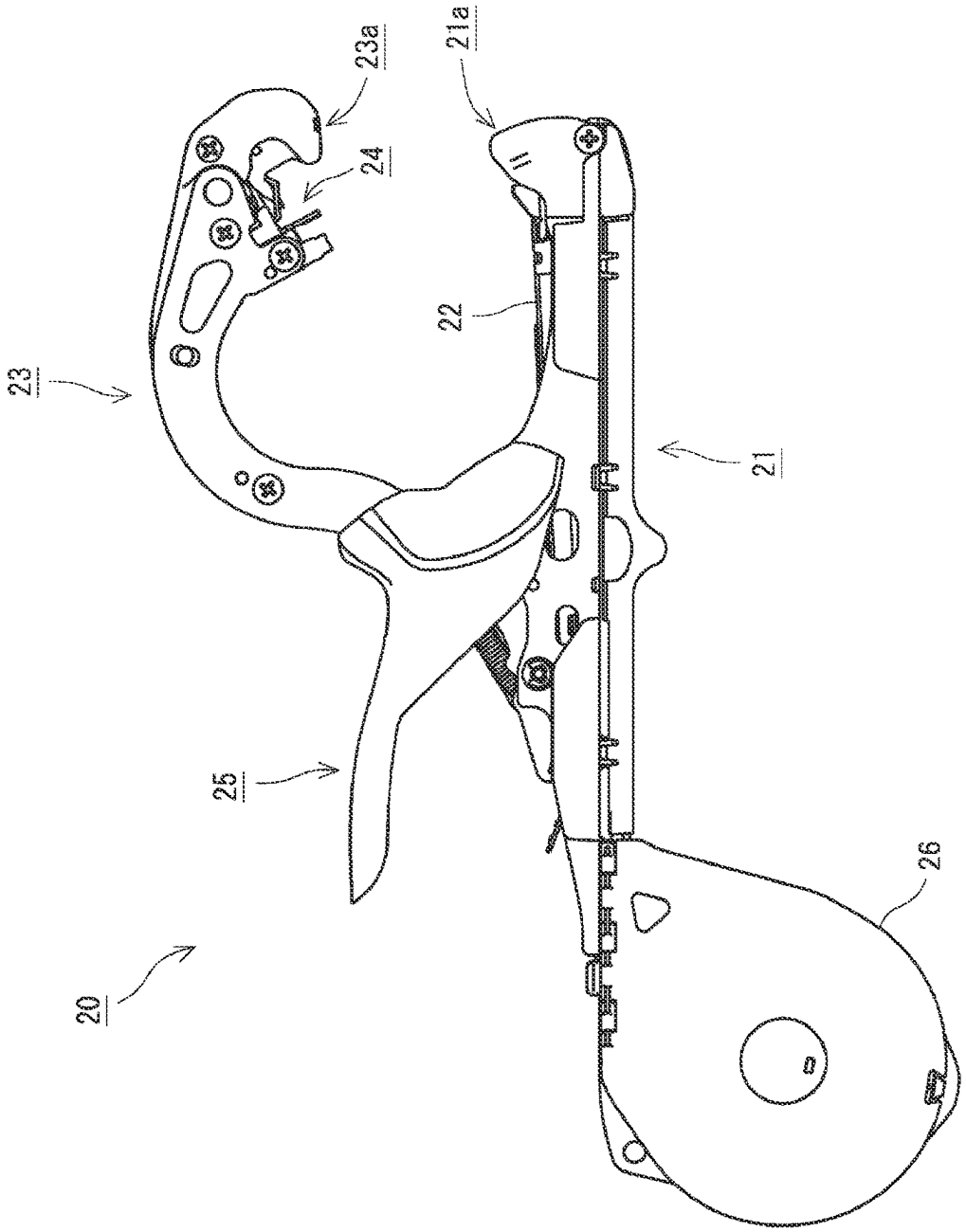

FIG.4

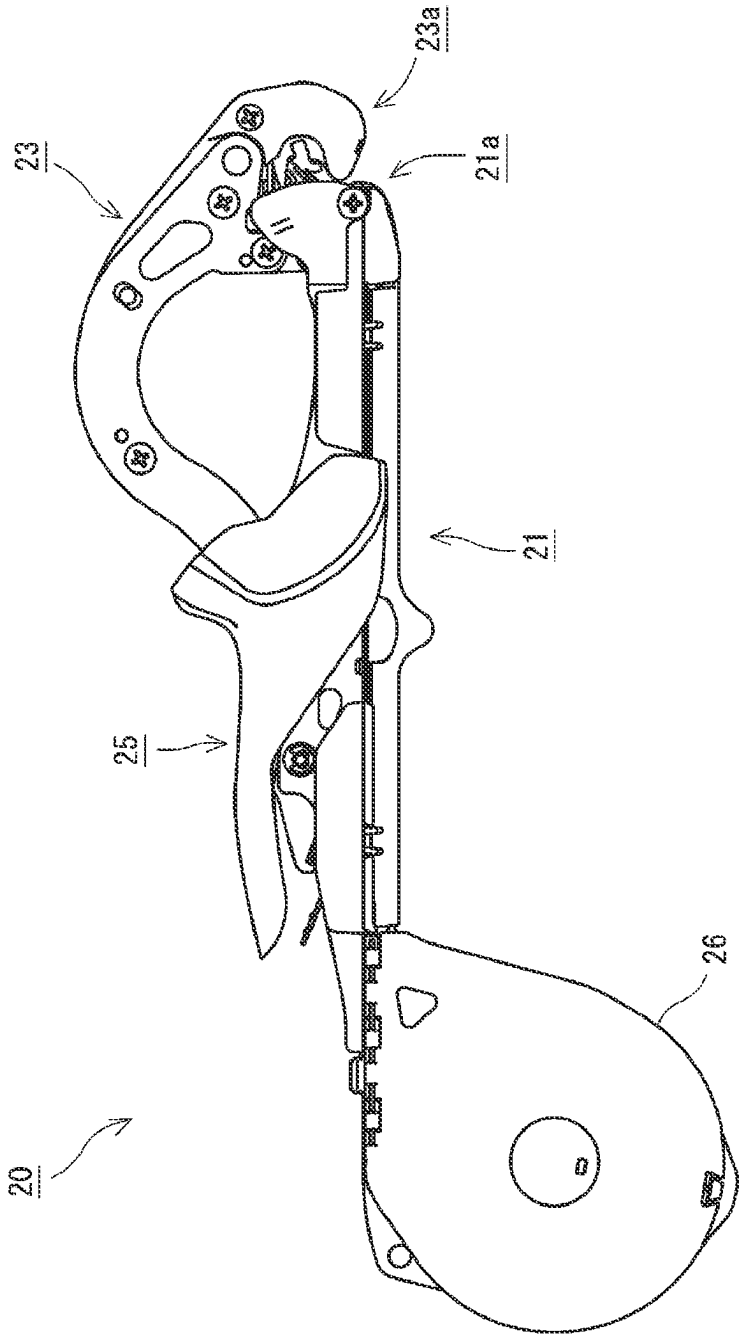

FIG.5

FIG.6A

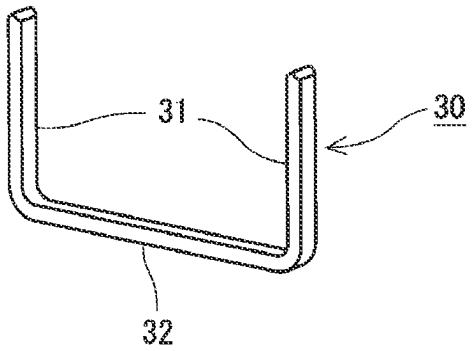

FIG.6B

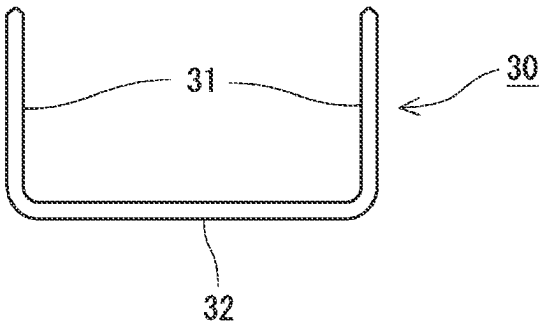

FIG.7A

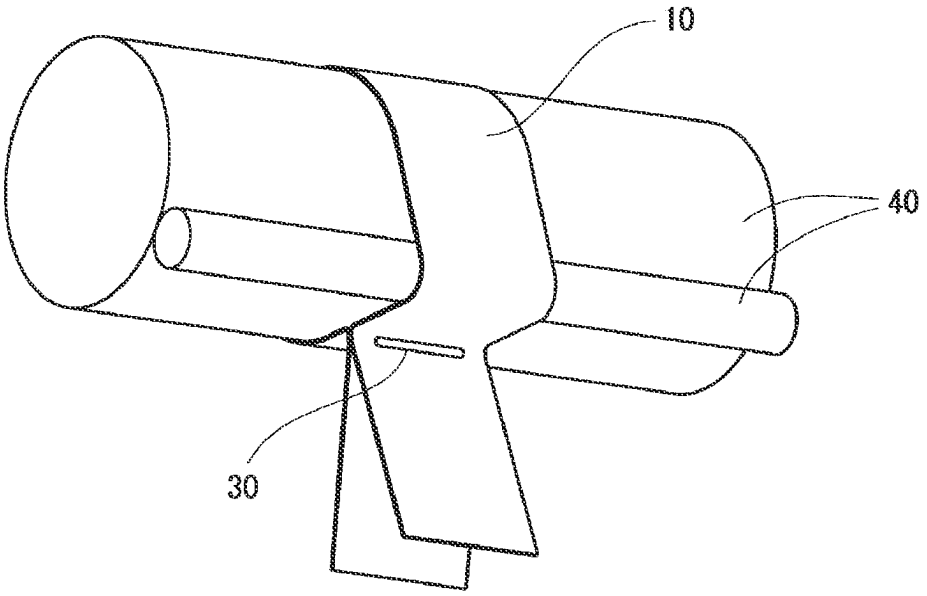

FIG7B

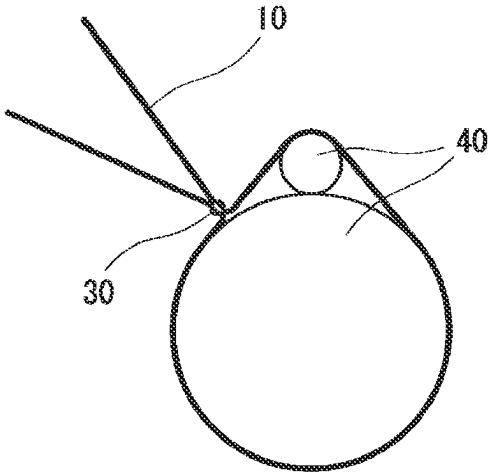

FIG.8A

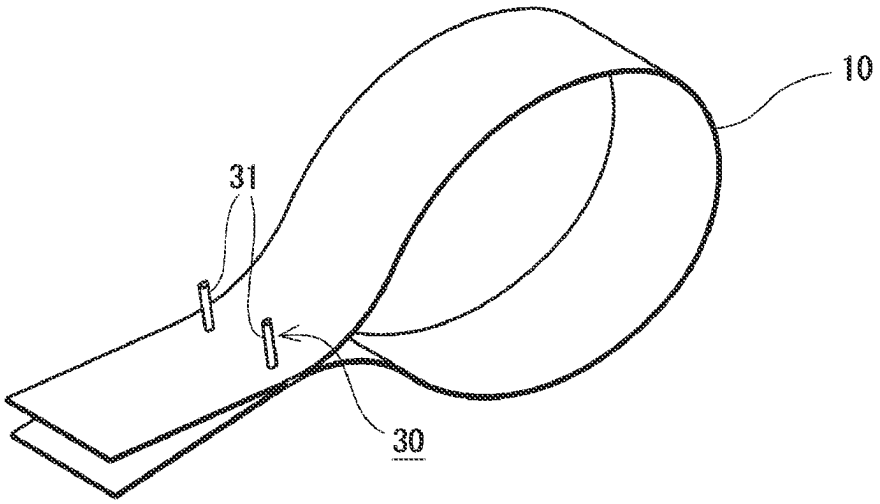

FIG.8B

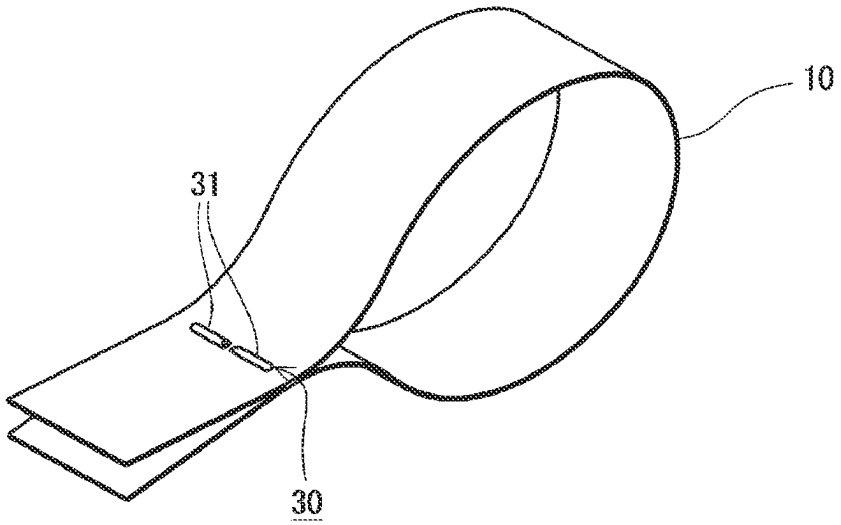

FIG.9A

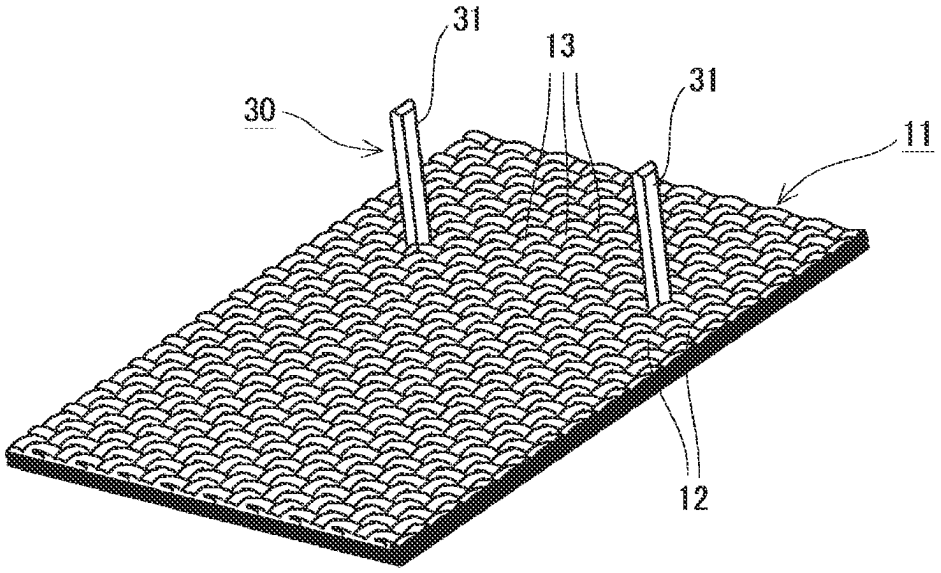

FIG.9B

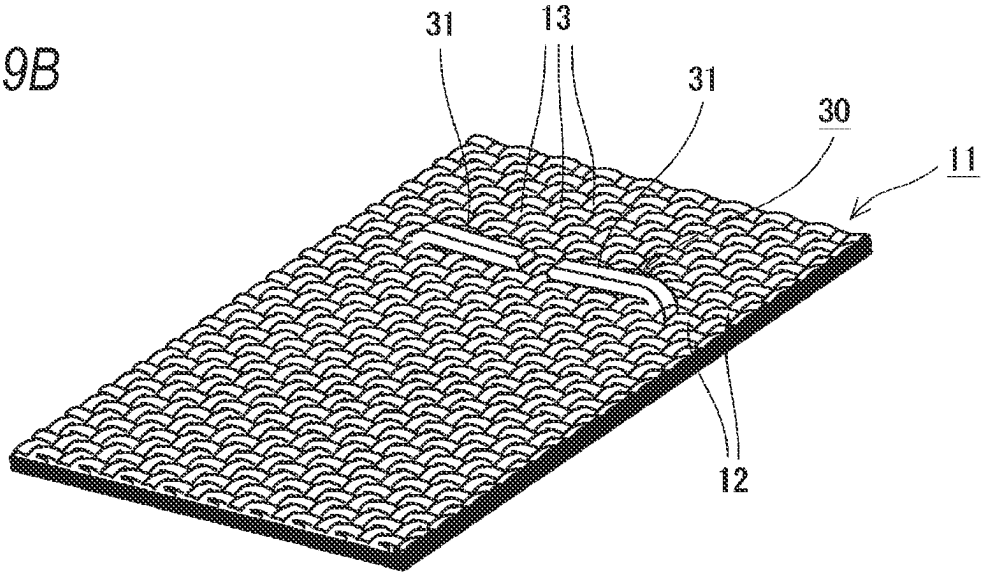

FIG.10A

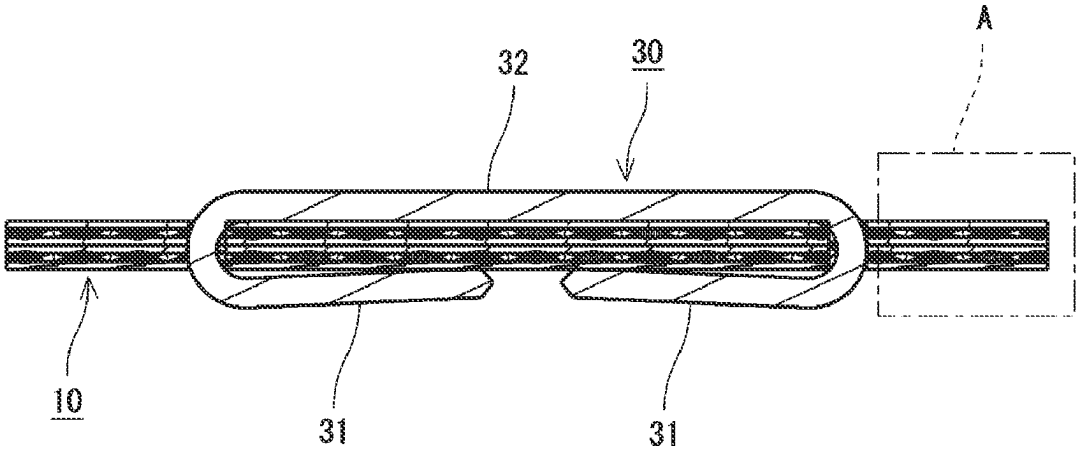

FIG.10B

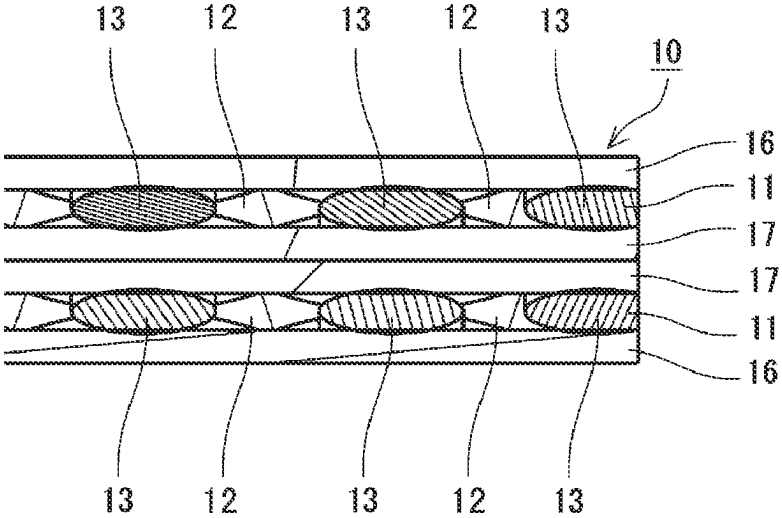

FIG.11A

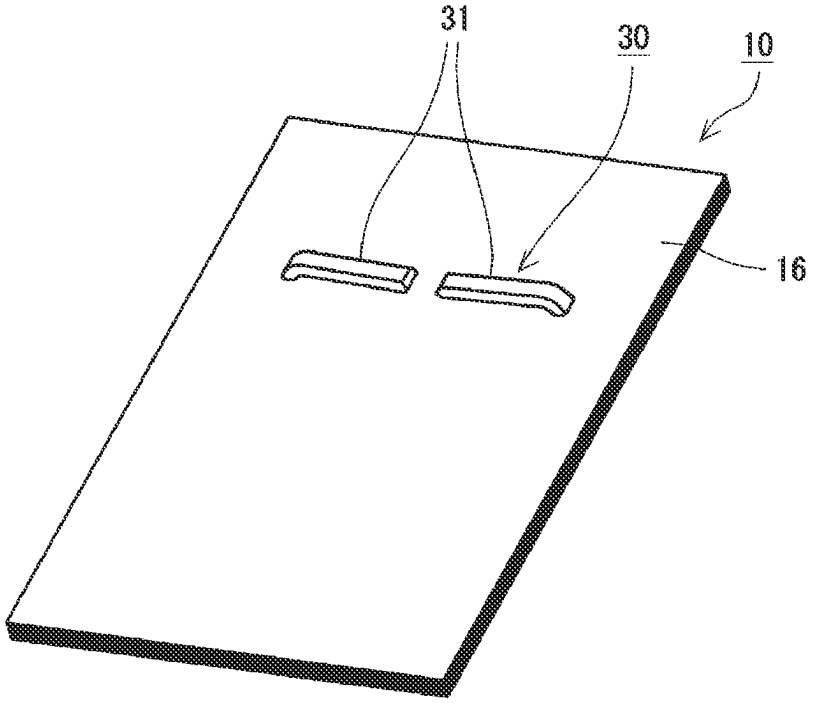

FIG.11B

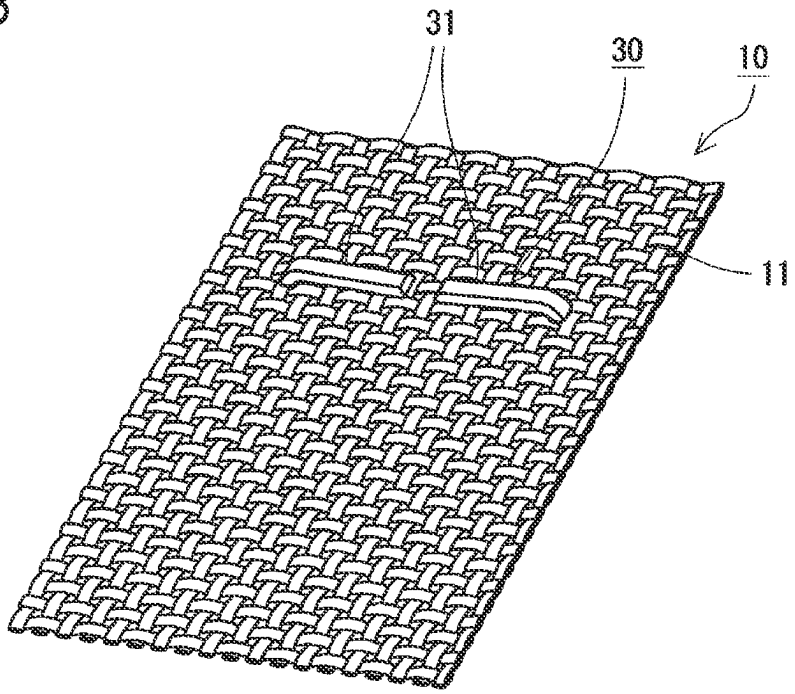

FIG.12A

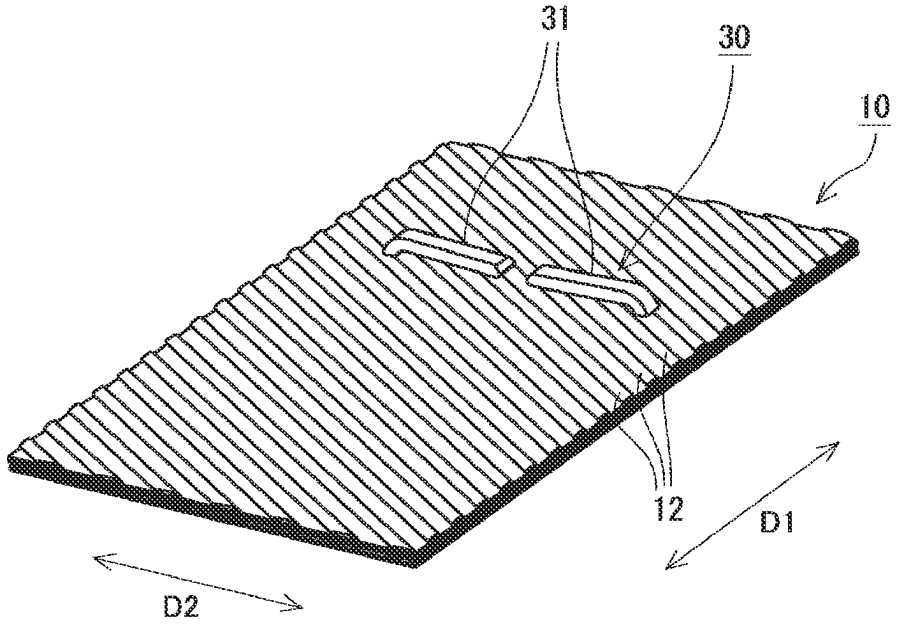

FIG.12B

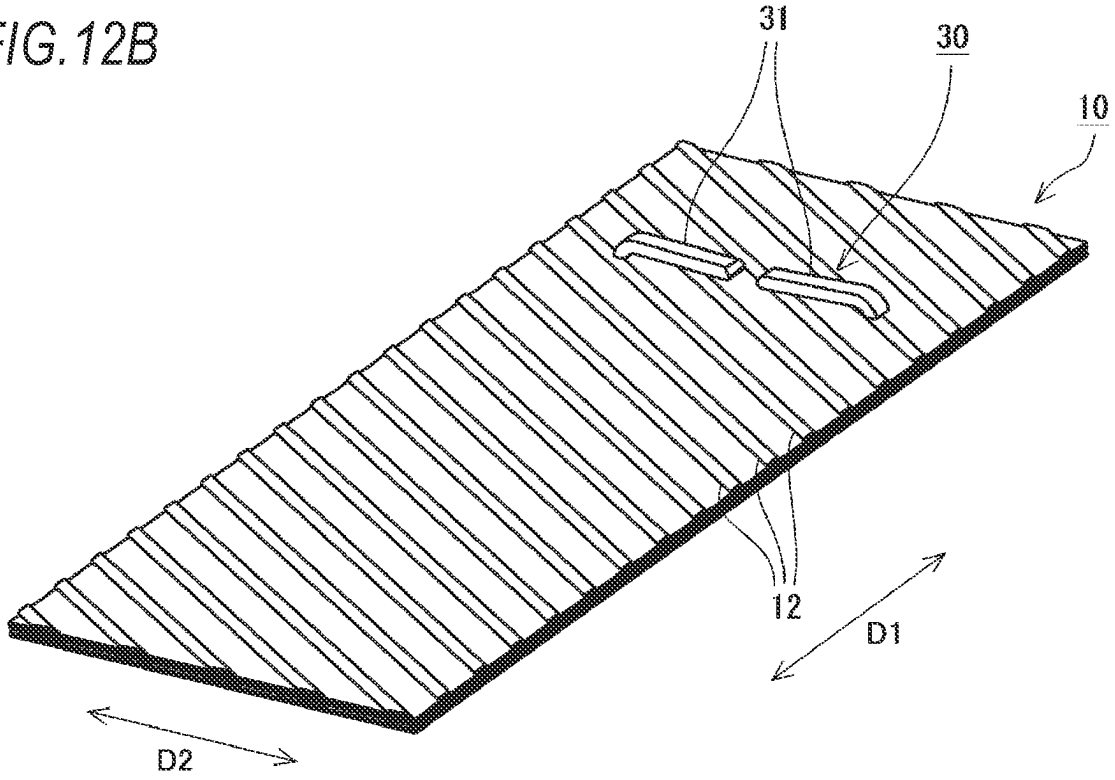

FIG.13A

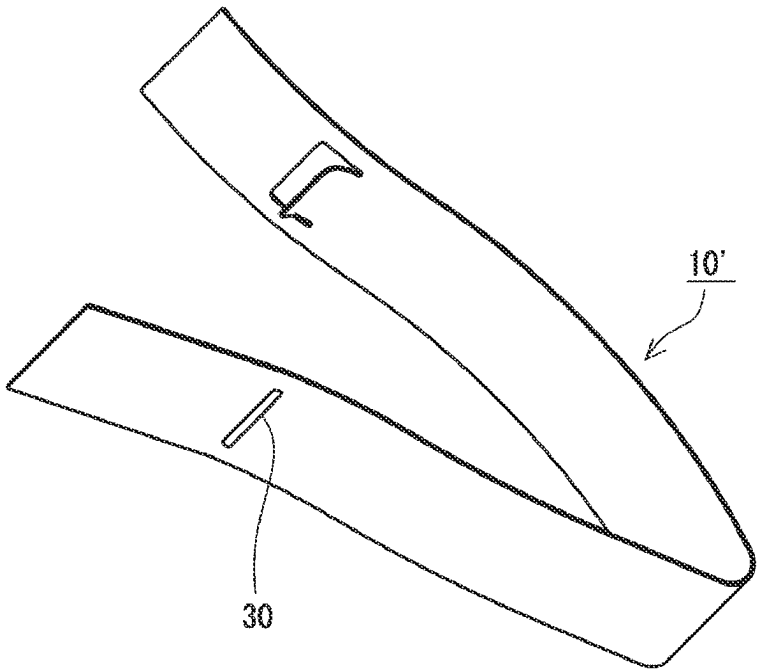

FIG.13B

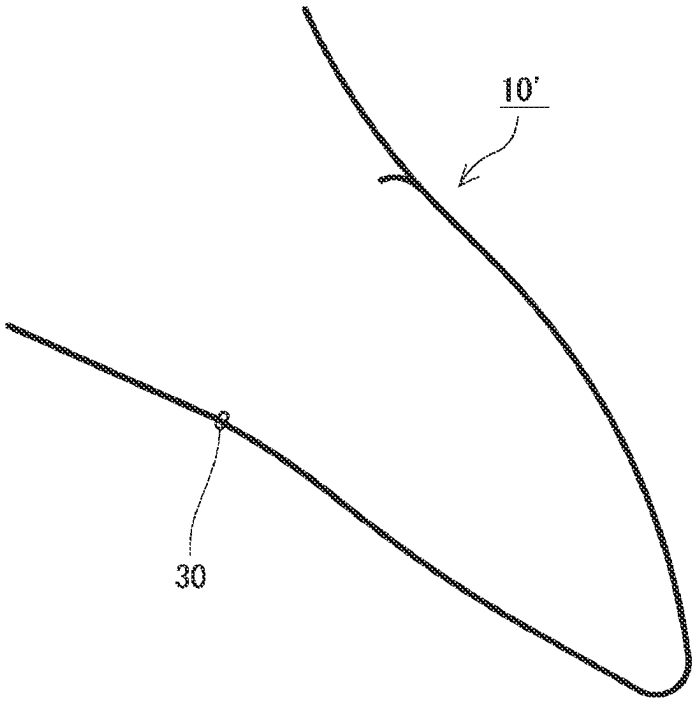

FIG.14

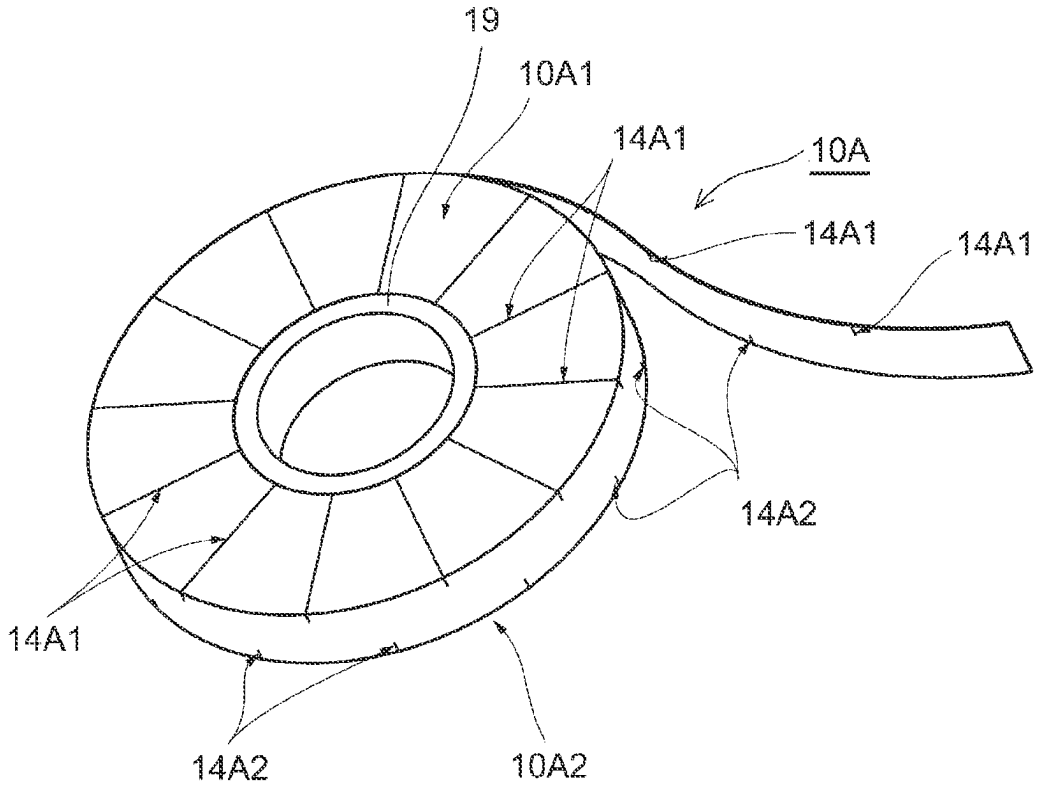

FIG.15A

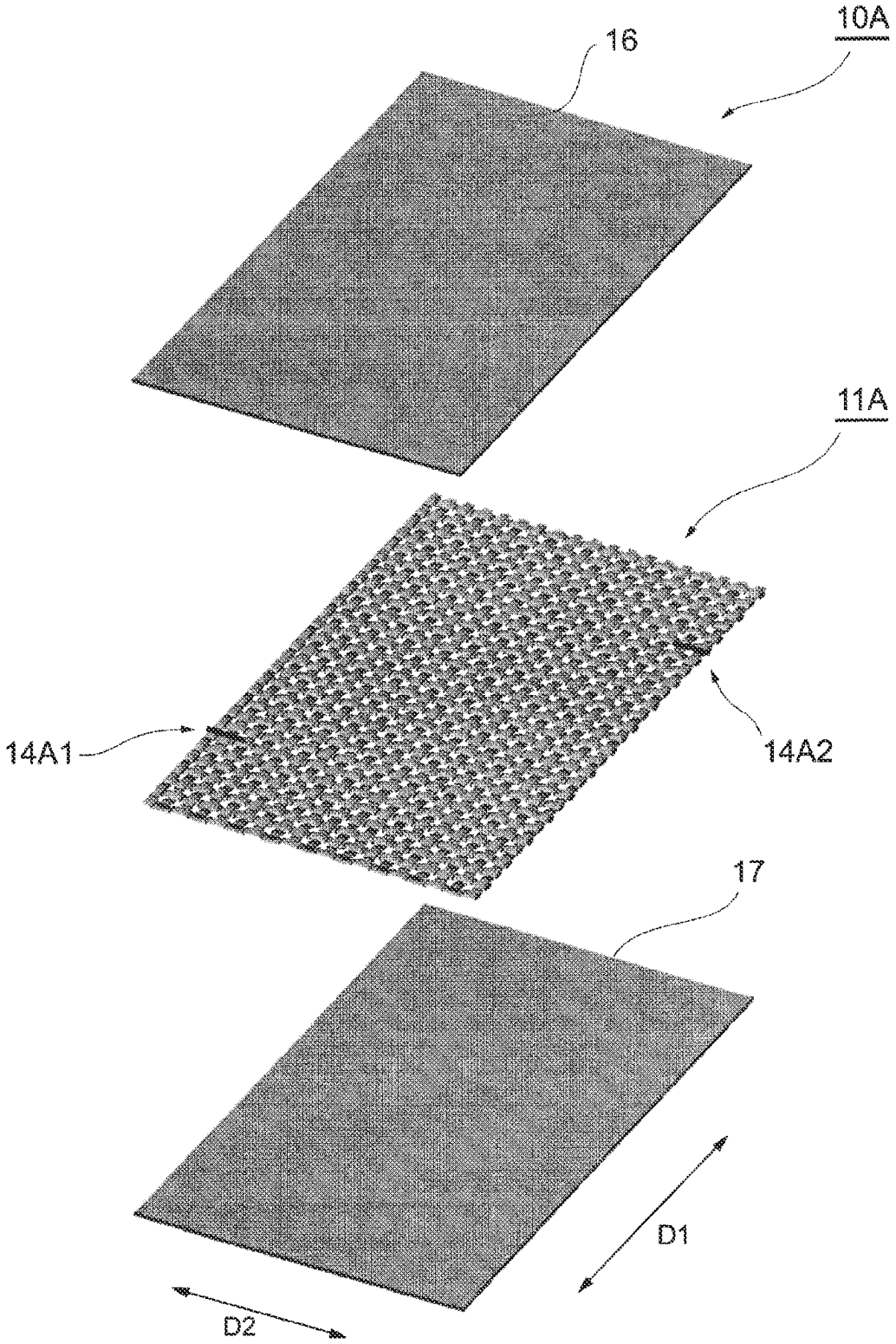

FIG.15B

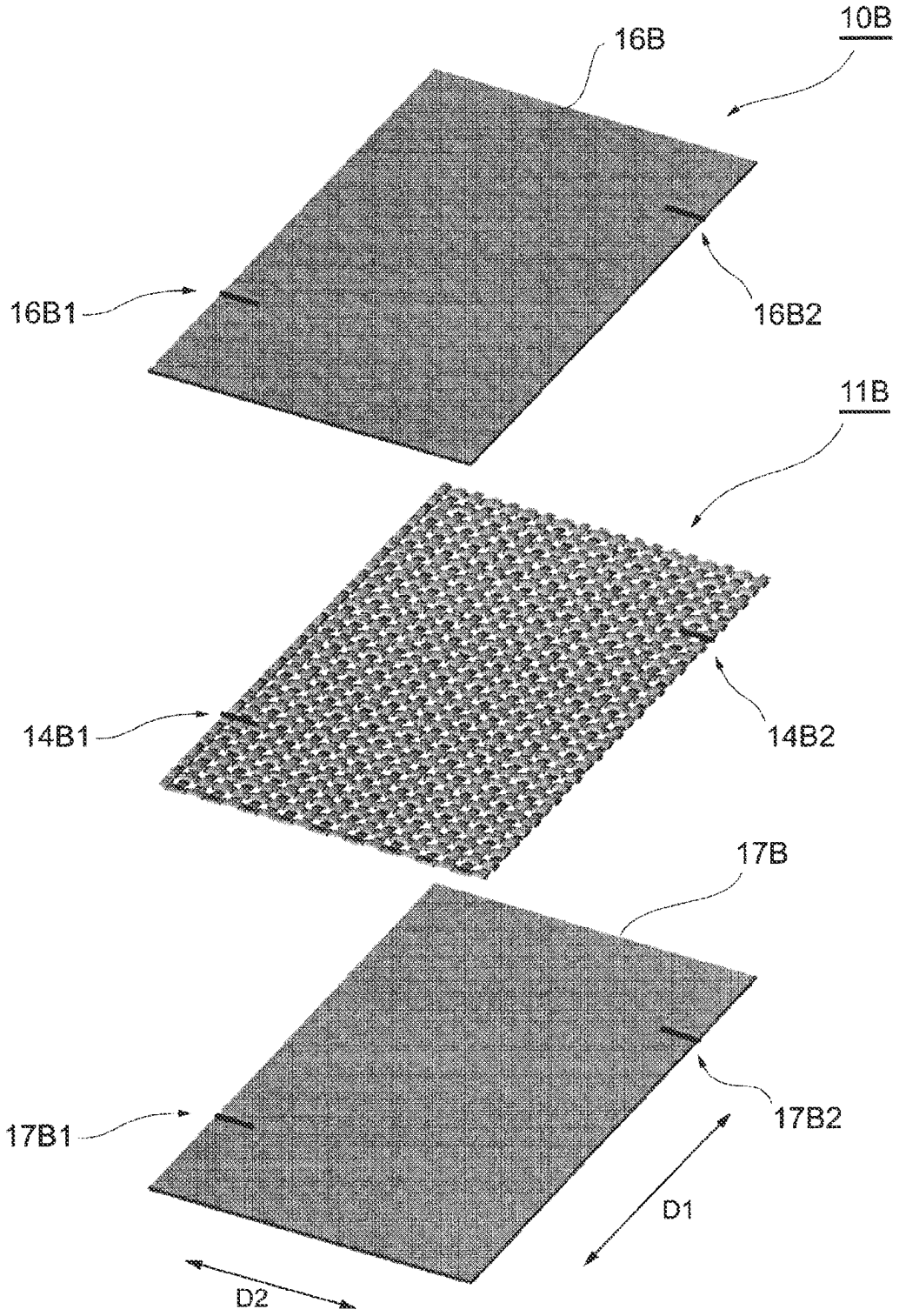

FIG.16A

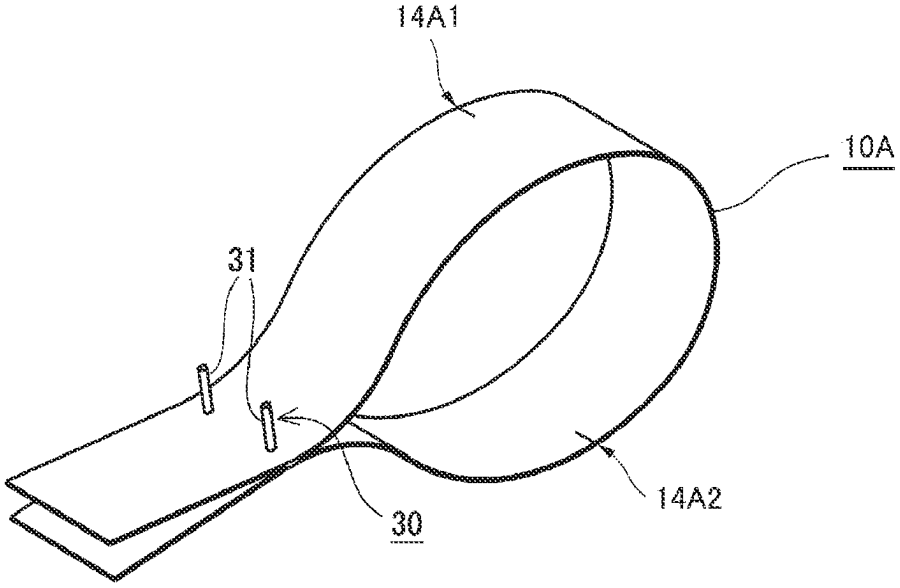

FIG.16B

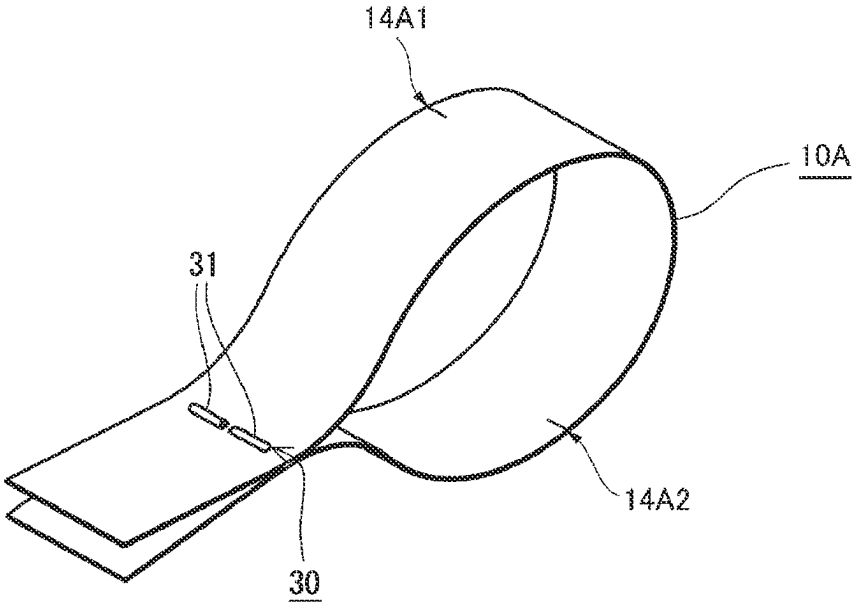

FIG.17A

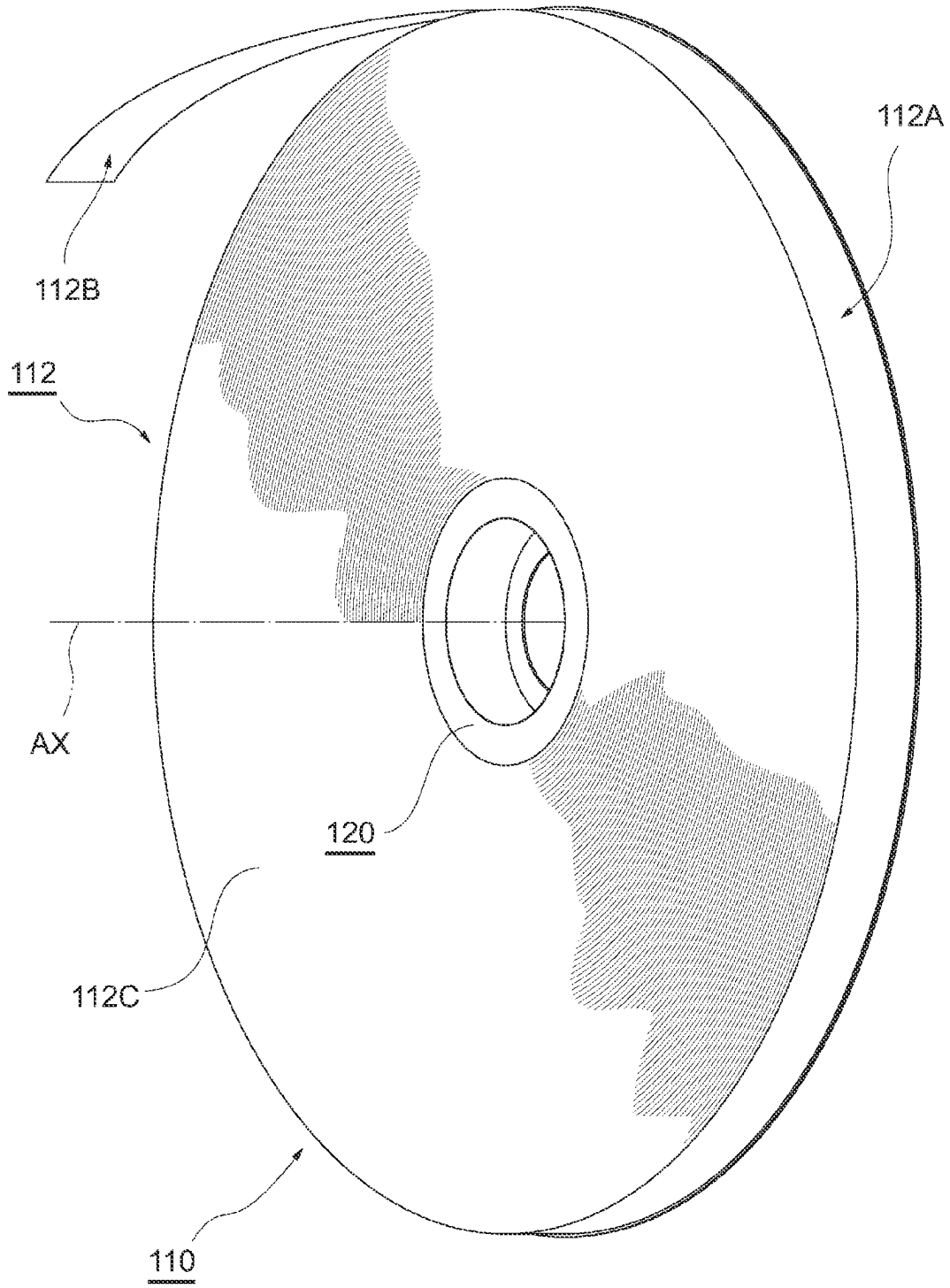

FIG.17B

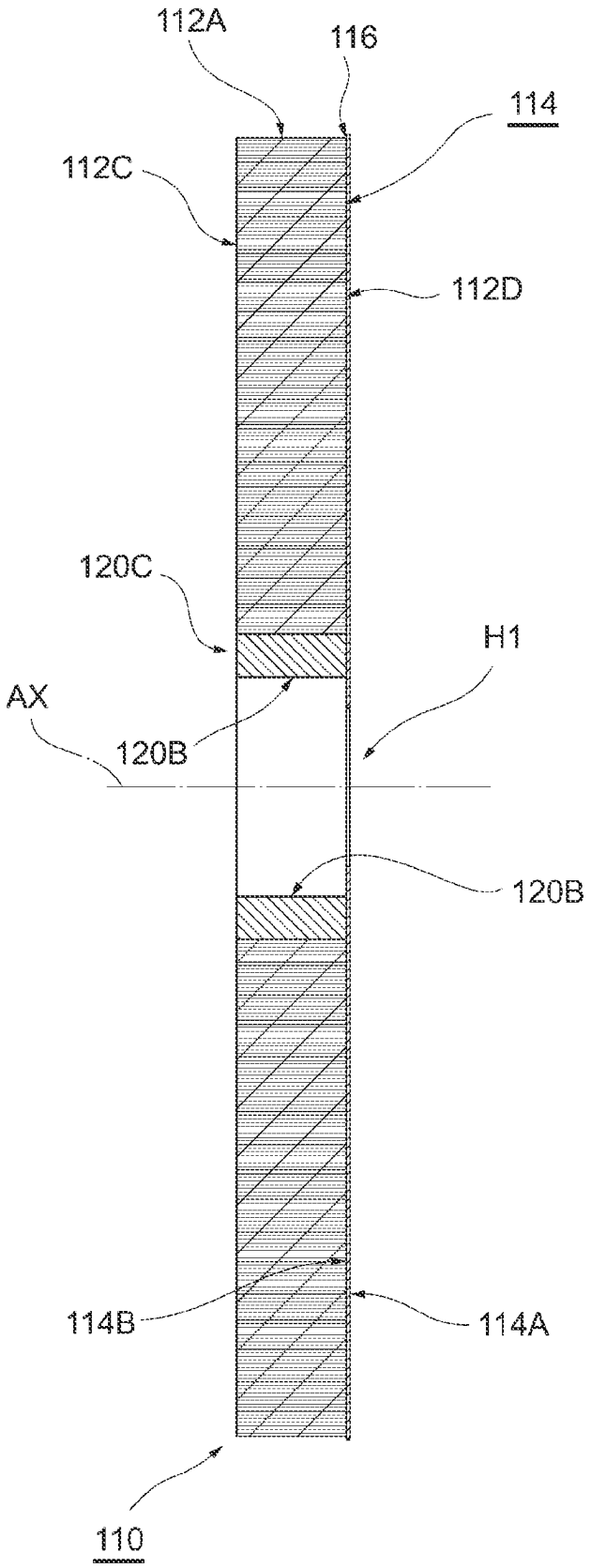

FIG.17C

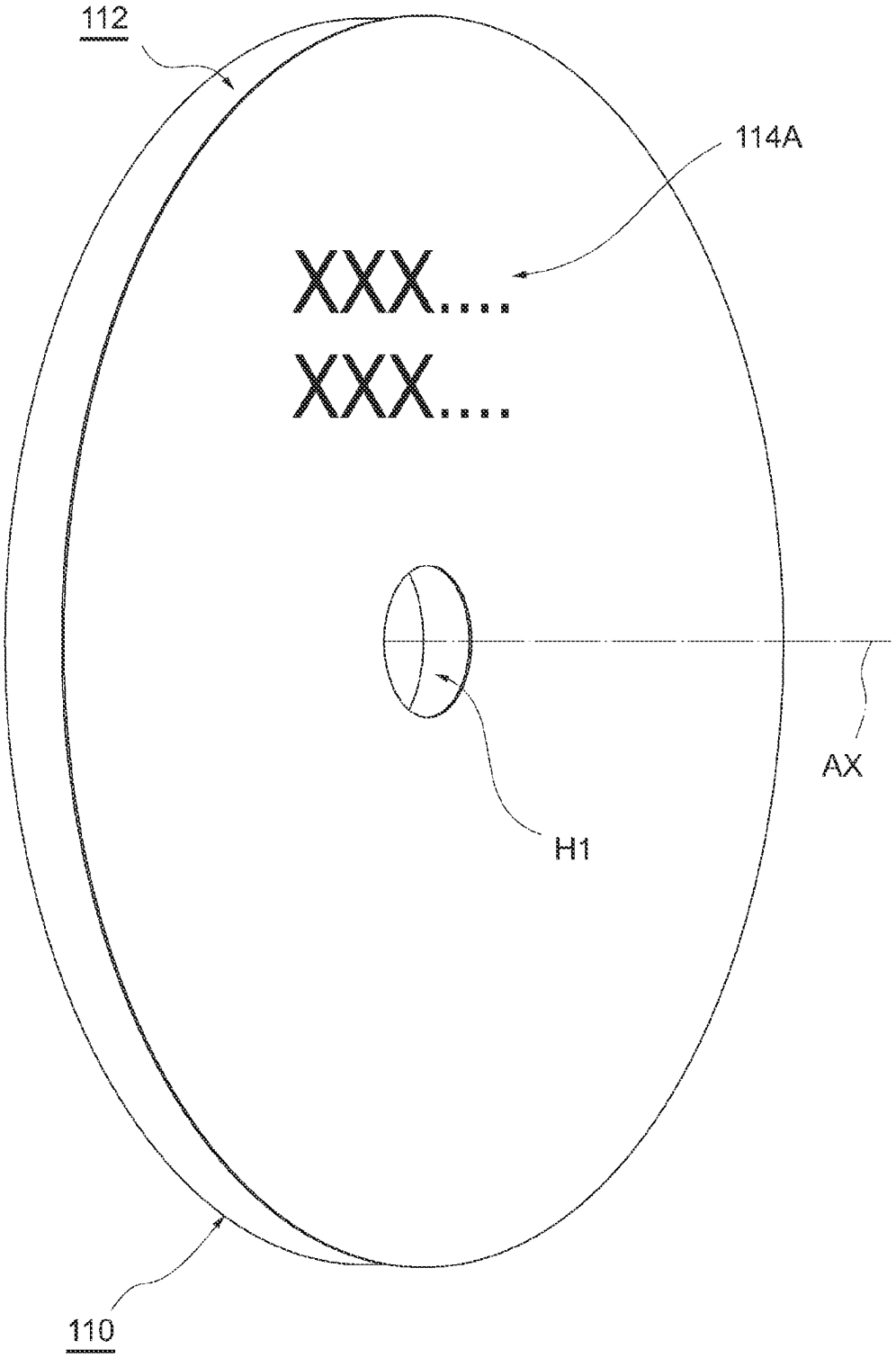

FIG.17D

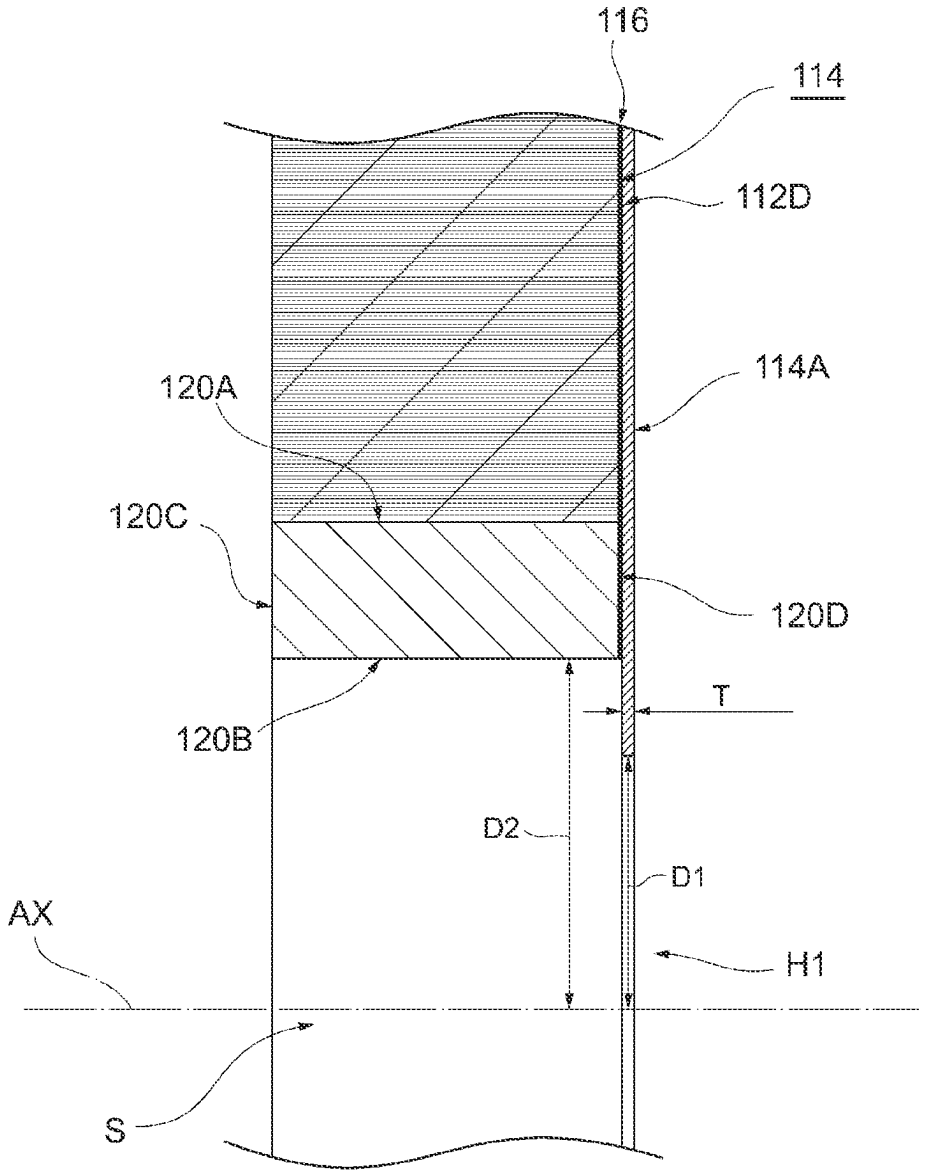

FIG.17E

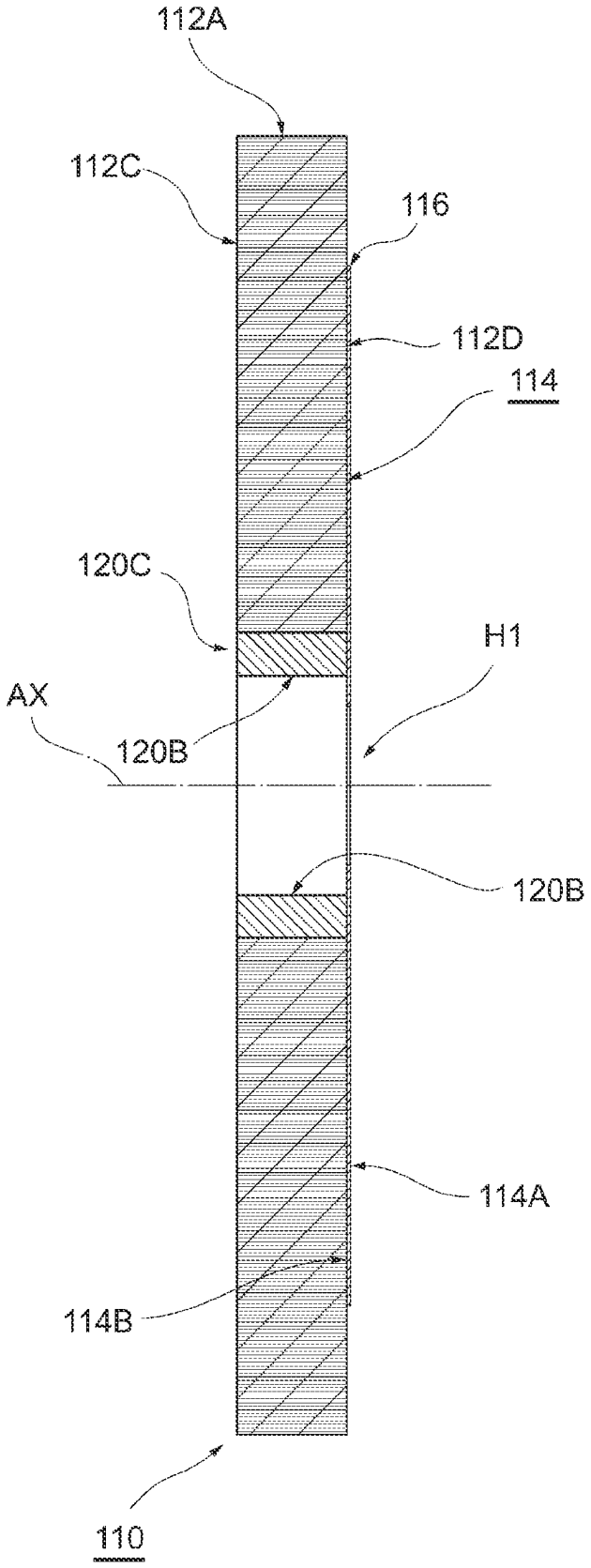

FIG.18

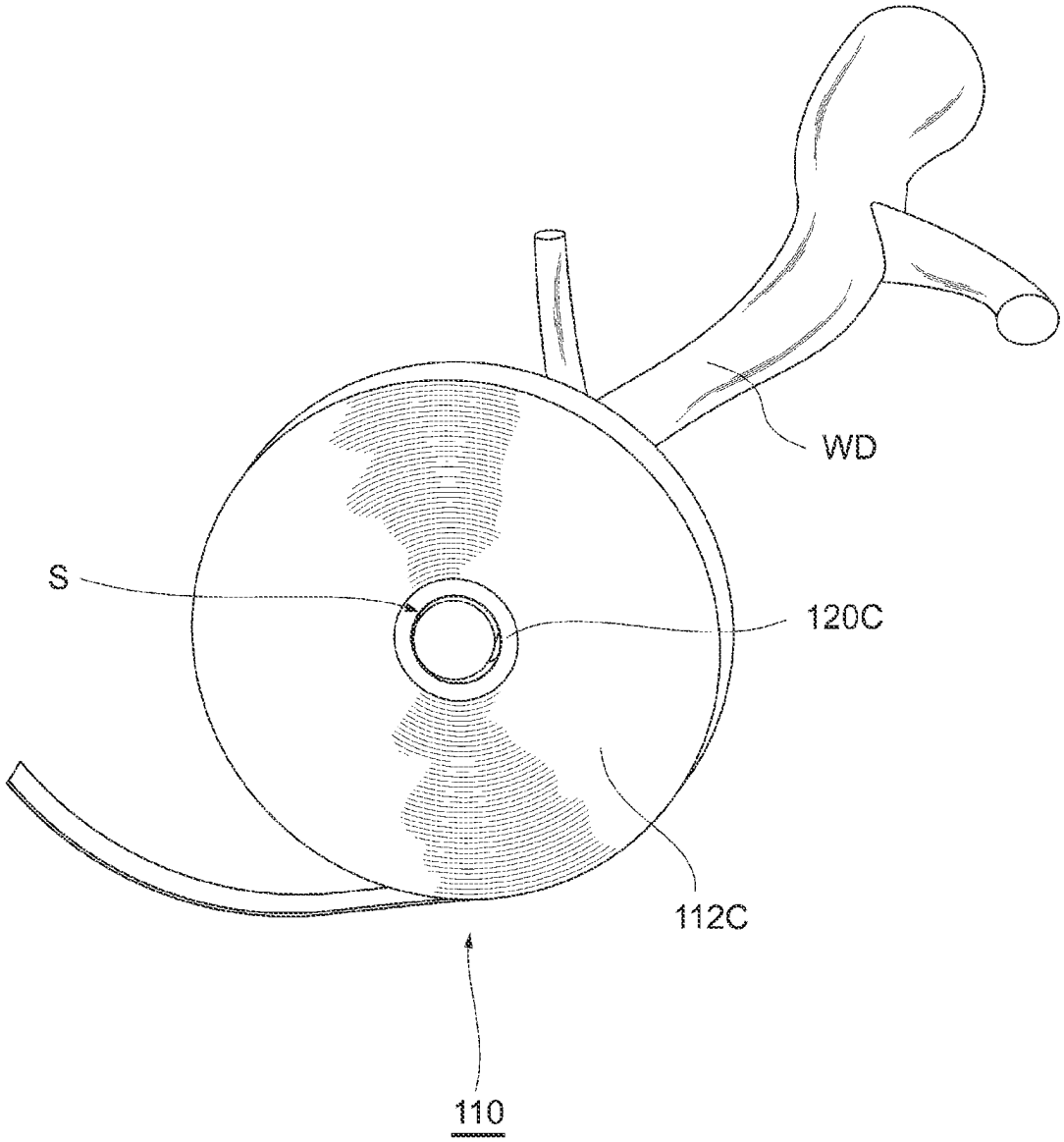

FIG.19

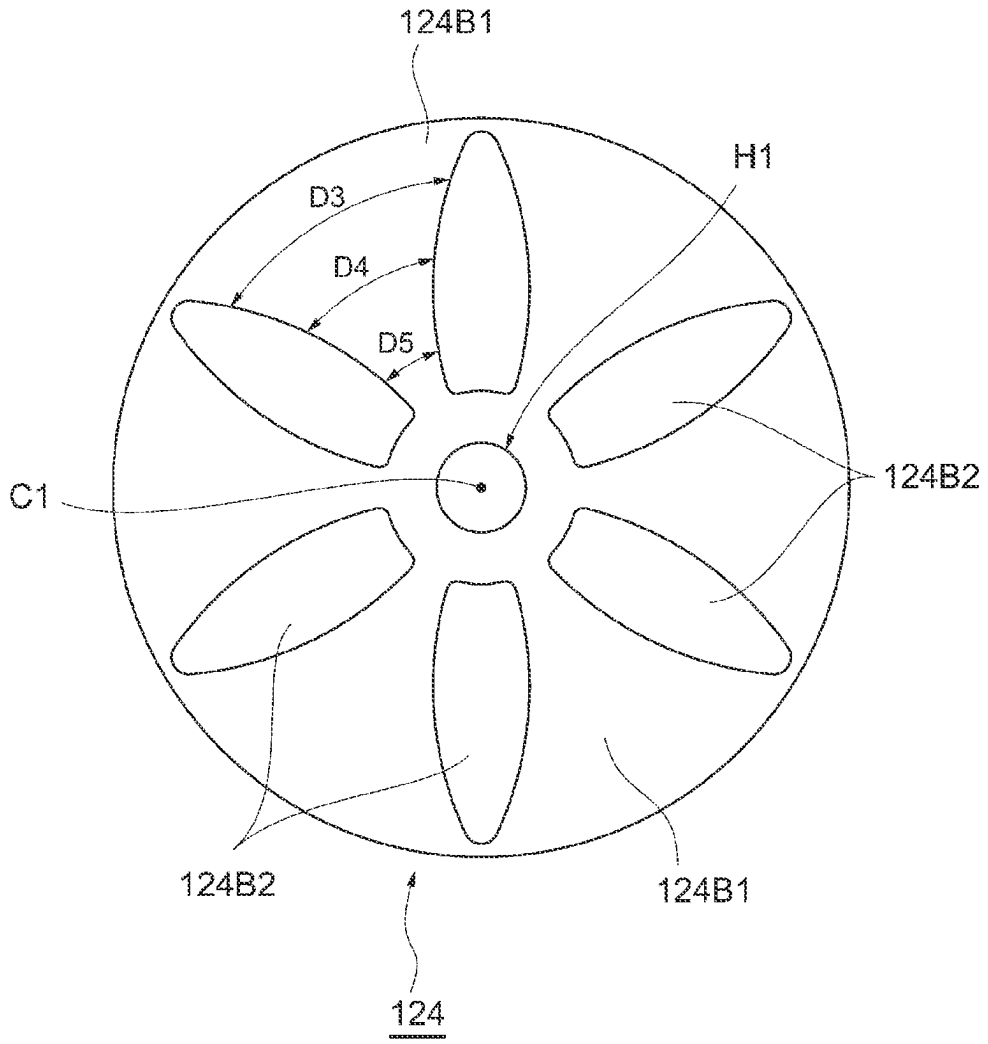

FIG.20A

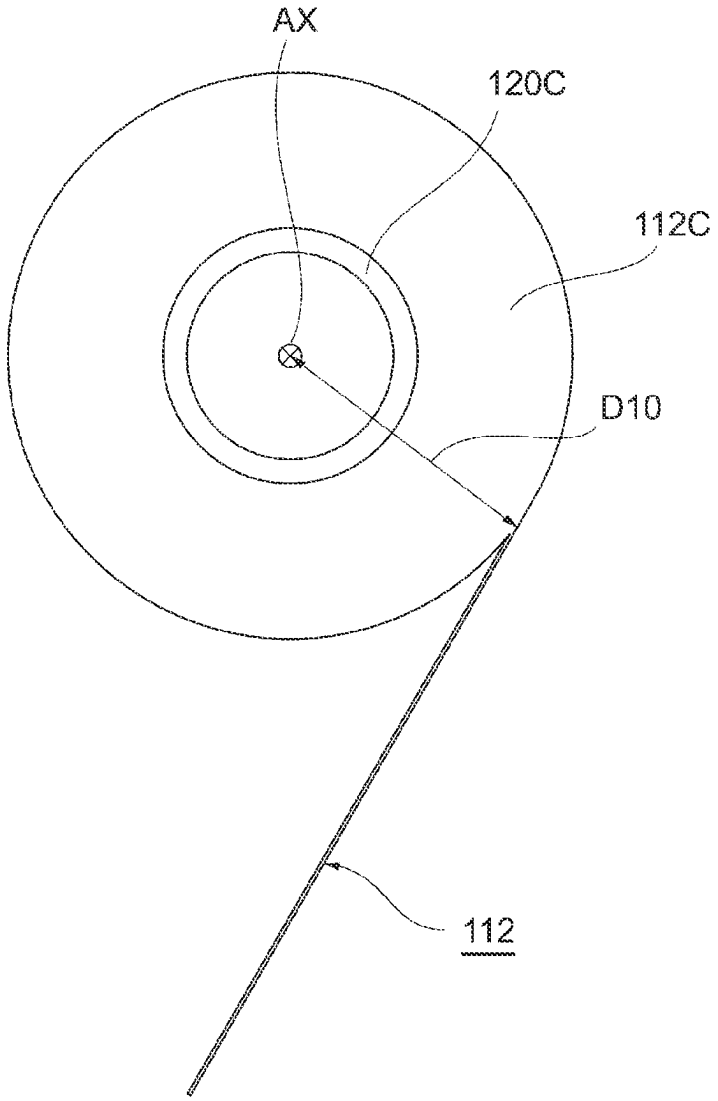

FIG.20B

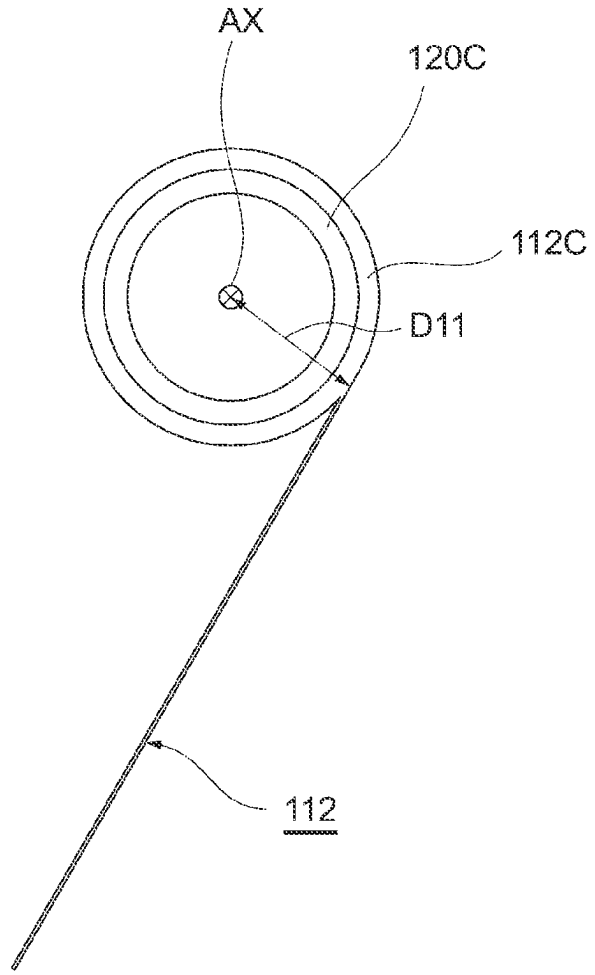

FIG.21A

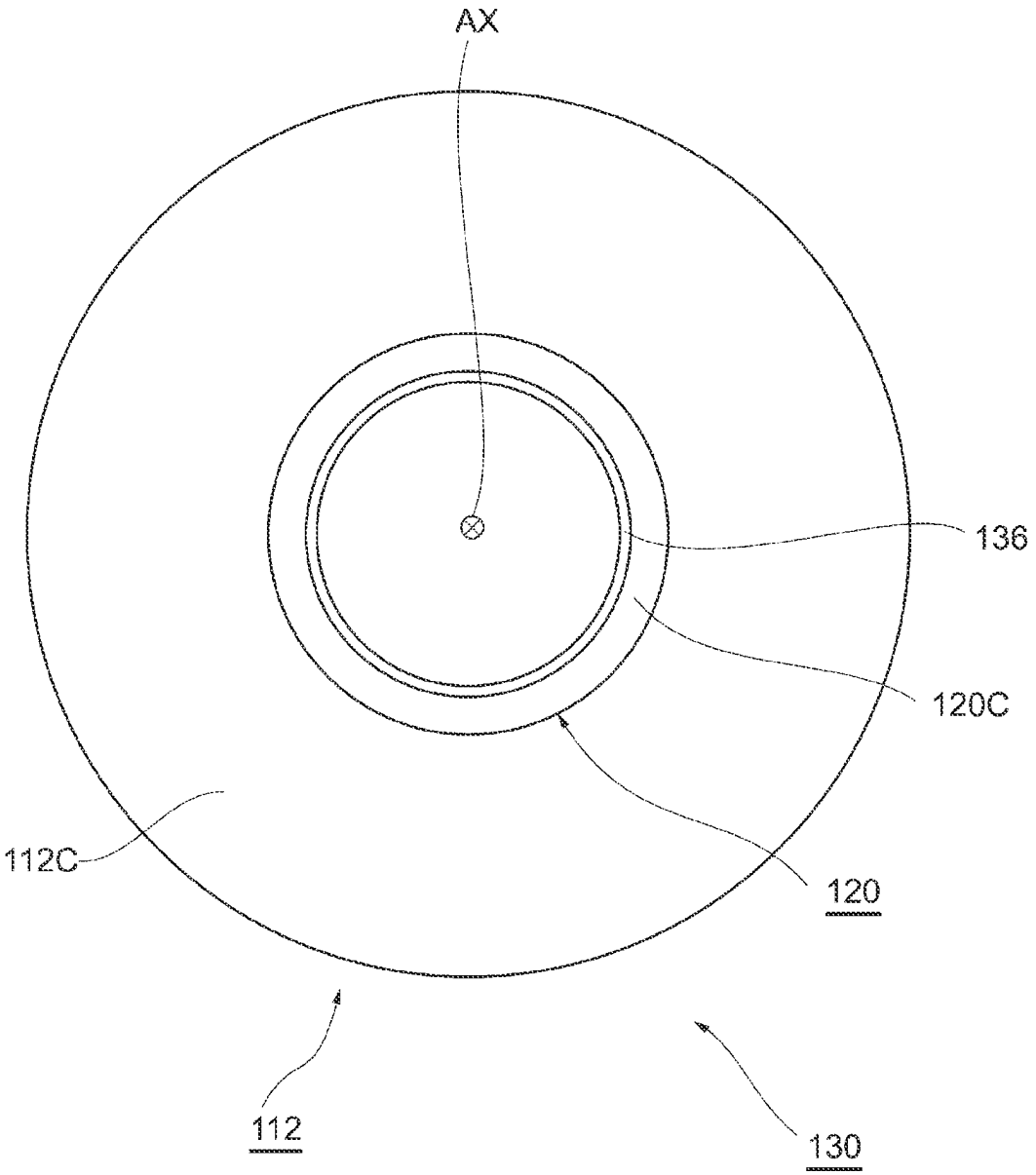

FIG.21B

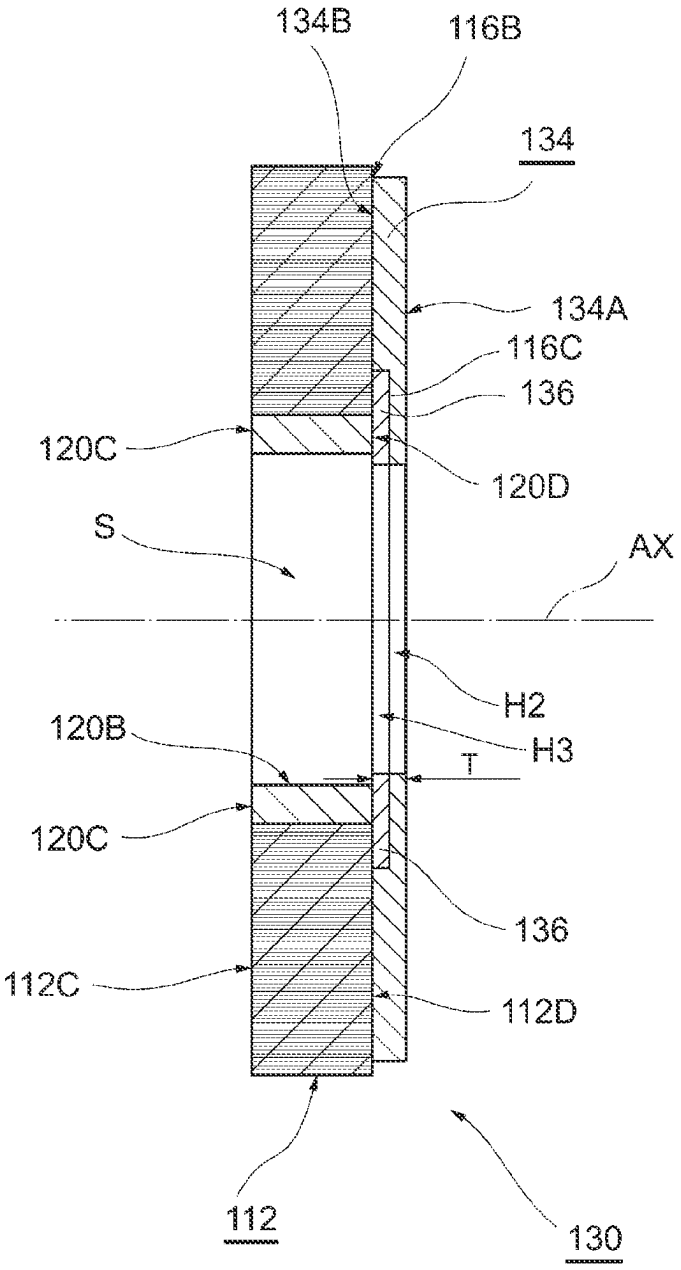
134B
116B
134
134A
116C
136
120C
120D
S
AX
H2
H3
120B
T
120C
136
112C
112D
112
130

FIG.21C

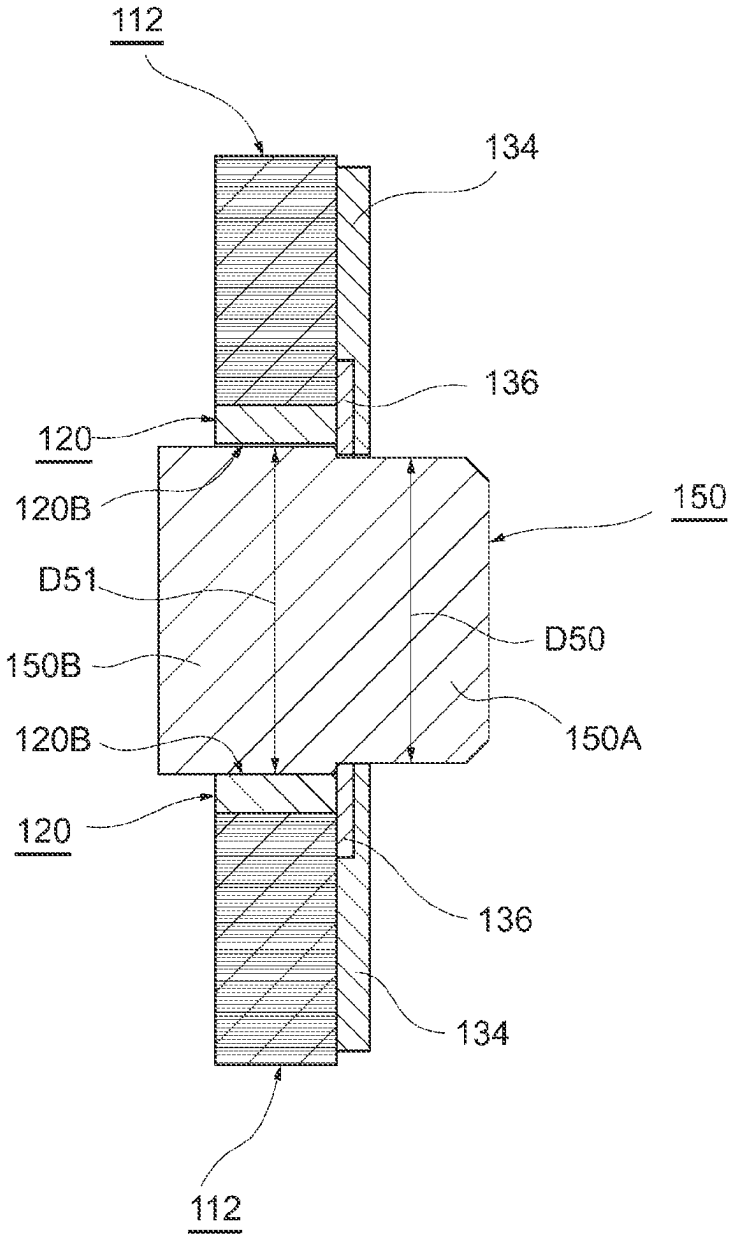

FIG. 22A

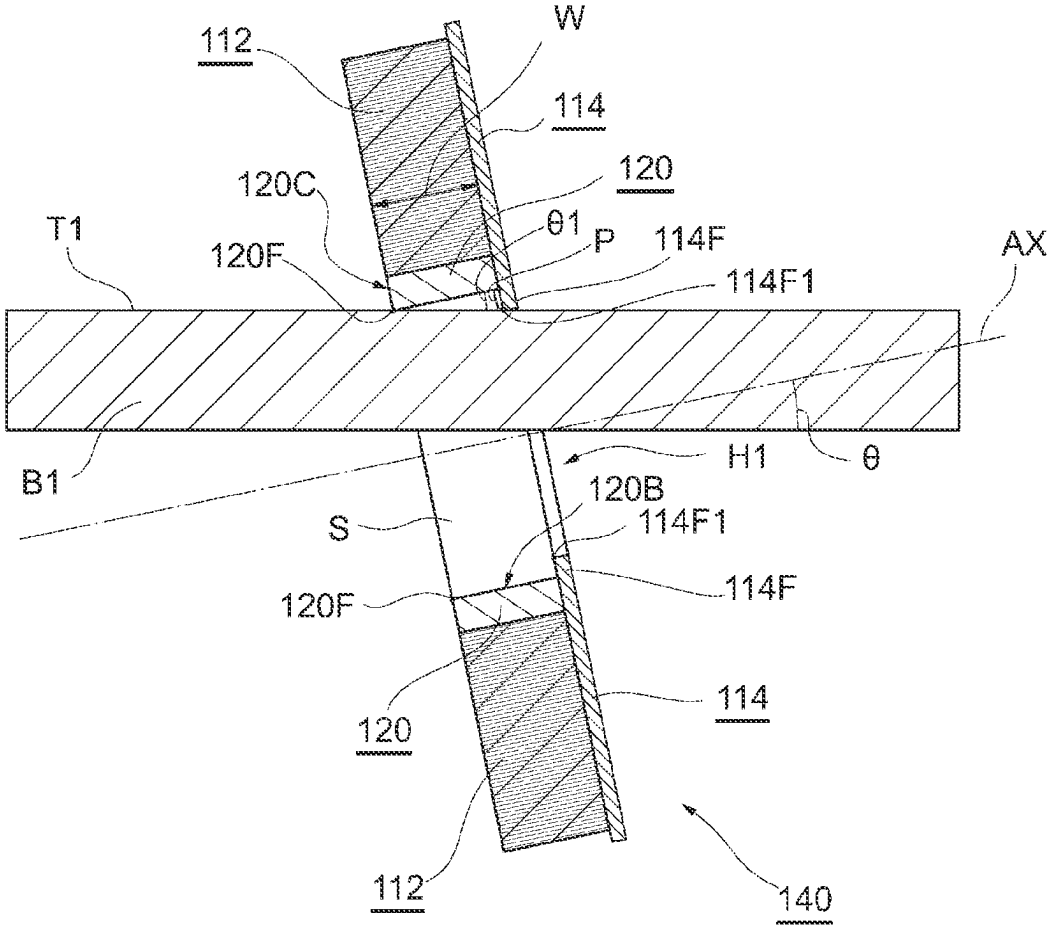
112
W
114
120
120C
θ1
P
114F
T1
120F
114F1
AX
B1
H1
θ
120B
S
114F1
114F
120F
114
120
112
140

FIG.22B

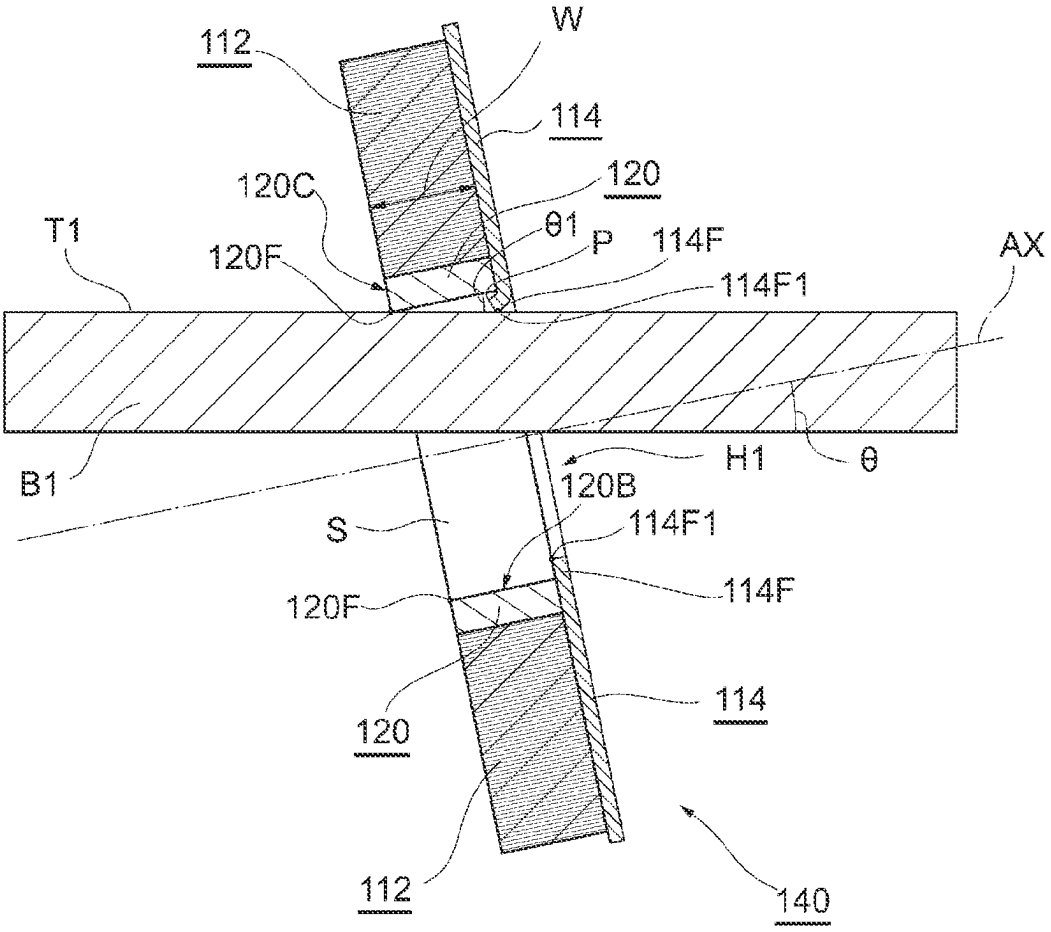
112
W
114
120
120C
θ1
P
114F
T1
120F
114F1
AX
B1
H1
θ
120B
S
114F1
120F
114F
120
114
112
140

FIG.22C

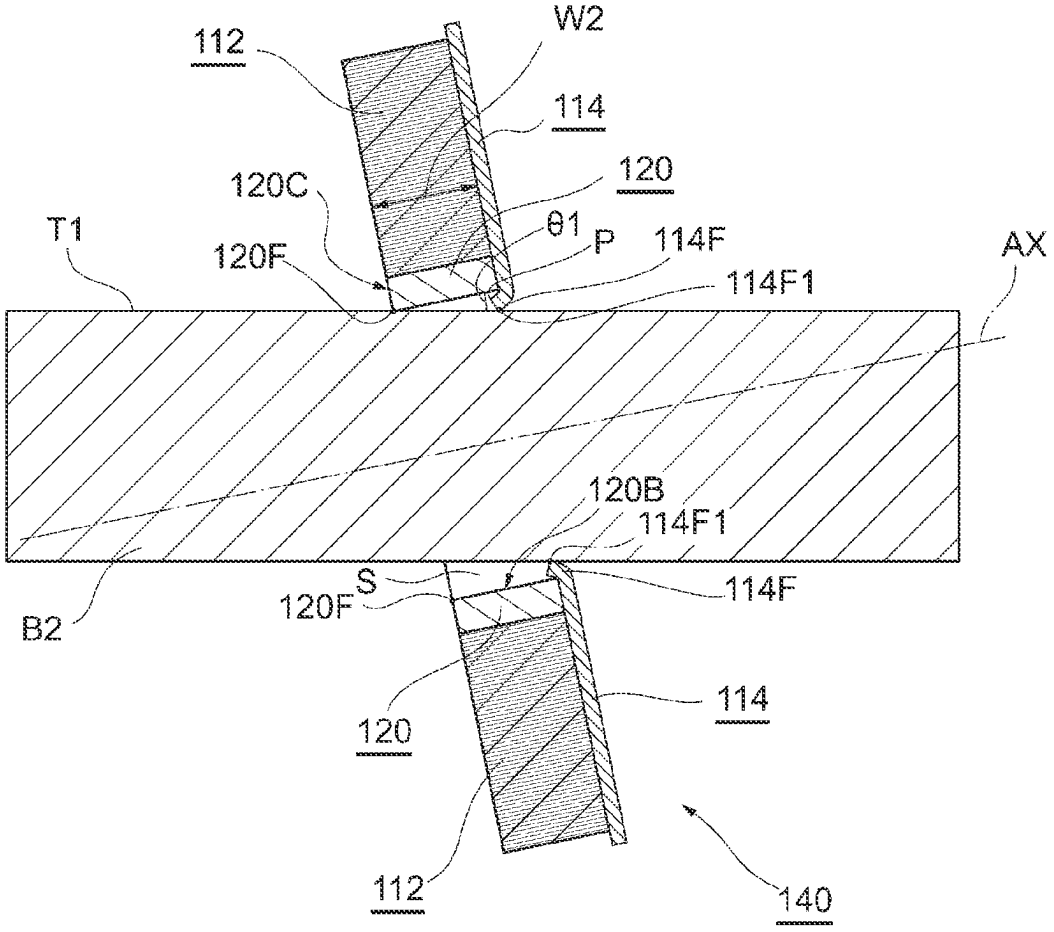
112
W2
114
120
120C
θ1
P
114F
T1
120F
114F1
AX
120B
114F1
S
114F
120F
B2
114
120
112
140

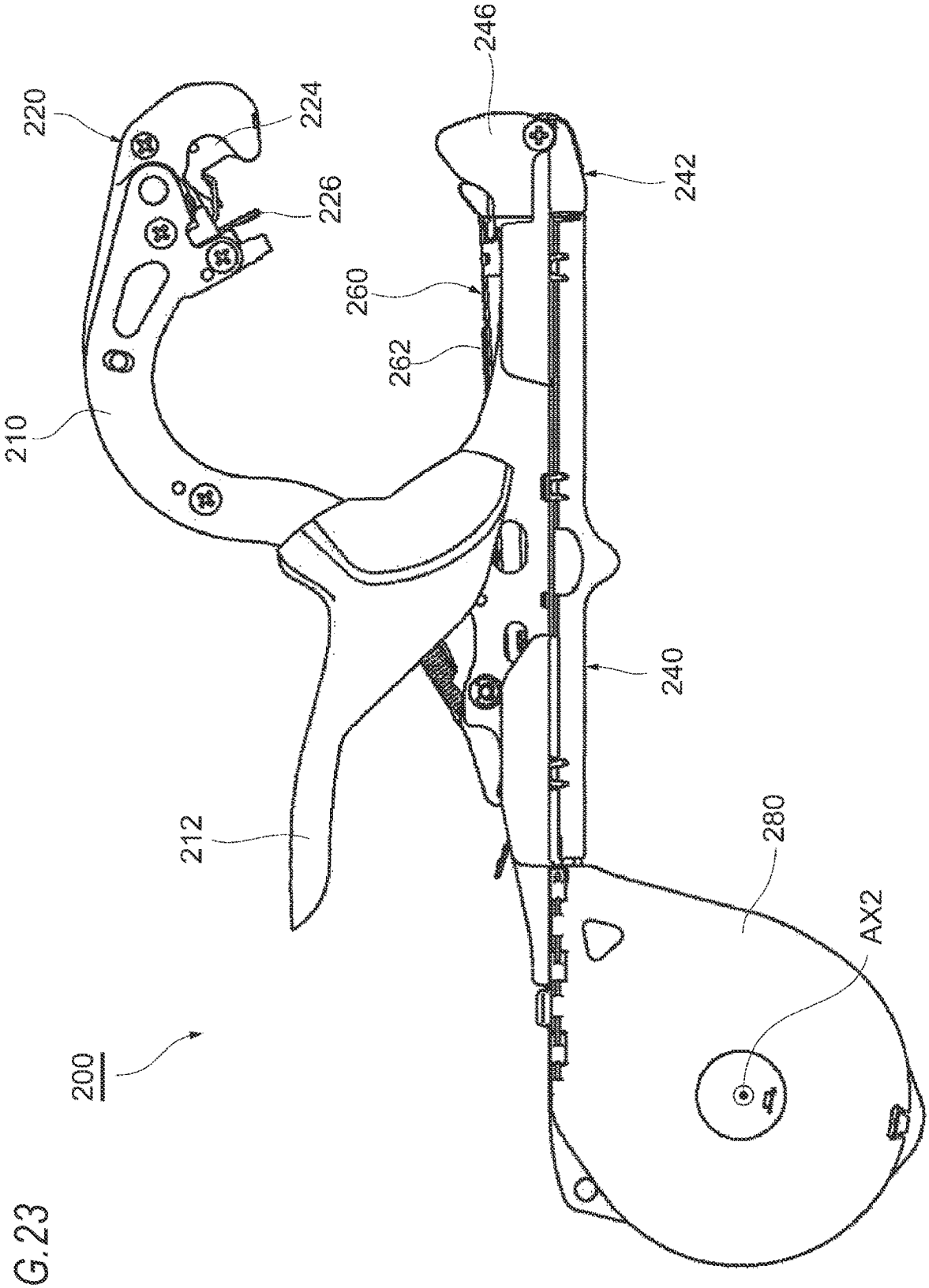

FIG.23

FIG.24A

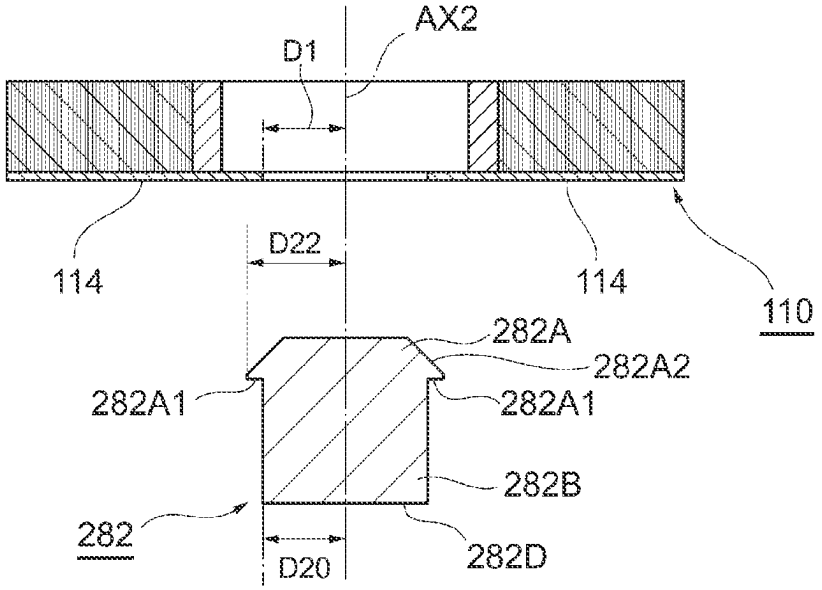

FIG.24B

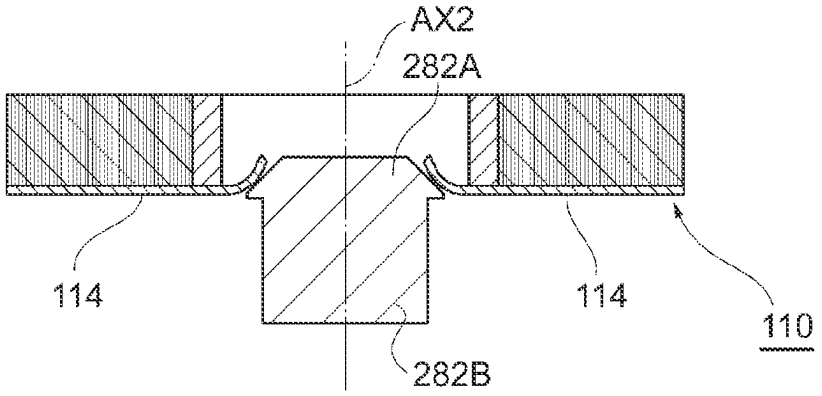

FIG.24C

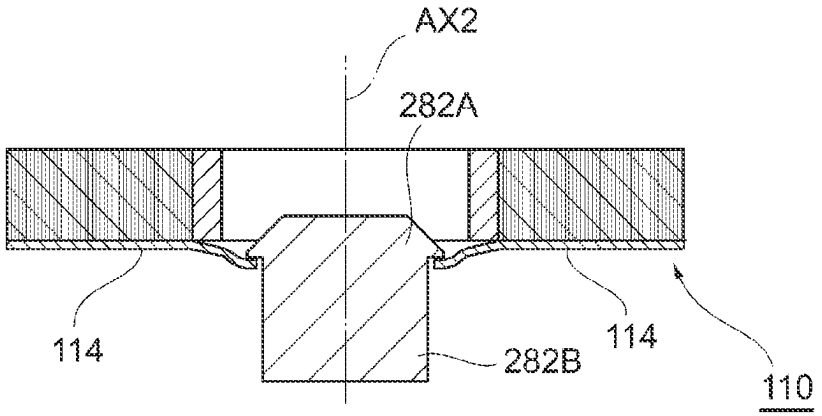

FIG. 25

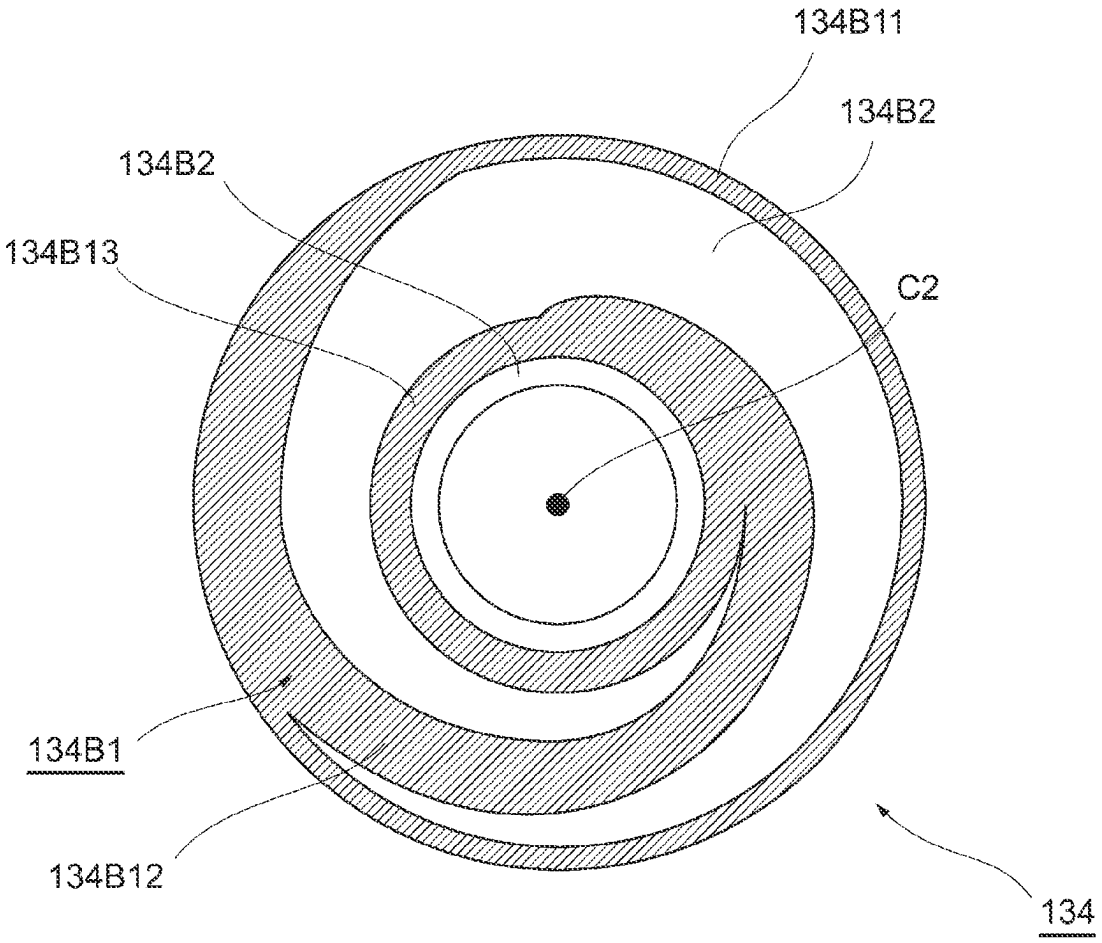

FIG. 26A

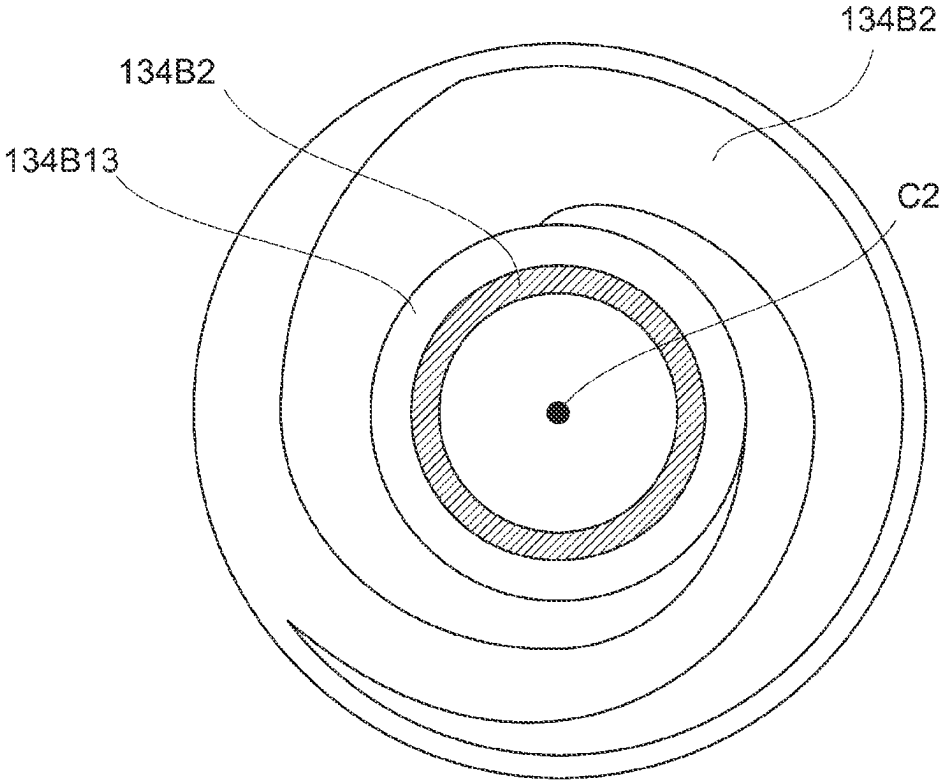

FIG. 26B

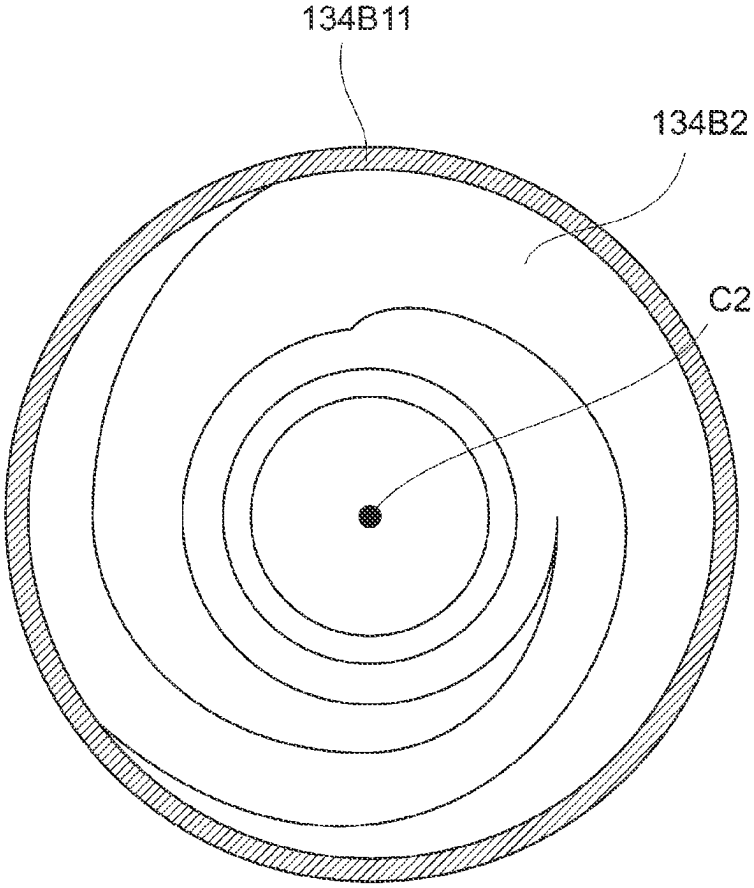

FIG.26C

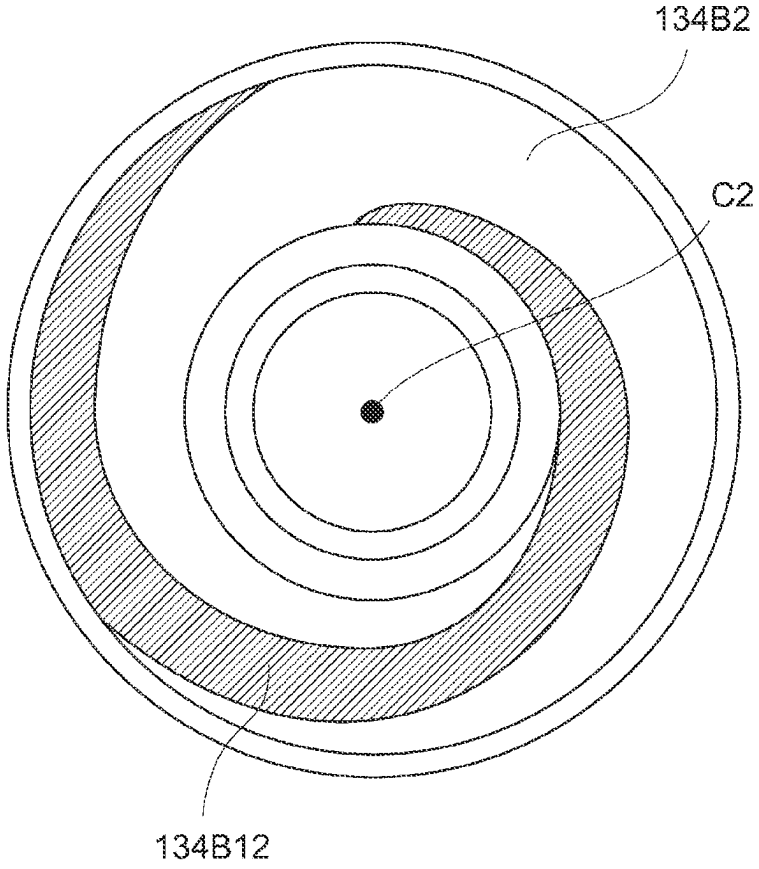

FIG.27

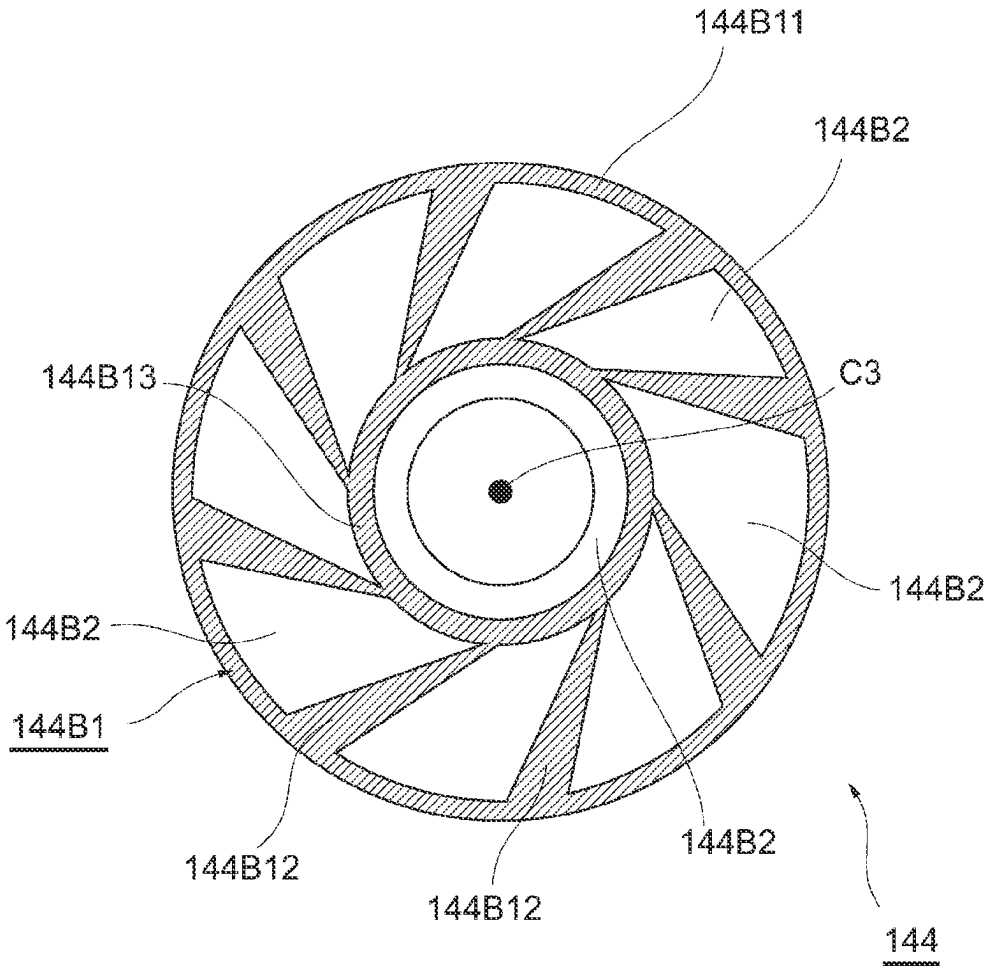
144B11
144B2
144B13
C3
144B2
144B2
144B1
144B12
144B2
144B12
144

FIG. 28A

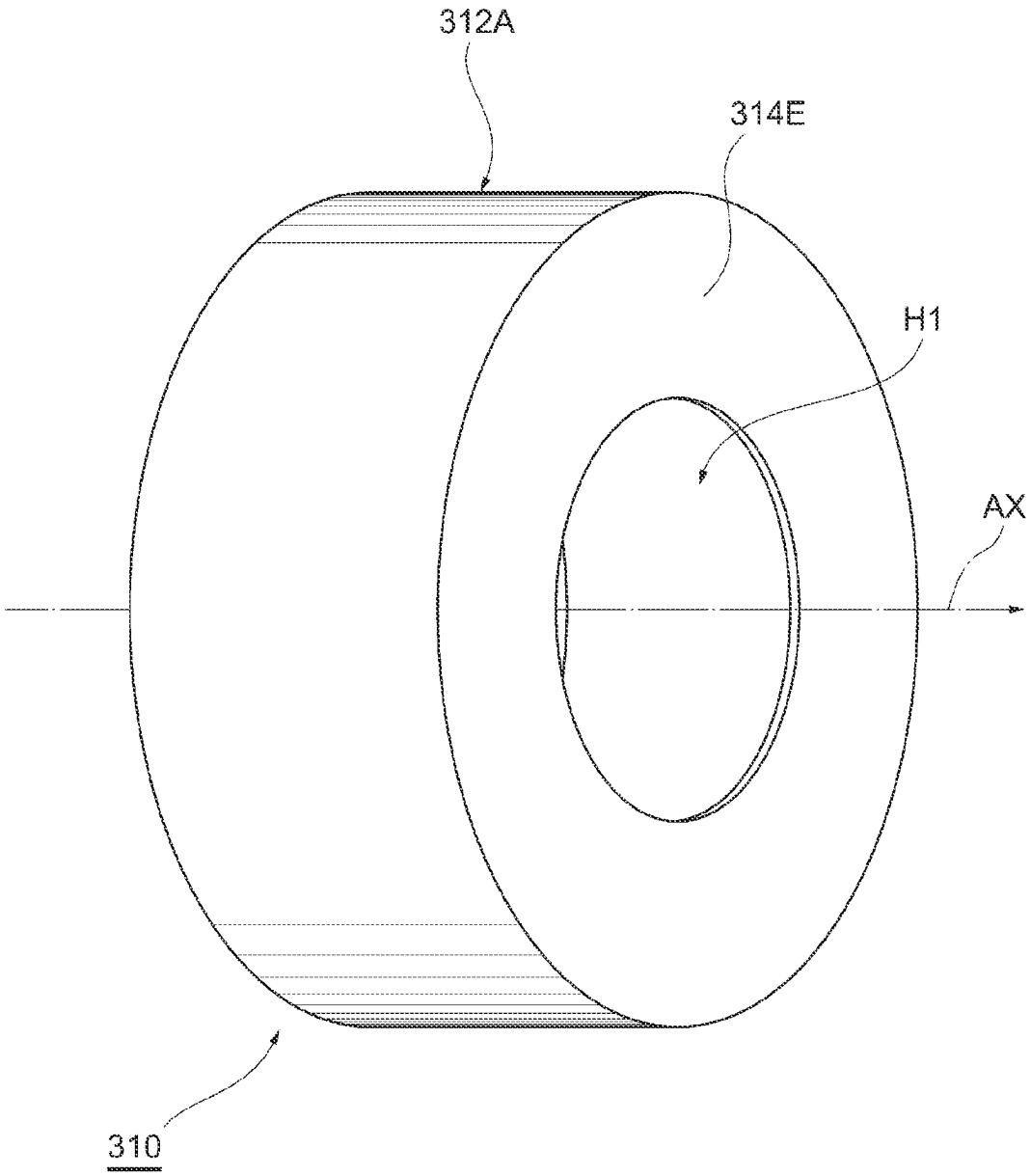

FIG. 28B

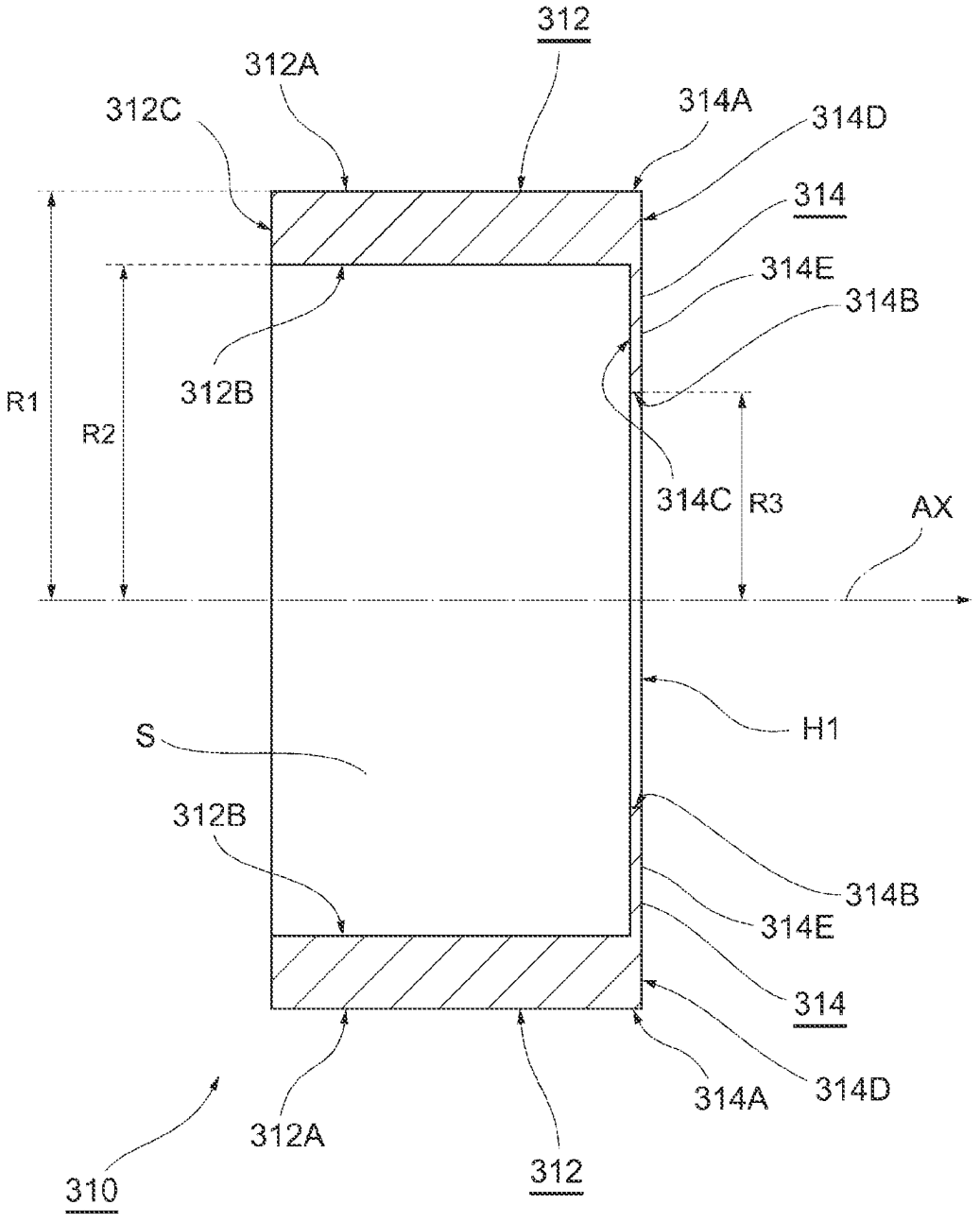
312
312A
312C
314A
314D
314
314E
314B
312B
R1
R2
314C
R3
AX
H1
S
312B
314B
314E
314
314A
314D
312A
312
310

FIG. 29A

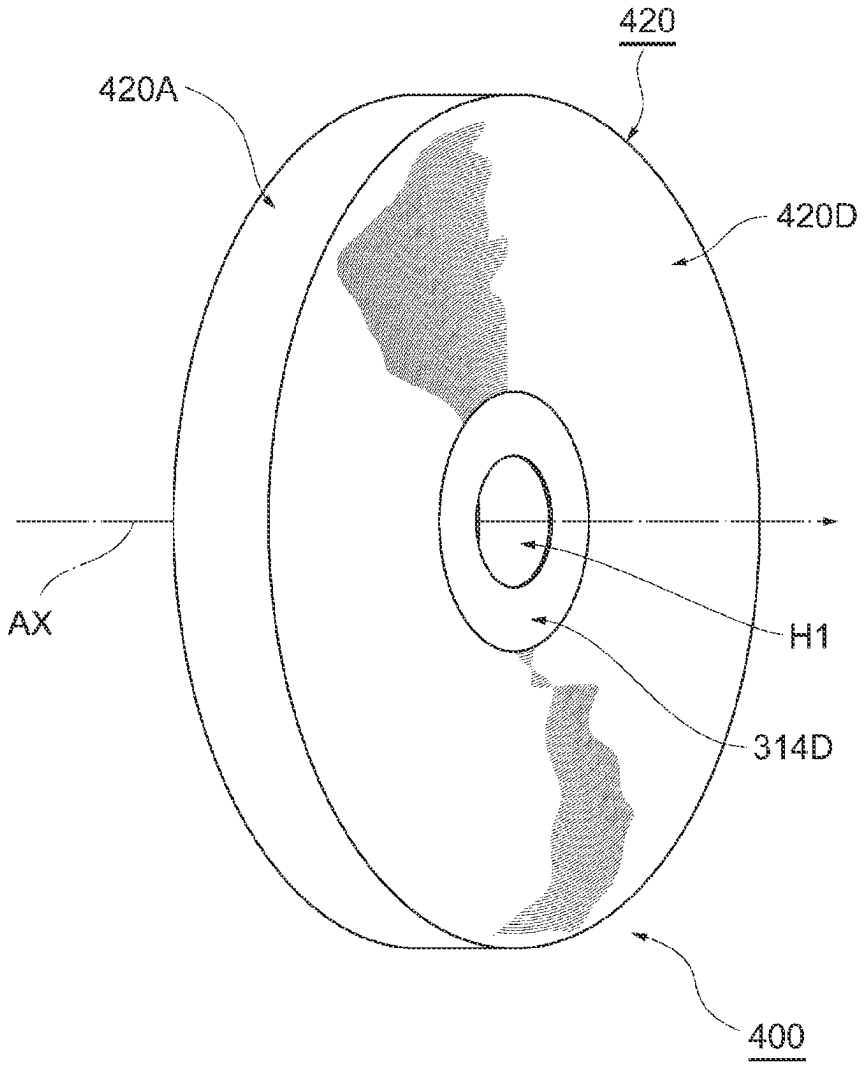

FIG.29B

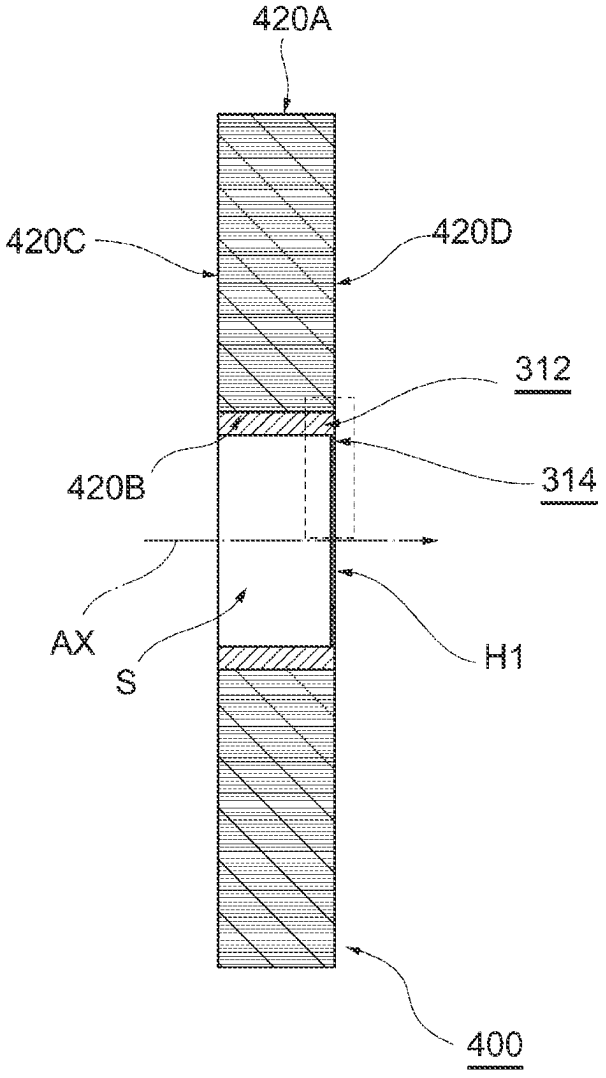

FIG.29C

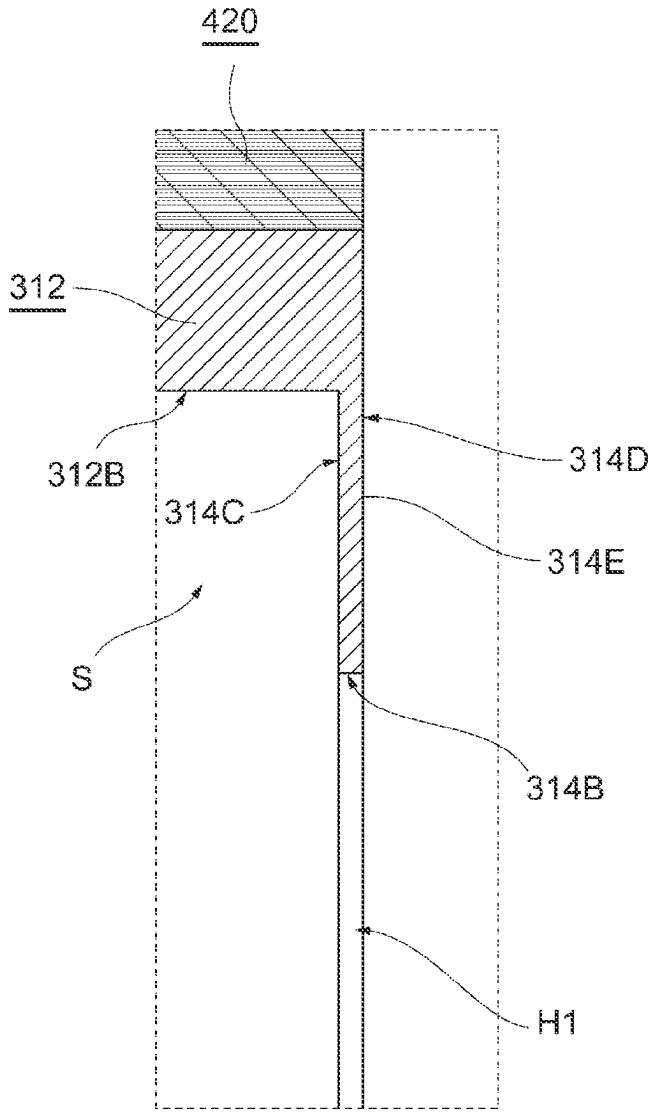

FIG.30

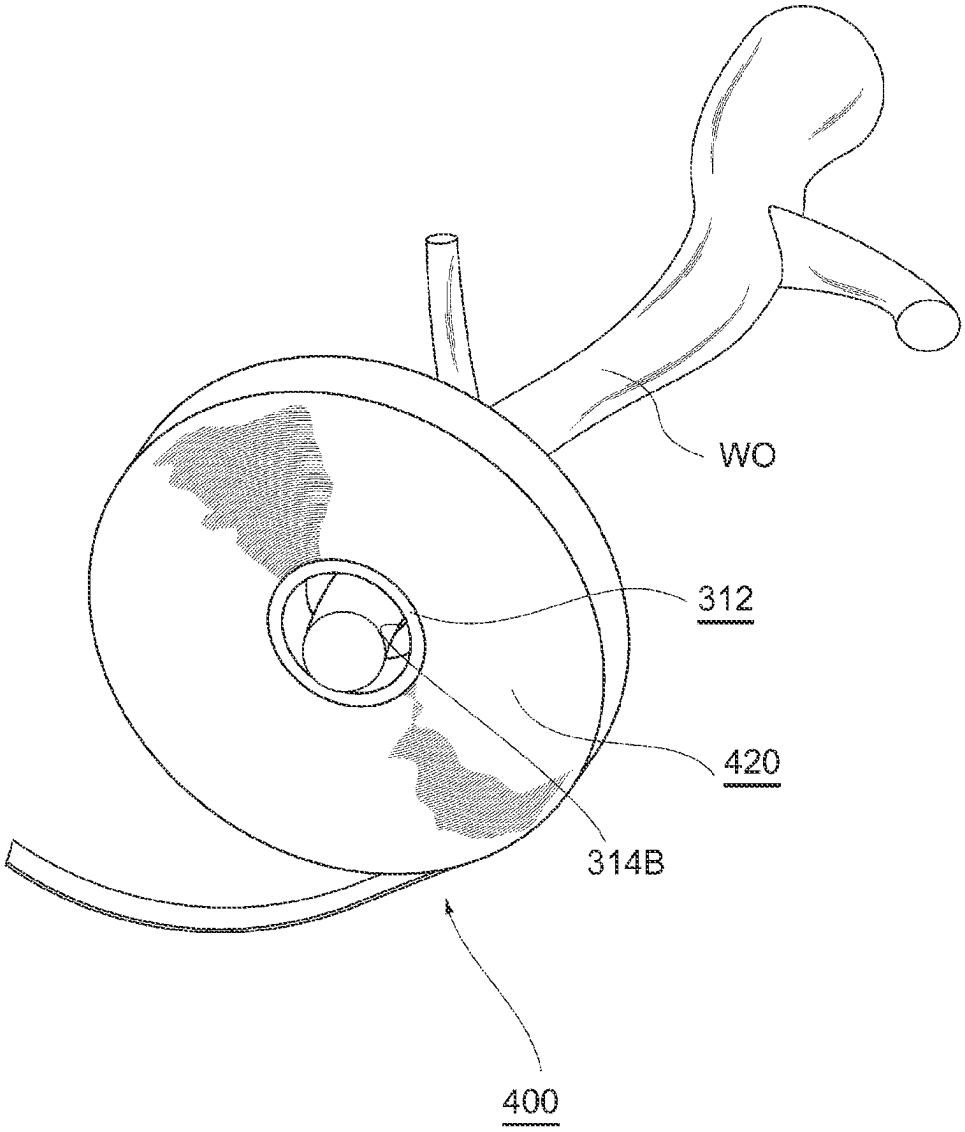

FIG.31A

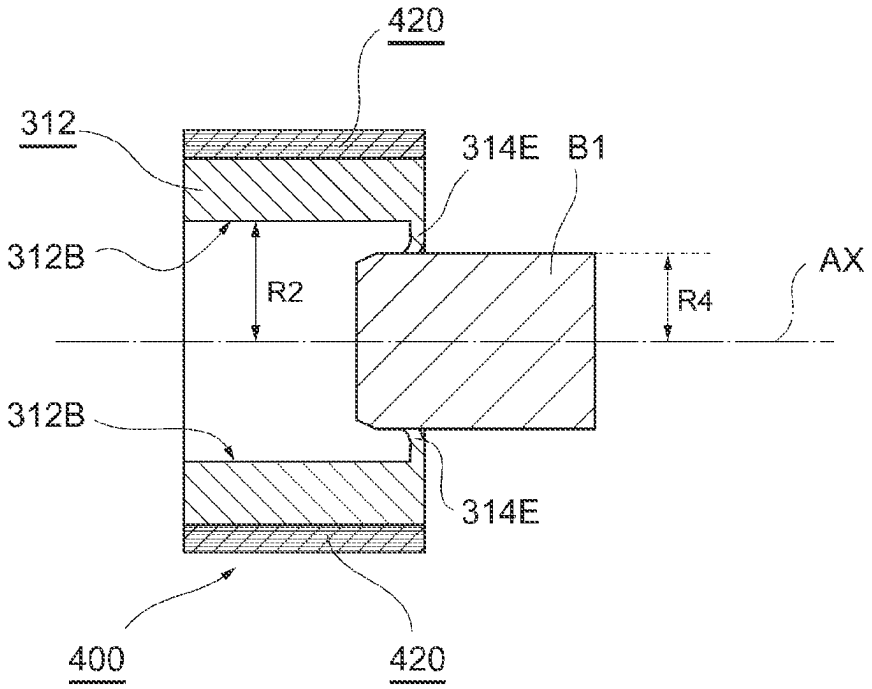

FIG.31B

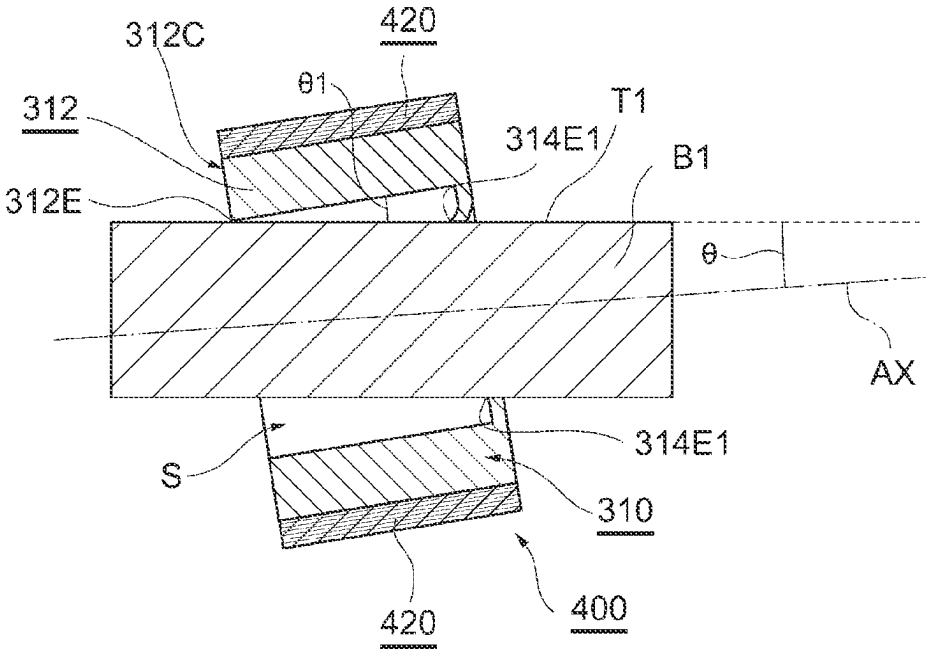

FIG.32A

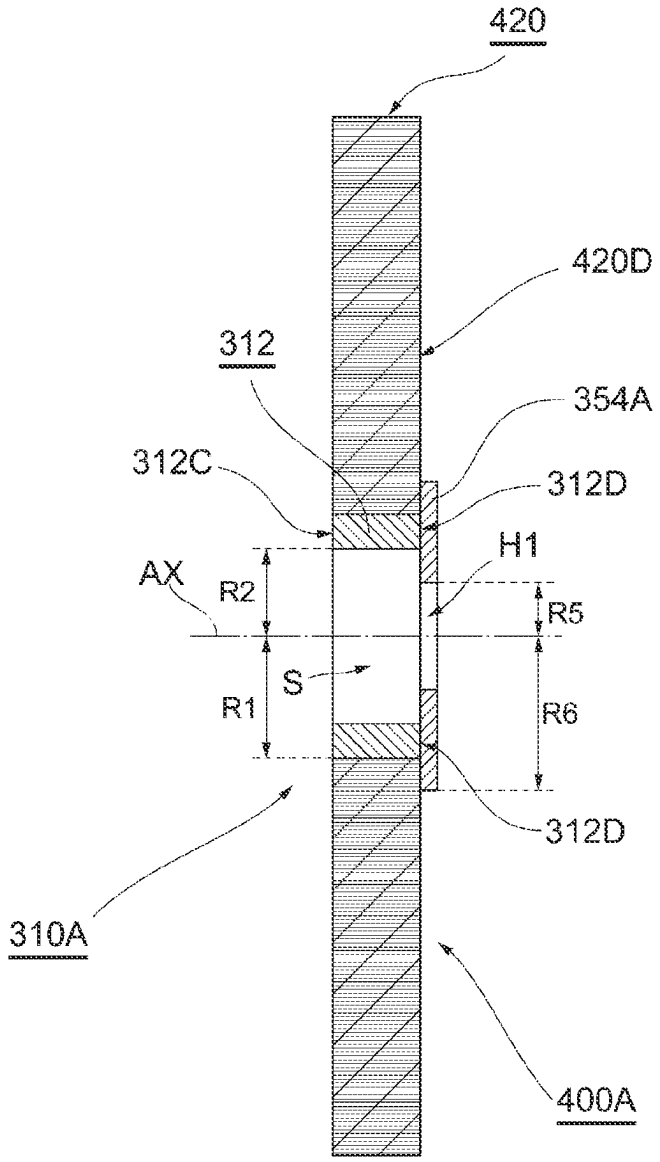

FIG.32B

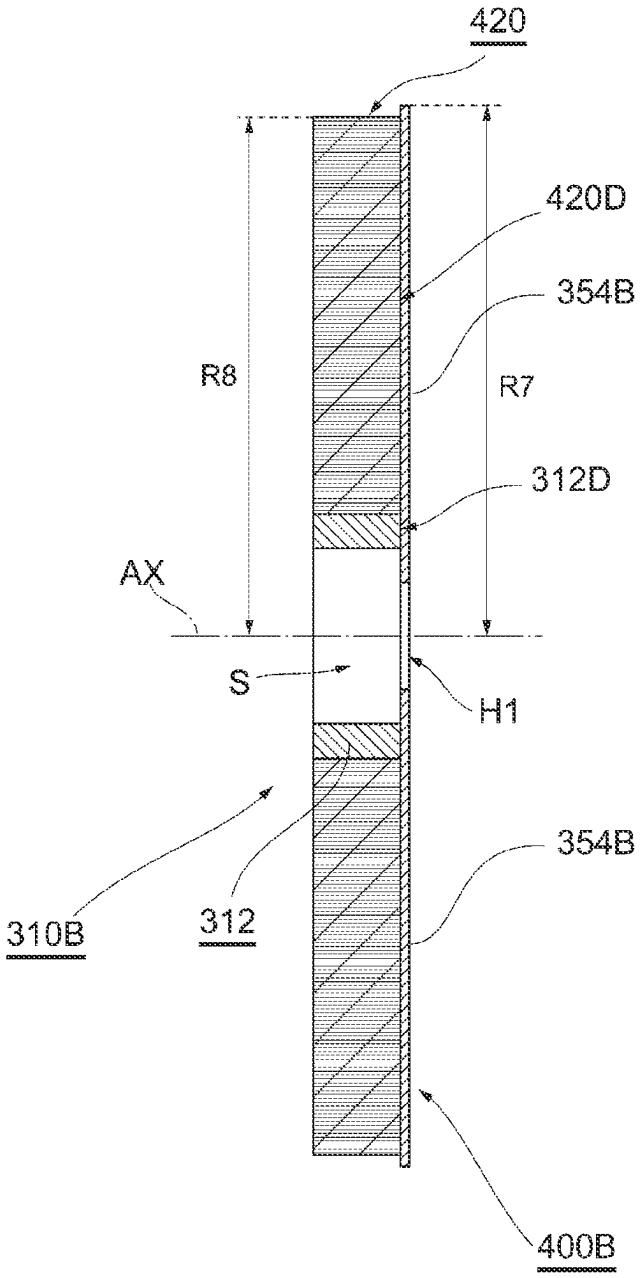

FIG.32C

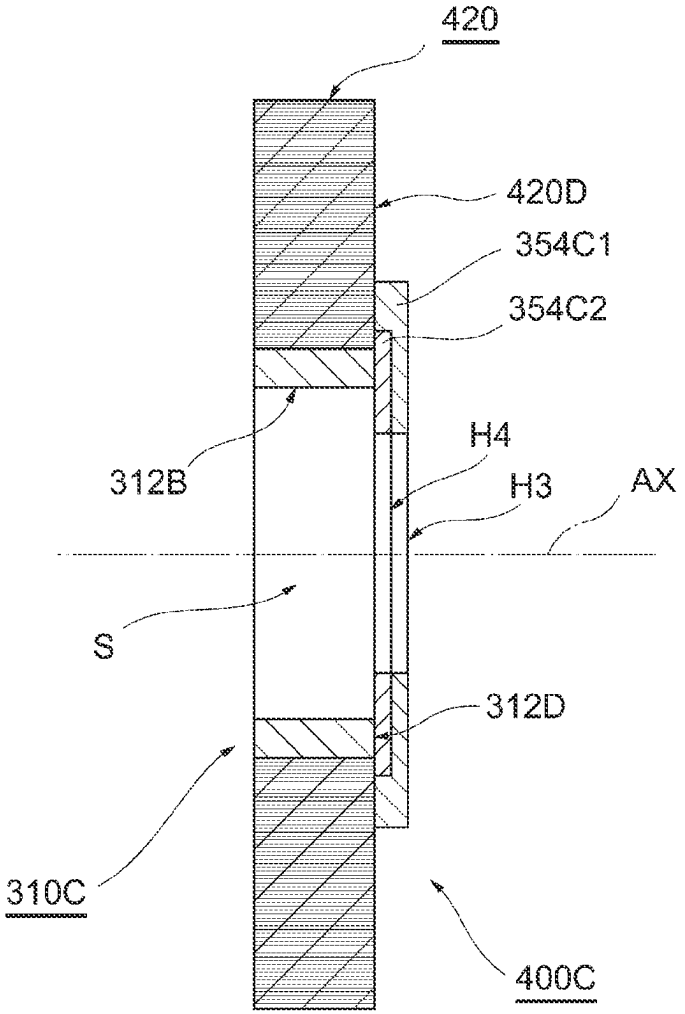

FIG. 32D

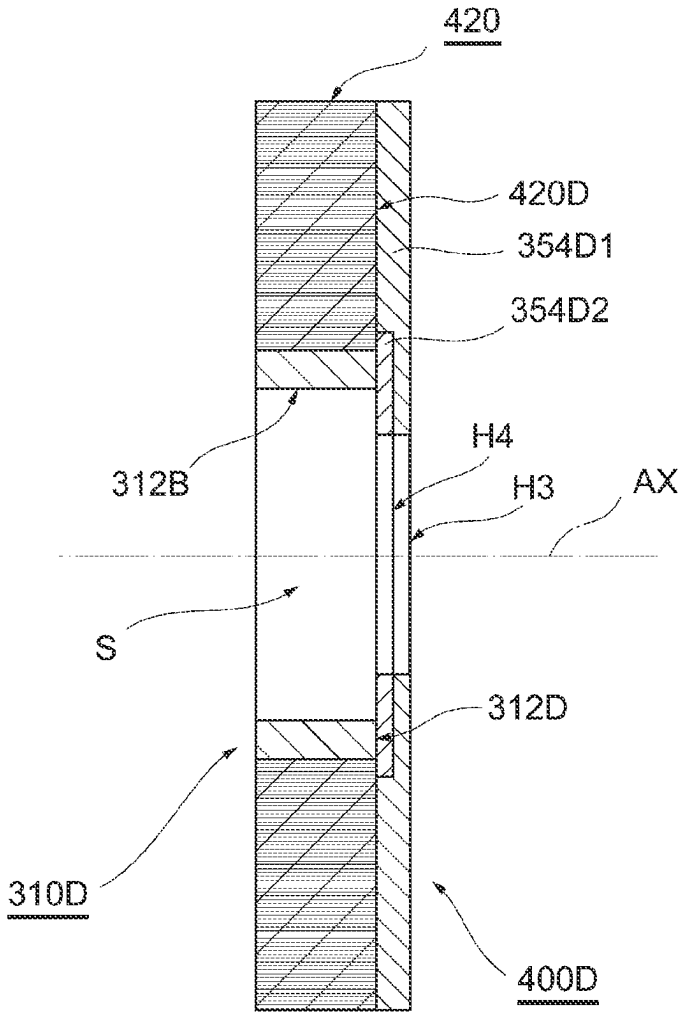

FIG.32E

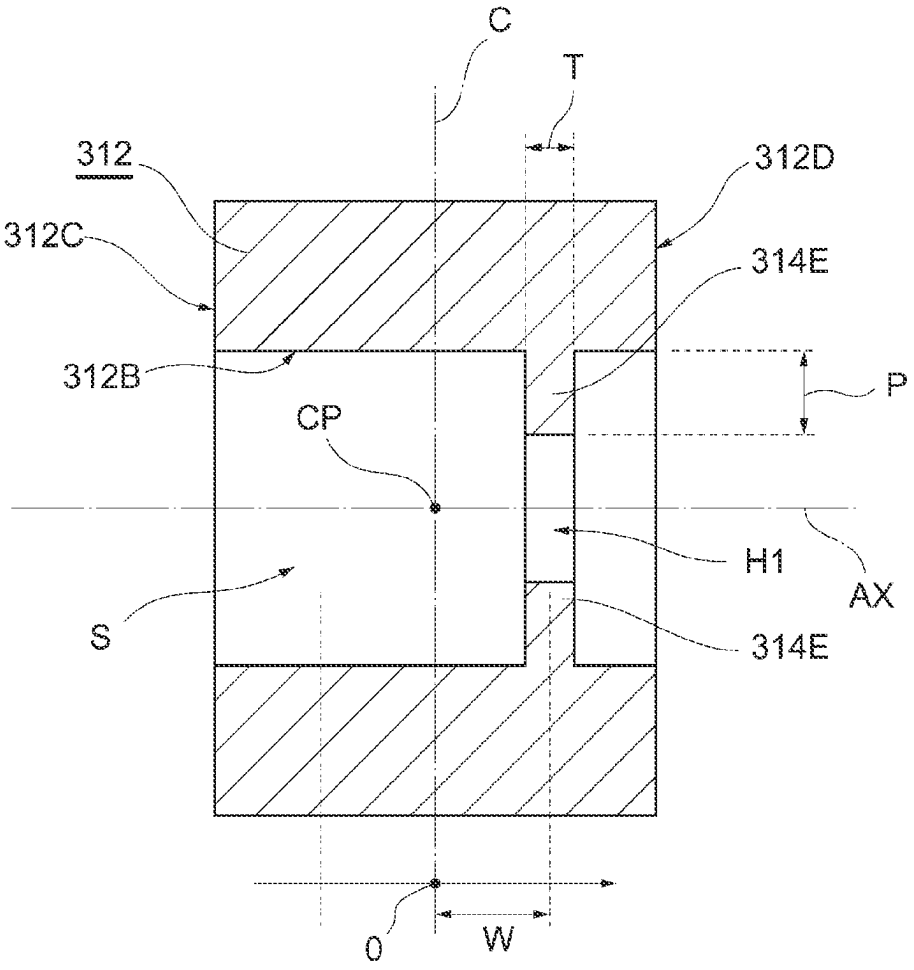

FIG. 32F

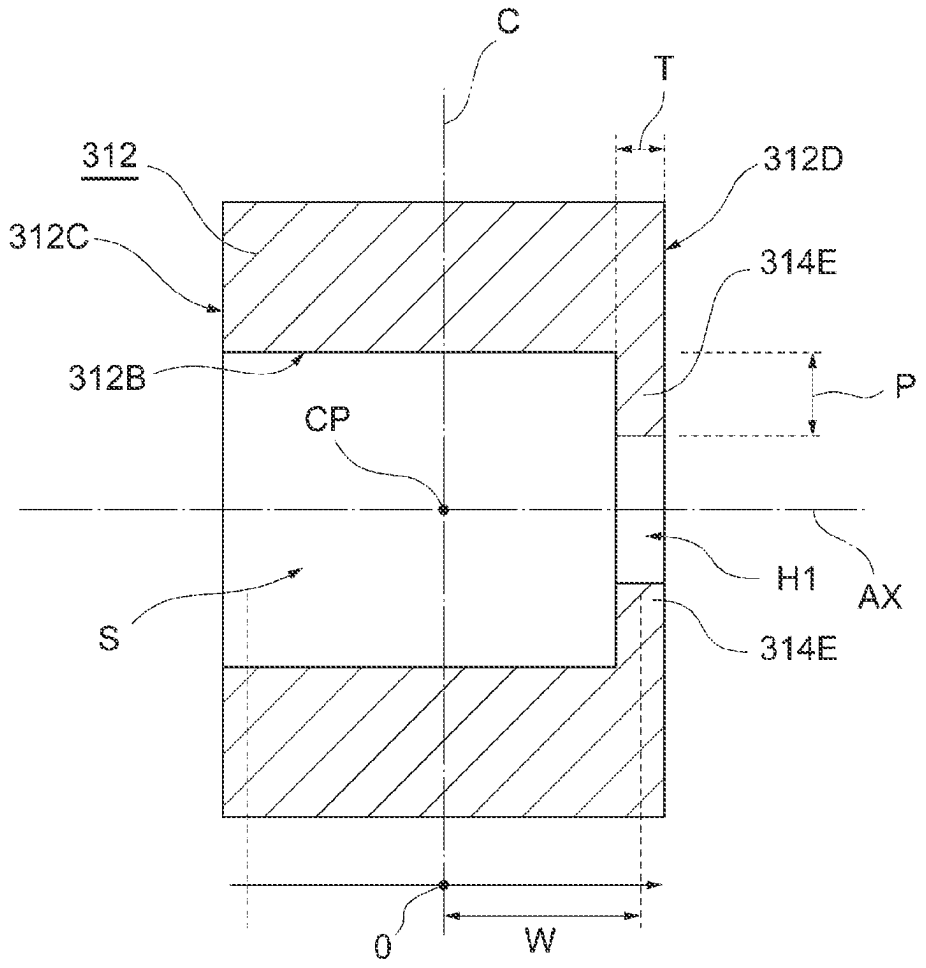

FIG.32G

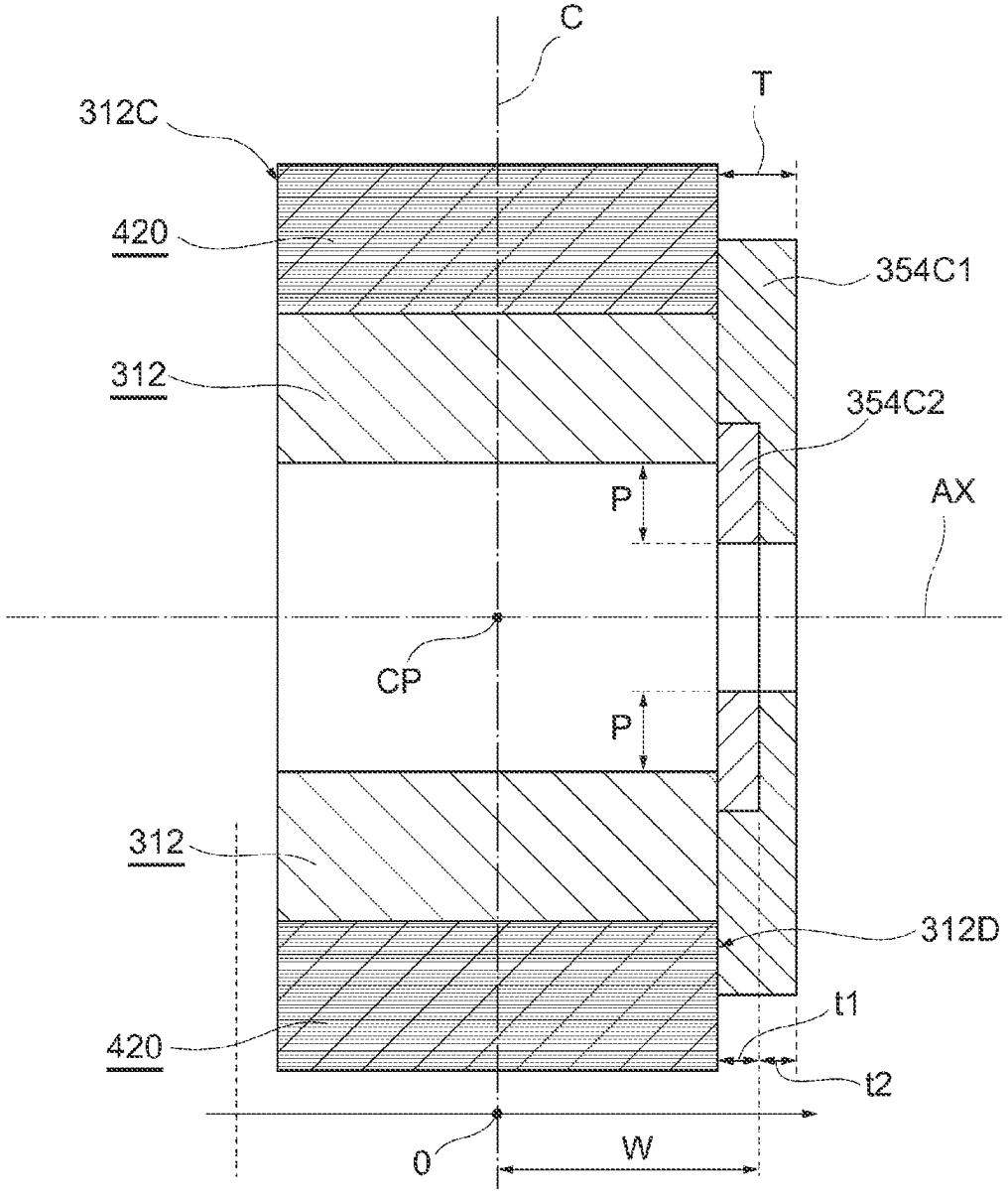

FIG.33A

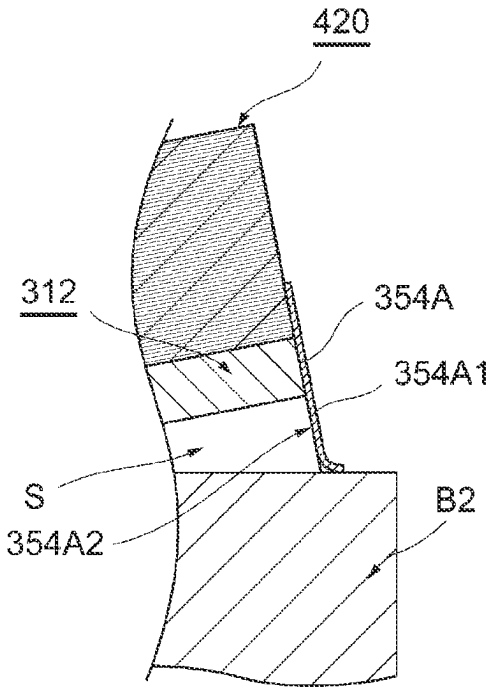

FIG.33B

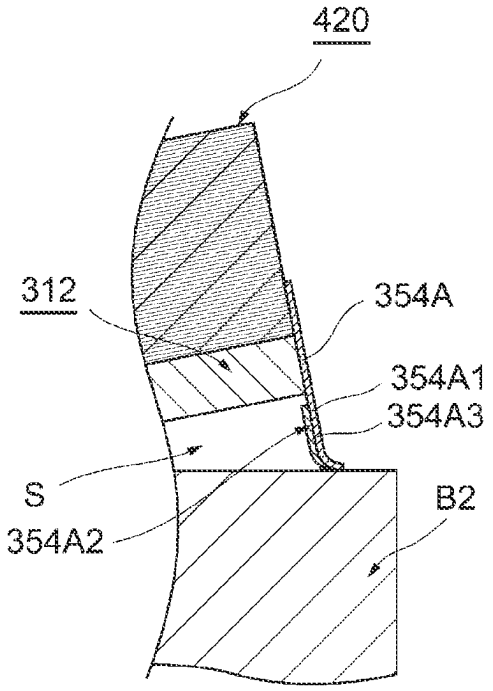

FIG.34

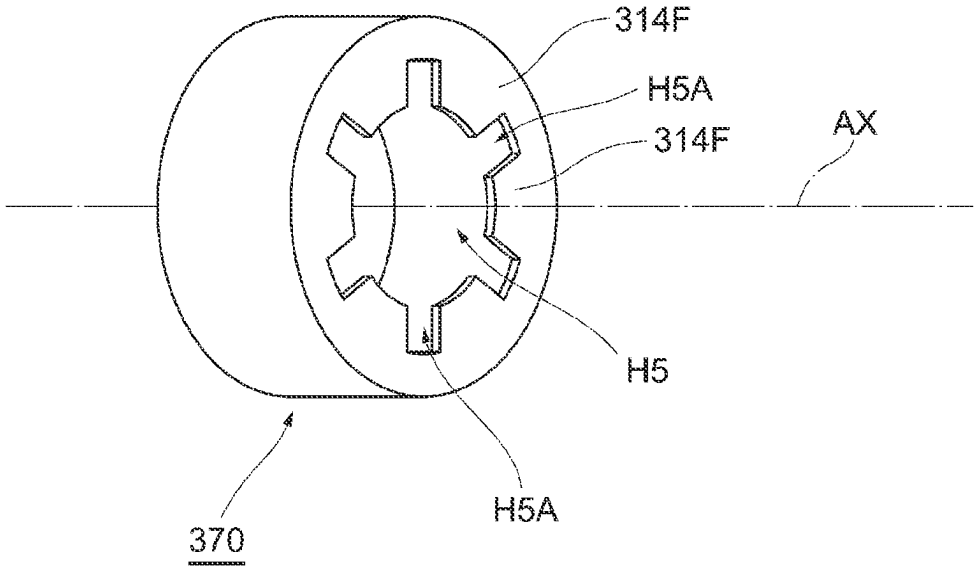

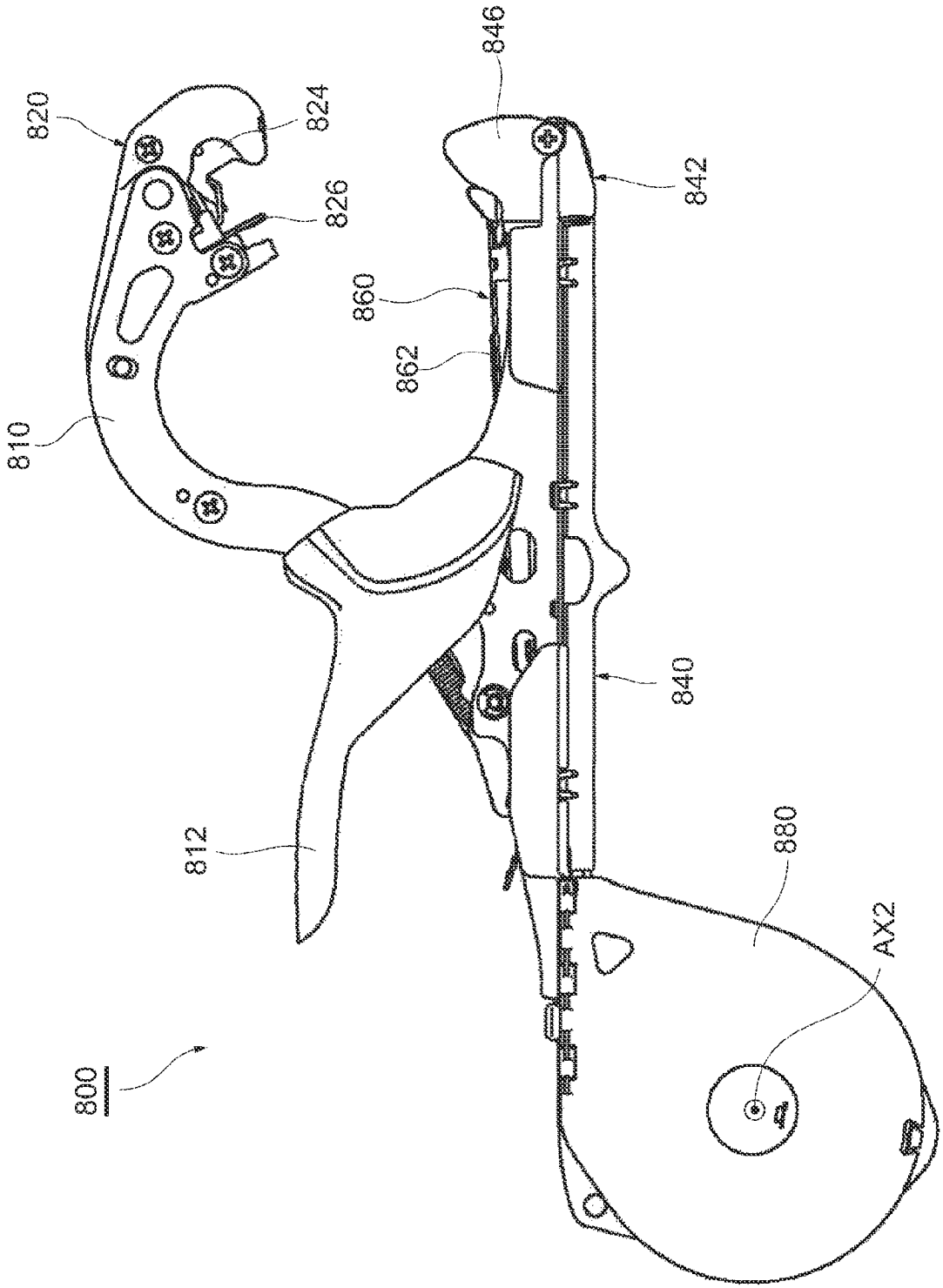

FIG.35

FIG.36A

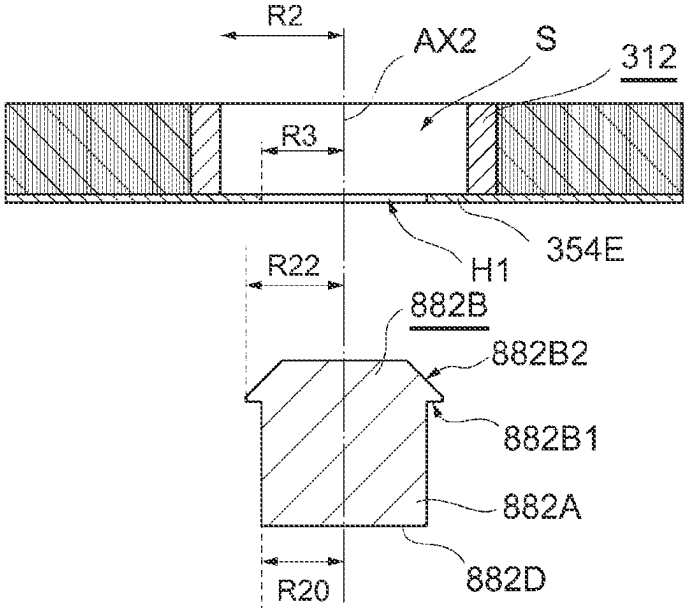

FIG.36B

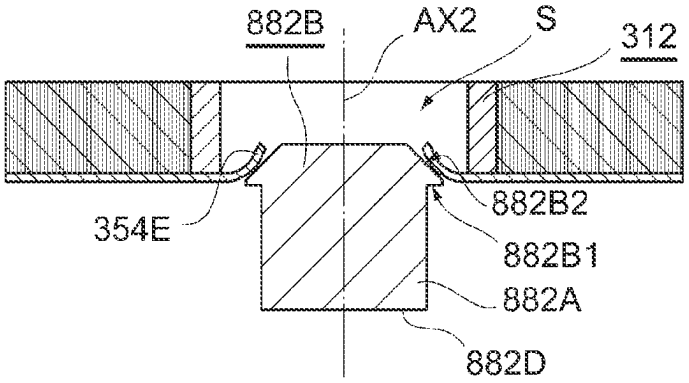

FIG.36C

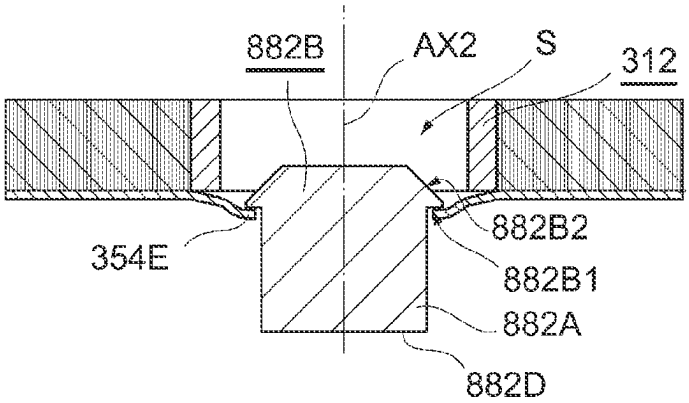

BINDING TAPE, BINDING METHOD, TAPE WINDING BODY AND REEL

CROSS REFERENCE TO RELATED APPLICATIONS

This application is a divisional of U.S. patent application Ser. No. 17/260,620 filed Jan. 15, 2021 which claims priority to 35 U.S.C. 371 National Phase Entry Application from PCT/JP2019/028363, filed Jul. 18, 2019, which claims priority to Japanese Patent Application Nos. 2018-134750, filed Jul. 18, 2018, 2019-037192, filed Mar. 1, 2019, 2019-037411, filed Mar. 1, 2019, and 2019-112599 filed on Jun. 18, 2019, the disclosures of which are incorporated herein in their entirety by reference, and priority is claimed to each of the foregoing.

TECHNICAL FIELD

The present invention relates to a binding tape, a binding method, a tape winding body and a reel. For example, the present invention relates to a binding tape, a binding method, a tape winding body and a reel that can be used for a guiding/binding operation and the like in agricultural crop cultivation.

BACKGROUND ART

In the conventional art, a binding machine for gardening is used for a guiding/binding operation when cultivating agricultural crops. Specifically, for example, in agricultural crop cultivation of cucumbers, grapes, tomatoes and the like, a binding machine for gardening is used so as to bind plant vines and stems to stanchions, nets and the like.

For example, as disclosed in PTL 1, the binding machine for gardening includes a main handle having a tip end portion from which a tape can be pulled out, a clincher arm configured to be rotatable with respect to the main handle, and an operating handle for rotating the clincher arm. When the operating handle of the binding machine for gardening is softly gripped, the clincher arm rotates in a closing direction with respect to the main handle, so that a tape gripping device of a tip end of the clincher arm grips the tape pulled out from the tip end portion of the main handle. When the gripped state of the handle is released in this state, the clincher arm rotates in an opening direction with respect to the main handle, so that the tape is pulled out. When the tape is pulled out and is in a stretched state between the clincher arm and the main handle, agricultural crops and stanchions are pressed against the pulled-out tape, and the agricultural crops and stanchions are inserted between the clincher arm and the main handle. When the handle is again gripped in this state, the clincher arm rotates in the closing direction with respect to the main handle, so that a tape loop is formed. When the handle is further gripped, the tape loop is stitched in the vicinity of both end portions by a staple, and an end portion of the tape loop is cut by a cutter, so that binding is completed.

The binding tape that is used for the binding machine for gardening is generally made of resin such as polyvinyl chloride (PVC), polyethylene (PE) and the like. PTL 2 discloses that non-woven fabric is used as a material of the binding tape.

PTL 3 discloses technology of arranging thick papers arranged side by side to face side surfaces of an adhesive tape so as to prevent a so-called bamboo shoot phenomenon that a wound adhesive tape slides laterally in a winding axis direction to form a mortar shape due to residual stress generated when pulling out the adhesive tape or strain stress generated due to a change in temperature during storage. Since the thick papers are bonded only to end faces of a core body, on which the adhesive tape is wound, by paste and are not bonded to side surfaces of the adhesive tape, the thick papers do not apply resistance when pulling out the adhesive tape, and can prevent the adhesive tape from sliding laterally in the winding axis direction.

PTL 4 discloses a paper tube for winding a thread such as wool thereon. The paper tube is formed to have a conical shape so that the thread can be easily pulled out even though the thread is steamed and swollen.

PTL 5 discloses a taping reel for winding an electronic component band having an electronic component bonded thereto. The taping reel has such a configuration that two side plates made of plastic sheets are arranged to face each other and boss parts protruding from central portions of each of the side plates are abutted and bonded to each other to form an outer peripheral surface for winding the electronic component band.

CITATION LIST

Patent Literature

[PTL 1] JP-A-2004-224412

[PTL 2] JP-A-554-153140

[PTL 3] Japanese Utility Model Examined Publication No. S48-40688

[PTL 4] Japanese Utility Model Unexamined Publication No. H02-80669

[PTL 5] Japanese Utility Model Unexamined Publication No. S59-33867

SUMMARY OF INVENTION

Technical Problem

However, according to the binding tapes of the conventional art as disclosed in PTL 1 and PTL 2, since the tape loop is easily torn when a force to spread the tape loop is applied thereto, the binding tape cannot be used in the guiding operation for agricultural crops having branches and stems having a high repulsive force.

For example, in a case of fixing branches to a fruit shelf in fruit tree cultivation such as pears and plums, when the branches are bound with the binding machine and the binding tape of the conventional art, the binding tape is stretched by the repulsive force of the branches. As a result, the binding tape is torn from holes formed upon fixing by a staple, so that the tape loop comes off.

For this reason, when fixing branches and the like having a high repulsive force, an operation of manually binding a string using a guiding string (a hemp string, a paper string, a plastic string, a rubber tube and the like) having high holding strength is performed. The manual operation is time consuming and requires intensive labor. Also, since the binding method is special, an unskilled operator cannot easily perform the method.

It is therefore an object of the present invention to implement binding using a binding machine for gardening even in a guiding operation for agricultural crops having a high repulsive force.

Unlike the adhesive tape disclosed in PTL 3, the binding tape has a feature that wound binding tapes are easily loosened from each other. For this reason, even though the

technology disclosed in PTL 3 is applied to the binding tape, the binding tape is loosened toward a side perpendicular to a winding axis, i.e., in an outer diameter direction.

It is therefore an object of the present invention to provide a tape winding body where a binding tape for binding a to-be-bound object or a non-adhesive binding tape having no adhesive layer is difficult to loosen.

A reel may be used hooked on tree branches or stanchions (hereinbelow, referred to as "core rod") of diverse sizes. PTL 4 and PTL 5 do not disclose a reel that can be favorably supported on core rods of diverse diameters.

It is therefore an object of the present invention to provide a reel that can be favorably supported on core rods of diverse diameters.

Solution to Problem

The present invention has been made so as to solve the above problems, and provides a binding tape including an intermediate layer, and a first surface layer covering one surface of the intermediate layer, in which the intermediate layer has a plurality of first linear members arranged side by side at an angle with respect to a longitudinal direction of the binding tape.

The present invention as described above includes the intermediate layer, and the first surface layer covering one surface of the intermediate layer. The intermediate layer has the plurality of first linear members arranged side by side at an angle with respect to the longitudinal direction of the binding tape. According to this configuration, when a force to stretch the binding tape in the longitudinal direction is applied, the force to stretch the binding tape is also applied to the first linear members. Therefore, since strength of the binding tape is increased by the first linear members, it is possible to make it difficult for the binding tape to tear even though a staple is struck into the binding tape and binds the same. When the binding tape is used, it is possible to perform a binding operation by using a binding machine for gardening even in a guiding operation of crops having a high repulsive force.

The binding tape may further include a second surface layer covering the other surface of the intermediate layer. That is, the intermediate layer may be sandwiched between the first surface layer and the second surface layer.

The intermediate layer may also have a second linear member intersecting with the first linear members. According to this configuration, since intervals of the first linear members are suppressed from increasing by the second linear member, it is possible to suppress stretching of the binding tape. Therefore, even though the binding tape is stretched after a staple is struck into the binding tape and binds the same, holes pierced by the staple are difficult to expand, so that it is possible to provide the binding tape that is difficult to tear.

The first linear members may also be arranged orthogonal to the longitudinal direction of the binding tape, and the second linear member may extend in the longitudinal direction of the binding tape. According to this configuration, since the first linear members and the second linear member are arranged in a lattice shape, it is possible to increase the strength of the binding tape.

The intermediate layer may also be formed by weaving the first linear members and the second linear member each other. According to this configuration, since a surface of the intermediate layer has a flat sheet shape having less unevenness, the intermediate layer can be easily handled even before sandwiching the same between the first surface layer and the second surface layer, and the binding tape can be easily manufactured. Also, the first linear members and the second linear member are entangled with each other, so that the first linear members and the second linear member are difficult to relatively move and it is thus possible to effectively suppress stretching of the binding tape.

At least one of the first linear members and the second linear member may also be formed by bundling a fabric material. According to this configuration, even when the first linear members or the second linear member are thickened to increase the strength, a thickness of the intermediate layer can be prevented from increasing. That is, since the linear members formed by bundling the fabric material are flattened when sandwiching the intermediate layer between the first surface layer and the second surface layer, it is possible to reduce a thickness of the binding tape.

The first linear members may also be arranged side by side at intervals of 5 mm or smaller. According to this configuration, even when the binding tape is stretched and extended after the staple is struck for binding, leg portions of the staple collide with the first linear members until the binding tape is stretched by at least 5 mm. Therefore, further movement of the staple is hindered, so that it is possible to suppress the holes, which are formed upon fixing by the staple, from further expanding.

At least one of the first surface layer and the second surface layer may also be formed of a photodegradable or biodegradable material. According to this configuration, when the binding tape after bound is left outdoors, the binding tape can be naturally deteriorated. The surface layer is deteriorated in this way, so that the binding tape can be easily removed when harvesting agricultural crops, and even though the detached binding tape falls in the field, it can be made less noticeable.

Note that, the binding tape of the present invention can be used in a binding method of winding the binding tape around a to-be-bound object, overlapping both end portions of the binding tape, and striking a U-shaped staple into both the end portions to stitch and bind the vicinity of both the end portions each other. When the binding tape is used in the binding method, the leg portions of the staple are held by the first linear members, so that movement of the staple is suppressed. Thereby, the holes pierced by the staple are difficult to expand, so that the binding tape is difficult to tear.

The binding tape of the present invention can also be used in a binding method of winding the binding tape around a to-be-bound object by a binding machine having the binding tape mounted thereto, overlapping both end portions of the binding tape, and striking a U-shaped staple into both the end portions to stitch and bind the vicinity of both the end portions each other. When the binding tape is used in the binding method, the leg portions of the staple are held by the first linear members, so that movement of the staple is suppressed. Thereby, the holes pierced by the staple are difficult to expand, so that the binding tape is difficult to tear.

One end portion of the intermediate layer of the binding tape in a width direction may also be formed with a plurality of first cuts spaced in the longitudinal direction of the binding tape. The other end portion of the intermediate layer of the binding tape in the width direction may also be formed with a plurality of second cuts spaced in the longitudinal direction of the binding tape. At least one of the first cuts may also cut at least a portion of the second linear member. Positions in the longitudinal direction in which the plurality of first cuts are formed and positions in the longitudinal direction in which the plurality of second cuts are formed may be asymmetrical to each other with respect to a line

passing through a center of the binding tape in the width direction. A position of the first surface layer or the second surface layer corresponding to at least one of the first cuts may also be formed with a cut cutting a portion of the first surface layer or the second surface layer. A position of the first surface layer or the second surface layer corresponding to at least one of the second cuts may also be formed with a cut cutting a portion of the first surface layer or the second surface layer. A position of the second surface layer corresponding to at least one of the first cuts may also be formed with a cut cutting a portion of the second surface layer. A position of the second surface layer corresponding to at least one of the second cuts may also be formed with a cut cutting a portion of the second surface layer. A length of at least one of the first cuts in the width direction with respect to a width of the binding tape may be 15% or less. The first cut may cut 60% or more of a length of the second linear member in the width direction.

In addition, there is provided a tape winding body including a cylindrical tube member, a binding tape wound on the tube member, and a first member positioned on a side surface of the wound binding tape and bonded to at least a part of the side surface. The first member may be flexible to be elastically deformed. The first member may also be formed with a hole communicating with a part surrounded by an inner wall of the tube member. An inner diameter of the tube member may also be larger than a diameter of the hole. The tube member may also have a cylindrical shape extending in a direction of a central axis passing through the part surrounded by the inner wall and the hole. A minimum distance (D**2**) between the tube member and the central axis may also be larger than a minimum distance (D**1**) between the first member and the central axis.

In the first member, the minimum distance (D**2**) between the tube member and the central axis may also be larger than the minimum distance (D**1**) between the first member and the central axis by 1 mm or greater. A part of the first member where the minimum distance (D**2**) between the tube member and the central axis is larger than the minimum distance (D**1**) between the first member and the central axis may also have a thickness (T) equal to or larger than 0.05 mm and equal to or smaller than 2 mm in a direction along the central axis. An adhesion area in which the first member and the side surface of the tape are bonded may also reduce from an outer periphery-side toward an inner periphery-side of the wound tape. The first member may also be provided with a region that reduces an adhesion area in which the first member and the side surface of the tape are bonded by an adhesive layer from the outer periphery-side toward the inner periphery-side of the wound tape, in which the adhesive layer is not exposed. At least a part of the first member may also be bonded to the tube member. In addition, the tape winding body may further include a second member having one surface facing parts of an end face of the tube member and the side surface of the tape and the other surface facing the first member and formed with a second hole communicating with the part surrounded by the tube member and the hole. The hole and the second hole may also have substantially the same diameters, and an inner diameter of the tube member may be larger than the diameters of the hole and the second hole. The first member may also be formed with a part communicating with the part surrounded by the inner wall of the tube member. The tube member may also have a cylindrical shape extending in a direction of a central axis passing through the part surrounded by the inner wall and the part communicating with the part. The minimum distance (D**2**) between the tube member and the central axis may also be larger than the minimum distance (D**1**) between the first member and the central axis. The minimum distance (D**2**) between the tube member and the central axis may also be larger than the minimum distance (D**1**) between the first member and the central axis by 1 mm or greater. A part of the first member where the minimum distance (D**2**) between the tube member and the central axis is larger than the minimum distance (D**1**) between the first member and the central axis may also have a thickness (T) equal to or larger than 0.05 mm and equal to or smaller than 2 mm.

An adhesion part between the binding tape and the first member may extend in a circumferential direction of the binding tape. The adhesion part between the binding tape and the first member may also extend in a radial direction of the binding tape. The adhesion part between the binding tape and the first member may be provided in plural with being spaced from each other. The adhesion part between the binding tape and the first member may also extend in a spiral shape extending in the circumferential direction and the radial direction of the binding tape.

In the tape winding body, the first member may also have a non-adhesion part that extends in the radial direction of the binding tape and is not bonded to the side surface of the binding tape. The first member may also have a first part including a portion that is bonded to the tube member, and a plurality of parts that are bonded to the side surface of the binding tape. The first member may also have a first part including a portion that is bonded to the tube member, and further have a first circular arc part that is bonded to the side surface of the binding tape and a second circular arc part that is not bonded to the side surface of the binding tape, on a virtual circle having an axis of the tube member as a center and including the first part therein.

In addition, there is provided a reel including a cylindrical tube member on which a binding tape can be wound, and a flexible protrusion protruding from an inner wall part of the tube member or one end face-side of the tube member toward an axis center of the tube member.

The protrusion may be provided within a range W of ±5.5 mm from a center position of the inner wall part in the axis center direction. One end face-side and the other end face-side of the tube member may communicate with each other, and a protruding amount P of the protrusion may be equal to or greater than 1 mm. A maximum thickness T of the protrusion in the axis center direction may be equal to or larger than 0.05 mm and equal to or smaller than 2 mm. The protrusion may be a film protruding from one end face-side of the tube member toward the axis center of the tube member. The film may have a two-layered structure. The protrusion may have at least one of water resistance and ductility.

In addition, there is provided a tape winding body including a binding tape, a reel including a cylindrical tube member on which the binding tape is wound and a flexible protrusion protruding from an inner wall part of the tube member or one end face-side of the tube member toward an axis center of the tube member, and a first member positioned on a side surface of the wound binding tape and bonded to at least a part of the side surface.

Here, an adhesion part between the binding tape and the first member may extend in a circumferential direction of the binding tape. The adhesion part between the binding tape and the first member may also extend in a radial direction of the binding tape. The adhesion part between the binding tape and the first member may be provided in plural with being spaced from each other. The adhesion part between the binding tape and the first member may also extend in a spiral

shape extending in the circumferential direction and the radial direction of the binding tape.

In the tape winding body, the first member may also have a non-adhesion part that extends in the radial direction of the binding tape and is not bonded to the side surface of the binding tape. The first member may also have a first part including a portion that is bonded to the tube member, and a plurality of parts that are bonded to the side surface of the binding tape. The first member may also have a first part including a portion that is bonded to the tube member, and further have a first circular arc part that is bonded to the side surface of the binding tape and a second circular arc part that is not bonded to the side surface of the binding tape, on a virtual circle having an axis of the tube member as a center and including the first part therein.

The present disclosure also relates to a tape winding body. The tape winding body may include a cylindrical tube member, a tape that is wound on the tube member and can bind a to-be-bound object, and a first member positioned on a side surface of the wound tape, and the first member and at least a part of the side surface of the tape are bonded. Here, the first member may be flexible to be elastically deformed.

The first member may also be formed with a hole communicating with a part surrounded by an inner wall of the tube member. On the other hand, the first member may also be simply formed with a cut. A user or the like may push and expand the first member along the cut. The first member may not also be formed with a hole or a slit. A user or the like may tear a part of the first member.

An inner diameter of the tube member is preferably larger than a diameter of the hole. The tube member may also have a cylindrical shape extending in a direction of a central axis passing through the part surrounded by the inner wall and the hole. The hole is preferably formed so that a minimum distance (D**2**) between the inner wall surface of the tube member and the central axis is larger than a minimum distance (D**1**) between the first member and the central axis. The minimum distance (D**2**) between the inner wall surface of the tube member and the central axis is more preferably formed to be larger than the minimum distance (D**1**) between the first member and the central axis by 1 mm or greater.

A part of the first member where the minimum distance (D**2**) between the tube member and the central axis is larger than the minimum distance (D**1**) between the first member and the central axis has preferably a thickness (T) equal to or larger than 0.05 mm and equal to or smaller than 2 mm in a direction along the central axis.

An adhesion area in which the first member and the side surface of the tape are bonded may also reduce from an outer periphery-side toward an inner periphery-side of the wound tape. In addition, the tape winding body may further include a second member having one surface facing parts of a surface of the tube member and the side surface of the tape and the other surface facing the first member and formed with a second hole communicating with a space surrounded by the tube member and the hole. Here, the hole and the second hole may have substantially the same diameters, and an inner diameter of the tube member may be larger than the diameters of the hole and the second hole.

The present disclosure also relates to a tape winding body having a tape capable of binding two or more to-be-bound objects. The tape winding body includes a cylindrical tube member, a tape wound on the tube member and capable of binding the to-be-bound objects, and a first member bonded to a side surface of the wound tape and having a hole communicating with a part surrounded by an inner wall of the tube member. Note that, the first member may also be formed with a region that reduces an adhesion area in which the first member and the side surface of the tape are bonded by an adhesive layer from an outer periphery-side toward an inner periphery-side of the wound tape, in which the adhesive layer is not exposed.

The present disclosure also relates to a tape winding body having a tape capable of binding a to-be-bound object. The tape winding body includes a cylindrical tube member, a tape wound on the tube member, and a first member bonded to a side surface of the wound tape and having a hole communicating with a part surrounded by an inner wall of the tube member.

In the tape winding body, one end portion of an intermediate layer of the binding tape in a width direction may be formed with a plurality of first cuts spaced in a longitudinal direction of the binding tape. The other end portion of the intermediate layer of the binding tape in the width direction may also be formed with a plurality of second cuts spaced in the longitudinal direction of the binding tape. At least one of the first cuts may cut at least a portion of a second linear member. Positions in the longitudinal direction in which the plurality of first cuts are formed and positions in the longitudinal direction in which the plurality of second cuts are formed may be asymmetrical to each other with respect to a line passing through a center of the binding tape in the width direction. A position of the first surface layer or the second surface layer corresponding to at least one of the first cuts may also be formed with a cut cutting a portion of the first surface layer or the second surface layer. A position of the first surface layer or the second surface layer corresponding to at least one of the second cuts may also be formed with a cut cutting a portion of the first surface layer or the second surface layer. A position of the second surface layer corresponding to at least one of the first cuts may also be formed with a cut cutting a portion of the second surface layer. A position of the second surface layer corresponding to at least one of the second cuts may also be formed with a cut cutting a portion of the second surface layer. A length of at least one of the first cuts in the width direction with respect to a width of the binding tape may be 15% or less. The first cut may cut 60% or more of a length of the second linear member in the width direction.

In the tape winding body, the binding tape may include an intermediate layer, and a first surface layer covering one surface of the intermediate layer. The intermediate layer has a plurality of first linear members arranged side by side at an angle with respect to a longitudinal direction of the binding tape.

The present invention as described above includes the intermediate layer, and the first surface layer covering one surface of the intermediate layer. The intermediate layer has a plurality of first linear members arranged side by side at an angle with respect to the longitudinal direction of the binding tape. According to this configuration, when a force to stretch the binding tape in the longitudinal direction is applied, the force to stretch the binding tape is also applied to the first linear members. Therefore, since strength of the binding tape is increased by the first linear members, it is possible to make it difficult for the binding tape to tear even though a staple is struck into the binding tape and binds the same. When the binding tape is used, it is possible to perform a binding operation by using a binding machine for gardening even in a guiding operation of crops having a high repulsive force.

Note that, the binding tape may further include a second surface layer covering the other surface of the intermediate layer. That is, the intermediate layer may be sandwiched between the first surface layer and the second surface layer.

The intermediate layer may also have a second linear member intersecting with the first linear members. According to this configuration, since intervals of the first linear members are suppressed from increasing by the second linear member, it is possible to suppress stretching of the binding tape. Therefore, even though the binding tape is stretched after a staple is struck into the binding tape and binds the same, holes pierced by the staple are difficult to expand, so that it is possible to provide the binding tape that is difficult to tear.

The first linear members may also be arranged orthogonal to the longitudinal direction of the binding tape, and the second linear member may extend in the longitudinal direction of the binding tape. According to this configuration, since the first linear members and the second linear member are arranged in a lattice shape, it is possible to increase the strength of the binding tape.

The intermediate layer may also be formed by weaving the first linear members and the second linear member each other. According to this configuration, since a surface of the intermediate layer has a flat sheet shape having less unevenness, the intermediate layer can be easily handled even before sandwiching the same between the first surface layer and the second surface layer, and the binding tape can be easily manufactured. Also, the first linear members and the second linear member are entangled with each other, so that the first linear members and the second linear member are difficult to relatively move and it is thus possible to effectively suppress stretching of the binding tape.

At least one of the first linear members and the second linear member may also be formed by bundling a fabric material. According to this configuration, even when the first linear members or the second linear member is thickened to increase the strength, a thickness of the intermediate layer can be prevented from increasing. That is, since the linear members formed by bundling the fabric material are flattened when sandwiching the intermediate layer between the first surface layer and the second surface layer, it is possible to reduce the thickness of the binding tape.

The first linear members may also be arranged side by side at intervals of 5 mm or smaller. According to this configuration, even when the binding tape is stretched and extended after the staple is struck for binding, leg portions of the staple collide with the first linear members until the binding tape is stretched by at least 5 mm. Therefore, further movement of the staple is hindered, so that it is possible to suppress the holes, which are formed upon fixing by the staple, from further expanding.

At least one of the first surface layer and the second surface layer may also be formed of a photodegradable or biodegradable material. According to this configuration, when the binding tape after bound is left outdoors, the binding tape can be naturally deteriorated. The surface layer is deteriorated in this way, so that the binding tape can be easily removed when harvesting agricultural crops, and even though the detached binding tape falls in the field, it can be made less noticeable.

Note that, the binding tape of the present invention can be used in a binding method of winding the binding tape around a to-be-bound object, overlapping both end portions of the binding tape, and striking a U-shaped staple into both the end portions to stitch and bind the vicinity of both the end portions each other. When the binding tape is used in the binding method, the leg portions of the staple are held by the first linear members, so that movement of the staple is suppressed. Thereby, the holes pierced by the staple are difficult to expand, so that the binding tape is difficult to tear.

The binding tape of the present invention can also be used in a binding method of winding the binding tape around a to-be-bound object by a binding machine having the binding tape mounted thereto, overlapping both end portions of the binding tape, and striking a U-shaped staple into both the end portions to stitch and bind the vicinity of both the end portions each other. When the binding tape is used in the binding method, the leg portions of the staple are held by the first linear members, so that movement of the staple is suppressed. Thereby, the holes pierced by the staple are difficult to expand, so that the binding tape is difficult to tear.

Here, an adhesion part between the binding tape and the first member may extend in a circumferential direction of the binding tape. The adhesion part between the binding tape and the first member may also extend in a radial direction of the binding tape. The adhesion part between the binding tape and the first member may be provided in plural with being spaced from each other. The adhesion part between the binding tape and the first member may also extend in a spiral shape extending in the circumferential direction and the radial direction of the binding tape.

In the tape winding body, the first member may also have a non-adhesion part that extends in the radial direction of the binding tape and is not bonded to a side surface of the binding tape. The first member may also have a first part including a portion that is bonded to the tube member, and a plurality of parts that are bonded to the side surface of the binding tape. The first member may also have a first part including a portion that is bonded to the tube member, and further have a first circular arc part that is bonded to the side surface of the binding tape and a second circular arc part that is not bonded to the side surface of the binding tape, on a virtual circle having an axis of the tube member as a center and including the first part therein.

The present disclosure provides a reel including a cylindrical tube member on which a tape capable of binding a to-be-bound object can be wound, and a flexible protrusion protruding from an inner wall part of the tube member or one end face-side of the tube member toward an axis center of the tube member. Here, the reel may include a tape wound on the tube member and capable of binding the to-be-bound object.

According to this configuration, since the protrusion is flexible, when a rod-shaped member such as a tree branch is inserted into the tube member, the protrusion is bent, so that a check effect of making it difficult for the rod-shaped member to separate in a pull-off direction can be achieved.

The protrusion is preferably provided within a range W of ±5.5 mm from a center position of the inner wall part in the axis center direction.

According to this configuration, when a rod-shaped member such as a tree branch is inserted into the tube member, the protrusion is favorably bent by engagement between the rod-shaped member and the tube member, so that the reel is stably supported without being excessively tilted.

The maximum thickness T in the axis center direction is preferably equal to or larger than 0.05 mm and equal to or smaller than 2 mm. The protrusion may also be a film protruding from one end face-side of the tube member toward the axis center of the tube member.

According to this configuration, since the protrusion is provided as the film, the protrusion can be easily provided to the tube member. By adjusting a shape of the film, it is

also possible to easily adjust the protruding amount P and the maximum thickness T. Also, the protrusion can be formed of a material having physical properties (including an elastic modulus) different from the tube member. Note that, the film may have a two-layered structure.

The film has a two-layered structure, so that it is possible to adjust the protruding amount P and the maximum thickness T according to uses. Also, the film has a two-layered structure, so that when bonding a first member to an end face of the tube member, even though an adhesive or the like squeezes out of a part of the first member becoming the protrusion, the adhesive or gluing agent can be covered by a second member. In a case where a rod-shaped member such as a tree branch is inserted into the tube member to pull out the tape, it is possible to prevent the squeezed adhesive or gluing agent from becoming a resistance to have a bad influence. Note that, the two-layered structure includes a multilayered structure of three or more layers including the two-layered structure.

Preferably, one end face-side and the other end face-side of the tube member communicate with each other, and a protruding amount P of the protrusion is 1 mm or greater.

If the protrusion is provided within the above numerical range, when a rod-shaped member such as a tree branch is inserted into the tube member to pull out the tape, the protrusion is bent, so that a favorable braking force can be obtained.

The protrusion may also be configured by a first member having a surface facing one end face of the tube member and extending toward the axis center of the tube member. In addition, a second member having one surface facing one end face of the tube member and the other surface facing the first member, and extending toward the axis center of the tube member may be further provided. Here, the first member may also be formed with a hole communicating with a part surrounded by an inner wall of the tube member.

In a cross section including the axis center, the protrusion can be formed so that a tangential line, which contacts the protrusion at a first contact point at a tip end of the protrusion and contacts the tube member at a second contact point on the other end face-side of the tube member, is inclined with respect to a straight line including the axis center. An angle of inclination is preferably 3° or greater, for example.

The present disclosure also relates to a reel having a tape capable of binding a to-be-bound object. The reel includes a tube member, a tape wound on the tube member, and a protrusion extending on one end face-side of the tube member toward an axis center of the tube member, wherein in a cross section including the axis center, a tangential line that contacts the protrusion at a first contact point at a tip end of the protrusion and contacts the tube member at a second contact point on the other end face-side of the tube member is formed so as to be inclined with respect to a straight line including the axis center. An angle of inclination is preferably 3° or greater, for example.

The present disclosure also relates to a reel including a cylindrical tube member on which a tape capable of binding a to-be-bound object is wound. Here, in a first cross section including an axis center, at least one end portion of the tube member in an axis center direction may be provided with a first protrusion extending from an inner wall of the tube member toward the axis center, and in a second cross section including the axis center and different from the first cross section, the same one end portion may be provided with a second protrusion extending from the inner wall of the tube member toward the axis center. However, an annular protrusion where the first protrusion and the second protrusion are integrally formed may also be possible. On the other hand, the first protrusion and the second protrusion may also be formed spaced from each other in a circumferential direction whose center is the axis center. In this case, in a third cross section including the axis center, the protrusion protruding from the inner wall is not formed. Preferably, the protrusions have end portions close to the axis center, as free ends, and are configured so as to be deformable in any direction of the axis center direction (a direction of the axis center direction facing toward the other end portion or an opposite direction thereto). The deformation is preferably elastic deformation. That is, the protrusions are preferably formed by a size and a material that enables return to an original shape when an action of force causing the deformation disappears.

The reel may further include a tape that is wound on the tube member and can bind the to-be-bound object.

In a tape winding body where a bindable tape is wound on the tube member, one end portion of an intermediate layer of the binding tape in a width direction may be formed with a plurality of first cuts spaced in a longitudinal direction of the binding tape. The other end portion of the intermediate layer of the binding tape in the width direction may be formed with a plurality of second cuts spaced in the longitudinal direction of the binding tape. At least one of the first cuts of the second linear member may cut at least a portion of the second linear member. Positions in the longitudinal direction in which the plurality of first cuts are formed and positions in the longitudinal direction in which the plurality of second cuts are formed may be asymmetrical to each other with respect to a line passing through a center of the binding tape in the width direction. A position of the first surface layer or the second surface layer corresponding to at least one of the first cuts may also be formed with a cut cutting a portion of the first surface layer or the second surface layer. A position of the first surface layer or the second surface layer corresponding to at least one of the second cuts may also be formed with a cut cutting a portion of the first surface layer or the second surface layer. A position of the second surface layer corresponding to at least one of the first cuts may also be formed with a cut cutting a portion of the second surface layer. A position of the second surface layer corresponding to at least one of the second cuts may also be formed with a cut cutting a portion of the second surface layer. A length of at least one of the first cuts in the width direction with respect to a width of the binding tape may be 15% or less. The first cut may cut 60% or more of a length of the second linear member in the width direction.

The reel as a tape winding body includes a cylindrical tube member, a tape wound on the tube member and capable of binding a to-be-bound object, and a first member positioned on a side surface of the wound tape, and the first member and at least a part of the side surface of the tape are bonded. Here, the first member may be flexible to be elastically deformed.

The first member may also be formed with a hole communicating with a part surrounded by an inner wall of the tube member. On the other hand, the first member may be simply formed with a cut. A user or the like may push and expand the first member along the cut. The first member may not also be formed with a hole or a slit. A user or the like may tear a part of the first member.

An inner diameter of the tube member is preferably larger than a diameter of the hole. The tube member may also have a cylindrical shape extending in a direction of a central axis passing through the part surrounded by the inner wall and the hole. The hole is preferably formed so that a minimum

distance (D2) between the inner wall surface of the tube member and the central axis is larger than a minimum distance (D1) between the first member and the central axis. The minimum distance (D2) between the inner wall surface of the tube member and the central axis is more preferably formed to be larger than the minimum distance (D1) between the first member and the central axis by 1 mm or greater.

A part of the first member where the minimum distance (D2) between the tube member and the central axis is larger than the minimum distance (D1) between the first member and the central axis has preferably a thickness T equal to or larger than 0.05 mm and equal to or smaller than 2 mm in a direction along the central axis.

An adhesion area in which the first member and the side surface of the tape are bonded may also reduce from an outer periphery-side toward an inner periphery-side of the wound tape. In addition, the reel may further include a second member having one surface facing parts of a surface of the tube member and the side surface of the tape and the other surface facing the first member and formed with a second hole communicating with a space surrounded by the tube member and the hole. Here, the hole and the second hole may have substantially the same diameters, and the inner diameter of the tube member may be larger than the diameters of the hole and the second hole.

The present disclosure also relates to a tape winding body having a tape capable of binding two or more to-be-bound objects. The tape winding body includes a cylindrical tube member, a tape wound on the tube member and capable of binding the to-be-bound objects, and a first member bonded to a side surface of the wound tape and having a hole communicating with a part surrounded by an inner wall of the tube member. Note that, the first member may also be formed with a region that reduces an adhesion area in which the first member and the side surface of the tape are bonded by an adhesive layer from an outer periphery-side toward an inner periphery-side of the wound tape, and in which the adhesive layer is not exposed.

The present disclosure also relates to a tape winding body having a tape capable of binding a to-be-bound object. The tape winding body includes a cylindrical tube member, a tape wound on the tube member, and a first member bonded to a side surface of the wound tape and having a hole communicating with a part surrounded by an inner wall of the tube member.

In the reel or the tape winding body, the binding tape may have an intermediate layer, and a first surface layer covering one surface of the intermediate layer. The intermediate layer has a plurality of first linear members arranged side by side at an angle with respect to a longitudinal direction of the binding tape.

The present invention as described above includes an intermediate layer, and a first surface layer covering one surface of the intermediate layer. The intermediate layer has a plurality of first linear members arranged side by side at an angle with respect to a longitudinal direction of the binding tape. According to this configuration, when a force to stretch the binding tape in the longitudinal direction is applied, the force to stretch the binding tape is also applied to the first linear members. Therefore, since strength of the binding tape is increased by the first linear members, it is possible to make it difficult for the binding tape to tear even though a staple is struck into the binding tape and binds the same. When the binding tape is used, it is possible to perform a binding operation by using a binding machine for gardening even in a guiding operation of crops having a high repulsive force.

Note that, the present invention may further include a second surface layer covering the other surface of the intermediate layer. That is, the intermediate layer may be sandwiched between the first surface layer and the second surface layer.

The intermediate layer may also have a second linear member intersecting with the first linear members. According to this configuration, since intervals of the first linear members are suppressed from increasing by the second linear member, it is possible to suppress stretching of the binding tape. Therefore, even though the binding tape is stretched after a staple is struck into the binding tape and binds the same, holes pierced by the staple are difficult to expand, so that it is possible to provide the binding tape that is difficult to tear.

The first linear members may also be arranged orthogonal to the longitudinal direction of the binding tape, and the second linear member may extend in the longitudinal direction of the binding tape. According to this configuration, since the first linear members and the second linear member are arranged in a lattice shape, it is possible to increase the strength of the binding tape.

The intermediate layer may also be formed by weaving the first linear members and the second linear member each other. According to this configuration, since a surface of the intermediate layer has a flat sheet shape having less unevenness, the intermediate layer can be easily handled even before sandwiching the same between the first surface layer and the second surface layer, and the binding tape can be easily manufactured. Also, the first linear members and the second linear member are entangled with each other, so that the first linear members and the second linear member are difficult to relatively move and it is thus possible to effectively suppress stretching of the binding tape.

At least one of the first linear members and the second linear member may also be formed by bundling a fabric material. According to this configuration, even when the first linear members or the second linear member is thickened to increase the strength, a thickness of the intermediate layer can be prevented from increasing. That is, since the linear members formed by bundling the fabric material are flattened when sandwiching the intermediate layer between the first surface layer and the second surface layer, it is possible to reduce the thickness of the binding tape.

The first linear members may also be arranged side by side at intervals of 5 mm or smaller. According to this configuration, even when the binding tape is stretched and extended after the staple is struck for binding, leg portions of the staple collide with the first linear members until the binding tape is stretched by at least 5 mm. Therefore, further movement of the staple is hindered, so that it is possible to suppress the holes, which are formed upon fixing by the staple, from further expanding.

At least one of the first surface layer and the second surface layer may also be formed of a photodegradable or biodegradable material. According to this configuration, when the binding tape after bound is left outdoors, the binding tape can be naturally deteriorated. The surface layer is deteriorated in this way, so that the binding tape can be easily removed when harvesting agricultural crops, and even though the detached binding tape falls in the field, it can be made less noticeable.

Note that, the binding tape of the present invention can be used in a binding method of winding the binding tape around

a to-be-bound object, overlapping both end portions of the binding tape, and striking a U-shaped staple into both the end portions to stitch and bind the vicinity of both the end portions each other. When the binding tape is used in the binding method, the leg portions of the staple are held by the first linear members, so that movement of the staple is suppressed. Thereby, the holes pierced by the staple are difficult to expand, so that the binding tape is difficult to tear.

The binding tape of the present invention can also be used in a binding method of winding the binding tape around a to-be-bound object by a binding machine having the binding tape mounted thereto, overlapping both end portions of the binding tape, and striking a U-shaped staple into both the end portions to stitch and bind the vicinity of both the end portions each other. When the binding tape is used in the binding method, the leg portions of the staple are held by the first linear members, so that movement of the staple is suppressed. Thereby, the holes pierced by the staple are difficult to expand, so that the binding tape is difficult to tear.

Supplementary Remarks

Subsequently, technical spirits that can be perceived from a plurality of embodiments and modified embodiments, which will be described later, are described.

(Supplementary Remark A)

1. A tape winding body including:
a cylindrical tube member;
a binding tape wound on the tube member; and
a first member positioned on a side surface of the wound binding tape and bonded to at least a part of the side surface.

2. The tape winding body according to the above 1, wherein the first member is flexible to be elastically deformed.

3. The tape winding body according to the above 1, wherein the first member is formed with a hole communicating with a part surrounded by an inner wall of the tube member.

4. The tape winding body according to the above 3, wherein an inner diameter of the tube member is larger than a diameter of the hole.

5. The tape winding body according to the above 3, wherein the tube member has a cylindrical shape extending in a direction of a central axis passing through the part surrounded by the inner wall and the hole, and a minimum distance (D**2**) between the tube member and the central axis is larger than a minimum distance (D**1**) between the first member and the central axis.

6. The tape winding body according to the above 5, wherein in the first member, the minimum distance (D**2**) between the tube member and the central axis is larger than the minimum distance (D**1**) between the first member and the central axis by 1 mm or greater.

7. The tape winding body according to the above 5 or 6, wherein a part of the first member where the minimum distance (D**2**) between the tube member and the central axis is larger than the minimum distance (D**1**) between the first member and the central axis has a thickness (T) equal to or larger than 0.05 mm and equal to or smaller than 2 mm in a direction along the central axis.

8. The tape winding body according to the above 1, wherein an adhesion area in which the first member and the side surface of the tape are bonded reduces from an outer periphery-side toward an inner periphery-side of the wound binding tape.

9. The tape winding body according to the above 1, wherein the first member is provided with a region that reduces an adhesion area in which the first member and the side surface of the binding tape are bonded by an adhesive layer from an outer periphery-side toward an inner periphery-side of the binding tape, the adhesive layer not being exposed in the region.

10. The tape winding body according to the above 3, wherein at least a part of the first member is bonded to the tube member.

11. The tape winding body according to the above 3, further comprising a second member having one surface facing parts of an end face of the tube member and the side surface of the binding tape and the other surface facing the first member and formed with a second hole communicating with the part surrounded by the tube member and the hole.

12. The tape winding body according to the above 11, wherein the hole and the second hole have substantially the same diameters, and an inner diameter of the tube member is larger than the diameters of the hole and the second hole.

13. The tape winding body according to the above 1 or 2, wherein the first member is formed with a part communicating with a part surrounded by an inner wall of the tube member.

14. The tape winding body according to the above 13, wherein the tube member has a cylindrical shape extending in a direction of a central axis passing through the part surrounded by the inner wall and the part communicating with the part, and a minimum distance (D**2**) between the tube member and the central axis is larger than a minimum distance (D**1**) between the first member and the central axis.

15. The tape winding body according to the above 14, wherein the minimum distance (D**2**) between the tube member and the central axis is larger than the minimum distance (D**1**) between the first member and the central axis by 1 mm or greater.

16. The tape winding body according to the above 14, wherein a part of the first member where the minimum distance (D**2**) between the tube member and the central axis is larger than the minimum distance (D**1**) between the first member and the central axis has a thickness (T) equal to or larger than 0.05 mm and equal to or smaller than 2 mm.

17. The tape winding body according to the above 1, wherein the first member has a first part including a portion that is bonded to the tube member, and a second part including a portion that extends in a radial direction of the binding tape and is bonded to the side surface of the binding tape.

18. The tape winding body according to the above 17, wherein the first member has a non-adhesion part that extends in the radial direction of the binding tape and is not bonded to the side surface of the binding tape.

19. The tape winding body according to the above 1, wherein the first member has a first part including a portion that is bonded to the tube member, and a plurality of parts that are bonded to the side surface of the binding tape.

20. The tape winding body according to the above 1, wherein the first member has a first part including a portion that is bonded to the tube member, and further has a first circular arc part that is bonded to the side surface of the binding tape and a second circular arc part that is not bonded to the side surface of the binding tape, on a virtual circle having an axis of the tube member as a center and including the first part therein.

21. The tape winding body according to the above 1, wherein the binding tape includes:

an intermediate layer, and

a first surface layer covering one surface of the intermediate layer, and

wherein the intermediate layer has a plurality of first linear members arranged side by side at an angle with respect to a longitudinal direction of the binding tape.

22. The tape winding body according to the above 21, wherein the intermediate layer has a second linear member intersecting with the first linear members.

23. The tape winding body according to the above 22, wherein the first linear members are arranged orthogonal to the longitudinal direction of the binding tape, and

wherein the second linear member extends in the longitudinal direction of the binding tape.

24. The tape winding body according to the above 22 or 23, wherein the first linear members and the second linear member are formed by weaving the same each other.

25. The tape winding body according to any one of the above 22 to 24, wherein at least one of the first linear members and the second linear member is formed by bundling a fabric material.

26. The tape winding body according to any one of the above 21 to 25, wherein the first linear members are arranged side by side at intervals of 5 mm or smaller.

27. The tape winding body according to any one of the above 21 to 26, further including a second surface layer covering the other surface of the intermediate layer.

28. The tape winding body according to the above 27, wherein at least one of the first surface layer and the second surface layer is formed of a photodegradable or biodegradable material.

29. The tape winding body according to any one of the above 21 to 28, wherein one end portion of the intermediate layer in a width direction is formed with a plurality of first cuts spaced in the longitudinal direction of the binding tape.

30. The tape winding body according to the above 29, wherein the other end portion of the intermediate layer in the width direction is formed with a plurality of second cuts spaced in the longitudinal direction of the binding tape.

31. The tape winding body according to the above 21 or 25, wherein one end portion of the intermediate layer in a width direction is formed with a plurality of first cuts spaced in the longitudinal direction of the binding tape, and at least one of the first cuts cuts at least a portion of the second linear members.

32. The tape winding body according to the above 30, wherein positions in the longitudinal direction in which the plurality of first cuts are formed and positions in the longitudinal direction in which the plurality of second cuts are formed are asymmetrical to each other with respect to a line passing through a center of the binding tape in a width direction.

33. The tape winding body according to the above 30 or 32, wherein a position of the first surface layer corresponding to at least one of the first cuts is formed with a cut cutting a portion of the first surface layer.

34. The tape winding body according to the above 30 or 32, wherein a position of the first surface layer corresponding to at least one of the second cuts is formed with a cut cutting a portion of the first surface layer.

35. The tape winding body according to the above 29, wherein a length of at least one of the first cuts in the width direction with respect to a width of the binding tape is 15% or less.

36. The tape winding body according to the above 31, wherein the first cut cuts 60% or more of a width of the second linear member.

37. A binding method including:

winding the binding tape from the tape winding body according to any one of the above 1 to 36 around a to-be-bound object, and

overlapping both end portions of the wound binding tape, and striking a U-shaped staple into both the end portions to stitch and bind the vicinity of both the end portions each other.

38. A binding method of binding a to-be-bound object by using a binding machine having the tape winding body mounted thereto according to any one of the above 1 to 36, the binding method including:

winding the binding tape around the to-be-bound object;

overlapping both end portions of the wound binding tape, and striking a U-shaped staple into both the end portions to stitch and bind the vicinity of both the end portions each other.

(Supplementary Remark B)

101. A reel including:

a cylindrical tube member on which a binding tape capable of binding a to-be-bound portion can be wound, and

a flexible protrusion protruding from an inner wall part of the tube member or one end face-side of the tube member toward an axis center of the tube member.

102. The reel according to the above 101, wherein the protrusion is provided within a range W of ±5.5 mm from a center position of the inner wall part in the axis center direction.

103. The reel according to the above 101 or 102, wherein one end face-side and the other end face-side of the tube member communicate with each other, and

wherein a protruding amount P of the protrusion is equal to or greater than 1 mm.

104. The reel according to any one of the above 101 to 103, wherein a maximum thickness T of the protrusion in the axis center direction is equal to or larger than 0.05 mm and equal to or smaller than 2 mm.

105. The reel according to any one of the above 101 to 104, wherein the protrusion is a film protruding from one end face-side of the tube member toward the axis center of the tube member.

106. The reel according to the above 105, wherein the film has a two-layered structure.

107. The reel according to any one of the above 101 to 106, wherein the protrusion has at least one of water resistance and ductility.

108. A tape winding body having a binding tape wound on the reel according to the above 101, the tape winding body including:

a binding tape;

a reel including a cylindrical tube member on which the binding tape is wound and a flexible protrusion protruding from an inner wall part of the tube member or one end face-side of the tube member toward an axis center of the tube member; and

a first member positioned on a side surface of the wound binding tape and bonded to at least a part of the side surface.

109. The tape winding body according to the above 108, wherein the first member has a first part including a portion that is bonded to the tube member, and a second part including a portion that extends in a radial direction of the binding tape and is bonded to the side surface of the binding tape.

110. The tape winding body according to the above 108, wherein the first member has a non-adhesion part that

extends in a radial direction of the binding tape and is not bonded to the side surface of the binding tape.

111. The tape winding body according to the above 108, wherein the first member has a first part including a portion that is bonded to the tube member, and a plurality of parts that are bonded to the side surface of the binding tape.

112. The tape winding body according to the above 108, wherein the first member has a first part including a portion that is bonded to the tube member, and further has a first circular arc part that is bonded to the side surface of the binding tape and a second circular arc part that is not bonded to the side surface of the binding tape, on a virtual circle having an axis of the tube member as a center and including the first part therein.

113. The tape winding body according to the above 108, further including:

an intermediate layer, and

a first surface layer covering one surface of the intermediate layer,

wherein the intermediate layer has a plurality of first linear members arranged side by side at an angle with respect to a longitudinal direction of the binding tape.

114. The tape winding body according to the above 113, wherein the intermediate layer has a second linear member intersecting with the first linear members.

115. The tape winding body according to the above 114, wherein the first linear members are arranged orthogonal to the longitudinal direction of the binding tape, and

wherein the second linear member extends in the longitudinal direction of the binding tape.

116. The tape winding body according to the above 114 or 115, wherein the first linear members and the second linear member are formed by weaving the same each other.

117. The tape winding body according to any one of the above 114 to 116, wherein at least one of the first linear members and the second linear member is formed by bundling a fabric material.

118. The tape winding body according to any one of the above 113 to 117, wherein the first linear members are arranged side by side at intervals of 5 mm or smaller.

119. The tape winding body according to any one of the above 113 to 118, further including a second surface layer covering the other surface of the intermediate layer.

120. The tape winding body according to the above 119, wherein at least one of the first surface layer and the second surface layer is formed of a photodegradable or biodegradable material.

121. The tape winding body according to any one of the above 113 to 120, wherein one end portion of the intermediate layer in a width direction is formed with a plurality of first cuts spaced in the longitudinal direction of the binding tape.

122. The tape winding body according to the above 121, wherein the other end portion of the intermediate layer in the width direction is formed with a plurality of second cuts spaced in the longitudinal direction of the binding tape.

123. The tape winding body according to any one of the above 114 or 117, wherein one end portion of the intermediate layer in a width direction is formed with a plurality of first cuts spaced in the longitudinal direction of the binding tape, and at least one of the first cuts cuts at least a portion of the second linear member.

124. The tape winding body according to the above 122, wherein positions in the longitudinal direction in which the plurality of first cuts are formed and positions in the longitudinal direction in which the plurality of second cuts are formed are asymmetrical to each other with respect to a line passing through a center of the binding tape in a width direction.

125. The tape winding body according to the above 122 or 124, wherein a position of the first surface layer corresponding to at least one of the first cuts is formed with a cut cutting a portion of the first surface layer.

126. The tape winding body according to the above 122 or 124, wherein a position of the first surface layer corresponding to at least one of the second cuts is formed with a cut cutting a portion of the first surface layer.

127. The tape winding body according to the above 121, wherein a length of at least one of the first cuts in the width direction with respect to a width of the binding tape is 15% or less.

128. The tape winding body according to the above 123, wherein the first cut cuts 60% or more of a width of the second linear member.

129. A binding method including:

winding the binding tape of the tape winding body according to any one of the above 113 to 128 around a to-be-bound object, and

overlapping both end portions of the wound binding tape, and striking a U-shaped staple into both the end portions to stitch and bind the vicinity of both the end portions each other.

130. A binding method of binding a to-be-bound object by using a binding machine having the binding tape of the tape winding body according to any one of the above 113 to 128, the binding method including:

winding the binding tape around the to-be-bound object;

overlapping both end portions of the wound binding tape, and striking a U-shaped staple into both the end portions to stitch and bind the vicinity of both the end portions each other.

131. The tape winding body according to the above 108, wherein the first member is flexible to be elastically deformed.

132. The tape winding body according to the above 108, wherein the first member is formed with a hole communicating with a part surrounded by the inner wall of the tube.

133. The tape winding body according to the above 132, wherein an inner diameter of the tube member is larger than a diameter of the hole.

134. The tape winding body according to the above 132, wherein the tube member has a cylindrical shape extending in a direction of a central axis passing through the part surrounded by the inner wall and the hole, and

wherein a minimum distance (D**2**) between the tube member and the central axis is larger than a minimum distance (D**1**) between the first member and the central axis.

135. The tape winding body according to the above 134, wherein in the first member, the minimum distance (D**2**) between the tube member and the central axis is larger than the minimum distance (D**1**) between the first member and the central axis by 1 mm or greater.

136. The tape winding body according to the above 134 or 135, wherein a part of the first member where the minimum distance (D**2**) between the tube member and the central axis is larger than the minimum distance (D**1**) between the first member and the central axis has a thickness (T) equal to or larger than 0.05 mm and equal to or smaller than 2 mm.

137. The tape winding body according to the above 108, wherein an adhesion area in which the first member and the

side surface of the tape are bonded reduces from an outer periphery-side toward an inner periphery-side of the wound binding tape.

138. The tape winding body according to the above 108, wherein the first member is provided with a region that reduces an adhesion area in which the first member and the side surface of the binding tape are bonded by an adhesive layer from an outer periphery-side toward an inner periphery-side of the wound binding tape, the adhesive layer not being exposed in the region.

139. The tape winding body according to the above 132, wherein at least a part of the first member is bonded to the tube member.

140. The tape winding body according to the above 132, further comprising a second member having one surface facing parts of an end face of the tube member and the side surface of the binding tape and the other surface facing the first member and formed with a second hole communicating with the part surrounded by the tube member and the hole.

141. The tape winding body according to the above 140, wherein the hole and the second hole have substantially the same diameters, and an inner diameter of the tube member is larger than the diameters of the hole and the second hole.

142. The tape winding body according to the above 108 or 109, wherein the first member is formed with a part communicating with a part surrounded by the inner wall of the tube member.

143. The tape winding body according to the above 142, wherein the tube member has a cylindrical shape extending in a direction of a central axis passing through the part surrounded by the inner wall and the part communicating with the part, and a minimum distance (D**2**) between the tube member and the central axis is larger than a minimum distance (D**1**) between the first member and the central axis.

144. The tape winding body according to the above 143, wherein the minimum distance (D**2**) between the tube member and the central axis is larger than the minimum distance (D**1**) between the first member and the central axis by 1 mm or greater.

145. The tape winding body according to the above 143, wherein a part of the first member where the minimum distance (D**2**) between the tube member and the central axis is larger than the minimum distance (D**1**) between the first member and the central axis has a thickness (T) equal to or larger than 0.05 mm and equal to or smaller than 2 mm.

146. The tape winding body according to the above 108, wherein the first member has a first part including a portion that is bonded to the tube member, and a second part including a portion that extends in a radial direction of the binding tape and is bonded to the side surface of the binding tape.

147. The tape winding body according to the above 146, wherein the first member has a non-adhesion part that extends in the radial direction of the binding tape and is not bonded to the side surface of the binding tape.

148. The tape winding body according to the above 108, wherein the first member has a first part including a portion that is bonded to the tube member, and a plurality of parts that are bonded to the side surface of the binding tape.

149. The tape winding body according to the above 108, wherein the first member has a first part including a portion that is bonded to the tube member, and further has a first circular arc part that is bonded to the side surface of the binding tape and a second circular arc part that is not bonded to the side surface of the binding tape, on a virtual circle having an axis of the tube member as a center and including the first part therein.

The problems corresponding to the Supplementary Remark A (Supplementary Remark 1 to 38) and Supplementary Remark B (Supplementary Remark 101 to 149) are described as follows.

PTL 3 discloses technology of arranging thick papers arranged side by side to face a side surface of an adhesive tape so as to prevent a so-called bamboo shoot phenomenon that a wound adhesive tape slides laterally in a winding axis direction to form a mortar shape due to residual stress generated when pulling out the adhesive tape or strain stress generated due to a change in temperature during storage. Since the thick papers are bonded only to an end face of a core body, on which the adhesive tape is wound, by paste and are not bonded to a side surface of the adhesive tape, the papers do not apply resistance when pulling out the adhesive tape, and can prevent the adhesive tape from sliding laterally in the winding axis direction.

PTL 4 discloses a paper tube for winding a thread such as wool thereon. The paper tube is formed to have a conical shape so that the thread can be easily pulled out even though the thread is steamed and swollen.

PTL 5 discloses a taping reel for winding an electronic component band having an electronic component bonded thereto. The taping reel has such a configuration that two side plates made of plastic sheets are arranged to face each other and boss parts protruding from central portions of each of the side plates are abutted and bonded to each other to form an outer peripheral surface for winding the electronic component band.

Unlike the adhesive tape disclosed in PTL 3, a binding tape has a feature that wound binding tapes are easily loosened from each other. For this reason, even though the technology disclosed in PTL 3 is applied to the binding tape, the binding tape is loosened toward a side perpendicular to a winding axis, i.e., in an outer diameter direction.

It is therefore an object of the invention described as Supplementary Remarks to provide a tape winding body where a binding tape for binding a to-be-bound object or a non-adhesive binding tape having no adhesive layer is difficult to loosen.

A reel may also be used hooked on tree branches or stanchions (hereinbelow, referred to as "core rod") of diverse sizes. PTL 4 and PTL 5 do not disclose a reel that can be favorably supported on core rods of diverse diameters.

It is therefore an object of the invention described as Supplementary Remarks to provide a reel that can be favorably supported on core rods of diverse diameters.

BRIEF DESCRIPTION OF DRAWINGS

FIG. **1** depicts an outer shape of a binding tape.

FIG. **2** is an exploded perspective view depicting a structure of the binding tape.

FIG. **3** is a partially enlarged view of an intermediate layer.

FIG. **4** is a side view of a binding machine.

FIG. **5** is a side view of the binding machine in a state where a clincher arm is closed.

FIG. **6**A is a perspective view of a staple and FIG. **6**B is a front view.

FIG. **7**A is a perspective view depicting a state where a to-be-bound object is bound, and FIG. **7**B is a side view.

FIG. **8**A and FIG. **8**B depict an aspect of stitching a tape loop by the staple, in which FIG. **8**A depicts a state before the staple is clinched and FIG. **8**B depicts a state after the staple is clinched.

FIG. **9**A and FIG. **9**B depict an aspect of stitching a tape loop by the staple (a first surface layer is omitted), in which FIG. **9**A depicts a state before the staple is clinched and FIG. **9**B depicts a state after the staple is clinched.

FIG. **10**A is a sectional view when the tape loop is stitched by the staple, and FIG. **10**B is an enlarged view of an A part.

FIG. **11**A and FIG. **11**B depict Modified Embodiment 1, in which FIG. **11**A depicts a state before a surface layer is degraded, and FIG. **11**B depicts a state after the surface layer is degraded.

FIG. **12**A and FIG. **12**B depict Modified Embodiment 2, in which FIG. **12**A depicts a state before a binding tape is stretched, and FIG. **12**B depicts a state after the binding tape is stretched.

FIG. **13**A is a perspective view and FIG. **13**B is a front view, depicting an aspect where the binding tape is torn from holes pierced by the staple.

FIG. **14** is a perspective view of a binding tape **10**A.

FIG. **15**A is a perspective view pictorially depicting a layer structure of the binding tape **10**A.

FIG. **15**B is a perspective view pictorially depicting a layer structure of a binding tape **10**B.

FIG. **16**A is a perspective view pictorially depicting an aspect where a staple **30** is struck so as to bind a to-be-bound object by using the binding tape **10**B.

FIG. **16**B is a perspective view pictorially depicting an aspect where the staple **30** is clinched so as to bind the to-be-bound object by using the binding tape **10**B.

FIG. **17**A is a perspective view of a tape winding body **110**, as seen from the left.

FIG. **17**B is a sectional view of the tape winding body **110**, including a central axis AX.

FIG. **17**C is a perspective view of the tape winding body **110**, as seen from the right.

FIG. **17**D is a partially enlarged view in the vicinity of the central axis AX shown in FIG. **1**B.

FIG. **17**E depicts an embodiment where a size of a film **114** is smaller than an outer peripheral surface **112**A.

FIG. **18** is a pictorial view depicting a using method of the tape winding body **110**.

FIG. **19** is a plan view of a film **124**.

FIG. **20**A is a pictorial view depicting an aspect where a binding tape **112** is pulled out.

FIG. **20**B is a pictorial view depicting an aspect where the binding tape **112** is pulled out.

FIG. **21**A is a left side surface of a tape winding body **130**.

FIG. **21**B is a sectional view of the tape winding body **130**, including the central axis AX.

FIG. **21**C is a pictorial view depicting a manufacturing process of the tape winding body **130**.

FIG. **22**A is a sectional view depicting a state where a tape winding body **140** is supported by a round rod B**1**.

FIG. **22**B is a sectional view depicting the state where the tape winding body **140** is supported by the round rod B**1**.

FIG. **22**C is a sectional view depicting the state where the tape winding body **140** is supported by a round rod B**2**.

FIG. **23** is a front view of a binding machine **100**.

FIG. **24**A is a pictorial view depicting an aspect where the tape winding body **110** is held.

FIG. **24**B is a pictorial view depicting an aspect where the tape winding body **110** is held.

FIG. **24**C is a pictorial view depicting an aspect where the tape winding body **110** is held.

FIG. **25** is a plan view of a film **134**.

FIG. **26**A is a pictorial view depicting an inner periphery region **134**B**13** of the film **134**.

FIG. **26**B is a pictorial view depicting an outer periphery region **134**B**11** of the film **134**.

FIG. **26**C is a pictorial view depicting an intermediate region **134**B**12** of the film **134**.

FIG. **27** is a plan view of a film **144**.

FIG. **28**A is a perspective view of a reel **310**.

FIG. **28**B is a sectional view of the reel **310**.

FIG. **29**A is a perspective view of a reel **400**.

FIG. **29**B is a sectional view of the reel **400**.

FIG. **29**C is a partially enlarged view of the reel **400**.

FIG. **30** is a pictorial view depicting a using aspect of the reel **400**.

FIG. **31**A is a sectional view depicting an aspect where the reel **400** is supported.

FIG. **31**B is a sectional view depicting an aspect where the reel **400** is supported.

FIG. **32**A depicts a first modified embodiment of the reel **400**.

FIG. **32**B depicts a second modified embodiment of the reel **400**.

FIG. **32**C depicts a third modified embodiment of the reel **400**.

FIG. **32**D depicts a fourth modified embodiment of the reel **400**.

FIG. **32**E is a pictorial view depicting an aspect and each size of the reel.

FIG. **32**F is a pictorial view depicting an aspect and each size of the reel.

FIG. **32**G is a pictorial view depicting an aspect and each size of the reel.

FIG. **33**A is a sectional view depicting an aspect where a reel of a modified embodiment is supported.

FIG. **33**B is a sectional view depicting an aspect where a reel of a modified embodiment is supported.

FIG. **34** is a perspective view of a reel **70** of a modified embodiment.

FIG. **35** is a front view of a binding machine **800**.

FIG. **36**A is a pictorial view depicting an aspect where a reel **400**B is held.

FIG. **36**B is a pictorial view depicting an aspect where the reel **400**B is held.

FIG. **36**C is a pictorial view depicting an aspect where the reel **400**B is held.

DESCRIPTION OF EMBODIMENTS

Embodiments of the present invention will be described with reference to the drawings.

First Embodiment

A binding tape **10** in accordance with the present embodiment is used for binding of a to-be-bound object **40**, and is used, for example, for a guiding/binding operation when cultivating agricultural crops. Specifically, the binding tape is used so as to bind plant vines, stems, branches and the like to stanchions, nets, shelves and the like. The binding tape **10** is usually used mounted to a binding machine **20** (which will be described later), and is wound on a winding core **19**, as shown in FIG. **1**, which is then loaded in a tape magazine **26** of the binding machine **20**.

As shown in FIG. **2**, the binding tape **10** includes an intermediate layer **11**, a first surface layer **16** covering one surface of the intermediate layer **11**, and a second surface layer **17** covering the other surface of the intermediate layer **11**.

The intermediate layer **11** of the present embodiment consists of a plurality of linear members. Specifically, the intermediate layer **11** consists of first linear members **12** and second linear members **13**.

The first linear members **12** are arranged side by side at an angle with respect to a longitudinal direction of the binding tape **10**. In the present embodiment, the first linear members **12** are arranged orthogonal to the longitudinal direction D**1** of the binding tape **10**. In other words, the first linear members **12** extend in a width direction D**2** of the binding tape **10**.

The plurality of first linear members **12** is arranged side by side at predetermined intervals. An interval W**1** of the first linear members **12** is preferably equal to or smaller than 5 mm (equal to or smaller than a length of a crown portion **32** of a staple **30** that is used for binding), and is more preferably equal to or smaller than 3 mm (equal to or smaller than a length of leg portions **31** of the staple **30** that is used for binding). According to this configuration, even when the binding tape **10** is stretched and extended after the staple **30** is struck for binding, the leg portions **31** of the staple **30** collide with the first linear members **12** until the binding tape is stretched by at least 5 mm (or 3 mm). Therefore, further movement of the staple **30** is hindered, so that it is possible to suppress the holes, which are formed upon fixing by the staple **30**, from further expanding. A size of the expanded holes is suppressed to a range that does not exceed the length of the crown portion **32** of the staple **30** used for binding, so that it is possible to make it difficult for the staple **30** to come off.

Note that, the second linear members **13** are provided to intersect with the first linear members **12**. In the present embodiment, the second linear members **13** extend in the longitudinal direction D**1** of the binding tape **10**. In other words, the second linear members **13** are arranged orthogonal to the width direction D**2** of the binding tape **10**.

In the present embodiment, the second linear members **13** are arranged side by side at predetermined intervals. An arrangement interval of the second linear members **13** is set to the same interval as the arrangement interval of the first linear members **12**.

Note that, in the present embodiment, the plurality of second linear members **13** is arranged side by side. However, the present invention is not limited thereto. For example, only one second linear member may also be provided. However, when it is intended to increase the strength of the binding tape **10**, it is preferably to use the plurality of second linear members **13**. Furthermore, when the staple **30** is struck, at least one of the second linear members **13** is enabled to pass between the pair of leg portions **31** of the staple **30**, which makes it difficult for the binding tape **10** to tear.

The first linear members **12** and the second linear members **13** are formed by bundling (twisting) a fabric material of polyester-based resin such as polyethylene terephthalate (PET). By bundling the fabric material in this way, even when the first linear members **12** and the second linear members **13** are thickened to increase the strength, a thickness of the intermediate layer **11** can be prevented from increasing. That is, since the first linear members **12** and the second linear members **13** are flattened when sandwiching the intermediate layer **11** between the first surface layer **16** and the second surface layer **17**, it is possible to reduce the thickness of the binding tape **10**.

As shown in FIG. **3**, the first linear members **12** and the second linear members **13** are alternately woven into a lattice shape, so that the sheet-shaped intermediate layer **11** is formed. The intermediate layer **11** is formed into the sheet shape, in this way, so that the intermediate layer **11** can be easily handled even before sandwiching the same between the first surface layer **16** and the second surface layer **17**, and the binding tape **10** can be advantageously manufactured. Also, the first linear members **12** and the second linear members **13** are entangled with each other, so that the first linear members and the second linear members are difficult to move by friction. Therefore, the intervals of the lattices are difficult to increase and the stretching of the binding tape **10** can be effectively suppressed.

Note that, it is not necessarily required that the first linear members **12** and the second linear members **13** be alternately woven. For example, the first linear members **12** and the second linear members **13** may also be stacked in a grid shape or the first linear members **12** and the second linear members **13** may be woven every multiple linear members, instead of being alternately woven. The first linear members **12** and the second linear members **13** may also be knitted, instead of being woven. By doing so, the first linear members **12** and the second linear members **13** are difficult to loosen.

The first surface layer **16** and the second surface layer **17** are formed of a film-shaped resin material (polyvinyl chloride (PVC), polyethylene (PE) and the like) so as to exhibit a weather resistance. The intermediate layer **11** is sandwiched between the first surface layer **16** and the second surface layer **17** and the first surface layer **16** and the second surface layer **17** are bonded to each other, so that the binding tape **10** is configured.

The binding tape **10** is used with a binding machine **20** as shown in FIGS. **4** and **5**, for example. The binding machine **20** is similar to the well-known binding machines. That is, the binding machine **20** includes an elongated main handle **21** that is formed linear, a clincher arm **23** rotatably attached to the main handle **21**, and an operating handle **25** rotatably attached to the clincher arm **23**. The clincher arm **23** is urged all the time by a spring, so that it is usually opened with respect to the main handle **21**, as shown in FIG. **4**. When the operating handle **25** and the main handle **21** are gripped from this state, the clincher arm **23** is rotated in a closing direction with respect to the main handle **21**, as shown in FIG. **5**.

Note that, a rear part of the main handle **21** is provided with a tape magazine **26** for accommodating the binding tape **10**. The binding tape **10** accommodated in the tape magazine **26** is pulled out to a tip end portion **21***a* of the main handle **21** through an inside of the main handle **21**. At the tip end portion **21***a* of the main handle **21**, a tip end of the binding tape **10** is held and set.

The main handle **21** is provided with a staple magazine **22** for accommodating staples **30**. The staple **30** that is used in the present embodiment has a substantially U-shape, as shown in FIG. **6**, and has a pair of leg portions **31** and a crown portion **32** connecting the pair of leg portions **31**. As the staples **30** accommodated in the staple magazine **22**, a staple where a plurality of staples **30** is bonded by an adhesive or the like is used. The staples **30** accommodated in the staple magazine **22** are sequentially sent toward the tip end, which is used so as to stitch the binding tape **10**.

A staple driver (not shown) for striking out the staple **30** is provided in the vicinity of a tip end of the staple magazine **22**. When the clincher arm **23** rotates to a state where it is completely closed with respect to the main handle **21**, the staple driver is introduced into the staple magazine **22** to strike out the head staple **30** in the staple magazine **22**. The leg portions **31** of the struck-out staple **30** are pressed and

bent inwardly by a clincher (not shown) provided to a tip end portion **23***a* of the clincher arm **23**.

The tip end portion **21***a* of the main handle **21** is also provided with a cutting blade (not shown) for cutting the bound binding tape **10**.

The tip end portion **23***a* of the clincher arm **23** is also provided with a tape gripping part **24** for gripping the binding tape **10** pulled out to the tip end portion **21***a* of the main handle **21**.

When binding the to-be-bound object **40** with the binding machine **20**, a user first grips the operating handle **25** to rotate the clincher arm **23** in the closing direction with respect to the main handle **21**. Thereby, the tape gripping part **24** provided at the tip end portion **23***a* of the clincher arm **23** grips the binding tape **10** pulled out to the tip end portion **21***a* of the main handle **21**. Thereafter, when the user releases the gripped state of the operating handle **25** to rotate the clincher arm **23** in the opening direction with respect to the main handle **21**, the tip end portion **23***a* of the clincher arm **23** and the tip end portion **21***a* of the main handle **21** are apart from each other with the binding tape **10** being gripped, so that the binding tape **10** is stretched between the clincher arm **23** and the main handle **21**. In this state, the user inserts the to-be-bound object **40** from an outside of the stretched binding tape **10**, and again grips the operating handle **25** to rotate the clincher arm **23** in the closing direction with respect to the main handle **21**. When the tip end portion **23***a* of the clincher arm **23** and the tip end portion **21***a* of the main handle **21** are pressed to each other by the movement, both end portions of the binding tape **10** wound on the to-be-bound object **40** are overlapped to form a tape loop for binding the to-be-bound object **40**. Then, the staple **30** is struck out by the staple driver, so that the leg portions **31** of the struck-out staple **30** are struck into the vicinity of both ends of the overlapped tape loop and penetrate the same. The leg portions **31** of the staple **30** penetrating the tape loop are pressed and stitched by the clincher. Thereafter, the binding tape **10** is cut so as to cut the stitched tape loop. In this way, during the first gripping operation, the binding tape **10** is pulled out, and during the second gripping operation, the binding is performed. In this way, the binding machine **20** of the present embodiment can strike the U-shaped staple **30** into both end portions of the binding tape **10** wound on the to-be-bound object **40**, thereby performing the binding as shown in FIG. **7**.

Here, when the staple **30** is struck into the binding tape **10** during the binding operation, the leg portions **31** of the staple **30** penetrate and pierce the vicinity of both end portions of the overlapped binding tape **10**, as shown in FIG. **8**A. Then, as shown in FIG. **8**B, the leg portions **31** of the staple **30** are clinched and bent inwardly. Thereby, as shown in FIG. **10**A, the overlapped binding tape **10** is sandwiched and held by the leg portions **31** and the crown portion **32** of the staple **30**.

In the binding method of fixing the binding tape **10** with the staple **30** in this way, since the leg portions **31** of the staple **30** pierce the binding tape **10**, it is not possible to avoid formation of holes in the binding tape **10**. When the binding tape **10** is stretched, stress is concentrated on the holes formed upon fixing by the staple **30**. For this reason, in a binding method of using a binding tape **10'** of the conventional art, the binding tape **10'** may be torn from the holes formed upon fixing by the staple **30**, as shown in FIG. **13**.

In this respect, if the binding tape **10** of the present embodiment is used, when the leg portions **31** of the staple **30** are enabled to pierce the binding tape **10**, the leg portions **31** of the staple **30** penetrate between the plurality of first linear members **12**, as shown in FIG. **9**A. Also, at least one or more second linear members **13** are enabled to pass between the leg portions **31** of the staple **30**. In this state, when the leg portions **31** of the staple **30** are clinched as shown in FIG. **9**B, the leg portions **31** of the staple **30** are held in the gaps of the first linear members **12** and the second linear members **13** woven in the lattice shape.

In this bound state, even when the binding tape **10** is stretched, the leg portions **31** of the staple **30** are held by the first linear members **12**, so that movement of the staple **30** is suppressed. Therefore, the holes pierced by the staple **30** are difficult to expand, so that the binding tape **10** is difficult to tear.

In addition, since the stretching of the binding tape **10** is suppressed by the first linear members **12** and the second linear members **13**, the holes formed upon fixing by the staple **30** are difficult to expand. Therefore, it is possible to effectively prevent the binding tape **10** from being torn from the holes formed upon fixing by the staple **30**.

As described above, according to the present embodiment, the binding tape includes the intermediate layer **11**, the first surface layer **16** covering one surface of the intermediate layer **11**, and the second surface layer **17** covering the other surface of the intermediate layer **11**, and the intermediate layer **11** is sandwiched by the first surface layer **16** and the second surface layer **17**. The intermediate layer **11** has the plurality of first linear members **12** arranged side by side at an angle with respect to the longitudinal direction D**1** of the binding tape **10**. According to this configuration, since the strength of the binding tape **10** is increased by the first linear members **12**, even when the staple **30** is struck into the binding tape **10** and binds the same, it is possible to make it difficult for the binding tape to tear. Therefore, when the binding tape **10** is used, it is possible to perform the binding operation by using the binding machine **20** even in a guiding/binding operation for crops having a high repulsive force.

The intermediate layer **11** also has the second linear members **13** intersecting with the first linear members **12**. Since the intervals of the first linear members **12** are suppressed from increasing by the second linear members **13**, it is possible to suppress the binding tape **10** from being stretched. Therefore, even though the binding tape **10** is stretched after the staple **30** is struck into the binding tape **10** and binds the same, the holes pierced by the staple **30** are difficult to expand, so that it is possible to provide the binding tape **10** that is difficult to tear.

Note that, in the above-described embodiment, the first surface layer **16** and the second surface layer **17** are formed of the weather resistant material. However, the present invention is not limited thereto. For example, at least one of the first surface layer **16** and the second surface layer **17** may also be formed of a photodegradable or biodegradable material. According to this configuration, since the surface layer is not deteriorated at an initial stage of the binding, as shown in FIG. **11**A, the binding strength can be secured. Note that, when the binding tape **10** after bound is left outdoors for a predetermined time period or longer, the surface layer is naturally deteriorated, as shown in FIG. **11**B. If the surface layer is deteriorated and only the intermediate layer **11** is left, the gaps of the first linear members **12** and the second linear members **13** configuring the intermediate layer **11** are likely to widen, so that the staple **30** can be easily detached from the binding tape **10**. For this reason, it is possible to easily remove the binding tape **10** when harvesting agricultural crops. Also, even though the

detached binding tape **10** falls in the field, it can be made less noticeable because the fibers of the intermediate layer **11** simply remain. Further, if the first linear members **12** and the second linear members **13** are colored by a blackish color or a brownish color, the binding tape can be made further less noticeable when the fibers of the intermediate layer **11** fall in the field or farmland, because the color becomes a protective color.

In the above-described embodiment, the intermediate layer **11** is configured by the first linear members **12** and the second linear members **13**. However, the present invention is not limited thereto. For example, the intermediate layer **11** may be configured only by the first linear members **12**. In this case, as shown in FIG. **12**A, the first linear members **12** are preferably arranged obliquely with respect to the longitudinal direction D**1** of the binding tape **10** and the width direction D**2** of the binding tape **10**. Note that, in FIG. **12**A, the first linear members **12** are exposed but this is just for convenience of descriptions. That is, the front and back of the actual first linear members **12** (intermediate layer **11**) are covered by the first surface layer **16** and the second surface layer **17** and are not thus exposed.

In a case where the first linear members **12** are provided obliquely in this way, the binding tape **10** can be extended within a predetermined range in the longitudinal direction D**1**, as shown in FIG. **12**B. That is, it is possible to provide the binding tape **10** having appropriate flexibility while increasing the strength of the binding tape **10**, as compared to the conventional art. The binding tape **10** may be used when it is desired to stretch the binding tape **10** according to growth of branches in agricultural crop cultivation, i.e., when it is desired not to inhibit growth of a tree while avoiding excessive restraint, for example.

The binding tape **10** may be configured by the intermediate layer **11** and the first surface layer **16** provided on one surface of the intermediate layer **11**. In this case, the other surface of the intermediate layer **11** may not be provided with the second surface layer **17**, and the other surface of the intermediate layer **11** may be thus exposed. Also in this configuration, the intermediate layer **11** has the plurality of first linear members **12** angled with respect to the longitudinal direction D**1** of the binding tape **10**. According to this configuration, since the strength of the binding tape **10** is increased by the first linear members **12**, even when the staple **30** is struck into the binding tape **10** and binds the same, it is possible to make it difficult for the binding tape to tear. Therefore, when the binding tape **10** is used, it is possible to perform the binding operation by using the binding machine **20** even in a guiding operation of crops having a high repulsive force.

Note that, the first surface layer **16** may not cover one entire surface of the intermediate layer **11**. For example, one surface of the intermediate layer **11** may also be exposed at one end or both ends of the intermediate layer **11** in the width direction D**2**.

Modified Embodiment 1

Hereinbelow, a binding tape **10**A in accordance with a modified embodiment of the binding tape **10** of the first embodiment is described with reference to the drawings. Note that, the descriptions of the constitutional elements, for which it can be understood by one skilled in the art that the configurations or functions that are the same as or similar to the constitutional elements described in the first embodiment can be adopted, will be omitted or simplified.

FIG. **14** is a perspective view of a binding tape **10**A. As shown in FIG. **14**, the binding tape **10**A is wound on the winding core **19**. One side surface **10A1** of the wound binding tape **10**A, i.e., one end portion or edge portion of the binding tape **10**A in the width direction D**2** is formed with first cuts **14A1**. As shown in FIG. **14**, the side surface **10A1** is formed with 12 first cuts **14A1** extending from a substantial center of the winding core **19** in a radial direction and formed with rotational symmetry of 30°, for example.

Similarly, the other side surface **10A2** of the wound binding tape **10**A, i.e., the other end portion or other edge portion of the binding tape **10**A in the width direction D**2** is formed with second cuts **14A2**. The side surface **10A2** is formed with 12 second cuts **14A2** extending from the substantial center of the winding core **19** in the radial direction and formed with rotational symmetry of 30°, for example.

As shown in FIG. **14**, the first cuts **14A1** and the second cuts **14A2** are formed in positions different from each other in the longitudinal direction D**1** of the binding tape **10**A. Specifically, the second cut **14A2** is formed in an intermediate position in the longitudinal direction D**1** between the two adjacent first cuts **14A1** spaced in the longitudinal direction D**1** of the binding tape **10**A. Also, the first cut **14A1** is formed in an intermediate position in the longitudinal direction D**1** between the two adjacent second cuts **14A2** spaced in the longitudinal direction D**1** of the binding tape **10**A.

FIG. **15**A is a perspective view pictorially depicting an aspect where the binding tape **10**A is configured by an intermediate layer **11**A, a first surface layer **16** covering one surface of the intermediate layer **11**A, and a second surface layer **17** covering the other surface of the intermediate layer **11**. Lengths of the first surface layer **16**, the intermediate layer **11** and the second surface layer **17** in the width direction D**2** are substantially the same. However, the lengths of the first surface layer **16** and the second surface layer **17** in the width direction D**2** may also be larger than the length of the intermediate layer **11** in the width direction D**2**. On the other hand, the lengths of the first surface layer **16** and the second surface layer **17** in the width direction D**2** may also be smaller than the length of the intermediate layer **11** in the width direction D**2**. In this case, a surface of an end portion of the intermediate layer **11** in the width direction D**2** is not covered by the first surface layer **16** and the second surface layer **17** and is thus exposed.

In FIG. **15**A, one end portion of the intermediate layer **11**A in the width direction D**2** is formed with the first cut **14A1**. The other end portion of the intermediate layer **11**A in the width direction D**2** is also formed with the second cut **14A2**. The first cut **14A1** and the second cut **14A2** are formed in different positions in the longitudinal direction D**1**.

Instead of the binding tape **10**A shown in FIG. **15**A, the binding tape **10** of the first embodiment may also be modified, like a binding tape **10**B shown in FIG. **15**B.

As shown in FIG. **15**B, the binding tape **10**B is configured by an intermediate layer **11**A, a first surface layer **16**B covering one surface of the intermediate layer **11**A, and a second surface layer **17**B covering the other surface of the intermediate layer **11**. One end portion of the intermediate layer **11**B in the width direction D**2** is formed with a first cut **14B1**. A position of the first surface layer **16**B corresponding to the first cut **14B1** is formed with a cut **16B1**, and a position of the second surface layer **17**B corresponding to the first cut **14B1** is formed with a cut **17B1**. A position of the first surface layer **16**B corresponding to a second cut

14B2 is formed with a cut 16B2, and a position of the second surface layer 17B corresponding to the second cut 14B2 is formed with a cut 17B2. However, either the first surface layer 16B or the second surface layer 17B may not be formed with the cut.

The binding tape 10A and the binding tape 10B may be used so as to bind the to-be-bound object with being mounted to the binding machine 20 as shown in FIGS. 4 and 5.

FIGS. 16A and 16B are pictorial views depicting an aspect where the staple 30 is struck into the binding tape 10B mounted to the binding machine 20 so as to bind a to-be-bound object (not shown). Note that, the staple 30 has the same structure as that shown in FIG. 6. Specifically, the staple 30 has a crown portion 32 extending in a first direction, a first leg portion 31 connecting to the crown portion 32 at one end portion of the crown portion 32 in the first direction and extending in a second direction intersecting with the first direction, and a second leg portion 31 connecting to the crown portion 32 at the other end portion of the crown portion 32 in the first direction and extending in a third direction (which may be the same as the second direction) intersecting with the first direction. One ends of the two leg portions 31 may be free ends. The connection portions between the crown portion 32 and the leg portions 31 may be rounded, as shown in FIG. 6. The staple 30 may also be shown as a rectangular U-shape.

When the staple 30 is struck into the binding tape 10B, the leg portions 31 of the staple 30 penetrate the overlapped binding tape 10B, as shown in FIG. 16A. Then, as shown in FIG. 16B, the leg portions 31 of the staple 30 are clinched and bent inwardly. Thereby, the overlapped binding tape 10B is sandwiched and held by the leg portions 31 and the crown portion 32 of the staple 30. At this time, at least one bundle of the first linear members 12 and the second linear members 13 are sandwiched between the leg portions 31 and the crown portion 32. Also, one side surface of the binding tape 10B in the width direction D2 is formed with the first cut 14A1, and the other side surface is formed with the second cut 14A2. For this reason, as shown in FIG. 16, one end portion of a tape loop, which is formed as a result of the stitching by the staple 30, of the binding tape 10B in the width direction D2 is formed with the first cut 14A1, and the other end portion in the width direction D2 is formed with the second cut 14A2.

In this state, even though the binding tape 10B is stretched, the leg portions 31 of the staple 30 are caught by at least one of the first linear members 12 and the second linear members 13, so that movement of the staple 30 is suppressed. For this reason, the through-holes formed as the staple 30 penetrates the binding tape 10B are difficult to expand, so that it is possible to suppress the binding tape 10 from being torn.

In the below, the technical meanings of the first cut 14A1 or the second cut 14A2 are described.

As described above, the tip end portion 21*a* of the main handle 21 of the binding machine 20 is provided with the cutting blade (not shown) for cutting the wound binding tape 10B. After the tape loop for binding the to-be-bound object 40 is formed, the staple 30 is struck out to stitch the binding tape 10B by the staple driver. Then, the binding tape 10 is cut so as to cut the stitched tape loop by using the tip end portion 21*a* of the main handle 21.

The present inventors noticed that the second linear member 13, which is provided at the end portion in the width direction D2, of the plurality of second linear members 13 arranged side by side in the width direction D2 may not be cut. For example, in a case where the cutting blade for cutting the binding tape 10B is formed by a plurality of periodically formed blades such as saw teeth, the present inventors noticed that a sufficient force is not applied from the blade to the second linear member 13 existing on an outermore side in the width direction D2 than the blade at the end portion in the width direction D2, so that the second linear member 13 at the end portion in the width direction D2 may not be cut. Since the second linear members 13 are connected to the binding tape 10B that is mounted to the binding machine 20, the user of the binding machine 20 should separately cut the second linear member 13 that could not be originally cut.

However, the end portion of the intermediate layer 11B of the binding tape 10B in the width direction D2 is formed with the plurality of first cuts 14B1. For this reason, at least a portion of the second linear member 13 provided at one end portion in the width direction D2 is cut in advance by the first cuts 14B1. For this reason, the second linear members 13 that are not originally cut by the cutting blade of the binding machine 20 can be easily cut. Note that, the second linear members 13 provided at one end portion in the width direction D2 may not be completely cut by the first cuts 14B1. For example, at least a portion of the second linear members 13 provided at one end portion in the width direction D2 is cut by the first cuts 14B1, so that the second linear members can be more easily cut by the pulling resulting from the cutting with the binding machine 20 or by other means such as light pulling with a hand, as compared to the conventional art. 60% or more of a length of at least one second linear member 13 in the width direction D2 is preferably cut by the first cut 14B1.

Note that, in a case where the single second linear member 13 is formed by bundling a plurality of fabric materials (for example, a plurality of polyester fibers), a half or more of the length (for example, 0.5 mm) of the second linear member 13 in the width direction D2 is preferably cut by the first cut 14B1. 60% or more of the length of the second linear member 13 in the width direction D2 is more preferably cut by the first cut 14B1. In the meantime, in a case where the side surface of the wound binding tape 10B is uneven, depths of slits, which are to be the first cuts 14B1 formed by pressing the blade into the side surface of the binding tape 10B, may also be uneven. If a length of the first cut 14B1 in the width direction D2 is made large, the binding tape 10B is extended in the longitudinal direction D1, so that the cutting for the binding tape 10B may be disturbed. Therefore, a length of at least one first cut 14B1 in the width direction D1 with respect to a width of the binding tape 10B is preferably 15% or less.

Similarly, at least a portion of the second linear members 13 provided at the other end portion in the width direction D2 is cut in advance by the second cuts 14B2. For this reason, it is possible to easily cut the second linear members 13 provided at the other end portion in the width direction D2, in a similar manner.

As described above, since one end of the intermediate layer of the binding tape in the width direction is provided with the plurality of cuts spaced in the longitudinal direction of the binding tape, it is possible to reduce a malfunction that may be caused when the second linear members are not cut.

Note that, the binding tape is not necessarily required to have both the first cuts and the second cuts. For example, only one end-side of the binding tape in the width direction may be formed with the first cuts.

In a case where both ends of the intermediate layer of the binding tape in the width direction are provided with the

plurality of cuts spaced in the longitudinal direction of the binding tape, positions in the longitudinal direction in which the plurality of cuts is formed at one end portion and positions in the longitudinal direction in which the plurality of cuts is formed at the other end portion are preferably asymmetrical to each other with respect to a line passing through a center of the binding tape in the width direction. According to this configuration, it is possible to suppress the tensile strength of the binding tape from being lowered.

The number, shape and length of the cuts may also be changed as appropriate. In the present modified embodiment, the cuts are radially formed, as seen from a side surface. However, the present invention is not limited to the present modified embodiment. For example, the side surface of the wound binding tape may also be formed with cuts in a lattice shape, as seen from a side surface.

Second Embodiment

FIG. **17**A is a perspective view of a tape winding body **110** in accordance with a second embodiment, as seen from the left. FIGS. **17**B, **17**C and **17**D are a sectional view including a central axis AX of the tape winding body **110**, a perspective view, as seen from the right, and a partially enlarged view in the vicinity of the central axis AX, respectively. Note that, FIG. **17**A depicts an aspect where a binding tape **112** is a little pulled out and an end portion of the binding tape **112** on an outer periphery-side is loosened.

As shown in FIG. **17**, the tape winding body **110** includes a cylindrical tube member **120**, a binding tape **112** wound on an outer peripheral surface of the tube member **120**, a film **114** (an example of the "first member") provided to face one side surface **112**D of a side surface **112**C and a side surface **112**D of the wound binding tape **112**, and an adhesive layer **116** provided between the film **114** and the side surface **112**D so as to bond the film **114** and the side surface **112**D.

The tube member **120** is formed to have a hollow cylindrical shape whose center is the central axis AX, and has an inner wall surface **120**B as an example of the inner wall whose at least a part includes a cylindrical surface having a radius D**2** (FIG. **17**D) centered on the central axis AX, an outer peripheral surface **120**A whose at least a part includes a cylindrical surface having a radius larger than the radius D**2** and centered on the central axis AX, and one end face **120**D facing toward a direction of the central axis AX and an end face **120**C facing toward an opposite direction to the end face **120**D, which connect the inner wall surface **120**B and the outer peripheral surface **120**A. The tube member **120** is a winding core for winding the binding tape **112**, and may be a paper tube formed to have a tube shape by paper board or may also be formed of plastic such as resin.

The binding tape **112** is a tape for binding two or more to-be-bound objects, for example. The binding tape is configured so that an inner peripheral surface **112**B (FIG. **17**A), which faces inwardly when wound, and an outer peripheral surface **112**A, which faces the inner peripheral surface **112**B outwardly when bound, do not adhere to each other so as to prevent the tape firmly adhering to the to-be-bound objects to disturb binding when it is intended to bind the to-be-bound objects by a hand. For example, each surface of the outer peripheral surface **112**A and the inner peripheral surface **112**B is formed of a non-adhesive material on which an adhesive is not applied, so that the binding tape **112** can be implemented.

The binding tape **112** has one surface becoming the outer peripheral surface **112**A, the other surface becoming the inner peripheral surface **112**B, and side surfaces connecting the surfaces. The binding tape **112** has one side surface **112**D facing the direction of the central axis AX and a side surface **112**C facing toward an opposite direction to the side surface **112**D when wound on the outer peripheral surface **120**A of the tube member **120** with the central axis AX of the tube member **120** as a winding axis. In the present embodiment, a width of the binding tape **112** and a length of the tube member **120** in the direction of the central axis AX are formed to be substantially the same. For this reason, when the binding tape **112** is wound, the end face **120**D of the tube member **120** and the side surface **112**D of the binding tape **112** are substantially flush with each other, and the end face **120**C and the side surface **112**C are substantially flush with each other.

The film **114** is a substantially circular film body having a surface facing the end face **120**D of the tube member **120** and the side surface **112**D of the binding tape **112** and arranged to be substantially concentric with the central axis AX. A central part of the film **114** is formed with a circular hole H**1** substantially concentric with the central axis AX. For this reason, the hole H**1** communicates with a region S surrounded by the inner wall surface **120**B of the tube member **120**. The film **114** may be formed of, for example, fiber such as paper or plastic. Also, the film may have a configuration where fiber and plastic are stacked. Note that, the part communicating with the region S surrounded by the inner wall surface **120**B of the tube member **120** is not limited to the hole H**1** formed in the film **114**. For example, the film **114** may be formed to have a substantial C-shape, and the communicating part may be formed in a notched shape having an opening part. When the film **114** is formed of a material having water resistance and ductility, for example, a material such as resin and rubber or synthetic paper in which a resin material and a pulp material are mixed, the film can be favorably used even though the tape winding body **110** is used in environments exposed to wind and rain, such as an environment where it is used outdoors.

As shown in FIG. **17**B, a radius of the film **114** is set so as to be larger than a radius of the wound binding tape **112** in an unused state. Also, as shown in FIG. **17**D, a radius D**1** of the hole H**1** is set to be smaller than a radius D**2** of the inner wall surface **120**B. Therefore, in a cross section including the central axis AX, the radius D**2** that is a minimum distance between the central axis AX and the inner wall surface **120**B is larger than the radius D**1** that is a minimum distance between the central axis AX and the film **114**. Also, information about the tape winding body **110** is printed on the other surface **114**A of the film **114** (FIG. **17**C).

As shown in FIG. **17**D, a surface of the film **114** is bonded to the facing side surface **112**D of the binding tape **112** by the adhesive layer **116**. In the present embodiment, the adhesive layer **116** is configured as an adhesive layer stacked on the surface of the film **114**. For this reason, the surface of the film **114** is bonded on the substantially entire side surface **112**D of the binding tape **112** and the substantially entire end face **120**D of the tube member **120**. Note that, the adhesive layer **116** may also be provided by coating or spraying an adhesive on the side surface **112**D of the binding tape **112**.

The sizes of the constitutional components of the tape winding body **110** can be designed as appropriate according to uses. For example, a length of the tube member **120** in the direction of the central axis AX may be set to 5 to 15 mm, a diameter of the inner wall surface **120**B may be set to 10 to 30 mm, and a diameter of the outer peripheral surface **120**A may be set to 15 to 40 mm. Also, a width of the binding tape **112** may be set to 5 to 15 mm, a thickness may be set to 0.05 to 0.4 mm, a length may be set to 10 to 40 m,

and an outer diameter may be set to 100 to 120 mm, for example, when wound. Also, a thickness of the film **114** may be set to 0.5 to 3 mm, an outer diameter may be set to 100 to 130 mm, an inner diameter may be set to 10 to 20 mm, and an amount of protrusion from the inner wall surface **120**B, i.e., a difference between the radius D**2** and the radius D**1** may be set to 1 to 5 mm.

FIG. **18** depicts an aspect where a to-be-bound object is bound using the tape winding body **110** with a hand. As shown in FIG. **18**, it is possible to pull out the binding tape **112** while rotating the tape winding body **110** by supporting the tape winding body **110** with a tree branch WD, a stanchion or the like so as to penetrate the region S surrounded by the inner wall surface **120**B of the tube member **120** and the hole H**1**. At this time, the side surface **112**D of the binding tape **112** is bonded to the film **114**, which is a film body, by the adhesive layer **116**. For this reason, even though the binding tape **112** rotates when pulled out, it is possible to suppress the binding tape **112** from loosening due to the inertial force. Similarly, it is also possible to suppress the binding tape **112** from loosening when carried. Even when the binding tape **112** is kept after used, the binding tape is difficult to loosen because the side surface **112**D of the end portion on the outer periphery-side of the binding tape **112** is bonded to the film **114**.

The part bonded to the film **114** is not the outer peripheral surface **112**A and the inner peripheral surface **112**B of the binding tape **112** but the side surface **112**D whose area per a length is extremely smaller than the outer peripheral surface **112**A and the like. For this reason, it is possible to easily pull out the binding tape **112** while suppressing the binding tape from loosening. The information about the tape winding body **110** is printed on the surface **114**A of the film **114**, so that even after the tape winding body **110** is taken out from a box, the tape winding body **110** can be identified from other tape winding bodies and the like. Note that, the information to be printed is not limited to the identification information of the tape winding body. Also, the information may be displayed on the surface **114**A of the film **114** by a method other than the printing. However, the information is not necessarily required to be printed. That is, the information may not be displayed.

Note that, even though the end portion on the outer periphery-side of the binding tape **112** is loosened after used, the binding tape may be kept in a state where a part of the outer peripheral surface **112**A or the inner peripheral surface **112**B is bonded and fixed to the surface of the film **114** that is exposed as the binding tape **112** is used.

The film may also be formed to have a variety of shapes such as rectangular and polygonal shapes, in addition to the circular shape. The film is not necessarily required to be bonded to the entire side surface of the binding tape, and may be bonded to only a part of the side surface. However, when the film is formed large enough to adhere to the side surface of the binding tape on the outermost periphery, it is possible to omit an operation of fixing the outer peripheral end portion of the binding tape by a tape or the like. For this reason, it is possible to reduce a troublesome of taking off a glove for operation and peeling off the tape at the outer peripheral end portion each time the binding tape is replaced. For example, when the film is formed to have a rectangular shape and is bonded at its vicinity of an apex to the side surface of the binding tape on the outermost periphery, it is possible to efficiently use the film. On the other hand, an outer diameter of the film may be formed to be smaller than the outer peripheral surface of the binding tape at the start of use. FIG. **17**E depicts an embodiment where the outer diameter of the film **114** is formed to be smaller than the outer peripheral surface **112**A of the binding tape **12** at the start of use.

The film is not also necessarily required to adhere to the entire end face of the tube member. That is, the film may be only partially bonded or may not be bonded at all. For example, the length of the tube member in the direction of the central axis may be formed to be smaller than the width of the binding tape to space the end face of the tube member and the film each other, so that a gap may be provided. However, when the film is also bonded to the end face of the tube member, even though an adhesion area between the side surface of the binding tape and the film reduces as the binding tape is used, the film can be stably supported.

The hole of the film may not be formed so that the film protrudes from the inner wall of the tube member in the direction of the central axis, or may also be formed to have a circular or polygonal hole larger than the inner wall of the tube member. However, when the film is formed with a small hole so as to protrude from the inner wall of the tube member, the film and the side surface of the binding tape can be bonded to each other so that the hole of the film can be seen beyond the region surrounded by the inner wall surface of the tube member. Therefore, when manufacturing the tape winding body **110** by bonding the film on the side surface of the binding tape wound on the tube member, the position of the film can be easily aligned. Also, even though a positional deviation occurs when bonding the film on the side surface of the binding tape, a part of the film can be bonded on the end face of the tube member. For example, when an inner diameter intersection of the hole of the film is set to ±0.3 mm, an inner diameter intersection of the tube member is set to ±0.3 mm, and a positioning intersection when bonding the film on the side surface of the binding tape is set to ±0.3 mm, a maximum error of 0.9 mm occurs. Therefore, when the radius of the hole of the film is formed to be smaller than the radius of the inner wall surface of the tube member by 1 mm or greater, it is possible to securely bond the end face of the tube member and a part of the film even if a positional deviation occurs. The film is preferably bonded on the side surface of the binding tape concentrically with the binding tape but may not be bonded concentrically. Also, as described above, the hole formed in the film may not be circular. For example, the hole may have a rectangular shape or a polygonal shape such as a hexagonal shape or may be a notch or a slit. Also, for example, the hole may have a rotationally symmetrical shape such as a star shape whose distance to a center changes.

Also, the film may not be formed with the hole. For example, the film may be configured as a film body having a circular shape, a polygonal shape or the like with no hole. Even for the tape winding body configured in this way, it is possible to form a hole through which a core rod or the like can penetrate a central part of the film, by tearing the film at the time of use.

Also, the central part of the film may be formed with a cut. Even for the tape winding body configured in this way, it is possible to form a hole through which a core rod or the like can penetrate a central part of the film, by pushing and expanding the film with the cut at the time of use.

The outer peripheral surface **120**A of the tube member **120** may not be a cylindrical surface. The inner wall surface **120**B may not also be a cylindrical surface, and for example, may be formed with an unevenness.

A thickness T of the film in a direction along the central axis AX is preferably equal to or larger than 0.05 mm and equal to or smaller than 2 mm, for example. The thickness

T of the film is set to be equal to or larger than 0.05 mm and equal to or smaller than 2 mm, so that even when the side surface of the wound binding tape has an unevenness, the film can be easily bonded following the unevenness. Also, when stacking the tape winding body, it is possible to suppress a height from increasing.

In addition to the case where the adhesive layer is formed on the surface of the film, a double-sided tape separate from the film may also be used. Also, a spray-type adhesive or the like may be applied or sprayed on the film, which may be then bonded on the side surface of the binding tape. Also, an adhesive or the like may be applied or sprayed on the side surface of the tape or the end face of the tube member.

In the above, the film has been described as an example of the film body. However, a member having a predetermined thickness can also be used instead of the film.

Modified Embodiment 2

In the below, a modified embodiment of the film **114** is described. Since the other configurations are similar to the second embodiment, the same or similar reference signs are used and the descriptions thereof are omitted or simplified.

FIG. **19** depicts a film **124** (an example of the "first member") in accordance with a modified embodiment of the film **114**. A side surface of the film **124** facing a side surface of the binding tape **112** is formed with a region **124**B**1** in which an adhesive is applied to provide the adhesive layer **116** and six regions **124**B**2** in which the adhesive is not applied. As shown, the six regions **124**B**2** are formed in a rotational symmetry of 60° about a center C**1** of the film **124** as a center. A distance of the two adjacent regions **124**B**2** in the circumferential direction reduces from an outer periphery-side toward an inner periphery-side of the film **124**. For example, a distance in the circumferential distance from an outer periphery-side of any region **124**B**2** to the adjacent region **124**B**2** in a position close to the outer periphery-side is denoted as a distance D**3**, a distance in the circumferential distance between the adjacent regions **124**B**2** in positions on a more inner periphery-side is denoted as a distance D**4** smaller than the distance D**3**, and a distance in the circumferential distance between the adjacent regions **124**B**2** in positions on a further inner periphery-side is denoted as a distance D**5** smaller than the distance D**4**. An adhesion area between the side surface **112**D of the binding tape **112** and the film **124** is a value obtained by integrating a sum of the distances in the circumferential direction between the adjacent regions **124**B**2** in positions spaced from the center C**1** by predetermined distances with respect to the distance from the center C**1**. For this reason, the adhesion area between the side surface **112**D of the binding tape **112** and the film **124** shown in FIG. **19** reduces from the outer periphery-side toward the inner periphery-side over a half or more region of the radius of the film **124**.

In the below, effects of the film **124** are described with reference to FIGS. **20**A and **20**B. Note that, in the present modified embodiment, a tube member having a diameter larger than the tube member **120** of the second embodiment is used. However, since the tube member has similar functions, the same reference signs are used.

FIG. **20**A depicts an aspect where the binding tape **112** is being pulled out in a state where most of the binding tape **112** remains. FIG. **20**B depicts an aspect where the binding tape **112** is being pulled out in a state where most of the binding tape **112** is used and a remaining amount is small.

In a case shown in FIG. **20**A where the remaining amount of the binding tape **112** is large, a distance D**10** between the central axis AX of the binding tape **112** and a pull-out position is large. For this reason, large moment is generated even when the binding tape **112** is pulled with the same force.

On the other hand, in a case shown in FIG. **20**B where the remaining amount of the binding tape **112** is small, a distance D**11** between the central axis AX of the binding tape **112** and a winding position is smaller than the distance D**10**. For this reason, only small moment is generated even when the binding tape **112** is pulled with the same force. In other words, a pull-out resistance for pulling out the binding tape **112** increases. For this reason, it is impossible to pull out the binding tape **112**, as intended. Also, if the force is excessively applied, the binding tape **112** may be excessively pulled out.

When the film **124** of the present modified embodiment is bonded on the side surface **112**D of the binding tape **112**, it is possible to reduce the adhesion area with the side surface **112**D of the binding tape **112** from the outer periphery-side toward the inner periphery-side. For this reason, as compared to the case where the film **114** is used, it is possible to reduce the increase in pull-out resistance on the inner periphery-side.

Note that, the region **124**B**2** in which the adhesive is not applied may also be formed as a hole penetrating the film **124**. As a shape of the region **124**B**2**, a variety of shapes such as a circle and a polygon can be applied as long as the shape can reduce the adhesion area with the side surface of the binding tape from the outer periphery-side toward the inner periphery-side.

Modified Embodiment 3

In the below, a tape winding body **130** in accordance with a modified embodiment of the tape winding body **110** is described. The descriptions of the similar configurations are omitted or simplified by using the same or similar reference signs.

The tape winding body **130** is different from the tape winding body **110** of the second embodiment, in that a film **134** (an example of the "first member") and a film **136** (an example of the "second member") are used instead of the film **114**.

FIG. **21**A is a left side view of the tape winding body **130**, and FIG. **21**B is a sectional view passing through the central axis AX of the tape winding body **130**. The film **134** is a substantially circular film body, and one surface thereof is provided with an adhesive layer **116**B on which an adhesive (not shown) is applied. A part of a surface **134**B of the film **134** facing the side surface **112**D of the binding tape **112** is bonded on the side surface **112**D of the binding tape **112** facing the surface **134**B by an adhesive layer **116**B, and the other part is bonded on a surface of the film **136** facing the surface **134**B by an adhesive layer **116**C. Also, as shown in FIG. **21**B, a central part of the film **134** is formed with a circular hole H**2** having a diameter smaller than an inner diameter of the tube member **120**. In the present modified embodiment, an outer diameter of the film **134** is formed to be slightly smaller than the outer diameter of the binding tape **112** in a wound state.

The film **136** is sandwiched between the film **134** and the side surface **112**D of the binding tape **112**. In the present modified embodiment, the film **136** is a substantially circular film body, and is formed with a substantially circular hole H**3** (FIG. **21**B) at a central part including the center. An outer diameter of the film **136** is formed to be larger than an outer diameter of the tube member **120**, and an inner diameter

thereof is formed to be substantially the same as an inner diameter of the film **134**. For this reason, as shown in FIG. **21**B, in a cross section passing through the central axis AX, the hole H**2** and the hole H**3** communicate with the region S surrounded by the inner wall surface **120**B of the tube member **120**. An end portion of the film **134** on the inner diameter-side and an end portion of the film **136** on the inner diameter-side protrude from the inner wall surface **120**B of the tube member **120**. The film **136** is a film body formed of fiber such as paper or resin such as plastic. In the present modified embodiment, a surface of the film **136** facing the film **134** is applied with an adhesive, and a surface facing the side surface **112**D of the binding tape **112** and the end face **120**D of the tube member **120** is not applied with an adhesive. Therefore, the film **136** adheres to the film **134**, and does not adhere to the binding tape **112** and the tube member **120**. Note that, the part communicating with the region S surrounded by the inner wall surface **20**B of the tube member **120** is not limited to the hole H**2** formed in the film **134** and the hole H**3** formed in the film **136**.

For example, the film **134** or the film **136** may be formed to have a substantial C-shape, and the communicating part may be formed in a notched shape having an opening part. When the film **134** or the film **136** is formed of a material having water resistance and ductility, for example, a material such as resin and rubber or synthetic paper in which a resin material and a pulp material are mixed, the film can be favorably used even though the tape winding body **110** is used in environments exposed to wind and rain, such as an environment where it is used outdoors.

FIG. **21**C is a sectional view depicting one process for manufacturing the tape winding body **130**. As shown in FIG. **21**C, a jig **150** formed by connecting cylinders having different diameters can be used so as to manufacture the tape winding body **130**. Specifically, as the jig **150**, a cylindrical part **150**B having an outer diameter D**51** and a cylindrical part **150**A provided at a tip end of the cylindrical part **150**B and having an outer diameter D**50** smaller than the outer diameter D**51** are concentrically formed. Since the outer diameter D**51** is substantially the same as the inner diameter of the tube member **120**, the cylindrical part **150**B can hold the tube member **120** on which the binding tape **112** is wound. Since the outer diameter D**50** is substantially the same as each of the inner diameters of the film **134** and the film **136**, the cylindrical part **150**A can hold the film **134** and the film **136**. In a state where the tube member **120** on which the binding tape **112** is wound is held by the cylindrical part **150**B, the cylindrical part **150**A holds the film **136** with penetrating the hole H**3**, so that the film **136** can be arranged side by side concentrically with the side surface **112**D of the binding tape **112**. Then, while holding the film **134** with the cylindrical part **150**A penetrating the hole H**2**, the surface **134**B of the film **134** is pressed against the surface of the film **136** and the side surface **112**D of the binding tape **112**.

By the above process, the film **134**, the film **136**, the tube member **120** and the binding tape **112** wound thereon can be concentrically integrated. When the binding tape **112** is made of resin, the binding tape **112** may expand or contract depending on temperatures or may be stretched during winding. Therefore, as compared to a case where the positional alignment is performed based on the outer diameter of the binding tape **112**, it is possible to improve accuracy of the positional alignment.

Note that, in order to prevent the tube member **120** from moving leftward in FIG. **21**A and the like, the jig **150** may be further provided with a cylindrical part having a large diameter and configured to contact the end face **120**C of the tube member **120**. Similarly, the tape winding body such as the tape winding body **110** where the film is one may also be positionally determined and integrated so that the film and the tube member are to be concentric with each other.

According to the tape winding body **130**, it is possible to adjust the adhesion area between the film **134** and the side surface **112**D of the binding tape **112** by adjusting the outer diameter of the film **136**. Therefore, when the remaining amount of the binding tape **112** becomes small, the pull-out load of the binding tape **112** can be reduced by reducing the adhesion area between the film **134** and the binding tape **112** or removing the adhesion. Also, it is possible to suppress the adhesive on the surface of the film **134** from squeezing out by the film **136**. Since a region protruding from the tube member **120**, which can be seen in the left side view of FIG. **21**A, toward the center direction can be covered with the film **136**, dust and the like can be suppressed from being attached in the region.

Note that, the film **136** may also be formed so that an adhesive is not applied on any surface. At this time, a shape such as the region **124**B**2** (FIG. **19**) may be continuously provided on the outer peripheral part. In this case, the film **136** has such a shape that a substantially circular central part having a hole formed at a center and a plurality of extension parts are provided, wherein the extension parts are each continuously provided on an outer periphery of the central part, extend so that an area gradually reduces toward an outer diameter and are spaced in a circumferential direction. Also, the film **136** may not be provided, and a region on the surface of the film **134** facing the film **136** may be applied with a release agent or the like, so that a non-contact surface may be provided.

In the tape winding body as described above, since the film that adheres to the side surface of the binding tape is provided, it is possible to suppress the binding tape from loosening. In the below, effects that are realized when the film protrudes inwardly beyond the tube member are described.

FIG. **22**A is a pictorial view depicting a use aspect where a tape winding body **140** is used supported by a round rod B**1**. Note that, the descriptions of the constitutional elements satisfying the similar functions to the second embodiment and the like are omitted or simplified by using the similar reference signs, even when the sizes are different. FIG. **22**A is a sectional view passing through the central axis AX of the tape winding body **140**. For convenience, a part, which protrudes from the inner wall surface **120**B toward the central axis AX, of the film **114** is referred to as a rib portion **114**F. The rib portion **114**F of the tape winding body **140** is annularly formed. In the sectional view passing through the central axis AX, an amount of protrusion of the rib portion **114**F from the inner wall surface **120**B is denoted as a protruding amount P. A width of the tube member **120** in the direction of the central axis AX is denoted as a width W**2**.

As shown in FIG. **22**A, the rib portion **114**F is provided, so that when supported by the round rod B**1**, the tape winding body **140** is supported at two places of both ends in the direction of the central axis AX by the round rod B**1**. Specifically, the tape winding body **140** is contacted to the round rod B**1** in a position **114**F**1**, which is a tip end of the film **114** exposed to the hole H**1** and at which a distance to the central axis AX is smallest, and in a position **120**F that is the other end portion, which is on the opposite side to the film **114** in the direction of the central axis AX, of the inner wall surface **120**B of the tube member **120**. The two support points are provided, so that the tape winding body **140** can be stably supported, as compared to a case where the rib

portion **114**F is not provided and the contact place with the round rod B**1** is not thus constant. In particular, since the large moment is applied to the position **114**F**1** of the film **114** by the binding tape **112** on the lower side in FIG. **22**A, the stability can be improved.

Note that, in a case where the width W**2** is 5 to 15 mm, the protruding amount P is preferably 1 mm or more, i.e., 6.6% or more of the width W**2**. In this case, in the cross section including the central axis AX, an angle θ between a tangential line T**1** (FIG. **22**A) in contact with the film **14** on one end-side in the direction of the central axis AX and in contact with the tube member **120** on the other end-side in the direction of the central axis AX and the central axis AX is 3.8° or greater. Note that, in the same cross section, in a case where the inner wall surface **20**B of the tube member **120** and the central axis AX are parallel to each other, an angle θ**1** between the tangential line T**1** and the inner wall surface **20**B is the same as the angle θ. If the protruding amount P is smaller than the above, it may be difficult to make the contact in the position **114**F**1** and the position **20**F as support points when a surface of the round rod B**1** has an unevenness of about 1 mm or when the unevenness of the surface has an inclination of about 3°. For example, when the width W**2** is about 15 mm, if the protruding amount P is 0.8 mm, the angle θ is about 3°.

When the width W**2** is 5 to 15 mm, the protruding amount P is preferably 7.5 mm or smaller, i.e., 50% or less of the width W**2**. In this case, the angle θ is 26.5° or smaller. If the protruding amount P becomes larger, a high load is applied on the position **120**F-side, so that the film **114** may be rotated in a counterclockwise direction due to a weight of the binding tape **112** and the tape winding body **140** may fall down, in some cases.

Note that, the rib portion **114**F may not be formed in an annular shape. For example, a configuration is also possible in which the rib portion **114**F is provided with a slit and a plurality of protrusions protruding toward the central axis AX is spaced from each other in the circumferential direction.

Note that, in a case where the film **114** that is an example of the first member is flexible to be elastically deformable and the rib portion **114**F can be thus bent, in a case where the protruding amount P of the rib portion **114**F from the inner wall surface **120**B is 1 mm or more, and in a case where the thickness T of the rib portion **114**F in the direction of the central axis AX is equal to or larger than 0.05 mm and equal to or smaller than 2 mm, when the tape winding body **140** is supported by the round rod B**1**, the rib portion **114**F is bent in an insertion direction of the round rod B**1** and is deformed, as shown in FIG. **22**B. The rib portion **114**F is bent, so that a check effect of making it difficult for the round rod B**1** to separate is realized. As a result, the tape winding body **140** is difficult to separate from the round rod B**1**.

A case where an outer shape of a round rod B**2** has a double or larger size of the radius D**1** of the hole H**1** of the film **114** is shown in FIG. **22**C. Also in this case, in a case where the film **114** that is an example of the first member is flexible to be elastically deformable and the rib portion **114**F can be thus bent, in a case where the protruding amount P of the rib portion **114**F from the inner wall surface **120**B is 1 mm or more, and in a case where the thickness T of the rib portion **114**F is equal to or larger than 0.05 mm and equal to or smaller than 2 mm, when the tape winding body **140** is supported by the round rod B**2**, the rib portion **114**F is bent in an insertion direction of the round rod B**2** and is deformed. The rib portion **114**F is bent, so that a check effect of making it difficult for the round rod B**2** to separate is realized. As a result, the tape winding body **140** is difficult to separate from the round rod B**2**.

Third Embodiment

A third embodiment where the tape winding body is used loaded on the binding machine is described. By using the binding machine, it is possible to bind branches and vines of fruit trees and vegetables to stanchions, and to bundle vegetables and bags together.

FIG. **23** is a front view of a binding machine **200**. The binding machine **200** as a hand-held tool includes a clincher arm **210**, a binding machine main body **240**, a handle **212**, a tape pulling-out unit **220**, a tape conveying unit **242**, a staple magazine unit **260**, and a tape magazine unit **280**. In the tape magazine unit **280**, a tape winding body is loaded. An end portion of a binding tape of the tape winding body is kept pulled out upwardly from a tape guide **246** of the tape conveying unit **242**, in FIG. **23**.

When the user grips the handle **212** and brings the same close to the binding machine main body **240**, the clincher arm **210** comes close to the binding machine main body **240** according to the principle of a lever, thereby sandwiching the binding tape by a tape catcher **224** and a tape plate **226** of the tape pulling-out unit **220**. When the user loosens the gripped state of the handle **212**, the clincher arm **210** separates from the binding machine main body **240** in the state where the binding tape is sandwiched, so that the binding tape is pulled out upwardly from the tape guide **246**. In this state, when the user pushes the binding machine **200** to the right in FIG. **23** so that a plurality of to-be-bound objects such as branches of vegetables and stanchions are present in a space between the clincher arm **210** and the tape conveying unit **242**, the to-be-bound objects and the binding tape are contacted to each other, so that the binding tape is further pulled out from the tape guide **246**. When the user again grips the handle **212**, the clincher arm **210** again comes close to the binding machine main body **240**, so that the binding tape is wrapped around the to-be-bound objects. Also, as the clincher arm **210** moves downwardly, when the tape guide **246** moves along an inclined surface facing the tape catcher **224** and reaches a position in which the movement is restrained, the tape catcher **224** rotates in a direction (toward the front part-side) away from the tape plate **226**. The tape guide **246** is also correspondingly rotated toward the front part-side. As the tape guide **246** is rotated, a cutting blade provided at a tip end of the tape guide **246** cuts the binding tape. Also, the staple loaded in the staple magazine main body **262** is struck out to stitch overlapped parts of the binding tape. By the series of processes, the to-be-bound objects are bound.

The tape winding body is required to be rotatably held in the tape magazine unit **280** so that it can be favorably used for the binding machine **200**. In a case where the tape winding body configured only by a tube member and the binding tape wound on the tube member is used, the tape magazine unit **280** is provided with a shaft part penetrating a region surrounded by an inner wall of the tube member, so that the tape winding body can be rotatably held. However, when it is intended to hold a tape winding body whose inner diameter of the tube member is large, a gap from the shaft part increases, so that it is difficult to rotatably hold the tape winding body in a stable manner.

The present inventors conceived that when the tape winding body **110** is used, the tape winding body **110** can be stably rotatably held.

FIGS. **24**A to **24**C are pictorial views depicting a method of holding the tape winding body **110**. The tape magazine unit **280** has a shaft part **282** having a central axis AX**2**. The shaft part **282** has a cylindrical portion **282**A having a cylindrical shape, and a circular truncated conical portion **282**B having a circular truncated conical shape and formed on a tip end of the cylindrical portion **282**A. A radius of a bottom surface of the circular truncated conical portion **282**B is formed to be larger than a radius of the cylindrical portion **282**A. For this reason, the shaft part **282** has an annular bottom surface part **282**A**1** protruding from the cylindrical portion **282**A, and an inclined surface **282**A**2** that is a conical surface. Here, a radius D**20** of the cylindrical portion **282**A is formed to be substantially the same as a radius D**1** of the hole H**1**. Also, a radius D**22** of the circular truncated conical portion **282**B is formed to be smaller than a radius D**2** of the inner wall surface **120**B of the tube member **120** and larger than the radius D**1** of the hole H**1**.

The shaft part **282** is configured to be movable in the direction of the central axis AX**2** and to be rotatable about the central axis AX**2** as a center in the tape magazine unit **280**. For example, the shaft part **282** may be configured to be held in the tape magazine unit **280** with being urged downwardly in the direction of the central axis AX**2** in FIG. **24**A and the like by a coil spring (not shown), and to be manually movable upwardly in the direction of the central axis AX**2** by pressing the bottom surface **282**D. Also, the shaft part may be configured to be rotatable around the central axis AX**2** by a bearing and the like (not shown).

FIGS. **24**A to **24**C are sectional views of the tape winding body **110** mounted in the tape magazine unit **280** and the shaft part **282** of the tape magazine unit **280**, taken along a plane including the central axis AX**2** of the shaft part **282**. FIG. **24**A depicts a state before the tape winding body **110** is mounted. The central axis AX of the tape winding body **110** is not required to coincide with the central axis AX**2** of the shaft part **282**. However, the tape winding body **110** is preferably mounted in the tape magazine unit **280** so that the central axis AX and the central axis AX**2** come close to each other at a distance smaller than the amount of protrusion of the film **114** and are substantially parallel to each other.

Subsequently, as shown in FIG. **24**B, the shaft part **282** is moved upwardly in the direction of the central axis AX**2**. Since the radius D**22** of the circular truncated conical portion **282**B is formed to be larger than the radius D**1** of the hole H**1**, the inclined surface **282**A**2** contacts end portions of the film **114**. Since the end portions of the film **114** are free ends, the film can be deformed along the inclined surface **282**A**2**, as shown in FIG. **24**B. When the shaft part **282** is further moved upwardly, the bottom surface part **182**A**1** of the circular truncated conical portion **282**B passes through the film **114**. For this reason, the circular truncated conical portion **282**B is accommodated in a region surrounded by the film **14** and the inner wall surface **120**B of the tube member **120**.

Thereafter, when the upward pressing in the direction of the central axis AX**2** of the shaft part **282** is stopped, the shaft part **282** is moved by the urging force of the coil spring. However, the bottom surface part **282**A**1** of the circular truncated conical portion **282**B contacts an edge portion of the film **114** with the hole H**1** and becomes a stopper. For this reason, as shown in FIG. **24**C, the tape winding body **110** can be held in the state where the circular truncated conical portion **282**B is accommodated in the region surrounded by the film **114** and the inner wall surface **120**B of the tube member **120**. At this time, the end portions of the film **114** are deformed downwardly in the direction of the central axis AX**2** away from the tube member **120**.

In this way, the film is formed with the hole so as to protrude toward the central axis AX, so that it is possible to provide the tape winding body capable of being stably held by the binding machine. Also, even a tape winding body whose inner diameter of the tube member is different can be held by forming the hole to have substantially the same diameter.

Note that, the hole H**1** may not be circular. For example, the hole H**1** may be formed so that two short sides are each present on the side surface **112**D of the binding tape **112** and two long sides are each above the region S surrounded by the end face **120**D of the tube member **120** and the inner wall surface **120**B of the tube member **120**. Also in this configuration, since a part of the film **114** protrudes beyond the inner wall surface **120**B of the tube member **120**, it is possible to hold the tape winding body by using the shaft part **282**.

The shaft part **282** is not necessarily required to be rotatable. Even though the shaft part **282** does not rotate, since the shaft part **282** slides on the surface of the film **114**, it is possible to rotate the tape winding body **110**.

Modified Embodiment 4

As the binding tape **112** of the second embodiment or as the binding tapes described in the other embodiments and the modified embodiments, a binding tape that is similar to the binding tape **10** or the binding tape according to the modified embodiment may also be used.

In this case, the tape winding body includes a cylindrical tube member, a tape wound on the tube member, capable of binding a to-be-bound object, and having a structure similar to the binding tape **10** or the like, and a first member positioned on a side surface of the wound tape, wherein the first member and at least a part of the side surface of the tape are bonded. As described above, the first member may be flexible to be elastically deformable, for example. The binding tape wound on the tube member has an intermediate layer, and a first surface layer covering one surface of the intermediate layer. The intermediate layer has a plurality of first linear members arranged side by side at an angle with respect to a longitudinal direction of the binding tape.

The tape winding body has the intermediate layer, and the first surface layer covering one surface of the intermediate layer. The intermediate layer has the plurality of first linear members arranged side by side at an angle with respect to the longitudinal direction of the binding tape. Therefore, it is possible to make it difficult for the binding tape to tear. When the binding tape is used, it is possible to perform the binding operation by using the binding machine for gardening even in a guiding operation of crops having a high repulsive force.

Modified Embodiment 5

As the binding tape **112** of the second embodiment or as the binding tapes described in the other embodiments and the modified embodiments, a binding tape that is similar to the binding tape **10**A shown in FIG. **14** and the like may also be used. In this case, one end portion of the intermediate layer of the binding tape in the width direction is formed with a plurality of first cuts spaced in the longitudinal direction of the binding tape. The other end portion of the intermediate layer of the binding tape in the width direction is also formed with a plurality of second cuts spaced in the

longitudinal direction of the binding tape. At least one of the first cuts may cut at least a portion of the second linear member.

Modified Embodiment 6

In the below, a modified embodiment of the film **114** is described. Since the other configurations are similar to the second embodiment, the same or similar reference signs are used and the descriptions thereof are omitted or simplified.

FIG. **25** depicts a film **134** (an example of the "first member") in accordance with a modified embodiment of the film **114**. A surface of the film **134** facing the side surface of the binding tape **112** is formed with a region **134**B**1** in which an adhesive including an acrylic-based gluing agent, for example, is applied to provide the adhesive layer **116** and a region **134**B**2** in which the adhesive is not applied.

FIGS. **26**A to **26**C are pictorial views in which the region **134**B**1** shown in FIG. **25** is separated into an outer periphery region **134**B**11**, an intermediate region **134**B**12**, and an inner periphery region **134**B**13**.

As shown, the outer periphery region **134**B**11** is formed in a region on an outer periphery-side, which includes an outer edge or an outer periphery of the film **134** most distant from a center C**2** of the film **134**, of the region **134**B**1** having the adhesive layer **116**. The outer periphery region **134**B**11** is provided and at least a part thereof is bonded to the side surface of the wound binding tape **112**, so that it is possible to suppress the film **134** from being bent. The outer periphery region may not be formed over an entire circumference of the outer edge or outer periphery, and may be formed to include only a part of the outer edge, for example. A width of the outer periphery region **134**B**11** is determined based on a material of the binding tape **112**, a surface state, adhesion strength of an adhesive to be applied, tack strength, a pressure bonding load upon seal adhesion, and the like.

The inner periphery region **134**B**13** is formed in a region, which is close to an inner edge or an inner periphery of the film **134**, of the region **134**B**1** having the adhesive layer **116**. As shown, in the present modified embodiment, the region including the inner edge or inner periphery is formed with the region **134**B**2** in which an adhesive is not applied. At least a part of the inner periphery region **134**B**13** is bonded in a region of the end face **120**D of the tube member **120** on the outer diameter-side, so that even though the binding tape **112** is used and a side surface area thereof is thus reduced, the film **134** can be suppressed from being detached from the binding tape **112**. Also, when discarding, it is possible to suppress a troublesome of picking up the tube member such as a paper tube, which has been separated from the film and has fallen, and to discard the film **134** and the tube member **120** together. It is not necessarily required to provide the region **134**B**2**, which is surrounded by the inner periphery region **134**B**13** and on which the adhesive layer is not applied. However, since the inner periphery of the film **134** is smaller than the inner periphery of the tube member **120**, in a case where the film **134** protrudes beyond the inner wall surface of the tube member **120**, when the region such as the region **134**B**2** on which the adhesive is not applied is formed, it is possible to suppress attachment and deposition of the adhesive on a mounting part when mounted to the binding machine.

In a plan view of FIG. **25**, the inner periphery region is preferably formed over the entire circumference so as to surround the center C**2**.

The intermediate region **134**B**12** is formed in a spiral shape extending in an outer diameter direction from the center C**2** and also extending in the circumferential direction so as to connect the outer periphery of the inner periphery region **134**B**13** and the inner periphery of the outer periphery region **134**B**11**. The intermediate region **134**B**12** connects to the outer periphery of the inner periphery region **134**B**13** and the inner periphery of the outer periphery region **134**B**11**. For this reason, a virtual circle having the center C**2** as a center and larger than the inner periphery region **134**B**13** and smaller than the outer periphery region **134**B**11** always passes through the region **134**B**1** in which the adhesive is applied and the region **134**B**2** in which the adhesive is not applied, irrespective of diameters. For this reason, a part of one round of the binding tape **112** can be theoretically bonded to the region **134**B**1** in which the adhesive is applied. For this reason, it is possible to suppress the binding tape **112** from loosening. However, this does not prevent a case where one round of the binding tape **112** is not bonded to the region **134**B**1** due to uneven heights of the side surface of the binding tape **112**. Also, it is possible to suppress a situation where the adhesive is excessively bonded to the binding tape **112** and hinders binding of the to-be-bound object.

In the present modified embodiment, the intermediate region **134**B**12** is formed so that a length of a circular arc, which passes through the region **134**B**1** in which the adhesive is applied, of the virtual circle larger than the inner periphery region **134**B**13** and smaller than the outer periphery region **134**B**11** is smaller than a length of a circular arc passing through the region **134**B**2** in which the adhesive is not applied. For this reason, it is possible to suppress the pull-out resistance of the binding tape **112** from excessively increasing.

In the present modified embodiment, the intermediate region **134**B**12** is formed so that as a diameter of the virtual circle larger than the inner periphery region **134**B**13** and smaller than the outer periphery region **134**B**11** increases, a ratio of the length of the circular arc passing through the region **134**B**2** in which the adhesive is not applied to the length of the circular arc passing through the region **134**B**1** in which the adhesive is applied increases. For this reason, it is possible to suppress the pull-out resistance from increasing as the binding tape **112** is used and the distance to the center C**2** thus decreases.

In a plan view of FIG. **25**, the intermediate region **134**B**12** may be formed so that a line segment connecting the outer periphery region **134**B**11** and the inner periphery region **134**B**13** on a straight line passing through the center C**2** includes the region in which the adhesive is applied, i.e., the intermediate region **134**B**12**, irrespective of angles. According to this configuration, since the film **134** and the binding tape **112** can be bonded in all directions, the binding machine can stably grip the film **134**. It is also possible to suppress the binding tape **112** from loosening.

Note that, the intermediate region **134**B**12** is preferably formed in one-third region, more preferably one-half region of a range from the inner periphery to the outer periphery of the film **134**. The inner periphery region **134**B**13**, the outer periphery region **134**B**11**, the intermediate region **134**B**12** may also be separated from each other. The intermediate region **134**B**12** may also be formed by a plurality of regions separated from each other. For example, the intermediate region **134**B**12** may be formed by a plurality of circular regions separated from each other.

Note that, in the present modified embodiment, the inner periphery region **134**B**13** is an example of the first part of the first member. The outer periphery region **134**B**11** and the intermediate region **134**B**12** are examples of the second part

of the first member. The region **134**B**2** in which the adhesive is not applied is an example of the non-adhesion part of the first member.

The intermediate region **134**B**12** includes an example of the first circular arc part. The region **134**B**2** in which the adhesive is not applied is an example of the second circular arc part. The intermediate region **134**B**12** includes a plurality of first circular arc parts because it includes circular arcs on the virtual circle including the first part therein for a plurality of virtual circles having different diameters. The region **134**B**2** in which the adhesive is not applied includes a plurality of second circular arc parts because it includes circular arcs on the virtual circle including the first part therein for a plurality of virtual circles having different diameters.

FIG. **27** is a plan view of a film **144** (an example of the "first member") in accordance with a modified embodiment of the film **114**. A surface of the film **144** facing the side surface of the binding tape **112** is formed with a region **144**B**1** in which an adhesive is applied to provide the adhesive layer **116**, and a region **144**B**2** in which an adhesive is not applied.

As shown in FIG. **27**, an outer periphery region **144**B**11** of the region **144**B**1** is formed similarly to the outer periphery region **134**B**11**, and an inner periphery region **144**B**13** is formed similarly to the inner periphery region **134**B**13**. Therefore, the detailed descriptions thereof are omitted.

An intermediate region **144**B**12** is formed to extend in the outer diameter direction from a center C**3** and also extending in the circumferential direction so as to connect an outer periphery of the inner periphery region **144**B**13** and an inner periphery of the outer periphery region **144**B**11**. Also, the intermediate region **144**B**12** is configured by seven separated small regions that are rotationally symmetric with respect to the center C**3**.

Also in this configuration, a virtual circle having the center C**3** as a center and larger than the inner periphery region **144**B**13** and smaller than the outer periphery region **144**B**11** always passes through the region **144**B**1** in which the adhesive is applied and the region **144**B**2** in which the adhesive is not applied, irrespective of diameters. For this reason, it is possible to suppress the binding tape **112** from loosening.

The intermediate region **144**B**12** is formed so that a length of a circular arc, which passes through the region **144**B**1** in which the adhesive is applied, of the virtual circle larger than the inner periphery region **144**B**13** and smaller than the outer periphery region **144**B**11** is smaller than a length of a circular arc passing through the region **144**B**2** in which the adhesive is not applied. For this reason, it is possible to suppress the pull-out resistance of the binding tape **112** from excessively increasing. Preferably, 60% to 70% of a circumference of the virtual circle passes through the region **144**B**2** in which the adhesive is not applied and 30% to 40% passes through the intermediate region **144**B**12** in which the adhesive is applied.

In the present modified embodiment, as a diameter of the virtual circle larger than the inner periphery region **144**B**13** and smaller than the outer periphery region **144**B**11** increases, the length of the circular arc passing through the region **144**B**1** in which the adhesive is applied increases. For this reason, it is possible to suppress the pull-out resistance from increasing as the binding tape **112** is used and the distance to the center C**3** thus decreases.

Note that, in the present modified embodiment, the intermediate region **144**B**12** is an example of the plurality of parts of the first member that are bonded to the side surface of the binding tape. The region **144**B**2** in which the adhesive is not applied is an example of the non-adhesion part of the first member.

Fourth Embodiment

FIG. **28**A is a perspective view of a reel **310** in accordance with a fourth embodiment, and FIG. **28**B is a sectional view taken along a plane including the axis center AX of the reel **310**.

As shown in FIGS. **28**A and **28**B, the reel **310** includes a cylindrical tube member **312**, and a protrusion **314** extending on one end face-side of the tube member **312** toward the axis center AX-side of the tube member **312**. In the present embodiment, the tube member **312** and the protrusion **314** are integrally provided.

An outer peripheral surface **312**A of the tube member **312** is formed as a cylindrical surface of a radius R**1** having the axis center AX as a center. An inner wall surface **312**B of the tube member **312** is formed as a cylindrical surface of a radius R**2** having the axis center AX as a center. An end face **312**C connecting the outer peripheral surface **312**A and the inner wall surface **312**B is formed at one end portion in the direction of the axis center AX. The other end portion in the direction of the axis center AX is formed with the protrusion **314**. A space S is a hollow space surrounded by an inner wall surface **312**B of the tube member **312**. The tube member **312** is a winding core for winding a binding tape **420**, and may be a paper tube formed of paper such as paper board or may also be formed of plastic such as resin.

The protrusion **314** extends on one end face-side of the tube member **312** toward the axis center AX of the tube member **312**. The protrusion **314** is formed in a circular ring shape having an outer peripheral part **314**A of the radius R**1** having the axis center AX as a center, an inner peripheral part **314**B of a radius R**3** having the axis center AX as a center, an end face **314**C facing toward the tube member **312**-side, and an end face **314**D facing toward the direction of the axis center AX in an opposite direction to the end face **312**C. The outer peripheral part **314**A is formed to be flush with the outer peripheral surface **312**A of the tube member **312**. On the other hand, the radius R**3** of the inner peripheral part **314**B is smaller than the radius R**2** of the inner wall surface **312**B of the tube member **312**. For this reason, the protrusion **314** has a rib portion **314**E protruding from the inner wall surface **312**B of the tube member **312** toward the axis center AX. An amount of protrusion of the rib portion **314**E from the inner wall surface **312**B is indicated by a difference between the radius R**2** and the radius R**3**. As shown, in the present embodiment, the rib portion **314**E has a circular ring shape having the axis center AX as a center. At a central part through which the axis center AX passes, a circular hole H**1** surrounded by the rib portion **314**E and communicating with the space S is formed.

FIG. **29**A is a perspective view of a reel **400** where the binding tape **420** is wound on the reel **310**, as seen from the end face **314**D-side of the protrusion **314**. Note that, in the below, a reel on which a binding tape is wound is referred to as a reel **400**, a reel **400**A and the like, and a reel on which a binding tape is not wound is referred to as a reel **310**, a reel **310**A and the like so as to identify both the reels.

FIG. **29**B is a sectional view of the reel **400** taken along a plane including the axis center AX. FIG. **29**C is a partially enlarged view of the vicinity of the rib portion **314**E. Note that, the reel **310** shown in FIG. **29**A and the like is different from the reel **310** shown in FIG. **28**A and the like, in that the size and the like of the rib portion **314**E are different, but

have the same functions, so that the same reference signs are denoted and the descriptions thereof are omitted. In the other drawings, even for the constitutional elements having a different size and the like, those having the same functions are denoted with the same reference signs and the descriptions thereof are omitted.

The binding tape **420** is wound on the outer peripheral surface **312**A of the tube member **312** so that a surface **420**B faces toward the axis center AX and a surface **420**A on an opposite side faces toward the outer diameter direction. The binding tape **420** is wound, so that one side surface **420**C facing toward the direction of the axis center AX and the other side surface **420**D facing toward the direction of the axis center AX on an opposite side are formed. As shown in FIG. **29**B, in the present embodiment, since a length of the reel **310** in the direction of the axis center AX and a width of the binding tape **420** are substantially the same, the side surface **420**C and the end face **312**C are substantially flush with each other. Similarly, the side surface **420**D and the end face **314**D of the protrusion **314** are substantially flush with each other.

The sizes of the constitutional components of the reel **400** can be designed as appropriate according to uses. For example, the length of the tube member **312** in the direction of the axis center AX may be set to 5 to 15 mm, the radius R**2** of the inner wall surface **312**B may be set to 5 to 15 mm, and a radius of the outer peripheral surface **312**A may be set to 7.5 to 20 mm. Also, the width of the binding tape **420** may be set to 5 to 15 mm, a thickness may be set to 0.05 to 0.4 mm, a length may be set to 10 to 40 m, and a radius may be set to 50 to 60 mm, for example, when wound. A thickness of the protrusion **314** in the direction of the axis center AX may be set to 1 mm or smaller, for example. The amount of protrusion of the rib portion **314**E from the inner wall surface **312**B toward the axis center AX, i.e., a difference between the radius R**2** and the radius R**3** may be set to 1 mm or larger, for example. The protrusion **314** is preferably flexible.

FIG. **30** depicts an aspect where a to-be-bound object is bound using the reel **400** with a hand. As shown in FIG. **30**, it is possible to pull out the binding tape **420** while rotating the reel **400** about the axis center AX by supporting the reel **400** with a tree branch WD, which is a core rod, a stanchion or the like so as to penetrate the region S surrounded by the inner wall surface **312**B of the tube member **312** and the hole H**1**.

FIGS. **31**A and **31**B are pictorial views depicting a use aspect where the reel **400** is supported by the cylindrical core rod B**1** to penetrate the region S surrounded by the inner wall surface **312**B of the tube member **312** and the hole H**1**. FIG. **31**A is a sectional view taken along a plane including the axis center AX while the reel **400** is moved rightward in FIG. **31**A with respect to the core rod B**1** so that the core rod B**1** penetrates the region S and the hole H**1**. FIG. **31**B is a sectional view taken along a plane including the axis center AX, depicting a state where the core rod B**1** penetrating the region S and the hole H**1** supports the reel **400**.

As shown in FIG. **31**A, in a case where a radius R**4** of the core rod B**1** is larger than the radius R**3** of the inner peripheral part **314**B, the core rod B**1** is contacted to a tip end of the rib portion **314**E. Even in a case where the radius R**4** of the core rod B**1** is equal to or smaller than the radius R**3** of the inner peripheral part **314**B, when moving relatively the core rod so that an axis center of the core rod B**1** is not concentric with the axis center AX, the core rod B**1** may contact the tip end of the rib portion **314**E. However, since the tip end of the rib portion **314**E is a free end, it can be deformed as shown in FIG. **31**A. For this reason, the core rod B**1** penetrate the region S and the hole H**1**. In a state where the reel **400** is supported by the core rod B**1** penetrating the region S and the hole H**1**, the tube member **312** is tilted due to own weights of the binding tape **420** and the tube member **312**, as shown in FIG. **31**B. For this reason, in a cross section taken along a plane including the axis center AX, a tangential line T**1** (FIG. **31**B) that penetrates the region S and the hole H**1** and is in contact with both end portions of the reel **310** in the direction of the axis center AX is tilted with respect to the axis center AX. Specifically, the tangential line T**1** is in contact with the reel **310** at two points of a tip end point **314**E**1** of the rib portion **314**E that is one tip end and an end point **312**E of the inner wall surface **312**B that is an end portion on the end face **312**C-side. Since the reel **400** can be supported at the two points spaced in the direction of the axis center AX by the core rod B**1** in this way, it is possible to stably support the reel, as compared to a case where the rib portion **314**E is not provided and a contact place with the core rod B**1** is not constant. In particular, since the reel **400** is tilted with respect to the core rod B**1** and large moment is thus applied from the tip end point **314**E**1** toward the core rod B**1** by a weight of the binding tape **420** on the lower side in FIG. **31**B, the reel **400** can be suppressed from moving in the axis center direction of the core rod B**1**. Also, the rib portion **314**E having a free end is slightly bent to press the core rod B**1**, so that the reel **400** is suppressed from moving in the direction of the axis center AX. Since the rib portion **314**E is bent in the insertion direction of the core rod B**1**, the check effect of making it difficult for the core rod B**1** to detach is exhibited, so that the reel **400** is difficult to separate from the core rod B**1**.

Note that, in a case where the width of the tube member **312** in the direction of the axis center AX is 5 to 15 mm, an amount of protrusion of the rib portion **314**E is preferably 1 mm or greater, i.e., 6.6% or greater of the width. At this time, in a cross section including the axis center AX, an angle θ between the tangential line T**1** and a straight line including the axis center AX is 3.8° or greater. Note that, in a case where the inner wall surface **312**B of the tube member **312** and the axis center AX are provided parallel to each other in the cross section, an angle θ**1** between the tangential line T**1** and the inner wall surface **312**B is the same as the angle θ. If the protruding amount of the rib portion **314**E is smaller than the above, it may be difficult to support the reel at the two support points spaced in the direction of the axis center AX when a surface of the core rod B**1** has an unevenness of about 1 mm or when the unevenness of the surface has an inclination of about 3°. Also, when the width of the tube member **312** in the direction of the axis center AX is 5 to 15 mm, the protruding amount of the rib portion **314**E is preferably 50% or less of the width. In this case, the angle θ is 26.5° or smaller. If the protruding amount becomes larger, the reel **400** may fall down due to a weight of the binding tape **420**, in some cases.

A direction in which the rib portion **314**E is bent may be different depending on the penetration method of the core rod B**1**. For example, when inserting the core rod B**1** from the end face **312**C-side for penetration, the rib portion **314**E is highly likely to be bent outwardly. Even in this case, the reel **400** can be stably supported in a similar manner. When the rib portion **314**E is bent outwardly, the check effect of making it difficult for the core rod B**1** to detach from the end face **312**C-side is exhibited, so that the reel **400** is difficult to separate from the core rod B**1**.

As described above, according to the reel **310** of the present embodiment, since the reel can be supported at the

two points of the rib portion **314**E formed on one end-side in the direction of the axis center AX and the tube member **312** formed on the other end-side by the core rods of diverse diameters, the reel can be stably supported, as compared to a case where the rib portion **314**E is not provided and the contact place with the core rod is not thus constant.

Note that, in a case where the radius R**4** of the core rod B**1** is larger than the radius R**3** of the inner peripheral part **314**B (FIG. **28**B), since the entire circumference of the inner peripheral part **314**B is contacted to the core rod B**1**, the reel **400** can be more stably supported. For the more stable support, the amount of protrusion of the rib portion **314**E is preferably set to 1 mm or greater.

Note that, the outer peripheral surface **312**A is not necessarily required to have the cylindrical surface as long as it has a surface on which the binding tape can be wound. Also, the inner wall surface **312**B may not be the cylindrical surface. For example, an unevenness may be formed on the surface. Therefore, the tube member **312** may be formed to have a tubular shape.

Modified Embodiment 7

FIGS. **32**A to **32**D depict a modified embodiment of the reel **400** of the fourth embodiment, and are all sectional views including the axis center AX of the tube member **312**. Note that, the overlapping descriptions of the constitutional elements that perform the similar functions are omitted by using the similar reference signs, even when the sizes and the like are different.

FIG. **32**A depicts a reel **400**A in accordance with a first modified embodiment. The reel **400**A includes a tube member **312**, and a film **354**A (an example of the "first member") as a protrusion extending on one end face-side of the tube member **312** toward the axis center AX of the tube member **312**.

The film **354**A has a circular ring shape where an inner periphery has a radius R**5** and an outer periphery has a radius R**6**, and is arranged concentrically with the axis center AX of the tube member **312**. The radius R**5** of the inner periphery of the film **354**A is smaller than the radius R**2** of the inner periphery of the tube member **312**. For this reason, the inner periphery part of the film **354**A has a portion protruding from the inner wall surface **312**B of the tube member **312** toward the axis center AX. The radius R**6** of the outer periphery of the film **354**A is larger than the radius R**1** of the outer periphery of the tube member **312**. A surface of the film **354**A is bonded to parts of the circular ring-shaped end face **312**D of the tube member **312** and the side surface **420**D of the binding tape **420** by an adhesive layer having an adhesive as a main component.

Even for a reel **310**A, the film **354**A has the portion protruding from the inner wall surface **312**B of the tube member **312** toward the axis center AX. Therefore, the reel can be supported with being tilted by core rods of diverse diameters at two points of one end portion and the other end portion in the direction of the axis center AX. Also, since the surface of the film **354**A is bonded to the side surface **420**D of the binding tape **420**, the binding tape **420** can be suppressed from loosening when pulled out. Also, the tube member **312** and the film **354**A can be formed of different materials. For example, when the film **354**A is formed of plastic and the tube member **312** is formed of paper, the protruding portion required to have durability can be formed of plastic.

An effect that is realized when an adhesive is applied on a surface **354**A**2**, which faces toward the tube member **312**, of a protruding rib portion **354**A**1** of the film **354**A is described with reference to FIG. **33**A. When the core rod B**2** is inserted from the end face **312**C-side, the rib portion **354**A**1** of the film **354**A is bent outwardly. Here, the surface **354**A**2** of the rib portion **354**A**1** on the tube member **312**-side is enabled to face the core rod B**2** due to the bending. For this reason, it is possible to stably support the reel **400**A. Since the tube member **312** is rotated as the binding tape **420** is pulled out, the adhesive applied on the surface **354**A**2** of the rib portion **354**A**1** on the space S-side is gradually worn, the reel **400**A can be more stably supported. Note that, the adhesive may be stacked on the film **354**A or may be sprayed on the surface **354**A**2** of the film **354**A, for example.

FIG. **32**B depicts a reel **400**B in accordance with a second modified embodiment. The reel **400**B is different from the reel **400**A of the first modified embodiment, in that a film **354**B (an example of the "first member") is formed to have a circular shape where a radius R**7** of an outer periphery is larger than a radius R**8** of an outer periphery of the binding tape **420**, so as to face the entire side surface **420**D of the binding tape **420**.

The reel **400**B can also be supported with being tilted at two points spaced in the direction of the axis center AX by the core rod because a rib portion **354**E protruding toward the axis center AX is formed. Also, since the surface of the film **354**B is bonded to the entire side surface **420**D of the binding tape **420**, the binding tape **420** can be suppressed from loosening when pulled out. Also, in a case when the reel **400**B is kept during use, the outer peripheral end portion of the binding tape **420** can be bonded and fixed to the surface of the exposed film **354**B. Note that, the film **354**B may also be formed to have a polygonal shape such as a rectangular shape, other than the circular ring shape. In this case, a distance between an apex of a polygon and the axis center AX is preferably at least a half or greater of the radius R**8**, and is more preferably the radius R**8** or greater.

FIG. **32**C depicts a reel **400**C in accordance with a third modified embodiment. The reel **400**C is different from the reel **400**A of the first modified embodiment, in that two films of a film **354**C**1** (an example of the "first member") and a film **354**C**2** (an example of the "second member") protrude from the inner wall surface **312**B of the tube member **312**. The film **354**C**1** is an annular film body, and an adhesive (not shown) is applied on one surface thereof. A part of the surface facing the side surface **420**D of the binding tape **420** is bonded to the side surface **420**D of the binding tape **420** by the adhesive, and the other part is bonded to the surface facing the film **354**C**2**. A central part of the film **354**C**1** is formed with a circular hole H**3** having a radius smaller than the radius of the inner wall surface **312**B of the tube member **312**.

The film **354**C**2** is sandwiched between the film **354**C**1** and the side surface **420**D of the binding tape **420**. In the present modified embodiment, the film **354**C**2** is a substantially annular film body, and has an outer diameter larger than the outer diameter of the tube member **312**. A central part of the film **354**C**2**, including a center, is formed with a substantially circular hole H**4**. A radius of the hole H**4** of the film **354**C**2** is formed to be smaller than the radius of the inner wall surface **312**B of the tube member **312**, and is substantially the same as the radius of the hole H**3** of the film **354**C**1**. For this reason, in a cross section including the axis center AX, the hole H**3** and the hole H**4** communicate with the region S surrounded by the inner wall surface of the tube member **312**. Also, an end portion of the film **354**C**1** on an inner diameter-side and an end portion of the film **354**C**2** on

an inner diameter-side become protrusions protruding from the inner wall surface **312**B of the tube member **312**. Note that, the film **354**C**2** is formed of a non-adhesive paper material or plastic, and is bonded to the film **354**C**1** whose surface is applied with the adhesive, but is not bonded to the binding tape **420** and the tube member **312**.

The reel **400**C can also be supported at two spaced points by the core rods of diverse diameters. Since the adhesive on the film **354**C**1** is not exposed by the film **354**C**2**, it is possible to smoothly rotate the reel **400**C without attaching an adhesive on the core rod, when using the reel for winding the binding tape **420** at high speed, for example. Also, when the film **354**C**2** is formed of plastic that is expensive but is hard and the film **354**C**1** is formed of inexpensive paper on which an adhesive is applied, it is possible to improve durability of the protrusion and to save the cost.

FIG. **32**D depicts a reel **400**D in accordance with a fourth modified embodiment. The reel **400**D is different from the reel **400**C of the modified embodiment, in that a film **354**D**1** (an example of the "first member") is formed in an annular shape so as to face the entire side surface **420**D of the binding tape **420**. The reel **400**D can also be supported with being tilted by the core rod at the two points spaced in the direction of the axis center AX. Since a surface of the film **354**D**1** is also bonded to the outer periphery-side of the side surface **420**D of the binding tape **420**, the binding tape **420** can be suppressed from loosening when pulled out. Note that, at least one of the film **354**D**1** and the film **354**D**2** (an example of the "second member") may also be formed to have a polygonal shape such as a rectangular shape. The descriptions of the other overlapping effects are omitted.

Note that, when forming a protrusion from films of two or more layers, as shown in FIG. **33**B, the surface **354**A**2** of the film **354**A facing toward the tube member **312** may be applied with an adhesive and bonded to an end face of the tube member **312** and to a different film **354**A**3**. Also in this aspect, the film **354**A**3** that is likely to wear can be formed of a material having high durability such as plastic, thereby reinforcing the protrusion. Since the film **354**A**3** is provided in the space S surrounded by the inner wall surface **312**B of the tube member **312**, it is possible to reduce a size of the reel in the direction of the axis center AX.

FIGS. **32**E to **32**F are all sectional views including the axis center AX of the tube member **312**, depicting additional aspects of the reel **400**. Note that, the overlapping descriptions of the constitutional elements that perform the similar functions are omitted by using the similar reference signs, even when the sizes and the like are different.

FIG. **32**E depicts an aspect of a reel where a forming position of the rib portion **314**E is different from the above aspects in a case where the tube member **312** and the rib portion **314**E are integrally formed. A length of the reel and the tube member **312** in the direction of the axis center AX, i.e., a distance between the end face **312**C and the end face **12**D is, for example, 15 mm.

In the sectional view, a central line C is a straight line that passes a center position CP on the axis center AX of the tube member **312** in the direction of the axis center AX and is perpendicular to the axis center AX. A thickness T is a maximum thickness of the rib portion **314**E in the direction of the axis center AX. The rib portion **314**E is formed so that the thickness in the direction of the axis center AX is constant irrespective of a distance from the axis center AX, for example. A region W is a region where the center position CP is an origin point O, a direction facing toward the end face **312**D is a positive direction, a direction facing toward the end face **312**C is a negative direction and the axis center AX is shown as an axis. The thickness T is, for example, 2 mm. A protruding amount P of the rib portion **314**E from the inner wall surface **312**B is, for example, 1 mm.

A center position of the rib portion **314**E in the direction of the axis center AX is formed within a range of ±5.5 mm. In the case of the rib portion **314**E shown in FIG. **32**E, the center position in the direction of the axis center AX is formed within the region W of +5 mm, i.e., the region W distant from the center position CP by 5 mm in a direction facing toward the end face **312**D in the direction of the axis center AX. Since the thickness T of the rib portion **314**E is 2 mm, a surface of the rib portion **314**E facing toward the center position CP is distant from the center position CP by 4 mm (=W−(T/2)). A surface of the rib portion **314**E facing toward an outer side that is an opposite side is formed in a position spaced from the end face **312**D by 1.5 mm (=7.5−(W+T/2)) and closer to the central line C than the end face **312**D. Note that, for reference, FIG. **32**E also shows a case where the center position in the direction of the axis center AX is within the region W of −5 mm. For example, the rib portion may also be formed in the region.

By the above configuration, when the rod-shaped member such as a tree branch is inserted into the tube member **312**, the rib portion **314**E that is a protrusion is favorably bent by engagement between the rod-shaped member and the tube member **312**, so that the reel is stably supported without being excessively tilted.

In order to favorably bend the rib portion **314**E, preferably, the thickness T is set to equal to or greater than 0.05 mm and equal to or smaller than 2 mm, and the protruding amount P of the rib portion **314**E from the inner wall surface **312**B is equal to or greater than 1 mm.

By the above configuration, when inserting the rod-shaped member such as a tree branch into the tube member and pulling out the tape, the protrusion is bent, so that a favorable braking force is obtained.

Note that, at least some of the respective sizes and structures (the protruding amount P, the thickness T, and the rib portion **314**E that is a protrusion is formed in the region W) may also be applied to the other reels described in the present disclosure, such as the reel **310** shown in FIG. **28**B.

FIG. **32**F depicts a structure where a protrusion is provided at an end portion of a reel in a case where the tube member and the protrusion are integrally provided. A length of the reel in the direction of the axis center AX, i.e., a distance between the end face **312**C and the end face **314**D is, for example, 9 mm.

A center position of the rib portion **314**E in the direction of the axis center AX is formed within a region of ±5.5 mm. In the case of the rib portion **314**E shown in FIG. **32**F, the center position in the direction of the axis center AX is formed within the region W of +4 mm, i.e., the region W distant from the center position CP by 4 mm in a direction facing toward the end face **314**D in the direction of the axis center AX.

By the above configuration, when the rod-shaped member such as a tree branch is inserted into the tube member **312**, the rib portion **314**E that is a protrusion is favorably bent by engagement between the rod-shaped member and the tube member **312**, so that the reel is stably supported without being excessively tilted.

In order to favorably bend the rib portion **314**E, preferably, the thickness T is set to equal to or greater than 0.05 mm and equal to or smaller than 2 mm, and the protruding amount P of the rib portion **314**E from the inner wall surface **312**B is equal to or greater than 1 mm.

By the above configuration, when inserting the rod-shaped member such as a tree branch into the tube member and pulling out the tape, the protrusion is bent, so that a favorable braking force is obtained.

FIG. **32**G depicts an aspect where a protrusion is formed from two layers of a film **354**C**1** and a film **354**C**2**, similarly to the reel **400**D of the fourth modified embodiment. A length of the tube member **312** in the direction of the axis center AX, i.e., a distance between the end face **312**C and the end face **312**D is, for example, 9 mm. A thickness T**1** and a thickness T**2** of the film **354**C**1** and the film **354**C**2** in the direction of the axis center AX are, for example, 0.5 mm, respectively. Therefore, the thickness T, in the direction of the axis center AX, of the protrusion having the two-layered structure of the film **354**C**1** and the film **354**C**2** is, for example, 1.0 mm.

A center position of the rib portion **314**E in the direction of the axis center AX is formed within a region of ±5.5 mm. In the case of the rib portion **314**E shown in FIG. **32**G, the center position in the direction of the axis center AX is formed within the region W of +5 mm, i.e., the region W distant from the center position CP by 5 mm in a direction facing toward the end face **314**D in the direction of the axis center AX.

By the above configuration, when the rod-shaped member such as a tree branch is inserted into the tube member **312**, the rib portion **314**E that is a protrusion is favorably bent by engagement between the rod-shaped member and the tube member **312**, so that the reel is stably supported without being excessively tilted.

In order to favorably bend the rib portion **314**E, preferably, the thickness T is set to equal to or greater than 0.05 mm and equal to or smaller than 2 mm, and the protruding amount P of the rib portion **314**E from the inner wall surface **312**B is equal to or greater than 1 mm.

By the above configuration, when inserting the rod-shaped member such as a tree branch into the tube member and pulling out the tape, the protrusion is bent, so that a favorable braking force is obtained. Note that, the hole H**1** to the hole H**4** may be formed to have diverse shapes, in addition to the circular shape. For example, a polygonal shape such as a rectangular shape and a hexagonal shape is also possible, a hole of a notch or a slit is also possible. In addition, for example, the hole may be formed with a protrusion having a rotationally symmetrical shape such as a star shape whose distance to the axis center AX changes. FIG. **34** depicts a reel **370** formed with a hole H**5** having a plurality of slits HSA. The plurality of slits H**5**A communicates with a central circular portion of the hole H**5**, and extends from the axis center AX in an outer diameter direction. Therefore, the reel **370** has a plurality of rotationally symmetrical protrusions **314**F protruding toward the axis center AX and spaced from each other in the circumferential direction.

Since the reel **370** is provided with the slits HSA, the core rod can be enabled to easily penetrate the same. Tip ends of the protrusion **314**F close to the axis center AX can be contacted to the core rod to support the reel **370** and the binding tape **420** wound on the reel. At this time, since the slits H**5**A are provided, the protrusions **314**F are bent. As a result, a contact area with the core rod increases, so that the stability can be improved.

Also, the film may not be formed with the hole. For example, the film may be configured as a film body having a circular shape, a polygonal shape or the like with no hole. Even for the tape winding body configured in this way, it is possible to form a hole through which a core rod or the like can penetrate a central part of the film, by tearing the film at the time of use.

Also, the central part of the film may be formed with a cut. Even for the tape winding body configured in this way, it is possible to form a hole through which a core rod or the like can penetrate a central part of the film, by pushing and expanding the film with the cut at the time of use.

Note that, the film may also be replaced with another member having a thickness in the axis center direction as long as it is provided at one end portion in the axis center direction with a portion protruding toward the axis center.

Fifth Embodiment

A fifth embodiment where the reel is used loaded on the binding machine is described. By using the binding machine, it is possible to bind branches and vines of fruit trees and vegetables to stanchions, and to bundle vegetables and bags together.

FIG. **35** is a front view of a binding machine **800**. The binding machine **800** as a hand-held tool includes a clincher arm **810**, a binding machine main body **840**, a handle **812**, a tape pulling-out unit **820**, a tape conveying unit **842**, a staple magazine unit **860**, and a tape magazine unit **880**. In the tape magazine unit **880**, a reel is loaded. An end portion of a binding tape of the reel is held pulled out upwardly from a tape guide **846** of the tape conveying unit **842**, in FIG. **35**.

When the user grips the handle **812** and brings the same close to the binding machine main body **840**, the clincher arm **810** comes close to the binding machine main body **840** according to the principle of a lever, thereby sandwiching the binding tape by a tape catcher **824** and a tape plate **826** of the tape pulling-out unit **820**. When the user loosens the gripped state of the handle **812**, the clincher arm **810** separates from the binding machine main body **840** in the state where the binding tape is sandwiched, so that the binding tape is pulled out upwardly from the tape guide **846**. In this state, when the user pushes the binding machine **800** to the right in FIG. **35** so that a plurality of to-be-bound objects such as branches of vegetables and stanchions are present in a space between the clincher arm **810** and the tape conveying unit **842**, the to-be-bound objects and the binding tape are contacted to each other, so that the binding tape is further pulled out from the tape guide **846**. When the user again grips the handle **812**, the clincher arm **810** again comes close to the binding machine main body **840**, so that the binding tape is wrapped around the to-be-bound objects. Also, as the clincher arm **810** moves downwardly, when the tape guide **846** moves along an inclined surface facing the tape catcher **824** and reaches a position in which the movement is restrained, the tape catcher **824** rotates in a direction (toward the front part-side) away from the tape plate **826**. The tape guide **846** is also correspondingly rotated toward the front part-side. As the tape guide **846** is rotated, a cutting blade provided at a tip end of the tape guide **846** cuts the binding tape. Also, the staple loaded in the staple magazine main body **862** is struck out to stitch overlapped parts of the binding tape. By the series of processes, the to-be-bound objects are bound.

The reel is required to be rotatably held in the tape magazine unit **880** so that it can be favorably used for the binding machine **800**. In a case where a reel configured only by a tube member and a binding tape wound on the tube member is used, the tape magazine unit **880** is provided with a shaft part penetrating a region surrounded by an inner wall of the tube member, so that the reel can be rotatably held.

However, when it is intended to hold a reel whose inner diameter of the tube member is large, a gap from the shaft part increases, so that it is difficult to rotatably hold the reel in a stable manner.

The present inventors conceived a configuration where the reel of the present disclosure is used and is stably rotatably held on the binding machine **800**.

FIGS. **36**A to **36**C are pictorial views depicting a method of holding the reel **400**B. Note that, the reel including the reel of the other embodiments or the modified embodiments can also be similarly held.

The tape magazine unit **880** has a shaft part **882** having a central axis AX**2**. The shaft part **882** has a cylindrical portion **882**A having a cylindrical shape, and a circular truncated conical portion **882**B having a circular truncated conical shape and formed on a tip end of the cylindrical portion **882**A. A radius of a bottom surface of the circular truncated conical portion **882**B is formed to be larger than a radius of the cylindrical portion **882**A. For this reason, the shaft part **882** has an annular bottom surface part **882**B**1** protruding from the cylindrical portion **882**A, and an inclined surface **882**B**2** that is a conical surface. Here, a radius R**20** of the cylindrical portion **882**A is formed to be substantially the same as a radius R**3** of the hole H**1**. Also, a radius R**22** of the circular truncated conical portion **882**B is formed to be smaller than a radius R**2** of the inner wall surface **312**B of the tube member **312** and larger than the radius D**1** of the hole H**1**.

The shaft part **882** is configured to be movable in the direction of the central axis AX**2** and to be rotatable about the central axis AX**2** as a center in the tape magazine unit **880**. For example, the shaft part **882** may be configured to be held in the tape magazine unit **880** with being urged downwardly in the direction of the central axis AX**2** in FIG. **36**A and the like by a coil spring (not shown), and to be manually movable upwardly in the direction of the central axis AX**2** by pressing the bottom surface **882**D. Also, the shaft part may be configured to be rotatable around the central axis AX**2** by a bearing and the like (not shown).

FIGS. **36**A to **36**C are sectional views of the reel **400**B mounted in the tape magazine unit **880** and the shaft part **882** of the tape magazine unit **880**, taken along a plane including the central axis AX**2** of the shaft part **882**. FIG. **36**A depicts a state before the reel **400**B is mounted. The central axis AX of the reel **400**B is not required to coincide with the central axis AX**2** of the shaft part **882**. However, the reel **400**B is preferably mounted in the tape magazine unit **880** so that the central axis AX and the central axis AX**2** come close to each other at a distance smaller than the amount of protrusion of the rib potion **354**E and are substantially parallel to each other.

Subsequently, as shown in FIG. **36**B, the shaft part **882** is moved upwardly in the direction of the central axis AX**2**. Since the radius R**22** of the circular truncated conical portion **882**B is formed to be larger than the radius R**3** of the hole H**1**, the inclined surface **882**A**2** contacts end portions of the rib portions **354**E. Since the end portions of the rib portions **354**E are free ends, the rib portions can be deformed along the inclined surface **882**A**2**, as shown in FIG. **36**B. When the shaft part **882** is further moved upwardly, the bottom surface part **882**A**1** of the circular truncated conical portion **882**B passes the rib portions **354**E. For this reason, the circular truncated conical portion **882**B is accommodated in a region S surrounded by the rib portions **354**E and the inner wall surface **312**B of the tube member **312**.

Thereafter, when the upward pressing in the direction of the central axis AX**2** of the shaft part **882** is stopped, the shaft part **882** is moved by the urging force of the coil spring. However, the bottom surface part **882**A**1** of the circular truncated conical portion **882**B contacts edge portions of the rib portions **354**E with the hole H**1** and becomes a stopper. For this reason, as shown in FIG. **36**C, the reel **400**B can be held in the state where the circular truncated conical portion **882**B is accommodated in the region surrounded by the rib portions **354**E and the inner wall surface **312**B of the tube member **312**. At this time, the end portions of the rib portions **354**E are deformed downwardly in the direction of the central axis AX**2** away from the tube member **312**.

In this way, the hole is formed so as for the rib portions **354**E to protrude toward the axis center AX, so that it is possible to provide the reel capable of being stably held by the binding machine. Also, even a reel whose inner diameter of the tube member is different can be held by forming the hole to have substantially the same diameter. Note that, as described above, a film body with no hole may be provided, and a central part of the film body may be torn to form a hole at the time of use. Also, the cut may be formed at an end, and the film may be pushed and expanded using the cut by the shaft part **882** at the time of use, so that a hole penetrating a central part of the film may be formed.

The above embodiments are just exemplary so as to describe the present invention, and the present invention is not limited to the embodiments. When the tube member **312**, the protrusion **314**, the rib portion **314**E, the film **354**A, the rib portion **354**A**1**, the film **354**B, the rib portion **354**E, the film **354**C**1**, the film **354**C**2**, the film **354**D**1**, the film **354**D**2**, and the protrusion **314**F are formed of a material having water resistance and ductility, for example, a material such as resin and rubber or synthetic paper in which a resin material and a pulp material are mixed, the reel **310**, the reel **310**A-**310**D, the reel **370**, the reel **400** and the reels **400**A-**400**D can be favorably used even though they are used in environments exposed to wind and rain, such as an environment where it is used outdoors.

The present invention can also be diversely modified without departing from the gist thereof. For example, some of the constitutional elements in any of the embodiments or modified embodiments can be added to the other embodiments or modified embodiments within the usual conceivable abilities of one skilled in the art. Also, some of the constitutional elements in any of the embodiments or modified embodiments can be replaced with the corresponding constitutional elements in the other embodiments or modified embodiments.

Modified Embodiment 8

As the binding tape **420** of the fourth embodiment or the binding tape described in the other embodiments, modified embodiments and the like, a binding tape having a similar structure to the binding tape **10** or the binding tape of the modified embodiments thereof may also be used.

In this case, the reel (in the below, the "reel" may also be referred to as the "tape winding body") includes the binding tape capable of binding the to-be-bound object. The reel includes a tube member, a binding tape wound on the tube member, and a protrusion extending on one end face-side of the tube member toward the axis center of the tube member, wherein in a cross section including the axis center, a tangential line that contacts the protrusion at a first contact point at a tip end of the protrusion and contacts the tube member at a second contact point on the other end face-side of the tube member is formed so as to be inclined with respect to a straight line including the axis center. An angle

of inclination is preferably 3° or greater, for example. The binding tape wound on the tube member has an intermediate layer, and a first surface layer covering one surface of the intermediate layer. The intermediate layer has a plurality of first linear members arranged side by side at an angle with respect to a longitudinal direction of the binding tape. According to the tape winding body, it is possible to make it more difficult for the binding tape to tear. When the binding tape is used, it is possible to perform the binding operation by using the binding machine for gardening even in a guiding operation of crops having a high repulsive force.

Modified Embodiment 9

As the binding tape **420** of the fourth embodiment or the binding tape described in the other embodiments, modified embodiments and the like, a binding tape having a similar structure to the binding tape **10**A shown in FIG. **14** and the like or the binding tape according to the variations thereof may also be used. In this case, one end portion of the intermediate layer of the binding tape in the width direction is formed with a plurality of first cuts spaced in the longitudinal direction of the binding tape. The other end portion of the intermediate layer of the binding tape in the width direction may also be formed with a plurality of second cuts spaced in the longitudinal direction of the binding tape. At least one of the first cuts may also cut at least a portion of the second linear member. According to the tape winding body, it is possible to make it more difficult for the binding tape to tear. When the binding tape is used, it is possible to perform the binding operation by using the binding machine for gardening even in a guiding operation of crops having a high repulsive force.

Modified Embodiment 10

As the film **354**A provided to the reel **400**A and the film **354**B provided to the reel **400**B in accordance with the modified embodiments of the fourth embodiment or the film described in the other embodiments, modified embodiments and the like, the film **134**, the film **144**, or the films described in the modified embodiments thereof and the like may also be used.

According to the reel or the tape winding body having the film, it is possible to further suppress the binding tape from loosening, and the like. The present invention can also be diversely modified without departing from the gist thereof. For example, some of the constitutional elements in any embodiment can be added to the other embodiments within the usual conceivable abilities of one skilled in the art. Also, some of the constitutional elements in any embodiment can be replaced with the corresponding constitutional elements in the other embodiments. For example, as the binding tape that is wound on the tape winding body of Modified Embodiment 10, the binding tape **10**A can be used.

The subject application is based on Japanese Patent Application No. 2018-134750 filed on Jul. 18, 2018, Japanese Patent Application No. 2019-37192 filed on Mar. 1, 2019, Japanese Patent Application No. 2019-37411 filed on Mar. 1, 2019, and Japanese Patent Application No. 2019-112599 filed on Jun. 18, 2019, the contents of which are incorporated herein by reference.

REFERENCE SIGNS LIST

10: binding tape
10': conventional binding tape
11: intermediate layer
12: first linear member
13: second linear member
16: first surface layer
17: second surface layer
19: winding core
20: binding machine
21: main handle
21*a*: tip end portion
22: staple magazine
23: clincher arm
23*a*: tip end portion
24: tape gripping part
25: operating handle
26: tape magazine
30: staple
31: leg portion
32: crown portion
40: to-be-bound object
D**1**: longitudinal direction of binding tape
D**2**: width direction of binding tape
W**1**: interval of first linear members

What is claimed is:

1. A binding tape to be wound around a to-be-bound object and configured to bind the to-be-bound object by stitching overlapped portions of the binding tape by a staple, the binding tape comprising:

an intermediate layer having a plurality of first linear members and a plurality of second linear members intersecting with the plurality of first linear members, wherein one end portion of the intermediate layer in a width direction is formed with a plurality of first cuts spaced in a longitudinal direction of the binding tape, the other end portion of the intermediate layer in the width direction is formed with a plurality of second cuts spaced in the longitudinal direction of the binding tape, and wherein at least one of the first cuts cuts 60% or more of a width of one of the second linear members which is arranged at an outermost side close to the one end portion of the intermediate layer in the width direction;

a first surface layer covering one surface of the intermediate layer and formed of a resin material; and

a second surface layer covering the other surface of the intermediate layer and formed of a resin material,

wherein an interval of adjacent two of the first linear members is equal to or smaller than 5 mm.

2. The binding tape according to claim **1**, wherein the interval of the adjacent two of the first linear members is equal to or smaller than 3 mm.

3. The binding tape according to claim **1**, wherein the first linear members are arranged orthogonal to a longitudinal direction of the binding tape.

4. The binding tape according to claim **1**, wherein the second linear members extend in a longitudinal direction of the binding tape.

5. The binding tape according to claim **1**, wherein a length of at least one of the first cuts in the width direction with respect to a width of the binding tape is 15% or less.

* * * * *