US012395866B2

(12) **United States Patent**
Zhou et al.

(10) **Patent No.: US 12,395,866 B2**
(45) **Date of Patent: Aug. 19, 2025**

(54) **DETERMINING A BEAM FAILURE INSTANCE COUNT FOR BEAM FAILURE DETECTION**

(71) Applicant: **QUALCOMM Incorporated**, San Diego, CA (US)

(72) Inventors: **Shanyu Zhou**, San Diego, CA (US); **Jelena Damnjanovic**, Del Mar, CA (US); **Tao Luo**, San Diego, CA (US)

(73) Assignee: **QUALCOMM Incorporated**, San Diego, CA (US)

(*) Notice: Subject to any disclaimer, the term of this patent is extended or adjusted under 35 U.S.C. 154(b) by 160 days.

(21) Appl. No.: **17/444,644**

(22) Filed: **Aug. 6, 2021**

(65) **Prior Publication Data**

US 2023/0041404 A1 Feb. 9, 2023

(51) **Int. Cl.**

H04W 24/04	(2009.01)
G06N 20/00	(2019.01)
H04L 5/00	(2006.01)
H04W 8/22	(2009.01)
H04W 72/20	(2023.01)

(52) **U.S. Cl.**

CPC ***H04W 24/04*** (2013.01); ***H04L 5/0048*** (2013.01); ***H04W 8/22*** (2013.01); ***H04W 72/20*** (2023.01); *G06N 20/00* (2019.01)

(58) **Field of Classification Search**

None

See application file for complete search history.

(56) **References Cited**

U.S. PATENT DOCUMENTS

2019/0281480	A1*	9/2019	Wei	H04W 24/08
2019/0372830	A1*	12/2019	Zhang	H04B 7/0695
2020/0052769	A1*	2/2020	Cirik	H04L 1/0026
2020/0100311	A1*	3/2020	Cirik	H04W 72/23
2020/0153542	A1*	5/2020	Zhou	H04W 52/221
2020/0236570	A1*	7/2020	Wei	H04B 7/0617
2021/0037589	A1*	2/2021	Yoshioka	H04W 24/04
2021/0067234	A1*	3/2021	Guan	H04W 24/08
2021/0091845	A1*	3/2021	Wu	H04W 24/04
2021/0105172	A1*	4/2021	Luo	H04W 74/0833
2021/0105176	A1*	4/2021	Tsai	H04W 72/23
2021/0153245	A1*	5/2021	Tooher	H04W 74/006
2021/0250794	A1*	8/2021	Wei	H04W 24/08
2021/0274569	A1*	9/2021	Jiang	H04B 7/0695
2021/0314218	A1*	10/2021	Kang	H04B 7/0695
2021/0376901	A1*	12/2021	Cirik	H04L 5/0094
2022/0046438	A1*	2/2022	Lo	H04L 5/0048
2022/0046740	A1*	2/2022	Lo	H04W 24/04
2022/0085862	A1*	3/2022	Kung	H04B 7/024
2022/0109489	A1*	4/2022	Zhu	H04B 7/088
2022/0117024	A1*	4/2022	Saber	H04B 7/0695

(Continued)

Primary Examiner — Chirag G Shah
Assistant Examiner — Suk Jin Kang
(74) *Attorney, Agent, or Firm* — Harrity & Harrity, LLP

(57) **ABSTRACT**

Various aspects of the present disclosure generally relate to wireless communication. In some aspects, a user equipment (UE) may receive, from a base station, a beam failure detection reference signal (BFD-RS). The UE may determine, autonomously at the UE based at least in part on the BFD-RS, a beam failure instance (BFI) count for different types of BFI including BFI noise and BFI interference. The UE may detect a beam failure based at least in part on the BFI count satisfying a threshold. Numerous other aspects are described.

30 Claims, 5 Drawing Sheets

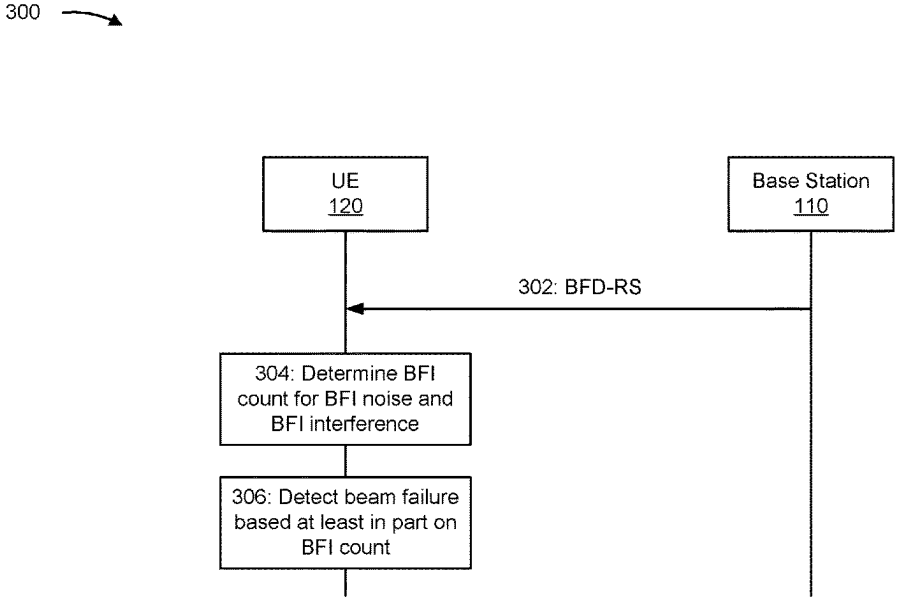

(56) **References Cited**

U.S. PATENT DOCUMENTS

2022/0124819 A1* 4/2022 Zhang H04B 7/0695
2022/0159767 A1* 5/2022 Zhang H04W 76/18
2022/0182281 A1* 6/2022 Cirik H04W 72/046
2022/0210857 A1* 6/2022 Cirik H04L 5/0023
2022/0216947 A1* 7/2022 Kim H04L 1/1819
2022/0224394 A1* 7/2022 Berggren H04B 7/06964
2022/0231810 A1* 7/2022 Matsumura H04L 5/0023
2022/0240144 A1* 7/2022 Cirik H04B 7/0695
2022/0256387 A1* 8/2022 Xiao H04L 5/0053
2022/0278731 A1* 9/2022 Koskela H04B 7/0695
2022/0286183 A1* 9/2022 Yi H04L 5/0053
2022/0294512 A1* 9/2022 Matsumura H04W 76/19
2022/0302985 A1* 9/2022 Zhang H04L 5/0023
2022/0311501 A1* 9/2022 Koskela H04W 76/19
2022/0330055 A1* 10/2022 Babaei H04B 7/088
2022/0346139 A1* 10/2022 Tooher H04W 72/0453
2022/0360314 A1* 11/2022 Zhu H04L 5/0051
2022/0368406 A1* 11/2022 Kang H04B 7/0695
2023/0006727 A1* 1/2023 Jang H04L 5/0051
2023/0007513 A1* 1/2023 Babaei H04W 76/27
2023/0023041 A1* 1/2023 Yi H04L 5/0048
2023/0028423 A1* 1/2023 Xu H04B 7/0663
2023/0051047 A1* 2/2023 Xu H04L 5/0048
2023/0123593 A1* 4/2023 Cao H04B 7/0695 370/329
2023/0198602 A1* 6/2023 Zeineddine H04W 76/19 370/329
2023/0199584 A1* 6/2023 Xu H04W 72/046 455/436
2023/0199890 A1* 6/2023 Cirik H04W 74/0833 370/228
2024/0023184 A1* 1/2024 Gu H04W 16/28
2024/0064839 A1* 2/2024 Xu H04B 7/06966
2024/0178903 A1* 5/2024 Go H04B 7/06964
2024/0251262 A1* 7/2024 Eldessoki H04B 7/0695
2025/0038823 A1* 1/2025 Go H04L 5/0094

* cited by examiner

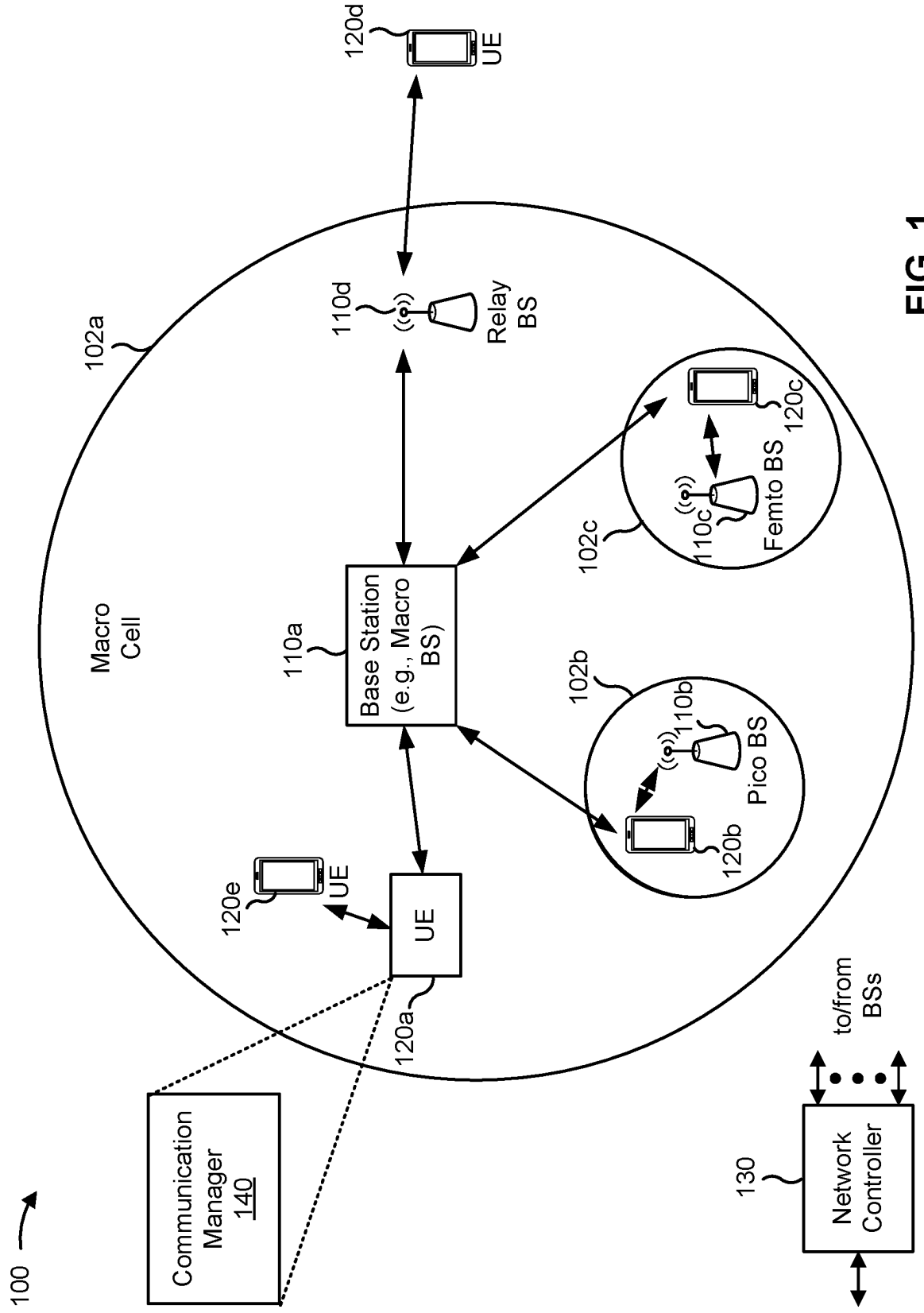
100
Communication Manager 140
Macro Cell
102a
110a
Base Station (e.g., Macro BS)
110d
Relay BS
120d
UE
102c
Femto BS
110c
120c
102b
Pico BS
110b
120b
120e
UE
UE
120a
130
Network Controller
to/from BSs

FIG. 1

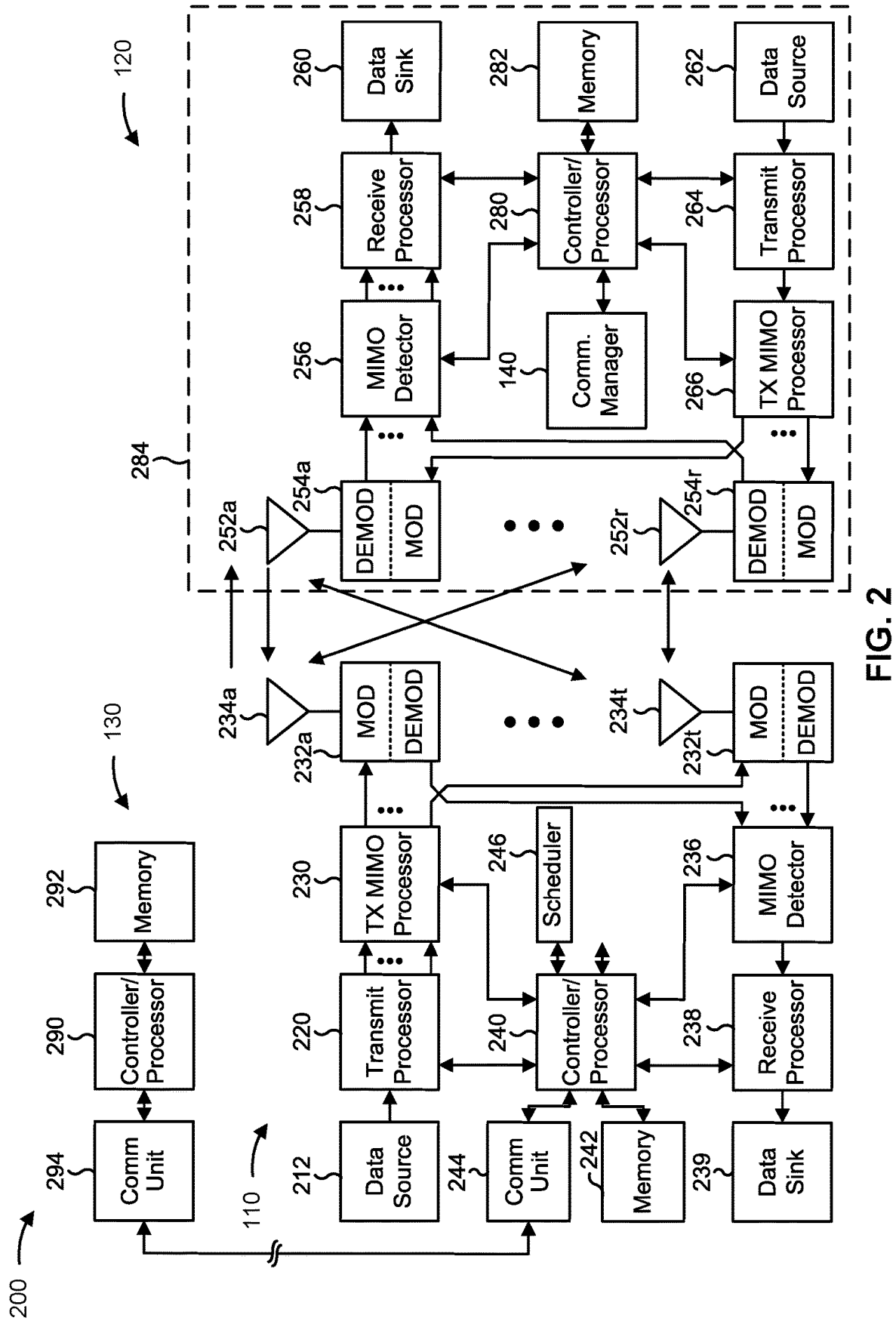
200
110
120
130
284
294
Comm Unit
290
Controller/ Processor
292
Memory
212
Data Source
220
Transmit Processor
230
TX MIMO Processor
232a
MOD
DEMOD
234a
252a
254a
DEMOD
MOD
256
MIMO Detector
258
Receive Processor
260
Data Sink
244
Comm Unit
242
Memory
240
Controller/ Processor
246
Scheduler
238
Receive Processor
236
MIMO Detector
239
Data Sink
232t
MOD
DEMOD
234t
252r
254r
DEMOD
MOD
266
TX MIMO Processor
264
Transmit Processor
262
Data Source
140
Comm. Manager
280
Controller/ Processor
282
Memory

FIG. 2

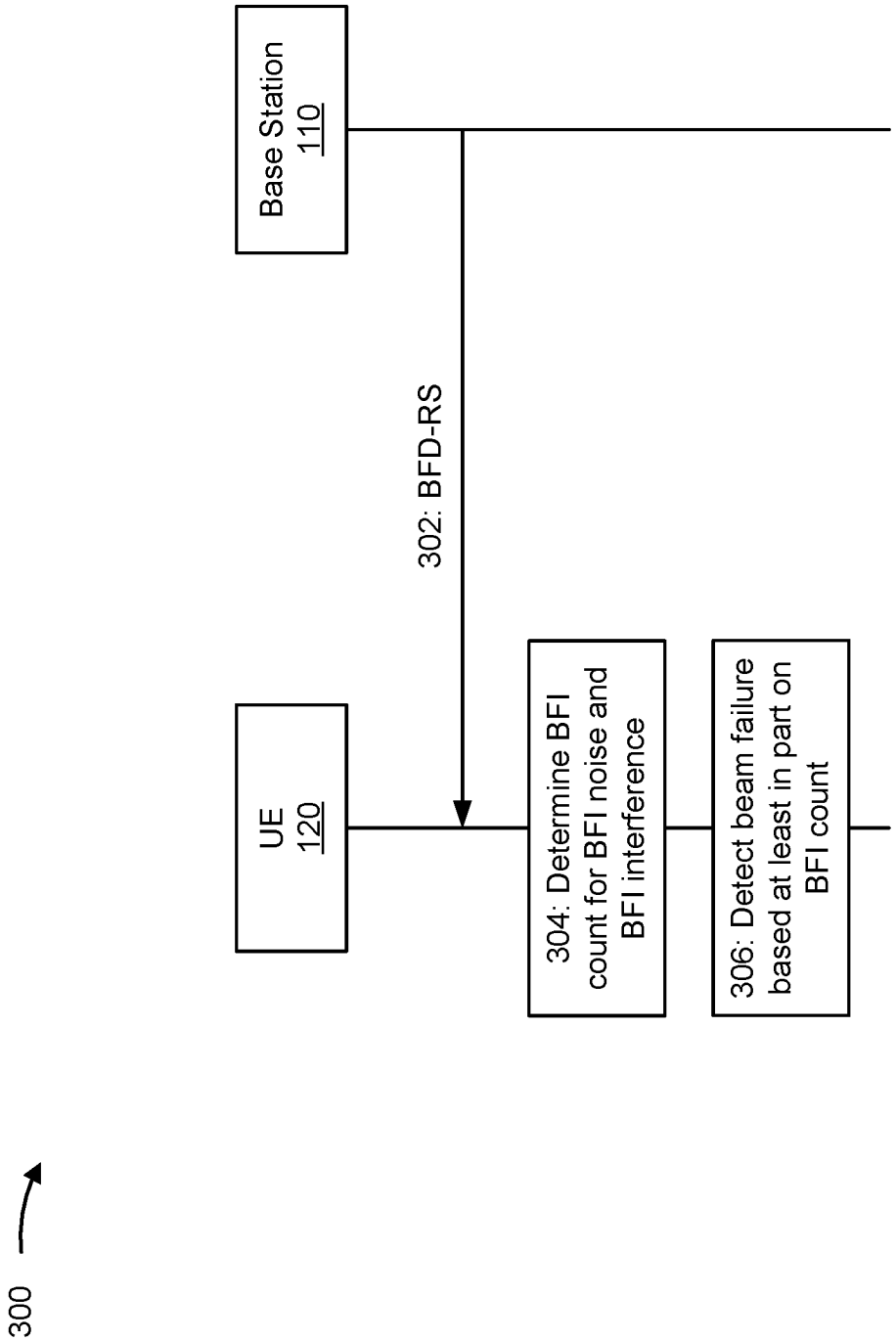
Base Station
110
302: BFD-RS
UE
120
304: Determine BFI count for BFI noise and BFI interference
306: Detect beam failure based at least in part on BFI count
300

FIG. 3

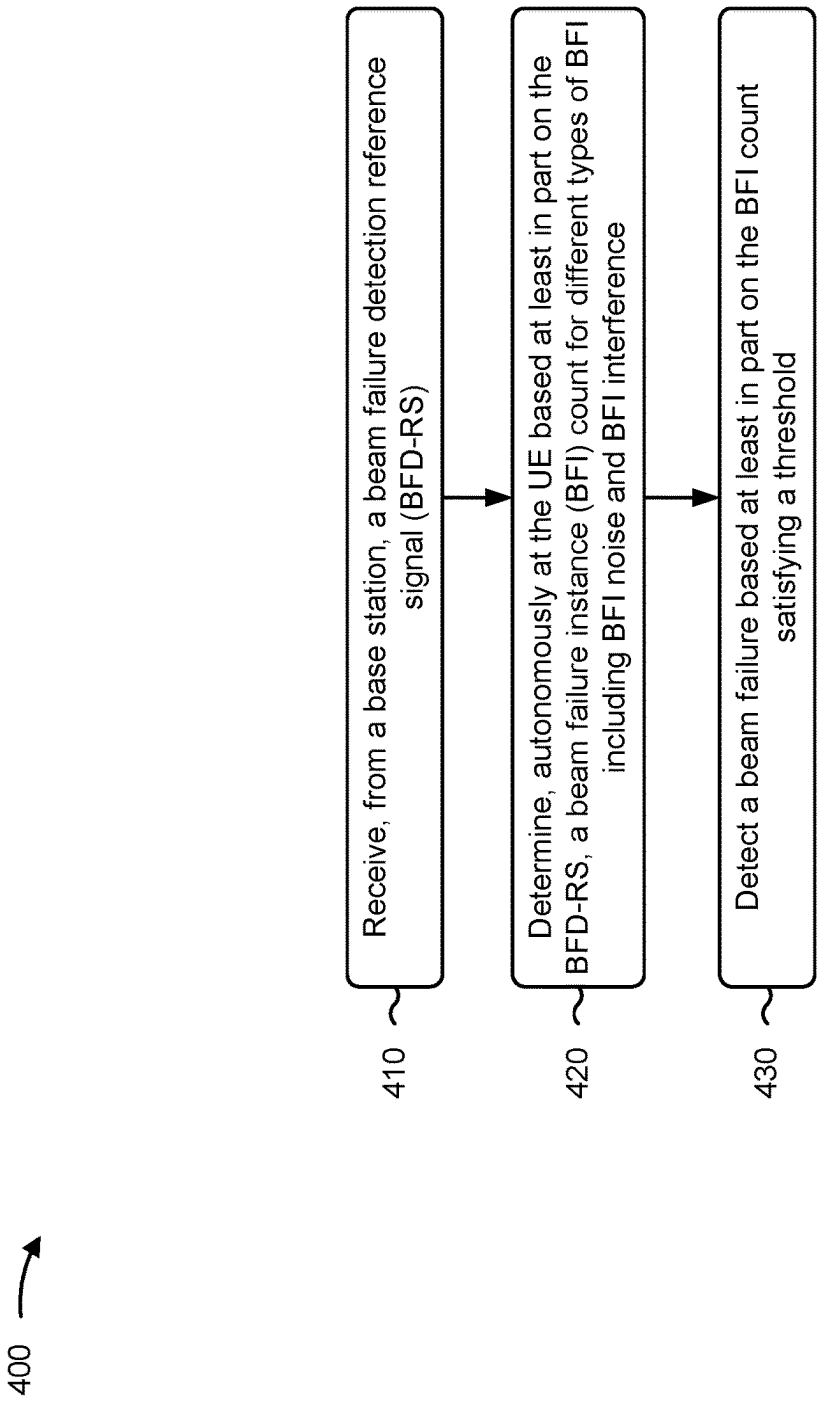
400
Receive, from a base station, a beam failure detection reference signal (BFD-RS)
410
Determine, autonomously at the UE based at least in part on the BFD-RS, a beam failure instance (BFI) count for different types of BFI including BFI noise and BFI interference
420
Detect a beam failure based at least in part on the BFI count satisfying a threshold
430

FIG. 4

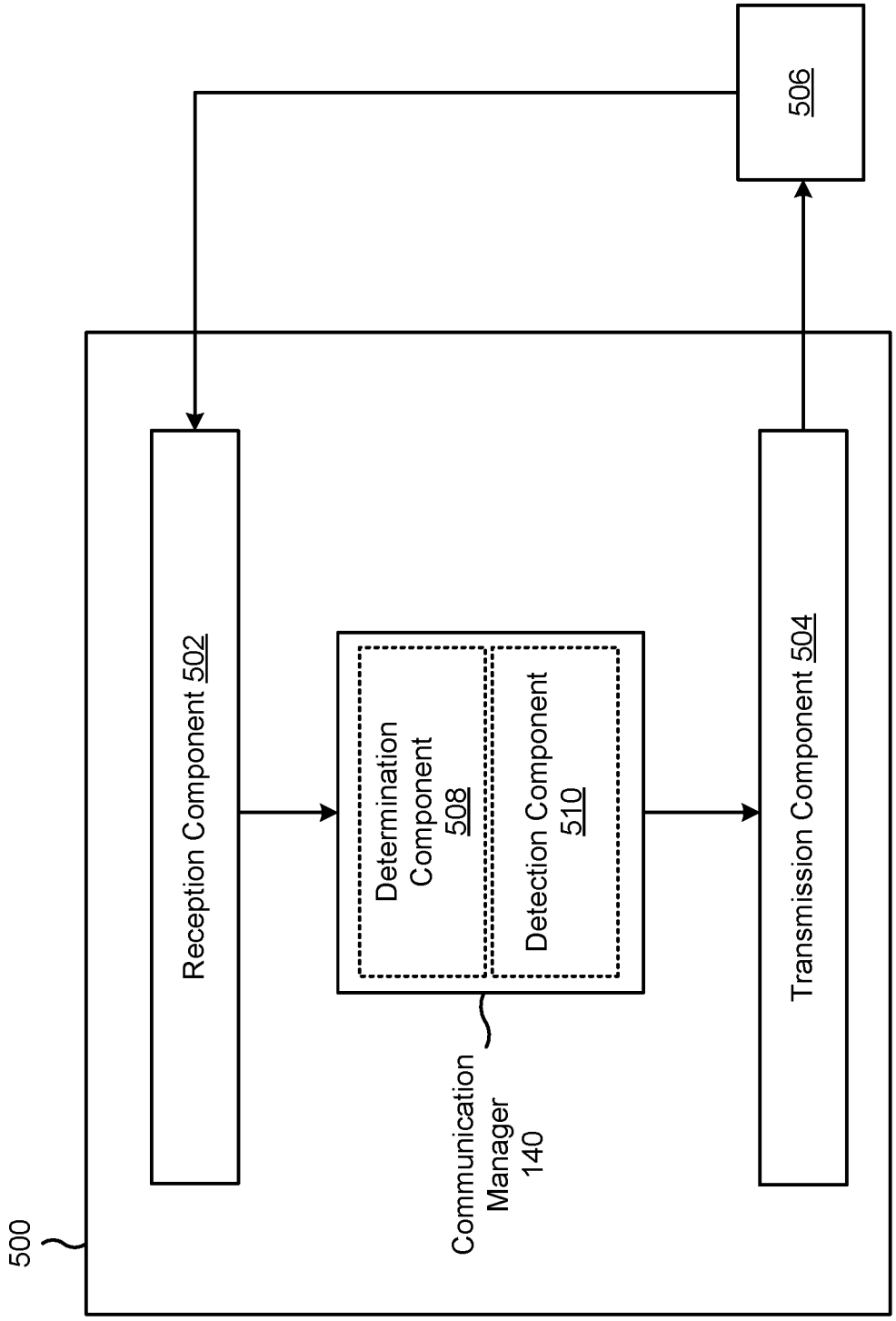
506
Reception Component 502
Determination Component 508
Detection Component 510
Transmission Component 504
Communication Manager 140
500

FIG. 5

DETERMINING A BEAM FAILURE INSTANCE COUNT FOR BEAM FAILURE DETECTION

FIELD OF THE DISCLOSURE

Aspects of the present disclosure generally relate to wireless communication and to techniques and apparatuses for determining a beam failure instance (BFI) count for beam failure detection.

BACKGROUND

Wireless communication systems are widely deployed to provide various telecommunication services such as telephony, video, data, messaging, and broadcasts. Typical wireless communication systems may employ multiple-access technologies capable of supporting communication with multiple users by sharing available system resources (e.g., bandwidth, transmit power, or the like). Examples of such multiple-access technologies include code division multiple access (CDMA) systems, time division multiple access (TDMA) systems, frequency division multiple access (FDMA) systems, orthogonal frequency division multiple access (OFDMA) systems, single-carrier frequency division multiple access (SC-FDMA) systems, time division synchronous code division multiple access (TD-SCDMA) systems, and Long Term Evolution (LTE). LTE/LTE-Advanced is a set of enhancements to the Universal Mobile Telecommunications System (UMTS) mobile standard promulgated by the Third Generation Partnership Project (3GPP).

A wireless network may include one or more base stations that support communication for a user equipment (UE) or multiple UEs. A UE may communicate with a base station via downlink communications and uplink communications. "Downlink" (or "DL") refers to a communication link from the base station to the UE, and "uplink" (or "UL") refers to a communication link from the UE to the base station.

The above multiple access technologies have been adopted in various telecommunication standards to provide a common protocol that enables different UEs to communicate on a municipal, national, regional, and/or global level. New Radio (NR), which may be referred to as 5G, is a set of enhancements to the LTE mobile standard promulgated by the 3GPP. NR is designed to better support mobile broadband internet access by improving spectral efficiency, lowering costs, improving services, making use of new spectrum, and better integrating with other open standards using orthogonal frequency division multiplexing (OFDM) with a cyclic prefix (CP) (CP-OFDM) on the downlink, using CP-OFDM and/or single-carrier frequency division multiplexing (SC-FDM) (also known as discrete Fourier transform spread OFDM (DFT-s-OFDM)) on the uplink, as well as supporting beamforming, multiple-input multiple-output (MIMO) antenna technology, and carrier aggregation. As the demand for mobile broadband access continues to increase, further improvements in LTE, NR, and other radio access technologies remain useful.

SUMMARY

In some implementations, an apparatus for wireless communication at a user equipment (UE) includes a memory and one or more processors, coupled to the memory, configured to: receive, from a base station, a beam failure detection reference signal (BFD-RS); determine, autonomously at the UE based at least in part on the BFD-RS, a beam failure instance (BFI) count for different types of BFI including BFI noise and BFI interference; and detect a beam failure based at least in part on the BFI count satisfying a threshold.

In some implementations, a method of wireless communication performed by a UE includes receiving, from a base station, a BFD-RS; determining, autonomously at the UE based at least in part on the BFD-RS, a BFI count for different types of BFI including BFI noise and BFI interference; and detecting a beam failure based at least in part on the BFI count satisfying a threshold.

In some implementations, a non-transitory computer-readable medium storing a set of instructions for wireless communication includes one or more instructions that, when executed by one or more processors of a UE, cause the UE to: receive, from a base station, a BFD-RS; determine, autonomously at the UE based at least in part on the BFD-RS, a BFI count for different types of BFI including BFI noise and BFI interference; and detect a beam failure based at least in part on the BFI count satisfying a threshold.

In some implementations, an apparatus for wireless communication includes means for receiving, from a base station, a BFD-RS; means for determining, autonomously at the UE based at least in part on the BFD-RS, a BFI count for different types of BFI including BFI noise and BFI interference; and means for detecting a beam failure based at least in part on the BFI count satisfying a threshold.

Aspects generally include a method, apparatus, system, computer program product, non-transitory computer-readable medium, user equipment, base station, wireless communication device, and/or processing system as substantially described herein with reference to and as illustrated by the drawings and specification.

The foregoing has outlined rather broadly the features and technical advantages of examples according to the disclosure in order that the detailed description that follows may be better understood. Additional features and advantages will be described hereinafter. The conception and specific examples disclosed may be readily utilized as a basis for modifying or designing other structures for carrying out the same purposes of the present disclosure. Such equivalent constructions do not depart from the scope of the appended claims Characteristics of the concepts disclosed herein, both their organization and method of operation, together with associated advantages, will be better understood from the following description when considered in connection with the accompanying figures. Each of the figures is provided for the purposes of illustration and description, and not as a definition of the limits of the claims.

While aspects are described in the present disclosure by illustration to some examples, those skilled in the art will understand that such aspects may be implemented in many different arrangements and scenarios. Techniques described herein may be implemented using different platform types, devices, systems, shapes, sizes, and/or packaging arrangements. For example, some aspects may be implemented via integrated chip embodiments or other non-module-component based devices (e.g., end-user devices, vehicles, communication devices, computing devices, industrial equipment, retail/purchasing devices, medical devices, and/or artificial intelligence devices). Aspects may be implemented in chip-level components, modular components, non-modular components, non-chip-level components, device-level components, and/or system-level components. Devices incorporating described aspects and features may include additional components and features for implementation and practice of claimed and described aspects. For example, transmission and reception of wireless signals may include

one or more components for analog and digital purposes (e.g., hardware components including antennas, radio frequency (RF) chains, power amplifiers, modulators, buffers, processors, interleavers, adders, and/or summers). It is intended that aspects described herein may be practiced in a wide variety of devices, components, systems, distributed arrangements, and/or end-user devices of varying size, shape, and constitution.

BRIEF DESCRIPTION OF THE DRAWINGS

So that the above-recited features of the present disclosure can be understood in detail, a more particular description, briefly summarized above, may be had by reference to aspects, some of which are illustrated in the appended drawings. It is to be noted, however, that the appended drawings illustrate only certain typical aspects of this disclosure and are therefore not to be considered limiting of its scope, for the description may admit to other equally effective aspects. The same reference numbers in different drawings may identify the same or similar elements.

FIG. **1** is a diagram illustrating an example of a wireless network, in accordance with the present disclosure.

FIG. **2** is a diagram illustrating an example of a base station in communication with a user equipment (UE) in a wireless network, in accordance with the present disclosure.

FIG. **3** is a diagram illustrating an example associated with determining a beam failure instance (BFI) count for beam failure detection, in accordance with the present disclosure.

FIG. **4** is a diagram illustrating an example process associated with determining a BFI count for beam failure detection, in accordance with the present disclosure.

FIG. **5** is a diagram of an example apparatus for wireless communication, in accordance with the present disclosure.

DETAILED DESCRIPTION

Various aspects of the disclosure are described more fully hereinafter with reference to the accompanying drawings. This disclosure may, however, be embodied in many different forms and should not be construed as limited to any specific structure or function presented throughout this disclosure. Rather, these aspects are provided so that this disclosure will be thorough and complete, and will fully convey the scope of the disclosure to those skilled in the art. One skilled in the art should appreciate that the scope of the disclosure is intended to cover any aspect of the disclosure disclosed herein, whether implemented independently of or combined with any other aspect of the disclosure. For example, an apparatus may be implemented or a method may be practiced using any number of the aspects set forth herein. In addition, the scope of the disclosure is intended to cover such an apparatus or method which is practiced using other structure, functionality, or structure and functionality in addition to or other than the various aspects of the disclosure set forth herein. It should be understood that any aspect of the disclosure disclosed herein may be embodied by one or more elements of a claim.

Several aspects of telecommunication systems will now be presented with reference to various apparatuses and techniques. These apparatuses and techniques will be described in the following detailed description and illustrated in the accompanying drawings by various blocks, modules, components, circuits, steps, processes, algorithms, or the like (collectively referred to as "elements"). These elements may be implemented using hardware, software, or combinations thereof. Whether such elements are implemented as hardware or software depends upon the particular application and design constraints imposed on the overall system.

While aspects may be described herein using terminology commonly associated with a 5G or New Radio (NR) radio access technology (RAT), aspects of the present disclosure can be applied to other RATs, such as a 3G RAT, a 4G RAT, and/or a RAT subsequent to 5G (e.g., 6G).

FIG. **1** is a diagram illustrating an example of a wireless network **100**, in accordance with the present disclosure. The wireless network **100** may be or may include elements of a 5G (e.g., NR) network and/or a 4G (e.g., Long Term Evolution (LTE)) network, among other examples. The wireless network **100** may include one or more base stations **110** (shown as a BS **110***a*, a BS **110***b*, a BS **110***c*, and a BS **110***d*), a user equipment (UE) **120** or multiple UEs **120** (shown as a UE **120***a*, a UE **120***b*, a UE **120***c*, a UE **120***d*, and a UE **120***e*), and/or other network entities. A base station **110** is an entity that communicates with UEs **120**. A base station **110** (sometimes referred to as a BS) may include, for example, an NR base station, an LTE base station, a Node B, an eNB (e.g., in 4G), a gNB (e.g., in 5G), an access point, and/or a transmission reception point (TRP). Each base station **110** may provide communication coverage for a particular geographic area. In the Third Generation Partnership Project (3GPP), the term "cell" can refer to a coverage area of a base station **110** and/or a base station subsystem serving this coverage area, depending on the context in which the term is used.

A base station **110** may provide communication coverage for a macro cell, a pico cell, a femto cell, and/or another type of cell. A macro cell may cover a relatively large geographic area (e.g., several kilometers in radius) and may allow unrestricted access by UEs **120** with service subscriptions. A pico cell may cover a relatively small geographic area and may allow unrestricted access by UEs **120** with service subscription. A femto cell may cover a relatively small geographic area (e.g., a home) and may allow restricted access by UEs **120** having association with the femto cell (e.g., UEs **120** in a closed subscriber group (CSG)). A base station **110** for a macro cell may be referred to as a macro base station. A base station **110** for a pico cell may be referred to as a pico base station. A base station **110** for a femto cell may be referred to as a femto base station or an in-home base station. In the example shown in FIG. **1**, the BS **110***a* may be a macro base station for a macro cell **102***a*, the BS **110***b* may be a pico base station for a pico cell **102***b*, and the BS **110***c* may be a femto base station for a femto cell **102***c*. A base station may support one or multiple (e.g., three) cells.

In some examples, a cell may not necessarily be stationary, and the geographic area of the cell may move according to the location of a base station **110** that is mobile (e.g., a mobile base station). In some examples, the base stations **110** may be interconnected to one another and/or to one or more other base stations **110** or network nodes (not shown) in the wireless network **100** through various types of backhaul interfaces, such as a direct physical connection or a virtual network, using any suitable transport network.

The wireless network **100** may include one or more relay stations. A relay station is an entity that can receive a transmission of data from an upstream station (e.g., a base station **110** or a UE **120**) and send a transmission of the data to a downstream station (e.g., a UE **120** or a base station **110**). A relay station may be a UE **120** that can relay transmissions for other UEs **120**. In the example shown in

FIG. **1**, the BS **110***d* (e.g., a relay base station) may communicate with the BS **110***a* (e.g., a macro base station) and the UE **120***d* in order to facilitate communication between the BS **110***a* and the UE **120***d*. A base station **110** that relays communications may be referred to as a relay station, a relay base station, a relay, or the like.

The wireless network **100** may be a heterogeneous network that includes base stations **110** of different types, such as macro base stations, pico base stations, femto base stations, relay base stations, or the like. These different types of base stations **110** may have different transmit power levels, different coverage areas, and/or different impacts on interference in the wireless network **100**. For example, macro base stations may have a high transmit power level (e.g., 5 to 40 watts) whereas pico base stations, femto base stations, and relay base stations may have lower transmit power levels (e.g., 0.1 to 2 watts).

A network controller **130** may couple to or communicate with a set of base stations **110** and may provide coordination and control for these base stations **110**. The network controller **130** may communicate with the base stations **110** via a backhaul communication link. The base stations **110** may communicate with one another directly or indirectly via a wireless or wireline backhaul communication link.

The UEs **120** may be dispersed throughout the wireless network **100**, and each UE **120** may be stationary or mobile. A UE **120** may include, for example, an access terminal, a terminal, a mobile station, and/or a subscriber unit. A UE **120** may be a cellular phone (e.g., a smart phone), a personal digital assistant (PDA), a wireless modem, a wireless communication device, a handheld device, a laptop computer, a cordless phone, a wireless local loop (WLL) station, a tablet, a camera, a gaming device, a netbook, a smartbook, an ultrabook, a medical device, a biometric device, a wearable device (e.g., a smart watch, smart clothing, smart glasses, a smart wristband, smart jewelry (e.g., a smart ring or a smart bracelet)), an entertainment device (e.g., a music device, a video device, and/or a satellite radio), a vehicular component or sensor, a smart meter/sensor, industrial manufacturing equipment, a global positioning system device, and/or any other suitable device that is configured to communicate via a wireless medium.

Some UEs **120** may be considered machine-type communication (MTC) or evolved or enhanced machine-type communication (eMTC) UEs. An MTC UE and/or an eMTC UE may include, for example, a robot, a drone, a remote device, a sensor, a meter, a monitor, and/or a location tag, that may communicate with a base station, another device (e.g., a remote device), or some other entity. Some UEs **120** may be considered Internet-of-Things (IoT) devices, and/or may be implemented as NB-IoT (narrowband IoT) devices. Some UEs **120** may be considered a Customer Premises Equipment. A UE **120** may be included inside a housing that houses components of the UE **120**, such as processor components and/or memory components. In some examples, the processor components and the memory components may be coupled together. For example, the processor components (e.g., one or more processors) and the memory components (e.g., a memory) may be operatively coupled, communicatively coupled, electronically coupled, and/or electrically coupled.

In general, any number of wireless networks **100** may be deployed in a given geographic area. Each wireless network **100** may support a particular RAT and may operate on one or more frequencies. A RAT may be referred to as a radio technology, an air interface, or the like. A frequency may be referred to as a carrier, a frequency channel, or the like. Each frequency may support a single RAT in a given geographic area in order to avoid interference between wireless networks of different RATs. In some cases, NR or 5G RAT networks may be deployed.

In some examples, two or more UEs **120** (e.g., shown as UE **120***a* and UE **120***e*) may communicate directly using one or more sidelink channels (e.g., without using a base station **110** as an intermediary to communicate with one another). For example, the UEs **120** may communicate using peer-to-peer (P2P) communications, device-to-device (D2D) communications, a vehicle-to-everything (V2X) protocol (e.g., which may include a vehicle-to-vehicle (V2V) protocol, a vehicle-to-infrastructure (V21) protocol, or a vehicle-to-pedestrian (V2P) protocol), and/or a mesh network. In such examples, a UE **120** may perform scheduling operations, resource selection operations, and/or other operations described elsewhere herein as being performed by the base station **110**.

Devices of the wireless network **100** may communicate using the electromagnetic spectrum, which may be subdivided by frequency or wavelength into various classes, bands, channels, or the like. For example, devices of the wireless network **100** may communicate using one or more operating bands. In 5G NR, two initial operating bands have been identified as frequency range designations FR1 (410 MHz-7.125 GHz) and FR2 (24.25 GHz-52.6 GHz). It should be understood that although a portion of FR1 is greater than 6 GHz, FR1 is often referred to (interchangeably) as a "Sub-6 GHz" band in various documents and articles. A similar nomenclature issue sometimes occurs with regard to FR2, which is often referred to (interchangeably) as a "millimeter wave" band in documents and articles, despite being different from the extremely high frequency (EHF) band (30 GHz-300 GHz) which is identified by the International Telecommunications Union (ITU) as a "millimeter wave" band.

The frequencies between FR1 and FR2 are often referred to as mid-band frequencies. Recent 5G NR studies have identified an operating band for these mid-band frequencies as frequency range designation FR3 (7.125 GHz-24.25 GHz). Frequency bands falling within FR3 may inherit FR1 characteristics and/or FR2 characteristics, and thus may effectively extend features of FR1 and/or FR2 into mid-band frequencies. In addition, higher frequency bands are currently being explored to extend 5G NR operation beyond 52.6 GHz. For example, three higher operating bands have been identified as frequency range designations FR4a or FR4-1 (52.6 GHz-71 GHz), FR4 (52.6 GHz-114.25 GHz), and FR5 (114.25 GHz-300 GHz). Each of these higher frequency bands falls within the EHF band.

With the above examples in mind, unless specifically stated otherwise, it should be understood that the term "sub-6 GHz" or the like, if used herein, may broadly represent frequencies that may be less than 6 GHz, may be within FR1, or may include mid-band frequencies. Further, unless specifically stated otherwise, it should be understood that the term "millimeter wave" or the like, if used herein, may broadly represent frequencies that may include mid-band frequencies, may be within FR2, FR4, FR4-a or FR4-1, and/or FR5, or may be within the EHF band. It is contemplated that the frequencies included in these operating bands (e.g., FR1, FR2, FR3, FR4, FR4-a, FR4-1, and/or FR5) may be modified, and techniques described herein are applicable to those modified frequency ranges.

In some aspects, a UE (e.g., UE **120**) may include a communication manager **140**. As described in more detail elsewhere herein, the communication manager **140** may

receive, from a base station, a beam failure detection reference signal (BFD-RS); determine, autonomously at the UE based at least in part on the BFD-RS, a BFI count for different types of BFI including BFI noise and BFI interference; and detect a beam failure based at least in part on the BFI count satisfying a threshold. Additionally, or alternatively, the communication manager **140** may perform one or more other operations described herein.

As indicated above, FIG. **1** is provided as an example. Other examples may differ from what is described with regard to FIG. **1**.

FIG. **2** is a diagram illustrating an example **200** of a base station **110** in communication with a UE **120** in a wireless network **100**, in accordance with the present disclosure. The base station **110** may be equipped with a set of antennas **234***a* through **234***t*, such as T antennas (T≥1). The UE **120** may be equipped with a set of antennas **252***a* through **252***r*, such as R antennas (R≥1).

At the base station **110**, a transmit processor **220** may receive data, from a data source **212**, intended for the UE **120** (or a set of UEs **120**). The transmit processor **220** may select one or more modulation and coding schemes (MCSs) for the UE **120** based at least in part on one or more channel quality indicators (CQIs) received from that UE **120**. The base station **110** may process (e.g., encode and modulate) the data for the UE **120** based at least in part on the MCS(s) selected for the UE **120** and may provide data symbols for the UE **120**. The transmit processor **220** may process system information (e.g., for semi-static resource partitioning information (SRPI)) and control information (e.g., CQI requests, grants, and/or upper layer signaling) and provide overhead symbols and control symbols. The transmit processor **220** may generate reference symbols for reference signals (e.g., a cell-specific reference signal (CRS) or a demodulation reference signal (DMRS)) and synchronization signals (e.g., a primary synchronization signal (PSS) or a secondary synchronization signal (SSS)). A transmit (TX) multiple-input multiple-output (MIMO) processor **230** may perform spatial processing (e.g., precoding) on the data symbols, the control symbols, the overhead symbols, and/or the reference symbols, if applicable, and may provide a set of output symbol streams (e.g., T output symbol streams) to a corresponding set of modems **232** (e.g., T modems), shown as modems **232***a* through **232***t*. For example, each output symbol stream may be provided to a modulator component (shown as MOD) of a modem **232**. Each modem **232** may use a respective modulator component to process a respective output symbol stream (e.g., for OFDM) to obtain an output sample stream. Each modem **232** may further use a respective modulator component to process (e.g., convert to analog, amplify, filter, and/or upconvert) the output sample stream to obtain a downlink signal. The modems **232***a* through **232***t* may transmit a set of downlink signals (e.g., T downlink signals) via a corresponding set of antennas **234** (e.g., T antennas), shown as antennas **234***a* through **234***t*.

At the UE **120**, a set of antennas **252** (shown as antennas **252***a* through **252***r*) may receive the downlink signals from the base station **110** and/or other base stations **110** and may provide a set of received signals (e.g., R received signals) to a set of modems **254** (e.g., R modems), shown as modems **254***a* through **254***r*. For example, each received signal may be provided to a demodulator component (shown as DEMOD) of a modem **254**. Each modem **254** may use a respective demodulator component to condition (e.g., filter, amplify, downconvert, and/or digitize) a received signal to obtain input samples. Each modem **254** may use a demodulator component to further process the input samples (e.g., for OFDM) to obtain received symbols. A MIMO detector **256** may obtain received symbols from the modems **254**, may perform MIMO detection on the received symbols if applicable, and may provide detected symbols. A receive processor **258** may process (e.g., demodulate and decode) the detected symbols, may provide decoded data for the UE **120** to a data sink **260**, and may provide decoded control information and system information to a controller/processor **280**. The term "controller/processor" may refer to one or more controllers, one or more processors, or a combination thereof. A channel processor may determine a reference signal received power (RSRP) parameter, a received signal strength indicator (RSSI) parameter, a reference signal received quality (RSRQ) parameter, and/or a CQI parameter, among other examples. In some examples, one or more components of the UE **120** may be included in a housing **284**.

The network controller **130** may include a communication unit **294**, a controller/processor **290**, and a memory **292**. The network controller **130** may include, for example, one or more devices in a core network. The network controller **130** may communicate with the base station **110** via the communication unit **294**.

One or more antennas (e.g., antennas **234***a* through **234***t* and/or antennas **252***a* through **252***r*) may include, or may be included within, one or more antenna panels, one or more antenna groups, one or more sets of antenna elements, and/or one or more antenna arrays, among other examples. An antenna panel, an antenna group, a set of antenna elements, and/or an antenna array may include one or more antenna elements (within a single housing or multiple housings), a set of coplanar antenna elements, a set of non-coplanar antenna elements, and/or one or more antenna elements coupled to one or more transmission and/or reception components, such as one or more components of FIG. **2**.

On the uplink, at the UE **120**, a transmit processor **264** may receive and process data from a data source **262** and control information (e.g., for reports that include RSRP, RSSI, RSRQ, and/or CQI) from the controller/processor **280**. The transmit processor **264** may generate reference symbols for one or more reference signals. The symbols from the transmit processor **264** may be precoded by a TX MIMO processor **266** if applicable, further processed by the modems **254** (e.g., for DFT-s-OFDM or CP-OFDM), and transmitted to the base station **110**. In some examples, the modem **254** of the UE **120** may include a modulator and a demodulator. In some examples, the UE **120** includes a transceiver. The transceiver may include any combination of the antenna(s) **252**, the modem(s) **254**, the MIMO detector **256**, the receive processor **258**, the transmit processor **264**, and/or the TX MIMO processor **266**. The transceiver may be used by a processor (e.g., the controller/processor **280**) and the memory **282** to perform aspects of any of the methods described herein (e.g., with reference to FIGS. **3-5**).

At the base station **110**, the uplink signals from UE **120** and/or other UEs may be received by the antennas **234**, processed by the modem **232** (e.g., a demodulator component, shown as DEMOD, of the modem **232**), detected by a MIMO detector **236** if applicable, and further processed by a receive processor **238** to obtain decoded data and control information sent by the UE **120**. The receive processor **238** may provide the decoded data to a data sink **239** and provide the decoded control information to the controller/processor **240**. The base station **110** may include a communication unit **244** and may communicate with the network controller **130** via the communication unit **244**. The base station **110** may

include a scheduler **246** to schedule one or more UEs **120** for downlink and/or uplink communications. In some examples, the modem **232** of the base station **110** may include a modulator and a demodulator. In some examples, the base station **110** includes a transceiver. The transceiver may include any combination of the antenna(s) **234**, the modem(s) **232**, the MIMO detector **236**, the receive processor **238**, the transmit processor **220**, and/or the TX MIMO processor **230**. The transceiver may be used by a processor (e.g., the controller/processor **240**) and the memory **242** to perform aspects of any of the methods described herein (e.g., with reference to FIGS. **3-5**).

The controller/processor **240** of the base station **110**, the controller/processor **280** of the UE **120**, and/or any other component(s) of FIG. **2** may perform one or more techniques associated with determining a BFI count for beam failure detection, as described in more detail elsewhere herein. For example, the controller/processor **240** of the base station **110**, the controller/processor **280** of the UE **120**, and/or any other component(s) of FIG. **2** may perform or direct operations of, for example, process **400** of FIG. **4**, and/or other processes as described herein. The memory **242** and the memory **282** may store data and program codes for the base station **110** and the UE **120**, respectively. In some examples, the memory **242** and/or the memory **282** may include a non-transitory computer-readable medium storing one or more instructions (e.g., code and/or program code) for wireless communication. For example, the one or more instructions, when executed (e.g., directly, or after compiling, converting, and/or interpreting) by one or more processors of the base station **110** and/or the UE **120**, may cause the one or more processors, the UE **120**, and/or the base station **110** to perform or direct operations of, for example, process **400** of FIG. **4**, and/or other processes as described herein. In some examples, executing instructions may include running the instructions, converting the instructions, compiling the instructions, and/or interpreting the instructions, among other examples.

In some aspects, a UE (e.g., UE **120**) includes means for receiving, from a base station, a BFD-RS; means for determining, autonomously at the UE based at least in part on the BFD-RS, a BFI count for different types of BFI including BFI noise and BFI interference; and/or means for detecting a beam failure based at least in part on the BFI count satisfying a threshold. The means for the UE to perform operations described herein may include, for example, one or more of communication manager **140**, antenna **252**, modem **254**, MIMO detector **256**, receive processor **258**, transmit processor **264**, TX MIMO processor **266**, controller/processor **280**, or memory **282**.

While blocks in FIG. **2** are illustrated as distinct components, the functions described above with respect to the blocks may be implemented in a single hardware, software, or combination component or in various combinations of components. For example, the functions described with respect to the transmit processor **264**, the receive processor **258**, and/or the TX MIMO processor **266** may be performed by or under the control of the controller/processor **280**.

As indicated above, FIG. **2** is provided as an example. Other examples may differ from what is described with regard to FIG. **2**.

During a legacy beam failure detection procedure, a UE may detect a beam failure based at least in part on counting BFI indications. A BFI indication may be based at least in part on a periodic BFD-RS, which may include a channel state information reference signal (CSI-RS) and/or a synchronization signal block (SSB). The BFI indication may be triggered when an estimated block error rate (BLER) associated with the periodic BFD-RS satisfies a BLER threshold.

During the legacy beam failure detection procedure, a medium access control (MAC) layer of the UE may determine that a BFI indication has been received from a lower layer, such as a physical (PHY) layer. A receipt of the BFI indication may be triggered by the estimated BLER associated with the periodic BFD-RS satisfying the BLER threshold. The MAC layer may correspond to a serving cell configured for beam failure detection. When the MAC layer determines that the BFI indication has been received from the lower layer, the MAC layer may start a beam failure detection timer. Further, the MAC layer may increment a BFI counter by one. The BFI counter may be per serving cell and may initially be set to zero. When the BFI counter satisfies a beam failure instance maximum count, the MAC layer may trigger a beam failure recovery for the serving cell.

The legacy beam failure detection procedure suffers from various shortcomings. First, the BFI is limited to a single type of BFI. The BFI does not distinguish between noise and interference. Noise may be a significant factor when determining radio link quality. On the other hand, interference may be temporary, and should not be considered equal to noise for the BFI. Further, the counting of BFI indications in the legacy beam failure detection procedure is linear and is based at least in part on BFI indications that are reported from the lower layer. For example, the BFI count may be incremented by one for each BFI indication that is reported from the lower layer. However, the linear counting of BFI indications by adding a value of one for each BFI indication may be limiting and does not consider different BFI types. Further, the legacy beam failure detection procedure provides no autonomy for the UE, as a base station configures a BFD-RS and a BFI configuration for the UE, and the UE linearly performs the counting of the BFI indications in accordance with the BFI configuration.

In various aspects of techniques and apparatuses described herein, a UE may receive, from a base station, a BFD-RS. The BFD-RS may be a CSI-RS or an SSB. The UE may determine, autonomously at the UE based at least in part on the BFD-RS, a BFI count for different types of BFI including BFI noise and BFI interference. The different types of BFI may be based at least in part on UE autonomous BFI criteria. The UE may determine the BFI count based at least in part on UE autonomous counting techniques. The UE may determine the BFI count based at least in part on a first count associated with the BFI noise and a second count associated with the BFI interference. Alternatively, the UE may determine the BFI count using a machine learning model, which may output the BFI count based at least in part on various inputs, such as BFI indication reports and/or channel measurements associated with the BFD-RS. The UE may detect a beam failure based at least in part on the BFI count satisfying a threshold.

In some aspects, the UE may perform beam failure detection in a more autonomous manner based at least in part on increasing processing capabilities at the UE. The UE may perform the beam failure detection by considering different BFI types (e.g., BFI noise and BFI interference) and associated counting techniques. In some cases, the UE may perform the beam failure detection using machine learning techniques. The beam failure detection may result in an improved beam failure detection reaction time to beam failure events and may reduce a UE processing delay. The UE may not need to wait for instructions from the base station to detect beam failures. The beam failure detection

may reduce resource usage at the base station, as less resources may be used at the base station to control the UE. The beam failure detection may have improved accuracy due to more sophisticated BFI instance counting techniques and/or different types of BFIs to distinguish between noise and interference.

FIG. **3** is a diagram illustrating an example **300** associated with determining a BFI count for beam failure detection, in accordance with the present disclosure. As shown in FIG. **3**, example **300** includes communication between a UE (e.g., UE **120**) and a base station (e.g., base station **110**). In some aspects, the UE and the base station may be included in a wireless network, such as wireless network **100**.

As shown by reference number **302**, the UE may receive, from the base station, a BFD-RS. The BFD-RS may be a periodic reference signal. In some cases, the BFD-RS may be a CSI-RS or an SSB.

In some aspects, the UE may categorize a BFI into various types of BFIs. A first type of BFI may be a BFI noise. The BFI noise may indicate that a current poor radio link quality is mainly due to noise, and the BFI noise maybe considered when detecting beam failure. A second type of BFI may be a BFI interference. The BFI interference may indicate that a current poor radio link quality is mainly due to interference, and the BFI interference may be considered to be less important as compared to the BFI noise when detecting the beam failure.

In some aspects, the BFI noise may indicate that a current radio link quality is affected by signal noise. The BFI interference may indicate that the current radio link quality is affected by signal interference. The BFI interference may be associated with a lower priority as compared to the BFI noise for beam failure detection.

In some aspects, the UE may determine the BFI noise or the BFI interference by comparing a signal-to-inference-plus-noise ratio (SINR) measurement of the BFD-RS and a signal-to-noise ratio (SNR) measurement of the BFD-RS. For example, the UE may determine BFI noise based at least in part on an SINR measurement that is relatively low and an SNR measurement that is relatively low. As another example, the UE may determine BFI interference based at least in part on an SINR measurement that is relatively low and an SNR measurement that is relatively high. As yet another example, the UE may determine no BFI based at least in part on an SINR measurement that is relatively high. In other words, a low SINR and a low SNR may indicate the BFI noise, a low SINR and a high SNR may indicate the BFI interference, and a high SINR may indicate no BFI. In some aspects, the UE may determine other types of BFI not including BFI noise and BFI interference.

"Low SINR" may refer to an SINR level that satisfies a low SINR threshold, "low SNR" may refer to an SNR level that satisfies a low SNR threshold, "high SNR" may refer to an SNR level that satisfies a high SNR threshold, and "high SINR" may refer to an SINR level that satisfies a high SINR threshold.

In some aspects, the base station may signal/configure multiple options of calculation techniques for BFI types, which may allow the UE to autonomously select one of the BFI types calculation techniques. A BFI types calculation technique may enable the UE to determine different types of BFIs from the BFD-RS, such as the BFI noise and/or the BFI interference. The base station may signal/configure the multiple options via a radio resource control (RRC) configuration. The base station may signal/configure the multiple options via a medium access control control element (MAC-CE) or downlink control information (DCI). Alternatively, the UE may be preconfigured with the multiple options of BFI types calculation techniques.

As shown by reference number **304**, the UE may determine, autonomously based at least in part on the BFD-RS, a BFI count for different types of BFI including BFI noise and BFI interference. The UE may determine the BFI count based at least in part on separate counters associated with the BFI noise and the BFI interference. Alternatively, the UE may determine the BFI count based at least in part on a machine learning model.

In some aspects, the UE may identify a first count associated with the BFI noise based at least in part on a first counter dedicated to BFI noise. The UE may identify a second count associated with the BFI interference based at least in part on a second counter dedicated to BFI interference. The UE may obtain the BFI count based at least in part on a function that considers the first count, the second count, and a weight associated with the BFI interference, where the BFI count may include separate counts for the BFI noise and the BFI interference.

In some aspects, the UE may implement a BFI counting technique for beam failure detection. The UE may maintain the separate counters for the BFI noise and the BFI interference. The BFI noise may be associated with a count_a, and the BFI interference may be associated with a count_b. In some aspects, a count total (count_total) may be equal to f(count_a, count_b), where f is a function. As an example, count_total may be equal to count_a+w*count_b, where w is a weight on BFI interference, and where $0 \leq w \leq 1$. The UE may compare the count_total to a beam failure instance maximum count, and when the count_total exceeds the beam failure instance maximum count, the UE may declare beam failure.

In some aspects, the UE may provide, as an input to the machine learning model, one or more BFI indication reports and one or more channel measurements associated with the BFD-RS. The one or more channel measurements may include an SINR measurement, an SNR measurement, an RSRP measurement, and/or an interference measurement. The UE may obtain, as an output of the machine learning model, the BFI count for the BFI noise and the BFI interference. The BFI count may be provided from a physical layer of the UE to a MAC layer of the UE for beam failure detection. The BFI count may include separate counts for the BFI noise and the BFI interference.

In some aspects, the UE may determine a BFI count based at least in part on the machine learning model (e.g., a neural network). The UE may input various types of information into the machine learning model, such as BFI reports and/or channel measurements. The channel measurements may be SINR measurements, SNR measurements, RSRP measurements, and/or interference measurements. The channel measurements may be collected over a measurement window, and the channel measurements may be associated with a quantity of past BFD-RSs. The machine learning model may receive the various types of information as input, and the machine learning model may output the BFI count based at least in part on the input. The BFI count may consider BFI noise and BFI interference. The UE may compare the BFI count outputted from the machine learning model to the beam failure instance maximum count, and when the BFI count exceeds the beam failure instance maximum count, the UE may declare beam failure. For example, the BFI count outputted from the machine learning model may be reported from a lower layer of the UE to a MAC layer of the UE, where the MAC layer of the UE may be responsible for comparing the BFI count to the beam failure instance

maximum count and determining whether to declare beam failure. In some aspects, the machine learning model may repeatedly calculate the BFI count based at least in part on a moving time window, and the BFI count may be compared to the beam failure instance maximum count for beam failure detection.

In some aspects, a machine learning model approach for determining the BFI count may not involve an incremental linear increase or an incremental weighted increase based at least in part on BFI count indications reported from the lower layer of the UE to the MAC layer of the UE. Rather, the BFI count determined using the machine learning model may depend on the various types of information, such as the BFI indication reports and/or the channel measurements. In some aspects, a machine learning model that is trained using a training data set may be deployed onto the UE. The training data set may indicate BFI indication reports and channel measurements and corresponding BFI counts, which may be used to train the machine learning model to output accurate BFI counts. In some aspects, the base station may transmit the machine learning model to the UE, and the base station may periodically provide updates for the machine learning model.

In some aspects, the base station may signal/configure multiple options of BFI counting techniques, which may allow the UE to autonomously select one of the BFI counting techniques. A BFI counting technique may enable the UE to count different types of BFIs, such as the BFI noise and the BFI interference. The BFI counting technique may use a formula that considers the BFI noise, the BFI interference, and the weight on the BFI interference. The base station may signal/configure the multiple options via an RRC configuration. The base station may signal/configure the multiple options via a MAC-CE or DCI. Alternatively, the UE may be preconfigured with the multiple options of BFI counting techniques.

In some aspects, the UE may receive, from the base station, signaling that configures a first set of options associated with determining different types of BFIs including the BFI noise and the BFI interference. The UE may autonomously select one option from the first set of options. The signaling may be received via an RRC configuration or a MAC-CE. In some aspects, the UE may receive, from the base station, signaling that configures a second set of options associated with determining BFI counts based at least in part on the different types of BFIs. The UE may autonomously select one option from the second set of options. The signaling may be received via the RRC configuration or the MAC-CE.

In some aspects, the UE may signal a UE capability message to the base station. The UE capability message may indicate machine learning features, processing power and capacity, memory, and/or computation resources. The UE may signal the UE capability message via a MAC-CE or via uplink control information (UCI).

In some aspects, autonomy activation/deactivation may be based at least in part on a UE reported capability. The base station may activate/deactivate UE autonomy for beam failure detection via signaling to the UE, where the signaling may be via a MAC-CE or DCI. In some aspects, the UE may transmit a request, to the base station, to activate/deactivate UE autonomy for beam failure detection via signaling to the base station, where the signaling may be via a MAC-CE or UCI.

In some aspects, the UE may transmit, to the base station via a MAC-CE or UCI, UE capability information that indicates the machine learning features of the UE, the processing power and capacity of the UE, a memory configuration of the UE, and/or the computation resources of the UE. The UE may receive, from the base station via a MAC-CE or DCI and based at least in part on the UE capability information, a configuration that activates UE autonomy, deactivates UE autonomy, or changes a UE autonomy level for determining the BFI count and detecting the beam failure based at least in part on the BFI count. In some aspects, the UE may transmit, to the base station via a MAC-CE or UCI, a request to activate UE autonomy or deactivate UE autonomy for determining the BFI count and detecting the beam failure based at least in part on the BFI count.

As shown by reference number **306**, the UE may detect a beam failure based at least in part on the BFI count satisfying a threshold. The UE may determine the BFI count based at least in part on the separate counters associated with the BFI noise and the BFI interference. Alternatively, the UE may determine the BFI count based at least in part on a machine learning model. The UE may compare the BFI count with the threshold (e.g., a beam failure instance maximum count), and the UE may detect the beam failure and initiate a beam failure recovery.

As indicated above, FIG. **3** is provided as an example. Other examples may differ from what is described with regard to FIG. **3**.

FIG. **4** is a diagram illustrating an example process **400** performed, for example, by a UE, in accordance with the present disclosure. Example process **400** is an example where the UE (e.g., UE **120**) performs operations associated with determining a BFI count for beam failure detection.

As shown in FIG. **4**, in some aspects, process **400** may include receiving, from a base station, a BFD-RS (block **410**). For example, the UE (e.g., using communication manager **140** and/or reception component **502**, depicted in FIG. **5**) may receive, from a base station, a BFD-RS, as described above.

As further shown in FIG. **4**, in some aspects, process **400** may include determining, autonomously at the UE based at least in part on the BFD-RS, a BFI count for different types of BFI including BFI noise and BFI interference (block **420**). For example, the UE (e.g., using communication manager **140** and/or determination component **508**, depicted in FIG. **5**) may determine, autonomously at the UE based at least in part on the BFD-RS, a BFI count for different types of BFI including BFI noise and BFI interference, as described above.

As further shown in FIG. **4**, in some aspects, process **400** may include detecting a beam failure based at least in part on the BFI count satisfying a threshold (block **430**). For example, the UE (e.g., using communication manager **140** and/or detection component **510**, depicted in FIG. **5**) may detect a beam failure based at least in part on the BFI count satisfying a threshold, as described above.

Process **400** may include additional aspects, such as any single aspect or any combination of aspects described below and/or in connection with one or more other processes described elsewhere herein.

In a first aspect, the BFI noise indicates that a current radio link quality is affected by signal noise, wherein the BFI interference indicates that the current radio link quality is affected by signal interference, and the BFI interference is associated with a lower priority as compared to the BFI noise for beam failure detection.

In a second aspect, alone or in combination with the first aspect, process **400** includes determining the BFI noise or the BFI interference by comparing an SINR measurement of

the BFD-RS with an SNR measurement of the BFD-RS, wherein a low SINR and a low SNR indicates the BFI noise, a low SINR and a high SNR indicates the BFI interference, and a high SINR indicates no BFI.

In a third aspect, alone or in combination with one or more of the first and second aspects, process **400** includes identifying a first count associated with the BFI noise based at least in part on a first counter dedicated to BFI noise, identifying a second count associated with the BFI interference based at least in part on a second counter dedicated to BFI interference, and obtaining the BFI count based at least in part on a function that considers the first count, the second count, and a weight associated with the BFI interference, wherein the BFI count includes separate counts for the BFI noise and the BFI interference.

In a fourth aspect, alone or in combination with one or more of the first through third aspects, process **400** includes providing, as an input to a machine learning model, one or more BFI indication reports and one or more channel measurements associated with the BFD-RS, wherein the one or more channel measurements include one or more of an SINR measurement, an SNR measurement, an RSRP measurement, or an interference measurement, and obtaining, as an output of the machine learning model, the BFI count for the BFI noise and the BFI interference, wherein the BFI count is provided from a physical layer of the UE to a MAC layer of the UE for beam failure detection, and the BFI count includes separate counts for the BFI noise and the BFI interference.

In a fifth aspect, alone or in combination with one or more of the first through fourth aspects, process **400** includes receiving, from the base station, signaling that configures a first set of options associated with determining different types of BFIs including the BFI noise and the BFI interference, wherein one option from the first set of options is autonomously selected at the UE, and wherein the signaling is received via an RRC configuration or a MAC-CE, and receiving, from the base station, signaling that configures a second set of options associated with determining BFI counts based at least in part on the different types of BFIs, wherein one option from the second set of options is autonomously selected at the UE, and the signaling is received via the RRC configuration or the MAC-CE.

In a sixth aspect, alone or in combination with one or more of the first through fifth aspects, process **400** includes transmitting, to the base station via a MAC-CE or UCI, UE capability information that indicates one or more of machine learning features of the UE, a processing power and capacity of the UE, a memory configuration of the UE, or computation resources of the UE, and receiving, from the base station via a MAC-CE or DCI and based at least in part on the UE capability information, a configuration that activates UE autonomy, deactivates UE autonomy, or changes a UE autonomy level for determining the BFI count and detecting the beam failure based at least in part on the BFI count.

In a seventh aspect, alone or in combination with one or more of the first through sixth aspects, process **400** includes transmitting, to the base station via a MAC-CE or UCI, a request to activate UE autonomy or deactivate UE autonomy for determining the BFI count and detecting the beam failure based at least in part on the BFI count.

Although FIG. **4** shows example blocks of process **400**, in some aspects, process **400** may include additional blocks, fewer blocks, different blocks, or differently arranged blocks than those depicted in FIG. **4**. Additionally, or alternatively, two or more of the blocks of process **400** may be performed in parallel.

FIG. **5** is a diagram of an example apparatus **500** for wireless communication. The apparatus **500** may be a UE, or a UE may include the apparatus **500**. In some aspects, the apparatus **500** includes a reception component **502** and a transmission component **504**, which may be in communication with one another (for example, via one or more buses and/or one or more other components). As shown, the apparatus **500** may communicate with another apparatus **506** (such as a UE, a base station, or another wireless communication device) using the reception component **502** and the transmission component **504**. As further shown, the apparatus **500** may include the communication manager **140**. The communication manager **140** may include one or more of a determination component **508**, or a detection component **510**, among other examples.

In some aspects, the apparatus **500** may be configured to perform one or more operations described herein in connection with FIG. **3**. Additionally, or alternatively, the apparatus **500** may be configured to perform one or more processes described herein, such as process **400** of FIG. **4**. In some aspects, the apparatus **500** and/or one or more components shown in FIG. **5** may include one or more components of the UE described in connection with FIG. **2**. Additionally, or alternatively, one or more components shown in FIG. **5** may be implemented within one or more components described in connection with FIG. **2**. Additionally, or alternatively, one or more components of the set of components may be implemented at least in part as software stored in a memory. For example, a component (or a portion of a component) may be implemented as instructions or code stored in a non-transitory computer-readable medium and executable by a controller or a processor to perform the functions or operations of the component.

The reception component **502** may receive communications, such as reference signals, control information, data communications, or a combination thereof, from the apparatus **506**. The reception component **502** may provide received communications to one or more other components of the apparatus **500**. In some aspects, the reception component **502** may perform signal processing on the received communications (such as filtering, amplification, demodulation, analog-to-digital conversion, demultiplexing, deinterleaving, de-mapping, equalization, interference cancellation, or decoding, among other examples), and may provide the processed signals to the one or more other components of the apparatus **506**. In some aspects, the reception component **502** may include one or more antennas, a modem, a demodulator, a MIMO detector, a receive processor, a controller/processor, a memory, or a combination thereof, of the UE described in connection with FIG. **2**.

The transmission component **504** may transmit communications, such as reference signals, control information, data communications, or a combination thereof, to the apparatus **506**. In some aspects, one or more other components of the apparatus **506** may generate communications and may provide the generated communications to the transmission component **504** for transmission to the apparatus **506**. In some aspects, the transmission component **504** may perform signal processing on the generated communications (such as filtering, amplification, modulation, digital-to-analog conversion, multiplexing, interleaving, mapping, or encoding, among other examples), and may transmit the processed signals to the apparatus **506**. In some aspects, the transmission component **504** may include one or more antennas, a modem, a modulator, a transmit MIMO processor, a transmit processor, a controller/processor, a memory, or a combination thereof, of the UE described in connection

with FIG. **2**. In some aspects, the transmission component **504** may be co-located with the reception component **502** in a transceiver.

The reception component **502** may receive, from a base station, a BFD-RS. The determination component **508** may determine, autonomously at the UE based at least in part on the BFD-RS, a BFI count for different types of BFI including BFI noise and BFI interference. The detection component **510** may detect a beam failure based at least in part on the BFI count satisfying a threshold.

The determination component **508** may determine the BFI noise or the BFI interference by comparing an SINR measurement of the BFD-RS with an SNR measurement of the BFD-RS, wherein a low SINR and a low SNR indicates the BFI noise, a low SINR and a high SNR indicates the BFI interference, and a high SINR indicates no BFI.

The determination component **508** may identify a first count associated with the BFI noise based at least in part on a first counter dedicated to BFI noise. The determination component **508** may identify a second count associated with the BFI interference based at least in part on a second counter dedicated to BFI interference. The determination component **508** may obtain the BFI count based at least in part on a function that considers the first count, the second count, and a weight associated with the BFI interference, wherein the BFI count includes separate counts for the BFI noise and the BFI interference.

The determination component **508** may provide, as an input to a machine learning model, one or more BFI indication reports and one or more channel measurements associated with the BFD-RS, wherein the one or more channel measurements include one or more of an SINR measurement, an SNR measurement, an RSRP measurement, or an interference measurement. The determination component **508** may obtain, as an output of the machine learning model, the BFI count for the BFI noise and the BFI interference, wherein the BFI count is provided from a physical layer of the UE to a MAC layer of the UE for beam failure detection, and the BFI count includes separate counts for the BFI noise and the BFI interference.

The reception component **502** may receive, from the base station, signaling that configures a first set of options associated with determining different types of BFIs including the BFI noise and the BFI interference, wherein one option from the first set of options is autonomously selected at the UE, and wherein the signaling is received via an RRC configuration or a MAC-CE. The reception component **502** may receive, from the base station, signaling that configures a second set of options associated with determining BFI counts based at least in part on the different types of BFIs, wherein one option from the second set of options is autonomously selected at the UE, and the signaling is received via the RRC configuration or the MAC-CE.

The transmission component **504** may transmit, to the base station via a MAC-CE or uplink control information, UE capability information that indicates one or more of machine learning features of the UE, a processing power and capacity of the UE, a memory configuration of the UE, or computation resources of the UE. The reception component **502** may receive, from the base station via a MAC-CE or downlink control information and based at least in part on the UE capability information, a configuration that activates UE autonomy, deactivates UE autonomy, or changes a UE autonomy level for determining the BFI count and detecting the beam failure based at least in part on the BFI count. The transmission component **504** may transmit, to the base station via a MAC-CE or UCI, a request to activate UE autonomy or deactivate UE autonomy for determining the BFI count and detecting the beam failure based at least in part on the BFI count.

The number and arrangement of components shown in FIG. **5** are provided as an example. In practice, there may be additional components, fewer components, different components, or differently arranged components than those shown in FIG. **5**. Furthermore, two or more components shown in FIG. **5** may be implemented within a single component, or a single component shown in FIG. **5** may be implemented as multiple, distributed components. Additionally, or alternatively, a set of (one or more) components shown in FIG. **5** may perform one or more functions described as being performed by another set of components shown in FIG. **5**.

The following provides an overview of some Aspects of the present disclosure:

Aspect 1: A method of wireless communication performed by a user equipment (UE), comprising: receiving, from a base station, a beam failure detection reference signal (BFD-RS); determining, autonomously at the UE based at least in part on the BFD-RS, a beam failure instance (BFI) count for different types of BFI including BFI noise and BFI interference; and detecting a beam failure based at least in part on the BFI count satisfying a threshold.

Aspect 2: The method of Aspect 1, wherein the BFI noise indicates that a current radio link quality is affected by signal noise, wherein the BFI interference indicates that the current radio link quality is affected by signal interference, and wherein the BFI interference is associated with a lower priority as compared to the BFI noise for beam failure detection.

Aspect 3: The method of any of Aspects 1 through 2, further comprising: determining the BFI noise or the BFI interference by comparing a signal-to-interference-plus-noise ratio (SINR) measurement of the BFD-RS with a signal-to-noise ratio (SNR) measurement of the BFD-RS, wherein a low SINR and a low SNR indicates the BFI noise, wherein a low SINR and a high SNR indicates the BFI interference, and wherein a high SINR indicates no BFI.

Aspect 4: The method of any of Aspects 1 through 3, wherein determining the BFI count comprises: identifying a first count associated with the BFI noise based at least in part on a first counter dedicated to BFI noise; identifying a second count associated with the BFI interference based at least in part on a second counter dedicated to BFI interference; and obtaining the BFI count based at least in part on a function that considers the first count, the second count, and a weight associated with the BFI interference, wherein the BFI count includes separate counts for the BFI noise and the BFI interference.

Aspect 5: The method of any of Aspects 1 through 4, wherein determining the BFI count comprises: providing, as an input to a machine learning model, one or more BFI indication reports and one or more channel measurements associated with the BFD-RS, wherein the one or more channel measurements include one or more of a signal-to-interference-plus-noise ratio measurement, a signal-to-noise ratio measurement, a reference signal received power measurement, or an interference measurement; and obtaining, as an output of the machine learning model, the BFI count for the BFI noise and the BFI interference, wherein the BFI count is provided from a physical layer of the UE to a medium access control layer of the UE for beam failure detection, and wherein the BFI count includes separate counts for the BFI noise and the BFI interference.

Aspect 6: The method of any of Aspects 1 through 5, further comprising: receiving, from the base station, signaling that configures a first set of options associated with determining different types of BFIs including the BFI noise and the BFI interference, wherein one option from the first set of options is autonomously selected at the UE, and wherein the signaling is received via a radio resource control (RRC) configuration or a medium access control control element (MAC-CE); and receiving, from the base station, signaling that configures a second set of options associated with determining BFI counts based at least in part on the different types of BFIs, wherein one option from the second set of options is autonomously selected at the UE, and wherein the signaling is received via the RRC configuration or the MAC-CE.

Aspect 7: The method of any of Aspects 1 through 6, further comprising: transmitting, to the base station via a medium access control control element (MAC-CE) or uplink control information, UE capability information that indicates one or more of machine learning features of the UE, a processing power and capacity of the UE, a memory configuration of the UE, or computation resources of the UE; and receiving, from the base station via a MAC-CE or downlink control information and based at least in part on the UE capability information, a configuration that activates UE autonomy, deactivates UE autonomy, or changes a UE autonomy level for determining the BFI count and detecting the beam failure based at least in part on the BFI count.

Aspect 8: The method of any of Aspects 1 through 7, further comprising: transmitting, to the base station via a medium access control control element (MAC-CE) or uplink control information, a request to activate UE autonomy or deactivate UE autonomy for determining the BFI count and detecting the beam failure based at least in part on the BFI count.

Aspect 9: An apparatus for wireless communication at a device, comprising a processor; memory coupled with the processor; and instructions stored in the memory and executable by the processor to cause the apparatus to perform the method of one or more of Aspects 1-8.

Aspect 10: A device for wireless communication, comprising a memory and one or more processors coupled to the memory, the one or more processors configured to perform the method of one or more of Aspects 1-8.

Aspect 11: An apparatus for wireless communication, comprising at least one means for performing the method of one or more of Aspects 1-8.

Aspect 12: A non-transitory computer-readable medium storing code for wireless communication, the code comprising instructions executable by a processor to perform the method of one or more of Aspects 1-8.

Aspect 13: A non-transitory computer-readable medium storing a set of instructions for wireless communication, the set of instructions comprising one or more instructions that, when executed by one or more processors of a device, cause the device to perform the method of one or more of Aspects 1-8.

The foregoing disclosure provides illustration and description but is not intended to be exhaustive or to limit the aspects to the precise forms disclosed. Modifications and variations may be made in light of the above disclosure or may be acquired from practice of the aspects.

As used herein, the term "component" is intended to be broadly construed as hardware and/or a combination of hardware and software. "Software" shall be construed broadly to mean instructions, instruction sets, code, code segments, program code, programs, subprograms, software modules, applications, software applications, software packages, routines, subroutines, objects, executables, threads of execution, procedures, and/or functions, among other examples, whether referred to as software, firmware, middleware, microcode, hardware description language, or otherwise. As used herein, a "processor" is implemented in hardware and/or a combination of hardware and software. It will be apparent that systems and/or methods described herein may be implemented in different forms of hardware and/or a combination of hardware and software. The actual specialized control hardware or software code used to implement these systems and/or methods is not limiting of the aspects. Thus, the operation and behavior of the systems and/or methods are described herein without reference to specific software code, since those skilled in the art will understand that software and hardware can be designed to implement the systems and/or methods based, at least in part, on the description herein.

As used herein, "satisfying a threshold" may, depending on the context, refer to a value being greater than the threshold, greater than or equal to the threshold, less than the threshold, less than or equal to the threshold, equal to the threshold, not equal to the threshold, or the like.

Even though particular combinations of features are recited in the claims and/or disclosed in the specification, these combinations are not intended to limit the disclosure of various aspects. Many of these features may be combined in ways not specifically recited in the claims and/or disclosed in the specification. The disclosure of various aspects includes each dependent claim in combination with every other claim in the claim set. As used herein, a phrase referring to "at least one of" a list of items refers to any combination of those items, including single members. As an example, "at least one of: a, b, or c" is intended to cover a, b, c, a+b, a+c, b+c, and a+b+c, as well as any combination with multiples of the same element (e.g., a+a, a+a+a, a+a+b, a+a+c, a+b+b, a+c+c, b+b, b+b+b, b+b+c, c+c, and c+c+c, or any other ordering of a, b, and c).

No element, act, or instruction used herein should be construed as critical or essential unless explicitly described as such. Also, as used herein, the articles "a" and "an" are intended to include one or more items and may be used interchangeably with "one or more." Further, as used herein, the article "the" is intended to include one or more items referenced in connection with the article "the" and may be used interchangeably with "the one or more." Furthermore, as used herein, the terms "set" and "group" are intended to include one or more items and may be used interchangeably with "one or more." Where only one item is intended, the phrase "only one" or similar language is used. Also, as used herein, the terms "has," "have," "having," or the like are intended to be open-ended terms that do not limit an element that they modify (e.g., an element "having" A may also have B). Further, the phrase "based on" is intended to mean "based, at least in part, on" unless explicitly stated otherwise. Also, as used herein, the term "or" is intended to be inclusive when used in a series and may be used interchangeably with "and/or," unless explicitly stated otherwise (e.g., if used in combination with "either" or "only one of").

What is claimed is:

1. An apparatus for wireless communication at a user equipment (UE), comprising:

a memory; and

one or more processors, coupled to the memory, configured to:

receive, from a base station, a beam failure detection reference signal (BFD-RS);

categorize a beam failure instance (BFI) as either a first type of BFI comprising BFI noise or a second type of BFI comprising BFI interference based at least in part on a signal-to-interference-plus-noise ratio (SINR) associated with the BFD-RS and a signal-to-noise ratio (SNR) associated with the BFD-RS;

determine, autonomously at the UE based at least in part on the BFD-RS, a BFI count that is based at least in part on a function of a first count associated with the first type of BFI comprising the BFI noise and a second count associated with the second type of BFI comprising the BFI interference; and

detect a beam failure based at least in part on the BFI count satisfying a threshold.

2. The apparatus of claim **1**, wherein the BFI noise indicates that a current radio link quality is affected by signal noise, wherein the BFI interference indicates that the current radio link quality is affected by signal interference, and wherein the BFI interference is associated with a lower priority as compared to the BFI noise for beam failure detection.

3. The apparatus of claim **1**, wherein the one or more processors are further configured to:

determine the BFI noise or the BFI interference by comparing an SINR measurement of the BFD-RS with an SNR measurement of the BFD-RS, wherein a low SINR and a low SNR indicates the BFI noise, wherein a low SINR and a high SNR indicates the BFI interference, and wherein a high SINR indicates no BFI.

4. The apparatus of claim **1**, wherein the one or more processors, to determine the BFI count, are configured to:

identify the first count associated with the BFI noise based at least in part on a first counter dedicated to BFI noise;

identify the second count associated with the BFI interference based at least in part on a second counter dedicated to BFI interference; and

obtain the BFI count based at least in part on the function, wherein the function considers the first count, the second count, and a weight associated with the BFI interference, and wherein the BFI count includes separate counts for the BFI noise and the BFI interference.

5. The apparatus of claim **1**, wherein the one or more processors, to determine the BFI count, are configured to:

provide, as an input to a machine learning model, one or more BFI indication reports and one or more channel measurements associated with the BFD-RS, wherein the one or more channel measurements include one or more of an SINR measurement, an SNR measurement, a reference signal received power measurement, or an interference measurement; and

obtain, as an output of the machine learning model, the BFI count for the BFI noise and the BFI interference, wherein the BFI count is provided from a physical layer of the UE to a medium access control layer of the UE for beam failure detection, and wherein the BFI count includes separate counts for the BFI noise and the BFI interference.

6. The apparatus of claim **1**, wherein the one or more processors are further configured to:

receive, from the base station, signaling that configures a first set of options associated with determining different types of BFIs including the BFI noise and the BFI interference, wherein one option from the first set of options is autonomously selected at the UE, and wherein the signaling is received via a radio resource control (RRC) configuration or a medium access control control element (MAC-CE); and

receive, from the base station, signaling that configures a second set of options associated with determining BFI counts based at least in part on the different types of BFIs, wherein one option from the second set of options is autonomously selected at the UE, and wherein the signaling is received via the RRC configuration or the MAC-CE.

7. The apparatus of claim **1**, wherein the one or more processors are further configured to:

transmit, to the base station via a medium access control control element (MAC-CE) or uplink control information, UE capability information that indicates one or more of machine learning features of the UE, a processing power and capacity of the UE, a memory configuration of the UE, or computation resources of the UE; and

receive, from the base station via a MAC-CE or downlink control information and based at least in part on the UE capability information, a configuration that activates UE autonomy, deactivates UE autonomy, or changes a UE autonomy level for determining the BFI count and detecting the beam failure based at least in part on the BFI count.

8. The apparatus of claim **1**, wherein the one or more processors are further configured to:

transmit, to the base station via a medium access control control element or uplink control information, a request to activate UE autonomy or deactivate UE autonomy for determining the BFI count and detecting the beam failure based at least in part on the BFI count.

9. A method of wireless communication performed by a user equipment (UE), comprising:

receiving, from a base station, a beam failure detection reference signal (BFD-RS);

categorizing a beam failure instance (BFI) as either a first type of BFI comprising BFI noise or a second type of BFI comprising BFI interference based at least in part on a signal-to-interference-plus-noise ratio (SINR) associated with the BFD-RS and a signal-to-noise ratio (SNR) associated with the BFD-RS;

determining, autonomously at the UE based at least in part on the BFD-RS, a BFI count that is based at least in part on a function of a first count associated with the first type of BFI comprising the BFI noise and a second count associated with the second type of BFI comprising the BFI interference; and

detecting a beam failure based at least in part on the BFI count satisfying a threshold.

10. The method of claim **9**, wherein the BFI noise indicates that a current radio link quality is affected by signal noise, wherein the BFI interference indicates that the current radio link quality is affected by signal interference, and wherein the BFI interference is associated with a lower priority as compared to the BFI noise for beam failure detection.

11. The method of claim **9**, further comprising:

determining the BFI noise or the BFI interference by comparing an SINR measurement of the BFD-RS with an SNR measurement of the BFD-RS, wherein a low SINR and a low SNR indicates the BFI noise, wherein a low SINR and a high SNR indicates the BFI interference, and wherein a high SINR indicates no BFI.

12. The method of claim **9**, wherein determining the BFI count comprises:

identifying the first count associated with the BFI noise based at least in part on a first counter dedicated to BFI noise;

identifying the second count associated with the BFI interference based at least in part on a second counter dedicated to BFI interference; and

obtaining the BFI count based at least in part on the function, wherein the function considers the first count, the second count, and a weight associated with the BFI interference, and wherein the BFI count includes separate counts for the BFI noise and the BFI interference.

13. The method of claim **9**, wherein determining the BFI count comprises:

providing, as an input to a machine learning model, one or more BFI indication reports and one or more channel measurements associated with the BFD-RS, wherein the one or more channel measurements include one or more of an SINR measurement, an SNR measurement, a reference signal received power measurement, or an interference measurement; and

obtaining, as an output of the machine learning model, the BFI count for the BFI noise and the BFI interference, wherein the BFI count is provided from a physical layer of the UE to a medium access control layer of the UE for beam failure detection, and wherein the BFI count includes separate counts for the BFI noise and the BFI interference.

14. The method of claim **9**, further comprising:

receiving, from the base station, signaling that configures a first set of options associated with determining different types of BFIs including the BFI noise and the BFI interference, wherein one option from the first set of options is autonomously selected at the UE, and wherein the signaling is received via a radio resource control (RRC) configuration or a medium access control control element (MAC-CE); and

receiving, from the base station, signaling that configures a second set of options associated with determining BFI counts based at least in part on the different types of BFIs, wherein one option from the second set of options is autonomously selected at the UE, and wherein the signaling is received via the RRC configuration or the MAC-CE.

15. The method of claim **9**, further comprising:

transmitting, to the base station via a medium access control control element (MAC-CE) or uplink control information, UE capability information that indicates one or more of machine learning features of the UE, a processing power and capacity of the UE, a memory configuration of the UE, or computation resources of the UE; and

receiving, from the base station via a MAC-CE or downlink control information and based at least in part on the UE capability information, a configuration that activates UE autonomy, deactivates UE autonomy, or changes a UE autonomy level for determining the BFI count and detecting the beam failure based at least in part on the BFI count.

16. The method of claim **9**, further comprising:

transmitting, to the base station via a medium access control control element or uplink control information, a request to activate UE autonomy or deactivate UE autonomy for determining the BFI count and detecting the beam failure based at least in part on the BFI count.

17. A non-transitory computer-readable medium storing a set of instructions for wireless communication, the set of instructions comprising:

one or more instructions that, when executed by one or more processors of a user equipment (UE), cause the UE to:

receive, from a base station, a beam failure detection reference signal (BFD-RS);

categorize a beam failure instance (BFI) as either a first type of BFI comprising BFI noise or a second type of BFI comprising BFI interference based at least in part on a signal-to-interference-plus-noise ratio (SINR) associated with the BFD-RS and a signal-to-noise ratio (SNR) associated with the BFD-RS;

determine, autonomously at the UE based at least in part on the BFD-RS, a BFI count that is based at least in part on a function of a first count associated with the first type of BFI comprising the BFI noise and a second count associated with the second type of BFI comprising the BFI interference; and

detect a beam failure based at least in part on the BFI count satisfying a threshold.

18. The non-transitory computer-readable medium of claim **17**, wherein the one or more instructions further cause the UE to:

determine the BFI noise or the BFI interference by comparing an SINR measurement of the BFD-RS with an SNR measurement of the BFD-RS, wherein a low SINR and a low SNR indicates the BFI noise, wherein a low SINR and a high SNR indicates the BFI interference, and wherein a high SINR indicates no BFI.

19. The non-transitory computer-readable medium of claim **17**, wherein the one or more instructions, that cause the UE to determine the BFI count, cause the UE to:

identify the first count associated with the BFI noise based at least in part on a first counter dedicated to BFI noise;

identify the second count associated with the BFI interference based at least in part on a second counter dedicated to BFI interference; and

obtain the BFI count based at least in part on the function, wherein the function considers the first count, the second count, and a weight associated with the BFI interference, and wherein the BFI count includes separate counts for the BFI noise and the BFI interference.

20. The non-transitory computer-readable medium of claim **17**, wherein the one or more instructions, that cause the UE to determine the BFI count, cause the UE to:

provide, as an input to a machine learning model, one or more BFI indication reports and one or more channel measurements associated with the BFD-RS, wherein the one or more channel measurements include one or more of an SINR measurement, an SNR measurement, a reference signal received power measurement, or an interference measurement; and

obtain, as an output of the machine learning model, the BFI count for the BFI noise and the BFI interference, wherein the BFI count is provided from a physical layer of the UE to a medium access control layer of the UE for beam failure detection, and wherein the BFI count includes separate counts for the BFI noise and the BFI interference.

21. The non-transitory computer-readable medium of claim **17**, wherein the one or more instructions further cause the UE to:

receive, from the base station, signaling that configures a first set of options associated with determining different types of BFIs including the BFI noise and the BFI interference, wherein one option from the first set of options is autonomously selected at the UE, and wherein the signaling is received via a radio resource control (RRC) configuration or a medium access control control element (MAC-CE); and

receive, from the base station, signaling that configures a second set of options associated with determining BFI counts based at least in part on the different types of BFIs, wherein one option from the second set of options is autonomously selected at the UE, and wherein the signaling is received via the RRC configuration or the MAC-CE.

22. The non-transitory computer-readable medium of claim **17**, wherein the one or more instructions further cause the UE to:

transmit, to the base station via a medium access control control element (MAC-CE) or uplink control information, UE capability information that indicates one or more of machine learning features of the UE, a processing power and capacity of the UE, a memory configuration of the UE, or computation resources of the UE; and

receive, from the base station via a MAC-CE or downlink control information and based at least in part on the UE capability information, a configuration that activates UE autonomy, deactivates UE autonomy, or changes a UE autonomy level for determining the BFI count and detecting the beam failure based at least in part on the BFI count.

23. The non-transitory computer-readable medium of claim **17**, wherein the one or more instructions further cause the UE to:

transmit, to the base station via a medium access control control element or uplink control information, a request to activate UE autonomy or deactivate UE autonomy for determining the BFI count and detecting the beam failure based at least in part on the BFI count.

24. An apparatus for wireless communication, comprising:

means for receiving, from a base station, a beam failure detection reference signal (BFD-RS);

means for categorizing a beam failure instance (BFI) as either a first type of BFI comprising BFI noise or a second type of BFI comprising BFI interference based at least in part on a signal-to-interference-plus-noise ratio (SINR) associated with the BFD-RS and a signal-to-noise ratio (SNR) associated with the BFD-RS;

means for determining, autonomously at the apparatus based at least in part on the BFD-RS, a BFI count that is based at least in part on a function of a first count associated with the first type of BFI comprising the BFI noise and a second count associated with the second type of BFI comprising the BFI interference; and

means for detecting a beam failure based at least in part on the BFI count satisfying a threshold.

25. The apparatus of claim **24**, further comprising:

means for determining the BFI noise or the BFI interference by comparing an SINR measurement of the BFD-RS with an SNR measurement of the BFD-RS, wherein a low SINR and a low SNR indicates the BFI noise, wherein a low SINR and a high SNR indicates the BFI interference, and wherein a high SINR indicates no BFI.

26. The apparatus of claim **24**, wherein the means for determining the BFI count comprises:

means for identifying the first count associated with the BFI noise based at least in part on a first counter dedicated to BFI noise;

means for identifying the second count associated with the BFI interference based at least in part on a second counter dedicated to BFI interference; and

means for obtaining the BFI count based at least in part on the function, wherein the function considers the first count, the second count, and a weight associated with the BFI interference, and wherein the BFI count includes separate counts for the BFI noise and the BFI interference.

27. The apparatus of claim **24**, wherein the means for determining the BFI count comprises:

means for providing, as an input to a machine learning model, one or more BFI indication reports and one or more channel measurements associated with the BFD-RS, wherein the one or more channel measurements include one or more of an SINR measurement, an SNR measurement, a reference signal received power measurement, or an interference measurement; and

means for obtaining, as an output of the machine learning model, the BFI count for the BFI noise and the BFI interference, wherein the BFI count is provided from a physical layer of the apparatus to a medium access control layer of the apparatus for beam failure detection, and wherein the BFI count includes separate counts for the BFI noise and the BFI interference.

28. The apparatus of claim **24**, further comprising:

means for receiving, from the base station, signaling that configures a first set of options associated with determining different types of BFIs including the BFI noise and the BFI interference, wherein one option from the first set of options is autonomously selected at the apparatus, and wherein the signaling is received via a radio resource control (RRC) configuration or a medium access control control element (MAC-CE); and

means for receiving, from the base station, signaling that configures a second set of options associated with determining BFI counts based at least in part on the different types of BFIs, wherein one option from the second set of options is autonomously selected at the apparatus, and wherein the signaling is received via the RRC configuration or the MAC-CE.

29. The apparatus of claim **24**, further comprising:

means for transmitting, to the base station via a medium access control control element (MAC-CE) or uplink control information, apparatus capability information that indicates one or more of machine learning features of the apparatus, a processing power and capacity of the apparatus, a memory configuration of the apparatus, or computation resources of the apparatus; and

means for receiving, from the base station via a MAC-CE or downlink control information and based at least in part on the apparatus capability information, a configuration that activates apparatus autonomy, deactivates apparatus autonomy, or changes an apparatus autonomy level for determining the BFI count and detecting the beam failure based at least in part on the BFI count.

30. The apparatus of claim **24**, further comprising:

means for transmitting, to the base station via a medium access control control element or uplink control information, a request to activate apparatus autonomy or deactivate apparatus autonomy for determining the BFI count and detecting the beam failure based at least in part on the BFI count.

* * * * *