US 20250262397A1

(19) United States

(12) Patent Application Publication

LIU et al.

(10) Pub. No.: US 2025/0262397 A1

(43) Pub. Date: Aug. 21, 2025

(54) **SYSTEMS AND METHODS FOR DELIVERING A RESPIRATORY GAS**

(71) Applicant: **BMC MEDICAL CO., LTD.**, Beijing (CN)

(72) Inventors: **Lijun LIU**, Beijing (CN); **Jianxin ZHI**, Beijing (CN); **Zhi ZHUANG**, Beijing (CN); **Min CHANG**, Beijing (CN)

(73) Assignee: **BMC MEDICAL CO., LTD.**, Beijing (CN)

(21) Appl. No.: **19/189,244**

(22) Filed: **Apr. 24, 2025**

Related U.S. Application Data

(63) Continuation of application No. 18/396,646, filed on Dec. 26, 2023, which is a continuation of application No. 17/118,616, filed on Dec. 11, 2020, now Pat. No. 12,115,309, which is a continuation of application No. 17/073,495, filed on Oct. 19, 2020, now Pat. No. 12,064,549, which is a continuation of application No. 16/988,595, filed on Aug. 7, 2020, now Pat. No. 11,766,530, which is a continuation of application No. PCT/CN2018/111996, filed on Oct. 26, 2018.

Publication Classification

(51) **Int. Cl.**

A61M 16/00	(2006.01)
A61L 9/20	(2006.01)
A61M 16/04	(2006.01)
A61M 16/06	(2006.01)
A61M 16/10	(2006.01)
A61M 16/16	(2006.01)
G16H 20/40	(2018.01)

(52) **U.S. Cl.**

CPC ***A61M 16/0066*** (2013.01); ***A61L 9/20*** (2013.01); ***A61M 16/1075*** (2013.01); ***A61M 16/109*** (2014.02); ***A61M 16/16*** (2013.01); ***A61M 16/161*** (2014.02); ***G16H 20/40*** (2018.01); *A61L 2209/12* (2013.01); *A61M 2016/0027* (2013.01); *A61M 2016/003* (2013.01); *A61M 16/0465* (2013.01); *A61M 16/06* (2013.01); *A61M 16/0616* (2014.02); *A61M 16/0666* (2013.01); *A61M 16/1055* (2013.01); *A61M 16/107* (2014.02); *A61M 2205/3306* (2013.01); *A61M 2205/3368* (2013.01); *A61M 2205/3584* (2013.01); *A61M 2205/3592* (2013.01); *A61M 2205/42* (2013.01); *A61M 2205/505* (2013.01); *A61M 2205/52* (2013.01); *A61M 2205/587* (2013.01); *A61M 2209/10* (2013.01); *A61M 2230/42* (2013.01)

(57) **ABSTRACT**

A humidification assembly configured to humidify a pressurized respiratory gas is provided. The humidification assembly may include a liquid chamber configured to accommodate one or more liquids, the liquid chamber including a tank and a tank cover. The tank cover includes a shell, a humidification assembly gas inlet port, a humidification assembly gas outlet port, a first gas passage including an output port, and a second gas passage including an input port. The humidification assembly gas inlet port is configured to introduce the pressurized respiratory gas, via the first gas passage, into the tank. The humidification assembly gas outlet port is configured to introduce the humidified and pressurized respiratory gas, via the second gas passage back into a main body of the respiratory ventilation apparatus. The humidification assembly gas inlet port and the humidification assembly gas outlet port are set on a same side surface of the shell.

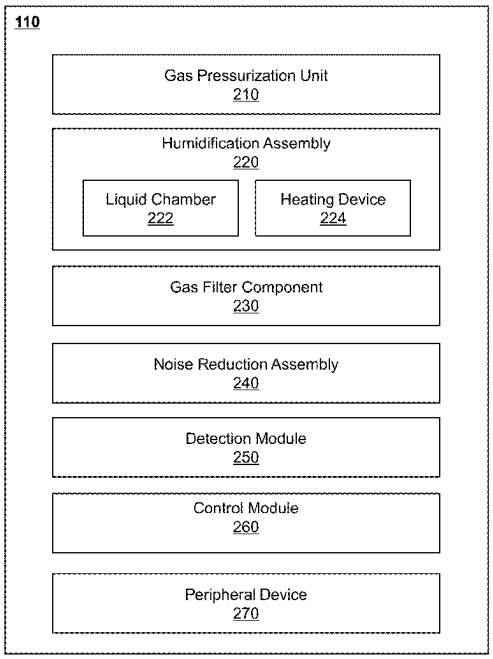

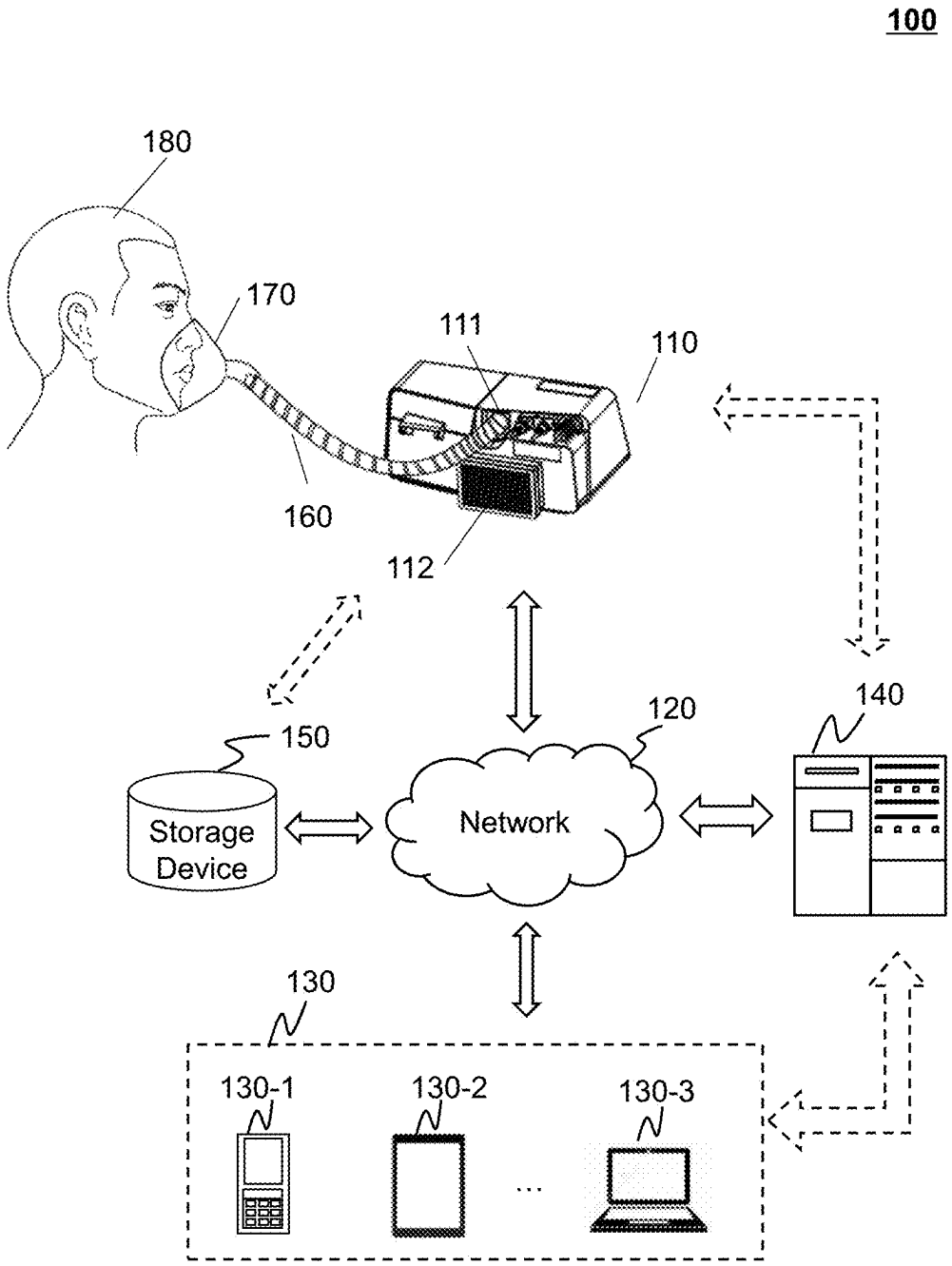
100
180
170
111
110
160
112
150
Storage Device
120
Network
140
130
130-1
130-2
130-3
...

FIG. 1

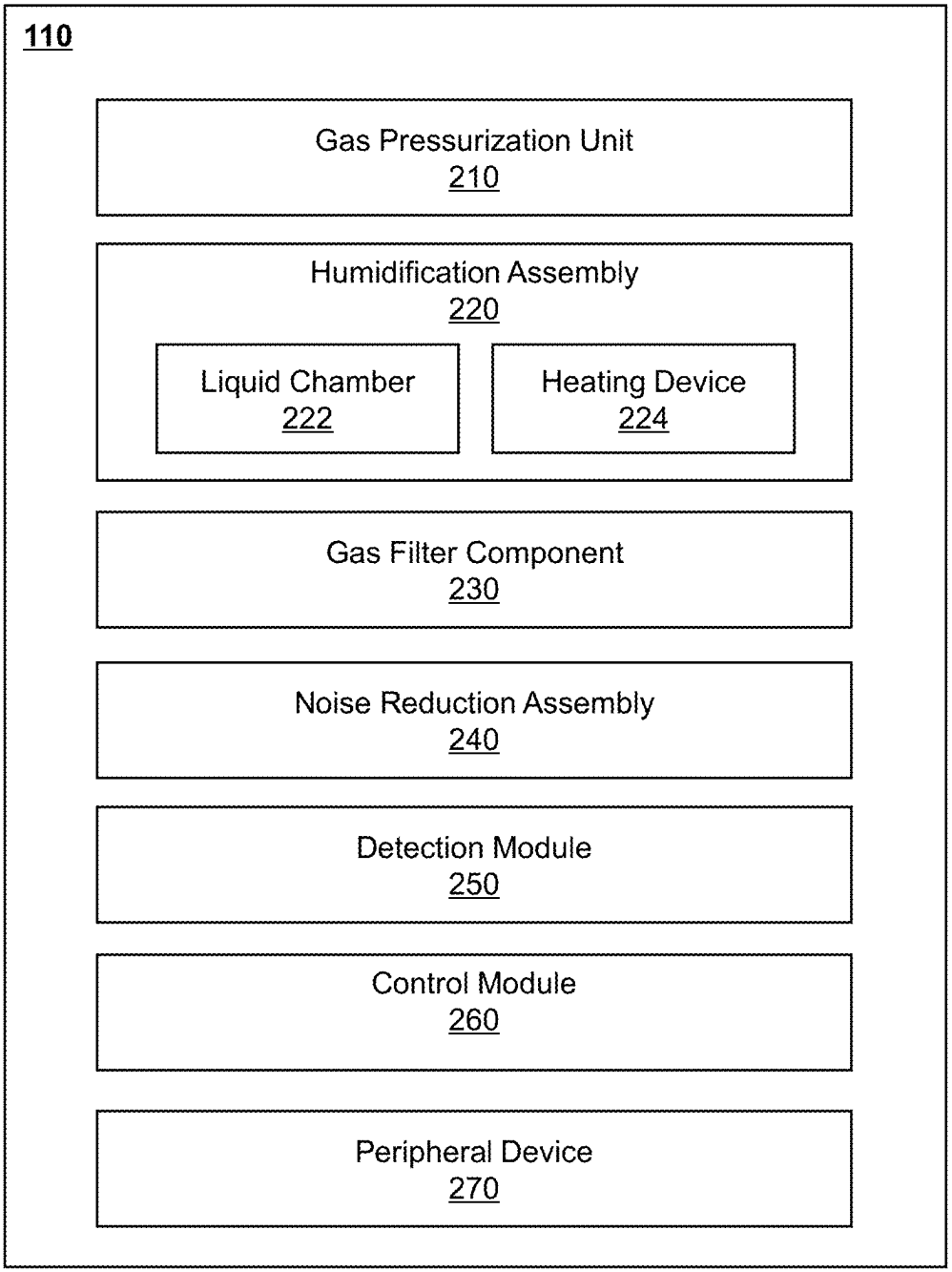
110
Gas Pressurization Unit
210
Humidification Assembly
220
Liquid Chamber
222
Heating Device
224
Gas Filter Component
230
Noise Reduction Assembly
240
Detection Module
250
Control Module
260
Peripheral Device
270

FIG. 2

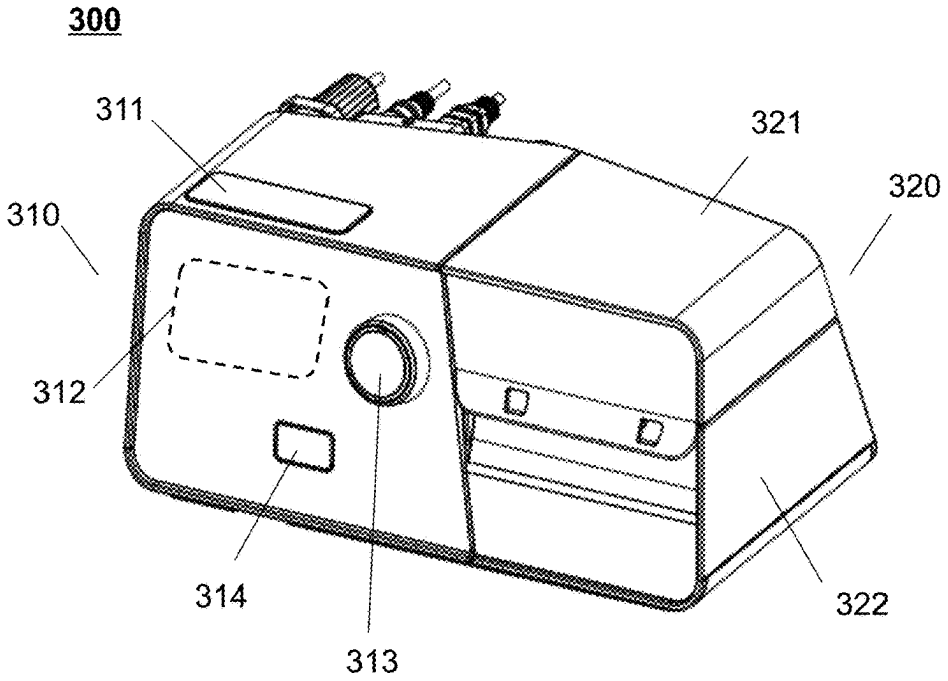

FIG. 3A

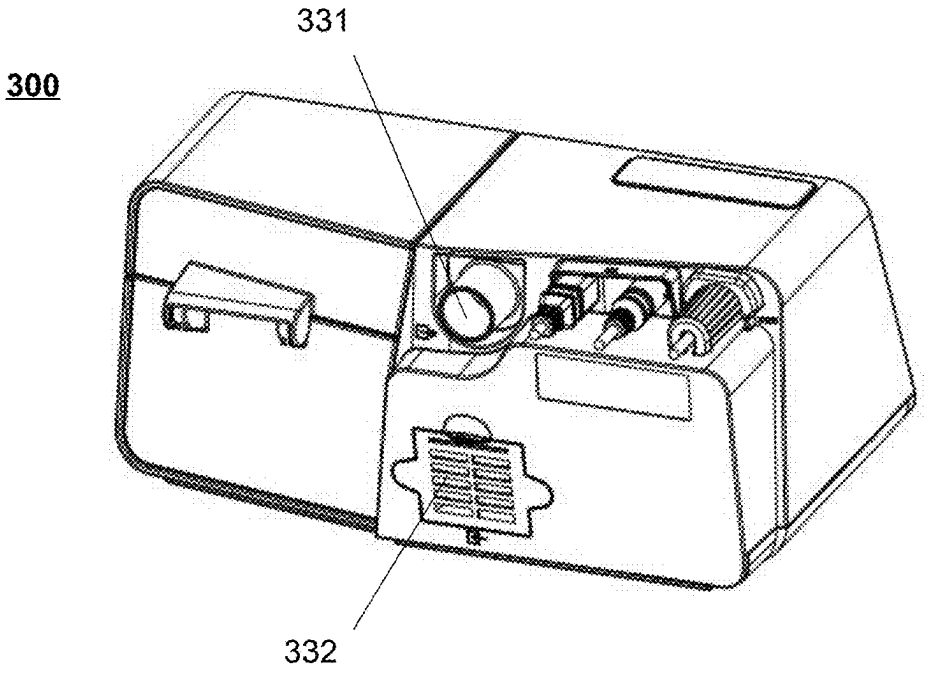

FIG. 3B

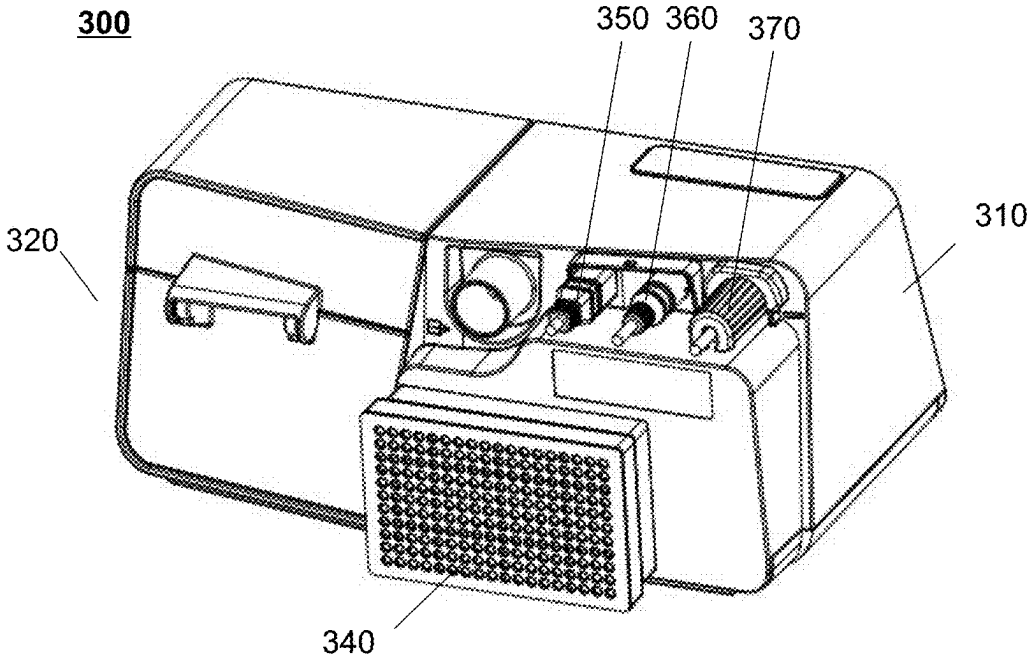

FIG. 3C

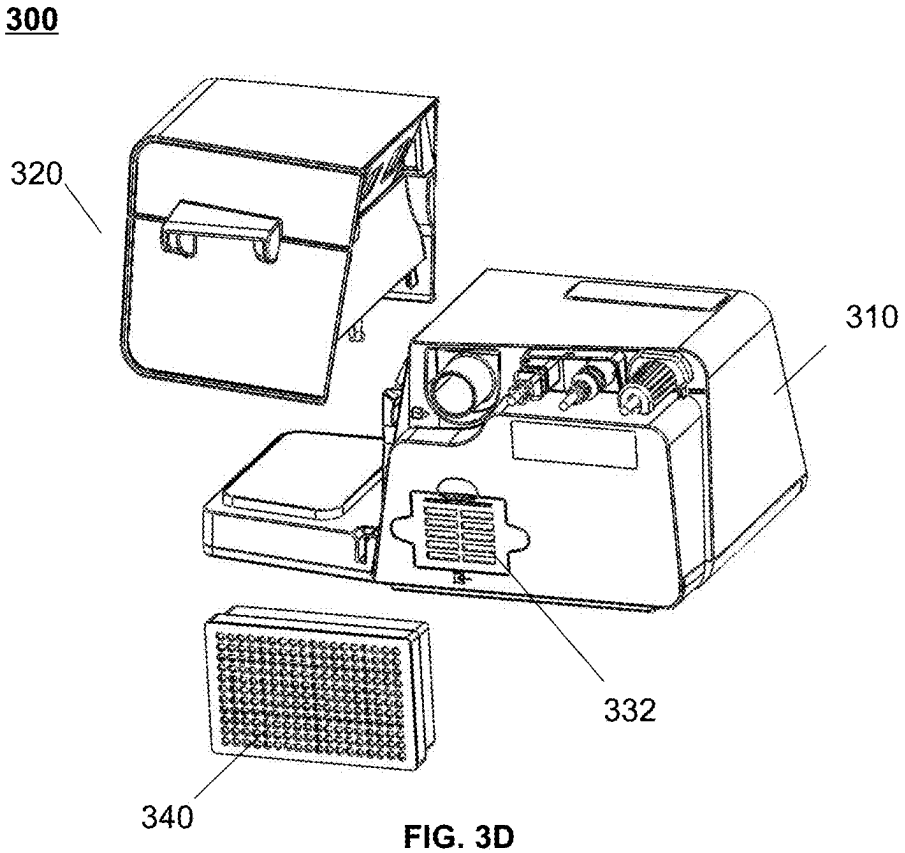

FIG. 3D

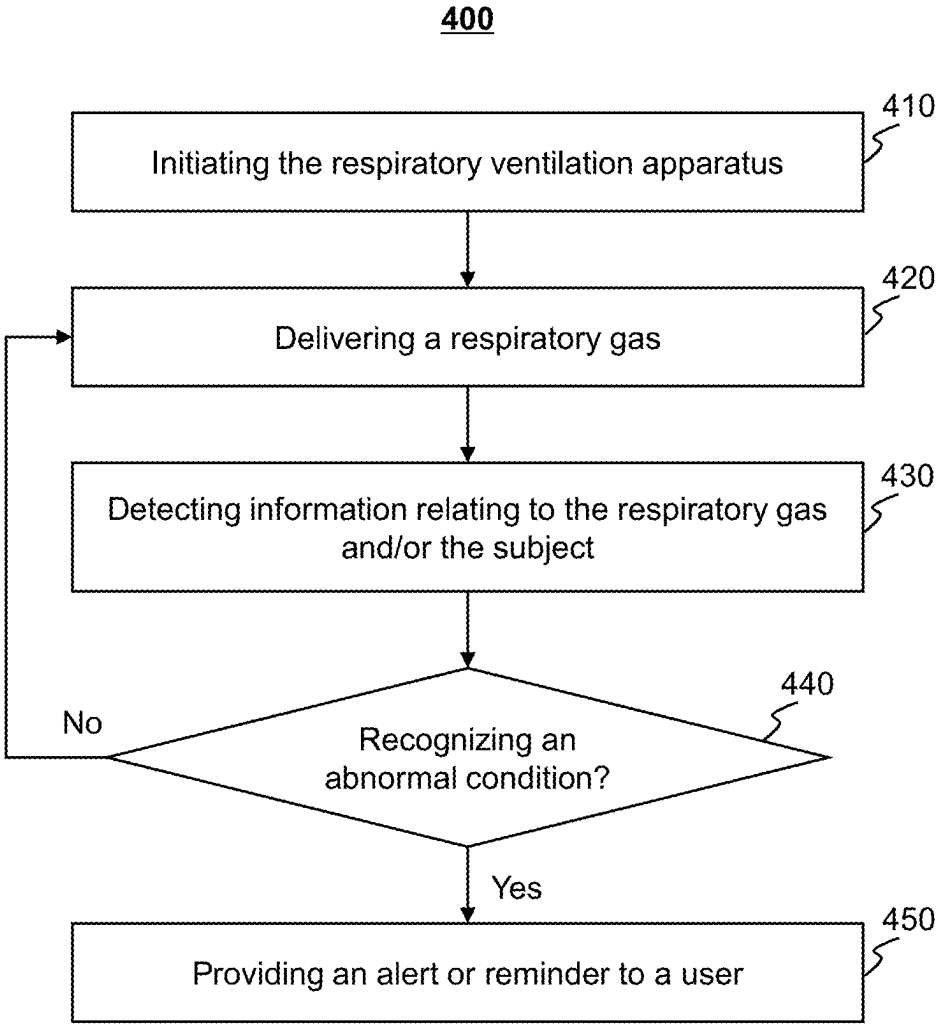
400
410
Initiating the respiratory ventilation apparatus
420
Delivering a respiratory gas
430
Detecting information relating to the respiratory gas and/or the subject
440
Recognizing an abnormal condition?
No
Yes
450
Providing an alert or reminder to a user

FIG. 4

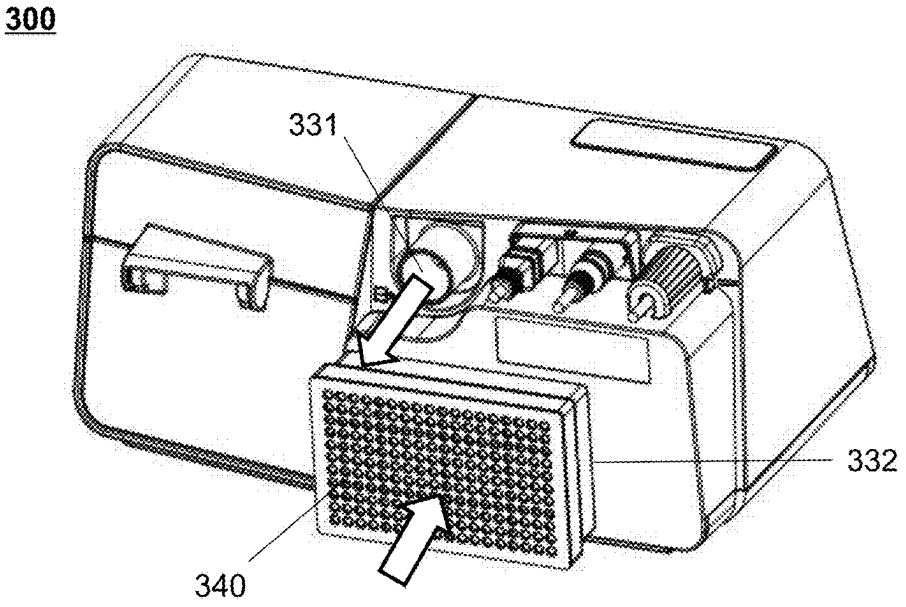

FIG. 5A

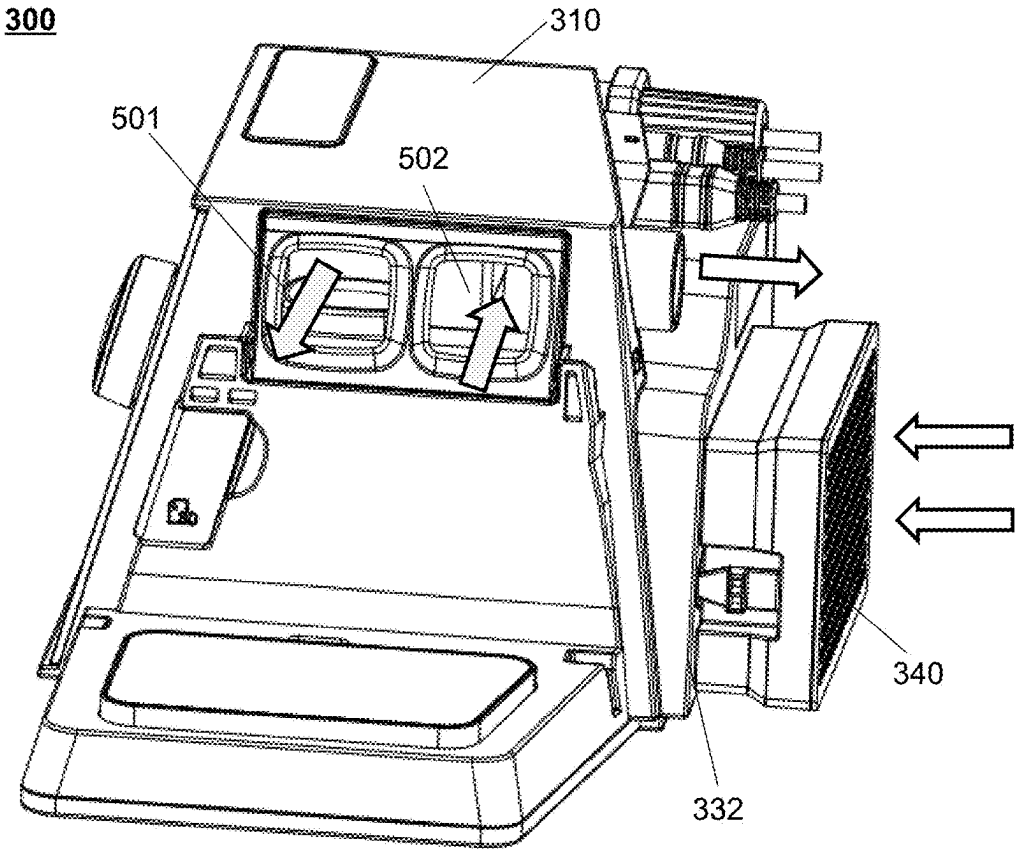

FIG. 5B

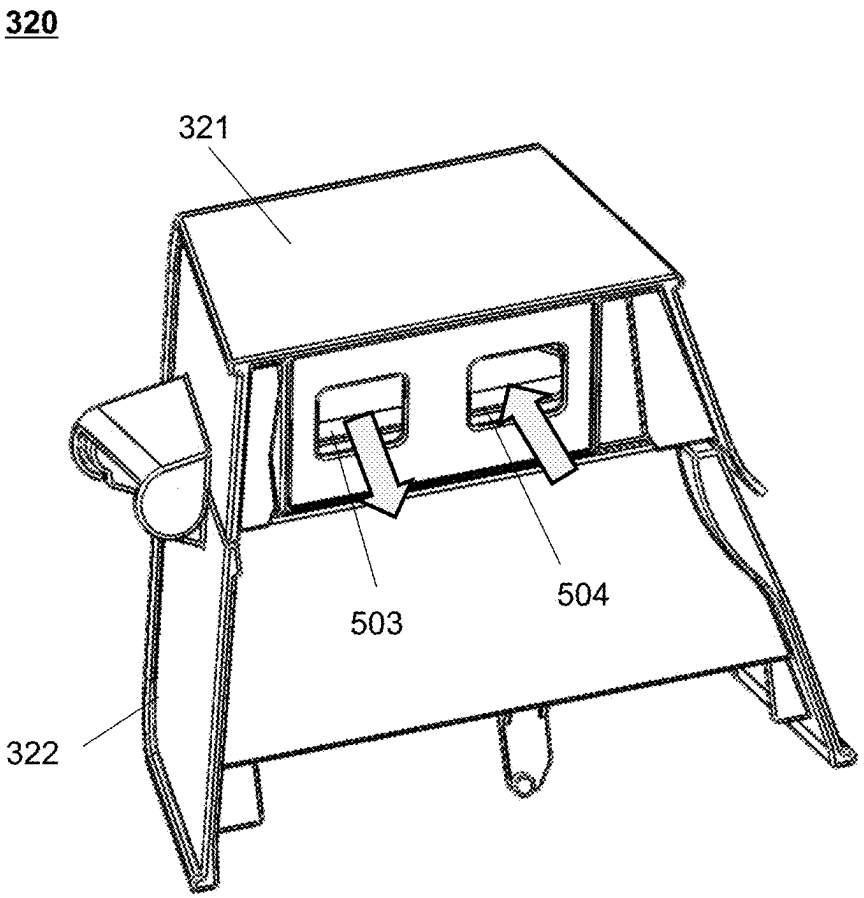

FIG. 5C

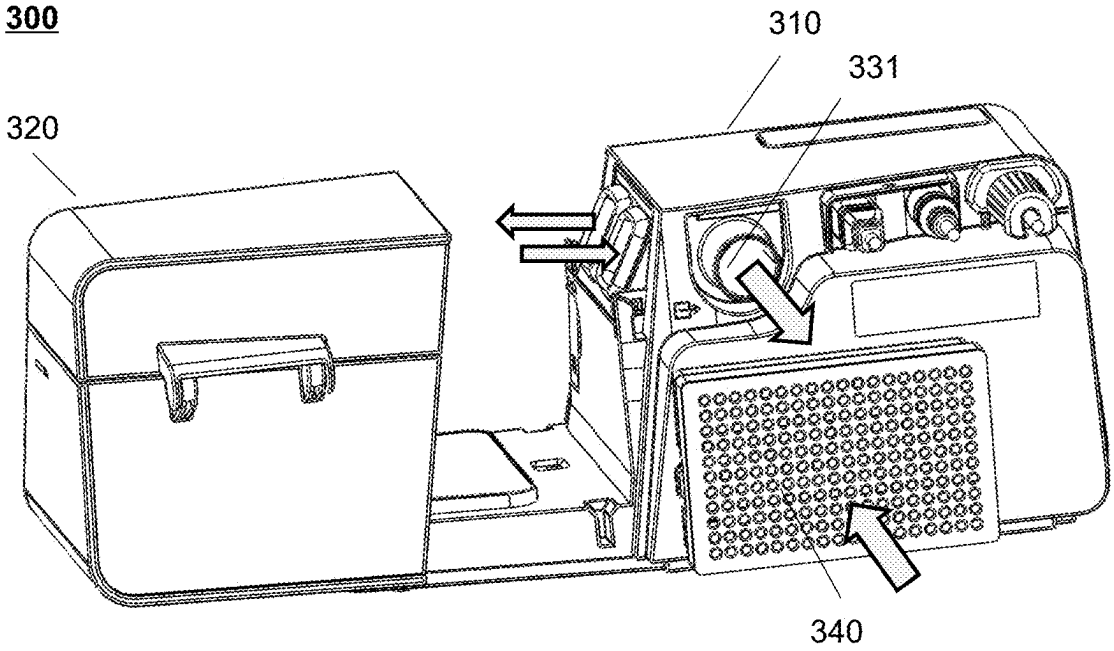

FIG. 5D

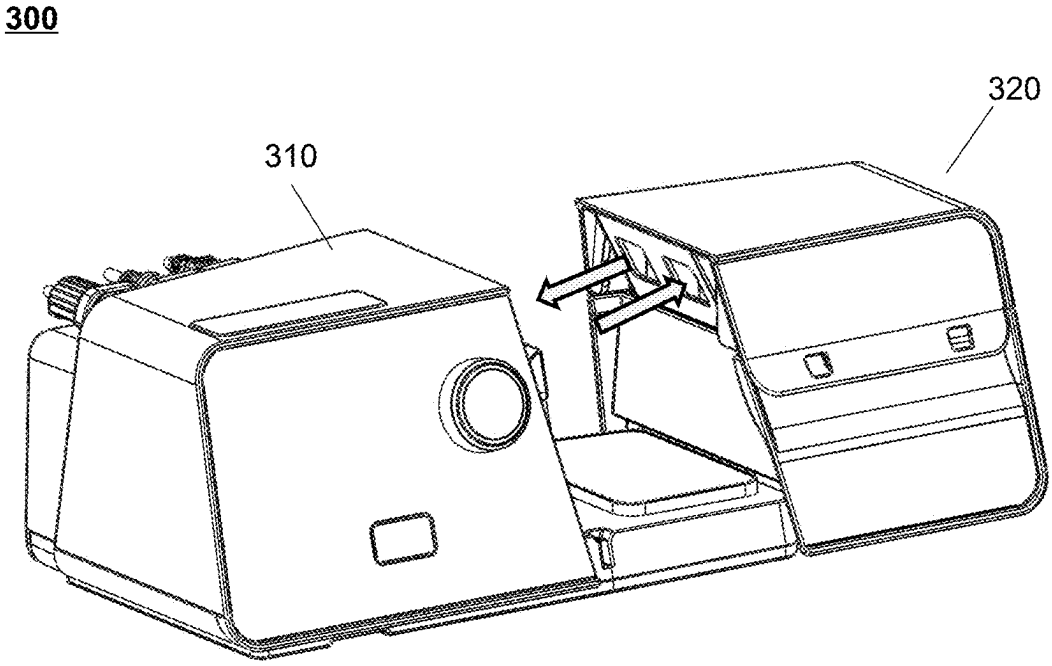

FIG. 5E

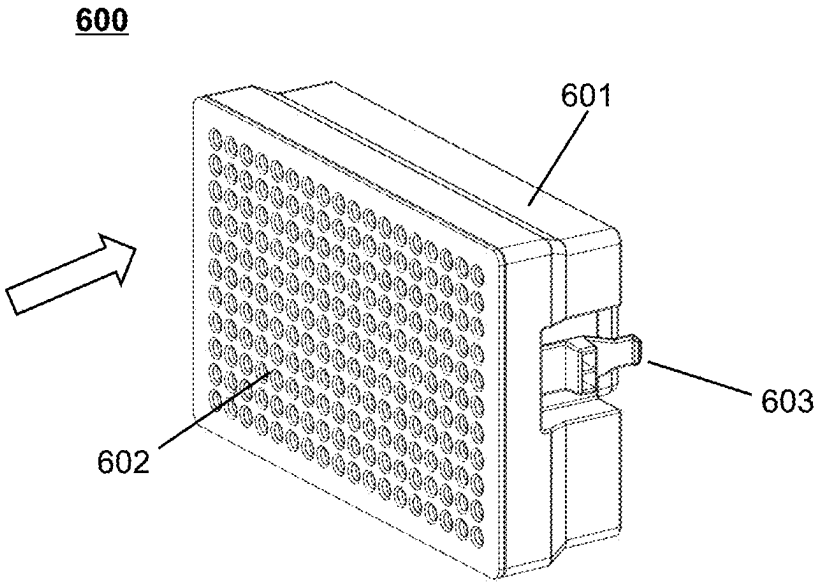

FIG. 6A

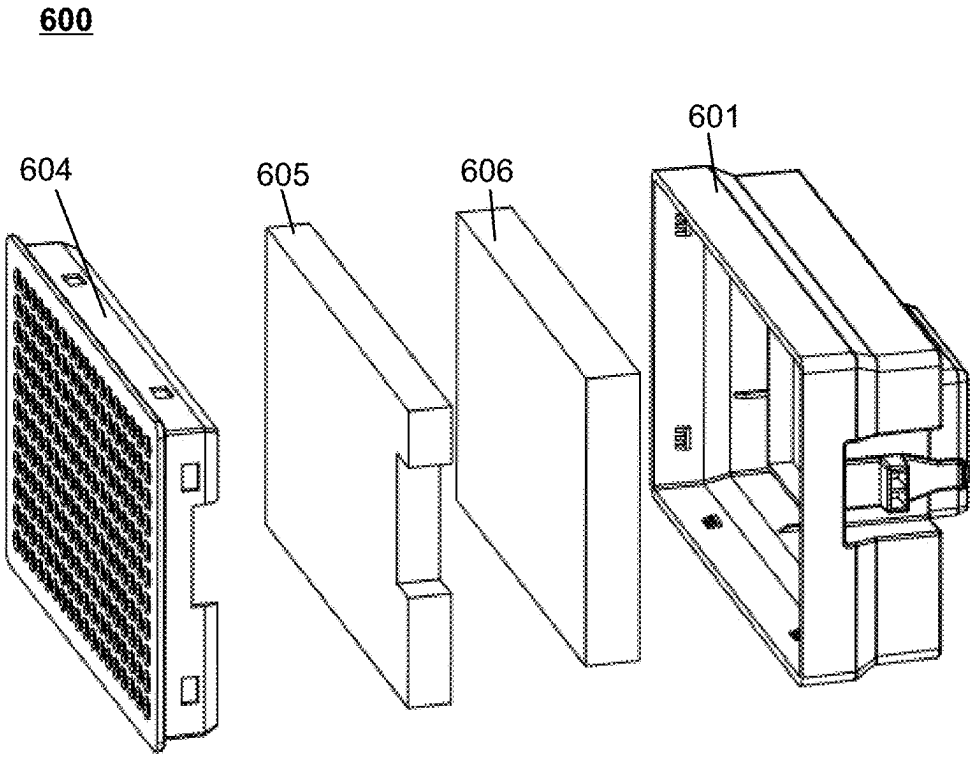

FIG. 6B

601

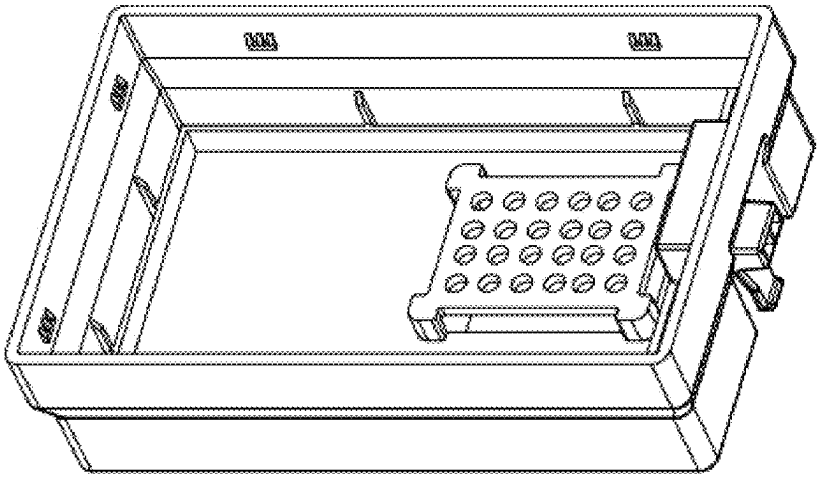

FIG. 6C

600

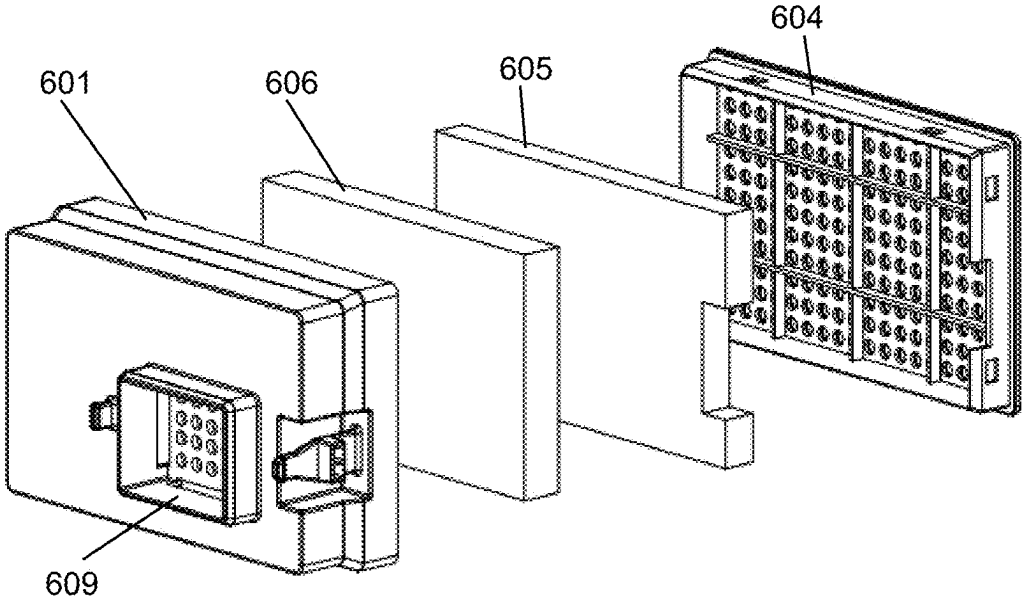

FIG. 6D

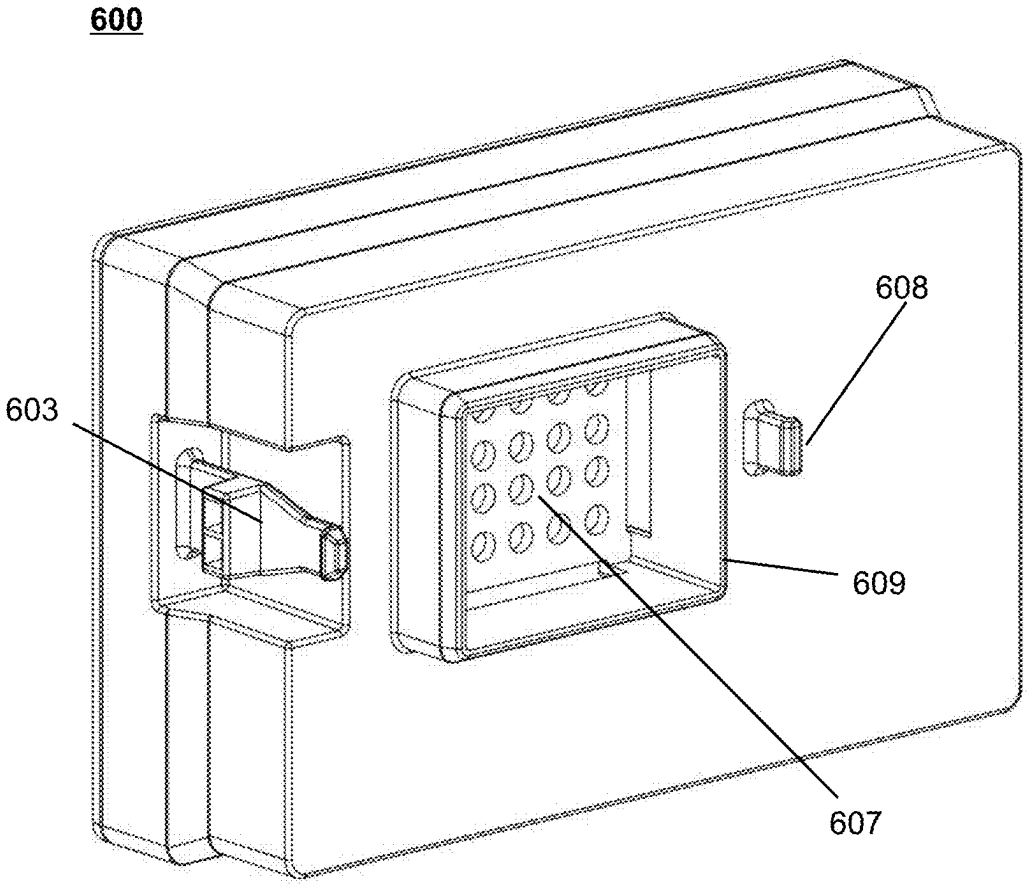

FIG. 6E

300

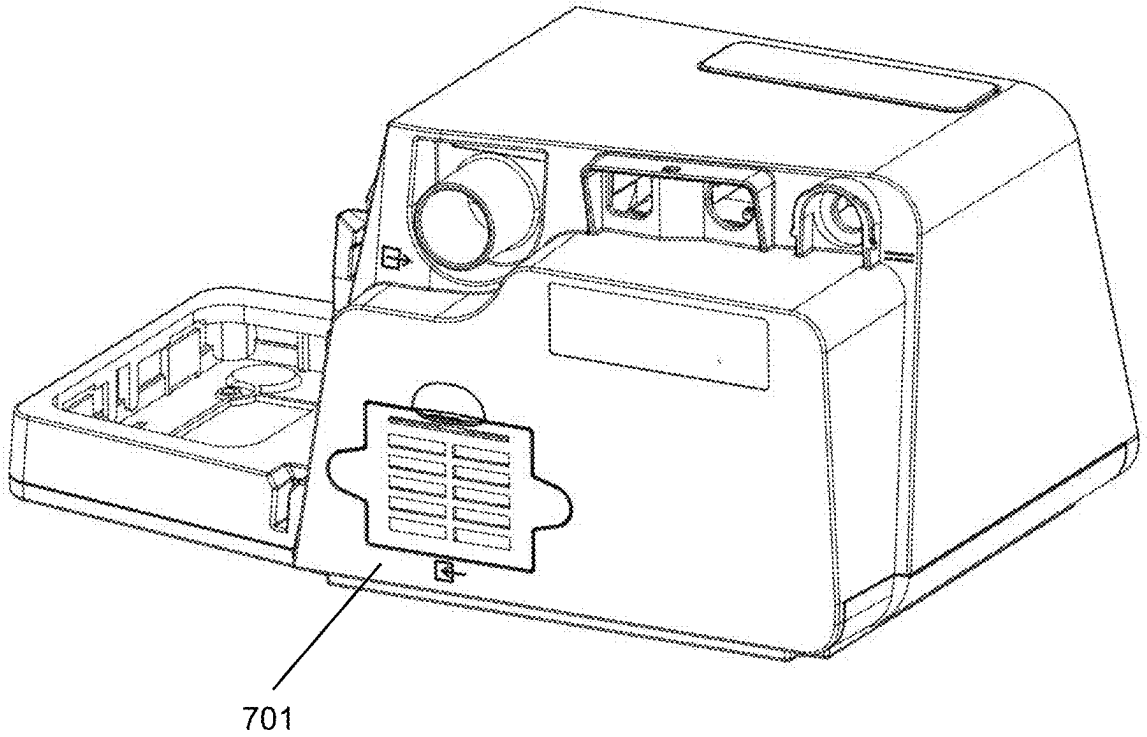

FIG. 7A

300

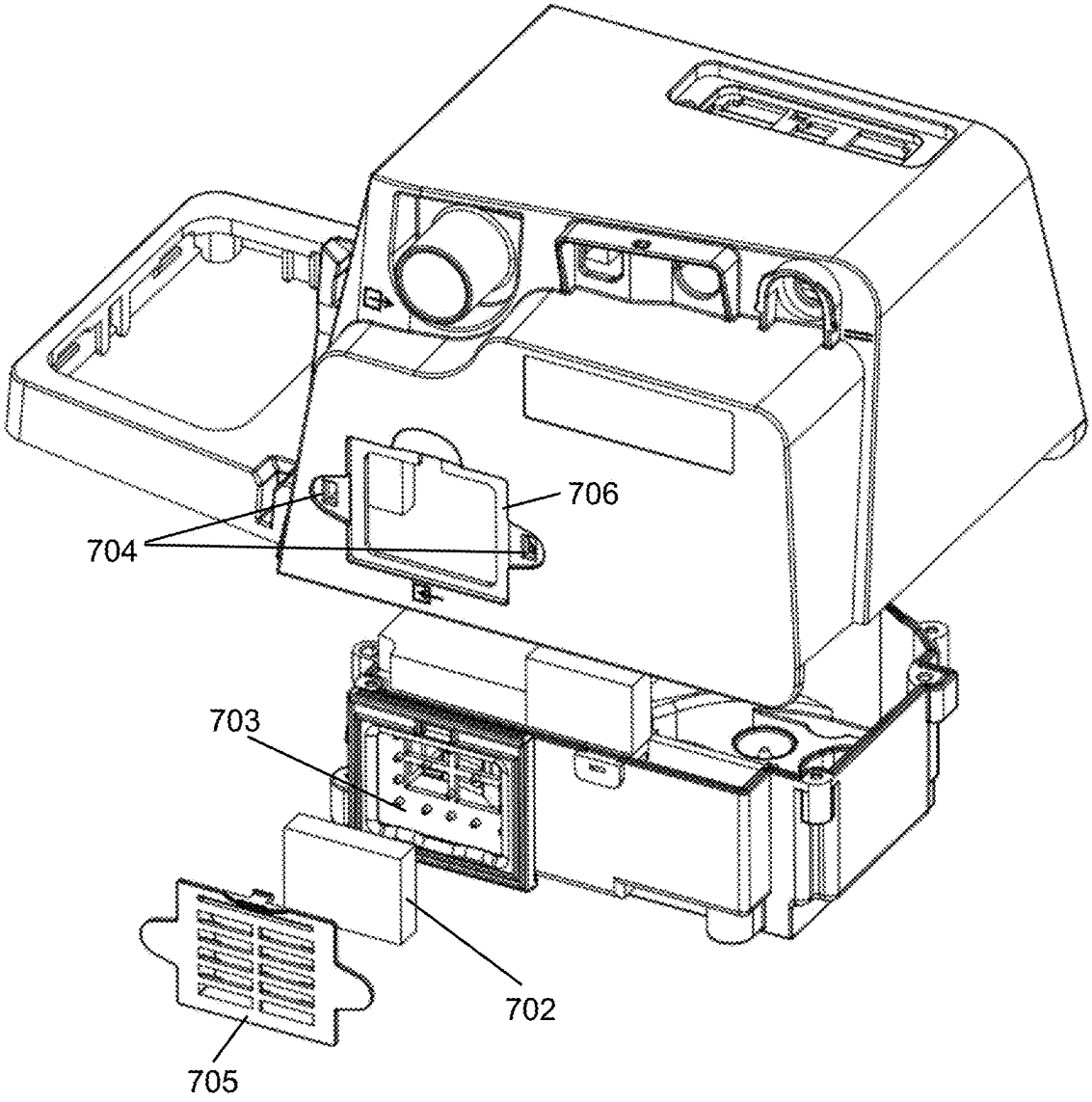

FIG. 7B

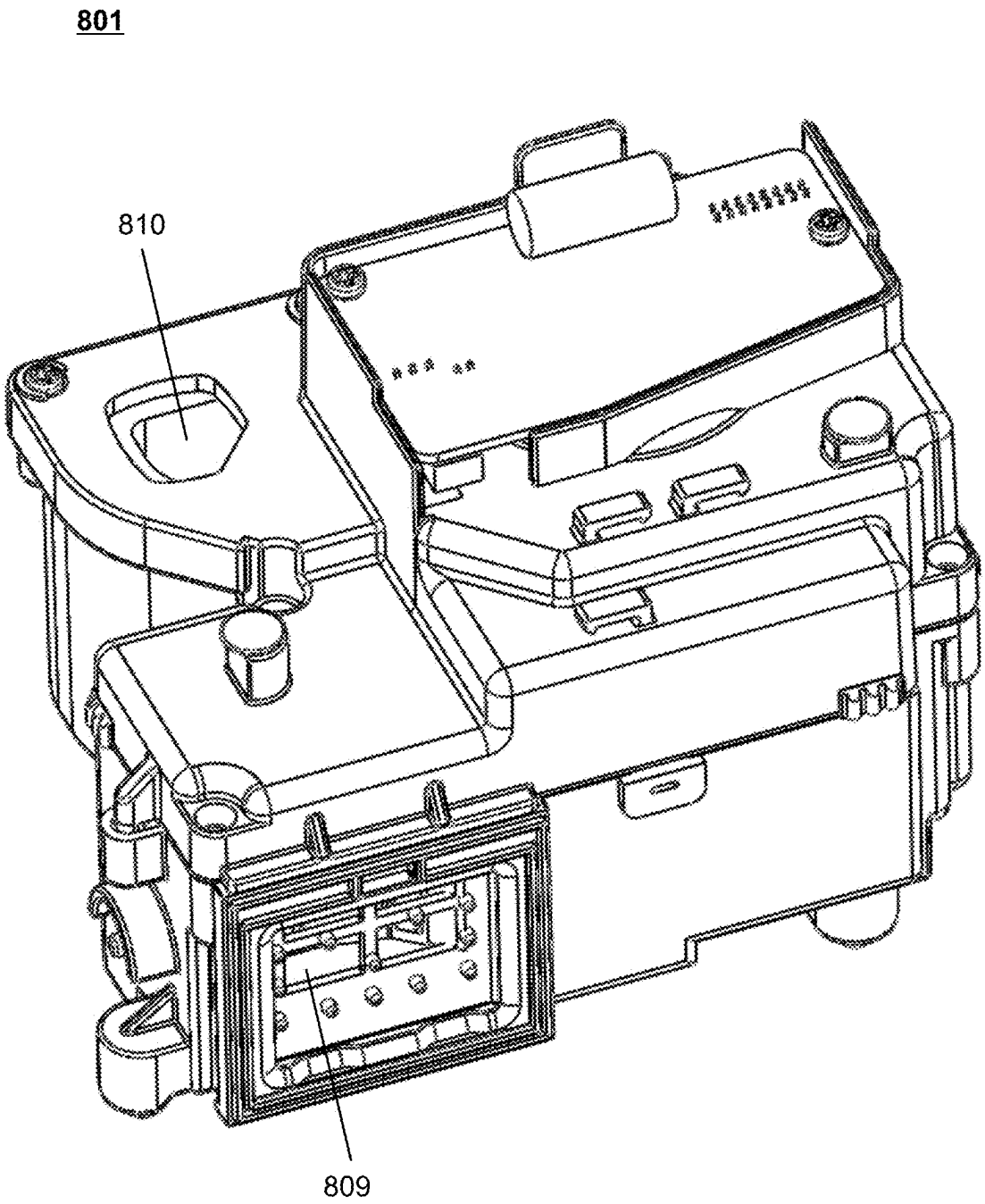

FIG. 8A

801

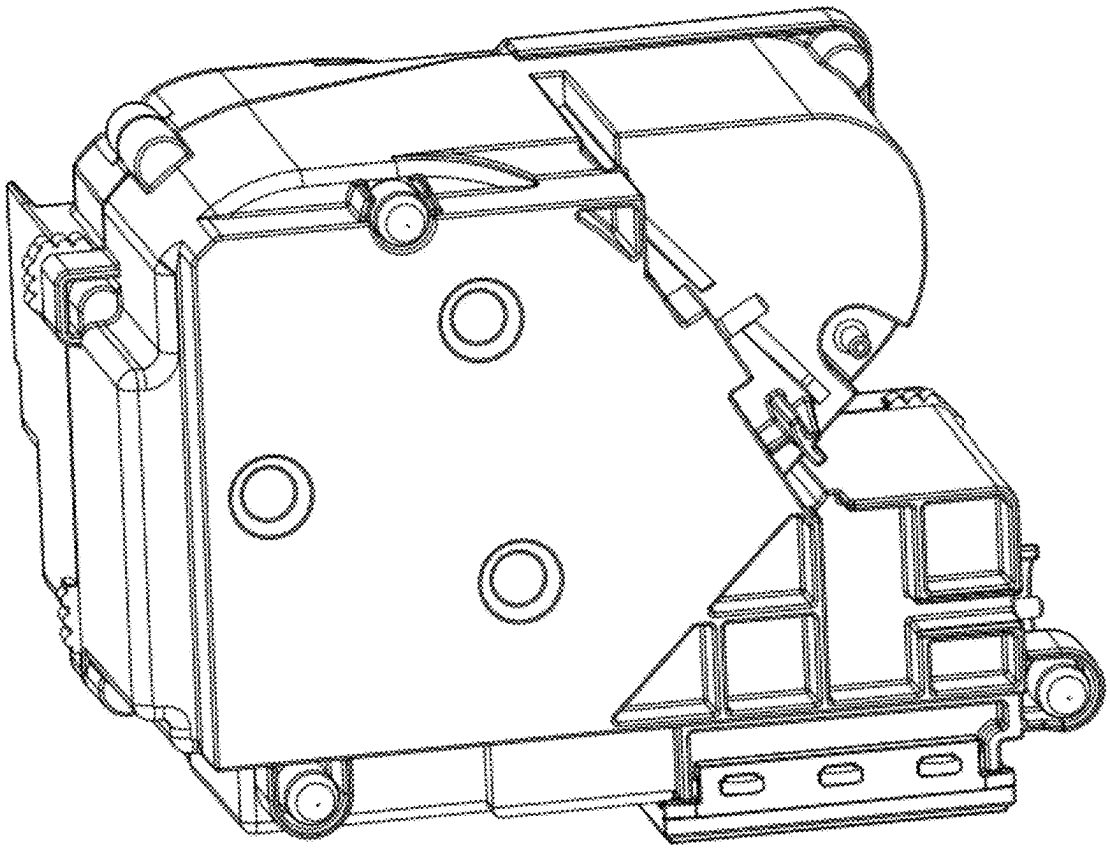

FIG. 8B

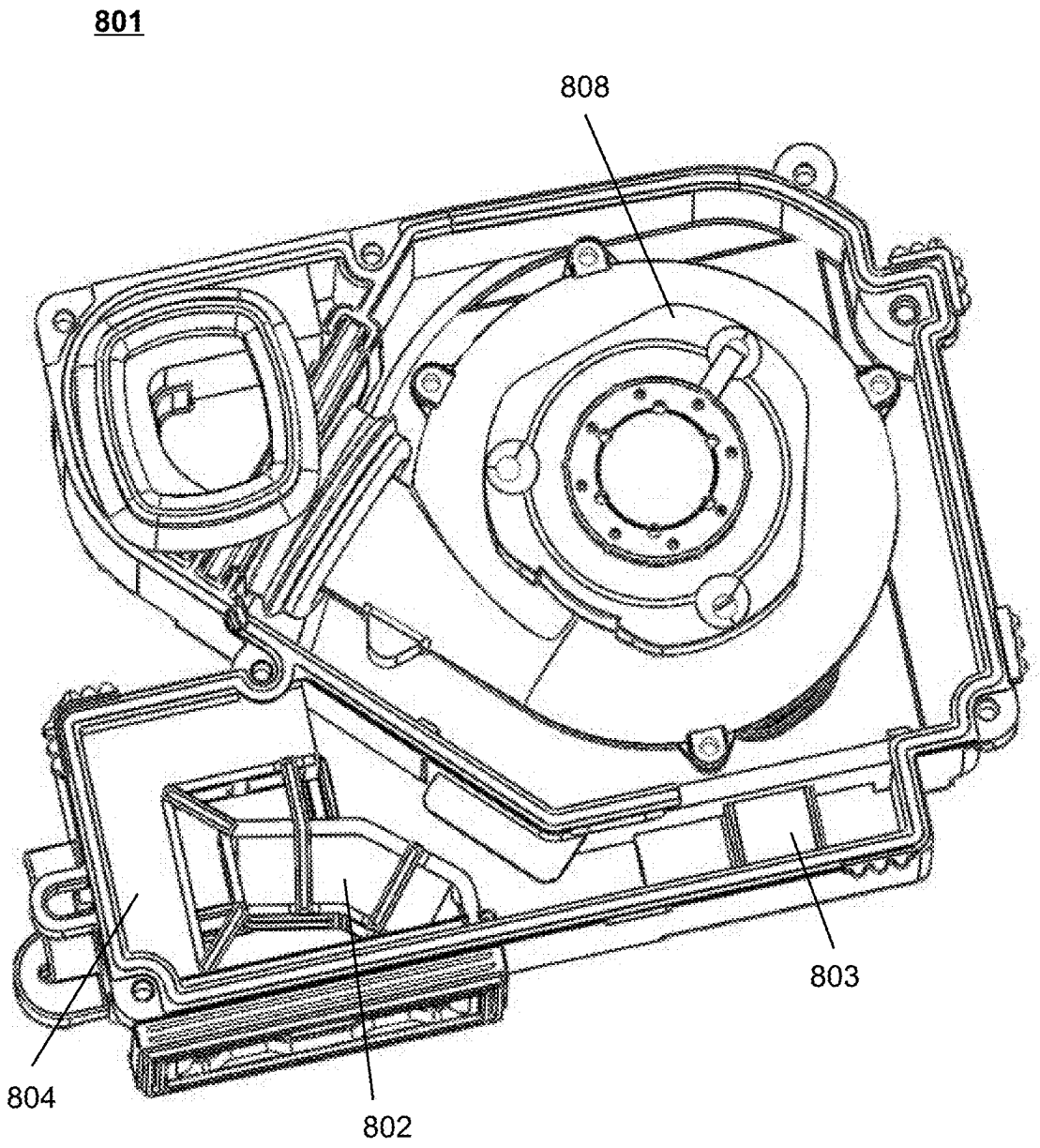

FIG. 8C

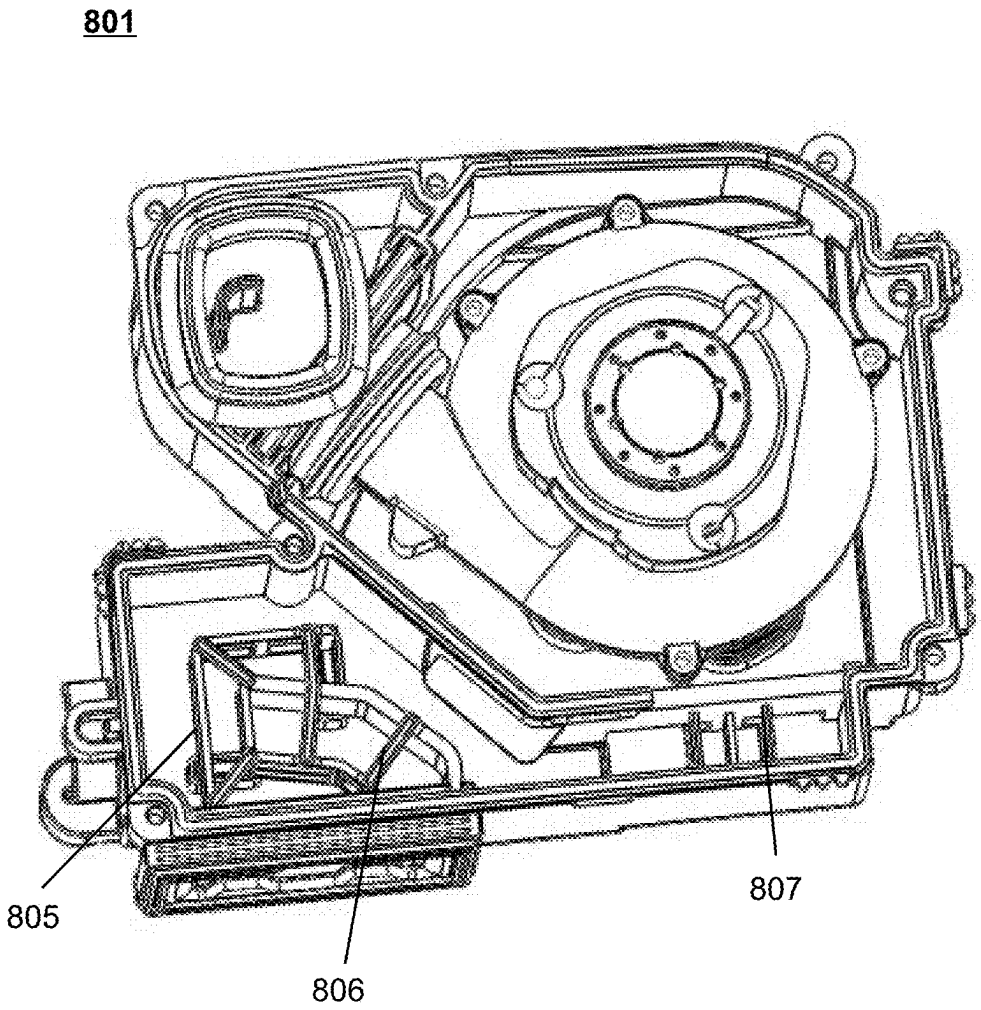

FIG. 8D

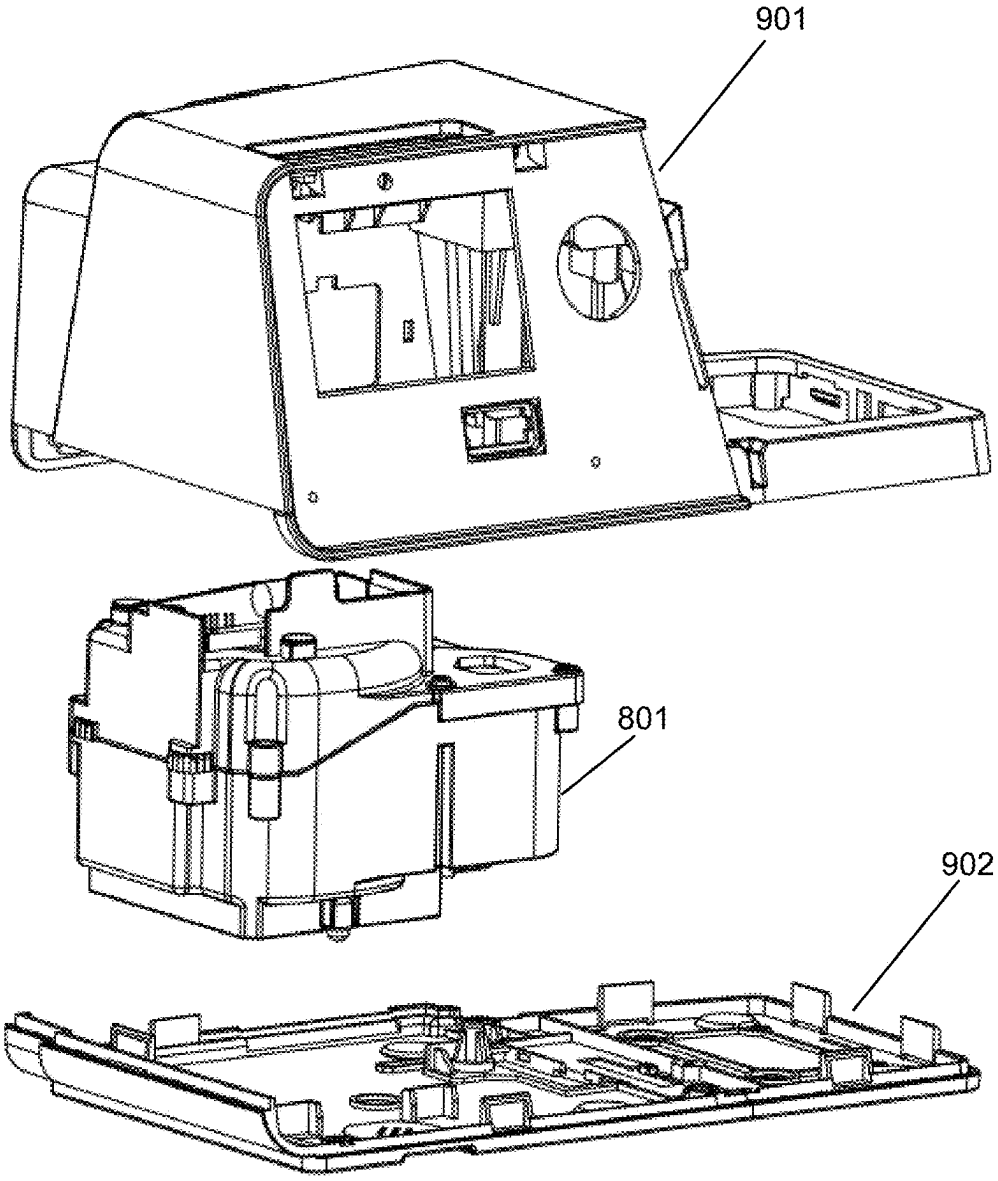

FIG. 9A

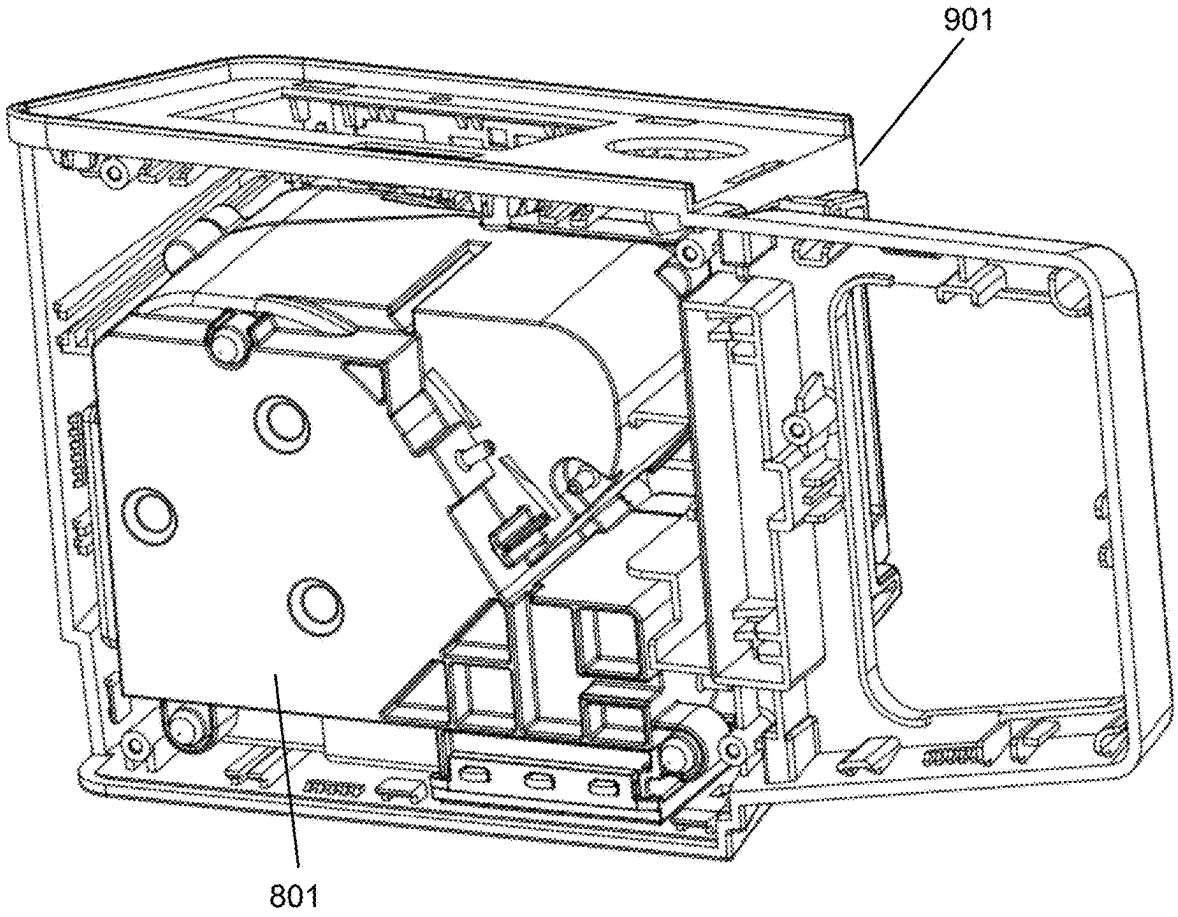

FIG. 9B

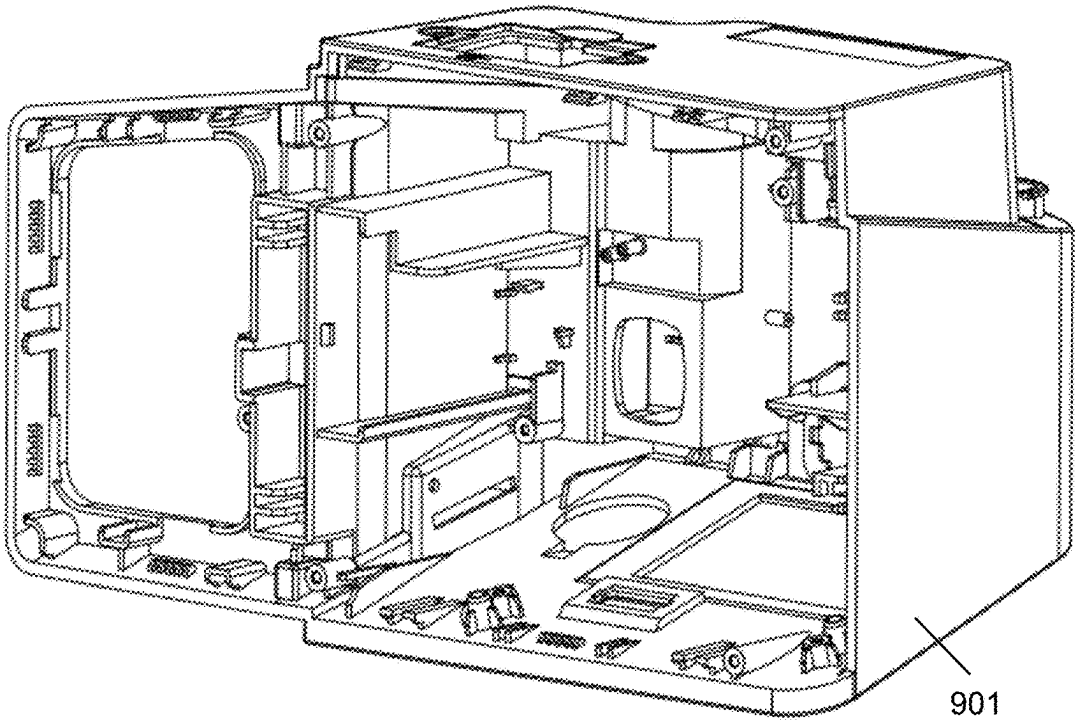

FIG. 9C

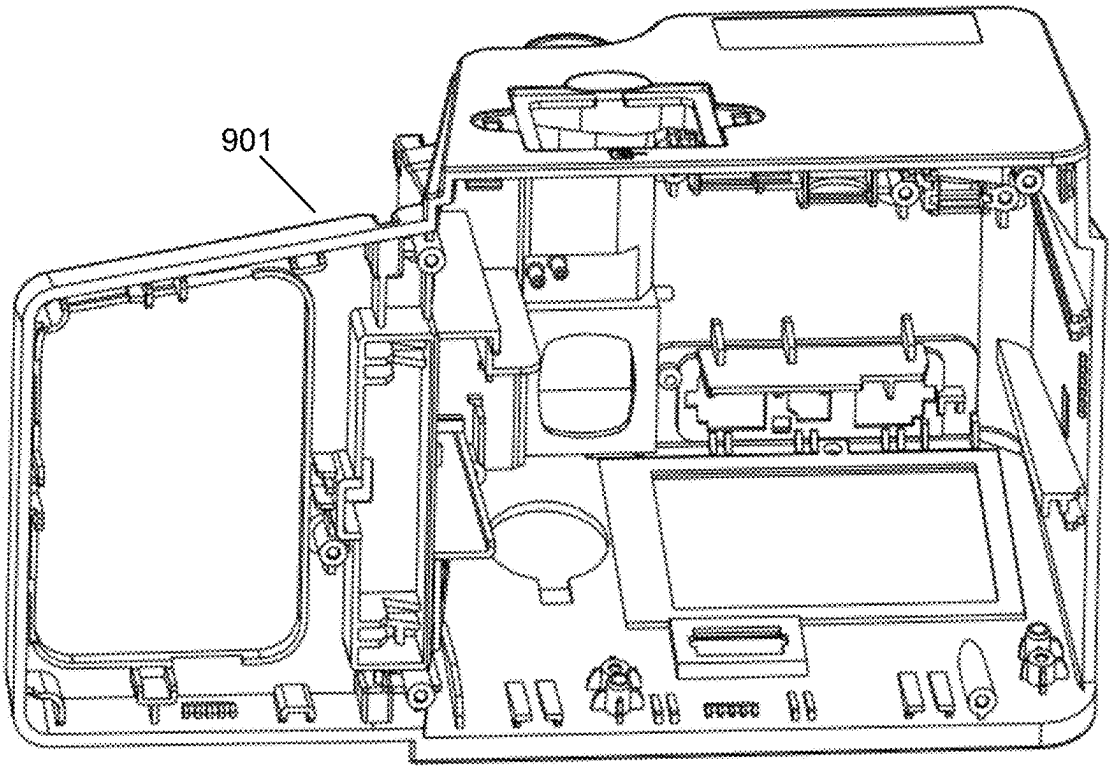

FIG. 9D

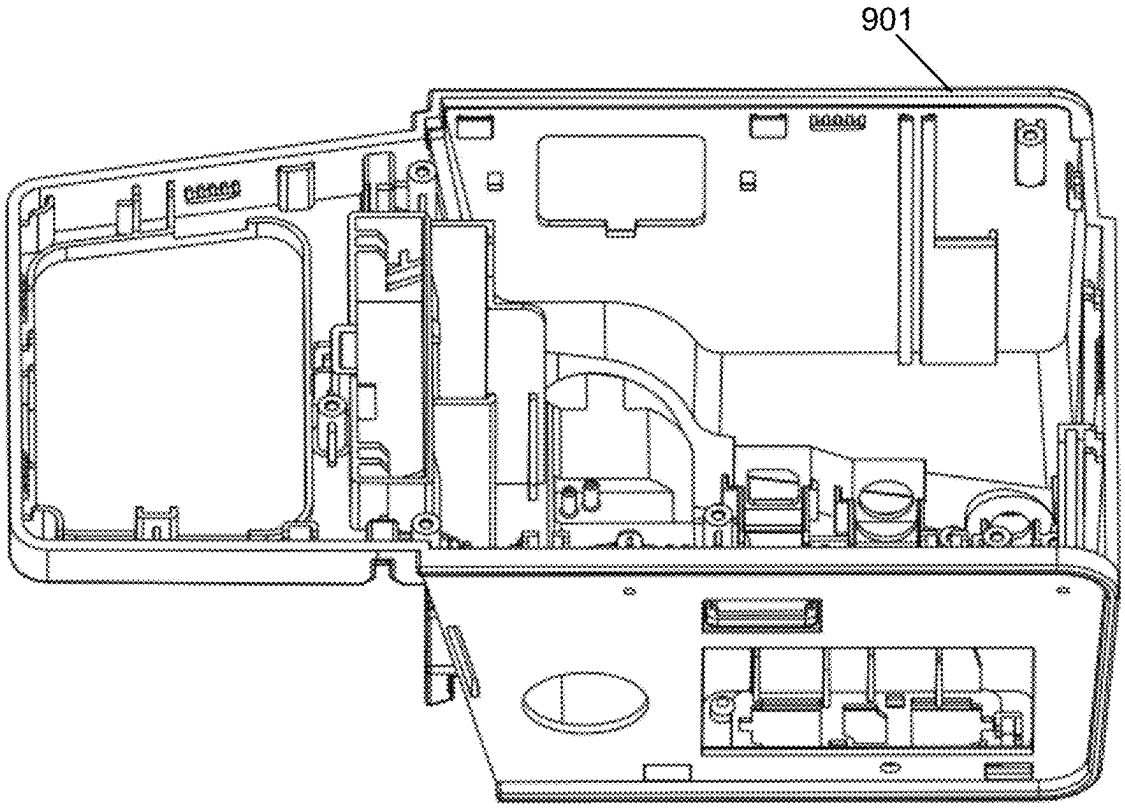

FIG. 9E

801

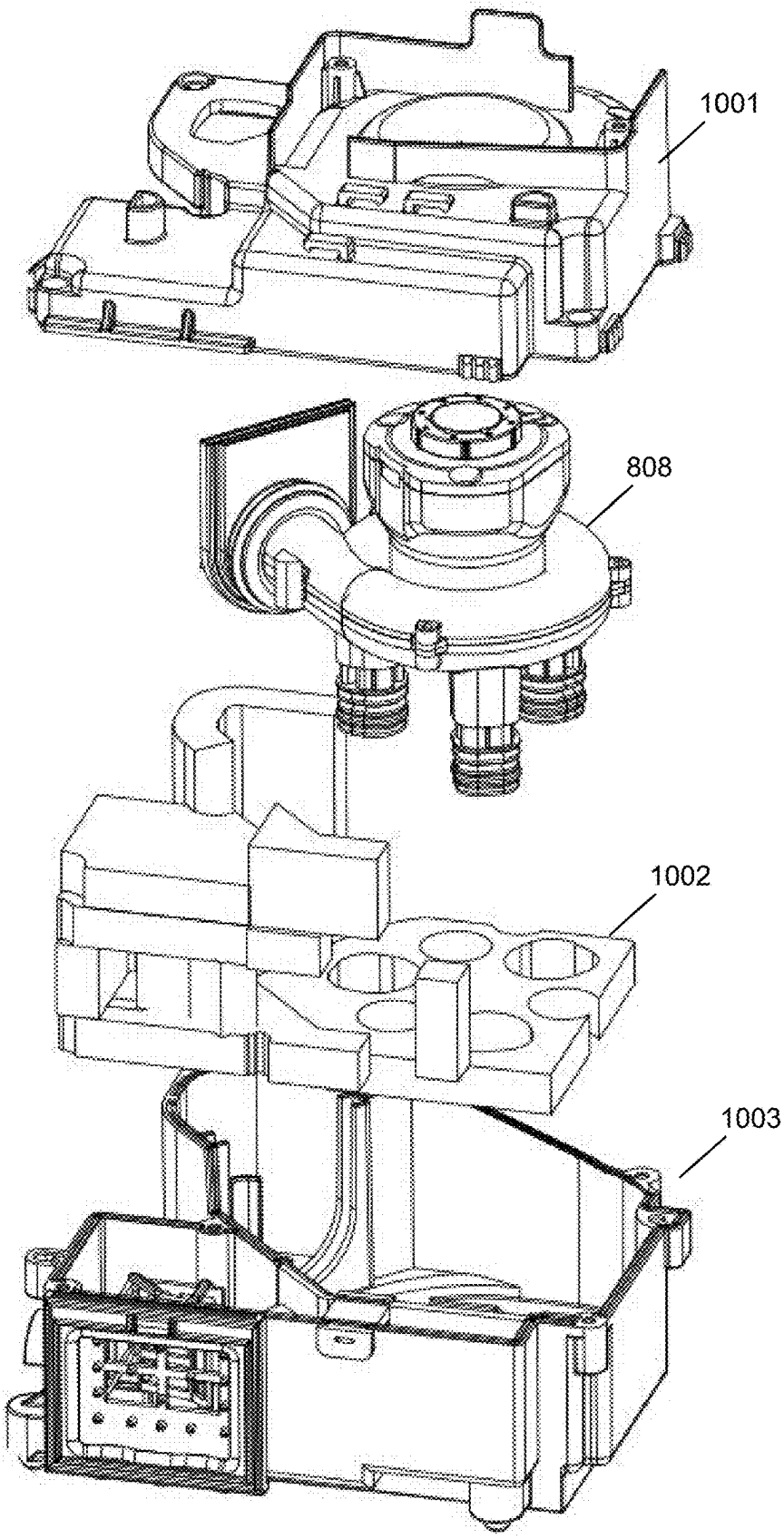

FIG. 10A

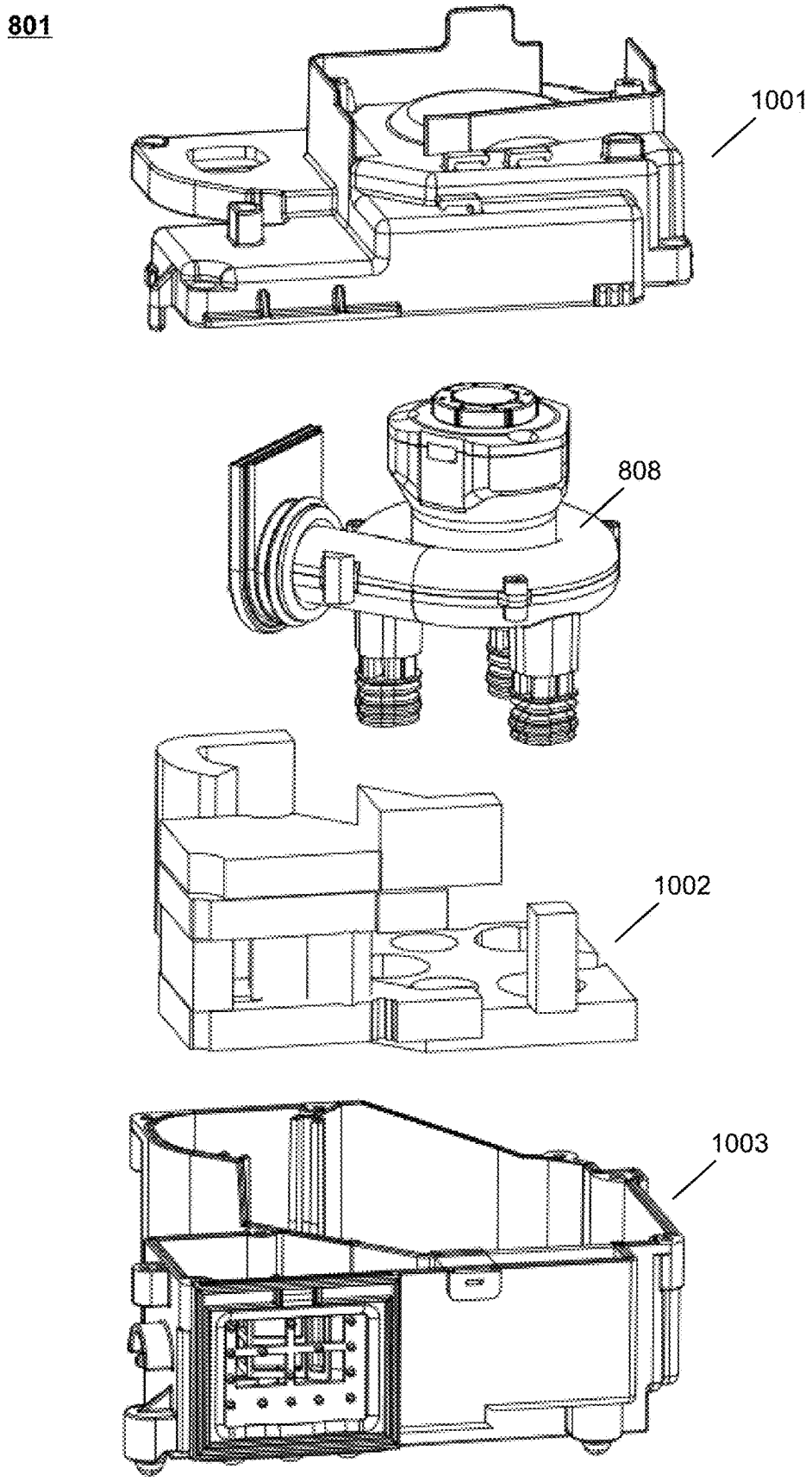

FIG. 10B

801

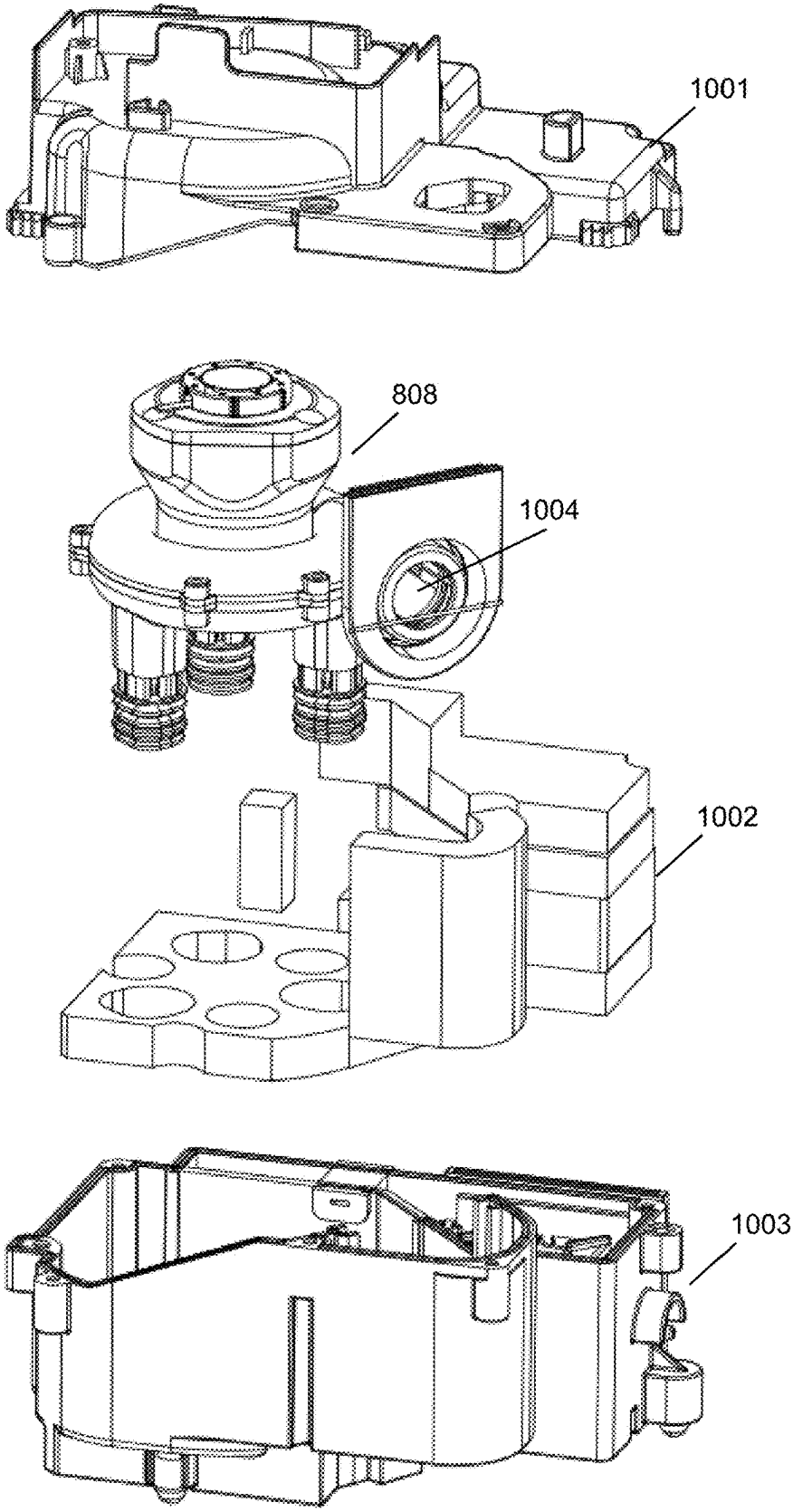

FIG. 10C

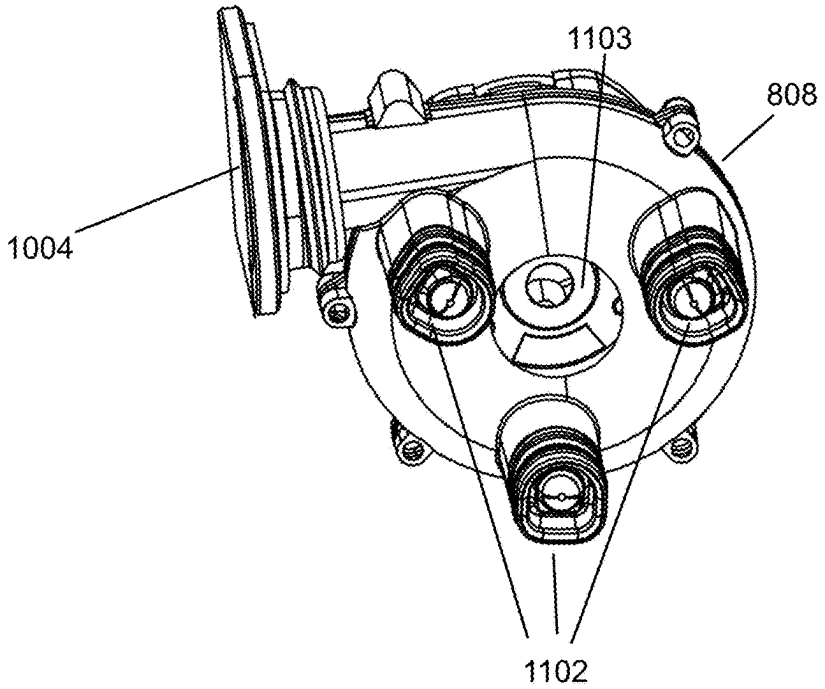

FIG. 11A

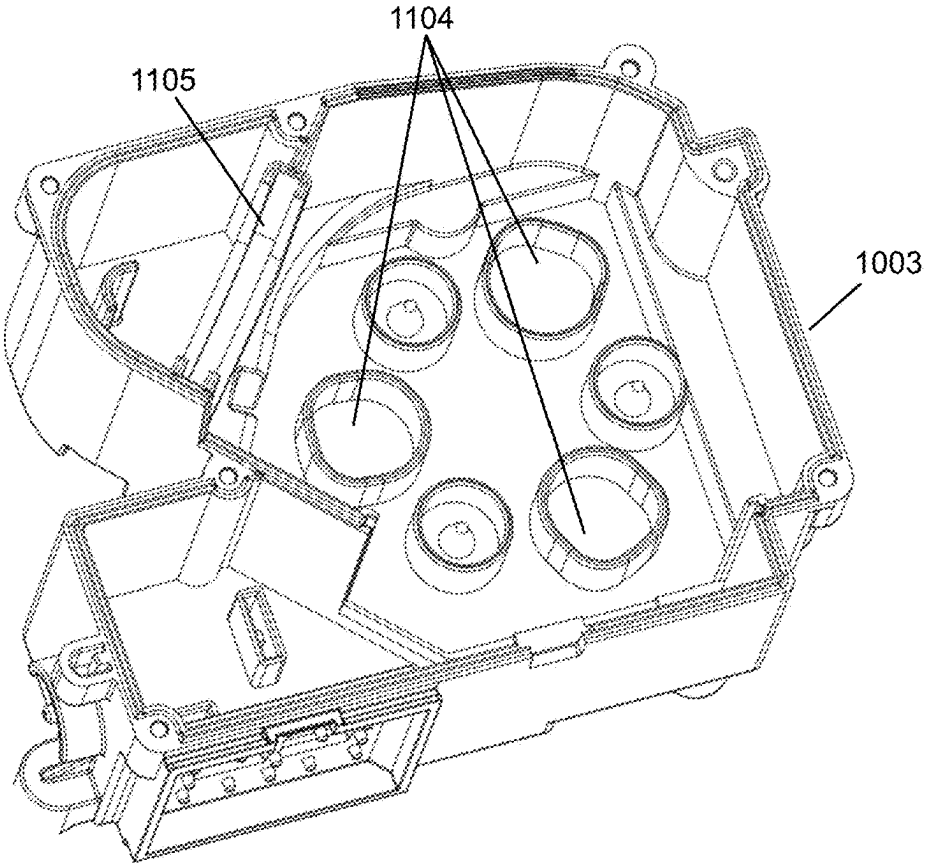

FIG. 11B

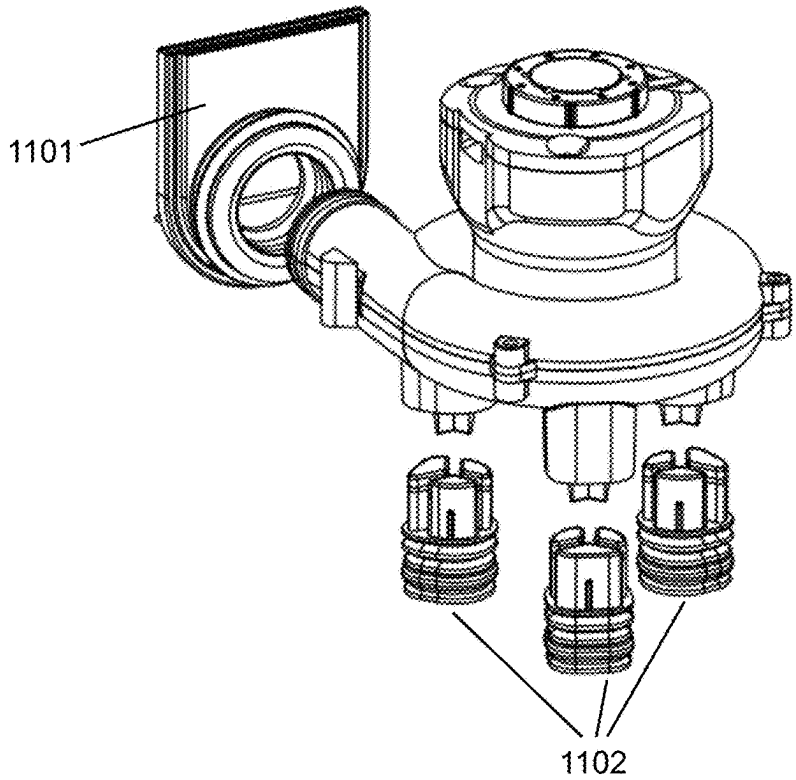

FIG. 11C

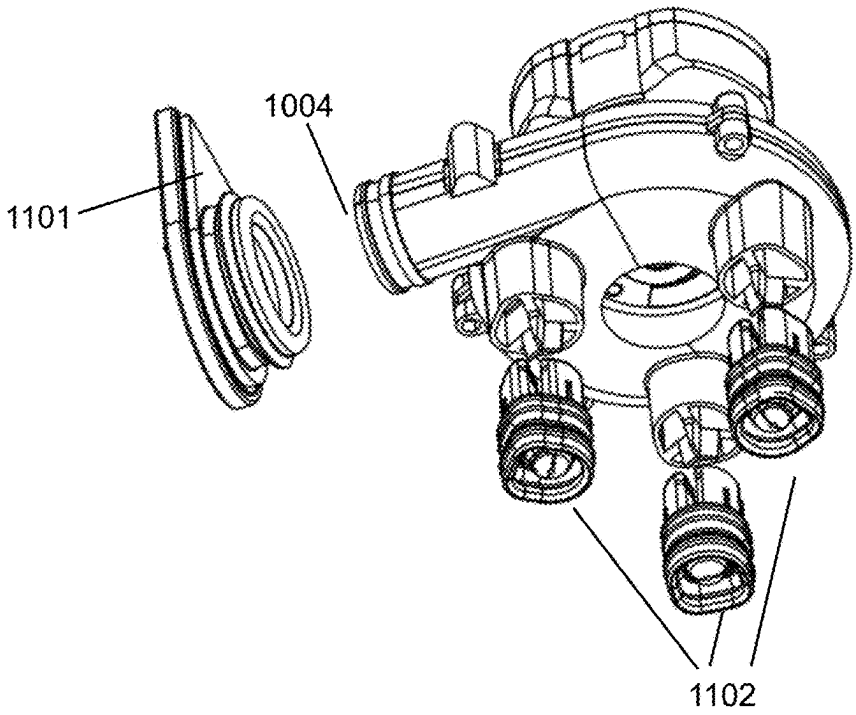

FIG. 11D

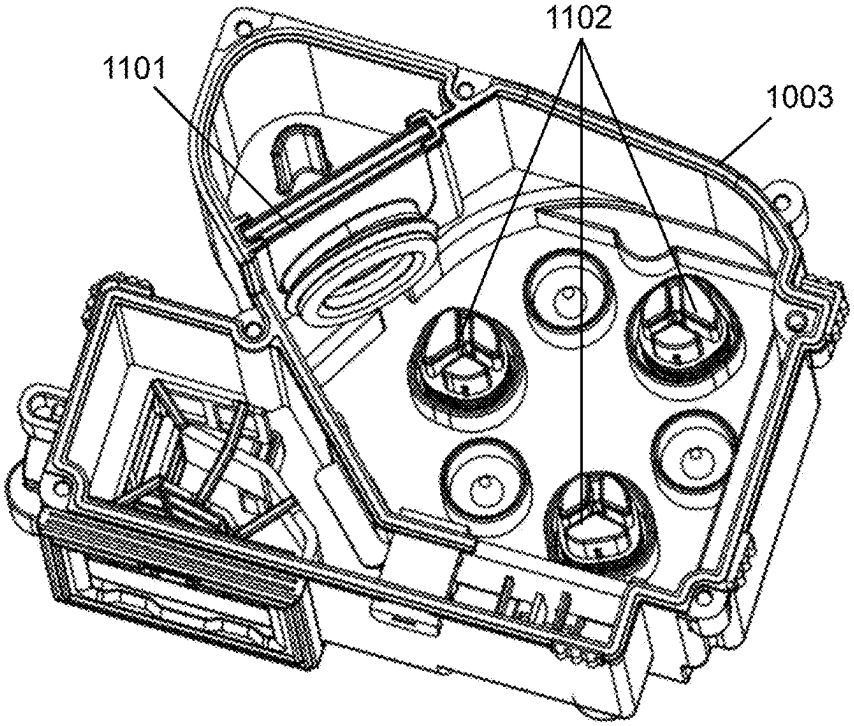

FIG. 11E

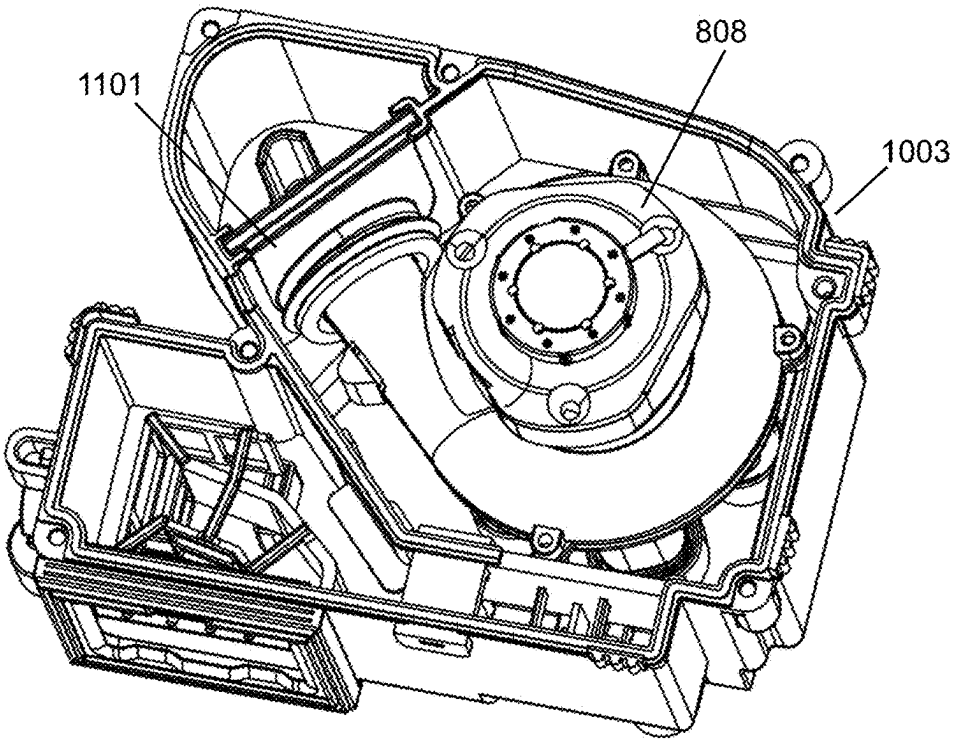

FIG. 11F

808

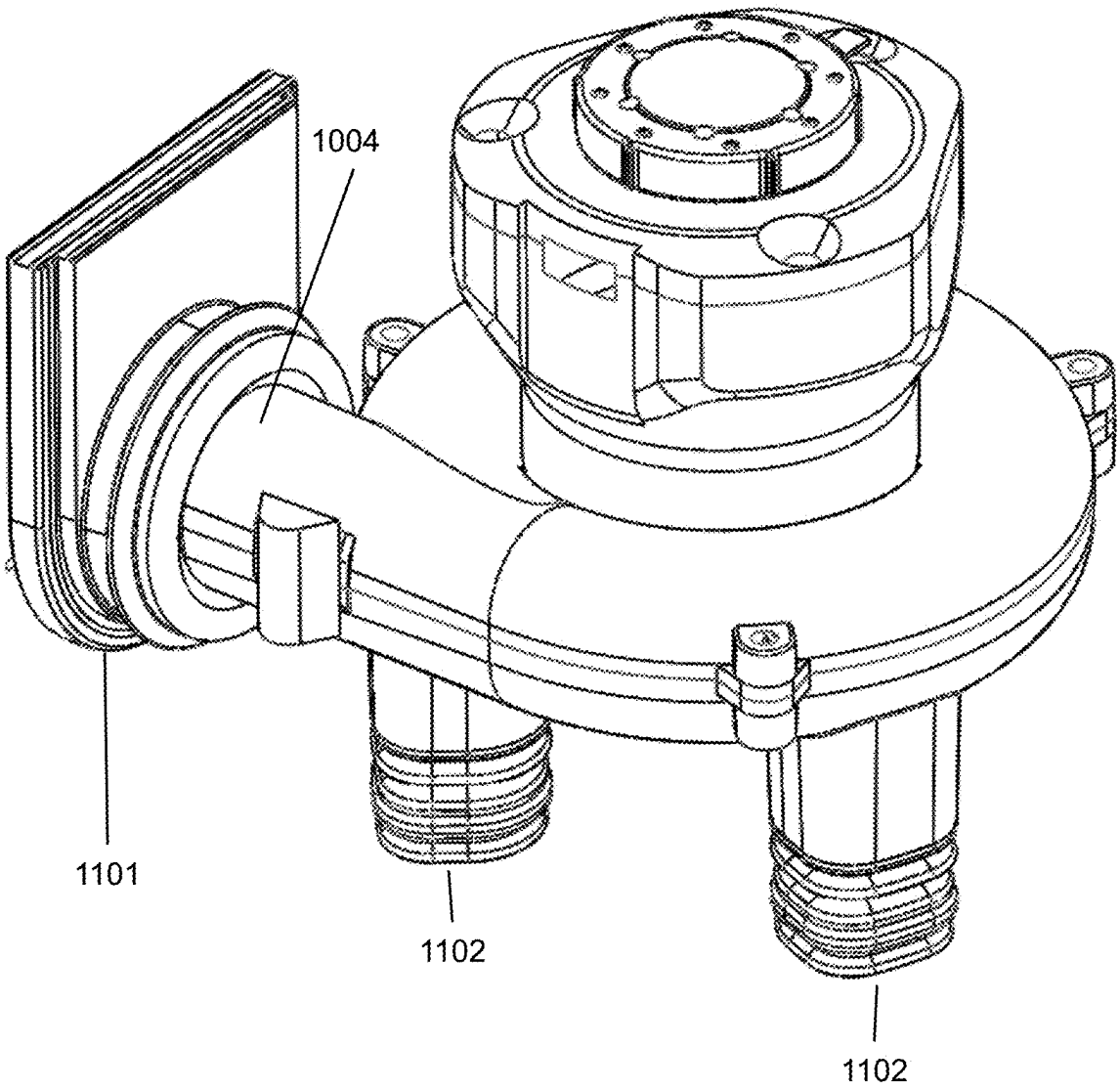

FIG. 12A

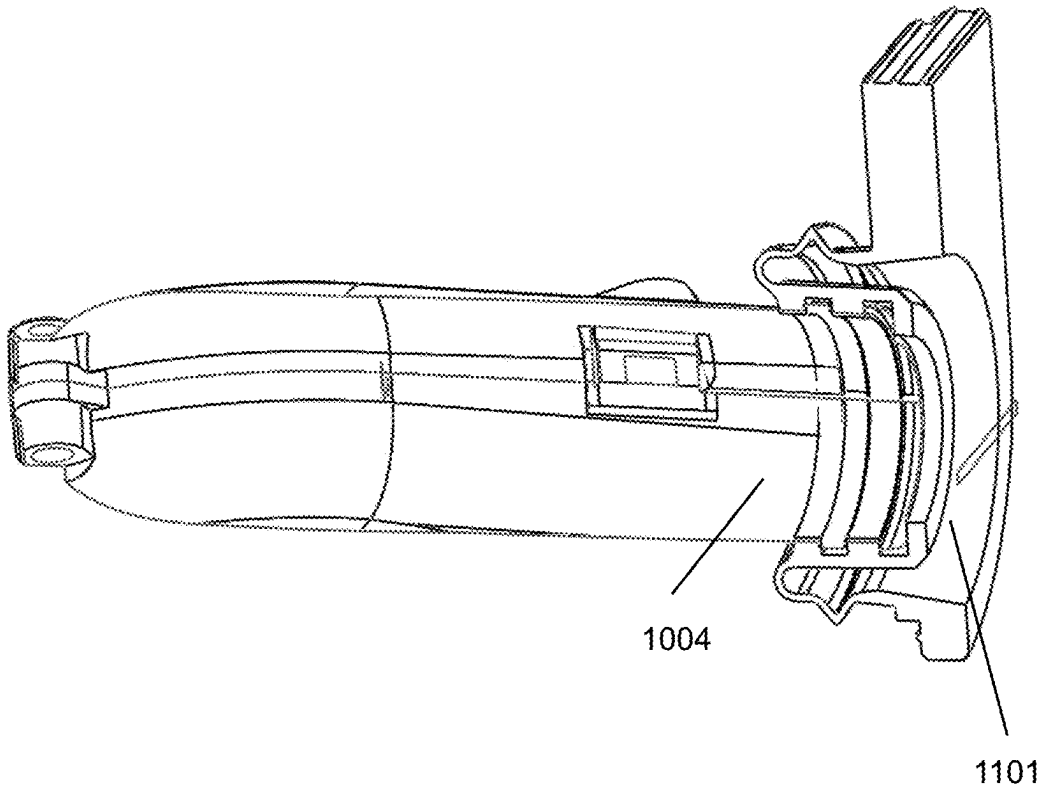

FIG. 12B

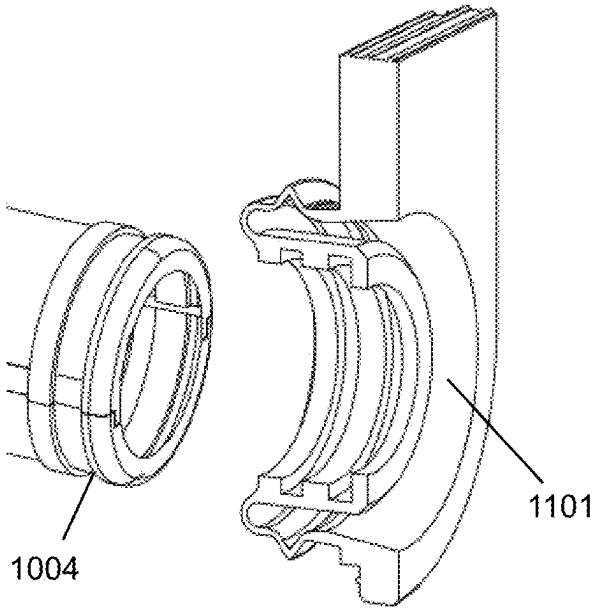

FIG. 12C

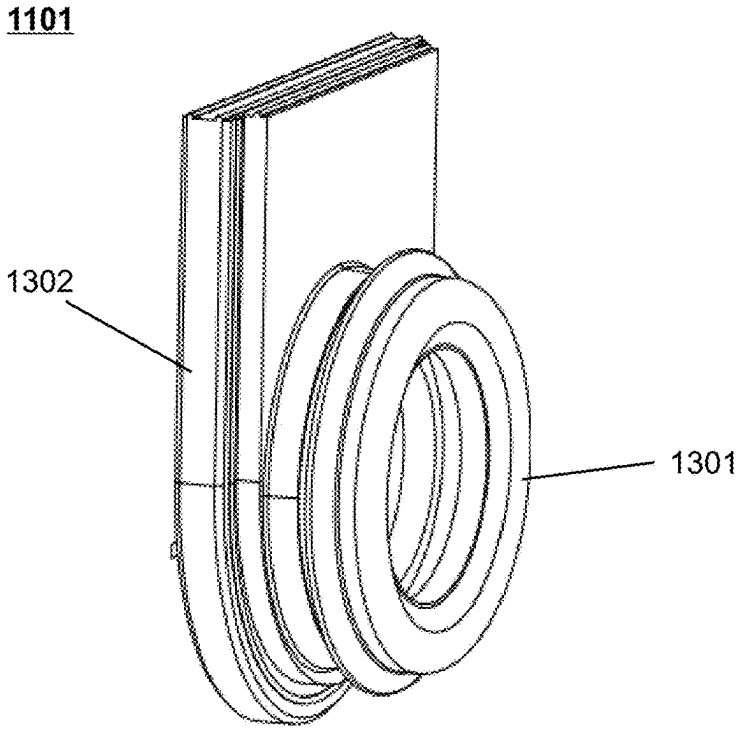

FIG. 13A

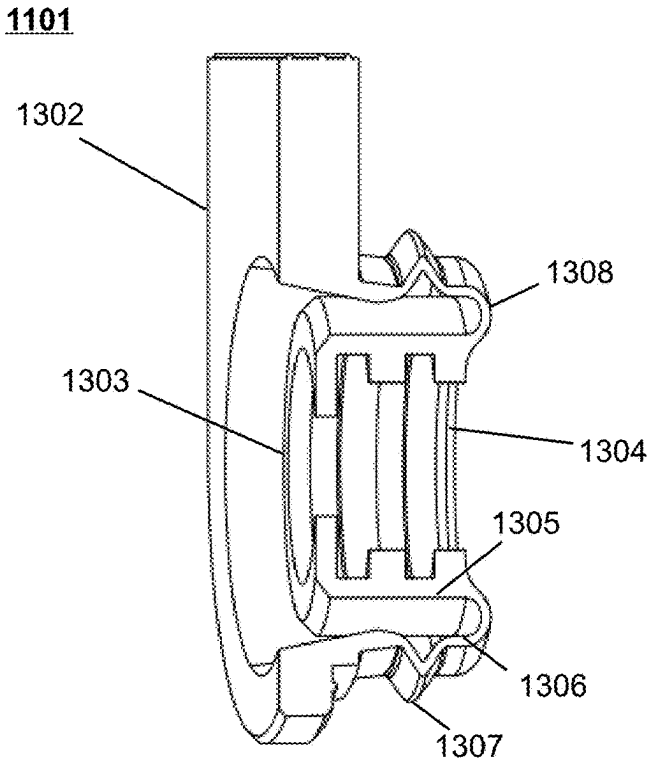

FIG. 13B

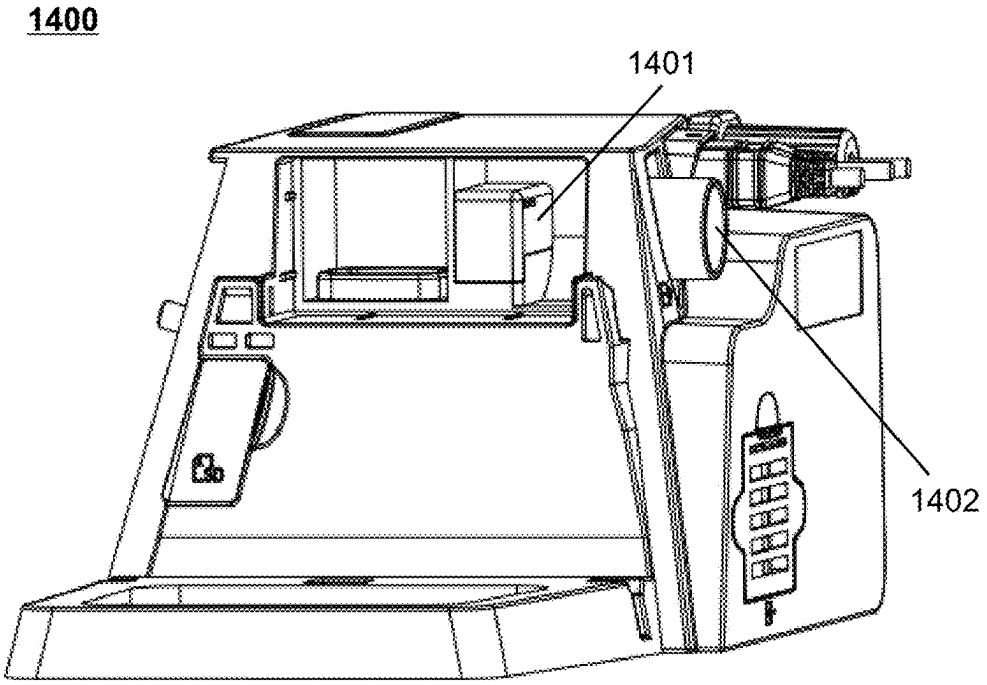

FIG. 14A

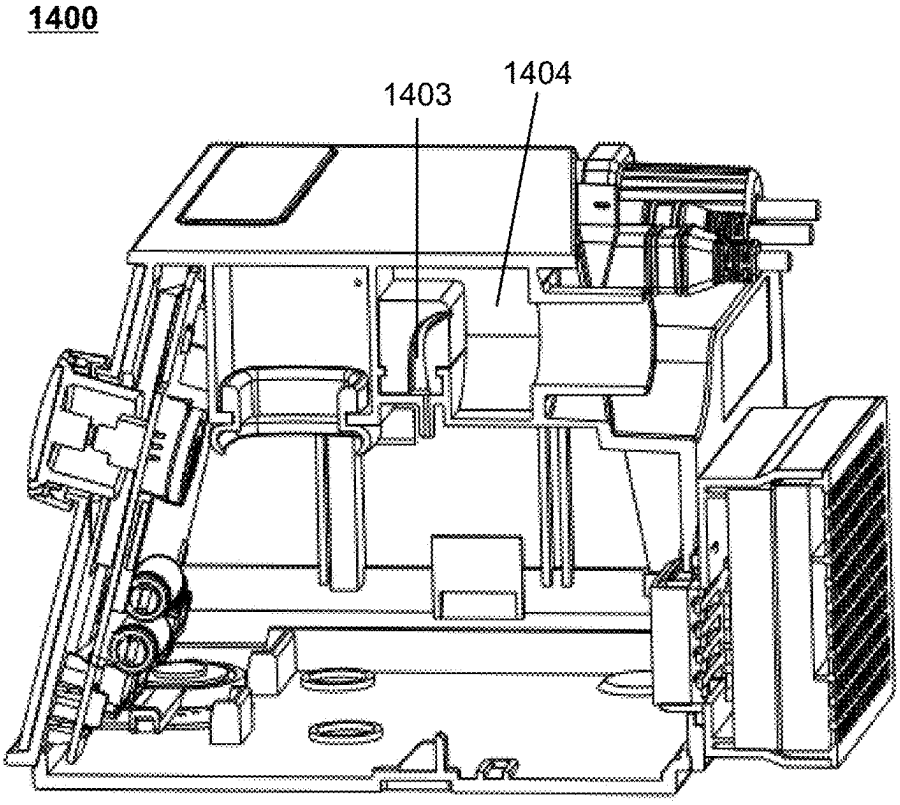

FIG. 14B

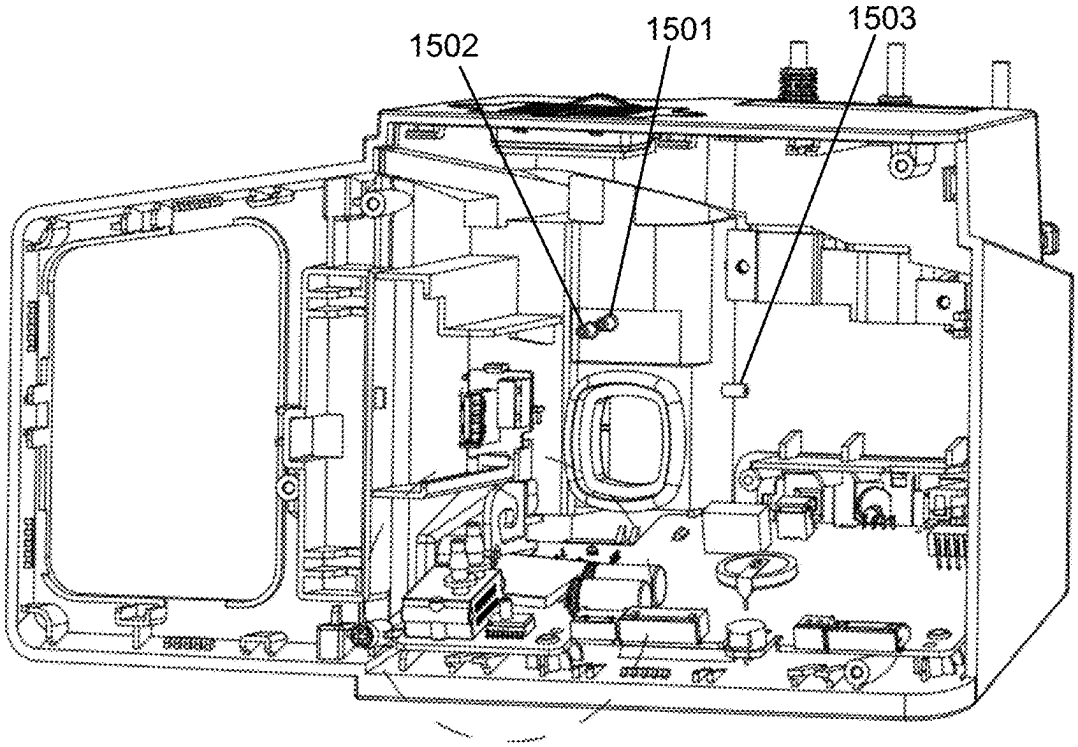

FIG. 15A

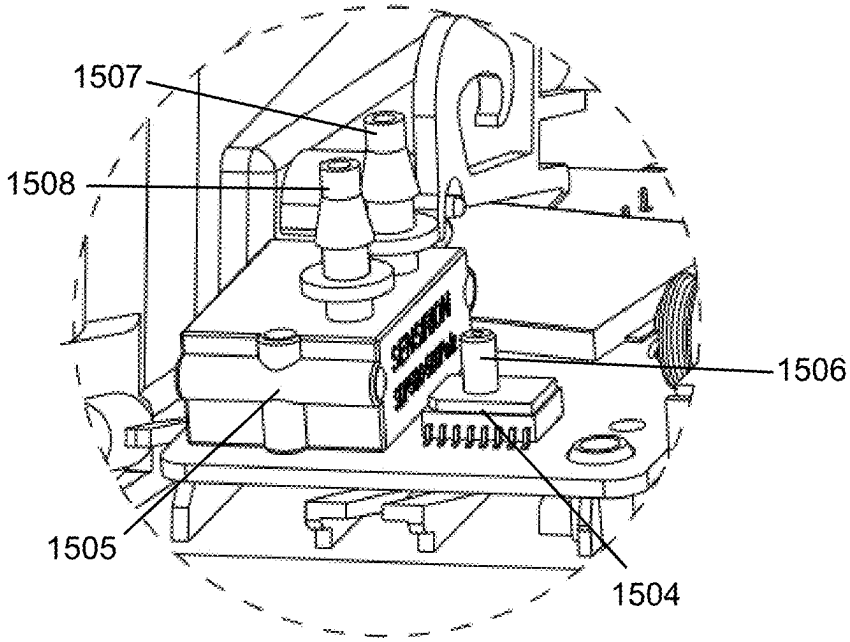

FIG. 15B

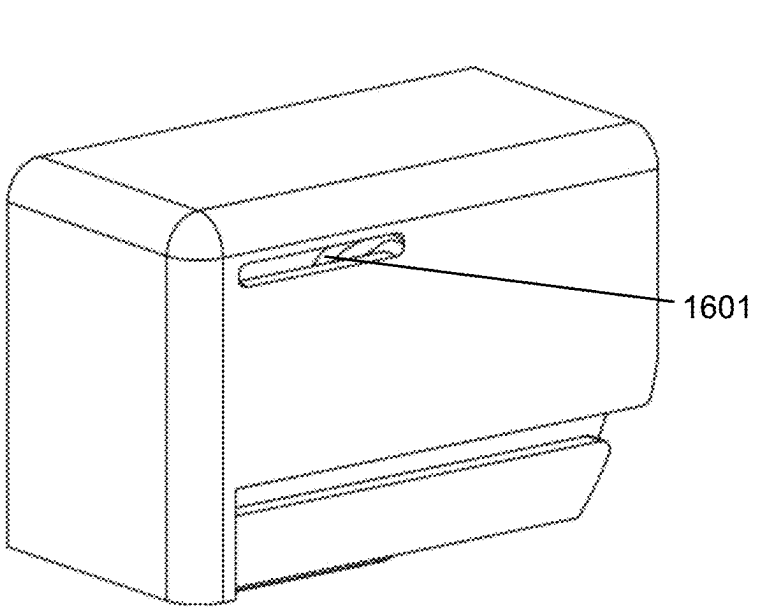

FIG. 16A

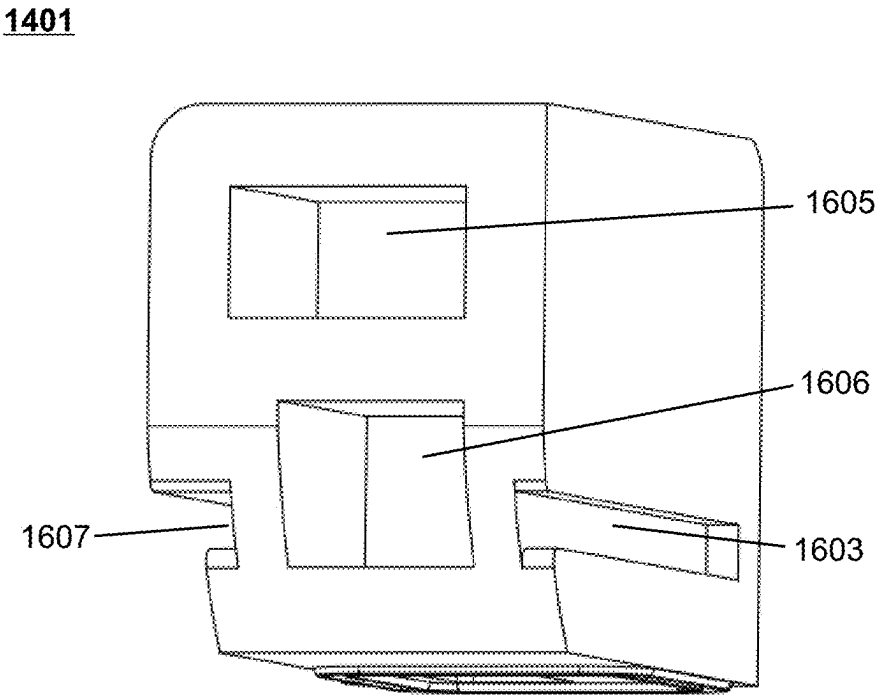

FIG. 16B

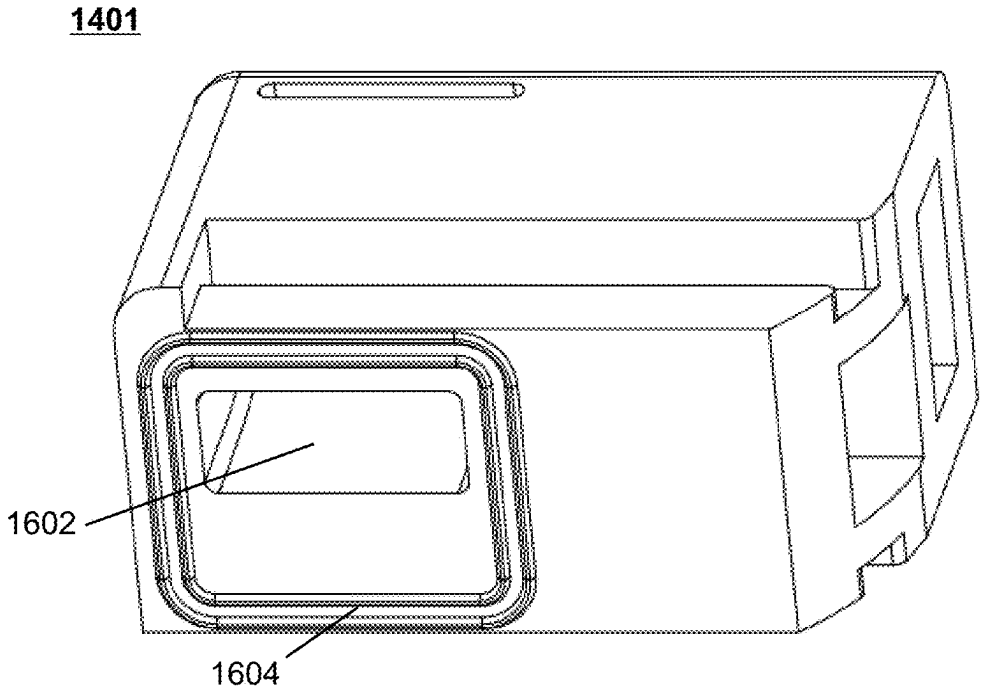

FIG. 16C

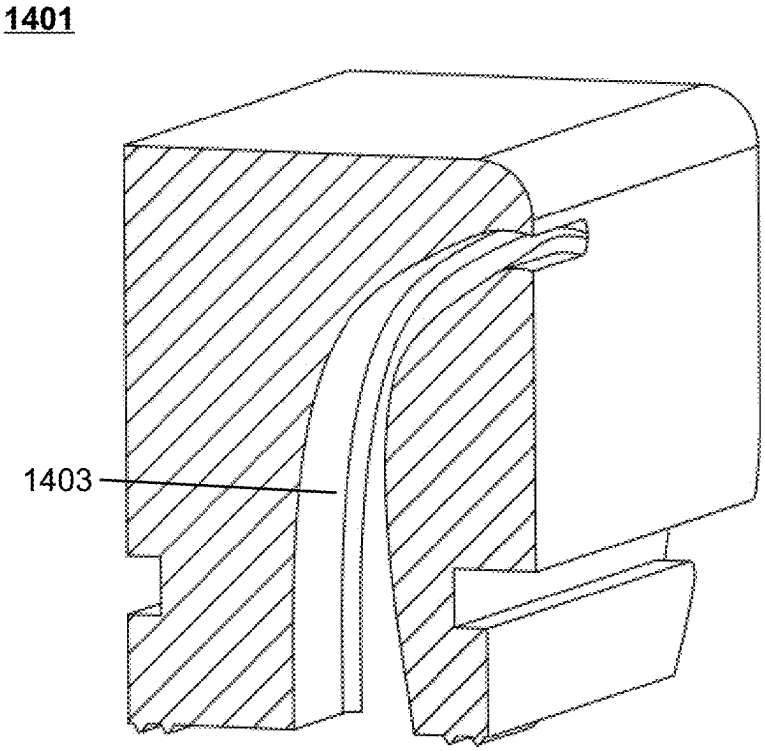

FIG. 16D

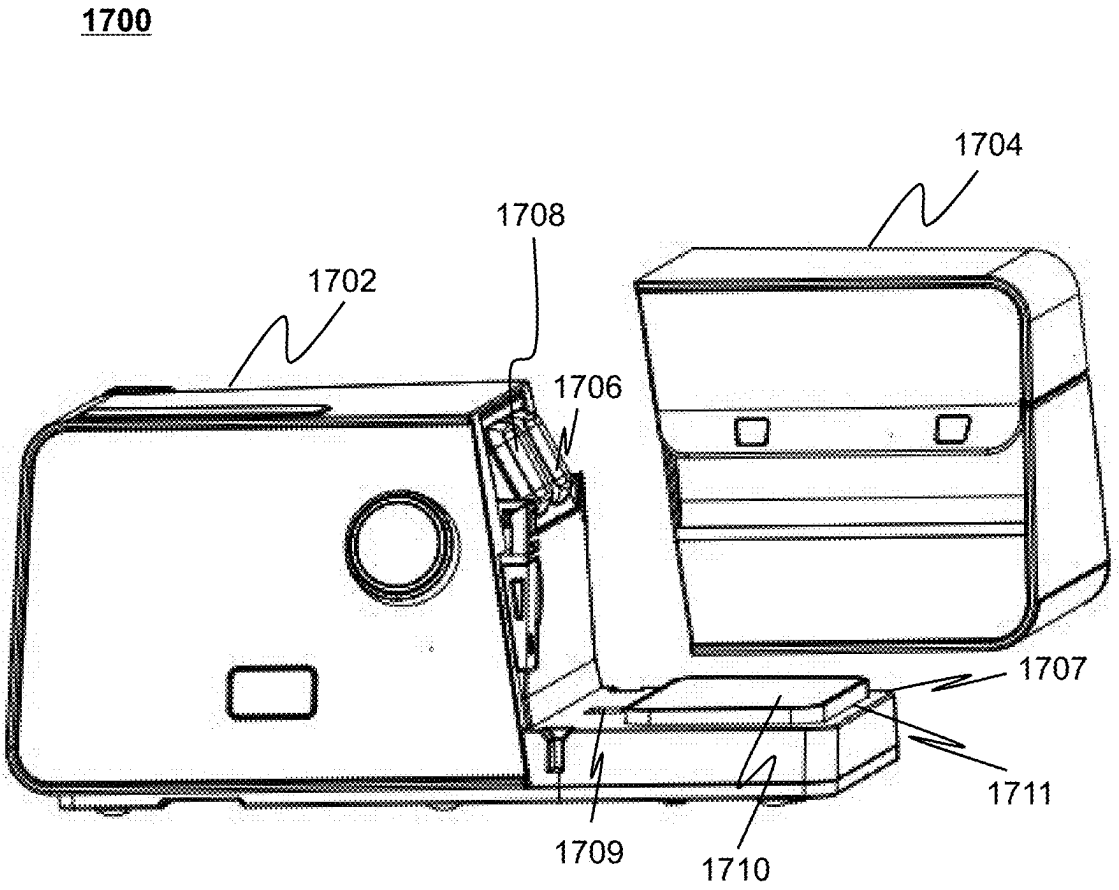

FIG. 17

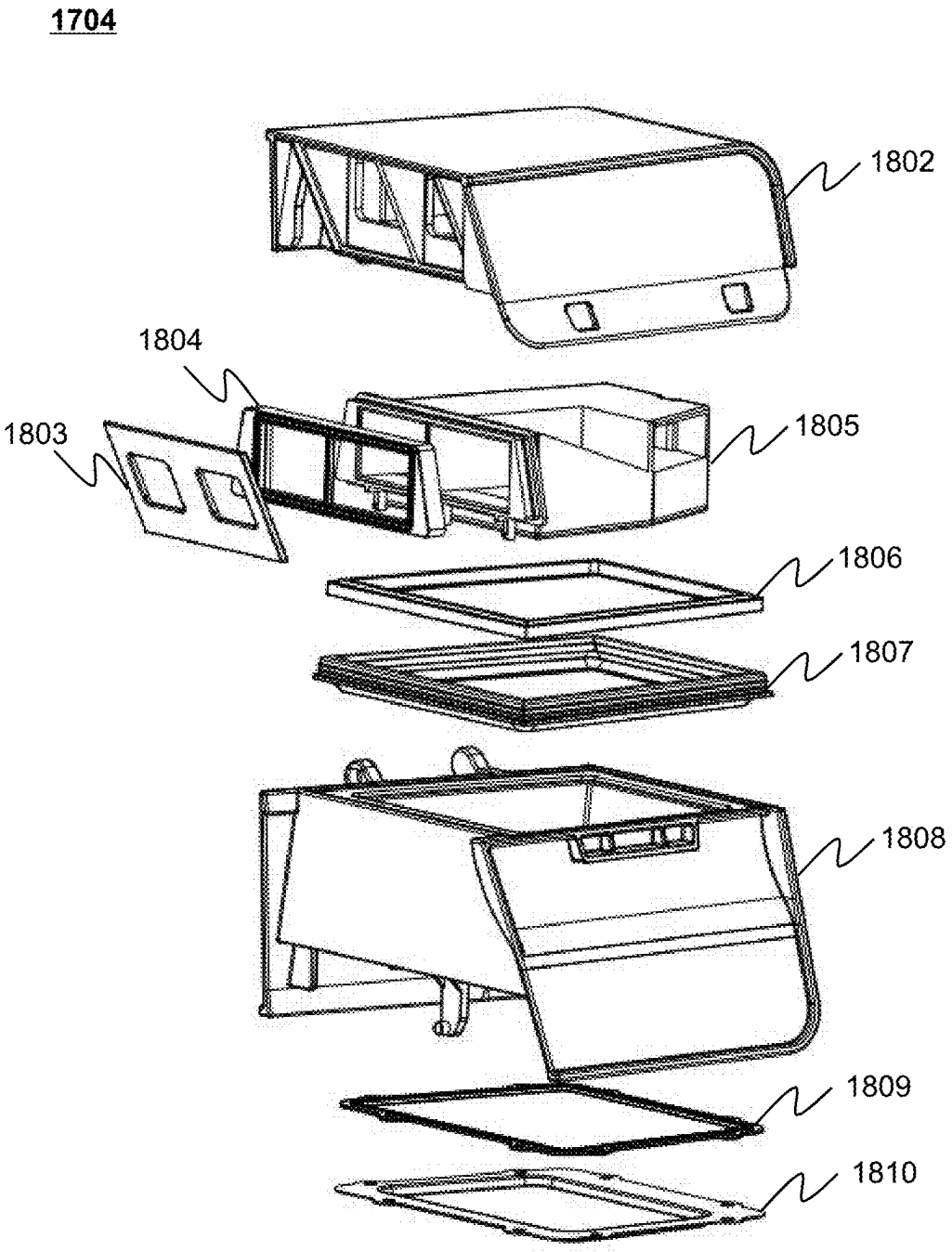

FIG. 18A

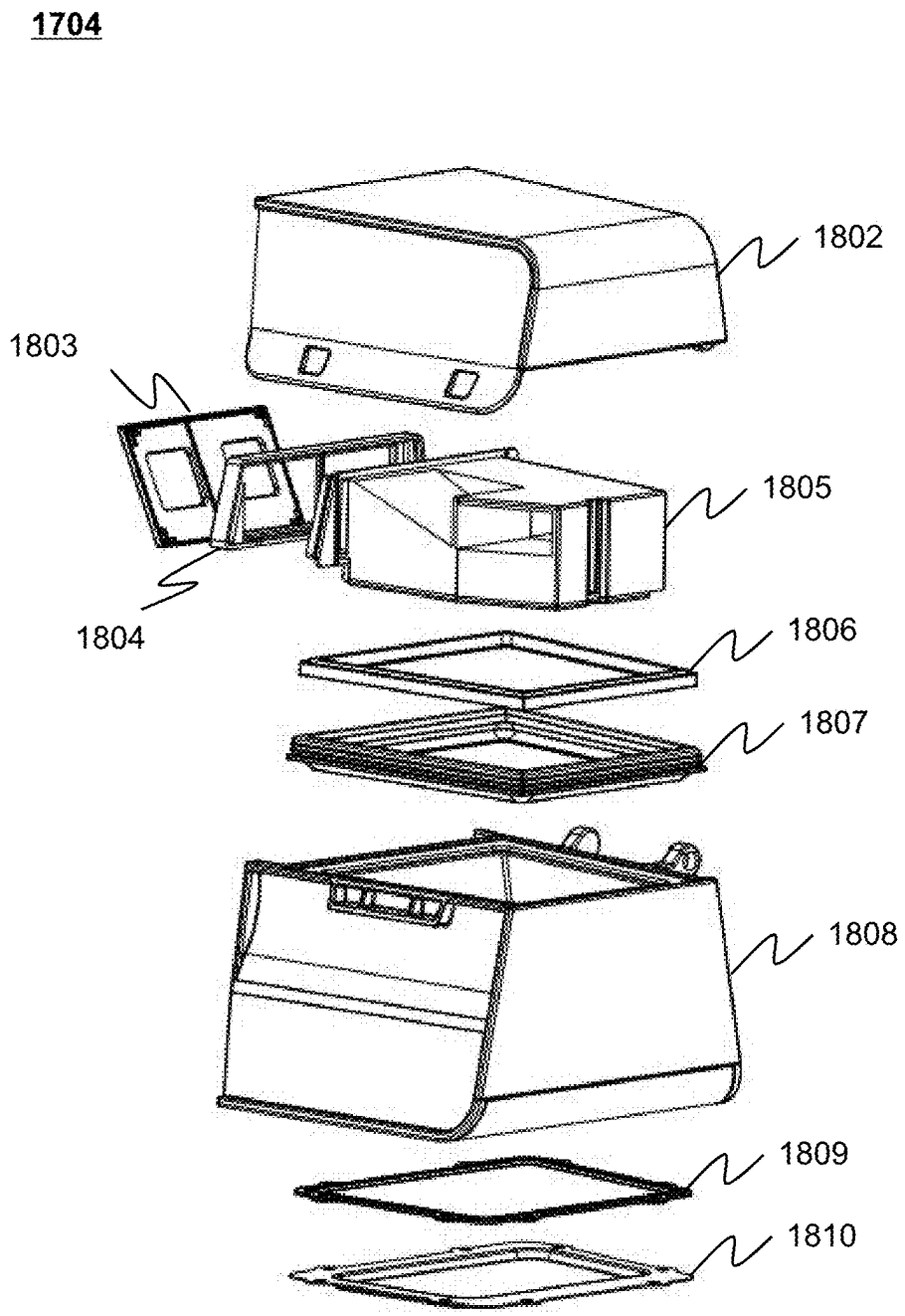

FIG. 18B

1900

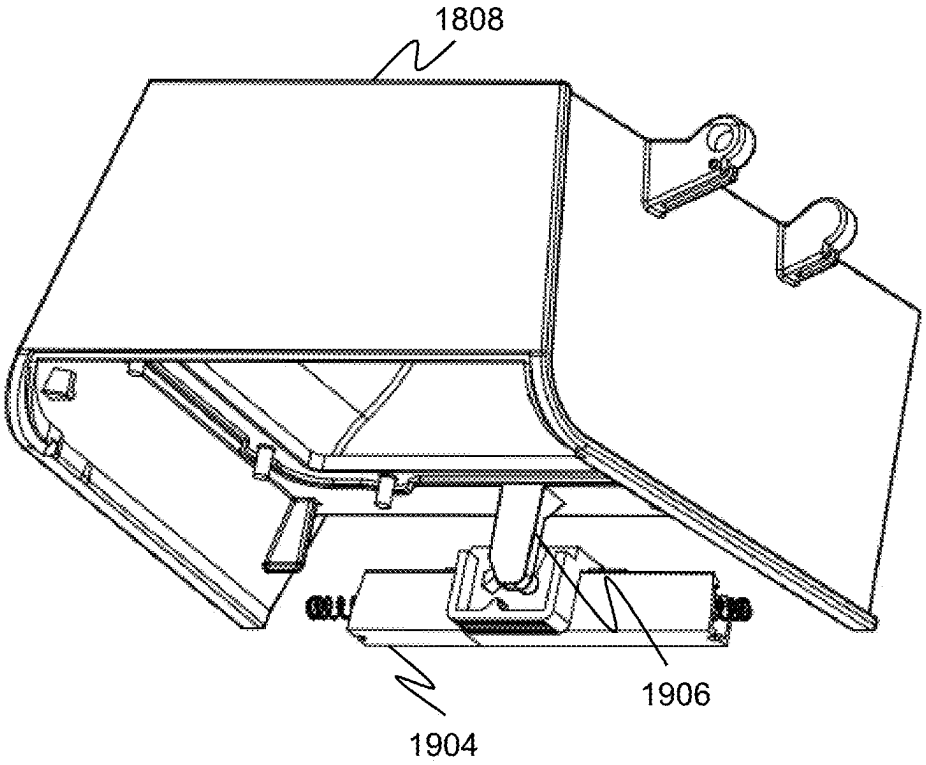

FIG. 19

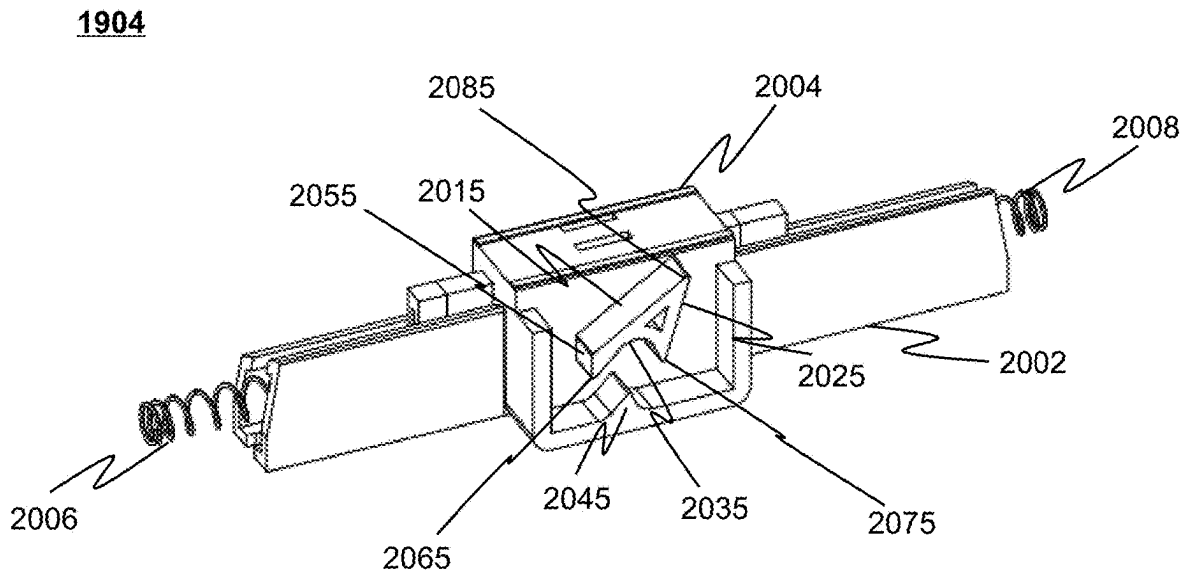

FIG. 20A

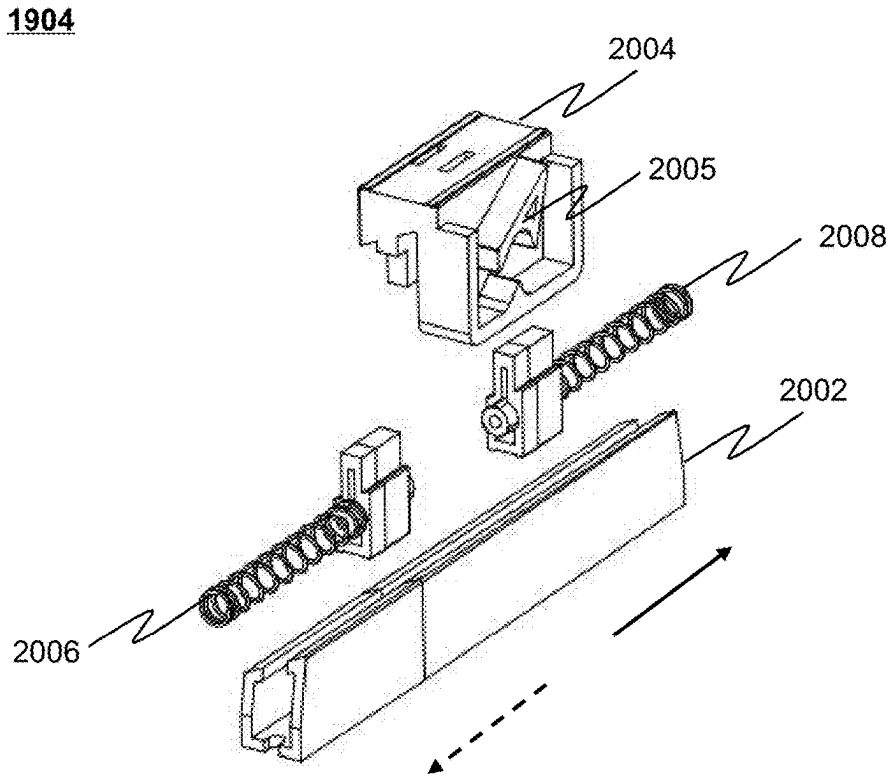

FIG. 20B

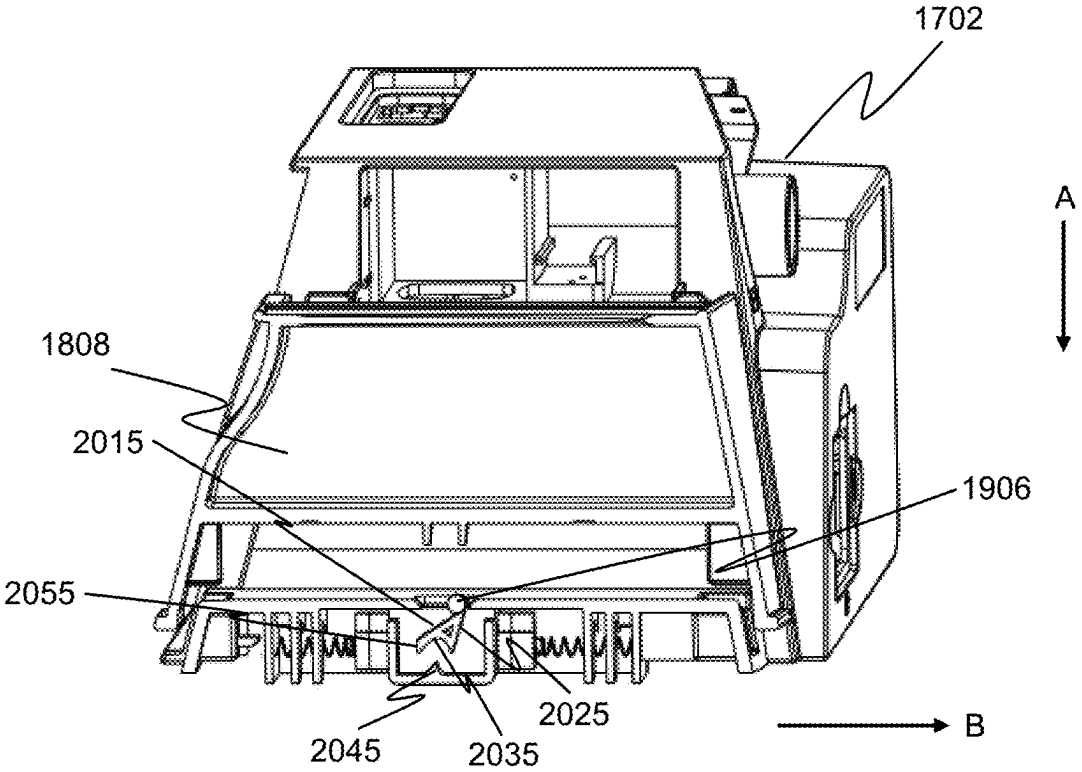

FIG. 21A

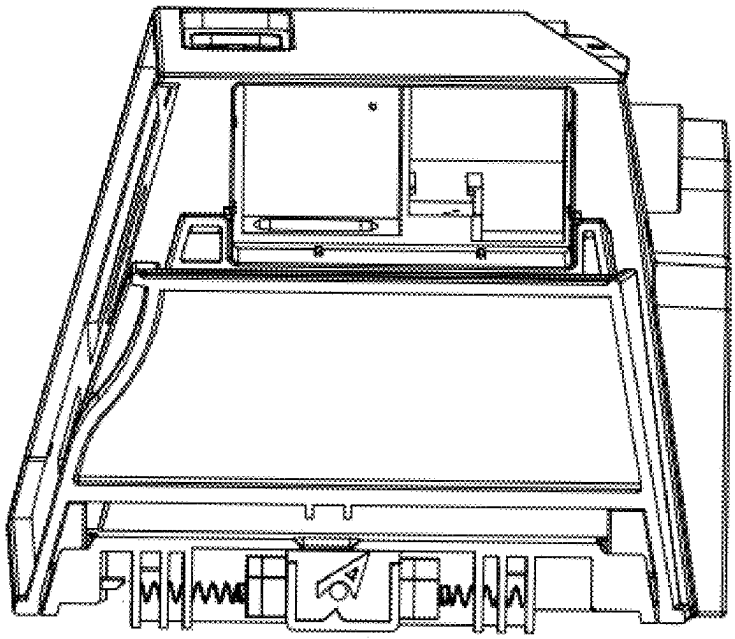

FIG. 21B

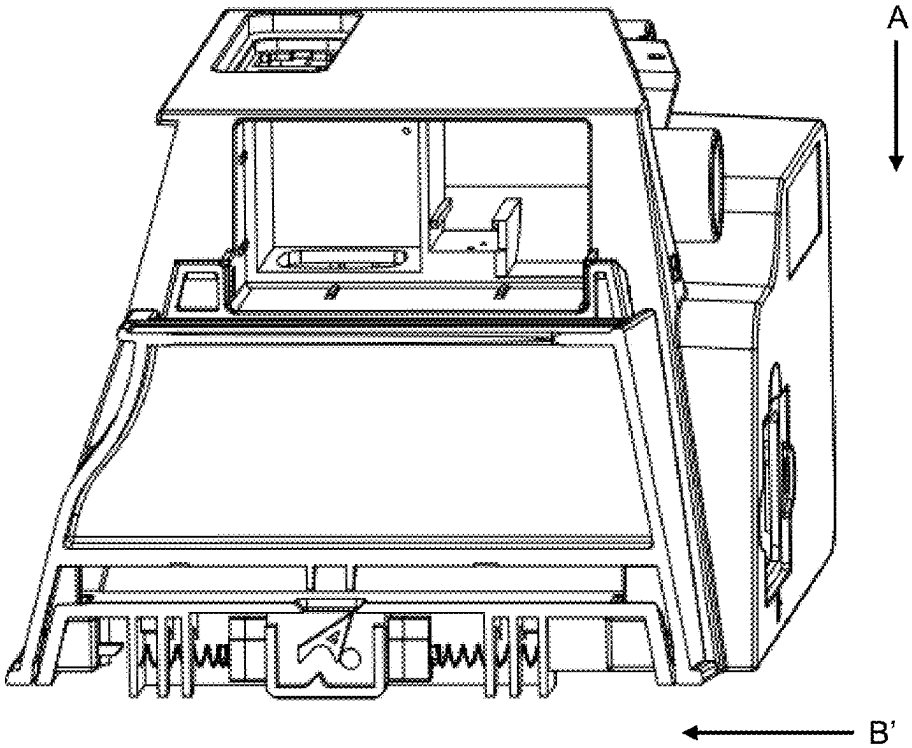

FIG. 21C

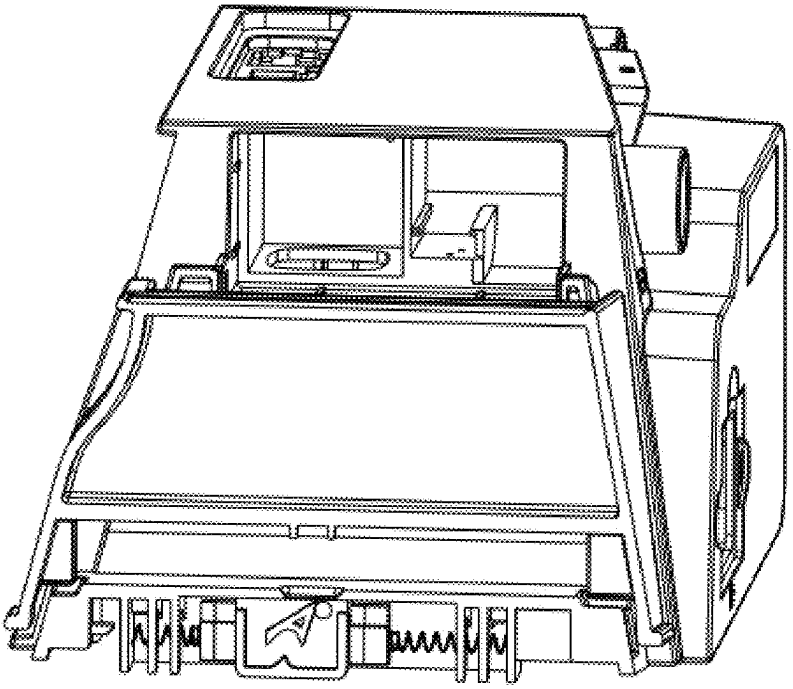

FIG. 21D

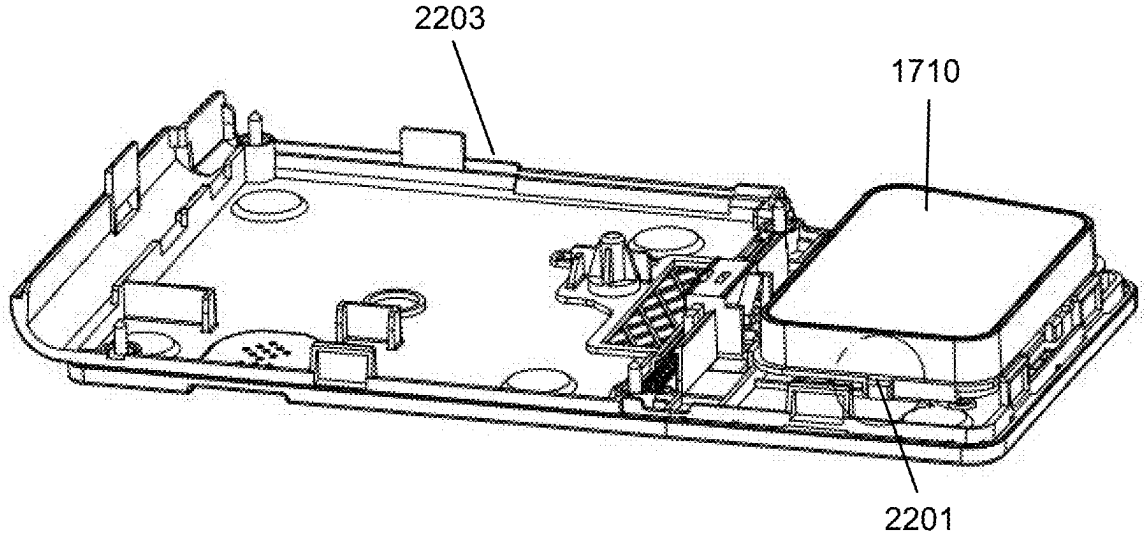

FIG. 22A

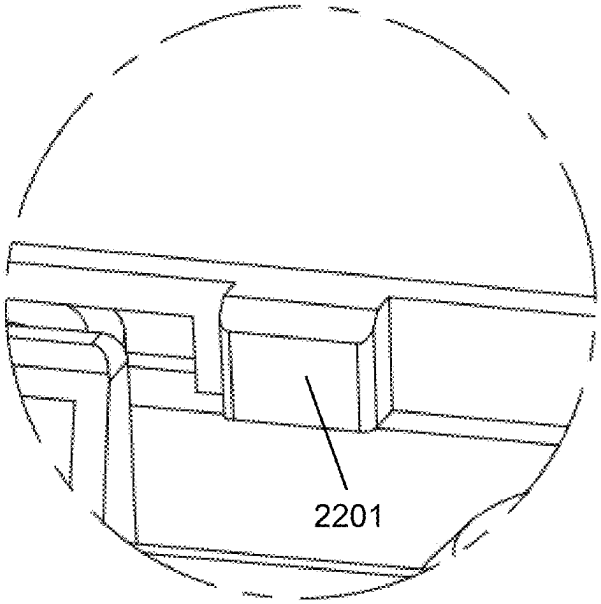

FIG. 22B

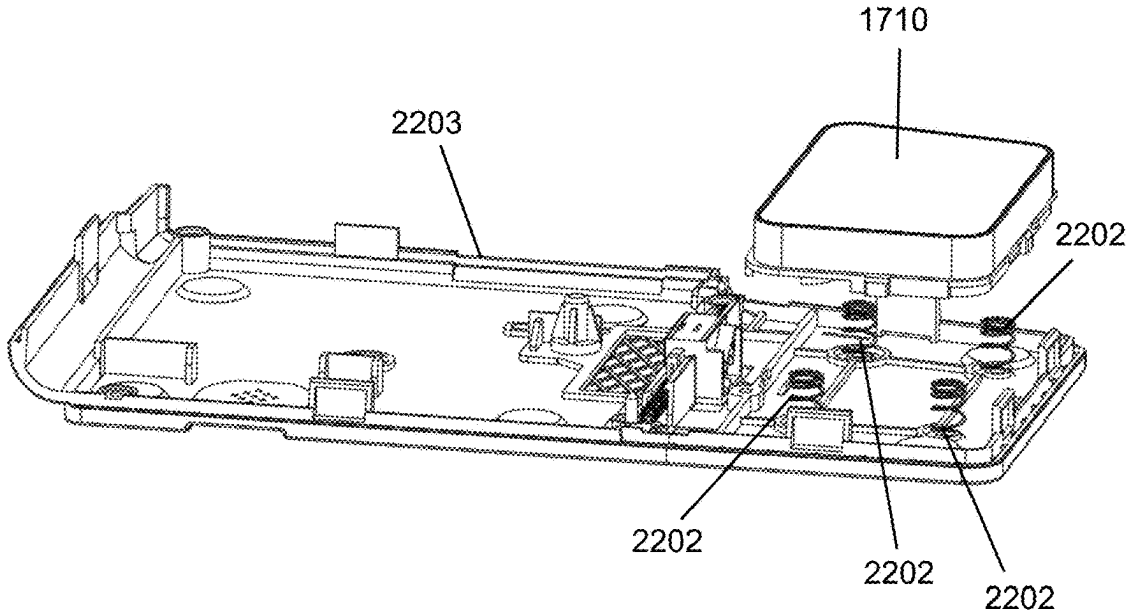

FIG. 22C

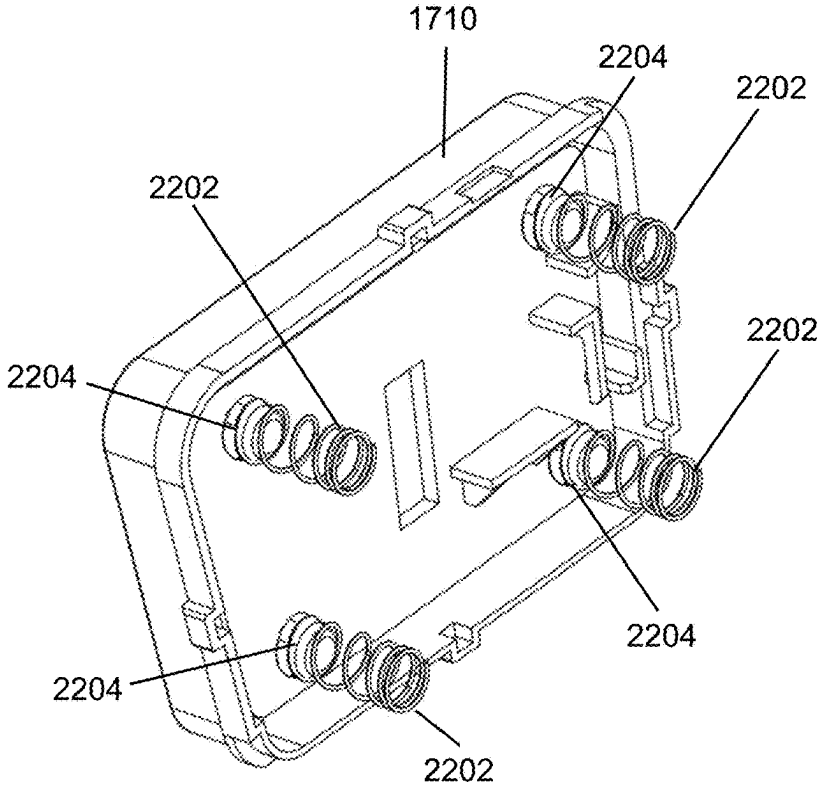

FIG. 22D

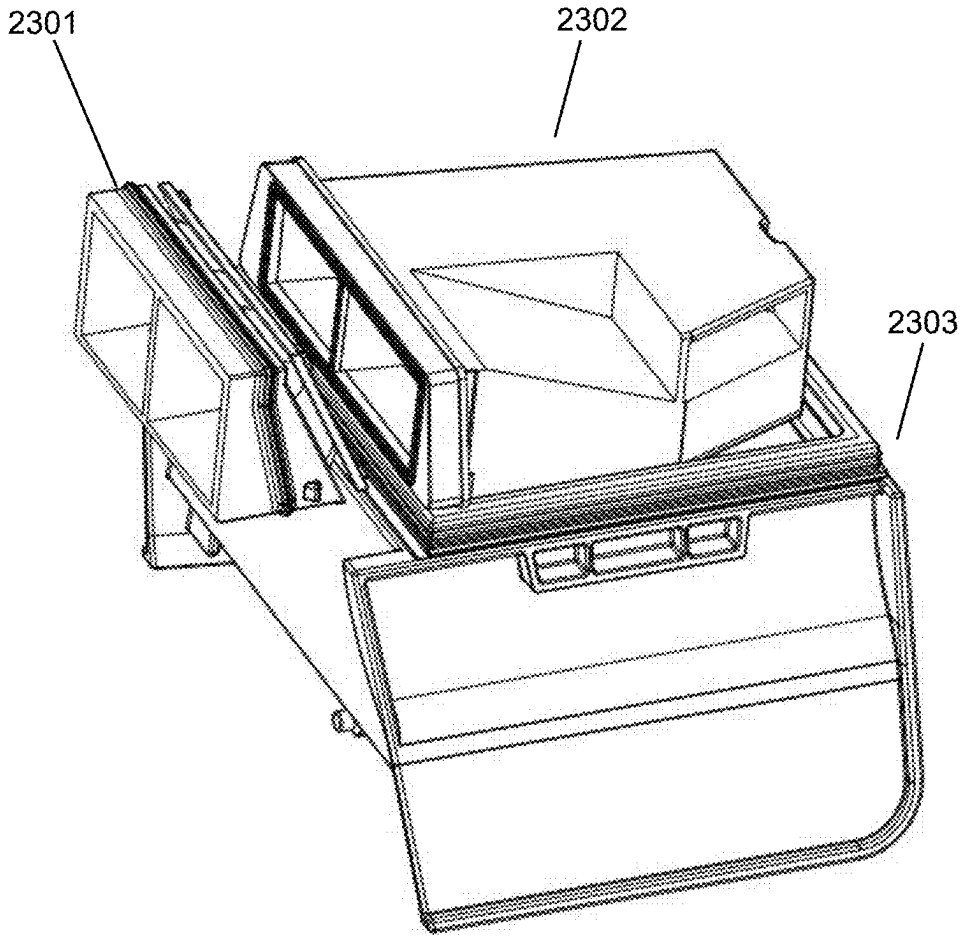

FIG. 23A

2301

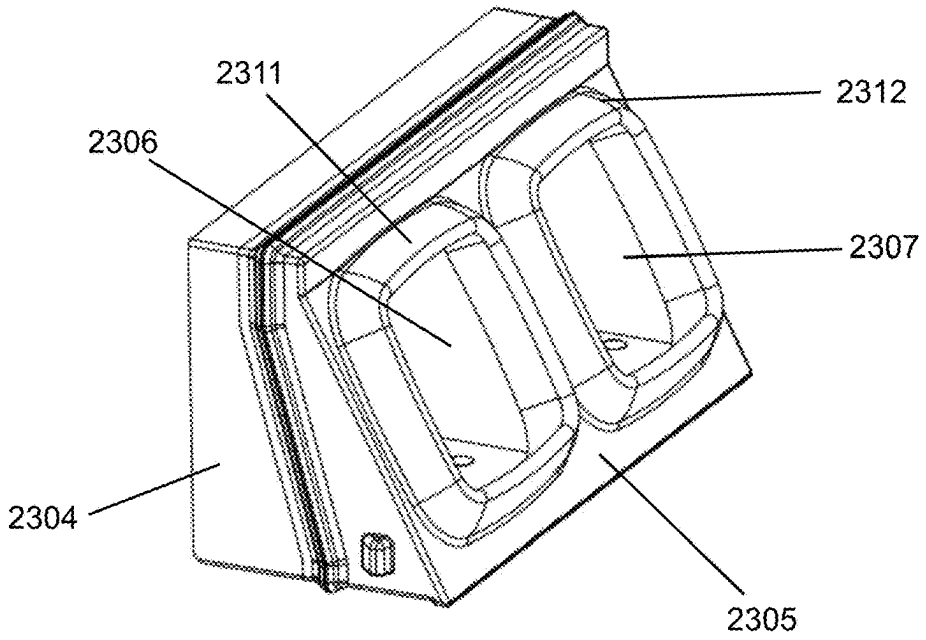

FIG. 23B

2302

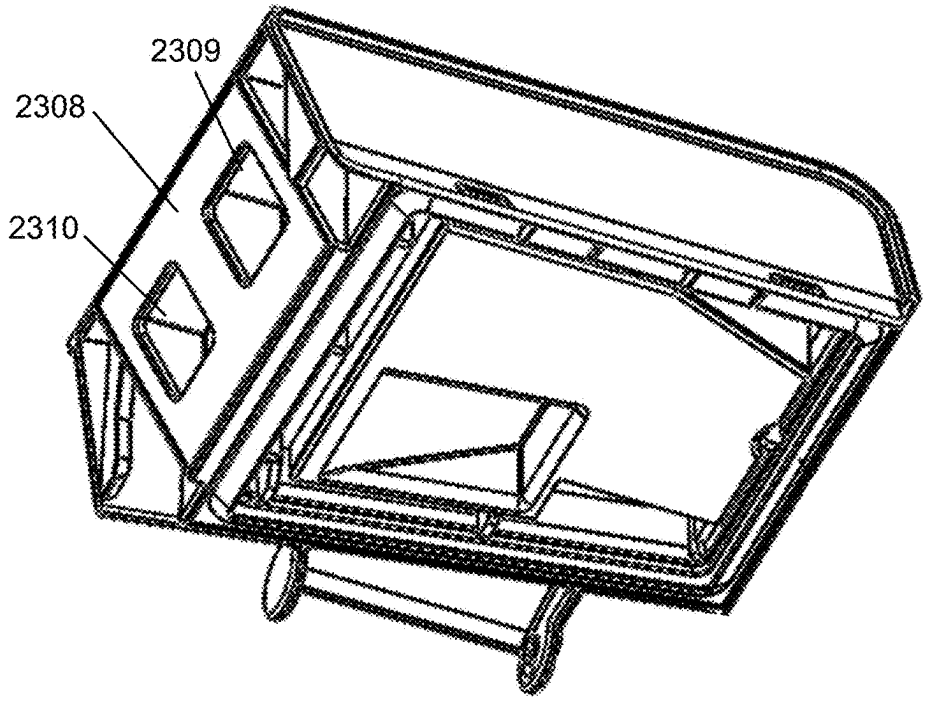

FIG. 23C

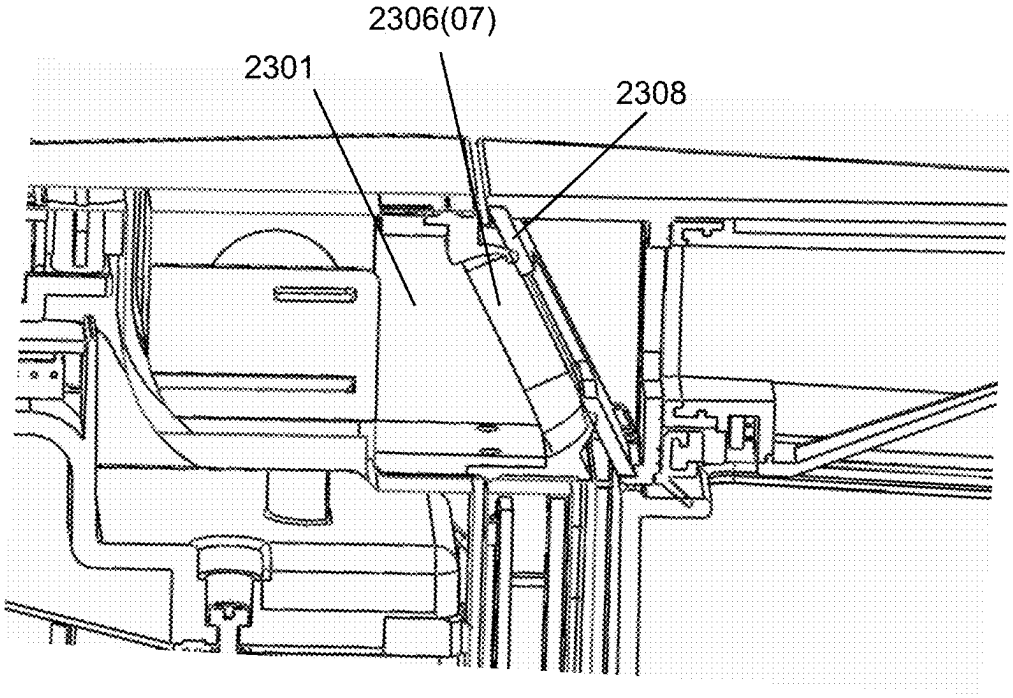

FIG. 23D

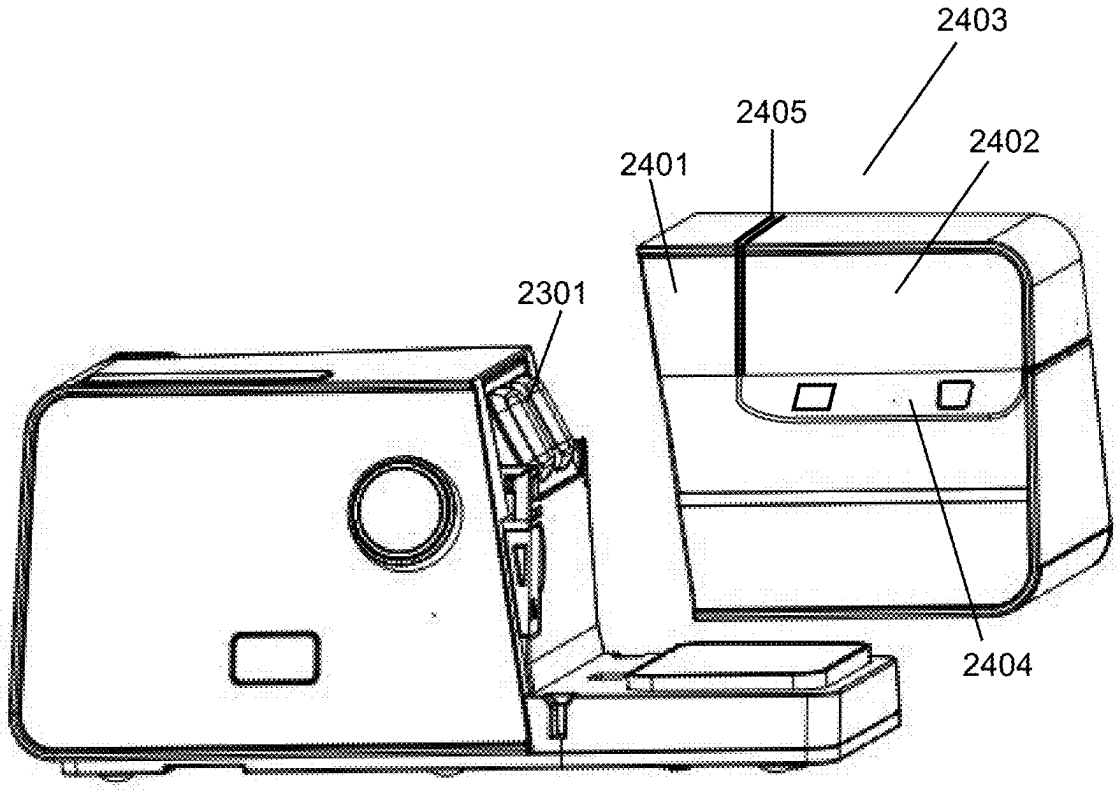

FIG. 24

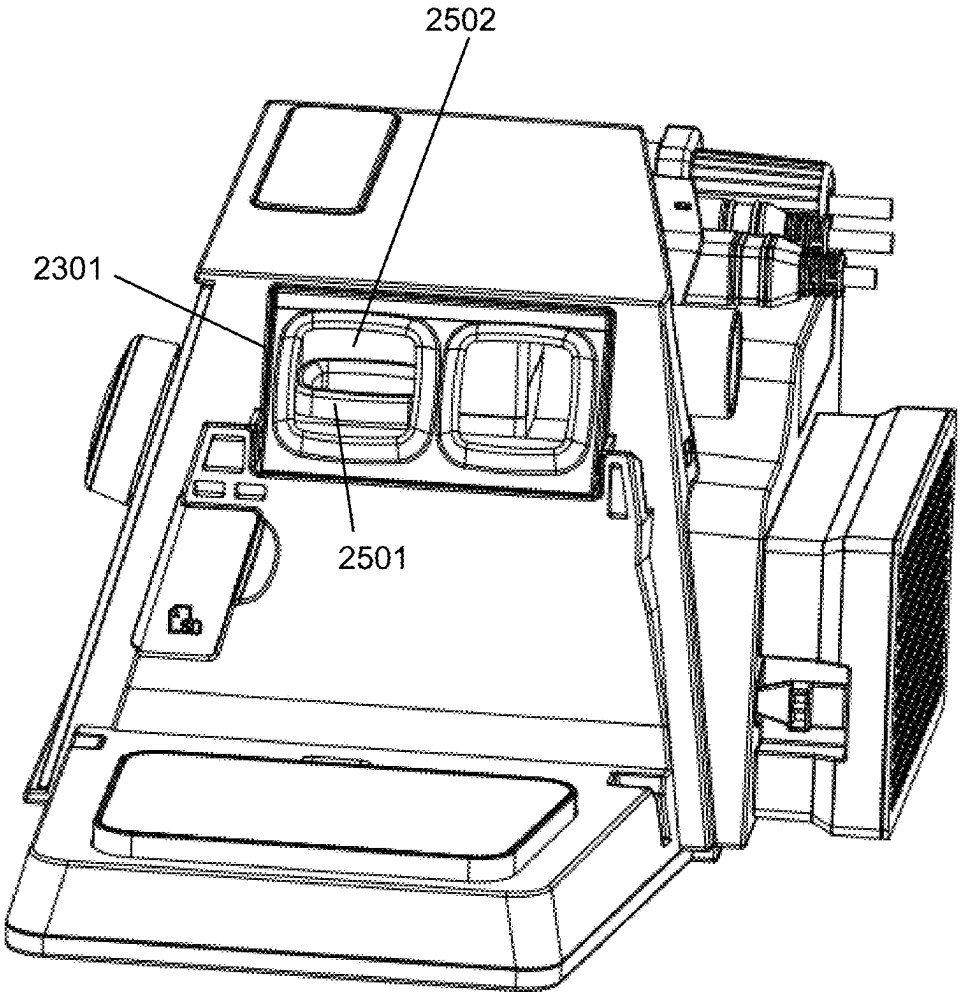

FIG. 25

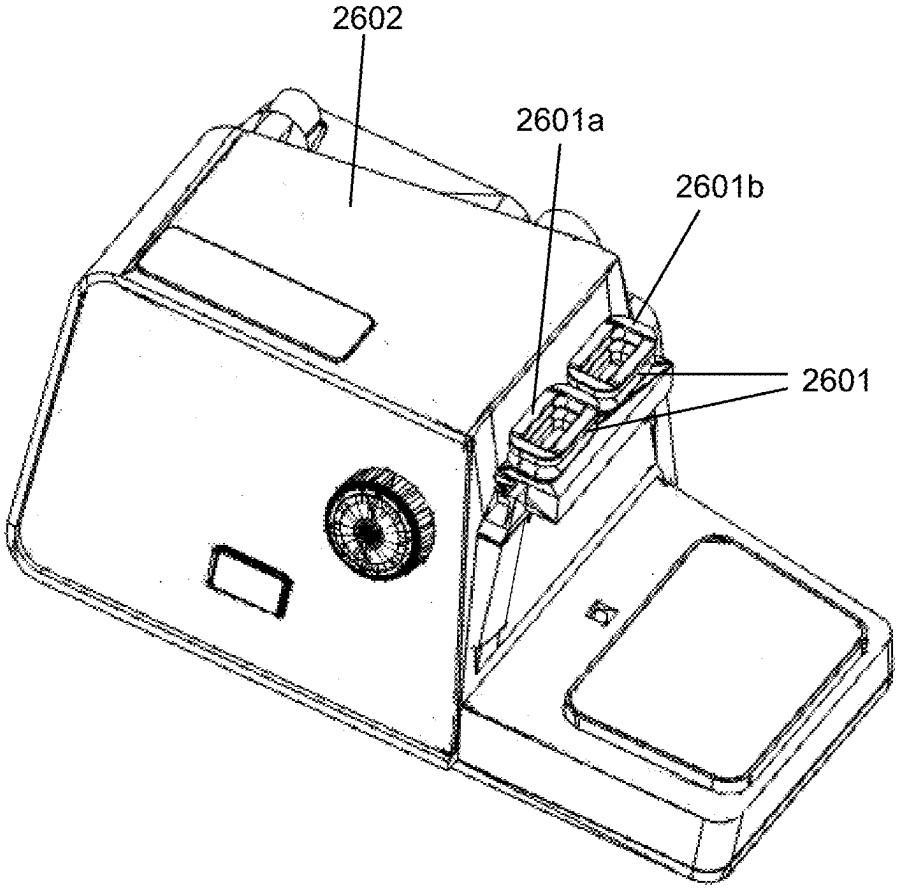

FIG. 26A

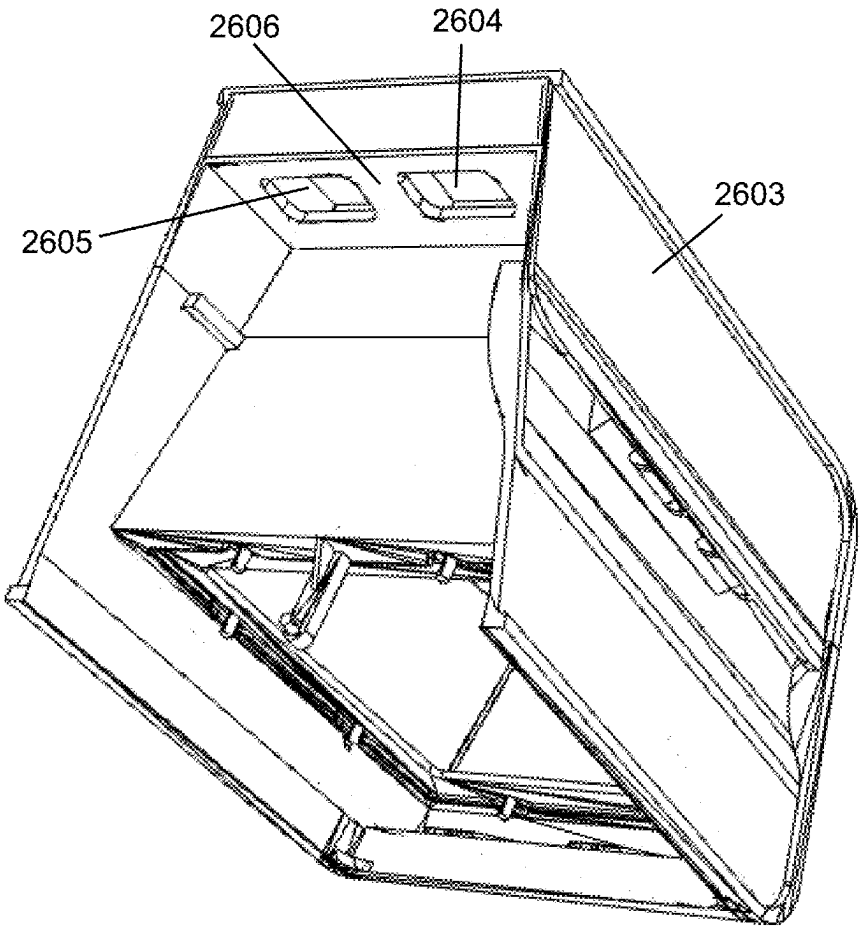

FIG. 26B

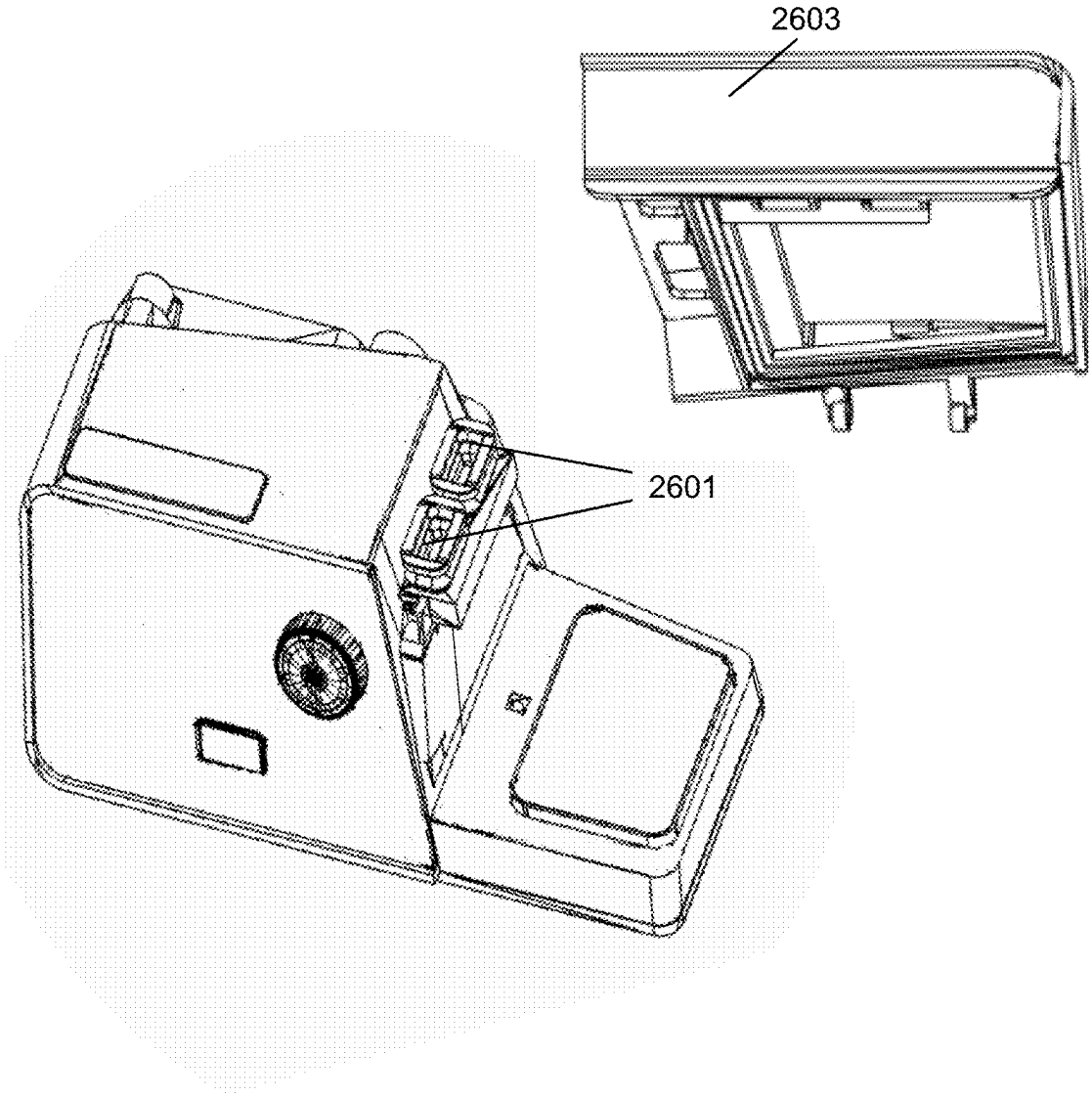

FIG. 26C

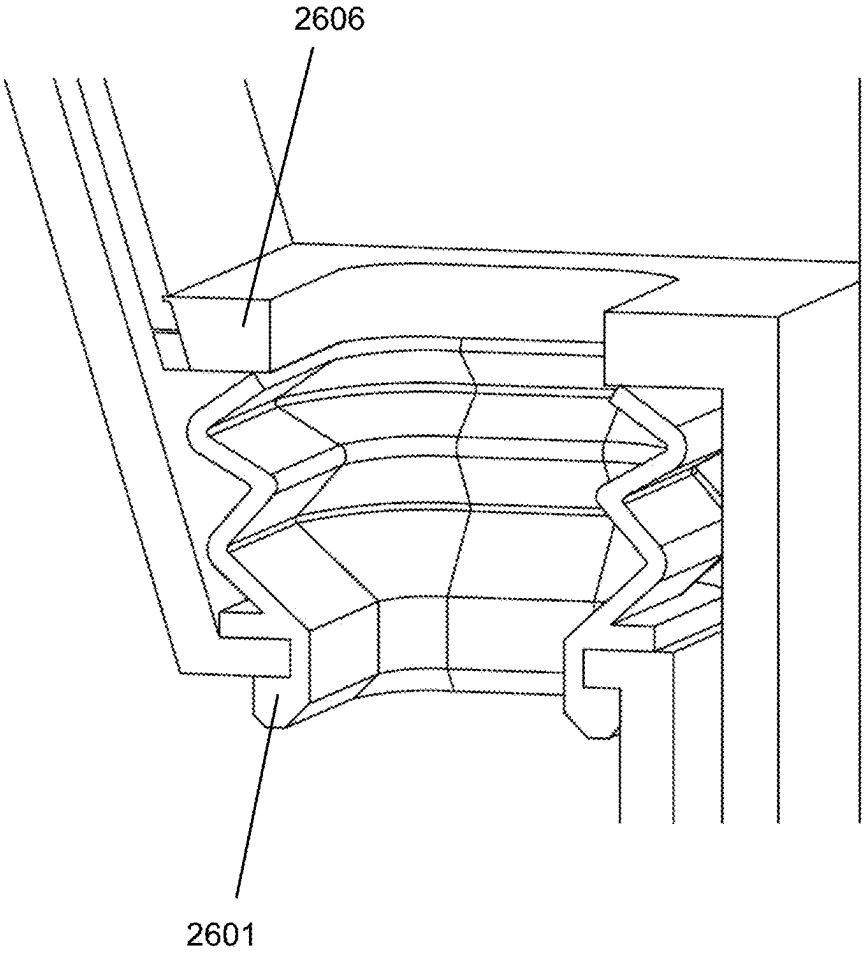

FIG. 27

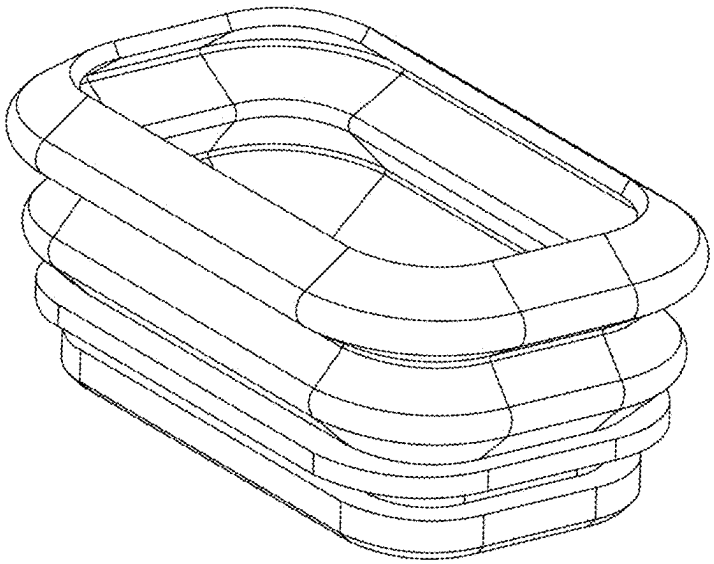

FIG. 28A

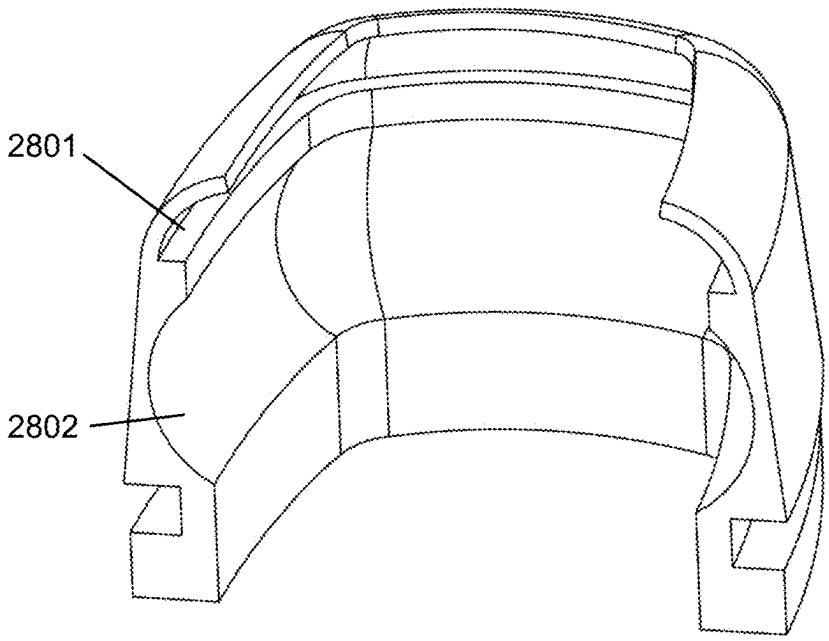

FIG. 28B

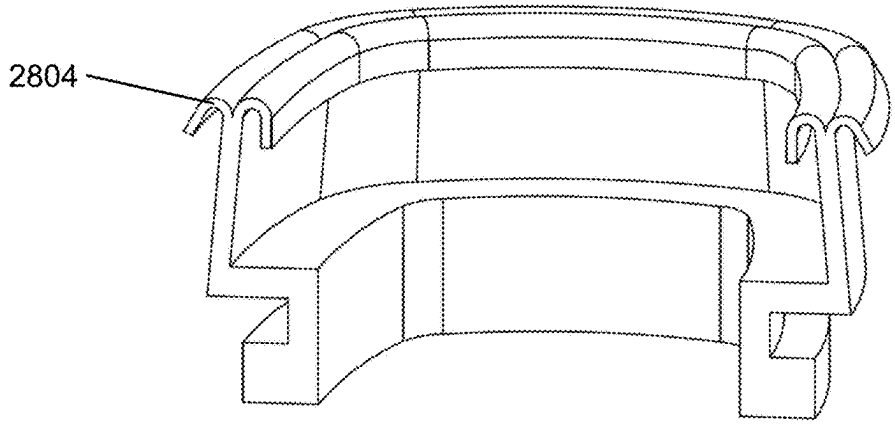

FIG. 28C

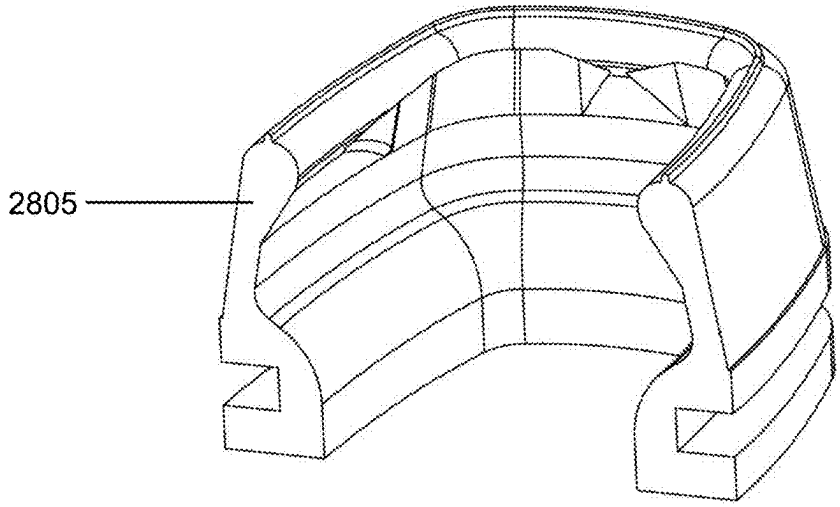

FIG. 28D

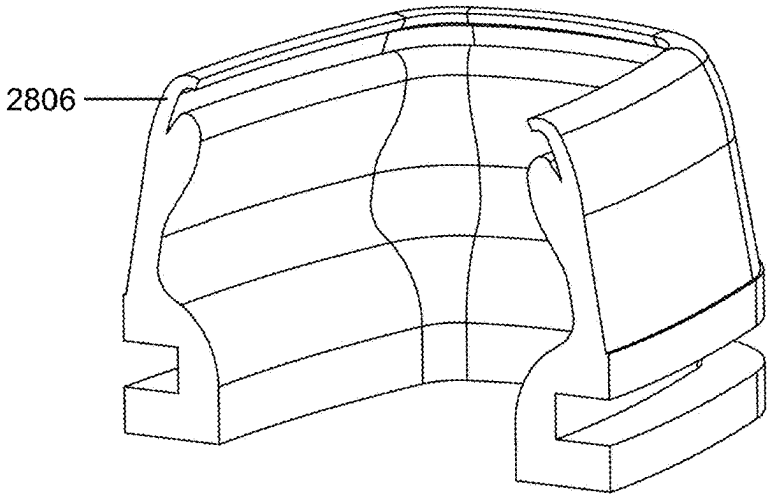

FIG. 28E

2900

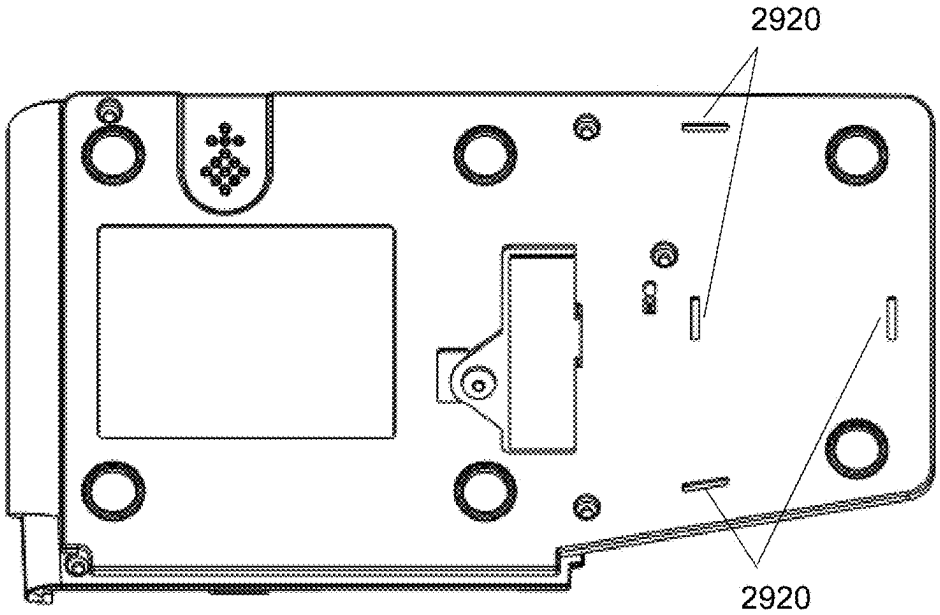

FIG. 29A

2900

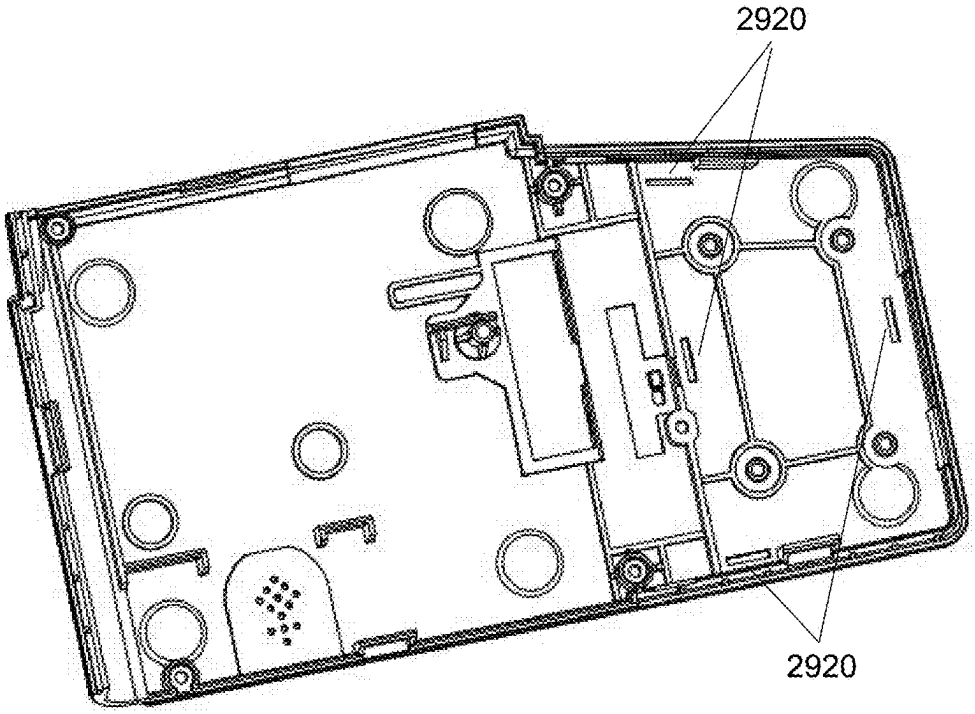

FIG. 29B

2900

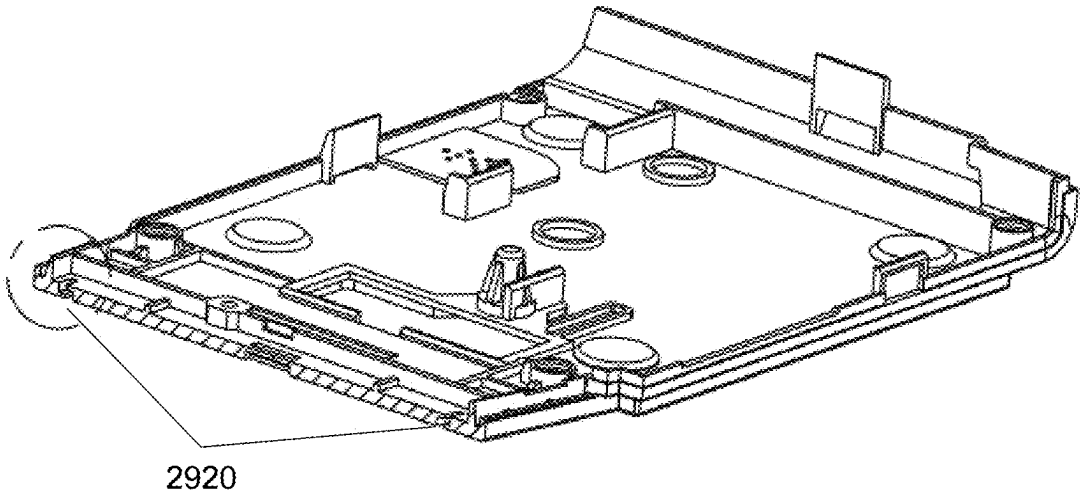

FIG. 29C

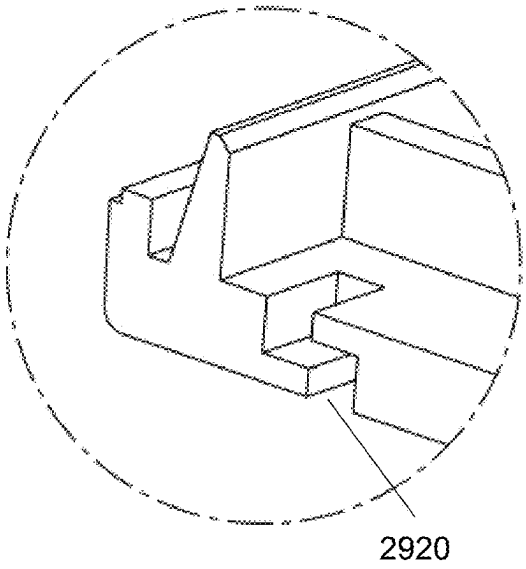

FIG. 29D

3000

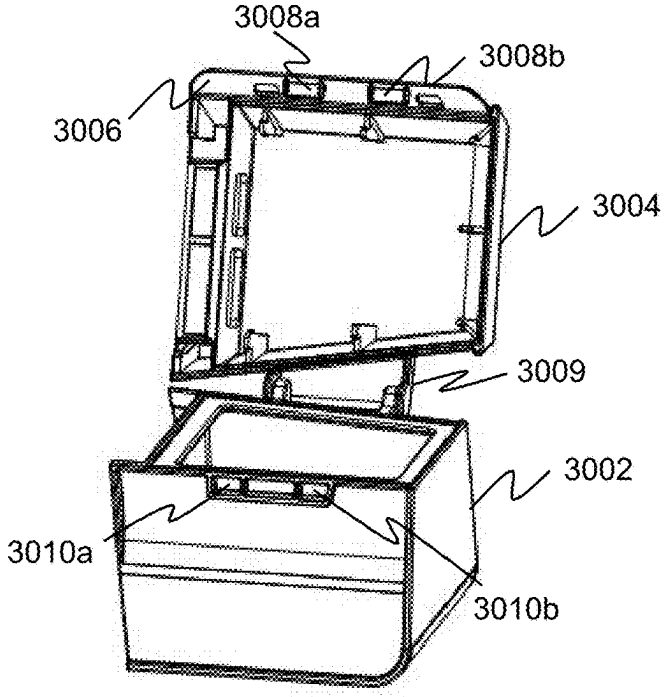

FIG. 30A

3000

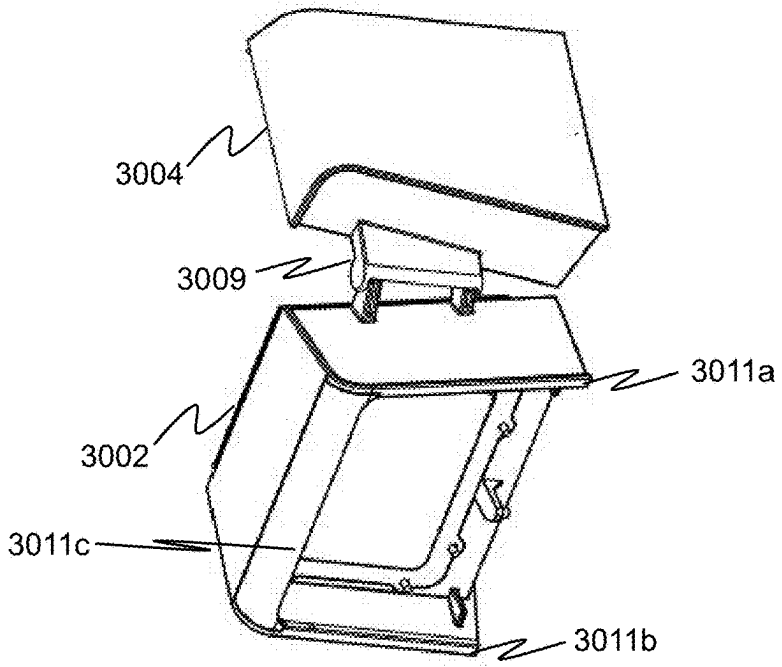

FIG. 30B

3004

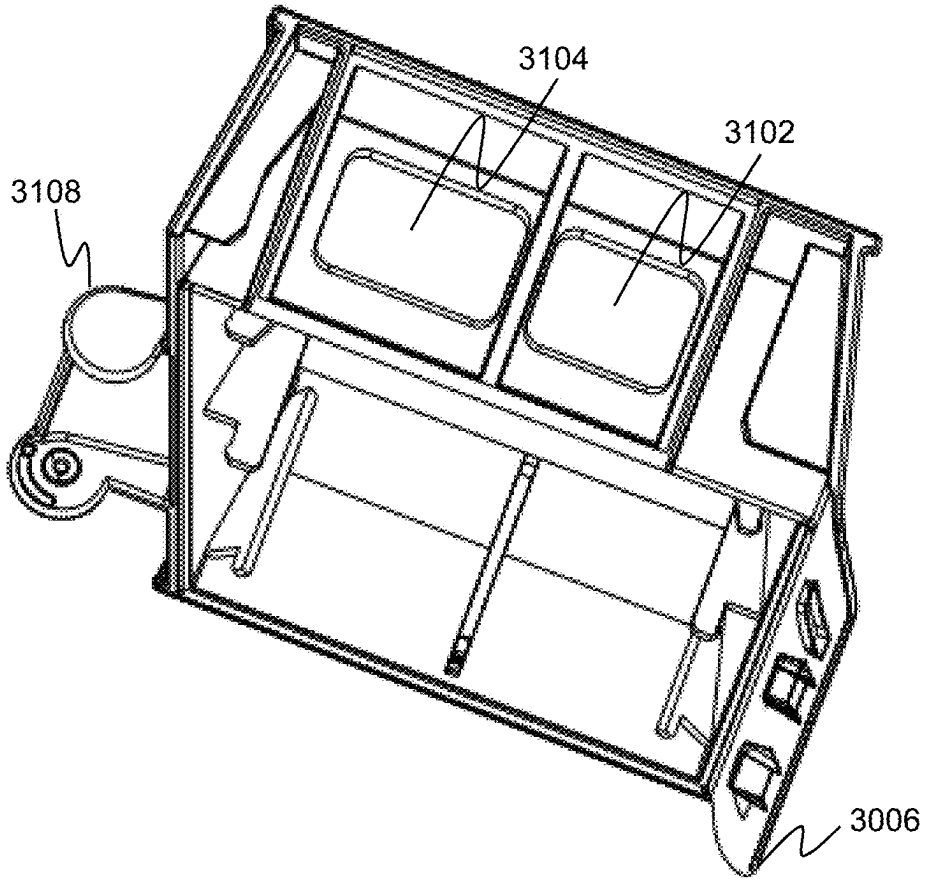

FIG. 31

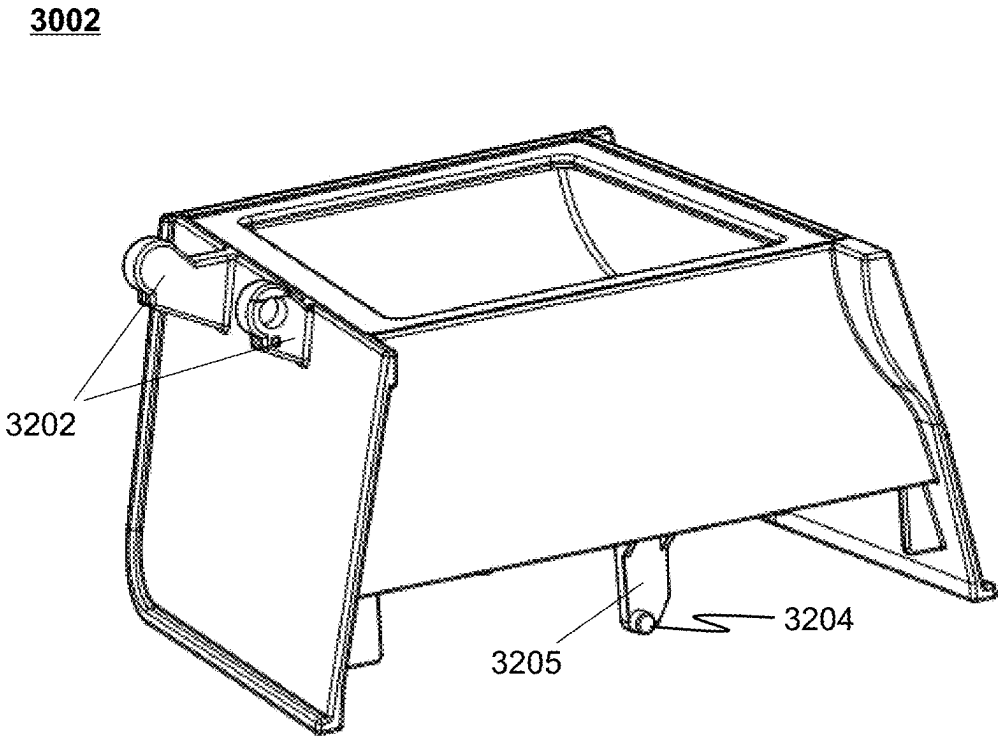

FIG. 32A

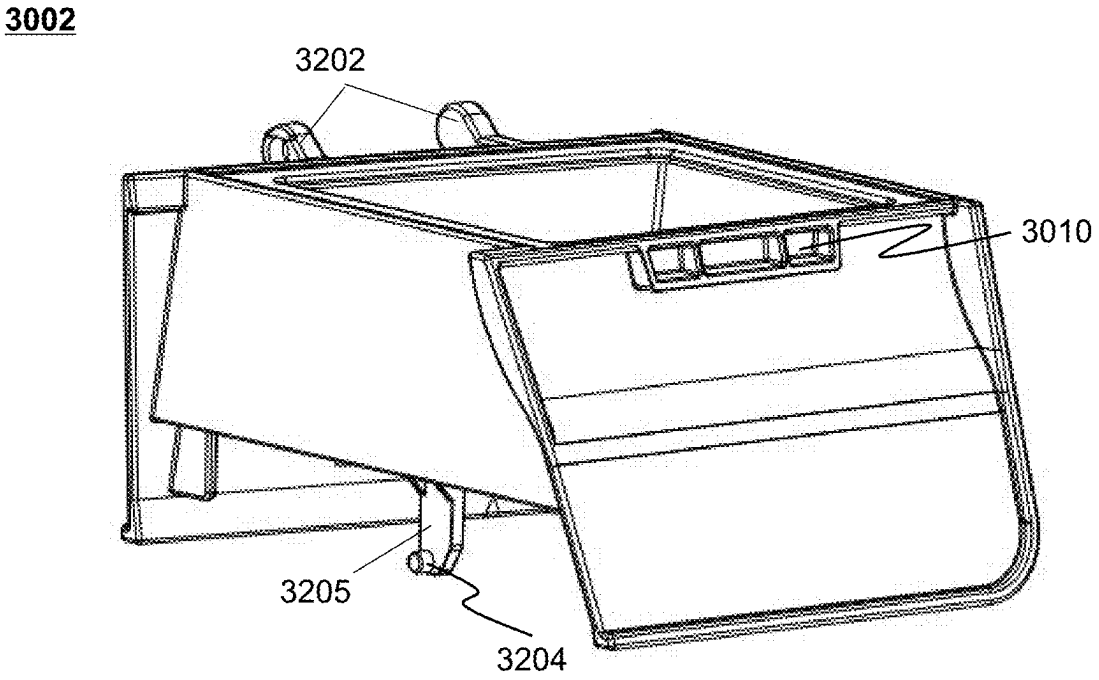

FIG. 32B

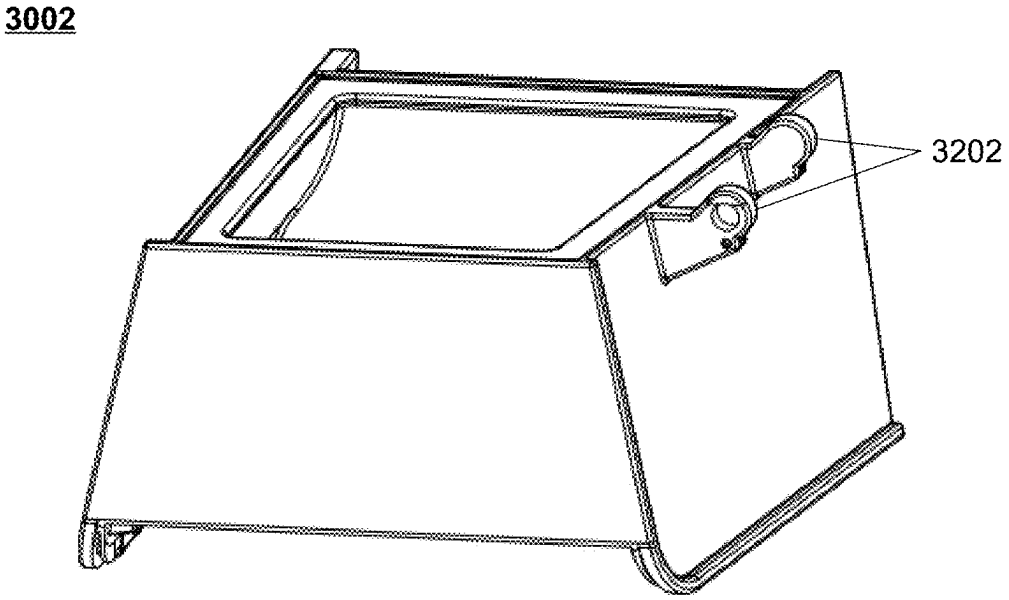

FIG. 32C

3300

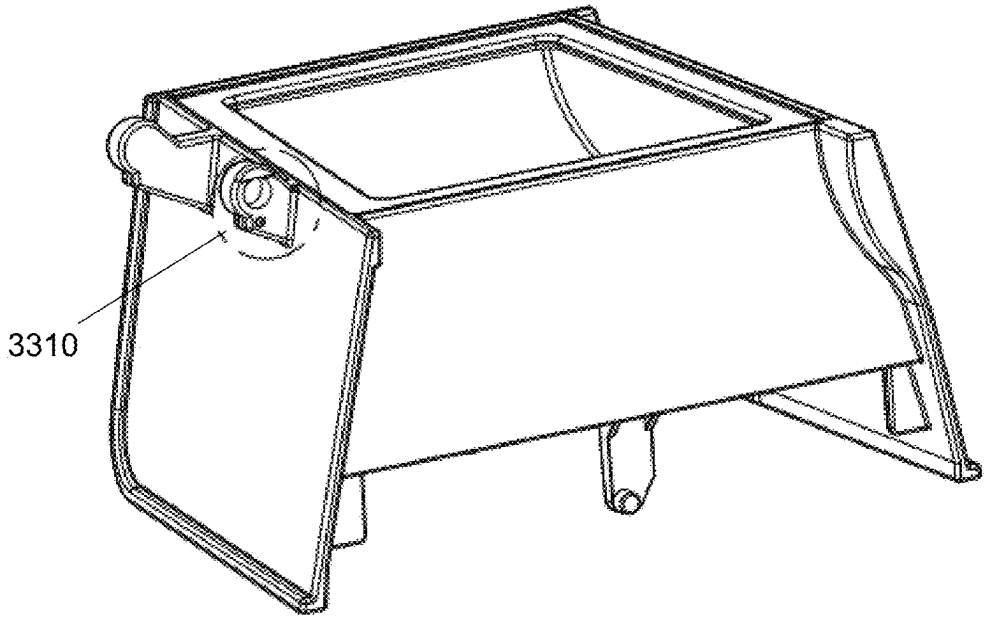

FIG. 33A

3310

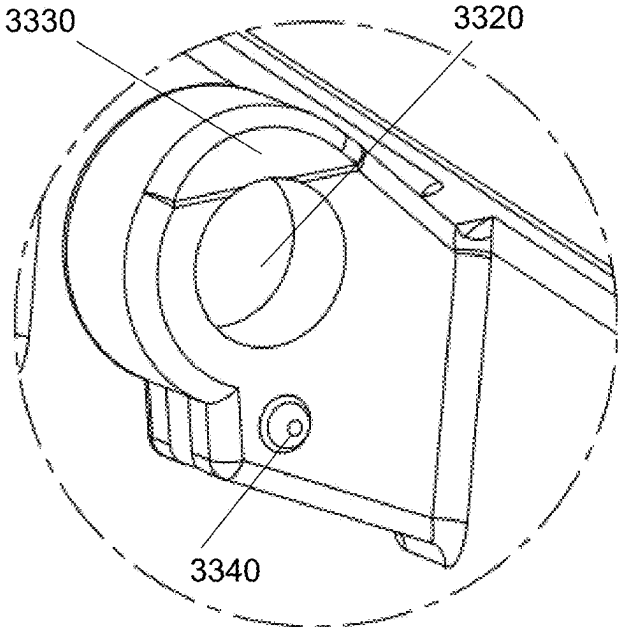

FIG. 33B

3400

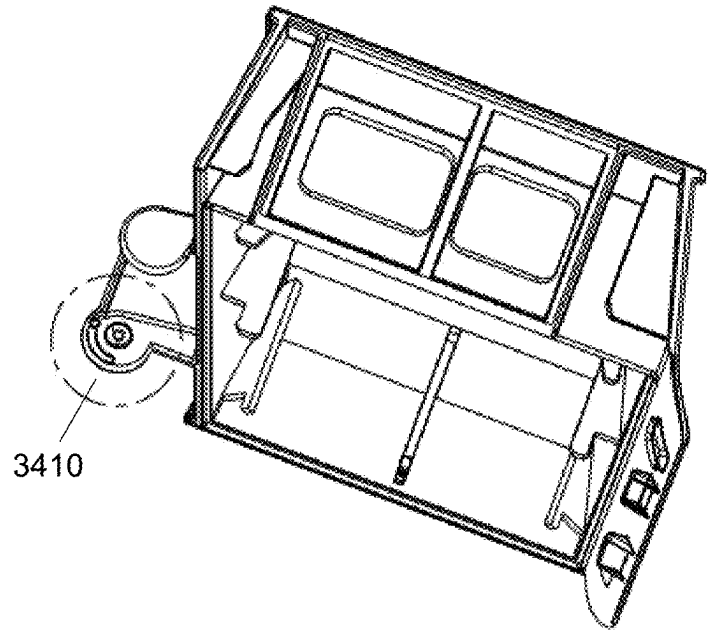

FIG. 34A

3410

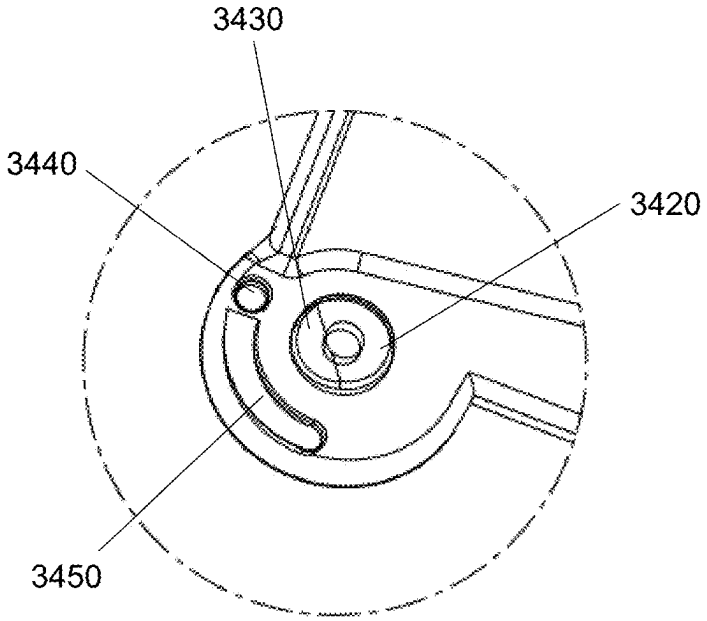

FIG. 34B

3410

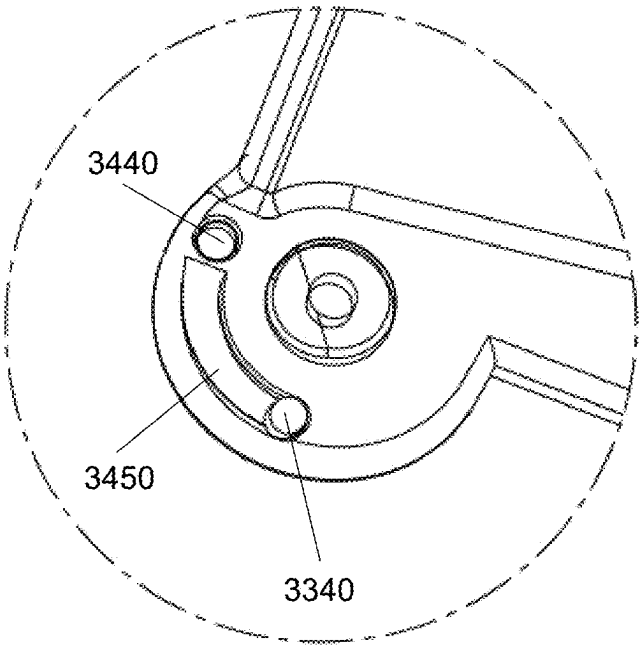

FIG. 35A

3410

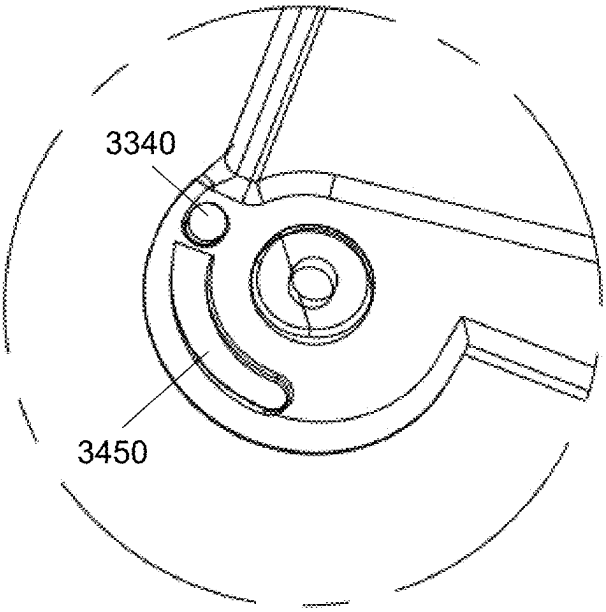

FIG. 35B

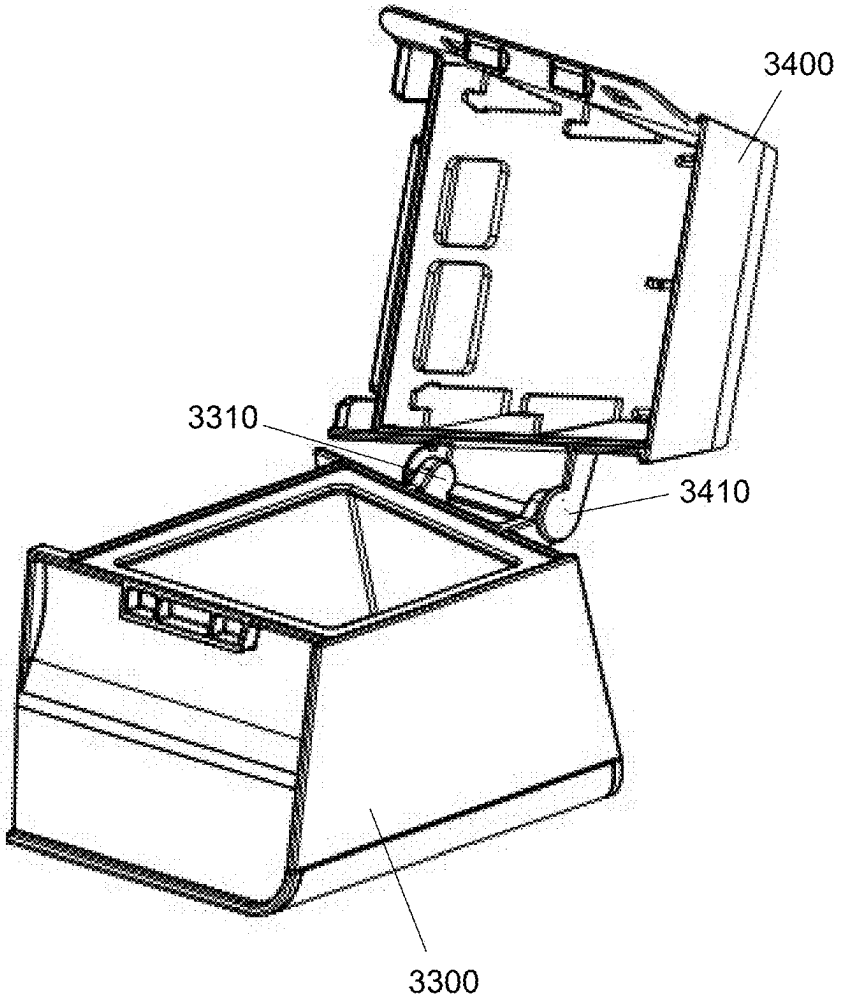

FIG. 36A

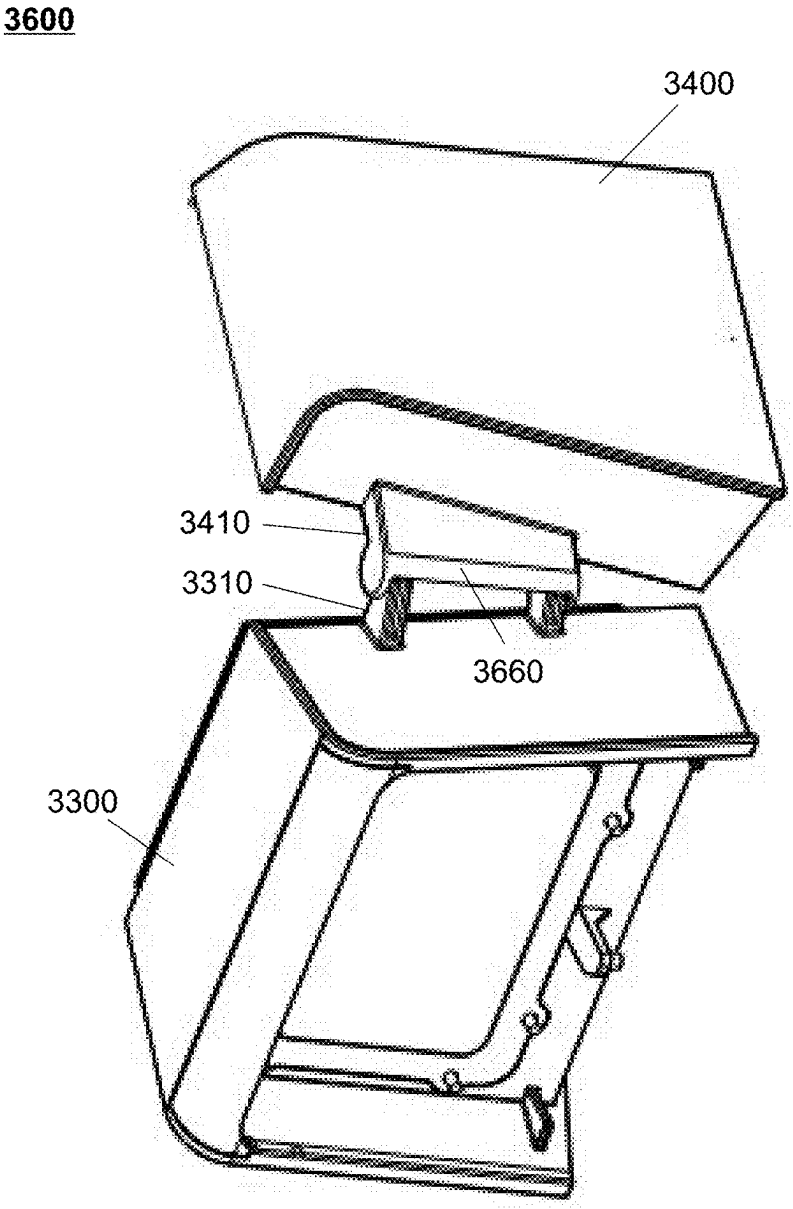

FIG. 36B

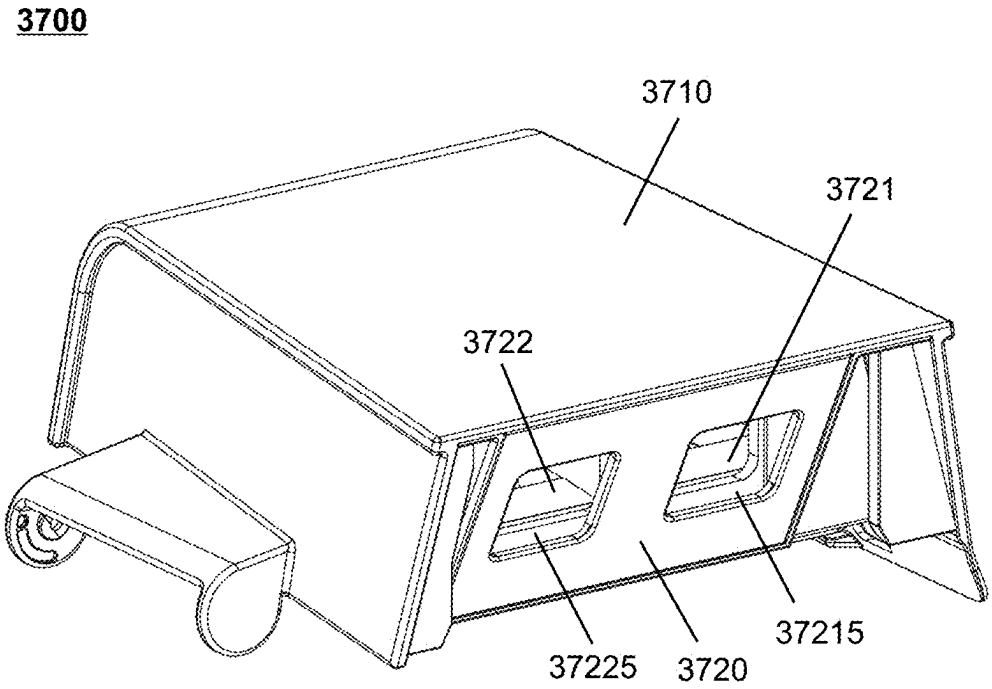

FIG. 37A

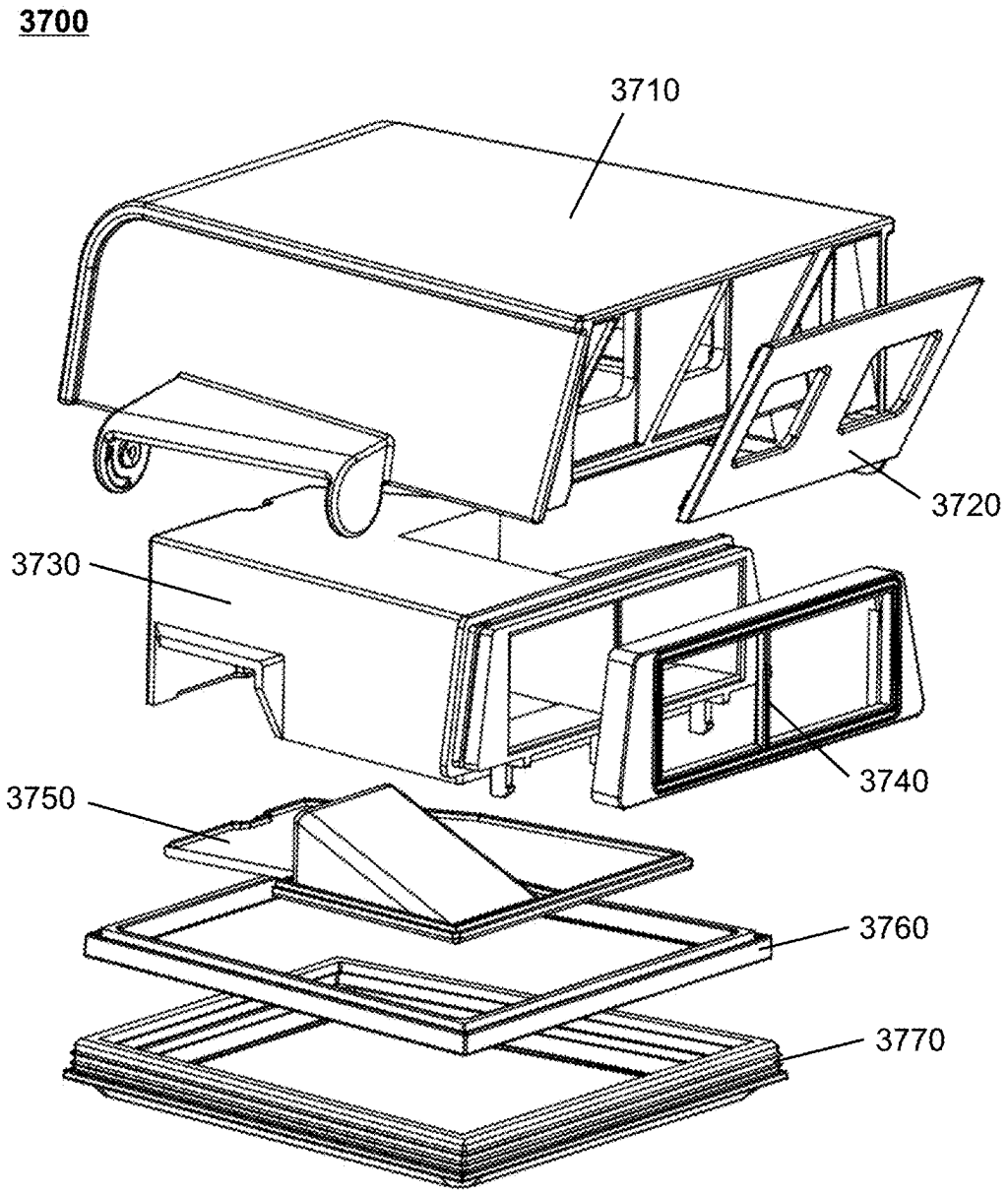

FIG. 37B

3710

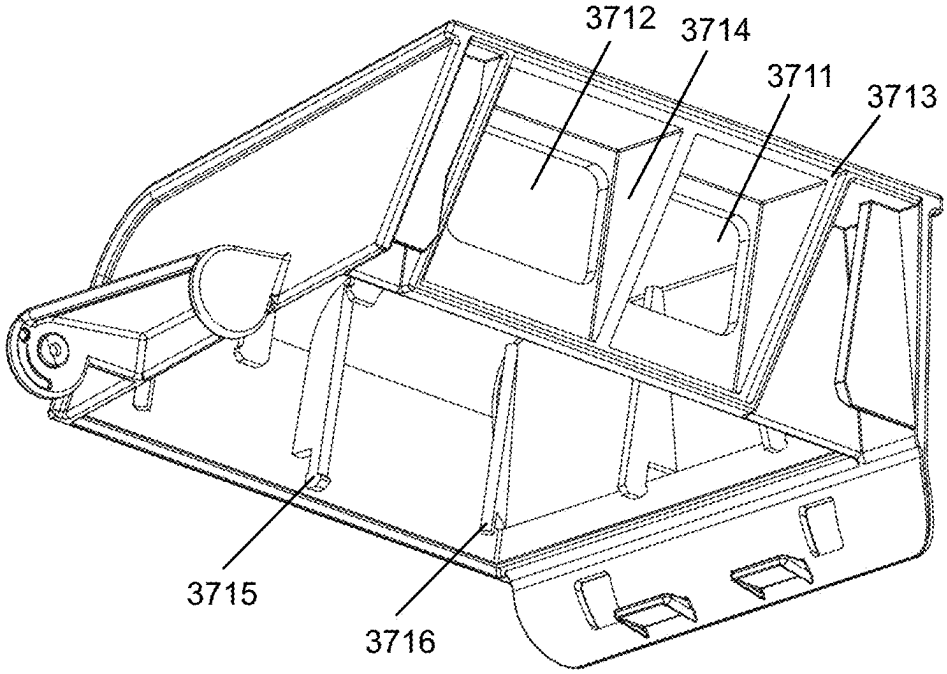

FIG. 38

3730

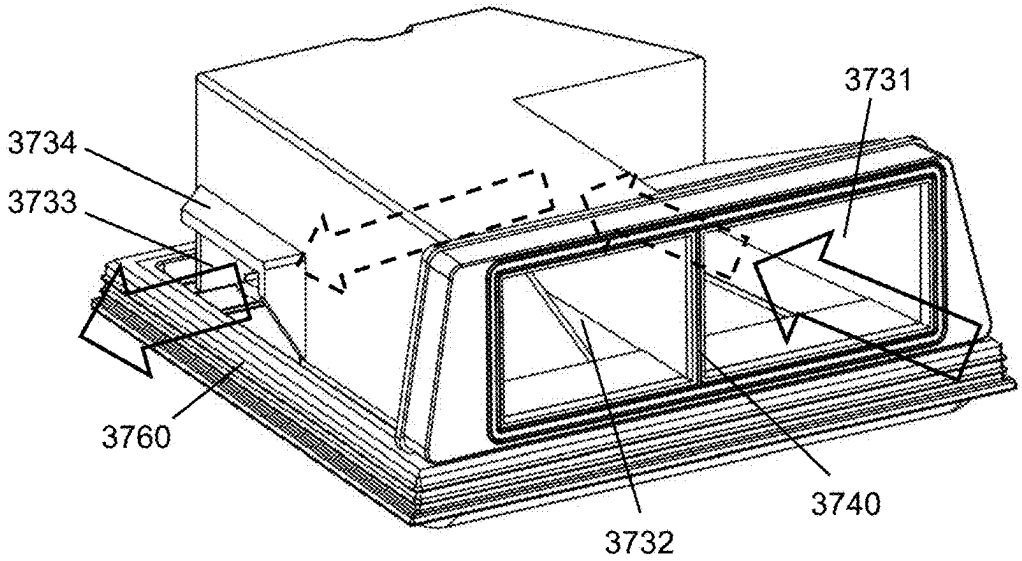

FIG. 39A

3730

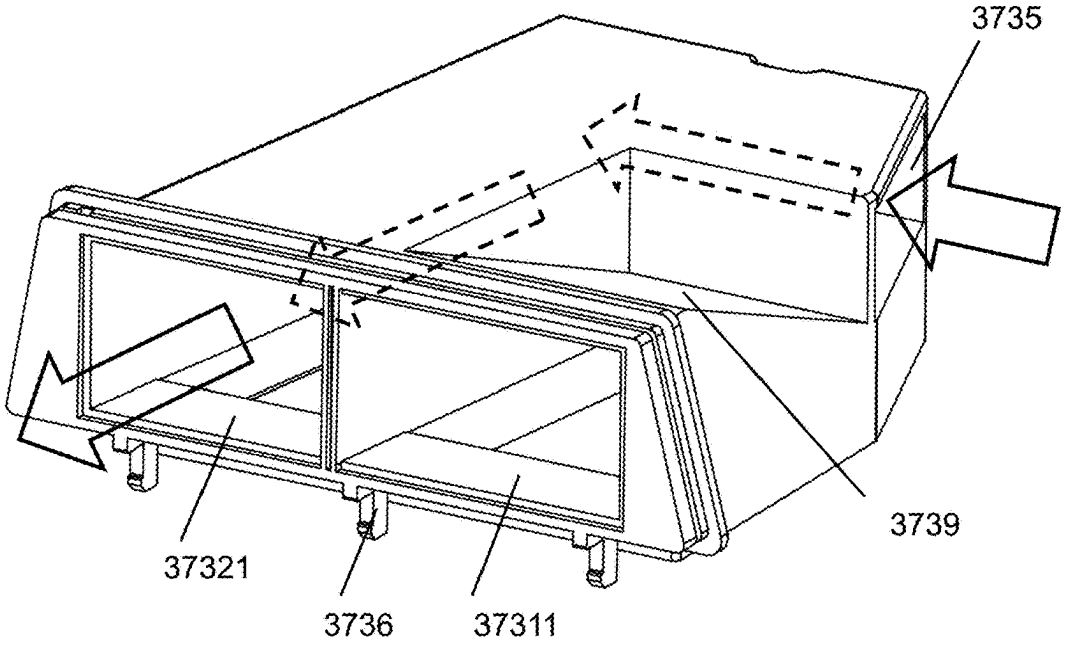

FIG. 39B

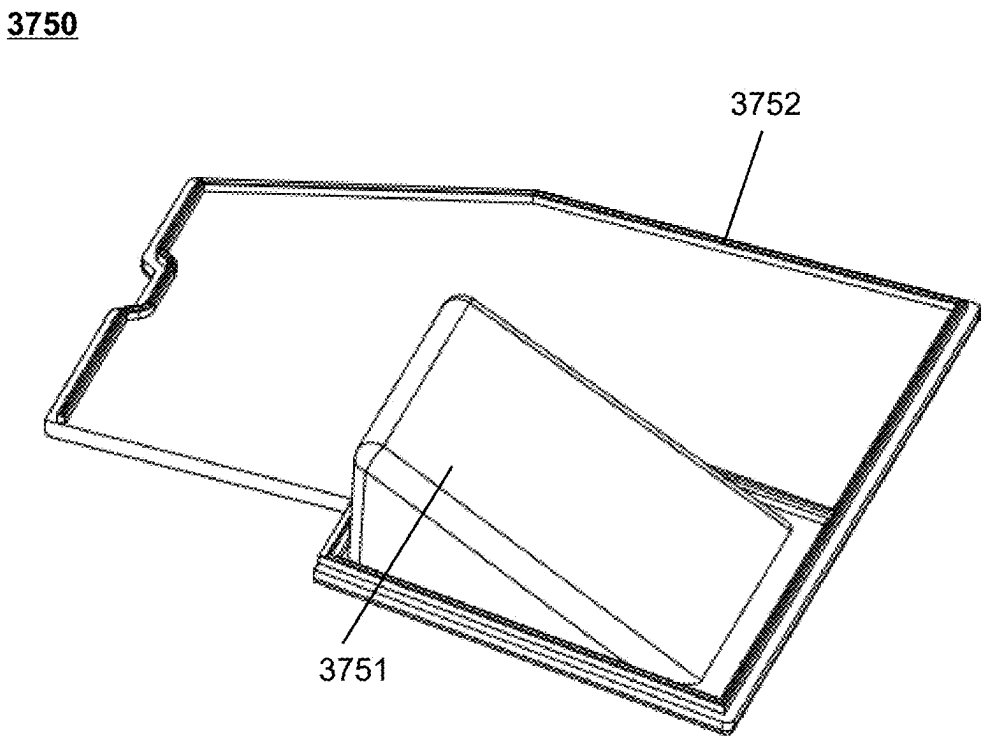

FIG. 40

3730

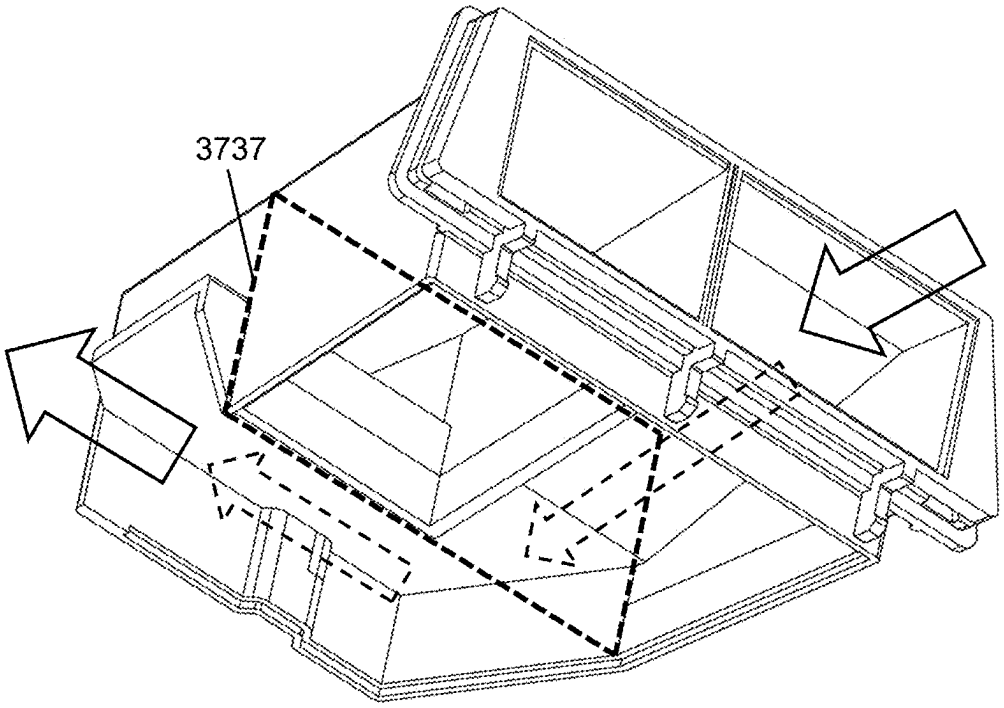

FIG. 41A

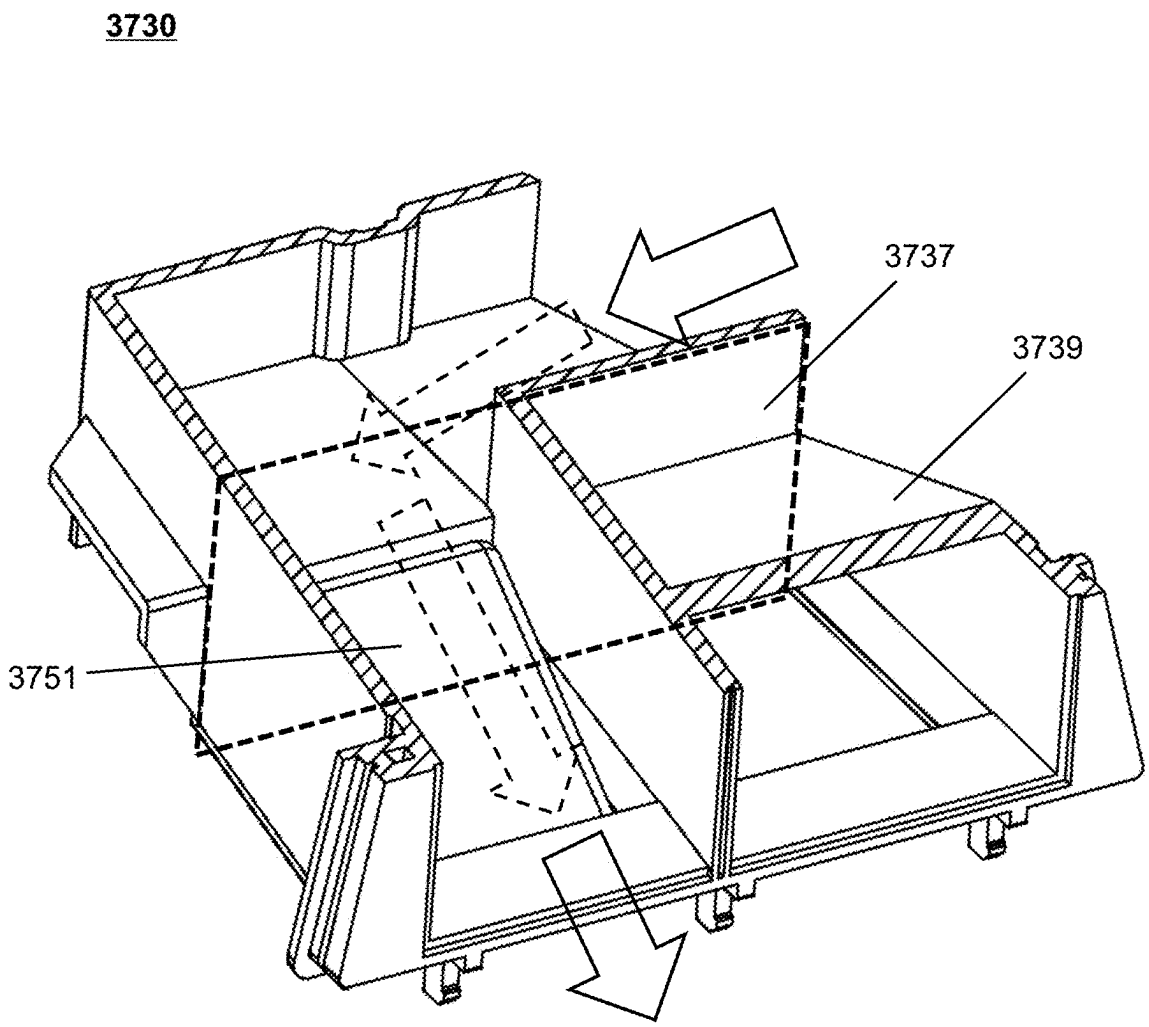

FIG. 41B

4200

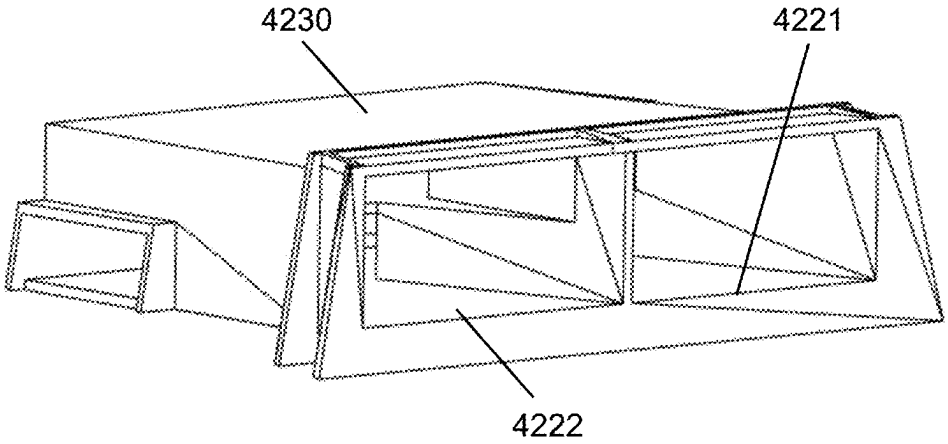

FIG. 42A

4200

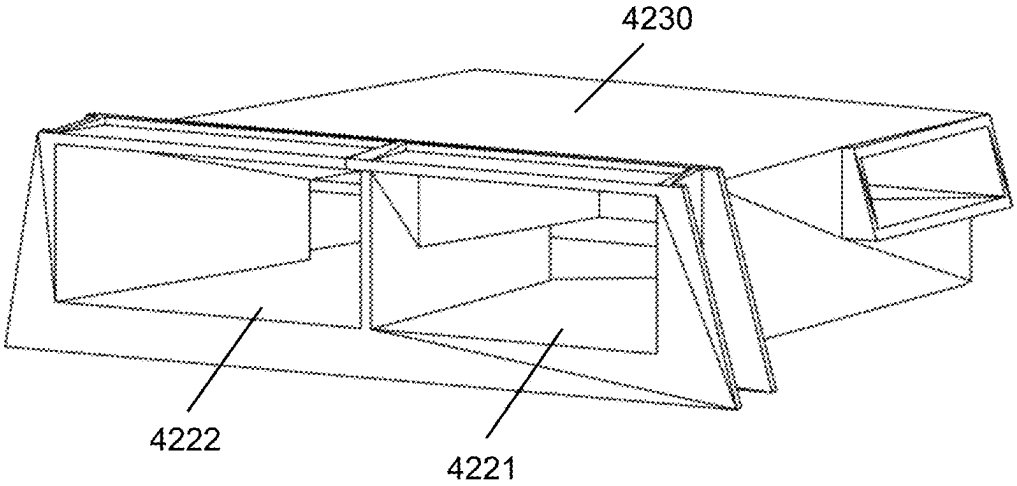

FIG. 42B

4300

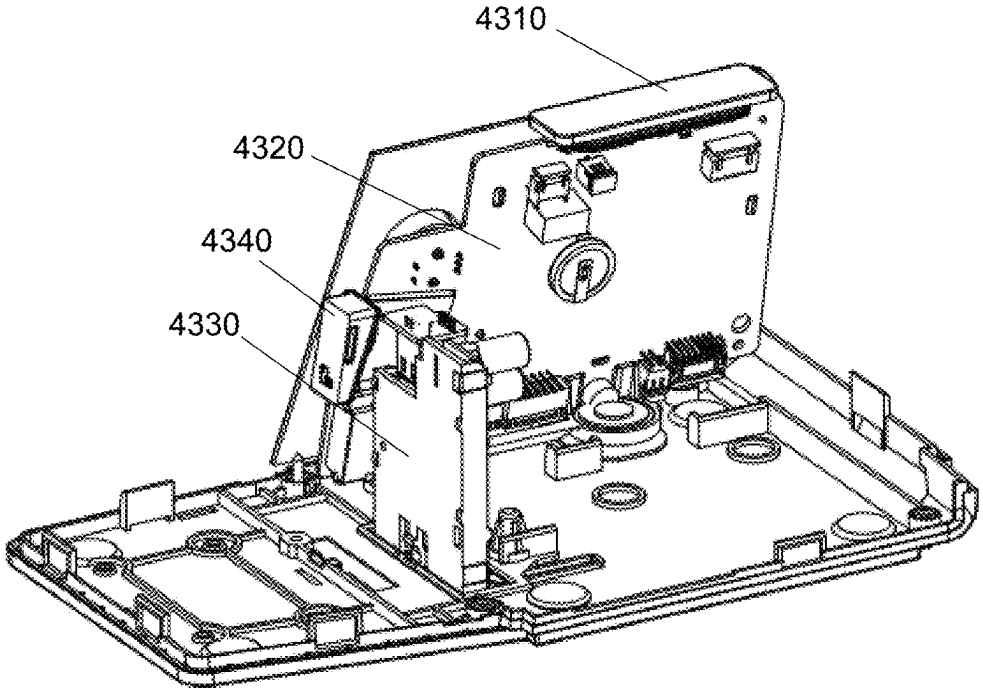

FIG. 43A

4300

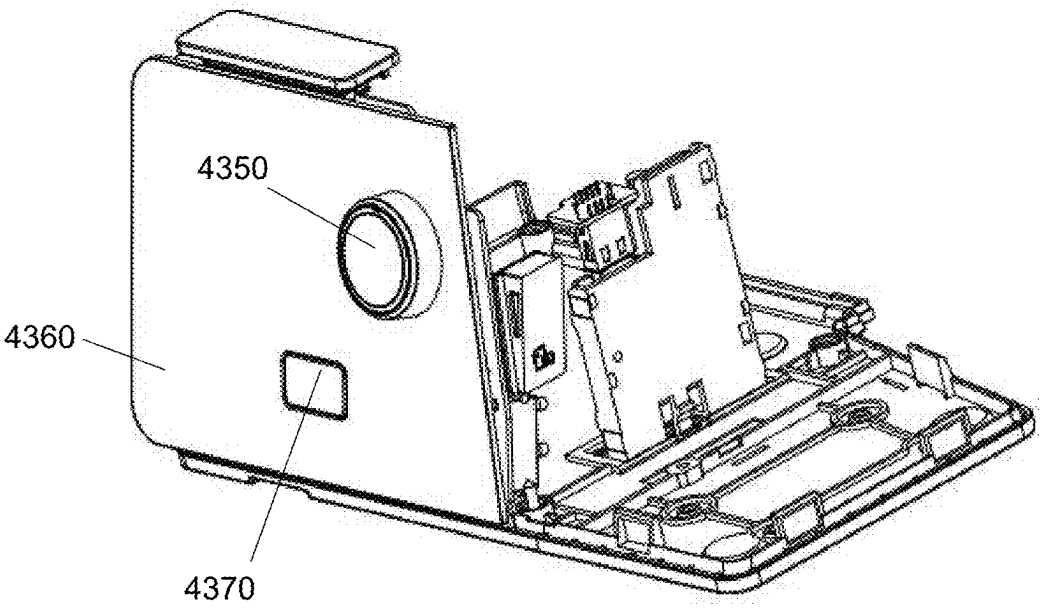

FIG. 43B

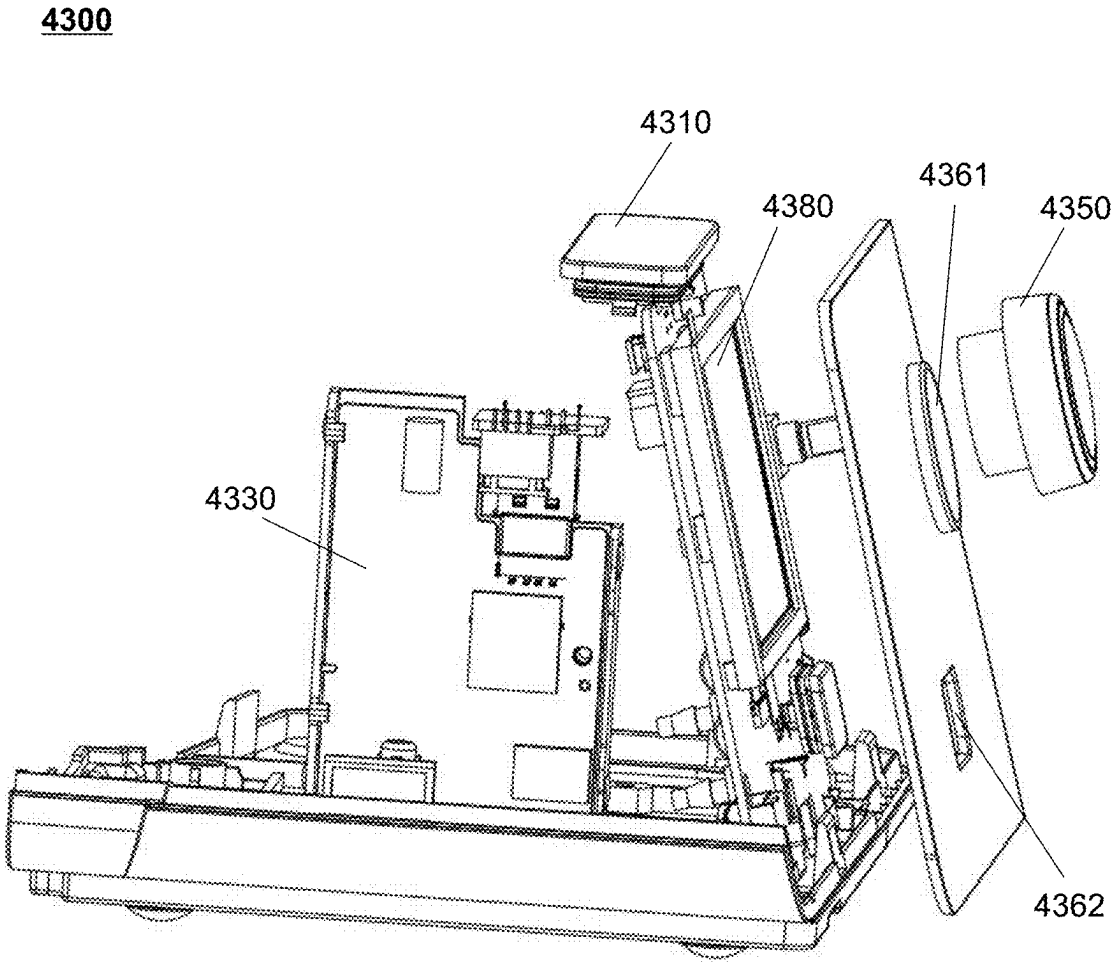

FIG. 43C

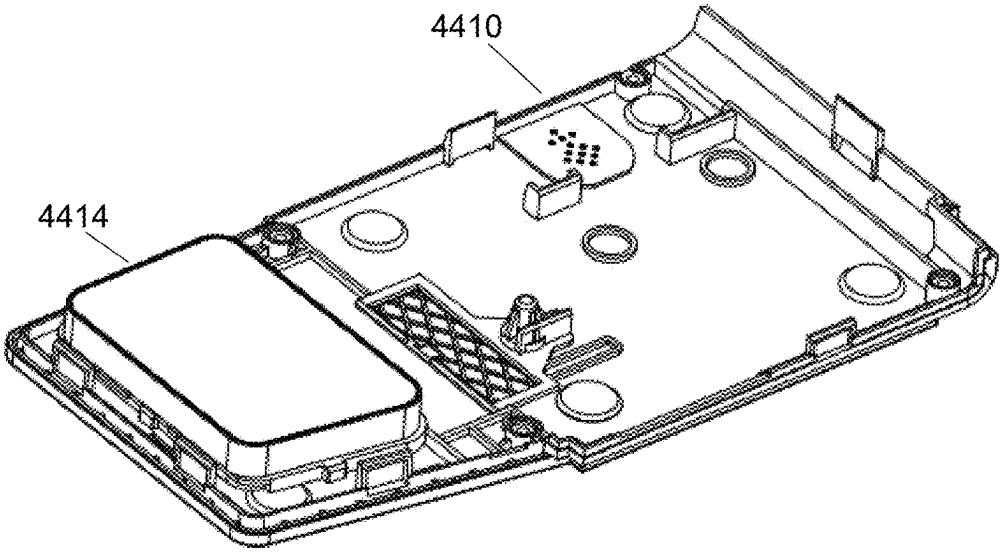

FIG. 44A

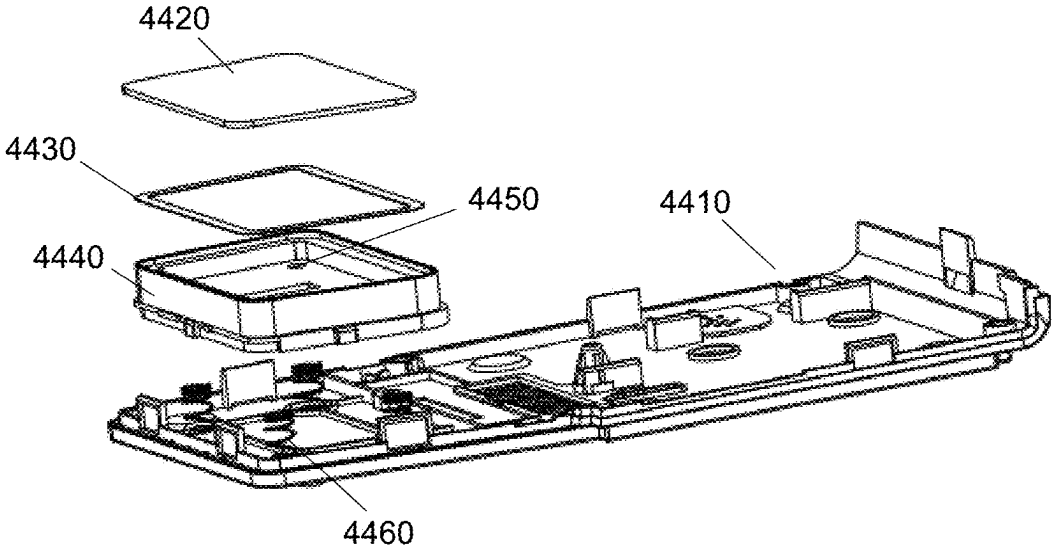

FIG. 44B

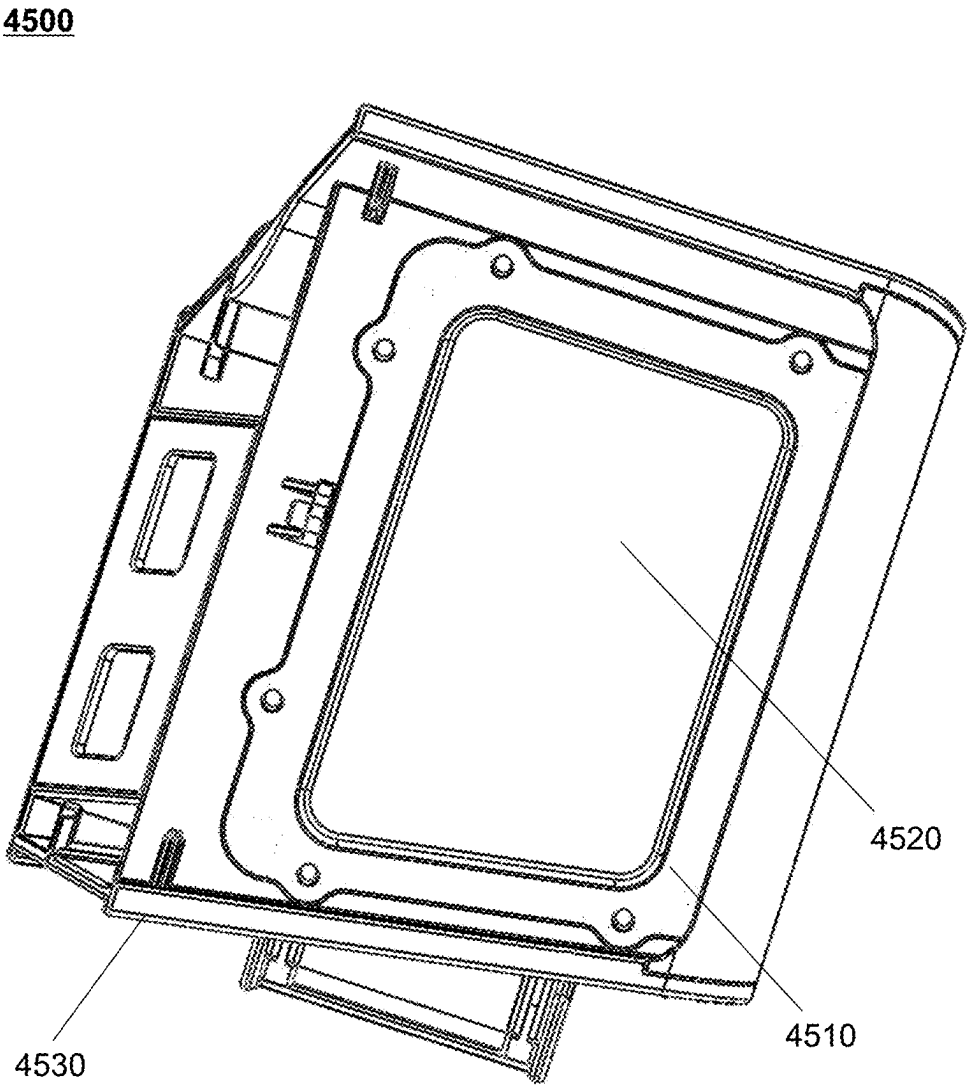

FIG. 45

SYSTEMS AND METHODS FOR DELIVERING A RESPIRATORY GAS

CROSS-REFERENCE TO RELATED APPLICATIONS

[0001] This application is a continuation of U.S. patent application Ser. No. 18/396,646, filed on Dec. 26, 2023, which is a continuation of U.S. patent application Ser. No. 17/118,616 (issued as U.S. Pat. No. 12,115,309), filed on Dec. 11, 2020, which is a continuation of U.S. patent application Ser. No. 17/073,495 (issued as U.S. Pat. No. 12,064,549), filed on Oct. 19, 2020, which is a continuation of U.S. patent application Ser. No. 16/988,595 (issued as U.S. Pat. No. 11,766,530), filed on Aug. 7, 2020, which is a continuation of International Patent Application No. PCT/CN2018/111996, filed on Oct. 26, 2018, the contents of each of which are hereby incorporated by reference.

TECHNICAL FIELD

[0002] This disclosure generally relates to the detection, diagnosis, treatment, prevention and amelioration of respiratory-related disorders, and more particularly, relates to systems and methods for delivering a respiratory gas.

BACKGROUND

[0003] Respiration is significant for the maintenance of the vitality of a subject (e.g., a human body). The respiratory system of the subject can facilitate gas exchange. The nose and/or mouth of the subject form the entrance to the airways of the subject. A range of respiratory disorders (e.g., apnea, hypopnea, hyperpnea, snore, or the like) exist. The respiratory disorders can threaten the health (and/or life) of the subject. Therefore, it is desirable to develop system(s) and method(s) for delivering a respiratory gas for the subject.

SUMMARY

[0004] In one embodiment, a humidification assembly is configured to humidify the pressurized respiratory gas from a respiratory ventilation apparatus, wherein the humidification assembly including a liquid chamber configured to accommodate one or more liquids, wherein the liquid chamber including a tank, a tank cover, and a humidification assembly gas inlet port configured to introduce the pressurized respiratory gas, via a first gas passage, into the tank, wherein the first gas passage includes an output port.

[0005] In one embodiment, the liquid chamber of the humidification assembly further includes: a humidification assembly gas outlet port configured to introduce the humidified and pressurized respiratory gas, via a second gas passage back into a main body of the respiratory ventilation apparatus, wherein the second gas passage includes an input port.

[0006] In one embodiment, the liquid chamber of the humidification assembly comprises a shell, wherein the humidification assembly gas inlet port of the liquid chamber and/or the humidification assembly gas outlet port of the liquid chamber are set on a first side surface of the shell of the liquid chamber, and wherein the output port of the first gas passage for connecting the first gas passage with the tank and/or the input port of the second gas passage for connecting the second gas passage with the tank are set inside the shell of the liquid chamber. In one embodiment the shell comprises an inner shell and a cover shell in a layered structure. Such layered structure may allow the shell to be dissembled and cleaned easily.

[0007] By forming the first and second gas passages in the shell of the liquid chamber, the tank may comprise a simple design with a much wider opening and volume allowing it to be more easily maintained and filled, e.g., comparing filling the water through one of the gas passages.

[0008] In one embodiment, the output port of the first gas passage faces a second side surface of the shell of the liquid chamber, the input port of the second gas passage faces a third side surface of the shell of the liquid chamber, and the second side surface of the shell of the liquid chamber is opposite to the third surface of the shell of the liquid chamber.

[0009] By spacing the input and output ports apart, gas flow may travel a longer distance while being exposed to the liquid(s) in the tank, thus, increasing the efficiency of the humidification.

[0010] In one embodiment, the liquid chamber includes a guide plate set on an upper edge of the output port of the first gas passage, the guide plate being configured to guide the pressurized respiratory gas to flow downward to the tank.

[0011] In one embodiment, the first gas passage includes a first portion and a second portion, wherein the first portion of the first gas passage extends from the humidification assembly gas inlet port of the liquid chamber to a first common plane, wherein the second portion of the first gas passage extends from the first common plane to the output port of the first gas passage. Such shape of the gas passage reduces the noise within the liquid chamber exiting through the gas passage.

[0012] In addition thereto or alternatively, the second gas passage includes a first portion and a second portion according to one embodiment, wherein the first portion of the second gas passage extends from the input port of the second gas passage to a second common plane, wherein the second portion of the second gas passage extends from the second common plane to the humidification assembly gas outlet port of the liquid chamber.

[0013] By forming the first and second gas passage with a common plane, a compact design may be achieved.

[0014] Additionally, or alternatively, the first and second gas passages has a substantially rectangular cross-section. Such rectangular cross-section may save dead space comparing to tubular cross-section and/or increasing the area of the cross-section, thus allowing a more compact design and/or a lower resistance for the pressurized gas.

[0015] In one embodiment, the first gas passage and the second gas passage cross each other; wherein the distance between the output port and the humidification assembly gas inlet port is larger than the distance between the output port and the humidification assembly gas outlet port.

[0016] Additionally, or alternatively, the distance between the input port and the humidification assembly gas outlet port is larger than the distance between the input port and the humidification assembly gas inlet port.

[0017] By crossing the first and second gas passage, mechanical noise from a main body of a respiratory ventilation apparatus for connected to the humidification assembly gas inlet port of the first gas passage and bubbling noise in the tank and propagating through the second gas passages are reduced with a compact design reducing the dead space. Liquid in the tank is also less likely reaching the inlet and outlet ports.

[0018] In one embodiment, the first portion of the first gas passage is substantially parallel to the second portion of the second gas passage along a direction having an angle with the first side surface of the shell of the liquid chamber. Additionally, or alternatively, the second portion of the first gas passage and the first portion of the second gas passage are set in different layers according to one embodiment. Additionally, or alternatively, a first projection of the second portion of the first gas passage on a horizontal plane and a second projection of the first portion of the second gas passage on the horizontal plane are intersecting or at least partially overlapping according to one embodiment.

[0019] In one embodiment, the second portion of the first gas passage is set below the first portion of the second gas passage, or the first portion of the second gas passage is set below the second portion of the first gas passage.

[0020] In one embodiment, an area of a first cross section of the first gas passage on the first common plane is equal to or less than half of an area of the humidification assembly gas inlet port of the liquid chamber, and/or an area of a second cross section of the second gas passage on the second common plane is equal to or less than half of an area of the humidification assembly gas outlet port of the liquid chamber.

[0021] In one embodiment, the liquid chamber further includes: a first inclined plate set between the first cross section and the humidification assembly gas inlet port of the liquid chamber, the first inclined plate being configured to smooth flowing of the pressurized respiratory gas in the first gas passage, and a second inclined plate set between the second cross section and the humidification assembly gas outlet port of the liquid chamber, the second inclined plate being configured to smooth flowing of the humidified and pressurized respiratory gas in the second gas passage.

[0022] In one embodiment, the liquid chamber further includes a connecting plate, the connecting plate including a first aperture and a second aperture, the first aperture and the second aperture corresponding to the humidification assembly gas inlet port and the humidification assembly gas outlet port of the liquid chamber respectively, the connecting plate being configured to allow a sealed connection between the liquid chamber and the main body of the respiratory ventilation apparatus.

[0023] In one embodiment, the liquid chamber further includes: a first groove set between the humidification assembly gas inlet port of the liquid chamber and the connecting plate, the first groove being configured to accommodate a first portion of the one or more liquids and prevent the first portion of the one or more liquids from entering the main body of the respiratory ventilation apparatus when the liquid chamber is tilted, and/or a second groove set between the humidification assembly gas outlet port of the liquid chamber and the connecting plate, the second groove being configured to accommodate a second portion of the one or more liquids and prevent the second portion of the one or more liquids from entering the main body of the respiratory ventilation apparatus when the liquid chamber is tilted.

[0024] In one embodiment, at least a portion of a bottom of the first gas passage is below a lower edge of the humidification assembly gas inlet port of the liquid chamber, and/or at least a portion of a bottom of the second gas passage is below a lower edge of the humidification assembly gas outlet port of the liquid chamber.

[0025] The arrangement may prevent fluid, e.g. condensed water, exit from the gas passages through the gas outlet port and/or enter the gas outlet port, when the tank cover is closed, or reduce such risks.

[0026] In one embodiment the shell is connected and/or connectable to the tank and/or to the tank cover and arranged pivotally relative to the tank. As the first and/or second gas passages are formed with the shell, the structure of the tank can be formed in a very simple manner allowing better access for cleaning and liquid filling.

[0027] In one embodiment, a liquid contacting side wall of the liquid chamber is at least partially formed by an outer side wall of the tank forming the outer surface of the humidification assembly. Additionally or alternatively, the tank is formed with only one opening for filling liquid and for exchange of pressurized gas. Comparing to some known designs, the liquid chamber and/or the tank may be formed in a simpler manner, e.g., with single layer side wall, and/or e.g., with an upper side substantially open thus reducing the weight and the size, increasing the liquid-gas contacting surface and making access to the tank/liquid chamber easier.

[0028] In one embodiment, the tank cover is pivotally connected to the tank through a connection mechanism; wherein at least a portion of the side of the first gas passage near the connection mechanism is covered in the flow direction by a side edge of the humidification assembly gas inlet port of the liquid chamber, and/or wherein at least a portion of the side of the second gas passage near the connection mechanism is covered in the flow direction by a side edge of the humidification assembly gas outlet port of the liquid chamber.

[0029] Once the tank cover is opened by pivoting the tank cover around a rotational axis defined by the connection mechanism, the side of the first and/or second gas passages near the connection mechanism will be turned into a lower position than other sides of the first and/or second gas passages. By covering at least a portion of such side, liquid within the first and/or second gas passages is prevented from flowing or dripping out damaging e.g. electronic components or dropping on e.g. the surface on which the humidification assembly is placed.

[0030] In one embodiment, the tank cover is pivotally connected to the tank through a connection mechanism, and wherein the distance between the connection mechanism and the humidification assembly gas outlet port is less than the distance between the connection mechanism and the humidification assembly gas inlet port.

[0031] Due to connection mechanism and the leverage effect, the port near the connection mechanism, e.g. a pivotable hinge connection, may have a tighter seal and/or less gap error than the port far away from the connection mechanism. By arranging the humidification assembly gas outlet port near the connection mechanism, the sealing of the humidified gas flowing through the humidification assembly gas outlet port in improved, which may be more critical than the sealing of the not yet humidified gas entering the humidification assembly through the humidification assembly gas inlet port in some circumstances.

[0032] In one embodiment, a respiratory ventilation apparatus is configured to deliver a respiratory gas to a patient interface, comprising an above-mentioned humidification assembly and further comprises: a gas pressurization unit configured to generate the pressurized respiratory gas by pressurizing the respiratory gas, the gas pressurization unit

being located in a main body of the respiratory ventilation apparatus, the main body of the respiratory ventilation apparatus including a housing with a first side wall configured to discharge the pressurized respiratory gas; a main gas inlet port configured to introduce the respiratory gas into the respiratory ventilation apparatus, the main gas inlet port being set on a second side wall of the housing of the main body of the respiratory ventilation apparatus; and

a main gas outlet port configured to discharge the humidified and pressurized respiratory gas to a respiration tube.

[0033] In one embodiment, the main gas outlet port is for setting on the main body of a respiratory ventilation apparatus.

[0034] In one embodiment, the main gas outlet port is set on the liquid chamber.

[0035] In one embodiment, the first side surface of the shell of the liquid chamber faces the first side wall of the housing of the main body of the respiratory ventilation apparatus.

[0036] In one embodiment, a respiratory ventilation apparatus is configured to deliver a respiratory gas to a patient interface, comprising: a gas pressurization unit located in a main body of the respiratory ventilation apparatus; a humidification assembly being removably coupled to the main body of the respiratory ventilation apparatus; wherein the humidification assembly includes: a liquid chamber configured to accommodate one or more liquids.

[0037] In one embodiment, the liquid chamber comprises a tank and a tank cover, which is pivotally connected to the tank through a connection mechanism with a rotational axis; wherein the tank comprises an opening for filling at least one of the one or more liquids, wherein the opening is openable by opening the tank cover and/or closable by closing the tank cover; and wherein the humidification assembly and the main body of the respiratory ventilation apparatus are fluidically connectable by closing the tank cover and/or fluidically disconnectable by opening the tank cover.

[0038] By allowing the main body and the humidification assembly be fluidically connected to form the flow channel for the pressurized gas and/or humidified and pressurized gas using the pivotable tank cover, the mechanical connection between the main body and the tank (often filled with water) may be isolated from the fluidically sealing, making the mechanical connection between the main body and the tank to be more easy to operate while the fluidically connection is secured to be gas-tight under pressure. Further, a lever effect of the tank cover can be used to ensure that the fluid connection is tight against the pressurized gas at one hand, easy to operate with less force on the other hand. In some embodiments, the liquid chamber may be directly mounted on the main body of the respiratory ventilation apparatus, the liquid chamber and the main body of the respiratory ventilation apparatus may be fluidically connectable through at least a connecting port for forming at least one flow channel between the main body of the respiratory ventilation apparatus and the liquid chamber, and the liquid chamber may include the tank cover that can be opened. In order to fill liquid(s) in the liquid chamber, the user only needs to open the tank cover and fill the liquid(s) in the tank. When filling the liquid(s), the fluid connection between the liquid chamber and the main body may be disconnected. Therefore, the respiratory ventilation apparatus has simplified structure and is easy to use. In some embodiments, the main body of the respiratory ventilation apparatus may include a blower of the gas pressurization unit, and/or a heating component configured to heat the liquid(s) in the liquid chamber. The heating component may be mounted on a side surface of the main body. The heating component and the main body may be configured as an integral piece, or the heating component may be detachable from the main body. In some embodiments, the tank and the tank cover may be locked when the tank cover is closed. In some embodiments, the liquid chamber and the heating component may be locked. In some embodiments, the tank cover may not be locked to the main body, and the tank cover is fixed to the main body via the locking between the tank and the tank cover, and the locking between the tank and the main body. When the liquid chamber is mounted with the heating component, the tank cover may be opened by unlocking the tank cover from the tank. Therefore, the opening and closing of the tank cover, and the fluid connection and disconnection between the tank cover and the main body may be facilitated. It should be noted that any other locking mode between the tank and the tank cover may realize the functions illustrated above without unlocking the liquid chamber from the main body.

[0039] In some embodiments, the tank and the main body are attachable with each other by moving the tank in an attaching direction relative to the main body with an angle between the rotational axis and the attaching direction between 20°-160°, or in some embodiments between 45°-135°, or in some further embodiments, between 60°-120°; and/or wherein the tank and the main body are unlockable from each other by moving the tank in an unlocking direction relative to the main body with an angle between the rotational axis and the unlocking direction between 20°-160°, or in some embodiments between 45°-135°, or in some further embodiments, between 60°-120°.

[0040] By arranging the rotational axis relative to the attaching direction in said manners, closing the tank cover may be in a direction perpendicular to the rotational axis and may have a component in the attaching direction. Thus, closing the tank cover towards the tank may also result in attaching the tank with the main body. The user comfort is thus improved.

[0041] In some embodiments, the angle between attaching direction and the unlocking direction is between −45° and 45°, in some further embodiments, between −30° and 30°, and in some further embodiments, between −15° and 15°. In one embodiment, the attaching direction and the unlocking direction may be substantially in the same direction. This can be further combined with a rotational axis allowing the tank cover only to be opened in a substantially opposite direction than the unlocking direction to avoid the user unlock the tank accidentally by opening the tank cover. The user comfort is increased.

[0042] In some embodiments, the humidification assembly and the main body of the respiratory ventilation apparatus are fluidically connectable through at least a connecting port for forming at least one flow channel between the main body of the respiratory ventilation apparatus and the liquid chamber; wherein the at least one connecting port comprises a gas inlet port and a gas outlet port; wherein the connecting port comprises an axial sealing member for fluidically sealingly connecting the gas inlet port and the gas outlet port; wherein an inner surface of the axial sealing member forms at least partially the flow channel and wherein the axial sealing member defines a sealing plane.

[0043] By using an axial sealing member, the sealing member creates, e.g., comparing to a cone-shaped connector forming a radial sealing, less frictional forces during connection and disconnection, thus improving the user comfort and operational safety.

[0044] In some embodiments, the angle between the sealing plane and the liquid level in the liquid chamber is between −75°-75°, in some further embodiments, between −30° and 30°, and in some further embodiments, between 15° and 65°; and/or wherein the angle between the sealing plane and the attaching direction is between 15°-165°, in some further embodiments, between 30° and 150°, and in some further embodiments, between 45° and 135°, and in some further embodiments, between 70° and 110°; and/or wherein the angle between the liquid level and the unlocking direction is between 15°-165°, in some further embodiments, between 30° and 150°, and in some further embodiments, between 45° and 135°, and in some further embodiments, between 70° and 110°.

[0045] By arranging the sealing plane in the said manners relative to the liquid level (e.g., the horizontal plane), and/or, by arranging the attaching direction in the said manners relative to the liquid level, the risks of the liquid being spilled out during the sealing, unlocking and/or attaching is reduced. The liquid level is the designed level of the liquid during normal use of the respiratory ventilation apparatus and the humidification assembly.

[0046] In some embodiments, the inner surface of the axial sealing member forms at least partially the flow channel and/or the overlapping section of the gas inlet and outlet port in a sealed state is less than 5 mm, such that the gas inlet port is disconnectable from the gas outlet port without the gas inlet port contacting the gas outlet port; wherein the axial sealing member comprises one or more elastical materials with a shore hardness of less than 70 (e.g., 20-70, 60, or the like), according to ASTM D2240 Typ A and wherein the axial sealing member is compressed along the axial direction by 10%-50% and/or by 0.5-6 mm (e.g., 1-3 mm) in a sealed state comparing to a state, wherein the main body and the humidification assembly are unlocked.

[0047] In some embodiments, the gas inlet port comprises an inlet aperture and the gas outlet port comprises an outlet aperture, wherein the inlet and outlet apertures are formed by one or more materials having a higher hardness than an elastical material forming the axial sealing member.

[0048] In some embodiments, the axial sealing member is formed around the inlet aperture and/or around the outlet aperture.

[0049] In some embodiments, the inlet aperture and the outlet aperture are formed by materials having a higher hardness than the elastic material forming the axial sealing member, and the inlet aperture and the outlet aperture are spaced apart by the axial sealing member in the axial direction of axial sealing member. In some embodiments, the inlet aperture and the outlet aperture are spaced apart at least 1 mm, in some further embodiments, at least 5 mm by the axial sealing member in the axial direction thereof in a sealed and attached state of the humidification assembly. By spacing the inlet and the outlet apertures apart in the axial direction, not only friction force between the gas inlet and outlet ports is minimized, collision between the materials forming the inlet and outlet apertures having a higher hardness is also minimized, reducing the sudden noise during the assembly and/or disassembly of the respiratory ventilation apparatus. Shortly before the inlet and outlet apertures are connected, the relative movement between the humidification assembly and the main body of the respiratory ventilation apparatus is also buffered by the axial sealing member, which further increases the user comfort.

[0050] In some embodiments, the axial sealing member comprises multiple parts consisting of the one or more elastic material and are configured such that a dynamic frictional force exists only between such parts during coupling or de-coupling of the humidification assembly.

[0051] In some embodiments, the axial sealing member comprises a sealing lip protruding from at least one of the inlet and the outlet apertures, wherein the sealing lip is inclined toward the center of the flow channel and is configured to bend towards the center of the flow channel if pressed and/or compressed by connecting the gas inlet port with the gas outlet port.

[0052] In some embodiments, the liquid chamber is in detachable connection with the main body of the respiratory ventilation apparatus through a push-push mechanism.

[0053] In some embodiments, a push direction of the push-push mechanism is substantially perpendicular to the rotational axis of the connection mechanism, wherein the humidification assembly and the main body of the respiratory ventilation apparatus are fluidically connectable by closing the tank cover in the push direction of the push-push mechanism while the tank is attached to the main body, and by attaching the liquid chamber to the main body in the push direction while the tank cover is closed.

[0054] In some embodiments, the gas pressurization unit is configured to generate a pressurized respiratory gas by pressurizing the respiratory gas; the main body of the respiratory ventilation apparatus includes a housing provided with a first side wall configured to discharge the pressurized respiratory gas; the humidification assembly is configured to humidify the pressurized respiratory gas; the respiratory ventilation apparatus further comprising: a first gas inlet port configured to introduce the respiratory gas into the respiratory ventilation apparatus, the first gas inlet port being set on a second side wall of the housing of the main body of the respiratory ventilation apparatus; and a first gas outlet port configured to discharge the humidified and pressurized respiratory gas to a respiration tube; wherein the liquid chamber being openable from a front surface of the respiratory ventilation apparatus; wherein the humidification assembly further includes a heater plate configured to heat the one or more liquids and generate vapor to humidify the pressurized respiratory gas.

[0055] In some embodiments, the liquid chamber is in detachable connection with the main body of the respiratory ventilation apparatus.

[0056] In some embodiments, the liquid chamber comprises: a tank; and a tank cover pivotally connected to the tank through a connection mechanism.

[0057] In some embodiments, the tank cover includes a second gas inlet port, the second gas inlet port being configured to introduce the pressurized respiratory gas from the main body of the respiratory ventilation apparatus into the liquid chamber.

[0058] In some embodiments, the first gas outlet port is set on the liquid chamber.

[0059] In some embodiments, the respiratory ventilation apparatus further comprises: a connecting piece configured to provide a sealed connection between the tank cover and

the main body of the respiratory ventilation apparatus, the connecting piece including a declining surface facing the tank cover, the tank cover includes a corresponding declining surface facing the connecting piece, and the declining surface of the tank cover includes the second gas inlet port.

[0060] In some embodiments, the connecting piece includes a gasket, the gasket includes a first aperture, the first aperture corresponds to the second gas inlet port of the tank cover, so that when the tank cover is closed, the tank cover is in sealed connection with the main body of the respiratory ventilation apparatus through the gasket, the first aperture and the gas inlet port of the tank cover are capable of introducing the pressurized respiratory gas from the main body of the respiratory ventilation apparatus into the liquid chamber.

[0061] In some embodiments, the respiratory ventilation apparatus further comprises: a connecting piece configured to provide a sealed connection between the tank cover and the main body of the respiratory ventilation apparatus, the connecting piece including a first thread hose, the first thread hose corresponding to the second gas inlet port of the tank cover.

[0062] In some embodiments, the tank cover includes a second gas inlet port and a second gas outlet port, the second gas inlet port being configured to introduce the pressurized respiratory gas from the main body of the respiratory ventilation apparatus into the liquid chamber, the second gas outlet port being configured to discharge the humidified and pressurized respiratory gas from the liquid chamber back into the main body of the respiratory ventilation apparatus.

[0063] In some embodiments, the respiratory ventilation apparatus further comprises: a connecting piece configured to provide a sealed connection between the tank cover and the main body of the respiratory ventilation apparatus.

[0064] In some embodiments, the connecting piece includes a declining surface facing the tank cover, the tank cover includes a corresponding declining surface facing the connecting piece, and the declining surface of the tank cover includes the second gas inlet port and the second gas outlet port.

[0065] In some embodiments, an angle between the declining surface of the connecting piece and a horizontal plane is substantially within 45°-60°.

[0066] In some embodiments, wherein the connecting piece includes a gasket, the gasket includes a first aperture and a second aperture, the first aperture corresponds to the second gas inlet port of the tank cover, the second aperture corresponds to the second gas outlet port of the tank cover, so that when the tank cover is closed, the tank cover is in sealed connection with the main body of the respiratory ventilation apparatus through the gasket, the first aperture and the second gas inlet port of the tank cover are capable of introducing the pressurized respiratory gas from the main body of the respiratory ventilation apparatus into the liquid chamber, and the second aperture and the second gas outlet port of the tank cover are capable of introducing the humidified and pressurized respiratory gas from the liquid chamber back into the main body of the respiratory ventilation apparatus.

[0067] In some embodiments, the connecting piece includes a first thread hose and a second thread hose, the first thread hose corresponds to the second gas inlet port of the tank cover, the second thread hose corresponds to the second gas outlet port of the tank cover.

[0068] In some embodiments, the first thread hose and the second thread hose are substantially vertical, and the second gas inlet port and the second gas outlet port of the tank cover are set in a horizontal surface facing the first thread hose and the second thread hose, so that when the tank cover is closed, the tank cover is in sealed connection with the main body of the respiratory ventilation apparatus through the first thread hose and the second thread hose, the first thread hose and the second gas inlet port of the tank cover are capable of introducing the pressurized respiratory gas from the main body of the respiratory ventilation apparatus into the liquid chamber, and the second thread hose and the second gas outlet port of the tank cover are capable of introducing the humidified and pressurized respiratory gas from the liquid chamber back into the main body of the respiratory ventilation apparatus.

[0069] In some embodiments, the tank cover includes a handle and a buckle on a back of the handle, the tank includes a notch in a position relative to the handle of the tank cover, and the tank cover is fastened with the tank through the cooperation of the buckle and the notch when the tank cover is closed.

[0070] In some embodiments, the handle is set on a front surface of the respiratory ventilation apparatus, and the connection mechanism between the tank and the tank cover is set on a back surface of the respiratory ventilation apparatus, so that when the tank cover is opened, an undersurface of the tank cover is substantially upright and facing the front surface of the respiratory ventilation apparatus.

[0071] In some embodiments, the connection mechanism between the tank and the tank cover comprises: one or more first connecting pieces set on the tank; and one or more second connecting pieces set on the tank cover, the one or more second connecting pieces being in pivot connection with the one or more first connecting pieces.

[0072] In some embodiments, each of the one or more first connecting pieces includes a pin hole, and each of the one or more second connecting pieces includes a pin.

[0073] In some embodiments, wherein each of the one or more second connecting pieces includes a pin hole, and each of the one or more first connecting pieces includes a pin.

[0074] In some embodiments, each of the one or more first connecting pieces includes a first inclined guide surface, each of the one or more second connecting pieces includes a second inclined guide surface, and the first inclined guide surface and the second inclined guide surface are configured to facilitate installation of the tank cover on the tank.

[0075] In some embodiments, at least one of the one or more first connecting pieces includes a protruding column, at least one of the one or more second connecting pieces includes a groove, and the groove is configured to accommodate the protruding column and limit a back rotary movement of the tank cover when the tank cover is opened to a certain angle.

[0076] In some embodiments, the at least one of the one or more second connecting pieces further includes a guide slot, the guide slot being set along a portion of a moving path of the protruding column, the guide slot being configured to smooth a movement of the protruding column.

[0077] In some embodiments, the guide slot includes a first end adjacent to the groove and a second end away from the groove, and the depth of the guide slot is gradually changed from a relatively small value at the first end to a relatively large value at the second end.

[0078] In some embodiments, the one or more second connecting pieces include a baffle configured to limit a maximum rotary movement of the tank cover when the tank cover is opened.

[0079] In some embodiments, a respiratory ventilation apparatus configured to deliver a respiratory gas to a patient interface, may include: a gas pressurization unit configured to generate a pressurized respiratory gas by pressurizing the respiratory gas, the gas pressurization unit being located in a main body of the respiratory ventilation apparatus, the main body of the respiratory ventilation apparatus including a housing with a first side wall configured to discharge the pressurized respiratory gas; a gas inlet port configured to introduce the respiratory gas into the respiratory ventilation apparatus, the gas inlet port being set on a second side wall of the housing of the main body of the respiratory ventilation apparatus; a gas filter component configured to filter the respiratory gas introduced into the respiratory ventilation apparatus and/or the pressurized respiratory gas discharged from the gas pressurization unit; and a gas outlet port configured to discharge the pressurized respiratory gas to a respiration tube.

[0080] In some embodiments, the gas filter component may include: a housing in detachable connection with the gas inlet port of the respiratory ventilation apparatus; and one or more gas filter units mounted in the housing, the one or more gas filter units being configured to filter the respiratory gas entering the respiratory ventilation apparatus.

[0081] In some embodiments, the one or more gas filter units may include a first gas filter unit, the first gas filter unit being a coarse filter.

[0082] In some embodiments, the one or more gas filter units may include a second gas filter unit, the second gas filter unit being a fine filter.

[0083] In some embodiments, the housing may include a gas inlet end and a gas outlet end, the gas inlet end including a first cover plate having at least one hole, the gas outlet end including a second cover plate having at least one hole.

[0084] In some embodiments, the one or more gas filter units may include a coarse filter and a fine filter, and the coarse filter may be positioned closer to the gas inlet end of the housing than the fine filter.

[0085] In some embodiments, the gas inlet end may have a larger intake area than the gas outlet end.

[0086] In some embodiments, the gas filter component may further include a baffle, the baffle having an area less than the gas inlet end of the housing, the baffle being mounted in the housing, the baffle being positioned closer to the gas inlet end of the housing than the one or more gas units.

[0087] In some embodiments, the gas outlet end of the housing may be in a sealed connection with the gas inlet port of the respiratory ventilation apparatus via a silicone gasket.

[0088] In some embodiments, the gas filter component may include a third gas filter unit mounted inside the gas inlet port of the respiratory ventilation apparatus, the third gas filter unit being configured to filter the respiratory gas entering the respiratory ventilation apparatus.

[0089] In some embodiments, the third gas filter unit may include a coarse filter and/or a fine filter.

[0090] In some embodiments, the gas filter component may include a fourth gas filter unit configured to filter one or more gases with pungent smell in one or more gas passages of the respiratory ventilation apparatus, the fourth gas filter unit including a membrane manufactured by one or more nanomaterials having adsorption ability.

[0091] In some embodiments, the one or more nanomaterials may include at least one of activated carbon or graphene.

[0092] In some embodiments, the fourth gas filter unit may be mounted outside the gas inlet port of the respiratory ventilation apparatus, at the gas inlet port of the respiratory ventilation apparatus, inside the gas inlet port of the respiratory ventilation apparatus, between the gas inlet port of the respiratory ventilation apparatus and a gas inlet port of the gas pressurization unit, at the gas inlet port of the gas pressurization unit, at a gas outlet port of the gas pressurization unit, between the gas outlet port of the gas pressurization unit and the gas outlet port of the respiratory ventilation apparatus, and/or at the gas outlet port of the respiratory ventilation apparatus.

[0093] In some embodiments, the gas filter component may include a fifth gas filter unit configured to filter bacteria in one or more gases in one or more gas passages of the respiratory ventilation apparatus.

[0094] In some embodiments, the fifth gas filter unit may be mounted outside the gas inlet port of the respiratory ventilation apparatus, at the gas inlet port of the respiratory ventilation apparatus, inside the gas inlet port of the respiratory ventilation apparatus, between the gas inlet port of the respiratory ventilation apparatus and a gas inlet port of the gas pressurization unit, at the gas inlet port of the gas pressurization unit, at a gas outlet port of the gas pressurization unit, between the gas outlet port of the gas pressurization unit and the gas outlet port of the respiratory ventilation apparatus, and/or at the gas outlet port of the respiratory ventilation apparatus.

[0095] In some embodiments, the respiratory ventilation apparatus may further include a humidification assembly configured to humidify the pressurized respiratory gas discharged from the gas pressurization unit, and the fifth gas filter unit may be mounted in a gas passage between the humidification assembly and the gas outlet port of the respiratory ventilation apparatus.

[0096] In some embodiments, the respiratory ventilation apparatus may further include: a respiration mask; and a respiration tube configured to introduce the pressurized respiratory gas from the gas outlet port of the respiratory ventilation apparatus to the respiration mask.

[0097] In some embodiments, the gas filter component may include one or more gas filter units, and at least one of the one or more gas filter units may be mounted in the respiration tube or the respiration mask.

[0098] In some embodiments, the respiratory ventilation apparatus may further include a humidification assembly configured to humidify the pressurized respiratory gas discharged from the gas pressurization unit.

[0099] In some embodiments, a respiratory ventilation apparatus configured to deliver a respiratory gas to a patient interface may include: a gas pressurization unit configured to generate a pressurized respiratory gas by pressurizing the respiratory gas, the gas pressurization unit being located in a main body of the respiratory ventilation apparatus; and a connecting piece configured to fix the gas pressurization unit to an internal space of the main body of the respiratory ventilation apparatus and/or damp vibration of the gas pressurization unit.

[0100] In some embodiments, the main body of the respiratory ventilation apparatus may include a housing with a first side wall configured to discharge the pressurized respiratory gas. The respiratory ventilation apparatus may further include: a gas inlet port configured to introduce the respiratory gas into the respiratory ventilation apparatus, the gas inlet port being set on a second side wall of the housing of the main body of the respiratory ventilation apparatus; and a gas outlet port configured to discharge the humidified and pressurized respiratory gas to a respiration tube.

[0101] In some embodiments, the connecting piece may include: a connecting part configured to connect an outlet port of the gas pressurization unit and form a sealed connection between the connecting piece and the gas pressurization unit; and a fixing part configured to fix the connecting piece to the internal space of the main body of the respiratory ventilation apparatus and form a fastening connection between the connecting piece and the main body of the respiratory ventilation apparatus.

[0102] In some embodiments, the fixing part may have a sheet structure and may include an aperture configured to allow the pressurized respiratory gas to pass.

[0103] In some embodiments, the connecting part may have a tubular structure; a first end of the connecting part may be fixed to the fixing part; a second end of the connecting part may be connected to the outlet port of the gas pressurization unit; and the connecting part may be capable of allowing the pressurized respiratory gas to pass through the tubular structure to the aperture of the fixing part.

[0104] In some embodiments, the second end of the connecting part may be an annular double-layer port including an inner layer and an outer layer.

[0105] In some embodiments, the inner layer may be connected to an outer surface of the outlet port of the gas pressurization unit.

[0106] In some embodiments, the outer surface of the outlet port of the gas pressurization unit may include one or more protruding bumps, and an inner surface of the inner layer may include one or more corresponding grooves to match with the one or more protruding bumps; or the outer surface of the outlet port of the gas pressurization unit may include one or more grooves, and the inner surface of the inner layer may include one or more corresponding protruding bumps to match with the one or more grooves.

[0107] In some embodiments, the outer layer may include a first annular flexible structure configured to damp vibration of the gas pressurization unit along an axial direction of the connecting part.

[0108] In some embodiments, the first annular flexible structure may have at least one of a U shape, a V shape, a Z shape, an M shape, an S shape, a C shape, an O shape, or one or more folds.

[0109] In some embodiments, the outer layer may be connected to an inner surface of the outlet port of the gas pressurization unit.

[0110] In some embodiments, the inner surface of the outlet port of the gas pressurization unit may include one or more protruding bumps, and an outer surface of the outer layer may include one or more corresponding grooves to match with the one or more protruding bumps; or the inner surface of the outlet port of the gas pressurization unit may include one or more grooves, and the outer surface of the outer layer may include one or more corresponding protruding bumps to match with the one or more grooves.

[0111] In some embodiments, the inner layer may include a first annular flexible structure configured to damp vibration of the gas pressurization unit along an axial direction of the connecting part.

[0112] In some embodiments, the first annular flexible structure may have at least one of a U shape, a V shape, a Z shape, an M shape, an S shape, a C shape, an O shape, or one or more folds.

[0113] In some embodiments, a joint of the inner layer and the outer layer may include a second annular flexible structure configured to damp vibration of the gas pressurization unit along a radial direction of the connecting part.

[0114] In some embodiments, the second annular flexible structure may have at least one of a U shape, a V shape, a Z shape, an M shape, an S shape, a C shape, an O shape, or one or more folds.

[0115] In some embodiments, the fixing part and the connecting part may be integral.

[0116] In some embodiments, two opposite sides of the fixing part may be stuck into two slots of the main body of the respiratory ventilation apparatus.

[0117] In some embodiments, the fixing part or the connecting part may include a flexible material.

[0118] In some embodiments, the flexible material may include at least one of an elastic material or a wear-resistant material.

[0119] In some embodiments, the gas outlet port may be set on the main body of the respiratory ventilation apparatus.

[0120] In some embodiments, the gas outlet port may be set on the liquid chamber.

[0121] In some embodiments, the respiratory ventilation apparatus may include one or more gas filter units mounted on the housing; wherein the one or more gas filter units may extend vertically from the lower edge of the gas pressurization unit to the upper edge of the gas pressurization unit, and/or wherein the one or more gas filter units may extend horizontally from one side of the gas pressurization unit to the opposite side of the gas pressurization unit.

[0122] In some embodiments, a respiratory ventilation apparatus configured to deliver a respiratory gas to a patient interface may include: a gas pressurization unit configured to generate a pressurized respiratory gas by pressurizing the respiratory gas, the gas pressurization unit being located in a main body of the respiratory ventilation apparatus; a main gas outlet port configured to discharge a humidified and pressurized respiratory gas to a respiration tube.

[0123] In some embodiments, the main body of the respiratory ventilation apparatus may include a housing with a first side wall configured to discharge the pressurized respiratory gas; the respiratory ventilation apparatus may further include: a main gas inlet port configured to introduce the respiratory gas into the respiratory ventilation apparatus, the main gas inlet port being set on a second side wall of the housing of the main body of the respiratory ventilation apparatus; and a gas parameter detection assembly configured to detect one or more gas parameters of the respiratory ventilation apparatus.

[0124] In some embodiments, the gas parameter detection assembly may include: an acquisition part configured to acquire a gas flow; a first sensor configured to measure a

pressure of the gas flow; and a first tube configured to introduce the gas flow from the acquisition part to a surface of the first sensor.

[0125] In some embodiments, the first sensor may be a pressure sensor.

[0126] In some embodiments, the first sensor may be integrated into a printed circuit board (P C B) mounted in an inner space of the respiratory ventilation apparatus.

[0127] In some embodiments, the acquisition part may face the main gas outlet port of the respiratory ventilation apparatus.

[0128] In some embodiments, the acquisition part may include: an input port set at a first surface of the acquisition part, the first surface facing the main gas outlet port of the respiratory ventilation apparatus; an output port set at a second surface of the acquisition part, the second surface being different from the first surface; and a curved channel set inside the acquisition part, the curved channel being configured to connect the input port and the output port; wherein the second surface of the acquisition part may be in a sealed connection with an inner surface of the main body of the respiratory ventilation apparatus; and the input port may be set above the second surface of the acquisition part, or the acquisition part is protruding from the inner surface of the main body of the respiratory ventilation apparatus, to prevent water from flowing in the acquisition part.

[0129] In some embodiments, the input port may be set below a top of the curved channel, so as to prevent condensate water from flowing through the curved channel to the surface of the first sensor.

[0130] In some embodiments, the input port may be set below an upper edge of the main gas outlet port of the respiratory ventilation apparatus but above a lower edge of the main gas outlet port of the respiratory ventilation apparatus.

[0131] In some embodiments, the output port may be set below the input port.

[0132] In some embodiments, the gas parameter detection assembly may be further configured to detect a flux of one or more gases in one or more passages of the respiratory ventilation apparatus.

[0133] In some embodiments, the gas parameter detection assembly may further include: a second sensor configured to detect a flux signal associated with the one or more gases in the one or more passages of the respiratory ventilation apparatus; a second tube configured to introduce a gas flow from the acquisition part to a surface of the second sensor; an auxiliary acquisition port set at upstream of the one or more gases; and a third tube configured to introduce a gas flow from the auxiliary acquisition port to a surface of the second sensor.

[0134] In some embodiments, the first sensor and the second sensor may share a same acquisition part.

[0135] In some embodiments, the second sensor may be a flow sensor.

[0136] In some embodiments, the acquisition part may include silicone.

[0137] In some embodiments, the acquisition part may be in detachable connection with the respiratory ventilation apparatus.

[0138] In some embodiments, the respiratory ventilation apparatus may further include a pressure sensor and a flow sensor for snore detection, and a humidified gas inlet port configured to introduce pressurized and humidified gas from a humidification assembly; and the pressure sensor and the flow sensor may be connected via a curved channel to a section between the main gas outlet port of the respiratory ventilation apparatus and the humidified gas inlet port.

[0139] In some embodiments, the gas parameter detection assembly may be configured to detect one or more gas parameters of the humidified and pressurized respiratory gas.

[0140] In some embodiments, the respiratory ventilation apparatus may further include a humidification assembly configured to generate the humidified and pressurized respiratory gas, and the gas parameter detection assembly may include an acquisition part placed in a downstream of the humidified and pressurized respiratory gas relative to the humidification assembly.

[0141] In some embodiments, an input port of the acquisition part may be set below an upper edge of the main gas outlet port of the respiratory ventilation apparatus but above a lower edge of the main gas outlet port of the respiratory ventilation apparatus.

[0142] In some embodiments, a respiratory ventilation apparatus configured to deliver a respiratory gas to a patient interface may include: a gas pressurization unit being located in a main body of the respiratory ventilation apparatus; a humidification assembly being removably coupled to the main body of the respiratory ventilation apparatus, the humidification assembly including a liquid chamber configured to accommodate one or more liquids; wherein the liquid chamber may be in detachable connection with the main body of the respiratory ventilation apparatus through a push-push mechanism.

[0143] In some embodiments, the gas pressurization unit may be configured to generate a pressurized respiratory gas by pressurizing the respiratory gas, wherein the main body of the respiratory ventilation apparatus includes a housing with a first side wall configured to discharge the pressurized respiratory gas; the humidification assembly may be configured to humidify the pressurized respiratory gas; the respiratory ventilation apparatus may further include: a gas inlet port configured to introduce the respiratory gas into the respiratory ventilation apparatus, the gas inlet port being set on a second side wall of the housing of the main body of the respiratory ventilation apparatus; and a gas outlet port configured to discharge the humidified and pressurized respiratory gas to a respiration tube.

[0144] In some embodiments, the push-push mechanism may include: a guide slot set on the main body of the respiratory ventilation apparatus; a slide block set on the main body of the respiratory ventilation apparatus, the slide block being positioned in the guide slot, the slide block being movable along the guide slot in a first direction back and forth; and a pushrod set on the liquid chamber, the pushrod being movable along a second direction back and forth, the second direction being perpendicular to the first direction; wherein the slide block may include a guide block, the guide block including a first slope, a groove and a second slope, the guide block being configured to guide or limit a moving position of the pushrod.

[0145] In some embodiments, an inclined direction of the first slope may be different from an inclined direction of the second slope; and a first angle between the first slope and a vertical direction may be greater than a second angle between the second slope and the vertical direction.

[0146] In some embodiments, the guide block may have a frame similar to character A.

[0147] In some embodiments, the push-push mechanism may further include: a first spring including a first end and a second end, the first end of the first spring being connected to a first end of the guide block, the second end of the first spring being fixed to the main body of the respiratory ventilation apparatus; and a second spring including a first end and a second end, the first end of the second spring being connected to a second end of the guide block, the second end of the second spring being fixed to the main body of the respiratory ventilation apparatus; wherein the first spring may be capable of being compressed when the guide block is driven to move along the first direction; and the compressed first spring may be capable of driving the guide block to move along an opposite direction of the first direction.

[0148] In some embodiments, upon being driven by a first pushing force, the pushrod may be capable of pushing the guide block to move along the first direction while the pushrod is moving along the second direction and sliding down along the first slope of the guide block; upon releasing the first pushing force, the pushrod may be capable of moving along an opposite direction of the second direction while the guide block is moving along an opposite direction of the first direction so that the pushrod is stuck into the groove of the guide block; upon being driven by a second pushing force, the pushrod may be capable of moving along the second direction and moving out of the groove while the guide block is moving along the opposite direction of the first direction so that the pushrod is released from the groove; and upon releasing the second pushing force, the pushrod may be capable of moving along the opposite direction of the second direction and sliding up along the second slope of the guide block, while the guide block is moving along the opposite direction of the first direction, so that the liquid chamber is released from the main body.

[0149] In some embodiments, the slide block may further include a bump below the groove of the guide block, the bump being configured to guide the pushrod to be stuck into the groove upon releasing the first pushing force.

[0150] In some embodiments, the pushrod may be set below a bottom surface of the liquid chamber; the guide slot and the slide block may be set below an interface of the liquid chamber and the main body of the respiratory ventilation apparatus; a plate on the interface may include a first hole; and the pushrod may be capable of passing through the first hole to interact with the slide block.

[0151] In some embodiments, the plate on the interface may include a second hole; the humidification assembly may further include a heater plate, the heater plate being configured to heat the one or more liquids and generate vapor to humidify the pressurized respiratory gas; and the heater plate may be mounted on a base of the respiratory ventilation apparatus through one or more springs, so that the heater plate is capable of moving up and down through the second hole upon being driven by a pressure or upon releasing the pressure.

[0152] In some embodiments, the liquid chamber may include a bottom, the bottom including a metallic heat conducting material; and the bottom of the liquid chamber may be in close contact with the heater plate when the liquid chamber is mounted on the main body of the respiratory ventilation apparatus.

[0153] In some embodiments, the gas outlet port may be set on the main body of the respiratory ventilation apparatus.

[0154] In some embodiments, the gas outlet port may be set on the liquid chamber.

[0155] In some embodiments, the push-push mechanism may be configured for unlocking the liquid chamber from the main body of the respiratory ventilation apparatus by pushing the liquid chamber in a push direction substantially perpendicular to a liquid level in the liquid chamber. Since pushing is easier than pulling and can be performed single handedly, the user comfort is improved. In addition thereto, any locking and/or connecting mechanism between the liquid chamber and the main body will experience less pulling force and their life time is increased, since such mechanism usually can withstand much higher pushing force than pulling force. In addition thereto, pushing to unlock also decreases the chance that the liquid is spilled out from the tank during disassembling.

[0156] In some embodiments, the push-push mechanism may be configured to comprise an energy storage means for storing the energy of the pushing action and for releasing the stored energy after the liquid chamber is unlocked by applying a force on the liquid chamber substantially in the opposite direction of the push direction.

[0157] In some embodiments, the liquid chamber may include: a tank; and a tank cover pivotally connected to the tank through a connection mechanism; wherein the tank cover may be configured to be closable by pushing in the push direction and/or is configured to be openable by pulling substantially in a direction opposite to the push direction. As the tank cover can be closed in the same direction, one single pushing action can close the tank cover and attach the liquid chamber to the main body at the same time, thus increases the comfort. As the tank cover is opened in the opposite direction, the chance for user to mix up opening the tank cover and removing the liquid chamber from the main body is minimized, thus avoiding the situation that the user accidentally open the tank cover while intending only to disconnect the humidification assembly and spill the liquid out.

[0158] In some embodiments, a method for operating a respiratory ventilation apparatus may include comprising: coupling the humidification assembly with the main body of the respiratory ventilation apparatus by pushing the liquid chamber in a push direction, and unlocking the humidification assembly with the main body by pushing the liquid chamber substantially in the push direction.

[0159] In some embodiments, the liquid chamber may include: a tank; and a tank cover pivotally connected to the tank through a connection mechanism; and the method may further include: placing the humidification assembly on a surface of the respiratory ventilation apparatus before the step of coupling; the step of coupling the humidification assembly may further include locking the tank cover with the tank by pushing the tank cover substantially in the push direction.

BRIEF DESCRIPTION OF THE DRAWINGS

[0160] The present disclosure is further described in terms of exemplary embodiments. These exemplary embodiments are described in detail with reference to the drawings. The drawings are not to scale. These embodiments are non-limiting exemplary embodiments, in which like reference

numerals represent similar structures throughout the several views of the drawings, and wherein:

[0161] FIG. **1** is a schematic diagram illustrating an exemplary system for delivering a respiratory gas according to some embodiments of the present disclosure;

[0162] FIG. **2** is a block diagram illustrating an exemplary respiratory ventilation apparatus according to some embodiments of the present disclosure;

[0163] FIGS. **3**A-**3**D illustrate an exemplary respiratory ventilation apparatus according to some embodiments of the present disclosure;

[0164] FIG. **4** illustrates an exemplary process for delivering a respiratory gas according to some embodiments of the present disclosure;

[0165] FIGS. **5**A-**5**E illustrate exemplary gas passages of a respiratory ventilation apparatus according to some embodiments of the present disclosure;

[0166] FIGS. **6**A-**6**E illustrate an exemplary gas filter component according to some embodiments of the present disclosure;

[0167] FIGS. **7**A and **7**B illustrate an exemplary gas filter unit according to some embodiments of the present disclosure;

[0168] FIGS. **8**A-**8**D illustrate different views of an exemplary noise reduction assembly according to some embodiments of the present disclosure;

[0169] FIGS. **9**A-**9**E illustrate an exemplary connection between a noise reduction assembly and a main body of a respiratory ventilation apparatus according to some embodiments of the present disclosure;

[0170] FIGS. **10**A-**10**C illustrate exemplary exploded views of a noise reduction assembly according to some embodiments of the present disclosure;

[0171] FIGS. **11**A-**11**F illustrate an exemplary connection between a gas pressurization unit and a noise reduction box according to some embodiments of the present disclosure;

[0172] FIGS. **12**A-**12**C illustrate an exemplary gas pressurization unit according to some embodiments of the present disclosure;

[0173] FIGS. **13**A and **13**B illustrate an exemplary connecting piece according to some embodiments of the present disclosure;

[0174] FIGS. **14**A and **14**B illustrate an exemplary respiratory ventilation apparatus including a gas parameter detection assembly according to some embodiments of the present disclosure;

[0175] FIGS. **15**A and **15**B illustrate an inner space of an exemplary respiratory ventilation apparatus including a gas parameter detection assembly according to some embodiments of the present disclosure;

[0176] FIGS. **16**A-**16**D illustrate an exemplary acquisition part of a gas parameter detection assembly and/or a flow detection assembly according to some embodiments of the present disclosure;

[0177] FIG. **17** illustrates an exemplary respiratory ventilation apparatus according to some embodiments of the present disclosure;

[0178] FIGS. **18**A and **18**B illustrate exploded views of an exemplary liquid chamber according to some embodiments of the present disclosure;

[0179] FIG. **19** illustrates an exemplary push-push mechanism in connection with a liquid chamber of a respiratory ventilation apparatus according to some embodiments of the present disclosure;

[0180] FIGS. **20**A and **20**B illustrate an exemplary push-push mechanism according to some embodiments of the present disclosure;

[0181] FIGS. **21**A and **21**B illustrate an exemplary process for mounting a liquid chamber on a main body of a respiratory ventilation apparatus by a push-push mechanism according to some embodiments of the present disclosure;

[0182] FIGS. **21**C and **21**D illustrate an exemplary process for removing a liquid chamber from a main body of a respiratory ventilation apparatus by a push-push mechanism according to some embodiments of the present disclosure;

[0183] FIGS. **22**A-**22**D illustrate an exemplary heater plate according to some embodiments of the present disclosure;

[0184] FIGS. **23**A-**23**D illustrate an exemplary connection between a liquid chamber and a main body of a respiratory ventilation apparatus according to some embodiments of the present disclosure;

[0185] FIG. **24** illustrates another exemplary connection between a liquid chamber and a main body of a respiratory ventilation apparatus according to some embodiments of the present disclosure;

[0186] FIG. **25** illustrates an exemplary connection piece fixed to a main body of a respiratory ventilation apparatus according to some embodiments of the present disclosure;

[0187] FIGS. **26**A-**26**C illustrate an exemplary connection between a liquid chamber and a main body of a respiratory ventilation apparatus according to some embodiments of the present disclosure;

[0188] FIG. **27** illustrates an exemplary connection between a connecting piece and a connecting plate of a tank cover when the tank cover is closed according to some embodiments of the present disclosure;

[0189] FIGS. **28**A-**28**E illustrate exemplary thread hoses of a connecting piece according to some embodiments of the present disclosure;

[0190] FIGS. **29**A-**29**D illustrate an exemplary baseplate of a respiratory ventilation apparatus according to some embodiments of the present disclosure;

[0191] FIGS. **30**A and **30**B illustrate an exemplary liquid chamber of a respiratory ventilation apparatus according to some embodiments of the present disclosure;

[0192] FIG. **31** illustrates an exemplary tank cover of a liquid chamber of a respiratory ventilation apparatus according to some embodiments of the present disclosure;

[0193] FIGS. **32**A-**32**C illustrate an exemplary tank of a liquid chamber of a respiratory ventilation apparatus according to some embodiments of the present disclosure;

[0194] FIGS. **33**A and **33**B illustrate an exemplary tank according to some embodiments of the present disclosure;

[0195] FIGS. **34**A and **34**B illustrate an exemplary tank cover according to some embodiments of the present disclosure;

[0196] FIGS. **35**A and **35**B illustrate a corporation of a protruding column of a first connecting piece of a tank and a groove of a second connecting piece of a tank cover according to some embodiments of the present disclosure;

[0197] FIGS. **36**A and **36**B illustrate an exemplary connection between a tank and a tank cover of a liquid chamber according to some embodiments of the present disclosure;

[0198] FIGS. **37**A and **37**B illustrate an exemplary tank cover according to some embodiments of the present disclosure;

[0199] FIG. **38** illustrates an exemplary cover shell according to some embodiments of the present disclosure;

[0200] FIGS. **39**A and **39**B illustrate an exemplary inner shell of a tank cover according to some embodiments of the present disclosure;

[0201] FIG. **40** illustrates an exemplary bottom plate of an inner shell of a tank cover according to some embodiments of the present disclosure;

[0202] FIGS. **41**A and **41**B illustrate an exemplary inner structure of an inner shell of a tank cover according to some embodiments of the present disclosure;

[0203] FIGS. **42**A and **42**B illustrate another exemplary tank cover according to some embodiments of the present disclosure;

[0204] FIGS. **43**A-**43**C illustrate exemplary electronic components in a main body of a respiratory ventilation apparatus according to some embodiments of the present disclosure;

[0205] FIGS. **44**A and **44**B illustrate an exemplary heating device according to some embodiments of the present disclosure; and

[0206] FIG. **45** illustrates an exemplary liquid chamber according to some embodiments of the present disclosure.

DETAILED DESCRIPTION

[0207] The following description is presented to enable any person skilled in the art to make and use the present disclosure and is provided in the context of a particular application and its requirements. Various modifications to the disclosed embodiments will be readily apparent to those skilled in the art, and the general principles defined herein may be applied to other embodiments and applications without departing from the spirit and scope of the present disclosure. Thus, the present disclosure is not limited to the embodiments shown but is to be accorded the widest scope consistent with the claims.

[0208] The terminology used herein is to describe particular exemplary embodiments only and is not intended to be limiting. As used herein, the singular forms "a," "an," and "the" may be intended to include the plural forms as well, unless the context expressly indicates otherwise. It will be further understood that the terms "comprise," "comprises," and/or "comprising," "include," "includes," and/or "including," when used in the present disclosure, specify the presence of stated features, integers, steps, operation, elements, and/or components, but do not preclude the presence or addition of one or more other features, integers, steps, operation, elements, components, and/or groups thereof.

[0209] These and other features, and characteristics of the present disclosure, as well as the methods of operation and functions of the related elements of structure and the combination of parts and economies of manufacture, may become more apparent upon consideration of the following description with reference to the accompanying drawings, all of which form a part of the present disclosure. It is to be expressly understood, however, that the drawings are for illustration and description only, and are not intended to limit the scope of the present disclosure. It is understood that the drawings are not to scale.

[0210] It will be understood that the term "system," "engine," "unit," and/or "module" used herein are one method to distinguish different components, elements, parts, sections, or assemblies of different levels in ascending order. However, the terms may be displaced by other expressions if they achieve the same purpose.

[0211] It will be understood that when a unit, engine, or module is referred to as being "on," "connected to," or "coupled to," another unit, engine, or module, it may be directly on, connected or coupled to, or communicate with the other unit, engine, or module, or an intervening unit, engine, or module may be present, unless the context clearly indicates otherwise. As used herein, the term "and/or" includes any and all combinations of one or more of the associated listed items.

[0212] The term "ambient" used herein refers to the external of the system **100** and/or the subject **180**, or surrounding the system **100** and/or the subject **180**. The "ambient gas" used herein may refer to the gas at the external of the system **100** and/or the subject **180**, or surrounding the system **100** and/or the subject **180**. The term "ambient humidity" with respect to a humidifier may refer to the humidity of gas surrounding the humidifier (e.g. the humidity in the room where the respiratory ventilation apparatus **110** and/or the subject **180** are located). The term "ambient pressure" may refer to the pressure surrounding or external to the subject **180**. The term "ambient (e.g. acoustic) noise" may refer to the background noise level in the room where the respiratory ventilation apparatus **110** and/or the subject **180** are located), other than for example, noise generated by the respiratory ventilation apparatus **110** or emanating from the subject interface **170**.

[0213] The flowcharts used in the present disclosure illustrate operation that systems implement according to some embodiments of the present disclosure. It is to be expressly understood, the operation of the flowcharts may be implemented not in order. Conversely, the operation may be implemented in inverted order, or simultaneously. Moreover, one or more other operation may be added to the flowcharts. One or more operations may be omitted from the flowcharts.

[0214] FIG. **1** is a schematic diagram illustrating an exemplary system for delivering a respiratory gas according to some embodiments of the present disclosure. In some embodiments, the respiratory gas may include natural air (or atmospheric air), purified air, oxygen, atmospheric air enriched with oxygen, a therapeutic drug, pressurized air, humidified air, or the like, or a combination thereof. As illustrated, the system **100** may include a respiratory ventilation apparatus **110**, a respiration tube **160**, and a subject interface **170**. In some embodiments, the respiratory ventilation apparatus **110** may be a non-invasive ventilator. In some embodiments, the system **100** may further include a network **120**, a terminal **130**, a processing device **140**, and a storage device **150**. It should be noted that one or more of the network **120**, the terminal **130**, the processing device **140**, and the storage device **150** may be omitted. The components in the system **100** may be connected in one or more of various ways. Merely by way of example, as illustrated in FIG. **1**, the respiratory ventilation apparatus **110** may be connected to the processing device **140** through the network **120**. As another example, the respiratory ventilation apparatus **110** may be connected to the processing device **140** directly as indicated by the bi-directional arrow in dotted lines linking the respiratory ventilation apparatus **110** and the processing device **140**. As a further example, the storage device **150** may be connected to the processing device **140** directly or through the network **120**. As still a

further example, the terminal **130** may be connected to the processing device **140** directly (as indicated by the bi-directional arrow in dotted lines linking the terminal **130** and the processing device **140**) or through the network **120**. In the present disclosure, "respiratory ventilation apparatus" and "continuous positive airway pressure (CPAP) apparatus" are used interchangeably.

[0215] The respiratory ventilation apparatus **110** may be configured to detect, diagnose, treat, prevent, and/or ameliorate respiratory-related disorders of a subject **180**. In some embodiments, the respiratory ventilation apparatus **110** may deliver a pressurized respiratory gas to a subject **180** (e.g., the nose and/or the mouth of the subject **180**). In some embodiments, the respiratory ventilation apparatus **110** may include a gas inlet port **112** and a gas outlet port **111**. The gas inlet port **112** may be configured to introduce a respiratory gas into the respiratory ventilation apparatus **110**. In some embodiments, the respiratory ventilation apparatus **110** may pressurize the respiratory gas introduced via the gas inlet port **112**. In some embodiments, the gas outlet port **111** may be connected to the respiration tube **160**. The gas outlet port **111** may be configured to discharge the pressurized respiratory gas to the respiration tube **160**. In some embodiments, the respiration tube **160** may be connected to the subject interface **170**. Therefore, the pressurized respiratory gas generated by the respiratory ventilation apparatus **110** may be discharged to the subject **180** via the respiration tube **160** and the subject interface **170**. In some embodiments, the respiratory ventilation apparatus **110** may include one or more gas passages (not shown in FIG. **1**) configured to guide the respiratory gas to flow in the respiratory ventilation apparatus **110**. More descriptions of the respiratory ventilation apparatus **110** may be found elsewhere in the present disclosure (e.g., FIGS. **3**A-**3**D and **5**A-**5**E and the descriptions thereof).

[0216] In some embodiments, the respiratory ventilation apparatus **110** may further include one or more controllers. The controllers may connect to one or more components of the respiratory ventilation apparatus **110** directly or via a network (e.g., a wired network, a wireless network). The controllers may control the operation(s) of one or more components of the respiratory ventilation apparatus **110**. In some embodiments, the controller(s) may be configured to initiate the respiratory ventilation apparatus **110** upon a boot operation. For example, the controller(s) may initiate a random access memory of the respiratory ventilation apparatus **110**, read one or more parameters from one or more storage device **150** (e.g., a non-volatile memory) of the respiratory ventilation apparatus **110**, and/or initiate the detection module **250**. In some embodiments, the parameter (s) may include at least one parameter used to control the pressure of the pressurized respiratory gas. In some embodiments, the controller(s) may be configured to initiate a program that constantly reads information from the detection module **250**, and control the pressure of the pressurized respiratory gas using at least the information read from the detection module **250** and one or more of the parameter(s).

[0217] In some embodiments, the respiratory ventilation apparatus **110** may further include or be equipped with one or more sensors configured to detect parameters relating to the respiratory gas, the expired gas of the subject **180**, and/or the operation status of the respiratory ventilation apparatus **110**. The parameters relating to the respiratory gas may include, for example, the flux of the respiratory gas, a flow rate of the respiratory gas, a temperature of the respiratory gas, a humidity of the respiratory gas, or the like, or a combination thereof. The parameters relating to the expired gas of the subject **180** may include a snore of the subject **180**, a respiratory rate of the subject **180**, a tidal volume of the subject **180**, a pressure of the expired gas of the subject **180**, an air leakage of the expired gas of the subject **180**, an autonomous respiration ratio of the subject **180**, or the like, or a combination thereof. The parameters relating to the operation status of the respiratory ventilation apparatus **110** may include a running time of the respiratory ventilation apparatus **110**, a time of delay for pressurizing the respiratory gas, an air leakage of the pressurized respiratory gas, an input voltage of the gas pressurization unit **210**, or the like, or a combination thereof.

[0218] In some embodiments, the respiratory ventilation apparatus **110** may further include or be equipped with one or more gas filter units configured to filter and/or purify the respiratory gas delivered to the subject **180**. In some embodiments, the gas filter unit(s) (e.g., a coarse filter, a fine filter, or the like) may filter one or more particles in the respiratory gas. In some embodiments, the gas filter unit(s) may filter bacteria in the respiratory gas. In some embodiments, the gas filter unit(s) may filter pungent gas in the respiratory gas.

[0219] In some embodiments, the subject **180** may be a healthy person. In some embodiments, the subject **180** may be a patient. In some embodiments, the patient may have one or more respiratory-related disorders. In some embodiments, the respiratory-related disorders may be characterized by apneas, hypopneas, or hyperpneas, or the like. Exemplary respiratory-related disorders may include, for example, obstructive sleep apnea (OSA), Cheyne-stokes respiration (CSR), obesity hyperventilation syndrome (OHS), chronic obstructive pulmonary disease (COPD), neuromuscular disease (NMD), chest wall disorders, or the like. The obstructive sleep apnea (OSA) is a form of sleep disordered breathing, and may cause affected patient to stop breathing for one or more periods (e.g., 30 to 120 seconds duration, or 200 to 300 times per night). The Cheyne-stokes respiration (CSR) is another form of sleep disordered breathing, and may be harmful because of repetitive hypoxia. The obesity hyperventilation syndrome (OHS) is defined as the combination of severe obesity and awake chronic hypercapnia, and may cause dyspnea, morning headache, excessive daytime sleepiness, or the like. The chronic obstructive pulmonary disease (COPD) may include increased resistance to air movement, extended expiratory phase of respiration, or loss of the normal elasticity of the lung, or the like. The chronic obstructive pulmonary disease (COPD) may cause dyspnea on exertion, chronic cough, sputum production, or the like. The neuromuscular disease (NMD) may include diseases and ailments that impair the functioning of the muscles either directly via intrinsic muscle pathology, or indirectly via nerve pathology. The neuromuscular disease (NMD) may cause increasing generalized weakness, dysphagia, dyspnea on exertion and at rest, fatigue, sleepiness, morning headache, difficulties with concentration and mood changes, or the like. The chest wall disorders are a group of thoracic deformities that result in inefficient coupling between respiratory muscles and the thoracic cage. The chest wall disorders may cause dyspnea on exertion, peripheral edema, orthopnea, repeated chest infections, morning headaches, fatigue, poor sleep quality, loss of appetite, or the like.

[0220] In some embodiments, the subject interface **170** may be configured to interface the respiratory ventilation apparatus **110** to the subject **180**, for example, by providing a flow of respiratory gas (e.g., air). In some embodiments, the subject interface **170** may include a gas passage to guide the respiratory gas. The subject interface **170** may include a mask, a tube, or the like. For example, the subject interface **170** may be a nasal mask, a full-face mask, a tube connected to the mouth of the subject **180**, a tracheostomy tube connected to the trachea of the subject **180**. In some embodiments, the subject interface **170** may form a sealed connection with a face region of the subject **180** to facilitate the delivery of the respiratory gas at a pressure that has a sufficient variance with ambient pressure to effect therapy (e.g., a positive pressure of about 10 cmH_2O). For example, the subject interface **170** may be fixed to the nose of the subject **180** by various fixing ways (e.g., through a fixing rope or a fixing ring). In some embodiments, the subject interface **170** may not form a sealed connection with a face region of the subject **180** that is sufficient to facilitate delivery of the respiratory gas to the subject **180** at a positive pressure of about 10 cmH_2O. In some embodiments, the subject interface **170** may further include a filter configured to filter the respiratory gas. More descriptions of the filter may be found elsewhere in the present disclosure (e.g., FIGS. **6**A-**6**E, **7**A, and **7**B and the descriptions thereof). In some embodiments, the subject interface **170** may further include or be equipped with one or more sensors configured to detect parameters relating to the respiratory gas and/or the expired gas of the subject **180**. In some embodiments, the subject interface **170** may further include or be equipped with one or more gas filter units configured to filter and/or purify the respiratory gas delivered to the subject **180**. In some embodiments, the gas filter unit(s) (e.g., a coarse filter, a fine filter, or the like) may filter one or more particles in the respiratory gas. In some embodiments, the gas filter unit(s) may filter bacteria in the respiratory gas. In some embodiments, the gas filter unit(s) may filter pungent gas in the respiratory gas.

[0221] In some embodiments, the respiration tube **160** may be configured to guide the respiratory gas from the respiratory ventilation apparatus **110** to the subject interface **170**. The respiration tube **160** may include a gas passage to guide the respiratory gas. In some embodiments, the respiration tube **160** may form a sealed connection with the gas outlet port **111** of the respiratory ventilation apparatus **110**. In some embodiments, the respiration tube **160** may form a sealed connection with the subject interface **170**. In some embodiments, the respiration tube **160** may further include a heater configured to heat the respiration tube **160**, so that the respiratory gas flowing through the respiration tube **160** can be maintained at a certain temperature, preferably, at a temperature that human beings are comfortable with, such as, a temperature within 16-43° C., a temperature within 28-38° C. In some embodiments, the respiration tube **160** may further include or be equipped with one or more sensors configured to detect parameters relating to the respiratory gas and/or the expired gas of the subject **180**. In some embodiments, the respiration tube **160** may further include or be equipped with one or more gas filter units configured to filter and/or purify the respiratory gas delivered to the subject **180**. In some embodiments, the gas filter unit(s) (e.g., a coarse filter, a fine filter, or the like) may filter one or more particles in the respiratory gas. In some embodiments, the gas filter unit(s) may filter bacteria in the respiratory gas. In some embodiments, the gas filter unit(s) may filter pungent gas in the respiratory gas.

[0222] In some embodiments, the network **120** may include any suitable network that can facilitate the exchange of information and/or data for the system **100**. In some embodiments, one or more components of the system **100** (e.g., the respiratory ventilation apparatus **110**, the terminal **130**, the processing device **140**, or the storage device **150**) may communicate information and/or data with one or more other components of the system **100** via the network **120**. For example, the processing device **140** may obtain signals from the respiratory ventilation apparatus **110** via the network **120**. As another example, the processing device **140** may obtain user instructions from the terminal **130** via the network **120**. In some embodiments, the network **120** may be any type of wired or wireless network, or a combination thereof. The network **120** may be and/or include a public network (e.g., the Internet), a private network (e.g., a local area network (LAN), a wide area network (WAN)), etc.), a wired network (e.g., an Ethernet network), a wireless network (e.g., an 802.11 network, a Wi-Fi network, etc.), a cellular network (e.g., a Long Term Evolution (LTE) network), a frame relay network, a virtual private network ("VPN"), a satellite network, a telephone network, routers, hubs, switches, server computers, and/or any combination thereof. Merely by way of example, the network **120** may include a cable network, a wireline network, a fiber-optic network, a telecommunications network, an intranet, a wireless local area network (WLAN), a metropolitan area network (MAN), a public telephone switched network (PSTN), a Bluetooth™ network, a ZigBee™ network, a near field communication (NFC) network, or the like, or any combination thereof. In some embodiments, the network **120** may include one or more network access points. For example, the network **120** may include wired and/or wireless network access points such as base stations and/or internet exchange points through which one or more components of the system **100** may be connected to the network **120** to exchange data and/or information.

[0223] In some embodiments, the terminal **130** may include a mobile device **130-1**, a tablet computer **130-2**, a laptop computer **130-3**, or the like, or any combination thereof. In some embodiments, the mobile device **130-1** may include a smart home device, a wearable device, a smart mobile device, a virtual reality device, an augmented reality device, or the like, or any combination thereof. In some embodiments, the smart home device may include a smart lighting device, a control device of an intelligent electrical apparatus, a smart monitoring device, a smart video camera, an interphone, or the like, or any combination thereof. In some embodiments, the wearable device may include a smart bracelet, smart footgear, a pair of smart glasses, a smart helmet, a smartwatch, smart clothing, a smart backpack, a smart accessory, or the like, or any combination thereof. In some embodiments, the smart mobile device may include a smartphone, a personal digital assistant (PDA), a gaming device, a navigation device, a point of sale (POS) device, or the like, or any combination thereof. In some embodiments, the virtual reality device and/or the augmented reality device may include a virtual reality helmet, a virtual reality glass, a virtual reality patch, an augmented reality helmet, an augmented reality glass, an augmented reality patch, or the like, or any combination thereof. For

example, the virtual reality device and/or the augmented reality device may include Google Glasses, an Oculus Rift, a Hololens, a GearVR, etc. In some embodiments, the terminal **130** may remotely operate the respiratory ventilation apparatus **110**. In some embodiments, the terminal **130** may operate the respiratory ventilation apparatus **110** via a wireless connection. In some embodiments, the terminal **130** may receive information and/or instructions inputted by a user, and send the received information and/or instructions to the respiratory ventilation apparatus **110** or to the processing device **140** via the network **120**. In some embodiments, the terminal **130** may receive data and/or information from the processing device **140**. In some embodiments, the terminal **130** may display information relating to the system **100**. In some embodiments, the terminal **130** may be part of the processing device **140**. In some embodiments, the terminal **130** may be omitted. In some embodiments, via the terminal **130**, a user may remotely update software of the respiratory ventilation apparatus **110**, and/or adjust or set one or more parameters of the respiratory ventilation apparatus **110**.

[0224] In some embodiments, the processing device **140** may process data and/or information obtained from the respiratory ventilation apparatus **110**, the terminal **130**, and/or the storage device **150**. For example, the processing device **140** may obtain signals detected by one or more sensors in the respiratory ventilation apparatus **110**, the respiration tube **160**, and/or the subject interface **170**, and may process and/or analyze the signals to obtain one or more parameters relating to the respiratory gas, the expired gas of the subject **180**, and/or the operation status of the respiratory ventilation apparatus **110**. In some embodiments, the processing device **140** may be a single server, or a server group. The server group may be centralized, or distributed. In some embodiments, the processing device **140** may be local or remote. For example, the processing device **140** may access information and/or data stored in the respiratory pressure therapy device **110**, the terminal **130**, and/or the storage device **150** via the network **120**. As another example, the processing device **140** may be directly connected to the respiratory ventilation apparatus **110**, the terminal **130**, and/or the storage device **150** to access stored information and/or data. In some embodiments, the processing device **140** may be implemented on a cloud platform. Merely by way of example, the cloud platform may include a private cloud, a public cloud, a hybrid cloud, a community cloud, a distributed cloud, an inter-cloud, a multi-cloud, or the like, or any combination thereof. In some embodiments, the processing device **140** may be implemented on a computing device of the respiratory ventilation apparatus **110**.

[0225] In some embodiments, the processing device **140** may include an acquisition unit and a processing unit. The acquisition unit may be configured to obtain information relating to the system **100** (e.g., the respiratory ventilation apparatus **110**, the processing device **140**, the storage device **150**, the terminal **130**, etc.). The information may include signals detected by the detection module **250**, data read from the storage device **150**, instructions or data provided by the terminal **130**, etc. In some embodiments, the information may be transmitted to the processing unit for processing. In some embodiments, the acquisition unit may obtain or transmit the information via a tangible transmission media or a Carrier-wave transmission media. The tangible transmission media may include, for example, a coaxial cable, a copper wire, a fiber optics, or the like. The Carrier-wave transmission media may take the form of electric or electromagnetic signals (e.g., signals generated during radio frequency (RF) data communications). The processing unit may be configured to process the information obtained by the acquisition unit. The processing unit may include an advanced RISC machines processor (ARM), a programmable logic device (PLD), a microprogrammed control unit (MCU), a digital signal processor (DSP), a field-programmable gate array (FPGA), a system on chip (SoC) or the like, or any combination thereof.

[0226] In some embodiments, the storage device **150** may store data and/or instructions. In some embodiments, the storage device **150** may store data or information obtained from the respiratory ventilation apparatus **110**. For example, the processing device **140** may determine one or more parameters relating to the respiratory gas, the expired gas of the subject **180**, and/or the operation status of the respiratory ventilation apparatus **110** based on the signals obtained from one or more sensors of the respiratory ventilation apparatus **110**, the respiration tube **160**, and/or the subject interface **170**. The determined parameter(s) may be stored in the storage device **150** for further use or processing. In some embodiments, the storage device **150** may store data obtained from the terminal **130** and/or the processing device **140**. In some embodiments, the storage device **150** may store data and/or instructions that the processing device **140** may execute or use to perform exemplary methods described in the present disclosure. In some embodiments, the storage device **150** may include a mass storage device, removable storage device, a volatile read-and-write memory, a read-only memory (ROM), or the like, or any combination thereof. Exemplary mass storage may include a magnetic disk, an optical disk, a solid-state drive, etc. Exemplary removable storage may include a flash drive, a floppy disk, an optical disk, a memory card, a zip disk, a magnetic tape, etc. Exemplary volatile read-and-write memory may include a random access memory (RAM). Exemplary RAM may include a dynamic RAM (DRAM), a double date rate synchronous dynamic RAM (DDR SDRAM), a static RAM (SRAM), a thyristor RAM (T-RAM), and a zero-capacitor RAM (Z-RAM), etc. Exemplary ROM may include a mask ROM (MROM), a programmable ROM (PROM), an erasable programmable ROM (PE ROM), an electrically erasable programmable ROM (EEPROM), a compactdisk ROM (CD-ROM), and a digital versatile disk ROM, etc. In some embodiments, the storage device **150** may be implemented on a cloud platform. Merely by way of example, the cloud platform may include a private cloud, a public cloud, a hybrid cloud, a community cloud, a distributed cloud, an inter-cloud, a multi-cloud, or the like, or any combination thereof.

[0227] In some embodiments, the storage device **150** may be connected to the network **120** to communicate with one or more components in the system **100** (e.g., the respiratory ventilation apparatus **110**, the processing device **140**, the terminal **130**, etc.). One or more components in the system **100** may access the data or instructions stored in the storage device **150** via the network **120**. In some embodiments, the storage device **150** may be directly connected to or communicate with one or more components in the system **100** (e.g., respiratory ventilation apparatus **110**, the processing device **140**, the terminal **130**, etc.). In some embodiments, the storage device **150** may be part of the processing device

140. In some embodiments, the storage device **150** may be part of the respiratory ventilation apparatus **110**.

[0228] FIG. **2** is a block diagram illustrating an exemplary respiratory ventilation apparatus **110** according to some embodiments of the present disclosure. As illustrated in FIG. **2**, the respiratory ventilation apparatus **110** may include a gas pressurization unit **210**, a humidification assembly **220**, a gas filter component **230**, a noise reduction assembly **240**, a detection module **250**, a control module **260**, and one or more peripheral devices **270**.

[0229] The gas pressurization unit **210** may be configured to pressurize the respiratory gas introduced in the respiratory ventilation apparatus **110**. In some embodiments, the gas pressurization unit **210** may generate a pressurized respiratory gas based on an ambient gas (e.g., atmospheric air) introduced in the respiratory ventilation apparatus **110**. In some embodiments, the gas pressurization unit **210** may provide a pressurized respiratory gas for the subject **180**. In some embodiments, the gas pressurization unit **210** may include a blower (e.g., a motor-driven blower). In some embodiments, the gas pressurization unit **210** may include a compressed gas reservoir. In some embodiments, when the blower is running, the respiratory gas (e.g., ambient gas) can be successively sucked into the respiratory ventilation apparatus **110** via the gas inlet port **112**, and then the respiratory gas can be pressurized. The pressurized respiratory gas generated by the gas pressurization unit **210** may be further discharged to the respiration tube **160** via the gas outlet port **111**. In some embodiments, the gas pressurization unit **210** may be controlled by the controller(s) of the respiratory ventilation apparatus **110**. For example, the starting, running (e.g., the rotation speed), and/or stopping of the gas pressurization unit **210** may be controlled (and/or adjusted) by the controller(s) of the respiratory ventilation apparatus **110**.

[0230] The humidification assembly **220** may be configured to humidify the (pressurized) respiratory gas. In some embodiments, the humidification assembly **220** may humidify the (pressurized) respiratory gas by introducing water vapor into the (pressurized) respiratory gas. In some embodiments, the humidification assembly **220** may include a liquid chamber **222** and/or a heating device **224**. The liquid chamber **222** may be configured to accommodate one or more liquids (e.g., water). The heating device **224** may be configured to heat the one or more liquids accommodated in the liquid chamber **222** and/or generate water vapor in a temperature range of e.g., 30-50 degree centigrade. The water vapor may be introduced into the (pressurized) respiratory gas, and then the (pressurized) respiratory gas can be humidified. In some embodiments, the liquid chamber **222** may include a tank and/or a tank cover. The tank may be configured to accommodate the one or more liquids. The tank cover may be configured to introduce (pressurized) respiratory gas onto the surface of the one or more liquids, and/or introduce humidified (pressurized) respiratory gas out of the liquid chamber **222**. In some embodiments, the tank cover may include a shell, a gas inlet port configured to introduce the (pressurized) respiratory gas, via a first gas passage, into the liquid chamber **222**, and/or a gas outlet port configured to introduce the humidified (pressurized) respiratory gas, via a second gas passage, back into the respiratory ventilation apparatus **110**. In some embodiments, the heating device **224** may include a heater plate, one or more heating rods, one or more heating electrodes, or the like, or any combination thereof, mounted beneath a baseplate of the tank or inside the tank.

[0231] In some embodiments, the humidification assembly **220** may humidify the (pressurized) respiratory gas by introducing one or more water droplets into the (pressurized) respiratory gas. In some embodiments, the humidification assembly **220** may include a liquid chamber **222** and/or an ultrasonic atomizer (e.g., a ceramic diaphragm) not shown. The ceramic diaphragm may be controlled by the controller (s) of the respiratory ventilation apparatus **110** to vibrate at an ultrasonic frequency to generate a plurality of water droplets. The water droplets may be introduced into the (pressurized) respiratory gas, and then the (pressurized) respiratory gas can be humidified. More descriptions of the humidification assembly **220** may be found elsewhere in the present disclosure (e.g., FIGS. **17-22**D, **30**A-**36**B and the descriptions thereof).

[0232] The gas filter component **230** may be configured to filter the respiratory gas introduced into the respiratory ventilation apparatus **110**. In some embodiments, the gas filter component **230** may filter the pressurized respiratory gas discharged from the gas pressurization unit **210**. In some embodiments, the gas filter component **230** may include a housing. In some embodiments, the housing of the gas filter component **230** may be in detachable connection with the gas inlet port **112** of the respiratory ventilation apparatus **110**. In some embodiments, the gas filter component **230** may include a plurality of gas filter units. In some embodiments, one or more of the gas filter unit(s) may be mounted in the housing. In some embodiments, one or more of the gas filter unit(s) may be mounted in any other locations of the respiratory ventilation apparatus **110**, the respiration tube **160**, and/or the subject interface **170**. In some embodiments, one or more of the gas filter unit(s) may be configured to filter the respiratory gas entering the respiratory ventilation apparatus **110**. In some embodiments, one or more of the gas filter unit(s) may be configured to filter the respiratory gas entering the gas pressurization unit **210**. In some embodiments, one or more of the gas filter unit(s) may be configured to filter the pressurized respiratory gas flowing from the gas pressurization unit **210**. In some embodiments, one or more of the gas filter unit(s) may be configured to filter the pressurized respiratory gas entering the humidification assembly **220**. In some embodiments, one or more of the gas filter unit(s) may be configured to filter the humidified and pressurized respiratory gas flowing from the humidification assembly **220**.

[0233] In some embodiments, the gas filter component **230** may include one or more ultra-fine filter units mounted outside the gas inlet port **112**, one or more gas filter units mounted inside the gas inlet port **112**, one or more gas filter units with an antibacterial membrane or a deodorization membrane in the gas passage(s) of the respiratory ventilation apparatus **110**, the respiration tube **160**, and/or the subject interface **170**.

[0234] Merely by way of example, in some embodiments, the gas filter component **230** may include a first gas filter unit. The first gas filter unit may be a coarse filter. In some embodiments, the gas filter component **230** may include a second gas filter unit. The second gas filter unit may be a fine filter. In some embodiments, the gas filter component **230** may include a third gas filter unit. The third gas filter unit may be mounted inside the gas inlet port **112** of the respi-

ratory ventilation apparatus **110**. The third gas filter unit may be configured to filter ambient gas entering the respiratory ventilation apparatus **110**. In some embodiments, the third gas filter unit may include a coarse filter and/or a fine filter. In some embodiments, the gas filter component **230** may include a fourth gas filter unit. The fourth gas filter unit may be configured to filter one or more gases with pungent smell (also referred to as pungent gas(es)) in one or more gas passages of the respiratory ventilation apparatus **110**. In some embodiments, the fourth gas filter unit may include a membrane manufactured by one or more nanomaterials having adsorption ability (e.g., activated carbon, graphene, etc.). In some embodiments, the gas filter component **230** may include a fifth gas filter unit. The fifth gas filter unit may be configured to filter bacteria in one or more gases in one or more gas passages of the respiratory ventilation apparatus **110**, the respiration tube **160**, and/or the subject interface **170**. More descriptions of the gas filter component **230** may be found elsewhere in the present disclosure (e.g., FIGS. **6**A-**7**B and the descriptions thereof).

[0235] The noise reduction assembly **240** may be configured to reduce the noise generated by the operation of the gas pressurization unit **210** (e.g., a blower) and/or the flowing of the respiratory gas. In some embodiments, the noise reduction assembly **240** may include a noise reduction box accommodating the gas pressurization unit **210**. In some embodiments, the noise reduction box may include one or more sound absorbing materials set on the inner walls of the noise reduction box. In some embodiments, the noise reduction box may include one or more frames configured to fix the one or more sound absorbing materials. Exemplary sound absorbing materials may include organic fiber, inorganic fiber, inorganic foam, foam plastic, or the like, or any other material with the function of absorbing sound. More descriptions of the noise reduction assembly **240** may be found elsewhere in the present disclosure (e.g., FIGS. **8**A-**11**F and the descriptions thereof).

[0236] The detection module **250** may be configured to detect one or more parameters relating to the system **100** (e.g., the respiratory ventilation apparatus **110**, the subject **180**). Exemplary parameters may include the flux of the respiratory gas, a flow rate of the respiratory gas, a temperature of the respiratory gas, a humidity of the respiratory gas, a snore of the subject **180**, a respiratory rate of the subject **180**, a tidal volume of the subject **180**, or the like, or a combination thereof. In some embodiments, the parameters may include operation status of the respiratory ventilation apparatus **110** (e.g., a running time of the respiratory ventilation apparatus **110**, a time of delay for pressurizing the respiratory gas, an air leakage of the pressurized respiratory gas, an input voltage of the gas pressurization unit **210**, or the like).

[0237] In some embodiments, the detection module **250** may include one or more sensors configured to detect the parameter(s). Exemplary sensors may include a flow sensor, a pressure sensor, a humidity sensor, a temperature sensor, a timer, etc. For example, the detection module **250** may include a snoring detection assembly (e.g., a pressure sensor) (see FIGS. **15**A and **15**B) configured to detect a snore of a user of the respiratory ventilation apparatus **110** (e.g., the subject **180**). As another example, the detection module **250** may include a flow detection assembly (see FIGS. **15**A and **15**B) configured to detect a flux of one or more gases in one or more passages of the respiratory ventilation apparatus **110**. In some embodiments, the detection module **250** may further include a liquid level detection assembly (e.g., a liquid level sensor) configured to detect the liquid level in the tank of the liquid chamber **222**.

[0238] The control module **260** may be configured to control the operation of the components of the system **100** (e.g., the gas pressurization unit **210**, the humidification assembly **220**, the gas filter component **230**, the detection module **250**, the processing device **140**, the storage device **150**, the terminal **130**, or the like). In some embodiments, the control module **260** may be configured to initiate the respiratory ventilation apparatus **110** upon a boot operation. For example, the control module **260** may load a bootstrap program from the storage device **150**, load a user program from the storage device **150**, initiate one or more peripheral devices of the control module **260** (e.g., a communication interface, a timer, an AD acquisition interface, an indicator light, a button, a knob, a power switch, etc.), initiate one or more sensors, initiate the gas pressurization unit **210**, initiate one or more configuration parameters, and/or initiate one or more treatment parameters. As another example, the control module **260** may initiate a random access memory of the respiratory ventilation apparatus **110**, read one or more parameters from the storage device **150** (e.g., a non-volatile memory) of the respiratory ventilation apparatus **110**, and/or initiate the detection module **250**. In some embodiments, the control module **260** may be configured to initiate a program that constantly reads information from the detection module **250**, and control the pressure of the pressurized respiratory gas using at least the information read from the detection module **250** and one or more of the parameters. In some embodiments, the control module **260** may cause the sensor (s) to detect one or more parameters (e.g., a pressure) of the pressurized respiratory gas, and/or adjust a rotated speed of the gas pressurization unit **210** to maintain the detected pressure of the pressurized respiratory gas within a predetermined range. In some embodiments, in response to an abnormal condition determined based on a comparison between a current state of the respiratory ventilation apparatus **110** and the plurality of parameters read from the storage device **150**, the control module **260** may cause the respiratory ventilation apparatus **110** to provide an alert or reminder to a user. In some embodiments, the current state of the respiratory ventilation apparatus **110** may include the pressure of the respiratory gas. In some embodiments, the parameter(s) read from the storage device **150** may include one or more thresholds relating to an upper limit of the pressure, an upper limit of an air leakage of the pressurized respiratory gas, a lower limit of the air leakage of the pressurized respiratory gas, a lower limit of a respiratory rate, or a lower limit of an input voltage of the respiratory ventilation apparatus **110**, or the like. In some embodiments, the control module **260** may adjust the rotated speed of the gas pressurization unit **210** to pressurize the respiratory gas with a delay after the initiation of the respiratory ventilation apparatus **110**.

[0239] The control module **260** may be implemented as software and/or hardware modules (e.g., controllers) and may be stored in any type of non-transitory computer-readable medium or other storage device. For example, the control module **260** may be stored in the processing device **140**. In some embodiments, a software module may be compiled and linked into an executable program. It will be appreciated that software modules can be callable from other

modules or from themselves, and/or can be invoked in response to detected events or interrupts. Software modules configured for execution on computing devices (e.g., a processor of the processing device **140**) can be provided on a computer-readable medium, such as a compact disc, a digital video disc, a flash drive, a magnetic disc, or any other tangible medium, or as a digital download (and can be originally stored in a compressed or installable format that requires installation, decompression, or decryption prior to execution). Such software code can be stored, partially or fully, on a memory device of the executing computing device, for execution by the computing device. Software instructions can be embedded in a firmware, such as an EPROM. It will be further appreciated that hardware modules can be included of connected logic units, such as gates and flip-flops, and/or can be included of programmable units, such as programmable gate arrays or processors. The modules or computing device functionality described herein can be implemented as software modules, and can be represented in hardware or firmware. In general, the modules described herein refer to logical modules that can be combined with other modules or divided into sub-modules despite their physical organization or storage. In some embodiments, the control module **260** or controllers may include signal processing circuitry, memory circuitry, one or more processors, a single chip microcomputer, or the like, or a combination thereof. In some embodiments, at least a portion of the control module **260** or controllers may be integrated in one or more printed circuit boards of the respiratory ventilation apparatus **110**.

[0240] The peripheral device **270** may be configured to facilitate the operation or use of the respiratory ventilation apparatus **110**. In some embodiments, the peripheral device **270** may include the respiration tube **160**, the subject interface **170**, or the like, or a combination thereof. More descriptions of the peripheral device **270** may be found elsewhere in the present disclosure (e.g., FIG. **1** and the descriptions thereof).

[0241] It should be noted that the above description of the respiratory ventilation apparatus **110** is merely provided for the purposes of illustration, and not intended to limit the scope of the present disclosure. For persons having ordinary skills in the art, multiple variations and modifications may be made under the teachings of the present disclosure. However, those variations and modifications do not depart from the scope of the present disclosure.

[0242] In some embodiments, the respiratory ventilation apparatus **110** may include one or more additional modules, units, assemblies, devices, or the like.

[0243] For example, the respiratory ventilation apparatus **110** may include a storage module configured to store data generated during the operation of the respiratory ventilation apparatus **110**.

[0244] As another example, the respiratory ventilation apparatus **110** may include one or more ultraviolet lamps set in one or more gas passages of the respiratory ventilation apparatus **110**, the respiration tube **160**, and/or the subject interface **170**. The ultraviolet lamp(s) may be configured to sterilize one or more gases flowing in the respiratory ventilation apparatus **110**, one or more gas passages in the respiratory ventilation apparatus **110**, or one or more components of the respiratory ventilation apparatus **110** (e.g., the humidification assembly **220**), or the like.

[0245] As a further example, the respiratory ventilation apparatus **110** may include one or more display panels configured to display information relating to the system **100**.

[0246] As a further example, the respiratory ventilation apparatus **110** may include a communication module configured to communicate information with the processing device **140**, the terminal **130**, etc. The communication module may be connected to a network (e.g., the network **120**) to facilitate data communications. The communication module may establish connections between the processing device **140** and the respiratory ventilation apparatus **110**, the terminal **130**, or the storage device **150**. The connection may be a wired connection, a wireless connection, or combination of both that enables data transmission and reception. The wired connection may include an electrical cable, an optical cable, a telephone wire, or the like, or any combination thereof. The wireless connection may include Bluetooth, Wi-Fi, WiMax, WLAN, ZigBee, mobile network (e.g., 3G, 4G, 5G, etc.), or the like, or a combination thereof. In some embodiments, the communication module may include a standardized communication port, such as RS232, RS485, etc. In some embodiments, the communication module may include a specially designed communication port.

[0247] As a further example, the respiratory ventilation apparatus **110** may include a remote-control unit. The remote-control unit may be configured to remotely operate the respiratory ventilation apparatus **110**. A user (e.g., the subject **180**) may operate the respiratory ventilation apparatus **110** via the remote-control unit without adjusting one or more components of the respiratory ventilation apparatus **110** (e.g., the on-off key **311**, the display panel **312**, the knob **313**, the home button **314**, or the like, as illustrated in FIG. **3**).

[0248] In some embodiments, one or more components of the respiratory ventilation apparatus **110** may be omitted. For example, the heating device **224** may be omitted and/or replaced by an ultrasonic atomizer. As another example, the humidification assembly **220** may be omitted. As a further example, the gas filter component **230** may be omitted.

[0249] FIGS. **3**A-**3**D illustrate an exemplary respiratory ventilation apparatus according to some embodiments of the present disclosure. FIG. **3**A shows a front side of the respiratory ventilation apparatus **300**. FIG. **3**B shows a rear side of the respiratory ventilation apparatus **300**. FIG. **3**C shows another rear side of the respiratory ventilation apparatus **300**. FIG. **3**D shows main components of the respiratory ventilation apparatus **300**. As illustrated in FIGS. **3**A-**3**D, the respiratory ventilation apparatus **300** may include a main body **310** and a liquid chamber **320**.

[0250] As illustrated in FIG. **3**A, the main body **310** of the respiratory ventilation apparatus **300** may include an on-off key **311**, a display panel **312**, a knob **313**, a home button **314**, or the like. The on-off key **311** may be configured to cause the respiratory ventilation apparatus **300** to switch between a boot state and a shutdown state. For example, if the respiratory ventilation apparatus **300** is switched off, a user (e.g., the subject **180**) may press the on-off key **311** to boot the respiratory ventilation apparatus **300**. As another example, if the respiratory ventilation apparatus **300** is switched on, the user (e.g., the subject **180**) may press the on-off key **311** to shut down the respiratory ventilation apparatus **300**. The display panel **312** may be configured to display information relating to the respiratory ventilation

apparatus **300**. The information displayed may include, for example, the parameters relating to the respiratory gas, the expired gas of the subject **180**, and/or the operation status of the respiratory ventilation apparatus **110**. More descriptions of the parameters may be found elsewhere in the present disclosure (e.g., FIG. **1** and the descriptions thereof). In some embodiments, the display panel **312** may be configured as a software operation interface of the respiratory ventilation apparatus **110**. In some embodiments, the display panel **312** may be a touch panel.

[0251] The knob **313** may be configured to facilitate a user (e.g., the subject **180**) to adjust and/or set the value(s) of one or more parameters illustrated above and/or a menu item of software implemented in the respiratory ventilation apparatus **110**. In some embodiments, the knob **313** may be turned and/or pressed. For example, the subject **180** may turn the knob **313** to adjust the value(s) of the pressure of the respiratory gas, the humidity of the respiratory gas, etc. As another example, the subject **180** may press the knob **313** to confirm an adjusted (or set) parameter, select a menu item, exit from a functional interface, etc. As a further example, the subject **180** may long press the knob **313** (or short press the knob **313** two times) to access a doctor's interface. In the doctor's interface, a doctor may be allowed to adjust and/or set one or more parameters associated with the respiratory ventilation apparatus **110**. The home button **314** may be pressed to switch to a main interface of the software. In some embodiments, the home button **314** may be long pressed to mute the hardware and/or software of the respiratory ventilation apparatus **110**. One or more of the on-off key **311**, the display panel **312**, the knob **313**, and the home button **314** may be set on the front side, the rear side, the top side, the left side, or the right side of the respiratory ventilation apparatus **300**, the rear side of the respiratory ventilation apparatus **300**.

[0252] As illustrated in FIG. **3**A, the liquid chamber **320** may include a tank **322** and a tank cover **321**. The liquid chamber **320** may be removably coupled to the main body **310** of the respiratory ventilation apparatus **300** (see FIG. **3**D). In some embodiments, the liquid chamber **320** may be in detachable connection with the main body **310** of the respiratory ventilation apparatus **300**. A user (e.g., the subject **180**) may discharge the liquid chamber **320** from the respiratory ventilation apparatus **300**, so that liquid filling in the tank **322**, liquid exchange of the tank **322**, washing of the tank **322**, and/or sterilization of the liquid chamber **320** may be facilitated. More descriptions of the liquid chamber **320** may be found elsewhere in the present disclosure (e.g., FIGS. **18**A, **18**B, **23**A, **26**B, **30**A, **30**B, **36**A, and **36**B, and the descriptions thereof). As illustrated in FIG. **3**A, the liquid chamber **320** is set on the right side of the main body **310** for illustration purposes. It should be noted that in some embodiments, the liquid chamber **320** may be set on the left side of the main body **310**.

[0253] As illustrated in FIG. **3**B, the respiratory ventilation apparatus **300** may include a gas inlet port **332** and a gas outlet port **331**. In some embodiments, the main body **310** of the respiratory ventilation apparatus **300** may include a housing. The housing may include a first side wall (e.g., the interface between the main body **310** and the liquid chamber **320**) and a second side wall (e.g., the rear side). The first side wall may be configured to discharge the pressurized respiratory gas. The gas inlet port **332** may be set on the main body **310**. In some embodiments, the gas inlet port **332** may be set on the second side wall of the housing of the main body **310** of the respiratory ventilation apparatus **300**. In some embodiments, the gas inlet port **332** may be set on the front side, the rear side, the top side of the respiratory ventilation apparatus **300**. In some embodiments, the gas inlet port **332** may be set on a side of the respiratory ventilation apparatus **300** opposite to the liquid chamber **320**. As illustrated in FIGS. **3**A and **3**B, as the liquid chamber **320** is set on the right side of the main body **310**, the gas inlet port **332** may be set on the left side of the respiratory ventilation apparatus **300**. In FIG. **3**B, the gas outlet port **331** is set on the main body **310**. The gas outlet port **331** may be set on the same side of the respiratory ventilation apparatus **300** as the gas inlet port **332**. In some embodiments, the gas outlet port **331** and the gas inlet port **332** may be set on different sides of the respiratory ventilation apparatus **300**. In some embodiments, the gas outlet port **331** may be set on the liquid chamber **320**. In some embodiments, the respiratory ventilation apparatus **300** may include or be equipped with one or more gas filter units (e.g., a coarse filter, a fine filter, or the like) inside the gas inlet port **332** to filter the respiratory gas entering the gas inlet port **332**.

[0254] As illustrated in FIG. **3**C, the respiratory ventilation apparatus **300** may include a gas filter component **340**. The gas filter component **340** may be configured to filter the respiratory gas entering the respiratory ventilation apparatus **300**. The gas filter component **340** may be removably coupled to the gas inlet port **332** of the respiratory ventilation apparatus **300** (see FIG. **3**D). The gas filter component **340** may include a coarse filter and/or a fine filter (not shown in FIGS. **3**A-**3**D). It should be noted that the gas filter component **340** may be optional. In some embodiments, the respiratory ventilation apparatus **300** may not include the gas filter component **340** as illustrated in FIG. **3**B. As illustrated in FIG. **3**D, the liquid chamber **320** and/or the gas filter component **340** may be in detachable connection with the main body **310** of the respiratory ventilation apparatus **300**. More descriptions of the gas filter component **340** may be found elsewhere in the present disclosure (e.g., FIGS. **6**A-**7**B and the descriptions thereof).

[0255] As illustrated in FIG. **3**C, the respiratory ventilation apparatus **300** may include a first interface **350**, a second interface **360**, and a third interface **370**. The first interface **350** may be configured to supply electric power for the heating device **224** of the respiratory ventilation apparatus **300**. The second interface **360** may be configured as an interface for software upgrading and/or data reading (or transmission). The third interface **370** may be configured to supply electric power for the respiratory ventilation apparatus **300**.

[0256] FIG. **4** illustrates an exemplary process for delivering a respiratory gas according to some embodiments of the present disclosure. In some embodiments, one or more operations of process **400** illustrated in FIG. **4** for delivering a respiratory gas may be implemented in the system **100** illustrated in FIG. **1**. For example, the process **400** illustrated in FIG. **4** may be stored in the storage device **150** in the form of instructions, and invoked and/or executed by the processing device **140**. As another example, a portion of the process **400** may be implemented on the respiratory ventilation apparatus **110**. The operations of the illustrated process presented below are intended to be illustrative. In some embodiments, the process may be accomplished with one or

more additional operations not described, and/or without one or more of the operations discussed. Additionally, the order in which the operations of the process as illustrated in FIG. **4** and described below is not intended to be limiting.

[0257] In **410**, the respiratory ventilation apparatus **110** (e.g., the control module **260**) may initiate one or more components of the respiratory ventilation apparatus **110**. In some embodiments, the respiratory ventilation apparatus **110** may be initiated upon a boot operation (e.g., a user presses the on-off button the respiratory ventilation apparatus **110**). In some embodiments, the control module **260** may load a bootstrap program from a storage device (e.g., a RAM, a ROM, a flash memory, a secure digital (SD) memory card, etc.) of the respiratory ventilation apparatus **110**, load a user program from the storage device of the respiratory ventilation apparatus **110**, initiate one or more peripheral devices of the control module **260** (e.g., a communication interface, a timer, an AD acquisition interface, an indicator light, a button, a knob, a power switch, etc.), initiate one or more sensors, initiate the gas pressurization unit **210**, initiate one or more configuration parameters, and/or initiate one or more treatment parameters. In some embodiments, the control module **260** may initiate a random access memory of the respiratory ventilation apparatus **110**, read one or more parameters from a storage device of the main body (e.g., a non-volatile memory, a flash memory, an SD card) of the respiratory ventilation apparatus **110** and/or from the network **120**, and/or initiate the detection module **250**. In some embodiments, the control module **260** may initiate a program that constantly reads information from the detection module **250**, and control the pressure of the pressurized respiratory gas using at least the information read from the detection module **250** and one or more of the parameters. In some embodiments, the parameter(s) read from a storage device of the main body (e.g., a non-volatile memory, a flash memory, an SD card) of the respiratory ventilation apparatus **110** and/or from the network **120** may include one or more thresholds relating to an upper limit of the pressure, an upper limit of an air leakage of the pressurized respiratory gas, a lower limit of the air leakage of the pressurized respiratory gas, a lower limit of a respiratory rate, or a lower limit of an input voltage of the respiratory ventilation apparatus **110**, or the like.

[0258] In **420**, the respiratory ventilation apparatus **110** may deliver a respiratory gas to a user (e.g., the subject **180**). In some embodiments, the control module **260** may control or adjust the rotated speed of the gas pressurization unit **210** to pressurize the respiratory gas, and the pressurized respiratory gas may be discharged (or delivered) to the subject **180** via one or more gas passaged in the respiratory ventilation apparatus **110**, the respiration tube **160**, and/or the subject interface **170**. In some embodiments, the control module **260** may adjust the rotated speed of the gas pressurization unit **210** to pressurize the respiratory gas with a delay after the initiation of the respiratory ventilation apparatus **110**. In some embodiments, the delay may be preset by the user.

[0259] In **430**, the respiratory ventilation apparatus **110** may detect information relating to the respiratory gas and/or the subject **180**. In some embodiments, the control module **260** may cause the detection module **250** (e.g., one or more sensors) to detect one or more parameters (e.g., a pressure) of the pressurized respiratory gas. The detected information may include parameters relating to the respiratory gas, the expired gas of the subject **180**, and/or the operation status of the respiratory ventilation apparatus **110**. More descriptions of the parameters may be found elsewhere in the present disclosure (e.g., FIG. **2** and the descriptions thereof). In some embodiments, the control module **260** may determine one or more parameters based on the operation condition(s) of one or more components of the respiratory ventilation apparatus **110**. For example, the control module **260** may determine the pressure of the respiratory gas based on the rotation speed, input voltage, and/or real-time power of the gas pressurization unit **210**. In some embodiments, the control module **260** may adjust the rotation speed of the gas pressurization unit **210** to maintain the detected pressure of the pressurized respiratory gas within a predetermined range.

[0260] In **440**, the respiratory ventilation apparatus **110** may determine whether an abnormal condition is recognized. In some embodiments, the control module **260** may recognize an abnormal condition based on a comparison between a current state of the respiratory ventilation apparatus **110** and the plurality of parameters read from a storage device of the main body of the respiratory ventilation apparatus **110** and/or from the network **120**. In some embodiments, the current state of the respiratory ventilation apparatus **110** may include for example, the pressure of the respiratory gas, an air leakage of the pressurized respiratory gas, a respiratory rate, an input voltage of the gas pressurization unit **210**, etc. In response to a determination that an abnormal condition is recognized, the process **400** may proceed to **450**. In response to a determination that no abnormal condition is recognized, the process **400** may return to **420**, i.e., the respiratory ventilation apparatus **110** may continue delivering the respiratory gas.

[0261] In **450**, the respiratory ventilation apparatus **110** may provide an alert or reminder to a user (e.g., the subject **180**). The alert or reminder may include a voice, a text, etc. For example, in response to an abnormal condition, the respiratory ventilation apparatus **110** may make an alarm sound, the respiratory ventilation apparatus **110** may display a notice on a displayer, and/or the control module **260** may send an instruction to the terminal **130** to display a notice or make an alarm sound, etc. In some embodiments, after the respiratory ventilation apparatus **110** provides an alert or reminder to the user, the process may return to **420**, i.e., the respiratory ventilation apparatus **110** may continue delivering the respiratory gas.

[0262] FIGS. **5**A-**5**E illustrate exemplary gas passages of a respiratory ventilation apparatus according to some embodiments of the present disclosure. As illustrated in FIG. **5**A, a flow of respiratory gas (e.g., ambient gas) may flow from a gas inlet port **332** into the respiratory ventilation apparatus **300** and out of the respiratory ventilation apparatus **300** from the gas outlet port **331**. In some embodiments, the respiratory ventilation apparatus **300** may further include a gas filter component **340** mounted outside the gas inlet port **332**. The respiratory gas may be filtered by the gas filter component **340** before entering the respiratory ventilation apparatus **300** via the gas inlet port **332**. As illustrated in FIG. **5**B, a side of the main body **310** attached with the liquid chamber **320** may include an outlet port **501** and an inlet port **502**. The respiratory gas filtered by the gas filter component **340** may be pressurized by the gas pressurization unit **210** and then pass through the outlet port **501** of the main body **310**. As illustrated in FIG. **5**C, the liquid chamber **320** may

include the tank **322** and the tank cover **321**, and a side of the tank cover **321** attached with the main body **310** may include an outlet port **503** and an inlet port **504**. The filtered and pressurized respiratory gas passing through the outlet port **501** of the main body **310** may enter the liquid chamber **320** from the inlet port **504** of the tank cover **321** and be humidified in the tank **322**. The outlet port **503** of the tank cover **321** may output the pressurized and humidified respiratory gas. As illustrated in FIGS. **5**D and **5**E, the pressurized and humidified respiratory gas output by the outlet port **503** of the tank cover **321** may return to the main body **310** from the inlet port **502** of the main body **310** and flow out of the respiratory ventilation apparatus **300** from the gas outlet port **331** of the respiratory ventilation apparatus **300**.

[0263] It should be noted that the above description of the respiratory ventilation apparatus **300** is merely provided for the purposes of illustration, and not intended to limit the scope of the present disclosure. For persons having ordinary skills in the art, multiple variations and modifications may be made under the teachings of the present disclosure. However, those variations and modifications do not depart from the scope of the present disclosure. In some embodiments, the respiratory ventilation apparatus **300** may not include the humidification assembly **220** (i.e., the liquid chamber **320** may be omitted). In some embodiments, the gas outlet port **331** of the respiratory ventilation apparatus **300** may be set on the liquid chamber **320**, and accordingly, the inlet port **502** of the respiratory ventilation apparatus **300** and the outlet port **503** of the liquid chamber **320** may be omitted. That is, the pressurized respiratory gas may be introduced into the liquid chamber **320** via the outlet port **501** of the main body **310** and the inlet port **504** of the liquid chamber **320**, and then be discharged to a respiration tube via a gas outlet port set on the liquid chamber **320**. Correspondingly, the humidified respiratory gas may not flow back to the main body **310**.

[0264] FIGS. **6**A-**6**E illustrate an exemplary gas filter component according to some embodiments of the present disclosure. FIG. **6**A shows a first axonometric drawing of the gas filter component **600** illustrating a front side, a left side, and a top side of the gas filter component **600**. FIG. **6**B shows a first exploded view of the gas filter component **600**. FIG. **6**C shows an internal structure of a housing of the gas filter component **600**. FIG. **6**D shows a second exploded view of the gas filter component **600**. FIG. **6**E shows a second axonometric drawing of the gas filter component **600** illustrating a rear side, a left side, and a top side of the gas filter component **600**. In some embodiments, the gas filter component **600** may be in detachable connection with the gas inlet port **112** of the respiratory ventilation apparatus **110**.

[0265] The gas filter component **600** may include a housing **601** and one or more gas filter units (e.g., a first gas filter unit **605**, a second gas filter unit **606**, etc.). In some embodiments, a respiratory gas (e.g., an ambient gas) may enter the respiratory ventilation apparatus **300** (e.g., when the gas pressurization unit **210** is in operation) via the gas filter component **600** along a direction indicated by the arrow shown in FIG. **6**A. The gas filter component **600** (e.g., the first gas filter unit **605**, the second gas filter unit **606**, etc.) may filter the respiratory gas entering the respiratory ventilation apparatus **300**. In some embodiments, the one or more gas filter units may filter the respiratory gas in different levels.

[0266] The housing **601** may include a gas inlet end **602** and a gas outlet end **609**. The gas inlet end **602** may include a first cover plate **604**. The gas outlet end **609** may include a second cover plate **607**. In some embodiments, the first cover plate **604** may have a same size as the gas inlet end **602**. In some embodiments, the first cover plate **604** may include at least one hole allowing the respiratory gas to enter the gas filter component **600**. In some embodiments, the second cover plate **607** may have a smaller size than the gas outlet end **609**. In some embodiments, the second cover plate **607** may include at least one hole allowing the respiratory gas to exit the gas filter component **600** and enter the respiratory ventilation apparatus **300**. In some embodiments, the first cover plate **604** may be in detachable connection with the housing **601**. In some embodiments, the first cover plate **604** may include a frame. In some embodiments, the frame of the first cover plate **604** may include one or more holes or grooves, and the housing **601** may include one or more corresponding protruding structures (or vice versa), so that the first cover plate **604** may be connected with the housing **601**. In some embodiments, the second cover plate **607** may be fixed on the gas outlet end **609** of the housing **601** through a sealed connection. In some embodiments, the second cover plate **607** and the housing **601** may be configured as an integral piece. In some embodiments, the first cover plate **604** and/or the second cover plate **607** may be configured to prevent one or more gas filter units (e.g., the first gas filter unit **605** and/or the second gas filter unit **606**) of the gas filter component **600** from deformation. In some embodiments, the housing **601** of the gas filter component **600** may be configured to facilitate the disassembly of the gas filter component **600**, and/or facilitate the replacement of the gas filter unit(s) (e.g., the first gas filter unit **605** and/or the second gas filter unit **606**) of the gas filter component **600**.

[0267] In some embodiments, the gas filter component **600** may have a stepped or tapered three-dimensional structure. In some embodiments, the gas filter component **600** may have the shape of a cuboid. In some embodiments, the gas filter component **600** may have the shape of a funnel. In some embodiments, the gas outlet end **609** of the housing **601** may have the shape of a funnel. In some embodiments, the gas inlet end **602** may have a same size as the gas outlet end **609**. In some embodiments, the gas inlet end **602** may have a larger size than the gas outlet end **609**, so that the intake volume of the respiratory gas flowing into the gas filter component **600** can be increased. In some embodiments, the gas outlet end **609** may have the shape of a funnel, so that the gas outlet end **609** can be connected with the gas inlet port **112** of the respiratory ventilation apparatus **110**. In some embodiments, a cross section (perpendicular to the inflow direction of the respiratory gas) of the gas inlet end **602** (or the first cover plate **604**) of the gas filter component **600** may be larger than that of the gas outlet end **609** (or the second cover plate **607**), which means the gas inlet end **602** (or the first cover plate **604**) may have a larger intake area than the gas outlet end **609** (or the second cover plate **607**).

[0268] In some embodiments, the first cover plate **604** (or the gas inlet end **602**) and the second cover plate **607** (or the gas outlet end **609**) may have the same shape. In some embodiments, the first cover plate **604** (or the gas inlet end **602**) and the second cover plate **607** (or the gas outlet end **609**) may have different shapes. For example, the first cover plate **604** and the second cover plate **607** may have a shape

of a rounded rectangle. As another example, the first cover plate **604** and the second cover plate **607** may have a shape of a circle. As still another example, the first cover plate **604** may have a shape of a rounded rectangle, while the second cover plate **607** may have a shape of a circle. As still another example, the first cover plate **604** may have a shape of a circle, while the second cover plate **607** may have a shape of a rounded rectangle.

[0269] The first cover plate **604** may include a plurality of holes. The holes of the first cover plate **604** may be configured to facilitate the respiratory gas to flow through the first cover plate **604** and reach the gas filter unit(s) to be filtered. After flowing through the plurality of holes of the first cover plate **604**, the respiratory gas may be filtered by the gas filter unit(s). Then the filtered respiratory gas may flow through the second cover plate **607** and enter the gas inlet port **112** of the respiratory ventilation apparatus **110**. The second cover plate **607** may include one or more holes. The holes of the second cover plate **607** may be configured to facilitate the filtered respiratory gas to flow through the second cover plate **607** and reach the gas inlet port **112**. In some embodiments, the number of the holes set on the first cover plate **604** may be larger than the number of the holes set on the second cover plate **607**.

[0270] In some embodiments, the holes of the first cover plate **604** and/or the second cover plate **607** may have a shape of a strip, circle, rectangle, triangle, rhombus, hexagon, star-like, or the like, or any combine thereof. The holes may have a relatively small size so that a finger of a user cannot be put in. In some embodiments, the holes of the first cover plate **604** and/or the second cover plate **607** may be evenly distributed. As show in FIG. **6**A, 198 round holes are evenly distributed on the first cover plate **604** to form an array of 11 rows and 18 columns. As show in FIG. **6**E, 16 round holes are evenly distributed on the second cover plate **607** to form an array of 4 rows and 4 columns. It should be noted that in some embodiments, the holes of the first cover plate **604** and/or the second cover plate **607** may be unevenly distributed. In some embodiments, the holes of the first cover plate **604** and/or the second cover plate **607** may help to adjust the gas flow of the respiratory gas entering the gas inlet port **112** of the respiratory ventilation apparatus **110**, so that the noise generated by the gas flow may be reduced.

[0271] In some embodiments, the first gas filter unit **605** may be a coarse filter. In some embodiments, the coarse filter may be positioned close to the first cover plate **604**. The coarse filter may include a coarse filter sponge (also refer to coarse filter foam). In some embodiments, the first gas filter unit **605** may include one or more layers of coarse filter sponge (or a multilayer filtration membrane). The coarse filter sponge may be configured to filter or adsorb solid particulates (such as dust, stive, pollen, etc.) in the respiratory gas entering the gas filter component **600**. In some embodiments, the size of the particulates filtered by the coarse filter sponge may be larger than 5 micrometers. In some embodiments, the coarse filter may further include a fixing part configured to fix the coarse filter sponge in the housing **601**.

[0272] In some embodiments, the second gas filter unit **606** may be a fine filter. The fine filter may include a fine filter sponge (also refer to fine filter foam). In some embodiments, the second gas filter unit **606** may include one or more layers of fine filter sponge (or a multilayer ultrafiltration membrane). The fine filter sponge may be configured to filter or adsorb solid particulates with a size larger than 1 micrometer, such as PM2.5 particles. Exemplary components of the coarse filter sponge and/or the fine filter sponge may include synthetic fibers, polyester fibers, glass gibers, or the like, or any combination thereof. In some embodiments, the fine filter may further include a fixing part configured to fix the fine filter sponge in the housing **601**. In some embodiments, the housing **601** may include one or more frames configured to fix the first gas filter unit **605** and/or the second gas filter unit **606**. In some embodiments, the first gas filter unit **605** may be positioned closer to the first cover plate **604** than the second gas filter unit **606** (i.e., the distance between the first gas filter unit **605** and the first cover plate **604** may be less than the distance between the second gas filter unit **606** and the first cover plate **604**).

[0273] In some embodiments, the second gas filter unit **606** may be mounted behind the first gas filter unit **605** in the gas flow direction. In some embodiments, the respiratory gas may flow through the first gas filter unit **605** first and then flow through the second gas filter unit **606**. In some embodiments, one or more grilles may be set between the first gas filter unit **605** and the second gas filter unit **606**, so that there may be a certain distance between the first gas filter unit **605** and the second gas filter unit **606**, thereby facilitating the respiratory gas to flow through the first gas filter unit **605** and the second gas filter unit **606**, and enhancing the filtering effect of the first gas filter unit **605** and the second gas filter unit **606**. In some embodiments, the first gas filter unit **605** and the second gas filter unit **606** may be independently mounded in the housing **601**. In some embodiments, the replacement cycle of the first gas filter unit **605** may be less than the replacement cycle of the second gas filter unit **606**. In some embodiments, the first gas filter unit **605** and the second gas filter unit **606** may be detachably connected with the housing **601**. The detachable connection may include snap connection, screw connection, hinge connection, or the like, or any combine thereof.

[0274] In some embodiments, the housing **601** of the gas filter component **600** may further include a connection part configured to connect the gas filter component **600** with the gas inlet port **112** of the respiratory ventilation apparatus **110**. As shown in FIG. **6**E, the connection part may include a position claw **608** on the rear side of the housing **601** and a snap claw **603** on the left side (or the right side) of the housing **601**. By pressing and/or holding the snap claw **603**, a user (e.g., the subject **180**) may easily connect (or disconnect) the gas filter component **600** with (or from) the respiratory ventilation apparatus **110**. Accordingly, a pair of limitation holes **704** (see FIG. **7**B) may be set at two sides of the gas inlet port **112** to cooperate with the snap claw **603** and the snap claw **603** respectively, so that the gas filter component **600** can be fixed on the respiratory ventilation apparatus **110**.

[0275] For ensuring a sealed connection between the gas filter component **600** and the respiratory ventilation apparatus **110**, a sealing element (e.g., a silicone gasket) may be set between the gas outlet end **609** and the gas inlet port **112** of the respiratory ventilation apparatus **110**. For example, a sealing element may be set at the gas outlet end **609**. As another example, a sealing element may be set at the gas inlet port **112** of the respiratory ventilation apparatus **110** (see **706** in FIG. **7**B).

[0276] In some embodiments, the gas filter component **600** may further include a first baffle (not shown). In some

embodiments, the first baffle may have an area less than the gas inlet end **602** of the housing **601**. In some embodiments, the first baffle may be mounted in the housing **601** closer to the gas inlet end **602** than the gas filter unit(s). In some embodiments, the coarse filter may be positioned closer to the gas inlet end **602** of the housing **601** than the fine filter. For example, the first baffle may be mounted between the first cover plate **604** and the first gas filter unit **605**. In some embodiments, the first baffle may cause the respiratory gas to flow from one or more sides (e.g., four sides) of the first baffle into the gas filter component **600**, so that the noise generated by the gas flowing may be reduced.

[0277] In some embodiments, the gas filter component **600** may be set between the gas outlet port of the respiratory ventilation apparatus **300** and the respiration tube **160**. In some embodiments, the gas outlet end **609** may have the shape of a funnel, so that the gas outlet end **609** can be connected with the respiration tube **160**.

[0278] It should be noted that in some embodiments, the gas filter component **600** may be configured as protruding out of the shell of the respiratory ventilation apparatus **110**. In some embodiments, there may be a certain distance between the first gas filter unit **605** and the second gas filter unit **606**. In some embodiments, the gas filter component **600** may be equipped with one or more grilles between the first gas filter unit **605** and the second gas filter unit **606**. In some embodiments, the first gas filter unit **605** may be set on the first cover plate **604**. In some embodiments, the second gas filter unit **606** may be set on the second cover plate **607**. In some embodiments, both the first gas filter unit **605** and the second gas filter unit **606** may be set on the first cover plate **604**. In some embodiments, both the first gas filter unit **605** and the second gas filter unit **606** may be set on the second cover plate **607**. In some embodiments, the number of the holes set on the first cover plate **604** may be larger than the number of the holes set on the second cover plate **607**.

[0279] FIGS. **7**A and **7**B illustrate an exemplary gas filter unit according to some embodiments of the present disclosure. FIG. **7**A shows an axonometric drawing of the respiratory ventilation apparatus **300** (without the humidification assembly **220**) illustrating a rear side of the respiratory ventilation apparatus **300**. FIG. **7**B shows an exploded view of the respiratory ventilation apparatus **300**.

[0280] The respiratory ventilation apparatus **300** may include a third gas filter unit **702**. In some embodiments, the third gas filter unit **702** may be set at the gas inlet port **701** of the respiratory ventilation apparatus **300**. In some embodiments, the third gas filter unit **702** may be configured to filter the respiratory gas (e.g., ambient gas) entering the gas inlet port **701**. The third gas filter unit **702** may include a coarse filter and/or a fine filter. More descriptions of the coarse filter and/or the fine filter may be found elsewhere in the present disclosure (e.g., FIGS. **6**A-**6**E and the descriptions thereof). In some embodiments, the third gas filter unit **702** may be mounted inside the gas inlet port of the respiratory ventilation apparatus **300**, between the gas inlet port of the respiratory ventilation apparatus **300** and a gas inlet port of the gas pressurization unit **210**, at the gas inlet port of the gas pressurization unit **210**, at a gas outlet port of the gas pressurization unit **210**, between the gas outlet port of the gas pressurization unit **210** and the gas outlet port of the respiratory ventilation apparatus **300**, at the gas outlet port of the respiratory ventilation apparatus **300**, in the respiration tube **160**, and/or in the subject interface **170**. For example, the third gas filter unit **702** may be set between the gas outlet port of the respiratory ventilation apparatus **300** and the respiration tube **160**.

[0281] In some embodiments, the gas inlet port **701** may include or be equipped with a second baffle **705** and/or a third baffle **703**. In some embodiments, one or more limitation holes **704** may be set at one or more sides of the gas inlet port **701**. The limitation hole(s) **704** may be configured to facilitate the fixation of an additional gas filter component (e.g., the gas filter component **600** shown in FIGS. **6**A-**6**E). The second baffle **705** and the third baffle **703** may be configured to fix the third gas filter unit **702** at the gas inlet port **701**. In some embodiments, the third gas filter unit **702** may be fixed between the second baffle **705** and the third baffle **703**. The second baffle **705** may include a plurality of holes, so that the respiratory gas can flow through the second baffle **705**. The holes may have various shapes. For example, as shown in FIG. **7**B, the holes may have a shape of a strip. It should be noted that in some embodiments, if an additional gas filter component (e.g., the gas filter component **600** shown in FIGS. **6**A-**6**E) is in use, the second baffle **705** may be discharged from the gas inlet port **701**. If the additional gas filter component is not in use, the second baffle **705** may be mounted at the gas inlet port **701**, and the second baffle **705** may cover the limitation hole(s) **704**. In some embodiments, the third baffle **703** may be a cross baffle. The third baffle **703** may include a plurality of protrusions configured to support the third gas filter unit **702**. In some embodiments, the edge **706** of the gas inlet port **701** may include or be equipped with a sealing element, so as to form a sealing connection between the additional gas filter component and the gas inlet port **701**.

[0282] In some embodiments, the respiratory ventilation apparatus **300** may include a fourth gas filter unit. The fourth gas filter unit may be configured to filter one or more gases with pungent smell and/or one or more harmful gases (e.g., methanol) in one or more gas passages of the respiratory ventilation apparatus **300**. In some embodiments, the fourth gas filter unit may include a membrane manufactured by one or more nanomaterials having adsorption ability. The one or more nanomaterials may include activated carbon, graphene, graphene oxide, carbon nanotube, or the like, or any combine thereof. The one or more nanomaterials may have large specific surface area. A large specific surface area may indicate a large number of surface atoms. Surface atoms may be more reactive than inner layer atoms and may be more likely to adsorb gas molecules. Therefore, a larger specific surface area of a nanomaterial may indicate a stronger adsorption ability.

[0283] If the respiratory ventilation apparatus **300** is used by a patient in a hospital, the pungent smell may be a smell of hospital disinfectant. If the respiratory ventilation apparatus **300** is used by a user at home, the pungent smell may be a smell of smoking and/or cooking fume. In some embodiments, the fourth gas filter unit may be mounted outside the gas inlet port of the respiratory ventilation apparatus **300**, at the gas inlet port of the respiratory ventilation apparatus **300**, inside the gas inlet port of the respiratory ventilation apparatus **300**, between the gas inlet port of the respiratory ventilation apparatus **300** and a gas inlet port of the gas pressurization unit **210**, at the gas inlet port of the gas pressurization unit **210**, at a gas outlet port of the gas pressurization unit **210**, between the gas outlet port

of the gas pressurization unit **210** and the gas outlet port of the respiratory ventilation apparatus **300**, at the gas outlet port of the respiratory ventilation apparatus **300**, in the respiration tube **160**, and/or in the subject interface **170**. For example, the fourth gas filter unit may be set between the gas outlet port of the respiratory ventilation apparatus **300** and the respiration tube **160**.

[0284] In some embodiments, the respiratory ventilation apparatus **300** may include a fifth gas filter unit. The fifth gas filter unit may be configured to filter bacteria in one or more gases in one or more gas passages of the respiratory ventilation apparatus **300**. In some embodiments, after long-term use, a large amount of bacteria may be propagated in the respiratory ventilation apparatus **300**. The fifth gas filter unit may include a membrane to filter bacteria. The membrane may use one or more physical or chemical techniques to realize bacteria filtration. The physical or chemical techniques may include high efficiency particulate air filter (HEPA) with H13 grade or above, plasma sterilizing technology, photo catalyst sterilizing technology (e.g., titanium dioxide as the catalyst for base material, CH-CUT technology with CH-CUT nanomaterial as the core, etc.), semiconductor catalytic sterilization technology, or the like, or any combine of thereof. In some embodiments, the fifth gas filter unit may be mounted outside the gas inlet port of the respiratory ventilation apparatus **300**, at the gas inlet port of the respiratory ventilation apparatus **300**, inside the gas inlet port of the respiratory ventilation apparatus **300**, between the gas inlet port of the respiratory ventilation apparatus **300** and a gas inlet port of the gas pressurization unit **210**, at the gas inlet port of the gas pressurization unit **210**, at a gas outlet port of the gas pressurization unit **210**, between the gas outlet port of the gas pressurization unit **210** and the gas outlet port of the respiratory ventilation apparatus **300**, at the gas outlet port of the respiratory ventilation apparatus **300**, in the respiration tube **160**, and/or in the subject interface **170**. For example, the fifth gas filter unit may be set between the gas outlet port of the respiratory ventilation apparatus **300** and the respiration tube **160**. In some embodiments, considering moist gas may be more suitable for bacteria breeding, the fifth gas filter unit may be mounted in a gas passage between the liquid chamber **222** and the gas outlet port of the respiratory ventilation apparatus **300**. In some embodiments, the respiratory ventilation apparatus **300** may include one or more gas filter units (e.g. the third gas filter unit, the fourth gas filter unit, the fifth gas filter unit, etc.) mounted in the respiration tube **160** and/or the subject interface **170**.

[0285] It should be noted that in some embodiments, the filter sponges of one or more of the first gas filter unit, the second filter unit, the third filter unit, the fourth gas filter unit, and the fifth gas filter unit, may have different materials, different shapes, and/or different colors. In some embodiments, to facilitate the replacement of the filter unit(s), the first gas filter unit, the second filter unit, the third filter unit, the fourth gas filter unit, and/or the fifth gas filter unit may be mounted at a connection position of two components of the respiratory ventilation apparatus **300** (e.g., a connection position between the main body of the respiratory ventilation apparatus **300** and the liquid chamber, a connection position between the gas outlet port of the respiratory ventilation apparatus **300** and the respiration tube **160**, a connection position between the respiration tube **160** and the subject interface **170**, etc.). In some embodiments, the filter unit(s) may be discharged from the respiratory ventilation apparatus **300** and may be stored under appropriate conditions (e.g., a drying closet, a sterilizer, a storage box, a dust-proof box, etc.).

[0286] In some embodiments, an ultrasonic atomizer may be used in the humidification assembly **220**, and droplets of one or more therapeutic drugs and/or one or more liquids may be generated and introduced into the respiratory gas. In some embodiments, one or more filter units illustrated above may be used to filter harmful particulates in the droplets of therapeutic drugs and/or liquids, and/or the respiratory gas. In some embodiments, the filter sponges of the filter unit(s) may include a hydrophobic surface.

[0287] FIGS. **8**A-**8**D illustrate different views of an exemplary noise reduction assembly according to some embodiments of the present disclosure. FIG. **8**A shows an axonometric drawing of the noise reduction assembly **8**. FIG. **8**B shows a bottom surface of the noise reduction assembly **8**. FIG. **8**C shows an internal structure of the noise reduction assembly **8** with sound absorbing materials. FIG. **8**D shows an internal structure of the noise reduction assembly **8** without sound absorbing materials. The noise reduction assembly **8** may be configured to reduce noise generated by a gas pressurization unit **808** and/or the noise generated by the flowing of the (pressurized) respiratory gas in the gas passage(s) of the respiratory ventilation apparatus **110**. The noise reduction assembly **8** may include a noise reduction box **801**, one or more sound absorbing materials, and/or one or more frames.

[0288] In some embodiments, the noise reduction box **801** may be a sealed box with a gas inlet port **809** (e.g., a gas inlet port for introducing respiratory gas into the noise reduction box **801**) and a gas outlet port **810** (e.g., a gas outlet port for outputting (pressurized) respiratory gas). In some embodiments, the gas inlet port **809** of the noise reduction box **801** may be in a sealed connection with an inner side of the gas inlet port **112** of the respiratory ventilation apparatus **110**, so that the respiratory gas entering the gas inlet port **112** of the respiratory ventilation apparatus **110** may directly flow into the noise reduction box **801**. In some embodiments, the gas inlet port **809** of the noise reduction box **801** may be configured as the gas inlet port **112** of the respiratory ventilation apparatus **110**.

[0289] The noise reduction box **801** may accommodate the gas pressurization unit **808**. The gas pressurization unit **808** may include a blower (not shown) configured to generate a flow of pressurized respiratory gas based on the gas introduced in the respiratory ventilation apparatus **110**. In some embodiments, after being filtered by one or more gas filter units mounted inside the gas inlet port, the respiratory gas may enter the gas pressurization unit **808** and be pressurized by the blower, and pressurized respiratory gas may be generated. The pressurized respiratory gas may be discharged from the noise reduction box **801** to an inner gas passage of the respiratory ventilation apparatus **110** via the gas outlet port **810**.

[0290] In some embodiments, the noise reduction box **801** may include one or more sound absorbing materials (e.g. an L-type sound absorbing material **804**, a broken line type sound absorbing material **802**, a rectangular sound absorbing material **803**). The sound absorbing materials may be set on the inner walls of the noise reduction box **801**. As shown in FIG. **8**C, the L-type sound absorbing material **804** and the broken line type sound absorbing material **802** may be set

close to the gas inlet port **809**. A rectangular sound absorbing material **803** may be set close to the gas pressurization unit **808**.

[0291] In some embodiments, the one or more sound absorbing materials may include porous materials, panel materials, resonance materials, or the like, or any combine thereof. Exemplary porous materials may include carpet, draperies, spray-applied cellulose, aerated plaster, fibrous mineral wool and glass fiber, open-cell foam, felted or cast porous ceiling tile, or the like, or a combination thereof. In some embodiments, porous materials may be the most commonly used sound absorbing materials. In some embodiments, the thickness of the porous materials may be important in sound absorption. The sound-absorbing effect of the porous materials may stem from the fact that the sound energy may penetrate the porous materials when hitting the surface of the porous materials. In some embodiments, the sound energy may be converted into heat energy, so that only a relatively small part may be reflected in the form of sound energy. In other words, the porous material may absorb a portion of the sound. In some embodiments, panel materials may be non-rigid, non-porous materials. The panel materials may be placed over an airspace that vibrates in a flexural mode in response to sound pressure exerted by adjacent gas molecules. Exemplary panel (or membrane) materials may include thin wood. In some embodiments, panel materials may be configured to absorb low-frequency noises. Resonance materials may be configured to absorb sound in a relatively narrow frequency range. Resonance materials may include some perforated materials and materials that have openings (holes and slots). An exemplary resonance material may include the Helmholtz resonance material, which may have a shape of a bottle. The resonant frequency may be governed by the size of the opening, the length of the neck, and the volume of gas trapped in the bottle-shaped chamber.

[0292] In some embodiments, the noise reduction box **801** may further include one or more frames configured to fix the one or more sound absorbing materials. In some embodiments, the size and/or shape of the frame(s) and that of the corresponding sound absorbing materials may be matched. As shown in FIG. **8**D, a frame **805** and a frame **806** may be configured to fix the L-type sound absorbing material **804** and the broken line type sound absorbing material **802** on the inner walls of noise reduction box **801**, respectively. A frame **807** may be configured to fix the rectangular sound absorbing material **803**. It should be noted that not all of the sound absorbing materials and the frames are shown in FIGS. **8**C and **8**D. For the purpose of illustration, only three sound absorbing materials and their corresponding frames are described in the preset disclosure, but not intended to limit the scope of the present disclosure.

[0293] As shown in FIGS. **8**C and **8**D, the one or more sound absorbing materials and/or the one or more frames may form a gas passage with one or more twists and/or one or more turns in the noise reduction box **801**. The gas passage in the noise reduction box **801** may be divided into a plurality of sub gas passages with different cross sections. The noise generated by the blower may constantly collide with the sound absorbing materials, resulting in that the vibration energy may be continuously absorbed which and the noise may be effectively reduced in decibels. In some embodiments, the sub gas passages may form at least two damping spaces including a first damping space close to the gas inlet port **809** and a second damping space around the gas pressurization unit **808**. The first damping space and the second damping space may be connected by a sub gas passage between them. In some embodiments, the at least two damping space may provide a greater arear for the respiratory gas than the sub gas passage connecting them, and then a relatively low resistance of the respiratory gas may be achieved at a relatively high velocity. Therefore, the noise (especially high frequency components of the noise) generated by the flowing of the respiratory gas may be effectively reduced.

[0294] FIGS. **9**A-**9**E illustrate an exemplary connection between a noise reduction assembly and a main body of a respiratory ventilation apparatus according to some embodiments of the present disclosure. In some embodiments, the noise reduction box **801** may be fixed between a shell cover **901** of the respiratory ventilation apparatus **110** and a baseplate **902** of the respiratory ventilation apparatus **110**. In some embodiments, the noise reduction box **801** may include one or more protruding structures and/or one or more grooves. In some embodiments, the shell cover **901** and/or the baseplate **902** may including one or more corresponding grooves and/or one or more corresponding protruding structures configured to cooperate with the protruding structure(s) and/or the groove(s), so that the noise reduction box **801** may be fixed between the shell cover **901** and the baseplate **902**.

[0295] FIGS. **10**A-**10**C illustrate exemplary exploded views of a noise reduction assembly according to some embodiments of the present disclosure. The noise reduction box **801** may include a box cover **1001**, a box body **1003**, and a filling part **1002**. The noise reduction box **801** may accommodate the gas pressurization unit **808**. In some embodiments, the filling part **1002** may be set around the gas pressurization unit **808**. The filling part **1002** may include a plurality of sound absorbing materials configured to reduce noise generated in the noise reduction box **801**. The gas pressurization unit **808** may include a gas inlet port (not shown in FIGS. **10**A-**10**C) and a gas outlet port **1004**. The gas inlet port of the gas pressurization unit **808** may be configured to introduce respiratory gas from the noise reduction box **801** into the gas pressurization unit **808**. The gas outlet port **1004** may be configured to discharge the pressurized respiratory gas from the gas pressurization unit **808** to the gas passages of the main body of the respiratory ventilation apparatus **110**.

[0296] FIGS. **11**A-**11**F illustrate an exemplary connection between a gas pressurization unit and a noise reduction box according to some embodiments of the present disclosure. In some embodiments, the noise reduction box **801** may further include one or more supports (e.g., three supports) **1102** configured to support the gas pressurization unit **808** in an inner space of the box body **1003** of the noise reduction box **801** (see FIGS. **11**E and **11**F). In some embodiments, the box body **1003** of the noise reduction box **801** may include one or more corresponding limitation holes **1104** configured to limit the position of the supports **1102**. In some embodiments, each of the supports **1102** may include a support portion and a buffer portion. The support portion of each of the supports **1102** may be manufactured by a hard material to fix the gas pressurization unit **808** in the noise reduction box **801**. The buffer portion of each of the supports **1102**

may be manufactured by flexible material (e.g. silicone) to damp the vibration of the gas pressurization unit **808** to reduce noise.

[0297] In some embodiments, the gas pressurization unit **808** may include a gas inlet port **1103** configured to introduce respiratory gas from the noise reduction box **801** into the gas pressurization unit **808**. In some embodiments, the gas pressurization unit **808** may include a connecting piece **1101** configured to fix the gas pressurization unit to an internal space of the noise reduction box **801**. In some embodiments, the box body **1003** of the noise reduction box **801** may include a limitation groove **1105**. The connecting piece **1101** may be fixed in the limitation groove **1105** so that the gas pressurization unit **808** may be fixed in the internal space of the noise reduction box **801** (see FIGS. **11**E and **11**F). In some embodiments, the connecting piece **1101** may damp vibration of the gas pressurization unit **808** in one or more directions. More descriptions of the connecting piece **1101** may be found elsewhere in the present disclosure (e.g., FIGS. **13**A and **13**B, and the descriptions thereof).

[0298] FIGS. **12**A-**12**C illustrate an exemplary gas pressurization unit according to some embodiments of the present disclosure. As shown in FIG. **12**A, the gas pressurization unit **808** may include a connecting piece **1101** and one or more supports **1102**. The connecting piece **1101** may be configured to fix the gas pressurization unit **808** to an internal space of the main body of the respiratory ventilation apparatus **110**. In some embodiments, the connecting piece **1101** may be configured to damp the vibration and/or impede the transmission of vibration of the gas pressurization unit **808** (e.g., to the noise reduction box **801**) in one or more directions. The vibration of the gas pressurization unit **808** may be generated in transportation, operation, etc. In some embodiments, the connecting piece **1101** may be detachably connected with the gas outlet port **1004** of the gas pressurization unit **808**.

[0299] FIG. **12**B shows a side cross-sectional view of the connecting piece **1101** coupled to the blower according to some embodiments of the present disclosure. In some embodiments, the gas outlet port **1004** of the gas pressurization unit **808** may be connected to the connecting piece **1101** by one or more screw threads. In some embodiments, the gas outlet port **1004** of the gas pressurization unit **808** may be connected to the connecting piece **1101** by one or more protruding bumps and one or more corresponding grooves. In some embodiments, an inner surface of the gas outlet port **1004** may be connected to an outer surface of the connecting piece **1101**. In some embodiments, as shown in FIG. **12**B, an inner surface of the connecting piece **1101** may be connected to an outer surface of the gas outlet port **1004**. Merely by way of example, as shown in FIG. **12**C, two annular grooves in the inner surface of the connecting piece **1101** may be coupled to two annular protrusions on the outer surface of the gas outlet port **1004** of the gas pressurization unit **808**. In some embodiments, the connecting piece **1101** may be manufactured by or include a flexible material (e.g. silicone) with elasticity. In some embodiments, the gas outlet port **1004** of the gas pressurization unit **808** may be directly inserted into the connecting piece **1101** or may be pivoted relative to the gas pressurization unit **808**, such that the gas outlet port **1004** can be connected to the connecting piece **1101**.

[0300] FIGS. **13**A and **13**B illustrate an exemplary connecting piece according to some embodiments of the present disclosure. FIG. **13**A shows an axonometric drawing of the connecting piece **1101**. FIG. **13**B shows a side cross-sectional view of the connecting piece **1101**. As shown in FIGS. **13**A and **13**B, the connecting piece **1101** may include a connecting part **1301** and a fixing part **1302**. The connecting part **1301** and the fixing part **1302** may be made of the same or different materials. In some embodiments, the connecting part **1301** may be configured to connect with the gas outlet port **1004** (see FIG. **12**B) of the gas pressurization unit **808** and/or form a sealed connection between the connecting piece **1101** and the gas pressurization unit **808**. In some embodiments, to prevent the gas outlet port **1004** of the gas pressurization unit **808** from separating from the connecting part **1301**, the connecting part **1301** may be made of one or more flexible materials (e.g., silicone), so that the connecting piece **1101** may tolerate or damp vibration of the gas pressurization unit **808** induced by rough handling of the respiratory ventilation apparatus **110**.

[0301] In some embodiments, the fixing part **1302** may be configured to fix the connecting piece **1101** to the internal space of the main body of the respiratory ventilation apparatus **110** and/or form a fastening connection between the connecting piece **1101** and the main body of the respiratory ventilation apparatus **110**. In some embodiments, the fixing part **1302** may be configured to fix the connecting piece **1101** to a noise reduction box (e.g., the noise reduction box **801** shown in FIG. **8**B) and/or form a fastening connection between the connecting piece **1101** and the noise reduction box. As shown in FIG. **11**B, the noise reduction box **801** may include one or more limitation grooves **1105** (e.g., fixing slot(s)) coupled to the fixing part **1302** of the connecting piece **1101**. In some embodiments, by sticking two opposite sides of the fixing part **1302** into the fixing slot(s), the gas pressurization unit **808** may be fixed in a fixed position inside the noise reduction box **801**.

[0302] In some embodiments, the fixing part **1302** may be made of one or more hard materials, such as Teflon, a thermoplastic polymer with relatively high strength and/or toughness. In some embodiments, as shown in FIG. **13**A, the fixing part **1302** may have a sheet structure. In some embodiments, the fixing part **1302** may include an aperture configured to allow the (pressurized) respiratory gas to pass. In some embodiments, the connecting part **1301** may have a tubular structure. The tubular structure may include a first end **1303** and a second end **1304**. In some embodiments, the first end **1303** of the connecting part **1301** may be fixed to the fixing part **1302**. In some embodiments, the second end **1304** of the connecting part **1301** may be connected to the outlet port of the gas pressurization unit **808**. The connecting part **1301** may be capable of allowing the (pressurized) respiratory gas to pass through the tubular structure to the aperture of the fixing part **1302**. In some embodiments, the (pressurized) respiratory gas may be discharged from the gas pressurization unit **808** and successively flow through the gas outlet port **1004**, the connecting part **1301**, the aperture of the fixing part **1302**, the gas outlet port **810** of the noise reduction box **801**, and into an inner gas passage of the respiratory ventilation apparatus **110**.

[0303] In some embodiments, the connecting part **1301** may include one or more annular structures. The one or more annular structures may be connected end to end. In some embodiments, there may be a certain distance between each two adjacent annular structures of the one or more annular structures. In some embodiments, each of the one or more

annular structures may include an outer annular structure and inner annular structure. The outer annular structure(s) may be connected with the fixing part **1302**. The inner annular structures may be connected with the noise reduction box, fix the connecting piece **1101** to the noise reduction box, and/or form a fastening connection between the connecting piece **1101** and the noise reduction box.

[0304] In some embodiments, as shown in FIG. **13**B, the connecting part **1301** and the fixing part **1302** may be configured as an integral piece. In some embodiments, the second end **1304** of the connecting part **1301** may have an annular double-layer structure including an inner layer **1305** and an outer layer **1306**. In some embodiments, the second end **1304** of the connecting part **1301** may have an annular multi-layer structure including an inner layer **1305**, an outer layer **1306**, and one or more intermediate layers (not shown in FIG. **13**B).

[0305] In some embodiments, as shown in FIG. **13**B, the outer layer **1306** may connect with the fixing part **1302** of the connecting piece **1101** in one end and may connect with the inner layer **1305** in the other end. In some embodiments, the inner layer **1305** may not connect with the fixing part **1302**. In some embodiments, the inner layer **1305** may be connected to an outer surface of the gas outlet port **1004** of the gas pressurization unit **808**. In some embodiments, the outer surface of the gas outlet port **1004** of the gas pressurization unit **808** may include one or more protruding bumps, and the inner surface of the inner layer **1305** may include one or more corresponding grooves to match with the one or more protruding bumps, so that the gas outlet port **1004** of the gas pressurization unit **808** can be fixed to the connecting piece **1101**. In some embodiments, the outer surface of the gas outlet port **1004** of the gas pressurization unit **808** may include one or more grooves, and the inner surface of the inner layer **1305** may include one or more corresponding protruding bumps to match with the one or more grooves, so that the gas outlet port **1004** of the gas pressurization unit **808** can be fixed to the connecting piece **1101**. The protruding bumps and/or the grooves may have various shapes (e.g., cuboid, cube, cylinder, cone, truncated cone, prism, pyramid, truncated pyramid, or the like, or any combine thereof). Merely by way of example, as shown in FIG. **13**B, the protruding bumps and the corresponding grooves may be annular. In some embodiments, the protruding bumps and/or the corresponding grooves may be uniformly arranged. Alternatively or additionally, the protruding bumps and/or the corresponding grooves may be disorderly arranged. In some embodiments, the outer layer **1306** may include a first annular flexible structure **1307** configured to tolerate or damp vibration of the gas pressurization unit **808** along an axial direction of the connecting part **1301**. In some embodiments, the first annular flexible structure **1307** may have a U shape, a V shape, a Z shape, an M shape, an S shape, a C shape, an O shape, or the like, or a combination thereof. In some embodiments, the first annular flexible structure **1307** may have one or more folds.

[0306] In some embodiments, the inner layer **1305** may connect with the fixing part **1302** of the connecting piece **1101** in one end and may connect with the outer layer **1306** in the other end. In some embodiments, the outer layer **1306** may not connect with the fixing part **1302**. In some embodiments, the outer layer **1306** may be connected to an inner surface of the gas outlet port **1004** of the gas pressurization unit **808**. In some embodiments, the inner surface of the gas outlet port **1004** of the gas pressurization unit **808** may include one or more grooves, and the outer surface of the outer layer **1306** may include one or more corresponding protruding bumps to match with the one or more grooves, so that the gas outlet port **1004** of the gas pressurization unit **808** can be fixed to the connecting piece **1101**. In some embodiments, the inner surface of the gas outlet port **1004** of the gas pressurization unit **808** may include one or more protruding bumps, and the outer surface of the outer layer **1306** may include one or more corresponding grooves to match with the one or more protruding bumps, so that the gas outlet port **1004** of the gas pressurization unit **808** can be fixed to the connecting piece **1101**. The protruding bumps and/or the grooves may have various shapes (e.g., cuboid, cube, cylinder, cone, truncated cone, prism, pyramid, truncated pyramid, or the like, or any combine thereof). Merely by way of example, as shown in FIG. **13**B, the protruding bumps and the corresponding grooves may be annular. In some embodiments, the protruding bumps and/or the corresponding grooves may be uniformly arranged. Alternatively or additionally, the protruding bumps and/or the corresponding grooves may be disorderly arranged. In some embodiments, the inner layer **1305** may include a first annular flexible structure configured to tolerate or damp vibration of the gas pressurization unit **808** along an axial direction of the connecting part **1301**. In some embodiments, the first annular flexible structure may have a U shape, a V shape, a Z shape, an M shape, an S shape, a C shape, an O shape, or the like, or a combination thereof. In some embodiments, the first annular flexible structure may have one or more folds.

[0307] In some embodiments, a joint of the inner layer **1305** and the outer layer **1306** may include a second annular flexible structure **1308** configured to tolerate or damp vibration of the gas pressurization unit **808** along a radial direction of the connecting part **1301**. In some embodiments, the second annular flexible structure **1308** may have a U shape, a V shape, a Z shape, an M shape, an S shape, a C shape, an O shape, or the like, or any combine of thereof. In some embodiments, the second annular flexible structure **1308** may have one or more folds.

[0308] In some embodiments, if the second end **1304** of the connecting part **1301** has an annular multi-layer structure including an inner layer **1305**, an outer layer **1306**, and one or more intermediate layers, the one or more intermediate layers may include a first annular flexible structure configured to tolerate or damp vibration of the gas pressurization unit **808** along an axial direction of the connecting part **1301**. In some embodiments, the first annular flexible structure may have a U shape, a V shape, a Z shape, an M shape, an S shape, a C shape, an O shape, or the like, or any combine of thereof. In some embodiments, the first annular flexible structure may have one or more folds. In some embodiments, a joint of the inner layer **1305** and an intermediate layer, a joint of the outer layer **1306** and an intermediate layers, and/or a joint of two intermediate layers may include one or more second annular flexible structures configured to tolerate or damp vibration of the gas pressurization unit **808** along a radial direction of the connecting part **1301**. In some embodiments, each second annular flexible structure may have a U shape, a V shape, a Z shape, an M shape, an S shape, a C shape, an O shape, or the like, or any combine of thereof. In some embodiments, each second annular flexible structure may have one or more folds.

[0309] It should be noted that the above description is merely provided for the purposes of illustration, and not intended to limit the scope of the present disclosure. F or persons having ordinary skills in the art, multiple variations and modifications may be made under the teachings of the present disclosure. However, those variations and modifications do not depart from the scope of the present disclosure. In some embodiments, the number of the first annular flexible structure may be larger than one. In some embodiments, the number of the second annular flexible structure may be larger than one. In some embodiments, the first annular flexible structure, the second annular flexible structure, the inner layer **1305**, and/or the outer layer **1306** may be made of the same or different materials. For example, the first annular flexible structure and/or the second annular flexible structure may be made of material(s) with relatively high elasticity (e.g., flexible material(s)), while the inner layer **1305** and/or the outer layer **1306** may be made of material(s) with relatively low elasticity (e.g., hard material (s)). In some embodiments, the first annular flexible structure, the second annular flexible structure, the inner layer **1305**, and/or the outer layer **1306** may have the same or different thicknesses. For example, the first annular flexible structure and/or the second annular flexible structure may have relatively small thickness, while the inner layer **1305** and/or the outer layer **1306** may have relatively large thickness. In some embodiments, the first annular flexible structure, the second annular flexible structure, the inner layer **1305**, and/or the outer layer **1306** may be partially strengthened by one or more fibers. In some embodiments, the connecting piece **1101** may be manufactured based on 3D printing. In some embodiments, the structure of the connecting part **1301** may be applied in various connecting pieces of the respiratory ventilation apparatus **110**, including for example, the connecting piece between the gas outlet port **111** and the respiration tube **160**, the connecting piece between the main body of the respiratory ventilation apparatus **110** and a liquid chamber, the connecting piece between the respiration tube **160** and the subject interface **170**, etc.

[0310] FIGS. **14**A and **14**B illustrate an exemplary respiratory ventilation apparatus including a gas parameter detection assembly according to some embodiments of the present disclosure. The gas parameter detection assembly may be configured to detect one or more gas parameters of (pressurized and/or humidified) respiratory gas e.g., from the down stream of the humidification assembly **220**. In some embodiments, the parameter(s) detected by the gas parameter detection may include a snore of a user (e.g., the subject **180**) of the respiratory ventilation apparatus **110**. FIG. **14**A shows an axonometric drawing of the main body **1400** of the respiratory ventilation apparatus **110** including the gas parameter detection assembly. FIG. **14**B shows a cross-section view of the respiratory ventilation apparatus **110** including the gas parameter detection assembly. In some embodiments, as shown in FIGS. **14**A and **14**B, the gas parameter detection assembly may include an acquisition part **1401**. The acquisition part **1401** may be configured to acquire a gas flow. In some embodiments, the acquisition part **1401** may be placed in a downstream of the humidified and pressurized respiratory gas relative to the humidification assembly **220**. In some embodiments, the gas flow may be disturbed by a snore of a user (e.g., the subject **180**) of the respiratory ventilation apparatus **110**. In some embodiments, a main body of the respiratory ventilation apparatus **110** may include a gas return chamber **1404**. The gas return chamber **1404** may be connected with the gas outlet port **1402** of the respiratory ventilation apparatus **110**. In the present disclosure, the gas outlet port **1402** of the respiratory ventilation apparatus **110** may also be referred to as the main gas outlet port of the respiratory ventilation apparatus **110**. The gas return chamber **1404** may be configured to guide the (pressurized and humidified) respiratory gas to flow to the gas outlet port **1402**. In some embodiments, the acquisition part **1401** may be set in the gas return chamber **1404**. In some embodiments, the acquisition part **1401** may be set facing the gas outlet port **1402** of the respiratory ventilation apparatus **110**. In some embodiments, the acquisition part **1401** may be in a detachable connection with the respiratory ventilation apparatus **110**. In some embodiments, the acquisition part **1401** may be fixed to the respiratory ventilation apparatus **110** via one or more slots (e.g., two slots) set on one or more sides of the acquisition part **1401** (see FIG. **16**B).

[0311] In some embodiments, as shown in FIGS. **14**A, **14**B, and **16**A-**16**D, the acquisition part **1401** may include an input port **1601**, an output port **1602**, and/or at least one channel **1403** (also referred as a gas passage). In some embodiments, the channel **1403** may be a curved channel. In some embodiments, the channel **1403** may be set inside the acquisition part **1401**. In some embodiments, a first end of the channel **1403** may be the input port **1601**. In some embodiments, the input port **1601** may be opening on a first surface (e.g. a front surface) of the acquisition part **1401**. In some embodiments, the first surface may face the gas outlet port **1402** of the respiratory ventilation apparatus **110**. In some embodiments, a second end of the channel **1403** may be the output port **1602**. In some embodiments, the output port **1602** may be opening on a second surface (e.g. a bottom surface) of the acquisition part **1401**. In some embodiments, the second surface may be different from the first surface. In some embodiments, the second surface of the acquisition part **1401** may be in a sealed connection with an inner surface of the main body of the respiratory ventilation apparatus **110** (e.g., a bottom surface of the gas return chamber **1404**). In some embodiments, the input port **1601** may be set above the bottom surface of the gas return chamber **1404**. In some embodiments, the input port **1601** may be set above the second surface of the acquisition part **1401**. In some embodiments, the acquisition part **1401** may be protruding from the inner surface of the main body of the respiratory ventilation apparatus **110** (e.g., a bottom surface of the gas return chamber **1404**), to prevent water from flowing in the acquisition part **1401**. In some embodiments, the cross-sectional area of the channel **1403** may be gradually increasing from the input port **1601** to the output port **1602**. In some embodiments, one or more ports (e.g., a first port **1501**, a second port **1502**) may be set in the inner space of the apparatus beneath the output port **1602** of the acquisition part **1401**. In some embodiments, the gas flow may be introduced into the inner space of the respiratory ventilation apparatus **110** via the acquisition part **1401** and the one or more ports. In some embodiments, the acquisition part **1401** may be made of a flexible material (e.g., silicone) or a hard material. In some embodiments, the acquisition part **1401** may be made of a hydrophobic material.

[0312] FIGS. **15**A and **15**B illustrate an inner space of an exemplary respiratory ventilation apparatus including a gas

parameter detection assembly according to some embodiments of the present disclosure. In some embodiments, a printed circuit board (PCB) may be mounted in the inner space of the respiratory ventilation apparatus **110**. In some embodiments, one or more sensors (e.g., a first sensor **1504**, a second sensor **1505**) may be integrated into the PCB. FIG. **15**A shows a bottom view of the inner space of the respiratory ventilation apparatus **110**. FIG. **15**B shows a magnified view of the one or more sensors integrated into the printed circuit board (PCB) mounted in the inner space of the respiratory ventilation apparatus **110**. As shown in FIGS. **15**A and **15**B, the gas parameter detection assembly may include a first sensor **1504**. In some embodiments, the first sensor **1504** may be configured to measure a gas parameter associated with the snore based on the gas flow. In some embodiments, the first sensor **1504** may be configured to measure a pressure of the gas flow. In some embodiments, the first sensor **1504** may include a third port **1506** on its surface. In some embodiments, the third port **1506** may be integrally formed on the surface of the first sensor **1504**. In some embodiments, the first sensor **1504** may be a pressure sensor. In some embodiments, the gas parameter detection assembly may include a first tube (not shown). The first tube may connect the first port **1501** with the third port **1506**. The first tube may be configured to introduce the gas flow from the acquisition part **1401** to the surface of the first sensor **1504**.

[0313] In some embodiments, the first sensor **1504** (e.g., pressure sensor) may be further configured to detect the pressure of the respiratory gas in one or more gas passages of the respiratory ventilation apparatus **110**. In some embodiments, the pressure of the respiratory gas in the gas passage(s) of the respiratory ventilation apparatus **110** may be detected based on a low-frequency part of the signal detected by the first sensor **1504**, while a snoring signal may be detected based on a high-frequency part of the signal detected by the first sensor **1504**. In some embodiments, the control module **260** may control and/or adjust the rotation speed of the gas pressurization unit **210** to achieve a desired pressure of the respiratory gas based on the detected pressure of the respiratory gas.

[0314] In some embodiments, the respiratory ventilation apparatus **110** may include a flow detection assembly. The flow detection assembly may be configured to detect a flux of one or more gases in one or more passages of the respiratory ventilation apparatus **110**. In some embodiments, the first sensor and the second sensor may share a same acquisition part **1401**. In some embodiments, the flow detection assembly may include the second sensor **1505**. The second sensor **1505** may be configured to detect a flux signal associated with the one or more gases in the one or more passages of the respiratory ventilation apparatus **110**. In some embodiments, the second sensor **1505** may be a flow sensor. In some embodiments, the second sensor **1505** may include a fourth port **1507** and/or a fifth port **1508** on its surface. In some embodiments, the fourth port **1507** and/or the fifth port **1508** may be integrally formed on the surface of the second sensor **1505**. In some embodiments, the flow detection assembly may include a sixth port **1503** (also referred to as an auxiliary acquisition port). The sixth port **1503** may be set in the main body of the respiratory ventilation apparatus **110**. In some embodiments, the sixth port **1503** may be set at upstream of the one or more gases that flow to the acquisition part **1401**. In some embodiments, the sixth port **1503** may be configured to acquire a gas flow from the gas outlet port of the gas pressurization unit **210**. In some embodiments, the flow detection assembly may include a second tube (not shown) and/or a third tube (not shown). The second tube may be configured to introduce a gas flow from the acquisition part **1401** to a surface of the second sensor **1505**. In some embodiments, the second tube may connect the second port **1502** with the fourth port **1507** to introduce the gas flow from the acquisition part **1401** to the surface of the second sensor **1505**. The third tube may be configured to introduce a gas flow from the auxiliary acquisition port to a surface of the second sensor **1505**. In some embodiments, the third tube may connect the fifth port **1508** with the sixth port **1503** to introduce the gas flow from the auxiliary acquisition port to the surface of the second sensor **1505**.

[0315] FIGS. **16**A-**16**D illustrate an exemplary acquisition part of a gas parameter detection assembly and/or a flow detection assembly according to some embodiments of the present disclosure. The acquisition part **1401** may be set in the main body of the respiratory ventilation apparatus **110** facing the gas outlet port **1402** of the respiratory ventilation apparatus **110**. In some embodiments, the acquisition part **1401** may acquire the pressurized and humidified respiratory gas from the down stream of the humidification assembly **220**. Therefore, the gas flow acquired by the acquisition part **1401** may be more stable, and the parameter(s) (such as, snore, pressure, flow rate, or the like) detected may be more accurate. FIG. **16**A shows a perspective view of the acquisition part **1401** according to some embodiments of the present disclosure. In some embodiments, as shown in FIG. **16**A, the acquisition part **1401** may have an approximate rounded cuboid structure with six surfaces (e.g. a front surface, a back surface, a top surface, a bottom surface, a left surface, and a right surface). The front surface of the acquisition part **1401** may face the gas outlet port **1402** of the respiratory ventilation apparatus **110**. In some embodiments, the acquisition part **1401** may have another structure including a cuboid, a cube, a cylinder, a prism, or the like, or any combine thereof.

[0316] In some embodiments, the acquisition part **1401** may include an input port **1601**. In some embodiments, the input port **1601** may be set at the front surface of the acquisition part **1401** facing the gas outlet port **1402** of the respiratory ventilation apparatus **110**. In some embodiments, the input port **1601** may be set below an upper edge of the gas outlet port **1402** of the respiratory ventilation apparatus **110** but above a lower edge of the gas outlet port **1402**. In some embodiments, the input port **1601** may be set at the upper left corner of the front surface. In some embodiments, the input port **1601** may be set on another position of the front surface. For example, the input port **1601** may be set on the upper right corner or the center of the front surface. In some embodiments, the input port **1601** may set on another surface of the acquisition part **1401**, such as the top surface of the acquisition part **1401**. In some embodiments, the input port **1601** may have a shape of a long and thin rounded rectangle (or a strip). In some embodiments, the input port **1601** may have another shape including a square, a circle, a polygon, or the like, or any combine of thereof. In some embodiments, the input port **1601** may have one or more openings.

[0317] FIG. **16**B shows a side perspective view of the acquisition part **1401** according to some embodiments of the

present disclosure. In some embodiments, as shown in FIG. **16**B, the acquisition part **1401** may include one or more slots. The one or more slots may be configured to establish a detachable connection between the acquisition part **1401** and the main body of the respiratory ventilation apparatus **110**. In some embodiments, the one or more slots may include a first fixing slot **1607** and a second fixing slot **1603**. The first fixing slot **1607** and the second fixing slot **1603** may be set on the same or different surfaces of the acquisition part **1401**. For example, the first fixing slot **1607** may be set on the front surface of the acquisition part **1401**, while the second fixing slot **1603** may be set on the back surface of the acquisition part **1401**. In some embodiments, the first fixing slot **1607** and the second fixing slot **1603** may be set parallel to fix the acquisition part **1401** in the horizontal direction. In some embodiments, the first fixing slot **1607** and the second fixing slot **1603** may be set on the right surface and left surface, respectively. In some embodiments, the first fixing slot **1607** and the second fixing slot **1603** may be set closer to the bottom surface of the acquisition part **1401**. In some embodiments, the acquisition part **1401** may include a first groove **1605** and a second groove **1606** set on any surface of the acquisition part **1401** (e.g., the right surface).

[0318] In some embodiments, one or more claws may be set on the bottom surface of the acquisition part **1401**. Correspondingly, one or more slots coupled to the one or more claws may be set in the main body of the respiratory ventilation apparatus **110** to fix the acquisition part **1401**. In some embodiments, one or more slots may be set on the bottom surface of the acquisition part **1401**, and one or more claws coupled to the one or more slots may be set in the main body of the respiratory ventilation apparatus **110** to fix the acquisition part **1401**.

[0319] FIG. **16**C shows a bottom perspective view of the acquisition part **1401** according to some embodiments of the present disclosure. As shown in FIG. **16**C, the acquisition part **1401** may include an output port **1602**. In some embodiments, as shown in FIG. **16**C, the output port **1602** may be set on the bottom surface of the acquisition part **1401**. In some embodiments, the output port **1602** may be set on another surface of the acquisition part **1401**, for example, the back surface of the acquisition part **1401**. The output port **1602** may be set below the input port **1601**. In some embodiments, the output port **1602** may have a shape of a rounded rectangle. In some embodiments, the output port **1602** may have a shape of a square, a circle, a polygon, or the like, or any combine of thereof. In some embodiments, a silicone gasket **1604** may be set on the acquisition part **1401** to ensure a sealed connection between the acquisition part **1401** and the main body of the respiratory ventilation apparatus **110**. In some embodiments, the silicone gasket **1604** may be set around the output port **1602**. In some embodiments, the output port **1602** may be set closer to the upper edge of the silicone gasket **1604**.

[0320] FIG. **16**D shows a side cross-sectional view of the acquisition part **1401** according to some embodiments of the present disclosure. As shown in FIG. **16**D, the acquisition part **1401** may include a channel **1403**. The channel **1403** may be set inside the acquisition part **1401**. The channel **1403** may be configured to connect the input port **1601** and the output port **1602**. In some embodiments, the channel **1403** may have a relatively small area of cross section near the input port **1601** and a relatively large area of cross section near the output port **1602**. In some embodiments, from the input port **1601** to the output port **1602**, the cross-sectional area of the channel **1403** may increase gradually. In some embodiments, the pressurized respiratory gas may include a certain amount of moisture. In some embodiments, one or more water droplets may be generated near the input port **1601** because of the condensation of the water vapor in the pressurized respiratory gas. In some embodiments, to prevent the condensate water droplets from flowing from the input port **1601** and the channel **1403** onto the surface of the first sensor **1504**, the channel **1403** may include a droop near the input port **1601**, so that the input port **1601** may be below the top of the channel **1403**. Therefore, the condensate water droplets may be prevented from flowing back through the channel **1403** to the surface of the first sensor under the force of gravity.

[0321] In some embodiments, the respiratory ventilation apparatus **110** may include a pressure sensor (e.g., the first sensor **1504**) and a flow sensor (e.g., the second sensor **1505**) for snore detection, and a humidified gas inlet port (e.g., the input port **1601**) configured to introduce pressurized and humidified respiratory gas from the humidification assembly **220**. In some embodiments, the pressure sensor and the flow sensor may be connected via a (curved) channel (e.g., the channel **1403**) to a section between a main gas outlet port of the respiratory ventilation apparatus **110** (e.g., the gas outlet port **1402**) and the humidified gas inlet port.

[0322] FIG. **17** illustrates an exemplary respiratory ventilation apparatus according to some embodiments of the present disclosure. The respiratory ventilation apparatus **1700** may include a main body **1702**, and/or a humidification assembly. In some embodiments, the humidification assembly may be configured to humidify the pressurized respiratory gas to generate pressurized and humidified respiratory gas. In some embodiments, the humidification assembly may include a liquid chamber **1704**, a heater plate **1710**, and a heat-conducting plate **1810** (see FIGS. **18**A and **18**B). The liquid chamber **1704** may be configured to accommodate one or more liquids (e.g., water and/or drug). The heat-conducting plate may be configured to conduct heat from the heater plate **1710** to heat the one or more liquids and generate vapor to humidify the pressurized respiratory gas. In some embodiments, the heat-conducting plate may be set on the bottom of the liquid chamber **1704**. In some embodiments, the heat-conducting plate may include a metallic heat conducting material.

[0323] In some embodiments, the main body **1702** may include a gas pressurization unit (not shown in FIG. **17**) located in the main body **1702**, a gas inlet port **1706**, a gas outlet port **1708**, and/or a support plate **1707**. In some embodiments, the gas inlet port **1706** and/or the gas outlet port **1708** may be set on a first interface of the main body **1702** and the liquid chamber **1704**. In some embodiments, the support plate **1707** may be set on a second interface of the main body **1702** and the liquid chamber **1704**. In some embodiments, the support plate **1707** may be fixed to a base plate of the main body **1702**. In some embodiments, the first interface (see FIGS. **23**A-**23**D) of the main body **1702** and the liquid chamber **1704** may refer to a side surface of the main body **1702** and a corresponding side surface of the liquid chamber **1704**. In some embodiments, the second interface (see FIGS. **17**-**21**D) of the main body **1702** and the liquid chamber **1704** may refer to a bottom surface of the liquid chamber **1704** and a corresponding surface of the

support plate **1707** of the main body **1702**. In some embodiments, the gas outlet port **1708** may be configured to discharge the pressurized respiratory gas from the main body **1702** to the liquid chamber **1704**. In some embodiments, the gas inlet port **1706** may be configured to introduce the pressurized and humidified respiratory gas from the liquid chamber **1704** back into the main body **1702**. In some embodiments, the support plate **1707** may include a first hole **1709** and/or a second hole **1711**. In some embodiments, the first hole **1709** and/or the second hole **1711** may be set on the second interface. In some embodiments, at least a portion of the heater plate **1710** may be set in the second hole **1711**.

[0324] The heater plate **1710** may be configured to heat one or more liquids in the liquid chamber **1704** and/or generate vapor to humidify the pressurized respiratory gas. In some embodiments, the heater plate **1710** may be mounted on the base of the main body **1702** through one or more springs **2202** (see FIG. **22**C). The heater plate **1710** may be capable of moving up and down through the second hole **1711** upon being driven by a pressure or upon releasing the pressure.

[0325] In some embodiments, the liquid chamber **1704** may be in detachable connection with the main body **1702**, such that the humidification assembly may be removably coupled to the main body **1702**. For example, the liquid chamber **1704** may be in detachable connection with the main body **1702** through a push-push mechanism (see FIGS. **19**-**21**D) via a hole (e.g., the first hole **1709**) of the support plate **1707**. If the liquid chamber **1704** is mounted on the main body **1702** of the respiratory ventilation apparatus **1700**, the bottom of the liquid chamber **1704** (e.g., a heat-conducting plate of the liquid chamber **1704**) may be in close contact with the heater plate **1710**. More descriptions of the humidification assembly may be found elsewhere in the present disclosure (e.g., FIGS. **18**A and **18**B and the descriptions thereof).

[0326] FIGS. **18**A and **18**B illustrate exploded views of an exemplary liquid chamber according to some embodiments of the present disclosure. In some embodiments, as shown in FIGS. **18**A and **18**B, the liquid chamber **1704** may include a tank cover and a tank. In some embodiments, the tank cover may include a cover shell **1802** and one or more gas passages **1805**. In some embodiments, the tank may include a tank shell **1808**, a heat-conducting plate sealing gasket **1809**, and a heat-conducting plate **1810**. It should be noted that in some embodiments, the gas passage(s) **1805** may be set in the tank. In some embodiments, the liquid chamber **1704** may include a fixing gasket **1806** and/or a tank cover sealing gasket **1807** between the tank and the tank cover. The fixing gasket **1806** and/or the tank cover sealing gasket **1807** may be configured to enable a sealed connection between the tank and the tank cover. In some embodiments, the liquid chamber **1704** may include a connecting plate **1803** and/or a gas passage sealing gasket **1804** to cooperate with the main body **1702**.

[0327] In some embodiments, the components of the liquid chamber **1704** may be in detachable connection. For example, the connecting plate **1803** may be set on and/or fixed to the cover shell **1802** by cementing, riveting, joggling, clamping, meshing, or the like, or any combination thereof. As another example, the gas passage sealing gasket **1804** may be connected and/or fixed to the gas passage(s) **1805**. As another example, the fixing gasket **1806** and/or the tank cover sealing gasket **1807** may be set on and/or fixed to the tank shell **1808** to improve air tightness between the cover shell **1802** and the tank shell **1808**. In some embodiments, the fixing gasket **1806** may be set inside the tank cover sealing gasket **1807**. As a further example, the heat-conducting plate sealing gasket **1809** may be set between the heat-conducting plate **1810** and a bottom frame of the tank shell **1808**. As still a further example, the heat-conducting plate **1810** may be connected with the heat-conducting plate sealing gasket **1809** by cementing, riveting, joggling, clamping, meshing, or the like, or any combination thereof. As still a further example, the heat-conducting plate sealing gasket **1809** may be fixed to the bottom frame of the tank shell **1808** by cementing, riveting, joggling, clamping, meshing, or the like, or any combination thereof.

[0328] FIG. **19** illustrates an exemplary push-push mechanism in connection with a liquid chamber of a respiratory ventilation apparatus according to some embodiments of the present disclosure. In some embodiments, the push-push mechanism **1904** may be set underneath the support plate **1707**. In some embodiments, the tank shell **1808** of the liquid chamber **1704** may be in a detachable connection with the push-push mechanism **1904** by a pushrod **1906**. In some embodiments, the pushrod **1906** may be set below a bottom surface of the liquid chamber **1704**.

[0329] In some embodiments, the liquid chamber **1704** may be driven by a first pushing force. When the first pushing force is released, the pushrod **1906** may be locked with the push-push mechanism **1904**, such that the liquid chamber **1704** can be mounted on the main body **1702** of the respiratory ventilation apparatus **1700**. If the liquid chamber **1704** is driven by a second pushing force and when the second pushing force is released, the pushrod **1906** may be removed from the push-push mechanism **1904**, such that the liquid chamber **1704** can be released from the main body **1702** of the respiratory ventilation apparatus **1700**. In some embodiments, the direction of the first pushing force may be the same as the direction of the second pushing force. For example, the direction of the first pushing force and the direction of the second pushing force may be vertically downward. In some embodiments, the push-push mechanism **1904** may be set on a side of the first interface between the main body **1702** and the liquid chamber **1704**, and then, the first pushing force and the second pushing force may be in the horizontal direction.

[0330] FIGS. **20**A and **20**B illustrate an exemplary push-push mechanism according to some embodiments of the present disclosure. FIG. **20**A shows an axonometric drawing of the push-push mechanism **1904**. FIG. **20**B shows an exploded view of the push-push mechanism **1904**. In some embodiments, as shown in FIGS. **20**A and **20**B, the push-push mechanism **1904** may include a guide slot **2002**, a slide block **2004**, a first spring **2006**, a second spring **2008**, a pushrod **1906** (see FIG. **19**), etc.

[0331] The guide slot **2002** may be configured to accommodate the first spring **2006** and the second spring **2008**, and guide the moving of the slide block **2004**. In some embodiments, the guide slot **2002** may be set on the main body (e.g., the main body **1702**) of a respiratory ventilation apparatus **1700**. For example, the guide slot **2002** may be set beneath the support plate **1707** of the main body (e.g., the main body **1702**) of the respiratory ventilation apparatus **1700**. In some embodiments, the guide slot **2002** may be fixed to the main body (e.g., the main body **1702**) by cementing, riveting, joggling, clamping, meshing, or the like, or any combination

thereof. In some embodiments, the guide slot **2002** may be made of a material such as cast iron, stainless steel, nonferrous metal, plastic, or the like, or any combination thereof.

[0332] The slide block **2004** may be mounted on the guide slot **2002**. In some embodiments, the slide block **2004** may move along the guide slot **2002** in a first direction back and forth. In some embodiments, the first direction may be parallel to the guide slot C**0402**. In some embodiments, the slide block **2004** may include a guide block **2005**. The guide block **2005** may be configured to guide or limit a moving position of the pushrod **1906**. In some embodiments, as shown in FIGS. **20**A and **20**B, the guide block **2005** may has a frame similar to character A. In some embodiments, the guide block **2005** may include a frame different from the character A (e.g., a frame of character N or M, etc.). In some embodiments, the guide block **2005** may include a first slope **2015**, a groove **2035**, a second slope **2025**, and a third slope **2055**. In some embodiments, the third slope **2055** may be substantially vertical. In some embodiments, the inclined direction of the first slope **2015** may be different from the inclined direction of the second slope **2025**. In some embodiments, a first angle between the first slope **2015** and a vertical direction may be greater than a second angle between the second slope **2025** and the vertical direction. The first slope **2015**, the second slope **2025**, and/or the third slope **2055** may be configured to guide the moving position of the pushrod **1906**. The groove **2035** may be configured to limit the moving position of the pushrod **1906**. In some embodiments, the guide block **2005** may include a first protrusion **2065**, a second protrusion **2075**, and/or a third protrusion **2085**. The first protrusion **2065** and/or the second protrusion **2075** may be configured to prevent the pushrod **1906** from moving out of the groove **2035** when the liquid chamber **1704** is mounted on the main body **1702**, such that the liquid chamber **1704** can be fixed to the main body **1702**. In some embodiments, the first protrusion **2065** and/or the second protrusion **2075** may be sharp. In some embodiments, the bottom end of the first protrusion **2065** may be lower than that of the second protrusion **2075**. In some embodiments, the first protrusion **2065** and the second protrusion **2075** may be set on the same side of the third protrusion **2085** in the horizontal direction.

[0333] In some embodiments, the slide block **2004** may further include a bulge **2045** (or bump) below the groove **2035** of the guide block **2005**. The bulge **2045** may include a first slope and a second slope. The first slope of the bulge **2045** may be close to the first slope of the guide block **2005**. The second slope of the bulge **2045** may be close to the second slope of the guide block **2005**. In some embodiments, the groove **2035** may limit the moving position of the pushrod **1906** through cooperating with the bulge **2045**. In some embodiments, the slide block **2004** may be made of a material such as cast iron, stainless steel, nonferrous metal, plastic, or the like, or any combination thereof. In some embodiments, the material of the slide block **2004** may be the same as or different from the material of the guide slot **2002**.

[0334] The first spring **2006** and the second spring **2008** may be set in the guide slot **2002**. The first spring **2006** may include a first end and a second end. The first end of the first spring **2006** may be connected to a first end of the guide block **2005**. The second end of the first spring **2006** may be fixed to the main body (e.g., the main body **1702**) of the respiratory ventilation apparatus **1700**. The second spring **2008** may include a first end and a second end. The first end of the second spring **2008** may be connected to a second end of the guide block **2005**. The second end of the second spring **2008** may be fixed to the main body (e.g., the main body **1702**) of the Respiratory ventilation apparatus. In some embodiments, the first spring **2006** may be the same as or different from the second spring **2008**, for example, in materials (e.g., carbon steels, or alloy steels), types (e.g., coil springs, wave springs, shaped springs, or conical springs), sizes, or the like, or any combination thereof.

[0335] In some embodiments, the first spring **2006** and the second spring **2008** may be configured to guide a moving direction of the guide block **2005** (or slide block **2004**). In some embodiments, if the guide block **2005** (or slide block **2004**) is driven to move along the first direction (e.g., the direction indicated by the solid arrow in FIG. **20**B), the second spring **2008** may be compressed. The compressed second spring **2008** may be capable of driving the guide block **2005** (or slide block **2004**) to move along an opposite direction of the first direction (e.g., the direction indicated by the dotted arrow in FIG. **20**B). Additionally or alternatively, if the guide block **2005** (or slide block **2004**) is driven to move along the opposite direction of the first direction, the first spring **2006** may be compressed. The compressed first spring **2006** may be capable of driving the guide block **2005** (or slide block **2004**) to move along the first direction. In some embodiments, the first spring **2006** may be omitted.

[0336] In some embodiments, the pushrod **1906** may include a first end and a second end. The first end of the pushrod **1906** may be mounted on the liquid chamber **1704** (e.g., the tank shell **1808**). The second end of the pushrod **1906** may cooperate with the guide block **2005**. In some embodiments, the pushrod **1906** may be movable along a second direction back and forth. In some embodiments, the second direction may be perpendicular to the first direction of the movement of the guide block **2005** (or slide block **2004**). In some embodiments, the second end of the pushrod **1906** may include a fixed structure such as a bulge (e.g., a cylinder). In some embodiments, the second end of the pushrod **1906** may include a rotatable structure such as a bearing assembly. In some embodiments, the second end of the pushrod **1906** including a fixed structure may be capable of sliding along the first slope **2015**, the third slope **2055**, the groove **2035**, and the second slope **2025** of the guide block **2005**. In some embodiments, the second end of the pushrod **1906** including a rotatable structure may be capable of rolling along the first slope **2015**, the third slope **2055**, the groove **2035**, and the second slope **2025** of the guide block **2005**.

[0337] FIGS. **21**A and **21**B illustrate an exemplary process for mounting a liquid chamber on a main body of a respiratory ventilation apparatus by a push-push mechanism according to some embodiments of the present disclosure. As shown in FIG. **21**A, the liquid chamber **1704** may be driven by a first pushing force and then be mounted on the main body **1702**. In some embodiments, the first pushing force may be generated by a user (e.g., the subject **180**). The direction of the first pushing force may be indicated by the arrow A (e.g., a vertical direction, also referred to as the second direction). In some embodiments, the pushrod **1906** may be capable of passing through the first hole **1709** and interact with the guide block **2005**. In some embodiments, the center position of the pushrod **1906** may be on the right side of the bottom of the second protrusion **2075** along the

first direction in its natural state. Upon being driven by the first pushing force, the pushrod **1906** may move with the liquid chamber **1704** along the second direction (indicated by the arrow A) and slide down along the first slope **2015** of the guide block **2005**, and accordingly, the pushrod **1906** may push the guide block **2005** to move along the first direction (indicated by the arrow B) while the pushrod **1906** is moving downward, and the second spring **2008** may be compressed. At the same time, the compressed second spring **2008** may generate a reactive force tending to make the pushrod **1906** being pressed with the guide block **2005**. In some embodiments, the first direction may be substantially perpendicular to the second direction. In some embodiments, if the first pushing force is larger than the reactive force, the pushrod **1906** may slide down along the third slope **2055** and move to or be close to the bottom edge of the third slope **2055**. Then the pushrod **1906** may be separated from the first slope and/or the third slope **2055** and may reach below the bottom of the first protrusion **2065**.

[0338] In some embodiments, if the first pushing force is released, the pushrod **1906** may move along an opposite direction of the second direction, and the pushrod **1906** may slide in a left part of a region formed by the bulge **2045** of the guide block **2005** and the groove **2035**. At the same time, the guide block **2005** may move along an opposite direction of the first direction. The pushrod **1906** and the guide block **2005** may stop moving when the pushrod **1906** moves to a top position of the groove **2035**, and accordingly, the pushrod **1906** may be stuck into the groove **2035** of the guide block **2005** (see FIG. **21**B). Therefore, the liquid chamber **1704** may be mounted on the main body **1702** of the respiratory ventilation apparatus. In some embodiments, during the first pushing force is imposed on the liquid chamber **1704**, and/or when the liquid chamber **1704** is mounted on the main body **1702**, the heater plate **1710** may be pressed by the bottom surface of the liquid chamber **1704**, and may move down in the second hole **1711**. In some embodiments, one or more springs **2202** beneath the heater plate **1710** may be pressed, and then the heater plate **1710** and the heat-conducting plate **1810** at the bottom of the liquid chamber **1704** may form a close contact (or an intimate contact).

[0339] FIGS. **21**C and **21**D illustrate an exemplary process for removing a liquid chamber from a main body of a respiratory ventilation apparatus by a push-push mechanism according to some embodiments of the present disclosure. As shown in FIG. **21**C, the liquid chamber **1704** may be driven by a second pushing force and then be released from the main body **1702**. In some embodiments, the second pushing force may be generated by a user (e.g., the subject **180**). The direction of the second pushing force may be indicated by the arrow A (e.g., a vertical direction, also referred to as the second direction). Upon being driven by the second pushing force, the pushrod **1906** may move with the liquid chamber **1704** along the second direction (indicated by the arrow A) and move down in a right part of a region formed by the bulge **2045** of the guide block **2005** and the groove **2035**. At the same time, the guide block **2005** may move along the opposite direction of the first direction (indicated by the arrow B'). In some embodiments, the movement of the guide block **2005** along the opposite direction of the first direction may be driven by the reactive force of the second spring **2008**. Then the pushrod **1906** may be released from the groove **2035** and may reach below the bottom of the second protrusion **2075**.

[0340] In some embodiments, if the second pushing force is released, the one or more pressed springs CH **0902** beneath the heater plate **1710** may drive the heater plate **1710** to move along the opposite direction of the second direction. The movement of the heater plate **1710** may drive the liquid chamber **1704** to move along the opposite direction of the second direction, and the movement of the liquid chamber **1704** may lead the pushrod **1906** to move along the opposite direction of the second direction. Then the pushrod **1906** may move along the second slope of the guide block **2005**, and the guide block **2005** may move along an opposite direction of the first direction (indicated by the arrow B'). Therefore, the liquid chamber **1704** may be released from the main body **1702** of the respiratory ventilation apparatus **1700** (see FIG. **21**D), and the liquid chamber **1704** may be removed from the main body **1702**.

[0341] It should be noted that the above description of the push-push mechanism **1904** is merely provided for the purposes of illustration, and not intended to limit the scope of the present disclosure. For persons having ordinary skills in the art, multiple variations and modifications may be made under the teachings of the present disclosure. However, those variations and modifications do not depart from the scope of the present disclosure. In some embodiments, the push-push mechanism **1904** may be mounted on the main body **1702** of the respiratory ventilation apparatus in different directions, thus different pushing forces may be needed to mount and/or remove the liquid chamber **1704** from the main body **1702**. In some embodiments, the guide block **2005** may be set as mirror symmetrical to that shown in FIGS. **20**A-**21**D. In some embodiments, the push-push mechanism **1904** may include more than one pushrod. In some embodiments, the push-push mechanism **1904** may be configured for unlocking the liquid chamber **1704** from the main body of the respiratory ventilation apparatus **110** by pushing the liquid chamber **1704** in a push direction. The push direction may be substantially perpendicular to a liquid level in the liquid chamber **1704**. In some embodiments, the push-push mechanism **1904** may be configured to form an energy storage means for storing the energy of the pushing action and for releasing the stored energy after the liquid chamber **1704** is unlocked by applying a force on the liquid chamber substantially in the opposite direction of the push direction. It should be noted that in some embodiments, the tank cover of the liquid chamber **1704** may be configured to be closable by pushing in the push direction. In some embodiments, the tank cover of the liquid chamber **1704** may be configured to be openable by pulling substantially in a direction opposite to the push direction. In some embodiments, in the operation of the respiratory ventilation apparatus **110**, a user may couple the humidification assembly (e.g., the liquid chamber **1704**) with the main body of the respiratory ventilation apparatus **110** by pushing the liquid chamber **1704** in the push direction, and/or unlock the humidification assembly with the main body by pushing the liquid chamber **1704** substantially in the push direction. In some embodiments, the user may place the humidification assembly on a surface of the respiratory ventilation apparatus **110** before the operation of coupling. In some embodiments, the operation of coupling the humidification assembly may include locking the tank cover with the tank by pushing the tank cover substantially in the push direction.

[0342] FIGS. **22**A-**22**D illustrate an exemplary heater plate according to some embodiments of the present disclosure. In some embodiments, the heater plate **1710** may include one or more fixing columns **2204** (e.g., four fixing columns illustrated in FIG. **22**D) configured to fix a first end of one or more springs **2202** (e.g., four springs illustrated in FIGS. **22**C and **22**D). Correspondingly, the base plate **2203** of the main body **1702** may include one or more fixing columns or bolts configured to fix a second end the springs **2202**. Therefore, the heater plate **1710** may be mounted on or fixed to the base plate **2203** of the main body **1702** via the one or more springs **2202**. As illustrated in FIG. **17**, the heater plate **1710** may be capable of moving up and down through the second hole **1711** upon being driven by a pressure or upon releasing the pressure. To facilitate the movement of the heater plate **1710** in the second hole **1711**, the heater plate **1710** may include one or more guide bumps **2201**. For example, the heater plate **1710** may include one guide bump **2201** in each side of the heater plate **1710**. Correspondingly, the side wall(s) of the second hole **1711** may include one or more guide grooves (not shown). The guide bumps and the guide grooves may be configured to guide the movement of the heater plate **1710** and/or limit the position of the heater plate **1710**. For example, the second hole **1711** may include one guide groove in each side wall thereof. It should be noted that in some embodiments, the heater plate **1710** may include one or more guide grooves while the second hole **1711** may include one or more guide bumps corresponding to the guide grooves.

[0343] FIGS. **23**A-**23**D illustrate an exemplary connection between a liquid chamber and a main body of a respiratory ventilation apparatus according to some embodiments of the present disclosure. FIG. **23**A shows an axonometric drawing of a connecting piece **2301** coupled with a tank cover **2302** of a liquid chamber **2303**. It should be noted that the cover shell of the tank cover **2302** is not shown in FIG. **23**A for illustration purposes. FIG. **23**B shows an axonometric drawing of the connecting piece **2301**. FIG. **23**C shows an axonometric drawing of the tank cover **2302**. FIG. **23**D shows a section view of a sealed connection between the gasket **2305** of the connecting piece **2301** and the tank cover **2302**.

[0344] The connecting piece **2301** may be configured to provide a sealed connection between the tank cover **2302** and the main body of the respiratory ventilation apparatus **110**, so as to ensure the air tightness of the pressurized respiratory gas flowing between the liquid chamber **2303** and the main body of the respiratory ventilation apparatus **110**. In some embodiments, the connecting piece **2301** may be fixed to the main body of the respiratory ventilation apparatus **110**. In some embodiments, the connecting piece **2301** may be in detachable connection with the main body of the respiratory ventilation apparatus **110**. In some embodiments, the housing of the main body of the respiratory ventilation apparatus **110** may include a space (e.g., the chamber **2502**) for accommodating the connecting piece **2301**. In some embodiments, the connecting piece **2301** and the main body may be an integral piece. In some embodiments, if the liquid chamber **2303** is fixed to a support plate (e.g., the support plate **1707** shown in FIG. **17**) of the main body of the respiratory ventilation apparatus **110**, and the tank cover **2302** is closed with the tank of the liquid chamber **2303**, the connecting piece **2301** may provide a sealed connection between the tank cover **2302** and the main body of the respiratory ventilation apparatus **110**. In some embodiments, the connecting piece **2301** may be fixed to or mounted on the tank cover **2302**. In some embodiments, the connecting piece **2301** may be in detachable connection with the tank cover **2302**. In some embodiments, the tank cover **2302** may include a space for mounting the connecting piece **2301**. In some embodiments, the connecting piece **2301** and the tank cover **2302** may be an integral piece.

[0345] As shown in FIG. **23**B, the connecting piece **2301** may include a support frame **2304** and/or a gasket **2305**. The support frame **2304** may be configured to support the gasket **2305** and/or facilitate the fixation of the gasket **2305** with the main body of the respiratory ventilation apparatus **110**. In some embodiments, the gasket **2305** may include a declining surface. In some embodiment, there may be a tilt angle between the declining surface of the connecting piece **2301** (or the gasket **2305**) and a horizontal plane. In some embodiments, the tilt angle may be substantially within 0 degree to 90 degrees (e.g., within 30 to 60 degrees). The gasket **2305** may be configured to form a sealed connection between the tank cover **2302** and the main body of the respiratory ventilation apparatus **110**. In some embodiments, the gasket **2305** may include a first aperture **2306** and/or a second aperture **2307** set on the declining surface. In some embodiments, support frame **2304** may include at least one gas flow passage in connection with the first aperture **2306** and/or the second aperture **2307**. Each of the at least one gas flow passage may be in connection with one or more gas passages in the main body of the respiratory ventilation apparatus **110**. In some embodiments, the edge of the first aperture **2306** may form a first protruding structure **2311**. In some embodiments, the edge of the second aperture **2307** may include a second protruding structure **2312**. The first protruding structure **2311** and/or the second protruding structure **2312** may protrude to the tank cover **2302**. The first protruding structure **2311** and/or the second protruding structure **2312** may facilitate the sealing connection between the connecting piece **2301** and the tank cover **2302**. In some embodiments, the cross section of the first protruding structure **2311** and/or the second protruding structure **2312** may have a C shape, an S shape, an O shape, a V shape, an M shape, an N shape, a Z shape, a U shape, or one or more folds, or the like, or a combination thereof. In some embodiments, the first protruding structure **2311** and/or the second protruding structure **2312** may be made of a soft material (e.g., silicone, soft glue, or the like, or any combination thereof). In some embodiments, the first protruding structure **2311** and/or the second protruding structure **2312** may be made of the same material (s) as that of the gasket **2305**. In some embodiments, the first protruding structure **2311** and/or the second protruding structure **2312** may be made of different material(s) from that of the gasket **2305**. In some embodiments, the thickness of the first protruding structure **2311** and/or the second protruding structure **2312** may be less than that of the gasket **2305**.

[0346] In some embodiments, the gasket **2305** may be fixed on the main body (e.g., the support frame **2304** of the connecting piece **2301**) of the respiratory ventilation apparatus **110**. In some embodiments, the gasket **2305** may be detachably connected to the main body (e.g., the support frame **2304** of the connecting piece **2301**) of the respiratory ventilation apparatus **110** through a, for example, glue joint, bonding, bolted connection, or the like, or a combination thereof. In some embodiments, the support frame **2304** may

be made of a rigid plastic material. Exemplary rigid plastic materials may include acrylonitrile butadiene styrene (ABS) resins materials, polyformaldenyde (POM) plastics materials, polystyrene (PS) plastics materials, polymethyl methacrylate (PMMA) plastic materials, polycarbonate (PC) plastic materials, poly(ethylene terephthalate) (PET) plastic materials, poly(butylene terephthalate) (PBT) plastic materials, or poly(phenylene oxide) (PPO) plastic materials, or the like, or any combination thereof. In some embodiments, the gasket **2305** may be made of an elastic material including, for example, elastomer, rubber (e.g., silicone), or the like, or a combination thereof. In some embodiments, the gasket **2305** may include a protruding edge at the interface of the support frame **2304** and the gasket **2305**. The protruding edge of the gasket **2305** may facilitate a sealing connection between the connecting piece **2301** and the main body of the respiratory ventilation apparatus **110**.

[0347] As shown in the FIGS. **23**A-**23**D, the declining surface of the gasket **2305** may face a corresponding declining surface of the connecting plate **2308** of the tank cover **2302**. The tank cover **2302** may include a gas inlet port **2309** and a gas outlet port **2310**. The first aperture **2306** on the declining surface of the gasket **2305** may correspond to the gas inlet port **2309** of the tank cover **2302**, the second aperture **2307** on the declining surface of the gasket **2305** may correspond to the gas outlet port **2310** of the tank cover **2302**. In some embodiments, if the liquid chamber **2303** is fixed to a support plate (e.g., the support plate **1707** shown in FIG. **17**) of the main body of the respiratory ventilation apparatus **110**, and the tank cover **2302** is closed with the tank of the liquid chamber **2303**, the tank cover **2302** may be in a sealed connection with the main body of the respiratory ventilation apparatus **110** through the gasket **2305**. The first aperture **2306** of the gasket **2305** and the gas inlet port **2309** of the tank cover **2302** may be capable of introducing the pressurized respiratory gas from the main body of the respiratory ventilation apparatus **110** into the liquid chamber **2303**. The second aperture **2307** of the gasket **2305** and the gas outlet port **2310** of the tank cover **2302** may be capable of introducing the humidified and pressurized respiratory gas from the liquid chamber **2303** back into the main body of the respiratory ventilation apparatus **110**.

[0348] As shown in FIG. **23**D, if the tank cover **2302** is closed, the first protruding structure **2311** may be extruded and deform, and then may form a closed line contact with the connecting plate **2308** (e.g., around the edge of the gas inlet port **2309** and/or the gas outlet port **2310**) of the tank cover **2302**. Therefore, the air tightness of the respiratory gas flowing between the main body of the respiratory ventilation apparatus **110** and the liquid chamber **2303** may be ensured.

[0349] FIG. **24** illustrate another exemplary connection between a liquid chamber and a main body of a respiratory ventilation apparatus according to some embodiments of the present disclosure. As shown in FIG. **24**, the liquid chamber **2403** may include a tank **2401** and a tank cover **2402**. The connection piece **2301** may be configured to provide a sealed connection between a portion of the tank **2401** and the main body of the respiratory ventilation apparatus **110**. In some embodiments, the connection piece **2301** may not directly contact with the tank cover **2402**. Therefore, the state of the tank cover **2402** (open or close) may not affect the connection between the connection piece **2301** and the tank **2401**. In some embodiments, the tank cover **2402** may be opened up by a handle **2404**. The handle **2404** may have one or more notches which may make the handle **2404** easier to operate. In some embodiments, the tank cover **2402** may be a slide cover. In some embodiments, the tank cover **2402** may slide along the horizontal direction or slide along a direction with a tilt angle (such as, 10 degrees, 20 degrees, 30 degrees, or the like) relative to the horizontal direction. In some embodiments, to ensure a sealed connection between the tank **2401** and the tank cover **2402**, an interface **2405** of the tank **2401** and the tank cover **2402** may be equipped with a sealing material (or an elastic material) including for example, a silicone, or the like.

[0350] FIG. **25** illustrate an exemplary connection piece fixed to a main body of a respiratory ventilation apparatus according to some embodiments of the present disclosure. In some embodiments, as shown in FIG. **25**, a protruding platform **2501** may be set at the gas outlet port of a noise reduction box (e.g., the noise reduction box **801**) or in a gas passage between the gas outlet port of the noise reduction box and the connecting piece **2301**. In some embodiments, the protruding platform **2501** may include a gas passage corresponding to a gas outlet. In some embodiments, the gas passage between the gas outlet port of the noise reduction box and the connecting piece **2301** may form a chamber **2502**. The chamber **2502** may include a bottom surface. In some embodiments, if the gas outlet of the protruding platform **2501** is in the vertical direction, the upper edge of the protruding platform **2501** may be set higher than the bottom surface of the chamber **2502**. In some embodiments, if the gas outlet of the protruding platform **2501** is in the horizontal direction, the lower edge of the gas passage in the protruding platform **2501** may be set higher than the bottom surface of the chamber **2502**. In some situations, if the respiratory ventilation apparatus **110** is placed obliquely (i.e., the liquid chamber is placed obliquely), a certain amount of liquid in the liquid chamber (e.g., the liquid chamber **1704**, the liquid chamber **2403**) may accidentally flow from the liquid chamber, via the gas inlet port (e.g., the gas inlet port **2309**) and/or the gas outlet port (e.g., the gas outlet port **2310**) of the liquid chamber, and/or the connecting piece **2301**, and into the chamber **2502** of the main body of the respiratory ventilation apparatus **110**. In some embodiments, the protruding platform **2501** may prevent the liquid from entering or reaching an interior space of the main body of the respiratory ventilation apparatus, the detection module **250**, the noise reduction assembly **240**, and/or the gas pressurization unit **210**.

[0351] In some embodiments, the protruding platform **2501** may be fixed to the gas outlet port of the noise reduction assembly **240**, the gas pressurization unit **210**, or may be fixed in the chamber **2502**. In some embodiments, the protruding platform **2501** may be detachably connected with the gas outlet port of the noise reduction assembly **240**, the gas pressurization unit **210**, or the chamber **2502** through a detachable connection structure, for example, a thread structure, a slot structure, or a snap joint structure, or the like, or any combination thereof.

[0352] FIGS. **26**A-**26**C illustrate an exemplary connection between a liquid chamber and a main body of a respiratory ventilation apparatus according to some embodiments of the present disclosure. The connecting piece **2601** may be configured to provide a sealed connection between the tank cover **2603** and the main body **2602** of the respiratory ventilation apparatus **110**. In some embodiments, the con-

necting piece **2601** may include a first thread hose **2601***a* and/or a second thread hose **2601***b*. The hollow hole of the first thread hose **2601***a* may form a gas outlet port of the main body **2602**. The hollow hole of the second thread hose **2601***b* may form a gas inlet port of the main body **2602**. In some embodiments, the first thread hose **2601***a* and/or the second thread hose **2601***b* may be made of an elastic material including, for example, elastomer, rubber (e.g., silicone), or the like, or a combination thereof.

[0353] In some embodiments, the tank cover **2603** of the liquid chamber may include a connecting plate **2606** equipped with a gas inlet port **2604** and/or a gas outlet port **2605** of the tank cover **2603**. The gas outlet port of the main body **2602** may correspond to the gas inlet port **2604** of the tank cover **2603**. The gas inlet port of the main body **2602** may correspond to the gas outlet port **2605** of the tank cover **2603**. In some embodiments, as shown in FIG. **26**A, the hollow holes of the first thread hose **2601***a* and the second thread hose **2601***b* of the connecting piece **2601** may be set substantially vertical at the first interface between the main body **2602** of the respiratory ventilation apparatus **110** and the liquid chamber. Correspondingly, the connecting plate **2606** may be set substantially horizontal on the tank cover **2603**. Therefore, if the tank cover **2603** is closed, a sealed connection may be formed between the main body **2602** of the respiratory ventilation apparatus **110** and the liquid chamber through the connecting piece **2601**.

[0354] FIG. **27** illustrates an exemplary connection between a connecting piece **2601** and a connecting plate **2606** of a tank cover **2603** when the tank cover **2603** is closed according to some embodiments of the present disclosure. As shown in FIG. **27**, if the tank cover **2603** is closed, the connecting piece **2601** may be connected with the connecting plate **2606** of the tank cover **2603**, and may form a closed line contact with the connecting plate **2606**, which may ensure the air tightness of the pressurized respiratory gas flowing between the liquid chamber and the main body of the respiratory ventilation apparatus **110**.

[0355] FIGS. **28**A-**28**E illustrate exemplary thread hoses of a connecting piece according to some embodiments of the present disclosure. In some embodiments, a thread hose of the connecting piece may include one or more pleated structures on its side wall(s). The one or more pleated structures may be any shape such as, a quarter-circle shape, a semicircle shape, an arc shape, a slot shape, a U shape, a V shape, a Z shape, an M shape, an S shape, a C shape, an O shape, or the like, or any combine of thereof. The one or more pleated structures may provide a certain elasticity for the connecting piece to form a closed line contact with the tank cover **2603** when the tank cover **2603** is closed.

[0356] In some embodiments, at the top edge of the thread hose of the connecting piece, there may be one or more flexural structures having, for example, a circle shape, an annulus shape, an arc shape, a crescent shape, a tilt linear shape, a slot shape, a U shape, a V shape, a Z shape, an M shape, an S shape, a C shape, an O shape, or the like, or any combine of thereof. The one or more flexural structures may cause the connecting piece to form one or more closed line contacts with the tank cover **2603** to ensure the air tightness of the pressurized respiratory gas flowing between the liquid chamber and the main body of the respiratory ventilation apparatus **110**.

[0357] For example, in FIG. **28**A, the thread hose of the connecting piece may have a two layer pleated structure on the side wall(s) thereof. In FIG. **28**B, the thread hose of the connecting piece may include a quarter-circle shaped pleated structure **2801** close to the top edge of the thread hose and an arc shaped pleated structure **2802** close to the bottom of the thread hose. In some embodiments, the quarter-circle shaped pleated structure **2801** and/or the arc shaped pleated structure **2802** may be set on the inner surface of the thread hose. In some embodiments, the thread hose may include an S shaped flexural structure (not shown) on its top edge. In FIG. **28**C, the thread hose may include a double C shaped flexural structure **2804** on its top edge. The double C shaped flexural structure **2804** may form two closed line contacts between the connecting piece and the tank cover when the tank cover is closed. In FIG. **28**D, the thread hose may include an approximate round structure **2805** on its top edge. In FIG. **28**E, the thread hose may include a half-crescent shaped flexural structure **2806**. The approximate round structure **2805** and the half-crescent shaped flexural structure **2806** may provide a sealed closed line contact between the connecting piece and the tank cover when the tank cover is closed. In some embodiments, the thread hose may include a tilt linear shaped flexural structure (not shown) on its top edge and a trapezoid shaped slot (not shown) on its inner surface. All the thread hoses described above may be configured to ensure the air tightness of the pressurized respiratory gas flowing between the liquid chamber and the main body of the respiratory ventilation apparatus **110**.

[0358] FIGS. **29**A-**29**D illustrate an exemplary baseplate of a respiratory ventilation apparatus **110** according to some embodiments of the present disclosure. FIG. **29**A shows an outer surface of the baseplate **2900**. FIG. **29**B shows an inner surface of the baseplate **2900**. FIG. **29**C shows a side cross-sectional view of the baseplate **2900**. FIG. **29**D shows an enlarged view of one or more holes **2920** set on the baseplate **2900**. The one or more holes **2900** may be configured to drain a certain amount of liquids leaking from a liquid chamber (e.g., the liquid chamber **1704** shown in FIG. **17**). In some embodiments, during adding liquids into the liquid chamber or in other situations (e.g., if the respiratory ventilation apparatus **110** is placed obliquely (i.e., the liquid chamber is placed obliquely), or the liquid chamber is untightly sealed), a certain amount of liquids may leak from the liquid chamber and onto the baseplate **2900** below the liquid chamber. The leaked liquids may flow out of the respiratory ventilation apparatus **110** through the holes **2920**. Therefore, the leaked liquids may not accumulate on the baseplate **2900**. As shown in FIG. **29**C and FIG. **29**D, the cross section of each of the one or more holes **2920** may have a step shape. In some embodiments, the holes **2920** may facilitate the draining of the leaked liquids. In some embodiments, the holes **2920** may prevent a foreign matter (e.g., a finger of the subject **180**) from entering the respiratory ventilation apparatus **110**. In some embodiments, the one or more holes **2920** may conform to international standards to make the overall appearance of the respiratory ventilation apparatus **110** more elegant and/or to prevent the subject **180** from directly looking into the internal space of the respiratory ventilation apparatus **110** from the outside.

[0359] FIGS. **30**A and **30**B illustrate an exemplary liquid chamber of a respiratory ventilation apparatus according to some embodiments of the present disclosure. FIGS. **30**A and **30**B shows schematic diagrams of the liquid chamber **3000** in an open mode from different views. As shown in FIGS.

30A and **30**B, the liquid chamber **3000** may include a tank **3002** and a tank cover **3004**. In some embodiments, the tank cover **3004** may be pivotally connected to the tank **3002** through a connection mechanism. In some embodiments, the liquid chamber **3000** may be openable from a front surface of the respiratory ventilation apparatus **110**.

[0360] The tank **3002** may be configured to accommodate one or more liquids (e.g., water and/or drug). In some embodiments, the tank **3002** may include an opening for filling at least one of the one or more liquids. In some embodiments, the opening may be openable by opening the tank cover **3004** and/or closable by closing the tank cover **3004**. In some embodiments, the humidification assembly **220** and the main body of the respiratory ventilation apparatus **110** may be fluidically connectable by closing the tank cover **3004** and/or fluidically disconnectable by opening the tank cover **3004**. In some embodiments, the tank **3002** and the main body may be attachable with each other by moving the tank **3002** in an attaching direction relative to the main body with an angle between the rotational axis and the attaching direction between 20°-160°. In some embodiments, the tank **3002** and the main body may be unlockable from each other by moving the tank **3002** in an unlocking direction relative to the main body with an angle between the rotational axis and the unlocking direction between 20°-160°. In some embodiments, the angle between the attaching direction and the unlocking direction may be between −45° and 45°.

[0361] In some embodiments, the humidification assembly **220** and the main body of the respiratory ventilation apparatus **110** may be fluidically connectable through at least a connecting port for forming at least one flow channel between the main body of the respiratory ventilation apparatus **110** and the liquid chamber **3000**. In some embodiments, the at least one connecting port (e.g., the connecting piece **2301**) may include a gas inlet port (e.g., the second aperture **2307**) and a gas outlet port (e.g., the first aperture **2306**). In some embodiments, the connecting port (e.g., the connecting piece **2301**) may include an axial sealing member (e.g., the first protruding structure **2311** and/or the second protruding structure **2312**) for fluidically sealingly connecting the gas inlet port **3102** and the gas outlet port **3104**. In some embodiments, an inner surface of the axial sealing member may form at least partially the flow channel. In some embodiments, the axial sealing member may define a sealing plane. In some embodiments, the angle between the sealing plane and the liquid level in the liquid chamber **3000** may be between −75°-75° (e.g., −30°-30°). In some embodiments, the angle between the sealing plane and the attaching direction may be between 15°-65°. In some embodiments, the angle between the liquid level and the attaching direction and/or the unlocking direction may be between 45°-135°.

[0362] In some embodiments, the liquid chamber **3000** may be in detachable connection with the main body of the respiratory ventilation apparatus **110** through a push-push mechanism (e.g., the push-push mechanism **1904**).

[0363] In some embodiments, a push direction of the push-push mechanism may be substantially perpendicular to the rotational axis of the connection mechanism. In some embodiments, the humidification assembly **220** and the main body of the respiratory ventilation apparatus **110** may be fluidically connectable by closing the tank cover **3004** in the push direction of the push-push mechanism while the tank **3002** is attached to the main body, and/or by attaching the liquid chamber **3000** to the main body in the push direction while the tank cover **3004** is closed.

[0364] The shape of the tank **3002** may include a cube, a cuboid or an irregular shape that may fit with a main body of the respiratory ventilation apparatus **110**. The tank **3002** may be transparent, opaque, or semi-transparent. In some embodiments, the tank **3002** may include one or more marks for indicating the liquid level (e.g., water level) of the one or more liquids in the tank **3002**. For example, the tank **3002** may include a first stick mark on a side surface of the tank **3002** indicating an allowable minimum liquid level, and/or a second stick mark on a side surface of the tank **3002** indicating an allowable maximum liquid level. As another example, the tank **3002** may include a flotage (e.g., a colored floating ball) inside the tank **3002** floating on the one or more liquids. In some embodiments, the tank **3002** may be equipped with a sensor for detecting the liquid level of the one or more liquids. More descriptions of the tank **3002** may be found elsewhere in the present disclosure (e.g., FIGS. **18**A, **18**B, and **32**A-**32**C and the descriptions thereof).

[0365] In some embodiments, the shape of the tank cover **3004** may be similar to or different from the shape of the tank **3002**. The shape of the tank cover **3004** may include a cube, a cuboid or an irregular shape that may fit with the main body of the respiratory ventilation apparatus **110**. The material of the tank cover **3004** may be similar to or different from the material of the tank **3002**. The tank cover **3004** may be transparent, opaque, or semi-transparent. More descriptions of the tank cover **3004** may be found elsewhere in the present disclosure (e.g., FIGS. **31**, and **37**A-**42**B, and the descriptions thereof).

[0366] In some embodiments, the tank cover **3004** may include a handle **3006**, one or more buckles (e.g., a first buckle **3008***a*, or a second buckle **3008***b*) on the rear side of the handle **3006**. The handle **3006** may be configured to facilitate the opening and/or closing of the tank cover **3004**. The tank **3002** may include one or more notches (e.g., a first notch **3010***a*, and/or a second notch **3010***b*) in positions relative to the handle **3006**, specifically corresponding to the one or more buckles of the handle **3006**. If the tank cover **3004** is closed, the tank cover **3004** may be fastened with the tank **3002** through the cooperation of the one or more buckles and the one or more notches. In some embodiments, the lower edge of the first notch **3010***a* and/or the second notch **3010***b* may be equipped with a transverse bar. In some embodiments, the first buckle **3008***a* and/or the second buckle **3008***b* may be fastened by the transverse bar, so that the tank cover **3004** can be fastened with the tank **3002**.

[0367] In some embodiments, the tank cover **3004** may be pivotally connected to the tank **3002** through a connection mechanism **3009**. In some embodiments, the tank cover **3004** may be pivotally connected to the tank **3002** through the connection mechanism **3009** with a rotational axis. In some embodiments, the tank cover **3004** may be opened by rotating relative to the tank **3002** to a certain angle (e.g., 90 degrees, 100 degrees, etc.). The certain angle may be associated with a maximum rotary movement of the tank cover **3004**. In some embodiments, the liquid chamber **3000** may be capable of being opened from a front surface of the respiratory ventilation apparatus **110**. In some embodiments, as shown in FIGS. **30**A and **30**B, the connection mechanism **3009** may be set on a rear side (or back surface) of the respiratory ventilation apparatus **110**, the handle **3006** may

be set on a front surface of the respiratory ventilation apparatus **110**, so that when the tank cover **3004** is opened, an undersurface of the tank cover **3004** may be substantially upright and facing the front surface of the respiratory ventilation apparatus **110**. In some embodiments, the connection mechanism **3009** may be set on a side surface of the respiratory ventilation apparatus **110** away from the main body of the respiratory ventilation apparatus **110**, the handle **3006** may be set on a top surface of the respiratory ventilation apparatus **110**, and the tank cover **3004** may be opened such that an undersurface of the tank cover **3004** may be substantially upright and facing the main body of the respiratory ventilation apparatus **110** (not shown). In some embodiments, the connection mechanism **3009** may be configured as a guide slot (not shown), and the tank cover **3004** may be opened by moving horizontally relative to the tank **3002**. More descriptions of the connection mechanism **3009** may be found elsewhere in the present disclosure (e.g., FIGS. **33**A-**36**B and the descriptions thereof).

[0368] In some embodiments, the liquid chamber **3000** may include a connecting piece (e.g., the fixing gasket **1806**, and/or the tank cover sealing gasket **1807** shown in FIGS. **18**A and **18**B) configured to provide a sealed connection between the tank **3002** and the tank cover **3004**, so that when the tank cover **3004** is closed with the tank **3002**, the liquid chamber **3000** may be sealed. The connecting piece may be made a material with a property of sealing, flexibility, elasticity, or the like, or any combination thereof. For example, the connecting piece may include flexible rubber (e.g., silicone) or a mixture of flexible rubber and hard rubber. In some embodiments, the connecting piece may be fixed on the bottom surface of the tank cover **3004** and/or the upper surface of the tank **3002**.

[0369] It should be noted that the above description of the liquid chamber **3000** is merely provided for the purposes of illustration, and not intended to limit the scope of the present disclosure. For persons having ordinary skill in the art, multiple variations and modifications may be made under the teachings of the present disclosure. However, those variations and modifications do not depart from the scope of the present disclosure. For example, the tank **3002** of the liquid chamber **3000** may be equipped with a sensor for detecting the liquid level of the one or more liquids. The respiratory ventilation apparatus **110** may generate a reminder based on the signal of the sensor when the liquid level is less than a predetermined level. As another example, the tank cover **3004** may slide inclinedly relative to the tank **3002**. As a further example, the tank cover **3004** may slide in a certain degree of arc relative to the tank **3002**.

[0370] FIG. **31** illustrates an exemplary tank cover of a liquid chamber of a respiratory ventilation apparatus according to some embodiments of the present disclosure. The tank cover **3004** may include a cover shell. The cover shell may include a front surface corresponding to the front surface of the respiratory ventilation apparatus **110**, a back surface corresponding to the back surface the respiratory ventilation apparatus **110**, a top surface away from a corresponding tank (e.g., the tank **3002**), a bottom surface that may contact with the tank **3002**, a side surface close to the main body of the respiratory ventilation apparatus **110**, a side surface away from the main body of the respiratory ventilation apparatus **110**, etc. The tank cover **3004** may include a gas inlet port **3102**, a gas outlet port **3104**, a handle **3006**, a connecting piece **3108** of the connection mechanism **3009**, etc. The gas inlet port **3102** may be configured to introduce the pressurized respiratory gas from the main body of the respiratory ventilation apparatus **110** into the liquid chamber (e.g., the liquid chamber **3000**). The gas outlet port **3104** may be configured to introduce the humidified and pressurized respiratory gas from the liquid chamber back into the main body of the respiratory ventilation apparatus **110**.

[0371] As shown in FIG. **31**, the handle **3006** may be set on the front surface of the tank cover **3004**. The connecting piece **3108** of the connection mechanism **3009** may be set on a back surface of the tank cover **3004**. The gas inlet port **3102** and the gas outlet port **3104** may be set on the side surface (e.g., a declining surface) of the tank cover **3004** close to the main body of the respiratory ventilation apparatus **110**. In some embodiments, the gas inlet port **3102** and the gas outlet port **3104** may be set on a portion of the bottom surface of the tank cover **3004** (see FIG. **26**B). The gas inlet port **3102** and the gas outlet port **3104** may be set close to the main body of the respiratory ventilation apparatus and may not contact with the tank **3002**.

[0372] FIGS. **32**A-**32**C illustrate an exemplary tank of a liquid chamber of a respiratory ventilation apparatus according to some embodiments of the present disclosure. FIGS. **32**A-**32**C shows the tank **3002** in different views. The tank **3002** may include a front surface facing a user of the respiratory ventilation apparatus **110**, a back surface away from the user of the respiratory ventilation apparatus **110**, a top surface that may contact with the tank cover **3004**, a bottom surface away from the tank cover **3004**, a side surface close to the main body of the respiratory ventilation apparatus **110**, a side surface away from the main body of the respiratory ventilation apparatus **110**, etc. The tank **3002** may include a connecting piece **3202** of the connection mechanism **3009**, a bolt **3204**, one or more notches **3010**, etc.

[0373] As shown in FIGS. **32**A-**32**C, the connecting piece **3202** of the connection mechanism **3009** may be set on the back surface of the tank **3002**. The connecting piece **3202** of the connection mechanism **3009** and the connecting piece **3108** of the connection mechanism **3009** may form an integral connection mechanism **3009**. The bolt **3204** may be set below the bottom surface of the tank **3002**. The bolt **3204** may be fixed to the bottom surface of the tank **3002** via a connecting piece **3205**. In some embodiments, the bolt **3204** may be involved in a push-push mechanism (e.g., the push-push mechanism **1904** shown in FIGS. **19**-**21**D). The one or more notches **3010** may be set on a front surface of the tank **3002** to be in accordance with the handle **3006** of the tank cover **3004**.

[0374] In some embodiments, the side surface of the liquid chamber **3000** close to the main body of the respiratory ventilation apparatus **110** may have an angle relative to the horizontal plane. In some embodiments, the angle between the side surface of the tank **3002** close to the main body of the respiratory ventilation apparatus **110** and the horizontal plane may be greater than the angle between the declining surface of the tank cover **3004** and the horizontal plane, which may facilitate a sealed connection between the tank cover **3004** and the main body of the respiratory ventilation apparatus **110**. In some embodiments, the front surface of the tank **3002**, the back surface of the tank **3002**, and/or the side surface of the tank **3002** away from the main body of the respiratory ventilation apparatus **110** may extend downwards to form one or more baffles (e.g., the baffles **3011***a*,

3011*b*, and/or **3011***c*) below the bottom surface. If the liquid camber is mounted on the respiratory ventilation apparatus **110**, the baffles **3011***a*, **3011***b*, and/or **3011***c* may form a space to accommodate a part of base of the main body of the respiratory ventilation apparatus **110** (e.g., a portion of the baseplate **4410**, and/or the heating device **4414**, etc.). If the liquid chamber is placed separately, the baffles **3011***a*, **3011***b*, and/or **3011***c* may support the tank **3002** (or the liquid chamber) and/or protect the bolt **3204** and the connecting piece **3205**. In some embodiments, the bolt **3204** and the connecting piece **3205** may also be referred to as a pushrod (e.g., the pushrod **1906** illustrated in FIG. **19**).

[0375] FIGS. **33**A and **33**B illustrate an exemplary tank according to some embodiments of the present disclosure. As shown in FIGS. **33**A and **33**B, the tank **3300** may include one or more first connecting pieces **3310**. In some embodiments, each of the one or more first connecting pieces **3310** may include a pin hole **3320**, a protruding column **3340**, and/or a first inclined guide surface **3330**.

[0376] FIGS. **34**A and **34**B illustrate an exemplary tank cover according to some embodiments of the present disclosure. As shown in FIGS. **34**A and **34**B, the tank cover **3400** may include one or more second connecting pieces **3410**. In some embodiments, each of the one or more second connecting pieces **3410** may include a pin **3420**, a second inclined guide surface **3430**, a groove **3440**, and/or a guide slot **3450**. In some embodiments, the pin **3420** may be placed into the pin hole **3320**, so that the tank cover **3400** may be fixed to the tank **3300**. In the process of opening and/or closing of the tank cover **3400**, the pin **3420** may rotate in the pin hole **3320**. In some embodiments, the first inclined guide surface **3330** of the first connecting piece(s) **3310** and the second inclined guide surface **3430** of the second connecting piece(s) **3410** may configured to facilitate the installation of the tank cover **3400** on the tank **3300**. In some embodiments, the guide slot **3450** may include a first end adjacent to the groove **3440** and a second end away from the groove **3440**. In some embodiments, the depth of the guide slot **3450** may be gradually changed from a relatively small value at the first end to a relatively large value at the second end. In some embodiments, the guide slot **3450** may be curved to fit with the rotation movement of the tank cover **3400** relative to the tank **3300**.

[0377] FIGS. **35**A and **35**B illustrate a corporation of a protruding column of a first connecting piece of a tank and a groove of a second connecting piece of a tank cover according to some embodiments of the present disclosure. In some embodiments, as shown in FIG. **35**A, if the tank cover **3400** is closed, the protruding column **3340** may be located at or close to the second end of the guide slot **3450**. In the process of opening the tank cover **3400**, the protruding column **3340** may gradually slide along the guide slot **3450** from the second end to the first end of the guide slot **3450**. The design of the relatively small depth of the first end of the guide slot **3450** relative to the second end of the guide slot **3450** may make it easy for the protruding column **3340** to fall into the groove **3440**. The design of the relatively large depth of the second end of the guide slot **3450** relative to the first end of the guide slot **3450** may facilitate the second end of the guide slot **3450** to accommodate the protruding column **3340** when the tank cover **3400** is closed. In some embodiments, if the tank cover **3400** is opened to a certain angle, the protruding column **3340** may fall into the groove **3440** and limit the tank cover **3400** to move back rotarily. Because the groove **3440** and the guide slot **3450** are disconnected and/or the depth of the first end of the guide slot **3450** is smaller than the depth of the groove **3440**, the protruding column **3340** may not be easily detached from the groove **3440**. When the protruding column **3340** falls into the groove **3440**, the design of the disconnection between the groove **3440** and the guide slot **3450**, and/or the design of the relatively small depth of the first end of the guide slot **3450** may prevent the tank cover **3400** from rotating back under no external force (e.g., a force from the user). If a force is imposed (e.g., by a user (e.g., the subject **180**)) on the tank cover **3400** to close the tank cover **3400**, the protruding column **3340** may be detached from the groove **3440** and may gradually slide along the guide slot **3450** from the first end to the second end of the guide slot **3450** until the tank cover **3400** is closed. In some embodiments, the protruding column **3340** may have a hemispherical shape, semi-ellipsoidal shape, or a shape of other convex structure having a curved surface to reduce the friction between the protruding column **3340** and the guide slot **3450**.

[0378] FIGS. **36**A and **36**B illustrate an exemplary connection between a tank and a tank cover of a liquid chamber **3600** according to some embodiments of the present disclosure. In some embodiments, the tank cover **3400** may be in pivoted connection with the tank **3300** through a connection mechanism (e.g., the connection mechanism **3009**) including the first connecting piece(s) **3310** and the second connecting piece(s) **3410**. In some embodiments, the first connecting piece(s) **3310** may be in pivot connection with the second connecting piece(s) **3410**.

[0379] In some embodiments, as shown in FIGS. **36**A and **36**B, a pair of first connecting piece **3310** may be located between a pair of second connecting pieces **3410**. In some embodiments, the pair of second connecting pieces **3410** may be located between the pair of first connecting pieces **3310**. In some embodiments, as shown in FIGS. **36**A and **36**B, the first connecting piece(s) **3310** may be set on a back surface of the tank **3300**. In some embodiments, the first connecting piece(s) **3310** may be set on another surface of the tank **3300**. For example, the first connecting piece(s) **3310** may be respectively set on the two side surfaces of the tank **3300** and close to the back surface of the tank **3300**, and correspondingly, the second connecting piece(s) **3410** may be set on the side surfaces of the tank cover **3400** and close to the back surface of the tank cover **3400**. As another example, the first connecting piece(s) **3310** and the second connecting piece(s) **3410** may be concealed in the tank **3300** or the tank cover **3400**, occupying a portion of the space of the tank **3300** or the tank cover **3400**. As a further example, the first connecting piece(s) **3310** and the second connecting piece(s) **3410** may be set on a side surface of the liquid chamber **3600** and opposite to the gas inlet port and/or the gas outlet port of the gas passages above the tank **3300** (i.e., if the user faces the front surface of the respiratory ventilation apparatus **110**, the first connecting piece(s) **3310** and the second connecting piece(s) **3410** may be set on the right side surface of the liquid chamber **3600**).

[0380] In some embodiments, the tank **3300** and/or the tank cover **3400** may have an irregular shape. Accordingly, the shapes or sizes of the first connecting piece(s) **3310** and/or the second connecting piece(s) **3410** may be irregular. For example, as shown in FIGS. **36**A and **36**B, in order to match with the irregular shape of the tank **3300** or the tank

cover **3400**, the lengths of the pair of first connecting pieces **3310** may be different, so that when the tank cover **3400** is opened, an undersurface of the tank cover **3400** may be substantially upright and facing the front surface of the respiratory ventilation apparatus **110**. In some embodiments, if the shape of the tank **3300** and/or the tank cover **3400** are regular, the first connecting pieces **3310** and/or the second connecting pieces **3410** may be regularly symmetrical.

[0381] As shown in FIG. **36**B, the second connecting piece(s) **3410** may include or be connected by a baffle **3660**. In some embodiments, if the tank cover **3400** is opened to a certain angle, the baffle **3660** may be blocked by a portion of the first connecting piece(s) **3310**, thereby preventing over rotation of the tank cover **3400**, and limiting a maximum rotary movement of the tank cover **3400**. In some embodiments, the liquid chamber **3600** may include one or more mounting shafts between the tank cover **3400** and the tank **3300**. An exemplary mounting shaft may refer to a pin **3420** (see FIG. **34**B). In some embodiments, the mounting shaft(s) may include a first mounting shaft and a second mounting shaft. In some embodiments, the height of the first mounting shaft may be larger than the height of the second mounting shaft. In some embodiments, the first mounting shaft may be set higher than the second mounting shaft.

[0382] It should be noted that the above description of the connection between the tank **3300** and the tank cover **3400** is merely provided for the purposes of illustration, and not intended to limit the scope of the present disclosure. For persons having ordinary skills in the art, multiple variations and modifications may be made under the teachings of the present disclosure. However, those variations and modifications do not depart from the scope of the present disclosure. In some embodiments, the connection between the tank **3300** and the tank cover **3400** may be realized in other ways, such as in hinged connection. For example, the tank **3300** and the tank cover **3400** may include a column-shaped hole on the same horizontal line, respectively, and the tank **3300** and the tank cover **3400** may be connected by a hinge pin passing through the hole(s). As another example, one end of the tank **3300** may include a hollow column with a shape of "C", and correspondingly, one end of the tank cover **3400** may include a column matching with the hollow column, so that if the tank cover **3400** is installed on the tank **3300**, the column may be clamped in the C-shaped hollow column to realize the pivoted connection between the tank **3300** and the tank cover **3400**.

[0383] FIGS. **37**A and **37**B illustrate an exemplary tank cover according to some embodiments of the present disclosure. In some embodiments, as shown in FIGS. **37**A and **378**, the tank cover **3700** may include a cover shell **3710**, a connecting plate **3720**, an inner shell **3730**, a gas passage sealing frame **3740**, a bottom plate **3750**, a fixing frame **3760** and a tank cover sealing frame **3770**. In some embodiments, the connecting plate **3720** may include a first aperture **3721** and a second aperture **3722**. In some embodiments, the first aperture **3721** may be a gas inlet port of the tank cover **3700** (also referred to as a humidification assembly gas inlet port). In some embodiments, the second aperture **3722** may be a gas outlet port of the tank cover **3700** (also referred to as a humidification assembly gas outlet port). In some embodiments, the connecting plate **3720** may be set as inclined outside the cover shell **3710**.

[0384] FIG. **38** illustrates an exemplary cover shell according to some embodiments of the present disclosure. In some embodiments, as shown in FIG. **38**, the cover shell **3710** may include a first aperture **3711**, a second aperture **3712**, a connecting frame **3713**, a barrier **3714**, one or more first clasps **3715**, and one or more second clasps **3716**. The first aperture **3711** and the first aperture **3721** of the connecting plate **3720** may function as the gas inlet port of the tank cover **3700**. The second aperture **3712** and the second aperture **3722** of the connecting plate **3720** may function as the gas outlet port of the tank cover **3700**. The connecting plate **3720** may be connected (e.g., fixed) to the connecting frame **3713**. In some embodiments, the connecting plate **3720** may be connected to the connecting frame **3713** by cementing, riveting, joggling, clamping, meshing, or the like, or any combination thereof. The barrier **3714** may be configured to separate the gas inlet port and the gas outlet port of the tank cover **3700** between the cover shell **3710** and the connecting plate **3720**, so that the respiratory gas flowing into the tank cover **3700** may be isolated from the respiratory gas flowing out of the tank cover **3700**.

[0385] In some embodiments, a sealing strip (not shown) may be used to improve the air tightness of the connection between the connecting frame **3713** and the connecting plate **3720**. For example, all joints between the connecting frame **3713** and the connecting plate **3720** may be equipped with the sealing strip. In some embodiments, a sealing strip (not shown) may be set at the joint between the barrier **3714** and the connecting plate **3720**. In some embodiments, as shown in FIG. **37**A, a first groove **37215** and/or a second groove **37225** may be set between the cover shell **3710** and the connecting plate **3720**. The first groove **37215** and/or the second groove **37225** may be configured to accommodate a portion of the liquid(s) leaking from a tank (e.g., the tank **3300** shown in FIGS. **36**A and **36**B) and prevent the liquid(s) from entering the main body of the respiratory ventilation apparatus **110**. F or example, if the liquid chamber (e.g., the liquid chamber **3600** shown in FIGS. **36**A and **36**B) is tilted or placed obliquely, a portion of the liquids loaded in the tank **3300** may flow into the tank cover **3700**, and the first groove **37215** and/or the second groove **37225** may accommodate the portion of the liquids and prevent the portion of the liquids from entering the main body of the respiratory ventilation apparatus **110**.

[0386] In some embodiments, the bottom plate **3750** may be fixed to the inner shell **3730** by cementing, riveting, joggling, clamping, meshing, or the like, or any combination thereof. In some embodiments, the bottom plate **3750** and the inner shell **3730** may be configured as an integral piece. In some embodiments, the first clasp(s) **3715** may be configured to fix the inner shell **3730** and the bottom plate **3750** to the cover shell **3710**. For example, through the first clasp **3715**, the inner shell **3730** and the bottom plate **3750** may be clamped to the cover shell **3710**. In some embodiments, the first clasp **3715** may be set at the middle of an inner side wall of the cover shell **3710** opposite to the connecting frame **3713**. In some embodiments, the second clasp **3716** may be configured to fix the fixing frame **3760** to the cover shell **3710**. In some embodiments, several (e.g., 4, 6, 8, etc.) second clasps **3716** may be set at the inner side wall(s) of the cover shell **3710** to fix the fixing frame **3760** to the cover shell **3710**. F or example, as shown in FIG. **38**, each of the two side walls of the cover shell **3710** adjacent to the connecting frame **3713** may include three second clasps **3716**. In some embodiments, the tank cover sealing frame **3770** may be fixed to the fixing frame **3760**. In some

embodiments, the fixing frame **3760** and the tank cover sealing frame **3770** may be connected by cementing, clamping, meshing, or the like, or any combination thereof. The tank cover sealing frame **3770** may be configured to improve the air tightness of the connection between the tank (e.g. the tank **3300** shown in FIGS. **36**A and **36**B) and the tank cover **3700**. In some embodiments, the tank cover sealing frame **3770** may be made of a sealing material including for example, silicone, rubber, nylon, or the like, or any combination thereof. In some embodiments, some or all of the components of the cover shell **3710** (e.g., the first aperture **3711**, the second aperture **3712**, the connecting frame **3713**, the barrier **3714**, the first clasp **3715** and/or the second clasp **3716**) may be configured as an integral piece.

[0387] In some embodiments, the cover shell **3710** may be connected and/or connectable to the tank and/or the tank cover **3700**. In some embodiments, the cover shell **3710** may be arranged pivotally relative to the tank. In some embodiments, a liquid contacting side wall of the liquid chamber may be at least partially formed by an outer side wall of the tank forming the outer surface of the humidification assembly **220**. In some embodiments, the tank may be formed with only one opening for filling liquid(s) and/or for exchange of pressurized respiratory gas. In some embodiments, the tank cover **3700** may be pivotally connected to the tank through a connection mechanism. In some embodiments, at least a portion of the side of the first gas passage near the connection mechanism may be covered in the flow direction by a side edge of the humidification assembly gas inlet port of the liquid chamber. In some embodiments, at least a portion of the side of the second gas passage near the connection mechanism may be covered in the flow direction by a side edge of the humidification assembly gas outlet port of the liquid chamber. In some embodiments, the distance between the connection mechanism and the humidification assembly gas outlet port may be less than the distance between the connection mechanism and the humidification assembly gas inlet port.

[0388] FIGS. **39**A and **39**B illustrate an exemplary inner shell of a tank cover according to some embodiments of the present disclosure. In some embodiments, as shown in FIGS. **39**A and **39**B, the inner shell **3730** may include a gas inlet port **3731** and/or a gas outlet port **3732**. In some embodiments, the gas inlet port **3731** may be configured to introduce a gas (e.g., the pressurized respiratory gas), via a first gas passage (e.g., a gas passage as indicated by the arrows shown in FIG. **39**A), into the liquid chamber. As shown in FIG. **39**A, the first gas passage (also referred to as the gas inlet passage) may include an output port **3733**. In some embodiments, the output port **3733** of the first gas passage may be configured for connecting the first gas passage with the tank. The gas may come out of the first gas passage through the output port **3733** and enter into the liquid chamber. In some embodiments, the inner shell **3730** may include a guide plate **3734**. In some embodiments, the guide plate **3734** may be set on an edge of the output port **3733** of the first gas passage. In some embodiments, the guide plate **3734** may be set on an upper edge and/or a side edge (e.g., the side edge closer to the gas inlet port **3731** and/or the gas outlet port **3732** of the inner shell **3730**) of the output port **3733** of the first gas passage. In some embodiments, the guide plate **3734** may be configured to guide the gas to flow downward to the tank below the tank cover **3700**. Therefore, the guide plate **3734** may reduce the amount of gas flowing into other spaces (e.g., the space between the cover shell **3710** and the inner shell **3730**). In some embodiments, the gas passage sealing frame **3740** may be connected to the inner shell **3730**, ensuring airtightness between the inner shell **3730** and the cover shell **3710**. In some embodiments, the gas passage sealing frame **3740** may be fixed to the inner shell **3730** by cementing, riveting, joggling, clamping, meshing, or the like, or any combination thereof.

[0389] In some embodiments, the gas inlet port **3731** (also referred to as the humidification assembly gas inlet port) and the output port **3733** of the first gas passage may be set on different side surfaces of the inner shell **3730**. For example, as shown in FIG. **39**A, the gas inlet port **3731** may be set on a right portion of a first side surface of the inner shell **3730**, and the output port **3733** of the first gas passage may be set on a left portion of a second side surface of the inner shell **3730**, wherein the second side surface of the inner shell **3730** may be adjacent to the first side surface of the inner shell **3730** in a clockwise direction. The gas inlet port **3731** and the output port **3733** of the first gas passage may be set as shown in FIG. **39**A, such that the liquid(s) (e.g., water) in the tank may be difficult to enter the main body of the respiratory ventilation apparatus **110**, regardless of how the respiratory ventilation apparatus **110** is placed or moved. In some embodiments, the distance between the output port **3733** of the first gas passage and the humidification assembly gas inlet port may be larger than the distance between the output port **3733** of the first gas passage and the humidification assembly gas outlet port. In some embodiments, the first side surface of the cover shell **3710** of the liquid chamber may face the first side wall of the housing of the main body of the respiratory ventilation apparatus **110**.

[0390] In some embodiments, the gas outlet port **3732** (also referred to as the humidification assembly gas outlet port) may be configured to introduce a gas (e.g., the humidified and pressurized respiratory gas), via a second gas passage (e.g., a gas passage as indicated by the arrows shown in FIG. **39**B) back into the main body of the respiratory ventilation apparatus **110**. As shown in FIG. **39**B, the second gas passage (also referred to as the gas outlet passage) may include an input port **3735**. In some embodiments, the input port **3735** of the second gas passage may be configured for connecting the second gas passage with the tank. The gas may flow into the second gas passage through the input port **3735** from the liquid chamber. In some embodiments, the first gas passage and/or the second gas passage may have a substantially rectangular cross-section. In some embodiments, the first gas passage and the second gas passage may cross each other.

[0391] In some embodiments, the gas outlet port **3732** (also referred to as the humidification assembly gas outlet port) and the input port **3735** of the second gas passage may be set on different side surfaces of the inner shell **3730**. For example, as shown in FIG. **39**B, the gas outlet port **3732** may be set on a left portion of the first side surface of the inner shell **3730**, and the input port **3735** of the second gas passage may be set on a right portion of a third side surface of the inner shell **3730**, wherein the third side surface of the inner shell **3730** may be adjacent to the first side surface of the inner shell **3730** in an anti-clockwise direction. The gas outlet port **3732** and the input port **3735** of the second gas passage may be set as shown in FIG. **39**B, such that the liquid(s) (e.g., water) in the tank may be difficult to enter the main body of the respiratory ventilation apparatus **110**,

regardless of how the respiratory ventilation apparatus **110** is placed or moved. In some embodiments, the first gas passage and the second gas passage may be set as non-parallel (such as crossed) in the liquid chamber, thereby making the output port **3733** of the first gas passage and the input port **3735** of the second gas passage opening in different directions. In some embodiments, the distance between the input port **3735** of the second gas passage and the humidification assembly gas outlet port may be larger than the distance between the input port **3735** of the second gas passage and the humidification assembly gas inlet port.

[0392] In some embodiments, the gas inlet port and/or the gas outlet port of the tank cover **3700** (i.e., the humidification assembly gas inlet port of the liquid chamber and/or the humidification assembly gas outlet port of the liquid chamber) may be set on a first side surface of the cover shell **3710** (corresponding to the first side surface of the inner shell **3730**) of the liquid chamber. In some embodiments, the output port **3733** of the first gas passage and the input port **3735** of the second gas passage may be set on opposite side surfaces of the inner shell **3730**. For example, the output port **3733** of the first gas passage may be set on the second side surface of the inner shell **3730**, while the input port **3735** of the second gas passage may be set on the third side surface of the inner shell **3730**. That is, the output port **3733** of the first gas passage may face a second side surface of the cover shell **3710** corresponding to the second side surface of the inner shell **3730**, while the input port **3735** of the second gas passage may face a third side surface of the cover shell **3710** corresponding to the third side surface of the inner shell **3730**.

[0393] In some embodiments, as shown in FIG. **39**B, a portion or all portions of the bottom plate **3750** may be set below a lower edge of the gas inlet port **37311** and/or a lower edge of the gas outlet port **37321** of the tank cover **3700**. Therefore, the bottom plate **3750** may be capable of accommodating a portion of the liquid(s) in the tank, and the height difference between the bottom plate **3750** and the lower edge of the gas inlet port **37311** and/or the lower edge of the gas outlet port **37321** may prevent the liquid(s) in the tank from entering the main body of the respiratory ventilation apparatus **110**. In some embodiments, the inner shell **3730** may include one or more third clasps **3736**. The third clasps **3736** may be configured to connect the gas passage sealing frame **3740** with the inner shell **3730**. As shown in FIG. **39**B, the inner shell **3730** may include three clasps **3736** that may be equally spaced on the bottom edge of the first side surface of the inner shell **3730**.

[0394] FIG. **40** illustrate an exemplary bottom plate of an inner shell of a tank cover according to some embodiments of the present disclosure. As shown in FIG. **40**, the bottom plate **3750** may include one or more sealing strips **3752** set along the edge(s) of the bottom plate **3750**. The sealing strip(s) **3752** may be configured to improve the airtightness of the connection between the bottom plate **3750** and the inner shell **3730**. In some embodiments, the bottom plate **3750** may include a bottom of the second gas passage (e.g., the second inclined plate **3751**) and a bottom of the first gas passage (e.g., the rest of the bottom plate **3750** except for the second inclined plate **3751**).

[0395] FIGS. **41**A and **41**B illustrate an exemplary inner structure of an inner shell of a tank cover according to some embodiments of the present disclosure. FIG. **41**A shows the gas inlet passage of the tank cover **3700**. FIG. **41**A shows an upward view of the tank cover **3710** without the bottom plate **3750**. FIG. **41**B shows the gas outlet passage of the tank cover **3700**. FIG. **41**B shows a sectional view of the tank cover **3700**. In some embodiments, the gas inlet passage (i.e., the first gas passage as indicated by the arrows shown in FIG. **41**A) may include a first portion and a second portion. The first portion of the first gas passage may extend from the gas inlet port (e.g., the first aperture **3721**) of the tank cover **3700** to a common plane (e.g., the common plane **3737** indicated by the parallelogram with dotted lines in FIGS. **41**A and **41**B). The second portion of the first gas passage may extend from the common plane **3737** to the output port **3733** of the first gas passage. In some embodiments, the second gas passage may include a first portion and a second portion. The first portion of the second gas passage may extend from the input port of the second gas passage **3735** to the common plane **3737**. The second portion of the second gas passage may extend from the common plane **3737** to the gas outlet port (e.g., the second aperture **3722**) of the tank cover **3700**.

[0396] In some embodiments, the first portion of the first gas passage may be substantially parallel to the second portion of the second gas passage along a direction having an angle with (e.g., substantially perpendicular to) the first side surface (e.g., the side surface including the connecting frame **3713** as shown in FIG. **38**) of the cover shell **3710** of the tank cover **3700**. In some embodiments, the second portion of the first gas passage and the first portion of the second gas passage may be set in different layers. In some embodiments, a first projection of the second portion of the first gas passage on a horizontal plane and a second projection of the first portion of the second gas passage on the horizontal plane may be intersecting or at least partially overlapping. In some embodiments, as shown in FIGS. **41**A and **41**B, the second portion of the first gas passage may be set below the first portion of the second gas passage. In some embodiments, the first portion of the second gas passage may be set below the second portion of the first gas passage. In some embodiments, an area of a first cross section of the first gas passage on the common plane may be equal to or less than a portion (e.g., a half) of an area of the gas inlet port (e.g., the first aperture **3721**) of the tank cover **3700**. In some embodiments, an area of a second cross section of the second gas passage on the common plane may be equal to or less than a portion (e.g., a half) of an area of the gas outlet port (e.g., the second aperture **3722**) of the tank cover **3700**.

[0397] In some embodiments, a first inclined plate **3739** (see FIGS. **39**B and **41**B) may be set between the first cross section and the gas inlet port (e.g., the first aperture **3721**) of the tank cover **3700**. The first inclined plate **3739** may be configured to smooth the flowing of the pressurized respiratory gas in the first gas passage. In some embodiments, the first inclined plate **3739** (see FIGS. **39**B and **41**B) may be set as a part of the inner shell **3730**. In some embodiments, a second inclined plate **3751** may be set between the second cross section and the gas outlet port (e.g., the second aperture **3722**) of the tank cover **3700**. The second inclined plate **3751** may be configured to smooth the flowing of the humidified and pressurized respiratory gas in the second gas passage. In some embodiments, the second inclined plate **3751** (see FIGS. **40** and **41**B) may be set on the bottom of the tank cover **3700**. For example, the second inclined plate **3751** may be a part of the bottom plate **3750**.

[0398] It should be noted that the above description of the tank cover **3700** is merely provided for the purposes of illustration and not intended to limit the scope of the present disclosure. For persons having ordinary skill in the art, multiple variations and modifications may be made under the teachings of the present disclosure. However, those variations and modifications do not depart from the scope of the present disclosure. For example, as shown in FIGS. **42**A and **42**B, the inner shell **4230** of the tank cover **4200** may not include the first inclined plate. As another example, the tank cover **4200** may not include the second inclined plate. As a further example, the bottom of the tank cover **4200** may align to a lower edge of the gas inlet port **4221** and/or a lower edge of the gas outlet port **4222** in the horizontal plane. FIGS. **42**A and **42**B illustrate another exemplary tank cover according to some embodiments of the present disclosure.

[0399] FIGS. **43**A-**43**C illustrate exemplary electronic components in a main body of a respiratory ventilation apparatus according to some embodiments of the present disclosure. In some embodiments, as shown in FIG. **43**A, the electronic components **4300** in the main body may include one or more printed circuit board (PCB) **4320**, an on-off button **4310**, a wireless module assembly **4330**, a rotary knob **4350**, a secure digital (SD) card read-write storage module **4340**, a panel **4360**, a home button **4370**, and a displayer **4380**. In some embodiments, the printed circuit board (PCB) **4320** may include one or more processors (e.g., ARM, PLD, MCU, DSP, FPGA, SoC), one or more controllers, one or more resistors, one or more capacitors, one or more inductors, one or more crystal oscillators, one or more ceramic filters, one or more mechanical switches, one or more connectors, one or more diodes, one or more transistors, one or more thyristors, one or more integrated circuits, one or more sensors (e.g., a flow sensor, a pressure sensor, a humidity sensor, a temperature sensor, etc.). In some embodiments, the one or more processors (and/or the one or more controllers) may be coupled with one or more electronic components **4300** of the printed circuit board (PCB) **4320**, the on-off button **4310**, the wireless module assembly **4330**, the rotary knob **4350**, the home button **4370**, and the displayer **4380** to control the operation of the respiratory ventilation apparatus **110**. For example, if a user (e.g., the subject **180**) presses the on-off button **4310**, the processor(s) may be triggered to control the start or stop of the respiratory ventilation apparatus **110**. In some embodiments, the gas pressurization unit **210** may be coupled with (or electrically connected with) the electronic components **4300**. In some embodiments, the electronic components **4300** may include the gas pressurization unit **210**.

[0400] In some embodiments, a first hole **4361** may be set on the panel **4360**, and the rotary knob **4350** may be connected to (or coupled with) the printed circuit board (PCB) **4320** through the first hole **4361**. In some embodiments, if the rotary knob **4350** is turned, the controller(s) may control the operation of one or more of the electronic components **4300**. In some embodiments, the rotary knob **4350** may be configured to adjust the brightness of the displayer **4380**. For example, if the rotary knob **4350** is turned gradually toward a certain direction (clockwise or anti-clockwise), the brightness of the displayer **4380** may become larger, and accordingly, if the rotary knob **4350** is turned in the opposite direction, the brightness of the displayer **4380** may become smaller. In some other embodiments, the rotary knob **4350** may be configured to adjust the gas flow. For example, if the rotary knob **4350** is turned gradually toward a certain direction (clockwise or anti-clockwise), the gas flow may become larger, and accordingly, if the rotary knob **4350** is turned in the opposite direction, the gas flow may become smaller. In some embodiments, the rotary knob **4350** may be used as an on-off button. In some embodiments, the rotary knob **4350** may be configured to adjust the pressure of the respiratory gas flowing in the gas passage(s) of the respiratory ventilation apparatus **110**. For example, if the rotary knob **4350** is turned gradually toward a certain direction (clockwise or anti-clockwise), the pressure of the respiratory gas may become larger, and accordingly, if the rotary knob **4350** is turned in the opposite direction, the pressure of the respiratory gas may become smaller.

[0401] In some embodiments, the panel **4360** may be configured to protect the displayer **4380** from damage and/or make the overall appearance of the respiratory ventilation apparatus **110** more elegant. In some embodiments, the panel **4360** may be transparent. In some embodiments, the information displayed on the displayer **4380** may be observed through the panel **4360**. The information displayed on the displayer **4380** may include a user interface, one or more working parameters generated or detected during the operation of the respiratory ventilation apparatus **110**, vital sign information of the user (e.g., the subject **180**), etc. In some embodiments, the working parameters may include the pressure of the respiratory gas, the temperature of the respiratory gas, the humidity of the respiratory gas, a working mode of the respiratory ventilation apparatus **110**, a status of the peripheral device, a working time, etc. In some embodiments, the vital sign information may include a respiratory frequency of the user, a snoring of the user, a sleeping status of the user, a tidal volume of the user, etc. In some other embodiments, a light sensor that is configured to detect an intensity of ambient light may be set outside of the respiratory ventilation apparatus **110** and coupled with the electronic components **4300**, so that the processor(s) (and/or controller(s)) may control the brightness of the displayer **4380** automatically based on the intensity of the ambient light. In some embodiments, the displayer **4380** may include a liquid crystal display (LCD) screen, a light-emitting diode (LED) screen, or the like.

[0402] In some embodiments, the home button **4370** may be configured to reset the working parameter(s) to original or initial value(s). In some embodiments, the home button **4370** may be configured to control the interface to return to a home page or a previous page. In some embodiments, a second hole **4362** may be set on the panel **4360**, and the home button **4370** may be connected to (or coupled with) the printed circuit board (PCB) **4320** through the second hole **4362**.

[0403] In some embodiments, the wireless module assembly **4330** may be configured to control the respiratory ventilation apparatus **110**. In some embodiments, the wireless module assembly **4330** may include a Bluetooth module, a ZigBee module, a mobile communication module, a radio frequency (RF) communication module, a WiFi module, or the like, or a combination thereof. In some embodiments, the respiratory ventilation apparatus **110** may connect to the internet through the WiFi module. In some embodiments, the working parameter(s) of the respiratory ventilation apparatus **110** may be adjusted (or controlled, or

changed) by a remote computer (e.g., a mobile terminal). In some embodiments, the radio frequency (RF) communication module may be coupled with a remote controller, and a user (e.g., the subject **180**) may start, stop, adjust, and/or control the operation of the respiratory ventilation apparatus **110** via the remote controller remotely. In some embodiments, the wireless module assembly **4330** may be coupled with one or more sensors equipped in the respiratory ventilation apparatus **110** to obtain information detected by the sensor(s). For example, the wireless module assembly **4330** may be coupled with a flow sensor located in the gas passage(s) of the respiratory ventilation apparatus **110** to obtain the flux of the respiratory gas.

[0404] In some embodiments, the secure digital (SD) card read-write storage module **4340** may be configured to accommodate a secure digital (SD) card, read information from the SD card, and/or write information to the SD card. It should be noted that the secure digital (SD) card may be dispensable. In some embodiments, the secure digital (SD) card may be configured to store the user's vital sign information, the working parameters generated or detected during the operation of the respiratory ventilation apparatus **110**, and/or one or more preset working parameters. In some embodiments, the memory size of the secure digital (SD) card may be selected by the user.

[0405] FIGS. **44**A and **44**B illustrate an exemplary heating device according to some embodiments of the present disclosure. As shown in FIG. **44**A, a heating device **4414** may be set on the baseplate **4410** of a main body of a respiratory ventilation apparatus **110**. In some embodiments, at least a portion of the baseplate **4410** may be set underneath a liquid chamber (e.g., the liquid chamber **320**). The heating device **4414** may be configured to heat the liquid(s) in the liquid chamber and/or accelerate the evaporation of the liquid(s) in the liquid chamber. In some embodiments, as shown in FIG. **44**B, the heating device **4414** may include a bracket **4440**, a heater plate **4420** and a fixing frame **4430**. The fixing frame **4430** may be configured to fix the heater plate **4420** to the bracket **4440**. In some embodiments, the heater plate **4420** may be fixed to the bracket **4440** by one or more screws (or snaps) or any other fixing mechanism. The heater plate **4420** may include for example, a stainless steel electric heater plate (mica electric heater plate), a ceramic electric heater plate, a cast aluminum electric heater plate, a cast copper electric heater plate, or the like, or a combination thereof. In some embodiments, one or more springs **4460** may be set underneath the bracket **4440**, so that the heating device **4414** may be capable of moving up and down if a pressure is imposed on or removed from the heater plate **4420**. More descriptions of the connection between the heating device **4414** and the baseplate **4410** may be found elsewhere in the present disclosure (e.g., FIGS. **22**A-**22**D and the descriptions thereof).

[0406] FIG. **45** illustrate an exemplary liquid chamber according to some embodiments of the present disclosure. In some embodiments, the liquid chamber **4500** may include a tank **4530**. The tank **4530** may be configured to accommodate one or more liquids. In some embodiments, the tank **4530** may include a heat conducting plate **4510**. The heat conducting plate **4510** may be configured to conduct the heat generated by the heater plate **4420** to the liquid(s) in the tank **4530**, so that the liquid(s) may evaporate to generate vapor to humidify the respiratory gas. In some embodiments, the heat conducting plate **4510** may be made of a heat conducting material including for example, one or more metals with capability of heat conductivity (e.g., copper, aluminum), heat conducting silica gel, or the like, or a combination thereof. In some embodiments, one or more heat conducting coatings, such as heat conducting silica gel, may be disposed on the surface of the heat conducting plate **4510** to promote thermal contact between the heater plate **4420** and the heat conducting plate **4510**.

[0407] In some embodiments, the heat conducting plate **4510** may be fixed to the bottom of the tank **4530** by screw(s) or glue. In some embodiments, the bottom of the tank **4530** may include a groove **4520**. In some embodiments, the shape of the groove **4520** may fit with the shape the heater plate **4420**, so that if the tank **4530** is mounted on the baseplate **4410**, the heating device **4414** may be totally or partly trapped in the groove **4520**. Therefore, the heater plate **4420** and the heat conducting plate **4510** can be closely connected.

[0408] In order to reduce heat loss, it may be necessary to ensure that the heater plate **4420** and the heat conducting plate **4510** are in close contact with each other. As illustrated in FIG. **44**B, one or more springs **4460** may be set below the heater plate **4420**. If the tank **4530** is mounted above the heating device **4414**, the spring(s) **4460** may be compressed, and the compressed spring(s) **4460** may push the heater plate **4420** to the heat conducting plate **4510**, increasing the contact pressure between the heater plate **4420** and the heat conducting plate **4510** and ensuring the close contact therebetween. In some embodiments, a plurality of elastic columns may be used instead of the spring(s) **4460**.

[0409] In some other embodiments, one or more heating rods, one or more electrodes or one or more ultrasonic atomizers may be directly installed in the tank **4530** to heat the liquid(s) in the tank **4530**. In some embodiments, the heating device **4414** may be coupled to (or electrically connected with) the electronic components **4300**. The controller(s) may control the start, stop, suspend, resume of the heating of the heating device **4414**, the heating rate of the heating device **4414**, the heating power of the heating device **4414**, etc., so as to control the humidity of the respiratory gas.

[0410] Having thus described the basic concepts, it may be rather apparent to those skilled in the art after reading this detailed disclosure that the foregoing detailed disclosure is intended to be presented by way of example only and is not limiting. Various alterations, improvements, and modifications may occur and are intended to those skilled in the art, though not expressly stated herein. These alterations, improvements, and modifications are intended to be suggested by this disclosure and are within the spirit and scope of the exemplary embodiments of this disclosure.

[0411] Moreover, certain terminology has been used to describe embodiments of the present disclosure. For example, the terms "one embodiment," "an embodiment," and/or "some embodiments" mean that a particular feature, structure or characteristic described in connection with the embodiment is included in at least one embodiment of the present disclosure. Therefore, it is emphasized and should be appreciated that two or more references to "an embodiment" or "one embodiment" or "an alternative embodiment" in various portions of this specification are not necessarily all referring to the same embodiment. Furthermore, the particu-

lar features, structures or characteristics may be combined as suitable in one or more embodiments of the present disclosure.

[0412] Further, it will be appreciated by one skilled in the art, aspects of the present disclosure may be illustrated and described herein in any of a number of patentable classes or context including any new and useful process, machine, manufacture, or composition of matter, or any new and useful improvement thereof. Accordingly, aspects of the present disclosure may be implemented entirely hardware, entirely software (including firmware, resident software, micro-code, etc.) or combining software and hardware implementation that may all generally be referred to herein as a "unit," "module," or "system." Furthermore, aspects of the present disclosure may take the form of a computer program product embodied in one or more computer-readable media having computer readable program code embodied thereon.

[0413] Similarly, it should be appreciated that in the foregoing description of embodiments of the present disclosure, various features are sometimes grouped together in a single embodiment, figure, or description thereof for the purpose of streamlining the disclosure aiding in the understanding of one or more of the various inventive embodiments. This method of disclosure, however, is not to be interpreted as reflecting an intention that the claimed subject matter requires more features than are expressly recited in each claim. Rather, inventive embodiments lie in less than all features of a single foregoing disclosed embodiment.

[0414] In some embodiments, the numbers expressing quantities or properties used to describe and claim certain embodiments of the application are to be understood as being modified in some instances by the term "about," "approximate," or "substantially." For example, "about," "approximate," or "substantially" may indicate ±20% variation of the value it describes, unless otherwise stated. Accordingly, in some embodiments, the numerical parameters set forth in the written description and attached claims are approximations that may vary depending upon the desired properties sought to be obtained by a particular embodiment. In some embodiments, the numerical parameters should be construed in light of the number of reported significant digits and by applying ordinary rounding techniques. Notwithstanding that the numerical ranges and parameters setting forth the broad scope of some embodiments of the application are approximations, the numerical values set forth in the specific examples are reported as precisely as practicable.

[0415] Each of the patents, patent applications, publications of patent applications, and other material, such as articles, books, specifications, publications, documents, things, and/or the like, referenced herein is hereby incorporated herein by this reference in its entirety for all purposes, excepting any prosecution file history associated with same, any of same that is inconsistent with or in conflict with the present document, or any of same that may have a limiting affect as to the broadest scope of the claims now or later associated with the present document. By way of example, should there be any inconsistency or conflict between the description, definition, and/or the use of a term associated with any of the incorporated material and that associated with the present document, the description, definition, and/or the use of the term in the present document shall prevail.

[0416] In closing, it is to be understood that the embodiments of the application disclosed herein are illustrative of the principles of the embodiments of the application. Other modifications that may be employed may be within the scope of the application. Thus, by way of example, but not of limitation, alternative configurations of the embodiments of the application may be utilized in accordance with the teachings herein. Accordingly, embodiments of the present application are not limited to that precisely as shown and described.

What is claimed is:

1. A humidification assembly configured to humidify a pressurized respiratory gas from a respiratory ventilation apparatus, the humidification assembly including:

a liquid chamber configured to accommodate one or more liquids, the liquid chamber including a tank and a tank cover, wherein the tank cover includes

a shell,

a humidification assembly gas inlet port configured to introduce the pressurized respiratory gas, via a first gas passage, into the tank, wherein the first gas passage includes an output port, and

a humidification assembly gas outlet port configured to introduce the humidified and pressurized respiratory gas, via a second gas passage, into the respiratory ventilation apparatus, wherein the second gas passage includes an input port,

the output port of the first gas passage faces a first side surface of the shell, the input port of the second gas passage faces a second side surface of the shell, and the first side surface of the shell is opposite to the second surface of the shell.

2. The humidification assembly of claim **1**, wherein the humidification assembly gas inlet port of the liquid chamber and/or the humidification assembly gas outlet port of the liquid chamber are set on a third side surface of the shell, wherein the third surface of the shell faces a first side wall of a housing of a main body of the respiratory ventilation apparatus.

3. The humidification assembly of claim **2**, wherein a first portion of the first gas passage is substantially parallel to a second portion of the second gas passage along a direction having an angle with the third side surface of the shell.

4. The humidification assembly of claim **1**, wherein the output port of the first gas passage for connecting the first gas passage with the tank and/or the input port of the second gas passage for connecting the second gas passage with the tank are set inside the shell.

5. The humidification assembly of claim **1**, wherein the shell comprises an inner shell and a cover shell in a layered structure, wherein

the output port of the first gas passage and the input port of the second gas passage are set on the inner shell; and/or

the humidification assembly gas inlet port of the liquid chamber and/or the humidification assembly gas outlet port of the liquid chamber are set on a first side surface of the cover shell.

6. The humidification assembly of claim **1**, wherein at least a portion of the first gas passage and at least a portion of the second gas passage extend substantially along a same plane.

7. The humidification assembly of claim **1**, wherein at least one of the first gas passage and the second gas passage includes a plurality of extension directions along its length.

8. The humidification assembly of claim **1**, wherein a portion of the first gas passage and a portion of the second gas passage are set in different layers.

9. The humidification assembly of claim **1**, wherein

at least a portion of a bottom of the first gas passage is below a lower edge of the humidification assembly gas inlet port of the liquid chamber, and/or

at least a portion of a bottom of the second gas passage is below a lower edge of the humidification assembly gas outlet port of the liquid chamber.

10. The humidification assembly of claim **1**, wherein a lower edge of the output port of the first gas passage is below a lower edge of the input port of the second gas passage.

11. The humidification assembly of claim **1**, wherein at least one of the first gas passage and the second gas passage includes a plurality of different cross-sectional areas along its extension direction.

12. The humidification assembly of claim **1**, wherein the liquid chamber further includes a guide plate set on an upper edge of the output port of the first gas passage, the guide plate being configured to guide the pressurized respiratory gas to flow downward to the tank.

13. The humidification assembly of claim **12**, wherein the guide plate has a tilt angle relative to a horizontal plane.

14. The humidification assembly of claim **12**, wherein the output port of the first gas passage, the input port of the second gas passage, and the guide plate is set such that an angle between a first flow direction of the pressurized respiratory gas flowing out from the output port of the first gas passage and a second flow direction of the pressurized respiratory gas flowing into the input port of the second gas passage is equal to or less than 90 degrees.

15. The humidification assembly of claim **1**, wherein the tank cover includes a cover shell and a connecting plate set as inclined outside the cover shell.

16. The humidification assembly of claim **1**, wherein

a liquid contacting side wall of the liquid chamber is at least partially formed by an outer side wall of the tank forming the outer surface of the humidification assembly; and/or

the tank is formed with only one opening for filling liquid and for exchange of pressurized gas.

17. The humidification assembly of claim **1**,

wherein at least a portion of a side of the first gas passage is covered by a side edge of the humidification assembly gas inlet port of the liquid chamber, and/or

wherein at least a portion of a side of the second gas passage is covered by a side edge of the humidification assembly gas outlet port of the liquid chamber.

18. A respiratory ventilation apparatus configured to deliver a respiratory gas to a patient interface, comprising a humidification assembly, the humidification assembly being configured to humidify the respiratory gas, the humidification assembly comprising:

a liquid chamber configured to accommodate one or more liquids, the liquid chamber including a tank and a tank cover, wherein the tank cover includes

a shell,

a humidification assembly gas inlet port configured to introduce the pressurized respiratory gas, via a first gas passage, into the tank, wherein the first gas passage includes an output port, and

a humidification assembly gas outlet port configured to introduce the humidified and pressurized respiratory gas, via a second gas passage, back into a main body of the respiratory ventilation apparatus, wherein the second gas passage includes an input port,

the output port of the first gas passage faces a first side surface of the shell, the input port of the second gas passage faces a second side surface of the shell, and the first side surface of the shell is opposite to the second surface of the shell.

19. The respiratory ventilation apparatus of claim **18**, wherein the humidification assembly gas inlet port of the liquid chamber and/or the humidification assembly gas outlet port of the liquid chamber are set on a third side surface of the shell, wherein the third surface of the shell faces a first side wall of a housing of a main body of the respiratory ventilation apparatus.

20. The respiratory ventilation apparatus of claim **18**, wherein the output port of the first gas passage for connecting the first gas passage with the tank and/or the input port of the second gas passage for connecting the second gas passage with the tank are set inside the shell.

* * * * *