US012394893B2

(12) **United States Patent**
Aoki et al.

(10) **Patent No.: US 12,394,893 B2**
(45) **Date of Patent: Aug. 19, 2025**

(54) **METHOD AND APPARATUS FOR CALIBRATING PHASED ARRAY ANTENNA**

(71) Applicant: **Samsung Electronics Co., Ltd.**, Suwon-si (KR)

(72) Inventors: **Yuichi Aoki**, Suwon-si (KR); **Tuan Manh Dao**, Suwon-si (KR); **Daehyun Kang**, Suwon-si (KR); **Yonghoon Kim**, Suwon-si (KR); **Yongan Hwang**, Suwon-si (KR)

(73) Assignee: **Samsung Electronics Co., Ltd.**, Suwon-si (KR)

(*) Notice: Subject to any disclaimer, the term of this patent is extended or adjusted under 35 U.S.C. 154(b) by 334 days.

(21) Appl. No.: **17/758,494**

(22) PCT Filed: **Jan. 8, 2021**

(86) PCT No.: **PCT/KR2021/000239**
§ 371 (c)(1),
(2) Date: **Jul. 7, 2022**

(87) PCT Pub. No.: **WO2021/141434**
PCT Pub. Date: **Jul. 15, 2021**

(65) **Prior Publication Data**

US 2023/0031668 A1 Feb. 2, 2023

(30) **Foreign Application Priority Data**

Jan. 9, 2020 (KR) 10-2020-0003036

(51) **Int. Cl.**
H01Q 3/26 (2006.01)
H01Q 3/30 (2006.01)

(52) **U.S. Cl.**
CPC ***H01Q 3/267*** (2013.01); ***H01Q 3/30*** (2013.01)

(58) **Field of Classification Search**
CPC H01Q 3/267; H01Q 3/30
See application file for complete search history.

(56) **References Cited**

U.S. PATENT DOCUMENTS

6,384,781 B1 5/2002 Kautz et al.
7,593,826 B2 9/2009 Weese
(Continued)

FOREIGN PATENT DOCUMENTS

KR 10-2010-0102195 A 9/2010
KR 10-2015-0076756 A 7/2015
(Continued)

OTHER PUBLICATIONS

Office Action dated Jan. 12, 2024, in connection with Korean Application No. 10-2020-0003036, 10 pages.
(Continued)

Primary Examiner — Vladimir Magloire
Assistant Examiner — Maxine McKenzie Phillips

(57) **ABSTRACT**

The present disclosure relates to a communication technique for merging, with an IoT technology, a 5G communication system for supporting a higher data transmission rate than a 4G system, and a system therefor. The present disclosure can be applied to intelligent services (for example, smart homes, smart buildings, smart cities, smart cars or connected cars, healthcare, digital education, retail businesses, security- and safety-related services, and the like) on the basis of a 5G communication technology and an IoT-related technology. The present disclosure discloses a method for calibration of a phased array antenna.

11 Claims, 28 Drawing Sheets

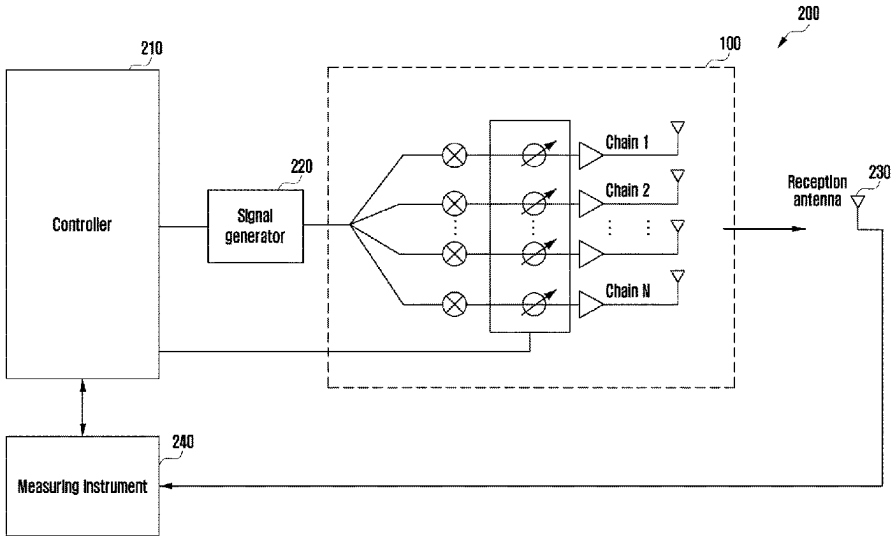

(56) **References Cited**

U.S. PATENT DOCUMENTS

7,714,775	B2	5/2010	Navarro et al.
8,013,783	B2	9/2011	Lomes et al.
10,505,647	B2	12/2019	Lee et al.
2017/0310004	A1	10/2017	Swirhun et al.
2018/0115064	A1	4/2018	Safavi-Naeini et al.
2020/0228211	A1	7/2020	Dao et al.

FOREIGN PATENT DOCUMENTS

KR	10-2017-0006639	A	1/2017
KR	10-1785980	B1	10/2017
KR	10-2019-0021688	A	3/2019

OTHER PUBLICATIONS

Supplementary European Search Report dated Dec. 23, 2022 in connection with European Patent Application No. 21 73 8722, 8 pages.

International Search Report and Written Opinion of the International Searching Authority dated Apr. 15, 2021, in connection with International Application No. PCT/KR2021/000239, 10 pages.

Office Action dated Aug. 14, 2024, in connection with Korean Application No. 10-2020-0003036, 9 pages.

Communication pursuant to Article 94(3) EPC dated Jul. 23, 2024, in connection with European Application No. 21738722.4, 7 pages.

Decision of Rejection issued Apr. 7, 2025, in connection with Korean Patent Application No. 10-2020-0003036, 7 pages.

FIG. 1

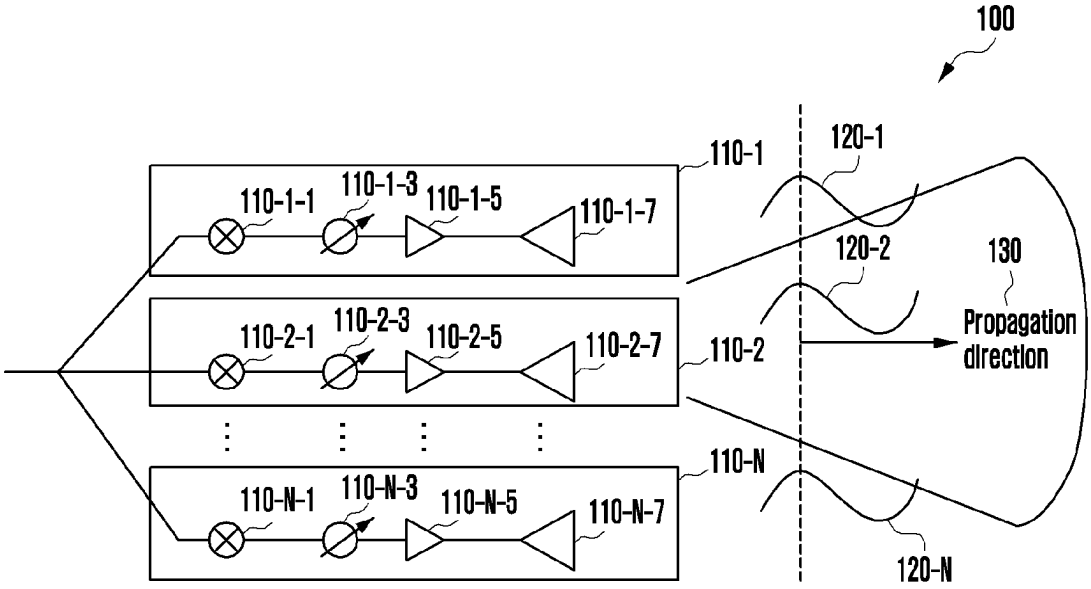
100
110-1
120-1
110-1-1
110-1-3
110-1-5
110-1-7
120-2
130
110-2-1
110-2-3
110-2-5
110-2-7
110-2
Propagation direction
110-N
110-N-1
110-N-3
110-N-5
110-N-7
120-N

FIG. 2A

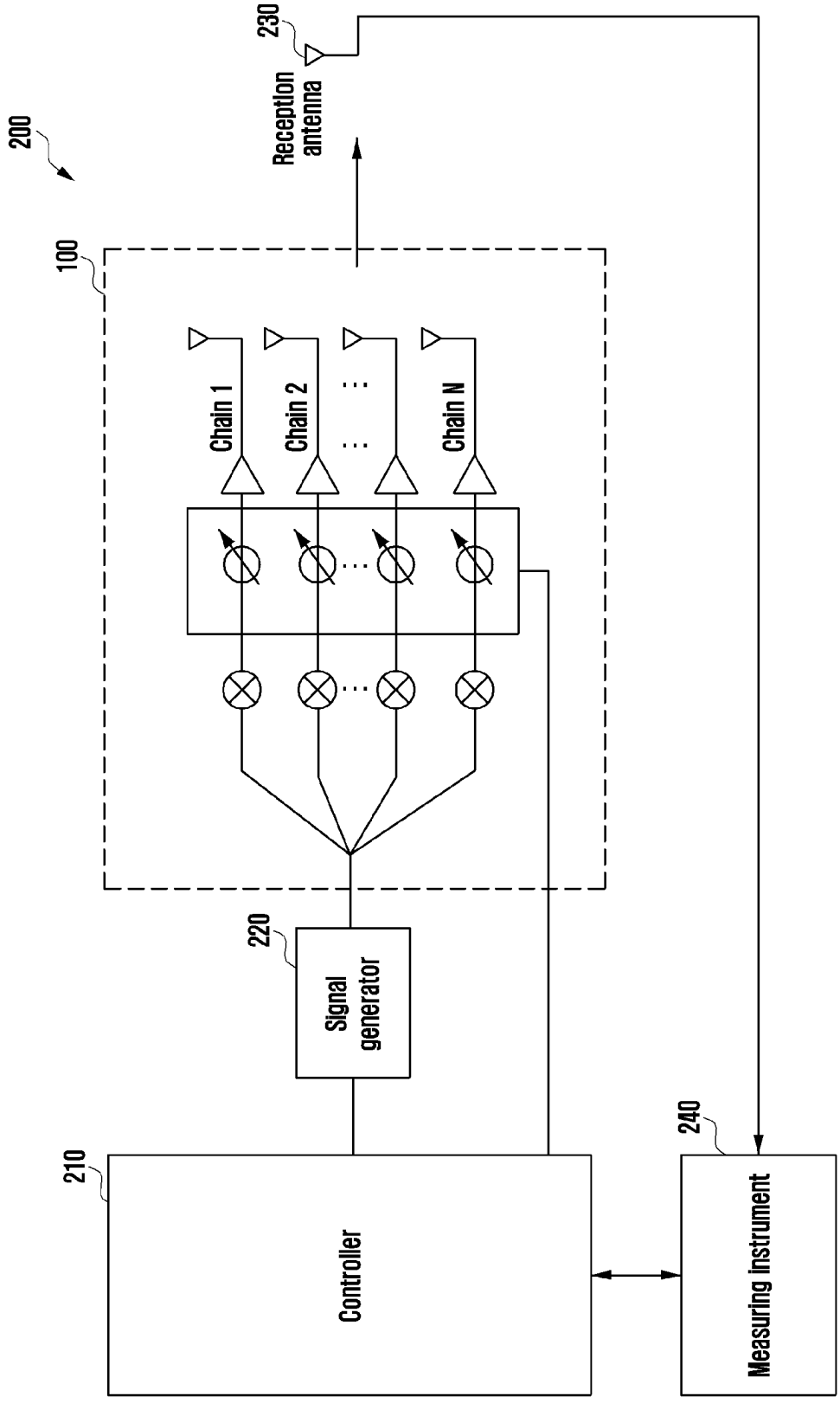
200
100
230
Reception antenna
Chain 1
Chain 2
Chain N
220
Signal generator
210
Controller
240
Measuring instrument

FIG. 2B

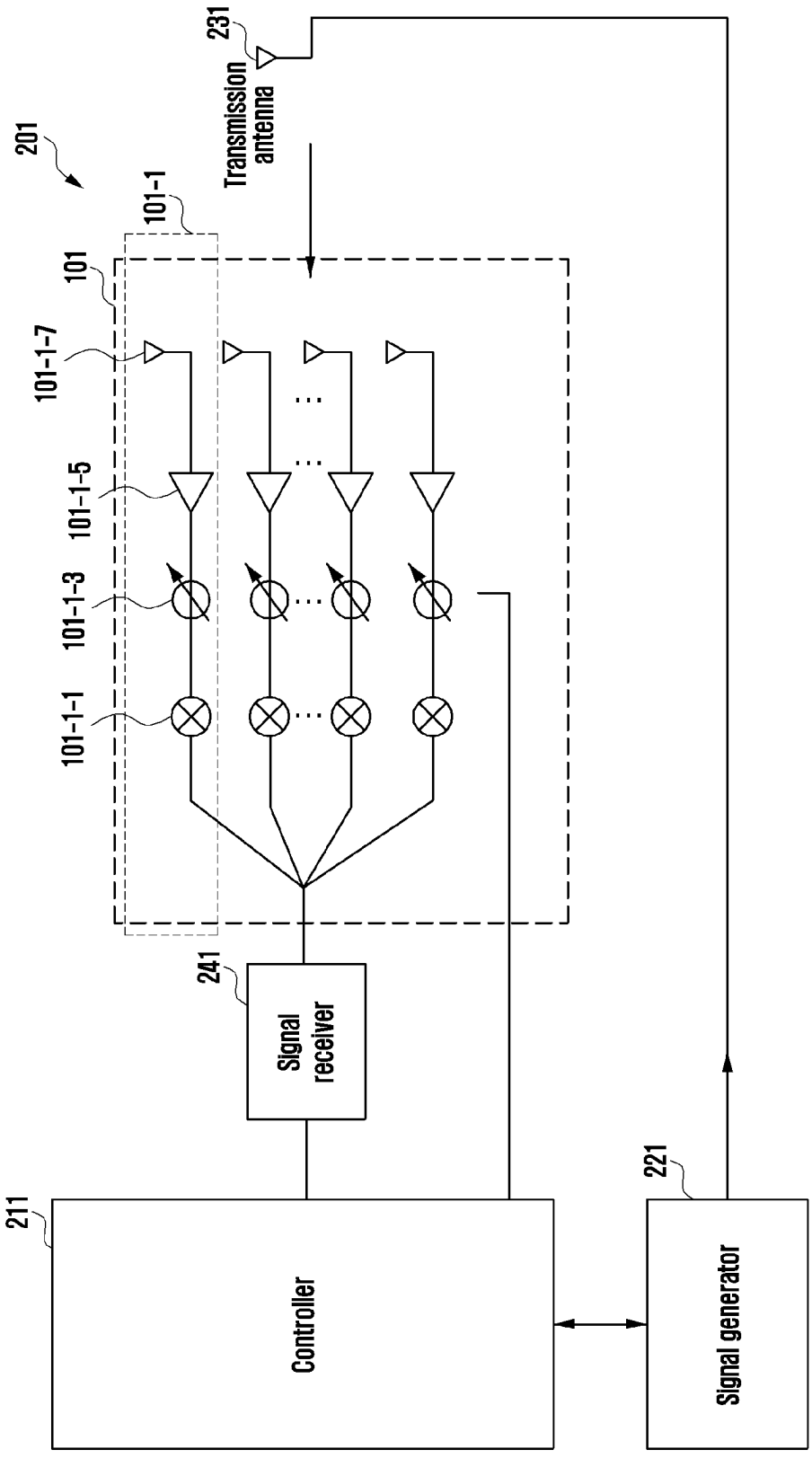
231
Transmission antenna
201
101-1
101
101-1-7
101-1-5
101-1-3
101-1-1
241
Signal receiver
211
Controller
221
Signal generator

FIG. 3

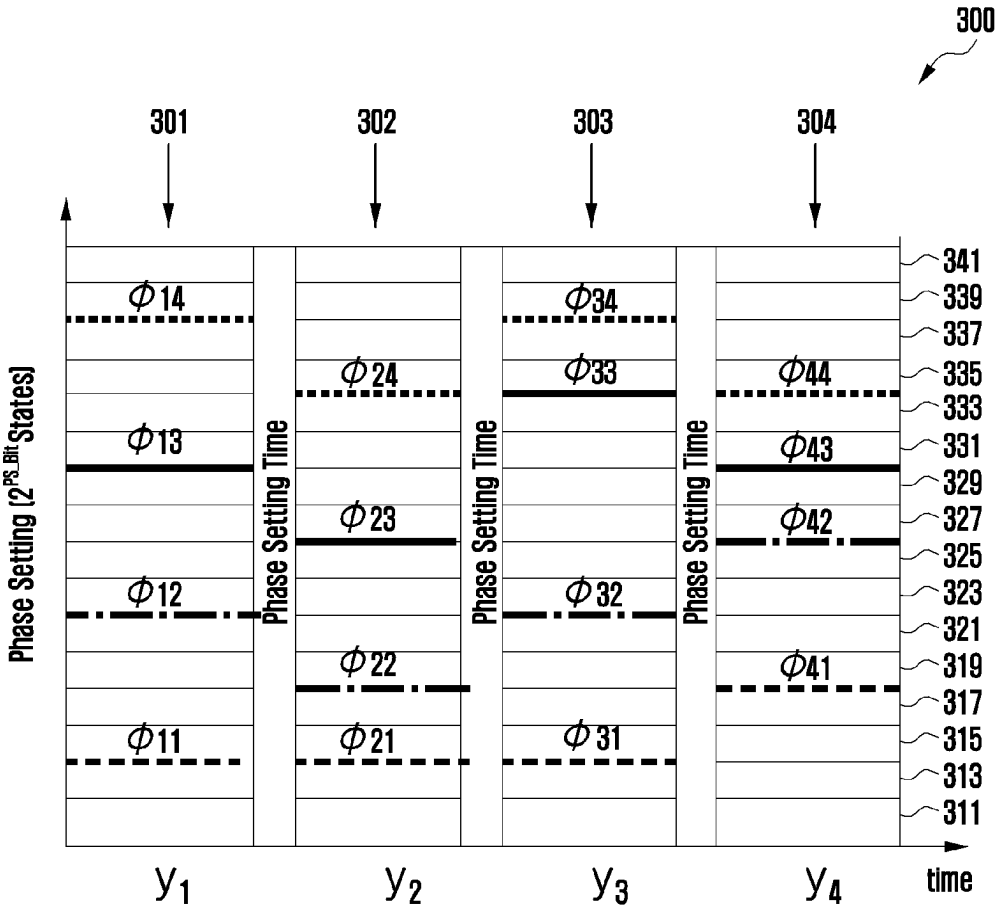
300
301
302
303
304
Phase Setting (2^PS_Bit States)
Phase Setting Time
Phase Setting Time
Phase Setting Time
Φ14
Φ13
Φ12
Φ11
Φ24
Φ23
Φ22
Φ21
Φ34
Φ33
Φ32
Φ31
Φ44
Φ43
Φ42
Φ41
341
339
337
335
333
331
329
327
325
323
321
319
317
315
313
311
y1
y2
y3
y4
time

FIG. 4

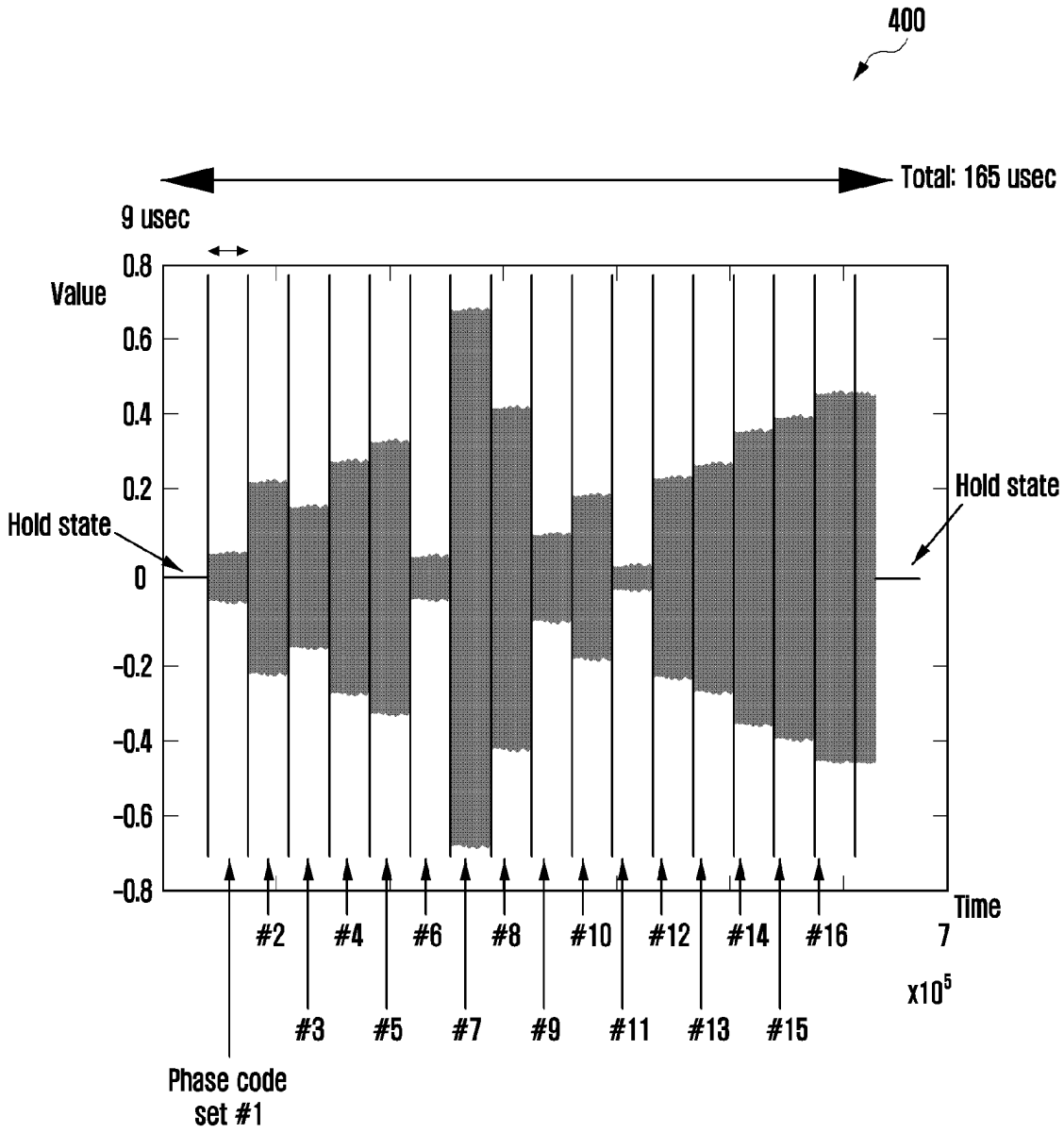
400
Total: 165 usec
9 usec
Value
0.8
0.6
0.4
0.2
0
-0.2
-0.4
-0.6
-0.8
Hold state
Hold state
Time
7
x10^5
#2
#4
#6
#8
#10
#12
#14
#16
#3
#5
#7
#9
#11
#13
#15
Phase code set #1

FIG. 5

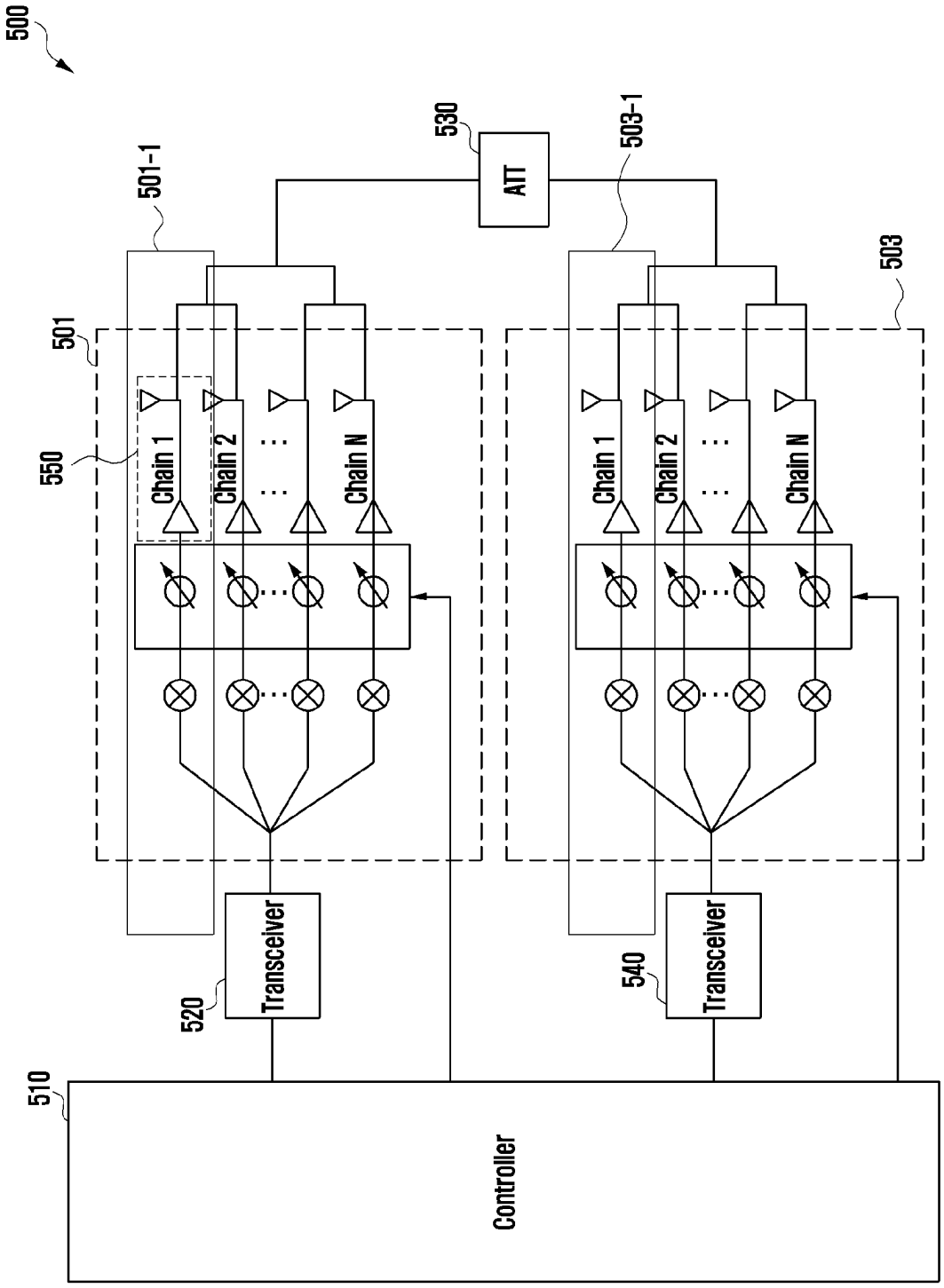
500
530
ATT
501-1
503-1
503
501
550
Chain 1
Chain 2
Chain N
Chain 1
Chain 2
Chain N
520
Transceiver
540
Transceiver
510
Controller

FIG. 6

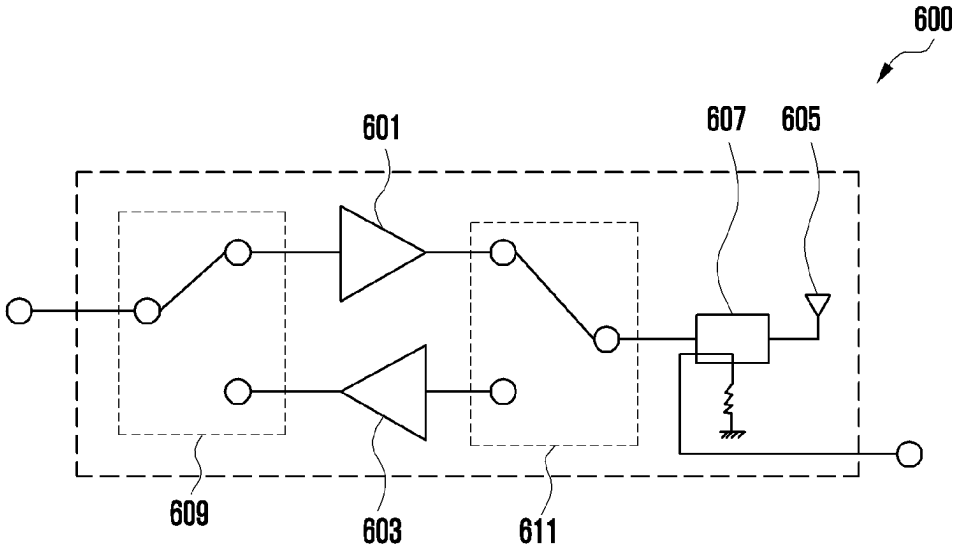

FIG. 7

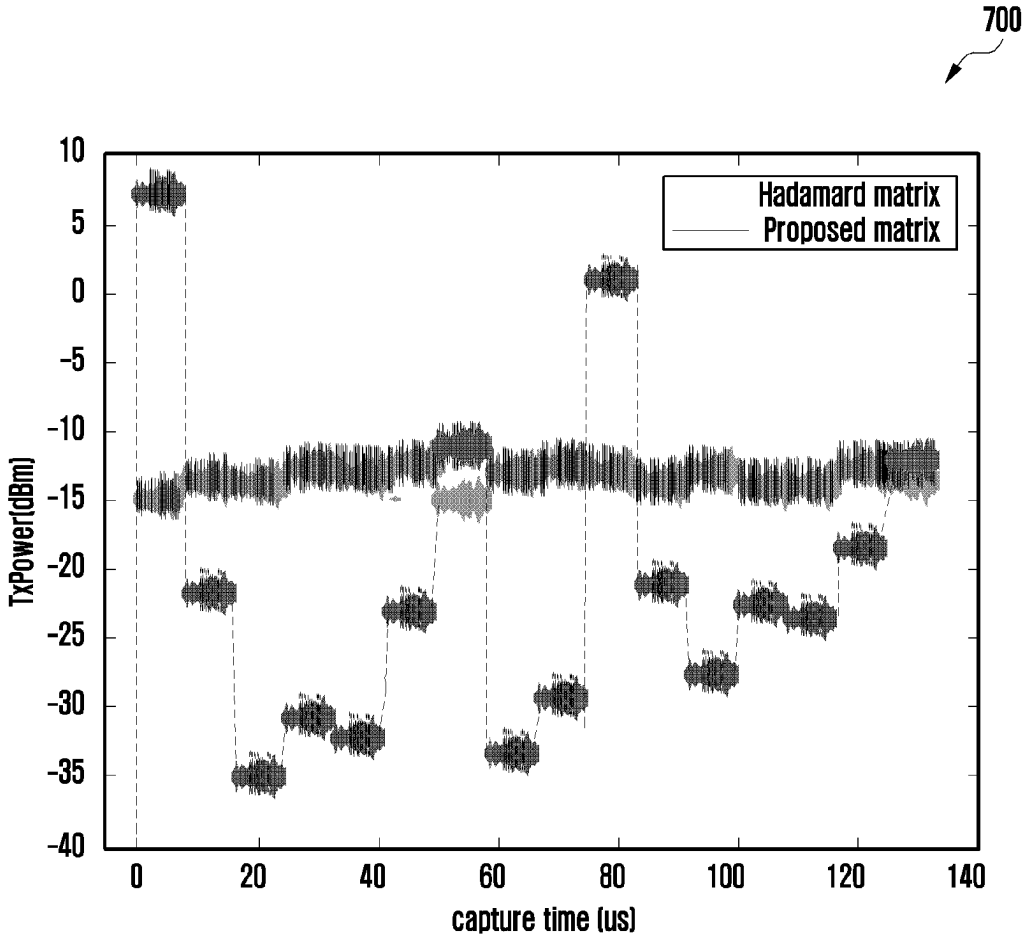
700
Hadamard matrix
Proposed matrix
TxPower(dBm)
capture time (us)
10
5
0
-5
-10
-15
-20
-25
-30
-35
-40
0
20
40
60
80
100
120
140

FIG. 8

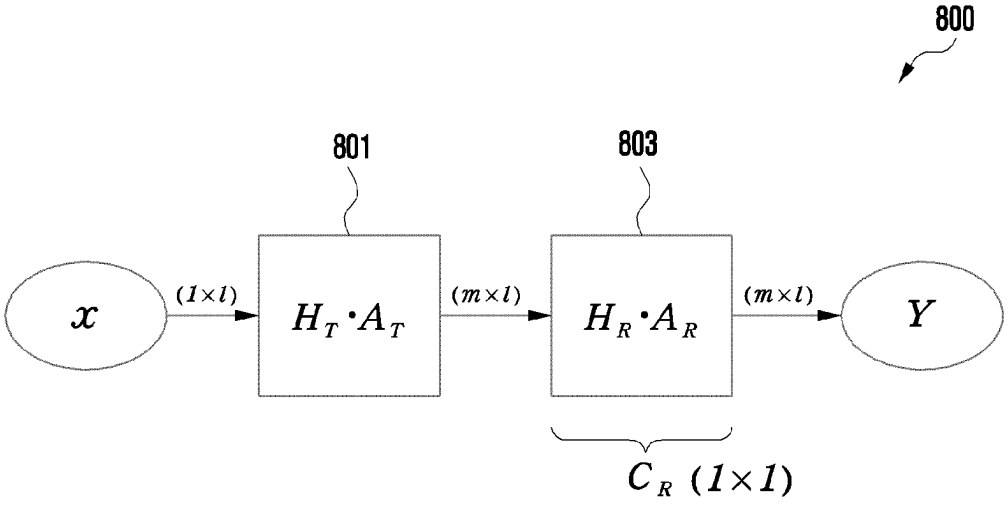

FIG. 9A

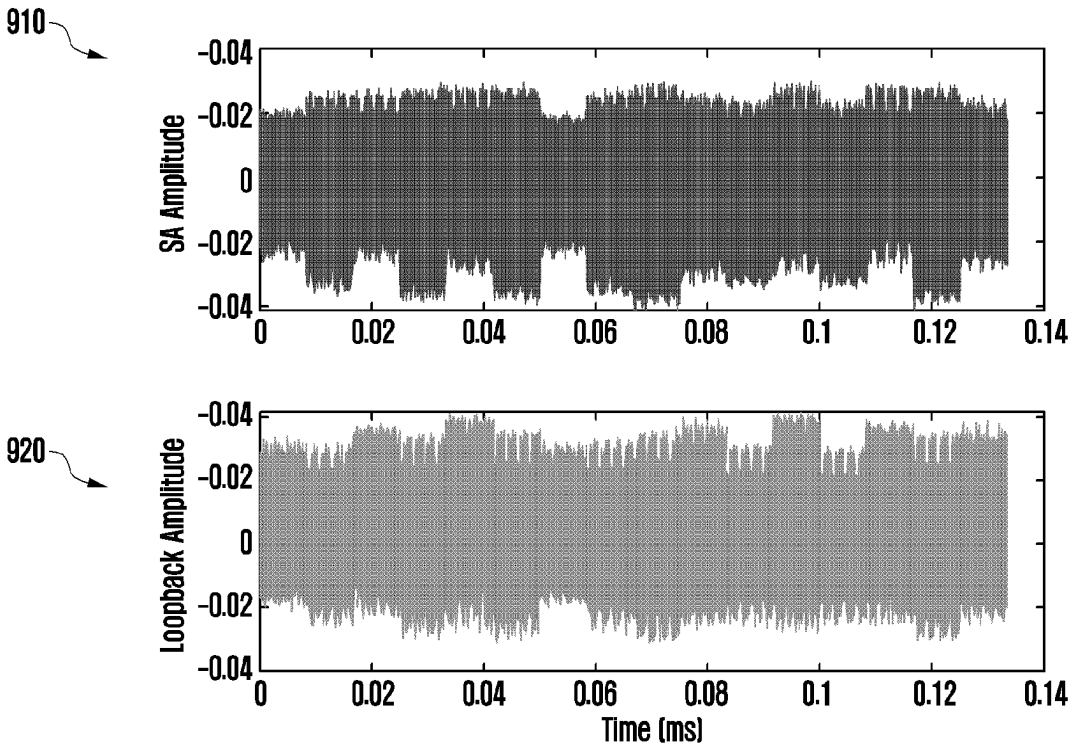
910
920
SA Amplitude
Loopback Amplitude
-0.04
-0.02
0
-0.02
-0.04
0
0.02
0.04
0.06
0.08
0.1
0.12
0.14
Time (ms)

FIG. 9B

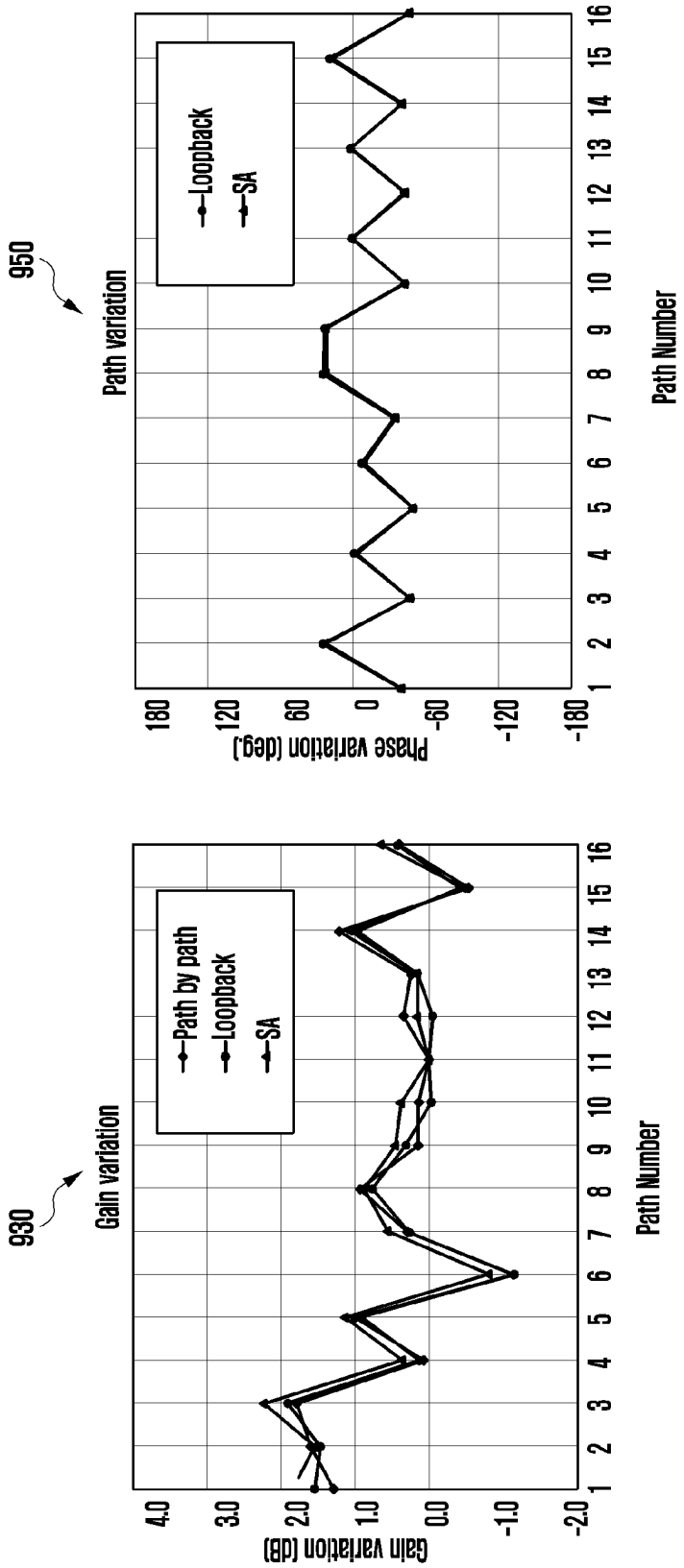
930
Gain variation
Path by path
Loopback
SA
Gain variation (dB)
4.0
3.0
2.0
1.0
0.0
-1.0
-2.0
1 2 3 4 5 6 7 8 9 10 11 12 13 14 15 16
Path Number
950
Path variation
Loopback
SA
Phase variation (deg.)
180
120
60
0
-60
-120
-180
1 2 3 4 5 6 7 8 9 10 11 12 13 14 15 16
Path Number

FIG. 10A

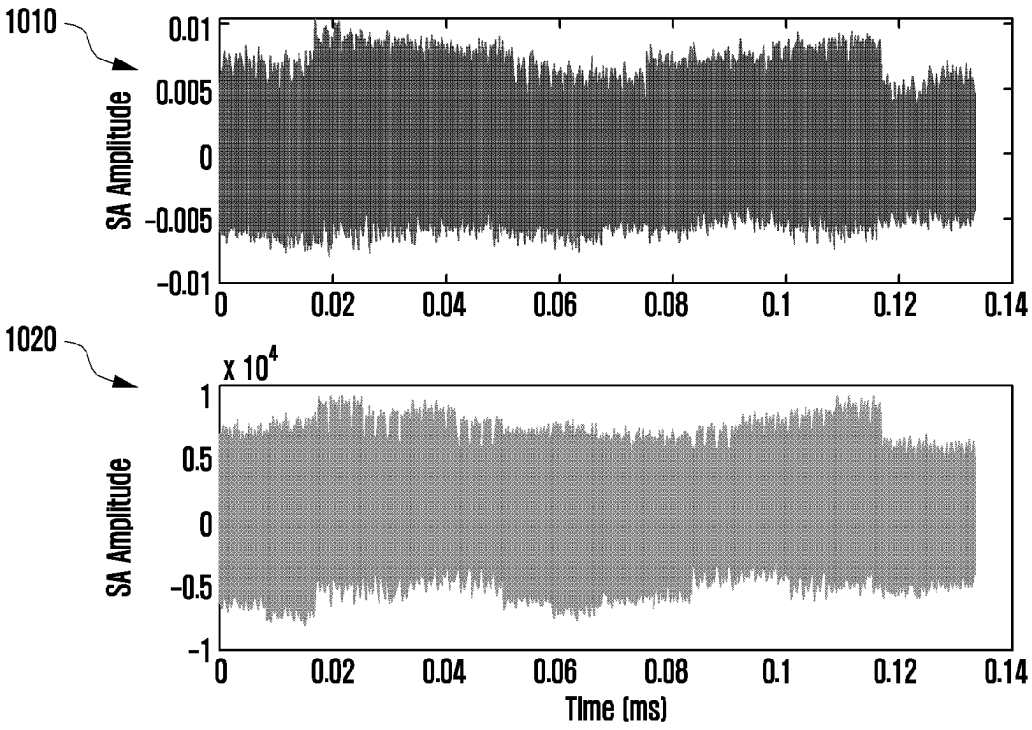
1010
SA Amplitude
0.01
0.005
0
-0.005
-0.01
0
0.02
0.04
0.06
0.08
0.1
0.12
0.14
1020
x 10^4
SA Amplitude
1
0.5
0
-0.5
-1
0
0.02
0.04
0.06
0.08
0.1
0.12
0.14
Time (ms)

FIG. 10B

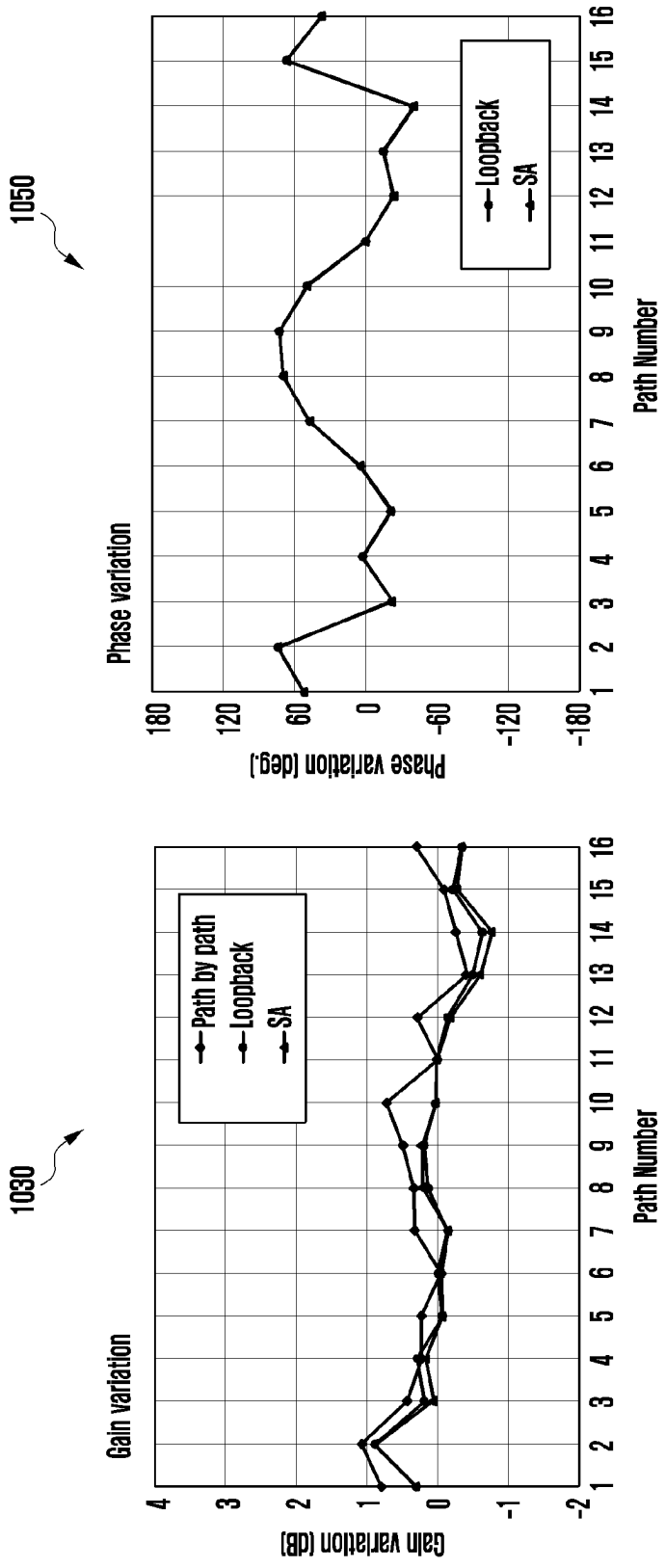
1050
Phase variation
Phase variation (deg.)
180
120
60
0
-60
-120
-180
1 2 3 4 5 6 7 8 9 10 11 12 13 14 15 16
Path Number
Loopback
SA
1030
Gain variation
Gain variation (dB)
4
3
2
1
0
-1
-2
1 2 3 4 5 6 7 8 9 10 11 12 13 14 15 16
Path Number
Path by path
Loopback
SA

FIG. 11

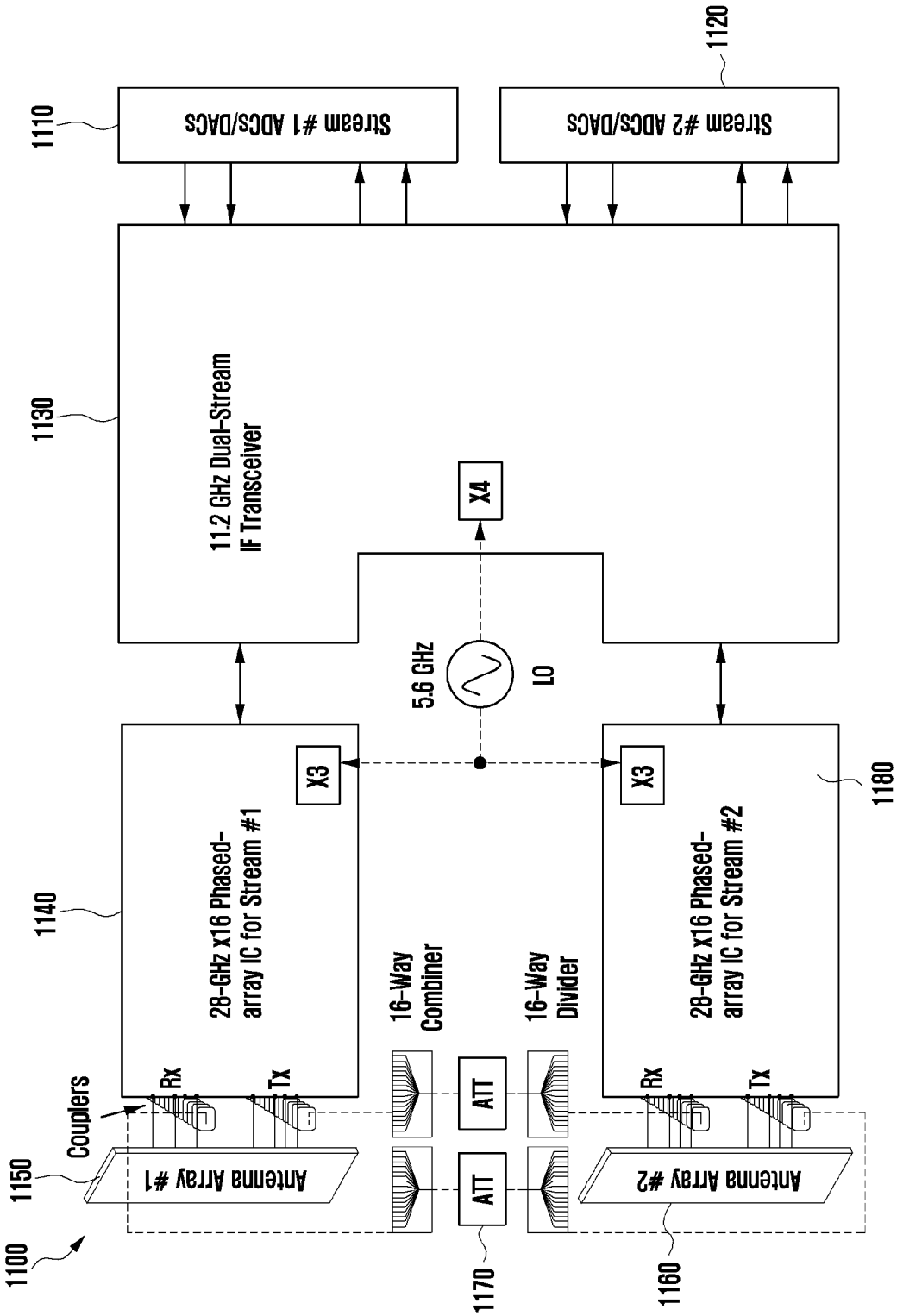
1120
1110
Stream #2 ADCs/DACs
Stream #1 ADCs/DACs
1130
11.2 GHz Dual-Stream IF Transceiver
X4
5.6 GHz
LO
X3
X3
1180
1140
28-GHz x16 Phased-array IC for Stream #1
28-GHz x16 Phased-array IC for Stream #2
16-Way Combiner
16-Way Divider
Couplers
Rx
Tx
Rx
Tx
ATT
ATT
1150
Antenna Array #1
Antenna Array #2
1100
1170
1160

FIG. 12

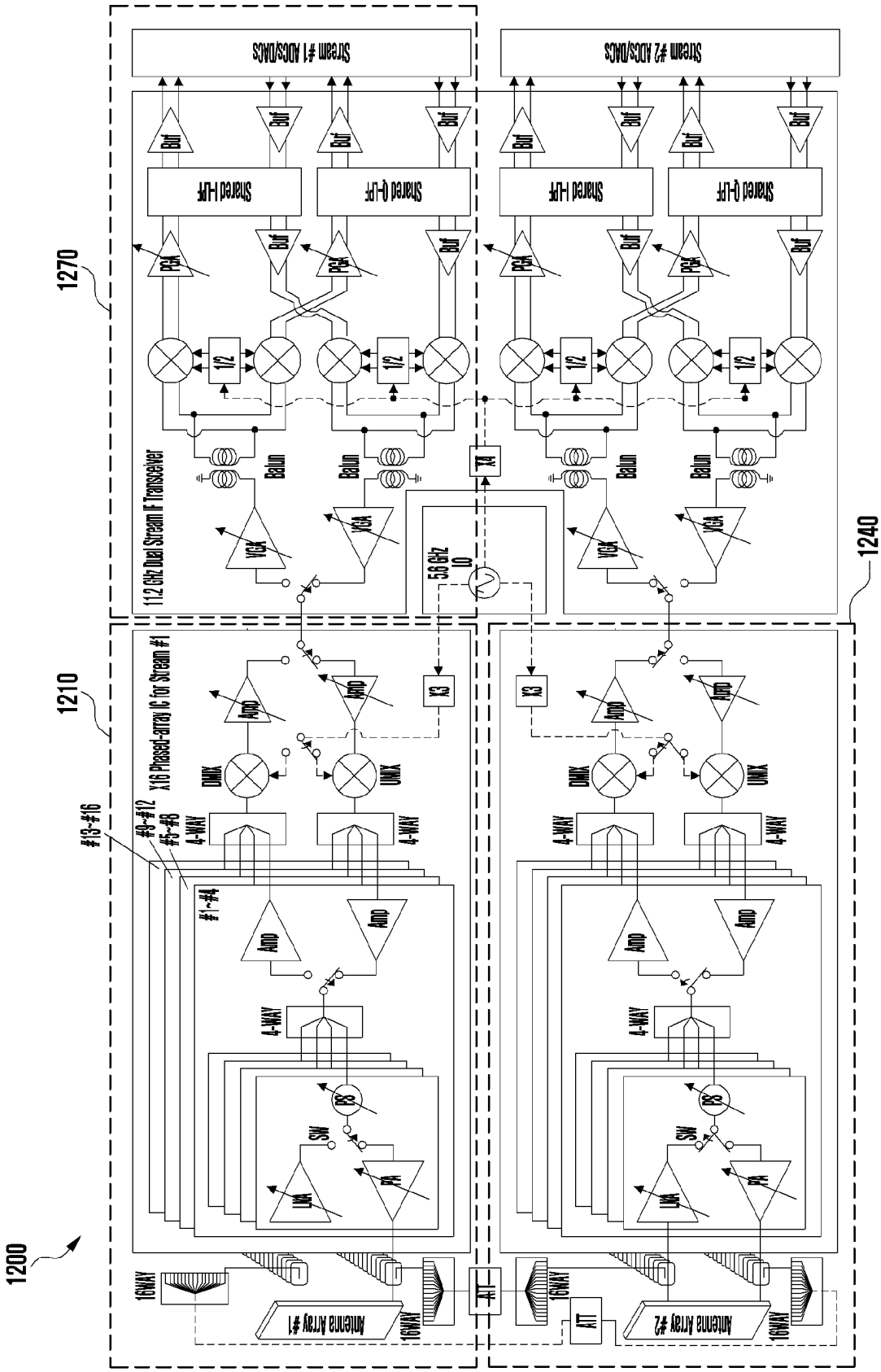
1200
1210
1240
1270
Stream #1 ADCs/DACs
Stream #2 ADCs/DACs
Shared I-LPF
Shared Q-LPF
Buf
PGA
1/2
Balun
VGA
X4
5.6 GHz LO
11.2 GHz Dual Stream IF Transceiver
X16 Phased-array IC for Stream #1
#13~#16
#9~#12
#5~#8
#1~#4
4-WAY
DMIX
UMIX
Amp
X3
PS
SW
LNA
PA
16WAY
ATT
Antenna Array #1
Antenna Array #2

FIG. 13A

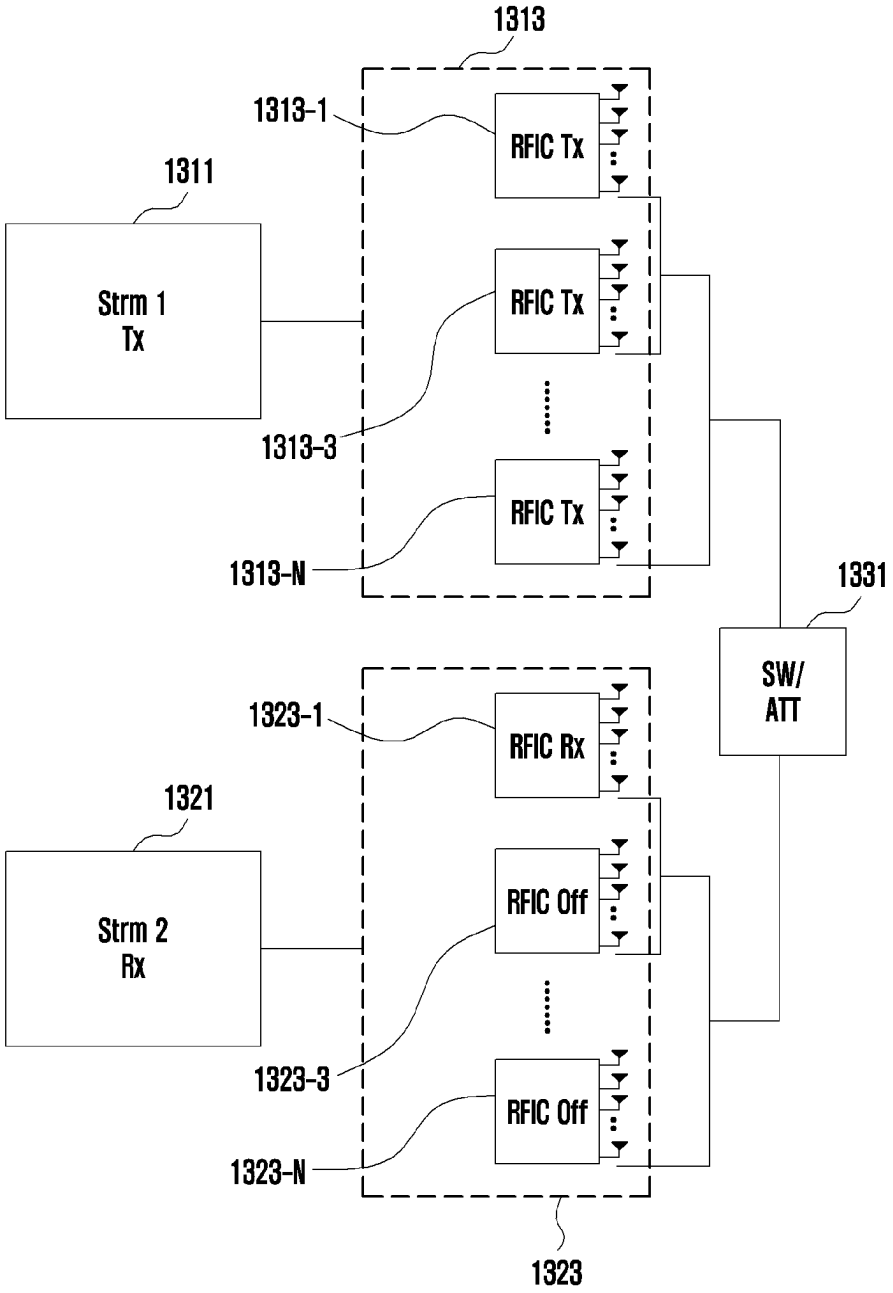
1313
1313-1
RFIC Tx
1311
Strm 1
Tx
RFIC Tx
1313-3
RFIC Tx
1313-N
1331
SW/
ATT
1323-1
RFIC Rx
1321
Strm 2
Rx
RFIC Off
1323-3
RFIC Off
1323-N
1323

FIG. 13B

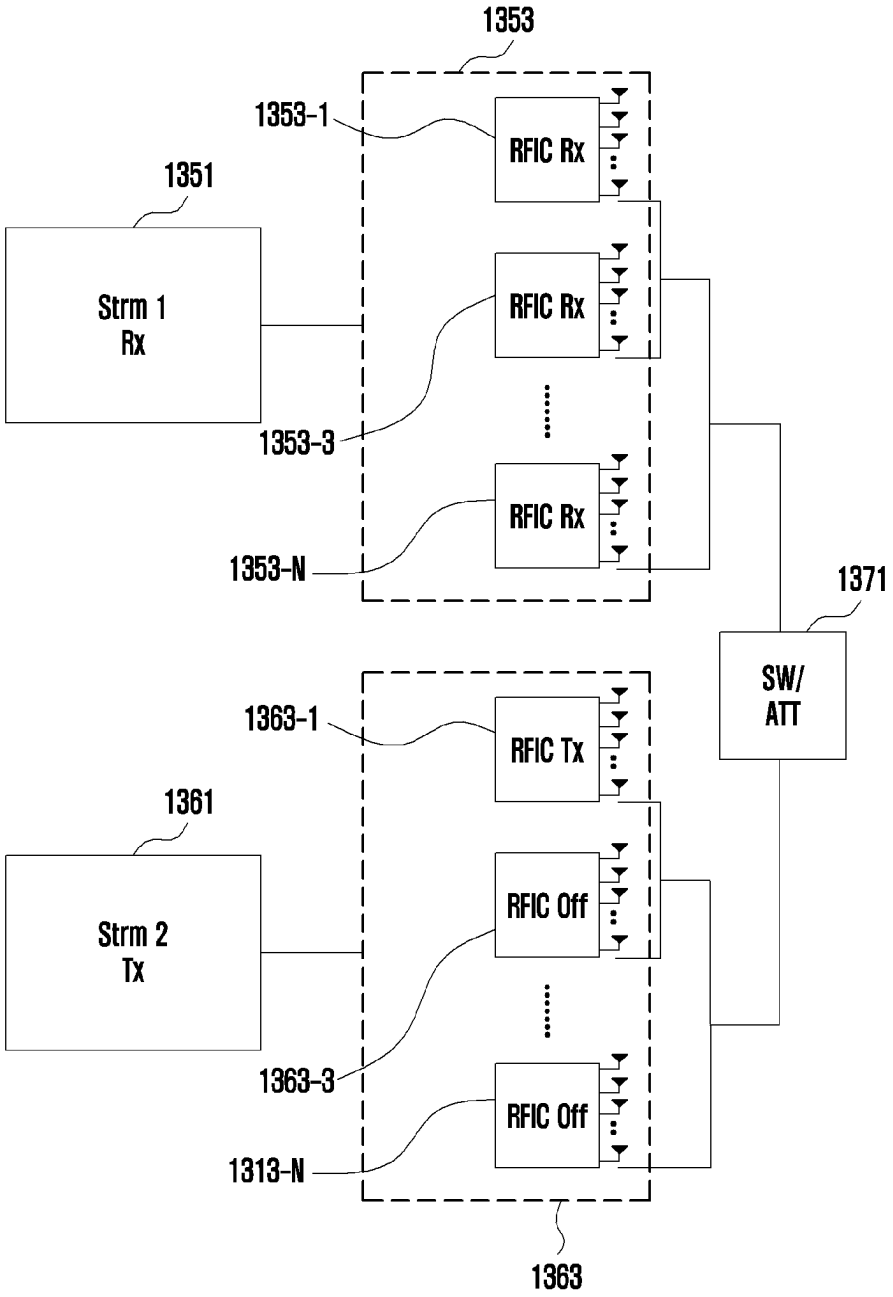
1353
1353-1
RFIC Rx
1351
Strm 1
Rx
RFIC Rx
1353-3
RFIC Rx
1353-N
1371
SW/
ATT
1363-1
RFIC Tx
1361
Strm 2
Tx
RFIC Off
1363-3
RFIC Off
1313-N
1363

FIG. 14A

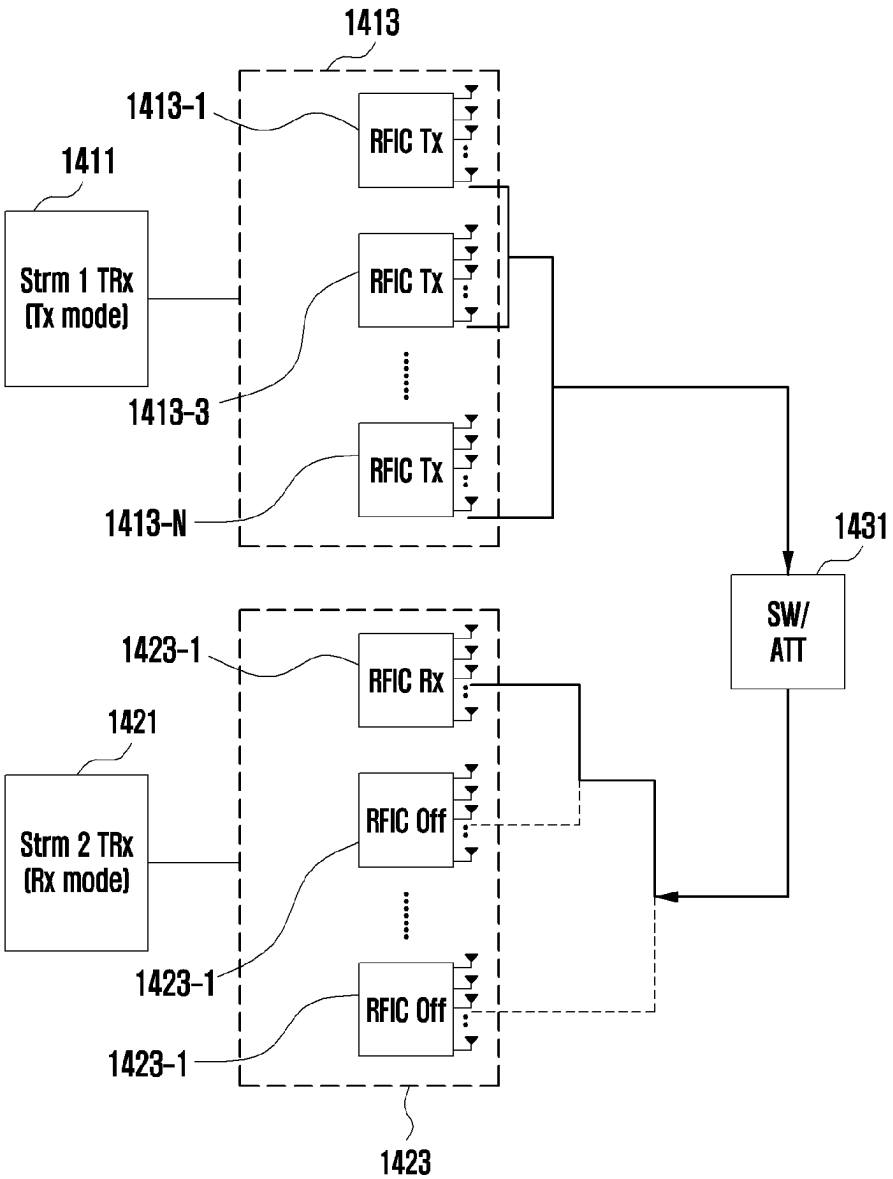
1413
1413-1
RFIC Tx
1411
Strm 1 TRx
(Tx mode)
RFIC Tx
1413-3
RFIC Tx
1413-N
1431
SW/
ATT
1423-1
RFIC Rx
1421
Strm 2 TRx
(Rx mode)
RFIC Off
1423-1
RFIC Off
1423-1
1423

FIG. 14B

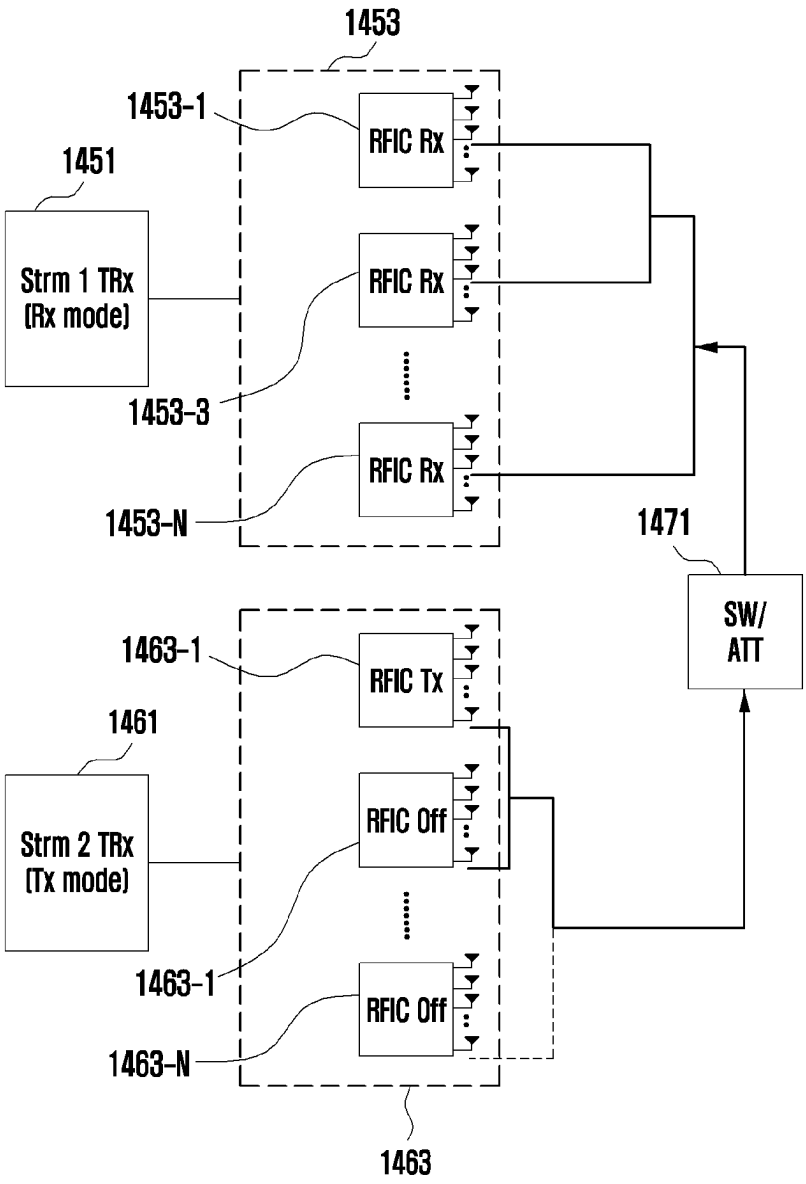
1453
1453-1
RFIC Rx
1451
Strm 1 TRx
(Rx mode)
RFIC Rx
1453-3
RFIC Rx
1453-N
1471
SW/
ATT
1463-1
RFIC Tx
1461
Strm 2 TRx
(Tx mode)
RFIC Off
1463-1
RFIC Off
1463-N
1463

FIG. 15

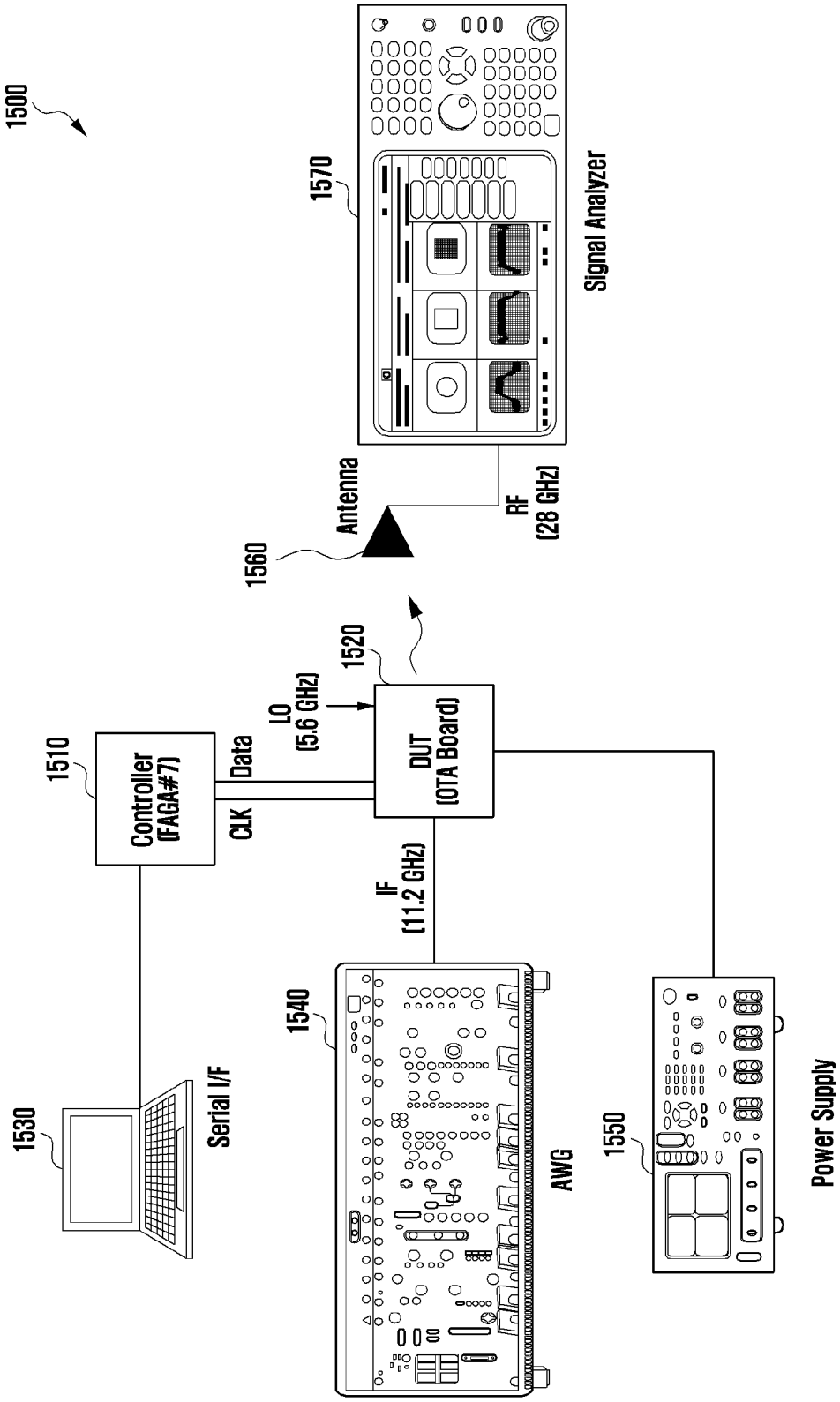
1500
1570
Signal Analyzer
Antenna
RF
(28 GHz)
1560
1520
LO
(5.6 GHz)
1510
Controller
(FAGA#7)
Data
CLK
DUT
(OTA Board)
IF
(11.2 GHz)
1540
AWG
1530
Serial I/F
1550
Power Supply

FIG. 16

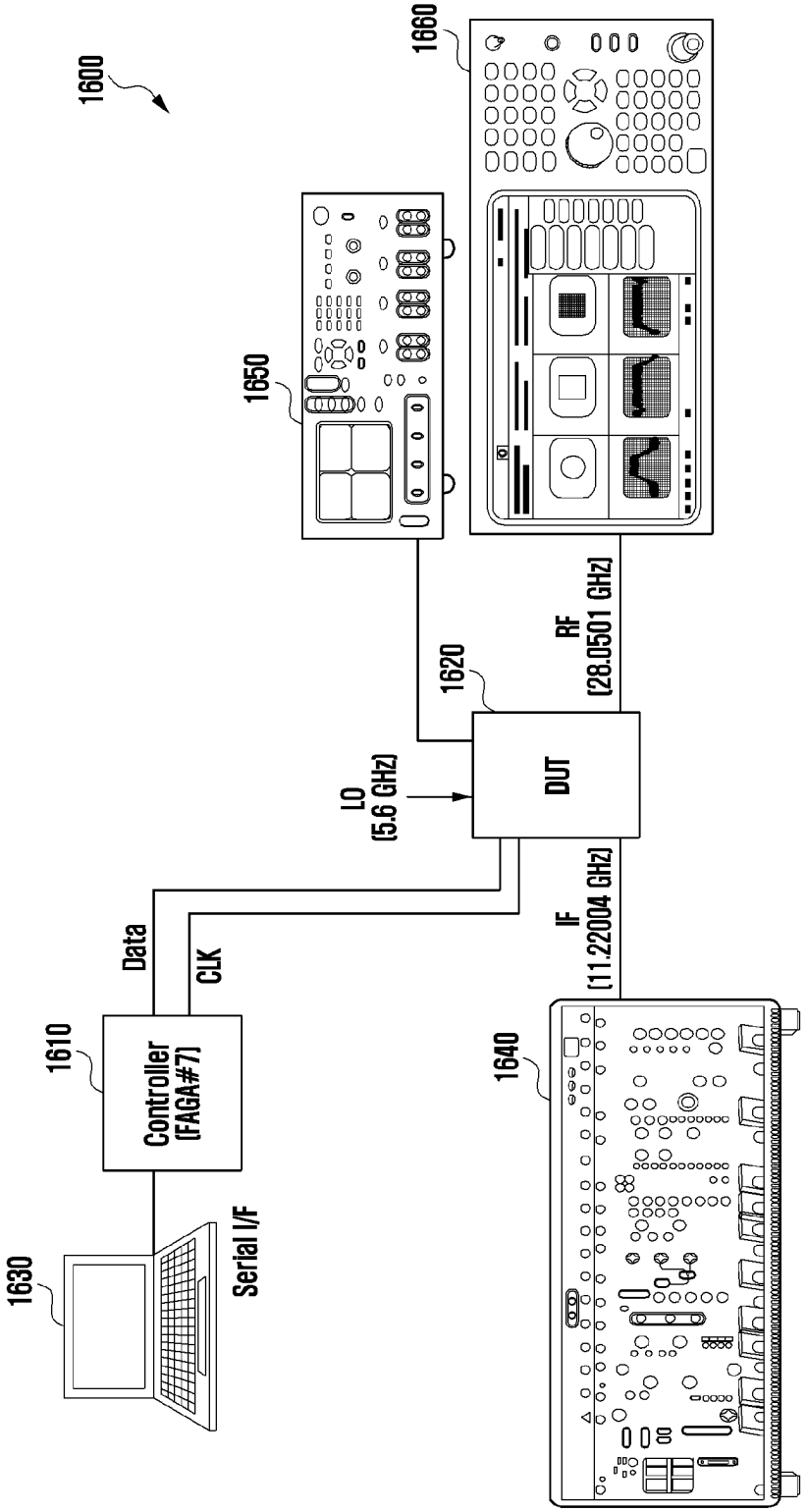
1600
1660
1650
RF
(28.0501 GHz)
1620
DUT
LO
(5.6 GHz)
IF
(11.22004 GHz)
Data
CLK
1610
Controller
(FAGA#7)
1640
1630
Serial I/F

FIG. 17

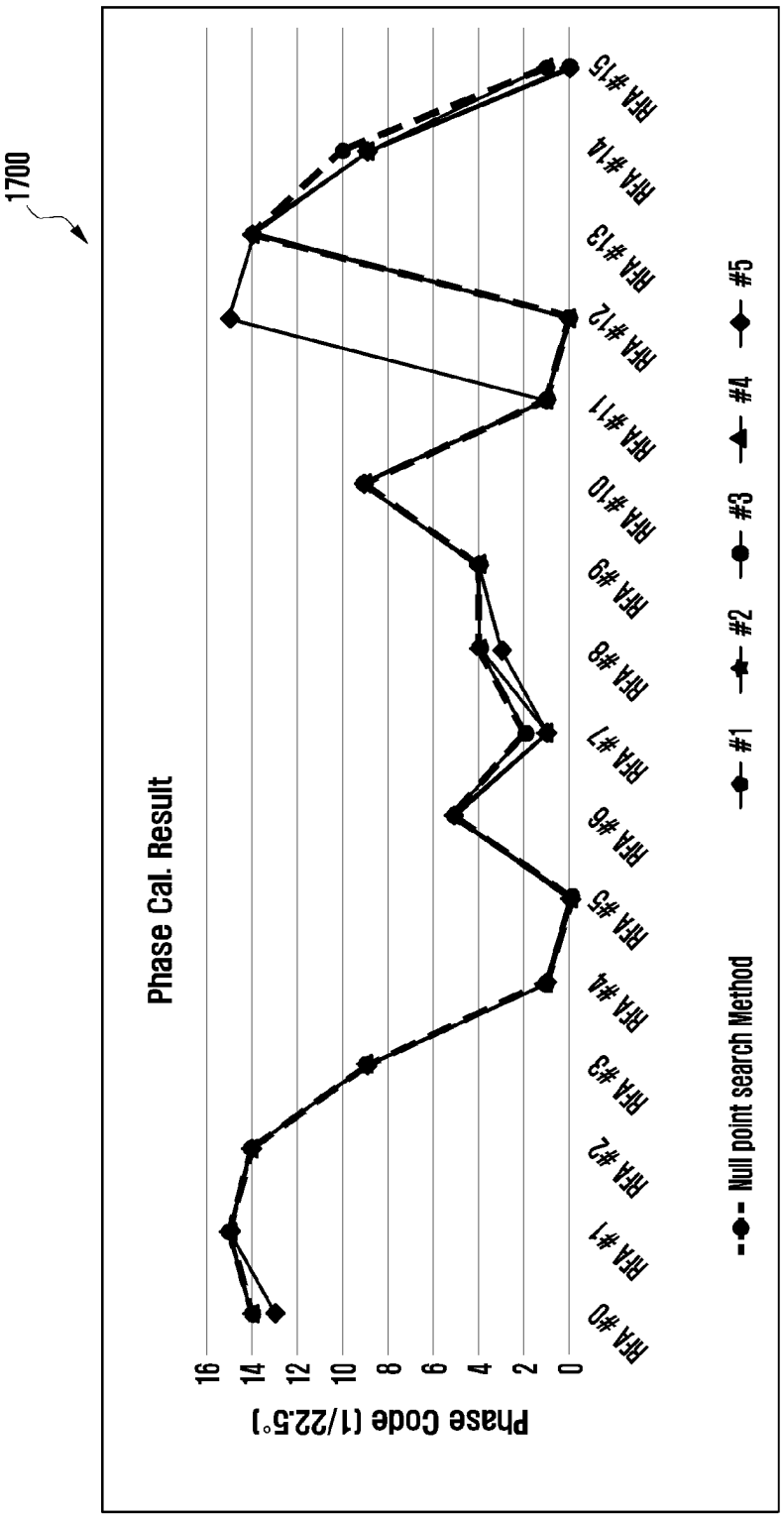
1700
Phase Cal. Result
Phase Code (1/22.5°)
16
14
12
10
8
6
4
2
0
RFA #0
RFA #1
RFA #2
RFA #3
RFA #4
RFA #5
RFA #6
RFA #7
RFA #8
RFA #9
RFA #10
RFA #11
RFA #12
RFA #13
RFA #14
RFA #15
Null point search Method
#1
#2
#3
#4
#5

FIG. 18

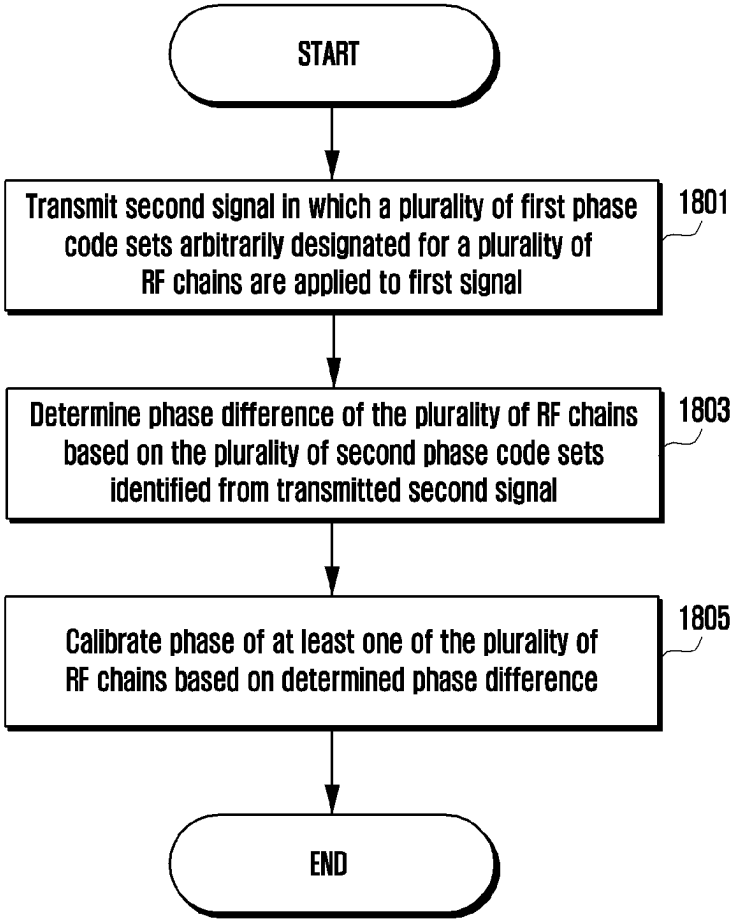
START
Transmit second signal in which a plurality of first phase code sets arbitrarily designated for a plurality of RF chains are applied to first signal
1801
Determine phase difference of the plurality of RF chains based on the plurality of second phase code sets identified from transmitted second signal
1803
Calibrate phase of at least one of the plurality of RF chains based on determined phase difference
1805
END

FIG. 19

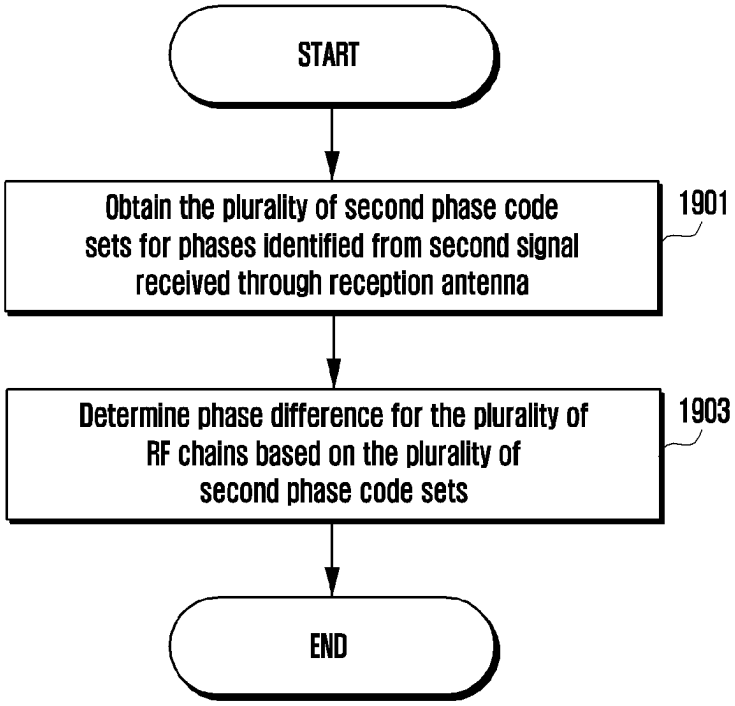
START
Obtain the plurality of second phase code sets for phases identified from second signal received through reception antenna
1901
Determine phase difference for the plurality of RF chains based on the plurality of second phase code sets
1903
END

FIG. 20

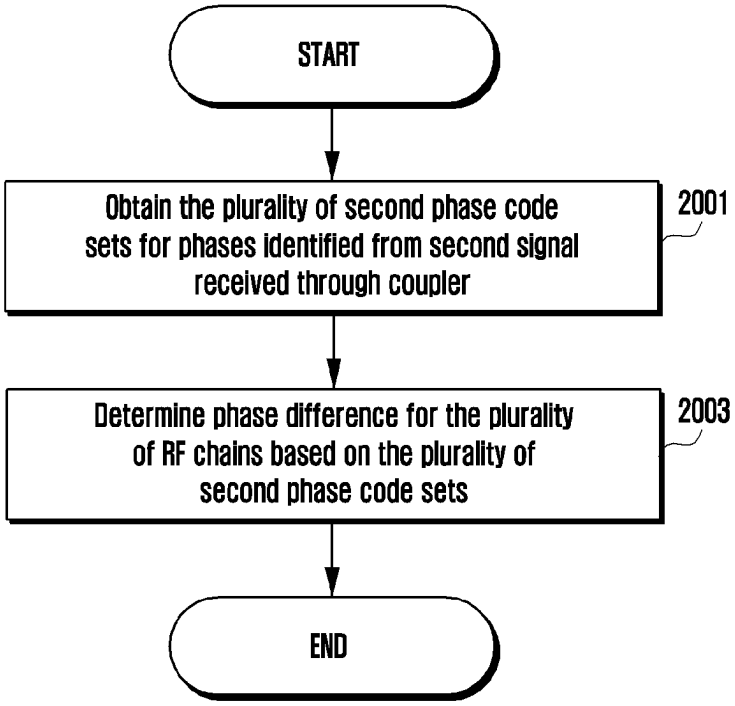
START
Obtain the plurality of second phase code sets for phases identified from second signal received through coupler
2001
Determine phase difference for the plurality of RF chains based on the plurality of second phase code sets
2003
END

FIG. 21A

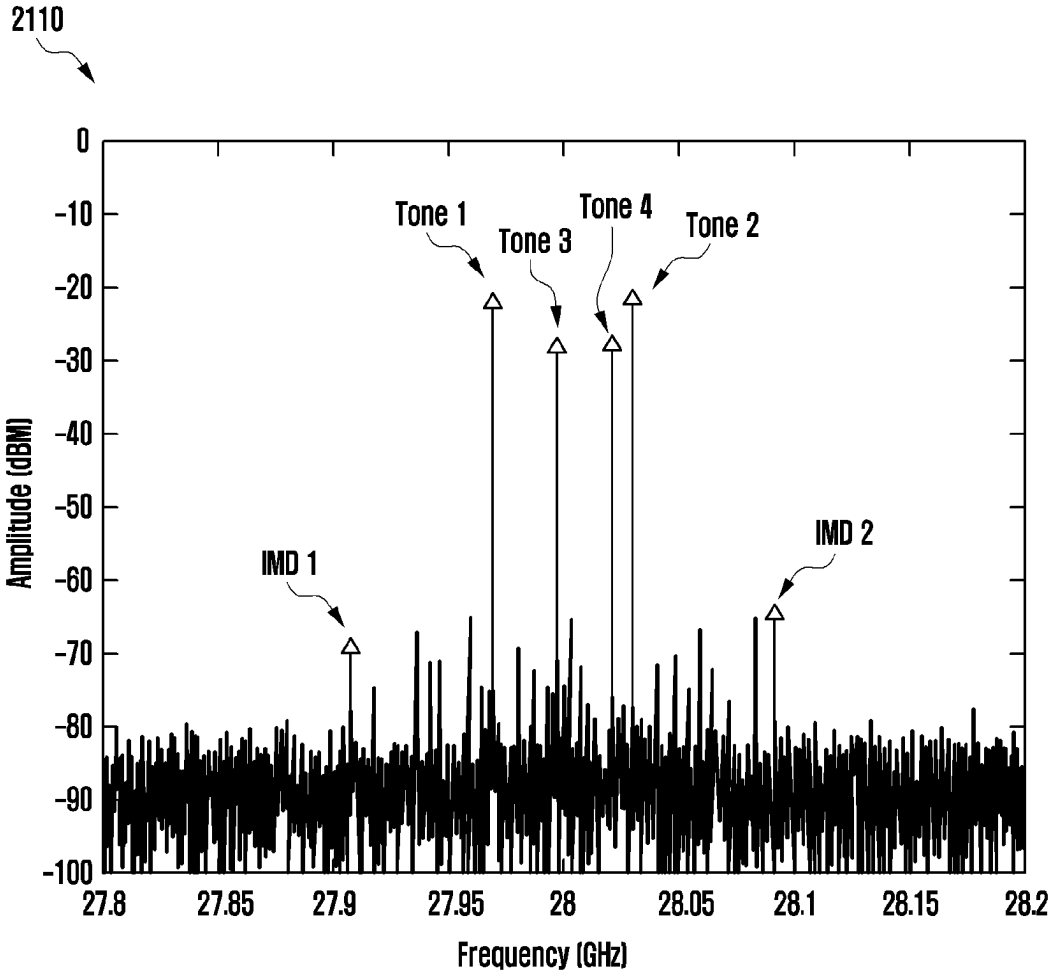
2110
0
-10
-20
-30
-40
-50
-60
-70
-80
-90
-100
Amplitude (dBM)
Tone 1
Tone 3
Tone 4
Tone 2
IMD 1
IMD 2
27.8
27.85
27.9
27.95
28
28.05
28.1
28.15
28.2
Frequency (GHz)

FIG. 21B

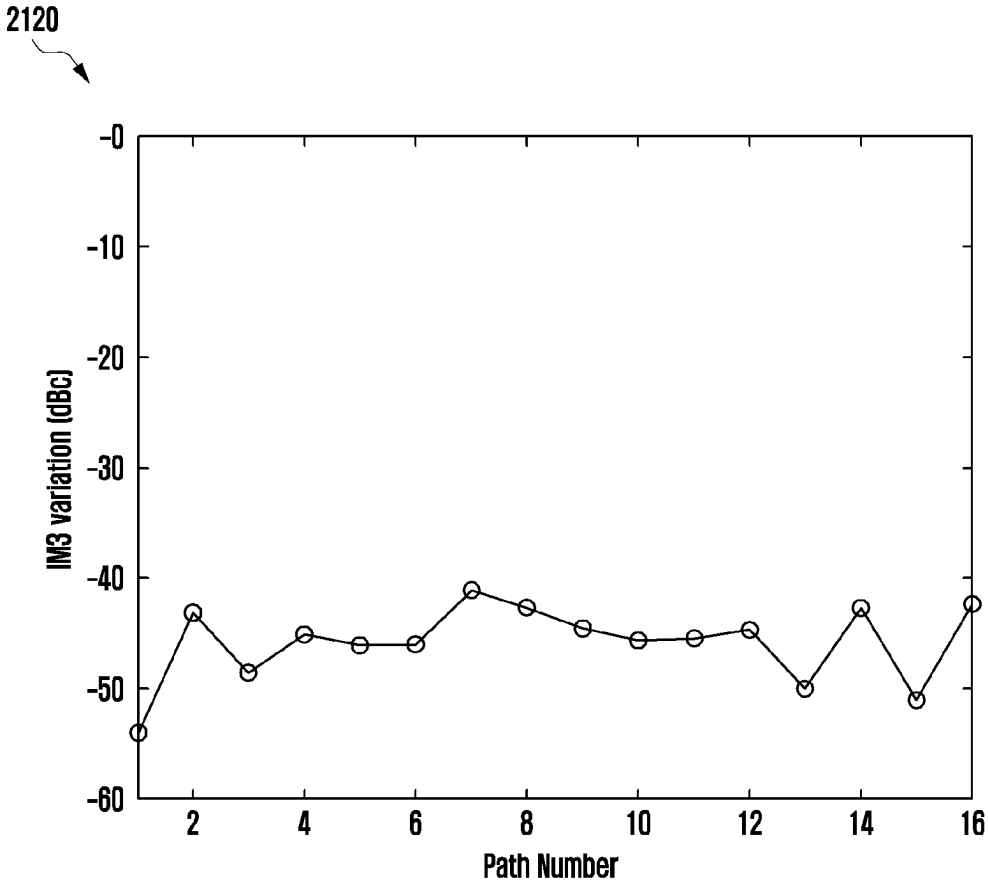
2120
-0
-10
-20
-30
-40
-50
-60
IM3 variation (dBc)
2
4
6
8
10
12
14
16
Path Number

FIG. 22

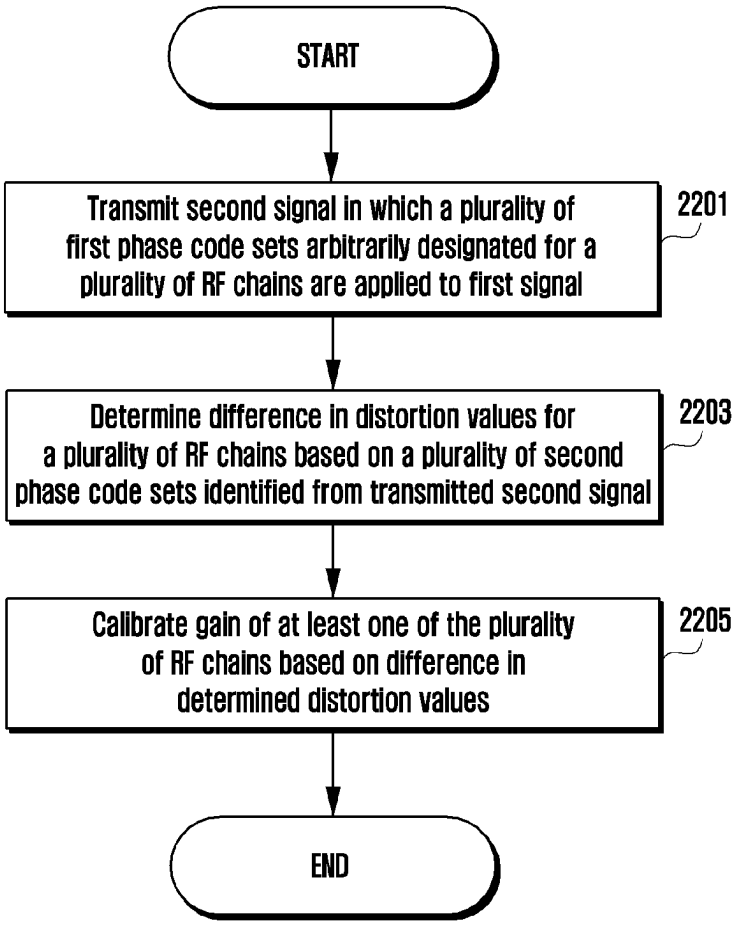
START
Transmit second signal in which a plurality of first phase code sets arbitrarily designated for a plurality of RF chains are applied to first signal
2201
Determine difference in distortion values for a plurality of RF chains based on a plurality of second phase code sets identified from transmitted second signal
2203
Calibrate gain of at least one of the plurality of RF chains based on difference in determined distortion values
2205
END

METHOD AND APPARATUS FOR CALIBRATING PHASED ARRAY ANTENNA

CROSS-REFERENCE TO RELATED APPLICATIONS

This application is a 371 National Stage of International Application No. PCT/KR2021/000239, filed Jan. 8, 2021, which claims priority to Korean Patent Application No. 10-2020-0003036, filed Jan. 9, 2020, the disclosures of which are herein incorporated by reference in their entirety.

BACKGROUND

1. Field

The disclosure relates to signal control in a mobile communication system, and more particularly, to a method and device for calibration of a phased array antenna.

2. Description of Related Art

In order to satisfy increases in demand for wireless data traffic now that a 4G communication system is commercially available, efforts are being made to develop an enhanced 5G communication system or a pre-5G communication system. Therefore, a 5G communication system or a pre-5G communication system is referred to as a beyond 4G network communication system or a post LTE system. In order to achieve a high data transmission rate, consideration is being given to implementing the 5G communication system in a mmWave band (e.g., 60 GHz band). In order to mitigate any route loss of electronic waves in a mmWave band and to increase transmission distances of electronic waves, the technologies of beamforming, massive multiple input and multiple output (MIMO), full dimensional MIMO (FD-MIMO), array antenna, analog beamforming, and large scale antenna are being discussed for the 5G communication system. Further, in order to enhance networks in the 5G communication system, the technologies of an innovative small cell, advanced small cell, cloud radio access network (cloud RAN), ultra-dense network, device to device communication (D2D), wireless backhaul, moving network, cooperative communication, coordinated multi-points (CoMP), and interference cancellation are being developed. Further, hybrid frequency shift keying and quadrature amplitude modulation (FQAM) and sliding window superposition coding (SWSC), which are advanced coding modulation (ACM) methods; and filter bank multi carrier (FBMC), non-orthogonal multiple access (NOMA), and sparse code multiple access (SCMA), which are advanced access technologies, are being developed for the 5G system.

Innovation of Internet from a human-centered connection network in which a human generates and consumes information to an Internet of Things (IoT) network that gives and receives and processes information to and from distributed constituent elements such as things has occurred. Internet of Everything (IoE) technology in which big data processing technology through connection to a cloud server is combined with IoT technology has been appeared. In order to implement the IoT, technology elements such as sensing technology, wired and wireless communication and network infrastructure, service interface technology, and security technology are required; thus, nowadays, research is being carried out on technology of a sensor network, machine to machine (M2M), and machine type communication (MTC) for connection between things. In an IoT environment, an intelligent Internet technology (IT) service that collects and analyzes data generated in connected things to provide a new value to human lives may be provided. The IoT may be applied to the field of a smart home, smart building, smart city, smart car or connected car, smart grid, health care, smart home appliances, and high-tech medical service through fusion and complex connections between existing information technology (IT) and various industries.

Accordingly, various attempts for applying a 5G communication system to an IoT network are being made. For example, 5G communication technologies such as a sensor network, machine to machine (M2M), and machine type communication (MTC) have been implemented by the technique of beamforming, MIMO, and array antenna. Application of a cloud RAN as the foregoing big data processing technology may be an example of convergence of 5G technology and IoT technology.

SUMMARY

The disclosure provides a method and device for calibration of a phased array antenna based on the above description.

The disclosure also provides a method and device for calibrating a plurality of radio frequency (RF) chains included in a phased array antenna.

The disclosure also provides a method and device for reducing the time required to calibrate an RF chain of a phased array antenna.

The disclosure also provides a method and device for calibrating each RF chain based on a relative phase value difference of each chain in a plurality of RF chains.

The disclosure also provides a method and device for calibrating a plurality of RF chains based on a reference signal and a known phase value.

The disclosure discloses a method for calibration of a phased array antenna. The method for calibrating a phased array antenna includes transmitting a second signal in which a plurality of first phase code sets including a phase arbitrarily designated for each of a plurality of RF chains are applied to a first signal transmitted from the plurality of RF chains; obtaining the second signal; determining a phase difference of each of the plurality of RF chains based on a plurality of second phase code sets measured corresponding to the plurality of first phase code sets from the obtained second signal; and calibrating a phase for at least some of the plurality of RF chains based on the phase difference of each of the plurality of RF chains.

The number of the plurality of first phase code sets may be generated by the number of the plurality of RF chains.

The second signal may include a plurality of third signals generated by applying each of the plurality of first phase code sets to the first signal.

Obtaining the second signal may include receiving the second signal through a coupler connected to the plurality of RF chains.

Obtaining the second signal may include receiving the second signal through an antenna in a reception mode.

Determining a phase difference of each of the plurality of RF chains based on a plurality of second phase code sets measured corresponding to the plurality of first phase code sets from the second signal may include determining a phase difference of each of the plurality of RF chains based on linear equations generated by the number of the plurality of first phase code sets or the number of the plurality of second phase code sets.

Calibrating a phase for at least some of the plurality of RF chains based on the phase difference of each of the plurality of RF chains may include determining a phase control value for each of the plurality of RF chains using a result of applying a square matrix in which the sum of each row converges to one constant to the phase difference; and applying the determined phase control value to each of the plurality of RF chains.

A square matrix in which the sum of each row converges to one constant may be determined based on the following equation,

[Equation]

$$H_{P1} = 1$$

$$H_{p2n} = \begin{bmatrix} H_{Pn} & H_{Pn} \cdot e^{j\frac{2}{\pi}} \\ H_{Pn} \cdot e^{j\frac{2}{\pi}} & H_{Pn} \end{bmatrix}$$

where 2n may be determined by the number of RF chains included in the phased array antenna.

Calibrating a phase for at least some of the plurality of RF chains based on the phase difference of each of the plurality of RF chains may include determining a phase control value in which a gain of the phased array antenna is maximized for each of the plurality of RF chains; and applying the determined phase control value to each of the plurality of RF chains.

The disclosure discloses a device for calibration of a phased array antenna. The device for calibrating a phased array antenna includes a plurality of RF chains constituting the phased array antenna and transmitting signals; and a controller configured to generate a second signal in which a plurality of first phase code sets including a phase arbitrarily designated for each of the plurality of RF chains are applied to a first signal transmitted from the plurality of RF chains, to process to transmit the generated second signal through the plurality of RF chains, to obtain the transmitted second signal, to determine a phase difference of each of the plurality of RF chains based on a plurality of second phase code sets measured corresponding to the plurality of first phase code sets from the obtained second signal, and to calibrate a phase for at least some of the plurality of RF chains based on the phase difference of each of the plurality of RF chains.

The controller may be configured to generate the number of the plurality of first phase code sets by the number of the plurality of RF chains.

The controller may be configured to generate the second signal by including a plurality of third signals generated by applying each of the plurality of first phase code sets to the first signal.

The controller may be configured to receive the second signal through a coupler connected to the plurality of RF chains.

The controller may be configured to receive the second signal through an antenna in a reception mode.

The controller may be configured to determine a phase difference of each of the plurality of RF chains based on linear equations generated by the number of the plurality of first phase code sets or the number of the plurality of second phase code sets.

The controller may be configured to determine a phase control value for each of the plurality of RF chains using a result of applying a square matrix in which the sum of each row converges to a constant to the phase difference, and to apply the determined phase control value to each of the plurality of RF chains.

A square matrix in which the sum of each row converges to one constant may be determined based on the following equation,

[Equation]

$$H_{P1} = 1$$

$$H_{p2n} = \begin{bmatrix} H_{Pn} & H_{Pn} \cdot e^{j\frac{2}{\pi}} \\ H_{Pn} \cdot e^{j\frac{2}{\pi}} & H_{Pn} \end{bmatrix}$$

where 2n may be determined by the number of RF chains included in the phased array antenna.

The controller may be configured to determine a phase control value in which a gain of the phased array antenna is maximized for each of the plurality of RF chains, and to apply the determined phase control value to each of the plurality of RF chains.

The disclosure discloses a method for calibration of a phased array antenna. The method includes transmitting a second signal in which a plurality of first phase code sets including a phase arbitrarily designated for each of a plurality of RF chains are applied to a first signal transmitted from the plurality of RF chains; obtaining the second signal; determining a distortion difference of each of the plurality of RF chains based on a plurality of second phase code sets measured corresponding to the plurality of first phase code sets from the obtained second signal; and calibrating a gain of at least some of the plurality of RF chains based on the distortion difference of each of the plurality of RF chains.

In a method and device according to various embodiments of the disclosure, by simultaneously calibrating a plurality of radio frequency (RF) chains of a phased array antenna, it is possible to reduce the time required for calibration, and to contribute to mass production of the phased array antenna.

BRIEF DESCRIPTION OF THE DRAWINGS

FIG. **1** is a block diagram illustrating a phased array antenna according to an embodiment of the disclosure.

FIGS. **2**A and **2**B are block diagrams illustrating a constitution of a calibration device according to an embodiment of the disclosure.

FIG. **3** is a graph illustrating a constitution example of a phase configuration and a test signal of a plurality of RF chains in a calibration device according to an embodiment of the disclosure.

FIG. **4** is a graph illustrating power of a test signal received by a calibration device according to an embodiment of the disclosure.

FIG. **5** is a block diagram illustrating a constitution of a calibration device according to an embodiment of the disclosure.

FIG. **6** is a circuit diagram illustrating a constitution of a coupler in a calibration device according to an embodiment of the disclosure.

FIG. **7** is a graph illustrating a result of a test signal when a Hadamard matrix or a proposed matrix is applied in relation to reduction of inaccuracy of a solution for calibration according to an embodiment of the disclosure.

FIG. **8** is a block diagram illustrating a signal processing flow in the calibration device according to an embodiment of the disclosure.

FIGS. **9**A and **9**B are graphs illustrating a calibration result using a measuring instrument and a calibration result using a loopback signal in a transmission mode of a calibration device according to an embodiment of the disclosure.

FIGS. **10**A and **10**B are graphs illustrating a calibration result using a measuring instrument and a calibration result using a loopback signal in a reception mode of a calibration device according to an embodiment of the disclosure.

FIG. **11** is a block diagram illustrating a calibration device using a loopback signal according to an embodiment of the disclosure.

FIG. **12** is a block diagram illustrating a detailed configuration of a calibration device using a loopback signal according to an embodiment of the disclosure.

FIGS. **13**A and **13**B are block diagrams illustrating a constitution of a calibration device using a loopback signal according to an embodiment of the disclosure.

FIGS. **14**A and **14**B are block diagrams illustrating a constitution of a calibration device using a loopback signal according to an embodiment of the disclosure.

FIGS. **15** and **16** are diagrams illustrating a constitution of a device for measuring a calibration device according to an embodiment of the disclosure.

FIG. **17** is a graph illustrating a measurement result of a calibration device according to an embodiment of the disclosure.

FIG. **18** is a flowchart illustrating an operation of a calibration device according to an embodiment of the disclosure.

FIG. **19** illustrates a partial operation flow of a calibration device according to an embodiment of the disclosure.

FIG. **20** illustrates a partial operation flow of a calibration device according to an embodiment of the disclosure.

FIGS. **21**A and **21**B are graphs illustrating a calibration result using a measuring instrument and a calibration result using a loopback signal in a transmission mode of a calibration device according to an embodiment of the disclosure.

FIG. **22** is a flowchart illustrating an operation of a calibration device according to an embodiment of the disclosure.

DETAILED DESCRIPTION

In describing embodiments of the disclosure, descriptions of technical contents that are well known in the technical field to which the disclosure pertains and that are not directly related to the disclosure will be omitted. This is to more clearly convey the gist of the disclosure without obscuring the gist of the disclosure by omitting unnecessary description.

For the same reason, some components are exaggerated, omitted, or schematically illustrated in the accompanying drawings. Further, the size of each component does not fully reflect the actual size. In each drawing, the same reference numerals are given to the same or corresponding components.

Advantages and features of the disclosure, and a method of achieving them will become apparent with reference to the embodiments described below in detail in conjunction with the accompanying drawings. However, the disclosure is not limited to the embodiments disclosed below, but may be implemented in various different forms, and only these embodiments enable the disclosure to be complete, and are provided to fully inform the scope of the disclosure to those of ordinary skill in the art to which the disclosure pertains, and the disclosure is only defined by the scope of the claims. Like reference numerals refer to like components throughout the specification.

In this case, it will be understood that each block of flowcharts and combinations of the flowcharts may be performed by computer program instructions. Because these computer program instructions may be mounted in a processor of a general purpose computer, special purpose computer, or other programmable data processing equipment, the instructions performed by a processor of a computer or other programmable data processing equipment generate a means that performs functions described in the flowchart block(s). Because these computer program instructions may be stored in a computer usable or computer readable memory that may direct a computer or other programmable data processing equipment in order to implement a function in a particular manner, the instructions stored in the computer usable or computer readable memory may produce a production article containing instruction means for performing the function described in the flowchart block(s). Because the computer program instructions may be mounted on a computer or other programmable data processing equipment, a series of operational steps are performed on the computer or other programmable data processing equipment to generate a computer-executed process; thus, instructions for performing a computer or other programmable data processing equipment may provide steps for performing functions described in the flowchart block(s).

Further, each block may represent a module, a segment, or a portion of a code including one or more executable instructions for executing specified logical function(s). Further, it should be noted that in some alternative implementations, functions recited in the blocks may occur out of order. For example, two blocks illustrated one after another may in fact be performed substantially simultaneously, or the blocks may be sometimes performed in the reverse order according to the corresponding function.

In this case, the term '-unit' used in this embodiment means software or hardware components such as FPGA or ASIC, and '-unit' performs certain roles. However, '-unit' is not limited to software or hardware. '-unit' may be configured to reside in an addressable storage medium or may be configured to reproduce one or more processors. Therefore, as an example, '-unit' includes components such as software components, object-oriented software components, class components, and task components, processes, functions, properties, procedures, subroutines, segments of program code, drivers, firmware, microcode, circuit, data, databases, data structures, tables, arrays, and variables. Functions provided in the components and '-units' may be combined into a smaller number of components and '-units' or may be further separated into additional components and '-units'. Further, components and '-units' may be implemented to reproduce one or more CPUs in a device or secure multimedia card. Further, in an embodiment, '-unit' may include one or more processors.

Hereinafter, for convenience of description, the disclosure uses terms and names defined in standards for 5G, new radio (NR), and long term evolution (LTE) systems. However, the disclosure is not limited by the terms and names, and may be equally applied to systems conforming to other standards.

Terms indicating signals used in the following description, terms indicating components of a device, and the like are exemplified for convenience of description. Accordingly, the disclosure is not limited to the terms described below, and other terms having equivalent technical meanings may be used.

Hereinafter, the disclosure relates to a device and method for calibrating a phased array antenna. Specifically, the disclosure describes technology for faster calibrating a target RF chain using a phase difference between a phase of a reference signal transmitted from a reference radio frequency (RF) chain and a phase of a signal transmitted from the target RF chain.

Spatial multiplexing in wireless communication is based on multiple-input and multiple-output (MIMO) technology in which multiple data streams are simultaneously transmitted from multiple antennas using the same time/same frequency resource. A 5G network is introducing new MIMO technology called massive MIMO (mMIMO) that enables beamforming of each data stream using a phased array antenna in a millimeter-wave (mmWave) band.

For example, a short wavelength of mmWave may allocate a large number of antenna elements in a small area, and a phased array antenna of mMIMO may form a very narrow range of directional beams that focus on specific user devices radially aligned at a specific antenna element.

A beam direction may be adjusted in real time by electrically changing a phase of the phased array antenna, and as a result, beamforming may improve spectral efficiency per cell, reduce interference to other users, and improve a signal quality in cell energy.

Because short wavelengths are very sensitive to phase offsets due to unequal line lengths, random delay deviations in components, or imbalances due to production asymmetry, a phased array system including a phased array antenna may require calibration of the phased array antenna for obtaining an optimal array performance.

Accordingly, there is a need for a method and device capable of improving a performance of a phased array antenna while minimizing a production cost without degrading a performance, and as an embodiment, calibration using loop back may be provided.

FIG. **1** is a block diagram illustrating a phased array antenna **100** according to an embodiment of the disclosure.

With reference to FIG. **1**, a phased array antenna **100** includes a plurality of radio frequency (RF) chains **110-1** to **110**-N. Hereinafter, for convenience of description, components of the RF chain **110-1** and a function of each component are described, but this is for convenience of description, and each component of other RF chains (e.g., RF chains **110-2** to **110**-N) may also perform the same function as or a similar function to each component of the RF chain **110-1**.

A mixer **110-1-1** may convert a center frequency of an input signal and output a signal having the converted center frequency. For example, the mixer **110-1-1** may convert an intermediate frequency (IF) signal into an RF signal or convert an RF signal into an IF signal. Here, a frequency of the RF signal may be expressed as the sum of a frequency of the IF signal and a frequency of a local oscillator (LO) signal, and a frequency of the IF signal may be expressed as the result of subtracting a frequency of the LO signal from a frequency of the RF signal. To this end, the mixer **110-1-1** is not illustrated in FIG. **1**, but may be connected to the LO.

A phase shifter **110-1-3** may convert a phase of an input signal and output a signal having the converted phase. For example, the phase shifter **110-1-3** may delay or advance a phase of the input signal. One phase value of a plurality of phase values may be configured to the phase shifter **110-1-3**. Each of the plurality of phase values may correspond to one of angles ranging from 0 degrees to 360 degrees, and different phase values may correspond to different angles. Accordingly, when the phase shifter **110-1-3** receives an external control signal for changing a phase value currently configured thereto, the phase shifter **110-1-3** may convert a phase of an input signal by a phase or an angle corresponding to the phase value change.

An amplifier **110-1-5** may amplify the input signal. The amplifier **110-1-5** may provide the amplified signal to a radiator **110-1-7**. According to an embodiment, the amplifier **110-1-5** may be configured as a power amplifier.

The radiator **110-1-7** may convert an input electrical signal into an electromagnetic wave and radiate the electromagnetic wave to a free space. The radiator may be provided as an antenna for signal transmission or reception.

A signal **120-1** may be transmitted from the RF chain **110-1** through the mixer **110-1-1**, the phase shifter **110-1-3**, the amplifier **110-1-5**, and the radiator **110-1-7** or may be received by the RF chain **110-1** through the radiator **110-1-7**, the amplifier **110-1-5**, the phase shifter **110-1-3**, and the mixer **110-1-1**. Similarly, a signal **120-2** may be transmitted from an RF chain **110-2** or may be received by the RF chain **110-2**, and a signal **120**-N may be transmitted from an RF chain **110**-N or may be received by the RF chain **110**-N.

Here, when phases of the signals **120-1** to **120**-N simultaneously transmitted by the plurality of RF chains **110-1** to **110**-N are the same, the signals **120-1** to **120**-N may form a plane wave as a whole and be propagated in a specific direction. That is, the signals **120-1** to **120**-N propagated in a specific direction may form a beam (e.g., a beam **130**) in a specific direction. When phase values configured to each of the plurality of phase shifters **110-1-3** to **110**-N–3 are changed by the same value in a state in which phases of the signals **120-1** to **120**-N are the same, the signals **120-1** to **120**-N may still form a plane wave as a whole, and be propagated in a direction changed by an angle corresponding to a phase value change in a specific direction.

Accordingly, when phase values are configured to each of the plurality of phase shifters **110-1-3** to **110**-N–3 so that phases of the signals **120-1** to **120**-N are the same, a device using the phased array antenna **100** may input the same phase value change corresponding to a specific angle change to the plurality of phase shifters **110-1-3** to **110**-N–3 to form a beam in a desired direction or to steer a beam.

In other words, it is possible to maintain the plane wave as a whole by controlling each of the plurality of phase shifters **110-1-3** to **110**-N–3 so that phases of the signals **120-1** to **120**-N are the same, so that beamforming is possible. For this, initial phases of the signals **120-1** to **120**-N need to be configured to be the same, and when there is a difference in initial phase values of each of the plurality of phase shifters **110-1-3** to **110**-N–3, it is required to control this.

According to various embodiments of the disclosure, calibration means configuring phase values of the phase shifters **110-1-3** to **110**-N–3 so that initial phases of the signals **120-1** to **120**-N are the same. Calibration may be performed for each of the RF chains **110-1** to **110**-N. For example, when calibration is performed in the RF chain **110-1**, a phase value may be configured to the phase shifter **110-1-3** included in the RF chain **110-1** so that an initial phase of the signal **120-1** is the same as an initial phase of a signal transmitted by a reference RF chain.

Here, the reference RF chain means an RF chain having a phase value as a reference for calibration of at least one other RF chain. The reference RF chain may be one of the plurality of RF chains **110-1** to **110**-N. For example, when the reference RF chain is **110-1**, calibration may be performed in the remaining RF chains **110-2** to **110**-N. In this case, the remaining RF chains **110-2** to **110**-N in which

calibration is to be performed may be referred to as a 'calibration target RF chain' or simply a 'target RF chain'.

When calibration is performed in any RF chain, the RF chain may serve as a reference RF chain for calibration of other RF chains. In other words, the reference RF chain may be changed while calibrating a plurality of RF chains. For example, when the RF chain **110-1** is used as the reference RF chain for calibration of the RF chain **110-2**, the calibrated RF chain **110-2** may be used as the reference RF chain for calibration of the RF chain **110-3**.

Further, the reference RF chain is not specified, and calibration may be performed in all of the plurality of RF chains **110-1** to **110**-N included in the phased array antenna **100**.

Calibration of the plurality of RF chains **110-1** to **110**-N included in the phased array antenna **100** may be performed by a calibration device. In other words, the calibration device may simultaneously or at least partially calibrate the plurality of RF chains **110-1** to **110**-N included in the phased array antenna **100**.

According to various embodiments of the disclosure, calibrating each of the plurality of RF chains **110-1** to **110**-N included in the phased array antenna **100** may be understood as calibrating the phased array antenna **100**, and a phased array antenna in which calibration is to be performed may be referred to as a 'target phased array antenna'.

A configuration of the calibration device (e.g., a calibration device **200**) for calibrating the phased array antenna **100** will be described in more detail with reference to FIG. **2**A.

FIG. **2**A is a block diagram illustrating a constitution of a calibration device according to an embodiment of the disclosure.

In FIGS. **2**A and **2**B, for convenience of description, it is assumed that calibration devices **200** and **201** calibrate phased array antennas **100** and **101**, but this is an example, and the calibration devices **200** and **201** may calibrate any phased array antenna included therein or connected thereto.

With reference to FIG. **2**A, the calibration device **200** includes a controller **210**, a signal generator **220**, a reception antenna **230**, and a measuring instrument **240**. Here, the calibration device **200** may include the phased array antenna **100**.

The controller **210** controls overall operations of the calibration device **200**. For example, the controller **210** may control the signal generator **220** to generate an initial input signal. In order to perform the above-described control operation, the controller **210** may include at least one processor or a microprocessor or may be a part of the processor.

According to various embodiments, the controller **210** may configure a phase value to each of the phase shifters **110-1-1** to **110**-N−1 and change the configured phase value. Configuring a phase value to the phase shifters **110-1-1** to **110**-N−1 may be understood as configuring a phase value to the RF chains **110-1** to **110**-N. For example, configuring a phase value to the phase shifter **110-1-1** may be understood as configuring a phase value to the RF chain **110-1** including the phase shifter **110-1-1**. Accordingly, a phase value configured to each of the phase shifters **110-1-1** to **110**-N−1 may be understood as a phase value of each of the RF chains **110-1** to **110**-N. The controller **210** may configure a phase value of each of the RF chains **110-1** to **110**-N to control each of the RF chains **110-1** to **110**-N to transmit a signal whose initial phase is corrected corresponding to the configured phase value.

According to various embodiments, the controller **210** may control an on/off state of each of the RF chains **110-1** to **110**-N. In other words, the controller **210** may turn on or off each of the RF chains **110-1** to **110**-N. To this end, the controller **210** may block or maintain a supply voltage of each of the RF chains **110-1** to **110**-N. Further, the controller **210** may transmit a control signal for controlling an on/off state to each of the RF chains **110-1** to **110**-N.

According to various embodiments, the controller **210** may measure power of a signal transmitted from the phased array antenna **100**. Specifically, the controller **210** may measure power of a signal transmitted from each RF chain in the phased array antenna **100** and measure power of a combined signal of signals transmitted from two or more RF chains.

The signal generator **220** may generate an initial input signal for calibrating the phased array antenna **100**. The signal generator **220** may provide the generated initial input signal to the phased array antenna **100** so that a signal is transmitted from the RF chains in an on state in the phased array antenna **100**. For example, the signal generator **220** may generate a signal for calibrating phases of RF chains of the phased array antenna under the control of the controller **210**.

According to various embodiments, the signal generator **220** may be configured as a part of a transmitter that generates and transmits a signal. Further, the signal generator **220** illustrates an operation performed in an embodiment in which the phased array antenna **100** transmits a signal, and when the phased array antenna serves as a reception antenna for receiving a signal, the signal generator **220** may be configured as a receiver. According to an embodiment, the signal generator **220** may be configured as a transceiver. In this case, the phased array antenna **101** may be configured to selectively operate in a transmission mode or a reception mode.

The reception antenna **230** may receive a signal transmitted from a radiator of the phased array antenna **100**.

The measuring instrument **240** may analyze a signal received through the reception antenna **230**. In order to perform the above-described control operation, the measuring instrument **240** may include at least one processor or microprocessor or may be a part of a processor.

The measuring instrument **240** may communicate with the controller **210** by wire or wirelessly. Further, the measuring instrument **240** may be connected with the controller **210** or may be included in a part of the controller **210**.

The measuring instrument **240** may receive a signal through the reception antenna **230**. For example, the measuring instrument **240** may receive a signal transmitted from a target phased array antenna (e.g., the phased array antenna **100**) and analyze a spectrum of the received signal.

According to various embodiments, the measuring instrument **240** may measure power of a signal transmitted from the phased array antenna **100**. Specifically, the measuring instrument **240** may receive a signal transmitted from each RF chain in the phased array antenna **100** through the reception antenna **230** and measure power of the received signal. In this case, the measuring instrument **240** may measure power of a combined signal of signals transmitted from two or more RF chains.

According to an embodiment, in calibrating the RF chains **110-1** to **110**-N, the calibration device **200** may determine a reference phase value and calibrate the plurality of RF chains using the reference phase value. For example, the calibration device **200** may transmit a signal (hereinafter, a test signal) while changing a phase values of the plurality of RF chains, and the measuring instrument **240** that has received a test signal through the reception antenna **230** may

determine a phase difference of a plurality of RF chains using the received test signal. According to an embodiment, the measuring instrument **240** may determine a phase difference (phase shift) of the RF chains based on phase code sets included in the received test signal.

The measuring instrument **240** may determine a phase control value for calibrating a plurality of RF chains based on a reference phase value and a phase difference determined for each of the plurality of RF chains.

According to various embodiments, the calibration device **200** may select a reference RF chain among the RF chains **110-1** to **110**-N, and calibrate the plurality of RF chains using the reference RF chain. For example, the calibration device **200** may transmit a test signal while changing phase values of the plurality of RF chains, and the measuring instrument **240** that has received a test signal through the reception antenna **230** may determine a phase difference between the plurality of RF chains using the received test signal. According to an embodiment, the measuring instrument **240** may determine a phase difference of the RF chains based on the phase code sets included in the received test signal.

The measuring instrument **240** may determine one of the plurality of RF chains as a reference RF chain and determine a phase control value for calibrating the remaining RF chains according to the phase of the reference RF chain.

In determining a phase control value for at least one of the plurality of RF chains, the measuring instrument **240** may determine a phase control value for a signal of each of the plurality of RF chains such that a gain of a combined signal is maximized.

According to various embodiments, the measuring instrument **240** may be configured as a signal analyzer that analyzes a signal received through the reception antenna **230**.

According to an embodiment, if a phase configured for each of the plurality of RF chains of a transmitted test signal and a phase identified for each of RF chains of a received test signal are the same, the gain may be maximized.

The calibration device **200** may determine a phase control value such that a gain in a phase of each of the plurality of RF chains identified from the received test signal is maximized compared to a phase of each of the plurality of RF chains configured upon transmitting.

According to various embodiments, the calibration device **200** may determine a phase control value of each of the RF chains so that a gain of a phased array antenna including the RF chains is maximized.

According to various embodiments, calibration of the phased array antenna **100** is not limited to determining a phase control value for controlling so that a phase-to-gain of each of the plurality of RF chains configured upon transmitting a test signal is maximized, but may be applied to calibration by configuring various reference values, as described above.

Various embodiments of the disclosure propose a device and method for reducing the time required for a plurality of RF chains, and enabling mass production of a phased array antenna in order to calibrate the phased array antenna, which will be described in more detail below.

As described above, FIG. **2**A illustrates an operation of the phased array antenna **100** in a transmission mode in the calibration device. According to various embodiments, the calibration device may perform calibration in a reception mode of the phased array antenna, which will be described with reference to FIG. **2**B.

FIG. **2**B is a block diagram illustrating a configuration of a calibration device according to an embodiment of the disclosure.

In FIG. **2**B, for convenience of description, the calibration device **201** may include the same components as or similar components to those of the calibration device of FIG. **2**A. According to an embodiment, the calibration device **201** includes a controller **211**, a signal generator **221**, a transmission antenna **231**, and a signal receiver **241**. Here, the calibration device **200** may include a phased array antenna **101**.

In this case, the phased array antenna **101** may operate in a reception mode. According to an embodiment, a plurality of RF chains included in the phased array antenna **101** may be configured to operate in a reception mode. For example, the RF chain **101-1** included in the phased array antenna **101** operating in a reception mode may include a mixer **101-1-1**, a phase shifter **101-1-3**, an amplifier **101-1-5**, and a radiator **101-1-7**.

The signal generator **221** may generate a test signal for calibrating the phased array antenna **101** that receives a signal. The signal generator **221** may transmit the generated test signal through the transmission antenna **231**, and the controller **211** may process to receive a signal from the phased array antenna **101** through RF chains in an on state. For example, the signal generator **221** may generate a specific signal to calibrate a phase of RF chains of the phased array antenna.

According to various embodiments, the signal generator **221** may be configured as a part of a transmitter that generates and transmits a signal. Further, the signal generator **221** illustrates an operation performed in an embodiment in which the phased array antenna **101** receives a signal, and when the phased array antenna serves as a transmission antenna for transmitting a signal, the signal generator **221** may be configured as a transmitter. According to an embodiment, the signal generator **220** may be configured as a transceiver. In this case, the phased array antenna **101** may be configured to selectively operate in a transmission mode or a reception mode.

The transmission antenna **231** may transmit a signal (e.g., test signal) generated by the signal generator **221**. The test signal transmitted through the transmission antenna **231** may be received through the phased array antenna **101**. According to an embodiment, the test signal transmitted through the transmission antenna **231** may be received by a radiator configured in each of a plurality of RF chains of the phased array antenna **101**, and be transmitted to the signal receiver **241** through an amplifier, a phase shifter, and a mixer configured in each of the plurality of RF chains. According to an embodiment, an operation of receiving the test signal through the plurality of RF chains constituting the phased array antenna **101** and transmitting the test signal to the signal receiver **241** may be described using the RF chain **101-1**, which is one of the plurality of RF chains.

The radiator **101-1-7** may receive a test signal in the form of an electromagnetic wave in a free space and output the test signal as an electrical signal. The radiator may be provided as an antenna for signal transmission or reception.

The amplifier **101-1-5** may amplify an input signal. The amplifier **101-1-5** may provide the amplified signal to the phase shifter **101-1-3**. According to an embodiment, the amplifier **101-1-5** may be configured as a low-noise amplifier.

The phase shifter **101-1-3** may convert a phase of an input signal and output a signal having the converted phase. For example, the phase shifter **101-1-3** may delay or advance the

phase of the input signal. One phase value of a plurality of phase values may be configured to the phase shifter **101-1-3**. Each of the plurality of phase values may correspond to one of angles ranging from 0 degrees to 360 degrees, and different phase values may correspond to different angles. Accordingly, when the phase shifter **101-1-3** receives an external control signal for changing the phase value currently configured thereto, the phase shifter **101-1-3** may convert the phase of the input signal by an angle or a phase corresponding to the phase value change.

The mixer **101-1-1** may convert a center frequency of an input signal and output a signal having the converted center frequency. For example, the mixer **101-1-1** may convert an intermediate frequency (IF) signal into an RF signal or convert an RF signal into an IF signal. Here, the frequency of the RF signal may be expressed as the sum of a frequency of the IF signal and a frequency of a local oscillator (LO) signal, and the frequency of the IF signal may be expressed as the result of subtracting the frequency of the LO signal from the frequency of the RF signal. To this end, although not illustrated in FIG. **1**, the mixer **101-1-1** may be connected to the LO.

The signal receiver **241** may receive a test signal from mixers included in each of a plurality of RF chains of the phased array antenna **101**. The signal receiver **241** may transmit test signals transmitted from each of the plurality of chains to the controller **211**.

The controller **211** may analyze a signal received through the signal receiver **241**. In order to perform the above-described control operation, the controller **211** may include at least one processor or microprocessor or may be a part of the processor.

The controller **211** may communicate with the signal generator **221** by wire or wirelessly. In this case, the test signal received by the signal receiver **241** may be a signal generated by the signal generator **221** by the number of times determined under the control of the controller **211** and transmitted through the transmission antenna **231**.

For example, the controller **211** may request the signal generator **221** to generate as many test signals as the number of RF chains for calibration in the phased array antenna **101**.

The controller **211** may receive, from the signal receiver **241**, the number of test signals requested through the controller **211** and transmitted to the signal receiver **241** from each of a plurality of RF chains included in the phased array antenna **101**.

In this case, each test signal received from the signal receiver **241** may be a signal to which an arbitrary phase determined for each signal by the controller **211** is applied through a phase shifter.

For example, the controller **211** may receive a test signal while changing phase values of the plurality of RF chains, and determine a phase difference between the plurality of RF chains configured in the phased array antenna **101** using the received test signal. According to an embodiment, the controller **211** may determine a phase difference (phase shift) of the RF chains based on phase sets identified in the received test signal.

The controller **211** may determine a phase control value for calibrating a plurality of RF chains based on a reference phase value and a phase difference determined for each of the plurality of RF chains.

An operation of obtaining phase sets from test signals received by the controller **211** and determining a phase difference and/or a phase control value of the RF chains based on the phase sets may be performed by applying equations to be described later in FIG. **6**.

According to an embodiment, the controller **211** may calculate a phase difference (phase shift) generated in each of the plurality of RF chains included in the phased array antenna **101** with a method of applying an operation in which HR·AR is determined as a constant value CR in Equation 10 to HR·AR. The controller **211** may determine a phase control value of each of the RF chains so that the obtained gain of the phased array antenna is maximized.

FIG. **3** is a graph illustrating a configuration example of a test signal **300** and a phase configuration of a plurality of RF chains in a calibration device according to an embodiment of the disclosure.

In RF chains constituting the phased array antenna, in a phase configuration process, a variation between the configured phase and the output may occur due to a structural performance difference or an error, or the like. By temporarily or permanently pre-adjusting phase values of RF chains in which variation occurs in a signal transmission step, a phase variation problem with the transmitted signal can be improved.

According to an embodiment of the disclosure, in a method of performing calibration of a plurality of RF chains in a phased array antenna, a method and device for simultaneously performing calibration for a plurality of RF chains are invented.

For example, the calibration device **200** may transmit a test signal while changing phase values of the plurality of RF chains, as described above. In this case, as a phase value for each of the plurality of RF chains configured to the test signal, a known phase value is applied, and a phase shift of each of the plurality of RF chains may be identified based on the phase value for each of the plurality of RF chains of the test signal identified by the measuring instrument **240**. The measuring instrument **240** may determine a phase control value for calibration of the phased array antenna **100** based on a phase shift of each of the plurality of identified RF chains.

With reference to FIG. **3**, in performing calibration on four RF chains in a 4-way phased array antenna, a constitution of a test signal and configuration of a phase for each of the RF chains may be described. Here, a phase for the four RF chains may be configured among known 16 phases (e.g., a first phase **311** to a 16th phase **341**) in a 4-way phased array antenna, and each phase interval may be configured to 22.5°.

As described above, in order to determine a phase control value for each of four RF chains, four linear equations are required; thus, the calibration device **200** may change or maintain phase values of the four RF chains and transmit signals four times to determine a phase difference and a control phase value of the four RF chains.

Accordingly, when transmitting a test signal, the controller **210** of the calibration device **200** for calibrating phases of the four RF chains determines a known arbitrary phase for each of the four RF chains to configure a phase code set. For example, the controller **210** may configure a first phase code set **301** to apply a third phase **315** to Φ**11** (a first RF chain of a first transmitting signal y**1**) included in the test signal, a seventh phase **323** to Φ**12** (a second RF chain of the first transmitting signal y**1**), an eleventh phase **331** to Φ**13** (a third RF chain of the first transmitting signal y**1**), and a fifteenth phase **339** to Φ**14** (a fourth RF chain of the first transmitting signal y**1**). The controller **210** may sequentially perform an operation of constituting such a phase code set as in a second phase code set **302**, a third phase code set **303**, and a fourth phase code set **304** to generate a second transmitting signal y**2**, a third transmitting signal y**3**, and a fourth transmitting signal y**4**. The controller **210** may

sequentially transmit the generated first transmitting signal y**1**, second transmitting signal y**2**, third transmitting signal y**3**, and fourth transmitting signal y**4** to configure a test signal so as to transmit total four times of transmitting signals to which different phase code sets are applied.

According to an embodiment, an operation of applying the first phase code set **301** to the fourth phase code set **304** to the initial input signal may be described as an operation of performing a phase shift.

Further, each phase code set may be predetermined in a state in which phases of the RF chains are combined to satisfy a specific condition for the phased array antenna. According to an embodiment, each phase code set may be determined by combining phases of the RF chains so that a gain of the phased array antenna is maximized.

According to various embodiments, because calculation of 16 linear equations is required when calibrating a 16-way phased array antenna, 16 phase code sets for 16 transmitting signals may be constituted corresponding to 16 RF chains, and a test signal may be constituted to transmit each of 16 phase code sets applied to the initial input signal.

According to various embodiments, a test signal transmission method in the 4-way phased array antenna or a test signal transmission method in the 16-way phased array antenna according to the above-described embodiments may be applied to test signal transmission of a large-scale phased array antenna exceeding 16-way.

The measuring instrument **240** may receive information on the generated test signal from the controller **210**. According to an embodiment, the controller **210** may generate information on the number of RF chains for calibration related to generation of a test signal, a phase value configured to each RF chain, a phase code set including phase values of RF chains configured to each transmitting signal, and a test signal including at least a portion of an initial input signal. The measuring instrument **240** may receive information on the test signal from the controller **210**. In this case, the measuring instrument **240** may receive information on a test signal from the controller **210** through wired or wireless communication or identify information on a test signal included in a test signal received through the antenna **230**.

The measuring instrument **240** may receive a test signal transmitted from the phased array antenna **100** through the reception antenna **230** and determine a linear equation using the received test signal.

According to an embodiment, an initial input signal x of the test signal is a complex signal and may be expressed as follows, including the magnitude and phase of the signal.

$$x=x_1+jx_q \quad \text{[Equation 1]}$$

By applying the measured phase value for each of four RF chains and a variable a for a phase shift in the received test signal, the measuring instrument **240** may determine four linear equations using the transmitted test signal y and the received test signal as follows.

$$y_1=a_1\exp(j\phi_{11})x+a_2\exp(j\phi_{12})x+a_3\exp(j\phi_{13})x+a_4\exp(j\phi_{14})x \quad \text{[Equation 2]}$$

$$y_2=a_1\exp(j\phi_{21})x+a_2\exp(j\phi_{22})x+a_3\exp(j\phi_{23})x+a_4\exp(j\phi_{24})x \quad \text{[Equation 3]}$$

$$y_3=a_1\exp(j\phi_{31})x+a_2\exp(j\phi_{32})x+a_3\exp(j\phi_{33})x+a_4\exp(j\phi_{4})x \quad \text{[Equation 4]}$$

$$y_4=a_1\exp(j\phi_{41})x+a_2\exp(j\phi_{42})x+a_3\exp(j\phi_{43})x+a_4\exp(j\phi_{44})x \quad \text{[Equation 5]}$$

Further, Equations 2 to 5 may be arranged as a function as follows.

$$Y=A\cdot M\rightarrow A+Y\cdot M^{-1} \quad \text{[Equation 6]}$$

where

$$Y=[\,y_1\ \ y_2\ \ y_3\ \ y_4\,] \quad \text{[Equation 7]}$$

$$A=[\,a_1\ \ a_2\ \ a_3\ \ a_4\,] \quad \text{[Equation 8]}$$

$$M=xH=x\begin{bmatrix}\exp(j\phi_{11}) & \exp(j\phi_{12}) & \exp(j\phi_{13}) & \exp(j\phi_{14})\\ \exp(j\phi_{21}) & \exp(j\phi_{22}) & \exp(j\phi_{23}) & \exp(j\phi_{24})\\ \exp(j\phi_{31}) & \exp(j\phi_{32}) & \exp(j\phi_{33}) & \exp(j\phi_{34})\\ \exp(j\phi_{41}) & \exp(j\phi_{42}) & \exp(j\phi_{43}) & \exp(j\phi_{44})\end{bmatrix} \quad \text{[Equation 9]}$$

The measuring instrument **240** determines a variable A for a phase shift with an initial phase for each of four RF chains based on a function Y for the transmitted test signal y and a function M for the received test signal, thereby determining a phase difference of the initial phase applied to each of the four RF chains.

According to an embodiment, a phase difference of the initial phase applied to each of the RF chains may be determined as a variable value for a phase code set identified in the received test signal and a phase shift of each of the phases included in the phase code set.

The measuring instrument **240** may determine a phase control value for calibration of at least one of four RF chains based on the phase difference of each of four RF chains. The measuring instrument **240** may transmit the determined phase control value to the controller **210**.

The controller **210** may control a phase of the RF chain constituting the phased array antenna **100** based on the phase control value received from the measuring instrument **240**. According to an embodiment, the controller **210** may take and apply a reciprocal number of the phase control value when applying the phase control value to the phase shifter of the RF chain.

FIG. **4** is a graph **400** illustrating power of a test signal received by a calibration device according to an embodiment of the disclosure.

According to an embodiment, the measuring instrument **240** may receive a test signal transmitted by the phased array antenna **100** through the reception antenna **230**, and identify time-power values for a plurality of transmitting signals included in the test signal.

FIG. **4** illustrates measured power of one transmitting signal among test signals transmitted from a 16-way phased array antenna. Here, a hold state indicates the start and end of the test signal, and as power of the phase code set increases, it may be determined that an antenna performance for each of the plurality of RF chains in the phase of the corresponding phase code set is excellent.

According to an embodiment, the measuring instrument **240** may determine a phase control value based on a phase code set measured as having the greatest power. For example, the measuring instrument **240** may determine a phase control value for each of the plurality of RF chains based on a seventh phase code set identified to have the greatest power.

The measuring instrument **240** may transmit the determined phase control value to the controller **210**.

By applying the phase control value received from the measuring instrument **240** to the phase shifter of the corresponding RF chains, the controller **210** may perform calibration of the phased array antenna.

FIG. **5** is a block diagram illustrating a configuration of a calibration device **500** according to an embodiment of the disclosure.

According to an embodiment, the calibration device according to FIG. **5** may be configured as a part of a communication device including a multi-stream transceiver (or transceiver). For example, a communication device including a multi-stream transceiver may include a plurality of transceivers and be a communication device in which a phased array antenna is connected to each transceiver.

With reference to FIG. **5**, the calibration device **500** may include a first transceiver **520** and a second transceiver **540** and include a first phased array antenna **501** connected to the first transceiver **520** and a second phased array antenna **503** connected to the second transceiver **540**.

According to an embodiment, although the first transceiver **520** and the second transceiver **540** are illustrated as separate modules, they may be included in one module. Further, the first transceiver **520** and the second transceiver **540** may be included in the controller **510**.

When the calibration device **500** performs calibration, in case that the first transceiver **520** is in a transmission mode (Tx mode), the second transceiver **540** may operate in a reception (Rx mode) mode. Further, in case that the first transceiver **520** is in a reception mode (Rx mode), the second transceiver **540** may operate in a transmission (Tx mode) mode.

The first phased array antenna and the second phased array antenna may be connected through a coupler. According to an embodiment, the calibration device **500** may be configured to directly receive a phase-converted signal by a phase shifter through the coupler (or coupling circuit) instead of receiving a signal radiated from at least one RF chain for calibration. For example, the coupling circuit may be configured to connect an output terminal of a power amplifier included in each RF chain in a phased array antenna in a transmission mode and an input terminal of a receiver included in each RF chain in a phased array antenna in a reception mode.

When the first transceiver **520** is in a transmission mode, a test signal transmitted through the first phased array antenna may be monitored by the coupler and be transmitted to a receiving terminal of the second phased array antenna.

According to an embodiment, a test signal identified through the coupler from an amplifier output terminal of the first phased array antenna operating in a transmission mode may be combined to a combiner, be divided into a divider through an attenuator, and then be transferred to an amplifier input terminal of the second phased array antenna operating in a reception mode. That is, the calibration device **500** may calibrate the phased array antenna using a loopback signal of a communication device including a plurality of transceivers and at least one phased array antenna connected to each of the plurality of transceivers. A configuration of a circuit **550** including at least one coupler for the loopback signal will be described later with reference to FIG. **6**.

FIG. **6** is a circuit diagram illustrating a constitution of a coupler in a calibration device according to an embodiment of the disclosure.

With reference to FIG. **6**, in a circuit **600** including a coupler, a coupler **607** may be configured between the amplifier and the radiator. According to an embodiment, in the calibration device including a dual stream transceiver, each of the plurality of RF chains included in each of the phased array antennas may include an amplifier for a transmission mode and a reception mode. For example, a power amplifier **601** for a transmission mode and a low-noise amplifier **603** for a reception mode are connected in parallel between the radiator and the phase shifter of the RF chain, and switches **609** and **611** are connected at both ends, respectively of the amplifiers so that they may be selectively driven. In this case, the coupler **607** may be configured between the radiator and the switch **611** connected in a direction of the radiator in the amplifier.

That is, the coupler may identify a signal output through the power amplifier configured in the RF chain of the phased array antenna operating in a transmission mode and output a loopback signal to the low noise amplifier configured in the RF chain of the phased array antenna operating in a reception mode.

Returning to FIG. **5**, the test signal monitored through the coupler may be transmitted to a part of the second phased array antenna. According to an embodiment, when the second transceiver **540** operates in a reception mode, the controller **510** may turn off some of the plurality of RF chains included in the second phased array antenna. For example, the controller **510** may turn off the remaining RF chains except for the RF chain **503-1** of the second phased array antenna in a reception mode of the second transceiver **540**.

The controller **510** may determine a phase code set for RF chains for calibration among a plurality of RF chains included in the first phased array antenna **501**, and transmit a test signal in which the phase code set is applied to an initial input signal.

The test signal transmitted through the first phased array antenna **501** may be monitored through the coupler and be transmitted to the RF chain **503-1** of the second phased array antenna **503**. The controller **510** may apply Equation 6 to calibrate the plurality of first phased array antennas **501** based on the test signal transmitted from the first phased array antenna **501** and the test signal received from the radiator of the RF chain **503-1** of the second phased array antenna **503**.

For example, in Equation 6, when the variable A for a phase shift occurring in the phased array antenna **100** of the transmitting side that transmits the test signal is considered, in the calibration using the loopback signal, it is necessary to consider together a variable AR for the phase shift generated in the second phased array antenna **503** of the receiving side as well as a variable AT for the phase shift generated in the first phased array antenna **501** of the transmitting side.

A linear equation for calibrating the first phased array antenna **501** using the loopback signal is as follows.

$$Y=H_R \cdot A_R \cdot L_{ATT} \cdot H_T \cdot A_T \cdot x \quad \text{[Equation 10]}$$

where x is an initial input signal, HT is a known random phase value determined for a test signal at the first phased array antenna **501**, and HR may be a measured phase value corresponding to any known phase value determined for the test signal identified in the RF chain **503-1** by receiving the test signal in the second phased array antenna **503**.

Equation 10 may be arranged in a manner similar to Equations 7 to 9.

For example,

$$A_T = \begin{bmatrix} a_{T1} \\ \vdots \\ a_{Tm} \end{bmatrix} \quad \text{[Equation 11]}$$

$$H_T = [\, e^{j\theta_{T1}} \quad \dots \quad e^{j\theta_{Tm}} \,] \quad \text{[Equation 12]}$$

$$H_R = [\, e^{j\theta_{R1}} \quad \dots \quad e^{j\theta_{Rm}} \,] \quad \text{[Equation 13]}$$

is applied, and in case of calibrating the first phased array antenna **501**, because the remaining RF chains except for the RF chain **503-1** of the second phased array antenna **503** were turned off, θRn of the HR side may be determined to a fixed value (e.g., 0), and HR·AR·LATT may be determined as a constant value CR.

According to an embodiment, for solving Equation 10, the technique described with reference to FIG. **3** in order to calculate Equation 1 may be similarly applied. For example, when calibrating the m number of RF chains, unknown AT requires aT1, aT2, to aTm, that is, the m number of linear equations; thus, HT is determined as an m×m matrix, and Equation 10 may be arranged as follows for AT.

$$A_T = \frac{1}{c_R} \cdot H_T^{-1} \cdot \left(Y \cdot x^{-1}\right) \quad \text{[Equation 14]}$$

That is, Equation 14 is arranged similarly to Equation 6, and by determining the variable AT for the phase shift from the initial phase for each of the m number of RF chains, the controller **510** may determine a phase difference of the initial phase applied to each of the m number of RF chains.

According to an embodiment, Equation 14 is an equation for determining a variable value for a phase shift in RF channels that have transmitted a test signal using an initial input signal, a transmitting signal in which a plurality of phase code sets are applied to the initial input signal, and components of phase values measured for RF channels that transmit the test signal and therefore, Equation 14 may be applied to a calibration device using the measuring instrument **240** of FIG. **2**.

According to an embodiment, in order to minimize inaccuracy of the solution in Equations 6 and 14, it is necessary to determine the condition number cond(H) of a matrix H (or HT) to be as small as possible. In this case, when such a phase difference deviation occurs large for a plurality of RF chains, a load for identifying the phase difference may occur or a high performance device may be required; thus, it is necessary to arrange or improve the calculation result of the phase difference so that such a deviation is measured to be small.

Accordingly, according to an embodiment, the Hadamard matrix is known to have the minimum number of conditions (e.g., cond(H)=1) in the case of m of the order 2 k case, as illustrated in Equation 15.

$$H_{H1} = 1 \quad \text{[Equation 15]}$$

$$H_{H2n} = \begin{bmatrix} H_{Hn} & H_{Hn} \\ H_{Hn} & -H_{Hn} \end{bmatrix}$$

(where 2n is the number of RF c s included in the phased array antenna or the number of RF chains for calibration)

However, a problem in the case of applying the Hadamard matrix is that the sum of a first row is m and the sum of a second row is 0. In general, as phased array systems are symmetrically designed, a radial shape of the antenna array is not accurate, but is generally almost uniformly aligned.

That is, when the Hadamard matrix is applied, the form in which a first measured value y**1** becomes very large and a next measured value y**2** becomes very small as the result of applying the Hadamard matrix illustrated in FIG. **7** is repeatedly displayed, and a very high signal-to-noise ratio (SNR) for the system is required, which reduces efficiency of the calibration.

FIG. **7** is a graph **700** illustrating a result of a test signal when a Hadamard matrix or a proposed matrix is applied in relation to reduction of inaccuracy of a solution for calibration according to an embodiment of the disclosure.

With reference to the result of applying the Hadamard matrix to Equation 14 in the graph **700**, in identifying phase control values for RF channels of the phased array antenna, the power magnitude deviation of transmitting signals appears to be high, and in order to measure this, a high performance signal measuring equipment is required.

Accordingly, as illustrated in Equation 16, a new matrix in which the condition number of H (or HT) is 1 may be proposed.

$$H_{P1} = 1 \quad \text{[Equation 16]}$$

$$H_{p2n} = \begin{bmatrix} H_{Pn} & H_{Pn} \cdot e^{j\frac{2}{\pi}} \\ H_{Pn} \cdot e^{j\frac{2}{\pi}} & H_{Pn} \end{bmatrix}$$

(where 2n is the number of RF chains included in the phased array antenna or the number of RF chains for calibration)

In the case of Equation 16, the sum of rows is expressed as the same value, and for example, HP16 is expressed as Equation 17, and the sum of each row is determined to −4.

$$H_{p16} = \begin{pmatrix} 1 & j & j & -1 & j & -1 & -1 & -j & j & -1 & -1 & -j & -1 & -j & -j & 1 \\ j & 1 & -1 & j & -1 & j & -j & -1 & -1 & j & -j & -1 & -j & -1 & 1 & -j \\ j & -1 & 1 & j & -1 & -j & j & -1 & -1 & -j & j & -1 & -j & 1 & -1 & -j \\ -1 & j & j & 1 & -j & -1 & -1 & j & -j & -1 & -1 & j & 1 & -j & -j & -1 \\ j & -1 & -1 & -j & 1 & j & j & -1 & -1 & -j & -j & 1 & j & -1 & -1 & -j \\ -1 & j & -j & -1 & j & 1 & -1 & j & -j & -1 & 1 & -j & -1 & j & -j & -1 \\ -1 & -j & j & -1 & j & -1 & 1 & j & -j & 1 & -1 & -j & -1 & -j & j & -1 \\ -j & -1 & -1 & j & -1 & j & j & 1 & 1 & -j & -j & -1 & -j & -1 & -1 & j \\ j & -1 & -1 & -j & -1 & -j & -j & 1 & 1 & j & j & -1 & j & -1 & -1 & -j \\ -1 & j & -j & -1 & -j & -1 & 1 & -j & j & 1 & -1 & j & -1 & j & -j & -1 \\ -1 & -j & j & -1 & -j & 1 & -1 & -j & j & -1 & 1 & j & -1 & -j & j & -1 \\ -j & -1 & -1 & j & 1 & -j & -j & -1 & -1 & j & j & 1 & -j & -1 & -1 & j \\ -1 & -j & -j & 1 & j & -1 & -1 & -j & j & -1 & -1 & -j & 1 & j & j & -1 \\ -j & -1 & 1 & -j & -1 & j & -j & -1 & -1 & j & -j & -1 & j & 1 & -1 & j \\ -j & 1 & -1 & -j & -1 & -j & j & -1 & -1 & -j & j & -1 & j & -1 & 1 & j \\ 1 & -j & -j & -1 & -j & -1 & -1 & j & -j & -1 & -1 & j & -1 & j & j & 1 \end{pmatrix}$$

In FIG. **7**, when the matrix proposed in relation to reduction of inaccuracy of the solution for calibration according to an embodiment of the disclosure is applied, the result of the test signal may be identified.

With reference to the result of applying a matrix proposed in Equation 14, in identifying a phase difference for RF channels of the phased array antenna, the power magnitude deviation of transmitting signals appears evenly, and a performance of the device for measuring this is not significantly limited, and may be advantageously applied in terms of cost and calibration speed.

As described above, by identifying the phase difference for RF chains in a state in which the proposed matrix is applied, the calibration device may determine a phase control value more effectively.

As described above, the result of applying the Hadamard matrix to Equation 14 and the result of applying the proposed matrix are illustrated in the measurement result graph **700** of FIG. **7**. According to an embodiment, the graph **700** is a graph of an envelope-power change for phase shifts (PSs) of 16 phase code sets in the test signal identified through the measuring instrument **240**.

A 5G mmWave transceiver should be able to switch simultaneously all PSs within a 100 ns transient time in every symbol. The symbol duration of a 5G NR FR2 120 kHz sub-carrier interval appears to be about 8.9 us.

According to an embodiment, as described above, a power dynamic range according to a PS configuration of the Hadamard matrix is 40 dB or more, and a power dynamic range according to a PS configuration of the proposed matrix appears to about 5 dB. When the PS configuration is switched in every symbol period of 5G NR, the measurement duration of 16 elements may be performed in less than 150 us.

According to an embodiment, operations described with reference to FIG. **5**, **6**, or **7** may be processed through the controller **510** of the calibration device **200**. With reference to FIG. **5**, the controller **510** is configured in the singular and is illustrated as being connected to the first transceiver **520** and the second transceiver **540**, but the controller **510** may be configured in the plural and be connected to the first transceiver **520** and the second transceiver **540**, respectively.

FIG. **8** is a block diagram illustrating a signal processing flow in a calibration device according to an embodiment of the disclosure.

According to an embodiment, when the calibration device includes a dual stream transceiver, as described above, the calibration device may include a first stream transceiver **801** and a second stream transceiver **803**. The components of Equation 10 may be described in comparison with detailed components of the calibration device with reference to FIG. **8**.

The first stream transceiver **801** may configure known phases to RF chains in order to calibrate a phase shift of the RF chains in a transmission mode, and apply and transmit the configured phases to an initial input signal x (a length **1** of the signal).

In this case, the calibration device may transmit a signal as much as the number m of RF chains of the first transceiver **801** for calibration and receive a signal Y through the coupler to identify a phase difference of the RF chains.

The calibration device may generate a linear equation for the received signal Y using the received signal (e.g., the test signal or the second signal). According to an embodiment, by defining RF chains of the first transceiver **801** of the transmitting side to HT·AT and RF chains of the second transceiver **803** of the receiving side to HR·AR, the calibration device may determine a phase difference of ideal phases configured to the RF chains of the first transceiver **801**.

According to an embodiment, when the calibration device calibrates RF chains of the first transceiver, the calibration device may also consider configured phases and a signal transmitted and received by the first transceiver **801** in a reception mode and the second transceiver **803** in a transmission mode.

Further, at least one attenuator may be included between the first transceiver **801** and the second transceiver **803** of the calibration device. In this case, a variable LATT by the attenuator may be applied to the calculation.

FIGS. **9**A and **9**B are graphs illustrating a calibration result using a measuring instrument and a calibration result using a loopback signal in a transmission mode of a calibration device according to an embodiment of the disclosure.

FIG. **9**A illustrates a graph **910** representing a measurement result of a test signal according to calibration using the measuring instrument **240** and a graph **920** of a measurement result of a test signal according to calibration using a loopback signal of the first phased array antenna **501**.

FIG. **9**B illustrates a gain variation graph **930** and a phase variation graph **950** for a measurement result of a test signal according to 1:1 calibration of RF channels included in the phased array antenna, a measurement result of a test signal according to calibration using the measuring instrument **240**, and a measurement result of a test signal according to calibration using a loopback signal of the first phased array antenna **501**.

FIGS. **10**A and **10**B are graphs illustrating a calibration result using a measuring instrument and a calibration result using a loopback signal in a reception mode of a calibration device according to an embodiment of the disclosure.

FIG. **10**A illustrates a graph **1010** representing a measurement result of a test signal according to calibration using the measuring instrument **240** and a graph **1020** of a measurement result of a test signal according to calibration using a loopback signal of the first phased array antenna **501**.

FIG. **10**B illustrates a gain variation graph **1030** and a phase variation graph **1050** for a measurement result of a test signal according to 1:1 calibration of RF channels included in the phased array antenna, a measurement result of a test signal according to calibration using the measuring instrument **240**, and a measurement result of a test signal according to calibration using the loopback signal of the first phased array antenna **501**.

FIG. **11** is a block diagram **1100** of a calibration device using a loopback signal according to an embodiment of the disclosure.

According to an embodiment, the calibration device **200** may be a device including a dual-stream transceiver. In the calibration device **200**, a baseband Tx signal from digital-to-analog converters (DACs) is up-converted to 11.2 GHz intermediate-frequency (IF), is up-converted back to 28 GHz, and is transmitted to the antenna array. Further, the 28 GHz Rx signal from the antenna arrays is down-converted to 11.2 GHz IF, down-converted back to a baseband, and is transmitted to analog-to-digital converters (ADCs).

In a calibration mode of the calibration device **200**, a transceiver **1110** for a stream #1 may operate in a Tx mode, and a transceiver **1120** for a stream #2 may operate in an Rx mode. In this case, a Tx signal from a 28 GHz phased array IC (28GIC) **1140** may be monitored through a coupler, be coupled through a 16-way combiner, be divided through a 16-way divider through an attenuator (ATT) **1170**, and then be coupled into an Rx port of another 28GIC **1180**.

FIG. **12** is a block diagram **1200** illustrating a detailed configuration of a calibration device using a loopback signal according to an embodiment of the disclosure.

The calibration device **200** may include at least one of 28-GHzx16 phased-array ICs **1210** and **1214** and include a 11.2 GHz dual-stream IF transceiver (IFIC) **1270**.

With reference to FIG. **12**, the 28 GHzx16 phased array IC **1210** may include 4 TRx blocks, a 4-way Wilkinson combiner, an up/down mixer, an IF variable amplifier, an IF switch, a local-oscillator (LO) switch, and an LO frequency tripler.

Each of the TRx blocks may include four TRx elements, a 4-way Wilkinson combiner, an Rx amplifier, and a Tx driver amplifier.

Each of the TRx elements includes a low-noise amplifier (LNA), a power amplifier (PA), a switch, and a 4-bit bidirectional passive phase shifter (PS). IFICs may include variable-gain amplifiers (VGA), baluns, inphase- and quadrature-phase (IQ) down mixers (DMIX), IQ up mixers (UMIXx), programmable gain amplifiers (PGA), 4th-order passive low-pass filters (LPFs), buffer amplifiers (Buf), and LO frequency quadruplers.

FIGS. **13**A and **13**B are block diagrams illustrating a configuration of a calibration device using a loopback signal according to an embodiment of the disclosure.

According to an embodiment, the calibration device of FIG. **13**A may include a transmitter **1311** of a first stream strm**1**, a phased array antenna **1313** for transmission connected thereto, a receiver of a second stream strm**2**, and a phased array antenna **1323** for reception connected thereto. In this case, the phased array antenna **1313** for transmission may include a plurality of RFICs **1313-1**, **1313-3**, and **1313**-N for transmission, and the phased array antenna **1313** for reception may include a plurality of RFICs **1323-1**, **1323-3**, and **1323**-N for reception.

According to an embodiment, each of the plurality of RFICs **1313-1**, **1313-3**, and **1313**-N for transmission may include a plurality of RF channels for reception. For example, each of a plurality of RF channels included in the phased array antenna **100** of FIGS. **1** and **2**A may include a plurality of RF channels for reception.

That is, the RF chain **110-1** of FIG. **1** may include a plurality of RF chains, and in this case, the RF chain **110-1** may be configured in a modular manner.

Similarly, each of the plurality of RFICs **1323-1**, **1323-3**, and **1323**-N for reception may include a plurality of RF channels for reception. For example, each of a plurality of RF channels included in the phased array antenna **101** of FIG. **2**B may include a plurality of RF channels for reception.

That is, the RF chain **101-1** of FIG. **2**A may include a plurality of RF chains, and in this case, the RF chain **101-1** may be configured in a modular manner.

According to an embodiment, a signal transmitted through the transmitter **1311** of a first stream strm**1** and a plurality of RFICs **1313-1**, **1313-3**, and **1313**-N connected thereto may be transmitted through a radiator included in each of a plurality of RFICs **1313-1**, **1313-3**, to **1313**-N. In this case, when the RFICs **1313-1**, **1313-3**, and **1313**-N are calibrated using a loopback signal, the signal transmitted from each of the plurality of RFICs **1313-1**, **1313-3**, and **1313**-N may be monitored through the coupler and be transmitted to the RFIC **1323-1** connected to a receiver **1321** of a second stream strm**2** in a reception mode through at least one of a combiner, an attenuator (or switch) **1331**, or a divider.

The calibration device may determine phase control values of RFICs **1313-1**, **1313-3**, and **1313**-N using the test signal received in the RFIC **1323-1** and the mathematical technique described with reference to FIG. **5**.

As illustrated in FIG. **13**A, when the calibration device calibrates a plurality of RFIC modules connected to the transmitter **1311** of a first stream strm**1**, the calibration device may use one RFIC module including one RF channel or a plurality of RF channels among the phased array antenna connected to the receiver **1321** of a second stream strm**2**.

According to an embodiment, in calibrating an RFIC module including a plurality of RF channels and a phased array antenna including a plurality of RFIC modules, by assuming that a performance of each of the plurality of RF channels included in one RFIC module is the same and assuming that there is a difference in a performance of each of the plurality of RFIC modules, the calibration device may process to calibrate the relative phase difference between the RFIC modules included in the phased array antenna.

According to an embodiment, the calibration device of FIG. **13**B may include a receiver **1351** of a first stream strm**1**, a phased array antenna **1353** for reception connected thereto, a transmitter **1361** of a second stream strm**2**, and a phased array antenna **1363** for transmission connected thereto.

In this case, the phased array antenna **1353** for reception may include a plurality of RFICs **1353-1**, **1353-3**, and **1353**-N for reception, and the phased array antenna **1363** for transmission may include a plurality of RFICs **1363-1**, **1363-3**, and **1363**-N for transmission.

In this case, the calibration device may process to calibrate the plurality of RFICs **1353-1**, **1353-3**, and **1353**-N connected to the receiver **1351** of a first stream strm**1**.

According to an embodiment, the test signal may be transmitted through an RFIC **1363-1** connected to the transmitter **1361** of a second stream strm**2**, and in this case, the transmitted test signal may be monitored through the coupler and be transmitted to RFICs **1353-1**, **1353-3**, and **1353**-N connected to the receiver **1351** of a first stream strm**1** in a reception mode through at least one of a combiner, a attenuator (or switch) **1371**, or a divider.

The calibration device may determine phase control values of RFICs **1353-1**, **1353-3**, and **1353**-N using a test signal received by the phased array antenna **101** of FIG. **2**B and the mathematical technique described with reference to FIG. **5**.

FIGS. **14**A and **14**B are block diagrams illustrating a configuration of a calibration device using a loopback signal according to an embodiment of the disclosure.

With reference to FIG. **14**A, a transceiver **1411** of a first stream strm**1** operating in a transmission mode or a transceiver **1421** of a second stream strm**2** operating in a reception mode may be configured with the first transceiver **520** or the second transceiver **540** described with reference to FIG. **5**.

The transceiver **1411** of a first stream strm**1** or the transceiver **1421** of a second stream strm**2** may operate in the same manner as or a similar manner to the transmitter **1311** of a first stream strm**1** or the receiver **1321** of a second stream strm**2** described with reference to FIG. **13**A, and the receiver **1351** of a first stream strm**1** or the transmitter **1361** of a second stream strm**2** described with reference to FIG. **13**B.

According to various embodiments, in order to calibrate each RFIC module, the calibration device may select at least

one radiator for identifying or transmitting a test signal through a coupler among a plurality of radiators included in each RFIC module.

For example, as illustrated in FIG. **14**A, the calibration device may obtain a test signal through an n-th radiator of a plurality of radiators included in each of RFICs **1413-1**, **1413-3**, to **1413**-N operating in a transmission mode connected to the transceiver **1411** of a first stream strm**1** operating in a transmission mode and transmit a test signal to a third radiator of an RFIC **1423-1** in an on state among radiators of RFICs **1423-1**, **1423-3** to **1423**-N operating in a reception mode connected to the transceiver **1421** of a second stream strm**2** operating in a reception mode.

With reference to FIG. **14**B, a transceiver **1461** of a first stream strm**1** operating in a transmission mode or a transceiver **1451** of a second stream strm**2** operating in a reception mode may be configured with the first transceiver **520** or the second transceiver **540** described with reference to FIG. **5**.

The transceiver **1461** of a first stream strm**1** or the transceiver **1451** of a second stream strm**2** may operate in the same manner as or a similar manner to the transmitter **1311** of a first stream strm**1** or the receiver **1321** of a second stream strm**2** described with reference to FIG. **13**A, and the receiver **1351** of a first stream strm**1** or the transmitter **1361** of a second stream strm**2** described with reference to FIG. **13**B.

According to various embodiments, as described with reference to FIG. **14**A, the calibration device may select at least one radiator for identifying or transmitting a test signal through a coupler among a plurality of radiators included in each RFIC module.

For example, as illustrated in FIG. **14**B, the calibration device may obtain a test signal through an n-th radiator of RFIC **1463-1** in an on state among the plurality of radiators included in each of RFICs **1463-1**, **1463-3**, to **1463**-N operating in a transmission mode connected to the transceiver **1461** of a second stream strm**2** operating in a transmission mode and transmit a test signal to a third radiator among radiators of RFICs **1453-1**, **1453-3**, and **1453**-N operating in a reception mode connected to the transceiver **1421** of a first stream strm**1** operating in a reception mode.

As described above, an operation of transmitting and receiving a test signal for calibration by selecting at least one radiator of a plurality of radiators in each RFIC module may be performed through the controller. In this case, the controller may determine a radiator for transmission and reception of a test signal for calibration based on states of the phased array antenna or RFIC modules.

According to various embodiments, as described above, an operation of selecting at least one of the plurality of radiators included in the RFIC module to transmit and receive a test signal for calibration may be applied to the calibration device including a transmitter and a receiver, as illustrated in FIG. **13**A or **13**B.

FIGS. **15** and **16** are diagrams illustrating a configuration of a device for simulating a calibration device according to an embodiment of the disclosure.

With reference to FIGS. **15** and **16**, device block diagrams **1700** and **1800** for measurement of calibration include controllers **1710** and **1810** programmed for measurement and circuits **1520** and **1620** for implementing measurement. Here, the device may further include at least one of signal generators **1540** and **1640**, power supplies **1550** and **1650**, or signal analyzers **1560** and **1660** for operating the circuits **1520** and **1620**.

With reference to FIG. **15**, for measurement in an embodiment of receiving a wirelessly transmitted test signal and analyzing the test signal by the measuring instrument, a reception antenna **1570** connected to the signal analyzer **1560** may be further included.

With reference to FIG. **16**, a configuration of a circuit **1620** will be described for measurement in an embodiment of analyzing a transmitting signal obtained through a coupler.

According to an embodiment, an onboard 16-way Wilkinson combiner used for the measurement was connected to a power amplifier (PA) output of 28GIC instead of being connected to the antenna and coupler. The combiner output was connected to a directional coupler, and an output port of the directional coupler was connected to a signal analyzer. A 20 dB coupling port of the directional coupler is connected to the onboard 16-way divider, and distributed ports are connected to inputs of another low noise amplifier (LNA) of 28GIC. A 14-bit 2-differential-channel arbitrary waveform generator was used as DACs, and a 10-bit 4-channel oscilloscope was used as ADCs. A 1.96608-GSps Zadoff-Chu sequence with a bandwidth of 100 MHz with 4096 samples was used as an initial input signal x of the test signal.

According to an embodiment, the measurement result of the calibration device configured as described above may be identified, as illustrated in Tables 1 and 2 and FIG. **17**.

TABLE 1

	RFIC #0	RFIC #1	RFIC #2	RFIC #3	RFIC #4	RFIC #5	RFIC #6	RFIC #7
Null point search Method	14	15	14	9	1	0	5	2
Phase	13	15	14	9	1	0	5	1
Gain	−0.6	−0.8	−1.7	−0.4	−0.7	0	−0.2	−0.8
Δ	−1	0	0	0	0	0	0	−1
Phase	13	15	14	0	1	0	5	2
Gain	0	−0.6	−1.7	−0.4	−0.8	0	0.2	−0.7
Δ	−1	0	0	0	0	0	0	0
Phase	14	15	14	9	1	0	5	2
Gain	−0.2	−0.4	−1.3	0.1	−0.6	0	0.1	−0.8
Δ	0	0	0	0	0	0	0	0
Phase	13	15	14	9	1	0	5	1
Gain	0	−0.9	−1.6	−0.2	−0.6	0	0.2	−0.7
Δ	−1	0	0	0	0	0	0	−1
Phase	13	15	14	9	1	0	5	1
Gain	−0.4	−0.9	−1.6	−0.2	−0.6	0	0.1	−0.8
Δ	−1	0	0	0	0	0	0	−1

TABLE 2

	RFIC #8	RFIC #9	RFIC #10	RFIC #11	RFIC #12	RFIC #13	RFIC #14	RFIC #15
Null point search Method	4	4	9	1	0	14	10	1
Phase	3	4	9	1	0	14	9	1
Gain	−0.8	−0.4	−0.9	0.5	−2.4	−0.4	−0.7	−1.7
Δ	−1	0	0	0	0	0	−1	0
Phase	4	4	9	1	0	14	9	1
Gain	−1.1	−0.4	−0.9	0.4	−2.5	−0.5	−0.4	−1.6
Δ	0	0	0	0	0	0	−1	0
Phase	4	4	9	1	0	14	9	1
Gain	−0.7	−0.1	−0.6	0.3	−2.3	−0.4	−0.5	−1.6
Δ	0	0	0	0	0	0	−1	0
Phase	4	4	9	1	0	14	9	1
Gain	−0.8	0	−0.8	0.5	−2.2	−0.3	−0.3	−1.9
Δ	0	0	0	0	0	0	−1	0

TABLE 2-continued

	RFIC #8	RFIC #9	RFIC #10	RFIC #11	RFIC #12	RFIC #13	RFIC #14	RFIC #15
Phase	3	4	9	1	15	14	9	0
Gain	−1	−0.2	−0.9	−0.1	−2.5	−0.4	−1.1	−2
Δ	−1	0	0	0	−1	0	−1	−1

FIG. **17** is a graph **1700** illustrating a measurement result of a calibration device according to an embodiment of the disclosure.

With reference to FIG. **17**, an eleventh RFIC module (RFIC #11) illustrates a large difference from a configured phase when a test signal is transmitted. The calibration device may determine a phase difference and a phase control value of an eleventh RFIC module (RFIC #11) based on the identified phase information, as illustrated in Tables 1 and 2 based on the transmitted test signal and the received test signal and control a phase of the eleventh RFIC module (RFIC #11) to perform calibration.

FIG. **18** is a flowchart illustrating an operation of a calibration device according to an embodiment of the disclosure.

With reference to FIG. **18**, in step **1801**, the calibration device transmits a second signal in which a plurality of first phase code sets arbitrarily designated for a plurality of RF chains are applied to the first signal.

Here, the first signal may be an initial input signal. In order to calibrate a plurality of RF chains included in the phased array antenna, the calibration device may configure an arbitrary phase value among known phase values, and apply and transmit the phase value to the first signal.

According to an embodiment, the N number of linear equations are required to calibrate the N number of RF chains. For example, for each of the N number of RF chains, the N number of phase code sets may be generated by selecting an arbitrary value among known phase values, and the N number of different transmitting signals may be transmitted by applying each of the N number of generated phase code sets to the first signal.

That is, the second signal may include the N number of different transmitting signals, and be a test signal transmitted from the phased array antenna.

In step **1803**, the calibration device determines a phase difference generated in the plurality of RF chains using the plurality of second phase code sets identified from the transmitted second signal.

According to an embodiment, the calibration device may determine a linear equation for determining a variable value for a phase shift in RF channels that have transmitted the second signal using a first signal, a transmitting signal to which a plurality of phase code sets are applied to the first signal, and components of a second phase code set measured for RF channels from a second signal including the plurality of transmitting signals.

For example, the calibration device may identify the N number of transmitting signals constituting the second signal, and identify the N number of second phase code sets including phase values for the N number of RF channels from each transmitting signal. The calibration device may generate the N number of linear equations based on phase values identified in the N number of transmitting signals included in the received test signal with respect to the phase values configured to the N number of transmitting signals at a time point of transmission, and calculate a variable a of a phase shift of the identified phase value compared to the phase value configured upon transmitting with respect to each RF channel to determine a phase difference of the N number of RF chains.

In step **1805**, the calibration device may control phases of the RF chains corresponding to the determined phase difference based on the determined phase difference with respect to the N number of RF chains. In this case, the calibration device may maintain the phase of the RF chains temporarily or permanently in a controlled state.

According to an embodiment, in controlling the phase of the RF chains based on the determined phase difference, the calibration device is not limited to simply performing correction as much as the identified phase difference, but by arranging values for the phase difference for the identified RF chains, the calibration device may determine a phase control value that can more effectively calibrate the RF chains.

According to an embodiment, the calibration device may apply a proposed matrix so as to improve a performance in an operation of determining the phase control value. According to an embodiment, in determining the phase difference, an N×N square matrix for satisfying that a matrix for the phase values for the N number of RF chains and the N number of phase code sets identified from the test signal becomes the condition number **1** may be applied. In this case, the proposed N×N square matrix is determined so that the sum of each row converges to one constant.

That is, by adjusting a deviation of the phase difference of each of the RF chains to be small, the calibration device may more effectively control the phases of the RF chains.

FIG. **19** illustrates a partial operation flow of a calibration device according to an embodiment of the disclosure.

According to an embodiment, operations of FIG. **19** may be performed with a method of identifying a second signal transmitted from the calibration device. For example, step **1901** may be performed after step **1801** of FIG. **18**.

In step **1901**, the calibration device may receive a second signal transmitted from the phased array antenna through a reception antenna. The second signal received through the reception antenna may be transferred to a measuring instrument (or signal analyzer) connected to the reception antenna, and the measuring instrument may identify a second phase code set corresponding to a first phase code set from the received second signal.

In step **1903**, the calibration device may determine a phase difference for the N number of RF chains using the second phase code set obtained from the second signal and/or the first phase code set applied to the first signal.

According to an embodiment, the measuring instrument may receive information on the second signal from the controller to identify the first phase code set, and identify the second phase code set from the received information on the second signal. According to another embodiment, the measuring instrument may identify information on the second signal included in the second signal received through the reception antenna.

The calibration device may determine the N number of linear equations and determine a phase difference for the N number of RF chains using phase values of the first phase code set and/or phase values of the second phase code set by applying the same method as or a similar method to the method described in step **1803** of FIG. **18**.

When step **1903** is performed, the calibration device may end the operation of FIG. **19**. When the operation of FIG. **19** is ended, the calibration device may perform step **1805** of FIG. **18**.

FIG. **20** illustrates a partial operation flow of a calibration device according to an embodiment of the disclosure.

According to an embodiment, operations of FIG. **20** may be performed with a method of identifying a second signal transmitted from the calibration device. For example, step **2001** may be performed after step **1801** of FIG. **18**.

In step **2001**, the calibration device may receive a second signal transmitted from the phased array antenna through a coupler. For example, each of the N number of RF chains constituting the phased array antenna for transmitting the second signal may be connected to the coupler. The controller of the calibration device may receive a loopback signal monitored through the coupler as the second signal.

The controller may identify a second phase code set corresponding to the first phase code set from the received second signal.

In step **2003**, the calibration device may determine a phase difference for the N number of RF chains using the second phase code set obtained from the second signal and/or the first phase code set applied to the first signal.

According to an embodiment, the controller may identify a first phase code set applied to the second signal transmitted through the phased array antenna, and may identify a second phase code set from information on the second signal received through the coupler.

The calibration device may determine the N number of linear equations and determine a phase difference for the N number of RF chains using phase values of the first phase code set and/or phase values of the second phase code set by applying the same method as or a similar method to the method described in step **1803** of FIG. **18**.

When step **2003** is performed, the calibration device may end the operation of FIG. **20**. When the operation of FIG. **20** is ended, the calibration device may perform step **1805** of FIG. **18**.

FIGS. **21**A and **21**B are graphs illustrating a calibration result using a measuring instrument and a calibration result using a loopback signal in a transmission mode of a calibration device according to an embodiment of the disclosure.

FIG. **22** is a flowchart illustrating an operation of a calibration device according to an embodiment of the disclosure.

With reference to FIG. **22**, in step **2201**, the calibration device transmits a second signal in which a plurality of first phase code sets including phases arbitrarily designated for a plurality of RF chains are applied to the first signal.

Here, the first signal may be an initial input signal. In order to calibrate a plurality of RF chains included in the phased array antenna, the calibration device may configure an arbitrary phase value among known phase values, and apply and transmit the phase value to the first signal.

According to an embodiment, the N number of linear equations are required to calibrate the N number of RF chains. For example, for each of the N number of RF chains, the N number of phase code sets are generated by selecting an arbitrary value among known phase values, and by applying each of the N number of generated phase code sets to the first signal, the N number of different transmitting signals may be transmitted.

That is, the second signal may include the N number of different transmitting signals, and be a test signal transmitted from the phased array antenna.

In step **2203**, the calibration device determines a difference in distortion values for a plurality of RF chains based on a plurality of second phase code sets identified from the transmitted second signal. The distortion value may mean the magnitude of distorted signals. A difference in distortion values may mean a difference in magnitudes of distorted signals. When two or more signals of different frequencies are input to the transmitter, intermodulation distortion may occur for the signals. The calibration device may measure intermodulation distortion with respect to the signals. For example, FIG. **21**A illustrates an output signal **2110** when four signals of different frequencies (tone 1 to tone 4) are input to a transmitter. A signal distorted according to third-order intermodulation of a first frequency signal (tone 1) and a second frequency signal (tone 2) may correspond to a low frequency signal IMD 1 and a high frequency signal IMD 2. For example, the magnitude of the signal distorted according to the third-order intermodulation may be proportional to the magnitude of the output signal. For example, when output values of the first frequency signal (tone 1) and the second frequency signal (tone 2) increase by 1 dB, the magnitude of the signal distorted according to third-order intermodulation may increase by 3 dB. When the output values of the first frequency signal (tone 1) and the second frequency signal (tone 2) decrease by 1 dB, the magnitude of the signal distorted according to the third-order intermodulation may decrease by 3 dB.

The distortion may occur according to gain expansion or gain compression of the amplifier. For example, when the first frequency signal (tone 1) and the second frequency signal (tone 2) are in phase, a phase of the low frequency signal (IMD 1) and a phase of the high frequency signal (IMD 2) may mutually have a certain relationship. For example, in case of gain expansion of the amplifier, the phase of the low frequency signal IMD 1 and the phase of the high frequency signal IMD 2 may be in phase. In case of gain compression of the amplifier, the phase of the low frequency signal IMD 1 and the phase of the high frequency signal IMD 2 may be out of phase.

For example, the phase shifter may convert and output four signals of different frequencies (tone 1 to tone 4) based on Equation 16. For example, gain changes with respect to four signals of different frequencies (tones 1 to 4) may be the same as or similar to the gain variation graph **930** of FIG. **9**B.

For example, the phase shifter may output a low frequency signal IMD 1 and a high frequency signal IMD 2 based on Equation 16. For example, with reference to FIG. **21**B, gain changes with respect to the low frequency signal IMD 1 and the high frequency signal IMD 2 may be the same as or similar to a third-order intermodulation distortion modulation graph **2120**. Because the magnitude of the signal distorted according to the third-order intermodulation changes by 3 dB whenever the value of the output signal changes by 1 dB, by adjusting gains of the amplifiers **110-1-5** to **110**-N–5, optimization of distortion may be performed.

In step **2205**, the calibration device may calibrate a gain of at least one of the plurality of RF chains based on a difference in distortion values determined with respect to the N number of RF chains.

According to various embodiments of the disclosure, the calibration device or elements thereof may be elements of a device (hereinafter, wireless communication device) that performs wireless communication using a phased array antenna (e.g., the phased array antenna **100**).

In other words, the calibration device may not be implemented separately from the wireless communication device, but may be implemented inside the wireless communication device. In this case, the wireless communication device may perform additional calibration, if necessary (e.g., when a

temperature of an internal circuit of the wireless communication device changes) for the phased array antenna that has already been calibrated.

According to various embodiments of the disclosure, a wireless communication device may include at least one of an electronic device, a terminal, a 'user equipment (UE)', a 'mobile station', a 'subscriber station', a 'remote terminal', a 'wireless terminal', a 'user device', a 'base station', an 'access point (AP)', an 'eNodeB (eNB)', a '5th generation node (5G node)', a 'wireless point', a 'transmission/reception point (TRP)', or other terms having an equivalent technical meaning or may be configured as at least one thereof.

According to various embodiments of the disclosure, the phase shifter of the phased array antenna constituting the calibration device may be configured to convert a phase of an IF signal. In this case, the controller of the calibration device may control phase shifters of the phased array antenna to convert a phase of an initial input signal transferred from the transmitter into the IF band.

According to various embodiments of the disclosure, the phase shifter of the phased array antenna in the calibration device may be configured to transform a phase of an LO signal. In this case, the controller of the calibration device may control the phase shifters of the phased array antenna to provide the phase-converted LO signals to the mixer of each RF chain. Because the phase change with respect to the LO signal is reflected to the RF signal converted from the IF signal based on the phase-converted LO signal, the calibration device may control the phase transformers configured to convert the phase of the LO signal to resultantly convert a phase of the signal transmitted by each RF chain.

According to various embodiments of the disclosure, the phased array antenna of the calibration device may include a digital to analog converter (DAC). The DAC may perform beamforming on a digital signal by multiplying the digital signal by a beamforming weight, and convert the beamformed digital signals into analog signals. Here, the beamforming weights may be used for changing the magnitude and/or phase of a signal, and be referred to as a 'precoding matrix', a 'precoder', or the like. The calibration device may control the DAC associated with each RF chain so that a phase of an initial input signal is changed for each RF chain, and as a result, the calibration device may convert the phase of the signal transmitted by each RF chain.

In describing in detail embodiments of the disclosure, 3GPP will mainly focus on the communication standard configured by the standard, but the main gist of the disclosure is applicable to other communication systems having a similar technical background with slight modifications within the scope not significantly departing from the scope of the disclosure, which will be possible at the discretion of a person having skilled technical knowledge in the technical field of the disclosure.

INDUSTRIAL APPLICABILITY

The disclosure may be used in the electronics industry and the information and communications industry.

The invention claimed is:

1. A method for calibration of a phased array antenna, the method comprising:

transmitting, by a phased array antenna including three or more RF chains, a test signal in which a plurality of first phase code sets including a phase arbitrarily designated for each of the three or more RF chains are applied to an initial input signal transmitted from the three or more RF chains, wherein the test signal is a combined signal of signals simultaneously outputted from the three or more RF chains;

obtaining, by a reception antenna, the test signal;

determining a phase difference of each of the three or more RF chains based on a plurality of second phase code sets measured corresponding to the plurality of first phase code sets from the obtained test signal; and

calibrating a phase of at least some of the three or more RF chains based on the phase difference of each of the three or more RF chains.

2. The method of claim **1**, wherein the plurality of first phase code sets are generated by the three or more RF chains.

3. The method of claim **1**, wherein obtaining the test signal through a coupler connected to the three or more RF chains.

4. The method of claim **1**, wherein determining a phase difference of each of the three or more RF chains based on the plurality of second phase code sets measured corresponding to the plurality of first phase code sets from the obtained test signal comprises determining a phase difference of each of the three or more RF chains based on linear equations generated by the plurality of first phase code sets or the plurality of second phase code sets.

5. The method of claim **1**, wherein calibrating a phase of at least some of the three or more RF chains based on the phase difference of each of the three or more RF chains comprises:

determining a phase control value of each of the three or more RF chains using a result of applying a square matrix in which a sum of each row converges to one constant to the phase difference; and

applying the determined phase control value to each of the three or more RF chains.

6. The method of claim **5**, wherein a square matrix in which the sum of each row converges to one constant is determined based on following equation,

$$H_{P1} = 1 \qquad \text{[Equation]}$$

$$H_{p2n} = \begin{bmatrix} H_{Pn} & H_{Pn} \cdot e^{j\frac{2}{\pi}} \\ H_{Pn} \cdot e^{j\frac{2}{\pi}} & H_{Pn} \end{bmatrix}$$

where 2n is determined by the three or more RF chains included in the phased array antenna.

7. The method of claim **1**, wherein calibrating a phase of at least some of the three or more RF chains based on the phase difference of each of the three or more RF chains comprises:

determining a phase control value in which a gain of the phased array antenna is maximized for each of the three or more RF chains; and

applying the determined phase control value to each of the three or more RF chains.

8. A device for calibration of a phased array antenna, the device comprising:

the phased array antenna including three or more RF chains for transmitting a signal; and

a controller configured to generate a test signal in which a plurality of first phase code sets including a phase arbitrarily designated for each of the three or more RF chains are applied to an initial input signal transmitted from the three or more RF chains, to transmit the generated test signal through the three or

more RF chains, to obtain the transmitted test signal, to determine a phase difference of each of the three or more RF chains based on a plurality of second phase code sets measured corresponding to the plurality of first phase code sets from the obtained test signal, and to calibrate a phase for at least some of the three or more RF chains based on the phase difference of each of the three or more RF chains, wherein the test signal is a combined signal of signals simultaneously outputted from the three or more RF chains.

9. The device of claim **8**, wherein the controller is configured to generate the plurality of first phase code sets by the three or more RF chains.

10. The device of claim **8**, wherein the controller is configured to receive the test signal through a coupler connected to the three or more RF chains.

11. A method for calibration of a phased array antenna, the method comprising:

transmitting a test signal in which a plurality of first phase code sets including a phase arbitrarily designated for each of three or more RF chains are applied to an initial input signal transmitted from the three or more RF chains, wherein the test signal is a combined signal of signals simultaneously outputted from the three or more RF chains;

obtaining the test signal;

determining a distortion difference of each of the three or more RF chains based on a plurality of second phase code sets measured corresponding to the plurality of first phase code sets from the obtained test signal; and

calibrating a gain of at least some of the three or more RF chains based on the distortion difference of each of the three or more RF chains.

* * * * *