US 20250261049A1

(19) United States
(12) Patent Application Publication
MONDET et al.
(10) Pub. No.: US 2025/0261049 A1
(43) Pub. Date: Aug. 14, 2025

(54) **MOBILITY FOR MULTI-MODAL UES AND DISTRIBUTED ARCHITECTURE**

(71) Applicant: **QUALCOMM Incorporated**, San Diego, CA (US)

(72) Inventors: **Mickael MONDET**, Louannec (FR); **Prasad Reddy KADIRI**, San Diego, CA (US); **Diana MAAMARI**, San Diego, CA (US); **Hyun Yong LEE**, San Diego, CA (US); **Prashanth Haridas HANDE**, San Diego, CA (US); **Peerapol TINNAKORNSRISUPHAP**, San Diego, CA (US)

(21) Appl. No.: **18/440,900**

(22) Filed: **Feb. 13, 2024**

Publication Classification

(51) **Int. Cl.**
H04W 36/00 (2009.01)
H04W 36/08 (2009.01)

(52) **U.S. Cl.**
CPC ... ***H04W 36/0009*** (2018.08); ***H04W 36/0033*** (2013.01); ***H04W 36/087*** (2023.05)

(57) **ABSTRACT**

An apparatus at a CP of a CU associated with a plurality of wireless devices associated with a first multi-modal service configured to output, for a target distributed unit (DU) associated with a joint handover procedure for the plurality of wireless devices, a first request relating to a first context of a first wireless device in the plurality of wireless devices, wherein the first request comprises a first identifier of at least a second wireless device in the plurality of wireless devices associated with the joint handover procedure; and output, for the target DU, a second request relating to a second context of the second wireless device in the plurality of wireless devices, wherein the second request comprises a second identifier of at least the first wireless device.

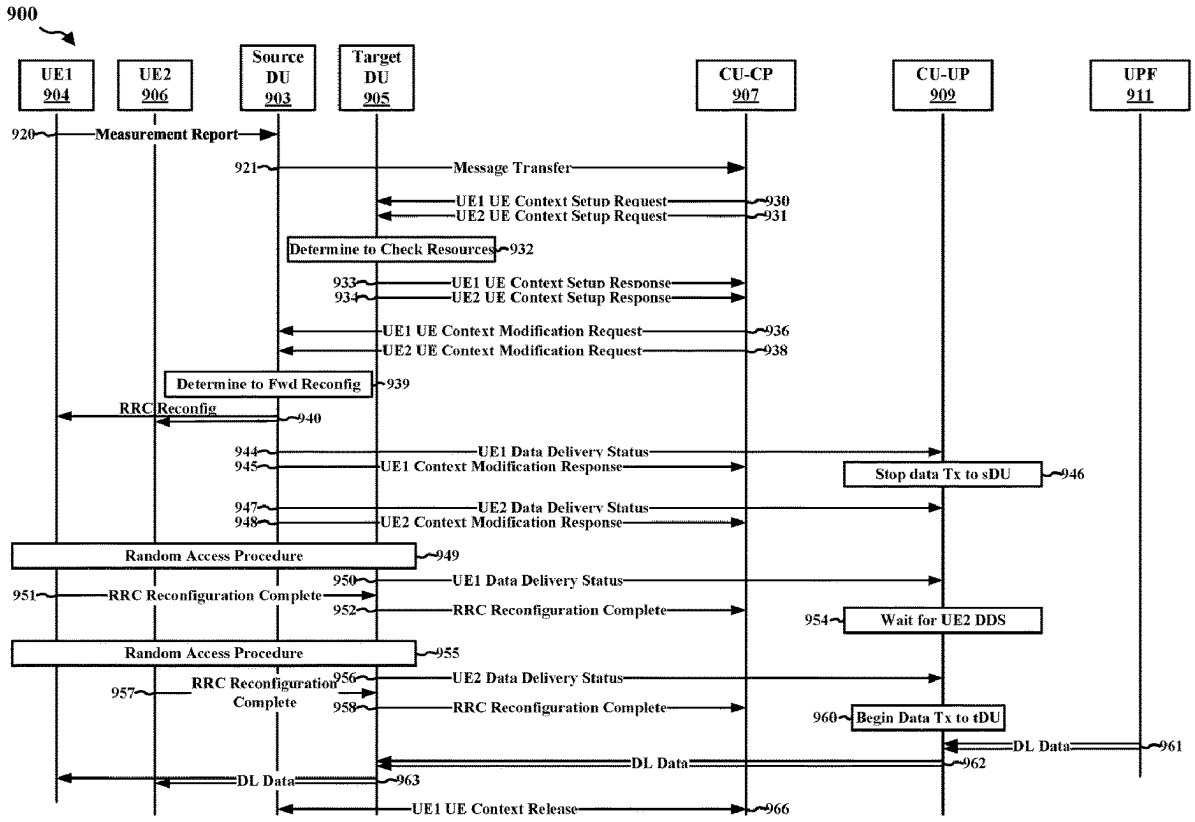

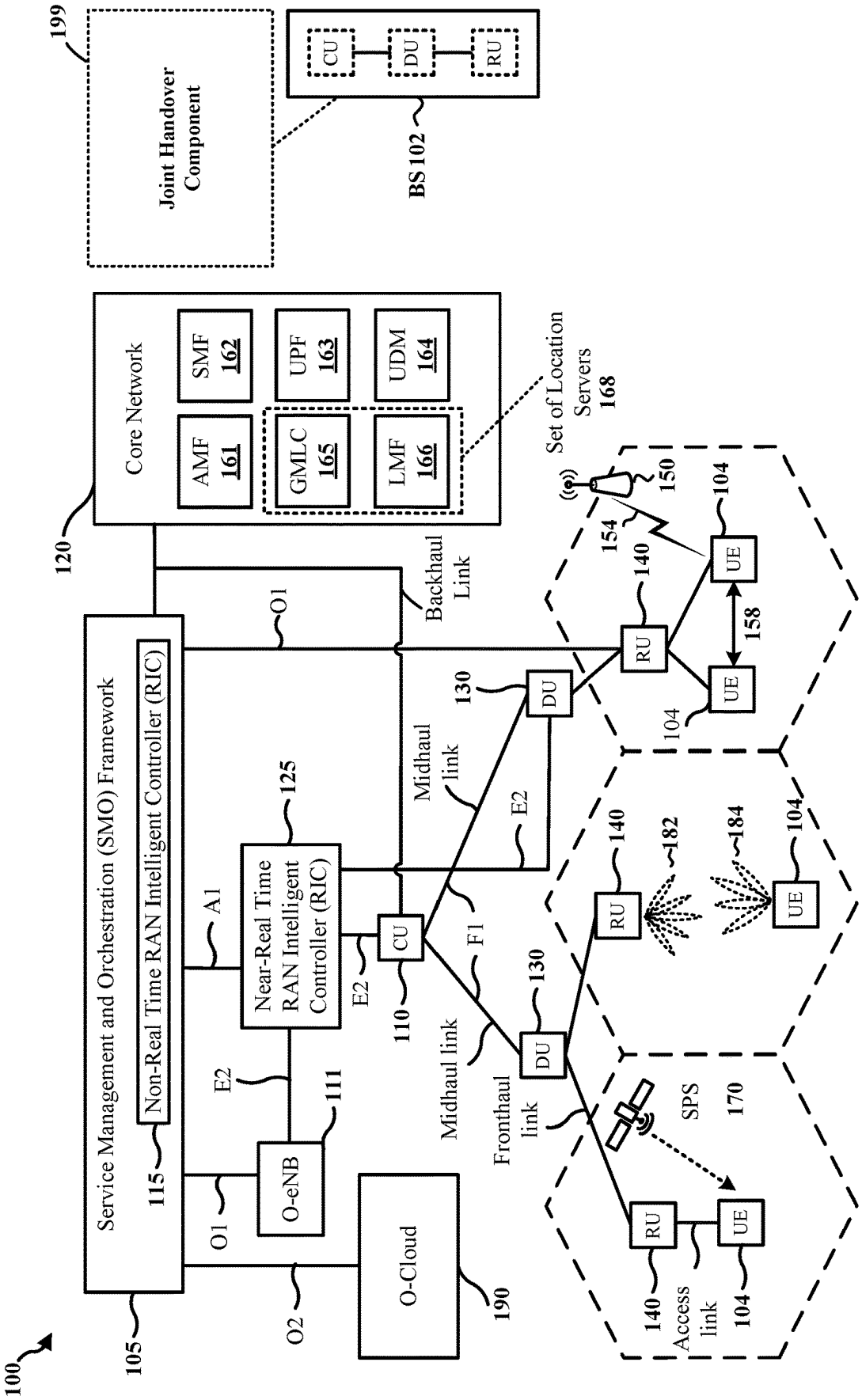
199
Joint Handover Component
CU
DU
RU
BS 102
Core Network
AMF 161
SMF 162
GMLC 165
UPF 163
LMF 166
UDM 164
Set of Location Servers 168
120
Backhaul Link
O1
Service Management and Orchestration (SMO) Framework
Non-Real Time RAN Intelligent Controller (RIC)
115
105
A1
Near-Real Time RAN Intelligent Controller (RIC)
125
E2
O1
O-eNB
111
O2
O-Cloud
190
CU
110
E2
Midhaul link
F1
Midhaul link
Fronthaul link
DU
130
DU
130
E2
RU
140
RU
140
RU
140
154
150
UE
104
UE
104
UE
104
158
182
184
SPS
170
Access link

FIG. 1

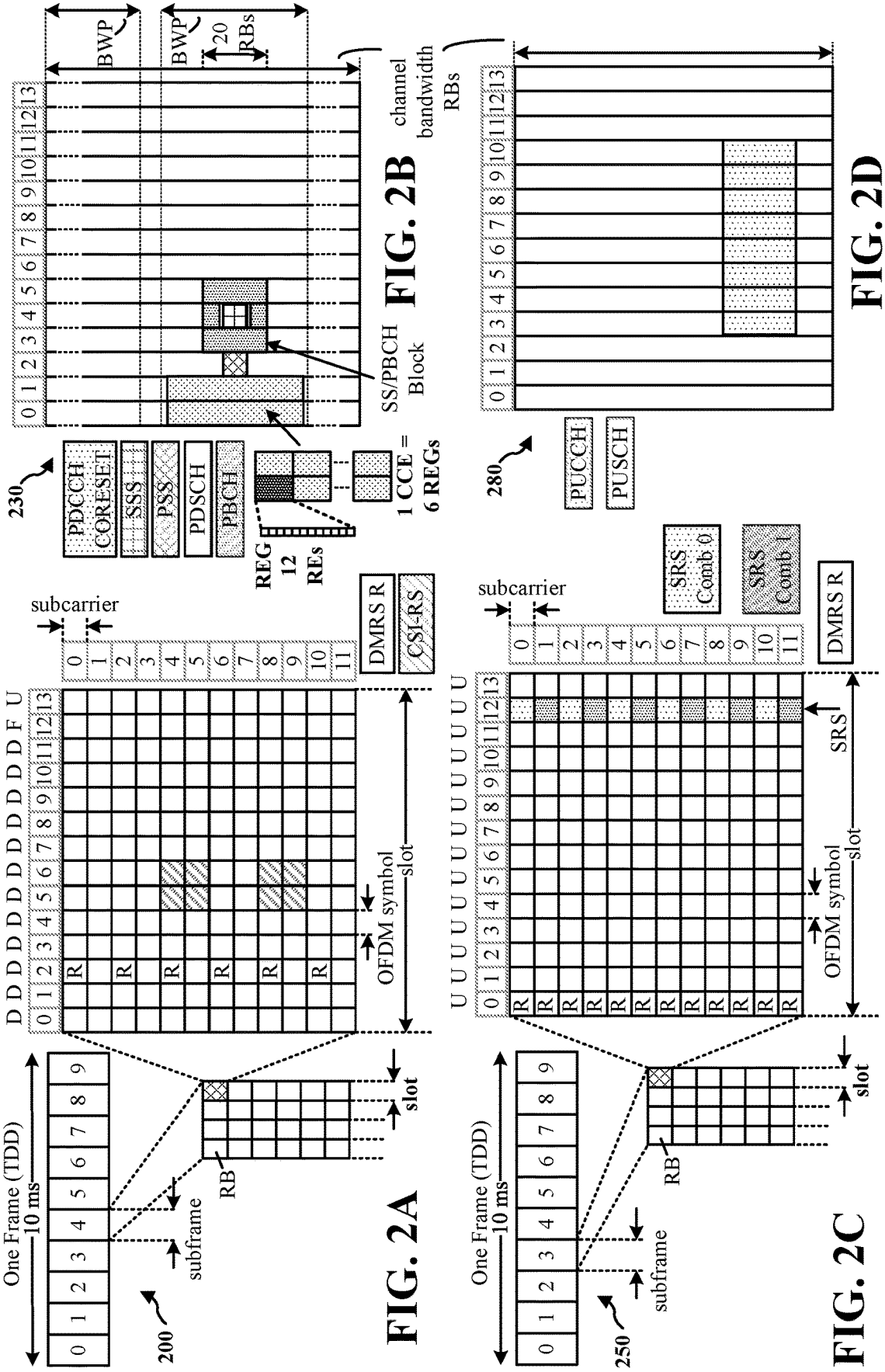
One Frame (TDD)
10 ms
0 1 2 3 4 5 6 7 8 9
200
subframe
RB
slot
D D D D D D D D D D D D F U
0 1 2 3 4 5 6 7 8 9 10 11 12 13
R
subcarrier
0 1 2 3 4 5 6 7 8 9 10 11
OFDM symbol
slot
DMRS R
CSI-RS
230
PDCCH CORESET
SSS
PSS
PDSCH
PBCH
REG
12 REEs
1 CCE = 6 REGs
BWP
BWP
20 RBs
0 1 2 3 4 5 6 7 8 9 10 11 12 13
SS/PBCH Block
channel bandwidth RBs
FIG. 2A
FIG. 2B
One Frame (TDD)
10 ms
0 1 2 3 4 5 6 7 8 9
250
subframe
RB
slot
U U U U U U U U U U U U U U
0 1 2 3 4 5 6 7 8 9 10 11 12 13
R
subcarrier
0 1 2 3 4 5 6 7 8 9 10 11
OFDM symbol
slot
SRS
SRS Comb 0
SRS Comb 1
DMRS R
280
PUCCH
PUSCH
0 1 2 3 4 5 6 7 8 9 10 11 12 13
FIG. 2C
FIG. 2D

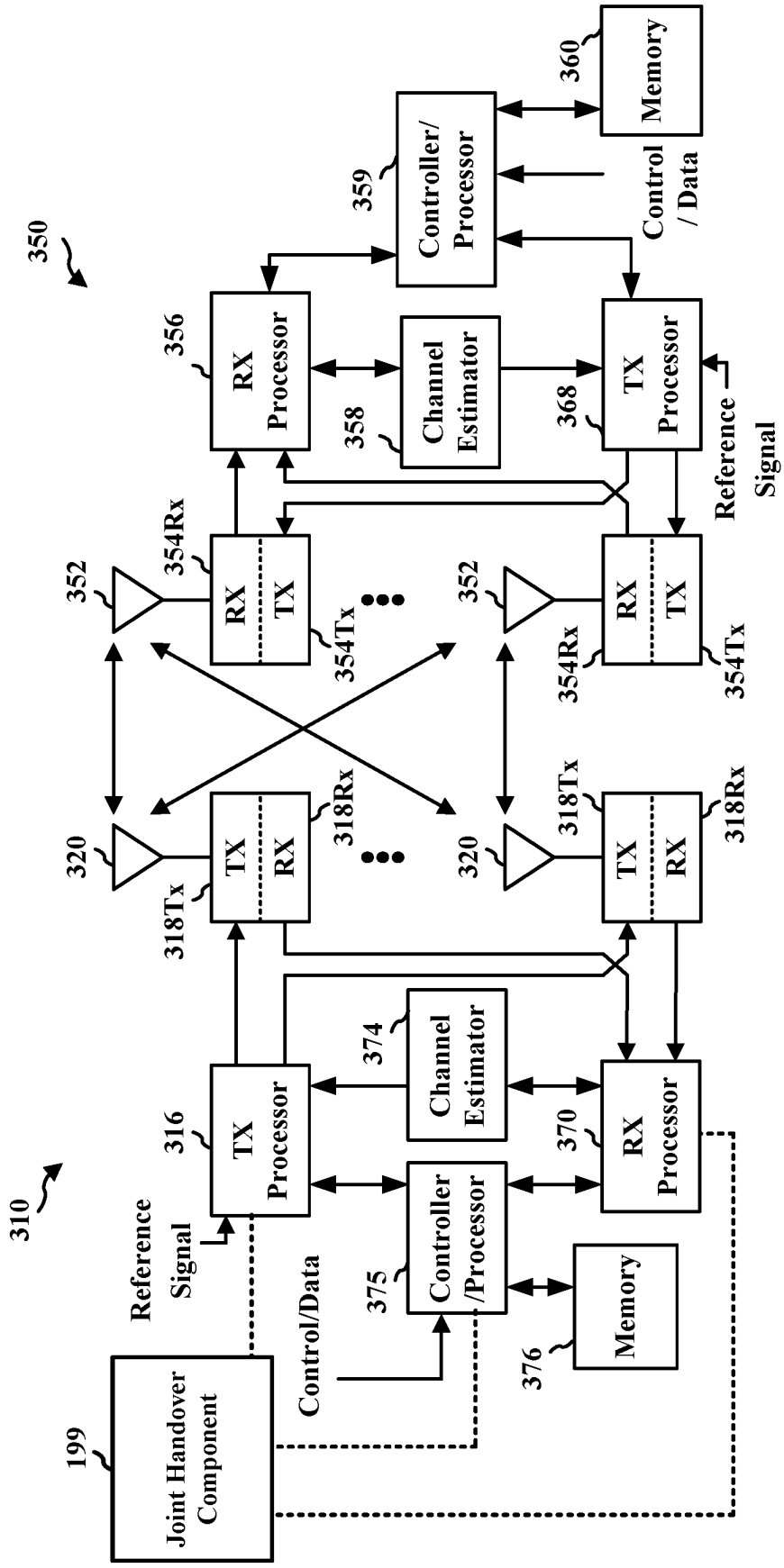
350
310
199
Joint Handover Component
Reference Signal
Control/Data
375
Controller /Processor
376
Memory
316
TX Processor
374
Channel Estimator
370
RX Processor
320
318Tx
TX
RX
318Rx
352
354Rx
RX
TX
354Tx
356
RX Processor
358
Channel Estimator
368
TX Processor
359
Controller/ Processor
360
Memory
Control / Data
Reference Signal

FIG. 3

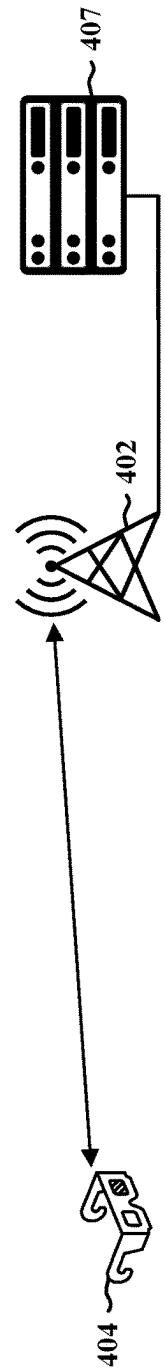

FIG. 4A

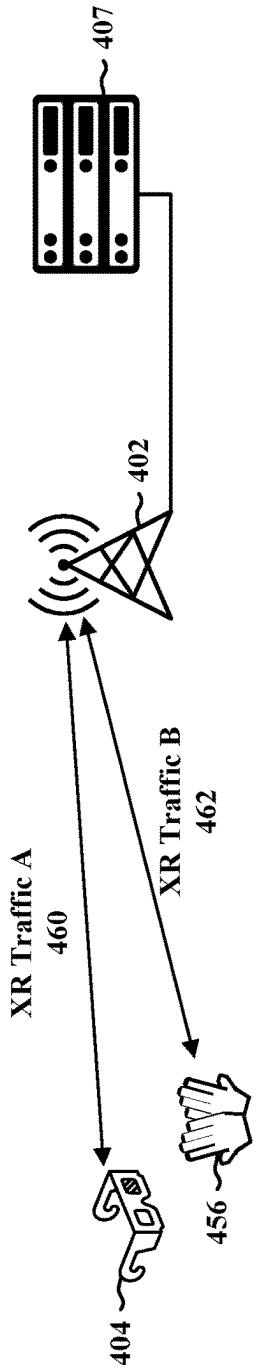

FIG. 4B

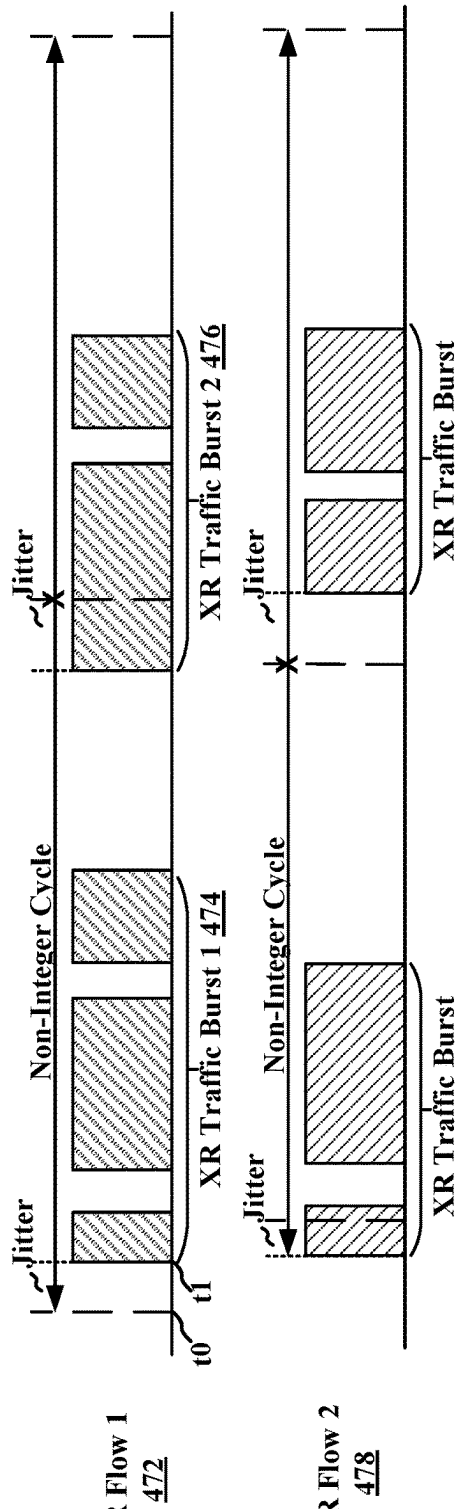

FIG. 4C

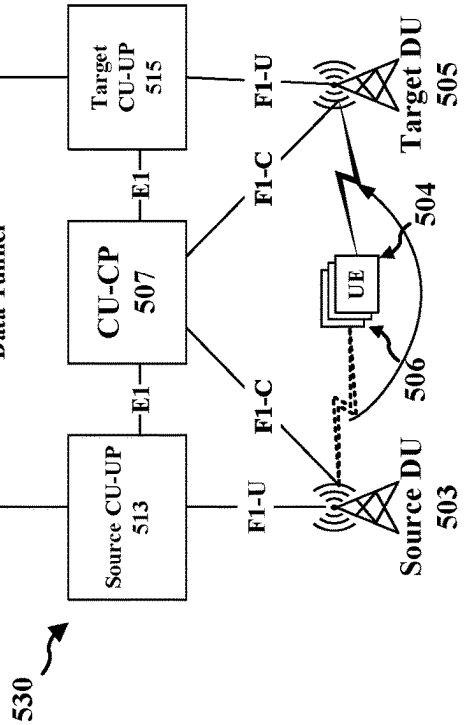

FIG. 5B

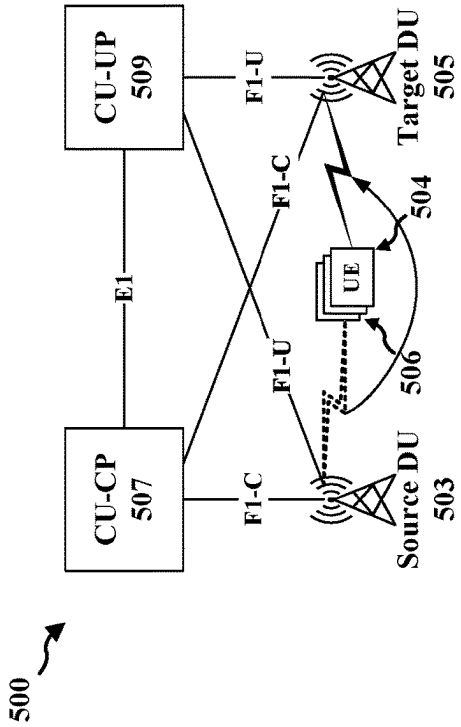

FIG. 5A

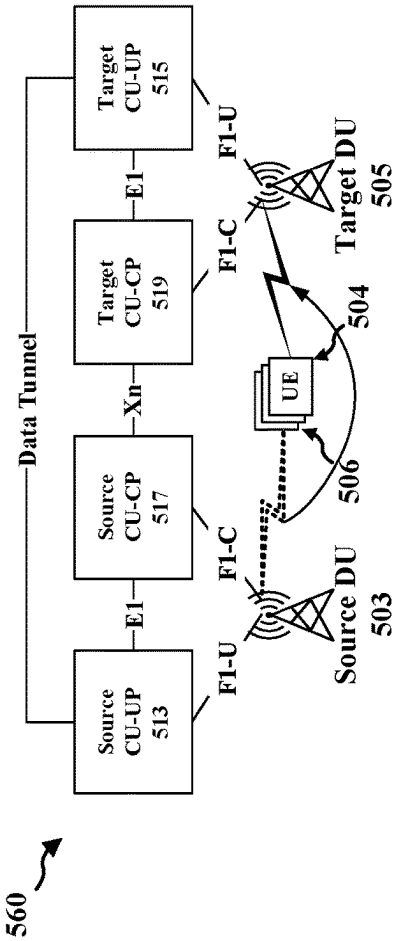

FIG. 5C

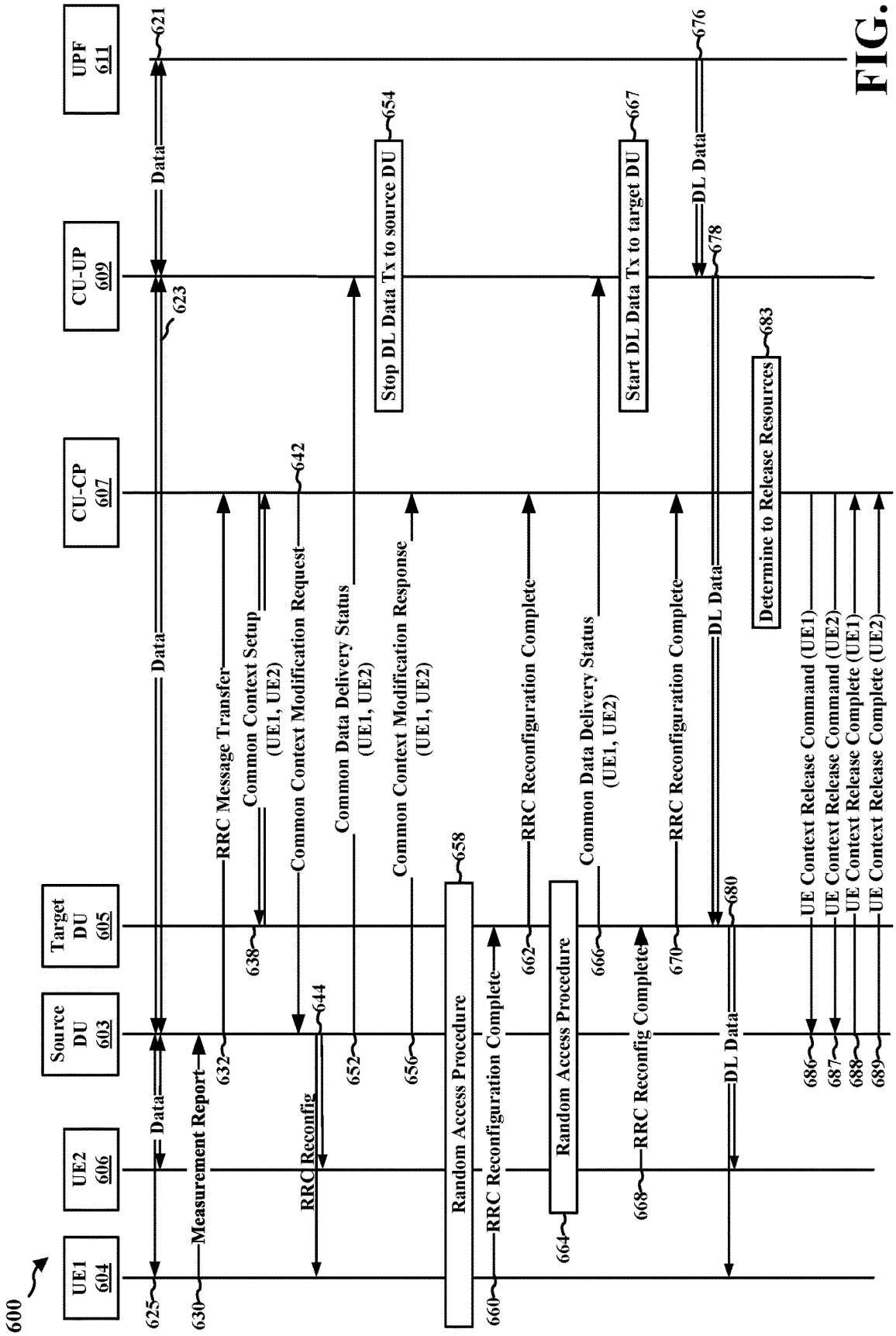
600
UE1 604
UE2 606
Source DU 603
Target DU 605
CU-CP 607
CU-UP 609
UPF 611
Data
Data
Data
Measurement Report
RRC Message Transfer
Common Context Setup (UE1, UE2)
Common Context Modification Request
RRC Reconfig
Common Data Delivery Status (UE1, UE2)
Stop DL Data Tx to source DU
Common Context Modification Response (UE1, UE2)
Random Access Procedure
RRC Reconfiguration Complete
RRC Reconfiguration Complete
Random Access Procedure
Common Data Delivery Status (UE1, UE2)
Start DL Data Tx to target DU
RRC Reconfiguration Complete
RRC Reconfig Complete
DL Data
DL Data
DL Data
Determine to Release Resources
UE Context Release Command (UE1)
UE Context Release Command (UE2)
UE Context Release Complete (UE1)
UE Context Release Complete (UE2)
625
630
632
638
642
644
652
654
656
658
660
662
664
666
667
668
670
676
678
680
683
686
687
688
689
621
623

FIG. 6

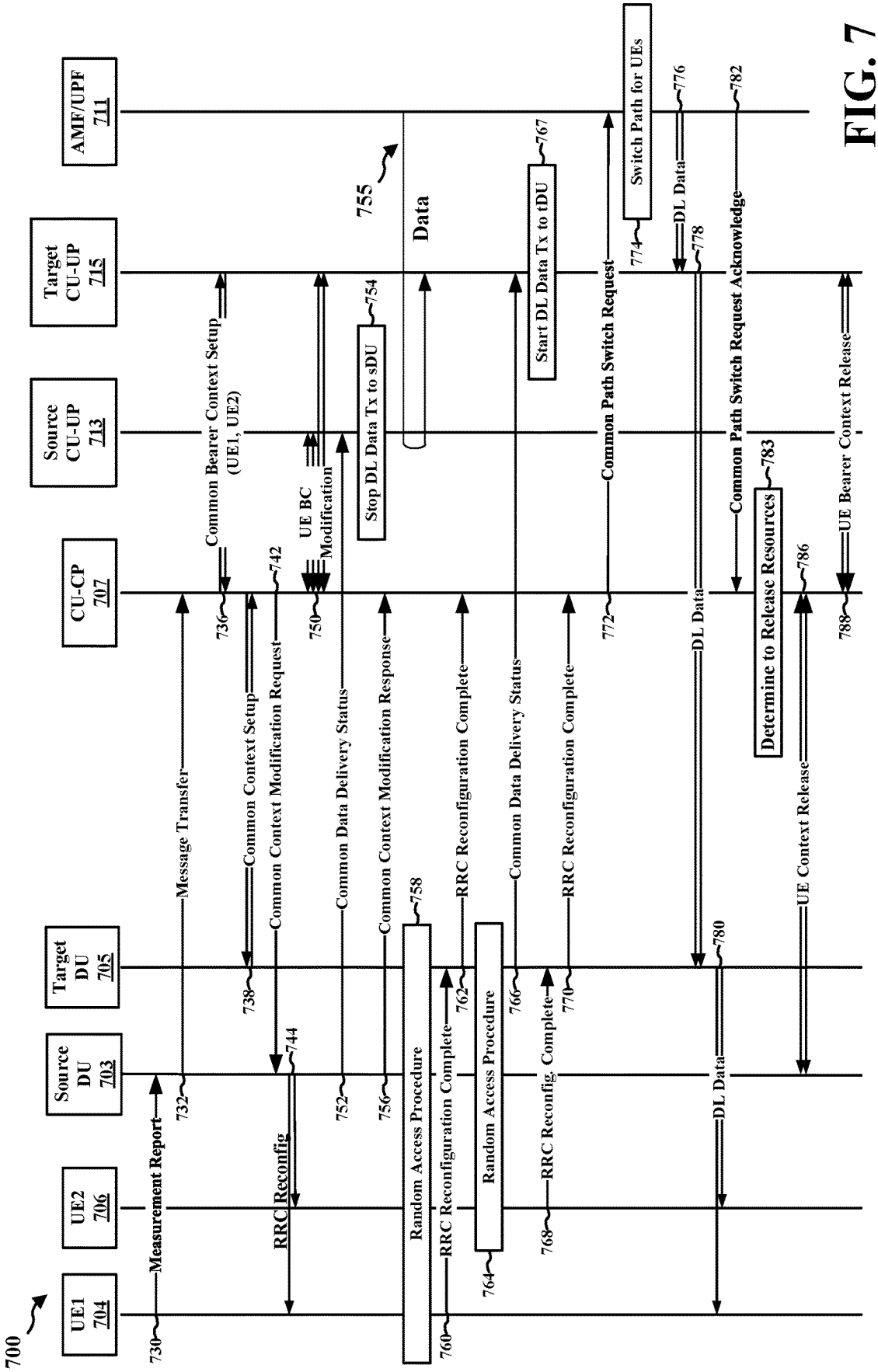
700
UE1 704
UE2 706
Source DU 703
Target DU 705
CU-CP 707
Source CU-UP 713
Target CU-UP 715
AMF/UPF 711
Measurement Report
730
Message Transfer
732
Common Bearer Context Setup (UE1, UE2)
736
Common Context Setup
738
Common Context Modification Request
742
RRC Reconfig
744
UE BC Modification
750
Common Data Delivery Status
752
Stop DL Data Tx to sDU
754
Common Context Modification Response
756
755
Data
Random Access Procedure
758
RRC Reconfiguration Complete
760
RRC Reconfiguration Complete
762
Random Access Procedure
764
Common Data Delivery Status
766
Start DL Data Tx to tDU
767
RRC Reconfiguration Complete
768
RRC Reconfig. Complete
770
Common Path Switch Request
772
Switch Path for UEs
774
DL Data
776
DL Data
778
DL Data
780
Common Path Switch Request Acknowledge
782
Determine to Release Resources
783
UE Context Release
786
UE Bearer Context Release
788

FIG. 7

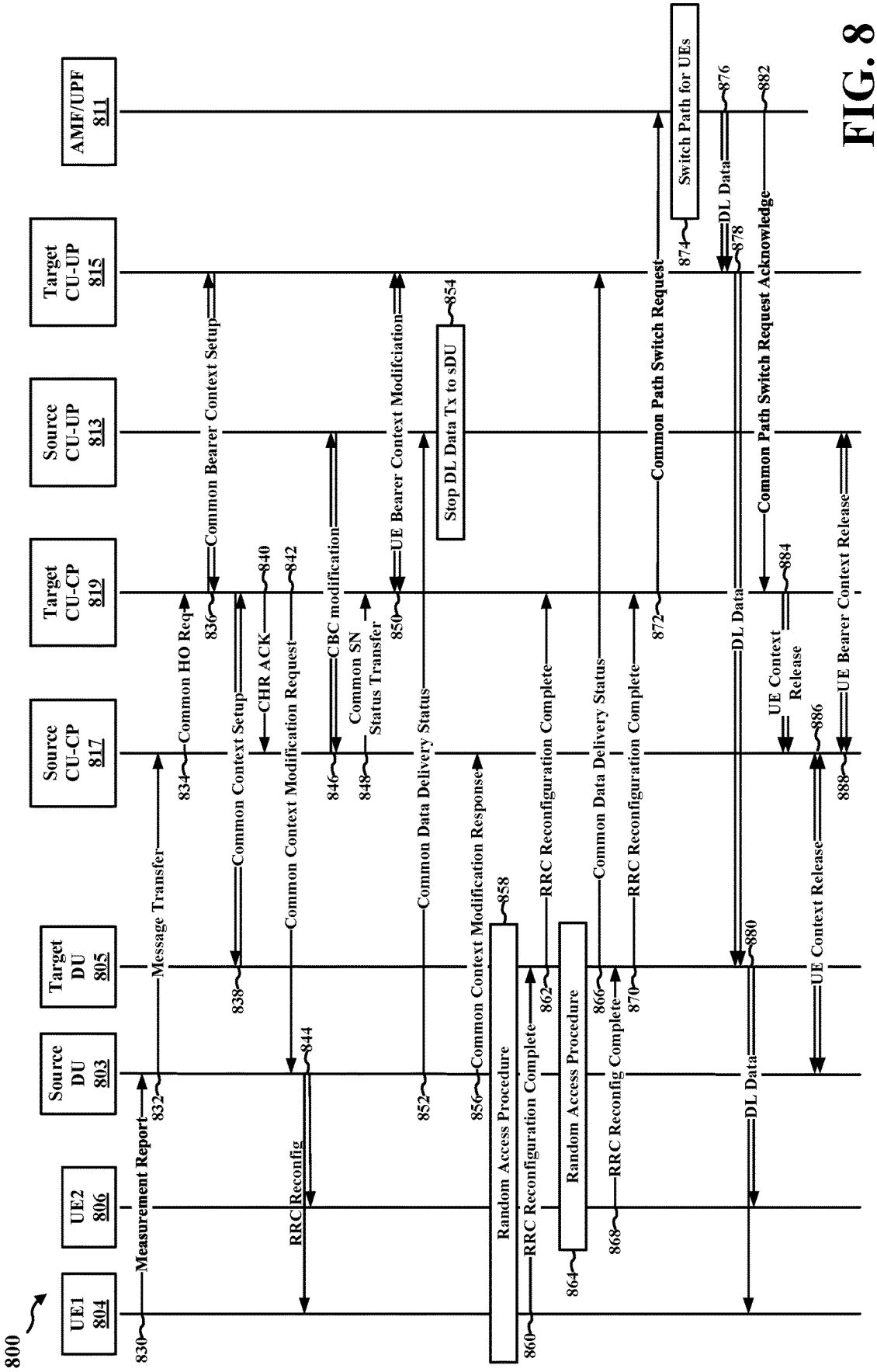
800
UE1 804
UE2 806
Source DU 803
Target DU 805
Source CU-CP 817
Target CU-CP 819
Source CU-UP 813
Target CU-UP 815
AMF/UPF 811
Measurement Report
Message Transfer
Common HO Req
Common Bearer Context Setup
Common Context Setup
CHR ACK
Common Context Modification Request
RRC Reconfig
CBC modification
Common SN Status Transfer
UE Bearer Context Modifciation
Stop DL Data Tx to sDU
Common Data Delivery Status
Common Context Modification Response
Random Access Procedure
RRC Reconfiguration Complete
Random Access Procedure
RRC Reconfiguration Complete
Common Data Delivery Status
RRC Reconfiguration Complete
RRC Reconfig Complete
Common Path Switch Request
Switch Path for UEs
DL Data
DL Data
DL Data
Common Path Switch Request Acknowledge
UE Context Release
UE Bearer Context Release
UE Context Release
830
832
834
836
838
840
842
844
846
848
850
852
854
856
858
860
862
864
866
868
870
872
874
876
878
880
882
884
886
888

FIG. 8

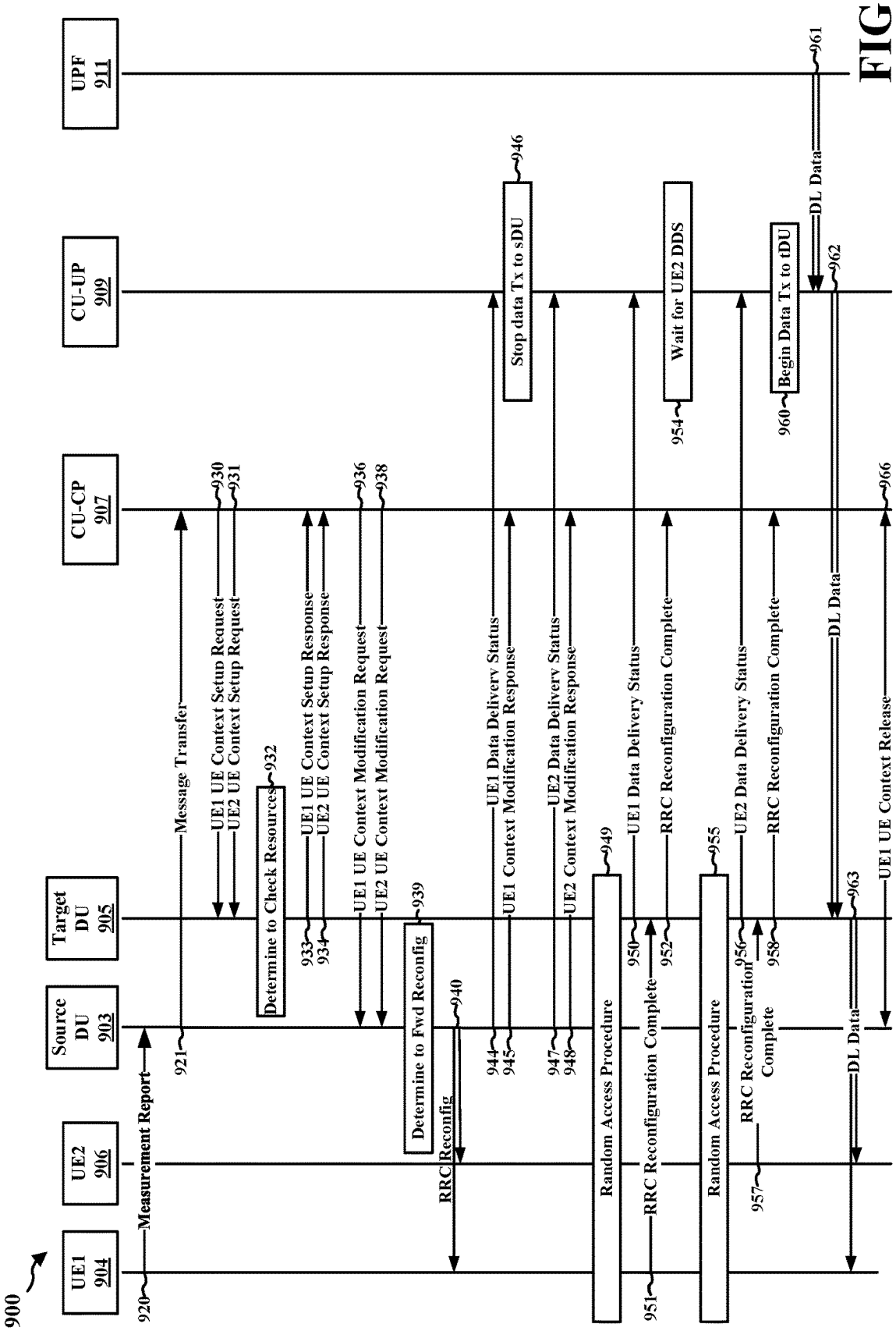
900
UE1 904
UE2 906
Source DU 903
Target DU 905
CU-CP 907
CU-UP 909
UPF 911
920
Measurement Report
921
Message Transfer
930
UE1 UE Context Setup Request
931
UE2 UE Context Setup Request
932
Determine to Check Resources
933
UE1 UE Context Setup Response
934
UE2 UE Context Setup Response
936
UE1 UE Context Modification Request
938
UE2 UE Context Modification Request
939
Determine to Fwd Reconfig
940
RRC Reconfig
944
UE1 Data Delivery Status
945
UE1 Context Modification Response
946
Stop data Tx to sDU
947
UE2 Data Delivery Status
948
UE2 Context Modification Response
949
Random Access Procedure
950
UE1 Data Delivery Status
951
RRC Reconfiguration Complete
952
RRC Reconfiguration Complete
954
Wait for UE2 DDS
955
Random Access Procedure
956
UE2 Data Delivery Status
957
RRC Reconfiguration Complete
958
RRC Reconfiguration Complete
960
Begin Data Tx to tDU
961
DL Data
962
DL Data
963
DL Data
966
UE1 UE Context Release

FIG. 9

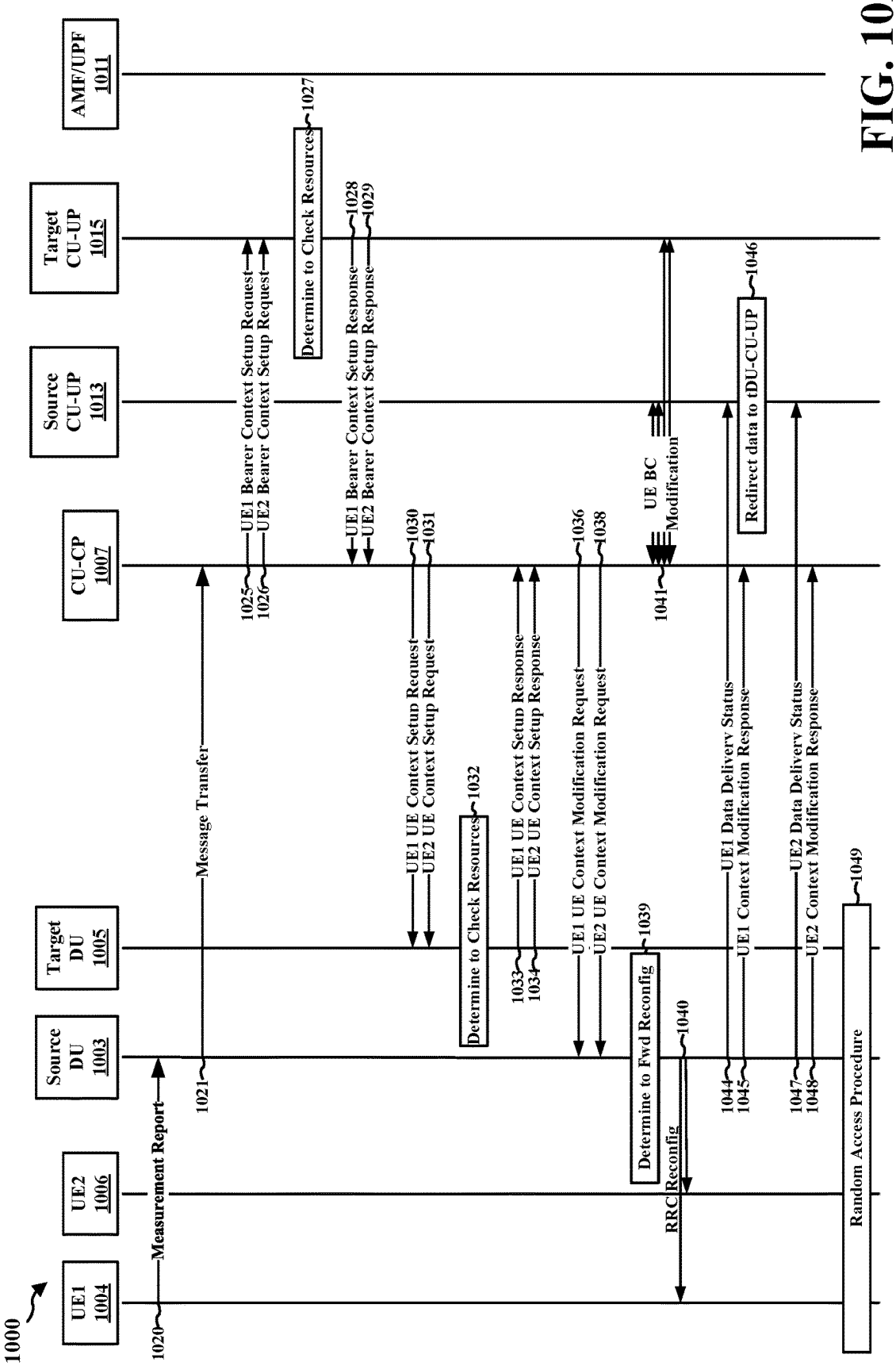
1000
UE1 1004
UE2 1006
Source DU 1003
Target DU 1005
CU-CP 1007
Source CU-UP 1013
Target CU-UP 1015
AMF/UPF 1011
1020
Measurement Report
1021
Message Transfer
1025
UE1 Bearer Context Setup Request
1026
UE2 Bearer Context Setup Request
Determine to Check Resources
1027
1028
UE1 Bearer Context Setup Response
1029
UE2 Bearer Context Setup Response
1030
UE1 UE Context Setup Request
1031
UE2 UE Context Setup Request
Determine to Check Resources
1032
1033
UE1 UE Context Setup Response
1034
UE2 UE Context Setup Response
1036
UE1 UE Context Modification Request
1038
UE2 UE Context Modification Request
1039
Determine to Fwd Reconfig
1040
RRC Reconfig
1041
UE BC Modification
Redirect data to tDU-CU-UP
1046
1044
UE1 Data Delivery Status
1045
UE1 Context Modification Response
1047
UE2 Data Delivery Status
1048
UE2 Context Modification Response
1049
Random Access Procedure

FIG. 10A

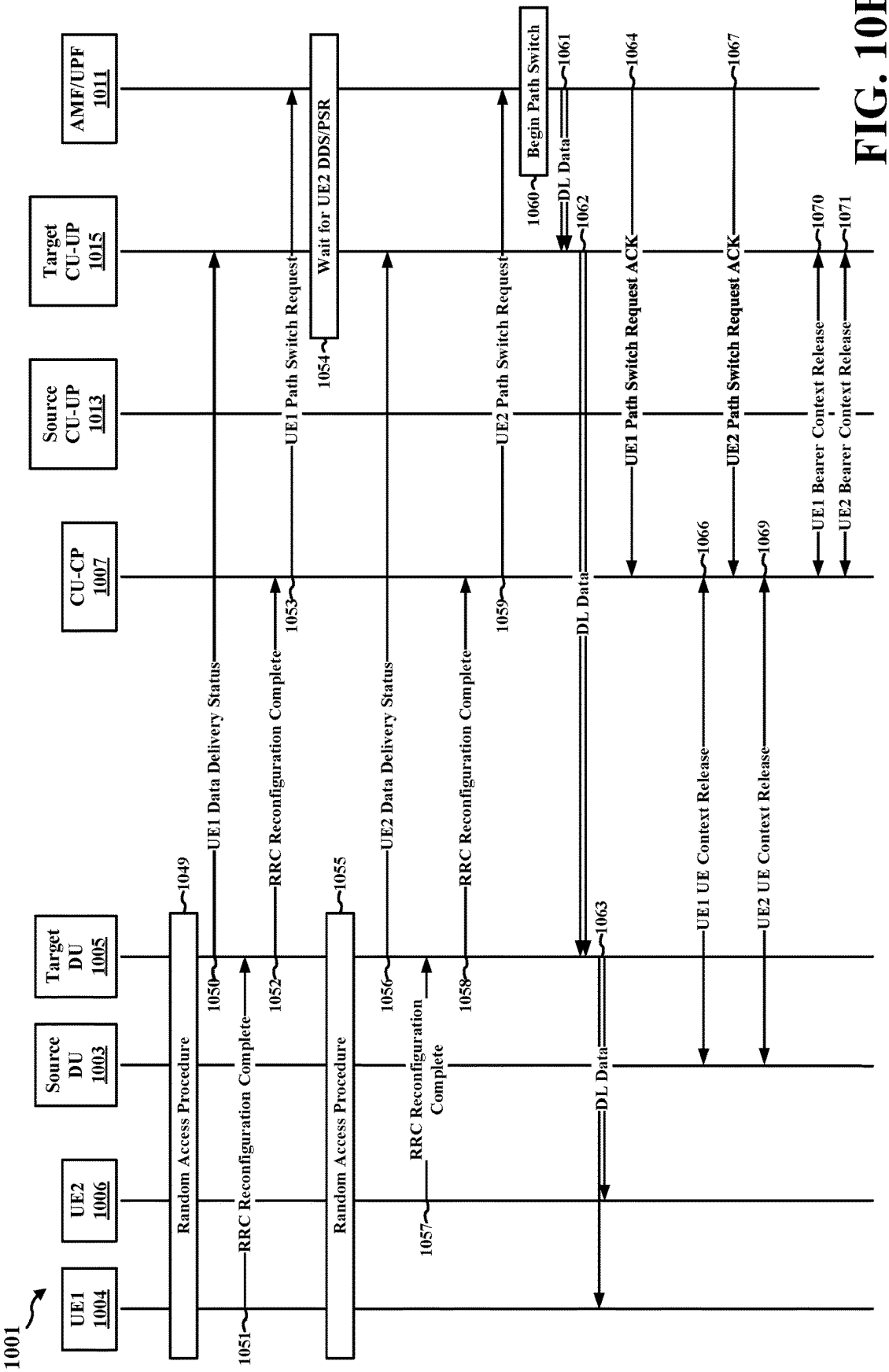
1001
UE1 1004
UE2 1006
Source DU 1003
Target DU 1005
Source CU-UP 1013
Target CU-UP 1015
CU-CP 1007
AMF/UPF 1011
1049
Random Access Procedure
1051
RRC Reconfiguration Complete
1050
UE1 Data Delivery Status
1052
RRC Reconfiguration Complete
1053
UE1 Path Switch Request
1054
Wait for UE2 DDS/PSR
1055
Random Access Procedure
1056
UE2 Data Delivery Status
1057
RRC Reconfiguration Complete
1058
RRC Reconfiguration Complete
1059
UE2 Path Switch Request
1060
Begin Path Switch
1061
DL Data
1062
DL Data
1063
DL Data
1064
UE1 Path Switch Request ACK
1066
UE1 UE Context Release
1067
UE2 Path Switch Request ACK
1069
UE2 UE Context Release
1070
UE1 Bearer Context Release
1071
UE2 Bearer Context Release

FIG. 10B

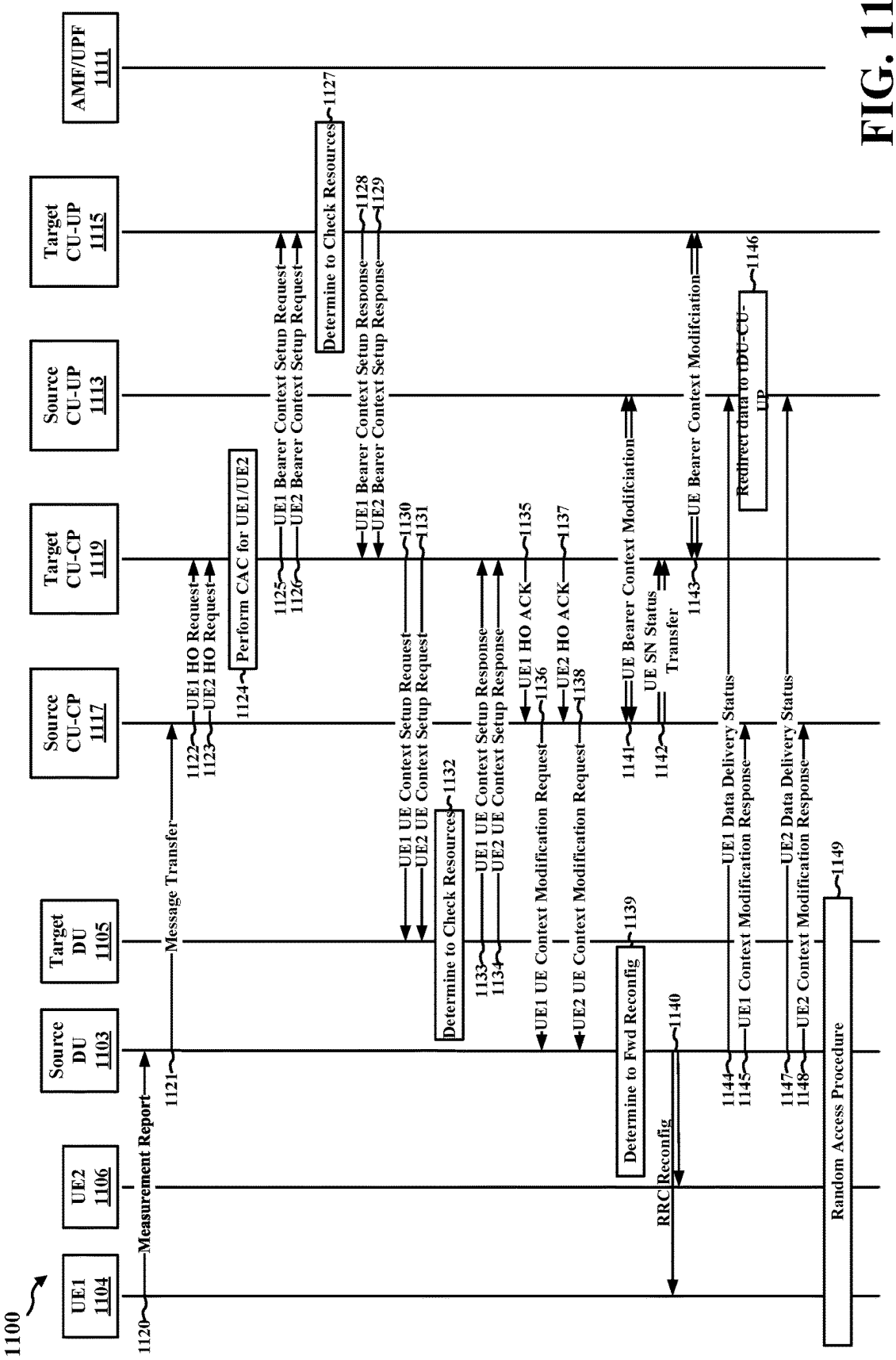
1100
UE1 1104
UE2 1106
Source DU 1103
Target DU 1105
Source CU-CP 1117
Target CU-CP 1119
Source CU-UP 1113
Target CU-UP 1115
AMF/UPF 1111
1120
Measurement Report
1121
Message Transfer
1122
UE1 HO Request
1123
UE2 HO Request
1124
Perform CAC for UE1/UE2
1125
UE1 Bearer Context Setup Request
1126
UE2 Bearer Context Setup Request
1127
Determine to Check Resources
1128
UE1 Bearer Context Setup Response
1129
UE2 Bearer Context Setup Response
1130
UE1 UE Context Setup Request
1131
UE2 UE Context Setup Request
1132
Determine to Check Resources
1133
UE1 UE Context Setup Response
1134
UE2 UE Context Setup Response
1135
UE1 HO ACK
1136
UE1 UE Context Modification Request
1137
UE2 HO ACK
1138
UE2 UE Context Modification Request
1139
Determine to Fwd Reconfig
1140
RRC Reconfig
1141
UE Bearer Context Modificiation
1142
UE SN Status Transfer
1143
UE Bearer Context Modificiation
1144
UE1 Data Delivery Status
1145
UE1 Context Modification Response
1146
Redirect data to DU-CU-UP
1147
UE2 Data Delivery Status
1148
UE2 Context Modification Response
1149
Random Access Procedure

FIG. 11A

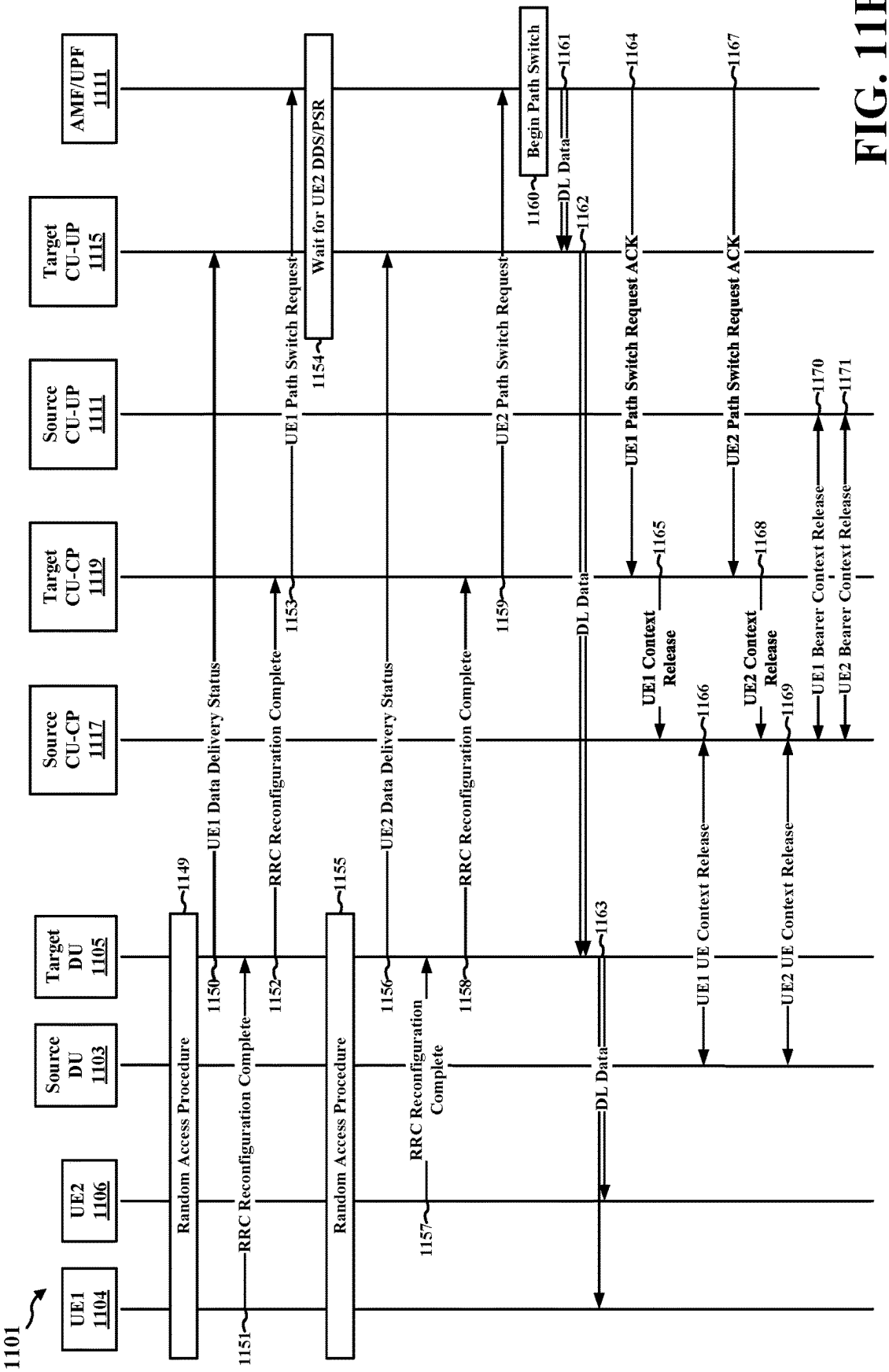
1101
UE1 1104
UE2 1106
Source DU 1103
Target DU 1105
Source CU-CP 1117
Target CU-CP 1119
Source CU-UP 1111
Target CU-UP 1115
AMF/UPF 1111
Random Access Procedure
1149
1151
RRC Reconfiguration Complete
1150
UE1 Data Delivery Status
1152
RRC Reconfiguration Complete
1153
UE1 Path Switch Request
1154
Wait for UE2 DDS/PSR
Random Access Procedure
1155
1157
RRC Reconfiguration Complete
1156
UE2 Data Delivery Status
1158
RRC Reconfiguration Complete
1159
UE2 Path Switch Request
1160
Begin Path Switch
1161
DL Data
1162
DL Data
1163
DL Data
1164
UE1 Path Switch Request ACK
1165
UE1 Context Release
1166
UE1 UE Context Release
1167
UE2 Path Switch Request ACK
1168
UE2 Context Release
1169
UE2 UE Context Release
1170
UE1 Bearer Context Release
1171
UE2 Bearer Context Release

FIG. 11B

FIG. 12

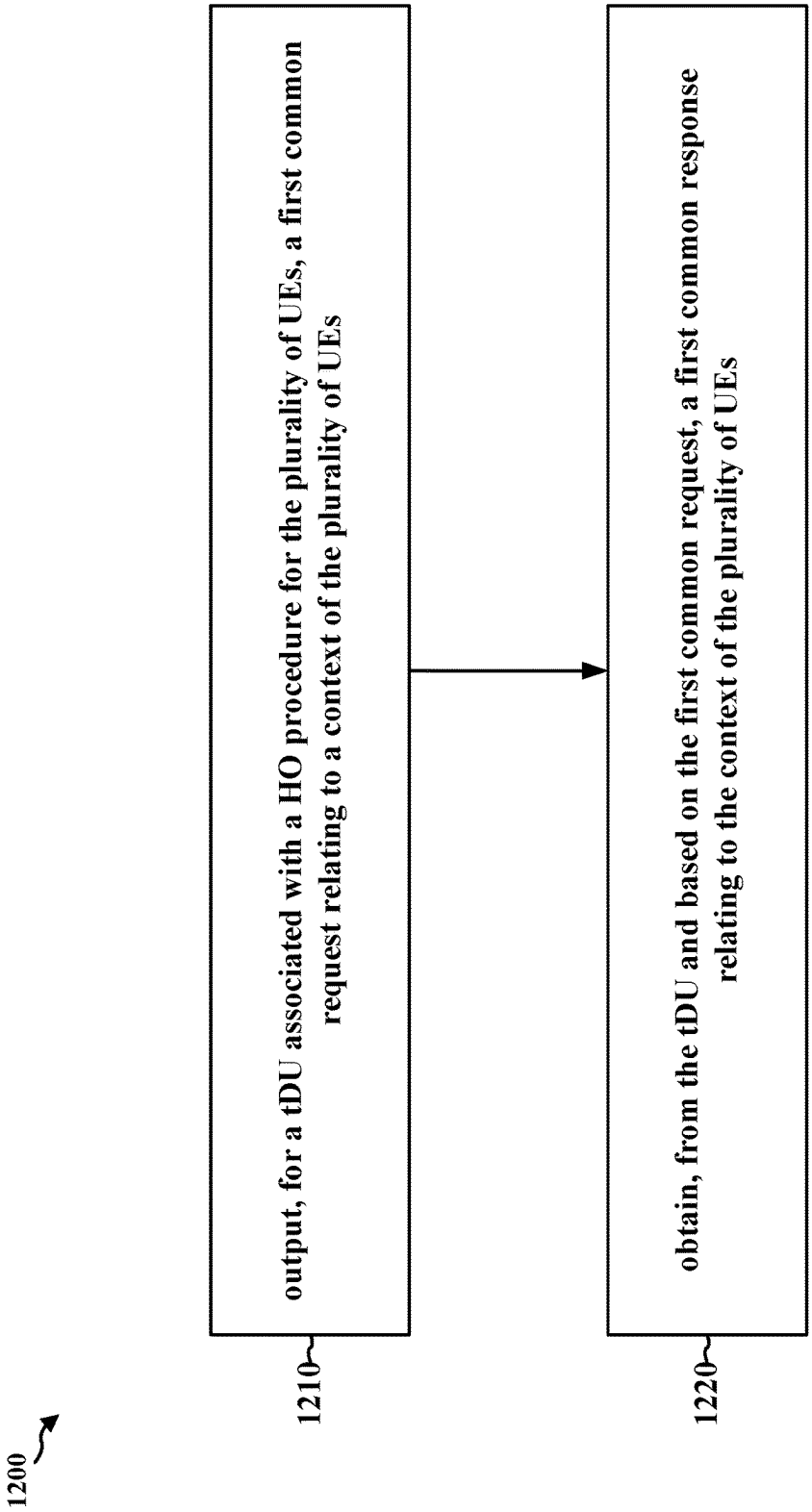
1200
1210
output, for a tDU associated with a HO procedure for the plurality of UEs, a first common request relating to a context of the plurality of UEs
1220
obtain, from the tDU and based on the first common request, a first common response relating to the context of the plurality of UEs

FIG. 13

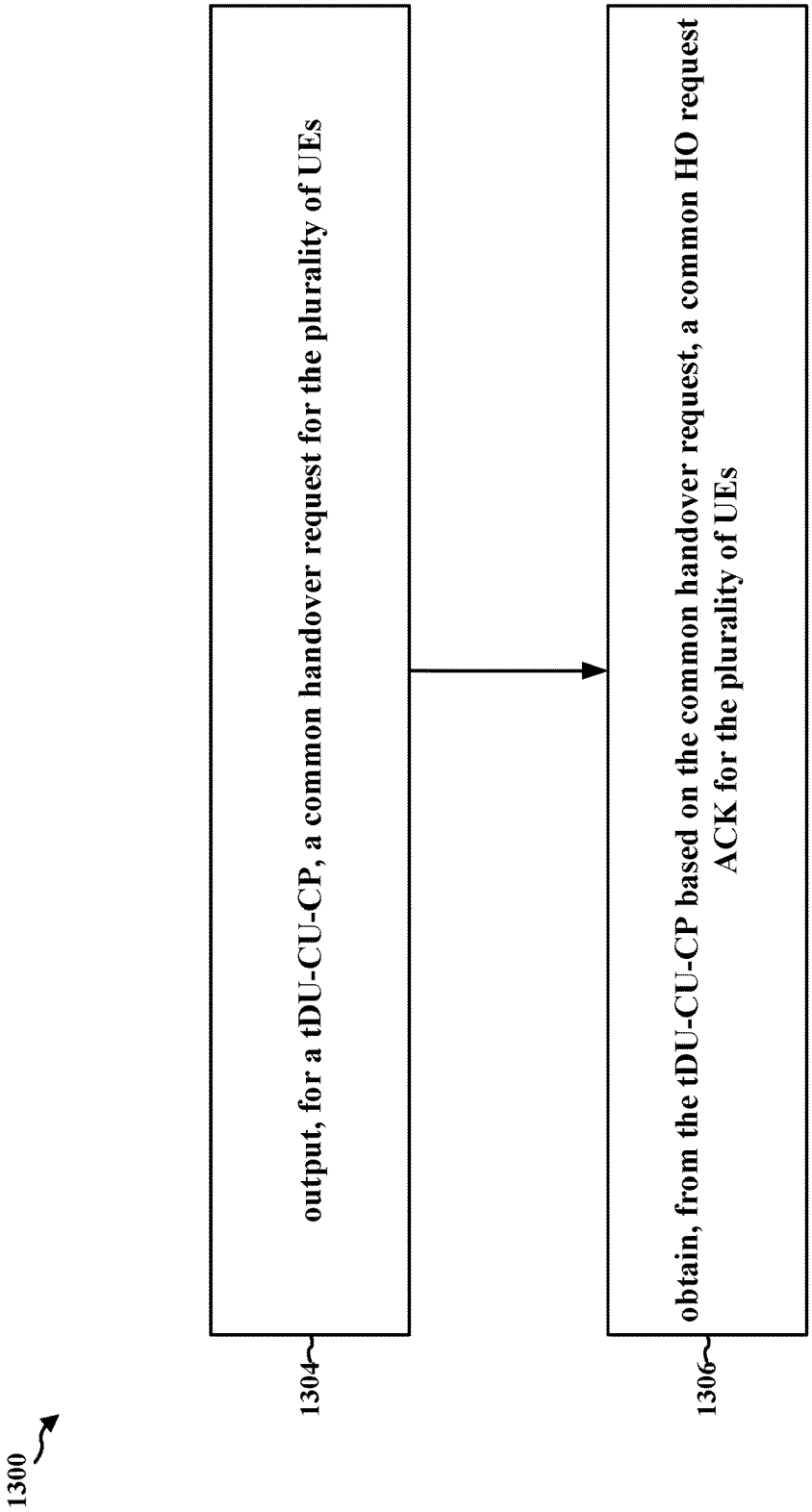
1300
1304
output, for a tDU-CU-CP, a common handover request for the plurality of UEs
1306
obtain, from the tDU-CU-CP based on the common handover request, a common HO request ACK for the plurality of UEs

FIG. 14

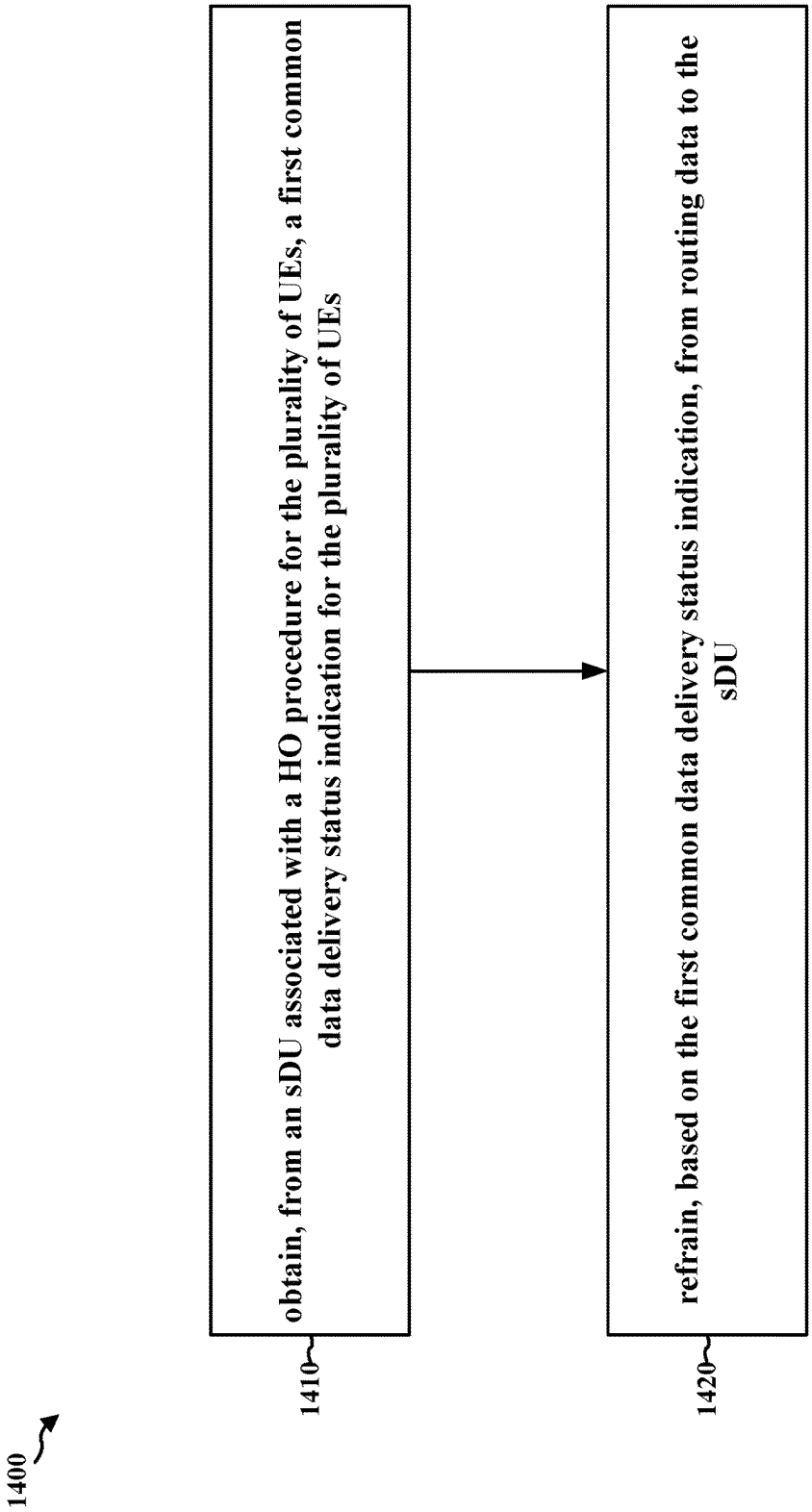
1400
1410
obtain, from an sDU associated with a HO procedure for the plurality of UEs, a first common data delivery status indication for the plurality of UEs
1420
refrain, based on the first common data delivery status indication, from routing data to the sDU

FIG. 15

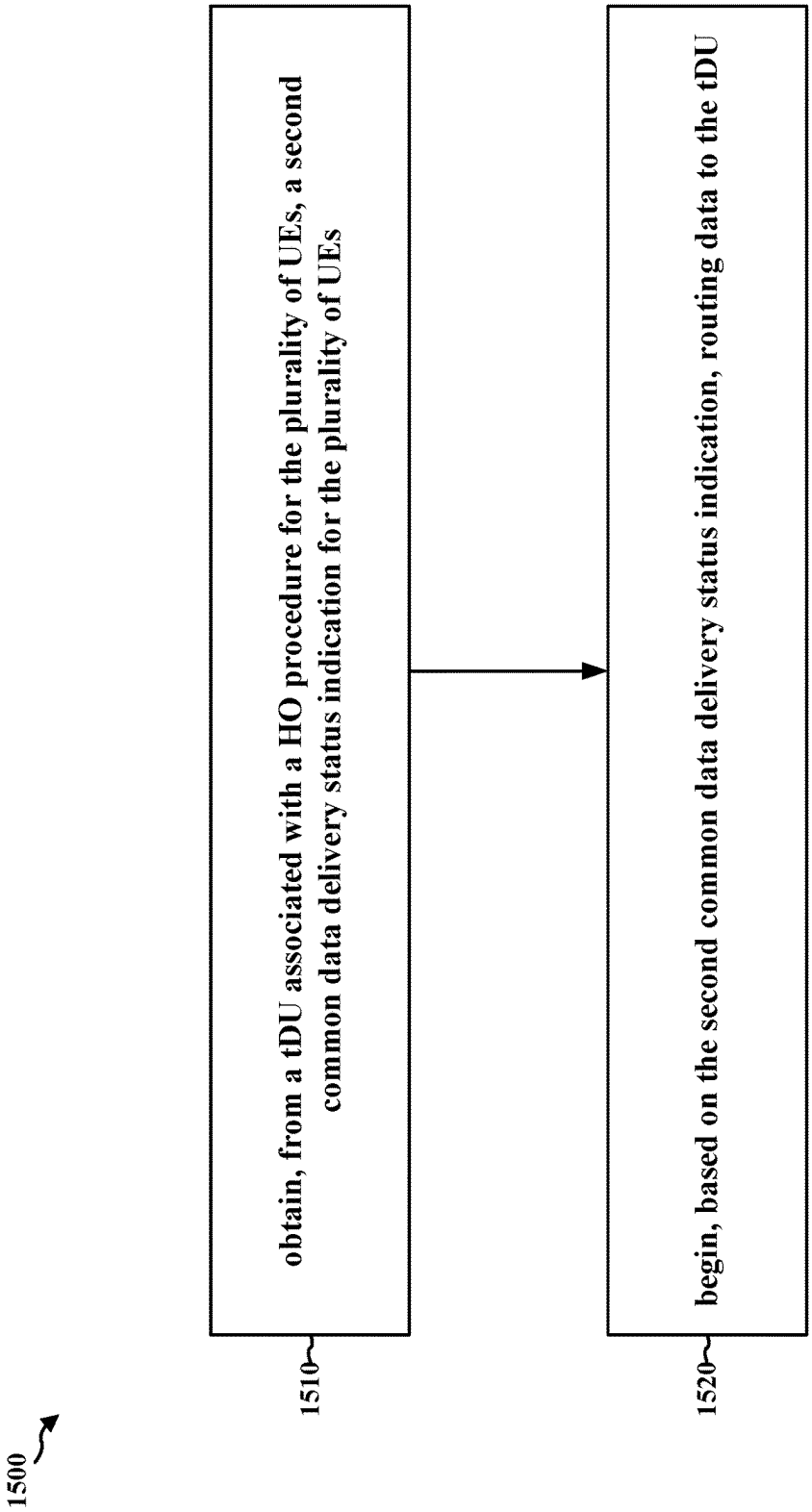
1500
1510
obtain, from a tDU associated with a HO procedure for the plurality of UEs, a second common data delivery status indication for the plurality of UEs
1520
begin, based on the second common data delivery status indication, routing data to the tDU

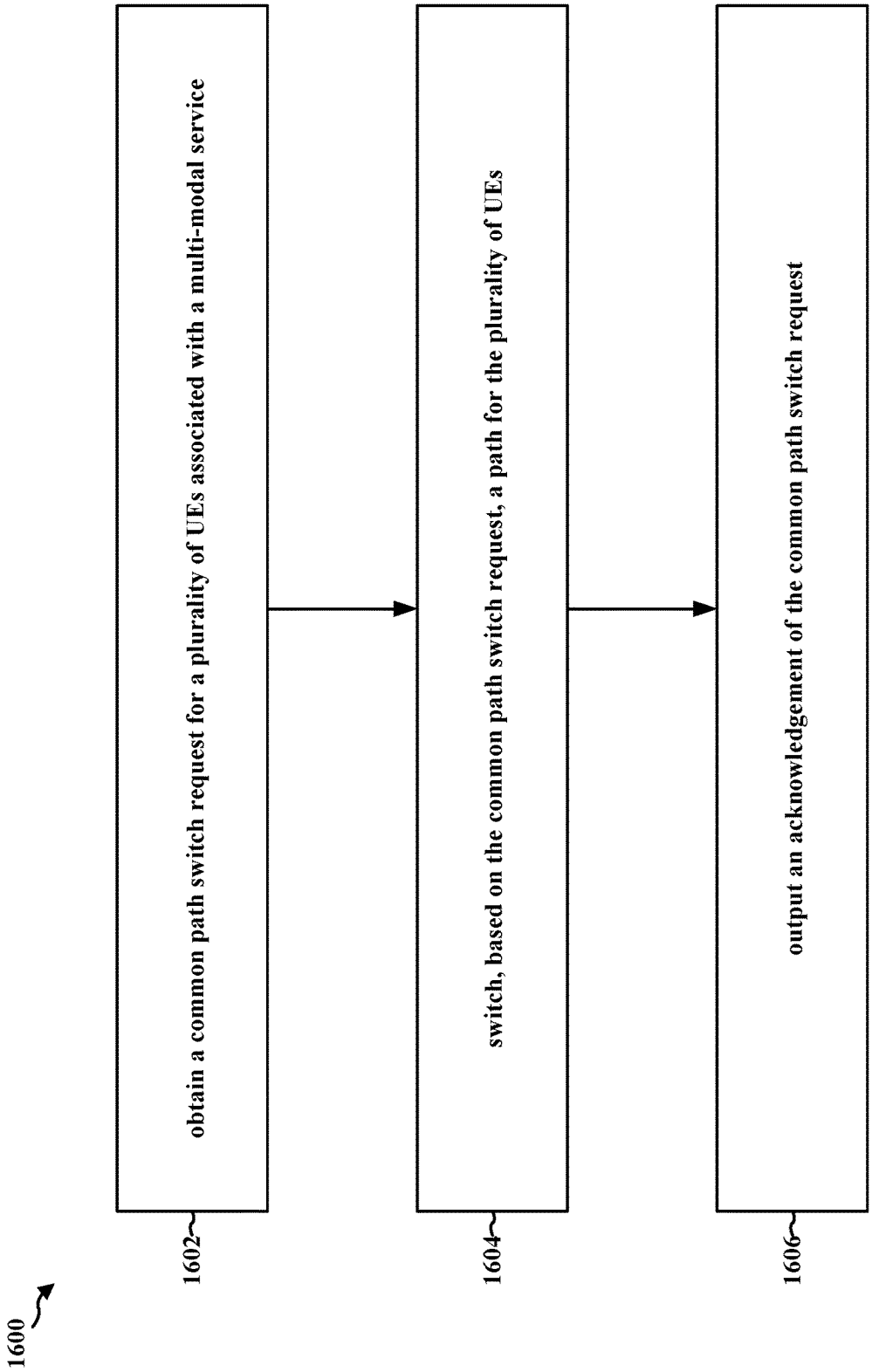
1600
1602
obtain a common path switch request for a plurality of UEs associated with a multi-modal service
1604
switch, based on the common path switch request, a path for the plurality of UEs
1606
output an acknowledgement of the common path switch request

FIG. 16

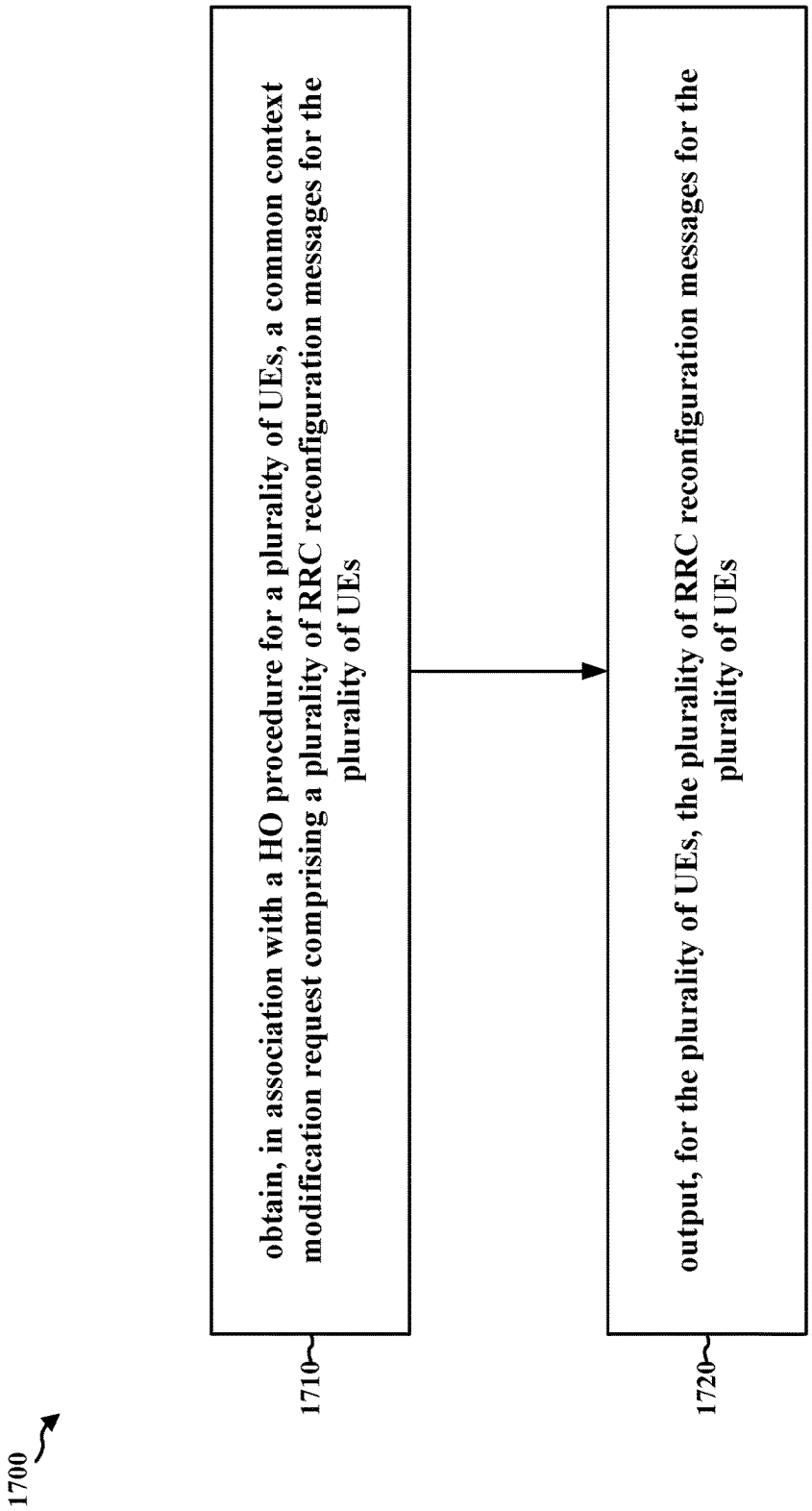
1700
1710
obtain, in association with a HO procedure for a plurality of UEs, a common context modification request comprising a plurality of RRC reconfiguration messages for the plurality of UEs
1720
output, for the plurality of UEs, the plurality of RRC reconfiguration messages for the plurality of UEs

FIG. 17

FIG. 18

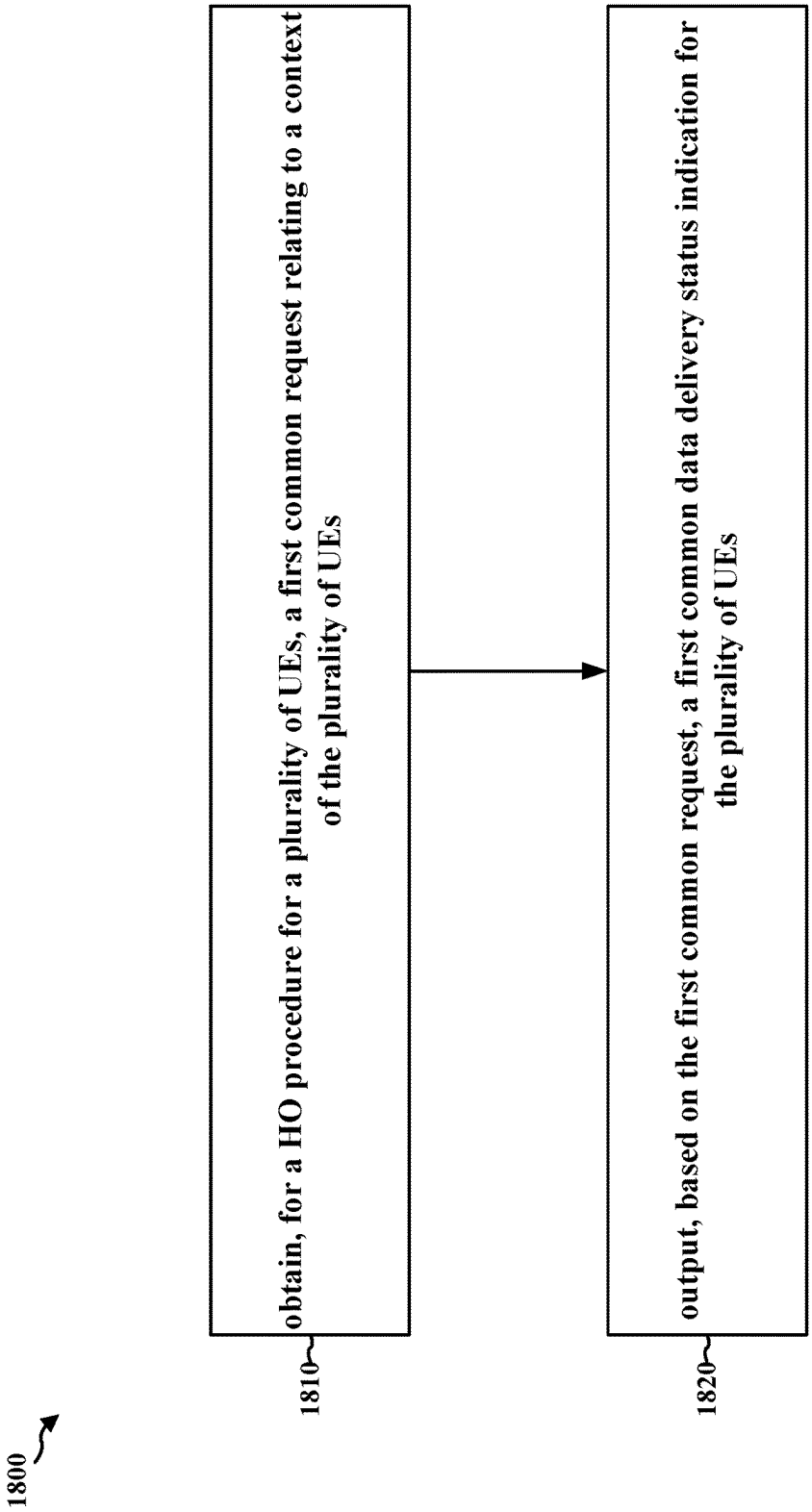
1800
1810
obtain, for a HO procedure for a plurality of UEs, a first common request relating to a context of the plurality of UEs
1820
output, based on the first common request, a first common data delivery status indication for the plurality of UEs

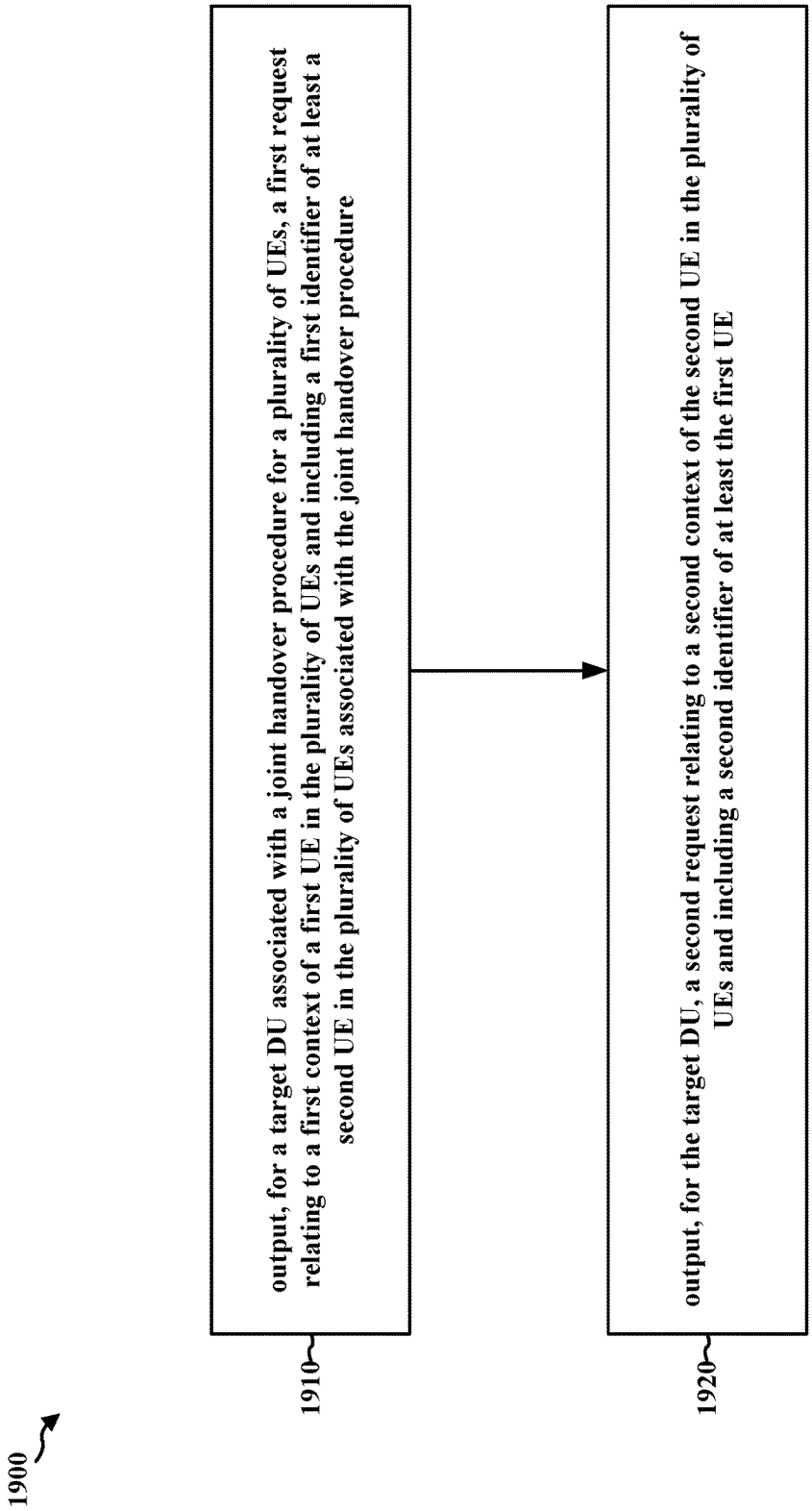
1900
1910
output, for a target DU associated with a joint handover procedure for a plurality of UEs, a first request relating to a first context of a first UE in the plurality of UEs and including a first identifier of at least a second UE in the plurality of UEs associated with the joint handover procedure
1920
output, for the target DU, a second request relating to a second context of the second UE in the plurality of UEs and including a second identifier of at least the first UE

FIG. 19

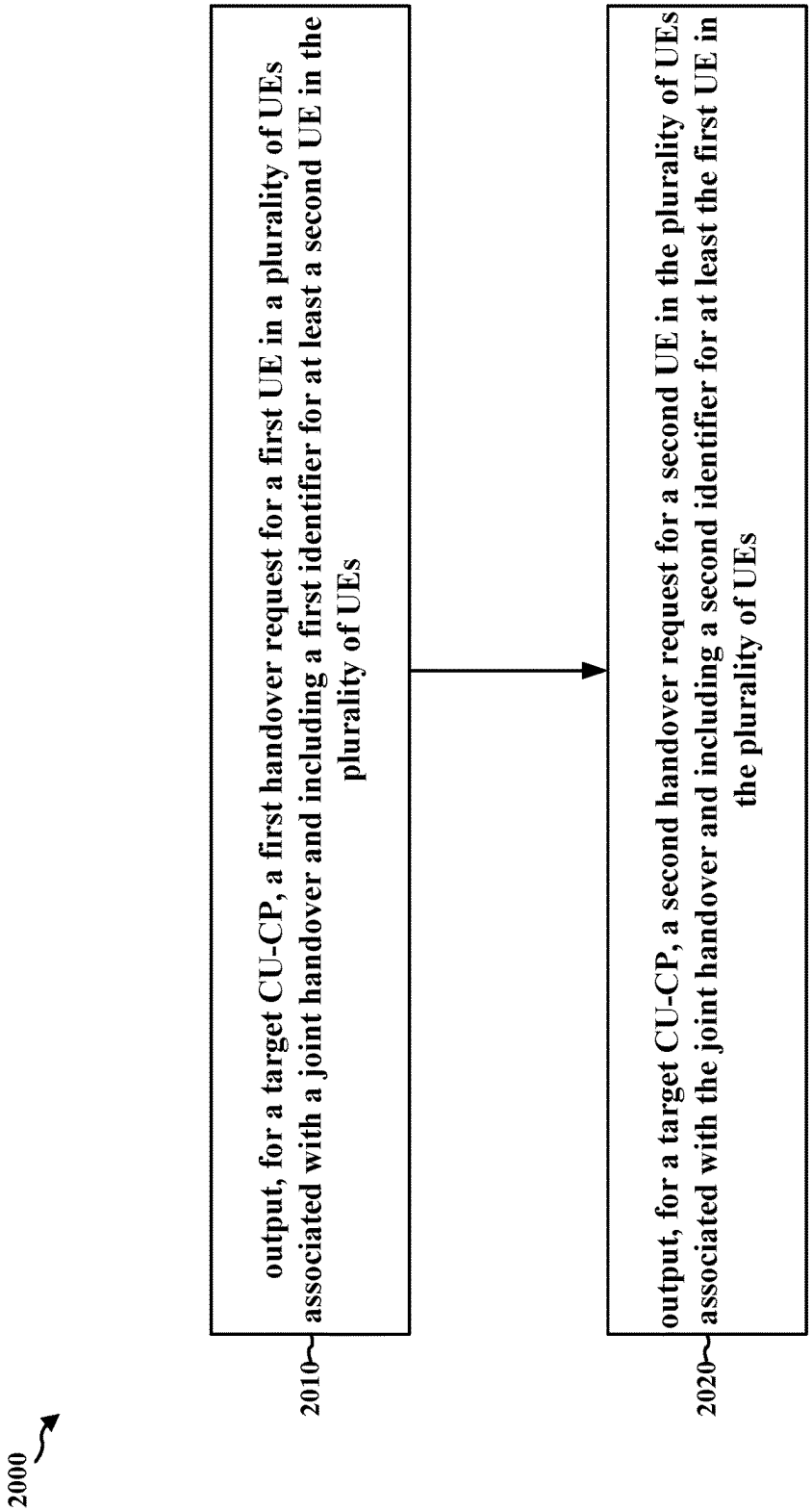
2000
2010
output, for a target CU-CP, a first handover request for a first UE in a plurality of UEs associated with a joint handover and including a first identifier for at least a second UE in the plurality of UEs
2020
output, for a target CU-CP, a second handover request for a second UE in the plurality of UEs associated with the joint handover and including a second identifier for at least the first UE in the plurality of UEs

FIG. 20

FIG. 21

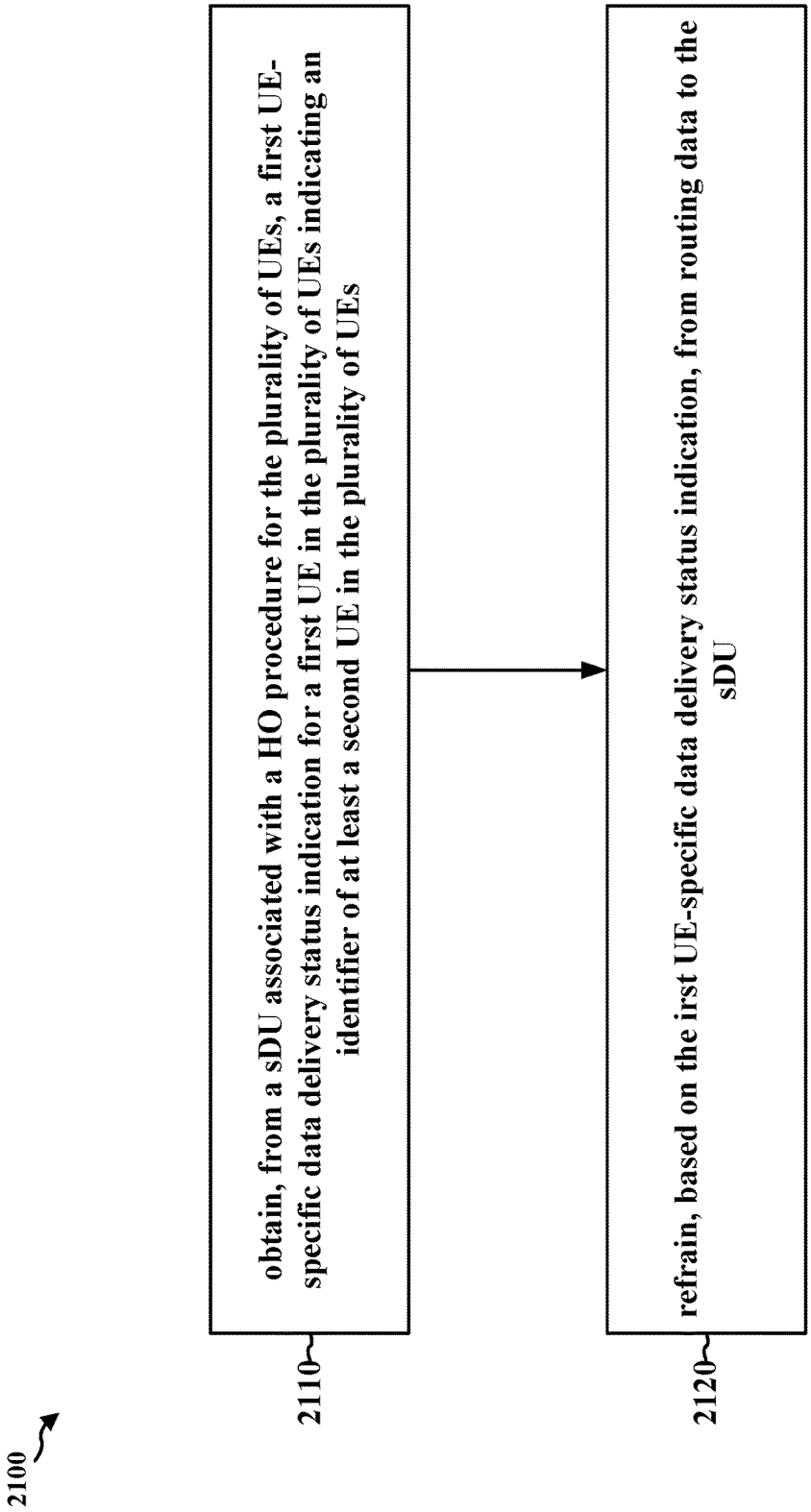
2100
2110
obtain, from a sDU associated with a HO procedure for the plurality of UEs, a first UE-specific data delivery status indication for a first UE in the plurality of UEs indicating an identifier of at least a second UE in the plurality of UEs
2120
refrain, based on the irst UE-specific data delivery status indication, from routing data to the sDU

FIG. 22

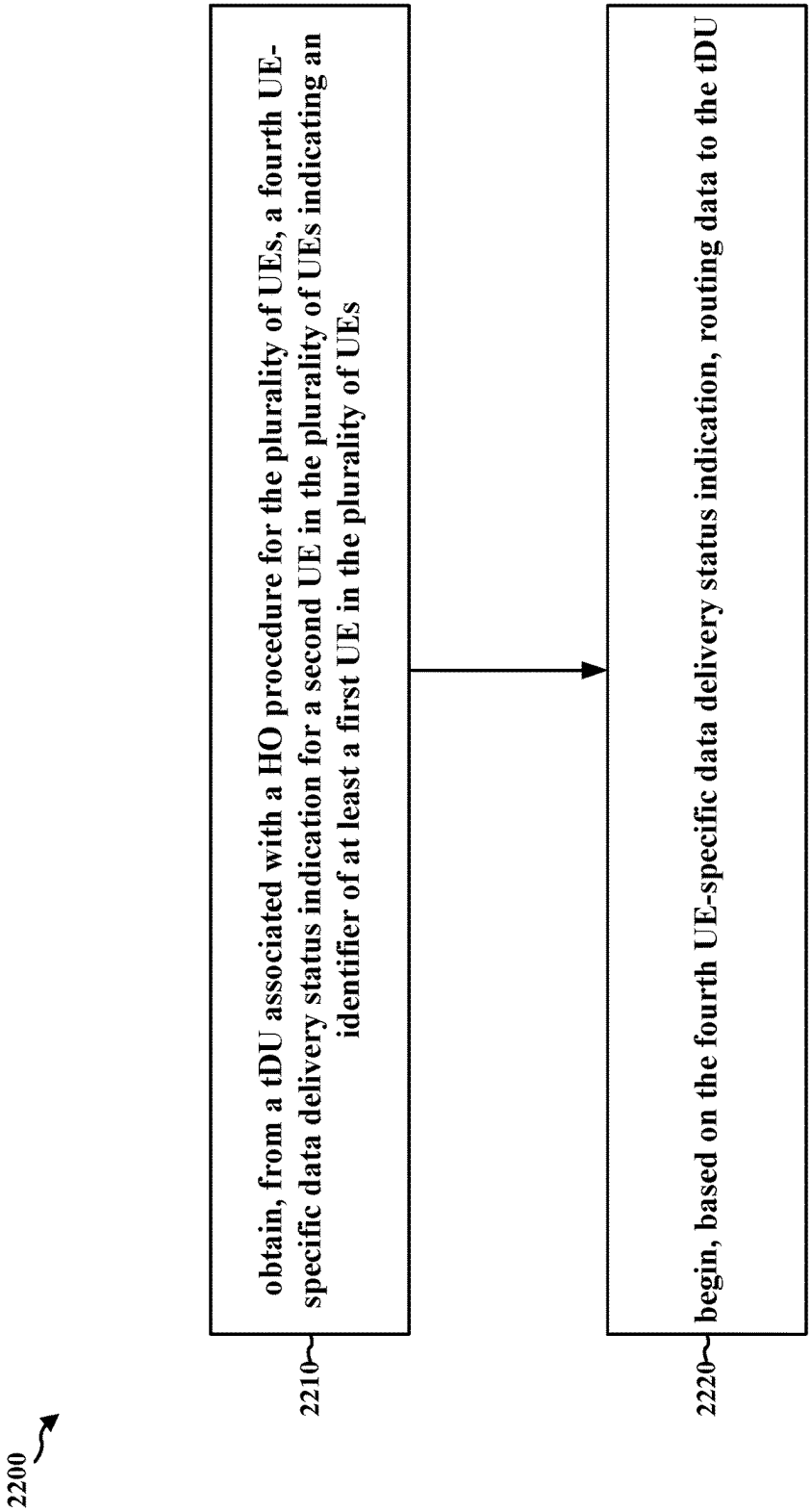
2200
2210
obtain, from a tDU associated with a HO procedure for the plurality of UEs, a fourth UE-specific data delivery status indication for a second UE in the plurality of UEs indicating an identifier of at least a first UE in the plurality of UEs
2220
begin, based on the fourth UE-specific data delivery status indication, routing data to the tDU

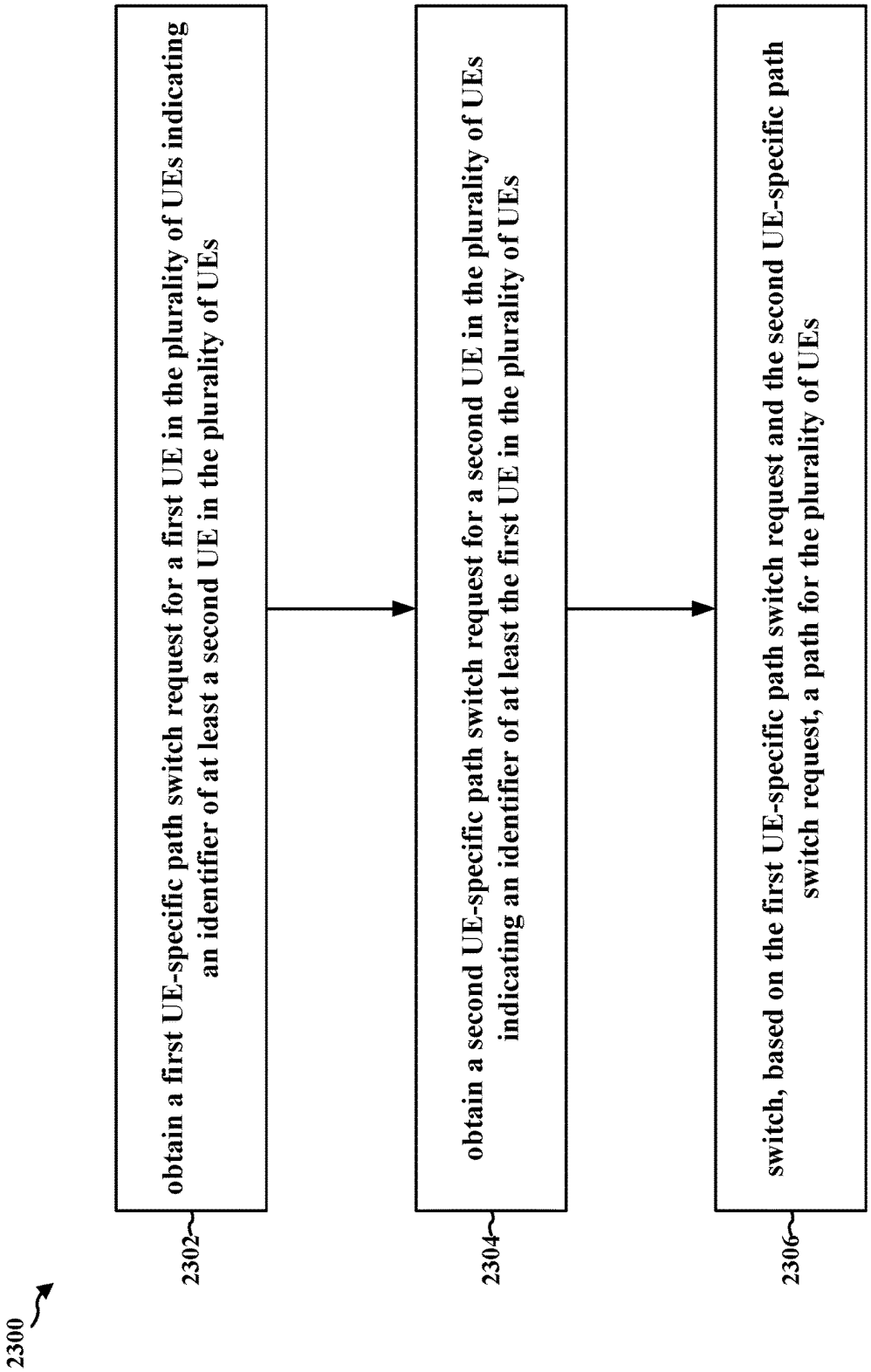
2300
2302
obtain a first UE-specific path switch request for a first UE in the plurality of UEs indicating an identifier of at least a second UE in the plurality of UEs
2304
obtain a second UE-specific path switch request for a second UE in the plurality of UEs indicating an identifier of at least the first UE in the plurality of UEs
2306
switch, based on the first UE-specific path switch request and the second UE-specific path switch request, a path for the plurality of UEs

FIG. 23

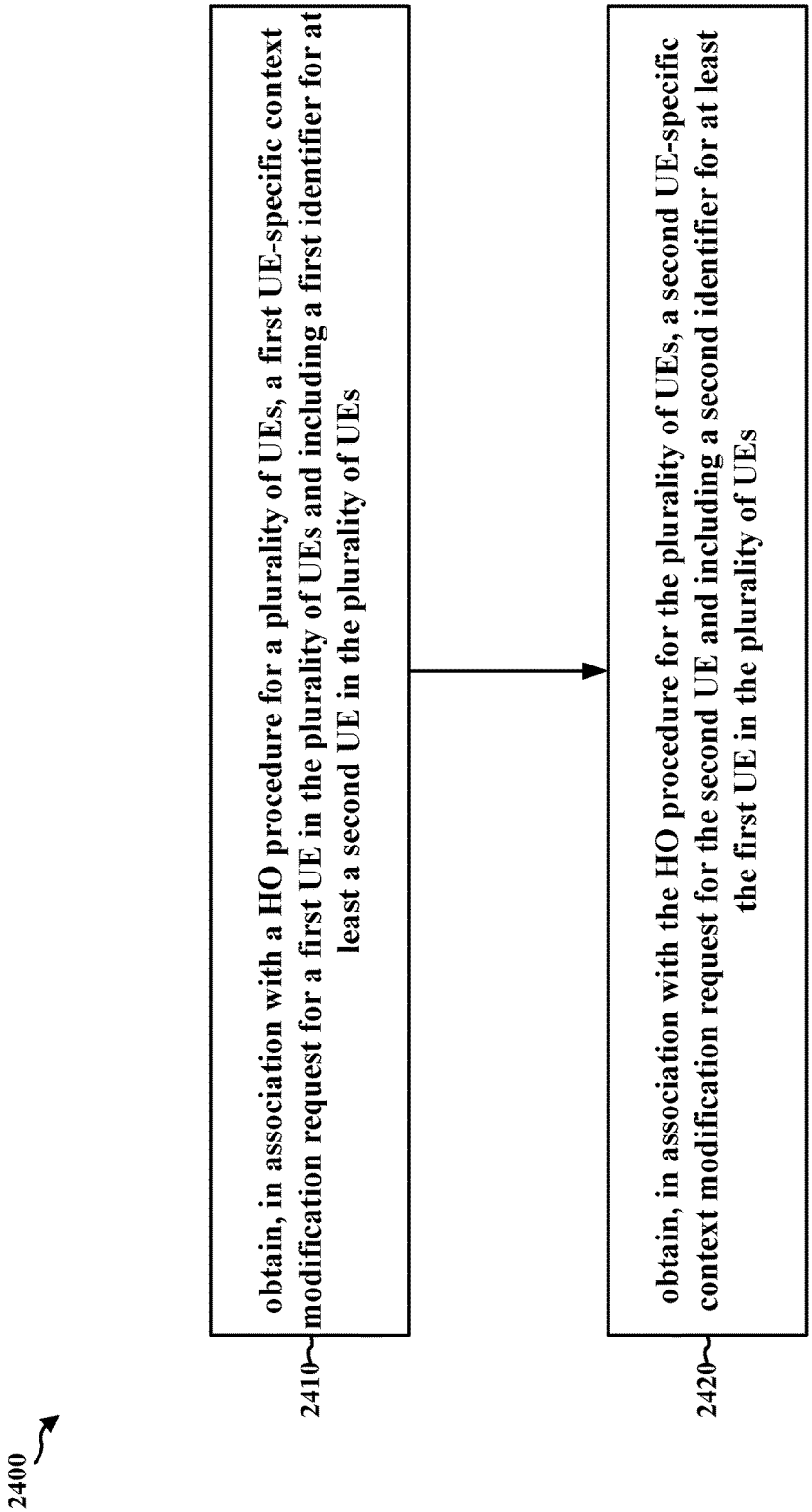
2400
2410
obtain, in association with a HO procedure for a plurality of UEs, a first UE-specific context modification request for a first UE in the plurality of UEs and including a first identifier for at least a second UE in the plurality of UEs
2420
obtain, in association with the HO procedure for the plurality of UEs, a second UE-specific context modification request for the second UE and including a second identifier for at least the first UE in the plurality of UEs

FIG. 24

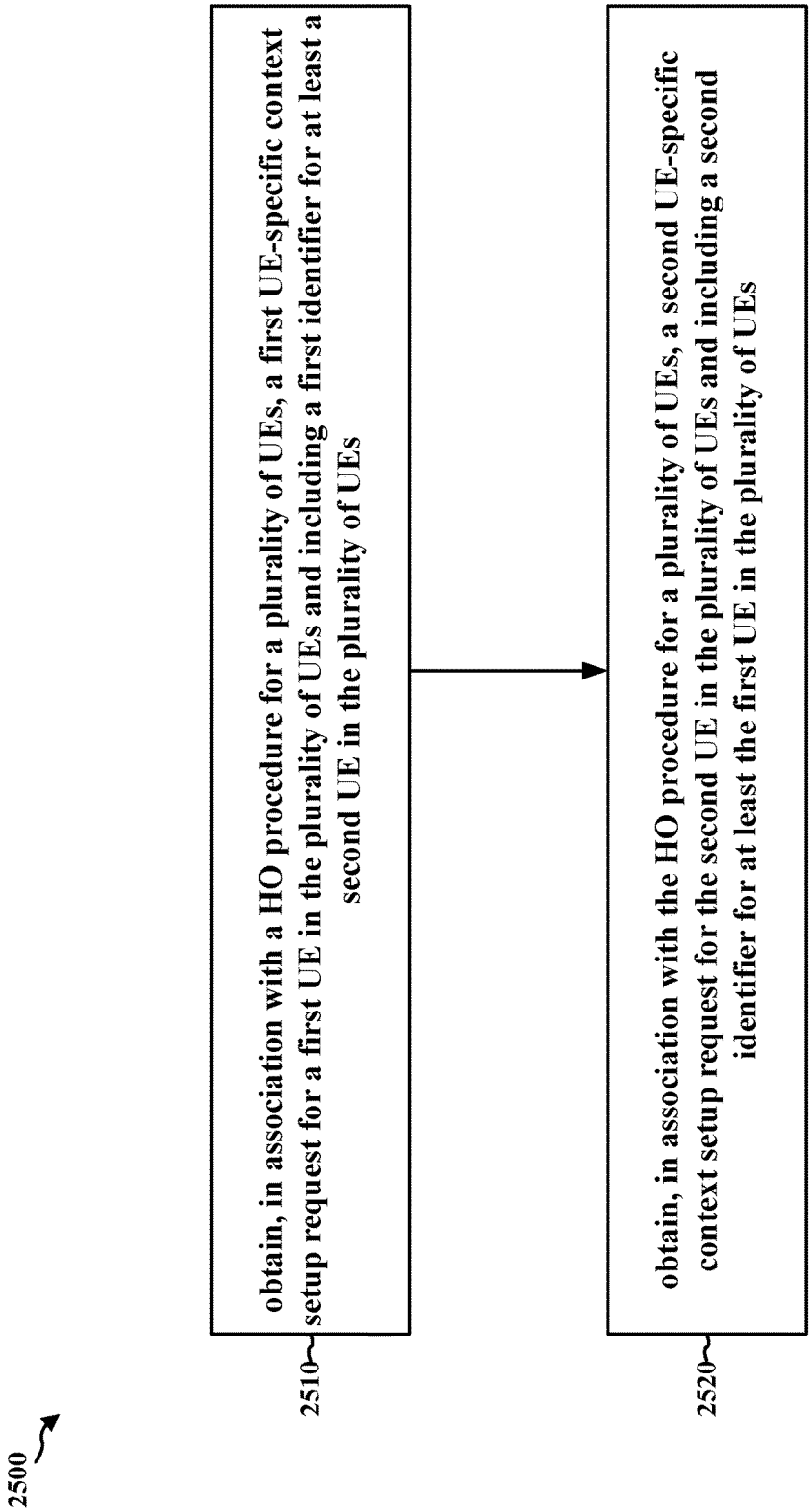
2500
2510
obtain, in association with a HO procedure for a plurality of UEs, a first UE-specific context setup request for a first UE in the plurality of UEs and including a first identifier for at least a second UE in the plurality of UEs
2520
obtain, in association with the HO procedure for a plurality of UEs, a second UE-specific context setup request for the second UE in the plurality of UEs and including a second identifier for at least the first UE in the plurality of UEs

FIG. 25

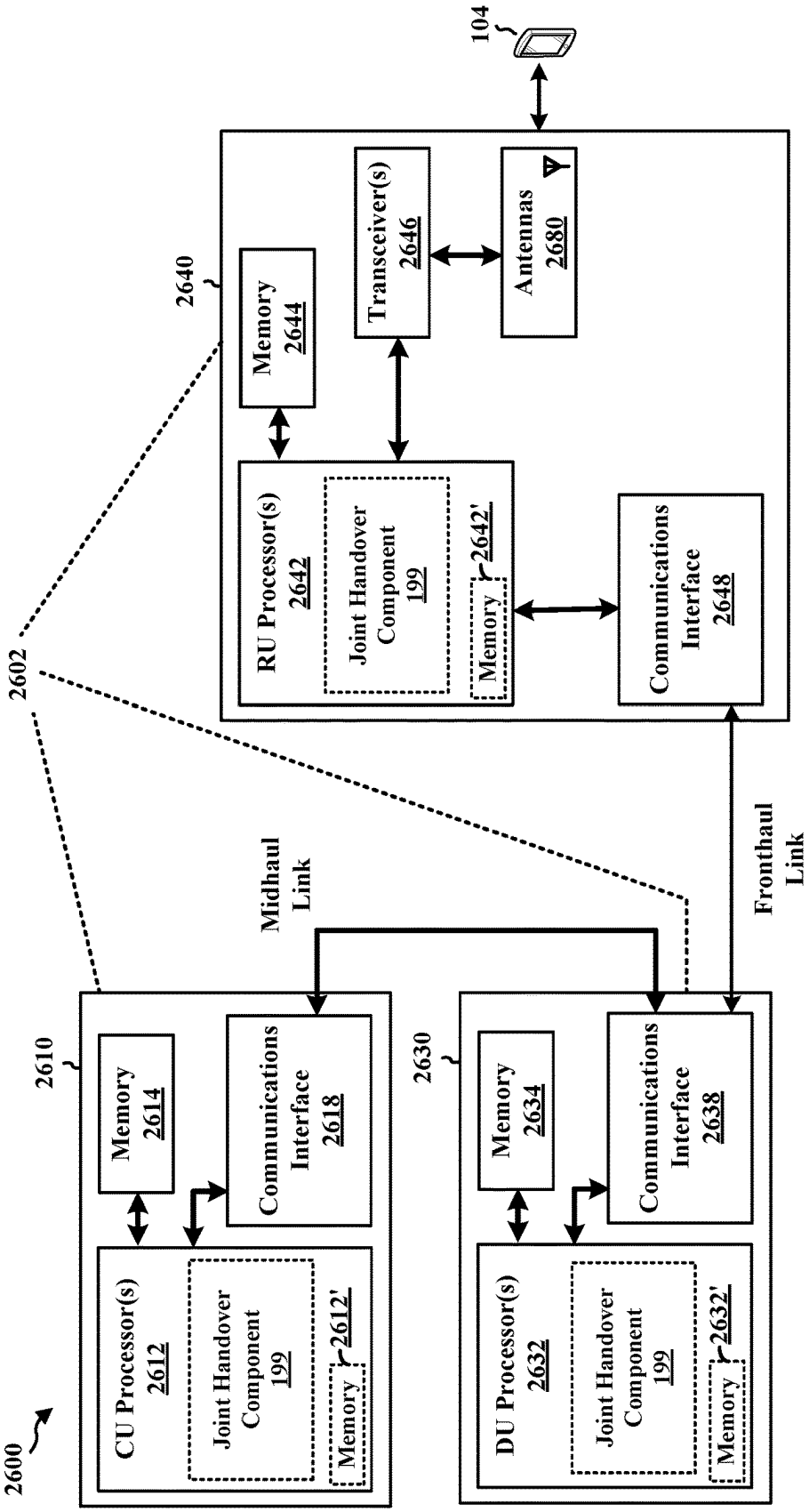
2600
2610
CU Processor(s)
2612
Memory
2614
Joint Handover Component
199
Memory
2612'
Communications Interface
2618
Midhaul Link
2630
DU Processor(s)
2632
Memory
2634
Joint Handover Component
199
Memory
2632'
Communications Interface
2638
Fronthaul Link
2602
2640
RU Processor(s)
2642
Memory
2644
Joint Handover Component
199
Memory
2642'
Transceiver(s)
2646
Antennas
2680
Communications Interface
2648
104

FIG. 26

FIG. 27

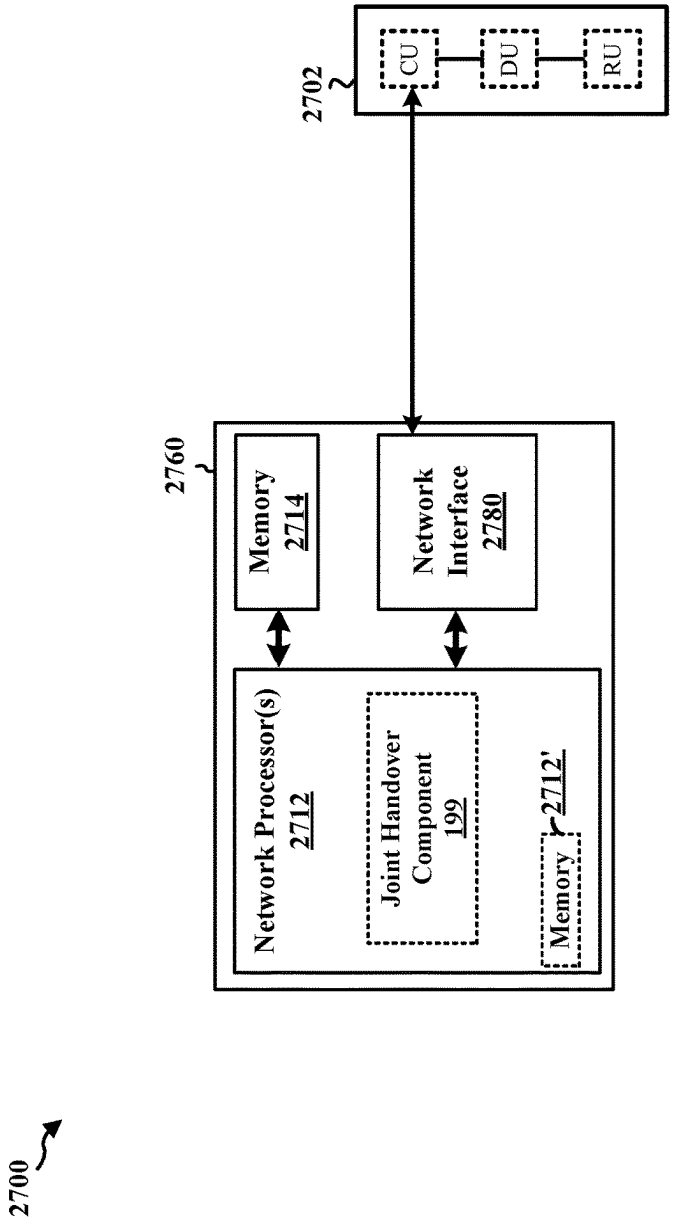
2700
2760
Memory
2714
Network Processor(s)
2712
Joint Handover
Component
199
Memory
2712'
Network
Interface
2780
2702
CU
DU
RU

MOBILITY FOR MULTI-MODAL UES AND DISTRIBUTED ARCHITECTURE

TECHNICAL FIELD

[0001] The present disclosure relates generally to communication systems, and more particularly, to user equipment (UE) mobility in wireless communication.

INTRODUCTION

[0002] Wireless communication systems are widely deployed to provide various telecommunication services such as telephony, video, data, messaging, and broadcasts. Typical wireless communication systems may employ multiple-access technologies capable of supporting communication with multiple users by sharing available system resources. Examples of such multiple-access technologies include code division multiple access (CDMA) systems, time division multiple access (TDMA) systems, frequency division multiple access (FDMA) systems, orthogonal frequency division multiple access (OFDMA) systems, single-carrier frequency division multiple access (SC-FDMA) systems, and time division synchronous code division multiple access (TD-SCDMA) systems.

[0003] These multiple access technologies have been adopted in various telecommunication standards to provide a common protocol that enables different wireless devices to communicate on a municipal, national, regional, and even global level. An example telecommunication standard is 5G New Radio (NR). 5G NR is part of a continuous mobile broadband evolution promulgated by Third Generation Partnership Project (3GPP) to meet new requirements associated with latency, reliability, security, scalability (e.g., with Internet of Things (IoT)), and other requirements. 5G NR includes services associated with enhanced mobile broadband (eMBB), massive machine type communications (mMTC), and ultra-reliable low latency communications (URLLC). Some aspects of 5G NR may be based on the 4G Long Term Evolution (LTE) standard. There exists a need for further improvements in 5G NR technology. These improvements may also be applicable to other multi-access technologies and the telecommunication standards that employ these technologies.

BRIEF SUMMARY

[0004] The following presents a simplified summary of one or more aspects in order to provide a basic understanding of such aspects. This summary is not an extensive overview of all contemplated aspects. This summary neither identifies key or critical elements of all aspects nor delineates the scope of any or all aspects. Its sole purpose is to present some concepts of one or more aspects in a simplified form as a prelude to the more detailed description that is presented later.

[0005] In an aspect of the disclosure, a method, a computer-readable medium, and an apparatus are provided. The apparatus may be a CP of a CU associated with a plurality of wireless devices associated with a first multi-modal service, configured to output, for a target distributed unit (DU) associated with a joint handover procedure for the plurality of wireless devices, a first request relating to a first context of a first wireless device in the plurality of wireless devices, wherein the first request comprises a first identifier of at least a second wireless device in the plurality of wireless devices associated with the joint handover procedure; and output, for the target DU, a second request relating to a second context of the second wireless device in the plurality of wireless devices, wherein the second request comprises a second identifier of at least the first wireless device.

[0006] In an aspect of the disclosure, a method, a computer-readable medium, and an apparatus are provided. The apparatus may be a CP of a CU associated with a plurality of wireless devices associated with a first multi-modal service, configured to outputting, for a source DU associated with a handover procedure for the plurality of wireless devices, a common request to modify a context of the plurality of wireless devices and obtain, from the source DU and based on the common request, a common response relating to the context of the plurality of wireless devices.

[0007] In an aspect of the disclosure, a method, a computer-readable medium, and an apparatus are provided. The apparatus may be a user plane (UP) of a CU associated with a plurality of wireless devices associated with a first multi-modal service, configured to obtain, from a source DU associated with a handover procedure for the plurality of wireless devices, a first common data delivery status indication relating to the plurality of wireless devices and refrain, based on the first common data delivery status indication, from routing data for the plurality of wireless devices to the source DU.

[0008] In an aspect of the disclosure, a method, a computer-readable medium, and an apparatus are provided. The apparatus may be a UP of a first CU associated with a target DU connected to a plurality of wireless devices associated with a first multi-modal service, configured to obtain, from a CP of a CU associated with the plurality of wireless devices, a common request associated with a bearer context setup for the plurality of wireless devices and output, for the CP of the CU, a common response associated with the bearer context setup for the plurality of wireless devices.

[0009] In an aspect of the disclosure, a method, a computer-readable medium, and an apparatus are provided. The apparatus may be one of an access and mobility management function (AMF) or a user plane function (UPF) associated with a plurality of wireless devices associated with a first multi-modal service, configured to obtain, from a CP of a CU associated with a target DU associated with the plurality of wireless devices, a common request associated with a path switch for the plurality of wireless devices, switch, based on the common request, a path for the plurality of wireless devices, and output, for the CP of the CU, a common response acknowledging the path switch for the plurality of wireless devices.

[0010] In an aspect of the disclosure, a method, a computer-readable medium, and an apparatus are provided. The apparatus may be a CP of a CU associated with a plurality of wireless devices associated with a first multi-modal service, configured to output, for a target DU associated with a joint handover procedure for the plurality of wireless devices, a first request relating to a first context of a first wireless device in the plurality of wireless devices, wherein the first request comprises a first identifier of at least a second wireless device in the plurality of wireless devices associated with the joint handover procedure and output, for the target DU, a second request relating to a second context of the second wireless device in the plurality of wireless

devices, wherein the second request comprises a second identifier of at least the first wireless device.

[0011] In an aspect of the disclosure, a method, a computer-readable medium, and an apparatus are provided. The apparatus may be a user plane (UP) of a CU associated with a plurality of wireless devices associated with a first multi-modal service, configured to obtain, from a source DU associated with a joint handover procedure for the plurality of wireless devices, a first data delivery status indication relating to a first wireless device in the plurality of wireless devices, wherein the first data delivery status indication comprises an identifier of at least a second wireless device in the plurality of wireless devices associated with the joint handover procedure and refrain, based on the first data delivery status indication, from routing data for the plurality of wireless devices to the source DU.

[0012] In an aspect of the disclosure, a method, a computer-readable medium, and an apparatus are provided. The apparatus may be a first user plane (UP) of a first CU associated with a source DU connected to a plurality of wireless devices associated with a first multi-modal service, configured to obtain, from a source DU associated with a joint handover procedure for the plurality of wireless devices, a first data delivery status indication relating to a first wireless device in the plurality of wireless devices, wherein the first data delivery status indication comprises a first identifier of at least a second wireless device in the plurality of wireless devices associated with the joint handover procedure and route, based on the first data delivery status indication, data for the plurality of wireless devices to a second UP of a second CU associated with a target DU.

[0013] In an aspect of the disclosure, a method, a computer-readable medium, and an apparatus are provided. The apparatus may be a user plane (UP) of a first CU associated with a target DU connected to a plurality of wireless devices associated with a first multi-modal service, configured to obtain, from a CP of a second CU associated with a joint handover procedure for the plurality of wireless devices, a first request associated with a first bearer context setup for a first wireless device in the plurality of wireless devices, wherein the first request comprises a first identifier of at least a second wireless device in the plurality of wireless devices associated with the joint handover procedure for the plurality of wireless devices, refrain, based on the first identifier of at least the second wireless device in the first request, from checking resources in response to the first request, obtain, from the CP of the CU, a second request associated with a second bearer context setup for the second wireless device in the plurality of wireless devices, wherein the second request comprises a second identifier of at least the first wireless device, and check, based on the first request and the second request, the resources for the plurality of wireless devices.

[0014] In an aspect of the disclosure, a method, a computer-readable medium, and an apparatus are provided. The apparatus may be one of an AMF or a UPF associated with a plurality of wireless devices associated with a first multi-modal service, configured to obtain, from a CP of a CU associated with a joint handover procedure for the plurality of wireless devices, a first request associated with a path switch for a first wireless device in the plurality of wireless devices, wherein the first request comprises a first identifier of at least a second wireless device in the plurality of wireless devices associated with the joint handover procedure for the plurality of wireless devices, refrain, based on the first identifier of at least the second wireless device in the first request, from switching a path for the plurality of wireless devices, obtain, from the CP of the CU, a second request associated with the path switch for the second wireless device, wherein the second request comprises a second identifier of at least the first wireless device, and switch, based on the first request and the second request, the path for the plurality of wireless devices.

[0015] In an aspect of the disclosure, a method, a computer-readable medium, and an apparatus are provided. The apparatus may be a source DU serving a plurality of wireless devices associated with a multi-modal service, configured to obtain, for a handover procedure for the plurality of wireless devices from the source DU to a target DU, a common context modification request relating to modifying a context of the plurality of wireless devices and output, based on the common context modification request, a first common data delivery status indication for the plurality of wireless devices.

[0016] In an aspect of the disclosure, a method, a computer-readable medium, and an apparatus are provided. The apparatus may be a target DU serving a plurality of wireless devices associated with a multi-modal service, configured to obtain, for a handover procedure for the plurality of wireless devices from a source DU to a target DU, a common context setup request relating to modifying a context of the plurality of wireless devices and output, based on the common context setup request, a common context setup response for the plurality of wireless devices.

[0017] In an aspect of the disclosure, a method, a computer-readable medium, and an apparatus are provided. The apparatus may be a source DU serving a plurality of wireless devices associated with a multi-modal service, configured to obtain, in association with a handover procedure for the plurality of wireless devices, a first context modification request for a first wireless device in the plurality of wireless devices, wherein the first context modification request comprises a first identifier for at least a second wireless device in the plurality of wireless devices, and obtain, in association with the handover procedure for the plurality of wireless devices, a second context modification request for the second wireless device, wherein the second context modification request comprises a second identifier for at least the first wireless device in the plurality of wireless devices.

[0018] In an aspect of the disclosure, a method, a computer-readable medium, and an apparatus are provided. The apparatus may be a target DU serving a plurality of wireless devices associated with a multi-modal service, configured to obtain, in association with a handover procedure for the plurality of wireless devices, a first context setup request for a first wireless device in the plurality of wireless devices, wherein the first context setup request comprises a first identifier for at least a second wireless device in the plurality of wireless devices and obtain, in association with the handover procedure for the plurality of wireless devices, a second context setup request for the second wireless device, wherein the second context setup request comprises a second identifier for at least the first wireless device in the plurality of wireless devices.

[0019] To the accomplishment of the foregoing and related ends, the one or more aspects may include the features hereinafter fully described and particularly pointed out in the claims. The following description and the drawings set forth

in detail certain illustrative features of the one or more aspects. These features are indicative, however, of but a few of the various ways in which the principles of various aspects may be employed.

BRIEF DESCRIPTION OF THE DRAWINGS

[0020] FIG. **1** is a diagram illustrating an example of a wireless communications system and an access network.

[0021] FIG. **2**A is a diagram illustrating an example of a first frame, in accordance with various aspects of the present disclosure.

[0022] FIG. **2**B is a diagram illustrating an example of downlink (DL) channels within a subframe, in accordance with various aspects of the present disclosure.

[0023] FIG. **2**C is a diagram illustrating an example of a second frame, in accordance with various aspects of the present disclosure.

[0024] FIG. **2**D is a diagram illustrating an example of uplink (UL) channels within a subframe, in accordance with various aspects of the present disclosure.

[0025] FIG. **3** is a diagram illustrating an example of a base station and user equipment (UE) in an access network.

[0026] FIG. **4**A is a diagram illustrating a UE providing an XR and/or VR service that may be provided from a server via a base station.

[0027] FIG. **4**B is a diagram illustrating a set of UEs associated with different multi-modal flows of a multi-modal service provided by a server via a base station in accordance with some aspects of the disclosure.

[0028] FIG. **4**C is a diagram illustrating an XR flow that includes multiple XR traffic bursts in accordance with some aspects of the disclosure.

[0029] FIG. **5**A is a diagram illustrating a first distributed architecture associated with some aspects of the disclosure.

[0030] FIG. **5**B is a diagram illustrating a second distributed architecture associated with some aspects of the disclosure.

[0031] FIG. **5**C is a diagram illustrating a third distributed architecture associated with some aspects of the disclosure.

[0032] FIG. **6** is a call flow diagram illustrating a method for a joint handover using common messages for a plurality of UEs in a first distributed architecture in accordance with some aspects of the disclosure.

[0033] FIG. **7** is a call flow diagram illustrating a method for a joint handover using common messages for a plurality of UEs in a second distributed architecture in accordance with some aspects of the disclosure.

[0034] FIG. **8** is a call flow diagram illustrating a method for a joint handover using common messages for a plurality of UEs in a third distributed architecture in accordance with some aspects of the disclosure.

[0035] FIG. **9** is a call flow diagram illustrating a method for a joint handover using UE-specific messages for a plurality of UEs in a first distributed architecture in accordance with some aspects of the disclosure.

[0036] FIG. **10**A is a call flow diagram illustrating a first portion of a method for a joint handover using UE-specific messages for a plurality of UEs in a second distributed architecture in accordance with some aspects of the disclosure.

[0037] FIG. **10**B is a call flow diagram illustrating a second portion of the method for the joint handover using UE-specific messages for the plurality of UEs in the second distributed architecture in accordance with some aspects of the disclosure.

[0038] FIG. **11**A is a call flow diagram illustrating a first portion of a method for a joint handover using common messages for a plurality of UEs in a third distributed architecture in accordance with some aspects of the disclosure.

[0039] FIG. **11**B is a call flow diagram illustrating a second portion of a method for a joint handover using common messages for a plurality of UEs in a third distributed architecture in accordance with some aspects of the disclosure.

[0040] FIG. **12** is a flowchart of a method of wireless communication.

[0041] FIG. **13** is a flowchart of a method of wireless communication.

[0042] FIG. **14** is a flowchart of a method of wireless communication.

[0043] FIG. **15** is a flowchart of a method of wireless communication.

[0044] FIG. **16** is a flowchart of a method of wireless communication.

[0045] FIG. **17** is a flowchart of a method of wireless communication.

[0046] FIG. **18** is a flowchart of a method of wireless communication.

[0047] FIG. **19** is a flowchart of a method of wireless communication.

[0048] FIG. **20** is a flowchart of a method of wireless communication.

[0049] FIG. **21** is a flowchart of a method of wireless communication.

[0050] FIG. **22** is a flowchart of a method of wireless communication.

[0051] FIG. **23** is a flowchart of a method of wireless communication.

[0052] FIG. **24** is a flowchart of a method of wireless communication.

[0053] FIG. **25** is a flowchart of a method of wireless communication.

[0054] FIG. **26** is a diagram illustrating an example of a hardware implementation for an example network entity.

[0055] FIG. **27** is a diagram illustrating an example of a hardware implementation for an example network entity.

DETAILED DESCRIPTION

[0056] Some aspects of wireless communication provide a high-speed, low-latency, and high-reliability wireless connectivity which can enable latency-sensitive services like an immersive extended reality (XR), augmented reality (AR), and/or virtual reality (VR) multimedia (e.g., associated with cloud computing). For example, wireless communication may provide multi-media associated with one or more of AR Glasses, VR Head-Mounted Display (HMD), Cloud Gaming, or Cloud AI. In some aspects, these advanced applications may be associated with strict system characteristics including one or more of data rate, latency, and power consumption. For example, a first service may be associated with low-latency and high-reliability characteristics and/or thresholds such as a set of thresholds associated with an error rate and a latency, e.g., 99% packets of (XR) traffic delivered within a packet delay budget (PDB) (e.g. 10 ms).

As mobile devices operate in cellular networks, the mobility procedures may significantly increase the packet delay of real-time multimedia traffic.

[0057] In some aspects, a VR and/or XR service may include audio, visual, and/or haptic data and/or traffic may be associated with multiple UEs (e.g., wireless devices such as VR goggles providing audio/visual content, gloves or other wearable devices providing haptic and/or tactile feedback, or other VR/XR devices). For example, tactile and multi-modal communication services may enable multi-modal interactions, combining ultra-low latency with extremely high availability, reliability, and/or security. In some aspects, good immersive experiences may be associated with multi-modal flows (e.g., multi-modal data and/or traffic) received by UEs within synchronization thresholds. For example, audio data may be delayed by up to 50 ms compared to related tactile/haptic data while tactile/haptic data may be delayed by up to 25 ms compared to related audio data. In some aspects, visual data may be delayed by up to 15 ms compared to related tactile/haptic data while tactile/haptic data may be delayed by up to 50 ms compared to related visual data.

[0058] The synchronization thresholds between multi-modal flows, in some aspects, may raise challenges related to inter-cell mobility, as two (or more) UEs may be involved. When a plurality of UEs is associated with different data flows associated with a same XR service, it may introduce challenges associated with ensuring the synchronization thresholds are met. In some aspects, in order to simplify meeting the synchronization UEs may be moved to a neighboring cell together if one UE experiences a trigger for moving cells (e.g., degrading radio conditions). The reasons for moving UEs together, in some aspects, may include (1) simplifying synchronization (such that all multi-modal QoS flows are managed by the same scheduler), (2) to ensure that packets which are synchronized go through the same path in the network (to avoid packets from one QoS flow to be delayed because of forwarding while packets of other flows are not), or (3) to ensure that the first UE is not moved to a target cell which doesn't have the resources to accept/support the other (related) UEs.

[0059] Various aspects relate generally to network signaling for UEs that are grouped together for serving a common service. In some examples, a CP of a CU associated with a plurality of wireless devices associated with a first multi-modal service, configured to output, for a source DU associated with a handover procedure for the plurality of wireless devices, a common request to modify a context of the plurality of wireless devices and obtain, from the source DU and based on the common request, a common response relating to the context of the plurality of wireless devices. In some aspects, a source DU serving a plurality of wireless devices associated with a multi-modal service may be configured to obtain, for a handover procedure for the plurality of wireless devices from the source DU to a target DU, a common context modification request relating to modifying a context of the plurality of wireless devices and output, based on the common context modification request, a first common data delivery status indication for the plurality of wireless devices. In some aspects, a target DU serving a plurality of wireless devices associated with a multi-modal service may be configured to obtain, for a handover procedure for the plurality of wireless devices from a source DU to a target DU, a common context setup request relating to modifying a context of the plurality of wireless devices and output, based on the common context setup request, a common context setup response for the plurality of wireless devices. In some aspects, a CP of a CU associated with a plurality of wireless devices associated with a first multi-modal service, may be configured to output, for a target distributed unit (DU) associated with a joint handover procedure for the plurality of wireless devices, a first request relating to a first context of a first wireless device in the plurality of wireless devices, wherein the first request comprises a first identifier of at least a second wireless device in the plurality of wireless devices associated with the joint handover procedure; and output, for the target DU, a second request relating to a second context of the second wireless device in the plurality of wireless devices, wherein the second request comprises a second identifier of at least the first wireless device. In some aspects, source DU serving a plurality of wireless devices associated with a multi-modal service, may be configured to obtain, in association with a handover procedure for the plurality of wireless devices, a first context modification request for a first wireless device in the plurality of wireless devices, wherein the first context modification request comprises a first identifier for at least a second wireless device in the plurality of wireless devices, and obtain, in association with the handover procedure for the plurality of wireless devices, a second context modification request for the second wireless device, wherein the second context modification request comprises a second identifier for at least the first wireless device in the plurality of wireless devices. In some aspects, a target DU serving a plurality of wireless devices associated with a multi-modal service may be configured to obtain, in association with a handover procedure for the plurality of wireless devices, a first context setup request for a first wireless device in the plurality of wireless devices, wherein the first context setup request comprises a first identifier for at least a second wireless device in the plurality of wireless devices and obtain, in association with the handover procedure for the plurality of wireless devices, a second context setup request for the second wireless device, wherein the second context setup request comprises a second identifier for at least the first wireless device in the plurality of wireless devices.

[0060] Particular aspects of the subject matter described in this disclosure can be implemented to realize one or more of the following potential advantages. In some examples, by introducing network signaling for UEs that are grouped together for serving a common service, the described techniques can be used to provide movement and/or transfer between cells for multiple UEs associated with a multi-modal service without interruption.

[0061] The detailed description set forth below in connection with the drawings describes various configurations and does not represent the only configurations in which the concepts described herein may be practiced. The detailed description includes specific details for the purpose of providing a thorough understanding of various concepts. However, these concepts may be practiced without these specific details. In some instances, well known structures and components are shown in block diagram form in order to avoid obscuring such concepts.

[0062] Several aspects of telecommunication systems are presented with reference to various apparatus and methods. These apparatus and methods are described in the following detailed description and illustrated in the accompanying

drawings by various blocks, components, circuits, processes, algorithms, etc. (collectively referred to as "elements"). These elements may be implemented using electronic hardware, computer software, or any combination thereof. Whether such elements are implemented as hardware or software depends upon the particular application and design constraints imposed on the overall system.

[0063] By way of example, an element, or any portion of an element, or any combination of elements may be implemented as a "processing system" that includes one or more processors. When multiple processors are implemented, the multiple processors may perform the functions individually or in combination. Examples of processors include microprocessors, microcontrollers, graphics processing units (GPUs), central processing units (CPUs), application processors, digital signal processors (DSPs), reduced instruction set computing (RISC) processors, systems on a chip (SoC), baseband processors, field programmable gate arrays (FPGAs), programmable logic devices (PLDs), state machines, gated logic, discrete hardware circuits, and other suitable hardware configured to perform the various functionality described throughout this disclosure. One or more processors in the processing system may execute software. Software, whether referred to as software, firmware, middleware, microcode, hardware description language, or otherwise, shall be construed broadly to mean instructions, instruction sets, code, code segments, program code, programs, subprograms, software components, applications, software applications, software packages, routines, subroutines, objects, executables, threads of execution, procedures, functions, or any combination thereof.

[0064] Accordingly, in one or more example aspects, implementations, and/or use cases, the functions described may be implemented in hardware, software, or any combination thereof. If implemented in software, the functions may be stored on or encoded as one or more instructions or code on a computer-readable medium. Computer-readable media includes computer storage media. Storage media may be any available media that can be accessed by a computer. By way of example, such computer-readable media can include a random-access memory (RAM), a read-only memory (ROM), an electrically erasable programmable ROM (EEPROM), optical disk storage, magnetic disk storage, other magnetic storage devices, combinations of the types of computer-readable media, or any other medium that can be used to store computer executable code in the form of instructions or data structures that can be accessed by a computer.

[0065] While aspects, implementations, and/or use cases are described in this application by illustration to some examples, additional or different aspects, implementations and/or use cases may come about in many different arrangements and scenarios. Aspects, implementations, and/or use cases described herein may be implemented across many differing platform types, devices, systems, shapes, sizes, and packaging arrangements. For example, aspects, implementations, and/or use cases may come about via integrated chip implementations and other non-module-component based devices (e.g., end-user devices, vehicles, communication devices, computing devices, industrial equipment, retail/purchasing devices, medical devices, artificial intelligence (AI)-enabled devices, etc.). While some examples may or may not be specifically directed to use cases or applications, a wide assortment of applicability of described examples may occur. Aspects, implementations, and/or use cases may range a spectrum from chip-level or modular components to non-modular, non-chip-level implementations and further to aggregate, distributed, or original equipment manufacturer (OEM) devices or systems incorporating one or more techniques herein. In some practical settings, devices incorporating described aspects and features may also include additional components and features for implementation and practice of claimed and described aspect. For example, transmission and reception of wireless signals necessarily includes a number of components for analog and digital purposes (e.g., hardware components including antenna, RF-chains, power amplifiers, modulators, buffer, processor(s), interleaver, adders/summers, etc.). Techniques described herein may be practiced in a wide variety of devices, chip-level components, systems, distributed arrangements, aggregated or disaggregated components, end-user devices, etc. of varying sizes, shapes, and constitution.

[0066] Deployment of communication systems, such as 5G NR systems, may be arranged in multiple manners with various components or constituent parts. In a 5G NR system, or network, a network node, a network entity, a mobility element of a network, a radio access network (RAN) node, a core network node, a network element, or a network equipment, such as a base station (BS), or one or more units (or one or more components) performing base station functionality, may be implemented in an aggregated or disaggregated architecture. For example, a BS (such as a Node B (NB), evolved NB (eNB), NR BS, 5G NB, access point (AP), a transmission reception point (TRP), or a cell, etc.) may be implemented as an aggregated base station (also known as a standalone BS or a monolithic BS) or a disaggregated base station.

[0067] An aggregated base station may be configured to utilize a radio protocol stack that is physically or logically integrated within a single RAN node. A disaggregated base station may be configured to utilize a protocol stack that is physically or logically distributed among two or more units (such as one or more central or centralized units (CUs), one or more distributed units (DUs), or one or more radio units (RUs)). In some aspects, a CU may be implemented within a RAN node, and one or more DUs may be co-located with the CU, or alternatively, may be geographically or virtually distributed throughout one or multiple other RAN nodes. The DUs may be implemented to communicate with one or more RUs. Each of the CU, DU and RU can be implemented as virtual units, i.e., a virtual central unit (VCU), a virtual distributed unit (VDU), or a virtual radio unit (VRU).

[0068] Base station operation or network design may consider aggregation characteristics of base station functionality. For example, disaggregated base stations may be utilized in an integrated access backhaul (IAB) network, an open radio access network (O-RAN (such as the network configuration sponsored by the O-RAN Alliance)), or a virtualized radio access network (vRAN, also known as a cloud radio access network (C-RAN)). Disaggregation may include distributing functionality across two or more units at various physical locations, as well as distributing functionality for at least one unit virtually, which can enable flexibility in network design. The various units of the disaggregated base station, or disaggregated RAN architecture, can be configured for wired or wireless communication with at least one other unit.

[0069] FIG. **1** is a diagram **100** illustrating an example of a wireless communications system and an access network. The illustrated wireless communications system includes a disaggregated base station architecture. The disaggregated base station architecture may include one or more CUs **110** that can communicate directly with a core network **120** via a backhaul link, or indirectly with the core network **120** through one or more disaggregated base station units (such as a Near-Real Time (Near-RT) RAN Intelligent Controller (RIC) **125** via an E2 link, or a Non-Real Time (Non-RT) RIC **115** associated with a Service Management and Orchestration (SMO) Framework **105**, or both). A CU **110** may communicate with one or more DUs **130** via respective midhaul links, such as an F1 interface. The DUs **130** may communicate with one or more RUs **140** via respective fronthaul links. The RUs **140** may communicate with respective UEs **104** via one or more radio frequency (RF) access links. In some implementations, the UE **104** may be simultaneously served by multiple RUs **140**.

[0070] Each of the units, i.e., the CUS **110**, the DUs **130**, the RUs **140**, as well as the Near-RT RICs **125**, the Non-RT RICs **115**, and the SMO Framework **105**, may include one or more interfaces or be coupled to one or more interfaces configured to receive or to transmit signals, data, or information (collectively, signals) via a wired or wireless transmission medium. Each of the units, or an associated processor or controller providing instructions to the communication interfaces of the units, can be configured to communicate with one or more of the other units via the transmission medium. For example, the units can include a wired interface configured to receive or to transmit signals over a wired transmission medium to one or more of the other units. Additionally, the units can include a wireless interface, which may include a receiver, a transmitter, or a transceiver (such as an RF transceiver), configured to receive or to transmit signals, or both, over a wireless transmission medium to one or more of the other units.

[0071] In some aspects, the CU **110** may host one or more higher layer control functions. Such control functions can include radio resource control (RRC), packet data convergence protocol (PDCP), service data adaptation protocol (SDAP), or the like. Each control function can be implemented with an interface configured to communicate signals with other control functions hosted by the CU **110**. The CU **110** may be configured to handle user plane functionality (i.e., Central Unit-User Plane (CU-UP)), control plane functionality (i.e., Central Unit-Control Plane (CU-CP)), or a combination thereof. In some implementations, the CU **110** can be logically split into one or more CU-UP units and one or more CU-CP units. The CU-UP unit can communicate bidirectionally with the CU-CP unit via an interface, such as an E1 interface when implemented in an O-RAN configuration. The CU **110** can be implemented to communicate with the DU **130**, as necessary, for network control and signaling.

[0072] The DU **130** may correspond to a logical unit that includes one or more base station functions to control the operation of one or more RUs **140**. In some aspects, the DU **130** may host one or more of a radio link control (RLC) layer, a medium access control (MAC) layer, and one or more high physical (PHY) layers (such as modules for forward error correction (FEC) encoding and decoding, scrambling, modulation, demodulation, or the like) depending, at least in part, on a functional split, such as those defined by 3GPP. In some aspects, the DU **130** may further host one or more low PHY layers. Each layer (or module) can be implemented with an interface configured to communicate signals with other layers (and modules) hosted by the DU **130**, or with the control functions hosted by the CU **110**.

[0073] Lower-layer functionality can be implemented by one or more RUs **140**. In some deployments, an RU **140**, controlled by a DU **130**, may correspond to a logical node that hosts RF processing functions, or low-PHY layer functions (such as performing fast Fourier transform (FFT), inverse FFT (IFFT), digital beamforming, physical random access channel (PRACH) extraction and filtering, or the like), or both, based at least in part on the functional split, such as a lower layer functional split. In such an architecture, the RU(s) **140** can be implemented to handle over the air (OTA) communication with one or more UEs **104**. In some implementations, real-time and non-real-time aspects of control and user plane communication with the RU(s) **140** can be controlled by the corresponding DU **130**. In some scenarios, this configuration can enable the DU(s) **130** and the CU **110** to be implemented in a cloud-based RAN architecture, such as a vRAN architecture.

[0074] The SMO Framework **105** may be configured to support RAN deployment and provisioning of non-virtualized and virtualized network elements. For non-virtualized network elements, the SMO Framework **105** may be configured to support the deployment of dedicated physical resources for RAN coverage requirements that may be managed via an operations and maintenance interface (such as an O1 interface). For virtualized network elements, the SMO Framework **105** may be configured to interact with a cloud computing platform (such as an open cloud (O-Cloud) **190**) to perform network element life cycle management (such as to instantiate virtualized network elements) via a cloud computing platform interface (such as an O2 interface). Such virtualized network elements can include, but are not limited to, CUs **110**, DUs **130**, RUs **140** and Near-RT RICs **125**. In some implementations, the SMO Framework **105** can communicate with a hardware aspect of a 4G RAN, such as an open eNB (O-eNB) **111**, via an O1 interface. Additionally, in some implementations, the SMO Framework **105** can communicate directly with one or more RUs **140** via an O1 interface. The SMO Framework **105** also may include a Non-RT RIC **115** configured to support functionality of the SMO Framework **105**.

[0075] The Non-RT RIC **115** may be configured to include a logical function that enables non-real-time control and optimization of RAN elements and resources, artificial intelligence (AI)/machine learning (ML) (AI/ML) workflows including model training and updates, or policy-based guidance of applications/features in the Near-RT RIC **125**. The Non-RT RIC **115** may be coupled to or communicate with (such as via an A1 interface) the Near-RT RIC **125**. The Near-RT RIC **125** may be configured to include a logical function that enables near-real-time control and optimization of RAN elements and resources via data collection and actions over an interface (such as via an E2 interface) connecting one or more CUs **110**, one or more DUs **130**, or both, as well as an O-eNB, with the Near-RT RIC **125**.

[0076] In some implementations, to generate AI/ML models to be deployed in the Near-RT RIC **125**, the Non-RT RIC **115** may receive parameters or external enrichment information from external servers. Such information may be

utilized by the Near-RT RIC **125** and may be received at the SMO Framework **105** or the Non-RT RIC **115** from non-network data sources or from network functions. In some examples, the Non-RT RIC **115** or the Near-RT RIC **125** may be configured to tune RAN behavior or performance. For example, the Non-RT RIC **115** may monitor long-term trends and patterns for performance and employ AI/ML models to perform corrective actions through the SMO Framework **105** (such as reconfiguration via **01**) or via creation of RAN management policies (such as A1 policies).

[0077] At least one of the CU **110**, the DU **130**, and the RU **140** may be referred to as a base station **102**. Accordingly, a base station **102** may include one or more of the CU **110**, the DU **130**, and the RU **140** (each component indicated with dotted lines to signify that each component may or may not be included in the base station **102**). The base station **102** provides an access point to the core network **120** for a UE **104**. The base station **102** may include macrocells (high power cellular base station) and/or small cells (low power cellular base station). The small cells include femtocells, picocells, and microcells. A network that includes both small cell and macrocells may be known as a heterogeneous network. A heterogeneous network may also include Home Evolved Node Bs (eNBs) (HeNBs), which may provide service to a restricted group known as a closed subscriber group (CSG). The communication links between the RUs **140** and the UEs **104** may include uplink (UL) (also referred to as reverse link) transmissions from a UE **104** to an RU **140** and/or downlink (DL) (also referred to as forward link) transmissions from an RU **140** to a UE **104**. The communication links may use multiple-input and multiple-output (MIMO) antenna technology, including spatial multiplexing, beamforming, and/or transmit diversity. The communication links may be through one or more carriers. The base station **102**/UEs **104** may use spectrum up to Y MHz (e.g., 5, 10, 15, 20, 100, 400, etc. MHz) bandwidth per carrier allocated in a carrier aggregation of up to a total of Yx MHz (x component carriers) used for transmission in each direction. The carriers may or may not be adjacent to each other. Allocation of carriers may be asymmetric with respect to DL and UL (e.g., more or fewer carriers may be allocated for DL than for UL). The component carriers may include a primary component carrier and one or more secondary component carriers. A primary component carrier may be referred to as a primary cell (PCell) and a secondary component carrier may be referred to as a secondary cell (SCell).

[0078] Certain UEs **104** may communicate with each other using device-to-device (D2D) communication link **158**. The D2D communication link **158** may use the DL/UL wireless wide area network (WWAN) spectrum. The D2D communication link **158** may use one or more sidelink channels, such as a physical sidelink broadcast channel (PSBCH), a physical sidelink discovery channel (PSDCH), a physical sidelink shared channel (PSSCH), and a physical sidelink control channel (PSCCH). D2D communication may be through a variety of wireless D2D communications systems, such as for example, Bluetooth™ (Bluetooth is a trademark of the Bluetooth Special Interest Group (SIG)), Wi-Fi™ (Wi-Fi is a trademark of the Wi-Fi Alliance) based on the Institute of Electrical and Electronics Engineers (IEEE) 802.11 standard, LTE, or NR.

[0079] The wireless communications system may further include a Wi-Fi AP **150** in communication with UEs **104** (also referred to as Wi-Fi stations (STAs)) via communication link **154**, e.g., in a 5 GHz unlicensed frequency spectrum or the like. When communicating in an unlicensed frequency spectrum, the UEs **104**/AP **150** may perform a clear channel assessment (CCA) prior to communicating in order to determine whether the channel is available.

[0080] The electromagnetic spectrum is often subdivided, based on frequency/wavelength, into various classes, bands, channels, etc. In 5G NR, two initial operating bands have been identified as frequency range designations FRI (410 MHz-7.125 GHZ) and FR2 (24.25 GHz-52.6 GHz). Although a portion of FR1 is greater than 6 GHz, FR1 is often referred to (interchangeably) as a "sub-6 GHz" band in various documents and articles. A similar nomenclature issue sometimes occurs with regard to FR2, which is often referred to (interchangeably) as a "millimeter wave" band in documents and articles, despite being different from the extremely high frequency (EHF) band (30 GHz-300 GHz) which is identified by the International Telecommunications Union (ITU) as a "millimeter wave" band.

[0081] The frequencies between FR1 and FR2 are often referred to as mid-band frequencies. Recent 5G NR studies have identified an operating band for these mid-band frequencies as frequency range designation FR3 (7.125 GHZ-24.25 GHZ). Frequency bands falling within FR3 may inherit FR1 characteristics and/or FR2 characteristics, and thus may effectively extend features of FR1 and/or FR2 into mid-band frequencies. In addition, higher frequency bands are currently being explored to extend 5G NR operation beyond 52.6 GHz. For example, three higher operating bands have been identified as frequency range designations FR2-2 (52.6 GHz-71 GHZ), FR4 (71 GHz-114.25 GHZ), and FR5 (114.25 GHz-300 GHz). Each of these higher frequency bands falls within the EHF band.

[0082] With the above aspects in mind, unless specifically stated otherwise, the term "sub-6 GHz" or the like if used herein may broadly represent frequencies that may be less than 6 GHz, may be within FR1, or may include mid-band frequencies. Further, unless specifically stated otherwise, the term "millimeter wave" or the like if used herein may broadly represent frequencies that may include mid-band frequencies, may be within FR2, FR4, FR2-2, and/or FR5, or may be within the EHF band.

[0083] The base station **102** and the UE **104** may each include a plurality of antennas, such as antenna elements, antenna panels, and/or antenna arrays to facilitate beamforming. The base station **102** may transmit a beamformed signal **182** to the UE **104** in one or more transmit directions. The UE **104** may receive the beamformed signal from the base station **102** in one or more receive directions. The UE **104** may also transmit a beamformed signal **184** to the base station **102** in one or more transmit directions. The base station **102** may receive the beamformed signal from the UE **104** in one or more receive directions. The base station **102**/UE **104** may perform beam training to determine the best receive and transmit directions for each of the base station **102**/UE **104**. The transmit and receive directions for the base station **102** may or may not be the same. The transmit and receive directions for the UE **104** may or may not be the same.

[0084] The base station **102** may include and/or be referred to as a gNB, Node B, eNB, an access point, a base transceiver station, a radio base station, a radio transceiver, a transceiver function, a basic service set (BSS), an extended service set (ESS), a TRP, network node, network entity,

network equipment, or some other suitable terminology. The base station **102** can be implemented as an integrated access and backhaul (IAB) node, a relay node, a sidelink node, an aggregated (monolithic) base station with a baseband unit (BBU) (including a CU and a DU) and an RU, or as a disaggregated base station including one or more of a CU, a DU, and/or an RU. The set of base stations, which may include disaggregated base stations and/or aggregated base stations, may be referred to as next generation (NG) RAN (NG-RAN).

[0085] The core network **120** may include an Access and Mobility Management Function (AMF) **161**, a Session Management Function (SMF) **162**, a User Plane Function (UPF) **163**, a Unified Data Management (UDM) **164**, one or more location servers **168**, and other functional entities. The AMF **161** is the control node that processes the signaling between the UEs **104** and the core network **120**. The AMF **161** supports registration management, connection management, mobility management, and other functions. The SMF **162** supports session management and other functions. The UPF **163** supports packet routing, packet forwarding, and other functions. The UDM **164** supports the generation of authentication and key agreement (AKA) credentials, user identification handling, access authorization, and subscription management. The one or more location servers **168** are illustrated as including a Gateway Mobile Location Center (GMLC) **165** and a Location Management Function (LMF) **166**. However, generally, the one or more location servers **168** may include one or more location/positioning servers, which may include one or more of the GMLC **165**, the LMF **166**, a position determination entity (PDE), a serving mobile location center (SMLC), a mobile positioning center (MPC), or the like. The GMLC **165** and the LMF **166** support UE location services. The GMLC **165** provides an interface for clients/applications (e.g., emergency services) for accessing UE positioning information. The LMF **166** receives measurements and assistance information from the NG-RAN and the UE **104** via the AMF **161** to compute the position of the UE **104**. The NG-RAN may utilize one or more positioning methods in order to determine the position of the UE **104**. Positioning the UE **104** may involve signal measurements, a position estimate, and an optional velocity computation based on the measurements. The signal measurements may be made by the UE **104** and/or the base station **102** serving the UE **104**. The signals measured may be based on one or more of a satellite positioning system (SPS) **170** (e.g., one or more of a Global Navigation Satellite System (GNSS), global position system (GPS), non-terrestrial network (NTN), or other satellite position/location system), LTE signals, wireless local area network (WLAN) signals, Bluetooth signals, a terrestrial beacon system (TBS), sensor-based information (e.g., barometric pressure sensor, motion sensor), NR enhanced cell ID (NR E-CID) methods, NR signals (e.g., multi-round trip time (Multi-RTT), DL angle-of-departure (DL-AoD), DL time difference of arrival (DL-TDOA), UL time difference of arrival (UL-TDOA), and UL angle-of-arrival (UL-AoA) positioning), and/or other systems/signals/sensors.

[0086] Examples of UEs **104** include a cellular phone, a smart phone, a session initiation protocol (SIP) phone, a laptop, a personal digital assistant (PDA), a satellite radio, a global positioning system, a multimedia device, a video device, a digital audio player (e.g., MP3 player), a camera, a game console, a tablet, a smart device, a wearable device, a vehicle, an electric meter, a gas pump, a large or small kitchen appliance, a healthcare device, an implant, a sensor/actuator, a display, or any other similar functioning device. Some of the UEs **104** may be referred to as IoT devices (e.g., parking meter, gas pump, toaster, vehicles, heart monitor, etc.). The UE **104** may also be referred to as a station, a mobile station, a subscriber station, a mobile unit, a subscriber unit, a wireless unit, a remote unit, a mobile device, a wireless device, a wireless communications device, a remote device, a mobile subscriber station, an access terminal, a mobile terminal, a wireless terminal, a remote terminal, a handset, a user agent, a mobile client, a client, or some other suitable terminology. In some scenarios, the term UE may also apply to one or more companion devices such as in a device constellation arrangement. One or more of these devices may collectively access the network and/or individually access the network.

[0087] Referring again to FIG. **1**, in certain aspects, the base station **102** may have a joint handover component **199** that may be configured to output, for a target distributed unit (DU) associated with a joint handover procedure for the plurality of wireless devices, a first request relating to a first context of a first wireless device in the plurality of wireless devices, wherein the first request comprises a first identifier of at least a second wireless device in the plurality of wireless devices associated with the joint handover procedure; and output, for the target DU, a second request relating to a second context of the second wireless device in the plurality of wireless devices, wherein the second request comprises a second identifier of at least the first wireless device.

[0088] The joint handover component **199** may be configured to output, for a source DU associated with a handover procedure for the plurality of wireless devices, a common request to modify a context of the plurality of wireless devices and obtain, from the source DU and based on the common request, a common response relating to the context of the plurality of wireless devices.

[0089] The joint handover component **199** may be configured to obtain, from a source DU associated with a handover procedure for the plurality of wireless devices, a first common data delivery status indication relating to the plurality of wireless devices and refrain, based on the first common data delivery status indication, from routing data for the plurality of wireless devices to the source DU.

[0090] The joint handover component **199** may be configured to obtain, from a CP of a CU associated with the plurality of wireless devices, a common request associated with a bearer context setup for the plurality of wireless devices and output, for the CP of the CU, a common response associated with the bearer context setup for the plurality of wireless devices.

[0091] The joint handover component **199** may be configured to obtain, from a CP of a CU associated with a target DU associated with the plurality of wireless devices, a common request associated with a path switch for the plurality of wireless devices, switch, based on the common request, a path for the plurality of wireless devices, and output, for the CP of the CU, a common response acknowledging the path switch for the plurality of wireless devices.

[0092] The joint handover component **199** may be configured to output, for a target DU associated with a joint handover procedure for the plurality of wireless devices, a first request relating to a first context of a first wireless

device in the plurality of wireless devices, wherein the first request comprises a first identifier of at least a second wireless device in the plurality of wireless devices associated with the joint handover procedure and output, for the target DU, a second request relating to a second context of the second wireless device in the plurality of wireless devices, wherein the second request comprises a second identifier of at least the first wireless device.

[0093] The joint handover component **199** may be configured to obtain, from a source DU associated with a joint handover procedure for the plurality of wireless devices, a first data delivery status indication relating to a first wireless device in the plurality of wireless devices, wherein the first data delivery status indication comprises an identifier of at least a second wireless device in the plurality of wireless devices associated with the joint handover procedure and refrain, based on the first data delivery status indication, from routing data for the plurality of wireless devices to the source DU.

[0094] The joint handover component **199** may be configured to obtain, from a source DU associated with a joint handover procedure for the plurality of wireless devices, a first data delivery status indication relating to a first wireless device in the plurality of wireless devices, wherein the first data delivery status indication comprises a first identifier of at least a second wireless device in the plurality of wireless devices associated with the joint handover procedure and route, based on the first data delivery status indication, data for the plurality of wireless devices to a second UP of a second CU associated with a target DU.

[0095] The joint handover component **199** may be configured to obtain, from a CP of a second CU associated with a joint handover procedure for the plurality of wireless devices, a first request associated with a first bearer context setup for a first wireless device in the plurality of wireless devices, wherein the first request comprises a first identifier of at least a second wireless device in the plurality of wireless devices associated with the joint handover procedure for the plurality of wireless devices, refrain, based on the first identifier of at least the second wireless device in the first request, from checking resources in response to the first request, obtain, from the CP of the CU, a second request associated with a second bearer context setup for the second wireless device in the plurality of wireless devices, wherein the second request comprises a second identifier of at least the first wireless device, and check, based on the first request and the second request, the resources for the plurality of wireless devices.

[0096] The joint handover component **199** may be configured to obtain, from a CP of a CU associated with a joint handover procedure for the plurality of wireless devices, a first request associated with a path switch for a first wireless device in the plurality of wireless devices, wherein the first request comprises a first identifier of at least a second wireless device in the plurality of wireless devices associated with the joint handover procedure for the plurality of wireless devices, refrain, based on the first identifier of at least the second wireless device in the first request, from switching a path for the plurality of wireless devices, obtain, from the CP of the CU, a second request associated with the path switch for the second wireless device, wherein the second request comprises a second identifier of at least the first wireless device, and switch, based on the first request and the second request, the path for the plurality of wireless devices.

[0097] The joint handover component **199** may be configured to obtain, for a handover procedure for the plurality of wireless devices from the source DU to a target DU, a common context modification request relating to modifying a context of the plurality of wireless devices and output, based on the common context modification request, a first common data delivery status indication for the plurality of wireless devices.

[0098] The joint handover component **199** may be configured to obtain, for a handover procedure for the plurality of wireless devices from a source DU to a target DU, a common context setup request relating to modifying a context of the plurality of wireless devices and output, based on the common context setup request, a common context setup response for the plurality of wireless devices.

[0099] The joint handover component **199** may be configured to obtain, in association with a handover procedure for the plurality of wireless devices, a first context modification request for a first wireless device in the plurality of wireless devices, wherein the first context modification request comprises a first identifier for at least a second wireless device in the plurality of wireless devices, and obtain, in association with the handover procedure for the plurality of wireless devices, a second context modification request for the second wireless device, wherein the second context modification request comprises a second identifier for at least the first wireless device in the plurality of wireless devices.

[0100] The joint handover component **199** may be configured to obtain, in association with a handover procedure for the plurality of wireless devices, a first context setup request for a first wireless device in the plurality of wireless devices, wherein the first context setup request comprises a first identifier for at least a second wireless device in the plurality of wireless devices and obtain, in association with the handover procedure for the plurality of wireless devices, a second context setup request for the second wireless device, wherein the second context setup request comprises a second identifier for at least the first wireless device in the plurality of wireless devices. Although the following description may be focused on 5G NR, the concepts described herein may be applicable to other similar areas, such as LTE, LTE-A, CDMA, GSM, and other wireless technologies.

[0101] FIG. **2**A is a diagram **200** illustrating an example of a first subframe within a 5G NR frame structure. FIG. **2**B is a diagram **230** illustrating an example of DL channels within a 5G NR subframe. FIG. **2**C is a diagram **250** illustrating an example of a second subframe within a 5G NR frame structure. FIG. **2**D is a diagram **280** illustrating an example of UL channels within a 5G NR subframe. The 5G NR frame structure may be frequency division duplexed (FDD) in which for a particular set of subcarriers (carrier system bandwidth), subframes within the set of subcarriers are dedicated for either DL or UL, or may be time division duplexed (TDD) in which for a particular set of subcarriers (carrier system bandwidth), subframes within the set of subcarriers are dedicated for both DL and UL. In the examples provided by FIGS. **2**A, **2**C, the 5G NR frame structure is assumed to be TDD, with subframe 4 being configured with slot format 28 (with mostly DL), where D

is DL, U is UL, and F is flexible for use between DL/UL, and subframe 3 being configured with slot format 1 (with all UL). While subframes 3, 4 are shown with slot formats 1, 28, respectively, any particular subframe may be configured with any of the various available slot formats 0-61. Slot formats 0, 1 are all DL, UL, respectively. Other slot formats 2-61 include a mix of DL, UL, and flexible symbols. UEs are configured with the slot format (dynamically through DL control information (DCI), or semi-statically/statically through radio resource control (RRC) signaling) through a received slot format indicator (SFI). Note that the description infra applies also to a 5G NR frame structure that is TDD.

[0102] FIGS. **2**A-**2**D illustrate a frame structure, and the aspects of the present disclosure may be applicable to other wireless communication technologies, which may have a different frame structure and/or different channels. A frame (10 ms) may be divided into 10 equally sized subframes (1 ms). Each subframe may include one or more time slots. Subframes may also include mini-slots, which may include 7, 4, or 2 symbols. Each slot may include 14 or 12 symbols, depending on whether the cyclic prefix (CP) is normal or extended. For normal CP, each slot may include 14 symbols, and for extended CP, each slot may include 12 symbols. The symbols on DL may be CP orthogonal frequency division multiplexing (OFDM) (CP-OFDM) symbols. The symbols on UL may be CP-OFDM symbols (for high throughput scenarios) or discrete Fourier transform (DFT) spread OFDM (DFT-s-OFDM) symbols (for power limited scenarios; limited to a single stream transmission). The number of slots within a subframe is based on the CP and the numerology. The numerology defines the subcarrier spacing (SCS) (see Table 1). The symbol length/duration may scale with 1/SCS.

TABLE 1

Numerology, SCS, and CP

μ	SCS $\Delta f = 2^{\mu} \cdot 15$[kHz]	Cyclic prefix
0	15	Normal
1	30	Normal
2	60	Normal, Extended
3	120	Normal
4	240	Normal
5	480	Normal
6	960	Normal

[0103] For normal CP (14 symbols/slot), different numerologies μ 0 to 4 allow for 1, 2, 4, 8, and 16 slots, respectively, per subframe. For extended CP, the numerology 2 allows for 4 slots per subframe. Accordingly, for normal CP and numerology μ, there are 14 symbols/slot and 24 slots/subframe. The subcarrier spacing may be equal to 2^{μ}*15 kHz, where μ is the numerology 0 to 4. As such, the numerology μ=0 has a subcarrier spacing of 15 kHz and the numerology μ=4 has a subcarrier spacing of 240 kHz. The symbol length/duration is inversely related to the subcarrier spacing. FIGS. **2**A-**2**D provide an example of normal CP with 14 symbols per slot and numerology μ=2 with 4 slots per subframe. The slot duration is 0.25 ms, the subcarrier spacing is 60 kHz, and the symbol duration is approximately 16.67 μs. Within a set of frames, there may be one or more different bandwidth parts (BWPs) (see FIG. **2**B) that are frequency division multiplexed. Each BWP may have a particular numerology and CP (normal or extended).

[0104] A resource grid may be used to represent the frame structure. Each time slot includes a resource block (RB) (also referred to as physical RBs (PRBs)) that extends 12 consecutive subcarriers. The resource grid is divided into multiple resource elements (REs). The number of bits carried by each RE depends on the modulation scheme.

[0105] As illustrated in FIG. **2**A, some of the REs carry reference (pilot) signals (RS) for the UE. The RS may include demodulation RS (DM-RS) (indicated as R for one particular configuration, but other DM-RS configurations are possible) and channel state information reference signals (CSI-RS) for channel estimation at the UE. The RS may also include beam measurement RS (BRS), beam refinement RS (BRRS), and phase tracking RS (PT-RS).

[0106] FIG. **2**B illustrates an example of various DL channels within a subframe of a frame. The physical downlink control channel (PDCCH) carries DCI within one or more control channel elements (CCEs) (e.g., 1, 2, 4, 8, or 16 CCEs), each CCE including six RE groups (REGs), each REG including 12 consecutive REs in an OFDM symbol of an RB. A PDCCH within one BWP may be referred to as a control resource set (CORESET). A UE is configured to monitor PDCCH candidates in a PDCCH search space (e.g., common search space, UE-specific search space) during PDCCH monitoring occasions on the CORESET, where the PDCCH candidates have different DCI formats and different aggregation levels. Additional BWPs may be located at greater and/or lower frequencies across the channel bandwidth. A primary synchronization signal (PSS) may be within symbol 2 of particular subframes of a frame. The PSS is used by a UE **104** to determine subframe/symbol timing and a physical layer identity. A secondary synchronization signal (SSS) may be within symbol 4 of particular subframes of a frame. The SSS is used by a UE to determine a physical layer cell identity group number and radio frame timing. Based on the physical layer identity and the physical layer cell identity group number, the UE can determine a physical cell identifier (PCI). Based on the PCI, the UE can determine the locations of the DM-RS. The physical broadcast channel (PBCH), which carries a master information block (MIB), may be logically grouped with the PSS and SSS to form a synchronization signal (SS)/PBCH block (also referred to as SS block (SSB)). The MIB provides a number of RBs in the system bandwidth and a system frame number (SFN). The physical downlink shared channel (PDSCH) carries user data, broadcast system information not transmitted through the PBCH such as system information blocks (SIBs), and paging messages.

[0107] As illustrated in FIG. **2**C, some of the REs carry DM-RS (indicated as R for one particular configuration, but other DM-RS configurations are possible) for channel estimation at the base station. The UE may transmit DM-RS for the physical uplink control channel (PUCCH) and DM-RS for the physical uplink shared channel (PUSCH). The PUSCH DM-RS may be transmitted in the first one or two symbols of the PUSCH. The PUCCH DM-RS may be transmitted in different configurations depending on whether short or long PUCCHs are transmitted and depending on the particular PUCCH format used. The UE may transmit sounding reference signals (SRS). The SRS may be transmitted in the last symbol of a subframe. The SRS may have a comb structure, and a UE may transmit SRS on one of the

combs. The SRS may be used by a base station for channel quality estimation to enable frequency-dependent scheduling on the UL.

[0108] FIG. **2**D illustrates an example of various UL channels within a subframe of a frame. The PUCCH may be located as indicated in one configuration. The PUCCH carries uplink control information (UCI), such as scheduling requests, a channel quality indicator (CQI), a precoding matrix indicator (PMI), a rank indicator (RI), and hybrid automatic repeat request (HARQ) acknowledgment (ACK) (HARQ-ACK) feedback (i.e., one or more HARQ ACK bits indicating one or more ACK and/or negative ACK (NACK)). The PUSCH carries data, and may additionally be used to carry a buffer status report (BSR), a power headroom report (PHR), and/or UCI.

[0109] FIG. **3** is a block diagram of a base station **310** in communication with a UE **350** in an access network. In the DL, Internet protocol (IP) packets may be provided to a controller/processor **375**. The controller/processor **375** implements layer 3 and layer 2 functionality. Layer 3 includes a radio resource control (RRC) layer, and layer 2 includes a service data adaptation protocol (SDAP) layer, a packet data convergence protocol (PDCP) layer, a radio link control (RLC) layer, and a medium access control (MAC) layer. The controller/processor **375** provides RRC layer functionality associated with broadcasting of system information (e.g., MIB, SIBs), RRC connection control (e.g., RRC connection paging, RRC connection establishment, RRC connection modification, and RRC connection release), inter radio access technology (RAT) mobility, and measurement configuration for UE measurement reporting; PDCP layer functionality associated with header compression/decompression, security (ciphering, deciphering, integrity protection, integrity verification), and handover support functions; RLC layer functionality associated with the transfer of upper layer packet data units (PDUs), error correction through ARQ, concatenation, segmentation, and reassembly of RLC service data units (SDUs), re-segmentation of RLC data PDUs, and reordering of RLC data PDUs; and MAC layer functionality associated with mapping between logical channels and transport channels, multiplexing of MAC SDUs onto transport blocks (TBs), demultiplexing of MAC SDUs from TBs, scheduling information reporting, error correction through HARQ, priority handling, and logical channel prioritization.

[0110] The transmit (TX) processor **316** and the receive (RX) processor **370** implement layer 1 functionality associated with various signal processing functions. Layer 1, which includes a physical (PHY) layer, may include error detection on the transport channels, forward error correction (FEC) coding/decoding of the transport channels, interleaving, rate matching, mapping onto physical channels, modulation/demodulation of physical channels, and MIMO antenna processing. The TX processor **316** handles mapping to signal constellations based on various modulation schemes (e.g., binary phase-shift keying (BPSK), quadrature phase-shift keying (QPSK), M-phase-shift keying (M-PSK), M-quadrature amplitude modulation (M-QAM)). The coded and modulated symbols may then be split into parallel streams. Each stream may then be mapped to an OFDM subcarrier, multiplexed with a reference signal (e.g., pilot) in the time and/or frequency domain, and then combined together using an Inverse Fast Fourier Transform (IFFT) to produce a physical channel carrying a time domain OFDM symbol stream. The OFDM stream is spatially precoded to produce multiple spatial streams. Channel estimates from a channel estimator **374** may be used to determine the coding and modulation scheme, as well as for spatial processing. The channel estimate may be derived from a reference signal and/or channel condition feedback transmitted by the UE **350**. Each spatial stream may then be provided to a different antenna **320** via a separate transmitter **318**Tx. Each transmitter **318**Tx may modulate a radio frequency (RF) carrier with a respective spatial stream for transmission.

[0111] At the UE **350**, each receiver **354**Rx receives a signal through its respective antenna **352**. Each receiver **354**Rx recovers information modulated onto an RF carrier and provides the information to the receive (RX) processor **356**. The TX processor **368** and the RX processor **356** implement layer 1 functionality associated with various signal processing functions. The RX processor **356** may perform spatial processing on the information to recover any spatial streams destined for the UE **350**. If multiple spatial streams are destined for the UE **350**, they may be combined by the RX processor **356** into a single OFDM symbol stream. The RX processor **356** then converts the OFDM symbol stream from the time-domain to the frequency domain using a Fast Fourier Transform (FFT). The frequency domain signal includes a separate OFDM symbol stream for each subcarrier of the OFDM signal. The symbols on each subcarrier, and the reference signal, are recovered and demodulated by determining the most likely signal constellation points transmitted by the base station **310**. These soft decisions may be based on channel estimates computed by the channel estimator **358**. The soft decisions are then decoded and deinterleaved to recover the data and control signals that were originally transmitted by the base station **310** on the physical channel. The data and control signals are then provided to the controller/processor **359**, which implements layer 3 and layer 2 functionality.

[0112] The controller/processor **359** can be associated with at least one memory **360** that stores program codes and data. The at least one memory **360** may be referred to as a computer-readable medium. In the UL, the controller/processor **359** provides demultiplexing between transport and logical channels, packet reassembly, deciphering, header decompression, and control signal processing to recover IP packets. The controller/processor **359** is also responsible for error detection using an ACK and/or NACK protocol to support HARQ operations.

[0113] Similar to the functionality described in connection with the DL transmission by the base station **310**, the controller/processor **359** provides RRC layer functionality associated with system information (e.g., MIB, SIBs) acquisition, RRC connections, and measurement reporting; PDCP layer functionality associated with header compression/decompression, and security (ciphering, deciphering, integrity protection, integrity verification); RLC layer functionality associated with the transfer of upper layer PDUs, error correction through ARQ, concatenation, segmentation, and reassembly of RLC SDUs, re-segmentation of RLC data PDUs, and reordering of RLC data PDUs; and MAC layer functionality associated with mapping between logical channels and transport channels, multiplexing of MAC SDUs onto TBs, demultiplexing of MAC SDUs from TBs, scheduling information reporting, error correction through HARQ, priority handling, and logical channel prioritization.

[0114] Channel estimates derived by a channel estimator **358** from a reference signal or feedback transmitted by the base station **310** may be used by the TX processor **368** to select the appropriate coding and modulation schemes, and to facilitate spatial processing. The spatial streams generated by the TX processor **368** may be provided to different antennas **352** via separate transmitters **354**Tx. Each transmitter **354**Tx may modulate an RF carrier with a respective spatial stream for transmission.

[0115] The UL transmission is processed at the base station **310** in a manner similar to that described in connection with the receiver function at the UE **350**. Each receiver **318**Rx receives a signal through its respective antenna **320**. Each receiver **318**Rx recovers information modulated onto an RF carrier and provides the information to a RX processor **370**.

[0116] The controller/processor **375** can be associated with at least one memory **376** that stores program codes and data. The at least one memory **376** may be referred to as a computer-readable medium. In the UL, the controller/processor **375** provides demultiplexing between transport and logical channels, packet reassembly, deciphering, header decompression, control signal processing to recover IP packets. The controller/processor **375** is also responsible for error detection using an ACK and/or NACK protocol to support HARQ operations.

[0117] At least one of the TX processor **316**, the RX processor **370**, and the controller/processor **375** may be configured to perform aspects in connection with the joint handover component **199** of FIG. **1**.

[0118] Wireless communication systems, such as described in connection with FIGS. **1**, **2**A, **2**B, **2**C, **2**D, and **3**, may support various types of wireless traffic. Some aspects of wireless communication provide a high-speed, low-latency, and high-reliability wireless connectivity which can enable latency-sensitive services like an immersive extended reality (XR), augmented reality (AR), and/or virtual reality (VR) multimedia (e.g., associated with cloud computing).

[0119] XR traffic may refer to wireless communications for technologies such as virtual reality (VR), mixed reality (MR), and/or augmented reality (AR). VR may refer to technologies in which a user is immersed in a simulated experience that is similar or different from the real world. A user may interact with a VR system through a VR headset or a multi-projected environment that generates realistic images, sounds, and other sensations that simulate a user's physical presence in a virtual environment. MR may refer to technologies in which aspects of a virtual environment and a real environment are mixed. AR may refer to technologies in which objects residing in the real world are enhanced via computer-generated perceptual information, sometimes across multiple sensory modalities, such as visual, auditory, haptic, somatosensory, and/or olfactory. An AR system may incorporate a combination of real and virtual worlds, real-time interaction, and accurate three-dimensional registration of virtual objects and real objects. In an example, an AR system may overlay sensory information (e.g., images) onto a natural environment and/or mask real objects from the natural environment. XR traffic may include video data and/or audio data. XR traffic may be transmitted by a base station and received by a UE or the XR traffic may be transmitted by a UE and received by a base station.

[0120] XR traffic may arrive in periodic traffic bursts ("XR traffic bursts"). An XR traffic burst may vary in a number of packets per burst and/or a size of each pack in the burst. The diagram **475** in FIG. **4**C illustrates a first XR flow **472** that includes a first XR traffic burst **474** and a second XR traffic burst **476**. As illustrated in the diagram **475**, the traffic bursts may include different numbers of packets, e.g., the first XR traffic burst **474** being shown with three packets (represented as rectangles in the diagram **475**) and the second XR traffic burst **476** being shown with two packets. Furthermore, as illustrated in the diagram **475**, the three packets in the first XR traffic burst **474** and the two packets in the second XR traffic burst **476** may vary in size, that is, packets within the first XR traffic burst **474** and the second XR traffic burst **476** may include varying amounts of data.

[0121] XR traffic bursts may arrive at non-integer periods (i.e., in a non-integer cycle). The periods may be different than an integer number of symbols, slots, etc. In an example, for 60 frames per second (FPS) video data, XR traffic bursts may arrive in $1/60$=16.67 ms periods. In another example, for 120 FPS video data, XR traffic bursts may arrive in $1/120$=8.33 ms periods.

[0122] Arrival times of XR traffic may vary. For example, XR traffic bursts may arrive and be available for transmission at a time that is earlier or later than a time at which a UE (or a base station) expects the XR traffic bursts. The variability of the packet arrival relative to the period (e.g., 16.76 ms period, 8.33 ms period, etc.) may be referred to as "jitter." In an example, jitter for XR traffic may range from −4 ms (earlier than expected arrival) to +4 ms (later than expected arrival). For instance, referring to the first XR flow **472**, a UE may expect a first packet of the first XR traffic burst **474** to arrive at time to, but the first packet of the first XR traffic burst **474** arrives at time t**1**.

[0123] XR traffic may include multiple flows that arrive at a UE (or a base station) concurrently with one another (or within a threshold period of time). For instance, the diagram **475** includes a second XR flow **478**. The second XR flow **478** may have different characteristics than the first XR flow **472**. For instance, the second XR flow **478** may have XR traffic bursts with different numbers of packets, different sizes of packets, etc. In an example, the first XR flow **472** may include video data and the second XR flow **478** may include audio data for the video data. In another example, the first XR flow **472** may include intra-coded picture frames (I-frames) that include complete images and the second XR flow **478** may include predicted picture frames (P-frames) that include changes from a previous image.

[0124] For example, wireless communication may provide multi-media associated with one or more of AR Glasses, VR Head-Mounted Display (HMD), Cloud Gaming, or Cloud AI. In some aspects, these advanced applications may be associated with strict system characteristics including one or more of data rate, latency, and power consumption. For example, a first service may be associated with low-latency and high-reliability characteristics and/or thresholds such as a set of thresholds associated with an error rate and a latency, e.g., 99% packets of (XR) traffic delivered within a packet delay budget (PDB) (e.g. 10 ms). As mobile devices operate in cellular networks, the mobility procedures may significantly increase the packet delay of real-time multimedia traffic.

[0125] FIG. **4**A is a diagram **400** illustrating an example of an exchange of XR traffic between a UE **404** and a service

(e.g., server **407**) via a base station **402**. As an example, the service may include an XR service or a cloud gaming service, among other examples. For example, the UE may include or be associated with AR Glasses, VR Head-Mounted Display (HMD), Cloud Gaming, or Cloud AI. As an example, an uplink packet from the UE may include input information, such as tracking information or user pose information for the XR service, or input for a cloud gaming service. The server **407** may receive the uplink packet and generate a downlink packet based on the user pose information, tracking information, or gaming input. As an example, the downlink packet may include encoded video data, e.g., with separate images (whether staggered or simultaneous) for each eye. FIG. **4**A illustrates a UE **404** providing an XR and/or VR service that may be provided from a server **407** via a base station **402**. Diagram **400** illustrates that a UE **404** may be associated with a single modal flow such that moving from one cell to another is not associated with introducing synchronization problems.

[0126] FIG. **4**B is a diagram **450** illustrating a set of multiple UEs (e.g., including UE **404** and UE **456**) associated with different multi-modal flows (e.g., XR traffic A **460** and XR traffic B **462**) of a multi-modal service provided by a server **407** via a base station **402** in accordance with some aspects of the disclosure. Diagram **450** illustrates that each UE may be associated with a different type of data (audio, visual, and/or tactile/haptic, etc.) and/or different data flows. As an example, the UE **404** may correspond to VR glasses, and the UE **456** may correspond to gloves associated with the same VR service as the VR glasses. The VR service may be for an immersive multi-modal VR application. The immersive experience may be based on data from multi-modal flows being received by the UE within a time period that meets a synchronization threshold. Table 2 illustrates example synchronization thresholds.

TABLE 2

Example Synchronization thresholds for immersive multi-modal VR application

Flow types	Synchronization thresholds	
Audio-Tactile	Audio delay: 50 ms	Tactile delay 25 ms
Visual-Tactile	Visual delay: 15 ms	Tactile delay: 50 ms

Note 1:
For each media component, "delay" refers to the case where that media component is delayed compared to the other.

[0127] In some aspects, a VR and/or XR service may include audio, visual, and/or haptic data and/or traffic may be associated with multiple UEs (e.g., wireless devices such as VR goggles providing audio/visual content, gloves or other wearable devices providing haptic and/or tactile feedback, or other VR/XR devices). For example, tactile and multi-modal communication services may enable multi-modal interactions, combining ultra-low latency with extremely high availability, reliability, and/or security. In some aspects, good immersive experiences may be associated with multi-modal flows (e.g., multi-modal data and/or traffic) received by UEs within synchronization thresholds. For example, audio data may be delayed by up to 50 ms compared to related tactile/haptic data while tactile/haptic data may be delayed by up to 25 ms compared to related audio data. In some aspects, visual data may be delayed by up to 15 ms compared to related tactile/haptic data while tactile/haptic data may be delayed by up to 50 ms compared to related visual data.

[0128] The synchronization thresholds between multi-modal flows, in some aspects, may raise challenges related to inter-cell mobility, as two (or more) UEs may be involved. As an example, if one UE, e.g., UE **404**, suffers signal degradation, it may determine to move cells which may lead to different schedulers scheduling data for the different data flows (e.g., XR traffic A **460** and XR traffic B **462**) or the data taking different paths between the server **407** and the different UEs, such that synchronization thresholds might not be met.

[0129] When a plurality of UEs is associated with different data flows associated with a same XR service, it may introduce challenges associated with ensuring the synchronization thresholds are met. In some aspects, in order to simplify meeting the synchronization UEs may be moved to a neighboring cell together if one UE experiences a trigger for moving cells (e.g., degrading radio conditions). The reasons for moving UEs together, in some aspects, may include (1) simplifying synchronization (such that all multi-modal QoS flows are managed by the same scheduler), (2) to ensure that packets which are synchronized go through the same path in the network (to avoid packets from one QoS flow to be delayed because of forwarding while packets of other flows are not), or (3) to ensure that the first UE is not moved to a target cell which doesn't have the resources to accept/support the other (related) UEs.

[0130] FIG. **5**A is a diagram **500** illustrating a first distributed architecture for an intra-CU-CP-intra-CU-UP-Inter-DU handover associated with some aspects of the disclosure. Diagram **500** illustrates that a group of wireless devices including UE **504** and UE **506** may initially be connected to a source DU **503** and may transfer the connection (e.g., via a handover procedure) to a target DU **505**. The source DU **503** and the target DU **505**, in some aspects, may be associated with a same CU-CP **507** and a same CU-UP **509**. In some aspects, the source DU may be referred to as a source base station or a component of a source base station, and the target DU may be referred to as a target base station or a component of a target base station. As one example, the source DU may correspond to a gNB-DU, and the target DU may correspond to a target gNB-DU.

[0131] FIG. **5**B is a diagram **530** illustrating a second distributed architecture for an intra-CU-CP-inter-CU-UP-inter-DU handover associated with some aspects of the disclosure. Diagram **530** illustrates that a group of wireless devices including UE **504** and UE **506** may initially be connected to a source DU **503** and may transfer the connection (e.g., via a handover procedure) to a target DU **505**. The source DU **503** may be associated with a first CU-UP (e.g., source CU-UP **513**) and the target DU **505** may be associated with a second CU-UP (e.g., target CU-UP **515**). As in diagram **500**, both the source DU **503** (e.g., a component of a source base station) and the target DU **505** (e.g., a component of a target base station) may be associated with a same CU-CP **507**.

[0132] FIG. **5**C is a diagram **560** illustrating a second distributed architecture for an inter-CU-CP-inter-CU-UP-inter-DU handover associated with some aspects of the disclosure. Diagram **560** illustrates that a group of wireless devices including UE **504** and UE **506** may initially be connected to a source DU **503** and may transfer the con-

nection (e.g., via a handover procedure) to a target DU **505**. The source DU **503** may be associated with a first CU-UP (source CU-UP **513**) and a first CU-CP (source CU-CP **517**). The target DU **505** may be associated with a second CU-UP (target CU-UP **515**) and a second CU-CP (target CU-UP **519**). In each of FIGS. **5**A, **5**B, and **5**C, an AMF or UPF may be common to each of the CU components and/or functionality (e.g., the CU-CP or CU-UP).

[0133] Some aspects presented herein provide for network signaling for UEs that are grouped together, or associated, for a common service, e.g., such as described in connection with FIG. **4**B. In some examples, a CP of a CU associated with a plurality of wireless devices associated with a first multi-modal service, may output, for a target distributed unit (DU) associated with a handover procedure for the plurality of wireless devices (e.g., a plurality of UEs), a first common request relating to a context of the plurality of wireless devices and obtain, from the target DU and based on the first common request, a first common response relating to the context of the plurality of wireless devices. The CP of the CU may also output, for a source DU associated with the handover procedure for the plurality of wireless devices, a second common request to modify the context of the plurality of wireless devices based on the first common response and obtain, from the source DU and based on the second common request, a second common response relating to the context of the plurality of wireless devices. In some aspects, the CP of the CU may output, for a target DU associated with a joint handover procedure for the plurality of wireless devices (e.g., a plurality of UEs), a first request relating to a first context of a first wireless device in the plurality of wireless devices, where the first request includes a first identifier of at least a second wireless device in the plurality of wireless devices associated with the joint handover procedure and output, for the target DU, a second request relating to a second context of the second wireless device in the plurality of wireless devices, where the second request comprises a second identifier of at least the first wireless device.

[0134] Particular aspects of the subject matter described in this disclosure can be implemented to realize one or more of the following potential advantages. In some examples, by introducing network signaling for UEs that are grouped together for a common service, the described techniques can be used to provide movement between cells for multiple UEs associated with a multi-modal service without interruption and maintaining synchronization between data flows for the different UEs within the synchronization thresholds for the service. By avoiding interruption and maintaining synchronization, an improved immersive user experience can be provided while enabling mobility between cells.

[0135] FIG. **6** is a call flow diagram **600** illustrating a method for a joint handover using common messages for a plurality of UEs in a first distributed architecture in accordance with some aspects of the disclosure. FIG. **6** illustrates an example of an intra-CU-CP-intra-CU-UP-inter-DU handover using common messages for multiple UEs served by a multi-modal service, where the source and target DUs have a common CU-CP and CU-UP. The method is illustrated in relation to a first and second UE (e.g., UE1 **604** and UE2 **606**) transferring (e.g., being handed over) from a source DU (sDU **603**) to a target DU (tDU **605**). The handover may include a handover from a first cell provided by the sDU to a second cell provided by the tDU. Although the example illustrates two UEs, the aspects may be used for a handover of more than two UEs served by a multi-modal service. The method is also illustrated in relation to a network that may include a UPF **611**, a CU-CP **607**, and a CU-UP **609** common to the sDU **603** and the tDU **605**. The functions ascribed to the sDU **603**, the tDU **605**, the CU-CP **607**, the CU-UP **609**, or the UPF **611**, in some aspects, may be described as being performed by one or more components of a network entity, a network node, or a network device (e.g., a component of a disaggregated network entity/node/device as described above in relation to FIG. **1**) of the network, the sDU **603**, the tDU **605**, the CU-CP **607**, the CU-UP **609**, or the UPF **611**. Accordingly, references to "transmitting" or "outputting" or "providing" in the description below may be understood to refer to a first component of the network, the sDU **603**, the tDU **605**, the CU-CP **607**, the CU-UP **609**, or the UPF **611** outputting (or providing) an indication of the content of the transmission to be transmitted by a different component of the network, the sDU **603**, the tDU **605**, the CU-CP **607**, the CU-UP **609**, or the UPF **611**. Similarly, references to "receiving" or "obtaining" in the description below may be understood to refer to a first component of the network, the sDU **603**, the tDU **605**, the CU-CP **607**, the CU-UP **609**, or the UPF **611** receiving a transmitted signal and outputting (or providing) the received signal (or information based on the received signal) to a different component of the network, the sDU **603**, the tDU **605**, the CU-CP **607**, the CU-UP **609**, or the UPF **611**.

[0136] UE1 **604** and UE2 **606**, in some aspects, may be two of a plurality of UEs (or wireless devices) associated with a same multi-modal service (e.g., an XR, AR, VR, or other service providing multiple modes and/or types of input/output via multiple wireless devices). The service, in some aspects, may be associated with multi-modal information including one or more of a service ID (or multi-modal service ID) and a plurality of flows (QOS flows), and a set of relationships between the flows in the plurality of flows. The relationships between flows, in some aspects, may indicate (or define) related flows (e.g., a specific relationship beyond being associated with the same multi-modal service) and inter-flow (or inter-QoS flow) synchronization thresholds for related and/or unrelated flows (e.g., such as described in connection with Table 2).

[0137] In order to illustrate the concept, the plurality of UEs may include a headset providing audio/visual output and one or more other wearable devices providing tactile or haptic feedback (e.g., heat/cold and/or vibrations), such as illustrated in the example in FIG. **5**B. However, the aspects presented herein are not limited to such examples of UEs and may be used with any plurality of UEs. As shown at **621**, **623**, and **625**, the UE1 **604** and the UE2 **606** may exchange data with a server via the sDU **603**, the CU-UP **609**, and the UPF **611**. The exchange of data may include any of the aspects described in connection with FIG. **5**B, for example. Although not illustrated, the source cell (e.g., via the sDU **603**) may provide the UE1 and the UE2 with a measurement configuration, e.g., indicating resources for the UEs to measure and/or indicating for the UEs to report such measurements. In some aspects, the measurement configuration may configure the UEs to measure other potential target cells.

[0138] As illustrated, a first UE of the plurality of UEs, e.g., UE1 **604**, may transmit, and the sDU **603** may receive,

a measurement report **630**. The measurement report **630**, in some aspects may trigger a handover (HO) procedure.

[0139] Based on the measurement report the sDU **603** may output, and CU-CP **607** may obtain, the message transfer **632** (e.g., an uplink RRC message transfer of the measurement report). In some aspects, the message transfer **632** may include the information included in the measurement report **630**. The CU-CP **607**, in some aspects, may determine, based on the message transfer **632**, to perform a HO procedure for the plurality of UEs (e.g., including at least UE1 **604** and UE2 **606**) from the sDU **603** to the tDU **605**. To initiate the HO procedure, the CU-CP **607** may output, and the tDU **605** may obtain, a first message in a common context setup **638** for the plurality of UEs. For example, the CU-CP **607** may output a common UE context setup request for the plurality of the UEs associated with the (same) service. In some aspects, a "context" may refer to the information used by the network to manage the UE (e.g., managing and/or performing the handover procedure). For example, the context for a UE may include a current state, active connections, supported services, network preferences, etc.

[0140] In some aspects, the common UE context setup request may be provided in an updated and/or enhanced UE context setup request that enables the indication of a plurality of UEs in a single UE context setup request. The common UE context setup request (and subsequent "common" messages related to the HO procedure) may include "multi-modal" (or "common") information. The multi-modal information, in some aspects, may include the multi-modal service ID associated with the plurality of UEs, a list of the UEs associated with the multi-modal service, a list of multi-modal flows associated with the multi-modal service and/or the plurality of UEs, and the relationships between the multi-modal flows associated with the multi-modal service (e.g., the synchronization thresholds associated with related flows). In some aspects, the multi-modal information may indicate which UEs or QoS flows are associated and/or inter-QoS synchronization threshold(s). The tDU **605**, in some aspects, may output, and the CU-CP **607** may obtain, a common UE context setup response as part of the common context setup **638**. Similarly, the common UE context setup response may be provided in an updated and/or enhanced UE context setup response that enables the indication of a plurality of UEs in a single UE context setup response (e.g., includes all, or part, of the multi-modal information described above). The common context setup request and the common context setup response shown at **638** may be F1-AP messages that are exchanged between the tDU **605** and the CU-CP **607** and include multi-modal information.

[0141] Based on the common context setup **638** (e.g., the common UE context setup request obtained from the tDU **605**), the CU-CP **607**, in some aspects, may output, and the sDU **603** may obtain, a common (UE) context modification request **642**. As for the common UE context setup request/response, the common (UE) context modification request **642** may be provided in an updated and/or enhanced format that enables the indication of a plurality of RRC reconfiguration messages for the plurality of UEs and, in some aspects, the multi-modal information described above (or a part thereof), in the common (UE) context modification request **642**. In some aspects, the common (UE) context modification request **642** may include multiple RRC reconfiguration messages (e.g., an RRC reconfiguration message for each of the plurality of UEs associated with the service such as an RRC reconfiguration for UE1 **604** and an RRC reconfiguration for UE2 **606**). The sDU **603** may transmit an individual RRC reconfiguration message **644** to the respective UEs such that, e.g., the UE1 **604** receives the RRC reconfiguration message for the UE1 **604** and the UE2 **606** receives the RRC reconfiguration message for the UE2 **606**. In addition to the common (UE) context modification request **642**, the sDU **603** may output, and the CU-UP **609** may obtain, a common data delivery status frame **652** indicating, or associated with, the plurality of UEs. As for the common UE context setup request/response, the common data delivery status frame **652** may be provided in an updated and/or enhanced format that enables the indication of a plurality of UEs in the common data delivery status frame **652** (e.g., may include at least a part of the multi-modal information described above).

[0142] At **654**, the CU-UP **609** may determine, based on reception of the common data delivery status frame **652** to stop forwarding, routing, and/or directing traffic (from the UPF **611**) to the sDU **603**. Based on the common (UE) context modification request **642**, the sDU **603** may output, and the CU-CP **607** may obtain, a common (UE) context modification response **656**. The common (UE) context modification response **656**, in some aspects, may indicate the multi-modal service ID and/or the plurality of UEs. The common context modification request and the common context modification response shown at **642** and **656** may be F1-AP messages that are exchanged between the tDU **605** and the CU-CP **607** and include multi-modal information.

[0143] Based on the RRC reconfiguration included in the common (UE) context modification request **642**, the UE1 **604** may perform a random access procedure **658**. After performing the procedure **658**, the UE1 **604** may transmit, and the tDU **605** may receive, the RRC reconfiguration complete message **660**. The tDU **605** may forward (or output), and the CU-CP **607** may obtain, the RRC reconfiguration complete message **662**, e.g., as an uplink transfer message. Based on the RRC reconfiguration included in the common (UE) context modification request **642**, the UE2 **606** may perform a random access procedure **664**. Additionally, after performing the procedure **658**, the UE2 **606** may transmit, and the tDU **605** may receive, the RRC reconfiguration complete message **668**. The tDU **605** may forward (or output), and the CU-CP **607** may obtain, the RRC reconfiguration complete message **670**.

[0144] The random access procedure **664** (and the random access procedure **658**) may include a first message (e.g., a Msg1), and after receiving at least the first message associated with the random access procedures for each of the plurality of UEs (e.g., each of the multi-modal UEs), the tDU **605** may output, and the CU-UP **609** may obtain, a common data delivery status **666**. For example, the tDU **605** may wait for the reception of the Msg1 from both the UE1 and the UE2 before sending the common data delivery status **666**. The common data delivery status **666**, in some aspects, may identify the plurality of UEs (e.g., via a list of UEs or via the multi-modal service ID associated with the plurality of UEs). Once the CU-UP **609** obtains the common data delivery status **666**, the CU-UP **609** may begin, at **667**, forwarding, routing, and/or directing traffic (from the UPF **611**) to the tDU **605**. For example, the UPF **611** may output, and the CU-UP **609** may obtain, DL data **676**. The CU-UP **609** may output, and the tDU **605** may obtain, DL data **678**

and the tDU **605** may transmit, and the UE1 **604** and the UE2 **606** may receive, DL data **680**.

[0145] After obtaining (or receiving) the RRC reconfiguration complete messages from the plurality of UEs (e.g., at least the RRC reconfiguration complete message **662** and the RRC reconfiguration complete message **670**), the CU-CP **607** may determine, at **683**, to release resources and or UE contexts for the plurality of UEs. Based on the determination at **683**, the CU-CP **607** may exchange, with sDU **603**, a set of UE context release messages **686** to **689** associated with the UE context release. For example, the CU-CP **607** may output, and the sDU **603** may obtain, a UE context release command message **686** and a UE context release command message **687**. The sDU **603** may output, and the CU-CP **607** may obtain, a UE context release complete message **688** and a UE context release complete message **689**. In some aspects, a UE context release command/complete message pair may be output/obtained for each of the plurality of UEs.

[0146] FIG. **7** is a call flow diagram **700** illustrating a method for a joint handover using common messages for a plurality of UEs in a first distributed architecture for an intra-CU-CP-inter-CU-UP-inter-DU handover in accordance with some aspects of the disclosure. The method is illustrated in relation to a first and second UE (e.g., UE1 **704** and UE2 **706**) transferring from a source DU (sDU **703**) to a target DU (tDU **705**). For example, the handover may be from a first cell provided by the source DU to a second cell provided by the target DU. The method is also illustrated in relation to a network including a CU-CP **707**, a source CU-UP **713**, a target CU-UP **715**, and an AMF/UPF **711** common to the sDU **703** and the tDU **705**. The functions ascribed to the network, the sDU **703**, the tDU **705**, the CU-CP **707**, the source CU-UP **713**, the target CU-UP **715**, or the AMF/UPF **711**, in some aspects, may be described as being performed by one or more components of a network entity, a network node, or a network device (e.g., a component of a disaggregated network entity/node/device as described above in relation to FIG. **1**) implementing the functionality of the network, the sDU **703**, the tDU **705**, the CU-CP **707**, the source CU-UP **713**, the target CU-UP **715**, or the AMF/UPF **711**. Accordingly, references to "transmitting" or "outputting" in the description below may be understood to refer to a first component of the network, the sDU **703**, the tDU **705**, the CU-CP **707**, the source CU-UP **713**, the target CU-UP **715**, or the AMF/UPF **711** outputting (or providing) an indication of the content of the transmission to be transmitted by a different component of the network, the sDU **703**, the tDU **705**, the CU-CP **707**, the source CU-UP **713**, the target CU-UP **715**, or the AMF/UPF **711**. Similarly, references to "receiving" or "obtaining" in the description below may be understood to refer to a first component of the network, the sDU **703**, the tDU **705**, the CU-CP **707**, the source CU-UP **713**, the target CU-UP **715**, or the AMF/UPF **711** receiving a transmitted signal and outputting (or providing) the received signal (or information based on the received signal) to a different component of the network, the sDU **703**, the tDU **705**, the CU-CP **707**, the source CU-UP **713**, the target CU-UP **715**, or the AMF/UPF **711**.

[0147] UE1 **704** and UE2 **706**, in some aspects, may be two of a plurality of UEs (or wireless devices) associated with a same multi-modal service (e.g., an XR, AR, VR, or other service providing multiple modes and/or types of input/output via multiple wireless devices), e.g., as described in connection with FIG. **5**B. The service, in some aspects, may be associated with multi-modal information including one or more of a service ID (or multi-modal service ID) and a plurality of flows (QOS flows), and a set of relationships between the flows in the plurality of flows. The relationships between flows, in some aspects, may indicate (or define) related flows (e.g., a specific relationship beyond being associated with the same multi-modal service) and inter-flow (or inter-QoS flow) synchronization thresholds for related and/or unrelated flows (see Table 2 above).

[0148] As described above, the plurality of UEs may include a headset providing audio/visual output and one or more other wearable devices providing tactile or haptic feedback (e.g., heat/cold and/or vibrations). UE1 **704** and UE2 **706** may exchange data with a server via the sDU **703**, source CU-UP **713**, and AMF/UPF **711**, e.g., as illustrated in connection with the example in FIG. **6**. UE1 **704** and UE2 **706** may also receive a configuration for a measurement report from the source DU, e.g., as described in connection with FIG. **6**.

[0149] As illustrated, a first UE of the plurality of UEs, e.g., UE1 **704**, may transmit, and the sDU **703** may receive, a measurement report **730** in some aspects. The measurement report **730**, in some aspects may trigger a handover (HO) procedure to the tDU **705**.

[0150] Based on the measurement report, the sDU **703** may output, and CU-CP **707** may obtain, the message transfer **732**. In some aspects, the message transfer **732** may include the information included in the measurement report **730**. The CU-CP **707**, in some aspects, may determine, based on the message transfer **732**, to perform a HO procedure for the plurality of UEs (e.g., including at least UE1 **704** and UE2 **706**) from the sDU **703** to the tDU **705**. To initiate the HO procedure, the CU-CP **707** may output, and the target CU-UP **715** may obtain, a first message in a common bearer context setup **736**. For example, the CU-CP **707** may output a common UE bearer context setup request for the plurality of the UEs associated with the multi-modal service. In some aspects, the common UE bearer context setup request may be provided in an updated and/or enhanced UE bearer context setup request that enables the indication of a plurality of UEs in a single UE bearer context setup request. The common UE bearer context setup request (and subsequent "common" messages related to the HO procedure) may include "multi-modal" (or "common") information, e.g., as described in connection with FIG. **6**. The multi-modal information, in some aspects, may include the multi-modal service ID associated with the plurality of UEs, a list of the UEs associated with the multi-modal service, a list of multi-modal flows associated with the multi-modal service and/or the plurality of UEs, and the relationships between the multi-modal flows associated with the multi-modal service (e.g., the synchronization thresholds associated with related flows).

[0151] The target CU-UP **715**, in some aspects, may output, and the CU-CP **707** may obtain, a common UE bearer context setup response as part of the common bearer context setup **736**. In some aspects, the common UE bearer context setup response may be provided in an updated and/or enhanced UE bearer context setup response that enables the indication of a plurality of UEs in a single UE bearer context setup response (e.g., includes all, or part, of the multi-modal information described above). The common bearer context setup request and the common bearer context

set response may be E1-AP that include the multi-modal information, e.g., that identifies the UEs to which the common messages are associated.

[0152] After exchanging, and based on, the messages associated with the common bearer context setup **736**, the CU-CP **707** may output, and the tDU **705** may obtain, a first message in a common context setup **738**. For example, the CU-CP **707** may output a common UE context setup request for the plurality of the UEs associated with the (same) service. In some aspects, the common UE context setup request may be provided in an updated and/or enhanced UE context setup request that enables the indication of a plurality of UEs in a single UE context setup request. The common UE context setup request (and subsequent "common" messages related to the HO procedure) may include "multi-modal" (or "common") information. The tDU **705**, in some aspects, may output, and the CU-CP **707** may obtain, a common UE context setup response as part of the common context setup **738**. In some aspects, the common UE context setup response may be provided in an updated and/or enhanced UE context setup response that enables the indication of a plurality of UEs in a single UE context setup response (e.g., includes all, or part, of the multi-modal information described above).

[0153] Based on the common context setup **738** (e.g., the common UE context setup response obtained from the tDU **705**), the CU-CP **707**, in some aspects, may output, and the sDU **703** may obtain, a common (UE) context modification request **742**. As for the common UE context setup request/response, the common (UE) context modification request **742** may be provided in an updated and/or enhanced format that enables the indication of a plurality of RRC reconfiguration messages for the plurality of UEs and, in some aspects, the multi-modal information described above (or a part thereof), in the common (UE) context modification request **742**. In some aspects, the common (UE) context modification request **742** may include multiple RRC reconfiguration messages (e.g., an RRC reconfiguration message for each of the plurality of UEs associated with the service). The sDU **703** may transmit the RRC reconfiguration messages **744** to the respective UEs such that, e.g., the UE1 **704** receives the RRC reconfiguration message for the UE1 **704** and the UE2 **706** receives the RRC reconfiguration message for the UE2 **706**.

[0154] In parallel with the RRC reconfiguration and/or the common context setup **738**, the CU-CP **707** may perform a UE bearer context modification (e.g., by exchanging UE bearer context modification messages **750**) in association with the source-CU-UP **713** and the target CU-UP **715**. For example, the CU-CP **707** may send a bearer context modify request message for UE1 to the source CU-UP **713**, and in response, the source CU-UP **713** may send a bearer context modify response message for UE1 to the CU-CP **707**. The CU-CP **707** may send a bearer context modify request message for UE2 to the source CU-UP **713**, and in response, the source CU-UP **713** may send a bearer context modify response message for UE2 to the CU-CP **707**. The CU-CP **707** may send a bearer context modify request message for UE1 to the target CU-UP **715**, and in response, the target CU-UP **715** may send a bearer context modify response message for UE1 to the CU-CP **707**. The CU-CP **707** may send a bearer context modify request message for UE2 to the target CU-UP **715**, and in response, the target CU-UP **715** may send a bearer context modify response message for UE2 to the CU-CP **707**.

[0155] In addition to the common (UE) context modification request **742**, the sDU **703** may output, and the source CU-UP **713** may obtain, a common data delivery status frame **752** indicating, or associated with, the plurality of UEs. As for the common UE context setup request/response, the common data delivery status frame **752** may be provided in an updated and/or enhanced format that enables the indication of a plurality of UEs in the common data delivery status frame **752** (e.g., may include at least a part of the multi-modal information described above).

[0156] At **754**, the source CU-UP **713** may determine, based on the common data delivery status frame **752** to stop forwarding, routing, and/or directing traffic (from the AMF/UPF **711**) to the sDU **703**. In some aspects, the source CU-UP **713** may also begin forwarding, routing, and/or directing traffic for UE1 and UE2 (from the AMF/UPF **711**) to the target CU-UP **715**, e.g., as shown at **755**. For example, upon reception of the 'Common Data Delivery Status' frame from the sDU **703**, the source CU-UP **713** may start forwarding data from downlink Multi-Modal QoS Flows to the target CU-UP **715**.

[0157] Based on the common (UE) context modification request **742**, the sDU **703** may output, and the CU-CP **707** may obtain, a common (UE) context modification response **756**. The common (UE) context modification response **756**, in some aspects, may indicate the multi-modal service ID and/or the plurality of UEs.

[0158] Based on the RRC reconfiguration included in the common (UE) context modification request **742**, the UE1 **704** may perform a random access procedure **758**. After performing the random access procedure **758**, the UE1 **704** may transmit, and the tDU **705** may receive, the RRC reconfiguration complete message **760**. The tDU **705** may forward (or output), and the CU-CP **707** may obtain, the RRC reconfiguration complete message **762**. Based on the RRC reconfiguration included in the common (UE) context modification request **742**, the UE2 **706** may perform a random access procedure **764**. Additionally, after performing the random access procedure **758**, the UE2 **706** may transmit, and the tDU **705** may receive, the RRC reconfiguration complete message **768**. The tDU **705** may forward (or output), and the CU-CP **707** may obtain, the RRC reconfiguration complete message **770**.

[0159] The random access procedure **764** (and the random access procedure **758**) may include a first message (e.g., a Msg1), and after receiving at least the first message associated with the random access procedures for each of the plurality of UEs, the tDU **705** may output, and the target CU-UP **715** may obtain, a common data delivery status **766**. The common data delivery status **766**, in some aspects, may identify the plurality of UEs (e.g., via a list of UEs or via the multi-modal service ID associated with the plurality of UEs). Once the target CU-UP **715** obtains the common data delivery status **766**, the target CU-UP **715** may begin, at **767**, forwarding, routing, and/or directing traffic (from the AMF/UPF **711**) to the tDU **705**. As an example, the target CU-UP **715** may forward the data **755** to the tDU **705** once the common data delivery status message is received from the tDU **705**. After obtaining (or receiving) the RRC reconfiguration complete messages from the plurality of UEs (e.g., at least the RRC reconfiguration complete message **762** and the

RRC reconfiguration complete message **768**), the CU-CP **707** may determine to output a common path switch request **772**. The common path switch request **772**, in some aspects, may include the multi-modal information (at least in part) to identify the plurality of UEs. Based on the common path switch request **772**, the AMF/UPF **711** may determine, at **774**, to switch the path for the plurality of UEs. For example, the AMF/UPF **711** may output, and the target CU-UP **715** may obtain, DL data **776**. The target CU-UP **715** may output, and the tDU **705** may obtain, DL data **778** and the tDU **705** may transmit, and the UE1 **704** and the UE2 **706** may receive, DL data **780**. The AMF/UPF **711**, in some aspects, may output, and the CU-CP **707** may obtain, a common path switch request acknowledgment message **782**. The common path switch request acknowledgment message **782**, in some aspects, may include the multi-modal information (at least in part) to identify the plurality of UEs.

[0160] After obtaining (or receiving) the RRC reconfiguration complete messages from the plurality of UEs (e.g., at least the RRC reconfiguration complete message **762** and the RRC reconfiguration complete message **768**), the CU-CP **707** may determine, at **783**, to release resources and or UE contexts for the plurality of UEs. Based on the determination at **783**, the CU-CP **707** may exchange, with sDU **703**, a set of UE context release messages **786** associated with the UE context release. For example, the CU-CP **707** may output, and the sDU **703** may obtain, a UE context release command message for UE1 and a UE context release command message for UE2. The sDU **703** may output, and the CU-CP **707** may obtain, a UE context release complete message for UE1 and a UE context release complete message for UE2. In some aspects, a UE context release command/complete message pair may be output/obtained for each of the plurality of UEs. Similarly, the CU-CP **707**, may exchange, with target CU-UP **715**, a set of UE bearer context release messages **788** associated with UE bearer context release. For example, the CU-CP **707** may output, and the target CU-UP **715** may obtain, a UE bearer context release command message for UE1 and a UE bearer context release command message for UE2, and the target CU-UP **715** may output, and the CU-CP **707** may obtain, a UE bearer context release complete message UE1 and a UE bearer context release complete message for UE2. In some aspects, a UE bearer context release command/complete message pair may be output/obtained for each of the plurality of UEs.

[0161] FIG. **8** is a call flow diagram **800** illustrating a method for a joint handover using common messages for a plurality of UEs in a first distributed architecture for an inter-CU-CP-inter-CU-UP-inter-DU handover in accordance with some aspects of the disclosure. The method is illustrated in relation to a first and second UE (e.g., UE1 **804** and UE2 **806**) transferring from a source DU (sDU **803**) to a target DU (tDU **805**). For example, the handover may be from a first cell provided by the sDU **803** to a second cell provided by the tDU **805**. The method is also illustrated in relation to one or more components of a network including a source CU-CP **817**, a target CU-CP **819**, a source CU-UP **813**, a target CU-UP **815**, and an AMF/UPF **811** common to the sDU **803** and the tDU **805**. The functions ascribed to the network including the source CU-CP **817**, the target CU-CP **819**, the source CU-UP **813**, the target CU-UP **815**, or the AMF/UPF **811**, in some aspects, may be performed by one or more components of a network entity, a network node, or a network device (e.g., a component of a disaggregated network entity/node/device as described above in relation to FIG. **1**) implementing the functionality of the network including the source CU-CP **817**, the target CU-CP **819**, the source CU-UP **813**, the target CU-UP **815**, or the AMF/UPF **811**. Accordingly, references to "transmitting" or "outputting" in the description below may be understood to refer to a first component of the network including the source CU-CP **817**, the target CU-CP **819**, the source CU-UP **813**, the target CU-UP **815**, or the AMF/UPF **811** outputting (or providing) an indication of the content of the transmission to be transmitted by a different component of the network including the source CU-CP **817**, the target CU-CP **819**, the source CU-UP **813**, the target CU-UP **815**, or the AMF/UPF **811**. Similarly, references to "receiving" or "obtaining" in the description below may be understood to refer to a first component of the network including the source CU-CP **817**, the target CU-CP **819**, the source CU-UP **813**, the target CU-UP **815**, or the AMF/UPF **811** receiving a transmitted signal and outputting (or providing) the received signal (or information based on the received signal) to a different component of the network including the source CU-CP **817**, the target CU-CP **819**, the source CU-UP **813**, the target CU-UP **815**, or the AMF/UPF **811**.

[0162] The UE1 **804** and the UE2 **806** may exchange data with a server via the sDU **803**, source CU-UP **813**, and AMF/UPF **811**, e.g., as described in connection with FIG. **6**. The UE1 **804** and UE2 **806**, in some aspects, may be two of a plurality of UEs (or wireless devices) associated with a same multi-modal service (e.g., an XR, AR, VR, or other service providing multiple modes and/or types of input/output via multiple wireless devices). The service, in some aspects, may be associated with multi-modal information including one or more of a service ID (or multi-modal service ID) and a plurality of flows (QOS flows), and a set of relationships between the flows in the plurality of flows. The relationships between flows, in some aspects, may indicate (or define) related flows (e.g., a specific relationship beyond being associated with the same multi-modal service) and inter-flow (or inter-QoS flow) synchronization thresholds for related and/or unrelated flows (see Table 2 above).

[0163] As described above, the plurality of UEs may include a headset providing audio/visual output and one or more other wearable devices providing tactile or haptic feedback (e.g., heat/cold and/or vibrations). As illustrated a first UE of the plurality of UEs, e.g., UE1 **804**, may transmit, and the sDU **803** may receive, a measurement report **830** in some aspects. The measurement report **830**, in some aspects may trigger a handover (HO) procedure.

[0164] Based on the measurement report, the sDU **803** may output, and source CU-CP **817** may obtain, the message transfer **832**. In some aspects, the message transfer **832** may include the information included in the measurement report **830**. The source CU-CP **817**, in some aspects, may determine, based on the message transfer **832**, to perform a HO procedure for the plurality of UEs (e.g., including at least UE1 **804** and UE2 **806**) from the sDU **803** to the tDU **805**. To initiate the HO procedure, the source CU-CP **817** may output, and the target CU-CP **819** may obtain, a common HO request that may include the multi-modal information to identify the plurality of UEs. Additionally, the target CU-CP **819** may output, and the target CU-UP **815** may obtain, a first message in a common bearer context setup **836**. For example, the target CU-CP **819** may output a common UE bearer context setup request for the plurality of the UEs

associated with the multi-modal service. In some aspects, the common UE bearer context setup request may be provided in an updated and/or enhanced UE bearer context setup request that enables the indication of a plurality of UEs in a single UE bearer context setup request. The common UE bearer context setup request (and subsequent "common" messages related to the HO procedure) may include "multi-modal" (or "common") information. The multi-modal information, in some aspects, may include the multi-modal service ID associated with the plurality of UEs, a list of the UEs associated with the multi-modal service, a list of multi-modal flows associated with the multi-modal service and/or the plurality of UEs, and the relationships between the multi-modal flows associated with the multi-modal service (e.g., the synchronization thresholds associated with related flows).

[0165] The target CU-UP **815**, in some aspects, may output, and the target CU-CP **819** may obtain, a common UE bearer context setup response as part of the common bearer context setup **836**. In some aspects, the common UE bearer context setup response may be provided in an updated and/or enhanced UE bearer context setup response that enables the indication of a plurality of UEs in a single UE bearer context setup response (e.g., includes all, or part, of the multi-modal information described above).

[0166] After exchanging the messages associated with the common bearer context setup **836**, the target CU-CP **819** may output, and the tDU **805** may obtain, a first message in a common context setup **838**. For example, the target CU-CP **819** may output a common UE context setup request for the plurality of the UEs associated with the (same) service. In some aspects, the common UE context setup request may be provided in an updated and/or enhanced UE context setup request that enables the indication of a plurality of UEs in a single UE context setup request. The common UE context setup request (and subsequent "common" messages related to the HO procedure) may include "multi-modal" (or "common") information. The tDU **805**, in some aspects, may output, and the target CU-CP **819** may obtain, a common UE context setup response as part of the common context setup **838**. In some aspects, the common UE context setup response may be provided in an updated and/or enhanced UE context setup response that enables the indication of a plurality of UEs in a single UE context setup response (e.g., includes all, or part, of the multi-modal information described above). Additionally, the target CU-CP **819**, in some aspects, may output, and the source CU-CP **817** may obtain, a common HO request acknowledgment **840** that may include the multi-modal information or an indication that it is related to the common handover request **834**.

[0167] Based on the common context setup **838** (e.g., the common UE context setup response obtained from the tDU **805**), the target CU-CP **819**, in some aspects, may output, and the sDU **803** may obtain, a common (UE) context modification request **842**. As for the common UE context setup request/response, the common (UE) context modification request **842** may be provided in an updated and/or enhanced format that enables the indication of a plurality of RRC reconfiguration messages for the plurality of UEs and, in some aspects, the multi-modal information described above (or a part thereof), in the common (UE) context modification request **842**. In some aspects, the common (UE) context modification request **842** may include multiple RRC reconfiguration messages (e.g., an RRC reconfiguration message for each of the plurality of UEs associated with the service). The sDU **803** may transmit the RRC reconfiguration messages **844** to the plurality of UEs such that, e.g., the UE1 **804** receives the RRC reconfiguration message for the UE1 **804** and the UE2 **806** receives the RRC reconfiguration message for the UE2 **806**.

[0168] In parallel with the RRC reconfiguration and/or the common context setup **838**, the source CU-CP **817** may perform a UE bearer context modification (e.g., by exchanging UE bearer context modification messages **846**) in association with the source CU-UP **813** and output a common sequence number (SN) status transfer **848** indicating that the source CU-UP **813** will stop assigning SNs. The target CU-CP **819** may perform a UE bearer context modification (e.g., by exchanging UE bearer context modification messages **850**) in association with the target CU-UP **815**.

[0169] In addition to the common (UE) context modification request **842**, the sDU **803** may output, and the source CU-UP **813** may obtain, a common data delivery status frame **852** indicating, or associated with, the plurality of UEs. As for the common UE context setup request/response, the common data delivery status frame **852** may be provided in an updated and/or enhanced format that enables the indication of a plurality of UEs in the common data delivery status frame **852** (e.g., may include at least a part of the multi-modal information described above).

[0170] At **854**, the source CU-UP **813** may determine, based on the common data delivery status frame **852** to stop forwarding, routing, and/or directing traffic (from the AMF/UPF **811**) to the sDU **803**. In some aspects, the source CU-UP **813** may also begin forwarding, routing, and/or directing traffic (from the AMF/UPF **811**) to the target CU-UP **815**. Based on the common (UE) context modification request **842**, the sDU **803** may output, and the source CU-CP **817** may obtain, a common (UE) context modification response **856**. The common (UE) context modification response **856**, in some aspects, may indicate the multi-modal service ID and/or the plurality of UEs.

[0171] Based on the RRC reconfiguration included in the common (UE) context modification request **842**, the UE1 **804** may perform a random access procedure **858**. After performing the procedure **858**, the UE1 **804** may transmit, and the tDU **805** may receive, the RRC reconfiguration complete message **860**. The tDU **805** may forward (or output), and the target CU-CP **819** may obtain, the RRC reconfiguration complete message **862**. Based on the RRC reconfiguration included in the common (UE) context modification request **842**, the UE2 **806** may perform a random access procedure **864**. Additionally, after performing the procedure **858**, the UE2 **806** may transmit, and the tDU **805** may receive, the RRC reconfiguration complete message **868**. The tDU **805** may forward (or output), and the target CU-CP **819** may obtain, the RRC reconfiguration complete message **870**.

[0172] The random access procedure **864** (and the random access procedure **858**) may include a first message (e.g., a Msg1), and after receiving at least the first message associated with the random access procedures for each of the plurality of UEs, the tDU **805** may output, and the target CU-UP **815** may obtain, a common data delivery status **866**. The common data delivery status **866**, in some aspects, may identify the plurality of UEs (e.g., via a list of UEs or via the multi-modal service ID associated with the plurality of UEs). Once the target CU-UP **815** obtains the common data

delivery status **866**, the target CU-UP **815** may begin forwarding, routing, and/or directing traffic (from the AMF/UPF **811**) to the tDU **805**. After obtaining (or receiving) the RRC reconfiguration complete messages from the plurality of UEs (e.g., at least the RRC reconfiguration complete message **862** and the RRC reconfiguration complete message **868**), the target CU-CP **819** may determine to output a common path switch request **872**. The common path switch request **872**, in some aspects, may include the multi-modal information (at least in part) to identify the plurality of UEs. Based on the common path switch request **872**, the AMF/UPF **811** may determine, at **874**, to switch the path for the plurality of UEs. For example, the AMF/UPF **811** may output, and the target CU-UP **815** may obtain, DL data **876**. The target CU-UP **815** may output, and the tDU **805** may obtain, DL data **878** and the tDU **805** may transmit, and the UE1 **804** and the UE2 **806** may receive, DL data **880**. The AMF/UPF **811**, in some aspects, may output, and the target CU-CP **819** may obtain, a common path switch request acknowledgment message **882**. The common path switch request acknowledgment message **882**, in some aspects, may include the multi-modal information (at least in part) to identify the plurality of UEs.

[0173] After obtaining (or receiving) the RRC reconfiguration complete messages from the plurality of UEs (e.g., at least the RRC reconfiguration complete message **862** and the RRC reconfiguration complete message **868**), the target CU-CP **819** may determine to release resources and or UE contexts for the plurality of UEs. Based on the determination, the target CU-CP **819** may output, and the source CU-CP **817** may obtain, a set of messages associated with the UE context release **884**. The source CU-CP **817**, based on the set of messages associated with the UE context release **884**, may exchange, with the sDU **803**, a set of messages associated with the UE context release **886**. For example, the source CU-CP **817** may output, and the sDU **803** may obtain, a UE context release command message. The sDU **803** may output, and the source CU-CP **817** may obtain, a UE context release complete message. In some aspects, a UE context release command/complete message pair may be output/obtained for each of the plurality of UEs. Similarly, the source CU-CP **817** may exchange, with source CU-UP **813**, a set of UE bearer context release messages **888** associated with UE bearer context release. For example, the source CU-CP **817** may output, and the source CU-UP **813** may obtain, a UE bearer context release command message and the source CU-UP **813** may output, and the source CU-CP **817** may obtain, a UE bearer context release complete message. In some aspects, a UE bearer context release command/complete message pair may be output/obtained for each of the plurality of UEs.

[0174] FIG. **9** is a call flow diagram **900** illustrating a method for a joint handover using UE-specific messages for a plurality of UEs in a first distributed architecture in accordance with some aspects of the disclosure. FIG. **9** illustrates an example of an intra-CU-CP-intra-CU-UP-inter-DU handover using UE-specific messages for multiple UEs served by a multi-modal service, where the source and target DUs have a common CU-CP and CU-UP. The method is illustrated in relation to a first and second UE (e.g., UE1 **904** and UE2 **906**) transferring from a source base station (sDU **903**) to a target base station (tDU **905**). For example, the handover may be from a first cell provided by the source DU to a second cell provided by the target DU. The method is also illustrated in relation to a network including a CU-CP **907**, a CU-UP **909** and a UPF **911** common to the sDU **903** and the tDU **905**. The functions ascribed to the network, the sDU **903**, the tDU **905**, the CU-CP **907**, the CU-UP **909**, or the UPF **911**, in some aspects, may be performed by one or more components of a network entity, a network node, or a network device (e.g., a component of a disaggregated network entity/node/device as described above in relation to FIG. **1**) implementing the functionality of the network, the sDU **903**, the tDU **905**, the CU-CP **907**, the CU-UP **909**, or the UPF **911**. Accordingly, references to "transmitting" or "outputting" in the description below may be understood to refer to a first component of the network, the sDU **903**, the tDU **905**, the CU-CP **907**, the CU-UP **909**, or the UPF **911** outputting (or providing) an indication of the content of the transmission to be transmitted by a different component of the network, the sDU **903**, the tDU **905**, the CU-CP **907**, the CU-UP **909**, or the UPF **911**. Similarly, references to "receiving" or "obtaining" in the description below may be understood to refer to a first component of the network, the sDU **903**, the tDU **905**, the CU-CP **907**, the CU-UP **909**, or the UPF **911** receiving a transmitted signal and outputting (or providing) the received signal (or information based on the received signal) to a different component of the network, the sDU **903**, the tDU **905**, the CU-CP **907**, the CU-UP **909**, or the UPF **911**.

[0175] UE1 **904** and UE2 **906**, in some aspects, may be two of a plurality of UEs (or wireless devices) associated with a same multi-modal service (e.g., an XR, AR, VR, or other service providing multiple modes and/or types of input/output via multiple wireless devices), e.g., as described in connection with FIG. **5**B. The service, in some aspects, may be associated with multi-modal information including one or more of a service ID (or multi-modal service ID) and a plurality of flows (QOS flows), and a set of relationships between the flows in the plurality of flows. The relationships between flows, in some aspects, may indicate (or define) related flows (e.g., a specific relationship beyond being associated with the same multi-modal service) and inter-flow (or inter-QoS flow) synchronization thresholds for related and/or unrelated flows (see Table 2 above).

[0176] As described above, the plurality of UEs may include a headset providing audio/visual output and one or more other wearable devices providing tactile or haptic feedback (e.g., heat/cold and/or vibrations). UE1 **1004** and UE2 **1006** may exchange data with a server via the sDU **1003**, source CU-UP **1013**, and AMF/UPF **1011**, e.g., as illustrated in connection with the example in FIG. **6**. UE1 **1004** and UE2 **1006** may also receive a configuration for a measurement report from the source DU, e.g., as described in connection with FIG. **6**.

[0177] As illustrated a first UE of the plurality of UEs, e.g., UE1 **904**, may transmit, and the sDU **903** may receive, a measurement report **920** in some aspects. The measurement report **920**, in some aspects may trigger a handover (HO) procedure to the tDU **905**.

[0178] Based on the measurement report the sDU **903** may output, and CU-CP **907** may obtain, the message transfer **921**. In some aspects, the message transfer **921** may include the information included in the measurement report **920**. The CU-CP **907**, in some aspects, may determine, based on the message transfer **921**, to perform a HO procedure for the plurality of UEs (e.g., including at least UE1 **904** and UE2 **906**) from the sDU **903** to the tDU **905**. To initiate the HO

procedure, the CU-CP **907** may output, and the tDU **905** may obtain, a first UE-specific context setup request **930** message for the UE1 **904** and a second UE-specific context setup request **931** for the UE2 **906**. In some aspects, the UE-specific context setup requests (e.g., the first UE-specific context setup request **930** and the second UE-specific context setup request **931**) may be provided in an updated and/or enhanced UE context setup request that enables the indication that the UE-specific context setup request is associated with a joint handover procedure and, in some aspects, the identity of related UEs and other relevant information. The UE-specific context setup requests (and subsequent messages related to the HO procedure) may include "multi-modal" (or "group") information, e.g., as described in connection with FIG. **6**. The multi-modal information, in some aspects, may include the multi-modal service ID associated with the plurality of UEs, a list of the UEs associated with the multi-modal service, a list of multi-modal flows associated with the multi-modal service and/or the plurality of UEs, and the relationships between the multi-modal flows associated with the multi-modal service (e.g., the synchronization thresholds associated with related flows).

[0179] The tDU **905**, in some aspects, may wait until receiving UE-specific context setup requests from each of the plurality of UEs associated with (or identified by) a first UE-specific context setup request output before determining, at **932**, to check resources for the plurality of UEs. For example, the tDU **905** may, upon receiving first UE-specific context setup request **930**, identify that the UE1 **904** and the UE2 **906** are associated with a joint handover procedure and wait until a UE-specific context setup request is received for both the UE1 **904** and the UE2 **906** before determining to check (and checking) for available resources for both UEs. Checking for resources, in some aspects, may be based at least in part on the relationships and/or synchronization thresholds indicated in the multi-modal information included in the first UE-specific context setup request **930** and/or the second UE-specific context setup request **931**.

[0180] After checking for available resources, the tDU **905** may output, and the CU-CP **907** may obtain, a first UE-specific context setup response **933** for the UE1 **904** and a second UE-specific context setup response **934** for the UE2 **906**. The UE-specific context setup responses may be provided in an updated and/or enhanced UE context setup response that enables the indication that the UE-specific context setup request is associated with a joint handover procedure and, in some aspects, the identity of related UEs and other relevant information. (e.g., includes all, or part, of the multi-modal information described above). The UE-specific context setup request and the UE-specific context setup response shown at **930**, **931**, **933**, and **934** may be F1-AP messages that are exchanged between the tDU **905** and the CU-CP **907** and include multi-modal information.

[0181] Based on the first UE-specific context setup response **933** and the second UE-specific context setup response **934**, the CU-CP **907**, in some aspects, may output, and the sDU **903** may obtain, a first UE-specific context modification request **936** for the UE1 **904** and a second UE-specific context modification request **938** for the UE2 **906**. Each UE-specific context modification request, in some aspects, may include an RRC reconfiguration message for one UE in the plurality of UEs. As for the UE-specific context setup request/response, a UE-specific context modification request may be provided in an updated and/or enhanced format that enables the indication that the UE-specific context modification request is associated with a joint handover procedure and, in some aspects, the identity of related UEs and other relevant information. (e.g., includes all, or part, of the multi-modal information described above).

[0182] The sDU **903** may, upon receiving a UE-specific context modification request for each UE identified as being associated with the joint handover procedure, determine, at **939**, to forward the plurality of RRC reconfiguration messages included in the plurality of UE-specific context modification requests to the UEs. Based on the determination at **939**, the sDU **903** may output the plurality of RRC reconfigurations **940** such that the UE1 **904** and the UE2 **906** receive a corresponding RRC reconfiguration message included in the first UE-specific context modification request **936** and the second UE-specific context modification request **938**, respectively. The sDU **903** may output, and the CU-UP **909** may obtain, a first UE-specific data delivery status frame **944** for the UE1 **904** indicating, or associated with, the plurality of UEs. The first UE-specific data delivery status frame **944** may be provided in an updated and/or enhanced format that enables the indication that the first UE-specific data delivery status frame **944** is associated with a joint handover procedure and, in some aspects, the identity of related UEs and other relevant information. (e.g., includes all, or part, of the multi-modal information described above).

[0183] At **946**, the CU-UP **909** may determine, based on the first UE-specific data delivery status frame **944** to stop forwarding, routing, and/or directing traffic (from the UPF **911**) to the sDU **903**. Based on the first UE-specific context modification request **936**, the sDU **903** may output, and the CU-CP **907** may obtain, a first UE-specific context modification response **945**. The first UE-specific context modification response **945**, in some aspects, may indicate the multi-modal service ID and/or the plurality of UEs.

[0184] The sDU **903** may output, and the CU-UP **909** may obtain, a second UE-specific data delivery status frame **947** for the UE2 **906** indicating, or associated with, the plurality of UEs. The second UE-specific data delivery status frame **947** may be provided in an updated and/or enhanced format that enables the indication that the second UE-specific data delivery status frame **947** is associated with a joint handover procedure and, in some aspects, the identity of related UEs and other relevant information. (e.g., includes all, or part, of the multi-modal information described above). Based on the second UE-specific context modification request **938**, the sDU **903** may output, and the CU-CP **907** may obtain, a second UE-specific context modification response **948**. The second UE-specific context modification response **948**, in some aspects, may indicate the multi-modal service ID and/or the plurality of UEs. The UE-specific context modification requests and the UE-specific context modification responses shown at **936**, **938**, **945**, and **948** may be F1-AP messages that are exchanged between the tDU **905** and the CU-CP **907** and include multi-modal information.

[0185] Based on the RRC reconfiguration included in the UE-specific context modification requests, the UE1 **904** may perform a random access procedure **949**. After performing the random access procedure **949**, the UE1 **904** may transmit, and the tDU **905** may receive, the RRC reconfiguration complete message **951**. The tDU **905** may forward (or output), and the CU-CP **907** may obtain, the RRC recon-

figuration complete message **952**. Additionally, the tDU **905** may, based on the random access procedure **949**, output, and the CU-UP **909** may obtain, a third UE-specific data delivery status **950** for the UE1 **904**. Based on an indication of additional UEs in the plurality of UEs associated with the joint handover procedure, the CU-UP **909** may wait, at **954**, for additional UE-specific data delivery statuses from the additional UEs in the plurality of UEs.

[0186] Based on the RRC reconfiguration included in the UE-specific context modification requests, the UE2 **906** may perform a random access procedure **955**. After performing the random access procedure **955**, the UE2 **906** may transmit, and the tDU **905** may receive, the RRC reconfiguration complete message **957**. The tDU **905** may forward (or output), and the CU-CP **907** may obtain, the RRC reconfiguration complete message **958**. Additionally, the tDU **905** may, based on the random access procedure **955**, output, and the CU-UP **909** may obtain, a fourth UE-specific data delivery status **956** for the UE2 **906**. Based on an indication of additional UEs in the plurality of UEs associated with the joint handover procedure, the CU-UP **909** may determine that each UE in the plurality of UEs has completed an RRC reconfiguration and begin, at **960**, forwarding, routing, and/or directing traffic (from the UPF **911**) to the tDU **905**. For example, the UPF **911** may output, and the CU-UP **909** may obtain, DL data **961**. The CU-UP **909** may output, and the tDU **905** may obtain, DL data **962** and the tDU **905** may transmit, and the UE1 **904** and the UE2 **906** may receive, DL data **963**. In some aspects, the sDU **903** and the CU-CP **907** may exchange a set of UE-specific context release messages **966**. For example, in some aspects, a UE context release command/complete message pair may be output/obtained for each of the plurality of UEs.

[0187] FIG. **10**A is a call flow diagram **1000** illustrating a first portion of a method for a joint handover using UE-specific messages for a plurality of UEs in a second distributed architecture for an intra-CU-CP-inter-CU-UP-inter-DU handover in accordance with some aspects of the disclosure. FIG. **10**B is a call flow diagram **1001** illustrating a second portion of the method for the joint handover using UE-specific messages for the plurality of UEs in the second distributed architecture in accordance with some aspects of the disclosure. The method is illustrated in relation to a first and second UE (e.g., UE1 **1004** and UE2 **1006**) transferring from a source base station (sDU **1003**) to a target base station (tDU **1005**). For example, the handover may be from a first cell provided by the source DU to a second cell provided by the target DU. The method is also illustrated in relation to a network including a CU-CP **1007**, a source CU-UP **1013**, a target CU-UP **1015**, and an AMF/UPF **1011** common to the sDU **1003** and the tDU **1005**. The functions ascribed to the network, the sDU **1003**, the tDU **1005**, the CU-CP **1007**, the source CU-UP **1013**, the target CU-UP **1015**, or the AMF/UPF **1011**, in some aspects, may be described as being performed by one or more components of a network entity, a network node, or a network device (e.g., a component of a disaggregated network entity/node/device as described above in relation to FIG. **1**) implementing the functionality of the network, the sDU **1003**, the tDU **1005**, the CU-CP **1007**, the source CU-UP **1013**, the target CU-UP **1015**, or the AMF/UPF **1011**. Accordingly, references to "transmitting" or "outputting" in the description below may be understood to refer to a first component of the network, the sDU **1003**, the tDU **1005**, the CU-CP **1007**, the source CU-UP **1013**, the target CU-UP **1015**, or the AMF/UPF **1011** outputting (or providing) an indication of the content of the transmission to be transmitted by a different component of the network, the sDU **1003**, the tDU **1005**, the CU-CP **1007**, the source CU-UP **1013**, the target CU-UP **1015**, or the AMF/UPF **1011**. Similarly, references to "receiving" or "obtaining" in the description below may be understood to refer to a first component of the network, the sDU **1003**, the tDU **1005**, the CU-CP **1007**, the source CU-UP **1013**, the target CU-UP **1015**, or the AMF/UPF **1011** receiving a transmitted signal and outputting (or providing) the received signal (or information based on the received signal) to a different component of the network, the sDU **1003**, the tDU **1005**, the CU-CP **1007**, the source CU-UP **1013**, the target CU-UP **1015**, or the AMF/UPF **1011**.

[0188] UE1 **1004** and UE2 **1006**, in some aspects, may be two of a plurality of UEs (or wireless devices) associated with a same multi-modal service (e.g., an XR, AR, VR, or other service providing multiple modes and/or types of input/output via multiple wireless devices). The service, in some aspects, may be associated with multi-modal information including one or more of a service ID (or multi-modal service ID) and a plurality of flows (QOS flows), and a set of relationships between the flows in the plurality of flows. The relationships between flows, in some aspects, may indicate (or define) related flows (e.g., a specific relationship beyond being associated with the same multi-modal service) and inter-flow (or inter-QoS flow) synchronization thresholds for related and/or unrelated flows (see Table 2 above).

[0189] As described above, the plurality of UEs may include a headset providing audio/visual output and one or more other wearable devices providing tactile or haptic feedback (e.g., heat/cold and/or vibrations). As illustrated a first UE of the plurality of UEs, e.g., UE1 **1004**, may transmit, and the sDU **1003** may receive, a measurement report **1020** in some aspects. The measurement report **1020**, in some aspects may trigger a handover (HO) procedure. Based on the measurement report the sDU **1003** may output, and CU-CP **1007** may obtain, the message transfer **1021**. In some aspects, the message transfer **1021** may include the information included in the measurement report **1020**. The CU-CP **1007**, in some aspects, may determine, based on the message transfer **1021**, to perform a HO procedure for the plurality of UEs (e.g., including at least UE1 **1004** and UE2 **1006**) from the sDU **1003** to the tDU **1005**.

[0190] To initiate the HO procedure, the CU-CP **1007** may output, and the target CU-UP **1015** may obtain, a first UE-specific bearer context setup request **1025** for the UE1 **1004** and a second UE-specific bearer context setup request **1026** for the UE2 **1006**. In some aspects, the UE-specific bearer context setup requests may be provided in an updated and/or enhanced UE bearer context setup request that enables the indication that the UE-specific bearer context setup request is associated with a joint handover procedure and, in some aspects, the identity of related UEs and other relevant information. (e.g., includes all, or part, of the multi-modal information described above). For example, the UE-specific bearer context setup requests (and similar messages related to the HO procedure) may include "multi-modal" (or "group") information. The multi-modal information, in some aspects, may include the multi-modal service ID associated with the plurality of UEs, a list of the UEs associated with the multi-modal service, a list of multi-modal flows associated with the multi-modal service and/or

the plurality of UEs, and the relationships between the multi-modal flows associated with the multi-modal service (e.g., the synchronization thresholds associated with related flows).

[0191] The target CU-UP **1015** waits, in some aspects, until a UE-specific bearer context setup request is received from each of the plurality of UEs identified in a first UE-specific bearer context setup request to check for resources for the plurality of UEs. In call flow diagram **1000**, based on receiving the first UE-specific bearer context setup request **1025** and the second UE-specific bearer context setup request **1026**, the target CU-UP **1015** may determine, at **1027**, to check for resources (e.g., to determine if sufficient resources are available) for the UE1 **1004** and the UE2 **1006**. If the target CU-UP **1015** determines that the resources are available, the target CU-UP **1015**, in some aspects, may output, and the CU-CP **1007** may obtain, a first UE-specific bearer context setup response **1028** for the UE1 **1004** and a second UE-specific bearer context setup response **1029** for the UE2 **1006**. In some aspects, the UE-specific bearer context setup responses may be provided in an updated and/or enhanced UE bearer context setup response that enables the indication that the UE-specific bearer context setup response is associated with a joint handover procedure and, in some aspects, the identity of related UEs and other relevant information. (e.g., includes all, or part, of the multi-modal information described above).

[0192] After exchanging the messages associated with the bearer context setup (e.g., first UE-specific bearer context setup response **1028** and the second UE-specific bearer context setup response **1029**), the CU-CP **1007** may output, and the tDU **1005** may obtain, a first UE-specific context setup request **1030** message for the UE1 **1004** and a second UE-specific context setup request **1031** for the UE2 **1006**. In some aspects, the UE-specific context setup requests (e.g., the first UE-specific context setup request **1030** and the second UE-specific context setup request **1031**) may be provided in an updated and/or enhanced UE context setup request that enables the indication that the UE-specific context setup request is associated with a joint handover procedure and, in some aspects, the identity of related UEs and other relevant information. The UE-specific context setup requests (and subsequent messages related to the HO procedure) may include "multi-modal" (or "group") information. The multi-modal information, in some aspects, may include the multi-modal service ID associated with the plurality of UEs, a list of the UEs associated with the multi-modal service, a list of multi-modal flows associated with the multi-modal service and/or the plurality of UEs, and the relationships between the multi-modal flows associated with the multi-modal service (e.g., the synchronization thresholds associated with related flows).

[0193] The tDU **1005**, in some aspects, may wait until receiving UE-specific context setup requests from each of the plurality of UEs associated with (or identified by) a first UE-specific context setup request output before determining, at **1032**, to check resources for the plurality of UEs. For example, the tDU **1005** may, upon receiving first UE-specific context setup request **1030**, identify that the UE1 **1004** and the UE2 **1006** are associated with a joint handover procedure and wait until a UE-specific context setup request is received for both the UE1 **1004** and the UE2 **1006** before determining to check (and checking) for available resources for both UEs. Checking for resources, in some aspects, may be based at least in part on the relationships and/or synchronization thresholds indicated in the multi-modal information included in the first UE-specific context setup request **1030** and/or the second UE-specific context setup request **1031**.

[0194] After checking for available resources, the tDU **1005** may output, and the CU-CP **1007** may obtain, a first UE-specific context setup response **1033** for the UE1 **1004** and a second UE-specific context setup response **1034** for the UE2 **1006**. The UE-specific context setup responses may be provided in an updated and/or enhanced UE context setup response that enables the indication that the UE-specific context setup request is associated with a joint handover procedure and, in some aspects, the identity of related UEs and other relevant information. (e.g., includes all, or part, of the multi-modal information described above). The UE-specific context setup request and the UE-specific context setup response shown at **1030**, **1031**, **1033**, and **1034** may be F1-AP messages that are exchanged between the tDU **1005** and the CU-CP **1007** and include multi-modal information.

[0195] Based on the first UE-specific context setup response **1033** and the second UE-specific context setup response **1034**, the CU-CP **1007**, in some aspects, may output, and the sDU **1003** may obtain, a first UE-specific context modification request **1036** for the UE1 **1004** and a second UE-specific context modification request **1038** for the UE2 **1006**. Each UE-specific context modification request, in some aspects, may include an RRC reconfiguration message for one UE in the plurality of UEs. As for the UE-specific context setup request/response, a UE-specific context modification request may be provided in an updated and/or enhanced format that enables the indication that the UE-specific context modification request is associated with a joint handover procedure and, in some aspects, the identity of related UEs and other relevant information. (e.g., includes all, or part, of the multi-modal information described above).

[0196] The sDU **1003** may, upon receiving a UE-specific context modification request for each UE identified as being associated with the joint handover procedure, determine, at **1039**, to forward the plurality of RRC reconfiguration messages included in the plurality of UE-specific context modification requests to the UEs. Based on the determination at **1039**, the sDU **1003** may output the plurality of RRC reconfigurations **1040** such that the UE1 **1004** and the UE2 **1006** receive a corresponding RRC reconfiguration message included in the first UE-specific context modification request **1036** and the second UE-specific context modification request **1038**, respectively. Based on the first UE-specific bearer context setup request **1025**, the second UE-specific bearer context setup request **1026**, the first UE-specific bearer context setup response **1028**, and the second UE-specific bearer context setup response **1029**, the CU-CP **1007** may exchange, with the source CU-UP **1013** and the target CU-UP **1015**, a set of UE bearer context modification messages **1041** (e.g., UE bearer context modification requests and responses). The set of UE bearer context modification messages **1041**, in some aspects, may include a UE bearer context modification request and response for each of the plurality of UEs exchanged with each of the source CU-UP **1013** and the target CU-UP **1015**.

[0197] The sDU **1003** may output, and the source CU-UP **1013** may obtain, a first UE-specific data delivery status frame **1044** for the UE1 **1004** indicating, or associated with,

the plurality of UEs. The first UE-specific data delivery status frame **1044** may be provided in an updated and/or enhanced format that enables the indication that the first UE-specific data delivery status frame **1044** is associated with a joint handover procedure and, in some aspects, the identity of related UEs and other relevant information. (e.g., includes all, or part, of the multi-modal information described above).

[0198] At **1046**, the source CU-UP **1013** may determine, based on the first UE-specific data delivery status frame **1044** to redirect (to begin forwarding, routing, and/or directing traffic (from the UPF **1011**) to the target CU-UP **1015**. Based on the first UE-specific context modification request **1036**, the sDU **1003** may output, and the CU-CP **1007** may obtain, a first UE-specific context modification response **1045**. The first UE-specific context modification response **1045**, in some aspects, may indicate the multi-modal service ID and/or the plurality of UEs.

[0199] The sDU **1003** may output, and the source CU-UP **1013** may obtain, a second UE-specific data delivery status frame **1047** for the UE2 **1006** indicating, or associated with, the plurality of UEs. The second UE-specific data delivery status frame **1047** may be provided in an updated and/or enhanced format that enables the indication that the second UE-specific data delivery status frame **1047** is associated with a joint handover procedure and, in some aspects, the identity of related UEs and other relevant information. (e.g., includes all, or part, of the multi-modal information described above). Based on the second UE-specific context modification request **1038**, the sDU **1003** may output, and the CU-CP **1007** may obtain, a second UE-specific context modification response **1048**. The second UE-specific context modification response **1048**, in some aspects, may indicate the multi-modal service ID and/or the plurality of UEs. The UE-specific context modification requests and the UE-specific context modification responses shown at **1036**, **1038**, **1045**, and **1048** may be F1-AP messages that are exchanged between the tDU **1005** and the CU-CP **1007** and include multi-modal information.

[0200] Based on the RRC reconfiguration included in the UE-specific context modification requests, the UE1 **1004** may perform a random access procedure **1049** of FIG. **10**A corresponding to the random access procedure **1049** of FIG. **10**B. The tDU **1005** may, based on the random access procedure **1049**, output, and the target CU-UP **1015** may obtain, a third UE-specific data delivery status **1050** for the UE1 **1004**. After performing the random access procedure **1049**, the UE1 **1004** may transmit, and the tDU **1005** may receive, the RRC reconfiguration complete message **1051**. The tDU **1005** may forward (or output), and the CU-CP **1007** may obtain, the RRC reconfiguration complete message **1052**. Based on the RRC reconfiguration complete message **1052**, the CU-CP **1007** may output, and the AMF/UPF **1011** may obtain, a first UE-specific path switch request **1053** for the UE1 **1004**. In some aspects, the third UE-specific data delivery status **1050** and the first UE-specific path switch request **1053** for the UE1 **1004** may include an indication of additional UEs in the plurality of UEs (e.g., at least UE2 **1006**) associated with the joint handover procedure. Based on the indication of additional UEs in the plurality of UEs associated with the joint handover procedure, the target CU-UP **1015** and the AMF/UPF **1011** may wait, at **1054**, for additional UE-specific data delivery statuses and path switch requests from the additional UEs in the plurality of UEs.

[0201] Based on the RRC reconfiguration included in the UE-specific context modification requests, the UE2 **1006** may perform a random access procedure **1055**. The tDU **1005** may, based on the random access procedure **1055**, output, and the target CU-UP **1015** may obtain, a fourth UE-specific data delivery status **1056** for the UE2 **1006**. In some aspects, the fourth UE-specific data delivery status **1056** for the UE2 **1006** may include an indication of additional UEs in the plurality of UEs (e.g., at least UE2 **1006**) associated with the joint handover procedure. Based on the indication of the additional UEs in the plurality of UEs associated with the joint handover procedure in the fourth UE-specific data delivery status **1056**, the target CU-UP **1015** may begin forwarding, routing, and/or directing traffic (from the AMF/UPF **1011**) to the tDU **1005**. After performing the random access procedure **1055**, the UE2 **1006** may transmit, and the tDU **1005** may receive, the RRC reconfiguration complete message **1057**. The tDU **1005** may forward (or output), and the CU-CP **1007** may obtain, the RRC reconfiguration complete message **1058**. Based on the RRC reconfiguration complete message **1058**, the CU-CP **1007** may output, and the AMF/UPF **1011** may obtain, a second UE-specific path switch request **1059** for the UE2 **1006**. In some aspects, the second UE-specific path switch request **1059** for the UE2 **1006** may include an indication of additional UEs in the plurality of UEs (e.g., at least UE2 **1006**) associated with the joint handover procedure. Based on the second UE-specific path switch request **1059**, the AMF/UPF **1011** may determine, at **1060**, to switch the path for the plurality of UEs. For example, based on the determination at **1060**, the AMF/UPF **1011** may output, and the target CU-UP **1015** may obtain, DL data **1061**. The target CU-UP **1015** may output, and the tDU **1005** may obtain, DL data **1062** and the tDU **1005** may transmit, and the UE1 **1004** and the UE2 **1006** may receive, DL data **1063**.

[0202] The AMF/UPF **1011**, in some aspects, may output, and the CU-CP **1007** may obtain, a first UE-specific path switch request acknowledgment **1064** for the UE1 **1004**. The CU-CP **1007** may, based on the first UE-specific path switch request acknowledgment **1064**, exchange UE context release messages **1066** for the UE1 **1004** with the sDU **1003**. UE context release messages **1066**, in some aspects, may include a UE context release command message and a UE context release complete message for the UE1 **1004**. The AMF/UPF **1011**, in some aspects, may output, and the CU-CP **1007** may obtain, a second UE-specific path switch request acknowledgment **1067** for the UE2 **1006**. The CU-CP **1007** may, based on the second UE-specific path switch request acknowledgment **1067**, exchange UE context release messages **1069** for the UE2 **1006** with the sDU **1003**. UE context release messages **1069**, in some aspects, may include a UE context release command message and a UE context release complete message for the UE2 **1006**. Similarly, the CU-CP **1007**, may exchange, with target CU-UP **1015**, a first set of UE bearer context release messages **1070** for the UE1 **1004** and a second set of UE bearer context release messages **1071** for the UE2 **1006** associated with UE bearer context release. For example, the CU-CP **1007** may output, and the target CU-UP **1015** may obtain, a UE bearer context release command message and the target CU-UP **1015** may output, and the CU-CP **1007** may obtain, a UE

bearer context release complete message for each UE in the plurality of UEs (e.g., for at least UE1 **1004** and UE2 **1006**).

[0203] FIG. **11**A is a call flow diagram **1100** illustrating a first portion of a method for a joint handover using common messages for a plurality of UEs in a third distributed architecture for an inter-CU-CP-inter-CU-UP-inter-DU handover in accordance with some aspects of the disclosure. FIG. **11**B is a call flow diagram **1101** illustrating a second portion of a method for a joint handover using common messages for a plurality of UEs in a third distributed architecture in accordance with some aspects of the disclosure. The method is illustrated in relation to a first and second UE (e.g., UE1 **1104** and UE2 **1106**) transferring from a source base station (sDU **1103**) to a target base station (tDU **1105**). For example, the handover may be from a first cell provided by the sDU **1103** to a second cell provided by the tDU **1105**. The method is also illustrated in relation to a network including a source CU-CP **1117**, a target CU-CP **1119**, a source CU-UP **1113**, a target CU-UP **1115**, and an AMF/UPF **1111** common to the sDU **1103** and the tDU **1105**. The functions ascribed to the network including the source CU-CP **1117**, the target CU-CP **1119**, the source CU-UP **1113**, the target CU-UP **1115**, or the AMF/UPF **1111**, in some aspects, may be performed by one or more components of a network entity, a network node, or a network device (e.g., a component of a disaggregated network entity/node/device as described above in relation to FIG. **1**) implementing the functionality of the network including the source CU-CP **1117**, the target CU-CP **1119**, the source CU-UP **1113**, the target CU-UP **1115**, or the AMF/UPF **1111**. Accordingly, references to "transmitting" or "outputting" in the description below may be understood to refer to a first component of the network including the source CU-CP **1117**, the target CU-CP **1119**, the source CU-UP **1113**, the target CU-UP **1115**, or the AMF/UPF **1111** outputting (or providing) an indication of the content of the transmission to be transmitted by a different component of the network including the source CU-CP **1117**, the target CU-CP **1119**, the source CU-UP **1113**, the target CU-UP **1115**, or the AMF/UPF **1111**. Similarly, references to "receiving" or "obtaining" in the description below may be understood to refer to a first component of the network including the source CU-CP **1117**, the target CU-CP **1119**, the source CU-UP **1113**, the target CU-UP **1115**, or the AMF/UPF **1111** receiving a transmitted signal and outputting (or providing) the received signal (or information based on the received signal) to a different component of the network including the source CU-CP **1117**, the target CU-CP **1119**, the source CU-UP **1113**, the target CU-UP **1115**, or the AMF/UPF **1111**.

[0204] The UE1 **1104** and the UE2 **1106** may exchange data with a server via the sDU **1103**, source CU-UP **1113**, and AMF/UPF **1111**, e.g., as described in connection with FIG. **6**. The UE1 **1104** and UE2 **1106**, in some aspects, may be two of a plurality of UEs (or wireless devices) associated with a same multi-modal service (e.g., an XR, AR, VR, or other service providing multiple modes and/or types of input/output via multiple wireless devices). The service, in some aspects, may be associated with multi-modal information including one or more of a service ID (or multi-modal service ID) and a plurality of flows (QOS flows), and a set of relationships between the flows in the plurality of flows. The relationships between flows, in some aspects, may indicate (or define) related flows (e.g., a specific relationship beyond being associated with the same multi-modal service) and inter-flow (or inter-QoS flow) synchronization thresholds for related and/or unrelated flows (see Table 2 above). As described above, the plurality of UEs may include a headset providing audio/visual output and one or more other wearable devices providing tactile or haptic feedback (e.g., heat/cold and/or vibrations). As illustrated a first UE of the plurality of UEs, e.g., UE1 **1104**, may transmit, and the sDU **1103** may receive, a measurement report **1120** in some aspects. The measurement report **1120**, in some aspects may trigger a handover (HO) procedure. Based on the measurement report the sDU **1103** may output, and source CU-CP may obtain, the message transfer **1121**. In some aspects, the message transfer **1121** may include the information included in the measurement report **1120**. The source CU-CP **1117**, in some aspects, may determine, based on the message transfer **1121**, to perform a HO procedure for the plurality of UEs (e.g., including at least UE1 **1104** and UE2 **1106**) from the sDU **1103** to the tDU **1105**. To initiate the HO procedure, the source CU-CP **1117** may output, and the target CU-CP **1119** may obtain, a first UE-specific handover request **1122** for the UE1 **1104** and second UE-specific handover request **1123** for the UE2 **1106**. In some aspects, the first UE-specific handover request **1122** and the second UE-specific handover request **1123** may include the multi-modal information to identify the plurality of UEs. The target CU-CP **1119**, in some aspects, may wait to receive UE-specific handover requests from each UE identified in the UE-specific handover requests (e.g., the first UE-specific handover request **1122** and the second UE-specific handover request **1123**) before performing, at **1124**, a call admission control for the plurality of UEs and requesting the setup of resources in the target CU-UP **1115**.

[0205] After receiving the UE-specific handover requests from each UE identified in the UE-specific handover requests (e.g., the first UE-specific handover request **1122** and the second UE-specific handover request **1123**), the target CU-CP **1119** may output, and the target CU-UP **1115** may obtain, a first UE-specific bearer context setup request **1125** for the UE1 **1104** and a second UE-specific bearer context setup request **1126** for the UE2 **1106**. In some aspects, the UE-specific bearer context setup requests may be provided in an updated and/or enhanced UE bearer context setup request that enables the indication that the UE-specific bearer context setup request is associated with a joint handover procedure and, in some aspects, the identity of related UEs and other relevant information. (e.g., includes all, or part, of the multi-modal information described above). For example, the UE-specific bearer context setup requests (and similar messages related to the HO procedure) may include "multi-modal" (or "group") information. The multi-modal information, in some aspects, may include the multi-modal service ID associated with the plurality of UEs, a list of the UEs associated with the multi-modal service, a list of multi-modal flows associated with the multi-modal service and/or the plurality of UEs, and the relationships between the multi-modal flows associated with the multi-modal service (e.g., the synchronization thresholds associated with related flows).

[0206] The target CU-UP **1115** waits, in some aspects, until a UE-specific bearer context setup request is received from each of the plurality of UEs identified in a first UE-specific bearer context setup request to check for resources for the plurality of UEs. In call flow diagram **1100**, based on receiving the first UE-specific bearer context setup

request **1125** and the second UE-specific bearer context setup request **1126**, the target CU-UP **1115** may determine, at **1127**, to check for resources (e.g., to determine if sufficient resources are available) for the UE1 **1104** and the UE2 **1106**. If the target CU-UP **1115** determines that the resources are available, the target CU-UP **1115**, in some aspects, may output, and the target CU-CP **1119** may obtain, a first UE-specific bearer context setup response **1128** for the UE1 **1104** and a second UE-specific bearer context setup response **1129** for the UE2 **1106**. In some aspects, the UE-specific bearer context setup responses may be provided in an updated and/or enhanced UE bearer context setup response that enables the indication that the UE-specific bearer context setup response is associated with a joint handover procedure and, in some aspects, the identity of related UEs and other relevant information. (e.g., includes all, or part, of the multi-modal information described above).

[0207] After exchanging the messages associated with the bearer context setup (e.g., first UE-specific bearer context setup response **1128** and the second UE-specific bearer context setup response **1129**), the target CU-CP **1119** may output, and the tDU **1105** may obtain, a first UE-specific context setup request **1130** message for the UE1 **1104** and a second UE-specific context setup request **1131** for the UE2 **1106**. In some aspects, the UE-specific context setup requests (e.g., the first UE-specific context setup request **1130** and the second UE-specific context setup request **1131**) may be provided in an updated and/or enhanced UE context setup request that enables the indication that the UE-specific context setup request is associated with a joint handover procedure and, in some aspects, the identity of related UEs and other relevant information. The UE-specific context setup requests (and subsequent messages related to the HO procedure) may include "multi-modal" (or "group") information. The multi-modal information, in some aspects, may include the multi-modal service ID associated with the plurality of UEs, a list of the UEs associated with the multi-modal service, a list of multi-modal flows associated with the multi-modal service and/or the plurality of UEs, and the relationships between the multi-modal flows associated with the multi-modal service (e.g., the synchronization thresholds associated with related flows).

[0208] The tDU **1105**, in some aspects, may wait until receiving UE-specific context setup requests from each of the plurality of UEs associated with (or identified by) a first UE-specific context setup request output before determining, at **1132**, to check resources for the plurality of UEs. For example, the tDU **1105** may, upon receiving first UE-specific context setup request **1130**, identify that the UE1 **1104** and the UE2 **1106** are associated with a joint handover procedure and wait until a UE-specific context setup request is received for both the UE1 **1104** and the UE2 **1106** before determining to check (and checking) for available resources for both UEs. Checking for resources, in some aspects, may be based at least in part on the relationships and/or synchronization thresholds indicated in the multi-modal information included in the first UE-specific context setup request **1130** and/or the second UE-specific context setup request **1131**.

[0209] After checking for available resources, the tDU **1105** may output, and the target CU-CP **1119** may obtain, a first UE-specific context setup response **1133** for the UE1 **1104** and a second UE-specific context setup response **1134** for the UE2 **1106**. The UE-specific context setup responses may be provided in an updated and/or enhanced UE context setup response that enables the indication that the UE-specific context setup request is associated with a joint handover procedure and, in some aspects, the identity of related UEs and other relevant information. (e.g., includes all, or part, of the multi-modal information described above).

[0210] Based on the first UE-specific context setup response **1133** and the second UE-specific context setup response **1134**, the target CU-CP **1119** may output, and the source CU-CP **1117** may obtain, a first UE-specific handover request acknowledgment **1135** for the UE1 **1104** and a second UE-specific handover request acknowledgment **1137** for the UE2 **1106**. Based on the first UE-specific handover request acknowledgment **1135** and the second UE-specific handover request acknowledgment **1137**, the source CU-CP **1117**, in some aspects, may output, and the sDU **1103** may obtain, a first UE-specific context modification request **1136** for the UE1 **1104** and a second UE-specific context modification request **1138** for the UE2 **1106**. Each UE-specific context modification request, in some aspects, may include an RRC reconfiguration message for one UE in the plurality of UEs. As for the UE-specific context setup request/response, a UE-specific context modification request may be provided in an updated and/or enhanced format that enables the indication that the UE-specific context modification request is associated with a joint handover procedure and, in some aspects, the identity of related UEs and other relevant information. (e.g., includes all, or part, of the multi-modal information described above).

[0211] The sDU **1103** may, upon receiving a UE-specific context modification request for each UE identified as being associated with the joint handover procedure, determine, at **1139**, to forward the plurality of RRC reconfiguration messages included in the plurality of UE-specific context modification requests to the UEs. Based on the determination at **1139**, the sDU **1103** may output the plurality of RRC reconfigurations **1140** such that the UE1 **1104** and the UE2 **1106** receive a corresponding RRC reconfiguration message included in the first UE-specific context modification request **1136** and the second UE-specific context modification request **1138**, respectively. Based on the first UE-specific handover request acknowledgment **1135** and the second UE-specific handover request acknowledgment **1137**, the source CU-CP **1117** may exchange, with the source CU-UP **1113**, a set of UE bearer context modification messages **1141** (e.g., UE bearer context modification requests and responses). The set of UE bearer context modification messages **1141**, in some aspects, may include a UE bearer context modification request and response for each of the plurality of UEs exchanged with the source CU-UP **1113**.

[0212] In parallel with the RRC reconfiguration and/or the UE-specific context modification, the source CU-CP **1117** may, in association with the source CU-UP **1113**, perform a UE bearer context modification (e.g., by exchanging UE bearer context modification messages **1141**) and may output a set of SN status transfer messages **1142** indicating that the source CU-UP **1113** will stop assigning SNs. The target CU-CP **1119** may, in association with the target CU-UP **1115**, perform a UE bearer context modification (e.g., by exchanging UE bearer context modification messages **1143**). The bearer context modification for the source CU-UP **1113** and the target CU-UP **1115** may each be associated with a separate UE bearer modification request/response pair for each UE in the plurality of UEs (e.g., a request/response pair

for each of the UE1 **1104** and the UE2 **1106**) while the SN status transfer may be associated with a UE-specific SN status transfer for each of the UEs in the plurality of UEs.

[0213] The sDU **1103** may output, and the source CU-UP **1113** may obtain, a first UE-specific data delivery status frame **1144** for the UE1 **1104** indicating, or associated with, the plurality of UEs. The first UE-specific data delivery status frame **1144** may be provided in an updated and/or enhanced format that enables the indication that the first UE-specific data delivery status frame **1144** is associated with a joint handover procedure and, in some aspects, the identity of related UEs and other relevant information. (e.g., includes all, or part, of the multi-modal information described above).

[0214] At **1146**, the source CU-UP **1113** may determine, based on the first UE-specific data delivery status frame **1144** to redirect (to begin forwarding, routing, and/or directing traffic (from the UPF **1111**) to the target CU-UP **1115**. Based on the first UE-specific context modification request **1136**, the sDU **1103** may output, and the source CU-CP **1117** may obtain, a first UE-specific context modification response **1145**. The first UE-specific context modification response **1145**, in some aspects, may indicate the multi-modal service ID and/or the plurality of UEs. Based on the second UE-specific context modification request **1138**, the sDU **1103** may output, and the source CU-CP **1117** may obtain, a second UE-specific context modification response **1148**. The second UE-specific context modification response **1148**, in some aspects, may indicate the multi-modal service ID and/or the plurality of UEs.

[0215] The sDU **1103** may output, and the source CU-UP **1113** may obtain, a second UE-specific data delivery status frame **1147** for the UE2 **1106** indicating, or associated with, the plurality of UEs. The second UE-specific data delivery status frame **1147** may be provided in an updated and/or enhanced format that enables the indication that the second UE-specific data delivery status frame **1147** is associated with a joint handover procedure and, in some aspects, the identity of related UEs and other relevant information. (e.g., includes all, or part, of the multi-modal information described above).

[0216] Based on the RRC reconfiguration included in the UE-specific context modification requests, the UE1 **1104** may perform a random access procedure **1149** of FIG. **11**A corresponding to the random access procedure **1149** of FIG. **11**B. The tDU **1105** may, based on the random access procedure **1149**, output, and the target CU-UP **1115** may obtain, a third UE-specific data delivery status **1150** for the UE1 **1104**. After performing the random access procedure **1149**, the UE1 **1104** may transmit, and the tDU **1105** may receive, the RRC reconfiguration complete message **1151**. The tDU **1105** may forward (or output), and the target CU-CP **1119** may obtain, the RRC reconfiguration complete message **1152**. Based on the RRC reconfiguration complete message **1152**, the target CU-CP **1119** may output, and the AMF/UPF **1111** may obtain, a first UE-specific path switch request **1153** for the UE1 **1104**. In some aspects, the third UE-specific data delivery status **1150** and the first UE-specific path switch request **1153** for the UE1 **1104** may include an indication of additional UEs in the plurality of UEs (e.g., at least UE2 **1106**) associated with the joint handover procedure. Based on the indication of additional UEs in the plurality of UEs associated with the joint handover procedure, the target CU-UP **1115** and the AMF/UPF **1111** may wait, at **1154**, for additional UE-specific data delivery statuses and path switch requests from the additional UEs in the plurality of UEs.

[0217] Based on the RRC reconfiguration included in the UE-specific context modification requests, the UE2 **1106** may perform a random access procedure **1155**. The tDU **1105** may, based on the random access procedure **1155**, output, and the target CU-UP **1115** may obtain, a fourth UE-specific data delivery status **1156** for the UE2 **1106**. In some aspects, the fourth UE-specific data delivery status **1156** for the UE2 **1106** may include an indication of additional UEs in the plurality of UEs (e.g., at least UE2 **1106**) associated with the joint handover procedure. Based on the indication of the additional UEs in the plurality of UEs associated with the joint handover procedure in the fourth UE-specific data delivery status **1156**, the target CU-UP **1115** may begin forwarding, routing, and/or directing traffic (from the AMF/UPF **1111**) to the tDU **1105**. After performing the random access procedure **1155**, the UE2 **1106** may transmit, and the tDU **1105** may receive, the RRC reconfiguration complete message **1157**. The tDU **1105** may forward (or output), and the target CU-CP **1119** may obtain, the RRC reconfiguration complete message **1158**. Based on the RRC reconfiguration complete message **1158**, the target CU-CP **1119** may output, and the AMF/UPF **1111** may obtain, a second UE-specific path switch request **1159** for the UE2 **1106**. In some aspects, the second UE-specific path switch request **1159** for the UE2 **1106** may include an indication of additional UEs in the plurality of UEs (e.g., at least UE2 **1106**) associated with the joint handover procedure. Based on the second UE-specific path switch request **1159**, the AMF/UPF **1111** may determine, at **1160**, to switch the path for the plurality of UEs. For example, based on the determination at **1160**, the AMF/UPF **1111** may output, and the target CU-UP **1115** may obtain, DL data **1161**. The target CU-UP **1115** may output, and the tDU **1105** may obtain, DL data **1162** and the tDU **1105** may transmit, and the UE1 **1104** and the UE2 **1106** may receive, DL data **1163**.

[0218] The AMF/UPF **1111**, in some aspects, may output, and the target CU-CP **1119** may obtain, a first UE-specific path switch request acknowledgment **1164** for the UE1 **1104**. Based on the first UE-specific path switch request acknowledgment **1164**, the target CU-CP **1119** may output, and the source CU-CP **1117** may obtain, a first UE-specific context release **1165** for the UE1 **1104**. The source CU-CP **1117** may, based on the first UE-specific context release **1165**, exchange UE context release messages **1166** for the UE1 **1104** with the sDU **1103**. UE context release messages **1166**, in some aspects, may include a UE context release command message and a UE context release complete message for the UE1 **1104**.

[0219] The AMF/UPF **1111**, in some aspects, may output, and the target CU-CP **1119** may obtain, a second UE-specific path switch request acknowledgment **1167** for the UE2 **1106**. Based on the second UE-specific path switch request acknowledgment **1167**, the target CU-CP **1119** may output, and the source CU-CP **1117** may obtain, a second UE-specific context release **1168** for the UE2 **1106**. The source CU-CP **1117** may, based on the second UE-specific context release **1168**, exchange UE context release messages **1169** for the UE1 **1104** with the sDU **1103**. UE context release messages **1169**, in some aspects, may include a UE context release command message and a UE context release complete message for the UE2 **1106**.

[0220] Similarly, the source CU-CP **1117**, may exchange, with source CU-UP **1113**, a first set of UE bearer context release messages **1170** for the UE1 **1104** and a second set of UE bearer context release messages **1171** for the UE2 **1106** associated with UE bearer context release. For example, the source CU-CP **1117** may output, and the source CU-UP **1113** may obtain, a UE bearer context release command message and the source CU-UP **1113** may output, and the source CU-CP **1117** may obtain, a UE bearer context release complete message for each UE in the plurality of UEs (e.g., for at least UE1 **1104** and UE2 **1106**).

[0221] FIG. **12** is a flowchart **1200** of a method of wireless communication. The method may be performed by one or more of a network, a network component, or a network device (e.g., the base station **102**; the sDU **603**, **703**, **803**; the tDU **605**, **705**, **805**; the CU-CP **607**, **707**; the CU-UP **609**; the AMF/UPF **711**, **811**; the source CU-UP **713**, **813**; the target CU-UP **715**, **815**; the source CU-CP **817**; the target CU-CP **819**; the network entity **2602**, **2760**). In some aspects, the method may be associated with a joint and/or common handover performed for a plurality of UEs (as an example of wireless devices) associated with a multi-modal service in a distributed architecture as discussed in any of FIGS. **6**, **7**, and **8**. The joint and/or common handover, in some aspects, may be for a handover from (1) a source base station or DU (an sBS or sDU) currently serving and/or connected to the plurality of UEs to (2) a target base station or DU (a tBS or tDU). The plurality of UEs may be associated with multi-modal information as discussed above in relation to FIGS. **6**, **7**, and **8** and if a message includes or indicates multi-modal information, it may include all, or part, of the multi-modal information including one or more of a service ID (or multi-modal service ID) and a plurality of flows (QOS flows), and a set of relationships between the flows in the plurality of flows.

[0222] In some aspects, the network device may be a CU associated with a CP (a "CU-CP" associated with, or implementing, CP functions), and may receive a measurement report (or information regarding a measurement report) from a sDU associated with the plurality of UEs. The measurement report, in some aspects, may include information triggering the joint and/or common handover procedure for the plurality of UEs. For example, referring to FIGS. **6**, **7**, and **8**, the CU-CP **607**, the CU-CP **707**, and the source CU-CP **817** may obtain, from sDU **603**, **703**, and **803** the message transfer **632**, **732**, and **832**.

[0223] If the CU-CP for the sDU (e.g., the source CU-CP **817**) is not the same as the CU-CP for the tDU (e.g., the target CU-CP **819**), the CU-CP for the sDU may output, and the CU-CP for the tDU may obtain, a common handover request for the plurality of UEs. In some aspects, the common handover request may include multi-modal information indicating at least the plurality of UEs. For example, referring to FIG. **8**, the source CU-CP **817** may output, and the target CU-CP **819** may obtain, common handover request **834**.

[0224] In some aspects, the CU-CP for the tDU may, based on the common handover request for the plurality of UEs, output a common bearer context setup message for the plurality of UEs and obtain a common bearer context response for the plurality of UEs. In some aspects, the common bearer context setup message and the common bearer context response may include multi-modal information and may be exchanged with (output to, or obtained from, a CU device associated with a UP (a "CU-UP") such as a CU-UP associated with the tDU (e.g., a target CU-UP). For example, referring to FIGS. **7**, and **8**, the CU-CP **707** and the target CU-CP **819** may output, and the target CU-UP **715** and **815** may obtain, a common bearer context setup request and the target CU-UP **715** and **815** may output, and the CU-CP **707** and the target CU-CP **819** may obtain, a common bearer context setup response as part of common context setup **736** or **836**.

[0225] At **1210**, the network device may output, for a tDU associated with the handover procedure for the plurality of wireless devices, a first common request relating to a context of the plurality of UEs (where, for a UE, the context may include a current state, active connections, supported services, network preferences, etc.). For example, **1210** may be performed by CU processor(s) **2612**, communications interface **2618**, network processor **2712**, network interface **2780**, and/or joint handover component **199** of FIGS. **26** and **27**. The first common request, in some aspects, may include the multi-modal information. For example, referring to FIGS. **6**, **7**, and **8**, the CU-CP **607**, the CU-CP **707**, and the target CU-CP **819** may output a common context setup request as part of common context setup **638**, **738**, or **838**.

[0226] At **1220**, the network device may obtain, from the tDU associated with the handover procedure for the plurality of wireless devices, a first common response relating to the context of the plurality of UEs. For example, **1220** may be performed by CU processor(s) **2612**, communications interface **2618**, network processor **2712**, network interface **2780**, and/or joint handover component **199** of FIGS. **26** and **27**. The first common response, in some aspects, may include the multi-modal information or other indication that it is related to the first common request. For example, referring to FIGS. **6**, **7**, and **8**, the CU-CP **607**, the CU-CP **707**, and the target CU-CP **819** may obtain a common context setup response as part of common context setup **638**, **738**, or **838**.

[0227] If the CU-CP for the sDU (e.g., the source CU-CP **817**) is not the same as the CU-CP for the tDU (e.g., the target CU-CP **819**), the CU-CP for the sDU may obtain, and the CU-CP for the tDU may output, a common handover request acknowledgment in response to the common handover request. In some aspects, the common handover request acknowledgment may include multi-modal information indicating at least the plurality of UEs or other information identifying the common handover request acknowledgment as being related to the common handover request. For example, referring to FIG. **8**, the source CU-CP **817** may output, and the target CU-CP **819** may obtain, common handover request **834**.

[0228] The network device, in some aspects, may output, for the sDU, a common context modification request (a second common request relating to a context modification) for the plurality of UEs. The common context modification request, in some aspects, may include the multi-modal information. In some aspects, the common context modification request may include a plurality of RRC reconfiguration messages for the plurality of UEs. The plurality of RRC reconfiguration messages, in some aspects, including an RRC reconfiguration message for each of the plurality of UEs. For example, referring to FIGS. **6**, **7**, and **8**, the CU-CP **607**, the CU-CP **707**, and the target CU-CP **819** may output, the context modification request **842** for the sDU **603**, **703**, or **803**.

[0229] If the CU-CP for the sDU (e.g., the source CU-CP **817**) is not the same as the CU-CP for the tDU (e.g., the target CU-CP **819**), the CU-CP for the sDU may output, and the CU-UP associated with the sDU (e.g., a source CU-UP) may obtain, a common bearer context modification request and the source CU-UP may output, and the CU-CP for the sDU may obtain a common bearer context modification response. In some aspects, the common bearer context modification request and/or the common bearer context modification response may include multi-modal information. For example, referring to FIG. **8**, the source CU-CP **817** may output, and the source CU-UP **813** may obtain, a common bearer context modification request and the source CU-UP **813** may output, and the source CU-CP **817** may obtain a common bearer context modification response in association with the UE bearer context modification messages **846**.

[0230] If the CU-CP for the sDU (e.g., the source CU-CP **817**) is not the same as the CU-CP for the tDU (e.g., the target CU-CP **819**), the CU-CP for the sDU may output, and the CU-CP for the tDU may obtain, a common SN status transfer message for the plurality of the UEs. In some aspects, the common SN status transfer message may include multi-modal information indicating at least the plurality of UEs. For example, referring to FIG. **8**, the source CU-CP **817** may output, and the target CU-CP **819** may obtain, common SN status transfer **848**.

[0231] Based on the common context modification request, the CU-CP (or a CU-CP for the sDU), in some aspects, may obtain, from an sDU, a common context modification response for the plurality of UEs. The common context modification response, in some aspects, may include multi-modal information. For example, referring to FIGS. **6**, **7**, and **8**, the CU-CP **607**, the CU-CP **707**, and the source CU-CP **817** may obtain, the context modification response **656**, **756**, or **856** from the sDU **603**, **703**, or **803**.

[0232] In some aspects, the CU-CP (or the CU-CP for the tDU) may obtain an RRC reconfiguration complete message from each of the plurality UEs. In some aspects, based on obtaining the RRC reconfiguration complete message from each of the plurality UEs, the CU-UP (or the CU-CP for the tDU) may output, for an AMF and/or a UPF, a common path switch request for the plurality of UEs and obtain, in response to the common path switch request, a common path switch request acknowledgment. In some aspects, the common path switch request and/or the common path switch request acknowledgment may include the multi-modal information. In some aspects, based on obtaining the RRC reconfiguration complete message from each of the plurality UEs, the CU-UP (or the CU-CP for the tDU) may release the UE context for the plurality of UEs. For example, referring to FIGS. **6**, **7**, and **8**, the CU-CP **607**, the CU-CP **707**, and the target CU-CP **819** may obtain, the RRC reconfiguration complete message **662**, **762**, and **862** and the RRC reconfiguration complete message **670**, **770**, and **870** and may output a common path switch request **772** or **872** and obtain a common path switch request acknowledgment message **782** or **882** and/or may determine at **683** or **783** to release the UE contexts for the plurality of UEs.

[0233] FIG. **13** is a flowchart **1300** of a method of wireless communication. The method may be performed by one or more of a network, a network component, or a network device (e.g., the base station **102**; the sDU **603**, **703**, **803**; the tDU **605**, **705**, **805**; the CU-CP **607**, **707**; the CU-UP **609**; the AMF/UPF **711**, **811**; the source CU-UP **713**, **813**; the target CU-UP **715**, **815**; the source CU-CP **817**; the target CU-CP **819**; the network entity **2602**, **2760**). In some aspects, the method may be associated with a joint and/or common handover performed for a plurality of UEs (as an example of wireless devices) associated with a multi-modal service in a distributed architecture as discussed in any of FIGS. **6**, **7**, and **8**. The joint and/or common handover, in some aspects, may be for a handover from (1) a source base station or DU (an sBS or sDU) currently serving and/or connected to the plurality of UEs to (2) a target base station or DU (a tBS or tDU). The plurality of UEs may be associated with multi-modal information as discussed above in relation to FIGS. **6**, **7**, and **8** and if a message includes or indicates multi-modal information, it may include all, or part, of the multi-modal information including one or more of a service ID (or multi-modal service ID) and a plurality of flows (QOS flows), and a set of relationships between the flows in the plurality of flows.

[0234] In some aspects, the network device may be a CU associated with a CP (a "CU-CP" associated with, or implementing, CP functions), and may receive a measurement report (or information regarding a measurement report) from a sDU associated with the plurality of UEs. The measurement report, in some aspects, may include information triggering the joint and/or common handover procedure for the plurality of UEs. For example, referring to FIGS. **6**, **7**, and **8**, the CU-CP **607**, the CU-CP **707**, and the source CU-CP **817** may obtain, from sDU **603**, **703**, and **803** the message transfer **632**, **732**, and **832**.

[0235] If the CU-CP for the sDU (e.g., the source CU-CP **817**) is not the same as the CU-CP for the tDU (e.g., the target CU-CP **819**), at **1304**, the CU-CP for the sDU may output, and the CU-CP for the tDU may obtain, a common handover request for the plurality of UEs. For example, **1304** may be performed by CU processor(s) **2612**, communications interface **2618**, network processor **2712**, network interface **2780**, and/or joint handover component **199** of FIGS. **26** and **27**. In some aspects, the common handover request may include multi-modal information indicating at least the plurality of UEs. For example, referring to FIG. **8**, the source CU-CP **817** may output, and the target CU-CP **819** may obtain, common handover request **834**.

[0236] In some aspects, the CU-CP for the tDU may, based on the common handover request for the plurality of UEs, output a common bearer context setup message for the plurality of UEs and obtain a common bearer context response for the plurality of UEs. In some aspects, the common bearer context setup message and the common bearer context response may include multi-modal information and may be exchanged with (output to, or obtained from, a CU device associated with a UP (a "CU-UP") such as a CU-UP associated with the tDU (e.g., a target CU-UP). For example, referring to FIGS. **7**, and **8**, the CU-CP **707** and the target CU-CP **819** may output, and the target CU-UP **715** and **815** may obtain, a common bearer context setup request and the target CU-UP **715** and **815** may output, and the CU-CP **707** and the target CU-CP **819** may obtain, a common bearer context setup response as part of common context setup **736** or **836**.

[0237] If the CU-CP for the sDU (e.g., the source CU-CP **817**) is not the same as the CU-CP for the tDU (e.g., the target CU-CP **819**), at **1306**, the CU-CP for the sDU may obtain, and the CU-CP for the tDU may output, a common

handover request acknowledgment in response to the common handover request. For example, **1306** may be performed by CU processor(s) **2612**, communications interface **2618**, network processor **2712**, network interface **2780**, and/or joint handover component **199** of FIGS. **26** and **27**. In some aspects, the common handover request acknowledgment may include multi-modal information indicating at least the plurality of UEs or other information identifying the common handover request acknowledgment as being related to the common handover request. For example, referring to FIG. **8**, the source CU-CP **817** may output, and the target CU-CP **819** may obtain, common handover request **834**.

[0238] If the CU-CP for the sDU (e.g., the source CU-CP **817**) is not the same as the CU-CP for the tDU (e.g., the target CU-CP **819**), the CU-CP for the sDU may output, and the CU-UP associated with the sDU (e.g., a source CU-UP) may obtain, a common bearer context modification request and the source CU-UP may output, and the CU-CP for the sDU may obtain a common bearer context modification response. In some aspects, the common bearer context modification request and/or the common bearer context modification response may include multi-modal information. For example, referring to FIG. **8**, the source CU-CP **817** may output, and the source CU-UP **813** may obtain, a common bearer context modification request and the source CU-UP **813** may output, and the source CU-CP **817** may obtain a common bearer context modification response in association with the UE bearer context modification messages **846**.

[0239] If the CU-CP for the sDU (e.g., the source CU-CP **817**) is not the same as the CU-CP for the tDU (e.g., the target CU-CP **819**), the CU-CP for the sDU may output, and the CU-CP for the tDU may obtain, a common SN status transfer message for the plurality of the UEs. In some aspects, the common SN status transfer message may include multi-modal information indicating at least the plurality of UEs. For example, referring to FIG. **8**, the source CU-CP **817** may output, and the target CU-CP **819** may obtain, common SN status transfer **848**.

[0240] Based on the common context modification request, the CU-CP for the sDU, in some aspects, may obtain, from an sDU, a common context modification response for the plurality of UEs. The common context modification response, in some aspects, may include multi-modal information. For example, referring to FIGS. **6**, **7**, and **8**, the CU-CP **607**, the CU-CP **707**, and the source CU-CP **817** may obtain, the context modification response **656**, **756**, or **856** from the sDU **603**, **703**, or **803**.

[0241] FIG. **14** is a flowchart **1400** of a method of wireless communication. The method may be performed by one or more of a network, a network component, or a network device (e.g., the base station **102**; the sDU **603**, **703**, **803**; the tDU **605**, **705**, **805**; the CU-CP **607**, **707**; the CU-UP **609**; the AMF/UPF **711**, **811**; the source CU-UP **713**, **813**; the target CU-UP **715**, **815**; the source CU-CP **817**; the target CU-CP **819**; the network entity **2602**, **2760**). In some aspects, the method may be associated with a joint and/or common handover performed for a plurality of UEs (as an example of wireless devices) associated with a multi-modal service in a distributed architecture as discussed in any of FIGS. **6**, **7**, and **8**. The joint and/or common handover, in some aspects, may be for a handover from (1) a source base station or DU (an sBS or sDU) currently serving and/or connected to the plurality of UEs to (2) a target base station or DU (a tBS or tDU). The plurality of UEs may be associated with multi-modal information as discussed above in relation to FIGS. **6**, **7**, and **8** and if a message includes or indicates multi-modal information, it may include all, or part, of the multi-modal information including one or more of a service ID (or multi-modal service ID) and a plurality of flows (QOS flows), and a set of relationships between the flows in the plurality of flows.

[0242] In some aspects, the network device may be a CU associated with a UP (a "CU-UP" associated with, or implementing, UP functions). If the CU-UP for the sDU (e.g., an source CU-UP such as the source CU-UP **713** or **813**) is not the same as the CU-UP for the tDU (e.g., a target CU-UP such as the target CU-UP **715** or **815**), the target CU-UP may obtain, and the CU-CP or the target CU-CP may output, a common bearer context setup request for the plurality of UEs and the target CU-UP may output, and the CU-CP or the target CU-CP may obtain, a common bearer context setup response. In some aspects, the common bearer context setup request and the common bearer context setup response may include multi-modal information indicating at least the plurality of UEs. For example, referring to FIGS. **7**, and **8**, the CU-CP **707** and the target CU-CP **819** may output, and the target CU-UP **715** and **815** may obtain, a common bearer context setup request and the target CU-UP **715** and **815** may output, and the CU-CP **707** and the target CU-CP **819** may obtain, a common bearer context setup response as part of common bearer context setup **736** or **836**.

[0243] If the CU-CP for the sDU (e.g., the source CU-CP **817**) is not the same as the CU-CP for the tDU (e.g., the target CU-CP **819**), the CU-CP for the sDU may output, and the CU-UP associated with the sDU (e.g., a source CU-UP) may obtain, a common bearer context modification request and the source CU-UP may output, and the CU-CP for the sDU may obtain a common bearer context modification response. In some aspects, the common bearer context modification request and/or the common bearer context modification response may include multi-modal information. For example, referring to FIG. **8**, the source CU-CP **817** may output, and the source CU-UP **813** may obtain, a common bearer context modification request and the source CU-UP **813** may output, and the source CU-CP **817** may obtain a common bearer context modification response in association with the UE bearer context modification messages **846**.

[0244] At **1410**, the network device (e.g., the CU-UP or the source CU-UP) may obtain, from the sDU associated with the handover procedure for the plurality of UEs, a first common data delivery status indication for the plurality of UEs. For example, **1410** may be performed by CU processor (s) **2612**, communications interface **2618**, network processor **2712**, network interface **2780**, and/or joint handover component **199** of FIGS. **26** and **27**. The first common data delivery status, in some aspects, may include the multi-modal information. For example, referring to FIGS. **6**, **7**, and **8**, the CU-UP **609**, the source CU-UP **713**, and the source CU-UP **813** may obtain, the common data delivery status frame **652**, **752**, and **852** from the sDU **603**, **703**, and **803**.

[0245] At **1420**, the network device (e.g., the CU-UP or the source CU-UP) may refrain, based on the first common data delivery status indication for the plurality of UEs, from routing data for the plurality of UEs to the sDU. For example, **1420** may be performed by CU processor(s) **2612**,

communications interface **2618**, network processor **2712**, network interface **2780**, and/or joint handover component **199** of FIGS. **26** and **27**. For example, referring to FIGS. **6**, **7**, and **8**, the CU-UP **609**, the source CU-UP **713**, and the source CU-UP **813** may refrain, at **654**, **754**, and **854** from routing DL data from the UPF **611**, or the AMF/UPF **711** and **811** to the sDU **603**, **703**, and **803**.

[0246] In some aspects, the network device (e.g., the CU-UP or the target CU-UP) may obtain, from the tDU associated with the handover procedure for the plurality of UEs, a second common data delivery status indication for the plurality of UEs. The second common data delivery status, in some aspects, may include the multi-modal information. For example, referring to FIGS. **6**, **7**, and **8**, the CU-UP **609**, the source CU-UP **713**, and the source CU-UP **813** may obtain, the common data delivery status **666**, **766**, and **866** from the sDU **603**, **703**, and **803**. In some aspects, the network device (e.g., the CU-UP or the source CU-UP) may begin, based on the second common data delivery status indication for the plurality of UEs, routing data for the plurality of UEs to the tDU. For example, referring to FIGS. **6**, **7**, and **8**, the CU-UP **609**, the target CU-UP **715**, and the target CU-UP **815** may begin, at **667**, **767**, and **867** routing DL data from the UPF **611**, or the AMF/UPF **711** and **811** to the tDU **605**, **705**, and **805**.

[0247] FIG. **15** is a flowchart **1500** of a method of wireless communication. The method may be performed by one or more of a network, a network component, or a network device (e.g., the base station **102**; the sDU **603**, **703**, **803**; the tDU **605**, **705**, **805**; the CU-CP **607**, **707**; the CU-UP **609**; the AMF/UPF **711**, **811**; the source CU-UP **713**, **813**; the target CU-UP **715**, **815**; the source CU-CP **817**; the target CU-CP **819**; the network entity **2602**, **2760**). In some aspects, the method may be associated with a joint and/or common handover performed for a plurality of UEs (as an example of wireless devices) associated with a multi-modal service in a distributed architecture as discussed in any of FIGS. **6**, **7**, and **8**. The joint and/or common handover, in some aspects, may be for a handover from (1) a source base station or DU (an sBS or sDU) currently serving and/or connected to the plurality of UEs to (2) a target base station or DU (a tBS or tDU). The plurality of UEs may be associated with multi-modal information as discussed above in relation to FIGS. **6**, **7**, and **8** and if a message includes or indicates multi-modal information, it may include all, or part, of the multi-modal information including one or more of a service ID (or multi-modal service ID) and a plurality of flows (QOS flows), and a set of relationships between the flows in the plurality of flows.

[0248] In some aspects, the network device may be a CU associated with a UP (a "CU-UP" associated with, or implementing, UP functions). If the CU-UP for the sDU (e.g., an source CU-UP such as the source CU-UP **713** or **813**) is not the same as the CU-UP for the tDU (e.g., a target CU-UP such as the target CU-UP **715** or **815**), the target CU-UP may obtain, and the CU-CP or the target CU-CP may output, a common bearer context setup request for the plurality of UEs and the target CU-UP may output, and the CU-CP or the target CU-CP may obtain, a common bearer context setup response. In some aspects, the common bearer context setup request and the common bearer context setup response may include multi-modal information indicating at least the plurality of UEs. For example, referring to FIGS. **7**, and **8**, the CU-CP **707** and the target CU-CP **819** may output, and the target CU-UP **715** and **815** may obtain, a common bearer context setup request and the target CU-UP **715** and **815** may output, and the CU-CP **707** and the target CU-CP **819** may obtain, a common bearer context setup response as part of common bearer context setup **736** or **836**.

[0249] If the CU-CP for the sDU (e.g., the source CU-CP **817**) is not the same as the CU-CP for the tDU (e.g., the target CU-CP **819**), the CU-CP for the sDU may output, and the CU-UP associated with the sDU (e.g., a source CU-UP) may obtain, a common bearer context modification request and the source CU-UP may output, and the CU-CP for the sDU may obtain a common bearer context modification response. In some aspects, the common bearer context modification request and/or the common bearer context modification response may include multi-modal information. For example, referring to FIG. **8**, the source CU-CP **817** may output, and the source CU-UP **813** may obtain, a common bearer context modification request and the source CU-UP **813** may output, and the source CU-CP **817** may obtain a common bearer context modification response in association with the UE bearer context modification messages **846**.

[0250] In some aspects, the network device (e.g., the CU-UP or the source CU-UP) may refrain, based on the first common data delivery status indication for the plurality of UEs, from routing data for the plurality of UEs to the sDU. For example, referring to FIGS. **6**, **7**, and **8**, the CU-UP **609**, the source CU-UP **713**, and the source CU-UP **813** may refrain, at **654**, **754**, and **854** from routing DL data from the UPF **611**, or the AMF/UPF **711** and **811** to the sDU **603**, **703**, and **803**.

[0251] At **1510**, the network device (e.g., the CU-UP or the target CU-UP) may obtain, from the tDU associated with the handover procedure for the plurality of UEs, a second common data delivery status indication for the plurality of UEs. For example, **1510** may be performed by CU processor (s) **2612**, communications interface **2618**, network processor **2712**, network interface **2780**, and/or joint handover component **199** of FIGS. **26** and **27**. The second common data delivery status, in some aspects, may include the multi-modal information. For example, referring to FIGS. **6**, **7**, and **8**, the CU-UP **609**, the source CU-UP **713**, and the source CU-UP **813** may obtain, the common data delivery status **666**, **766**, and **866** from the sDU **603**, **703**, and **803**.

[0252] At **1520**, the network device (e.g., the CU-UP or the target CU-UP) may begin, based on the second common data delivery status indication for the plurality of UEs, routing data for the plurality of UEs to the tDU. For example, **1520** may be performed by CU processor(s) **2612**, communications interface **2618**, network processor **2712**, network interface **2780**, and/or joint handover component **199** of FIGS. **26** and **27**. For example, referring to FIGS. **6**, **7**, and **8**, the CU-UP **609**, the target CU-UP **715**, and the target CU-UP **815** may begin, at **667**, **767**, and **867** routing DL data from the UPF **611**, or the AMF/UPF **711** and **811** to the tDU **605**, **705**, and **805**.

[0253] FIG. **16** is a flowchart **1600** of a method of wireless communication. The method may be performed by one or more of a network, a network component, or a network device (e.g., the base station **102**; the sDU **603**, **703**, **803**; the tDU **605**, **705**, **805**; the CU-CP **607**, **707**; the CU-UP **609**; the AMF/UPF **711**, **811**; the source CU-UP **713**, **813**; the target CU-UP **715**, **815**; the source CU-CP **817**; the target CU-CP **819**; the network entity **2602**, **2760**). In some

aspects, the method may be associated with a joint and/or common handover performed for a plurality of UEs (as an example of wireless devices) associated with a multi-modal service in a distributed architecture as discussed in any of FIGS. **6**, **7**, and **8**. The joint and/or common handover, in some aspects, may be for a handover from (1) a source base station or DU (an sBS or sDU) currently serving and/or connected to the plurality of UEs to (2) a target base station or DU (a tBS or tDU). The plurality of UEs may be associated with multi-modal information as discussed above in relation to FIGS. **6**, **7**, and **8** and if a message includes or indicates multi-modal information, it may include all, or part, of the multi-modal information including one or more of a service ID (or multi-modal service ID) and a plurality of flows (QOS flows), and a set of relationships between the flows in the plurality of flows.

[0254] In some aspects, the network device may be an AMF/UPF associated with the handover procedure and/or the plurality of UEs. At **1602**, the network device may obtain a common path switch request for the plurality of UEs. In some aspects, the common path switch request may be obtained from a CU-UP (or the CU-CP for a tDU). For example, **1602** may be performed by network processor **2712**, network interface **2780**, and/or joint handover component **199** of FIG. **27**. The first common path switch request, in some aspects, may include the multi-modal information. For example, referring to FIGS. **7**, and **8**, the AMF/UPF **711** and **811** may obtain, from the CU-CP **707** or the target CU-CP **819**, the common path switch request **772** and **872**.

[0255] At **1604**, the network device may switch, based on the common path switch request for the plurality of UEs, a path for the plurality of UEs. For example, **1604** may be performed by network processor **2712**, network interface **2780**, and/or joint handover component **199** of FIG. **27**. For example, referring to FIGS. **7**, and **8**, the AMF/UPF **711** and **811** may switch, at **774** and **874**.

[0256] At **1606**, the network device may, in response to the common path switch request, output a common path switch request acknowledgment. For example, **1606** may be performed by network processor **2712**, network interface **2780**, and/or joint handover component **199** of FIG. **27**. In some aspects, the common path switch request acknowledgment may include the multi-modal information. For example, referring to FIGS. **7**, and **8**, the AMF/UPF **711** and **811** may output a common path switch request acknowledgment message **782** or **882**.

[0257] FIG. **17** is a flowchart **1700** of a method of wireless communication. The method may be performed by one or more of a network, a network component, or a network device (e.g., the base station **102**; the sDU **603**, **703**, **803**; the tDU **605**, **705**, **805**; the CU-CP **607**, **707**; the CU-UP **609**; the AMF/UPF **711**, **811**; the source CU-UP **713**, **813**; the target CU-UP **715**, **815**; the source CU-CP **817**; the target CU-CP **819**; the network entity **2602**, **2760**). In some aspects, the method may be associated with a joint and/or common handover performed for a plurality of UEs (as an example of wireless devices) associated with a multi-modal service in a distributed architecture as discussed in any of FIGS. **6**, **7**, and **8**. The joint and/or common handover, in some aspects, may be for a handover from (1) a source base station or DU (an sBS or sDU) currently serving and/or connected to the plurality of UEs to (2) a target base station or DU (a tBS or tDU). The plurality of UEs may be associated with multi-modal information as discussed above in relation to FIGS. **6**, **7**, and **8** and if a message includes or indicates multi-modal information, it may include all, or part, of the multi-modal information including one or more of a service ID (or multi-modal service ID) and a plurality of flows (QOS flows), and a set of relationships between the flows in the plurality of flows.

[0258] In some aspects, the network device may be the source DU. The source DU, in some aspects, may output a measurement report (or information regarding a measurement report) to a CU-CP or source CU-CP. The measurement report, in some aspects, may include information triggering the joint and/or common handover procedure for the plurality of UEs. For example, referring to FIGS. **6**, **7**, and **8**, the CU-CP **607**, the CU-CP **707**, and the source CU-CP **817** may obtain, from sDU **603**, **703**, and **803** the message transfer **632**, **732**, and **832**.

[0259] At **1710** The network device, in some aspects, may obtain, from the CU-CP or the source CU-CP, a common context modification request (a common request relating to a context modification) for the plurality of UEs. The common context modification request, in some aspects, may include the multi-modal information. For example, **1710** may be performed by DU processor(s) **2632**, transceiver(s) **2646**, antenna(s) **2680**, and/or joint handover component **199** of FIG. **26**. In some aspects, the common context modification request may include a plurality of RRC reconfiguration messages for the plurality of UEs. The plurality of RRC reconfiguration messages, in some aspects, including an RRC reconfiguration message for each of the plurality of UEs. For example, referring to FIGS. **6**, **7**, and **8**, the CU-CP **607**, the CU-CP **707**, and the target CU-CP **819** may output, the common context modification request **842** for the sDU **603**, **703**, or **803**.

[0260] At **1720**, the network device, in some aspects, may output, for the plurality of UEs, the plurality of RRC reconfiguration messages for the plurality of UEs included in the common context modification request. The common context modification request, in some aspects, may include the multi-modal information. For example, **1720** may be performed by DU processor(s) **2632**, transceiver(s) **2646**, antenna(s) **2680**, and/or joint handover component **199** of FIG. **26**. The plurality of RRC reconfiguration messages, in some aspects, including an RRC reconfiguration message for each of the plurality of UEs. For example, referring to FIGS. **6**, **7**, and **8**, the CU-CP **607**, the sDU **603**, **703**, or **803** may output, an individual RRC reconfiguration message **644** to each of the UE1 **604**, **704**, or **804** and the UE2 **606**, **706**, or **806**.

[0261] In some aspects, the network device may output, for a CU-UP (e.g., the CU-UP or the source CU-UP) associated with the handover procedure for the plurality of UEs, a first common data delivery status indication for the plurality of UEs. The first common data delivery status, in some aspects, may include the multi-modal information. For example, referring to FIGS. **6**, **7**, and **8**, the CU-UP **609**, the source CU-UP **713**, and the source CU-UP **813** may obtain, the common data delivery status frame **652**, **752**, and **852** from the sDU **603**, **703**, and **803**.

[0262] Based on the common context modification request, the sDU, may output, for a CU-CP or a source CU-CP, a common context modification response for the plurality of UEs. The common context modification response, in some aspects, may include multi-modal infor-

mation. For example, referring to FIGS. **6**, **7**, and **8**, the sDU **603**, **703**, or **803** may output, and the CU-CP **607**, the CU-CP **707**, and the source CU-CP **817** may obtain, the context modification response **656**, **756**, or **856**.

[0263] FIG. **18** is a flowchart **1800** of a method of wireless communication. The method may be performed by one or more of a network, a network component, or a network device (e.g., the base station **102**; the sDU **603**, **703**, **803**; the tDU **605**, **705**, **805**; the CU-CP **607**, **707**; the CU-UP **609**; the AMF/UPF **711**, **811**; the source CU-UP **713**, **813**; the target CU-UP **715**, **815**; the source CU-CP **817**; the target CU-CP **819**; the network entity **2602**, **2760**). In some aspects, the method may be associated with a joint and/or common handover performed for a plurality of UEs (as an example of wireless devices) associated with a multi-modal service in a distributed architecture as discussed in any of FIGS. **6**, **7**, and **8**. The joint and/or common handover, in some aspects, may be for a handover from (1) a source base station or DU (an sBS or sDU) currently serving and/or connected to the plurality of UEs to (2) a target base station or DU (a tBS or tDU). The plurality of UEs may be associated with multi-modal information as discussed above in relation to FIGS. **6**, **7**, and **8** and if a message includes or indicates multi-modal information, it may include all, or part, of the multi-modal information including one or more of a service ID (or multi-modal service ID) and a plurality of flows (QOS flows), and a set of relationships between the flows in the plurality of flows.

[0264] In some aspects, the network device may be the target DU. At **1810**, the network device, in some aspects, may obtain, from the CU-CP or the target CU-CP, a common context setup request for the plurality of UEs. For example, **1810** may be performed by DU processor(s) **2632**, transceiver(s) **2646**, antenna(s) **2680**, and/or joint handover component **199** of FIG. **26**. The common context setup request, in some aspects, may include the multi-modal information. For example, referring to FIGS. **6**, **7**, and **8**, the tDU **605**, **705**, and **805** may obtain, from the CU-CP **607**, the CU-CP **707**, and the target CU-CP **819**, a common context setup request in association with the common context setup **838**.

[0265] In some aspects, the network device may be the target DU. The network device, in some aspects, may output, for the CU-CP or the target CU-CP, a common context setup response for the plurality of UEs. The common context setup request, in some aspects, may include the multi-modal information. For example, referring to FIGS. **6**, **7**, and **8**, the tDU **605**, **705**, and **805** may output, for the CU-CP **607**, the CU-CP **707**, and the target CU-CP **819**, a common context setup response in association with the common context setup **838**.

[0266] At **1820**, the network device may output, for a CU-UP (e.g., the CU-UP or the target CU-UP) associated with the handover procedure for the plurality of UEs, a (second) common data delivery status indication for the plurality of UEs. For example, **1820** may be performed by DU processor(s) **2632**, transceiver(s) **2646**, antenna(s) **2680**, and/or joint handover component **199** of FIG. **26**. The (second) common data delivery status, in some aspects, may include the multi-modal information. For example, referring to FIGS. **6**, **7**, and **8**, the CU-UP **609**, the source CU-UP **713**, and the source CU-UP **813** may obtain, the common data delivery status **666**, **766**, and **866** from the tDU **605**, **705**, and **805**.

[0267] FIG. **19** is a flowchart **1900** of a method of wireless communication. The method may be performed by one or more of a network, a network component, or a network device (e.g., the base station **102**; the sDU **903**, **1003**, **1103**; the tDU **905**, **1005**, **1105**; the CU-CP **907**, **1007**; the CU-UP **909**; the AMF/UPF **1011**, **1111**; the source CU-UP **1013**, **1113**; the target CU-UP **1015**, **1115**; the source CU-CP **1117**; the target CU-CP **1119**; the network entity **2602**, **2760**). In some aspects, the method may be associated with a joint and/or common handover performed for a plurality of UEs (as an example of wireless devices) associated with a multi-modal service in a distributed architecture as discussed in any of FIG. **9**, **10**A, **10**B, **11**A, or **11**B. The joint and/or common handover, in some aspects, may be for a handover from (1) a source base station or DU (an sDU or sDU) currently serving and/or connected to the plurality of UEs to (2) a target base station or DU (a tDU or tDU). The plurality of UEs may be associated with multi-modal information as discussed above in relation to FIG. **9**, **10**A, **10**B, **11**A, or **11**B and if a message includes or indicates multi-modal information, it may include all, or part, of the multi-modal information including one or more of a service ID (or multi-modal service ID) and a plurality of flows (QOS flows), and a set of relationships between the flows in the plurality of flows.

[0268] In some aspects, the network device may be a CU associated with a CP (a "CU-CP" associated with, or implementing, CP functions), and may receive a measurement report (or information regarding a measurement report) from a sDU associated with the plurality of UEs. The measurement report, in some aspects, may include information triggering the joint and/or common handover procedure for the plurality of UEs. For example, referring to FIGS. **9**, **10**A, and **11**A, the CU-CP **907**, the CU-CP **1007**, and the source CU-CP **1117** may obtain, from sDU **903**, **1003**, and **1103** the message transfer **921**, **1021**, and **1121**.

[0269] If the CU-CP for the sDU (e.g., a source CU-CP such as the source CU-CP **1117**) is not the same as the CU-CP for the tDU (e.g., a target CU-CP such as the target CU-CP **1119**), the source CU-CP may output, and the target CU-CP may obtain, a first UE-specific handover request for a first UE in the plurality of UEs. In some aspects, the source CU-CP may output, and the target CU-CP may obtain, a second UE-specific handover request for a second UE in the plurality of UEs. In some aspects, the first UE-specific handover request and the second UE-specific handover request may include the multi-modal information (e.g., information identifying the plurality of UEs as being related for the joint handover procedure). For example, referring to FIG. **11**A, the source CU-CP **1117** may output, and the target CU-CP **1119** may obtain, first UE-specific handover request **1122** and second UE-specific handover request **1123**.

[0270] In some aspects, the target CU-CP may, after receiving the first UE-specific handover request, wait to receive UE-specific handover requests from each of the UEs indicated in the first UE-specific handover request. Once the UE-specific handover requests from each of the UEs indicated in the first UE-specific handover request have been received, the target CU-CP may perform a call admission control for the plurality of UEs and request the setup of resources in, or at, the target CU-UP via a first UE-specific bearer context setup request for a first UE in the plurality of UEs and a second UE-specific bearer context setup request for a second UE in the plurality of UEs. The UE-specific

bearer context setup requests, in some aspects, may include the multi-modal information. For example, referring to FIG. **11**A, the target CU-CP **1119** may wait until the first UE-specific handover request **1122** and the second UE-specific handover request **1123** are received and then perform the call admission control at **1124** and output the first UE-specific bearer context setup request **1125** and the second UE-specific bearer context setup request **1126**.

[0271] In some aspects, the CU-CP for the tDU may, based on the UE-specific bearer context setup requests for the plurality of UEs, obtain a UE-specific bearer context setup response for each of the plurality of UEs. The UE-specific bearer context setup responses, in some aspects, may include the multi-modal information. In some aspects, the UE-specific bearer context setup requests may be output for, or provided to, a target CU-UP and the UE-specific bearer context setup responses may be obtained from the target CU-UP. For example, referring to FIGS. **10**A, **10**B, **11**A, and **11**B, the CU-CP **1007** and the target CU-CP **1119** may output, and the target CU-UP **1015** and **1115** may obtain, the first UE-specific bearer context setup request **1125** and the second UE-specific bearer context setup request **1126** and the target CU-UP **1015** and **1115** may output, and the CU-CP **1007** and the target CU-CP **1119** may obtain, the first UE-specific bearer context setup response **1128** and the second UE-specific bearer context setup response **1129**.

[0272] At **1910**, the network device may output, for a target DU associated with the handover procedure for the plurality of UEs, a first UE-specific request relating to a context of a first UE (where, for a UE, the context may include a current state, active connections, supported services, network preferences, etc.). For example, **1910** may be performed by CU processor(s) **2612**, communications interface **2618**, network processor **2712**, network interface **2780**, and/or joint handover component **199** of FIGS. **26** and **27**. The first UE-specific request, in some aspects, may include a first identifier of at least a second UE in the plurality of UEs and/or the multi-modal information. For example, referring to FIGS. **9**, **10**A, **10**B, **11**A, and **11**B, the CU-CP **907**, the CU-CP **1007**, and the target CU-CP **1119** may output a first UE-specific context setup request **930**, **1030**, and **1130**.

[0273] At **1920**, the network device may output, for a target DU associated with the handover procedure for the plurality of UEs, a second UE-specific request relating to a context of the second UE (where, for a UE, the context may include a current state, active connections, supported services, network preferences, etc.). For example, **1920** may be performed by CU processor(s) **2612**, communications interface **2618**, network processor **2712**, network interface **2780**, and/or joint handover component **199** of FIGS. **26** and **27**. The second UE-specific request, in some aspects, may include a second identifier of at least a first UE in the plurality of UEs and/or the multi-modal information. For example, referring to FIGS. **9**, **10**A, **10**B, **11**A, and **11**B, the CU-CP **907**, the CU-CP **1007**, and the target CU-CP **1119** may output a second UE-specific context setup request **931**, **1031**, and **1131**.

[0274] In some aspects, the network device may obtain, from the target DU associated with the handover procedure for the plurality of UEs, a first UE-specific response relating to a context of the first UE (where, for a UE, the context may include a current state, active connections, supported services, network preferences, etc.). In some aspects, the first UE-specific response may be obtained based on outputting the first UE-specific request. The first UE-specific response, in some aspects, may include a first identifier of at least the second UE in the plurality of UEs and/or the multi-modal information. For example, referring to FIGS. **9**, **10**A, **10**B, **11**A, and **11**B, the CU-CP **907**, the CU-CP **1007**, and the target CU-CP **1119** may obtain a first UE-specific context setup response **933**, **1033**, and **1133**.

[0275] In some aspects, the network device may obtain, from the target DU associated with the handover procedure for the plurality of UEs, a second UE-specific response relating to a context of the second UE (where, for a UE, the context may include a current state, active connections, supported services, network preferences, etc.). In some aspects, the second UE-specific response may be obtained based on outputting the second UE-specific request. The second UE-specific response, in some aspects, may include a second identifier of at least the first UE in the plurality of UEs and/or the multi-modal information. For example, referring to FIGS. **9**, **10**A, **10**B, **11**A, and **11**B, the CU-CP **907**, the CU-CP **1007**, and the target CU-CP **1119** may obtain a second UE-specific context setup response **934**, **1034**, and **1134**.

[0276] If the CU-CP for the sDU (e.g., the source CU-CP **1117**) is not the same as the CU-CP for the tDU (e.g., the target CU-CP **1119**), the CU-CP for the sDU may obtain, and the CU-CP for the tDU may output, a first and second UE-specific handover request acknowledgments in response to the first and second UE-specific handover requests. In some aspects, the first and second UE-specific handover request acknowledgments may include multi-modal information indicating at least the plurality of UEs or other information identifying the first and second UE-specific handover request acknowledgments as being related to the first and second UE-specific handover requests. For example, referring to FIG. **11**A, the source CU-CP **1117** may output, and the target CU-CP **1119** may obtain, the first UE-specific handover request acknowledgment **1135** and the second UE-specific handover request acknowledgment **1137**.

[0277] The network device, in some aspects, may output, for the sDU, a first and second UE-specific context modification requests (a second set of requests relating to a context modification) for the first and second UEs, respectively. The first and second UE-specific context modification requests, in some aspects, may include the multi-modal information. For example, referring to FIGS. **9**, **10**A, **10**B, **11**A, and **11**B, the CU-CP **907**, the CU-CP **1007**, and the target CU-CP **1119** may output, the first UE-specific context modification request **1136** and the second UE-specific context modification request **1138**.

[0278] Based on the first and second UE-specific context modification requests, the CU-CP (or a CU-CP for the sDU), in some aspects, may obtain, from an sDU, first and second UE-specific context modification responses for the plurality of UEs. The UE-specific context modification responses, in some aspects, may include multi-modal information. For example, referring to FIGS. **9**, **10**A, **10**B, **11**A, and **11**B, the CU-CP **907**, the CU-CP **1007**, and the source CU-CP **1117** may obtain, the first UE-specific context modification response **945**, **1045**, **1145** and the second UE-specific context modification response **948**, **1048**, and **1148** from the sDU **903**, **1003**, or **1103**.

[0279] In some aspects, the CU-CP (or the CU-CP for the tDU) may obtain a first RRC reconfiguration complete message for the first UE and output, for an AMF/UPF based on the first RRC reconfiguration complete message, a first UE-specific path switch request for the first UE in the plurality of UEs. The first UE-specific path switch request for the first UE, in some aspects, may include the multi-modal information including an indication of the second UE in the plurality of UEs. For example, referring to FIGS. **9**, **10**A, **10**B, **11**A, and **11**B, the CU-CP **907**, the CU-CP **1007**, and the target CU-CP **1119** may obtain, the RRC reconfiguration complete message **952**, **1052**, and **1152** and the CU-CP **1007** and the target CU-CP **1119** may output a first UE-specific path switch request **1053** or **1153**.

[0280] In some aspects, the CU-CP (or the CU-CP for the tDU) may obtain a second RRC reconfiguration complete message for the first UE and output, for an AMF/UPF based on the second RRC reconfiguration complete message, a second UE-specific path switch request for the second UE in the plurality of UEs. The second UE-specific path switch request for the second UE, in some aspects, may include the multi-modal information including an indication (e.g., an identifier) of the first UE in the plurality of UEs. For example, referring to FIGS. **9**, **10**A, **10**B, **11**A, and **11**B, the CU-CP **907**, the CU-CP **1007**, and the target CU-CP **1119** may obtain, the RRC reconfiguration complete message **958**, **1058**, and **1158** and the CU-CP **1007** and the target CU-CP **1119** may output a second UE-specific path switch request **1059** or **1159**.

[0281] FIG. **20** is a flowchart **2000** of a method of wireless communication. The method may be performed by one or more of a network, a network component, or a network device (e.g., the base station **102**; the sDU **903**, **1003**, **1103**; the tDU **905**, **1005**, **1105**; the CU-CP **907**, **1007**; the CU-UP **909**; the AMF/UPF **1011**, **1111**; the source CU-UP **1013**, **1113**; the target CU-UP **1015**, **1115**; the source CU-CP **1117**; the target CU-CP **1119**; the network entity **2602**, **2760**). In some aspects, the method may be associated with a joint and/or common handover performed for a plurality of UEs (as an example of wireless devices) associated with a multi-modal service in a distributed architecture as discussed in any of FIG. **9**, **10**A, **10**B, **11**A, or **11**B. The joint and/or common handover, in some aspects, may be for a handover from (1) a source base station or DU (an sDU or sDU) currently serving and/or connected to the plurality of UEs to (2) a target base station or DU (a tDU or tDU). The plurality of UEs may be associated with multi-modal information as discussed above in relation to FIG. **9**, **10**A, **10**B, **11**A, or **11**B and if a message includes or indicates multi-modal information, it may include all, or part, of the multi-modal information including one or more of a service ID (or multi-modal service ID) and a plurality of flows (QOS flows), and a set of relationships between the flows in the plurality of flows.

[0282] In some aspects, the network device may be a CU associated with a CP (a "CU-CP" associated with, or implementing, CP functions), and may receive a measurement report (or information regarding a measurement report) from a sDU associated with the plurality of UEs. The measurement report, in some aspects, may include information triggering the joint and/or common handover procedure for the plurality of UEs. For example, referring to FIG. **11**A, the source CU-CP **1117** may obtain, and sDU **1103** may output, the message transfer **1121**.

[0283] If the CU-CP for the sDU (e.g., the source CU-CP **1117**) is not the same as the CU-CP for the tDU (e.g., the target CU-CP **1119**), at **2010**, the source CU-CP may output, and the target CU-CP may obtain, a first UE-specific handover request for a first UE in the plurality of UEs associated with a joint handover and including a first identifier for at least a second UE in the plurality of UEs. For example, **2010** may be performed by CU processor(s) **2612**, communications interface **2618**, network processor **2712**, network interface **2780**, and/or joint handover component **199** of FIGS. **26** and **27**. In some aspects, the first UE-specific handover request may include multi-modal information indicating at least the second UE in the plurality of UEs. For example, referring to FIG. **11**A, the source CU-CP **1117** may output, and the target CU-CP **1119** may obtain, the first UE-specific handover request **1122**.

[0284] At **2020**, the source CU-CP may output, and the target CU-CP may obtain, a second UE-specific handover request for a second UE in the plurality of UEs associated with a joint handover and including a second identifier for at least the first UE in the plurality of UEs. For example, **2020** may be performed by CU processor(s) **2612**, communications interface **2618**, network processor **2712**, network interface **2780**, and/or joint handover component **199** of FIGS. **26** and **27**. In some aspects, the second UE-specific handover request may include multi-modal information indicating at least the first UE in the plurality of UEs. For example, referring to FIG. **11**A, the source CU-CP **1117** may output, and the target CU-CP **1119** may obtain, the second UE-specific handover request **1123**.

[0285] In some aspects, the CU-CP for the tDU may, based on the first and second UE-specific handover requests for the first and second UEs, output a first and second UE-specific bearer context setup message for the first and second UEs and obtain a first and second UE-specific bearer context response for the first and second UEs. In some aspects, the first and second UE-specific bearer context setup message and the first and second UE-specific bearer context response may include multi-modal information and may be exchanged with (output to, or obtained from, a CU device associated with a UP (a "CU-UP") such as a CU-UP associated with the tDU (e.g., a target CU-UP). For example, referring to FIGS. **10**A, **10**B, **11**A, and **11**B, the CU-CP **1007** and the target CU-CP **1119** may output, and the target CU-UP **1015** and **1115** may obtain, the first UE-specific bearer context setup request **1125**, the second UE-specific bearer context setup request **1126** and the target CU-UP **1015** and **1115** may output, and the CU-CP **1007** and the target CU-CP **1119** may obtain, the first UE-specific bearer context setup response **1128** and the second UE-specific bearer context setup response **1129**.

[0286] If the CU-CP for the sDU (e.g., the source CU-CP **1117**) is not the same as the CU-CP for the tDU (e.g., the target CU-CP **1119**), the CU-CP for the sDU may obtain, and the CU-CP for the tDU may output, a first UE-specific handover request acknowledgment and a second UE-specific handover request acknowledgment in response to the first and second UE-specific handover requests, respectively. In some aspects, the first and second UE-specific handover request acknowledgment may include multi-modal information indicating at least the second UE and the first UE, respectively or other information identifying the first and second UE-specific handover request acknowledgments as being related to the first and second UE-specific handover

requests. For example, referring to FIG. **11**A, the source CU-CP **1117** may output, and the target CU-CP **1119** may obtain, the first UE-specific handover request acknowledgment **1135** and the second UE-specific handover request acknowledgment **1137**.

[0287] If the CU-CP for the sDU (e.g., the source CU-CP **1117**) is not the same as the CU-CP for the tDU (e.g., the target CU-CP **1119**), the CU-CP for the sDU may output, and the sDU may obtain, a first and second UE-specific context modification request. In some aspects, the first and second UE-specific context modification requests may include multi-modal information. For example, referring to FIG. **11**A, the source CU-CP **1117** may output, and the sDU **1103** may obtain, the first UE-specific context modification request **1136** and the second UE-specific context modification request **1138**.

[0288] Based on the first and second UE-specific context modification requests, the CU-CP for the sDU, in some aspects, may obtain, from an sDU, a first and second UE-specific context modification response for the plurality of UEs. The first and second UE-specific context modification response, in some aspects, may include multi-modal information. For example, referring to FIGS. **9**, **10**A, **10**B, **11**A, and **11**B, the CU-CP **907**, the CU-CP **1007**, and the source CU-CP **1117** may obtain, the first UE-specific context modification response **945**, **1045**, **1145** and the second UE-specific context modification response **948**, **1048**, **1148** from the sDU **903**, **1003**, or **1103**.

[0289] FIG. **21** is a flowchart **2100** of a method of wireless communication. The method may be performed by one or more of a network, a network component, or a network device (e.g., the base station **102**; the sDU **903**, **1003**, **1103**; the tDU **905**, **1005**, **1105**; the CU-CP **907**, **1007**; the CU-UP **909**; the AMF/UPF **1011**, **1111**; the source CU-UP **1013**, **1113**; the target CU-UP **1015**, **1115**; the source CU-CP **1117**; the target CU-CP **1119**; the network entity **2602**, **2760**). In some aspects, the method may be associated with a joint and/or common handover performed for a plurality of UEs (as an example of wireless devices) associated with a multi-modal service in a distributed architecture as discussed in any of FIG. **9**, **10**A, **10**B, **11**A, or **11**B. The joint and/or common handover, in some aspects, may be for a handover from (1) a source base station or DU (an sDU or sDU) currently serving and/or connected to the plurality of UEs to (2) a target base station or DU (a tDU or tDU). The plurality of UEs may be associated with multi-modal information as discussed above in relation to FIG. **9**, **10**A, **10**B, **11**A, or **11**B and if a message includes or indicates multi-modal information, it may include all, or part, of the multi-modal information including one or more of a service ID (or multi-modal service ID) and a plurality of flows (QOS flows), and a set of relationships between the flows in the plurality of flows.

[0290] At **2110**, the network device (e.g., the CU-UP or a source CU-UP if the CU-UP is different for the source and target DUs) may obtain, from the sDU associated with the handover procedure for the plurality of UEs, a first UE-specific data delivery status indication for a first UE in the plurality of UEs. For example, **2110** may be performed by CU processor(s) **2612**, communications interface **2618**, network processor **2712**, network interface **2780**, and/or joint handover component **199** of FIGS. **26** and **27**. The first UE-specific data delivery status, in some aspects, may include the multi-modal information indicating at least a second UE in the plurality of UEs. If more than two UEs are involved in the joint handover procedure, the first UE-specific data delivery status, in some aspects, indicates each of the additional UEs (e.g., besides the first UE) and or the plurality of UEs (e.g., including the first UE) as being associated with the joint handover procedure. For example, referring to FIGS. **9**, **10**A, **10**B, **11**A, and **11**B, the CU-UP **909**, the source CU-UP **1013**, and the source CU-UP **1113** may obtain, the first UE-specific data delivery status frame **944**, **1044**, or **1144** from the sDU **903**, **1003**, and **1103**.

[0291] At **2120**, the network device (e.g., the CU-UP or the source CU-UP) may refrain, based on the first UE-specific data delivery status indication for the first UE in the plurality of UEs, from routing data for the plurality of UEs to the sDU. In some aspects, a source CU-UP may further begin routing and/or redirecting data (e.g., DL data from the AMF and/or UPF) to a target CU-UP. For example, **2120** may be CU processor(s) **2612**, communications interface **2618**, network processor **2712**, network interface **2780**, and/or joint handover component **199** of FIGS. **26** and **27**. For example, referring to FIGS. **9**, **10**A, **10**B, **11**A, and **11**B, the CU-UP **909**, the source CU-UP **1013**, and the source CU-UP **1113** may refrain, at **946**, **1046**, and **1146** from routing DL data from the UPF **911**, or the AMF/UPF **1011** and **1111** to the sDU **903**, **1003**, and **1103**. Additionally, the source CU-UP **1013** and the source CU-UP **1113** may begin, at **1046** and **1146**, redirecting data to the target CU-UP **1015** and target CU-UP **1115**, respectively.

[0292] The network device (e.g., the CU-UP or a source CU-UP) may obtain, from the sDU associated with the handover procedure for the plurality of UEs, a second UE-specific data delivery status indication for the second UE in the plurality of UEs. The second UE-specific data delivery status, in some aspects, may include the multi-modal information indicating at least the first UE in the plurality of UEs. If more than two UEs are involved in the joint handover procedure, the second UE-specific data delivery status, in some aspects, indicates each of the additional UEs (e.g., besides the second UE) and or the plurality of UEs (e.g., including the second UE) as being associated with the joint handover procedure. For example, referring to FIGS. **9**, **10**A, **10**B, **11**A, and **11**B, the CU-UP **909**, the source CU-UP **1013**, and the source CU-UP **1113** may obtain, the second UE-specific data delivery status frame **947**, **1047**, or **1147** from the sDU **903**, **1003**, and **1103**.

[0293] In some aspects, the network device may obtain, from a tDU associated with the handover procedure for the plurality of UEs, a third UE-specific data delivery status indication for a first UE in the plurality of UEs. The third UE-specific data delivery status, in some aspects, may include the multi-modal information indicating at least a second UE in the plurality of UEs. If more than two UEs are involved in the joint handover procedure, the third UE-specific data delivery status, in some aspects, indicates each of the additional UEs (e.g., besides the first UE) and or the plurality of UEs (e.g., including the first UE) as being associated with the joint handover procedure. For example, referring to FIGS. **9**, **10**A, **10**B, **11**A, and **11**B, the CU-UP **909**, the source CU-UP **1013**, and the source CU-UP **1113** may obtain, the third UE-specific data delivery status **950**, **1050**, **1150** from the tDU **905**, **1005**, and **1105**.

[0294] In some aspects, the network device may wait for UE-specific data delivery statuses or UE-specific data delivery status messages from each of the plurality of UEs

indicated in the third UE-specific data delivery status before routing data for the plurality of UEs to a tDU. For example, referring to FIG. **9**, the CU-UP **909** may wait, at **954**, for at least the fourth UE-specific data delivery status **956** before beginning, at **960**, to route data from the UPF **911** to the tDU **905**.

[0295] The network device may obtain, from the tDU associated with the handover procedure for the plurality of UEs, a fourth UE-specific data delivery status indication for the second UE in the plurality of UEs. The fourth UE-specific data delivery status, in some aspects, may include the multi-modal information indicating at least the first UE in the plurality of UEs. If more than two UEs are involved in the joint handover procedure, the fourth UE-specific data delivery status, in some aspects, indicates each of the additional UEs (e.g., besides the second UE) and or the plurality of UEs (e.g., including the second UE) as being associated with the joint handover procedure. For example, referring to FIG. **9** the CU-UP **909** may obtain, the fourth UE-specific data delivery status **956** from the tDU **905**.

[0296] The network device may begin, based on the fourth UE-specific data delivery status indication for the second UE in the plurality of UEs, routing data for the plurality of UEs to the tDU. For example, referring to FIG. **9**, the CU-UP **909** may begin, at **960**, routing DL data from the UPF **911** to the tDU **905**.

[0297] FIG. **22** is a flowchart **2200** of a method of wireless communication. The method may be performed by one or more of a network, a network component, or a network device (e.g., the base station **102**; the sDU **903**, **1003**, **1103**; the tDU **905**, **1005**, **1105**; the CU-CP **907**, **1007**; the CU-UP **909**; the AMF/UPF **1011**, **1111**; the source CU-UP **1013**, **1113**; the target CU-UP **1015**, **1115**; the source CU-CP **1117**; the target CU-CP **1119**; the network entity **2602**, **2760**). In some aspects, the method may be associated with a joint and/or common handover performed for a plurality of UEs (as an example of wireless devices) associated with a multi-modal service in a distributed architecture as discussed in any of FIG. **9**, **10**A, **10**B, **11**A, or **11**B. The joint and/or common handover, in some aspects, may be for a handover from (1) a source base station or DU (an sDU or sDU) currently serving and/or connected to the plurality of UEs to (2) a target base station or DU (a tDU or tDU). The plurality of UEs may be associated with multi-modal information as discussed above in relation to FIG. **9**, **10**A, **10**B, **11**A, or **11**B and if a message includes or indicates multi-modal information, it may include all, or part, of the multi-modal information including one or more of a service ID (or multi-modal service ID) and a plurality of flows (QOS flows), and a set of relationships between the flows in the plurality of flows.

[0298] In some aspects, the network device may be a CU associated with a UP (a "CU-UP" associated with, or implementing, UP functions). If the CU-UP for the sDU (e.g., a source CU-UP such as the source CU-UP **1013** or **1113**) is not the same as the CU-UP for the tDU (e.g., a target CU-UP such as the target CU-UP **1015** or **1115**), the target CU-UP may obtain, from a target CU-CP, a first UE-specific bearer context setup request for a first UE in the plurality of UEs and a second UE-specific bearer context setup request for the second UE. The first and second UE-specific bearer context setup requests, in some aspects, may include the multi-modal information. For example, referring to FIGS. **10**A and **11**A, the target CU-UP **1015** and **1115** may obtain, from target CU-CP **1019** and **1119**, respectively, the first UE-specific bearer context setup request **1025** and **1125** and the second UE-specific bearer context setup request **1026** and **1126**.

[0299] The target CU-UP, in some aspects, may determine based on receiving the first and second UE-specific bearer context setup requests (if the plurality of UEs includes only the first and second UEs) to check resources for the plurality of UEs. The target CU-UP may determine that it has available resources to support the plurality of UEs and may, based on the UE-specific bearer context setup requests for the plurality of UEs, output a UE-specific bearer context setup response for each of the plurality of UEs. The UE-specific bearer context setup responses, in some aspects, may include the multi-modal information. In some aspects, the UE-specific bearer context setup responses may be output for, or provided to, a target CU-CP. For example, referring to FIGS. **10**A, **10**B, **11**A, and **11**B, the target CU-CP **1019** and **1119** may wait for the first UE-specific bearer context setup request **1025** and **1125** and the second UE-specific bearer context setup request **1026** and **1126** to be received before determining at **1027** and **1127**, to check for available resources and output, the first UE-specific bearer context setup response **1028** and **1128** and the second UE-specific bearer context setup response **1029** and **1129**.

[0300] In some aspects, the network device may obtain, from a tDU associated with the handover procedure for the plurality of UEs, a third UE-specific data delivery status indication for a first UE in the plurality of UEs. The third UE-specific data delivery status, in some aspects, may include the multi-modal information indicating at least a second UE in the plurality of UEs. If more than two UEs are involved in the joint handover procedure, the third UE-specific data delivery status, in some aspects, indicates each of the additional UEs (e.g., besides the first UE) and or the plurality of UEs (e.g., including the first UE) as being associated with the joint handover procedure. For example, referring to FIGS. **9**, **10**A, **10**B, **11**A, and **11**B, the CU-UP **909**, the source CU-UP **1013**, and the source CU-UP **1113** may obtain, the third UE-specific data delivery status **950**, **1050**, **1150** from the tDU **905**, **1005**, and **1105**.

[0301] In some aspects, the network device may wait for UE-specific data delivery statuses or UE-specific data delivery status messages from each of the plurality of UEs indicated in the third UE-specific data delivery status before routing data for the plurality of UEs to a tDU. For example, referring to FIGS. **10**B and **11**B, the target CU-UP **1015** and **1115** may wait, at **1054** and **1154**, for at least the fourth UE-specific data delivery status **1056** and **1156** before beginning to route data (e.g., pending the path switch at **1060**) from the AMF/UPF **1011** and **1111** to the tDU **905**.

[0302] At **2210**, the network device may obtain, from the tDU associated with the handover procedure for the plurality of UEs, a fourth UE-specific data delivery status indication for the second UE in the plurality of UEs. For example, **2210** may be performed by CU processor(s) **2612**, communications interface **2618**, network processor **2712**, network interface **2780**, and/or joint handover component **199** of FIGS. **26** and **27**. The fourth UE-specific data delivery status, in some aspects, may include the multi-modal information indicating at least the first UE in the plurality of UEs. If more than two UEs are involved in the joint handover procedure, the fourth UE-specific data delivery status, in some aspects, indicates each of the additional UEs (e.g., besides the second

UE) and or the plurality of UEs (e.g., including the second UE) as being associated with the joint handover procedure. For example, referring to FIGS. **10**B and **11**B the target CU-UP **1015** and **1115** may obtain, the fourth UE-specific data delivery status **1056** and the **1156** from the tDU **905**.

[0303] At **2220**, the network device may begin, based on the fourth UE-specific data delivery status indication for the second UE in the plurality of UEs, routing data for the plurality of UEs to the tDU. For example, **2220** may be performed by CU processor(s) **2612**, communications interface **2618**, network processor **2712**, network interface **2780**, and/or joint handover component **199** of FIGS. **26** and **27**. For example, referring to FIGS. **10**B and **11**B, the target CU-UP **1015** and **1115** may obtain the fourth UE-specific data delivery status **1056** and **1156** and begin routing data for the plurality of UEs (e.g., pending the path switch at **1060**) from the AMF/UPF **1011** and **1111** to the tDU **905**.

[0304] FIG. **23** is a flowchart **2300** of a method of wireless communication. The method may be performed by one or more of a network, a network component, or a network device (e.g., the base station **102**; the sDU **903**, **1003**, **1103**; the tDU **905**, **1005**, **1105**; the CU-CP **907**, **1007**; the CU-UP **909**; the AMF/UPF **1011**, **1111**; the source CU-UP **1013**, **1113**; the target CU-UP **1015**, **1115**; the source CU-CP **1117**; the target CU-CP **1119**; the network entity **2602**, **2760**). In some aspects, the method may be associated with a joint and/or common handover performed for a plurality of UEs (as an example of wireless devices) associated with a multi-modal service in a distributed architecture as discussed in any of FIG. **9**, **10**A, **10**B, **11**A, or **11**B. The joint and/or common handover, in some aspects, may be for a handover from (1) a source base station or DU (an sDU or sDU) currently serving and/or connected to the plurality of UEs to (2) a target base station or DU (a tDU or tDU). The plurality of UEs may be associated with multi-modal information as discussed above in relation to FIG. **9**, **10**A, **10**B, **11**A, or **11**B and if a message includes or indicates multi-modal information, it may include all, or part, of the multi-modal information including one or more of a service ID (or multi-modal service ID) and a plurality of flows (QOS flows), and a set of relationships between the flows in the plurality of flows.

[0305] In some aspects, the network device may be an AMF/UPF associated with the handover procedure and/or the plurality of UEs. At **2302**, the network device may obtain a first UE-specific path switch request for the first UE in the plurality of UEs.

[0306] For example, **2302** may be performed by network processor **2712**, network interface **2780**, and/or joint handover component **199** of FIG. **27**. The first UE-specific path switch request for the first UE, in some aspects, may include the multi-modal information including an indication of the second UE in the plurality of UEs. For example, referring to FIGS. **10**B and **11**B, the AMF/UPF **1011** and the **1111** may obtain, the first UE-specific path switch request **1053** or **1153**.

[0307] At **2304**, the network device may obtain a second UE-specific path switch request for the second UE in the plurality of UEs. For example, **2304** may be performed by network processor **2712**, network interface **2780**, and/or joint handover component **199** of FIG. **27**. The second UE-specific path switch request for the second UE, in some aspects, may include the multi-modal information including an indication of the first UE in the plurality of UEs. For example, referring to FIGS. **10**B and **11**B, the AMF/UPF **1011** and the **1111** may obtain, the second UE-specific path switch request **1059** or **1159**.

[0308] At **2306**, the network device may switch, based on the first and second UE-specific path switch requests, a path for the plurality of UEs. For example, **2306** may be performed by network processor **2712**, network interface **2780**, and/or joint handover component **199** of FIG. **27**. For example, referring to FIGS. **10**A, **10**B, **11**A, and **11**B, the AMF/UPF **1011** and **1111** may switch, at **1074** and **1174**.

[0309] FIG. **24** is a flowchart **2400** of a method of wireless communication. The method may be performed by one or more of a network, a network component, or a network device (e.g., the base station **102**; the sDU **903**, **1003**, **1103**; the tDU **905**, **1005**, **1105**; the CU-CP **907**, **1007**; the CU-UP **909**; the AMF/UPF **1011**, **1111**; the source CU-UP **1013**, **1113**; the target CU-UP **1015**, **1115**; the source CU-CP **1117**; the target CU-CP **1119**; the network entity **2602**, **2760**). In some aspects, the method may be associated with a joint and/or common handover performed for a plurality of UEs (as an example of wireless devices) associated with a multi-modal service in a distributed architecture as discussed in any of FIG. **9**, **10**A, **10**B, **11**A, or **11**B. The joint and/or common handover, in some aspects, may be for a handover from (1) a source base station or DU (an sDU or sDU) currently serving and/or connected to the plurality of UEs to (2) a target base station or DU (a tDU or tDU). The plurality of UEs may be associated with multi-modal information as discussed above in relation to FIG. **9**, **10**A, **10**B, **11**A, or **11**B and if a message includes or indicates multi-modal information, it may include all, or part, of the multi-modal information including one or more of a service ID (or multi-modal service ID) and a plurality of flows (QOS flows), and a set of relationships between the flows in the plurality of flows.

[0310] In some aspects, the network device may be the source DU. The source DU, in some aspects, may output a measurement report (or information regarding a measurement report) to a CU-CP or source CU-CP. The measurement report, in some aspects, may include information triggering the joint and/or group handover procedure for the plurality of UEs. For example, referring to FIGS. **9**, **10**A, and **11**A, the sDU **903**, **1003**, and **1103**, may output the message transfer **921**, **1021**, and **1121**.

[0311] At **2410** The network device, in some aspects, may obtain, from the CU-CP or the source CU-CP, a first UE-specific context modification request (a UE-specific request relating to a context modification) for a first UE in the plurality of UEs. For example, **2410** may be performed by DU processor(s) **2632**, transceiver(s) **2646**, antenna(s) **2680**, and/or joint handover component **199** of FIG. **26**. The first UE-specific context modification request, in some aspects, may include the multi-modal information including an indication of the second UE in the plurality of UEs. In some aspects, the first UE-specific context modification request may include an RRC reconfiguration message (or RRC reconfiguration parameters) for the first UE. For example, referring to FIGS. **9**, **10**A, and **11**A, the sDU **903**, **1003**, and **1103**, may obtain the first UE-specific context modification request **936**, **1036**, **1136**.

[0312] At **2420**, the network device, in some aspects, may obtain, from the CU-CP or the source CU-CP, a second UE-specific context modification request (a UE-specific request relating to a context modification) for the second UE

in the plurality of UEs. For example, **2420** may be performed by DU processor(s) **2632**, transceiver(s) **2646**, antenna(s) **2680**, and/or joint handover component **199** of FIG. **26**. The second UE-specific context modification request, in some aspects, may include the multi-modal information including an indication of the first UE in the plurality of UEs. In some aspects, the second UE-specific context modification request may include an RRC reconfiguration message (or RRC reconfiguration parameters) for the second UE. For example, referring to FIGS. **9**, **10**A, and **11**A, the sDU **903**, **1003**, and **1103**, may obtain the second UE-specific context modification request **938**, **1038**, **1138**.

[0313] In some aspects, the network device may determine, based on receiving a UE-specific context modification request for each of the plurality of UEs, to forward the RRC reconfigurations for the plurality of UEs received in the plurality of UE-specific context modification requests. For example, referring to FIGS. **9**, **10**A, and **11**A, the sDU **903**, **1003**, and **1103**, may determine at **939**, **1039**, and **1139**, to forward the plurality of RRC reconfigurations **940**, **1040**, and **1140** included in the first UE-specific context modification request **936**, **1036**, and **1136** and the second UE-specific context modification request **938**, **1038**, **1138**. The network device may output (or transmit) the plurality of RRC reconfiguration messages received in the plurality of UE-specific context modification requests (e.g., at least the first and second UE-specific context modification requests). For example, referring to FIGS. **9**, **10**A, and **11**A, the sDU **903**, **1003**, and **1103**, may output the plurality of RRC reconfigurations **940**, **1040**, and **1140**.

[0314] In some aspects, the network device may output, for a CU-UP (e.g., the CU-UP or the source CU-UP) associated with the handover procedure for the plurality of UEs, a first UE-specific data delivery status indication for the first UE in the plurality of UEs. The first UE-specific data delivery status, in some aspects, may include the multi-modal information including an indication of the second UE in the plurality of UEs. For example, referring to FIGS. **9**, **10**A, and **11**A, the sDU **903**, **1003**, and **1103**, may output the first UE-specific data delivery status frame **944**, **1044**, and **1144**.

[0315] Based on the first UE-specific context modification request, the sDU, may output, for a CU-CP or a source CU-CP, a first UE-specific context modification response for the first UE in the plurality of UEs. The first UE-specific context modification response, in some aspects, may include the multi-modal information including an indication of the second UE in the plurality of UEs. For example, referring to FIGS. **9**, **10**A, and **11**A, the sDU **903**, **1003**, and **1103**, may output the first UE-specific context modification response **945**, **1045**, and **1145**.

[0316] In some aspects, the network device may output, for a CU-UP (e.g., the CU-UP or the source CU-UP) associated with the handover procedure for the plurality of UEs, a second UE-specific data delivery status indication for the second UE in the plurality of UEs. The second UE-specific data delivery status, in some aspects, may include the multi-modal information including an indication of the first UE in the plurality of UEs. For example, referring to FIGS. **9**, **10**A, and **11**A, the sDU **903**, **1003**, and **1103**, may output the second UE-specific data delivery status frame **947**, **1047**, and **1147**.

[0317] Based on the second UE-specific context modification request, the sDU, may output, for a CU-CP or a source CU-CP, a second UE-specific context modification response for the second UE in the plurality of UEs. The second UE-specific context modification response, in some aspects, may include the multi-modal information including an indication of the first UE in the plurality of UEs. For example, referring to FIGS. **9**, **10**A, and **11**A, the sDU **903**, **1003**, and **1103**, may output the second UE-specific context modification response **948**, **1048**, and **1148**.

[0318] FIG. **25** is a flowchart **2500** of a method of wireless communication. The method may be performed by one or more of a network, a network component, or a network device (e.g., the base station **102**; the sDU **903**, **1003**, **1103**; the tDU **905**, **1005**, **1105**; the CU-CP **907**, **1007**; the CU-UP **909**; the AMF/UPF **1011**, **1111**; the source CU-UP **1013**, **1113**; the target CU-UP **1015**, **1115**; the source CU-CP **1117**; the target CU-CP **1119**; the network entity **2602**, **2760**). In some aspects, the method may be associated with a joint and/or common handover performed for a plurality of UEs (as an example of wireless devices) associated with a multi-modal service in a distributed architecture as discussed in any of FIG. **9**, **10**A, **10**B, **11**A, or **11**B. The joint and/or common handover, in some aspects, may be for a handover from (1) a source base station or DU (an sDU or sDU) currently serving and/or connected to the plurality of UEs to (2) a target base station or DU (a tDU or tDU). The plurality of UEs may be associated with multi-modal information as discussed above in relation to FIG. **9**, **10**A, **10**B, **11**A, or **11**B and if a message includes or indicates multi-modal information, it may include all, or part, of the multi-modal information including one or more of a service ID (or multi-modal service ID) and a plurality of flows (QOS flows), and a set of relationships between the flows in the plurality of flows.

[0319] In some aspects, the network device may be the target DU. At **2510** The network device, in some aspects, may obtain, from the CU-CP or the target CU-CP, a first UE-specific context setup request for the first UE in the plurality of UEs. For example, **2510** may be performed by DU processor(s) **2632**, transceiver(s) **2646**, antenna(s) **2680**, and/or joint handover component **199** of FIG. **26**. The first UE-specific context setup request, in some aspects, may include the multi-modal information including an indication of the second UE in the plurality of UEs. For example, referring to FIGS. **9**, **10**A, and **11**A, the tDU **905**, **1005**, and **1105**, may obtain the first UE-specific context setup request **930**, **1030**, **1130**.

[0320] At **2520**, the network device, in some aspects, may obtain, from the CU-CP or the target CU-CP, a second UE-specific context setup request for the second UE in the plurality of UEs. For example, **2520** may be performed by DU processor(s) **2632**, transceiver(s) **2646**, antenna(s) **2680**, and/or joint handover component **199** of FIG. **26**. The second UE-specific context setup request, in some aspects, may include the multi-modal information including an indication of the first UE in the plurality of UEs. For example, referring to FIGS. **9**, **10**A, and **11**A, the tDU **905**, **1005**, and **1105**, may obtain the second UE-specific context setup request **931**, **1031**, **1131**.

[0321] In some aspects, the network device may, based on receiving the plurality of UE-specific context setup requests, determine to check for available resources for the joint handover. For example, referring to FIGS. **9**, **10**A, and **11**A, the tDU **905**, **1005**, and **1105**, may determine, at **932**, **0132**, and **1132**, to check for resources for the plurality of UEs.

Based on checking for the resources, the network device may output, for the CU-CP or the target CU-CP, a first UE-specific context setup response for the first UE in the plurality of UEs. The first UE-specific context setup response, in some aspects, may include the multi-modal information including an indication of the second UE in the plurality of UEs. For example, referring to FIGS. **9**, **10**A, and **11**A, the tDU **905**, **1005**, and **1105**, may output the first UE-specific context setup response **933**, **1033**, **1133**.

[0322] In some aspects, the network device, in some aspects, may output, for the CU-CP or the target CU-CP, a second UE-specific context setup response for the second UE in the plurality of UEs. The second UE-specific context setup response, in some aspects, may include the multi-modal information including an indication of the first UE in the plurality of UEs. For example, referring to FIGS. **9**, **10**A, and **11**A, the tDU **905**, **1005**, and **1105**, may output the second UE-specific context setup response **934**, **1034**, **1134**.

[0323] In some aspects, the network device may output, for a CU-UP (e.g., the CU-UP or the target CU-UP) associated with the handover procedure for the plurality of UEs, a third UE-specific data delivery status indication for the first UE in the plurality of UEs. The third UE-specific data delivery status, in some aspects, may include the multi-modal information including an indication of the second UE in the plurality of UEs. For example, referring to FIGS. **9**, **10**A, and **11**A, the tDU **905**, **1005**, and **1105**, may output the third UE-specific data delivery status **950**, **1050**, and **1150**.

[0324] In some aspects, the network device may output, for a CU-UP (e.g., the CU-UP or the target CU-UP) associated with the handover procedure for the plurality of UEs, a fourth UE-specific data delivery status indication for the second UE in the plurality of UEs. The fourth UE-specific data delivery status, in some aspects, may include the multi-modal information including an indication of the first UE in the plurality of UEs. For example, referring to FIGS. **9**, **10**A, and **11**A, the tDU **905**, **1005**, and **1105**, may output the fourth UE-specific data delivery status **956**, **1056**, and **1156**.

[0325] FIG. **26** is a diagram **2600** illustrating an example of a hardware implementation for a network entity **2602**. The network entity **2602** may be a BS, a component of a BS, or may implement BS functionality. The network entity **2602** may include at least one of a CU **2610**, a DU **2630**, or an RU **2640**. For example, depending on the layer functionality handled by the joint handover component **199**, the network entity **2602** may include the CU **2610**; both the CU **2610** and the DU **2630**; each of the CU **2610**, the DU **2630**, and the RU **2640**; the DU **2630**; both the DU **2630** and the RU **2640**; or the RU **2640**. The CU **2610** may include at least one CU processor **2612**. The CU processor(s) **2612** may include on-chip memory **2612'**. In some aspects, the CU **2610** may further include additional memory modules **2614** and a communications interface **2618**. The CU **2610** communicates with the DU **2630** through a midhaul link, such as an F1 interface. The DU **2630** may include at least one DU processor **2632**. The DU processor(s) **2632** may include on-chip memory **2632'**. In some aspects, the DU **2630** may further include additional memory modules **2634** and a communications interface **2638**. The DU **2630** communicates with the RU **2640** through a fronthaul link. The RU **2640** may include at least one RU processor **2642**. The RU processor(s) **2642** may include on-chip memory **2642'**. In some aspects, the RU **2640** may further include additional memory modules **2644**, one or more transceivers **2646**, one or more antennas **2680**, and a communications interface **2648**. The RU **2640** communicates with the UE **104**. The on-chip memory **2612'**, **2632'**, **2642'** and the additional memory modules **2614**, **2634**, **2644** may each be considered a computer-readable medium/memory. Each computer-readable medium/memory may be non-transitory. Each of the processors **2612**, **2632**, **2642** is responsible for general processing, including the execution of software stored on the computer-readable medium/memory. The software, when executed by the corresponding processor(s) causes the processor(s) to perform the various functions described supra. The computer-readable medium/memory may also be used for storing data that is manipulated by the processor(s) when executing software.

[0326] As discussed supra, the joint handover component **199** may be configured to output, for a target DU associated with a handover procedure for the plurality of wireless devices, a first common request relating to a context of the plurality of wireless devices and obtain, from the target DU and based on the first common request, a first common response relating to the context of the plurality of wireless devices. In some aspects the joint handover component **199** may be configured to obtaining, for a handover procedure for the plurality of wireless devices from the source DU to a target DU, a common context modification request relating to modifying a context of the plurality of wireless devices and output, based on the common context modification request, a first common data delivery status indication for the plurality of wireless devices. In some aspects the joint handover component **199** may be configured to obtain, for a handover procedure for the plurality of wireless devices from a source DU to a target DU, a common context setup request relating to modifying a context of the plurality of wireless devices and output, based on the common context setup request, a common context setup response for the plurality of wireless devices. In some aspects the joint handover component **199** may be configured to obtain, from a source DU associated with a handover procedure for the plurality of wireless devices, a first common data delivery status indication relating to the plurality of wireless devices refrain, based on the first common data delivery status indication, from routing data for the plurality of wireless devices to the source DU. In some aspects the joint handover component **199** may be configured to obtain, from a target DU associated with the handover procedure for the plurality of wireless devices, a common data delivery status indication relating to the plurality of wireless devices and route, based on the common data delivery status indication, data to the target DU. In some aspects the joint handover component **199** may be configured to output, for a target distributed unit (DU) associated with a joint handover procedure for the plurality of wireless devices, a first request relating to a first context of a first wireless device in the plurality of wireless devices, wherein the first request comprises a first identifier of at least a second wireless device in the plurality of wireless devices associated with the joint handover procedure, and output, for the target DU, a second request relating to a second context of the second wireless device in the plurality of wireless devices, wherein the second request comprises a second identifier of at least the first wireless device. In some aspects the joint handover component **199** may be configured to obtain, in association with a handover procedure for the plurality of wireless devices, a first context

modification request for a first wireless device in the plurality of wireless devices, wherein the first context modification request comprises a first identifier for at least a second wireless device in the plurality of wireless devices and obtain, in association with the handover procedure for the plurality of wireless devices, a second context modification request for the second wireless device, wherein the second context modification request comprises a second identifier for at least the first wireless device in the plurality of wireless devices. In some aspects the joint handover component **199** may be configured to obtain, in association with a handover procedure for the plurality of wireless devices, a first context setup request for a first wireless device in the plurality of wireless devices, wherein the first context setup request comprises a first identifier for at least a second wireless device in the plurality of wireless devices and obtain, in association with the handover procedure for the plurality of wireless devices, a second context setup request for the second wireless device, wherein the second context setup request comprises a second identifier for at least the first wireless device in the plurality of wireless devices. In some aspects the joint handover component **199** may be configured to obtain, from a source DU associated with a handover procedure for the plurality of wireless devices, a first data delivery status indication, wherein the first data delivery status indication comprises a first identifier for at least a second wireless device in the plurality of wireless devices and refrain, based on the first data delivery status indication, from routing data for the plurality of wireless devices to the source DU. In some aspects the joint handover component **199** may be configured to obtain, from a target DU associated with the handover procedure for the plurality of wireless devices, a last data delivery status indication in a plurality of data delivery status indications for the plurality of wireless devices, wherein each data delivery status indication is for a different wireless device in the plurality of wireless devices and comprises at least one identifier for at least one other wireless device in the plurality of wireless devices and route, based on the last data delivery status indication, data for the plurality of wireless devices to the target DU. The joint handover component **199** may be within one or more processors of one or more of the CU **2610**, DU **2630**, and the RU **2640**. The joint handover component **199** may be one or more hardware components specifically configured to carry out the stated processes/algorithm, implemented by one or more processors configured to perform the stated processes/algorithm, stored within a computer-readable medium for implementation by one or more processors, or some combination thereof. When multiple processors are implemented, the multiple processors may perform the stated processes/algorithm individually or in combination.

[0327] The network entity **2602** may include a variety of components configured for various functions. In one configuration, the network entity **2602** may include means for outputting, for a target distributed unit (DU) associated with a handover procedure for the plurality of wireless devices, a first common request relating to a context of the plurality of wireless devices. The network entity **2602** may include means for obtaining, from the target DU and based on the first common request, a first common response relating to the context of the plurality of wireless devices. The network entity **2602** may include means for outputting, for a source DU associated with the handover procedure for the plurality of wireless devices, a second common request to modify the context of the plurality of wireless devices based on the first common response. The network entity **2602** may include means for obtaining, from the source DU and based on the second common request, a second common response relating to the context of the plurality of wireless devices. The network entity **2602** may include means for obtaining a plurality of individual indications that a radio resource control (RRC) reconfiguration has completed for each wireless device in the plurality of wireless devices. The network entity **2602** may include means for outputting, based on the plurality of individual indications, a common path switch request to an access and mobility management function (AMF) for the plurality of wireless devices. The network entity **2602** may include means for obtaining a common path switch request acknowledgment for the plurality of wireless devices. The network entity **2602** may include means for releasing, based on at least one of the plurality of individual indications and the common path switch request acknowledgment, contexts associated with the plurality of wireless devices at a source DU. The network entity **2602** may include means for obtaining a measurement report triggering the handover procedure for the plurality of wireless devices, wherein outputting the first common request is based on the measurement report. The network entity **2602** may include means for outputting, for a user plane (UP) of a second CU associated with the target DU and based on the measurement report, a third common request associated with a bearer context setup for the plurality of wireless devices. The network entity **2602** may include means for obtaining, from the UP of the second CU, a third common response associated with the bearer context setup, wherein the first common request is output based on the third common response. The network entity **2602** may include means for obtaining a common handover procedure request for the plurality of wireless devices. The network entity **2602** may include means for outputting, based on the common handover procedure request, a common handover procedure request acknowledgment for the plurality of wireless devices. The network entity **2602** may include means for outputting, for a user plane (UP) of a second CU associated with the target DU and based on the common handover procedure request, a third common request associated with a bearer context setup for the plurality of wireless devices. The network entity **2602** may include means for obtaining, from the UP of the second CU, a third common response associated with the bearer context setup, wherein the first common request is output based on the third common response. The network entity **2602** may include means for obtaining a common sequence number (SN) status transfer message indicating that a second CP of a third CU will stop assigning SNs. The network entity **2602** may include means for obtaining, for a handover procedure for the plurality of wireless devices from the source DU to a target DU, a common context modification request relating to modifying a context of the plurality of wireless devices. The network entity **2602** may include means for outputting, based on the common context modification request, a first common data delivery status indication for the plurality of wireless devices. The network entity **2602** may include means for outputting, for each of the plurality of wireless devices, one of the plurality of individual RRC reconfiguration messages corresponding to the wireless device. The network entity **2602** may include means for outputting, based on the common context modi-

fication request, a common context modification response for the plurality of wireless devices. The network entity **2602** may include means for obtaining, for a handover procedure for the plurality of wireless devices from a source DU to a target DU, a common context setup request relating to modifying a context of the plurality of wireless devices. The network entity **2602** may include means for outputting, based on the common context setup request, a common context setup response for the plurality of wireless devices. The network entity **2602** may include means for outputting, based on the common context setup request, a first common data delivery status indication for the plurality of wireless devices. The network entity **2602** may include means for receiving, from the plurality of wireless devices, at least a first message of a random access procedure for each of the plurality of wireless devices, wherein outputting the first common data delivery status indication is further based on the first message of the random access procedure for each of the plurality of wireless devices. The network entity **2602** may include means for obtaining, from a source DU associated with a handover procedure for the plurality of wireless devices, a first common data delivery status indication relating to the plurality of wireless devices. The network entity **2602** may include means for refraining, based on the first common data delivery status indication, from routing data for the plurality of wireless devices to the source DU. The network entity **2602** may include means for obtaining, from a target DU associated with the handover procedure for the plurality of wireless devices, a common data delivery status indication relating to the plurality of wireless devices. The network entity **2602** may include means for routing, based on the common data delivery status indication, data to the target DU. The network entity **2602** may include means for outputting, for a target distributed unit (DU) associated with a joint handover procedure for the plurality of wireless devices, a first request relating to a first context of a first wireless device in the plurality of wireless devices, wherein the first request comprises a first identifier of at least a second wireless device in the plurality of wireless devices associated with the joint handover procedure. The network entity **2602** may include means for outputting, for the target DU, a second request relating to a second context of the second wireless device in the plurality of wireless devices, wherein the second request comprises a second identifier of at least the first wireless device. The network entity **2602** may include means for obtaining, from a second CP of a second CU associated with the joint handover procedure for the plurality of wireless devices, a first handover request for the first wireless device in the plurality of wireless devices, wherein the first request comprises the first identifier of at least the second wireless device in the plurality of wireless devices. The network entity **2602** may include means for obtaining, from the second CP of the second CU, a second handover request for the second wireless device in the plurality of wireless devices, wherein the second request comprises the second identifier of at least the first wireless device. The network entity **2602** may include means for outputting, for the second CP of the second CU, a first handover request acknowledgment for the first wireless device in the plurality of wireless devices, wherein the first handover request acknowledgment comprises the first identifier of at least the second wireless device in the plurality of wireless devices. The network entity **2602** may include means for outputting, from the second CP of the second CU, a second handover request acknowledgment for the second wireless device in the plurality of wireless devices, wherein the second handover request acknowledgment comprises the second identifier of at least the first wireless device. The network entity **2602** may include means for performing, based on the first handover request and the second handover request, a call admission control for the first wireless device and the second wireless device. The network entity **2602** may include means for outputting, based on the first handover request and the second handover request, a first bearer context setup request for the first wireless device, wherein the first bearer context setup request comprises the first identifier of at least the second wireless device in the plurality of wireless devices. The network entity **2602** may include means for outputting, based on the first handover request and the second handover request, a second bearer context setup request for the second wireless device, wherein the second bearer context setup request comprises the second identifier of at least the first wireless device. The network entity **2602** may include means for obtaining, based on the first bearer context setup request, a first bearer context setup response for the first wireless device, wherein the first bearer context setup response comprises the first identifier of at least the second wireless device in the plurality of wireless devices. The network entity **2602** may include means for obtaining, based on the second bearer context setup request, a second bearer context setup response for the second wireless device, wherein the second bearer context setup request comprises the second identifier of at least the first wireless device. The network entity **2602** may include means for obtaining, from the target DU, a first context setup response relating to the first context of the first wireless device in the plurality of wireless devices, wherein the first context setup response comprises the first identifier of at least the second wireless device in the plurality of wireless devices associated with the joint handover procedure. The network entity **2602** may include means for obtaining, from the target DU, a second context setup response relating to the second context of the second wireless device in the plurality of wireless devices, wherein the second context setup response comprises the second identifier of at least the first wireless device in the plurality of wireless devices associated with the joint handover procedure. The network entity **2602** may include means for obtaining a first indication of a completion of a radio resource control (RRC) reconfiguration for the first wireless device. The network entity **2602** may include means for outputting, based on the first indication, a first path switch request for the first wireless device, wherein the first path switch request comprises the first identifier of at least the second wireless device in the plurality of wireless devices. The network entity **2602** may include means for obtaining a second indication of an additional completion of an additional RRC reconfiguration for the second wireless device. The network entity **2602** may include means for outputting, based on the second indication, a second path switch request for the second wireless device, wherein the second path switch request comprises the second identifier of at least the first wireless device in the plurality of wireless devices. The network entity **2602** may include means for obtaining, in association with a handover procedure for the plurality of wireless devices, a first context modification request for a first wireless device in the plurality of wireless devices, wherein the first context modification request comprises a first identifier for at least a second

wireless device in the plurality of wireless devices. The network entity **2602** may include means for obtaining, in association with the handover procedure for the plurality of wireless devices, a second context modification request for the second wireless device, wherein the second context modification request comprises a second identifier for at least the first wireless device in the plurality of wireless devices. The network entity **2602** may include means for outputting, based on obtaining the first context modification request and the second context modification request, the first individual RRC reconfiguration message for the first wireless device and the second individual RRC reconfiguration message for the second wireless device. The network entity **2602** may include means for outputting, based on the first context modification request, a first context modification response for the first wireless device, wherein the first context modification response comprises the first identifier for at least the second wireless device in the plurality of wireless devices. The network entity **2602** may include means for outputting, based on the second context modification request, a second context modification response for the second wireless device, wherein the second context modification response comprises the second identifier for at least the first wireless device in the plurality of wireless devices. The network entity **2602** may include means for outputting, based on the first context modification request, a first data delivery status indication for the first wireless device, wherein the first data delivery status indication comprises the first identifier for at least the second wireless device in the plurality of wireless devices. The network entity **2602** may include means for outputting, based on the second context modification request, a second data delivery status indication for the second wireless device, wherein the second data delivery status indication comprises the second identifier for at least the first wireless device in the plurality of wireless devices. The network entity **2602** may include means for obtaining, in association with a handover procedure for the plurality of wireless devices, a first context setup request for a first wireless device in the plurality of wireless devices, wherein the first context setup request comprises a first identifier for at least a second wireless device in the plurality of wireless devices. The network entity **2602** may include means for obtaining, in association with the handover procedure for the plurality of wireless devices, a second context setup request for the second wireless device, wherein the second context setup request comprises a second identifier for at least the first wireless device in the plurality of wireless devices. The network entity **2602** may include means for checking, based on obtaining the first context setup request and the second context setup request, for resources for the first wireless device and the second wireless device. The network entity **2602** may include means for outputting, based on the first context setup request and the checking for the resources, a first context setup response for the first wireless device in the plurality of wireless devices, wherein the first context setup response comprises the first identifier for at least the second wireless device in the plurality of wireless devices. The network entity **2602** may include means for outputting, based on the second context setup request and the checking for the resources, a second context setup response for the second wireless device in the plurality of wireless devices, wherein the second context setup response comprises the second identifier for at least the first wireless device in the plurality of wireless devices. The network entity **2602** may include means for performing, based on the first context setup request and the second context setup request, a random access procedure for the plurality of wireless devices. The network entity **2602** may include means for outputting, based on the random access procedure for the first wireless device, a first data delivery status indication for the first wireless device, wherein the first data delivery status indication comprises the first identifier for at least the second wireless device in the plurality of wireless devices. The network entity **2602** may include means for outputting, based on the random access procedure for the second wireless device, a second data delivery status indication for the second wireless device, wherein the second data delivery status indication comprises the second identifier for at least the first wireless device in the plurality of wireless devices. The network entity **2602** may include means for obtaining, from a source DU associated with a handover procedure for the plurality of wireless devices, a first data delivery status indication, wherein the first data delivery status indication comprises a first identifier for at least a second wireless device in the plurality of wireless devices. The network entity **2602** may include means for refraining, based on the first data delivery status indication, from routing data for the plurality of wireless devices to the source DU. The network entity **2602** may include means for obtaining, from a target DU associated with the handover procedure for the plurality of wireless devices, a last data delivery status indication in a plurality of data delivery status indications for the plurality of wireless devices, wherein each data delivery status indication is for a different wireless device in the plurality of wireless devices and comprises at least one identifier for at least one other wireless device in the plurality of wireless devices. The network entity **2602** may include means for routing, based on the last data delivery status indication, data for the plurality of wireless devices to the target DU. The network entity **2602** may further include means for performing any of the aspects described in connection with the flowcharts in FIGS. **12-25**, and/or performed by the DU, CU, or AMF elements in the communication flow of FIGS. **6**, **7**, **8**, **9**, **10**A, **10**B, **11**A, and **11**B. The means may be the joint handover component **199** of the network entity **2602** configured to perform the functions recited by the means. As described supra, the network entity **2602** may include the TX processor **316**, the RX processor **370**, and the controller/processor **375**. As such, in one configuration, the means may be the TX processor **316**, the RX processor **370**, and/or the controller/processor **375** configured to perform the functions recited by the means or as described in relation to FIGS. **6**, **7**, **8**, **9**, **10**A, **10**B, **11**A, **11**B, and **12-25**.

[0328] FIG. **27** is a diagram **2700** illustrating an example of a hardware implementation for a network entity **2760**. In one example, the network entity **2760** may be within the core network **120**. The network entity **2760** may include at least one network processor **2712**. The network processor(s) **2712** may include on-chip memory **2712'**. In some aspects, the network entity **2760** may further include additional memory modules **2714**. The network entity **2760** communicates via the network interface **2780** directly (e.g., backhaul link) or indirectly (e.g., through a RIC) with the CU **2702**. The on-chip memory **2712'** and the additional memory modules **2714** may each be considered a computer-readable medium/memory. Each computer-readable medium/memory may be non-transitory. The network processor(s)

2712 is responsible for general processing, including the execution of software stored on the computer-readable medium/memory. The software, when executed by the corresponding processor(s) causes the processor(s) to perform the various functions described supra. The computer-readable medium/memory may also be used for storing data that is manipulated by the processor(s) when executing software.

[0329] As discussed supra, the joint handover component **199** may be configured to obtain, from a CP of a CU associated with a target DU associated with the plurality of wireless devices, a common request associated with a path switch for the plurality of wireless devices, switch, based on the common request, a path for the plurality of wireless devices, and output, for the CP of the CU, a common response acknowledging the path switch for the plurality of wireless devices. In some aspects the joint handover component **199** may be configured to obtain, from a CP of a CU associated with a target DU associated with the plurality of wireless devices, a first path switch request for a first wireless device, wherein the first path switch request comprises a first identifier for at least a second wireless device in the plurality of wireless devices, obtain, from the CP of the CU, a second path switch request for the second wireless device, wherein the second path switch request comprises a second identifier for at least the first wireless device in the plurality of wireless devices, and switch, based on the first and second path switch requests, a path for the plurality of wireless devices. The joint handover component **199** may be within the network processor(s) **2712**. The joint handover component **199** may be one or more hardware components specifically configured to carry out the stated processes/algorithm, implemented by one or more processors configured to perform the stated processes/algorithm, stored within a computer-readable medium for implementation by one or more processors, or some combination thereof. When multiple processors are implemented, the multiple processors may perform the stated processes/algorithm individually or in combination. The network entity **2760** may include a variety of components configured for various functions. In one configuration, the network entity **2760** may include means for obtaining, from a control plane (CP) of a centralized unit (CU) associated with a target distributed unit (DU) associated with the plurality of wireless devices, a common request associated with a path switch for the plurality of wireless devices. The network entity **2760** may include means for switching, based on the common request, a path for the plurality of wireless devices. The network entity **2760** may include means for outputting, for the CP of the CU, a common response acknowledging the path switch for the plurality of wireless devices. The network entity **2760** may include means for obtaining, from a control plane (CP) of a centralized unit (CU) associated with a target distributed unit (DU) associated with the plurality of wireless devices, a first path switch request for a first wireless device, wherein the first path switch request comprises a first identifier for at least a second wireless device in the plurality of wireless devices. The network entity **2760** may include means for obtaining, from the CP of the CU, a second path switch request for the second wireless device, wherein the second path switch request comprises a second identifier for at least the first wireless device in the plurality of wireless devices. The network entity **2760** may include means for switching, based on the first and second path switch requests, a path for the plurality of wireless devices. The network entity **2760** may further include means for performing any of the aspects described in connection with the flowcharts in FIGS. **16** and **23**, and/or performed by the AMF elements in the communication flow of FIGS. **6**, **7**, **8**, **9**, **10**A, **10**B, **11**A, and **11**B. The means may be the joint handover component **199** of the network entity **2760** configured to perform the functions recited by the means or as described in relation to FIGS. **6**, **7**, **8**, **9**, **10**A, **10**B, **11**A, **11**B, **16** and **23**.

[0330] Particular aspects of the subject matter described in this disclosure can be implemented to realize one or more of the following potential advantages. In some examples, by introducing network signaling for UEs that are grouped together for serving a common service, the described techniques can be used to provide movement and/or transfer between cells for multiple UEs associated with a multimodal service without interruption.

[0331] It is understood that the specific order or hierarchy of blocks in the processes/flowcharts disclosed is an illustration of example approaches. Based upon design preferences, it is understood that the specific order or hierarchy of blocks in the processes/flowcharts may be rearranged. Further, some blocks may be combined or omitted. The accompanying method claims present elements of the various blocks in a sample order, and are not limited to the specific order or hierarchy presented.

[0332] The previous description is provided to enable any person skilled in the art to practice the various aspects described herein. Various modifications to these aspects will be readily apparent to those skilled in the art, and the generic principles defined herein may be applied to other aspects. Thus, the claims are not limited to the aspects described herein, but are to be accorded the full scope consistent with the language claims. Reference to an element in the singular does not mean "one and only one" unless specifically so stated, but rather "one or more." Terms such as "if," "when," and "while" do not imply an immediate temporal relationship or reaction. That is, these phrases, e.g., "when," do not imply an immediate action in response to or during the occurrence of an action, but simply imply that if a condition is met then an action will occur, but without requiring a specific or immediate time constraint for the action to occur. The word "exemplary" is used herein to mean "serving as an example, instance, or illustration." Any aspect described herein as "exemplary" is not necessarily to be construed as preferred or advantageous over other aspects. Unless specifically stated otherwise, the term "some" refers to one or more. Combinations such as "at least one of A, B, or C," "one or more of A, B, or C," "at least one of A, B, and C," "one or more of A, B, and C," and "A, B, C, or any combination thereof" include any combination of A, B, and/or C, and may include multiples of A, multiples of B, or multiples of C. Specifically, combinations such as "at least one of A, B, or C," "one or more of A, B, or C," "at least one of A, B, and C," "one or more of A, B, and C," and "A, B, C, or any combination thereof" may be A only, B only, C only, A and B, A and C, B and C, or A and B and C, where any such combinations may contain one or more member or members of A, B, or C. Sets should be interpreted as a set of elements where the elements number one or more. Accordingly, for a set of X, X would include one or more elements. When at least one processor is configured to perform a set of functions, the at least one processor, individually or in any combination, is configured to perform

the set of functions. Accordingly, each processor of the at least one processor may be configured to perform a particular subset of the set of functions, where the subset is the full set, a proper subset of the set, or an empty subset of the set. A processor may be referred to as processor circuitry. A memory/memory module may be referred to as memory circuitry. If a first apparatus receives data from or transmits data to a second apparatus, the data may be received/transmitted directly between the first and second apparatuses, or indirectly between the first and second apparatuses through a set of apparatuses. A device configured to "output" data, such as a transmission, signal, or message, may transmit the data, for example with a transceiver, or may send the data to a device that transmits the data. A device configured to "obtain" data, such as a transmission, signal, or message, may receive, for example with a transceiver, or may obtain the data from a device that receives the data. Information stored in a memory includes instructions and/or data. All structural and functional equivalents to the elements of the various aspects described throughout this disclosure that are known or later come to be known to those of ordinary skill in the art are expressly incorporated herein by reference and are encompassed by the claims. Moreover, nothing disclosed herein is dedicated to the public regardless of whether such disclosure is explicitly recited in the claims. The words "module," "mechanism," "element," "device," and the like may not be a substitute for the word "means." As such, no claim element is to be construed as a means plus function unless the element is expressly recited using the phrase "means for."

[0333] As used herein, the phrase "based on" shall not be construed as a reference to a closed set of information, one or more conditions, one or more factors, or the like. In other words, the phrase "based on A" (where "A" may be information, a condition, a factor, or the like) shall be construed as "based at least on A" unless specifically recited differently.

[0334] The following aspects are illustrative only and may be combined with other aspects or teachings described herein, without limitation.

[0335] Aspect 1 is a method of wireless communication at a CP of a CU associated with a plurality of wireless devices associated with a multi-modal service, comprising: outputting, for a target distributed unit (DU) associated with a handover procedure for the plurality of wireless devices, a first common request relating to a context of the plurality of wireless devices; and obtaining, from the target DU and based on the first common request, a first common response relating to the context of the plurality of wireless devices.

[0336] Aspect 2 is the method of aspect 1, further comprising: outputting, for a source DU associated with the handover procedure for the plurality of wireless devices, a second common request to modify the context of the plurality of wireless devices based on the first common response; and obtaining, from the source DU and based on the second common request, a second common response relating to the context of the plurality of wireless devices.

[0337] Aspect 3 is the method of aspect 2, wherein the second common request comprises a plurality of radio resource control (RRC) reconfiguration messages for the plurality of wireless devices, wherein the plurality of RRC reconfiguration messages comprises an RRC reconfiguration message for each of the plurality of wireless devices.

[0338] Aspect 4 is the method of any of aspects 1 to 3, wherein the first common request relating to the context of the plurality of wireless devices comprises one or more of a multi-modal service identifier (ID) associated with the multi-modal service, an ID of each of the plurality of wireless devices, and an indication of characteristics of flows associated with the plurality of wireless devices.

[0339] Aspect 5 is the method of any of aspects 1 to 4, further comprising: obtaining a plurality of individual indications that a radio resource control (RRC) reconfiguration has completed for each wireless device in the plurality of wireless devices; outputting, based on the plurality of individual indications, a common path switch request to an access and mobility management function (AMF) for the plurality of wireless devices; obtaining a common path switch request acknowledgment for the plurality of wireless devices; and releasing, based on at least one of the plurality of individual indications and the common path switch request acknowledgment, contexts associated with the plurality of wireless devices at a source DU.

[0340] Aspect 6 is the method of any of aspects 1 to 5, further comprising: obtaining a measurement report triggering the handover procedure for the plurality of wireless devices, wherein outputting the first common request is based on the measurement report.

[0341] Aspect 7 is the method of aspect 6, wherein the CP of the CU is a first CP of a first CU associated with both a source DU and the target DU further comprising: outputting, for a user plane (UP) of a second CU associated with the target DU and based on the measurement report, a third common request associated with a bearer context setup for the plurality of wireless devices; obtaining, from the UP of the second CU, a third common response associated with the bearer context setup, wherein the first common request is output based on the third common response;

[0342] Aspect 8 is the method of aspect any of aspects 1, wherein the CP of the CU is a first CP of a first CU associated with the target DU, the method further comprising: obtaining a common handover procedure request for the plurality of wireless devices; and outputting, based on the common handover procedure request, a common handover procedure request acknowledgment for the plurality of wireless devices.

[0343] Aspect 9 is the method of aspect 8, further comprising: outputting, for a user plane (UP) of a second CU associated with the target DU and based on the common handover procedure request, a third common request associated with a bearer context setup for the plurality of wireless devices; and obtaining, from the UP of the second CU, a third common response associated with the bearer context setup, wherein the first common request is output based on the third common response.

[0344] Aspect 10 is the method of any of aspects 1 to 7, further comprising: obtaining a common sequence number (SN) status transfer message indicating that a second CP of a third CU will stop assigning SNs.

[0345] Aspect 11 is a method of wireless communication at a source distributed unit (DU) serving a plurality of wireless devices associated with a multi-modal service, comprising: obtaining, for a handover procedure for the plurality of wireless devices from the source DU to a target DU, a common context modification request relating to modifying a context of the plurality of wireless devices; and outputting, based on the common context modification

request, a first common data delivery status indication for the plurality of wireless devices.

[0346] Aspect 12 is the method of aspect 11, wherein the common context modification request comprises a plurality of individual radio resource control (RRC) reconfiguration messages for the plurality of wireless devices, wherein the plurality of individual RRC reconfiguration messages comprises an individual RRC reconfiguration message for each of the plurality of wireless devices.

[0347] Aspect 13 is the method of aspect 12, further comprising: outputting, for each of the plurality of wireless devices, one of the plurality of individual RRC reconfiguration messages corresponding to the wireless device.

[0348] Aspect 14 is the method of any of aspects 11 to 15, wherein the common context modification request comprises one or more of a multi-modal service identifier (ID) associated with the multi-modal service, an ID of each of the plurality of wireless devices, and an indication of characteristics of flows associated with the plurality of wireless devices.

[0349] Aspect 15 is the method of aspect 14, further comprising: outputting, based on the common context modification request, a common context modification response for the plurality of wireless devices, wherein the common context modification response comprises one or more of the multi-modal service ID, the ID of each of the plurality of wireless devices, the indication of characteristics of flows associated with the plurality of wireless devices, and an indication that the common context modification response is related to the common context modification request.

[0350] Aspect 16 is a method of wireless communication at a target distributed unit (DU) serving a plurality of wireless devices associated with a multi-modal service, comprising: obtaining, for a handover procedure for the plurality of wireless devices from a source DU to a target DU, a common context setup request relating to modifying a context of the plurality of wireless devices; and outputting, based on the common context setup request, a common context setup response for the plurality of wireless devices.

[0351] Aspect 17 is the method of aspect 16, further comprising: outputting, based on the common context setup request, a first common data delivery status indication for the plurality of wireless devices.

[0352] Aspect 18 is the method of aspect 17, further comprising: receiving, from the plurality of wireless devices, at least a first message of a random access procedure for each of the plurality of wireless devices, wherein outputting the first common data delivery status indication is further based on the first message of the random access procedure for each of the plurality of wireless devices.

[0353] Aspect 19 is the method of any of aspects 16 to 18, wherein the common context setup request comprises one or more of a multi-modal service identifier (ID) associated with the multi-modal service, an ID of each of the plurality of wireless devices, and an indication of characteristics of flows associated with the plurality of wireless devices.

[0354] Aspect 20 is a method of wireless communication at a user plane (UP) of a centralized unit (CU) associated with a source distributed unit (DU) connected to a plurality of wireless devices associated with a first multi-modal service, comprising: obtaining, from a source DU associated with a handover procedure for the plurality of wireless devices, a first common data delivery status indication relating to the plurality of wireless devices; refraining, based on the first common data delivery status indication, from routing data for the plurality of wireless devices to the source DU.

[0355] Aspect 21 is a method of wireless communication at a user plane (UP) of a first centralized unit (CU) associated with a target distributed unit (DU) connected to a plurality of wireless devices associated with a first multi-modal service, comprising: obtaining, from a target DU associated with the handover procedure for the plurality of wireless devices, a common data delivery status indication relating to the plurality of wireless devices; and routing, based on the common data delivery status indication, data to the target DU.

[0356] Aspect 22 is a method of wireless communication at one of an access and mobility management function (AMF) or a user plane function (UPF) associated with a plurality of wireless devices associated with a first multi-modal service, comprising: obtaining, from a control plane (CP) of a centralized unit (CU) associated with a target distributed unit (DU) associated with the plurality of wireless devices, a common request associated with a path switch for the plurality of wireless devices; switching, based on the common request, a path for the plurality of wireless devices; and outputting, for the CP of the CU, a common response acknowledging the path switch for the plurality of wireless devices.

[0357] Aspect 23 is a method of wireless communication at a CP of a CU associated with a plurality of wireless devices associated with a first multi-modal service, comprising: outputting, for a target distributed unit (DU) associated with a joint handover procedure for the plurality of wireless devices, a first request relating to a first context of a first wireless device in the plurality of wireless devices, wherein the first request comprises a first identifier of at least a second wireless device in the plurality of wireless devices associated with the joint handover procedure; and outputting, for the target DU, a second request relating to a second context of the second wireless device in the plurality of wireless devices, wherein the second request comprises a second identifier of at least the first wireless device.

[0358] Aspect 24 is the method of aspect 23, wherein the CP of the CU is a first CP of a first CU associated with the plurality of wireless devices further comprising: obtaining, from a second CP of a second CU associated with the joint handover procedure for the plurality of wireless devices, a first handover request for the first wireless device in the plurality of wireless devices, wherein the first request comprises the first identifier of at least the second wireless device in the plurality of wireless devices; and obtaining, from the second CP of the second CU, a second handover request for the second wireless device in the plurality of wireless devices, wherein the second request comprises the second identifier of at least the first wireless device.

[0359] Aspect 25 is the method of aspect 24, further comprising: outputting, for the second CP of the second CU, a first handover request acknowledgment for the first wireless device in the plurality of wireless devices, wherein the first handover request acknowledgment comprises the first identifier of at least the second wireless device in the plurality of wireless devices; and outputting, from the second CP of the second CU, a second handover request acknowledgment for the second wireless device in the plurality of wireless devices, wherein the second handover

request acknowledgment comprises the second identifier of at least the first wireless device.

[0360] Aspect 26 is the method of aspect 24, further comprising: performing, based on the first handover request and the second handover request, a call admission control for the first wireless device and the second wireless device.

[0361] Aspect 27 is the method of aspect 24, further comprising: outputting, based on the first handover request and the second handover request, a first bearer context setup request for the first wireless device, wherein the first bearer context setup request comprises the first identifier of at least the second wireless device in the plurality of wireless devices; and outputting, based on the first handover request and the second handover request, a second bearer context setup request for the second wireless device, wherein the second bearer context setup request comprises the second identifier of at least the first wireless device.

[0362] Aspect 28 is the method of aspect 27, further comprising: obtaining, based on the first bearer context setup request, a first bearer context setup response for the first wireless device, wherein the first bearer context setup response comprises the first identifier of at least the second wireless device in the plurality of wireless devices; and obtaining, based on the second bearer context setup request, a second bearer context setup response for the second wireless device, wherein the second bearer context setup request comprises the second identifier of at least the first wireless device.

[0363] Aspect 29 is the method of any of aspects 23 to 28, further comprising: obtaining, from the target DU, a first context setup response relating to the first context of the first wireless device in the plurality of wireless devices, wherein the first context setup response comprises the first identifier of at least the second wireless device in the plurality of wireless devices associated with the joint handover procedure; and obtaining, from the target DU, a second context setup response relating to the second context of the second wireless device in the plurality of wireless devices, wherein the second context setup response comprises the second identifier of at least the first wireless device in the plurality of wireless devices associated with the joint handover procedure.

[0364] Aspect 30 is the method of any of aspects 23 to 29, further comprising: obtaining a first indication of a completion of a radio resource control (RRC) reconfiguration for the first wireless device; and outputting, based on the first indication, a first path switch request for the first wireless device, wherein the first path switch request comprises the first identifier of at least the second wireless device in the plurality of wireless devices.

[0365] Aspect 31 is the method of aspect 30, further comprising: obtaining a second indication of an additional completion of an additional RRC reconfiguration for the second wireless device; and outputting, based on the second indication, a second path switch request for the second wireless device, wherein the second path switch request comprises the second identifier of at least the first wireless device in the plurality of wireless devices.

[0366] Aspect 32 is a method of wireless communication at a source distributed unit (DU) serving a plurality of wireless devices associated with a multi-modal service, comprising: obtaining, in association with a handover procedure for the plurality of wireless devices, a first context modification request for a first wireless device in the plurality of wireless devices, wherein the first context modification request comprises a first identifier for at least a second wireless device in the plurality of wireless devices; and obtaining, in association with the handover procedure for the plurality of wireless devices, a second context modification request for the second wireless device, wherein the second context modification request comprises a second identifier for at least the first wireless device in the plurality of wireless devices.

[0367] Aspect 33 is the method of aspect 32, wherein the first context modification request further comprises one or more of a multi-modal service identifier (ID) associated with the multi-modal service, an ID of each of the plurality of wireless devices, and an indication of characteristics of flows associated with the plurality of wireless devices.

[0368] Aspect 34 is the method of any of aspects 32 and 33, wherein the first context modification request comprises a first individual radio resource control (RRC) reconfiguration message for the first wireless device, and the second context modification request comprises a second individual RRC reconfiguration message for the second wireless device.

[0369] Aspect 35 is the method of aspect 34, further comprising: outputting, based on obtaining the first context modification request and the second context modification request, the first individual RRC reconfiguration message for the first wireless device and the second individual RRC reconfiguration message for the second wireless device.

[0370] Aspect 36 is the method of any of aspects 32 to 35, further comprising: outputting, based on the first context modification request, a first context modification response for the first wireless device, wherein the first context modification response comprises the first identifier for at least the second wireless device in the plurality of wireless devices; and outputting, based on the second context modification request, a second context modification response for the second wireless device, wherein the second context modification response comprises the second identifier for at least the first wireless device in the plurality of wireless devices.

[0371] Aspect 37 is the method of any of aspects 32 to 36, further comprising: outputting, based on the first context modification request, a first data delivery status indication for the first wireless device, wherein the first data delivery status indication comprises the first identifier for at least the second wireless device in the plurality of wireless devices; and outputting, based on the second context modification request, a second data delivery status indication for the second wireless device, wherein the second data delivery status indication comprises the second identifier for at least the first wireless device in the plurality of wireless devices.

[0372] Aspect 38 is a method of wireless communication at a target distributed unit (DU) serving a plurality of wireless devices associated with a multi-modal service, comprising: obtaining, in association with a handover procedure for the plurality of wireless devices, a first context setup request for a first wireless device in the plurality of wireless devices, wherein the first context setup request comprises a first identifier for at least a second wireless device in the plurality of wireless devices; and obtaining, in association with the handover procedure for the plurality of wireless devices, a second context setup request for the second wireless device, wherein the second context setup request comprises a second identifier for at least the first wireless device in the plurality of wireless devices.

[0373] Aspect 39 is the method of aspect 38, further comprising: checking, based on obtaining the first context setup request and the second context setup request, for resources for the first wireless device and the second wireless device.

[0374] Aspect 40 is the method of aspect 39, further comprising: outputting, based on the first context setup request and the checking for the resources, a first context setup response for the first wireless device in the plurality of wireless devices, wherein the first context setup response comprises the first identifier for at least the second wireless device in the plurality of wireless devices; and outputting, based on the second context setup request and the checking for the resources, a second context setup response for the second wireless device in the plurality of wireless devices, wherein the second context setup response comprises the second identifier for at least the first wireless device in the plurality of wireless devices.

[0375] Aspect 41 is the method of any of aspects 38 to 40, wherein the first context setup request comprises one or more of a multi-modal service identifier (ID) associated with the multi-modal service, an ID of each of the plurality of wireless devices, and an indication of characteristics of flows associated with the plurality of wireless devices.

[0376] Aspect 42 is the method of any of aspects 38 to 41, further comprising: performing, based on the first context setup request and the second context setup request, a random access procedure for the plurality of wireless devices; outputting, based on the random access procedure for the first wireless device, a first data delivery status indication for the first wireless device, wherein the first data delivery status indication comprises the first identifier for at least the second wireless device in the plurality of wireless devices; and outputting, based on the random access procedure for the second wireless device, a second data delivery status indication for the second wireless device, wherein the second data delivery status indication comprises the second identifier for at least the first wireless device in the plurality of wireless devices.

[0377] Aspect 43 is a method of wireless communication at a user plane (UP) of a centralized unit (CU) associated with a source distributed unit (DU) connected to a plurality of wireless devices associated with a first multi-modal service, comprising: obtaining, from a source DU associated with a handover procedure for the plurality of wireless devices, a first data delivery status indication, wherein the first data delivery status indication comprises a first identifier for at least a second wireless device in the plurality of wireless devices; and refraining, based on the first data delivery status indication, from routing data for the plurality of wireless devices to the source DU.

[0378] Aspect 44 is a method of wireless communication at a user plane (UP) of a first centralized unit (CU) associated with a target distributed unit (DU) connected to a plurality of wireless devices associated with a first multi-modal service, comprising: obtaining, from a target DU associated with the handover procedure for the plurality of wireless devices, a last data delivery status indication in a plurality of data delivery status indications for the plurality of wireless devices, wherein each data delivery status indication is for a different wireless device in the plurality of wireless devices and comprises at least one identifier for at least one other wireless device in the plurality of wireless devices; and routing, based on the last data delivery status indication, data for the plurality of wireless devices to the target DU.

[0379] Aspect 45 is a method of wireless communication at one of an access and mobility management function (AMF) or a user plane function (UPF) associated with a plurality of wireless devices associated with a first multi-modal service, comprising: obtaining, from a control plane (CP) of a centralized unit (CU) associated with a target distributed unit (DU) associated with the plurality of wireless devices, a first path switch request for a first wireless device, wherein the first path switch request comprises a first identifier for at least a second wireless device in the plurality of wireless devices; obtaining, from the CP of the CU, a second path switch request for the second wireless device, wherein the second path switch request comprises a second identifier for at least the first wireless device in the plurality of wireless devices; switching, based on the first and second path switch requests, a path for the plurality of wireless devices.

[0380] Aspect 46 is an apparatus for wireless communication at a device including a memory and at least one processor coupled to the memory and, based at least in part on information stored in the memory, the at least one processor is configured to implement any of aspects 1 to 10.

[0381] Aspect 47 is the apparatus of aspect 46, further including a transceiver or an antenna coupled to the at least one processor.

[0382] Aspect 48 is an apparatus for wireless communication at a device including means for implementing any of aspects 1 to 10.

[0383] Aspect 49 is a computer-readable medium (e.g., a non-transitory computer-readable medium) storing computer executable code, where the code when executed by a processor causes the processor to implement any of aspects 1 to 10.

[0384] Aspect 50 is an apparatus for wireless communication at a device including a memory and at least one processor coupled to the memory and, based at least in part on information stored in the memory, the at least one processor is configured to implement any of aspects 11 to 15.

[0385] Aspect 51 is the apparatus of aspect 50, further including a transceiver or an antenna coupled to the at least one processor.

[0386] Aspect 52 is an apparatus for wireless communication at a device including means for implementing any of aspects 11 to 15.

[0387] Aspect 53 is a computer-readable medium (e.g., a non-transitory computer-readable medium) storing computer executable code, where the code when executed by a processor causes the processor to implement any of aspects 11 to 15.

[0388] Aspect 54 is an apparatus for wireless communication at a device including a memory and at least one processor coupled to the memory and, based at least in part on information stored in the memory, the at least one processor is configured to implement any of aspects 16 to 19.

[0389] Aspect 55 is the apparatus of aspect 54, further including a transceiver or an antenna coupled to the at least one processor.

[0390] Aspect 56 is an apparatus for wireless communication at a device including means for implementing any of aspects 16 to 19.

[0391] Aspect 57 is a computer-readable medium (e.g., a non-transitory computer-readable medium) storing computer executable code, where the code when executed by a processor causes the processor to implement any of aspects 16 to 19.

[0392] Aspect 58 is an apparatus for wireless communication at a device including a memory and at least one processor coupled to the memory and, based at least in part on information stored in the memory, the at least one processor is configured to implement aspect 20.

[0393] Aspect 59 is the apparatus of aspect 58, further including a transceiver or an antenna coupled to the at least one processor.

[0394] Aspect 60 is an apparatus for wireless communication at a device including means for implementing aspect 20.

[0395] Aspect 61 is a computer-readable medium (e.g., a non-transitory computer-readable medium) storing computer executable code, where the code when executed by a processor causes the processor to implement aspect 20.

[0396] Aspect 62 is an apparatus for wireless communication at a device including a memory and at least one processor coupled to the memory and, based at least in part on information stored in the memory, the at least one processor is configured to implement aspect 21.

[0397] Aspect 63 is the apparatus of aspect 62, further including a transceiver or an antenna coupled to the at least one processor.

[0398] Aspect 64 is an apparatus for wireless communication at a device including means for implementing aspect 21.

[0399] Aspect 65 is a computer-readable medium (e.g., a non-transitory computer-readable medium) storing computer executable code, where the code when executed by a processor causes the processor to implement aspect 21.

[0400] Aspect 66 is an apparatus for wireless communication at a device including a memory and at least one processor coupled to the memory and, based at least in part on information stored in the memory, the at least one processor is configured to implement aspect 22.

[0401] Aspect 67 is the apparatus of aspect 66, further including a transceiver or an antenna coupled to the at least one processor.

[0402] Aspect 68 is an apparatus for wireless communication at a device including means for implementing aspect 22.

[0403] Aspect 69 is a computer-readable medium (e.g., a non-transitory computer-readable medium) storing computer executable code, where the code when executed by a processor causes the processor to implement aspect 22.

[0404] Aspect 70 is an apparatus for wireless communication at a device including a memory and at least one processor coupled to the memory and, based at least in part on information stored in the memory, the at least one processor is configured to implement any of aspects 23 to 31.

[0405] Aspect 71 is the apparatus of aspect 70, further including a transceiver or an antenna coupled to the at least one processor.

[0406] Aspect 72 is an apparatus for wireless communication at a device including means for implementing any of aspects 23 to 31.

[0407] Aspect 73 is a computer-readable medium (e.g., a non-transitory computer-readable medium) storing computer executable code, where the code when executed by a processor causes the processor to implement any of aspects 23 to 31.

[0408] Aspect 74 is an apparatus for wireless communication at a device including a memory and at least one processor coupled to the memory and, based at least in part on information stored in the memory, the at least one processor is configured to implement any of aspects 32 to 37.

[0409] Aspect 75 is the apparatus of aspect 74, further including a transceiver or an antenna coupled to the at least one processor.

[0410] Aspect 76 is an apparatus for wireless communication at a device including means for implementing any of aspects 32 to 37.

[0411] Aspect 77 is a computer-readable medium (e.g., a non-transitory computer-readable medium) storing computer executable code, where the code when executed by a processor causes the processor to implement any of aspects 32 to 37.

[0412] Aspect 78 is an apparatus for wireless communication at a device including a memory and at least one processor coupled to the memory and, based at least in part on information stored in the memory, the at least one processor is configured to implement any of aspects 38 to 42.

[0413] Aspect 79 is the apparatus of aspect 78, further including a transceiver or an antenna coupled to the at least one processor.

[0414] Aspect 80 is an apparatus for wireless communication at a device including means for implementing any of aspects 38 to 42.

[0415] Aspect 81 is a computer-readable medium (e.g., a non-transitory computer-readable medium) storing computer executable code, where the code when executed by a processor causes the processor to implement any of aspects 38 to 42.

[0416] Aspect 82 is an apparatus for wireless communication at a device including a memory and at least one processor coupled to the memory and, based at least in part on information stored in the memory, the at least one processor is configured to implement aspect 43.

[0417] Aspect 83 is the apparatus of aspect 82, further including a transceiver or an antenna coupled to the at least one processor.

[0418] Aspect 84 is an apparatus for wireless communication at a device including means for implementing aspect 43.

[0419] Aspect 85 is a computer-readable medium (e.g., a non-transitory computer-readable medium) storing computer executable code, where the code when executed by a processor causes the processor to implement aspect 43.

[0420] Aspect 86 is an apparatus for wireless communication at a device including a memory and at least one processor coupled to the memory and, based at least in part on information stored in the memory, the at least one processor is configured to implement aspect 44.

[0421] Aspect 87 is the apparatus of aspect 86, further including a transceiver or an antenna coupled to the at least one processor.

[0422] Aspect 88 is an apparatus for wireless communication at a device including means for implementing aspect 44.

[0423] Aspect 89 is a computer-readable medium (e.g., a non-transitory computer-readable medium) storing computer executable code, where the code when executed by a processor causes the processor to implement aspect 44.

[0424] Aspect 90 is an apparatus for wireless communication at a device including a memory and at least one processor coupled to the memory and, based at least in part on information stored in the memory, the at least one processor is configured to implement aspect 45.

[0425] Aspect 91 is the apparatus of aspect 90, further including a transceiver or an antenna coupled to the at least one processor.

[0426] Aspect 92 is an apparatus for wireless communication at a device including means for implementing aspect 45.

[0427] Aspect 93 is a computer-readable medium (e.g., a non-transitory computer-readable medium) storing computer executable code, where the code when executed by a processor causes the processor to implement aspect 45.

What is claimed is:

1. An apparatus for wireless communication at a CP of a CU associated with a plurality of wireless devices associated with a first multi-modal service, comprising:

at least one memory; and

at least one processor coupled to the at least one memory and, based at least in part on stored information that is stored in the at least one memory, the at least one processor, individually or in any combination, is configured to:

output, for a target distributed unit (DU) associated with a joint handover procedure for the plurality of wireless devices, a first request relating to a first context of a first wireless device in the plurality of wireless devices, wherein the first request comprises a first identifier of at least a second wireless device in the plurality of wireless devices associated with the joint handover procedure; and

output, for the target DU, a second request relating to a second context of the second wireless device in the plurality of wireless devices, wherein the second request comprises a second identifier of at least the first wireless device.

2. The apparatus of claim **1**, wherein the CP of the CU is a first CP of a first CU associated with the plurality of wireless devices, and wherein the at least one processor, individually or in any combination, is further configured to:

obtain, from a second CP of a second CU associated with the joint handover procedure for the plurality of wireless devices, a first handover request for the first wireless device in the plurality of wireless devices, wherein the first request comprises the first identifier of at least the second wireless device in the plurality of wireless devices; and

obtain, from the second CP of the second CU, a second handover request for the second wireless device in the plurality of wireless devices, wherein the second request comprises the second identifier of at least the first wireless device.

3. The apparatus of claim **2**, wherein the at least one processor, individually or in any combination, is further configured to:

output, for the second CP of the second CU, a first handover request acknowledgment for the first wireless device in the plurality of wireless devices, wherein the first handover request acknowledgment comprises the first identifier of at least the second wireless device in the plurality of wireless devices; and

output, from the second CP of the second CU, a second handover request acknowledgment for the second wireless device in the plurality of wireless devices, wherein the second handover request acknowledgment comprises the second identifier of at least the first wireless device.

4. The apparatus of claim **2**, wherein the at least one processor, individually or in any combination, is further configured to:

perform, based on the first handover request and the second handover request, a call admission control for the first wireless device and the second wireless device.

5. The apparatus of claim **2**, wherein the at least one processor, individually or in any combination, is further configured to:

output, based on the first handover request and the second handover request, a first bearer context setup request for the first wireless device, wherein the first bearer context setup request comprises the first identifier of at least the second wireless device in the plurality of wireless devices; and

output, based on the first handover request and the second handover request, a second bearer context setup request for the second wireless device, wherein the second bearer context setup request comprises the second identifier of at least the first wireless device.

6. The apparatus of claim **5**, wherein the at least one processor, individually or in any combination, is further configured to:

obtain, based on the first bearer context setup request, a first bearer context setup response for the first wireless device, wherein the first bearer context setup response comprises the first identifier of at least the second wireless device in the plurality of wireless devices; and

obtain, based on the second bearer context setup request, a second bearer context setup response for the second wireless device, wherein the second bearer context setup request comprises the second identifier of at least the first wireless device.

7. The apparatus of claim **1**, wherein the at least one processor, individually or in any combination, is further configured to:

obtain, from the target DU, a first context setup response relating to the first context of the first wireless device in the plurality of wireless devices, wherein the first context setup response comprises the first identifier of at least the second wireless device in the plurality of wireless devices associated with the joint handover procedure; and

obtain, from the target DU, a second context setup response relating to the second context of the second wireless device in the plurality of wireless devices, wherein the second context setup response comprises the second identifier of at least the first wireless device in the plurality of wireless devices associated with the joint handover procedure.

8. The apparatus of claim **1**, wherein the at least one processor, individually or in any combination, is further configured to:

obtain a first indication of a completion of a radio resource control (RRC) reconfiguration for the first wireless device; and

output, based on the first indication, a first path switch request for the first wireless device, wherein the first path switch request comprises the first identifier of at least the second wireless device in the plurality of wireless devices.

9. The apparatus of claim **8**, wherein the at least one processor, individually or in any combination, is further configured to:

obtain a second indication of an additional completion of an additional RRC reconfiguration for the second wireless device; and

output, based on the second indication, a second path switch request for the second wireless device, wherein the second path switch request comprises the second identifier of at least the first wireless device in the plurality of wireless devices.

10. An apparatus for wireless communication at a source distributed unit (DU) serving a plurality of wireless devices associated with a multi-modal service, comprising:

at least one memory; and

at least one processor coupled to the at least one memory and, based at least in part on stored information that is stored in the at least one memory, the at least one processor, individually or in any combination, is configured to:

obtain, in association with a handover procedure for the plurality of wireless devices, a first context modification request for a first wireless device in the plurality of wireless devices, wherein the first context modification request comprises a first identifier for at least a second wireless device in the plurality of wireless devices; and

obtain, in association with the handover procedure for the plurality of wireless devices, a second context modification request for the second wireless device, wherein the second context modification request comprises a second identifier for at least the first wireless device in the plurality of wireless devices.

11. The apparatus of claim **10**, wherein the first context modification request further comprises one or more of a multi-modal service identifier (ID) associated with the multi-modal service, an ID of each of the plurality of wireless devices, and an indication of characteristics of flows associated with the plurality of wireless devices.

12. The apparatus of claim **10**, wherein the first context modification request comprises a first individual radio resource control (RRC) reconfiguration message for the first wireless device, and the second context modification request comprises a second individual RRC reconfiguration message for the second wireless device.

13. The apparatus of claim **12**, wherein the at least one processor, individually or in any combination, is further configured to:

output, based on obtaining the first context modification request and the second context modification request, the first individual RRC reconfiguration message for the first wireless device and the second individual RRC reconfiguration message for the second wireless device.

14. The apparatus of claim **10**, wherein the at least one processor, individually or in any combination, is further configured to:

output, based on the first context modification request, a first context modification response for the first wireless device, wherein the first context modification response comprises the first identifier for at least the second wireless device in the plurality of wireless devices; and

output, based on the second context modification request, a second context modification response for the second wireless device, wherein the second context modification response comprises the second identifier for at least the first wireless device in the plurality of wireless devices.

15. The apparatus of claim **10**, wherein the at least one processor, individually or in any combination, is further configured to:

output, based on the first context modification request, a first data delivery status indication for the first wireless device, wherein the first data delivery status indication comprises the first identifier for at least the second wireless device in the plurality of wireless devices; and

output, based on the second context modification request, a second data delivery status indication for the second wireless device, wherein the second data delivery status indication comprises the second identifier for at least the first wireless device in the plurality of wireless devices.

16. An apparatus for wireless communication at a target distributed unit (DU) serving a plurality of wireless devices associated with a multi-modal service, comprising:

at least one memory; and

at least one processor coupled to the at least one memory and, based at least in part on stored information that is stored in the at least one memory, the at least one processor, individually or in any combination, is configured to:

obtain, in association with a handover procedure for the plurality of wireless devices, a first context setup request for a first wireless device in the plurality of wireless devices, wherein the first context setup request comprises a first identifier for at least a second wireless device in the plurality of wireless devices; and

obtain, in association with the handover procedure for the plurality of wireless devices, a second context setup request for the second wireless device, wherein the second context setup request comprises a second identifier for at least the first wireless device in the plurality of wireless devices.

17. The apparatus of claim **16**, wherein the at least one processor, individually or in any combination, is further configured to:

check, based on obtaining the first context setup request and the second context setup request, for resources for the first wireless device and the second wireless device.

18. The apparatus of claim **17**, wherein the at least one processor, individually or in any combination, is further configured to:

output, based on the first context setup request and the check for the resources, a first context setup response for the first wireless device in the plurality of wireless devices, wherein the first context setup response comprises the first identifier for at least the second wireless device in the plurality of wireless devices; and

output, based on the second context setup request and the check for the resources, a second context setup

response for the second wireless device in the plurality of wireless devices, wherein the second context setup response comprises the second identifier for at least the first wireless device in the plurality of wireless devices.

19. The apparatus of claim **16**, wherein the first context setup request comprises one or more of a multi-modal service identifier (ID) associated with the multi-modal service, an ID of each of the plurality of wireless devices, and an indication of characteristics of flows associated with the plurality of wireless devices.

20. The apparatus of claim **16**, wherein the at least one processor, individually or in any combination, is further configured to:

perform, based on the first context setup request and the second context setup request, a random access procedure for the plurality of wireless devices;

output, based on the random access procedure for the first wireless device, a first data delivery status indication for the first wireless device, wherein the first data delivery status indication comprises the first identifier for at least the second wireless device in the plurality of wireless devices; and

output, based on the random access procedure for the second wireless device, a second data delivery status indication for the second wireless device, wherein the second data delivery status indication comprises the second identifier for at least the first wireless device in the plurality of wireless devices.

* * * * *