US 20250255615A1

(19) United States
(12) Patent Application Publication
FUJIMOTO et al.
(10) Pub. No.: US 2025/0255615 A1
(43) Pub. Date: Aug. 14, 2025

(54) **CLIP CARTRIDGE, MEDICAL DEVICE, AND ATTACHMENT METHOD FOR MEDICAL DEVICE**

(71) Applicant: **Olympus Corporation**, Tokyo (JP)

(72) Inventors: **Yasuyuki FUJIMOTO**, Hino-shi (JP); **Kensuke Uesaka**, Hino-shi (JP); **Ryu Yorita**, Tokyo (JP); **Yuta Muyari**, Hino-shi (JP)

(73) Assignee: **Olympus Corporation**, Tokyo (JP)

(21) Appl. No.: **19/193,316**

(22) Filed: **Apr. 29, 2025**

Related U.S. Application Data

(63) Continuation of application No. 17/386,207, filed on Jul. 27, 2021, now Pat. No. 12,310,597, which is a continuation of application No. PCT/JP2019/003134, filed on Jan. 30, 2019.

Publication Classification

(51) **Int. Cl.**

A61B 17/128	(2006.01)
A61B 17/00	(2006.01)
A61B 17/122	(2006.01)
A61B 90/00	(2016.01)

(52) **U.S. Cl.**
CPC ***A61B 17/128*** (2013.01); ***A61B 17/122*** (2013.01); ***A61B 90/03*** (2016.02); *A61B 2017/00477* (2013.01); *A61B 2090/034* (2016.02)

(57) **ABSTRACT**

A clip cartridge includes a clip unit having a pressing tube, an arm member and a connection portion. The connection portion can transition between a protrusion configuration and an accommodation configuration. The clip cartridge also includes a housing that can accommodate the clip unit. The housing has a stopper that restricts movement of the connection portion and a release mechanism or a groove that permits movement of the connection portion. The stopper is able to restrict movement of the clip unit by contacting the arm member or the pressing tube.

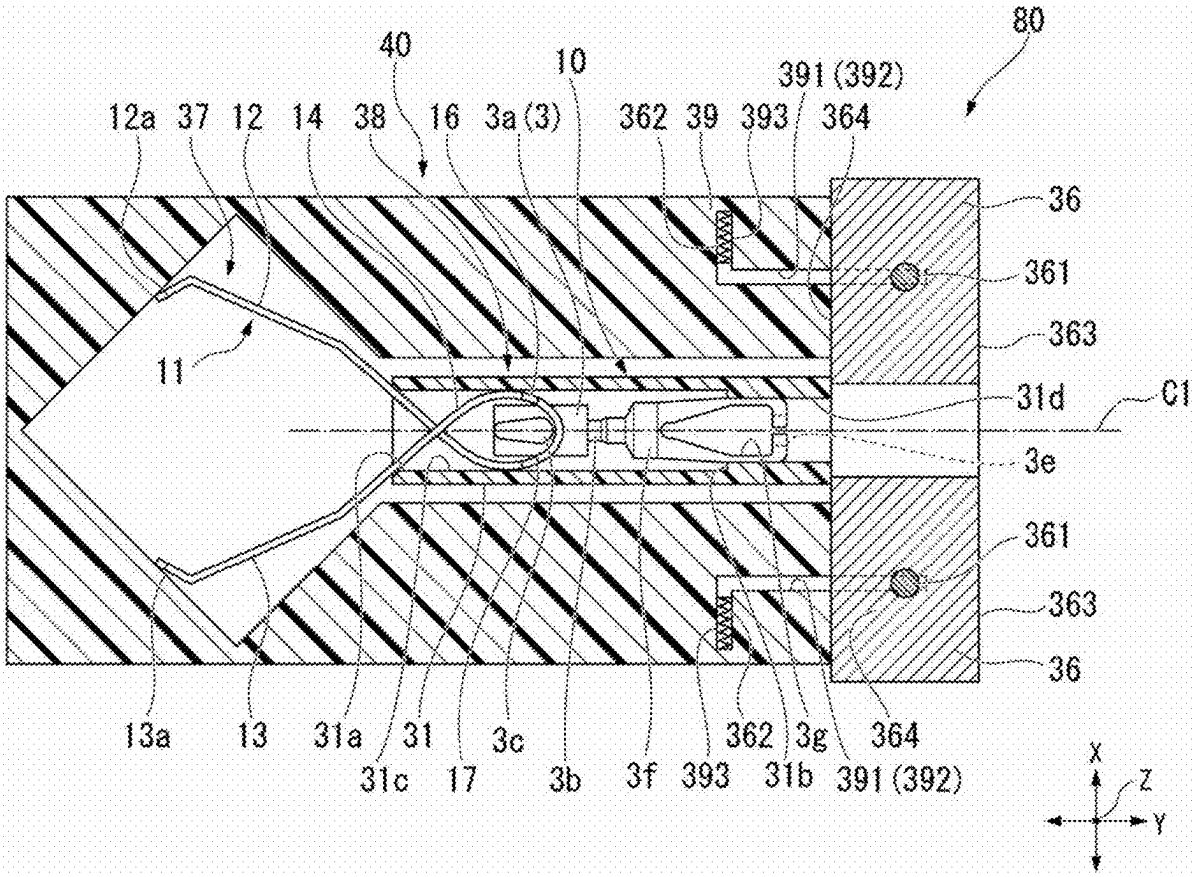

FIG. 1

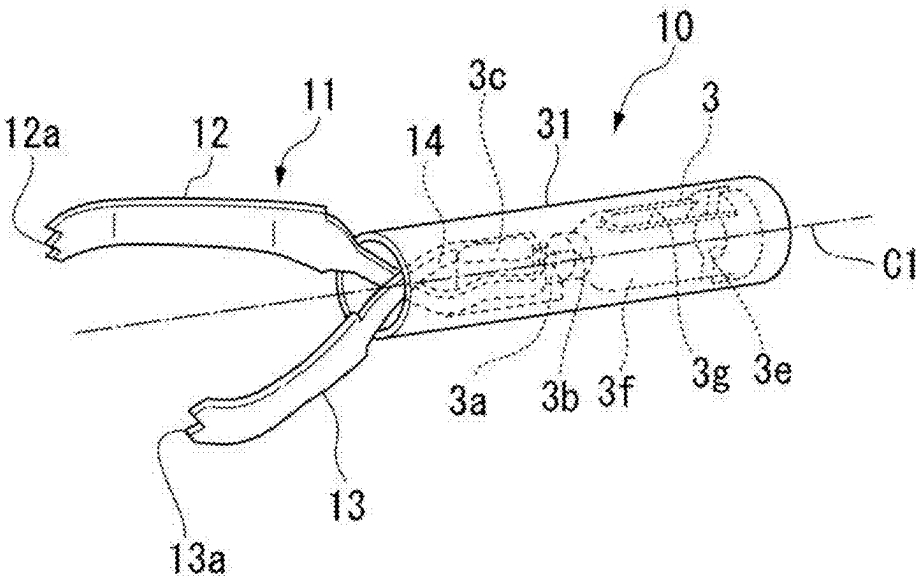
10
3c
11
3
12a
12
14
31
C1
3a
3b
3f
3g
3e
13
13a

FIG. 2

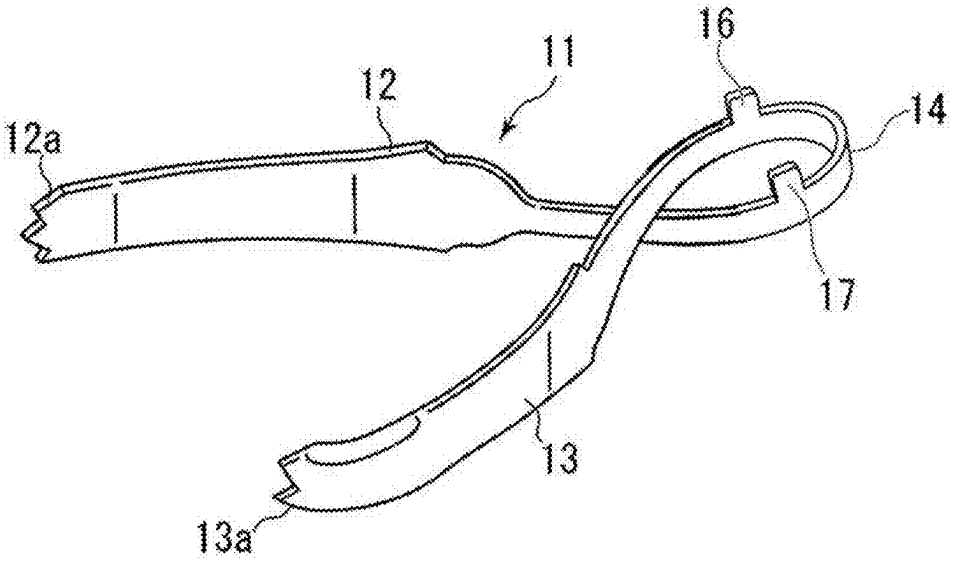
16
11
12
14
12a
17
13
13a

FIG. 3

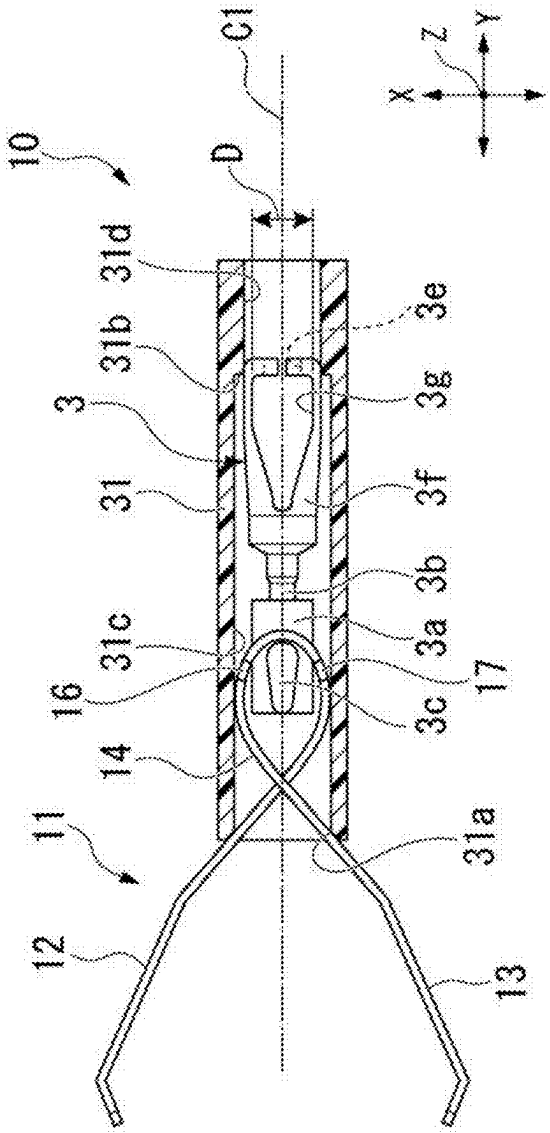

FIG. 4

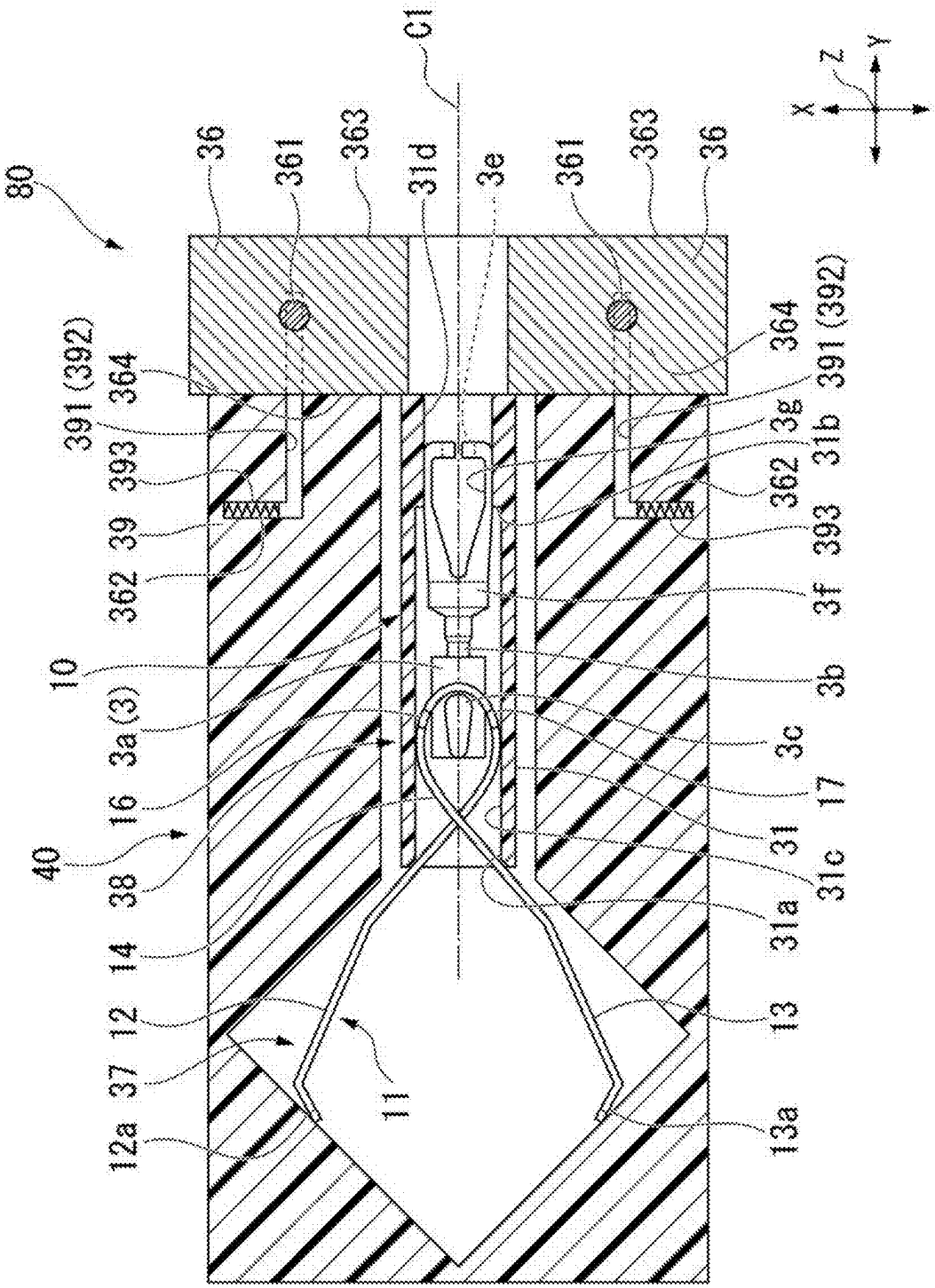
80
36
361
363
31d
C1
3e
361
363
36
X
Z
Y
391 (392)
364
391 (392)
364
393
3g
31b
39
362
393
362
3f
10
3b
3a (3)
3c
16
17
40
38
31
31c
14
31a
12
13
37
11
12a
13a

FIG. 5

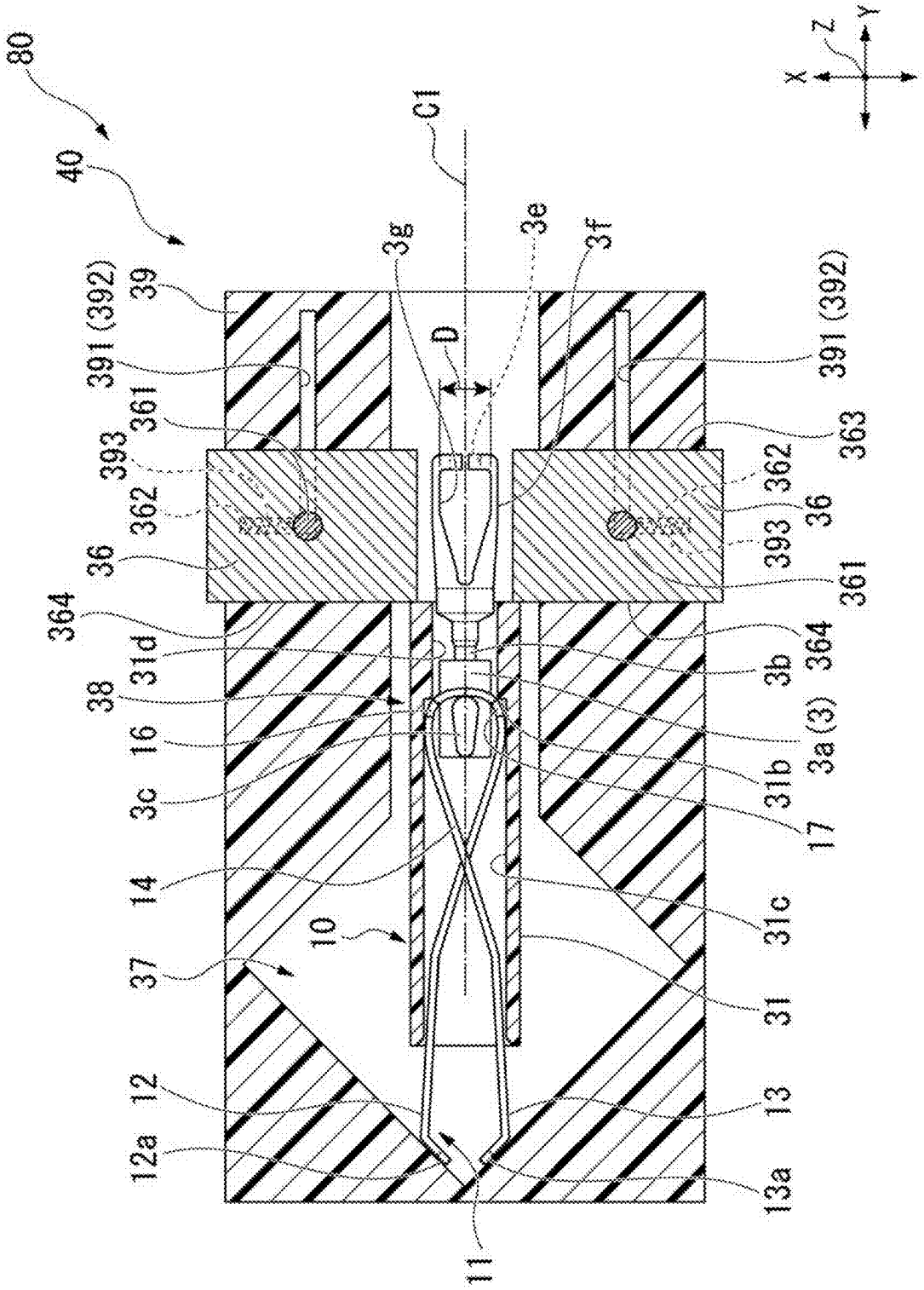
80
40
39
391 (392)
391 (392)
361
393
362
36
364
31d
38
16
3c
14
37
10
12
12a
11
13a
13
31
31c
17
31b
3a (3)
3b
364
361
36
393
362
363
3g
3e
3f
D
C1
X
Y
Z

FIG. 6

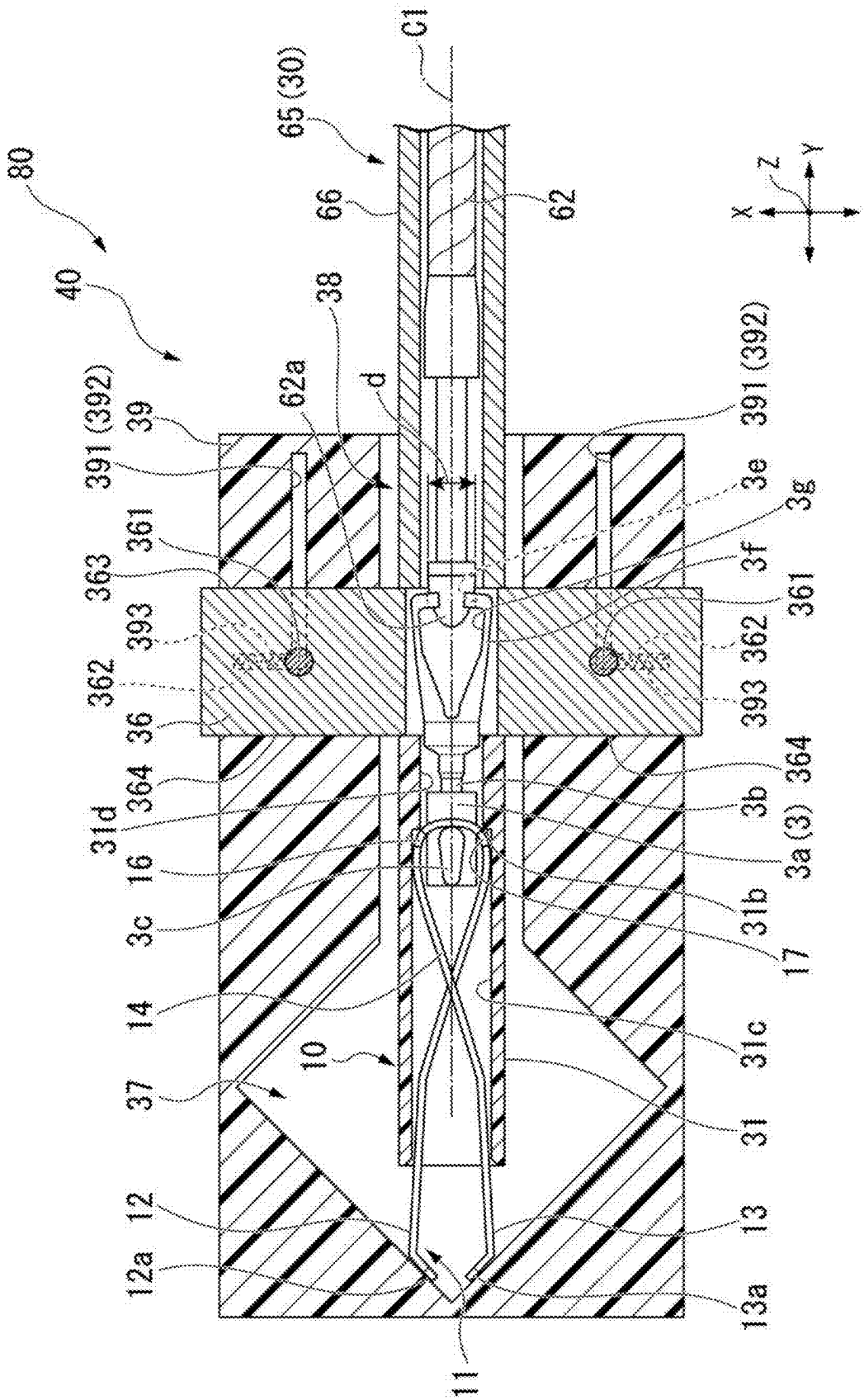
80
40
65 (30)
C1
66
62
38
62a
d
39
391 (392)
391 (392)
361
363
393
362
36
364
31d
16
3c
14
37
10
12
12a
11
13a
13
31
31c
17
31b
3a (3)
3b
364
393
362
361
3f
3g
3e
X
Y
Z

FIG. 7

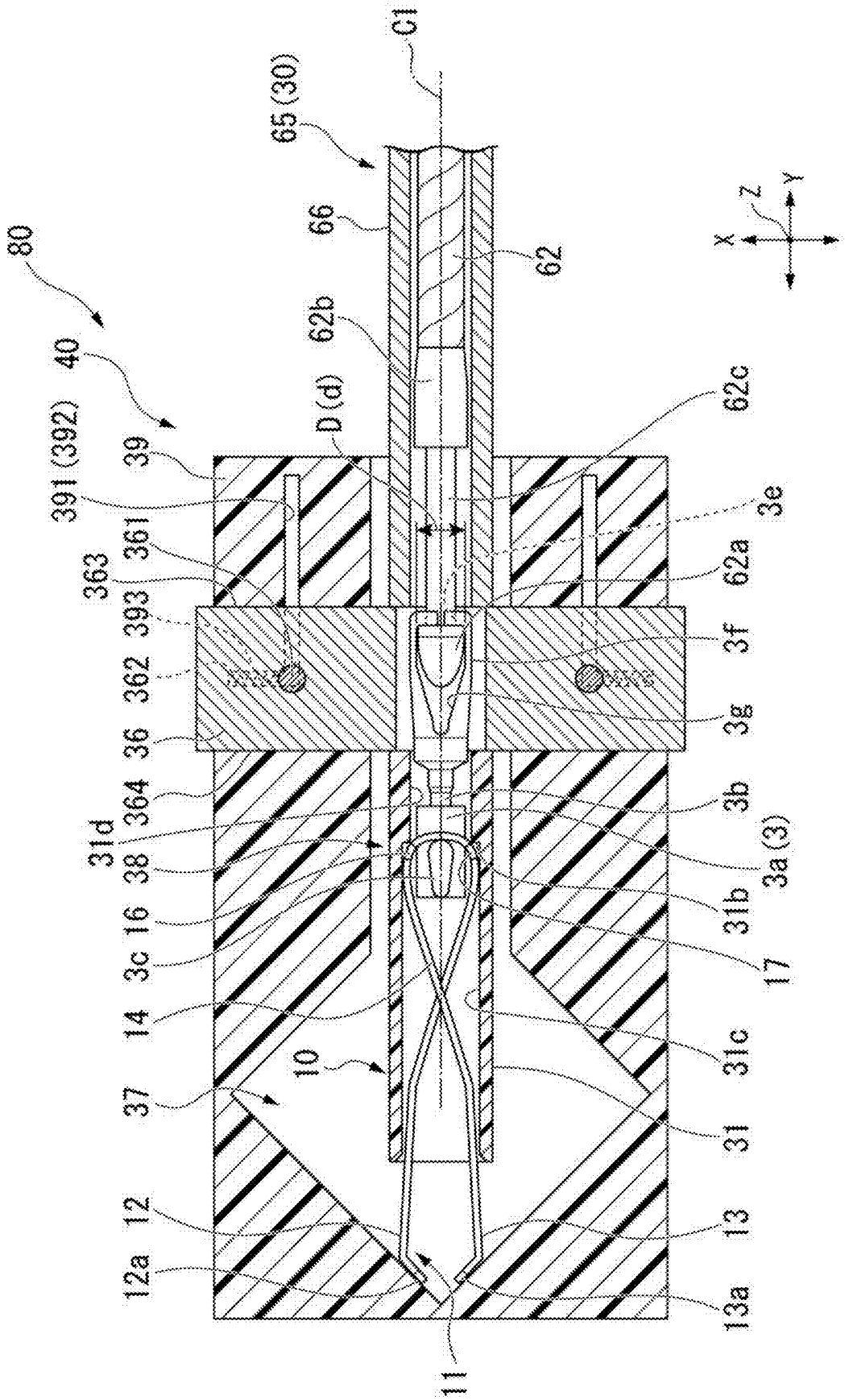
C1
65 (30)
66
62
62b
62c
62a
80
40
39
391 (392)
D (d)
3e
363
361
393
362
36
3f
3g
364
31d
38
16
3c
14
37
10
3b
3a (3)
31b
17
31c
31
12
12a
13
13a
11
X
Y
Z

FIG. 8

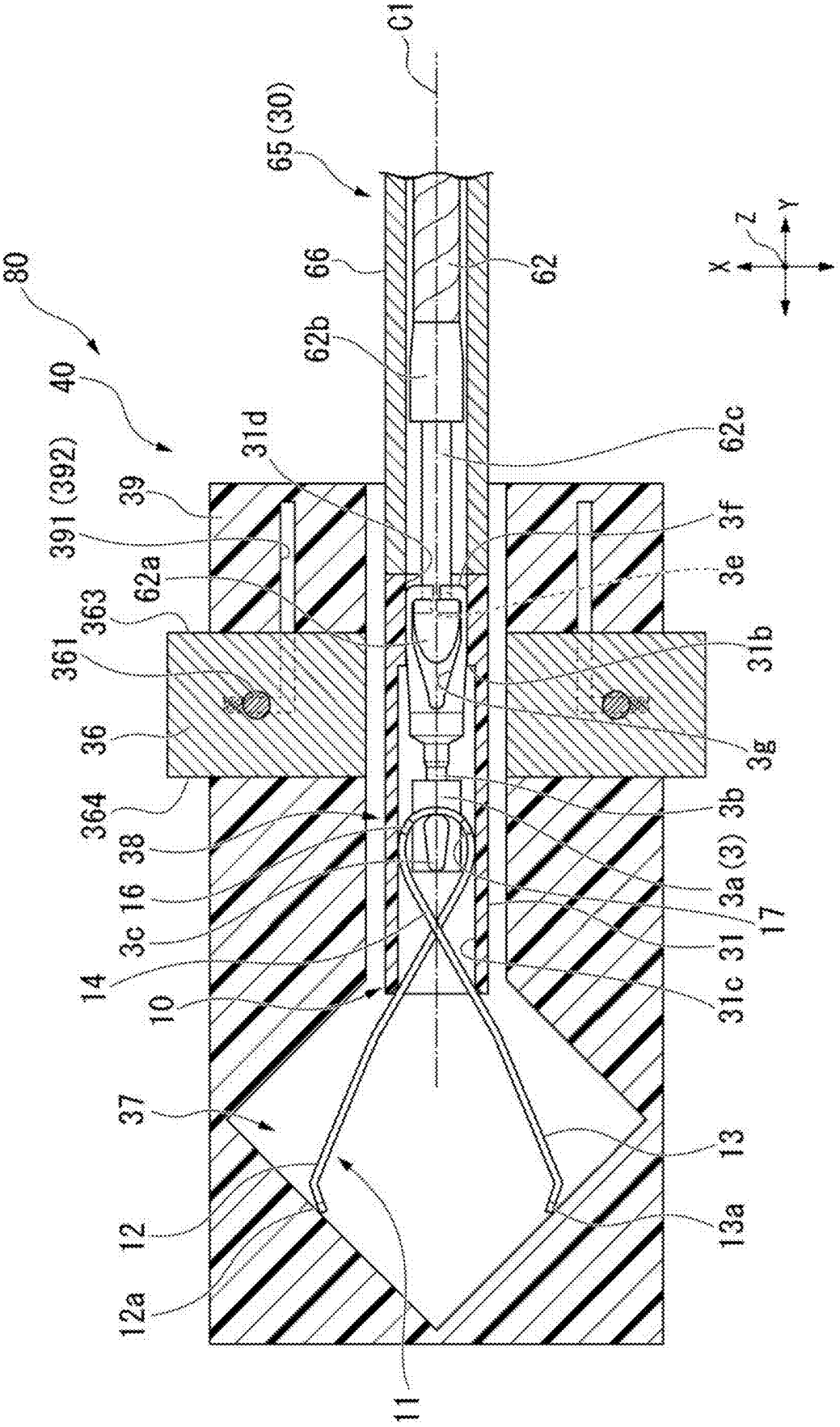
C1
65 (30)
66
62
62b
62c
80
40
31d
39
391 (392)
3f
3e
62a
363
361
31b
36
3g
364
3b
38
3a (3)
16
17
3c
31
14
31c
10
37
13
12
13a
12a
11
X
Y
Z

FIG. 9

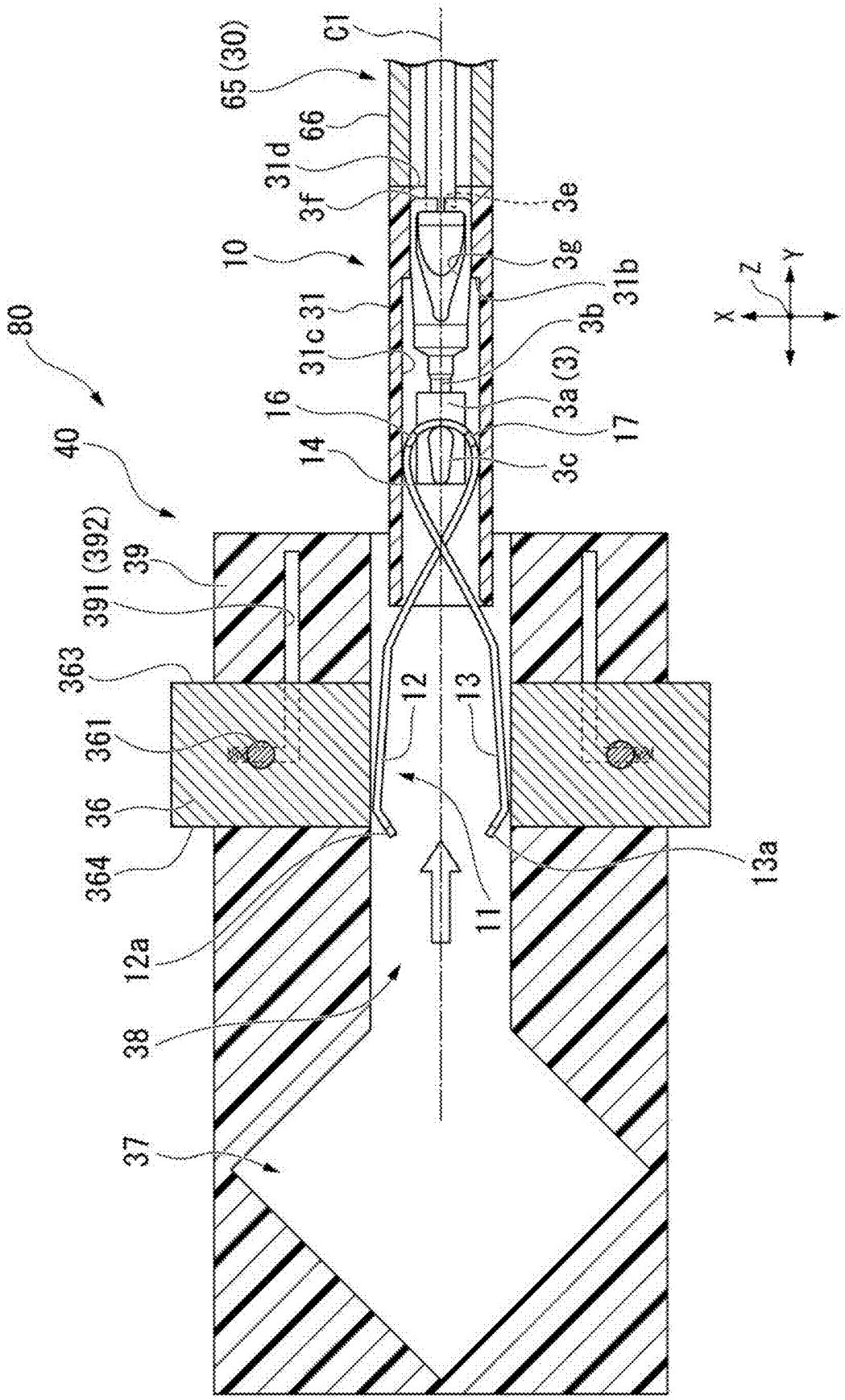
C1
65 (30)
66
31d
3f
3e
10
3g
31b
31
31c
3b
3a (3)
16
17
14
3c
80
40
391 (392)
39
363
361
36
364
12
13
11
13a
12a
38
37
X
Y
Z

FIG. 10

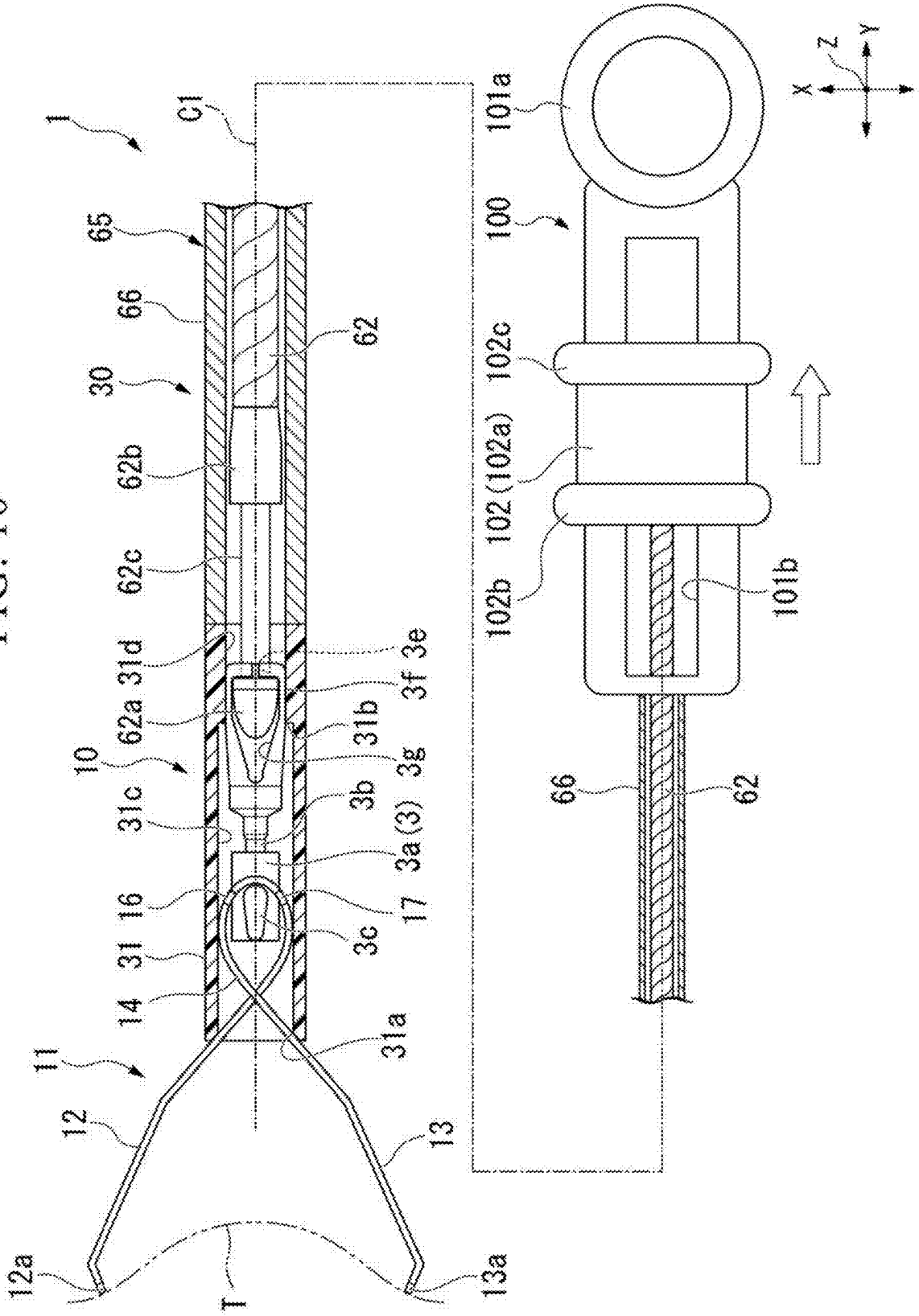
1
C1
65
66
30
62
62b
62c
31d
62a
10
31c
16
31
14
11
12
12a
T
13a
13
31a
3c
17
3a(3)
3b
3g
31b
3f
3e
101a
100
102c
102(102a)
102b
101b
66
62
X
Y
Z

FIG. 11

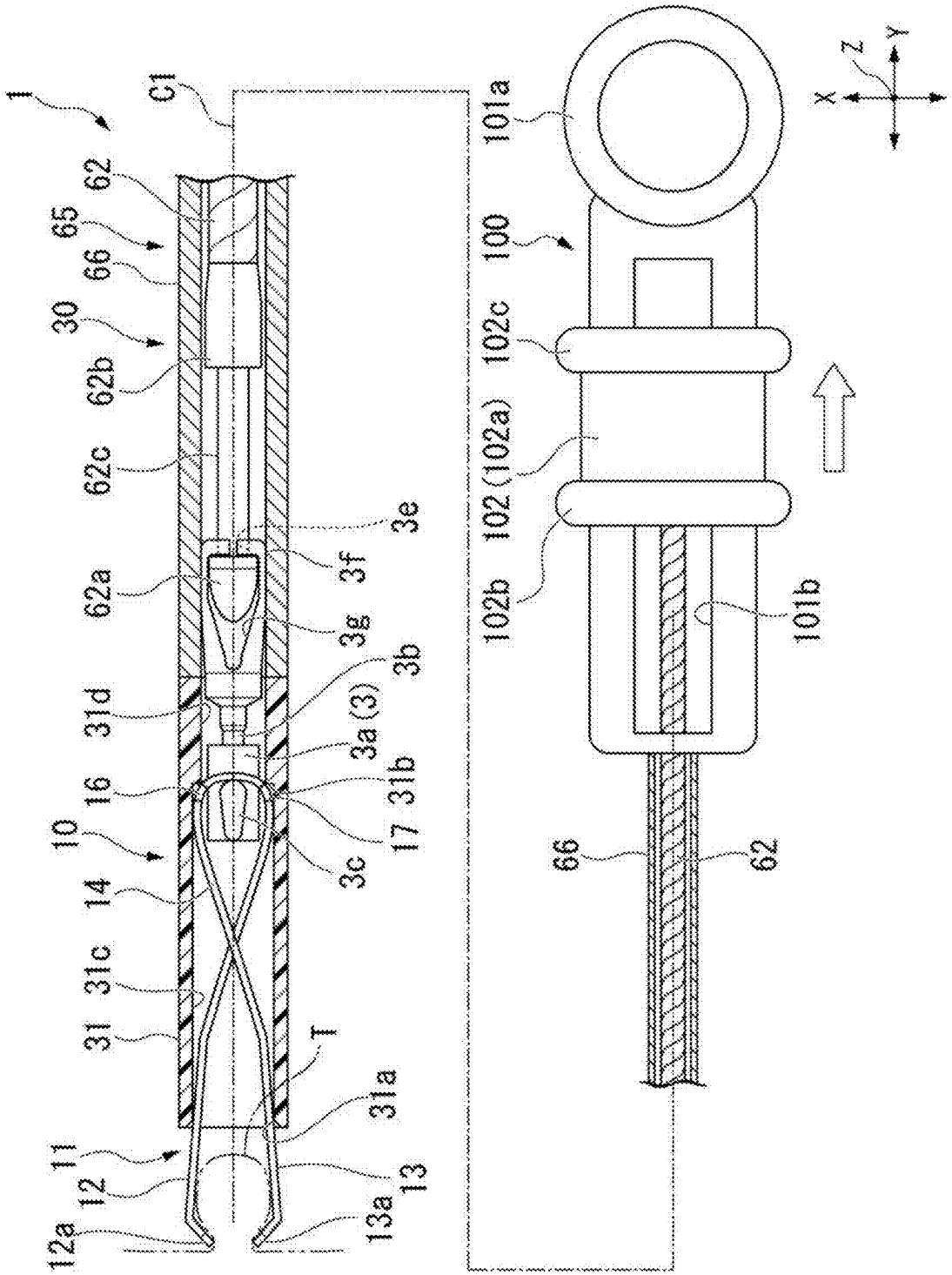
1
C1
62
65
66
30
62b
62c
62a
31d
16
10
14
31c
31
11
12
12a
T
31a
13
13a
3e
3f
3g
3b
3a (3)
31b
17
3c
101a
100
102c
102 (102a)
102b
101b
66
62
X
Y
Z

FIG. 12

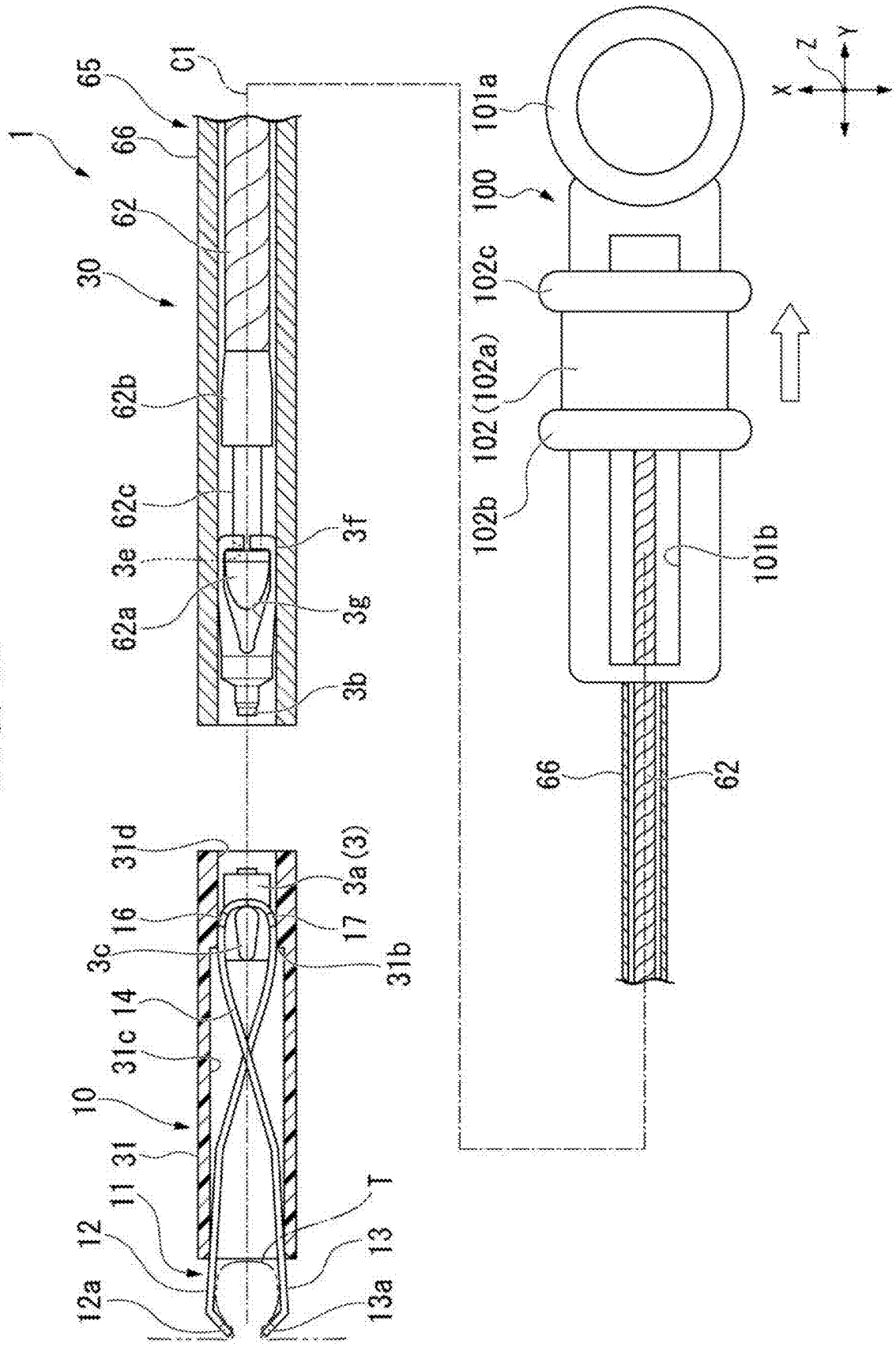
1
65
66
62
30
62b
62c
3e
62a
3f
3g
3b
C1
31d
16
3c
14
31c
10
31
11
12
12a
3a (3)
17
31b
T
13
13a
101a
100
102c
102 (102a)
102b
101b
66
62
X
Y
Z

FIG. 13

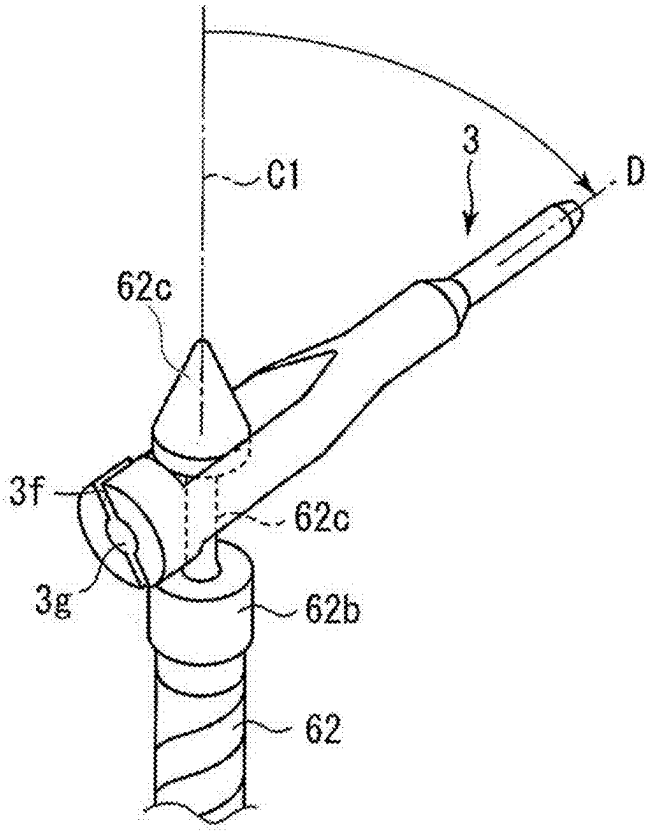

FIG. 14

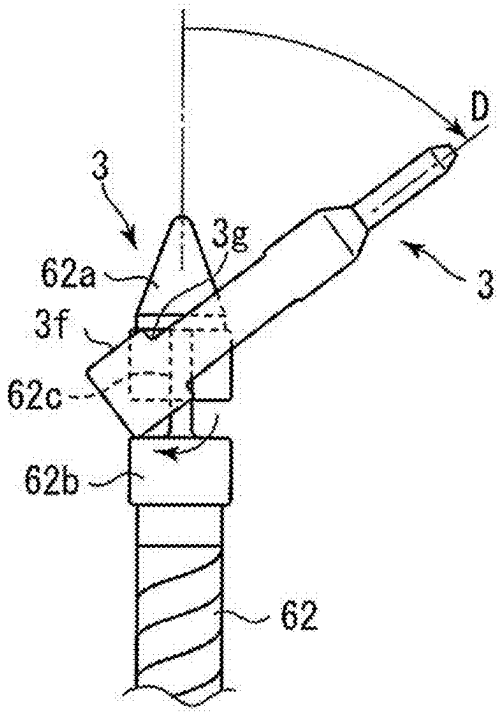

FIG. 15A

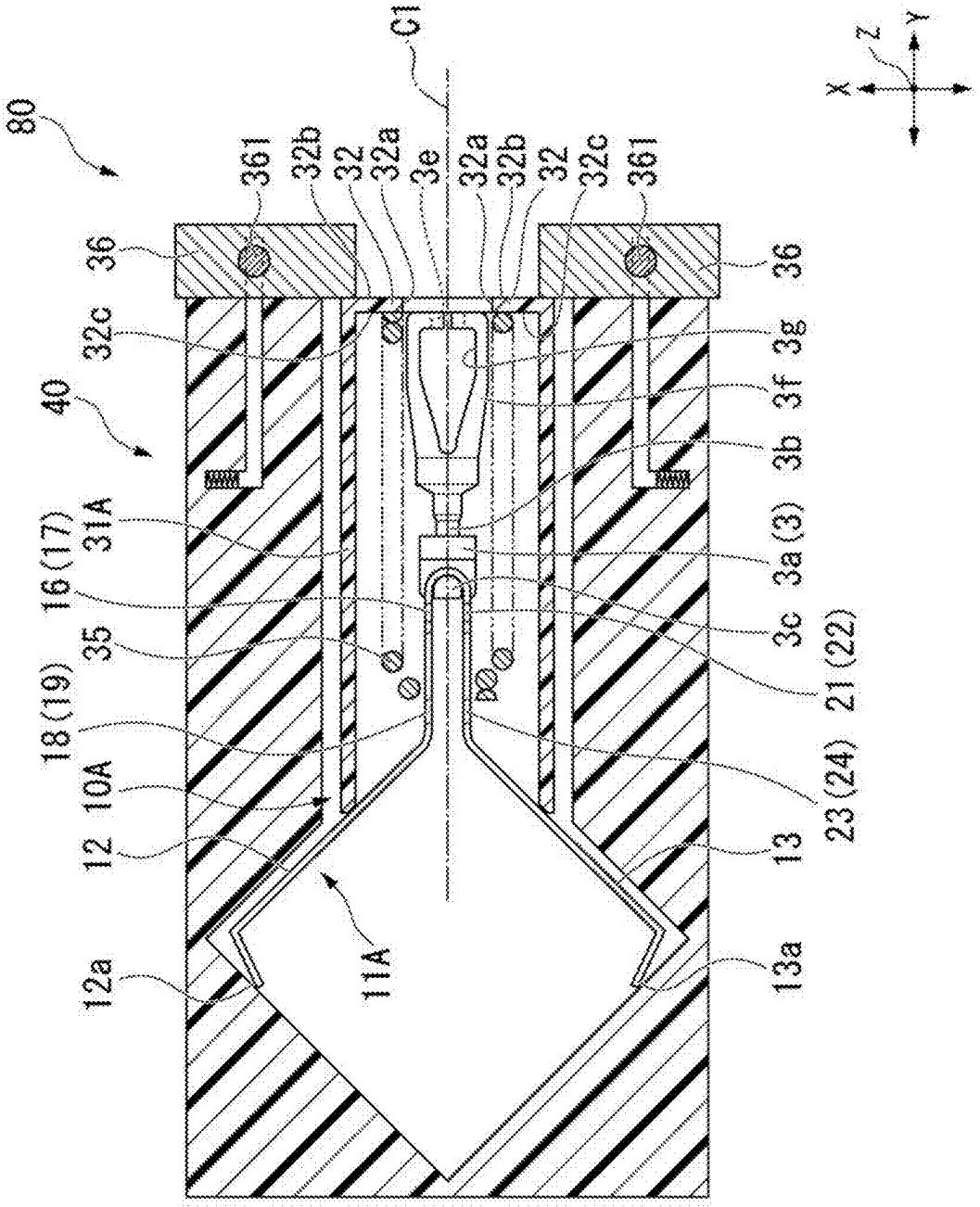
80
36
36
32c
40
16(17)
31A
35
18(19)
10A
12
12a
11A
C1
361
32b
32
32a
3e
32a
32b
32
32c
361
3g
3f
3b
3a(3)
3c
21(22)
23(24)
13
13a
X
Y
Z

FIG. 15B

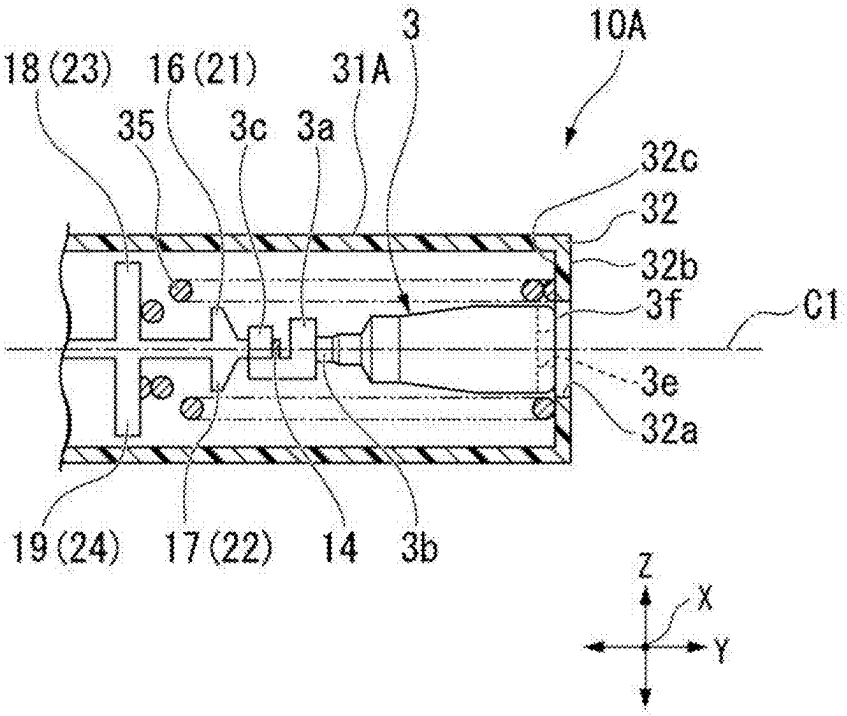

FIG. 15C

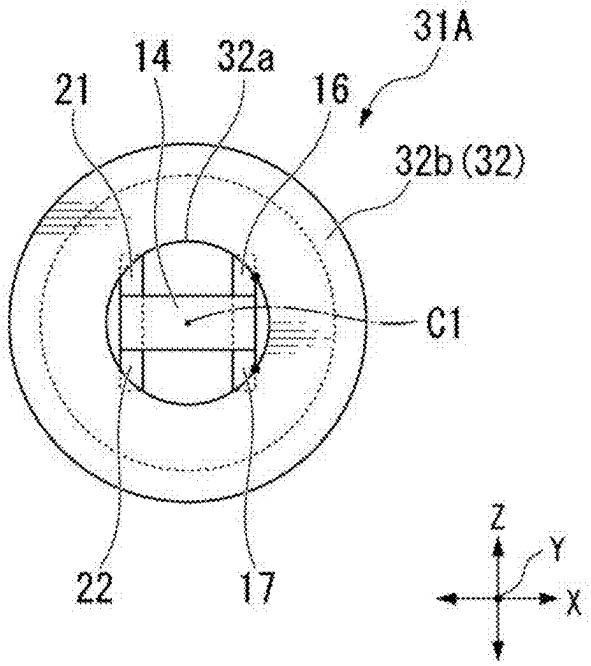

FIG. 16A

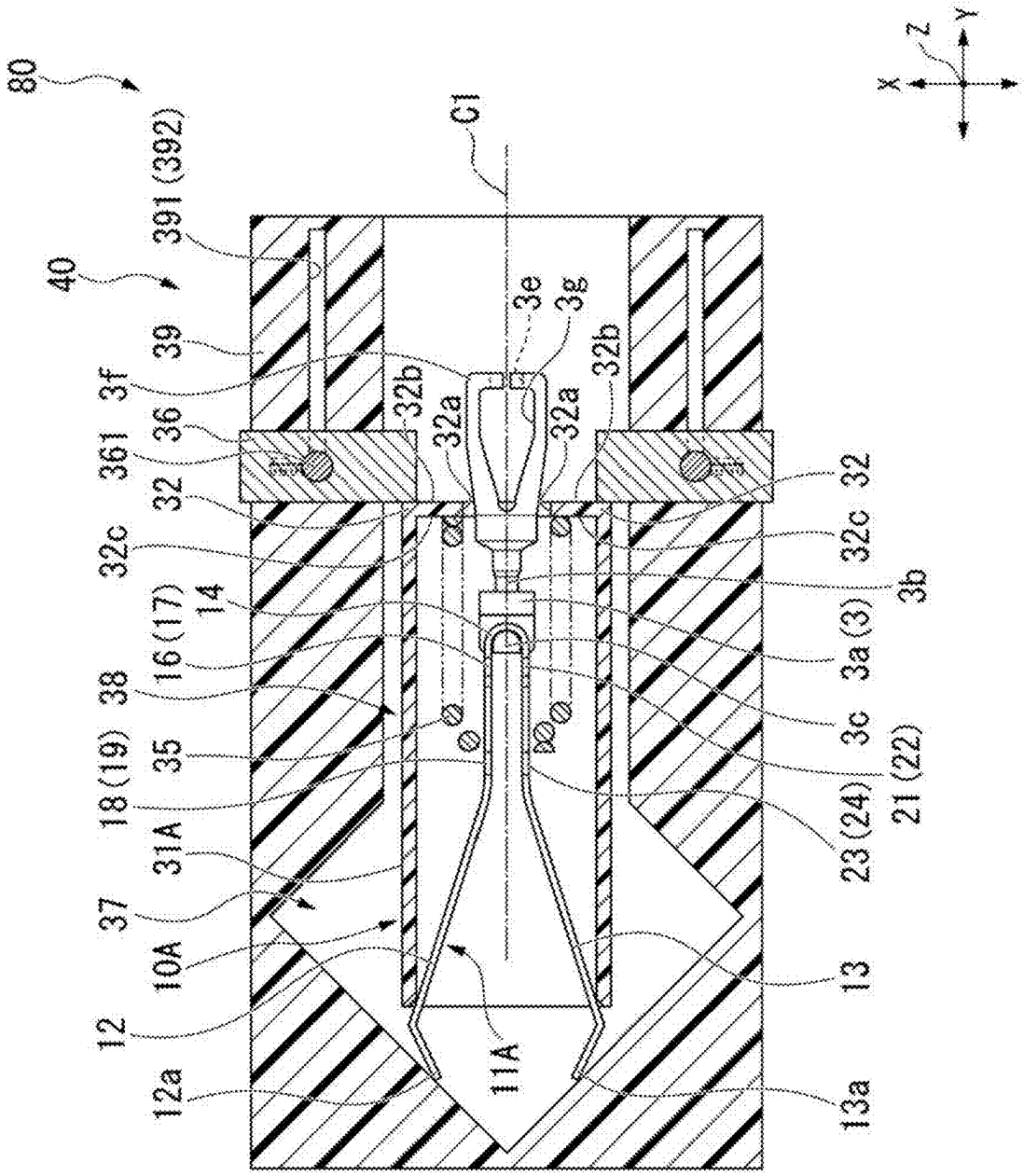
80
40
391 (392)
39
3f
361
36
32
32c
38
18 (19)
37
12
12a
10A
31A
35
16 (17)
14
32b
32a
C1
3e
3g
11A
13
13a
23 (24)
21 (22)
3c
3a (3)
3b
X
Y
Z

FIG. 16B

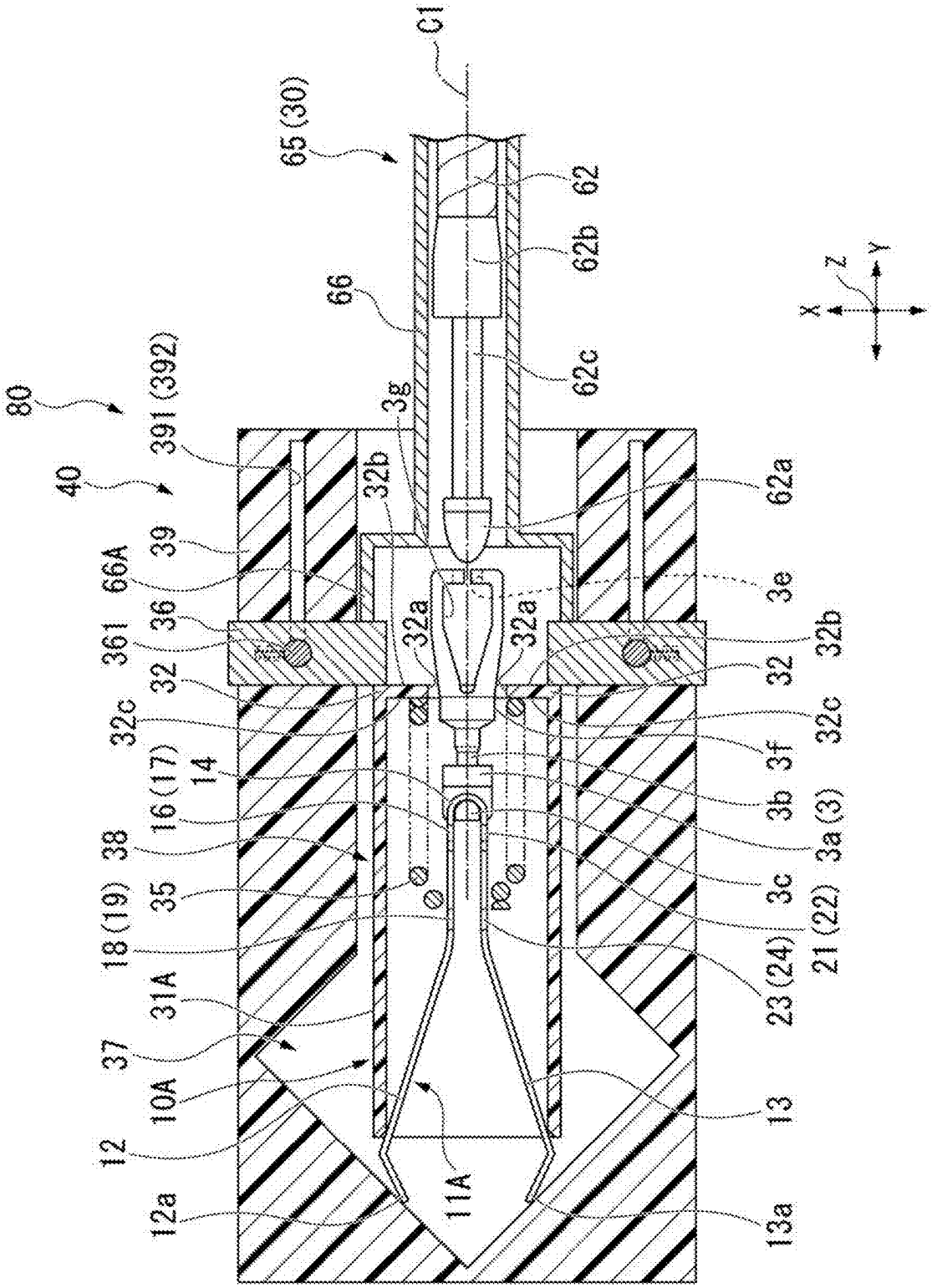
C1
65 (30)
62
62b
66
62c
80
391 (392)
40
39
66A
361
36
32
32c
14
16 (17)
38
35
18 (19)
31A
37
10A
12
12a
11A
3g
32b
32a
32a
62a
3e
32b
32
32c
3f
3b
3a (3)
3c
21 (22)
23 (24)
13
13a
X
Y
Z

FIG. 16C

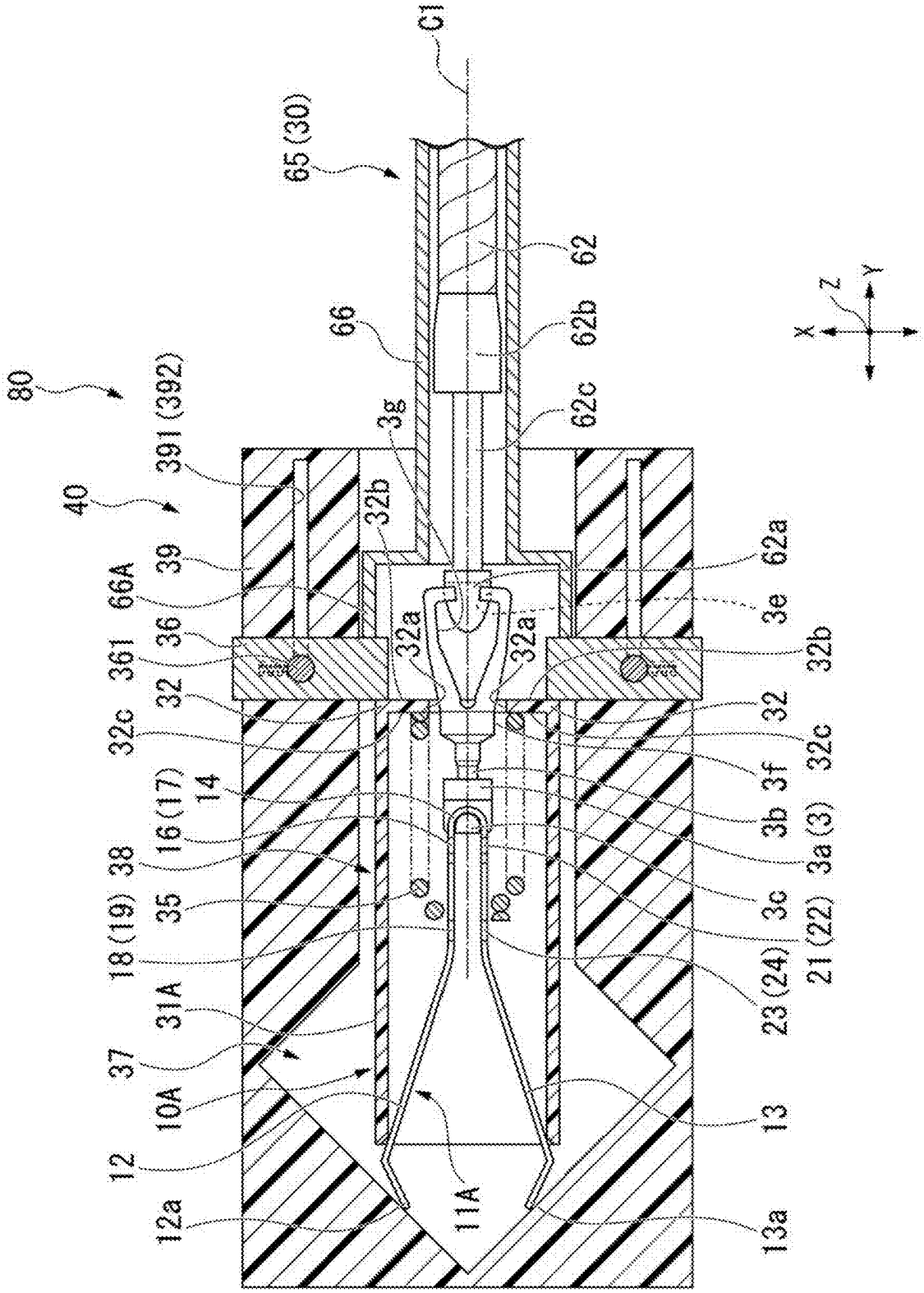
C1
65 (30)
62
62b
62c
66
3g
80
391 (392)
40
39
66A
36
361
32
32c
32b
32a
32a
62a
3e
32b
32
32c
3f
3b
3a (3)
3c
21 (22)
23 (24)
13
13a
14
16 (17)
38
35
18 (19)
31A
37
10A
12
12a
11A
X
Y
Z

FIG. 16D

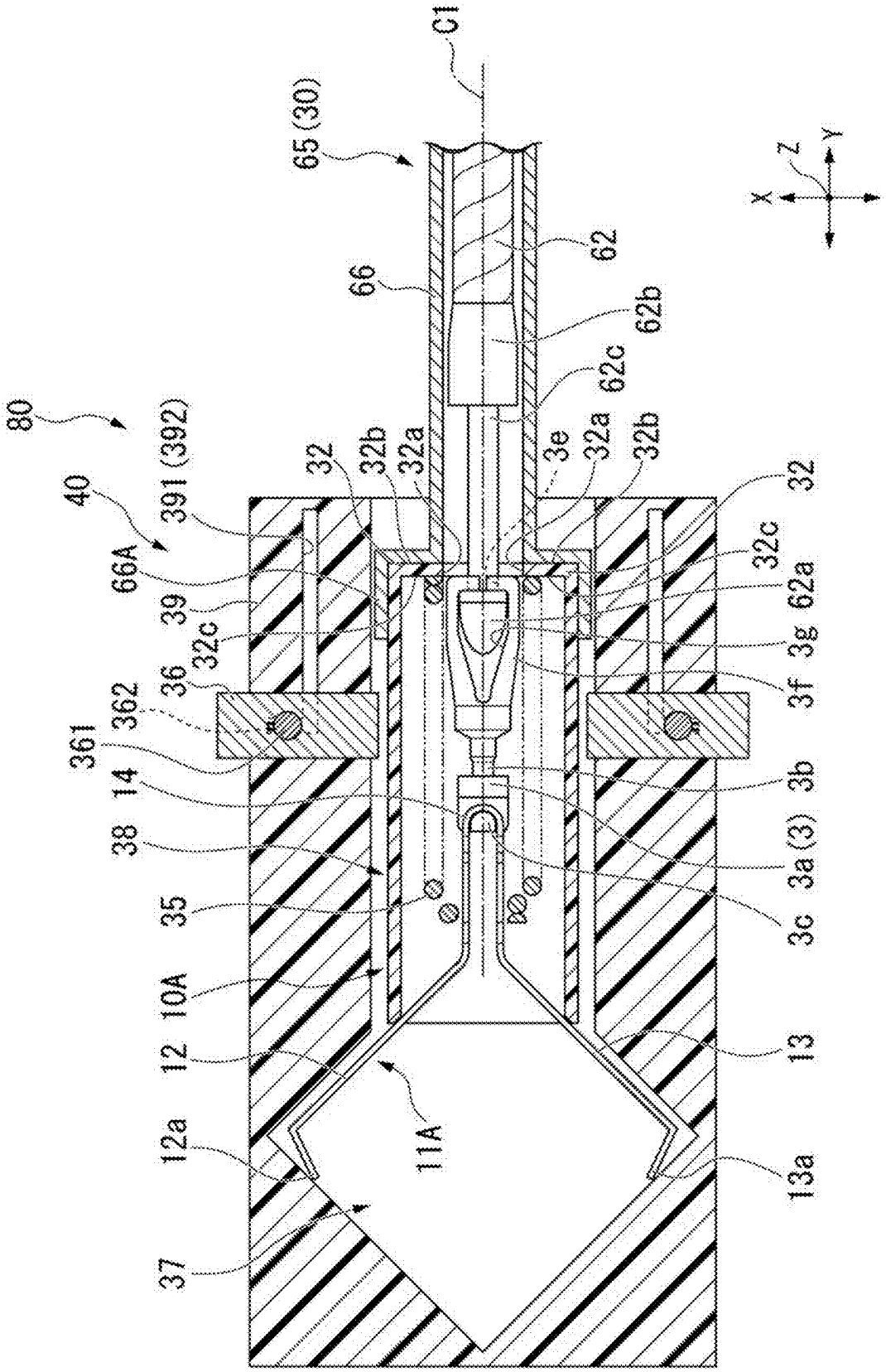
C1
65 (30)
66
62
62b
62c
80
40
391 (392)
66A
39
32c
36
362
361
14
38
35
10A
12
12a
37
11A
32
32b
32a
3e
32a
32b
32
32c
62a
3g
3f
3b
3a (3)
3c
13
13a
X
Y
Z

FIG. 16E

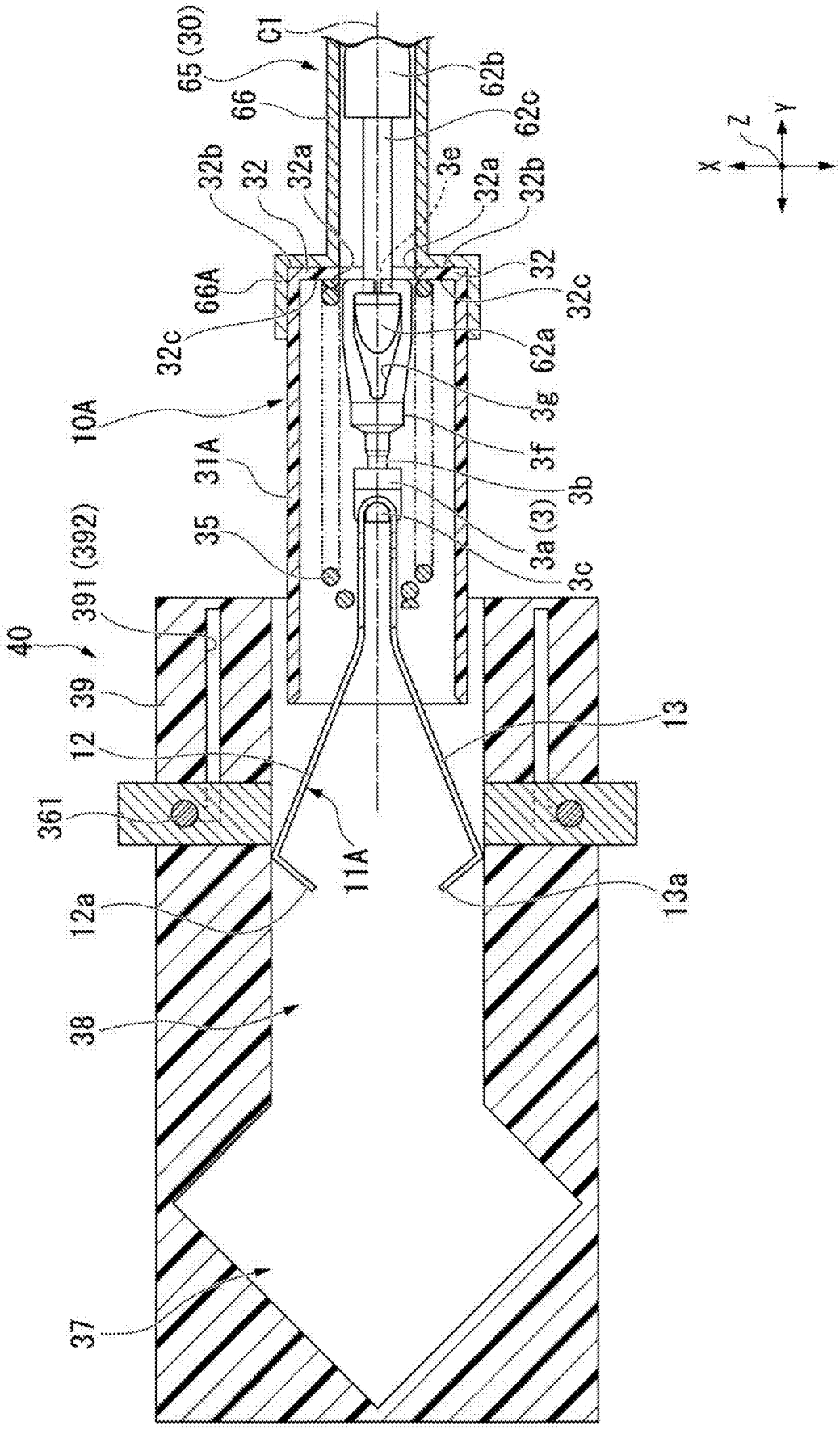
65 (30)
C1
66
62b
62c
32b
32
32a
3e
32a
32b
66A
32
32c
32c
62a
10A
3g
31A
3f
3b
35
3a (3)
3c
391 (392)
40
39
13
12
361
11A
13a
12a
38
37
X
Y
Z

FIG. 17A

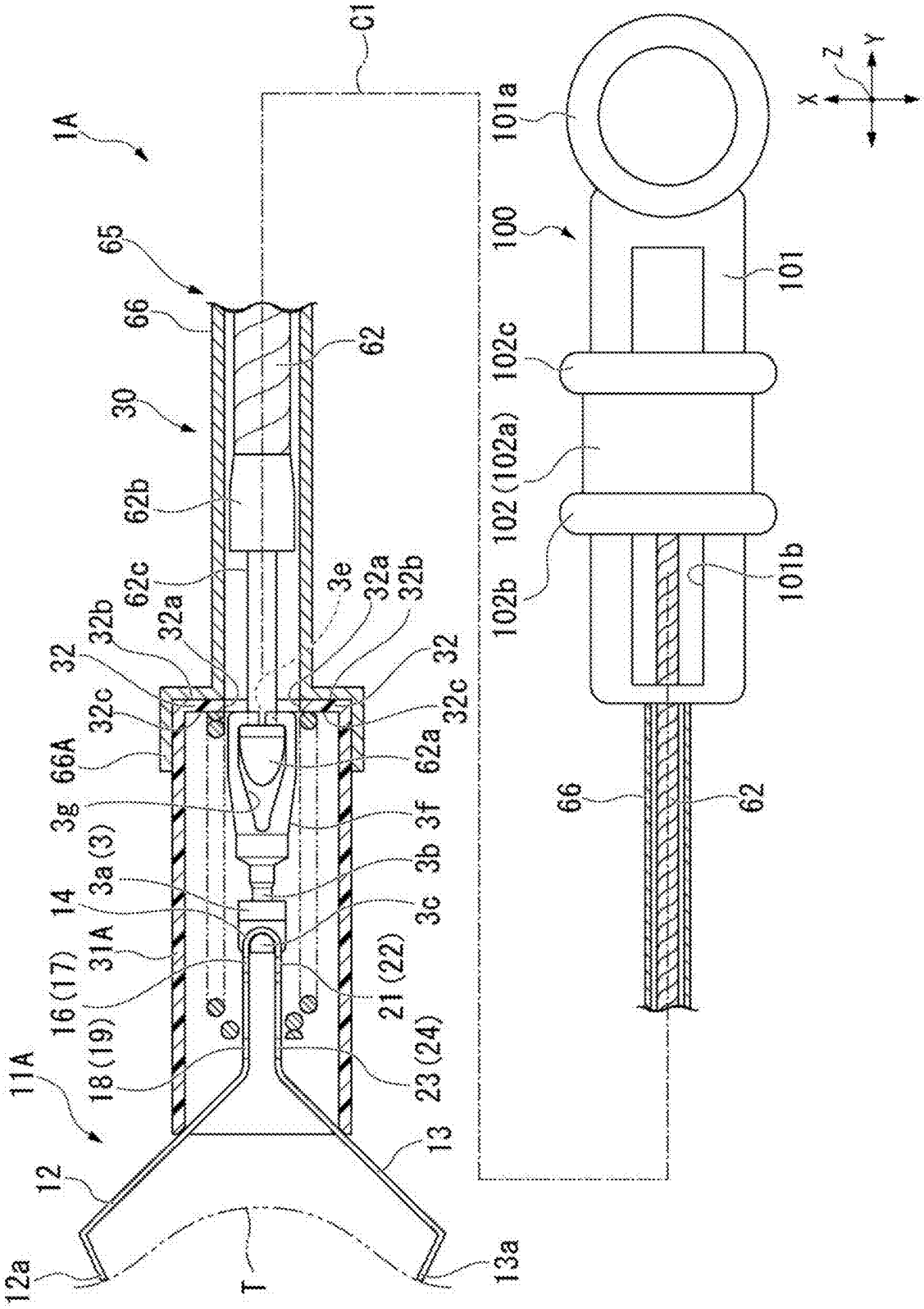
1A
65
66
30
62b
62c
32
32b
32a
32c
66A
3g
3a (3)
14
16 (17)
31A
18 (19)
11A
12
12a
T
13a
13
23 (24)
21 (22)
3c
3b
3f
62a
3e
62
C1
101a
100
101
102c
102 (102a)
102b
101b
66
62
X
Y
Z

FIG. 17B

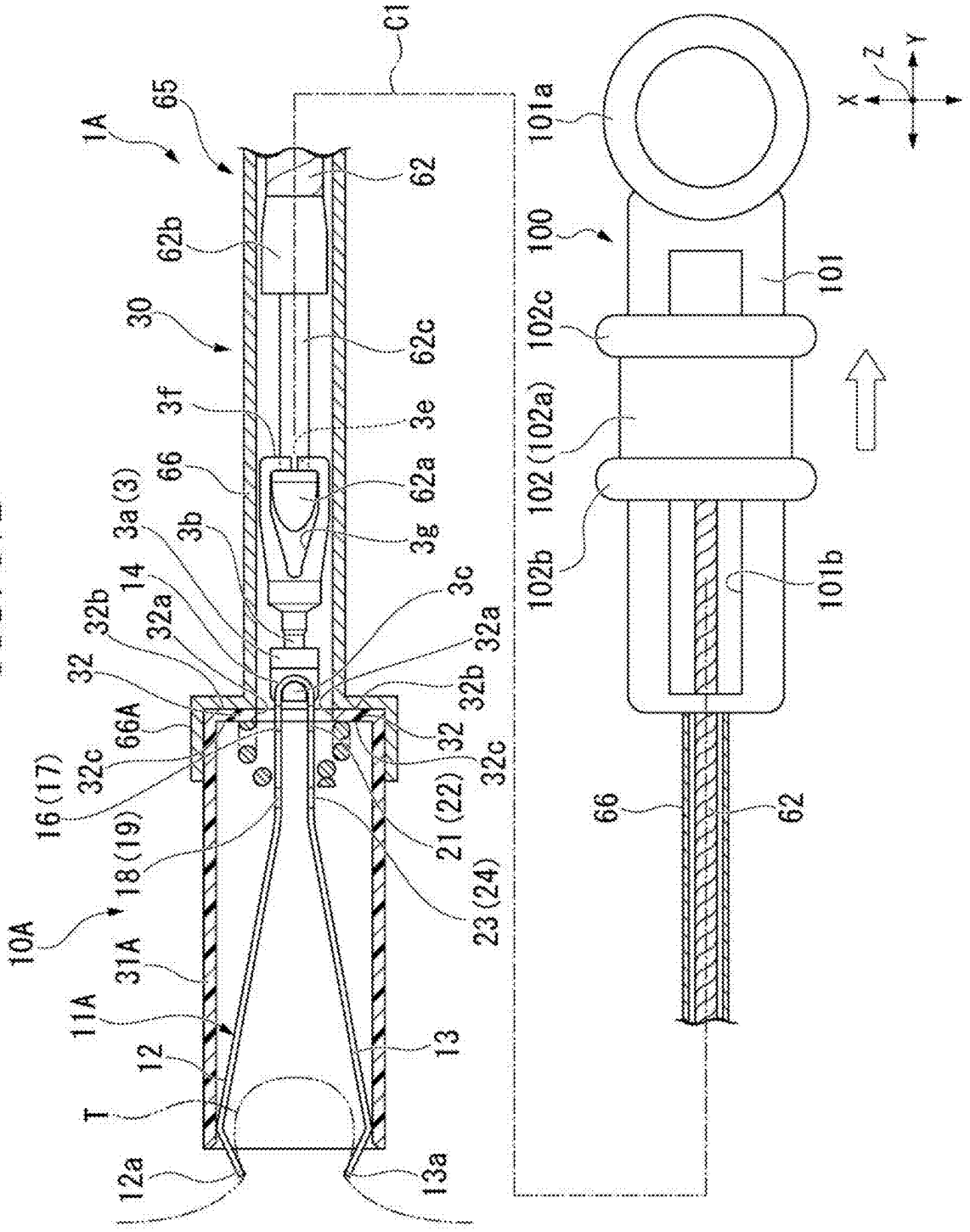
C1
1A
65
62
62b
30
62c
3f
3e
66
62a
3a(3)
3g
3b
14
3c
32b
32a
32a
32
32b
66A
32
32c
32c
16(17)
21(22)
18(19)
23(24)
10A
31A
11A
13
12
T
12a
13a
101a
100
101
102c
102(102a)
102b
101b
66
62
X
Y
Z

FIG. 17C

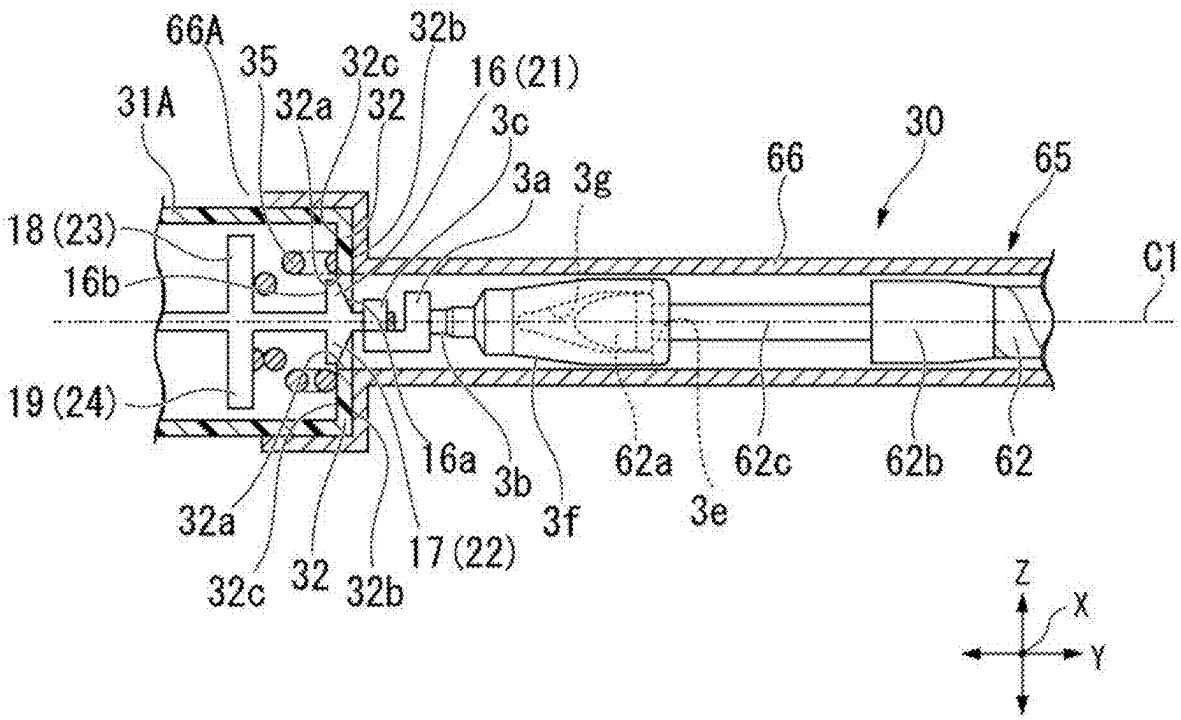
66A
35
32b
32c
16 (21)
31A
32a
32
3c
3a
3g
66
30
65
18 (23)
16b
C1
19 (24)
16a
3b
3f
62a
62c
62b
62
3e
32a
32c
32
32b
17 (22)
Z
X
Y

FIG. 18A

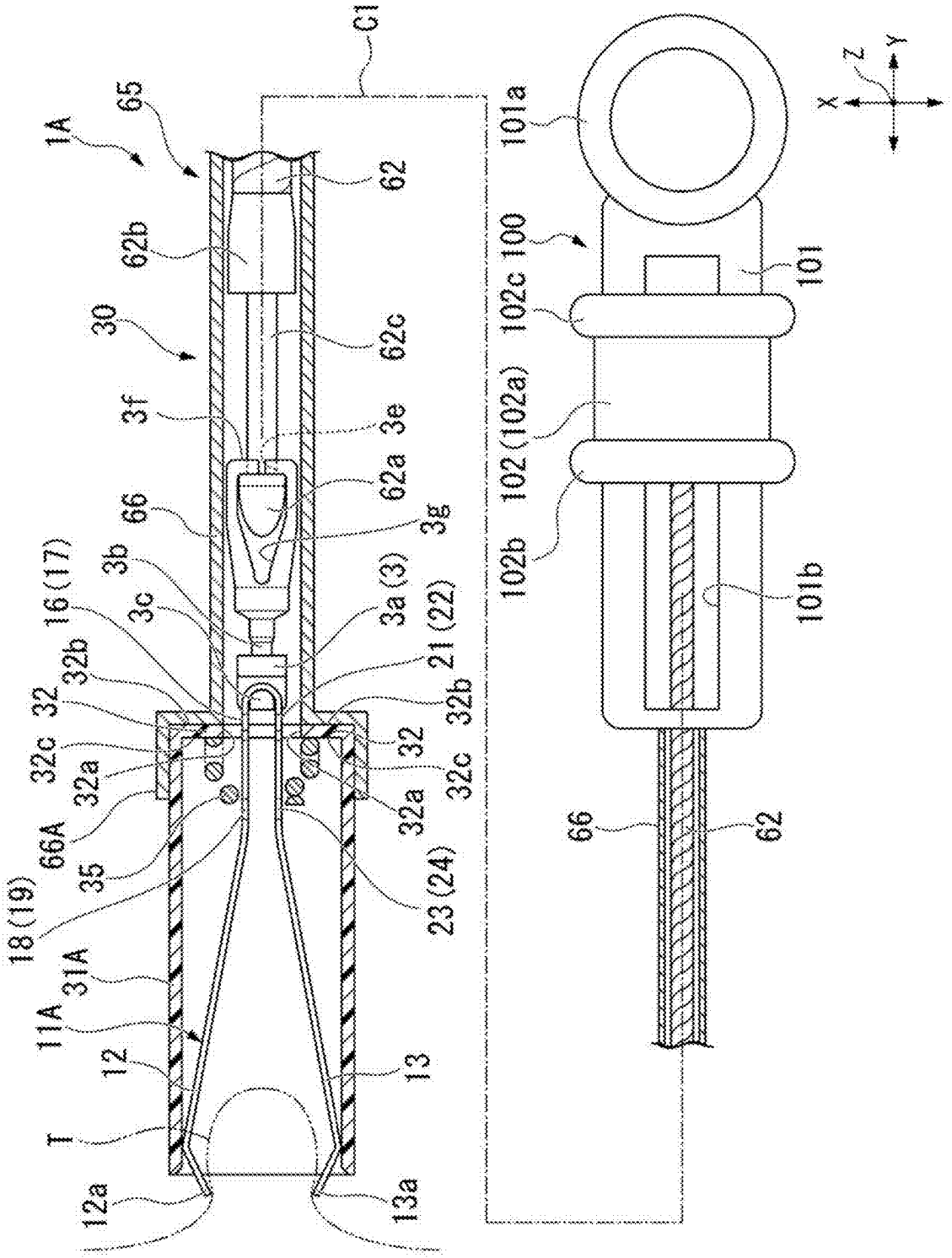
C1
1A
65
62
62b
30
62c
3f
3e
62a
66
3g
3b
16(17)
3c
3a(3)
21(22)
32b
32
32c
32a
66A
35
18(19)
23(24)
31A
11A
12
13
T
12a
13a
101a
100
101
102c
102(102a)
102b
101b
66
62
X
Y
Z

FIG. 18B

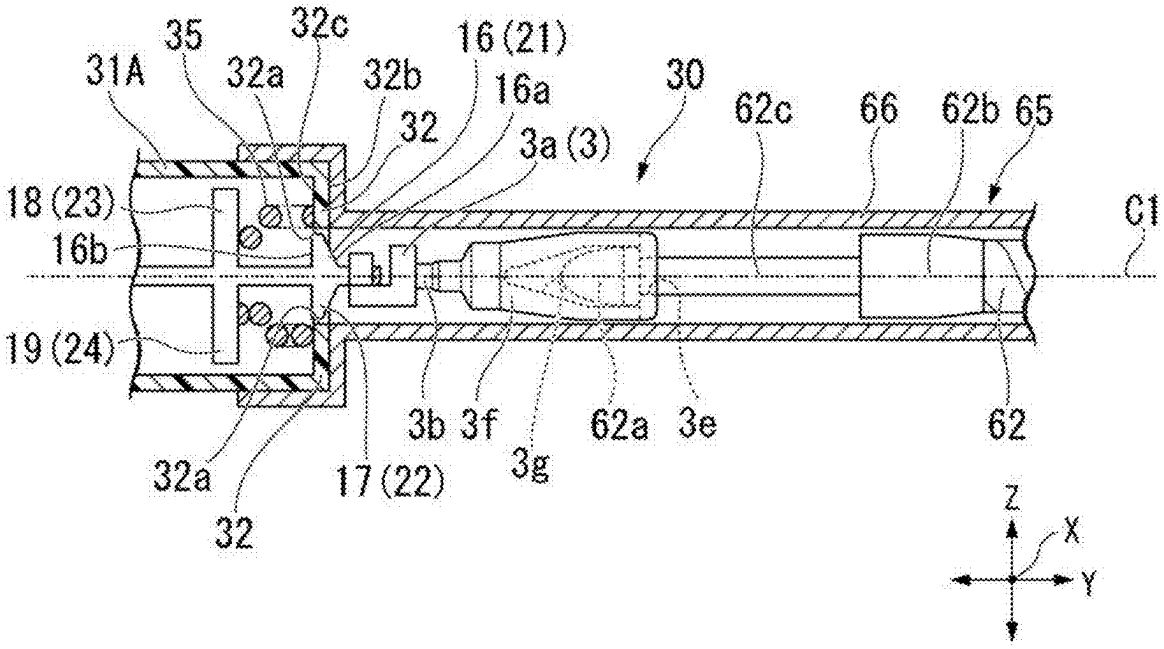

FIG. 18C

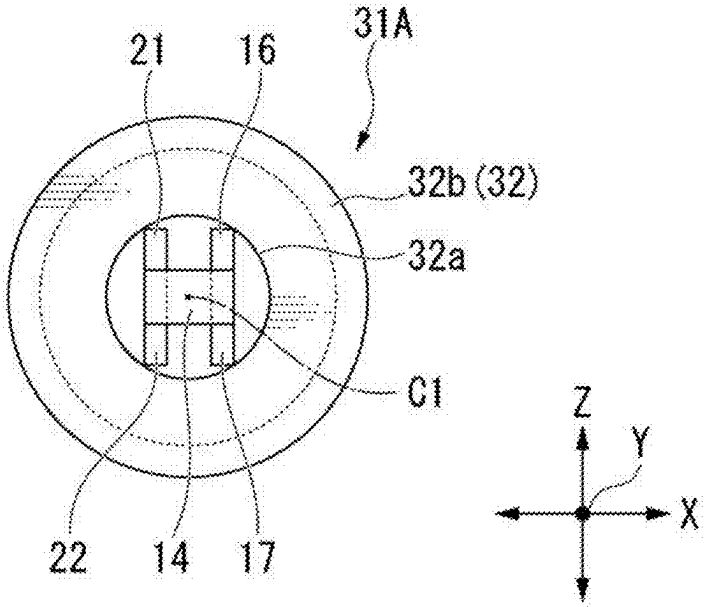

FIG. 19A

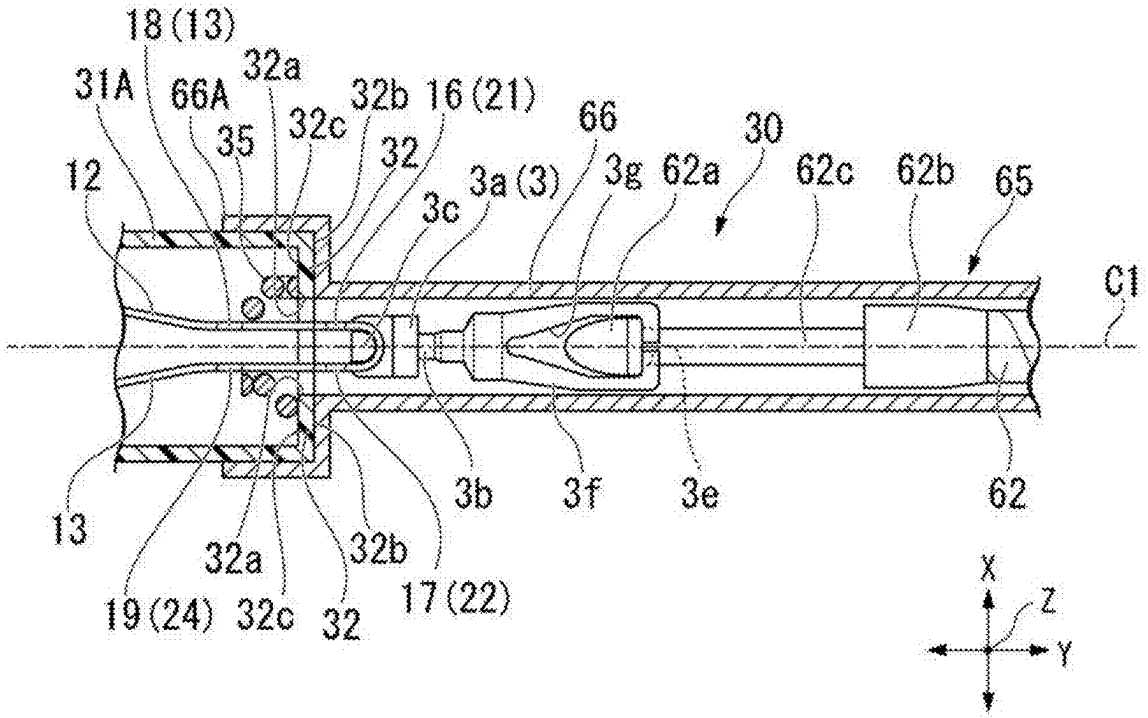

FIG. 19B

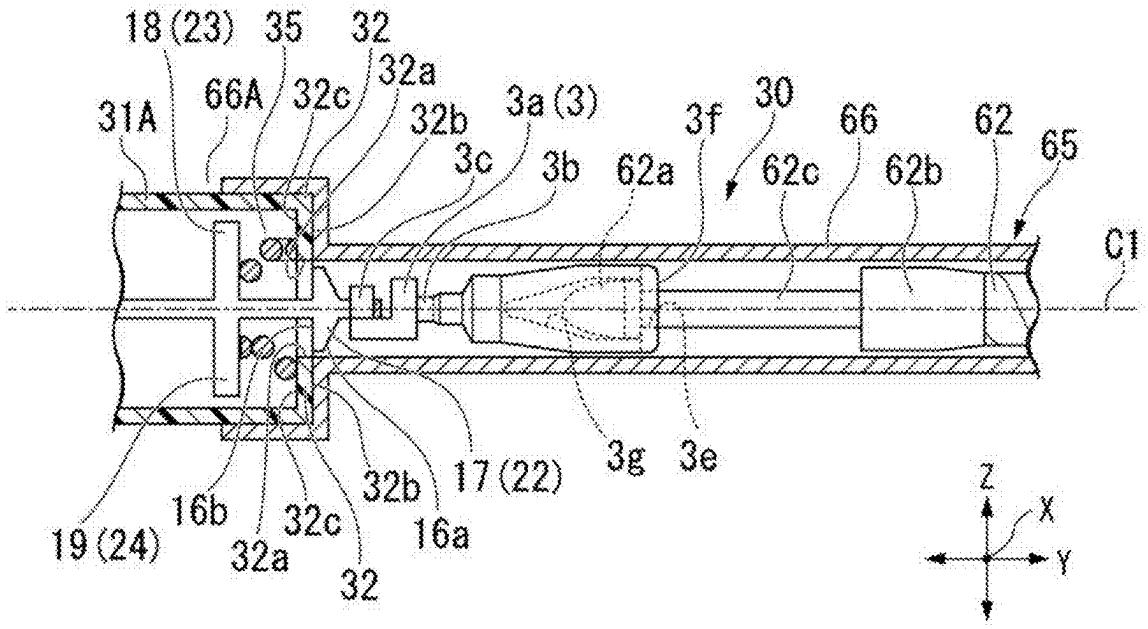

FIG. 19C

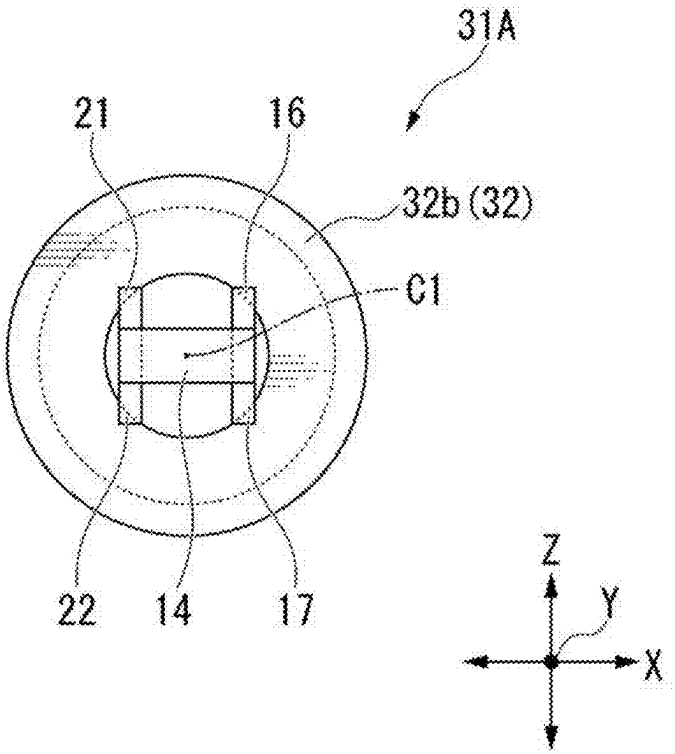

FIG. 20

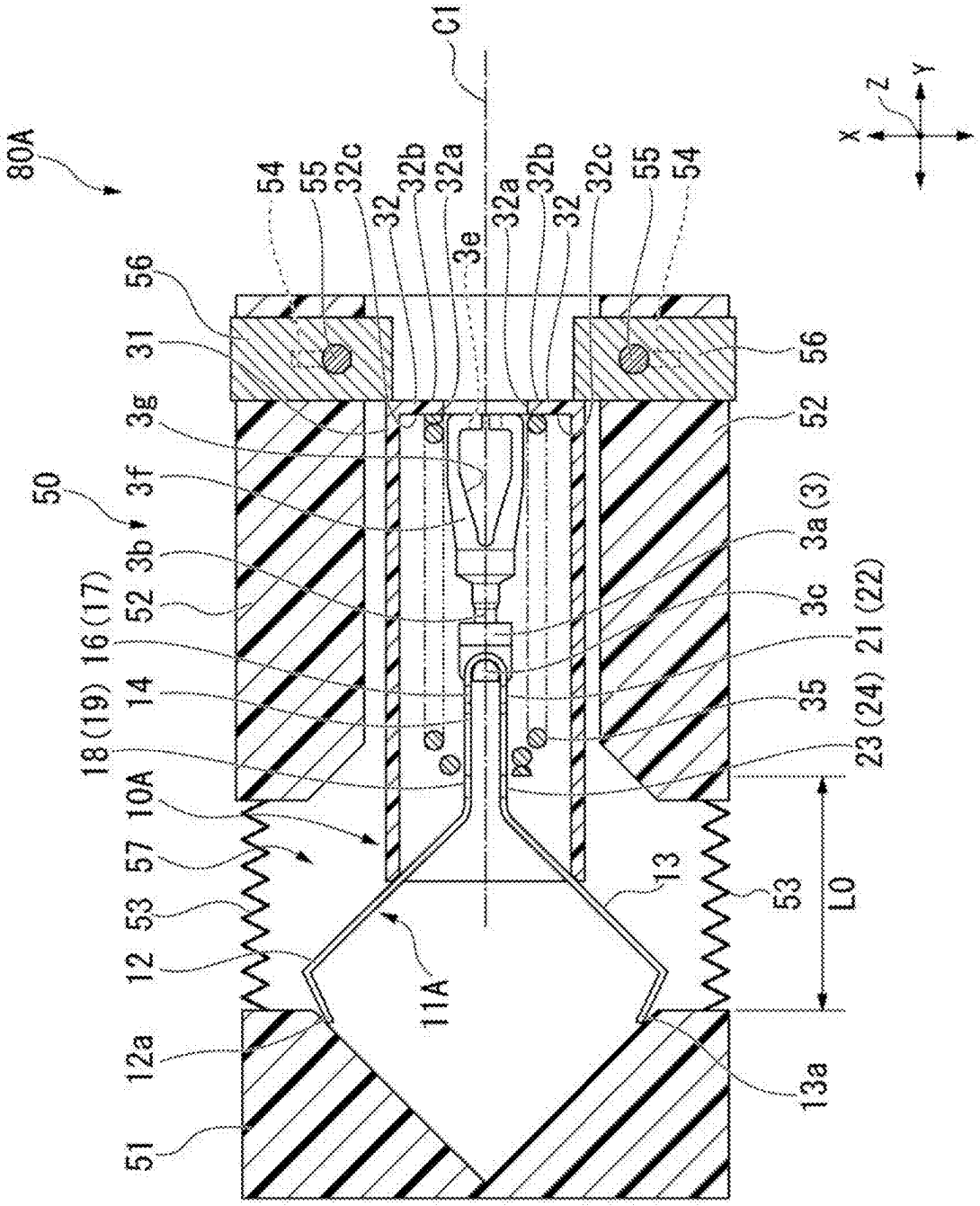
80A
C1
54
55
32c
32b
32a
32
3e
32a
32b
32
32c
55
54
56
31
3g
3f
50
3b
52
16(17)
14
18(19)
10A
57
53
12
12a
51
11A
13
13a
L0
53
56
52
3a(3)
3c
21(22)
35
23(24)
X
Y
Z

FIG. 21

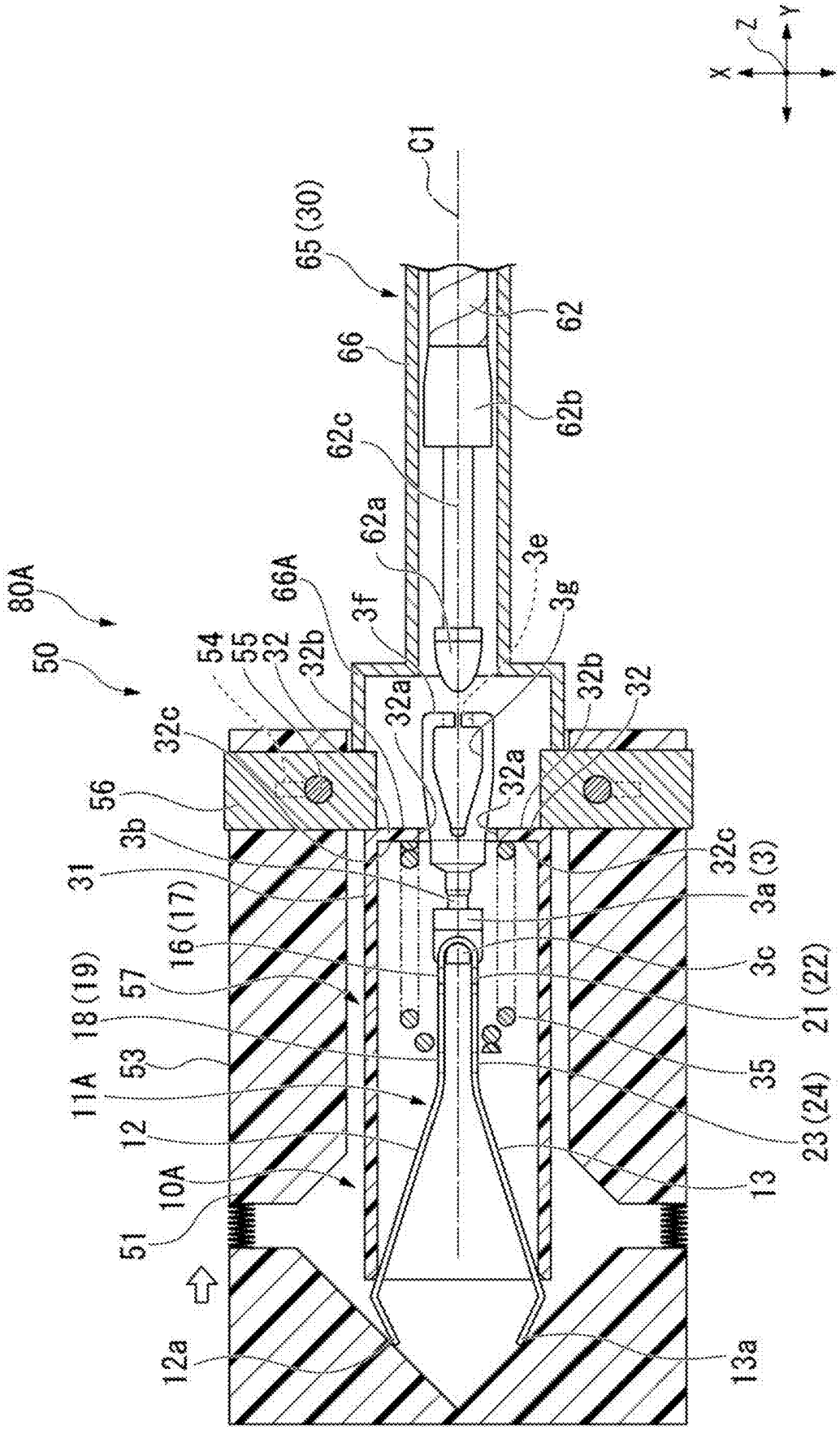
X
Y
Z
C1
65 (30)
62
66
62b
62c
62a
3e
3g
66A
3f
80A
50
54
55
32
32b
32a
32c
56
3b
31
16 (17)
57
18 (19)
53
11A
12
10A
51
12a
13a
13
23 (24)
35
21 (22)
3c
3a (3)

FIG. 22

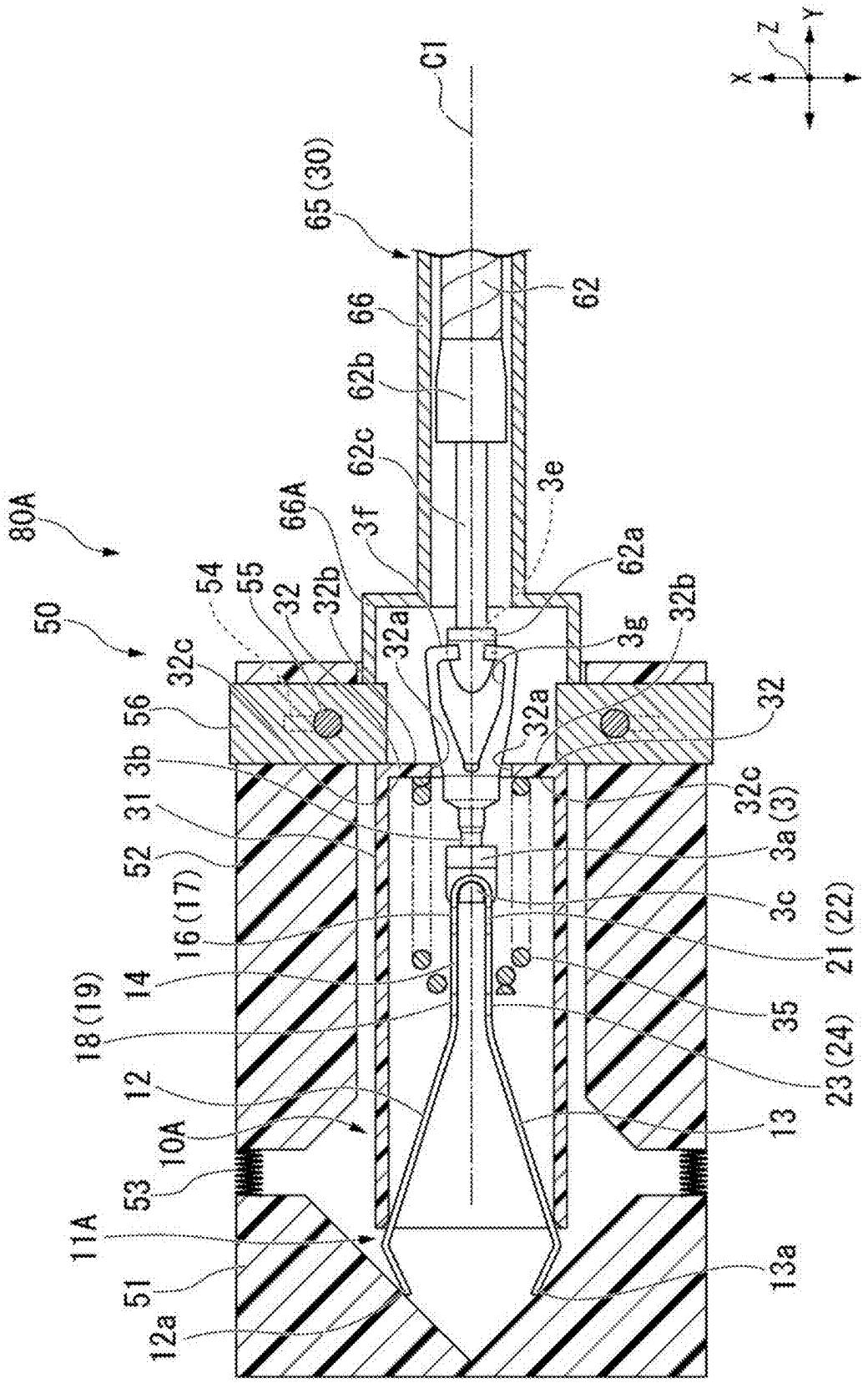
80A
50
54
55
32
32b
32c
56
3b
31
52
16(17)
14
18(19)
12
10A
53
11A
51
12a
66A
3f
32a
62c
62b
66
65(30)
C1
62
3e
62a
3g
32b
32
32a
32c
3a(3)
3c
21(22)
35
23(24)
13
13a
X
Y
Z

FIG. 23

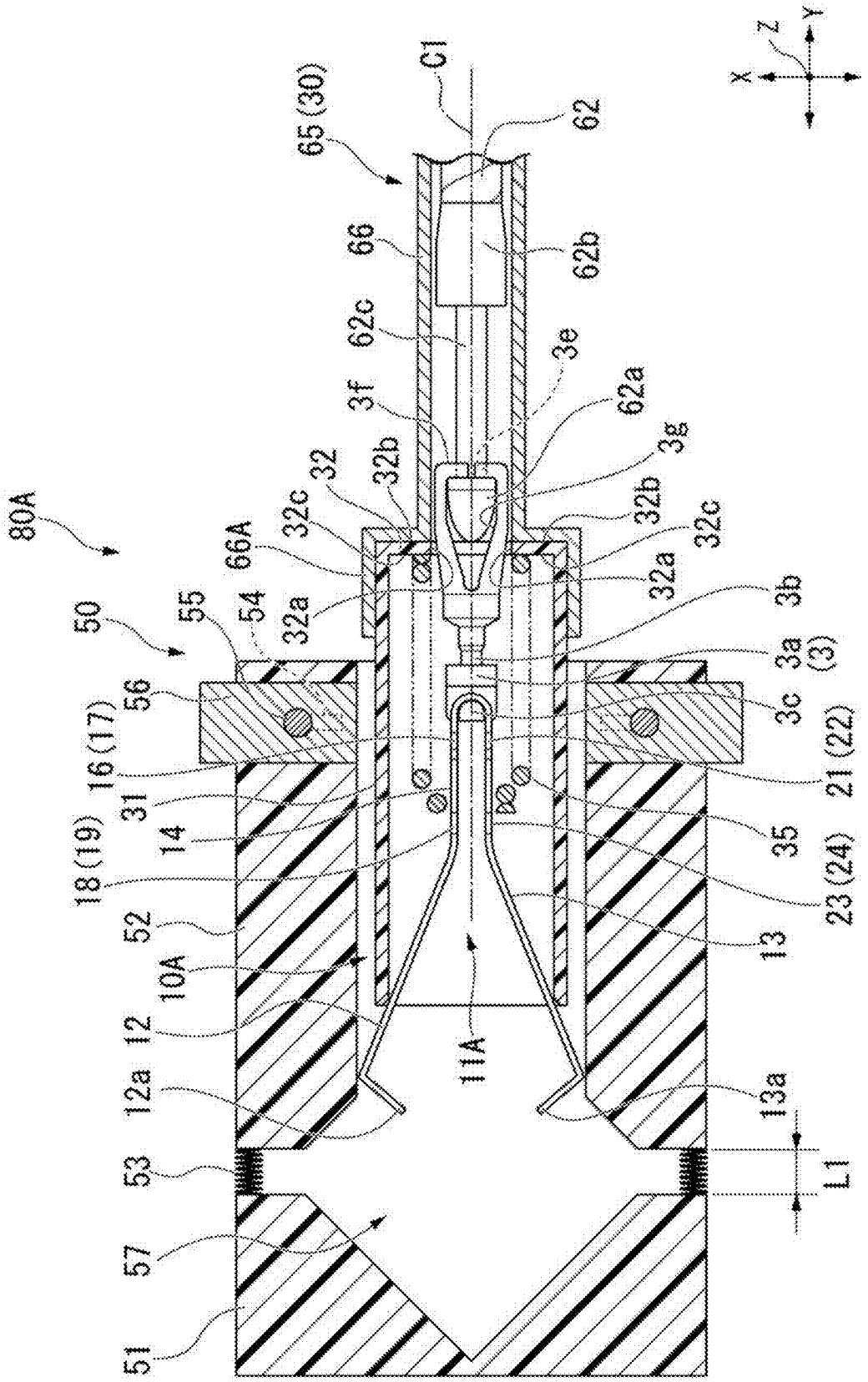
80A
50
55
54
56
16 (17)
18 (19)
52
10A
12
12a
53
57
51
66A
32c
32
32b
32a
65 (30)
66
62c
3f
C1
62
62b
3e
62a
3g
32b
32c
32a
3b
3a
(3)
3c
21 (22)
35
23 (24)
13
13a
11A
14
31
L1
X
Y
Z

FIG. 24

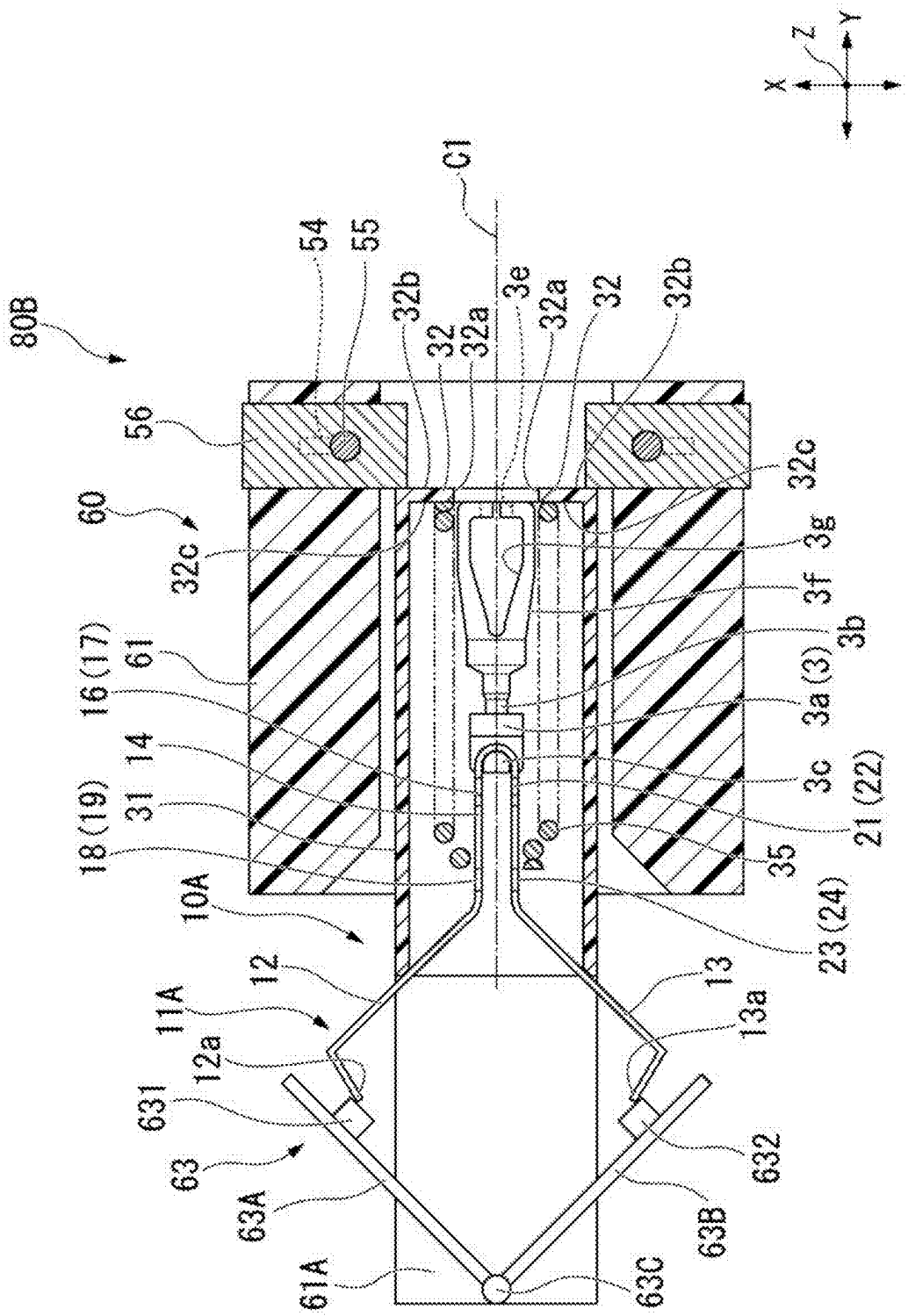
80B
54
55
C1
32b
32
32a
3e
32a
32
32b
56
60
32c
32c
3g
3f
3b
3a (3)
16 (17)
61
14
3c
18 (19)
31
21 (22)
35
10A
23 (24)
12
13
11A
13a
12a
631
632
63
63A
63B
61A
63C
X
Y
Z

FIG. 25

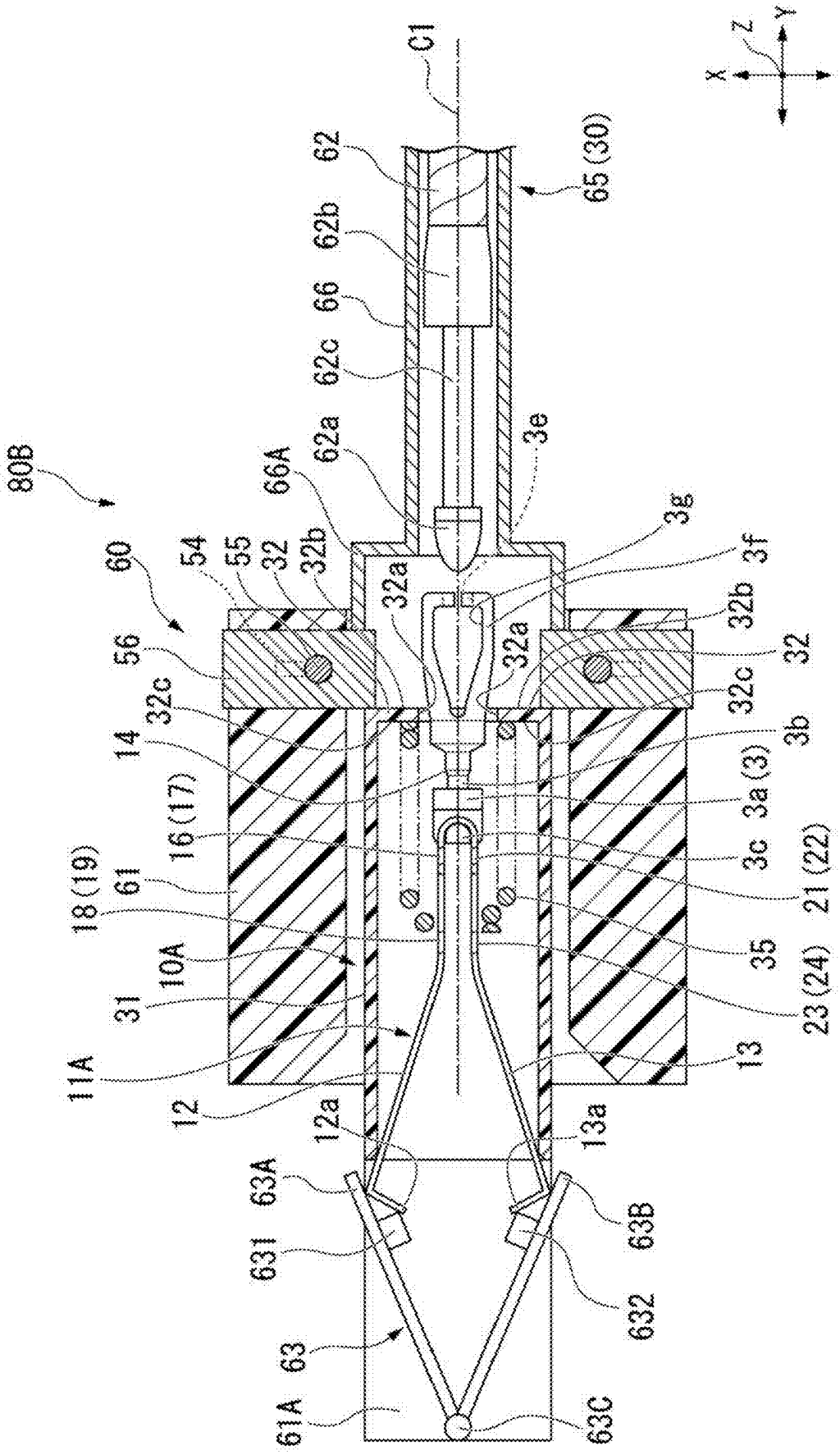
C1
62
62b
66
62c
62a
66A
65 (30)
3e
3g
3f
80B
60
54
55
32
32b
32a
32a
32b
32
56
32c
32c
14
3b
3a (3)
16 (17)
3c
21 (22)
18 (19)
61
35
10A
23 (24)
31
13
11A
12
12a
13a
63A
63B
631
632
63
61A
63C
X
Y
Z

FIG. 26

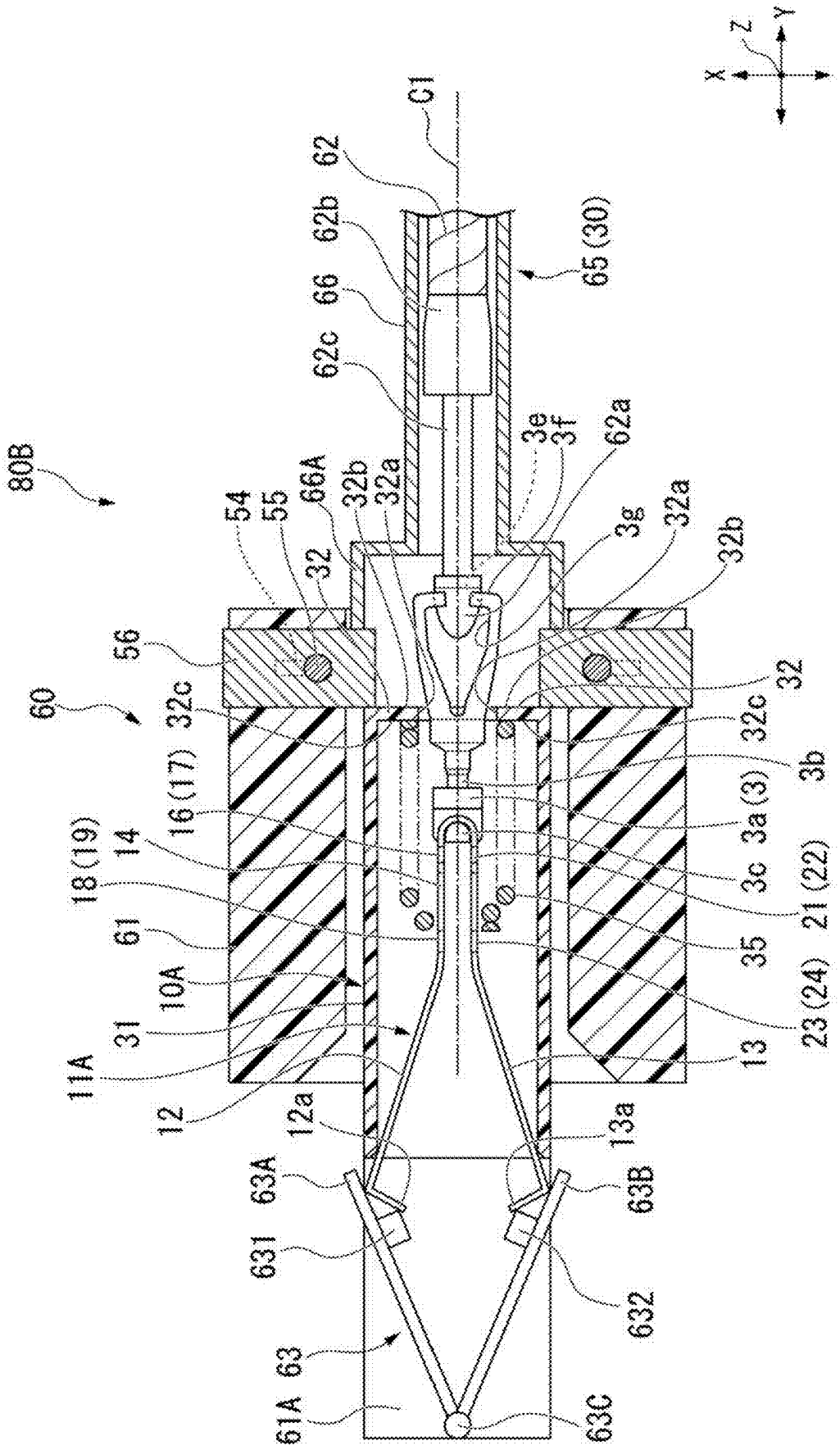
80B
60
56
54
55
32
66A
32b
32a
62
62b
66
62c
C1
65 (30)
3e
3f
62a
3g
32a
32b
32
32c
32c
3b
3a (3)
3c
21 (22)
35
23 (24)
13
13a
63B
632
63C
63
61A
631
63A
12a
12
11A
31
10A
61
18 (19)
14
16 (17)
X
Y
Z

FIG. 27

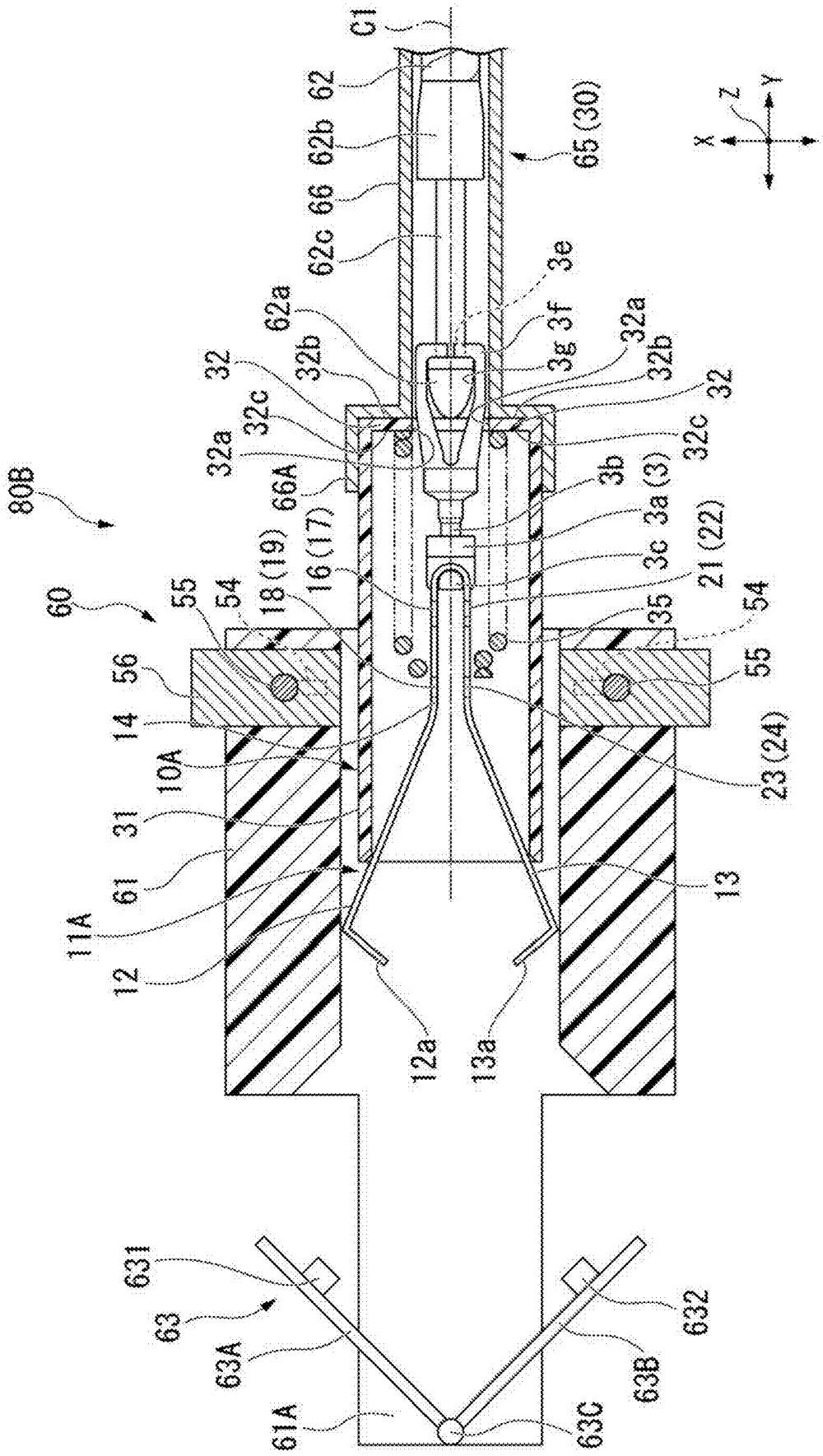
C1
62
62b
66
62c
65 (30)
X
Y
Z
3e
62a
3f
3g
32a
32b
32
32c
66A
80B
3b
3a (3)
3c
21 (22)
18 (19)
16 (17)
60
55
54
35
56
14
10A
31
61
11A
12
23 (24)
13
12a
13a
631
63
63A
61A
63C
63B
632

FIG. 28A

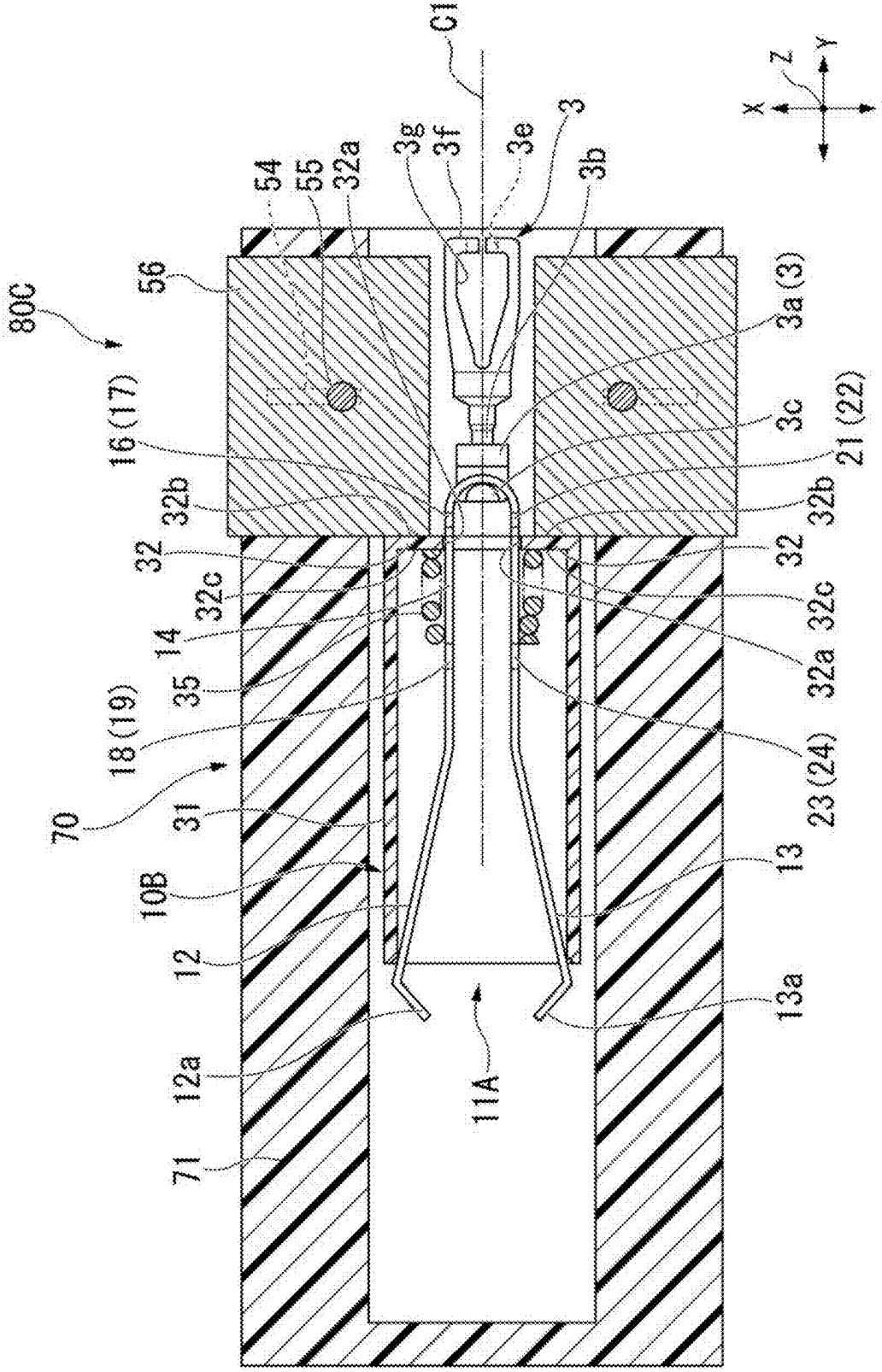
C1
X
Y
Z
3
3g
3f
3e
3b
54
55
32a
56
80C
3a (3)
16 (17)
3c
21 (22)
32b
32b
32
32
32c
32c
14
32a
35
18 (19)
23 (24)
70
31
13
10B
12
13a
12a
11A
71

FIG. 28B

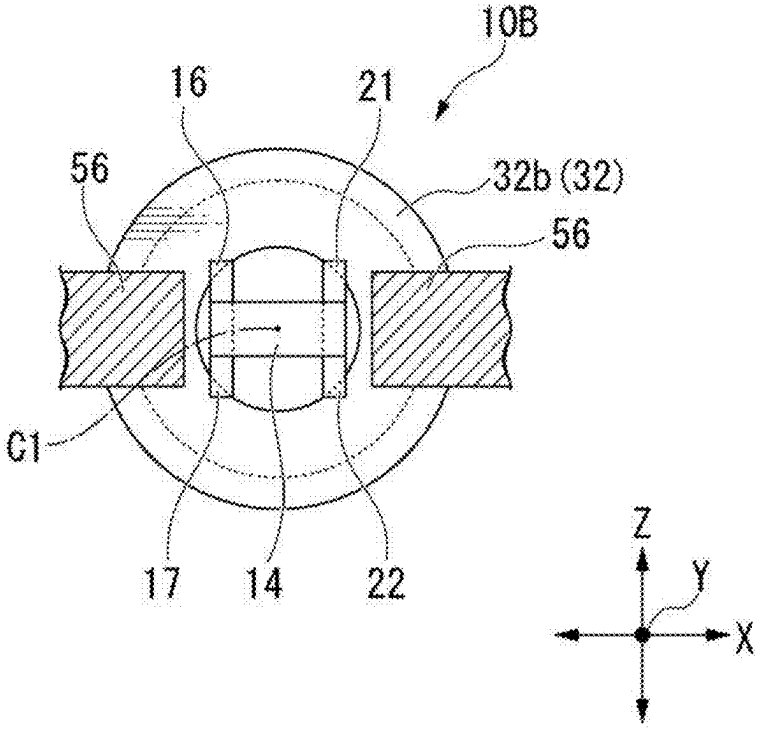

FIG. 29

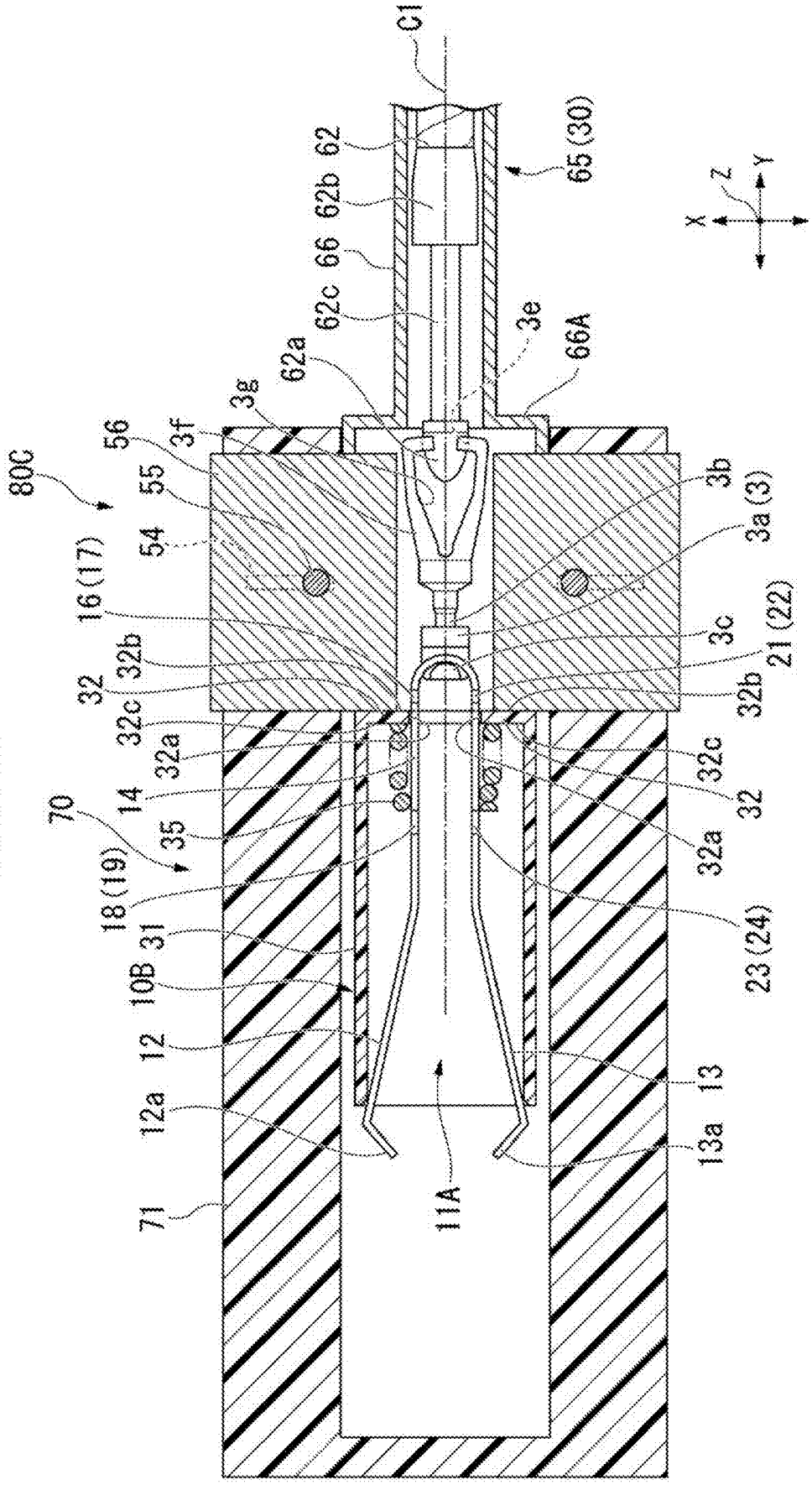
C1
62
62b
66
62c
62a
3g
3f
56
55
54
16(17)
32
32b
32c
32a
14
35
18(19)
31
10B
12
12a
71
80C
70
65(30)
3e
66A
3b
3a(3)
3c
21(22)
32b
32c
32
32a
23(24)
13
13a
11A
X
Y
Z

FIG. 30

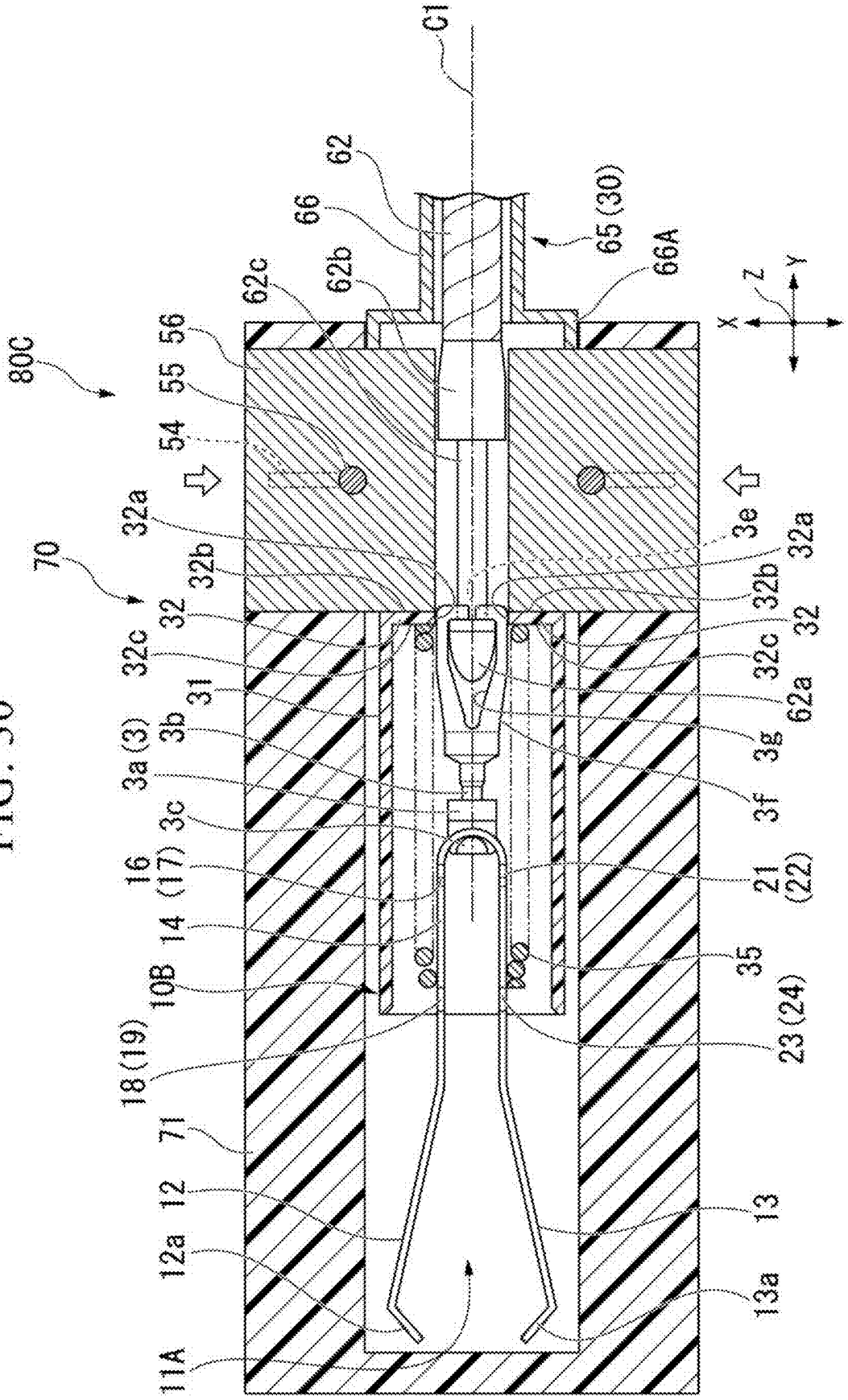
C1
62
66
65 (30)
66A
62c
62b
56
55
80C
54
32a
70
32b
32
32c
31
3a (3)
3b
3c
16
(17)
14
10B
18 (19)
71
12
12a
11A
3e
32a
32b
32
32c
62a
3g
3f
21
(22)
35
23 (24)
13
13a
X
Y
Z

FIG. 31

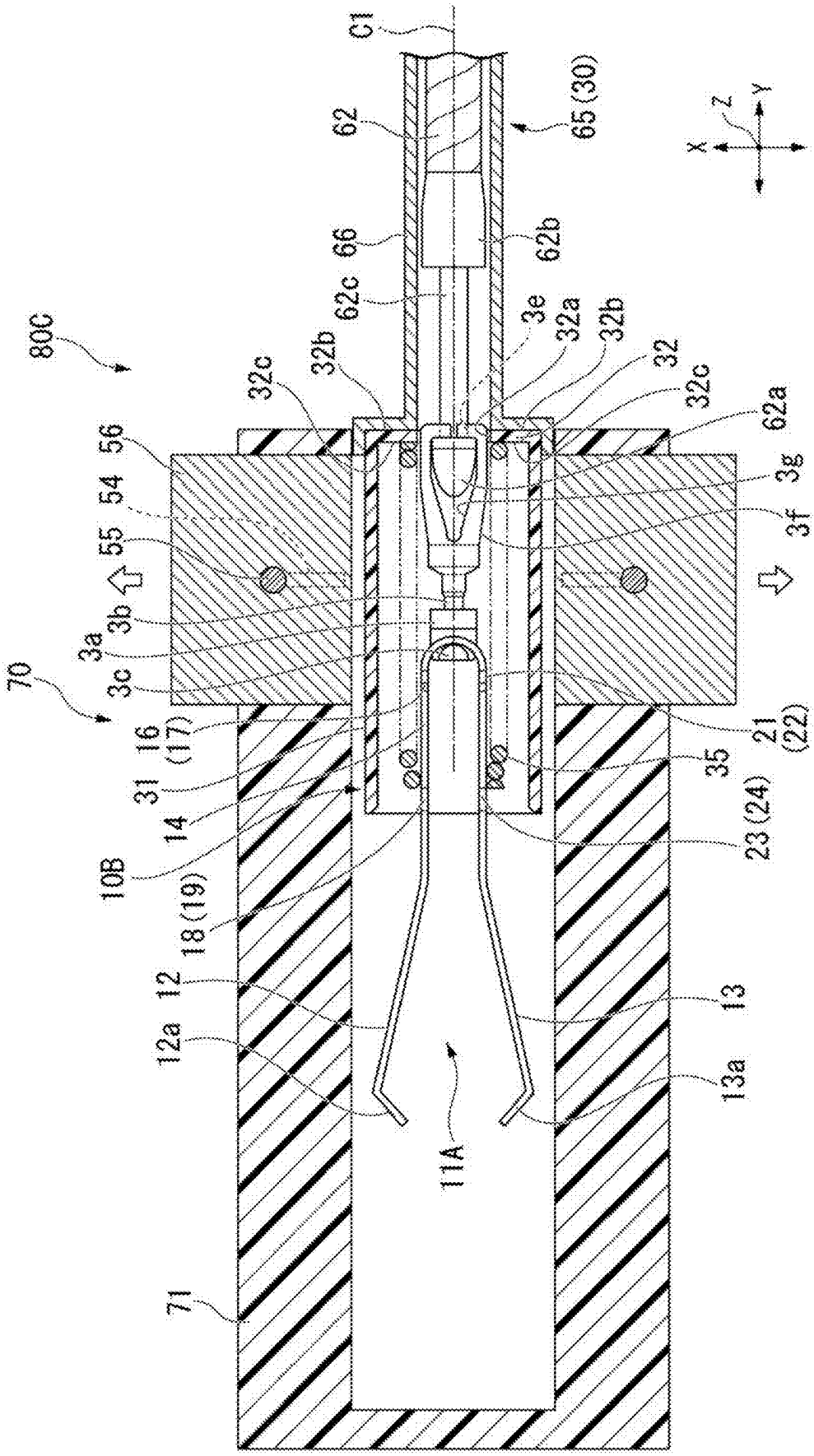
C1
62
65 (30)
66
62b
62c
3e
32a
32b
32
32c
62a
80C
32c
32b
56
54
55
3b
3a
3c
70
16
(17)
31
14
10B
18 (19)
12
12a
71
11A
13
13a
23 (24)
35
21
(22)
3f
3g
X
Y
Z

FIG. 32

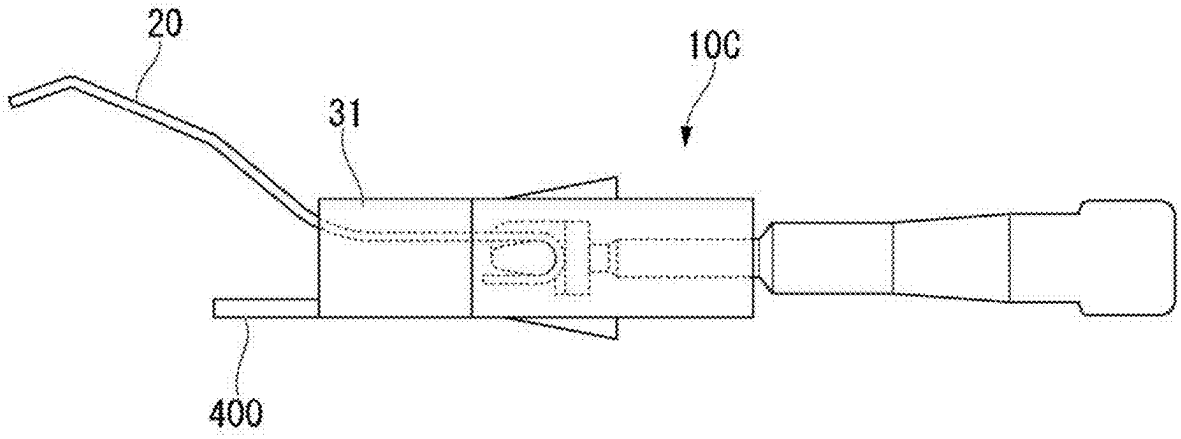

CLIP CARTRIDGE, MEDICAL DEVICE, AND ATTACHMENT METHOD FOR MEDICAL DEVICE

CROSS-REFERENCE TO RELATED APPLICATION

[0001] This application is a continuation of U.S. application Ser. No. 17/386,207 filed on Jul. 27, 2021 which in turn is a continuation of International Application No. PCT/JP2019/003134, filed on Jan. 30, 2019, the entire contents of which are incorporated herein by reference.

TECHNICAL FIELD

[0002] The present disclosure relates to a clip cartridge for accommodating a clip unit configured to treat a target tissue in a body, a medical device (more specifically, a ligating device used for ligating a tissue), and an attachment method for attaching the medical device.

BACKGROUND ART

[0003] Conventionally, an endoscope treatment device introduced into the body of a patient through a channel of the endoscope for ligating the openings formed in the tissues and the blood vessels in the body is disclosed in Japanese Unexamined Patent Application, First Publication No. 2009-011852.

[0004] The treatment instrument for an endoscope described in Japanese Unexamined Patent Application, First Publication No. 2009-011852 is configured by engaging a clip unit accommodated in a clip case and an operation wire inserted through an insertion portion of the endoscope with each other. According to the endoscope treatment device disclosed in Japanese Unexamined Patent Application, First Publication No. 2009-011852, the operation wire and the clip unit are engaged with each other by inserting a hook formed at the distal end side of the operation wire and in an arrowhead shape into a notch portion formed at the proximal end side of the clip unit. According to the endoscope treatment device disclosed in Japanese Unexamined Patent Application, First Publication No. 2009-011852, at the time when the operation wire and the clip unit are engaged with each other, the engagement portion of the hook and the connection member is positioned in the sheath of the insertion portion of the endoscope.

[0005] In the endoscope treatment device disclosed in Japanese Unexamined Patent Application, First Publication No. 2009-011852, a pair of arms of the clip unit are formed to be intersected with each other and part of the pair of arms are accommodated in the pressing tube. Accordingly, in the state in which the operation wire and the clip unit are engaged with each other, by the operation of retracting the operation wire to the proximal end side, the pair of arms are in contact with the pressing tube while the opening width between the pair of arms are increased once and then decreased to a degree suitable to tightly bind the target tissue.

[0006] According to the endoscope treatment device disclosed in Japanese Unexamined Patent Application, First Publication No. 2009-011852, the connection member disposed at the proximal end side of the clip unit has a small-diameter portion configured to be broken in a case in which a force exceeding the predetermined tensile strength is applied to the connection member. Accordingly, according to the endoscope treatment device disclosed in Japanese Unexamined Patent Application, First Publication No. 2009-011852, in the state in which the target tissue is grasped by the pair of arms of the clip unit, when the operator retracts the operation wire toward the proximal end side, the connection member is broken. In this manner, it is possible to indwell the clip unit grasping the target tissue in the body.

[0007] Generally, the medical device configured to perform treatment (ligation) with respect to the tissues inside the body is configured by connecting the treatment device (for example, the clip) inserted into the body and the applicator configured to adjust the position and the orientation of the treatment portion by the hand of the operator. When using the treatment device to perform treatment to the target tissues inside the body, for example, there is a case to further perform treatment to the new target tissues that are not discovered before the surgeon. At this time, for example, in the case of using the clip as the treatment device, it is necessary to exchange the plurality of clips so as to perform ligation to each of the plurality of target tissues. In other words, in the medical device for treating the target tissues inside the body, it is preferable to attach the new treatment device to the applicator, that is, it is preferable that the treatment device may be reloaded.

[0008] On the other hand, at the time of treating one target tissue inside the body, for example, in a case in which the tissue is unintentionally grasped by the clip used as the treatment device or in a case in which the state of grasping the target tissues is necessary to be adjusted, it is preferable to once release the grasping state of the tissues by the treatment device and then grasp the tissues again, that is, it is preferable to re-grasp the target tissue by the treatment device.

[0009] As disclosed above, in order to suitably perform treatment to the target tissues inside the body, it is preferable to achieve both goals of reloading the treatment portion and re-grasping the target tissues by the treatment device.

SUMMARY

[0010] According to an aspect of the present disclosure, a clip cartridge includes a clip unit having a pressing tube extending along a longitudinal axis; an arm member inserting into the pressing tube; and a connection portion provided in the arm member and configured to be capable to transition between a protrusion configuration protruding from the pressing tube and an accommodation configuration of being accommodated in the pressing tube; and a housing configured to be able to accommodate the clip unit, wherein the housing having: a stopper configured to restrict the transition of the connection portion from the protrusion configuration to the accommodation configuration; and a release mechanism configured to release the restriction by the stopper with respect to the transition of the connection portion from the protrusion configuration to the accommodation configuration, and wherein the stopper is configured to restrict the transition of the clip unit by coming in contact with the arm member or the pressing tube.

[0011] According to another aspect of the present disclosure, a medical device includes the clip according to the first aspect; and an applicator including an operation wire being engageable with the connecting portion, wherein the connection portion includes an engagement configuration in which the connection portion and the operation wire are engaged with each other and a release configuration in

which the engagement configuration between the connection portion and the operation wire is released, wherein the connection portion is able to transition from the release configuration to the engagement configuration in the protrusion configuration, and wherein the transition of the connection portion from the release configuration to the engagement configuration in the accommodation configuration is restricted by an inner wall of the pressing tube.

[0012] According to a further aspect of the present disclosure, An attachment method for a medical device, wherein the medical device includes a clip unit having a pressing tube (**31**) extending along a longitudinal axis and an arm member (**11**) having a connection portion (**3**); a stopper (**36**) configured to restrict a transition of a position of the connection portion with respect to the pressing tube by the stopper coming in contact with the arm member or the pressing tube; a release mechanism (vertical groove **393**) configured to release the restriction by the stopper with respect to the transition of the position of the connection portion; a housing (**40**) being able to accommodate the clip unit, and an applicator including an operation wire being engageable with the connection portion, the attachment method for a medical device to attach the clip unit to the applicator includes a step of moving the operation wire so as to engage the operation wire with the connection portion when the connection portion is at a position protruding from the pressing tube; and a step of moving the release mechanism to release the restriction with respect to the transition of the position of the connection portion and causing the connection portion to transition from the protruding position to a position where the connection portion is accommodated in the pressing tube in a state in which the connection portion is engaged with the operation wire.

BRIEF DESCRIPTION OF DRAWINGS

[0013] FIG. **1** is a perspective view schematically showing a configuration of a clip unit according to a first embodiment of the present disclosure.

[0014] FIG. **2** is a perspective view schematically showing a configuration of an arm member in the clip unit according to the present embodiment.

[0015] FIG. **3** is a partial cross-sectional planar view showing the clip unit according to the present embodiment.

[0016] FIG. **4** is a partial cross-sectional planar view showing a state in which the clip unit is accommodated in the clip cartridge according to the present embodiment.

[0017] FIG. **5** is a view showing an operation of attaching the clip unit to an applicator according to the present embodiment.

[0018] FIG. **6** is a view showing the operation of attaching the clip unit to an applicator according to the present embodiment.

[0019] FIG. **7** is a view showing the operation of attaching the clip unit to an applicator according to the present embodiment.

[0020] FIG. **8** is a view showing the operation of attaching the clip unit to an applicator according to the present embodiment.

[0021] FIG. **9** is a view showing the operation of attaching the clip unit to an applicator according to the present embodiment.

[0022] FIG. **10** is a view showing an operation of treating the target tissue using a medical device according to the present embodiment.

[0023] FIG. **11** is a view showing the operation of treating the target tissue using a medical device according to the present embodiment.

[0024] FIG. **12** is a view showing the operation of treating the target tissue using a medical device according to the present embodiment.

[0025] FIG. **13** is a perspective view schematically showing a configuration of a connection portion between the clip unit and the applicator in the medical device according to the present embodiment.

[0026] FIG. **14** is a side view schematically showing the configuration of the connection portion between the clip unit and the applicator in the medical device according to the present embodiment.

[0027] FIG. **15**A is a partial cross-sectional planar view showing the state in which the clip unit is accommodated in the clip cartridge according to a modification of the present embodiment.

[0028] FIG. **15**B is a partial cross-sectional side view showing the clip unit according to the present modification.

[0029] FIG. **15**C is a view viewed from the proximal end side of the clip unit according to the present modification.

[0030] FIG. **16**A is a view showing an operation of attaching the clip unit to the applicator according to the present modification.

[0031] FIG. **16**B is a view showing the operation of attaching the clip unit to the applicator according to the present modification.

[0032] FIG. **16**C is a view showing the operation of attaching the clip unit to the applicator according to the present modification.

[0033] FIG. **16**D is a view showing the operation of attaching the clip unit to the applicator according to the present modification.

[0034] FIG. **16**E is a view showing the operation of attaching the clip unit to the applicator according to the present modification.

[0035] FIG. **17**A is a view showing an operation of treating the target tissue using a medical device according to the present modification.

[0036] FIG. **17**B is a view showing the operation of treating the target tissue using the medical device according to the present modification.

[0037] FIG. **17**C is a view showing the operation of treating the target tissue using the medical device according to the present modification.

[0038] FIG. **18**A is a view showing the operation of treating the target tissue using the medical device according to the present modification.

[0039] FIG. **18**B is a view showing the operation of treating the target tissue using the medical device according to the present modification.

[0040] FIG. **18**C is a view showing the operation of treating the target tissue using the medical device according to the present modification.

[0041] FIG. **19**A is a view showing the operation of treating the target tissue using the medical device according to the present modification.

[0042] FIG. **19**B is a view showing the operation of treating the target tissue using the medical device according to the present modification.

[0043] FIG. **19**C is a view showing the operation of treating the target tissue using the medical device according to the present modification.

[0044] FIG. **20** is a partial cross-sectional planar view showing a state in which a clip unit is accommodated in a clip cartridge according to a second embodiment of the present disclosure.

[0045] FIG. **21** is a view showing an operation of attaching the clip unit to the applicator according to the present embodiment.

[0046] FIG. **22** is a view showing the operation of attaching the clip unit to the applicator according to the present embodiment.

[0047] FIG. **23** is a view showing the operation of attaching the clip unit to the applicator according to the present embodiment.

[0048] FIG. **24** is a partial cross-sectional planar view showing a state in which a clip unit is accommodated in a clip cartridge according to a third embodiment of the present disclosure.

[0049] FIG. **25** is a view showing an operation of attaching the clip unit to the applicator according to the present embodiment.

[0050] FIG. **26** is a view showing the operation of attaching the clip unit to the applicator according to the present embodiment.

[0051] FIG. **27** is a view showing the operation of attaching the clip unit to the applicator according to the present embodiment.

[0052] FIG. **28**A is a partial cross-sectional planar view showing a state in which a clip unit is accommodated in a clip cartridge according to a fourth embodiment of the present disclosure.

[0053] FIG. **28**B is a view showing the clip unit when observed from the proximal end side in the state in which the clip unit is accommodated in the cartridge according to the present embodiment.

[0054] FIG. **29** is a view showing an operation of attaching the clip unit to the applicator according to the present embodiment.

[0055] FIG. **30** is a view showing the operation of attaching the clip unit to the applicator according to the present embodiment.

[0056] FIG. **31** is a view showing the operation of attaching the clip unit to the applicator according to the present embodiment.

[0057] FIG. **32** is a view showing a configuration of a clip unit according to a modification of the present disclosure.

DESCRIPTION OF EMBODIMENTS

First Embodiment

[0058] Hereinafter, configurations of a clip cartridge and a medical device according to a first embodiment of the present disclosure will be described with reference to FIG. **1** to FIG. **14**.

[0059] A medical device **1** according to the present embodiment is used by being inserted into the body of a patient body through a channel formed in an endoscope (not shown). More specifically, the medical device **1** according to the present embodiment is a ligation device for ligating a target tissue in the body.

[0060] In this specification, the side on which the endoscope operation portion for the operator to operate the endoscope is located is defined as a proximal side, and the side on which the distal end portion of the endoscope inserted into the body is located is defined as a distal end side. More specifically, the proximal end side of the medical device **1** according to the present embodiment is defined as the side on which the endoscope operation portion is located when the medical device **1** is inserted into the channel formed in the endoscope. The distal end side of the medical device **1** is defined as the side where the distal end portion of the endoscope is located when the medical device **1** is inserted into the channel formed in the endoscope.

[0061] The medical device **1** according to the present embodiment is configured to include a clip unit (treatment portion) **10** provided on the distal end side and an applicator **30** (see FIG. **10**). Hereinafter, for convenience of description, the clip unit **10** will be simply referred to as the clip **10**. As shown in FIG. **13** and FIG. **14**, the clip **10** is detachably connected to a distal end portion of an applicator **30** described later.

[0062] Hereinafter, the configuration of the clip **10** according to the present embodiment will be described with reference to FIG. **1** to FIG. **3**.

[0063] FIG. **1** is a perspective view of a clip **10** according to the present embodiment. FIG. **2** is a perspective view of the arm member **11** of the clip **10** according to the present embodiment. FIG. **3** is a partial cross-sectional planar view of the clip **10** according to the present embodiment.

[0064] As shown in FIG. **1**, the clip **10** according to the present embodiment includes an arm member **11**, a pressing tube **31**, and a connecting portion (first link) **3**.

(Structure of Arm Member)

[0065] As shown in FIG. **1** and FIG. **2**, the arm member **11** includes a first arm **12**, a second arm **13**, and an intermediate portion **14**. The first arm **12** and the second arm **13** extend from the proximal end side toward the distal end side and are arranged to be opposite to each other. The arm member **11** is configured by the first arm **12** and the second arm **13** intersecting with each other. As shown in FIG. **3**, the first arm **12** and the second arm **13** may be formed at positions symmetrical with respect to the axis C**1** of the pressing tube **31**.

[0066] The intermediate portion **14** is located between the proximal end portion of the first arm **12** and the proximal end portion of the second arm **13**. More specifically, as shown in FIG. **2**, in the arm member **11**, a portion located at more proximal end side than the intersection portion where the first arm **12** and the second arm **13** intersect is defined as the intermediate portion **14**. The intermediate portion **14** is formed to have a loop shape that can be hooked by the distal end portion **3***a* of the connection portion **3** described later.

[0067] According to the present embodiment, the first arm **12** and the second arm **13** have an elastic restoring force such that in a natural state, the first arm **12** and the second arm **13** are separated from each other, and the distance therebetween increases along the direction from the proximal end side to the distal end side. In the present specification, the "natural state" refers to a state in which an external force is not applied to the arm member **11**. A claw **12***a* extending toward the second arm **13** side is formed at the distal end portion of the first arm **12**. A claw **13***a* extending toward the first arm **12** side is formed at the distal end portion of the second arm **13**. The arm member **11** is biased by the elastic restoring force of the first arm **12** and the second arm **13** in a direction in which the loop shape formed in the intermediate portion **14** expands. Since the arm member **11** has the above-described configuration, for

example, when the intermediate portion **14** retracts with respect to the pressing tube **31** in a state in which the intermediate portion **14** is in contact with an inner wall (internal circumferential surface) at more distal end side than a step portion **31***b* of the pressing tube described below, the distance between the first arm **12** and the second arm **13** may become larger by the intermediate portion **14** being pressed by the inner wall of the pressing tube **31** until the intersection portion where the first arm **12** and the second arm **13** intersect enters the pressing tube **31**. Furthermore, when the first arm **12** and the second arm **13** are further moved toward the proximal end side with respect to the pressing tube **31** in a state where the intersection portion of the first arm **12** and the second arm **13** has entered the pressing tube **31**, the first arm **12** and the second arm **13** are in contact with the tapered surface **31***a* formed in the opening at the distal end side of the pressing tube **31** and the distance therebetween decreases. That is, the first arm **12** and the second arm **13** may transition from an open configuration in which they are separated from each other to a closed configuration in which they approach each other to be close to each other.

[0068] The arm member **11** is formed, for example, by bending a metal material such as a plate spring material such as stainless steel to form the first arm **12** and the second arm **13**, and then intersecting the first arm **12** and the second arm **13**. The arm member **11** has this configuration such that the arm member **11** is slidable along the inner wall of the pressing tube **31** when moving inside the pressing tube **31** as described below.

[0069] A pair of first locked portions **16**, **17** are formed on the first arm **12** and the second arm **13** of the arm member **11** respectively. More specifically, the pair of first locked portions **16**, **17** protrude orthogonally to the longitudinal direction in which the first arm **12** and the second arm **13** of the arm member **11** extend. The pair of first locked portions **16**, **17** may be formed at positions symmetrical with respect to the axis in the longitudinal direction in which the arm member **11** extends. By forming the pair of first locked portions **16**, **17** of the clip **10**, when the arm member **11** is retracted into the pressing tube **31**, the arm member **11** comes into contact with the inner wall of the pressing tube **31** to restrict the movement of the arm member **11** with respect to the pressing tube **31**. According to the present embodiment, the pair of first locked portions **16**, **17** only have to be able to come in contact with the inner wall of the pressing tube **31** and the shape thereof is not particularly limited. However, in order to smoothly re-grasp the target tissue using the clip **10** described later, it is preferable that the pair of first locked portions **16**, **17** be formed in a shape that does not bite into the inner wall of the pressing tube **31**. For example, the pair of first locked portions **16**, **17** may be formed in a circular arc shape or the like whose surface that abuts the inner wall of the pressing tube **31** is rounded.

(Structure of Pressing Tube)

[0070] According to the present embodiment, the pressing tube **31** is a pipe formed in a cylindrical shape having a longitudinal axis. For convenience of description, an example in which the longitudinal axis of the pressing tube **31** is the axis C**1** will be described. The pressing tube **31** has an inner diameter such that the intermediate portion **14** of the arm member **11** is able to enter. That is, the pressing tube **31** is formed with a lumen into which the first arm **12** and the second arm **13** of the arm member **11** are enterable. At least part of the connection portion **3** described later can also enter the lumen formed in the pressing tube **31**. According to the present embodiment, the pressing tube **31** is formed to have the outer diameter that is larger than the inner diameter of the sheath **66** of the insertion portion **65** described later.

[0071] According to the present embodiment, the pressing tube **31** is formed to have the inner diameter such that when the pressing tube **31** is positioned inside the pressing tube **31** with the hook **62***a* provided at the distal end of the operation wire **62** described later and the notch **3***g* of the connection portion **3** are engaged with each other, the connection portion **3** cannot rotate with respect to the hook **62***a*. More specifically, as shown in FIGS. **8** to **10**, in the above-described state, the connection portion **3** only has to be formed to rotate with respect to the hook **62***a* in a direction intersecting the direction of axis C**1** so as to release the engagement state between the hook **62***a* and the connection portion **3**, and it is not necessary that the connection portion **3** does not rotate with respect to the hook **62***a* at all.

[0072] The members including the arm member **11** that configure the clip **10** are made of a material such as the cobalt chromium alloy, the titanium, or the stainless steel and the like. The clip **10** is also configured to be observable under MRI (Nuclear Magnetic Resonance Imaging).

[0073] For example, the arm member **11** is integrally formed by punching a plate material formed of a cobalt chrome alloy or the like in which the first arm **12** and the second arm **13**, the intermediate portion **14**, and the pair of first locked portions **16** and **17** are expanded in a planar shape.

[0074] As shown in FIG. **3**, a tapered surface **31***a* is formed on the inner wall of the distal end portion of the pressing tube **31** over the entire circumference. The tapered surface **31***a* has a diameter increasing toward the distal end side. In the present embodiment, the pressing tube **31** may be integrally formed of a material such as the **64** titanium alloy (Ti-6AL-4V) or the cobalt chromium alloy and the like.

[0075] According to the present embodiment, a step portion **31***b* is formed which protrudes from the inner wall of the pressing tube **31** toward the inside of the pressing tube **31** in the radial direction. The pressing tube **31** is formed to have a large-diameter portion **31***c* located on the distal end side of the step portion **31***b* and a small-diameter portion **31***d* located on the proximal end side of the step portion **31***b*. That is, in the pressing tube **31**, the large-diameter portion **31***c* has a larger inner diameter than the small-diameter portion **31***d*. The large-diameter portion **31***c* of the pressing tube **31** has an inner diameter such that the pair of first locked portions **16**, **17** of the arm member **11** can advance and retract therein. Further, the small-diameter portion **31***d* of the pressing tube **31** has an inner diameter smaller than the width of the portion of the arm member **11** where the pair of first locked portions **16** and **17** are formed. Therefore, when the arm member **11** is retracted into the pressing tube **31** to be located at the proximal end side of the step portion **31***b*, the pair of first locked portions **16**, **17** of the arm member **11** cut into the inner wall of the small-diameter portion **31***d* of the pressing tube **31** such that the movement of the arm member **11** toward the distal end side with respect to the pressing tube **31** is restricted.

(Structure of Connection Portion)

[0076] According to the present embodiment, the connection portion (first link) **3** is formed to have, as shown in FIGS. **1** and **3**, a distal end portion **3***a*, a rod portion **3***b*, a hook portion **3***c*, a notch portion **3***g*, an insertion hole **3***e*, and a proximal end portion **3***f*. The connection portion **3** is formed by a method such as injection molding using a resin material having a predetermined strength.

[0077] As shown in FIG. **3**, the connection portion **3** is configured to connect the arm member **11** of the clip **10** and an operation wire **62** described later. The distal end portion **3***a* of the connection portion **3** is configured to support the hook portion **3***c* for connecting the arm member **11**, and the shape thereof is not particularly limited. The hook portion **3***c* is formed to protrude from the distal end portion **3***a* in a direction orthogonal to the direction of the longitudinal axis in which the connection portion **3** extends, and the hook portion **3***c* is hooked on a loop formed in the intermediate portion **14** of the arm member **11** so as to connect the arm member **11** to the connection portion **3**.

[0078] As shown in FIG. **3**, the proximal end portion **3***f* of the connection portion **3** is formed by bifurcating from the distal end side toward the proximal end side of the connection portion **3**. In other words, the proximal end portion **3***f* is formed to have a pair of legs being apart from each other and an insertion hole **3***e* formed between the pair of legs. More specifically, as shown in FIG. **3**, the insertion hole **3***e* is formed to have a width suitable for the arrowhead-shaped hook **62***a* (see FIG. **6**) disposed at the distal end of the operation wire **62** described later to be inserted between the pair of legs of the proximal end portion **3***f*. Although details will be described later, when the hook **62***a* is inserted into the insertion hole **3***e* formed in the proximal end portion **3***f*, the outer circumferential surface of the hook **62***a* presses while contacting the inner circumferential surface of the insertion hole **3***e* such that the pair of legs of the proximal end portion **3***f* are elastically deformed outward in the radial direction with respect to the longitudinal axis direction of the connection portion **3** (see FIG. **6**). Therefore, the hook **62***a* may pass through the insertion hole **3***e* and enter the notch portion **3***g* of the proximal end portion **3***f*.

[0079] As shown in FIG. **1** and FIG. **3**, a notch portion **3***g* is formed by cutting a part of the proximal end portion **3***f*. The notch portion **3***g* has a width D that is large enough to accommodate the hook **62***a* when the hook **62***a*, which will be described later, enters the notch portion **3***g* through the insertion hole **3***e* formed in the proximal end portion **3***f*.

[0080] According to the present embodiment, the rod-shaped portion **3***b* connecting the distal end portion **3***a* and the proximal end portion **3***f* of the connection portion **3** is set to have lower strength than the other portions. Therefore, as will be described in detail later, when the clip **10** is indwelled, the connection portion **3** is broken at the rod-shaped portion **3***b* by retracting the operation wire **62** with a predetermined amount of force by the operator. At this time, the distal end portion **3***a* of the connection portion **3** is indwelled inside the body together with the clip **10**, and the proximal portion **3***f* is removed from the body by the operation wire **62** while being engaged with the hook **62***a* (see FIG. **12**).

[0081] According to the present embodiment, the connection portion **3** that engages with the intermediate portion **14** of the arm member **11** is biased toward the direction of moving to the distal end side by the elastic restoring force of the first arm **12** and the second arm **13** of the arm member **11**. Further, since the connection portion **3** has the dimension capable of being accommodated in the pressing tube **31**, as shown in FIG. **1**, the connection portion **3** is in an accommodation configuration of being accommodated in the pressing tube **31** in a natural state where no external force is applied thereto. Further, as shown in FIG. **3**, in this state, the outer diameter of the proximal end portion **3***f* is slightly smaller than the inner diameter of the small-diameter portion **31***d* of the pressing tube **31**. Therefore, even if the operator inserts the hook **62***a* of the operation wire **62** into the insertion hole **3***e*, the pair of legs of the proximal end portion **3***f* cannot be elastically deformed radially outward with respect to the longitudinal axis direction of the connection portion **3**. In other words, the clip **10** cannot be attached to the operation wire **62**, which will be described later, when the connection portion **3** is in the accommodation configuration of being accommodated in the pressing tube **31**.

[0082] Although not shown in the present embodiment, when the connection portion **3** is located in the large-diameter portion **31***c* of the pressing tube **31**, a certain clearance between the outer circumferential surface of the proximal end portion **3***f* and the inner circumferential surface of the large-diameter portion **31***c* of the pressing tube **31** is available. Therefore, when the operator inserts the hook **62***a* of the operation wire **62** into the insertion hole **3***e*, the pair of legs of the proximal end portion **3***f* can be elastically deformed slightly outward in the radial direction with respect to the longitudinal axis direction of the connection portion **3**. However, even in this state, the hook **62***a* cannot be inserted through the insertion hole **3***e* having a slightly enlarged diameter. In other words, in the present embodiment, the operator cannot attach the clip **10** to the operation wire **62** by inserting the hook **62***a* of the operation wire **62** into the notch portion **3***g* of the connection portion **3** in a state where the connection portion **3** is located inside the pressing tube **31**.

[0083] Further, since the pressing tube **31** in the present embodiment has the above-described configuration, when the hook **62***a* is located inside the pressing tube **31** in a state of being engaged with the notch portion **3***g*, it is possible to prevent the hook **62***a* from being unintentionally slipped from the notch portion **3***g*.

[0084] For convenience of description, in the present embodiment, the connection portion **3**, the pressing tube **31**, and the operation portion **100** described below are arranged along the common longitudinal axis C**1**.

(Structure of Clip Cartridge)

[0085] Next, the configuration of the clip cartridge **80** according to the present embodiment will be described. The clip cartridge **80** is configured to facilitate transportation during the process from the manufacturing of the clip **10** to the actual use thereof and to prevent the clip **10** from being contaminated by the external environment. As shown in FIG. **4**, the clip cartridge **80** according to the present embodiment is configured to include the clip **10** and a housing **40** configured to be able to accommodate the clip **10** inside. FIG. **4** is a partial cross-sectional view showing a state where the clip **10** is accommodated inside the housing **40** in the clip cartridge **80** at the time of shipping.

[0086] According to the present embodiment, FIG. **4** is used only to show the positional relationship between the clip **10** and the housing **40**. The housing **40** according to the

present embodiment is not limited to the configuration shown in FIG. **4**. The housing **40** according to the present embodiment only has to be able to suitably accommodate the clip **10** and has a size that is easy for the operator to grasp, and the shape thereof is not particularly limited. The housing **40** according to the present embodiment may employ the shape and configuration of the clip case described in Japanese Unexamined Patent Application, First Publication No. 2009-011852, for example.

[0087] As shown in FIG. **4**, the housing **40** according to the present embodiment is formed to have the clip storage portion **37** and the lumen **38** along the longitudinal axis in the main body **39**. In the clip storage portion **37**, an inner cavity is formed in which the arm member **11** in the open configuration can be stored. The lumen **38** is provided at the proximal end side of the clip storage portion **37** and is configured to be able to accommodate the pressing tube **31**. That is, in the housing **40**, the clip storage portion **37** and the lumen **38** are formed along the axis Y direction shown in FIG. **4**. In the clip storage portion **37**, the dimension of the inner cavity in the direction of the axis X shown in FIG. **4** may be equal to or larger than the maximum value of the distance between the first arm **12** and the second arm **13** of the arm member **11** in the open configuration. The inner diameter of the lumen **38** in the direction of the axis X may be larger than the outer diameter of the pressing tube **31**. The main body **39** of the housing **40** according to the present embodiment may be formed of, for example, various known resin materials that have a certain rigidness and are transparent.

[0088] Since the housing **40** according to the present embodiment has the above-described configuration, the housing **40** may be advanced and retracted along the longitudinal axis direction (the direction along the axis C**1**) while the clip **10** is accommodated in the housing **40**.

[0089] As shown in FIG. **4**, the housing **40** according to the present embodiment has two L-shaped grooves **391** formed on the proximal end side of the main body **39**. More specifically, the groove **391** formed in the main body **39** includes a horizontal groove (first groove) **392** formed to extend along the longitudinal axis direction, and a vertical groove (second groove) **393** formed at more distal end side than the horizontal groove **392** and extending in the direction orthogonal to the horizontal groove **392**. According to the present embodiment, the end surface of the horizontal groove **392** at the proximal end side is referred to as a proximal end surface of the groove **391**, and the end surface of the vertical groove **393** on the outer side in the radial direction of the housing **40** is referred to as the distal end surface of the groove **391**.

[0090] As shown in FIG. **4**, at the proximal end side of the housing **40**, a pair of stoppers **36** being in contact with the proximal end surface of the pressing tube **31** are provided. The stopper **36** may be formed integrally with the pin **361** provided in the groove **391**. Therefore, the pair of stoppers **36** may be moved along the groove **391** since the movement directions thereof are restricted by the pair of pins **361** respectively. Although details will be described later, as shown in FIG. **5**, when the operator grasps the pair of stoppers **36** and moves the stoppers **36** toward the distal end side along the longitudinal axis direction of the housing **40** (direction along the axis C**1**), the pressing tube **31** may be moved to the distal end side in a state where the stopper **36** is in contact with the proximal end surface of the pressing tube **31**.

[0091] As shown in FIG. **4**, for convenience of description, an example in which the stopper **36** is formed to have a rectangular shape will be described according to the present embodiment; however, the present disclosure is not limited to this configuration. According to the present embodiment, the stopper **36** only has to be in contact with the proximal end surface of the pressing tube **31** so as to move the pressing tube **31** toward the distal end side, and the shape and the dimension thereof is not particularly limited.

[0092] As shown in FIG. **4**, the distance between the pair of stoppers **36** in the direction of the axis X is larger than the inner diameter of the large-diameter portion **31***c* of the pressing tube **31**. Although details will be described later, according to the present embodiment, in the state in which the pair of stoppers **36** are arranged in the horizontal groove **392**, and the stoppers **36** are in contact with the proximal end surface of the pressing tube **31**, the operator may move the pressing tube **31** toward the distal end side such that the operator may insert the hook **62***a* of the operation wire **62** into the notch portion **3***g* of the connection portion **3** when at least the proximal end portion **3***f* of the connection portion **3** protrudes from the opening at the proximal end side of the pressing tube **31** (see FIG. **6** and FIG. **7**). In other words, the distance between the pair of stoppers **36** in the direction of the axis line X is equal to or larger than the maximum width of the proximal end portion **3***f* in the X direction when the hook **62***a* is inserted into the insertion hole **3***e* such that the pair of legs in the proximal end portion **3***f* are elastically deformed. Further, in the state in which the pair of stoppers **36** are arranged in the horizontal groove **392**, the distance between the pair of stoppers **36** in the axis X direction is equal to or less than the outer diameter of the pressing tube **31**.

[0093] According to the present embodiment, the pair of stoppers **36** and the pair of L-shaped grooves **391** may be provided in line symmetry with respect to the longitudinal axis C**1** of the housing **40**.

[0094] According to the present embodiment, the configuration in which the pair of stoppers **36** are provided in the main body **39** of the housing **40** is described as an example; however, the present disclosure is not limited to this configuration. With the configuration in which the housing **40** includes the pair of stoppers **36**, it is possible to uniformly apply the force at the proximal end surface of the pressing tube **31** in the operation of moving the pressing tube **31** to the distal end side as described below so as to smoothly move the pressing tube **31** to the distal end side. According to the present embodiment, only one stopper **36** may be provided as long as the pressing tube **31** can be moved to the distal end side.

[0095] As shown in FIG. **4**, an elastic member **362** is arranged in the vertical groove **393** formed in the main body **39**. The elastic member **362** is fixed to the end surface positioned at the outer side of the vertical groove **393** in the axis X direction, that is, the outer side in the radial direction of the housing **40**. The elastic member **362** is biased in the direction toward the longitudinal axis of the housing **40**, that is, inward in the radial direction of the housing **40**.

(Configuration of Applicator)

[0096] Subsequently, the configuration of the applicator **30** according to the present embodiment will be described with reference to FIG. **10**. As shown in FIG. **10**, the applicator **30** according to the present embodiment is configured to have an insertion portion **65** and an operation portion **100**.

(Structure of Insertion Portion)

[0097] The insertion portion **65** of the applicator **30** includes a sheath **66** and an operation wire (wire) **62**. The operation wire **62** is inserted into the sheath **66** so as to be advanceable and retractable therein. The operation wire **62** is configured to transmit the force with which the operator operates the operation portion **100** on the proximal end side (for example, the operation of pushing in the slider **102** and the operation of retracting the slider **102**) to the clip **10**.

[0098] The sheath **66** may be a coil sheath made of stainless steel such as SUS301 having high compression resistance strength. In this case, a coil formed by closely winding a wire (not shown) in the axial direction Y may be used as the sheath **66**. The sheath **66** has flexibility and is strong against the compressive force in the axial direction Y.

[0099] According to the present embodiment, the sheath **66** is formed to have an inner diameter substantially equal to the inner diameter of the small-diameter portion **31***d* of the pressing tube **31** (see FIG. **8**). Therefore, the clip **10** cannot be attached to the operation wire **62** inside the sheath **66**. Further, when the hook **62***a* is located inside the sheath **66** in a state of being engaged with the notch portion **3***g*, it is possible to prevent the hook **62***a* from being unintentionally slipped from the notch portion **3***g*.

[0100] According to the present embodiment, the operation wire **62** is formed of, for example, a metal single wire or a twisted wire. The hook (second link) **62***a* formed in the arrowhead shape, a shaft portion **62***c*, and a fixation portion **62***b* are connected to the distal end side of the operation wire **62**. The fixation portion **62***b* is a cylindrical member made of a metal material such as the stainless steel or the like, for example. The operation wire **62** is fixed to the fixation portion **62***b* by various known methods such as bonding, welding or the like. Further, the hook **62***a* and the fixation portion **62***b* are connected by the shaft portion **62***c* formed in a rod shape. Therefore, according to the present embodiment, the operation wire **62** is integrally formed with the hook **62***a*, the fixation portion **62***b*, and the shaft portion **62***c*. The hook **62***a* may advance and retract together with the operation wire **62** by the advancement and retraction operation of the operation wire **62**.

[0101] The hook **62***a* is formed to have a conical shape. As shown in FIG. **10**, the hook **62***a* has an outer circumferential surface formed in an inclined surface shape in which the outer diameter gradually decreases toward the distal end side. The outer diameter (width) d in the proximal end surface of the hook **62***a* is larger than the diameter of the insertion hole **3***e* formed in the proximal end portion **3***f* and equal to or less than the width D of the notch portion **3***g* in the state when the proximal end portion **3***f* of the connection portion **3** is not elastically deformed. As shown in FIG. **7**, an example in which the width D of the notch portion **3***g* is substantially equal to the width d of the hook **62***a* is described according to the present embodiment; however, the present disclosure is not limited to this configuration.

(Structure of Operation Portion)

[0102] As shown in FIG. **10**, the operation portion **100** includes an operation portion main body (handle) **101** and a slider **102**.

[0103] The operation portion main body **101** is attached to the proximal end portion of the sheath **66**. The operation portion main body **101** is formed in a rod shape extending in the axial direction Y, and has a finger hook portion **101***a* at the proximal end portion. The operation portion main body **101** is provided with a slit **101***b* extending in the axial direction Y.

[0104] The slider **102** is provided to be inserted into the operation portion main body **101**. The slider **102** is slidable (advanceable and retractable) in the Y-axis direction with respect to the operation unit body **101**. According to the present embodiment, when the slider **102** is advanced and retracted in the axial direction Y, the operation wire **62** and the hook **62***a* fixed to the distal end of the operation wire **62** are advanced and retracted. In the state in which the operation wire **62** and the connection portion **3** are connected, the arm member **11** of the clip **10** may advance or retract together with the operation wire **62** by the advancement or retraction of the operation wire **62**. As a result, the pair of first arm **12** and second arm **13** of the arm member **11** may be opened or closed.

[0105] The slider **102** is formed in a cylindrical shape. On the outer circumferential surface of the slider **102**, a recess **102***a* is formed over the entire circumference. On the slider **102**, a flange portion **102***b*, the recess **102***a*, and a flange portion **102***c* are formed in this order from the distal end side to the proximal end side in the axial direction Y. The pair of flange portion **102***b* and flange portion **102***c* have elliptical shapes when viewed in the axial direction Y. As a result, the slider **102** can be easily grasped, and space can be saved when the operation portion **100** is packed.

[0106] The slider **102** engages with the slit **101***b* of the operation portion main body **101** to limit the movement range of the slider **102** in the axial direction Y with respect to the operation portion main body **101**.

According to the present embodiment, the operation portion **100** may be adopted by using the configuration of the operation unit of various known endoscope treatment devices.

(Operation to Attach the Clip to the Applicator)

[0107] Hereinafter, with reference to FIGS. **4** to **9**, an operation of attaching the clip **10** according to the present embodiment to the applicator **30** will be described as preparation before the treatment with respect to the target tissue in the body.

[0108] As shown in FIG. **4**, the clip **10** is shipped while being accommodated in the housing **40**. In this state, the pressing tube **31** including the connection portion **3** is located inside the lumen **38** of the housing **40**.

[0109] As shown in FIG. **4**, the clip **10** has an open configuration in which the first arm **12** and the second arm **13** of the arm member **11** protrude from the opening at the distal end side of the pressing tube **31** and separate from each other in the state in which the first arm **12** and the second arm **13** of the arm member **11** are in contact with the tapered surface **31***a* formed at the distal end side of the pressing tube **31**. The first arm **12** and the second arm **13** of the arm member **11** are formed to have a pair of claws **12***a*

and **13***a* provided on the distal end side are in contact (abut) with the inner wall of the clip storage portion of the housing **40**. In the clip storage portion **37** of the housing **40** according to the present embodiment, an inner cavity having a size larger than the maximum value of the distance between the first arm **12** and the second arm **13** of the arm member **11** in the open configuration is formed such that it is impossible that the first arm **12** and the second arm **13** of the arm member **11** are bent by abutting the inner wall of the clip storage portion.

[0110] The intermediate portion **14** of the arm member **11** forms a loop shape so as to be hooked on the hook portion **3***c* of the connection portion **3**. That is, the clip **10** and the connection portion **3** are engaged with each other by the intermediate portion **14** being hooked to the hook portion **3***c*. The elastic restoring force of the first arm **12** and the second arm **13** of the arm member **11** applies on the connection portion **3** such that the connection portion **3** is located inside the pressing tube **31**.

[0111] As shown in FIG. **4**, the pair of stoppers **36** are positioned at the proximal end side of the housing **40**, and the respective distal end surfaces **364** are in contact (abut) with the proximal end surface of the pressing tube **31**. The pressing tube **31** receives both the pressing force of the first arm **12** and the second arm **13** of the arm member **11** on the tapered surface **31***a* at the distal end side and the restriction force of the stopper **36** on the proximal end surface. The pressing force of the first arm **12** and the second arm **13** of the arm member **11** is applied to move the pressing tube **31** to the proximal end side. On the other hand, the movement of the pressing tube **31** toward the proximal end side is restricted by the restriction force on the distal end surface of the stopper **36**. In other words, the pressing tube **31** is held at the position in the lumen **38** formed in the housing **40** since the two forces are simultaneously applied on the pressing tube **31** in a state in which the two forces are balanced.

[0112] Next, the operator grasps the pair of stoppers **36** and moves (slides) the pair of stoppers **36** together with the pin **361** toward the distal end side. As shown in FIG. **5**, the pressing tube **31** moves to the distal end side together with the movement of the pair of stoppers **36** being in contact with the proximal end surface of the pressing tube **31** toward the distal end side. In this process, since the pair of stoppers **36** move in the horizontal groove **392** along the longitudinal axis direction of the housing **40**, the distance between the pair of stoppers **36** is constant. As described above, since the distance between the pair of stoppers **36** is set to be larger than the width of the connection portion **3**, the pressing tube **31** does not collide with the connection portion **3** in the process of moving to the distal end side.

[0113] As shown in FIG. **5**, during the process in which the pressing tube moves toward the distal end side, the first arm **12** and the second arm **13** of the arm member **11** of the clip **10** come in contact with the tapered surface **31***a* and press the tapered surface **31***a*. The claws **12***a* and **13***a* of the first arm **12** and the second arm **13** of the arm member **11** move along the inner wall of the clip storage portion **37** of the housing **40** in the direction in which the distance therebetween decreases. As a result, the first arm **12** and the second arm **13** of the arm member **11** may transition from the above-mentioned open configuration to a closed configuration in which the first arm **12** and the second arm **13** of the arm member **11** are in contact with each other or the distance therebetween is substantially zero. At this time, the first arm **12** and the second arm **13** of the arm member **11** are partially inserted into the pressing tube **31**.

[0114] When the operator moves the pair of stoppers **36** while holding them until the pin **361** reaches the distal end of the horizontal groove **392**, the connection portion **3** protrudes from the opening at the proximal end side of the pressing tube **31**, as shown in FIG. **5**. According to the present embodiment, a state in which the connection portion **3** protrudes from the opening on the proximal end side of the pressing tube **31** is referred to as a protrusion configuration of the connection portion **3**. In the protrusion configuration in which the connection portion **3** protrudes from the opening at the proximal end side of the pressing tube **31**, at least part of the proximal end portion **3***f* including the notch portion **3***g* of the connection portion **3** protrudes from the opening at the proximal end side of the pressing tube **31**; however, the present disclosure is not limited to this configuration. According to the present embodiment, at a position where part of the proximal end portion **3***f* of the connection portion **3** protrudes from the pressing tube **31**, it is only necessary that the operation for connecting the hook **62***a* provided at the distal end of the operation wire **62** described later to the connection portion **3** may be performed. The protrusion amount of the connection portion **3** from the pressing tube **31** is not particularly limited.

[0115] Due to the elastic restoring force of the first arm **12** and the second arm **13** of the arm member **11** in the closed configuration, the pressing tube **31** tends to move to the proximal end side. However, since the proximal end surface of the pressing tube **31** is in contact with the distal end surfaces **364** of the pair of stoppers **36** and the position of the stopper **36** is held by the operator, the movement of the pressing tube **31** toward the proximal end side is restricted. In other words, the stopper **36** and the pressing tube **31** are in contact with each other such that the protrusion configuration of the connection portion **3** may be maintained. The stopper **36** may regulate the transition from the protrusion configuration in which the connection portion **3** protrudes from the pressing tube **31** to the accommodation configuration in which the connection portion **3** is accommodated in the pressing tube **31**.

[0116] According to the present embodiment, the stopper **36** moves along the horizontal groove **392** in the L-shaped groove **391** such that the relative position between the connection portion **3** and the pressing tube **31** may be controlled.

[0117] According to the present embodiment, since the elastic member **362** that is biased radially inward of the housing **40** is provided in the vertical groove **393** of the L-shaped groove **391**, unless the operator moves the pin **361**, it is impossible for the pin **361** to move radially outward of the housing **40** in the vertical groove **393**. Therefore, the state in which the stopper **36** and the pressing tube **31** are engaged is not released by the unintentionally movement of the pin **361**.

[0118] According to the present embodiment, the state in which the stopper **36** is positioned at the distal end of the horizontal groove **392** is maintained by the operator grasping the stopper **36** is described as an example; however, the present disclosure is not limited to this configuration. By appropriately configuring the horizontal groove **392** and the pin **361**, the position of the stopper **36** may be maintained even if the operator does not grasp the stopper **36**.

[0119] For example, an elastically deformable restriction member (not shown) may be provided on the inner wall of the horizontal groove **392** at the distal end side to restrict the movement of the pin **361** toward the proximal end side. At this time, at the position where the restriction member is provided in the horizontal groove **392**, a portion where the inner diameter of the horizontal groove **392** becomes smaller is formed. When the operator operates the stopper **36** to move the pin **361** toward the distal end side in the horizontal groove **392**, the pin **361** and the restriction member abut against each other and the restriction member elastically deforms, the pin **361** may climb over the restriction member to reach the connection portion between the horizontal groove **392** and the vertical groove **393**. However, it is impossible for the pin **361** to climb over the restriction member only by the press force for moving the pressing tube **31** and the stopper **36** that abuts the pressing tube **31** toward the proximal end side due to the elastic restoring force of the first arm **12** and the second arm **13** of the arm member **11**.

[0120] Accordingly, even if the operator does not grasp the stopper **36**, the state in which the stopper **36** is positioned at the distal end of the horizontal groove **392** may be maintained.

[0121] For example, the frictional force between the horizontal groove **392** and the pin **361** may be increased by appropriately selecting the materials for the inner wall of the horizontal groove **392** and the outer circumferential surface of the pin **361**. In this case, due to the frictional force between the horizontal groove **392** and the pin **361**, the pin **361** may be arranged at a desired position in the horizontal groove **392** unless the operator operates the stopper **36**.

[0122] In the state in which the stopper **36** positioned at the distal end of the horizontal groove **392**, the operator subsequently operates the operation portion **100** (see FIG. **10**) of the applicator **30** to move the sheath **66** of the insertion portion **65** toward the connection portion **3** at the distal end side so as to cause the distal end surface of the sheath **66** to come in contact with the proximal end surface **363** of the stopper **36**.

[0123] In this state, as shown in FIG. **6**, at least part of the proximal end portion **3***f* of the connection portion **3** protrudes from the pressing tube **31** toward the proximal end side to be located between the pair of stoppers **36**. In this state, due to the operation of the operator to push the slider **102** toward the distal end side along the slit **101***b* of the operation portion main body **101**, the hook **62***a* provided at the distal end of the operation wire **62** advances together with the operation wire **62**, and the hook **62***a* comes in contact and presses the insertion hole **3***e* of the proximal end portion **3***f* of the connection portion **3**.

[0124] When the operator pushes the slider **102** toward the distal end side, as shown in FIG. **6**, the pair of legs of the proximal end portion **3***f* of the connection portion **3** are elastically deformed radially outward with respect to the longitudinal axis C**1**. The hook **62***a* passes through the insertion hole **3***e* formed in the proximal end portion **3***f* of the connection portion **3** and enters the notch portion **3***g* of the connection portion **3**. As shown in FIG. **6**, when the hook **62***a* passes through the insertion hole **3***e* of the connection portion **3**, the pair of legs of the base end portion **3***f* of the connection portion **3** are elastically deformed such that the maximum value of the width of the proximal end portion **3***f* of the connection portion **3** in the X axis direction is equal to or less than the distance between the pair of stoppers **36** and larger than the inner diameter of the sheath **66** and the inner diameters of the large-diameter portion **31***c* and the small-diameter portion **31***d* of the pressing tube **31**. In other words, according to the present embodiment, as shown in FIG. **6**, the hook **62***a* of the operation wire **62** passes through the insertion hole **3***e* to be engaged with the notch portion **3***g* only in the state when the proximal end portion **3***f* of the connection portion **3** is not accommodated inside the pressing tube **31** and the sheath **66**.

[0125] As a result, as shown in FIG. **7**, the hook **62***a* is engaged with the notch **3***g* of the connection portion **3**, and the connection portion where the connection portion **3** and the hook **62***a* are engaged with each other is located between the pair of stoppers **36**, and the state of the hook **62***a* protruding from the opening at the proximal end side of the pressing tube **31** is maintained. That is, the protrusion configuration of the connection portion **3** is maintained.

[0126] More specifically, when the operator pushes the slider **102** to insert the hook **62***a* provided at the distal end of the operation wire **62** into the insertion hole **3***e* formed in the proximal end portion **3***f* of the connection portion **3**, part of the proximal end portion **3***f* is elastically deformed. Therefore, the elastic restoring force generated by the partial elastic deformation of the proximal end portion **3***f* may be transmitted to the operator via the operation wire **62**. When the hook **62***a* climbs over the proximal end portion **3***f* of the connection portion **3** and enters the notch portion **3***g*, the proximal end portion **3***f* is restored to the original shape and the hook **62***a* is accommodated in the notch portion **3***g*. By the operations described above, the operation wire **62** and the clip **10** are connected by the connection portion **3**.

[0127] It is preferable for the operator since it is easy to confirm that the hook **62***a* enters the notch portion **3***g* of the connection portion **3** and engages with the notch portion **3***g* when the operator pushes the slider **102** until the slider **102** comes in contact with the distal end surface of the slit **101***b* during the operation of the operator pushing the slider **102**. However, the present disclosure is not limited to this case.

[0128] That is, the hook **62***a* may enter the notch **3***g* of the connection portion **3** along the slit **101***b* and be engaged therewith before the slider **102** comes into contact with the distal end surface of the slit **101***b*. At this time, when the hook **62***a* enters the notch portion **3***g* of the connection portion **3** and is engaged therewith, the position of the slider **102** in the operation portion **100** within the slit **101***b* may be considered as the most advanced position of the slider **102**. In this case, since the hook **62***a* is accommodated in the notch portion **3***g*, even if the operator pushes the slider **102**, the resistance by the notch portion **3***g* may be transmitted to the operator, and the operator may similarly confirm that the connection portion **3** and the hook **62***a* are engaged with each other.

[0129] In the state in which the operation wire **62** and the clip **10** are connected to each other, the clip **10** may advance and retract together with the operation wire **62** by the operation to the slider **102** by the operator. More specifically, the first arm **12** and the second arm **13** of the arm member **11** of the clip **10** may advance and retract together with the operation wire **62** due to the advancement and the retraction of the operation wire **62**. At this time, the first arm **12** and the second arm **13** of the arm member **11** may move relative to the pressing tube **31**, as described below. As a result, the first arm **12** and the second arm **13** of the arm member **11** are in contact with the tapered surface **31***a* formed at the distal

end side of the pressing tube **31**, while the opening width of the arm member **11** therebetween is increased or decreased.

[0130] As shown in FIG. **7**, in the state in which the operation wire **62** and the clip **10** are connected, the operator moves (slides) the pair of stoppers **36** outward in the radial direction of the housing **40** along the vertical groove **393**. When the pair of stoppers **36** move outward in the radial direction of the housing **40** along the vertical groove **393**, the engagement between the proximal end surface of the pressing tube **31** and the distal end surface **364** of the stopper **36** is released.

[0131] At this time, the pressing tube **31** moves to the proximal end side by the elastic restoring force of the first arm **12** and the second arm **13** of the arm member **11** of the clip **10**. As described above, the pressing tube **31** according to the present embodiment is formed to have the outer diameter larger than the inner diameter of the sheath **66**. Therefore, the pressing tube **31** moves toward the proximal end side until the proximal end surface comes in contact with the distal end surface of the sheath **66**. As shown in FIG. **8**, the connection portion where the connection portion **3** and the operation wire **62** are engaged with each other is accommodated in the pressing tube **31**. In this state, even if the operator operates the slider **102** to advance or retract the operation wire **62**, the connection portion between the connection portion **3** and the hook **62***a* is located inside the pressing tube **31** or the sheath **66**, and thus it is impossible to unintentionally release the engagement between the connection portion **3** and the hook **62***a*.

[0132] In other words, when the operator moves the stopper **36** outward in the radial direction of the housing **40** along the vertical groove **393**, the restriction to the transition of the connection portion **3** from the protrusion configuration to the accommodation configuration by the stopper **36**. Accordingly, due to the elastic restoring force of the first arm **12** and the second arm **13** of the arm member **11**, the pressing tube **31** moves toward the sheath **66** to the proximal end side and contacts the sheath **66**. On the other hand, the connection portion **3** may transition from the protrusion configuration of protruding from the pressing tube **31** to the accommodation configuration of being accommodated in the pressing tube **31**.

[0133] According to the present embodiment, the stopper **36** moves outward in the radial direction of the housing **40** along the vertical groove **393** of the L-shaped groove **391**, so as to release the restriction with respect to the transition of the connection portion **3** from the protrusion configuration to the housing shape by the stopper **36**. Accordingly, the vertical groove **393** in the L-shaped groove **391** according to the present embodiment is considered as a release mechanism for releasing the restriction to the transition of the connection portion **3** from the protrusion configuration to the accommodation configuration.

[0134] According to the present embodiment, in a case in which the elastic member **362** is not provided, it is possible that the pin **361** enters the vertical groove **393** and unintentionally moves in the direction toward the distal end surface of the L-shaped groove **391**, that is, outward in the radial direction of the housing **40**. When the pin **361** moves, the stopper **36** formed integrally with the pin **361** similarly moves outward in the radial direction of the housing **40**. At this time, the state in which the stopper **36** and the pressing tube **31** are engaged with each other may be unintentionally released. As a result, the elastic restoring force of the arm member **11** of the clip **10** applies on the pressing tube **31** and moves the pressing tube **31** to the proximal end side.

[0135] According to the present embodiment, the elastic member **362** is configured to restrict the unintentional movement of the stopper **36** outward in the radial direction of the housing **49** together with the pin **361**. Various known springs may be adopted as the elastic member **362**. However, if the operator may grasp the stopper **36** so as to restrict the unintentional movement of the stopper **36**, it is not necessary to provide the elastic member **362**. That is, the elastic member **362** is not an essential configuration component of the housing **40**.

[0136] Thereafter, the operator operates the operation portion main body **101** of the operation portion **100**, and as shown in FIG. **9**, the operation wire **62** and the clip **10** engaged with the operation wire **62** may be removed from the opening at the proximal end side of the lumen **38** of the housing **40**. At this time, as shown in FIG. **9**, the stopper **36** may be maintained to be at the position in the vertical groove **393** at the outside in the radial direction of the housing **40** by the operator, or the operator may release the stopper **36**.

[0137] By the operations described above, the clip **10** according to the present embodiment is attached to the applicator **30**. As shown in FIG. **9**, in the state in which the clip **10** is attached to the applicator **30**, the connection portion **3** is in the accommodation configuration of being accommodated in the pressing tube **31**.

(Procedure with Medical Device)

[0138] Hereinafter, procedures for ligating the target tissue T using the medical device **1** according to the present embodiment having the above-described configuration will be described with reference to FIG. **10** to FIG. **12**.

[0139] When the clip **10** is taken out from the housing **40** in the state of being attached to the applicator **30**, the first arm **12** and the second arm **13** of the arm member **11** of the clip **10** are in the open configuration of separating from each other due to the elastic restoring force themselves, as shown in FIG. **10**. In this state, the slider **102** is at the most advanced position in the slit **101***b* in the operation portion **100** at the proximal end side. Although it is not shown in figures, for example, the slider **102** may be at the position in contact with the distal end surface of the slit **101***b*, or the slider **102** may be at the position on the proximal end side in the slit **101***b*, which is separated from the distal end surface.

[0140] As described above, the elastic restoring force of the first arm **12** and the second arm **13** of the arm member **11** has an effect of moving the pressing tube **31** to the proximal end side. Therefore, as shown in FIG. **8** to FIG. **9**, the proximal end surface of the pressing tube **31** is in contact with the distal end surface of the sheath **66**. However, since the pressing tube **31** is formed to have the outer diameter larger than the inner diameter of the sheath **66**, it is impossible for the pressing tube **31** to enter the sheath **66**. In this state, the connection portion between the connection portion **3** and the hook **62***a* is located inside the pressing tube **31**.

[0141] The operator inserts an endoscope (not shown) into the body of the patient. Subsequently, the operator inserts the medical device **1** from the proximal end portion of the channel of the endoscope, operate the medical device **1** to protrude from the distal end portion of the channel of the endoscope, and moves the medical device **1** to the vicinity of the target tissue T as the treatment target. In this process, the first arm **12** and the second arm **13** of the arm member

11 are maintained in the closed configuration by the operator continuing to grasp the slider **102**.

[0142] The operator inserts the medical device **1** through the channel of the endoscope and moves the medical device **1** to the vicinity of the target tissue T so as to cause the arm member **11** to transition from the closed configuration to the open configuration.

[0143] At this time, the operator may operate the slider **102** to advance and retract so as to adjust the opening width between the first arm **12** and the second arm **13** of the arm member **11** to an optimum value in accordance with the size of the target tissue T. As a result, as shown in FIG. **10**, the operator may adjust the opening width between the first arm **12** and the second arm **13** of the arm member **11** to the appropriate value with respect to the size of the target tissue T.

[0144] More specifically, according to the present embodiment, the operator operates the slider **102** of the operation portion **100** to advance and retract such that the clip **10** advances and retracts together with the operation wire **62**. That is, the first arm **12** and the second arm **13** of the arm member **11** of the clip **10** may move relative to the pressing tube **31** together with the advancement and retraction of the operation wire **62**. As a result, the first arm **12** and the second arm **13** of the arm member **11** are in contact with the tapered surface **31***a* provided on the distal end side of the pressing tube **31**, while the opening width of the arm member **11** therebetween is increased or decreased. For example, as shown in FIG. **10**, when the operator retracts the slider **102** toward the proximal end side, in the arm member **11**, the intermediate portion **14** (the portion at more proximal end side than the location where the first arm **12** and the second arm **13** intersect) enters the large-diameter portion **31***c* of the pressing tube **31**, and the first arm **12** and the second arm **13** are separated from each other in the radial direction of the arm member **11**. As a result, the operator may adjust the opening width of the arm member **11** in accordance with the size of the target tissue T.

[0145] Next, the operator operates an endoscope (not shown) to adjust the orientation and posture of the arm member **11** of the clip **10** and then presses the arm member **11** toward the target tissue T. By such operations, the target tissue T is located between the first arm **12** and the second arm **13** of the arm member **11** in the open configuration. When the operator confirms that the target tissue T is located between the first arm **12** and the second arm **13**, the operator may operate the endoscope to grasp the target tissue with the first arm **12** and the second arm **13** of the arm member **11**.

[0146] When the operator can confirm that the target tissue Tis located between the first arm **12** and the second arm **13**, the operator grasps the operation portion main body **101** and moves the slider **102** to the proximal end side, as shown in FIG. **10**. At this time, the operation wire **62**, the hook **62***a* and the connection portion **3** which are engaged with each other, and the first arm **12** and the second arm **13** move together toward the proximal end side. The first arm **12** and the second arm **13** come in contact with the tapered surface **31***a* provided on the distal end side of the pressing tube **31**, while the first arm **12** is elastically deformed toward the second arm **13** side and the second arm **13** is elastically deformed toward the first arm **12** side. As a result, the claw **12***a* provided on the distal end side of the first arm **12** and the claw **13**A provided on the distal end side of the second arm **13** approach each other. In other words, the opening width of the arm member **11** between the first arm **12** and the second arm **13** is decreased, and the arm member **11** transitions from the open configuration to the closed configuration.

[0147] As shown in FIG. **10** and FIG. **11**, in the process in which the operator retracts the slider **102** to the proximal end side, the proximal end portion of the arm member **11** including the intermediate portion **14** is retracted to the proximal end side in the pressing tube **31**. According to the present embodiment, when the pair of first locked portions **16**, **17** provided at the proximal end portion of the arm member **11** are located at more distal end side than the step portion **31***b* in the pressing tube **31**, the operator may move the arm member **11** toward the distal end side by pushing the slider **102** toward the distal end side. In other words, in the state in which the pair of first locked portions **16**, **17** of the arm member **11** are located at more distal end side than the step portion **31***b*, the operator may cause the arm member **11** to transition from the closed configuration to the open configuration by pushing the slider **102** toward the distal end side. By this operation, the operator may re-grasp the target tissue T using the arm member **11**.

[0148] That is, in the process of retracting the slider **102** until the above-described state, the operator may operate the endoscope so as to direct the clip **10** toward the target tissue T again. Subsequently, the target tissue T maybe re-grasped by the clip **10** by the procedure described above.

[0149] As a result of the operator retracting the slider **102** to the proximal end side, as shown in FIG. **11**, the target tissue T is grasped by the arm member **11** in the state of being tightly bound by the first arm **12** and the second arm **13** at the root of the target tissue T. According to the present embodiment, the state in which the distance between the first arm **12** and the second arm **13** is substantially zero is included in the closed configuration of the arm member **11**. In this procedure, as shown in FIG. **11**, the connection portion of the hook **62***a* and the connection portion **3** is moved toward the proximal end side in the pressing tube **31** and partially enters the sheath **66**. According to the present embodiment, since the inner diameter of the sheath **66** is substantially equal to the inner diameter of the small-diameter portion **31***d* of the pressing tube **31**, it is impossible for the engagement between the hook **62***a* and the connection portion **3** in the sheath **66** to be unintentionally released.

[0150] When the operator confirms that the target tissue T is grasped in a desired state by the arm member **11** in the closed state, the operator may retract the slider **102** toward the proximal end side until the pair of first locked portions **16**, **17** provided on the arm member **11** climb over the step portion **31***b* in the pressing tube **31** to be positioned in the small-diameter portion **31***d*. In this state, the pair of first locked portions **16** and **17** cuts into the inner wall of the small-diameter portion **31***d* of the pressing tube **31** so as to restrict the arm member **11** from moving toward the distal end side with respect to the pressing tube **31**. In other words, when the pair of first locked portions **16**, **17** provided on the arm member **11** are located in the small-diameter portion **31***d* of the pressing tube **31**, the state in which the arm member **11** in the closed configuration grasps the target tissue T is maintained.

[0151] According to the present embodiment, even if the operator operates the slider **102** (pushing the slider **102** toward the distal end side or retracting the slider **102** toward the proximal end side), the state in which the connection

portion between the connection portion **3** and the hook **62***a* is positioned in the pressing tube **31** or the sheath **66** is maintained. Accordingly, according to the present embodiment, even if the operator operates the slider **102** to re-grasp the target tissue T using the arm member **11**, the engagement between the connection portion **3** and the hook **62***a* is not released.

[0152] The operator may confirm the state in which the target tissue T is grasped by the arm member **11** in the closed configuration. If the operator confirms that the target tissue T is grasped by the arm member **11** of the clip **10** in the desired state, the operator may lock the state in which the target tissue T is grasped by the clip **10** and indwell the clip **10** in the body.

[0153] Specifically, the operator further retracts the slider **102** toward the proximal end side such that the pair of first locked portions **16**, **17** provided on the arm member **11** are positioned in the small-diameter portion **31***d* of the pressing tube **31**. In this state, the first arm **12** and the second arm **13** of the arm member **11** come into contact with the tapered surface **31***a* at the distal end side of the pressing tube **31** and pressed by the tapered surface **31***a*. Accordingly, the state in which the first arm **12** and the second arm **13** of the arm member **11** grasp the target tissue T in the closed configuration is maintained. At this time, the force of retracting the slider **102** to the proximal end side by the operator concentrates on the connection portion **3** such that the most fragile rod-shaped portion **3***b* in the connection portion **3** is broken. As a result, as shown in FIG. **12**, when the target tissue T is tightly bound by the clip **10**, the connection portion **3** is broken at the rod-shaped portion **3***b*, the distal end portion **3***a* of the connection portion **3** is indwelled in the body together with the clip **10**, and the proximal end portion **3***f* in the state of engaging with the hook **62***a* is removed from the body by the operation wire **62**.

[0154] After the clip **10** ligating the target tissue Tis indwelled in the body, the operator operates the endoscope to take out the medical device **1** from the channel of the endoscope. Subsequently, the operator takes necessary measures and finishes the series of procedures.

[0155] As shown in FIG. **13** and FIG. **14**, the situation in which the connection portion between the connection portion **3** and the hook **62***a* is located outside the pressing tube **31** is assumed. In this case, when the connection portion **3** is rotated along the direction indicated by the arrow D and intersecting the direction of the axis C1, the hook **62***a* may be pulled out from the side of the notch portion **3***g* of the connection portion **3**. In other words, when the connection portion between the connection portion **3** and the hook **62***a* is located outside the pressing tube **31**, there is possibility that the engagement state of the connection portion **3** and the hook **62***a* is unintentionally released. As a result, the clip **10** may be unintentionally slipped from off the applicator **30**.

[0156] According to the medical device **1** according to the present embodiment, during the operation of attaching the clip **10** to the applicator **30**, the connection portion between the connection portion **3** and the hook **62***a* may be accommodated in the pressing tube **31** by engaging the hook **62***a* provided at the distal end of the operation wire **62** to the notch portion **3***g* of the connection portion **3** and subsequently moving the stopper **36** outward in the radial direction of the housing **40** along the vertical groove **393**. In the state in which the connection portion between the connection portion **3** and the hook **62***a* is accommodated in the pressing tube **31**, the connection portion **3** cannot rotate with respect to the hook **62***a*.

[0157] Furthermore, in the process of treating the target tissue T with the clip **10** attached to the applicator **30**, during the operation of the operator to push the slider **102** of the operation portion **100** toward the distal end side or retract the slier **102** toward the proximal end side, the state in which the connection portion between the connection portion **3** and the hook **62***a* is accommodated in the pressing tube **31** is maintained.

[0158] According to the medical device **1** according to the present embodiment, it is possible to prevent the clip **10** from unintentionally slipping from the applicator **30**.

[0159] According to the medical device **1** according to the present embodiment, the relative position between the connection portion **3** engaged with the clip **10** and the pressing tube **31** may be controlled by the stopper **36** in the housing **40** that accommodates the clip **10**. Specifically, when the stopper **36** moves toward the distal end side along the horizontal groove **392**, the pressing tube **31** advances with respect to the connection portion **3** and the connection portion **3** protrudes from the opening of the pressing tube **31** at the proximal end side. On the other hand, when the stopper **36** moves to the proximal end side along the horizontal groove **392**, the pressing tube **31** retracts with respect to the connection portion **3**, and the connection portion **3** or the connection portion **3** and the hook **62***a* that engage with each other are accommodated in the pressing tube **31**.

[0160] According to the clip cartridge **80** according to the present embodiment, without changing the configuration of the clip **10**, it may be easy to protrude the connection portion **3** from the opening of the pressing tube **31** at the proximal end side at the time of attaching the clip **10** to the applicator **30** by providing the L-shaped groove **391** and the stopper **36** in the housing **40**. On the other hand, after attaching the clip **10** to the applicator **30**, it may be easy to accommodate the connection portion between the connection portion **3** and the hook **62***a* in the pressing tube **31**. That is, according to the stopper **36** of the housing **40** according to the present embodiment, it is possible to control the transition of the connection portion **3** between the accommodation configuration and the protrusion configuration and the protrusion amount of the connection portion **3** from the pressing tube **31** when the connection portion **3** is in the protrusion configuration.

[0161] According to the clip cartridge **80** according to the present embodiment, both goals of the reloadable operation of the clip **10** with respect to the applicator **30** and the operation of re-grasping the target tissue T may be achieved.

[0162] According to the present embodiment, for convenience of description, the example in which the inner diameter of the sheath **66** is substantially the same with the inner diameter of the small-diameter portion **31***d* of the pressing tube **31** has been described; however, the present disclosure is not limited to this configuration. As described above, in the present embodiment, the hook **62***a* of the operation wire **62** only has to be engaged with the notch portion **3***g* by pressing the pair of legs of the proximal end portion **3***f* to cause the pair of legs to be elastically deformed in the state in which the proximal end portion **3***f* of the connection portion **3** is not accommodated in the pressing tube **3** or the sheath **66**. For example, both of the inner

diameter of the sheath **66** and the inner diameter of the pressing tube **31** only have to be smaller than the width of the proximal end portion **3***f* of the connection portion **3** in the direction of the axis X when the hook **62***a* enters the insertion hole **3***e* of the connection portion **3**, and the inner dimeter of the sheath **66** and the inner diameter of the pressing tube **31** may be different.

[0163] According to the medical device **1** according to the present embodiment, the housing **40** may be easily configured by forming the L-shaped groove **391** and the stopper **36** in various known configurations, and thus the manufacturing may be easy. Accordingly, the medical device **1** may be manufactured at low cost.

(Modification)

[0164] The configuration of a medical device according to a modification of the first embodiment of the present disclosure will be described below with reference to FIG. **15**A to FIG. **19**C. Hereinafter, the same configurations as those of the medical device **1** according to the above-described embodiment will be designated by the same reference numerals, the description thereof will be omitted, and differences from the above-described embodiment will be mainly described.

[0165] A medical device **1**A according to the present modification includes a clip **10**A instead of the clip **10** as compared with the medical device **1** according to the above embodiment. The clip **10**A includes a pressing tube **31**A, an arm member **11**A, and a connection portion **3**. A support portion **66**A configured to support the clip **10**A is formed at the distal end portion of the sheath **66** of the applicator **30**. The medical device **1**A according to the present modification includes the housing **40** of the medical device **1** according to the first embodiment described above. That is, the clip cartridge **80** according to the present modification is configured to accommodate the clip **10**A in the housing **40**.

[0166] FIG. **15**A to FIG. **16**E are views showing operations of attaching the clip **10**A to the applicator **30**A in the medical device **1**A according to the present modification. FIG. **17**A to FIG. **19**C are views showing a procedure using the medical device **1**A according to the present modification.

[0167] As shown in FIG. **15**A, the clip **10**A of the medical device **1**A according to the present modification includes an elastic member **35** and a locking portion **32** provided inside the pressing tube **31**A. Further, the arm member **11**A of the clip **10**A has protrusions **18**, **19**, **23**, **24** connected to the elastic member **35** and the locked portions **16**, **17**, **21**, **22** which may be locked by the locking portion **32**.

(Structure of Elastic Member)

[0168] The elastic member **35** is configured to have a distal end portion locked to the protrusions **18**, **19**, **23**, **24** and a proximal end portion locked to the locking portion **32** in the pressing tube **31**A. The proximal end portion of the elastic member **35** and the locking portion **32** may be fixed by welding or the like.

[0169] The portion at more proximal end side than the protrusions **18**, **19** in the first arm **12**, the portion at more proximal end side than the protrusions **23**, **24** in the second arm **13**, and the intermediate portion **14** are insertable through the elastic member **35**.

[0170] According to the present modification, the elastic member **35** is compressed in the axial direction Y when the protrusions **18**, **19**, **23**, **24** are moved to the proximal end side together with the first arm **12** and the second arm **13** of the arm member **11**A. When the elastic member **35** is compressed, an elastic force that pushes the arm member **11**A from the pressing tube **31**A in the axial direction Y is generated. According to the present modification, the elastic member **35** may be configured by, for example, a spiral spring.

[0171] According to the present modification, since the elastic member **35** is configured in the pressing tube **31**A, the pair of legs of the connecting member **3** may interfere with the elastic member **35** in the pressing tube **31**A, and thus it is impossible for the pair of legs to elastically deform outward in the radial direction. In other words, according to the present modification, similar to the above-described first embodiment, it is impossible for the hook **62***a* of the operation wire **62** to pass through the insertion hole **3***e* of the connection portion **3** to be engaged with the notch portion **3***g* in the pressing tube **31**A.

(Structure of Arm Member)

[0172] As shown in FIG. **15**A, according to the present modification, two of first locked portions **16**, **17** are provided at the proximal end portion of the first arm **12** of the arm member **11**A. The first locked portions **16**, **17** are disposed to protrude from the side surface of the first arm **12** in the orthogonal direction Z on a plane parallel to the longitudinal axis of the pressing tube **31**A. The first locked portions **16**, **17** are formed to protrude in directions opposite to each other.

[0173] In the planar view shown in FIG. **15**B, the first locked portion **16** and the first locked portion **17** are formed line-symmetrically with respect to the longitudinal axis of the pressing tube **31**A. The proximal end surface **16***a* of the first locked portion **16** is separated from the first arm **12** toward the distal end side, and the proximal end surface **16***a* is inclined with respect to the longitudinal axis along which the first arm **12** extends. The distal end surface **16***b* of the first locked portion **16** is orthogonal to the axial direction Y. The proximal end surface **17***a* of the first locked portion **17** and the proximal end surface **16***a* of the first locked portion **16** are line-symmetric with respect to the longitudinal axis of the pressing tube **31**A. The distal end surface **17***b* of the first locked portion **17** and the distal end surface **16***b* of the first locked portion **16** are line-symmetric with respect to the longitudinal axis of the pressing tube **31**A.

[0174] As shown in FIG. **15**A, in the first arm **12**, the two of protrusions **18**, **19** are provided at more distal end side than the first locked portions **16**, **17**. As shown in FIG. **15**B, the protrusions **18**, **19** protrude from the side surface of the first arm **12** in the orthogonal direction Z. The protrusion **18** and the protrusion **19** are line-symmetric with respect to the longitudinal axis of the pressing tube **31**A in the planar view. The protrusion lengths of the protrusions **18**, **19** protruding from the first arm **12** may be larger than the protrusion lengths of the first locked portions **16**, **17** protruding from the first arm **12** in the orthogonal direction Z.

[0175] The second arm **13** is configured to include the second locked portions **21**, **22** and protrusions **23**, **24** formed in the same manner as the first locked portions **16**, **17** and the protrusions **18**, **19** of the first arm **12**. That is, the second locked portions **21**, **22** protrude from the side surface of the second arm **13** in the orthogonal direction Z which is a direction in which the second arm **13** is separated from the

second arm **13**. The protrusions **23**, **24** protrude in the orthogonal direction Z from the side surface of the second arm **13** and disposed at more distal end side than the second locked portions **21** and **22** of the second arm **13**. The second locked portions **21**, **22** and the first locked portions **16**, **17** are arranged in the opposite direction X while the protrusions **23**, **24** and the protrusions **18**, **19** are arranged in the opposite direction X. In the planar view shown in FIG. **15**B, the second locked portions **21**, **22** overlap the first locked portions **16**, **17**, and the protrusions **23**, **24** overlap the protrusions **18**, **19**, respectively.

(Structure of Locking Portion)

[0176] As shown in FIG. **15**A and FIG. **15**B, a locking portion **32** is formed to protrude over the whole circumference on the inner wall of the proximal end portion of the pressing tube **31**A. As shown in FIG. **15**C, an edge portion **32***a* of the locking portion **32** on the axis C**1** side is formed in a circular shape coaxial with the pressing tube **31**A. As shown in FIG. **15**A and FIG. **15**B, the proximal end surface (proximal end side end surface) **32***b* and the distal end surface (distal end side surface) **32***c* of the locking portion **32** are orthogonal to the axial direction Y. The portion of the first arm **12** at the more proximal end side than the protrusions **18**, **19**, the portion of the second arm **13** at the more proximal end side than the protrusions **23**, **24**, and the intermediate portion **14** are insertable into the locking portion **32**.

(Configuration of Sheath)

[0177] As shown in FIG. **16**B, a support portion **66**A supporting the proximal end portion of the pressing tube **31**A is formed on the distal end side of the sheath **66** of the applicator **30** according to the present modification. The inner diameter of the support portion **66**A may be equal to or larger than the width of the pressing tube **31**A in the radial direction. The outer diameter of the sheath **66** in the support portion **66**A is smaller than the inner diameter of the lumen **38** of the housing **40**. According to the present modification, the sheath **66** having such a structure may be inserted into the lumen **38** of the housing **40** to abut on the stopper **36** and support the pressing tube **31**A as shown in FIG. **16**B.

[0178] According to the present modification, for convenience of description, the example in which the inner diameter of the support portion **66**A of the sheath **66** is larger than the inner diameters of the other portions of the sheath **66** is described; however, the present disclosure is not limited to this configuration. For example, the support portion that supports the pressing tube **31**A may be formed by cutting off a part of the inner circumferential surface of the distal end portion of the sheath **66**.

[0179] According to the present modification, the sheath **66** is formed such that the inner diameter thereof is substantially equal to the distance between the pair of elastic members **35** provided in the pressing tube **31**A. Therefore, in the present modification, it is impossible for the hook **62***a* of the operation wire **62** to pass through the insertion hole **3***e* of the connection portion **3** and engage with the notch portion **3***g* in the sheath **66**.

(Operation to Attach the Clip to the Applicator)

[0180] Hereinafter, with reference from FIG. **15**A to FIG. **16**E, an operation of attaching the clip **10**A according to the present modification to the applicator **30** will be described.

[0181] FIG. **15**A is a view showing a state in which the clip **10**A according to the present modification is accommodated in the housing **40**. As shown in FIG. **15**A, the pair of stoppers **36** are located on the proximal end side of the housing **40**, and the respective distal end surfaces **364** are in contact with the proximal end surface **32***b* of the locking portion **32** of the pressing tube **31**A. In this state, the elastic member **35** in the pressing tube **31**A may be in a non-pressed state, for example. Further, the connection portion **3** is in the accommodated configuration of being accommodated in the pressing tube **31**A.

[0182] Next, the operator grasps the pair of stoppers **36** to move the pair of stoppers along the horizontal groove **392** toward the distal end side. By this operation, as shown in FIG. **16**A, the proximal end surface **32***b* of the locking portion **32** of the pressing tube **31**A engages with the distal end surface **364** of the stopper **36** so as to move the pressing tube **31**A toward the distal end side with respect to the clip **10**A. As a result, when the pin **361** formed integrally with the stopper **36** reaches the distal end of the horizontal groove **392**, the connection portion **3** is in the protrusion configuration protruding from the opening on the proximal end side of the pressing tube **31**A. In the pressing tube **31**A, the elastic member **35** is compressed in the longitudinal axis direction of the pressing tube **31**A. Further, the first arm **12** and the second arm **13** of the arm member **11**A transition from the open configuration shown in FIG. **15**A to the closed configuration.

[0183] As shown in FIG. **16**A, in the state in which the connection portion **3** protrudes from the opening on the proximal end side of the pressing tube **31**A, the operator may move the operating wire **62** toward the pressing tube **31**A so as to engage the hook **62***a* disposed on the distal end of the operation wire **62** with the notch portion **3***g* via the insertion hole **3***e* of the connection portion **3**. As shown in FIG. **16**B, the operator operates the operation portion **100** of the applicator **30** to insert the sheath **66** into the lumen **38** of the housing **40**, and makes the distal end surface of the support portion **66**A of the sheath **66** to be in contact with the proximal end surface **363** of the stopper **36**. In this state, the hook **62***a* is located at the proximal end side of the connection portion **3** and apart from the connection portion **3**.

[0184] Subsequently, the operator pushes the slider **102** toward the distal end side along the slit **101***b* of the operation section body **101**. By this operation, as shown in FIG. **16**C, the hook **62***a* is moved toward the connection portion **3** and toward the distal end side together with the operation wire **62**. The hook **62***a* passes through the insertion hole **3***e* formed in the proximal end portion **3***f* of the connection portion **3** and enters the notch portion **3***g* of the connection portion **3**. At this time, the hook **62***a* presses the proximal end surface of the insertion hole **3***e* formed in the proximal end portion **3***f* of the connection portion **3**, and the pair of legs of the proximal end portion **3***f* of the connection portion **3** elastically deforms radially outward such that the width of the insertion hole **3***e* increases. When the width of the deformed insertion hole **3***e* becomes equal to or larger than the width d of the hook **62***a*, the hook **62***a* can pass through the insertion hole **3***e* and enter the notch portion **3***g* of the connection portion **3**. As shown in FIG. **16**C, in this state, the width of the proximal end portion **3***f* of the connection portion **3** is smaller than the distance between the pair of stoppers **36**, and larger than the distance between the pair of elastic members **35** in the pressing tube **31**A or the inner

diameter of the sheath **66**. As a result, the hook **62***a* is engaged with the notch portion **3***g* of the connection portion **3** such that the operation wire **62** and the clip **10**A are connected with each other in the engaged state.

[0185] According to the present modification, similar to the above-described first embodiment, only in the state in which at least part of the proximal end portion **3***f* of the connection portion **3** is not accommodated in the pressing tube **31**A or the sheath **66** and is exposed to the outside (for example, positioned between the pair of stoppers **56**), the operator may engage the hook **62***a* with the notch portion **3***g* of the connection portion **3**.

[0186] As shown in FIG. **16**D, the operator moves the pair of stoppers **36** along the vertical groove **393** outward in the radial direction of the housing **40** while the hook **62***a* is engaged with the notch portion **3***g* of the connection portion **3**. As a result, the engagement between the proximal end surface of the pressing tube **31**A (proximal end surface **32***b* of the locking portion **32**) and the distal end surface **364** of the stopper **36** is released. As shown in FIG. **16**D, the elastic restoring force of the first arm **12** and the second arm **13** of the arm member **11** of the clip **10** applies on the pressing tube **31**A such that the pressing tube **31**A moves toward the proximal end side, and the proximal end surface of the pressing tube **31**A and a surface of the support portion **66**A of the sheath **66** that faces toward the distal end side are in contact with each other. That is, the pressing tube **31**A is supported by the support portion **66**A of the sheath **66**.

[0187] By this operation, the restriction to the transition from the protrusion configuration to the accommodation configuration of the connection portion **3** by the stopper **36** is released, and the pressing tube **31**A is moved to the proximal end side with respect to the connection portion **3** such that the connection portion **3** transitions from the protrusion configuration to the accommodation configuration. As shown in FIG. **16**D, the connection portion **3** between the connection portion **3** and the hook **62***a* is located inside the pressing tube **31**A.

[0188] Similar to the above-described first embodiment, the operator operates the operation portion main body **101** of the operation portion **100**, and as shown in FIG. **16**E, the operation wire **62** and the clip **10**A engaged with the operation wire **62** may be removed from the opening at the proximal end side of the lumen **38** of the housing **40**. As described above, the clip **10**A according to the present modification is attached to the applicator **30**. As shown in FIG. **16**E, in the state in which the clip **10**A is attached to the applicator **30**, the connection portion **3** is in the accommodation configuration of being accommodated in the pressing tube **31**A.

(Procedure with Medical Device)

[0189] Next, a procedure for ligating the target tissue T with the medical device **1**A according to the present modification will be described with reference to FIG. **17**A to FIG. **19**C.

[0190] When the clip **10**A is taken out from the housing **40** by the elastic restoring force of the first arm **12** and the second arm **13** of the arm member **11**A of the clip **10**A, the first arm **12** and the second arm **13** of the arm member **11**A are separated from each other to be in the open configuration.

[0191] In this state, the operator moves the medical device **1**A to the vicinity of the target tissue T to be treated in the same manner as in the first embodiment. Subsequently, the operator operates the slider **102** to adjust the opening width between the first arm **12** and the second arm **13** of the arm member **11**A in accordance with the size of the target tissue T, and as shown in FIG. **17**A, the arm member **11**A is pressed against the target tissue T.

[0192] When the operator can confirm that the target tissue Tis located between the first arm **12** and the second arm **13**, the operator grasps the operation portion main body **101** and retracts the slider **102**. At this time, the first arm **12** and the second arm **13** are moved to the proximal end side together with the operation wire **62**, and the opening width therebetween is decreased. By this operation, as shown in FIG. **17**B, the first arm **12** and the second arm **13** of the arm member **11**A may grasp the target tissue T.

[0193] At this time, as shown in FIG. **17**C, the elastic member **35** in the pressing tube **31**A is compressed, and the first locked portions **16**, **17** of the first arm **12** and the second locked portions **21**, **22** of the second arm **13** of the arm member **11**A partially enter the locking portion **32**. More specifically, for example, the proximal end surface **16***a* of the first locked portion **16** is partially located at more proximal end side than the distal end surface **32***c* of the locking portion **32**. Further, the connection portion **3** including the connection portion between the connection portion **3** and the hook **62***a* climbs over the locking portion **32** to be positioned inside the sheath **66** at more proximal end side than the proximal end surface **32***b* of the locking portion **32**.

[0194] Due to the operation by the operator to further retract the slider **102** to the proximal end side, as shown in FIG. **18**A to FIG. **18**C, the first locked portions **16**, **17** and the second locked portions **21**, **22** of the arm member **11**A completely enter the locking portion **32**, and at least part of the first locked portions **16**, **17** and the second locked portions **21**, **22** is located at more distal end side than the proximal end surface **32***b* of the locking portion **32**. At this time, as shown in FIG. **18**B, the elastic member **35** in the pressing tube **31**A is further compressed, and for example, the distal end of the proximal end surface **16***a* of the first locked portion **16** is positioned at more proximal end side than the distal end surface **32***c* of the locking portion **32**, and at more distal end side than the proximal end surface **32***b* of the locking portion **32**.

[0195] In this state, the intermediate portion **14** between the first arm **12** and the second arm **13** of the arm member **11**A is compressed, and the distance between the proximal end portion of the first arm **12** and the proximal end portion of the second arm **13** is decreased. More specifically, as shown in FIG. **18**C, when viewed from the proximal end side of the clip **10**A along the direction of the longitudinal axis of the pressing tube **31**A, the distance between the first locked portions **16**, **17** and the second locked portions **21**, **22** is smaller than that in the state shown in FIG. **15**C.

[0196] According to the present modification, in the process of retracting the slider **102** from the state shown in FIG. **18**A to FIG. **18**C, the operator may move the operation wire **62** and the clip **10**A to the distal end side by pushing the slider **102** toward the distal end side. By such operations, the first arm **12** and the second arm **13** of the clip **10**A may transition from the closed configuration to the open configuration again. That is, in the medical device **1**A according to the present modification, the operator only has to operate the slider **102** to re-grasp the target tissue T using the clip **10**A.

[0197] In the operation of re-grasping the target tissue T using the clip **10**A, the connection portion between the connection portion **3** and the hook **62***a* is moved from the sheath **66** to the distal end side and then accommodated in the pressing tube **31**A again. Further, by the elastic force of the elastic member **35**, the state in which the pressing tube **31**A is supported by the support portion **66**A of the sheath **66** is maintained. Accordingly, in the operation of re-grasping the target tissue T, the connection portion between the connection portion **3** and the hook **62***a* moves between the sheath **66** and the pressing tube **31**; however, the connection portion thereof is not exposed to the outside. That is, it is possible to prevent the clip **10**A from being unintentionally slipped from the applicator **30**.

[0198] When the operator confirms that the target tissue T is grasped by the arm member **11**A in the desired state, the operator may further retract the slider **102** to the proximal end side to move the first locked portions **16**, **17** and the second locked portions **21**, **22** of the arm member **11**A such that the first locked portions **16**, **17** and the second locked portions **21**, **22** of the arm member **11**A climb over the locking portion **32** to the position at more proximal end side than the locking portion **32**.

[0199] As shown in FIG. **19**A to FIG. **19**B, at this time, both the distal end surface **16***b* of the first locked portion **16** and the distal end surface **17***b* of the first locked portion **17** contact the proximal end surface **32***b* of the locking portion **32** such that the first locked portion **16** and the first locked portion **17** are locked to the locking portion **32**. Similarly, both the distal end surface (not shown) of the second locked portion **21** and the distal end surface (not shown) of the second locked portion **22** contact the proximal end surface **32***b* of the locking portion **32** such that the second locked portion **21** and the second locked portion **22** are locked to the locking portion **32**. At this time, the arm member **11**A is in the closed configuration in which the distance between the first arm **12** and the second arm **13** is substantially zero. That is, the root of the target tissue T is tightly bound by the first arm **12** and the second arm **13** of the arm member **11**A.

[0200] As shown in FIG. **19**C, when viewed from the proximal end side of the clip **10**A along the direction of the longitudinal axis of the pressing tube **31**A, the distance between the first locked portions **16**, **17** and the second locked portions **21**, **22** in the radial direction of the clip **10**A may be substantially the same as that in the state shown in FIG. **15**C.

[0201] In this state, the elastic member **35** provided in the pressing tube **31**A is in a tightly wound state in which the strands adjacent to each other in the axial direction Y are substantially in close contact with each other. In the clip **10**A, the locking force generated since the first locked portions **16**, **17** are locked to the proximal end surface **32***b* of the locking portion **32** and the elastic force of the elastic member **35** are in balance. Accordingly, unless there is an external force applied, the support portion **66**A of the sheath **66** and the pressing tube **31**A contact each other; however, the support portion **66**A and the pressing tube **31**A do not press each other. As a result, the operator operates the slider **102** such that the operation wire **62** and the clip **10**A may move integrally.

[0202] Subsequently, when the operator further pulls back the slider **102** to the proximal end side, the pressing tube **31**A cannot move to the proximal end side due to the support portion **66**A of the sheath **66** such that the force for retracting the slider **102** to the proximal end side is concentrated in the connection portion **3**. Similar to the first embodiment described above, the connection portion **3** is broken at the proximal end portion **3***f*. As a result, the clip **10**A may be indwelled in the body while the target tissue T is ligated by the clip **10**A in the closed configuration. The operator takes necessary measures and finishes a series of procedures.

[0203] The housing **40** according to the present modification has the same effects as the housing **40** according to the above-described first embodiment. The medical device **1**A according to the present modification has the same effects as the medical device **1** according to the above-described first embodiment.

[0204] Further, in the medical device **1**A according to the present modification, the locking portion **32** is formed to protrude over the entire circumference on the inner wall of the proximal end portion of the pressing tube **31**A. Accordingly, as shown in FIG. **15**A, the area of the contact surface where the stopper **36** and the pressing tube **31**A come into contact with each other is larger than that of the medical device **1** according to the first embodiment. According to the medical device **1**A of the present modification, the operation of moving the stopper **36** with the stopper **36** and the pressing tube **31**A in contact with each other becomes simple.

Second Embodiment

[0205] Hereinafter, a clip cartridge according to a second embodiment of the present disclosure will be described with reference to FIG. **20** to FIG. **23**. Hereinafter, the same configurations as those of the above-described first embodiment will be designated by the same reference numerals, the description thereof will be omitted, and the description will focus on points different from the above-described first embodiment.

[0206] FIG. **20** is a partial cross-sectional planar view showing a state where the clip **10**A is accommodated in the housing **50** according to the second embodiment of the present disclosure. FIG. **21** to FIG. **23** are views showing operations of attaching the clip **10**A according to the present embodiment on the applicator **30**.

[0207] As shown in FIG. **20**, a clip cartridge **80**A according to the present embodiment is configured to have the clip **10**A according to the above-described modification of the first embodiment and a housing **50**. The housing **50** includes a distal-main-body portion **51**, a proximal-main-body portion **52**, an elastic member **53** that connects the distal-main-body portion **51** and the proximal-main-body portion **52**, a vertical groove **54** formed in the proximal-main-body portion **52**, and a stopper **56** integrally formed with a pin **55**. According to the present embodiment, by disposing the pin **55** in the vertical groove **54**, the stopper **56** may slide in the radial direction of the housing **50** along the vertical groove **54**.

[0208] Similar to the above-described first embodiment, FIG. **20** to FIG. **23** are used only to show the positional relationship between the clip **10**A and the housing **50**. The housing **50** according to the present embodiment is not limited to the configurations shown in these figures.

[0209] As shown in FIG. **20**, in a state before the clip **10**A is attached to the applicator **30**, the arm member **11**A is accommodated in a clip accommodation portion **57** formed between the distal-main-body portion **51** and the proximal-

main-body portion **52** in the housing **50**, and the pressing tube **31** is disposed in the lumen **38** formed in the proximal-main-body portion **52**.

[0210] As shown in FIG. **20**, at the proximal end side of the proximal-main-body portion **52**, a pair of stoppers **56** are provided in contact with the proximal end surface of the pressing tube **31**. The pair of stoppers **56** may be moved outward in the radial direction of the housing **50** along the vertical groove **54** by the operation of the operator. When the pair of stoppers **56** moves outward in the radial direction of the housing **50** along the vertical groove **54**, the engagement between the stoppers **56** and the pressing tube **31** may be released.

[0211] As shown in FIG. **20**, an elastic member **53** is provided between the proximal-main-body portion **52** and the distal-main-body portion **51**. The elastic member **53** may be configured using, for example, various known springs; however, the elastic member **53** is not limited to this configuration. For example, the elastic member **53** may be formed from a material that is elastically deformable to a certain extent when it receives the pressing force in the longitudinal axis direction itself.

[0212] The clip **10**A and the applicator **30** according to the present embodiment have the same configurations as that in the modification of the first embodiment described above.

(Operation to Attach the Clip to the Applicator)

[0213] According to the present embodiment, when the clip **10**A is attached to the applicator **30**, in the state shown in FIG. **20**, the operator grasps the proximal-main-body portion **52** and presses the distal-main-body portion **51** toward the proximal end side in the longitudinal axis direction of the housing **50** (direction along the axis C**1**). By this operation, the elastic member **53** between the distal-main-body portion **51** and the proximal-main-body portion **52** is compressed, and the distal-main-body portion **51** is moved toward the proximal end and toward the proximal-main-body portion **52**.

[0214] As shown in FIG. **21**, the elastic member **53** is compressed, and the distance between the distal-main-body portion **51** and the proximal-main-body portion **52** changes from L**0** shown in FIGS. **20** to L**1** which is a value smaller than L**0**. On the other hand, the claws **12***a*, **13***a* provided on the distal ends of the first arm **12** and the second arm **13** of the arm member **11**A of the clip **10**A approach the longitudinal axis of the housing **50** along the inner wall of the clip housing **57**. That is, the first arm **12** and the second arm **13** of the arm member **11**A are gradually closed from the open configuration shown in FIG. **20**.

[0215] According to the present embodiment, when the distal-main-body portion **51** is pressed and moves toward the proximal-main-body portion **52**, the pressing force applies on the arm member **11**A and the pressing tube **31**. However, the pressing tube **31** is configured such that the movement of the pressing tube **31** toward the proximal end side is restricted by the stopper **56** provided at the proximal end portion of the proximal-main-body portion **52**. Accordingly, the pressing force that presses the distal-main-body portion **51** applies on the arm member **11**A, and the arm member **11**A and the connection portion **3** that engages with the arm member **11**A move to the proximal end side with respect to the pressing tube **31**.

[0216] As shown in FIG. **21**, the connection portion **3** is moved toward the proximal end side with respect to the pressing tube **31** such that the connection portion **3** protrudes from the opening at the proximal end side of the pressing tube **31** and the connection portion **3** is moved to the position at more proximal end side than the locking portion **32**. In this state, the elastic member **35** in the pressing tube **31** is compressed. In other words, by pressing the distal-main-body portion **51** toward the proximal end side, it is possible for the connection portion **3** to transition from the accommodation configuration of being accommodated in the pressing tube **31** to the protrusion configuration of protruding from the pressing tube **31**.

[0217] Subsequently, as shown in FIG. **21** and FIG. **22**, similarly to the above-described modification of the first embodiment, the operator operates the operation portion (not shown) to move the support portion **66**A provided at the distal end portion of the sheath **66** until coming in contact with the stopper **56**. Subsequently, the operator may engage the hook **62***a* provided at the distal end of the operation wire **62** with the connection portion **3** protruding from the pressing tube **31** by pushing the slider of the operation portion (not shown) toward the distal end side. As shown in FIG. **22**, when the hook **62***a* enters the notch portion **3***g* of the connection portion **3** to be engaged with the connection portion **3**, the pair of stoppers **56** are in contact with the proximal end surface of the pressing tube **31** such that the transition of the connection portion **3** from the protrusion configuration to the accommodation configuration is restricted.

[0218] According to the present embodiment, similarly to the above-described modification of the first embodiment or the first embodiment, only in the state in which at least part of the proximal end portion **3***f* of the connection portion **3** is not accommodated in the pressing tube **31**A and the sheath **66** and exposed to the outside (for example, positioned between the pair of stoppers **56**), the operator may engage the hook **62***a* to the notch portion **3***g* of the connection portion **3**.

[0219] When the operator confirms that the hook **62***a* engages with the connection portion **3**, the operator moves the pair of stoppers **56** together with the pin **55** along the vertical groove **54** outward in the radial direction of the housing **50**, as shown in FIG. **23**. As a result, the engagement between the pair of stoppers **56** and the proximal end surface of the connection portion **3** is released. In other words, the restriction with respect to the transition of the connection portion **3** from the protrusion configuration to the accommodation configuration by the pair of stoppers **56** is released. Accordingly, as shown in FIG. **23**, due to the elastic restoring force of the first arm **12** and the second arm **13** of the arm member **11**A of the clip **10**A, the pressing tube **31** is moved to the proximal end side and toward the sheath **66** until the proximal end surface of the pressing tube **31** comes in contact with the distal end surface of the sheath **66**. The connection portion **3** transitions to the accommodation configuration of being accommodated in the pressing tube **31**. Due to the above-described operations, the clip **10**A according to the present embodiment is attached to the applicator **30**.

[0220] Subsequently, similarly to the above-described modification of the first embodiment described above, the operator operates the operation unit (not shown) to remove the clip **10**A and the applicator **30** from the opening at the proximal end side of the housing **50** such that it is possible to perform the ligation treatment on the target tissue T.

[0221] According to the clip cartridge **80**A according to the present embodiment, if the length of the elastic member **53** of the housing **50** in the longitudinal axis direction is adjusted, the transition between the protrusion configuration and accommodation configuration of the clip **10**A, and the protrusion length from the pressing tube **31** in the protrusion configuration of the clip **10**A may be controlled. According to the clip cartridge **80**A of the present embodiment, similarly to the above-described first embodiment and the modification, when the clip **10**A is attached to the applicator **30**, it is easy to cause the connection portion **3** of the clip **10**A to transition from the accommodation configuration to the protrusion configuration.

Third Embodiment

[0222] Next, a clip cartridge **80**B according to a third embodiment of the present disclosure will be described with reference to FIG. **24** to FIG. **27**. Hereinafter, the same configurations as those of the above-described respective embodiments will be designated by the same reference numerals, the description thereof will be omitted, and the description will be focused on the points different from the above-described respective embodiments. In the present embodiment, the clip **10**A and the applicator **30** have the same configurations as those of the above-described embodiments.

[0223] FIG. **24** is a partial cross-sectional planar view showing a state where the clip **10**A is housed in the housing **60** in the clip cartridge **80**B according to the present embodiment. FIG. **25** to FIG. **27** are views showing operations of attaching the clip **10**A according to the present embodiment to the applicator **30**.

[0224] As shown in FIG. **24**, in the housing **60** of the clip cartridge **80**B according to the present embodiment, a protrusion **61**A is provided on the distal end side of the main body **61**. A control mechanism **63** configured to abut the claws **12***a*, **13***a* of the first arm **12** and the second arm **13** of the arm member **11**A of the clip **10**A is configured in the protrusion **61**A.

[0225] According to the present embodiment, the control mechanism **63** is configured by connecting a pair of rods **63**A, **63**B with a pin **63**C. The pair of rods **63**A, **63**B may rotate around the pin **63**C as a rotation center. As shown in FIG. **24**, the pair of rods **63**A and **63**B are biased by the elastic member such as a spring or the like to the direction of separating from each other. In other words, in the state in which there is no external force applied thereto, as shown in FIG. **24**, the pair of rods **63**A, **63**B of the control mechanism **63** are separated by a certain distance in the radial direction of the housing **60**.

[0226] As shown in FIG. **24**, a protrusion **631** and a protrusion **632** are formed at the inner side of the pair of rods **63**A, **63**B of the control mechanism **63**, that is, on the side facing the longitudinal axis of the housing **60**. According to the present embodiment, the protrusion **631** and the protrusion **632** are formed at positions capable of coming in contact with the first arm **12** and the second arm **13** of the arm member **11**A. Further, the protrusion **631** and the protrusion **632** are formed from a slip resistance material such that when the protrusion **631** and the protrusion **632** are engaged with each of the first arm **12** and the second arm **13**, the engagement state may be stably maintained. According to the present embodiment, as will be described later, the portions of the first arm **12** and the second arm **13** of the arm member **11**A at more proximal end side than the claws **12***a*, **13***a* may contact the protrusion **631** and the protrusion **632**, respectively.

[0227] Since the control mechanism **63** has the above-described configuration, the arm member **11**A may be locked without directly contacting the claw **12***a* of the first arm **12** and the claw **13***a* of the second arm **13** of the arm member **11**A.

[0228] Other configurations of the housing **60** according to the present embodiment are the same as those of the housing **50** according to the second embodiment described above.

(Operation to Attach the Clip to the Applicator)

[0229] As shown in FIG. **24**, in the state in which the clip **10**A is accommodated in the housing **60**, the claw **12***a* of the first arm **12** and the second claw **13***a* of the second arm **13** of the arm member **11**A are in contact with the protrusion **631** of the rod **63**A and the protrusion **632** of the rod **63**B of the control mechanism **63**, respectively. The arm member **11**A is in the open configuration in which the first arm **12** and the second arm **13** are separated from each other. The connection portion **3** of the clip **10**A is arranged in the pressing tube **31** located in the lumen **38** formed in the main body **61**. Further, the pair of stoppers **56** are arranged at the positions protruding into the lumen **38** so as to come in contact with the proximal end surface of the pressing tube **31**.

[0230] The operator may close the control mechanism **63** as shown in FIG. **25** by grasping and pressing the pair of rods **63**A, **63**B of the control mechanism **63**. At this time, the first arm **12** and the second arm **13** of the arm member **11**A are closed together with the control mechanism **63**. In this process, the rod **63**A of the control mechanism **63** comes into contact with a portion of the first arm **12** at slightly proximal end side than the claw **12***a*, and the arm **63**B of the control mechanism **63** comes into contact with a portion of the second arm **13** at slightly proximal end side than the claw **13***a*. That is, the rods **63**A, **63**B of the control mechanism **63** do not directly apply the load to the claw **12***a* of the first arm **12** and the claw **13***a* of the second arm **13** of the arm member **11**A. As a result, when the operator operates the control mechanism **63** to close the first arm **12** and the second arm **13** of the arm member **11**A, it is possible to prevent the claws **12***a*, **13***a* from being unintentionally deformed.

[0231] When the operator presses and closes the control mechanism **63**, the arm member **11**A transitions from the open configuration to the closed configuration, and the connection portion **3** on which the intermediate portion **14** of the arm member **11**A is hooked is moved toward the proximal end side along the longitudinal axis of the housing **60** (the direction along the axis C**1**). As a result, as shown in FIG. **25**, the connection portion **3** moves toward the proximal end side with respect to the pressing tube **31**, and the connection portion transitions from the accommodation configuration of being accommodated in the pressing tube **31** to the protrusion configuration of climbing over the locking portion **32** to protrude from the opening at the proximal end side of the pressing tube **31**. In this state, since the proximal end surface of the pressing tube **31** is in contact with the stopper **56**, the movement of the pressing tube **31** to the proximal end side is restricted. The elastic member **35** is compressed in the pressing tube **31**.

[0232] Subsequently, similarly to each of the above-described embodiments, the operator operates the operation

portion (not shown) to insert the applicator **30** to the housing **60** until the support portion **66**A provided at the distal end portion of the sheath **66** comes in contact with the stopper **56**. In the state in which the support portion **66**A is in contact with the stopper **56**, the operator pushes the slider of the operation portion (not shown) to move the hook **62***a* provided at the distal end of the operating wire **62** to the distal end side together with the operating wire **62** itself. As a result, as shown in FIG. **26**, the hook **62***a* enters the notch portion **3***g* of the connection portion **3**, and the hook **62***a* and the connection portion **3** are engaged with each other.

[0233] According to the present embodiment, similarly to the above-described each embodiment and the modification, only in the state in which at least part of the proximal end portion **3***f* of the connection portion **3** is not accommodated in the sheath **66** and exposed to the outside (for example, positioned between the pair of stoppers **56**), the operator may engage the hook **62***a* with the notch portion **3***g* of the connection portion **3**.

[0234] When it is confirmed that the hook **62***a* and the connection portion **3** are engaged with each other, the operator moves (slides) the pair of stoppers **56** along the vertical groove **54** outward in the radial direction of the housing **60** while grasping the control mechanism **63**. By this operation, the engagement between the pressing tube **31** and the stopper **56** is released. In other words, the restriction with respect to the transition of the pressing tube **31** from the protrusion configuration to the accommodation configuration by the stopper **56** is released. As a result, due to the elastic restoring force of the first arm **12** and the second arm **13** of the arm member **11**A, the pressing tube **31** moves toward the sheath **66** along the longitudinal axis direction of the housing **60** toward the proximal end side. Further, the engagement state between the control mechanism **63** and the first arm **12** and the second arm **13** of the arm member **11** is also released, and the arm member **11**A and the control mechanism **63** are separated from each other.

[0235] As shown in FIG. **27**, the pressing tube **31** moves to the proximal end side until the pressing tube **31** comes into contact with the support portion **66**A provided at the distal end portion at the distal end of the sheath **66** such that the connection portion **3** transitions to the accommodation configuration of being accommodated in the pressing tube **31**.

[0236] Subsequently, the operator operates an operation portion (not shown) to remove the applicator **30** and the clip **10**A attached to the applicator **30**. The operation of attaching the clip **10**A to the applicator **30** according to the present embodiment is finished.

[0237] According to the clip cartridge **80**B of the present embodiment, by the combination of the control mechanism **63** and the stopper **56**, the transition between the protrusion configuration and the accommodation configuration of the connection portion **3** of the clip **10** and the protrusion amount of the connection portion **3** from the pressing tube **31** in the protrusion configuration may be controlled. According to the housing **60** according to the present embodiment, similarly to the above-described embodiments, at the time of attaching the clip **10**A to the applicator **30**, it is easy to make the connection portion **3** of the clip **10**A to transition from the accommodation configuration to the protrusion configuration.

Fourth Embodiment

[0238] Hereinafter, a clip cartridge **80**C according to the fourth embodiment of the present disclosure will be described with reference to FIG. **28**A to FIG. **31**. Hereinafter, the same configurations as those of the above-described respective embodiments will be designated by the same reference numerals, the description thereof will be omitted, and the description will be focused on the points different from the above-described respective embodiments.

[0239] FIG. **28**A is a partial cross-sectional planar view showing a state in which the clip unit **10**B is accommodated in the housing **70** according to the fourth embodiment of the present disclosure. FIG. **28**B is a view of the clip **10**B viewed from the proximal end side in a state where the clip **10**B is accommodated in the clip cartridge **80**C according to the present embodiment. FIG. **29** to FIG. **31** are views showing operations of attaching the clip unit **10**B to the applicator **30** according to the present embodiment.

[0240] As shown in FIG. **28**A and FIG. **28**B, in the state in which the clip **10**B according to the present embodiment is accommodated in the housing **70** of the clip cartridge **80**C, the first locked portions **16**, **17** and the second locked portions **21**, **22** provided at the proximal end side of the arm member **11**A are engaged with the proximal end surface **32***b* of the locking portion **32** provided at the proximal end portion of the pressing tube **31**. Accordingly, the movement of the arm member **11**A toward the distal end side with respect to the pressing tube **31** is restricted. As a result, the state in which the connection portion **3** connected to the arm member **11**A protrudes from the opening at the proximal end side of the pressing tube **31** is maintained. In this state, the elastic member **35** is compressed inside the pressing tube **31**.

[0241] In the housing **70** according to the present embodiment, similarly to the above-described embodiments, the stopper **56** and the pin **55** may be integrally moved (slided) in the radial direction of the housing **70** along the vertical groove **54** at the proximal end side of the main body portion **71**. As shown in FIG. **28**A, the pair of stoppers **56** abuts on the proximal end surface **32***b* of the locking portion **32** of the pressing tube **31** and the pair of stoppers restrict the movement of the pressing tube **31** toward the proximal end side.

[0242] According to the above-described configuration of the housing **70** according to the present embodiment, in the operation of attaching the clip **10**B to the applicator **30**, the operation of protruding the connection portion **3** from the opening at the proximal end side of the pressing tube **31** by the operation of the operator is unnecessary. As will be described later, according to the present embodiment, when the operator moves (slides) the stopper **56** inward in the radial direction of the housing **70**, the pair of stoppers **56** abut the intermediate portion **14** of the arm member **11**A, and it is possible to release the engagement between the first locked portions **16**, **17** and the second locked portions **21**, **22** of the arm member **11**A and the proximal end surface **32***b* of the locking portion **32** of the pressing tube **31**.

(Operation to Attach the Clip to the Applicator)

[0243] As shown in FIG. **28**A and FIG. **28**B, in the state in which the clip **10**B according to the present embodiment is accommodated in the housing **70**, the first locked portions **16**, **17** and the second locked portions **21**, **22** are in contact with the proximal end surface of the pressing tube **31** such that the protrusion configuration in which the connection

portion **3** protrudes from the opening at the proximal end side of the pressing tube **31** is maintained. The operator operates the operation portion (not shown) to move the sheath **66** to the distal end side, as shown in FIG. **29**, and causes the support portion **66**A provided at the distal end portion of the sheath **66** to come into contact with the stopper **56**. In this state, similarly to the above-described embodiments, the proximal end portion **3***f* of the connection portion **3** is located between the pair of stoppers **56** in the space inside the support portion **66**A. Subsequently, the operator pushes the slider of the operation portion (not shown) to insert the hook **62***a* provided at the distal end of the operation wire **62** into the notch **3***g* of the connection portion **3** protruding from the opening at the proximal end side of the pressing tube **31**.

[0244] When the operator confirms that the hook **62***a* is engaged with the connection portion **3**, the operator grasps the pair of stoppers **56** and moves (slides) the pair of stoppers **56** inward in the radial direction of the housing **70** along the vertical groove **54**. By this operation, the pair of stoppers **56** press the intermediate portion **14** of the arm member **11**A inward in the radial direction of the housing **70**.

[0245] Due to the pressing force by the stopper **56** inward in the radial direction of housing **70**, the intermediate portion **14** of the arm member **11**A is elastically deformed and the inner diameter of the loop shape formed in the intermediate portion **14** is decreased. As a result, the distance between the first locked portions **16**, **17** and the second locked portions **21**, **22** of the arm member **11**A in the radial direction of the housing **70** is decreased. The operator moves the pair of stoppers **56**, and when the distance between the first locked portions **16**, **17** and the second locked portions **21**, **22** of the arm member **11**A is equal to or less than the inner diameter of the edge portion **32***a* of the locking portion **32**, the engagement between the first locked portions **16**, **17**, the second locked portions **21**, **22** and the proximal end surface **32***b* of the locking portion **32** of the pressing tube **31** is released (see FIG. **18**C).

[0246] According to the present embodiment, when the engagement between the first engaged portions **16**, **17**, the second engaged portions **21**, **22** and the proximal end surface **32***b* of the locking portion **32** is released, the elastic restoring force of the first arm **12** and the second arm **13** of the arm member **11**A and the elastic restoring force of the elastic member **35** apply on the connection portion **3** to move the connection portion **3** to the distal end side. As a result, as shown in FIG. **30**, the connection portion **3** transitions from the protrusion configuration of protruding from the opening at the proximal end side of the pressing tube **31** to the accommodation configuration of being accommodated in the pressing tube **31**. At this time, the locking portion **32** of the pressing tube **31** and the support portion **66**A of the sheath **66** are in contact with the distal end surface and the proximal end surface of the stopper **56**, respectively, and the pressing tube **31** and the sheath **66** are separated from each other.

[0247] Subsequently, the operator moves (slides) the pair of stoppers **56** outward in the radial direction of the housing **70** along the vertical groove **54**. As shown in FIG. **31**, the engagement between the pressing tube **31** and the stopper **56**, and the engagement between the sheath **66** and the stopper **56** are released. In this state, similarly to the above-described embodiments, the elastic restoring force of the first arm **12** and the second arm **13** of the arm member **11**A applies on the pressing tube **31**, and the pressing tube **31** and the sheath **66** are engaged with each other.

[0248] The operator operates the operation portion (not shown) to remove the clip **10**B attached to the applicator **30** together with the applicator **30** from the housing **70**. The operations to attach the clip **10**B to the applicator **30** according to the present embodiment is finished.

[0249] According to the clip cartridge **80**C of the present embodiment, similarly to the above-described embodiments, when the clip **10**B is attached the applicator **30**, it is easy to cause the connection portion **3** of the clip **10**B to transition from the accommodation configuration to the protrusion configuration.

[0250] According to the clip cartridge **80**C of the present embodiment, by the first locked portions **16**, **17** and the second locked portions **21**, **22** provided on the arm member **11**A of the clip **10**B, when the clip **10**B is accommodated in the housing **70**, the protrusion configuration that the connection portion **3** protrudes from the opening on the proximal end side of the pressing tube **31** is maintained. Accordingly, the operation by the operator to protrude the connection portion **3** from the opening on the proximal end side of the pressing tube **31** is unnecessary and the attachment operation of the clip **10**B becomes simple.

[0251] Although the respective embodiments and modifications of the present disclosure have been described above, the technical scope of the present disclosure is not limited to the above-described embodiments, and the configurations of the respective embodiments and modifications within the scope not departing from the spirit of the present disclosure. It is possible to change the combination of elements, make various changes to each constituent element, and delete the constituent element. The present disclosure is not limited by the above description, and only limited by the appended claims.

[0252] In each of the above-described embodiments, the configuration example of the arm member including the pair of arms has been described; however, the present disclosure is not limited to this configuration. For example, as shown in FIG. **32**, the configuration of the clip unit including only one arm **20** is applicable. As shown in FIG. **32**, the clip **10**C has a rod-shaped member **400** fixed to the distal end surface of the pressing tube **31** and the rod-shaped member **400** protrudes from the distal end surface of the pressing tube **31** toward the distal end side.

[0253] According to the clip **10**C configured as described above, by operating the operation wire (not shown), the arm **20** advances and retracts together with the operation wire in a state in which the arm **20** is in contact with the distal end surface of the pressing tube **31**. For example, when the operator retracts the operation wire to the proximal end side, the arm **20** connected to the operation wire is retracted toward the proximal end side together with the operation wire while contacting the distal end surface of the pressing tube **31**. As a result, the distance between the arm **20** and the rod-shaped member **400** decreases as the arm **20** is retracted.

[0254] In other words, in the clip **10**C shown in FIG. **32**, when the arm **20** and the rod-shaped member **400** are regarded as the first arm and the second arm of the arm member according to the above-described embodiments, respectively, only the arm (first arm) **20** is moved to the proximal end side with respect to the pressing tube **31**, it is possible to cause the arm member to transition from the open configuration to the closed configuration. Similarly, accord-

ing to the clip shown as FIG. **32**, the operator pushes the operation wire toward the distal end side such that only the arm (first arm) **20** is moved to the distal end side with respect to the pressing tube **31**, it is possible to cause the arm member to transition from the closed configuration to the open configuration.

[0255] In the clip **10**C, since only the arm **20** may move with respect to the pressing tube **31**, the arm **20** may be regarded as the movement portion of the arm member. By applying the configuration of the clip **10**C shown in FIG. **32** to each of the above-described embodiments and modifications, the same effect can be achieved.

[0256] In each of the above-described embodiments and modified examples, the example has been described in which the connection portion and the arm member of the clip are formed individually and connected with each other while being separable has been described; however, the present disclosure is not limited to this configuration. For example, the connection portion may be configured as a part of the arm member. In other words, the connection portion may be integrally formed with the arm member. At this time, the operating wire may directly engages with the connection portion formed at the proximal end side of the arm member so as to connect the clip and the applicator.

What is claimed is:

1. A clip cartridge, comprising:

an arm;

a tube accommodating the arm; and

a housing accommodating the arm, the housing including:

a groove extending along a first direction and a second direction intersecting the first direction;

a stopper configured to:

restrict a movement of the tube with respect to the housing; and

move in the second direction to release the tube with respect to the housing.

2. The clip cartridge according to claim **1**, wherein the tube is configured to be biased proximally with respect to the arm by receiving a biasing force generated by at least one of the arm or an elastic material provided in the tube.

3. The clip cartridge according to claim **2**, wherein the stopper is configured to receive the biasing force via the tube.

4. The clip cartridge according to claim **1**, wherein the stopper is configured to restrict the arm and the tube from moving outside of the housing.

5. The clip cartridge according to claim **1**, wherein the stopper is configured to:

move along the first direction to move the tube with respect to the arm by contacting the tube.

6. The clip cartridge according to claim **1**, wherein the groove comprises:

a first surface extending along the first direction; and

a second surface extending along the second direction.

7. The clip cartridge according to claim **6**, wherein the stopper is configured to move along the first surface and the second surface.

8. The clip cartridge according to claim **6**, wherein the first surface is provided proximally relative to the second surface.

9. The clip cartridge according to claim **6**, wherein the first surface is provided closer to the tube than the second surface in the second direction.

10. The clip cartridge according to claim **6**, wherein the first direction extends along a longitudinal direction of the tube, and

the second direction extends along a direction in which the arm opens and closes.

11. The clip cartridge according to claim **1**, wherein the stopper comprises a first stopper and a second stopper, and the first and the second stoppers are configured to move along the first direction to move the tube distally.

12. The clip cartridge according to claim **11**, wherein the first stopper and the second stopper are movable between a first configuration and a second configuration,

in the first configuration, an opening between the first and second stoppers is smaller than an outer diameter of the tube to restrict the movement the arm and the tube with respect to the housing, and

in the second configuration, the opening is larger than the outer diameter of the tube to release the arm and the tube with respect to the housing.

13. The clip cartridge according to claim **11**, wherein the first and the second stoppers are configured to move away from each other along the second direction to release the tube from the housing.

14. The clip cartridge according to claim **11**, wherein the groove comprises:

a first groove comprising:

a first surface extending along the first direction; and

a second surface extending along the second direction; and

a second groove comprising:

a third surface extending along the first direction, the third surface provided on an opposite side of the first surface with respect to the tube; and

a fourth surface extending along the second direction, and the fourth surface provided on an opposite side of the first surface with respect to the tube.

15. The clip cartridge according to claim **14**, wherein the first stopper is configured to move along the first surface and the second surface, and

the second stopper is configured to move along the third surface and the fourth surface.

16. The clip cartridge according to claim **1**, wherein the stopper is provided proximally relative to the tube, the stopper is configured to restrict the movement of the tube with respect to the housing proximally.

17. The clip cartridge according to claim **1**, wherein the stopper is configured to contact a proximal end of the tube.

18. The clip cartridge according to claim **1**, wherein the housing comprises a cavity accommodating the arm, the cavity comprises:

a first portion having a first width in a direction intersecting a longitudinal direction of the tube; and

a second portion having a second width in the direction, the first portion is provided distally relative to the second portion, and

the first width is smaller than the second width.

19. A medical device, comprising:

the clip cartridge according to claim **1**; and

an applicator including an operation wire configured to engage with the arm via a connection portion.

20. The medical device according to claim **19**, wherein the applicator is configured to:

be inserted into an opening of the housing; and

move the stopper and the tube in the first direction.

* * * * *