US012389001B2

(12) **United States Patent**
Tanaka et al.

(10) **Patent No.: US 12,389,001 B2**
(45) **Date of Patent: *Aug. 12, 2025**

(54) **IMAGE PROCESSING DEVICE AND METHOD**

(71) Applicant: **Sony Group Corporation**, Tokyo (JP)

(72) Inventors: **Junichi Tanaka**, Kanagawa (JP); **Ohji Nakagami**, Tokyo (JP); **Yoshitaka Morigami**, Tokyo (JP)

(73) Assignee: **SONY GROUP CORPORATION**, Tokyo (JP)

(*) Notice: Subject to any disclaimer, the term of this patent is extended or adjusted under 35 U.S.C. 154(b) by 0 days.

This patent is subject to a terminal disclaimer.

(21) Appl. No.: **18/189,258**

(22) Filed: **Jan. 3, 2024**

(65) **Prior Publication Data**

US 2024/0205405 A1 Jun. 20, 2024

Related U.S. Application Data

(63) Continuation of application No. 17/211,177, filed on Mar. 24, 2021, now Pat. No. 11,758,139, which is a (Continued)

(30) **Foreign Application Priority Data**

Dec. 19, 2011 (JP) 2011-277745
Jan. 18, 2012 (JP) 2012-008462
Feb. 24, 2012 (JP) 2012-039216

(51) **Int. Cl.**
H04N 19/126 (2014.01)
H04N 19/103 (2014.01)
(Continued)

(52) **U.S. Cl.**
CPC ***H04N 19/126*** (2014.11); ***H04N 19/103*** (2014.11); ***H04N 19/107*** (2014.11);
(Continued)

(58) **Field of Classification Search**
CPC A61F 11/14; A61F 11/145; G08B 21/02; G10K 11/162; G10L 13/00; H04R 1/1008;
(Continued)

(56) **References Cited**

U.S. PATENT DOCUMENTS

9,635,354 B2 * 4/2017 Tanaka H04N 19/597
9,781,422 B2 * 10/2017 Tanaka H04N 19/463
(Continued)

FOREIGN PATENT DOCUMENTS

AU 2017203441 A1 6/2017
CA 2 769 733 A1 3/2011
(Continued)

OTHER PUBLICATIONS

Zhou et al., Non-CE04: Carriage of large block size quantization matrices with up-sampling, Nov. 9, 2011, JCTVC-G094, pp. 1-6. (Year: 2011).*

(Continued)

Primary Examiner — Kathleen M Walsh
(74) *Attorney, Agent, or Firm* — XSENSUS LLP

(57) **ABSTRACT**

The present disclosure relates to an image processing device and method that enable suppression of an increase in the amount of coding of a quantization matrix.

An image processing device of the present disclosure includes an up-conversion unit configured to up-convert a quantization matrix limited to a size less than or equal to a transmission size that is a maximum size allowed for transmission, from the transmission size to a size that is identical to a block size that is a processing unit of quantization or dequantization. The present disclosure is applicable to, for example, an image processing device for processing image data.

6 Claims, 39 Drawing Sheets

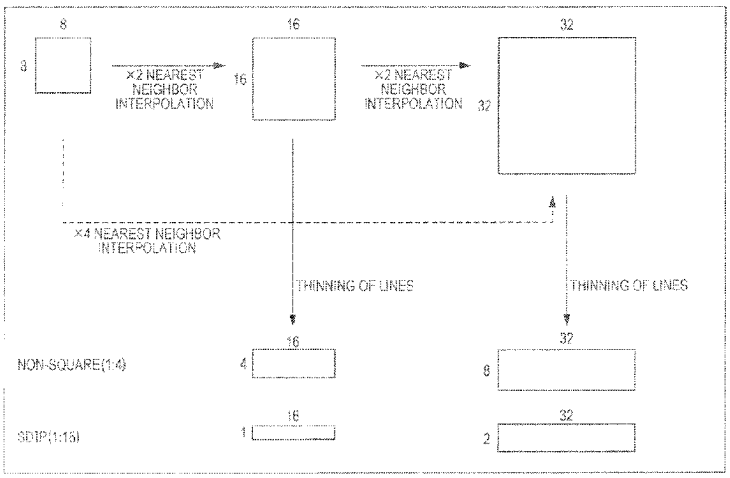

Related U.S. Application Data

continuation of application No. 16/706,832, filed on Dec. 9, 2019, now abandoned, which is a continuation of application No. 16/138,184, filed on Sep. 21, 2018, now Pat. No. 10,560,697, which is a continuation of application No. 15/687,082, filed on Aug. 25, 2017, now Pat. No. 10,136,135, which is a continuation of application No. 15/429,866, filed on Feb. 10, 2017, now Pat. No. 9,781,422, which is a continuation of application No. 14/359,765, filed as application No. PCT/JP2012/081057 on Nov. 30, 2012, now Pat. No. 9,635,354.

(51) **Int. Cl.**

H04N 19/107	(2014.01)
H04N 19/176	(2014.01)
H04N 19/18	(2014.01)
H04N 19/184	(2014.01)
H04N 19/30	(2014.01)
H04N 19/463	(2014.01)
H04N 19/59	(2014.01)
H04N 19/593	(2014.01)
H04N 19/597	(2014.01)
H04N 19/70	(2014.01)

(52) **U.S. Cl.**

CPC ***H04N 19/176*** (2014.11); ***H04N 19/18*** (2014.11); ***H04N 19/184*** (2014.11); ***H04N 19/30*** (2014.11); ***H04N 19/463*** (2014.11); ***H04N 19/59*** (2014.11); ***H04N 19/593*** (2014.11); ***H04N 19/597*** (2014.11); ***H04N 19/70*** (2014.11)

(58) **Field of Classification Search**

CPC H04R 1/1041; H04R 1/1083; H04R 2420/07; H04W 4/80; H04W 76/10; H04N 19/103; H04N 19/107; H04N 19/126; H04N 19/176; H04N 19/18; H04N 19/184; H04N 19/30; H04N 19/463; H04N 19/59; H04N 19/593; H04N 19/597; H04N 19/70

USPC 375/240.03

See application file for complete search history.

(56) **References Cited**

U.S. PATENT DOCUMENTS

10,136,135	B2 *	11/2018	Tanaka	H04N 19/59
10,560,697	B2	2/2020	Tanaka et al.	
2005/0169547	A1	8/2005	Mihara	
2006/0159165	A1	7/2006	Lu et al.	
2007/0189626	A1	8/2007	Tanizawa et al.	
2007/0292039	A1	12/2007	Kadono et al.	
2011/0135000	A1	6/2011	Alshina et al.	
2012/0140815	A1	6/2012	Zhou et al.	
2013/0114695	A1 *	5/2013	Joshi	H04N 19/126 375/240.03
2020/0112723	A1	4/2020	Tanaka et al.	

FOREIGN PATENT DOCUMENTS

CN	1835595	A	9/2006
CN	1910921	A	2/2007
CN	101123723	A	2/2008
CN	101292535	A	10/2008
CN	101674478	A	3/2010
CN	101729897	A	6/2010
CN	101867811	A	10/2010
CN	102224731	A	10/2011
CN	102577387	A	7/2012
JP	2000-102004	A	4/2000
JP	2004-254327	A	9/2004
KR	1998-074609	A	11/1998
KR	2003-0036129	A	5/2003
KR	10-2004-0065406	A	7/2004
WO	2011/152518	A1	12/2011
WO	2012/077408	A1	6/2012

OTHER PUBLICATIONS

Zhang et al., Method and syntax for quantization matrices representation, Nov. 9, 2011, JCTVC-G152, pp. 1-8. (Year: 2011).*

International Search Report issued Mar. 5, 2013 in PCT/JP2012/081057.

Minhua Zhou, et al. "Non-CE04: Carriage of large block size quantization matrices with up-sampling" Joint Collaborative Team on Video Coding (JCT-VC) of ITU-T SG16 WP3 and ISO/IEC JTC1/SC29/WG11 7th Meeting, Nov. 19-30, 2011, 6 pages.

Kimin Zhang, et al., "Method and syntax for quantization matrices representation" Joint Collaborative Team on Video Coding (JCT-VC) of ITU-T SG16 WP3 and ISO/IEC JTC1/SC29/WG11 7th Meeting, Nov. 21-30, 2011, 8 pages.

Junichi Tanaka, et al., "Quantization Matrix for HEVC" Joint Collaborative Team on Video Coding (JCT-VC) of ITU-T SG16 WP3 and ISO/IEC JTC1/SC29/WG11 5th Meeting, Mar. 16-23, 2011, 24 pages.

JCTVC-B205 "Test Model under Consideration" Joint Collaborative Team on Video Coding (JCT-VC) of ITU-T SG16 WP3 and ISO/IEC JTC1/SC29/WG11 2nd Meeting, Jul. 21-28, 2010, 198 pages.

VCEG-AD06 "Adaptive Quantization Matrix Selection on KTA Software" ITU Telecommunications Standardization Sector 30th Meeting, Oct. 23-24, 2006, 5 pages.

Combined Search Report and Examination Report issued Apr. 14, 2015 in Singapore Patent Application No. 11201402920T.

Extended Search Report issued Jun. 19, 2015 in European Patent Application No. 12860469.1.

Akiyuki Tanizawa, et al., "Simulation results of Adaptive Quantization Matrix Selection on KTA Software", Proposal, Q.6/SG16 (VCEG), ITU—Telecommunications Standardization Sector Document VCEG-AC07, Study Group 16 Question 6, Video Coding Experts Group (VCEG), Filename: VCEG-AC07.doc, Jul. 13, 2006, 4 pages.

Munsi Haque, et al., "HVS Model based Default Quantization Matrices", Input Document to JCT-VC, Sony Electronics Inc./Sony Corp., Joint Collaborative Team on Video Coding (JCT-VC) of ITU-T SG16 WP3 and ISO/IEC JTC1/SC29AVG11 7th Meeting: Geneva, CH, Nov. 21-30, 2011, Document: JCTVC-G0880, WG11 No. m22458, 14 pages.

Japanese Office Action issued Nov. 5, 2015 in Patent Application No. 2013-550202.

Japanese Office Action issued Nov. 5, 2015 in Patent Application No. 2015-033125.

Office Action issued Feb. 16, 2016 in Japanese Patent Application No. 2015-033125.

Combined Office Action and Search Report issued Jan. 24, 2017 in Chinese Patent Application No. 201280061142. 8.

Combined Office Action and Search Report issued Feb. 23, 2017 in Chinese Patent Application No. 201410668859.X.

Singaporean Search Report and Written Opinion issued Sep. 7, 2017 in Patent Application No. 10201407305T.

Kazushi Sato et al., "Necessity of Quantization Matrices Compression in HEVC", Joint Collaborative Team on Video Coding (JCT-VC) of ITU-T SG16 WP3 and ISO/IEC JTC1/SC29/WG11, 5th Meeting, Document: JCTVC-E056, Mar. 16-23, 2011, 4 pages.

Ken McCann, et al., "HM4: High Efficiency Video Coding (HEVC) Test Model 4 Encoder Description", Joint Collaborative Team on Video Coding (JCT-VC) of ITU-T SG16 WP3 and ISO/IEC JTC1/SC29/WG11, 6th Meeting Torino, IT, Jul. 14-22, 2011, Document: JCTVD-F802, 36 pp.

Korean Office Action dated Apr. 21, 2020, issued in corresponding Korean Patent Application No. 10-2020-7005154.

(56) **References Cited**

OTHER PUBLICATIONS

Korean Office Action dated Apr. 21, 2020, issued in corresponding Korean Patent Application No. 10-2020-7005155.
Korean Office Action dated Apr. 21, 2020, issued in corresponding Korean Patent Application No. 10-2020-7005156.
Korean Office Action dated Apr. 21, 2020, issued in corresponding Korean Patent Application No. 10-2020-7005158.
Korean Office Action dated Apr. 21, 2020, issued in corresponding Korean Patent Application No. 10-2020-7005163.
Shangguan Jintai, "Multimodal Image Registering", the Tianjin Science and Technology Press, pp. 97-99, Aug. 2011, with an English translation of Office Action, total 18 pages.

* cited by examiner

FIG. 1

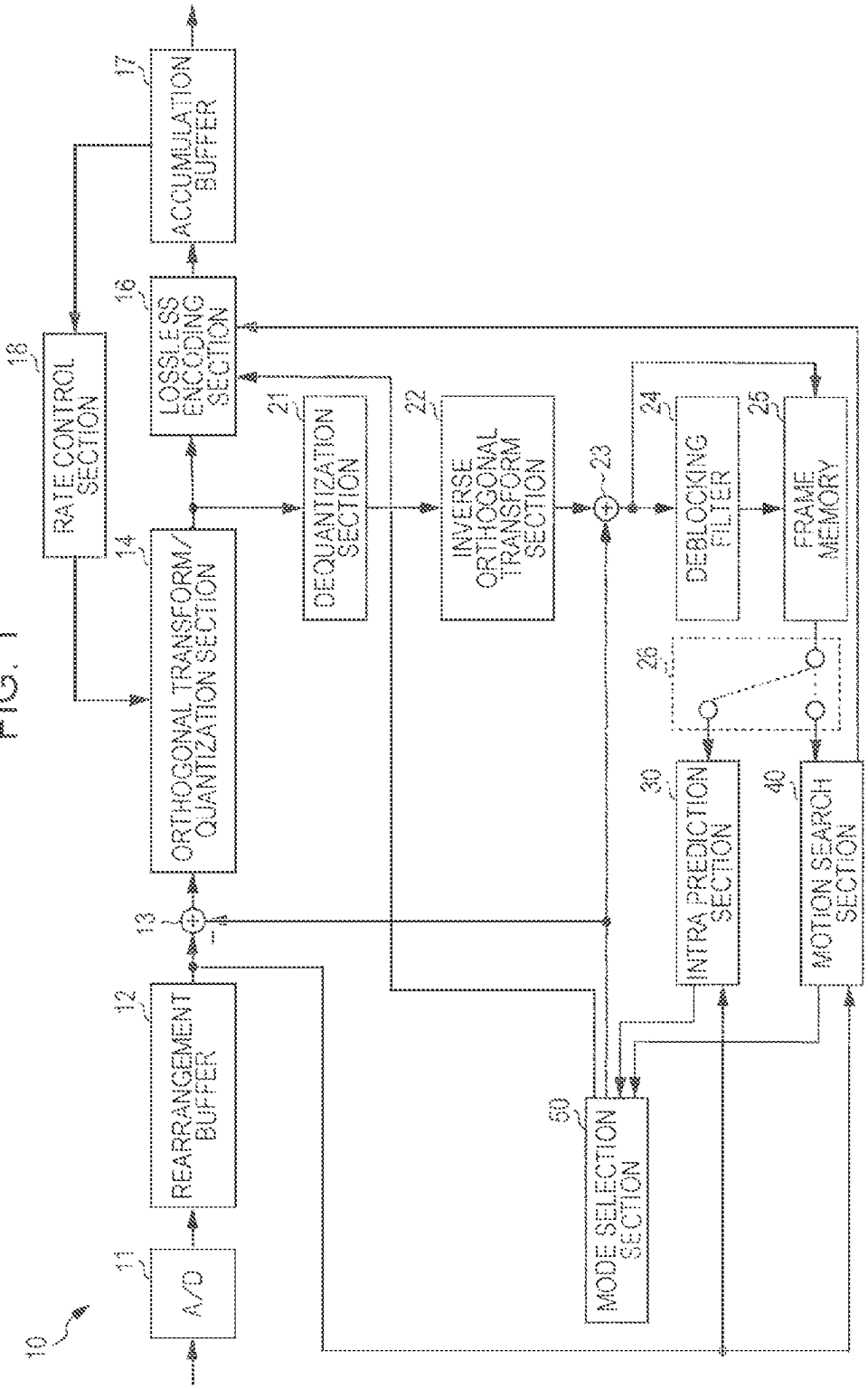
10
11
A/D
12
REARRANGEMENT BUFFER
13
14
ORTHOGONAL TRANSFORM/ QUANTIZATION SECTION
16
LOSSLESS ENCODING SECTION
17
ACCUMULATION BUFFER
18
RATE CONTROL SECTION
21
DEQUANTIZATION SECTION
22
INVERSE ORTHOGONAL TRANSFORM SECTION
23
24
DEBLOCKING FILTER
25
FRAME MEMORY
26
30
INTRA PREDICTION SECTION
40
MOTION SEARCH SECTION
50
MODE SELECTION SECTION

FIG. 2

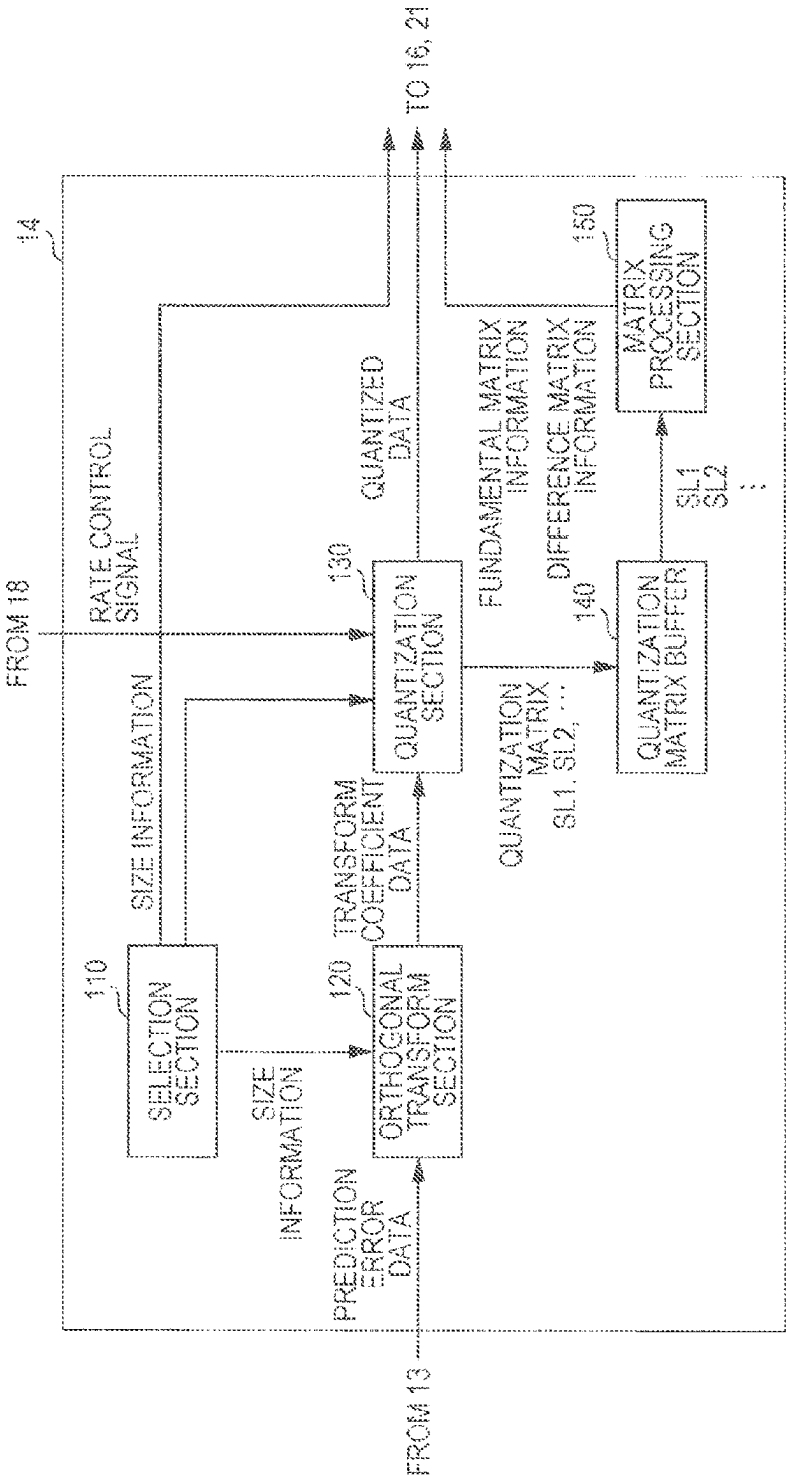
14
FROM 18
RATE CONTROL SIGNAL
SIZE INFORMATION
110
SELECTION SECTION
SIZE INFORMATION
120
ORTHOGONAL TRANSFORM SECTION
PREDICTION ERROR DATA
FROM 13
TRANSFORM COEFFICIENT DATA
130
QUANTIZATION SECTION
QUANTIZED DATA
TO 16, 21
QUANTIZATION MATRIX SL1, SL2, ...
140
QUANTIZATION MATRIX BUFFER
FUNDAMENTAL MATRIX INFORMATION
DIFFERENCE MATRIX INFORMATION
150
MATRIX PROCESSING SECTION
SL1
SL2
...

FIG. 3

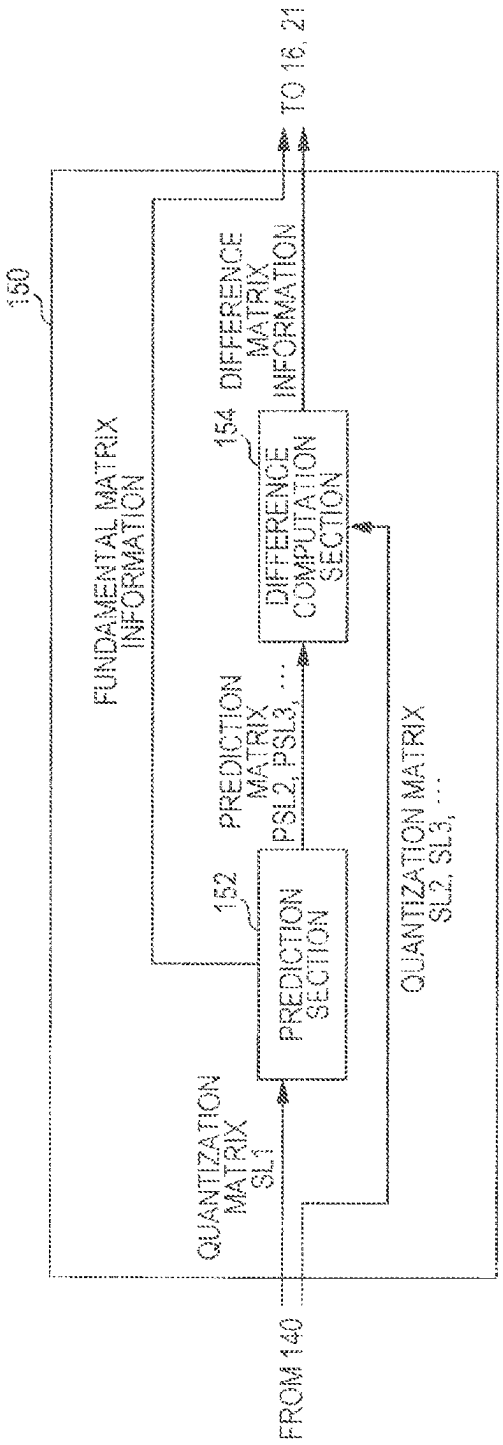
150
FUNDAMENTAL MATRIX INFORMATION
152
PREDICTION SECTION
PREDICTION MATRIX PSL2, PSL3, ...
154
DIFFERENCE COMPUTATION SECTION
DIFFERENCE MATRIX INFORMATION
TO 16, 21
QUANTIZATION MATRIX SL1
QUANTIZATION MATRIX SL2, SL3, ...
FROM 140

FIG. 4

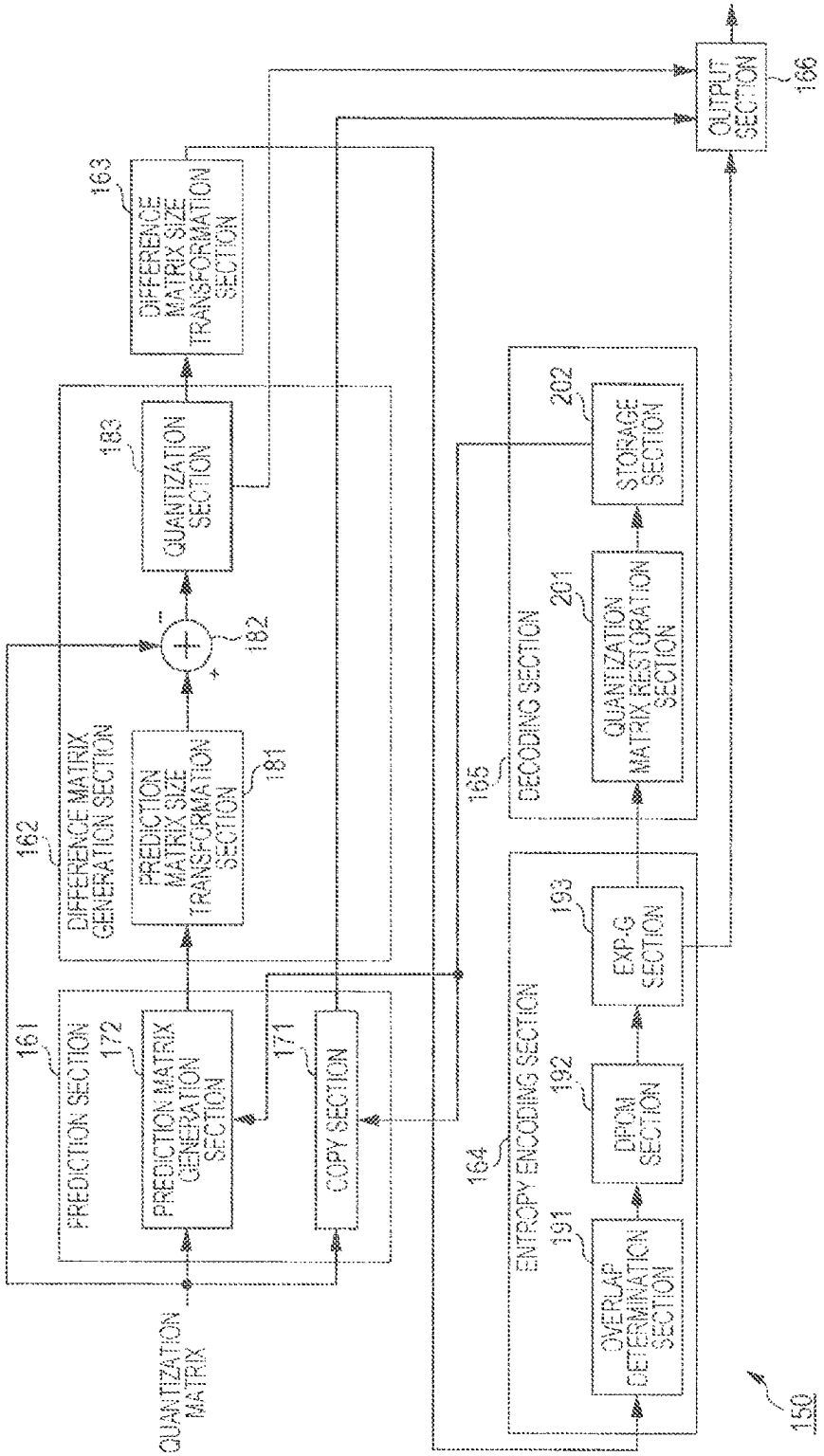
QUANTIZATION MATRIX
161
PREDICTION SECTION
172
PREDICTION MATRIX GENERATION SECTION
171
COPY SECTION
162
DIFFERENCE MATRIX GENERATION SECTION
181
PREDICTION MATRIX SIZE TRANSFORMATION SECTION
182
183
QUANTIZATION SECTION
163
DIFFERENCE MATRIX SIZE TRANSFORMATION SECTION
166
OUTPUT SECTION
164
ENTROPY ENCODING SECTION
191
OVERLAP DETERMINATION SECTION
192
DPCM SECTION
193
EXP-G SECTION
165
DECODING SECTION
201
QUANTIZATION MATRIX RESTORATION SECTION
202
STORAGE SECTION
150

FIG. 5

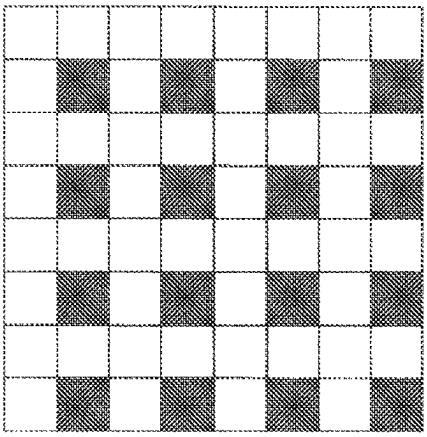

FIG. 6

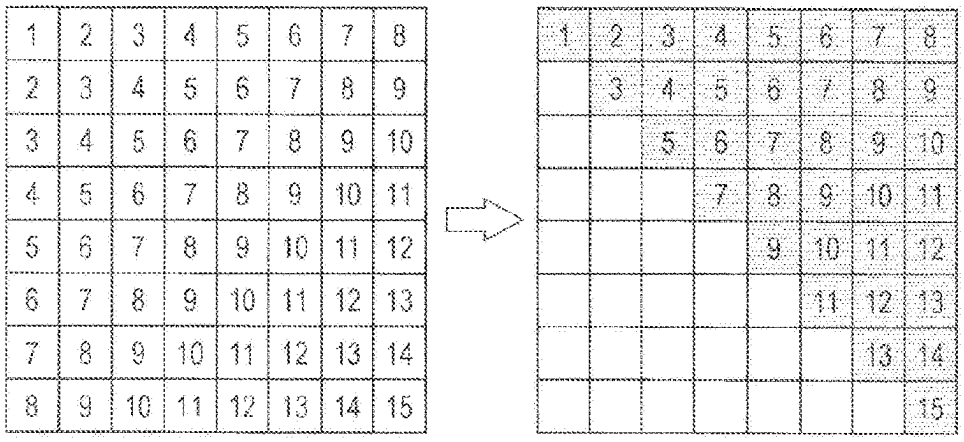
1 2 3 4 5 6 7 8
2 3 4 5 6 7 8 9
3 4 5 6 7 8 9 10
4 5 6 7 8 9 10 11
5 6 7 8 9 10 11 12
6 7 8 9 10 11 12 13
7 8 9 10 11 12 13 14
8 9 10 11 12 13 14 15
1 2 3 4 5 6 7 8
3 4 5 6 7 8 9
5 6 7 8 9 10
7 8 9 10 11
9 10 11 12
11 12 13
13 14
15

FIG. 7

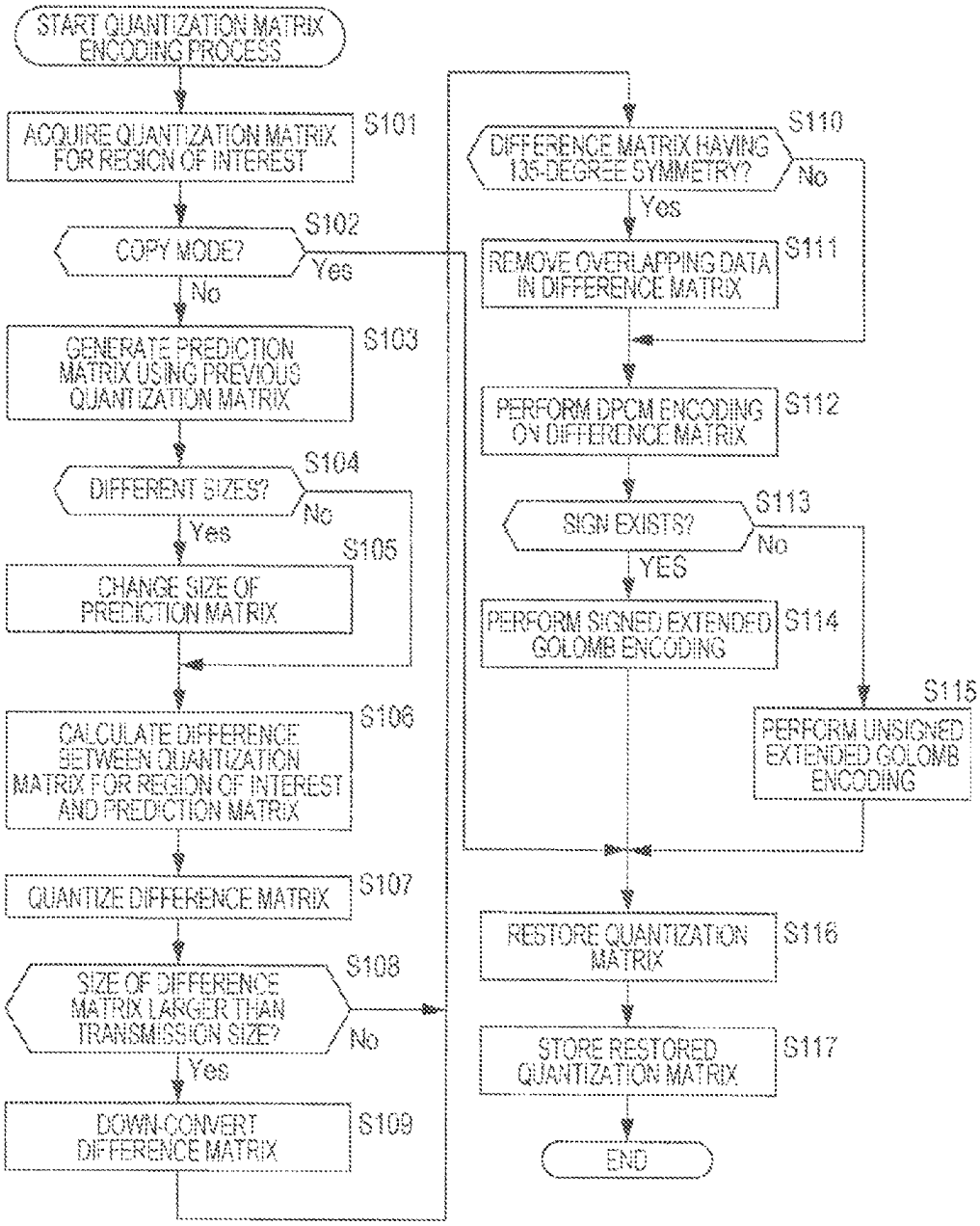
START QUANTIZATION MATRIX ENCODING PROCESS
ACQUIRE QUANTIZATION MATRIX FOR REGION OF INTEREST
S101
COPY MODE?
S102
Yes
No
GENERATE PREDICTION MATRIX USING PREVIOUS QUANTIZATION MATRIX
S103
DIFFERENT SIZES?
S104
No
Yes
CHANGE SIZE OF PREDICTION MATRIX
S105
CALCULATE DIFFERENCE BETWEEN QUANTIZATION MATRIX FOR REGION OF INTEREST AND PREDICTION MATRIX
S106
QUANTIZE DIFFERENCE MATRIX
S107
SIZE OF DIFFERENCE MATRIX LARGER THAN TRANSMISSION SIZE?
S108
No
Yes
DOWN-CONVERT DIFFERENCE MATRIX
S109
DIFFERENCE MATRIX HAVING 135-DEGREE SYMMETRY?
S110
No
Yes
REMOVE OVERLAPPING DATA IN DIFFERENCE MATRIX
S111
PERFORM DPCM ENCODING ON DIFFERENCE MATRIX
S112
SIGN EXISTS?
S113
No
YES
PERFORM SIGNED EXTENDED GOLOMB ENCODING
S114
PERFORM UNSIGNED EXTENDED GOLOMB ENCODING
S115
RESTORE QUANTIZATION MATRIX
S116
STORE RESTORED QUANTIZATION MATRIX
S117
END

FIG. 8

	Descriptor
Qscale0: QUANTIZATION VALUE FOR REGION 0	ue(v)
Qscale1: QUANTIZATION VALUE FOR REGION 1	ue(v)
Qscale2: QUANTIZATION VALUE FOR REGION 2	ue(v)
Qscale3: QUANTIZATION VALUE FOR REGION 3	ue(v)
for(SizeID = 0;SizeID<4;SizeID ++){	
for(MatrixID = 0;MatrixID<(SizeID == 3)?2:6.MatrixID ++){	
pred_mode: PREDICTION MODE FOR MATRIX	ue(v)
if(pred_mode == 0){ //Copy	
pred_matrix_id_delta: USED FOR PREDICTION OF MatrixID. pred_matrix_id = MatrixID − (pred_matrix_id_delta + 1);	ue(v)
}else if(pred_mode == 1){ //Pred of arbitary size	
pred_matrix_id_delta: USED FOR PREDICTION OF MatrixID. pred_matrix_id = MatrixID + pred_matrix_id_delta;	se(v)
pred_size_id_delta: USED FOR PREDICTION OF MatrixID. pred_size_id = SizeID + pred_size_id_delta;	se(v)
residual_flag: WHETHER OR NOT RESIDUAL SIGNAL EXISTS?	u(1)
if(residual_flag){	
residual_down_sampling_flag: WHETHER OR NOT RESIDUAL SIGNAL IS SUBJECTED TO DOWNSAMPLING?	u(1)
residual_symmetry_flag: WHETHER OR NOT RESIDUAL SIGNAL IS A 135-DEGREE SYMMETRIC MATRIX?	u(1)
scaling_list_residual(ScalingList:Residual[SizeID][MatrixID] residual_symmetry_flag,(1<<(4+(SizeID<<1))))	
}	
}	
}	
}	

FIG. 9

PARAMETER NAME	DESCRIPTION
QMPS ID	IDENTIFIER FOR IDENTIFYING QMPSs FROM EACH OTHER
GENERATION MODE PRESENCE FLAG	FLAG INDICATING WHETHER GENERATION MODE SEGMENT (pred_mode) IS PRESENT
GENERATION MODE <pred_mode>	SEGMENTS INDICATING MODES OF QUANTIZATION MATRIX GENERATION PROCESS e.g.) 0: COPY, 1: SPECIFYING OF AXIS, 2: FULL-SCAN
IN COPY MODE (pred_mode = '0')	
SOURCE ID	QMPS ID SPECIFYING QMPS OF COPY SOURCE * IF A SPECIFIED MATRIX IS USED, SELF ID IS SPECIFIED
COPY SOURCE SIZE	SIZE OF QUANTIZATION MATRIX OF COPY SOURCE
COPY SOURCE TYPE	TYPE OF QUANTIZATION MATRIX OF COPY SOURCE
RESIDUAL FLAG	FLAG INDICATING PRESENCE OF RESIDUE
RESIDUAL DATA	DATA FOR GENERATING RESIDUAL MATRIX
IN FULL-SCAN MODE (pred_mode = '1')	
DIFFERENCE DATA	LINEAR ARRAY OF DIFFERENCE VALUES CALCULATED USING DPCM METHOD FOR EACH ELEMENT IN QUANTIZATION MATRIX

QUANTIZATION MATRIX PARAMETER SET

FIG. 10

```
01 | QuantizaionMatrixParameterSet(){
02 |  quantizaion_matrix_parameter_id      ···QMPS ID
03 |  pred_present_flag                    ···GENERATION MODE PRESENCE FLAG
04 |  for(i=0;i<Sizeidc;i++){                      //LOOP FOR EACH SIZE//
05 |    for(j=0;j<6;j++){                           //LOOP FOR EACH TYPE//
06 |     if(pred_present_flag){
07 |       pred_mode                       ···GENERATION MODE
08 |       if(pred_mode==0){                        //COPY MODE//
09 |         pred_qmps_id                  ···SOURCE ID
10 |         pred_size_idc                 ···COPY SOURCE SIZE
11 |         pred_matrix_id                ···COPY SOURCE TYPE
12 |         pred_matrix(i,j,pred_qmps_id,pred_size_idc,pred_matrix_id)
                                                       //COPY//
13 |         residual_flag                 ···RESIDUAL FLAG
14 |         if(residual_flag){
15 |           residual_matrix(i)                   //ADD RESIDUES//
51 |       }else if(pred_mode==1)                   //FULL-SCAN MODE//
52 |         qmatrix(i,j)
53 |       }
54 |     }else{
55 |       qmatrix(i,j)
56 |     }
57 |   }
58 |  }
59 | }
```

FIG. 11

```
residual_matrix(){
 residual_dpcm_flag                    ···RESIDUE SPECIFYING METHOD FLAG
 if(residual_dpcm_flag){                    //DPCM METHOD//
   nextcoef = 0
   for(i = 0;i < coefNum;i++){
     delta_coef
       nextcoef = nextcoef + delta_coef
       coef[i] = nextcoef
     }
 }else{                                     //RUN-LENGTH METHOD//
     next_pos = 0
     while(last_pos == 0){
       run
       data
       last_pos
       coef[next_pos + run] = data
       next_pos += run + 1
     }
   }
}
```

FIG. 12

```
01 QuantizationMatrixParameterSet(){
02   quantization_matrix_parameter_id      ···QMPS ID
03   use_default_only_flag
04   use_dqp_flag
05   if(use_default_only_flag
06     pred_present_flag                   ···GENERATION MODE PRESENCE FLAG
07     Qscale0                             ···FIRST QUANTIZATION SCALE
08     Qscale1                             ···SECOND QUANTIZATION SCALE
09     Qscale2                             ···THIRD QUANTIZATION SCALE
10     Qscale3                             ···FOURTH QUANTIZATION SCALE
11     for(i=0;i<4;i++){                          //LOOP FOR EACH SIZE//
12       for(i=0;j<6;j++){                        //LOOP FOR EACH SIZE//
13         if(pred_present_flag){
14         pred_mode                       ···GENERATION MODE
15         if(pred_mode==0){                        //COPY MODE//
16         pred_qmps_id                    ···SOURCE ID
17         pred_size_idc                   ···COPY SOURCE SIZE
18         pred_matrix_id                  ···COPY SOURCE TYPE
19         residual_flag                   ···RESIDUAL FLAG
20         if(residual_flag){
21           residual_matrix()                      //SPECIFY RESIDUES//
22         }
```

//SEE FIG. 11//

```
77       }
78     }
79   }
80 }
```

FIG. 13

```
57      }else if(pred_mode == 1)                    //FULL-SCAN MODE//
58        matrix_symmetry_flag
59        matrix_sign_flag
60        matrix_dpcm_run_flag          ···SPECIFYING METHOD FLAG
61        vlc_table_data                ···VCL TABLE (DATA)
62        if(matrix_dpcm_run_flag){
63          vlc_table_run               ···VCL TABLE (RUNS)
64        }
65        qmatrix()
66      }
67    }else{
68        matrix_symmetry_flag
69        matrix_sign_flag
70        matrix_dpcm_run_flaig         ···SPECIFYING METHOD FLAG
71        vlc_table_data                ···VCL TABLE (DATA)
72        if(matrix_dpcm_run_flag){
73          vlc_table_run               ···VCL TABLE (RUNS)
74        }
75        qmatrix()
76      }
```

FIG. 14

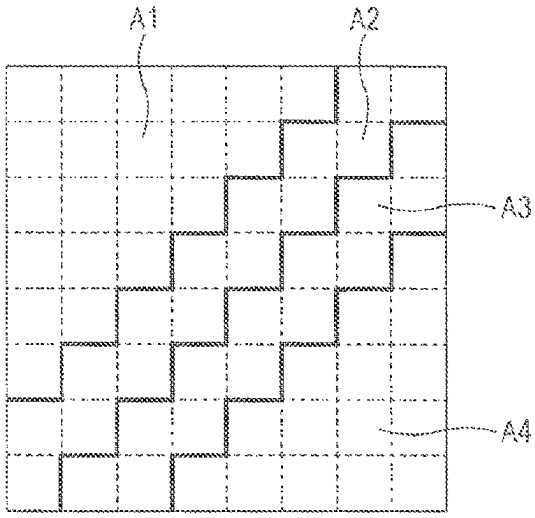

EXAMPLE OF QUANTIZATION SCALE SETTING REGION OF 8×8 QUANTIZATION MATRIX

FIG. 15

REGION A1: Qscale0 = 1 (NOT QUANTIZED)

REGION A2: Qscale1 = 2

REGION A3: Qscale2 = 3

REGION A4: Qscale3 = 4

$$\begin{pmatrix} 1 & 1 & 1 & 1 & 1 & 1 & 2 & 2 \\ 1 & 1 & 1 & 1 & 1 & 2 & 2 & 3 \\ 1 & 1 & 1 & 1 & 2 & 2 & 3 & 3 \\ 1 & 1 & 1 & 2 & 2 & 3 & 3 & 4 \\ 1 & 1 & 2 & 2 & 3 & 3 & 4 & 4 \\ 1 & 2 & 2 & 3 & 3 & 4 & 4 & 4 \\ 2 & 2 & 3 & 3 & 4 & 4 & 4 & 4 \\ 2 & 3 & 3 & 4 & 4 & 4 & 4 & 4 \end{pmatrix}$$

EXAMPLE OF QUANTIZATION SCALE SETTING

FIG. 16

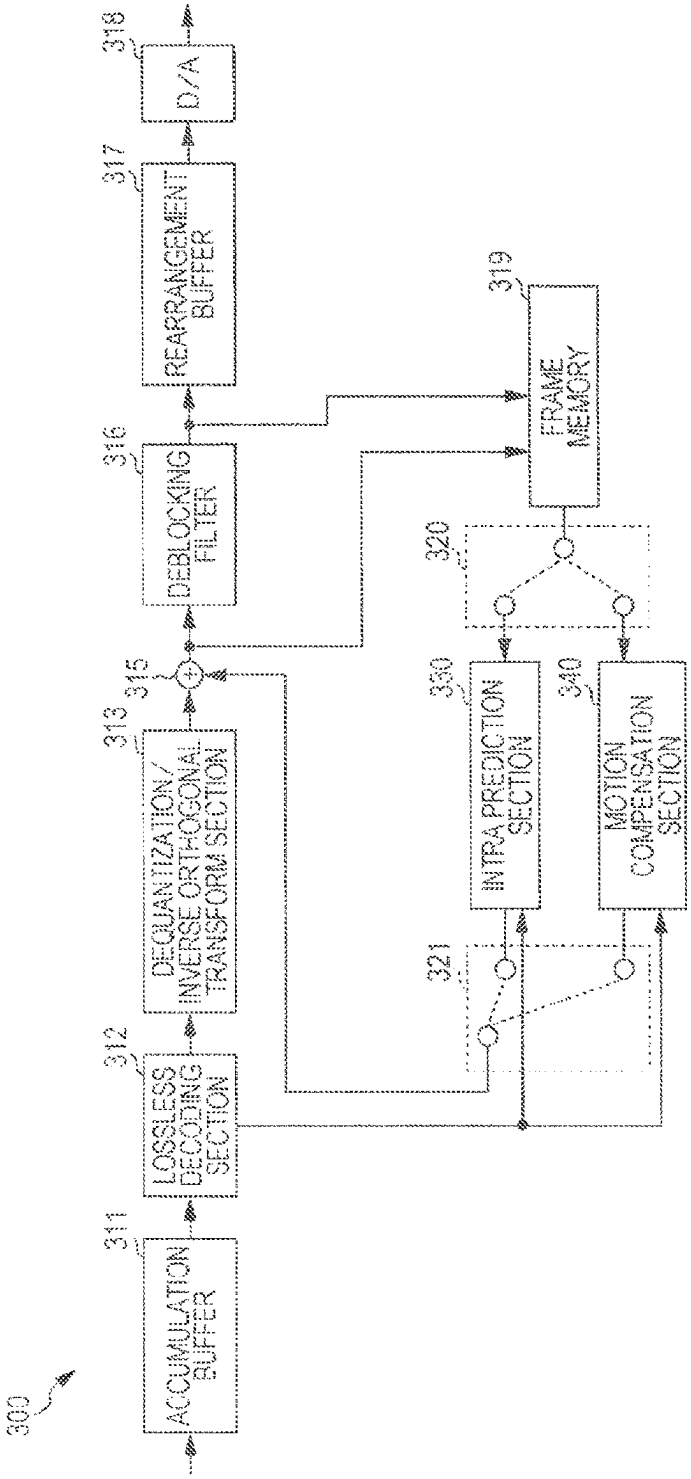
300
ACCUMULATION BUFFER
311
LOSSLESS DECODING SECTION
312
DEQUANTIZATION / INVERSE ORTHOGONAL TRANSFORM SECTION
313
315
DEBLOCKING FILTER
316
REARRANGEMENT BUFFER
317
D/A
318
FRAME MEMORY
319
320
321
INTRA PREDICTION SECTION
350
MOTION COMPENSATION SECTION
340

FIG. 17

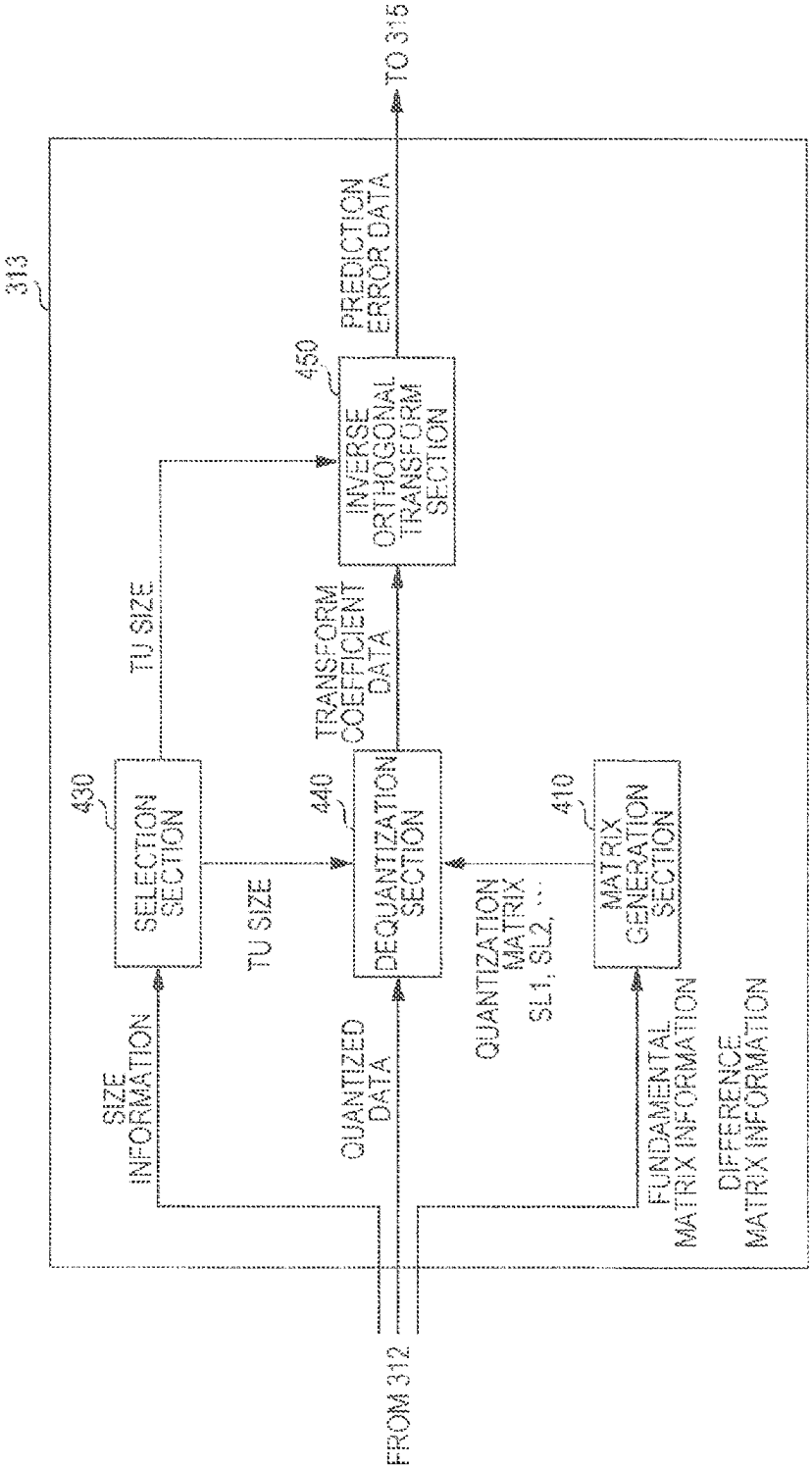
313
TO 315
PREDICTION ERROR DATA
450
INVERSE ORTHOGONAL TRANSFORM SECTION
TU SIZE
TRANSFORM COEFFICIENT DATA
430
SELECTION SECTION
440
DEQUANTIZATION SECTION
410
MATRIX GENERATION SECTION
TU SIZE
QUANTIZATION MATRIX SL1, SL2, ···
SIZE INFORMATION
QUANTIZED DATA
FUNDAMENTAL MATRIX INFORMATION
DIFFERENCE MATRIX INFORMATION
FROM 312

FIG. 18

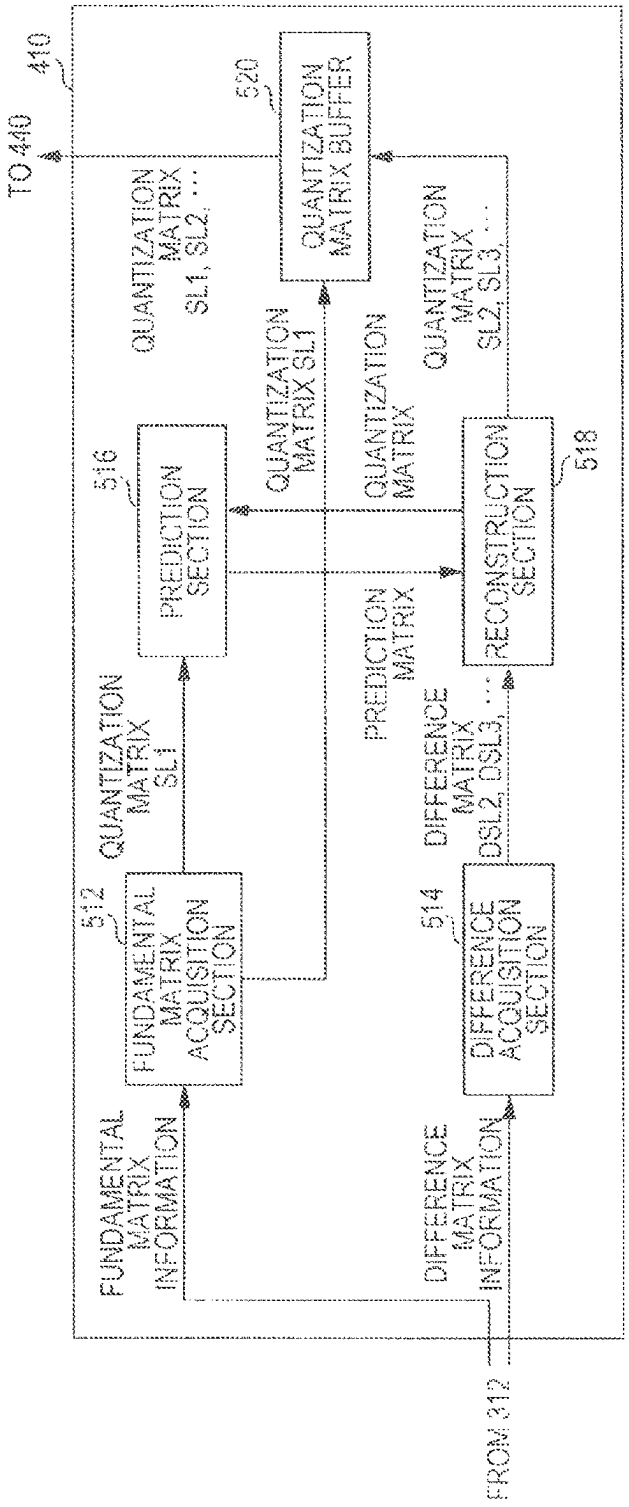
410
TO 440
520
QUANTIZATION MATRIX BUFFER
QUANTIZATION MATRIX SL1, SL2, ...
QUANTIZATION MATRIX SL1
QUANTIZATION MATRIX
QUANTIZATION MATRIX SL2, SL3, ...
516
PREDICTION SECTION
518
RECONSTRUCTION SECTION
PREDICTION MATRIX
QUANTIZATION MATRIX SL1
DIFFERENCE MATRIX DSL2, DSL3, ...
512
FUNDAMENTAL MATRIX ACQUISITION SECTION
514
DIFFERENCE ACQUISITION SECTION
FUNDAMENTAL MATRIX INFORMATION
DIFFERENCE MATRIX INFORMATION
FROM 312

FIG. 19

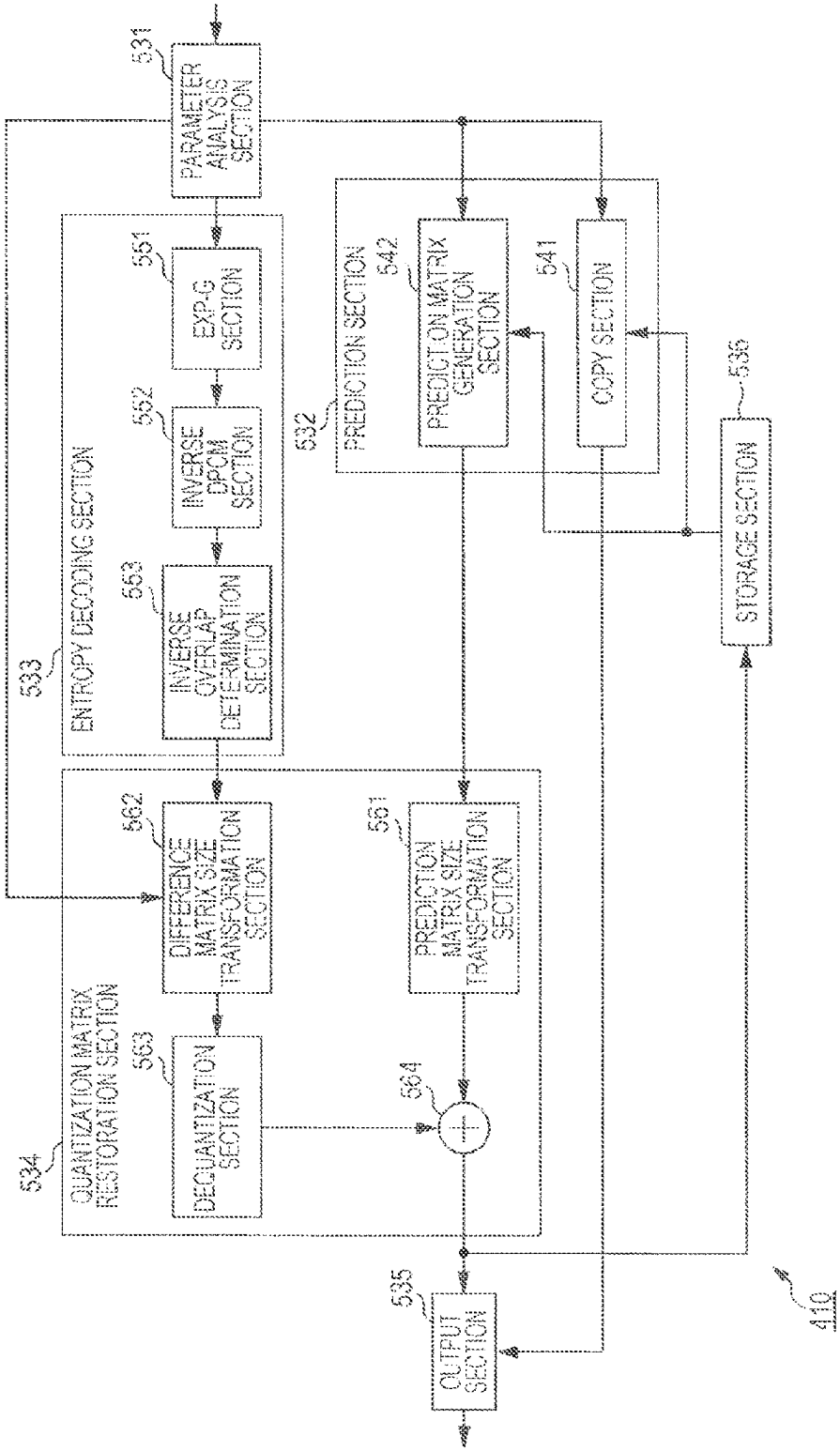
531
PARAMETER ANALYSIS SECTION
533
ENTROPY DECODING SECTION
551
EXP-G SECTION
552
INVERSE DPCM SECTION
553
INVERSE OVERLAP DETERMINATION SECTION
532
PREDICTION SECTION
542
PREDICTION MATRIX GENERATION SECTION
541
COPY SECTION
536
STORAGE SECTION
534
QUANTIZATION MATRIX RESTORATION SECTION
562
DIFFERENCE MATRIX SIZE TRANSFORMATION SECTION
561
PREDICTION MATRIX SIZE TRANSFORMATION SECTION
563
DEQUANTIZATION SECTION
564
535
OUTPUT SECTION
410

FIG. 20

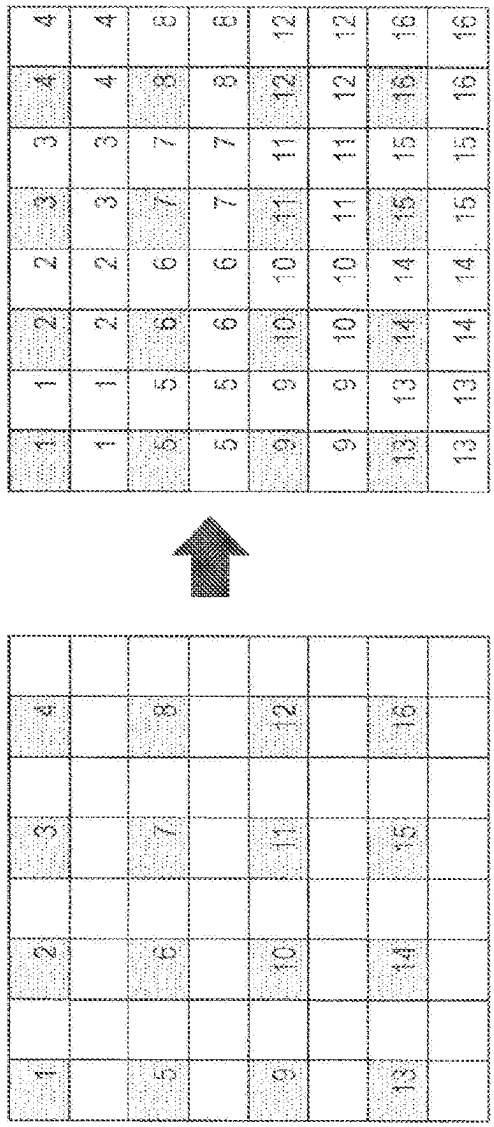
1 2 3 4
5 6 7 8
9 10 11 12
13 14 15 16
1 2 3 4
1 2 3 4
5 6 7 8
5 6 7 8
9 10 11 12
9 10 11 12
13 14 15 16
13 14 15 16

FIG. 21

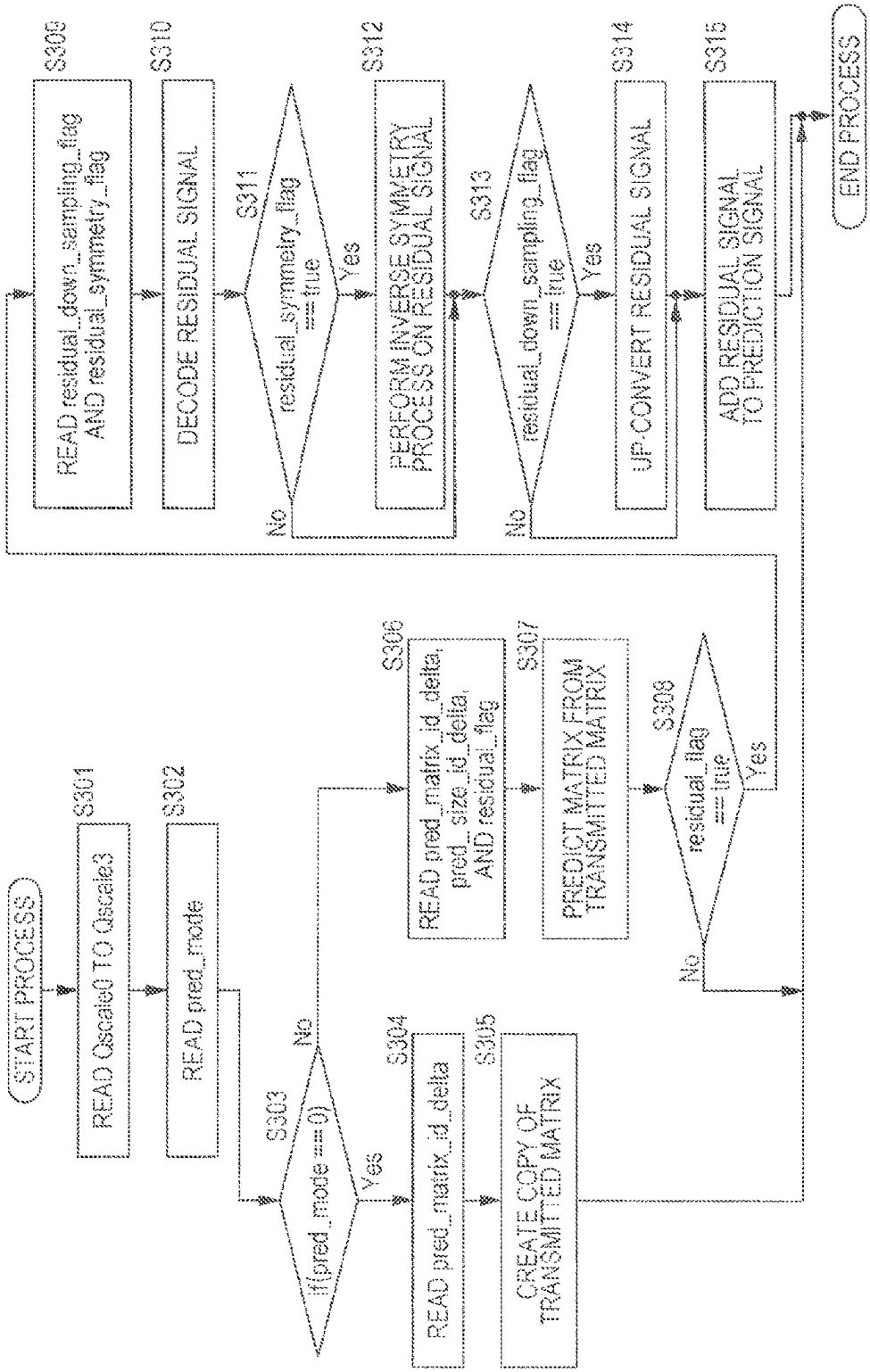
START PROCESS
S301
READ Qscale0 TO Qscale3
S302
READ pred_mode
S303
If(pred_mode == 0)
No
Yes
S304
READ pred_matrix_id_delta
S305
CREATE COPY OF TRANSMITTED MATRIX
S306
READ pred_matrix_id_delta, pred_size_id_delta, AND residual_flag
S307
PREDICT MATRIX FROM TRANSMITTED MATRIX
S308
residual_flag == true
Yes
No
S309
READ residual_down_sampling_flag AND residual_symmetry_flag
S310
DECODE RESIDUAL SIGNAL
S311
residual_symmetry_flag == true
Yes
No
S312
PERFORM INVERSE SYMMETRY PROCESS ON RESIDUAL SIGNAL
S313
residual_down_sampling_flag == true
Yes
No
S314
UP-CONVERT RESIDUAL SIGNAL
S315
ADD RESIDUAL SIGNAL TO PREDICTION SIGNAL
END PROCESS

FIG. 22

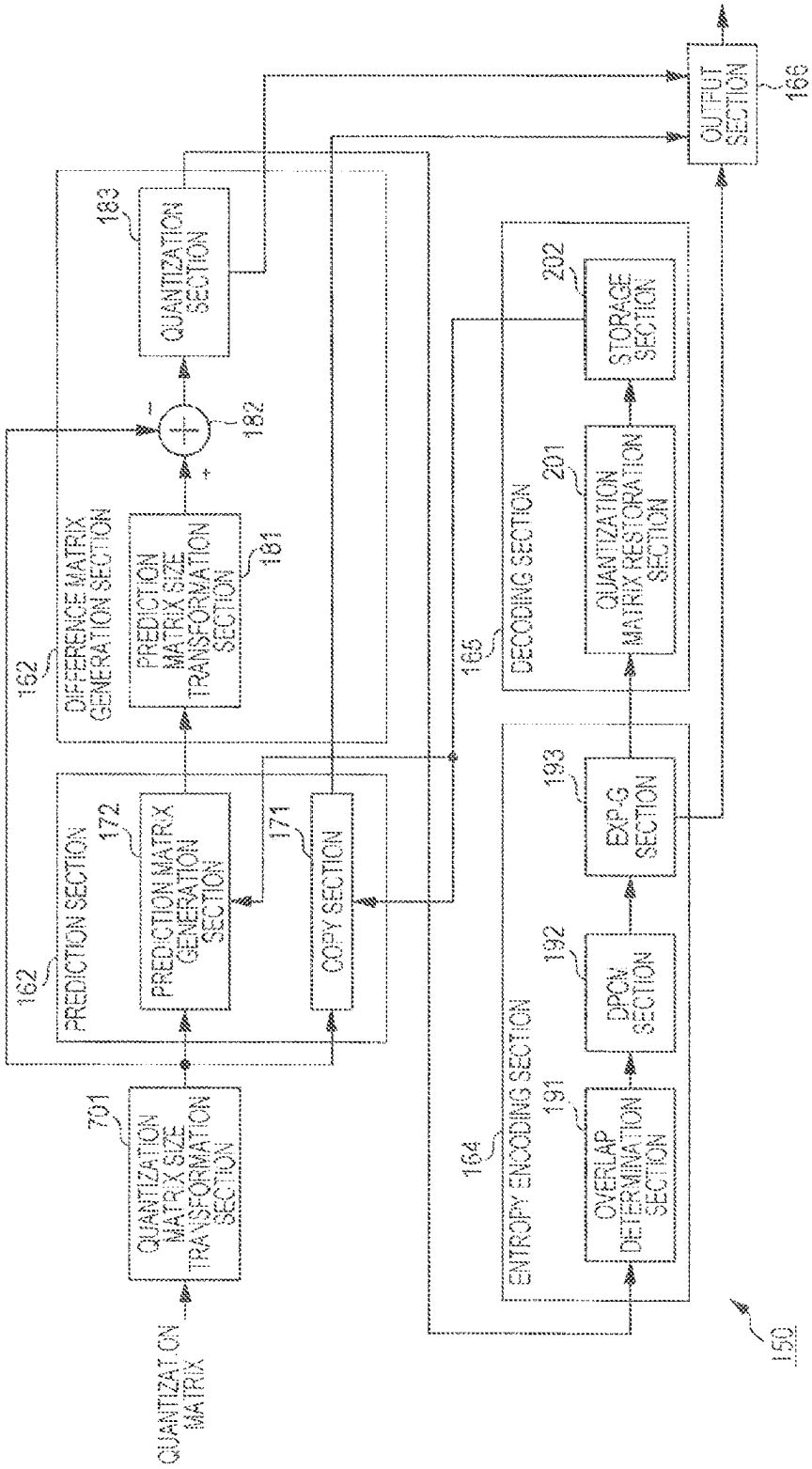
QUANTIZATION MATRIX
701
QUANTIZATION MATRIX SIZE TRANSFORMATION SECTION
162
PREDICTION SECTION
172
PREDICTION MATRIX GENERATION SECTION
171
COPY SECTION
162
DIFFERENCE MATRIX GENERATION SECTION
181
PREDICTION MATRIX SIZE TRANSFORMATION SECTION
182
183
QUANTIZATION SECTION
164
ENTROPY ENCODING SECTION
191
OVERLAP DETERMINATION SECTION
192
DPCM SECTION
193
EXP-G SECTION
165
DECODING SECTION
201
QUANTIZATION MATRIX RESTORATION SECTION
202
STORAGE SECTION
166
OUTPUT SECTION
150

FIG. 23

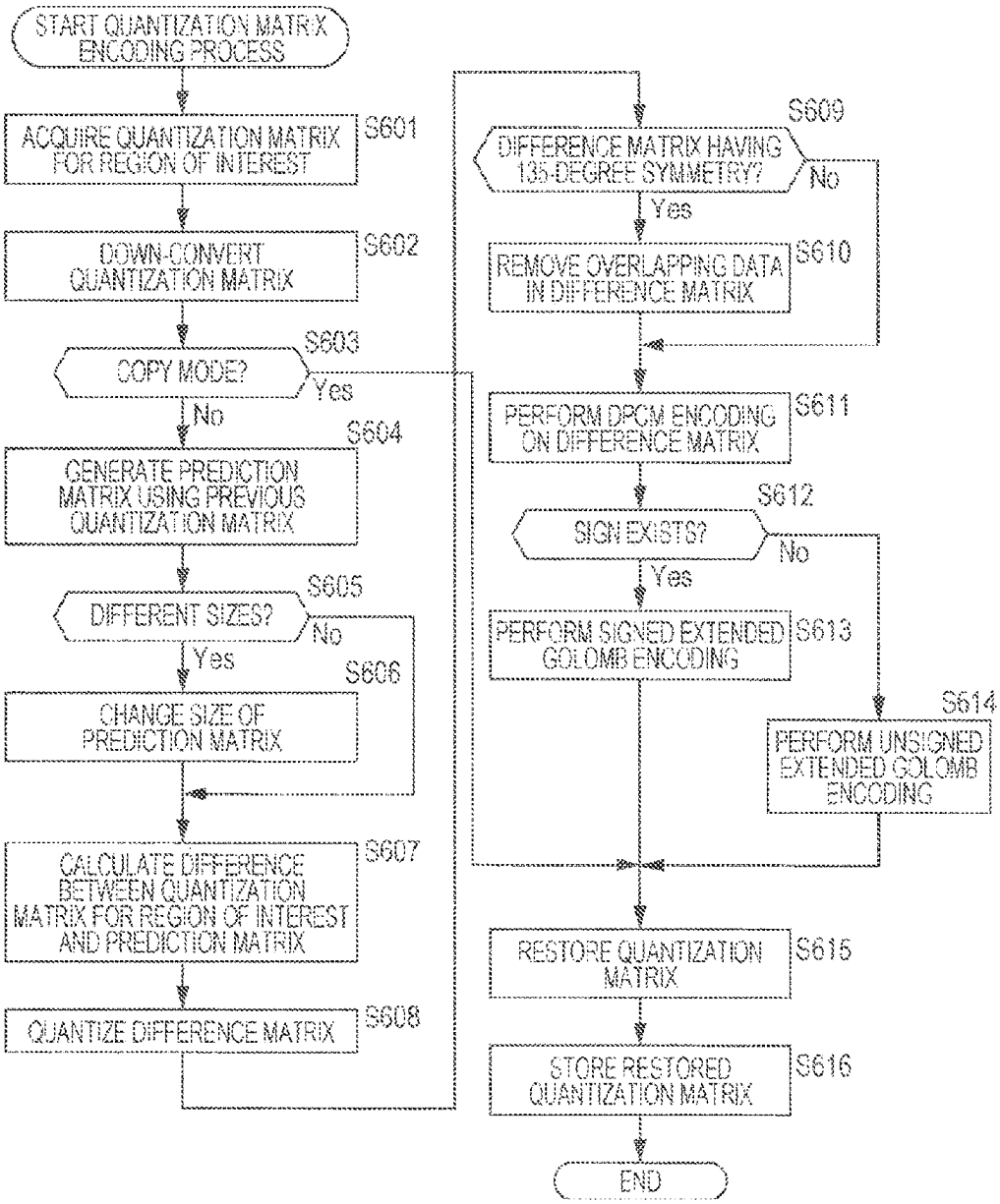
START QUANTIZATION MATRIX ENCODING PROCESS
ACQUIRE QUANTIZATION MATRIX FOR REGION OF INTEREST
S601
DOWN-CONVERT QUANTIZATION MATRIX
S602
COPY MODE?
S603
Yes
No
GENERATE PREDICTION MATRIX USING PREVIOUS QUANTIZATION MATRIX
S604
DIFFERENT SIZES?
S605
No
Yes
CHANGE SIZE OF PREDICTION MATRIX
S606
CALCULATE DIFFERENCE BETWEEN QUANTIZATION MATRIX FOR REGION OF INTEREST AND PREDICTION MATRIX
S607
QUANTIZE DIFFERENCE MATRIX
S608
DIFFERENCE MATRIX HAVING 135-DEGREE SYMMETRY?
S609
No
Yes
REMOVE OVERLAPPING DATA IN DIFFERENCE MATRIX
S610
PERFORM DPCM ENCODING ON DIFFERENCE MATRIX
S611
SIGN EXISTS?
S612
No
Yes
PERFORM SIGNED EXTENDED GOLOMB ENCODING
S613
PERFORM UNSIGNED EXTENDED GOLOMB ENCODING
S614
RESTORE QUANTIZATION MATRIX
S615
STORE RESTORED QUANTIZATION MATRIX
S616
END

FIG. 24

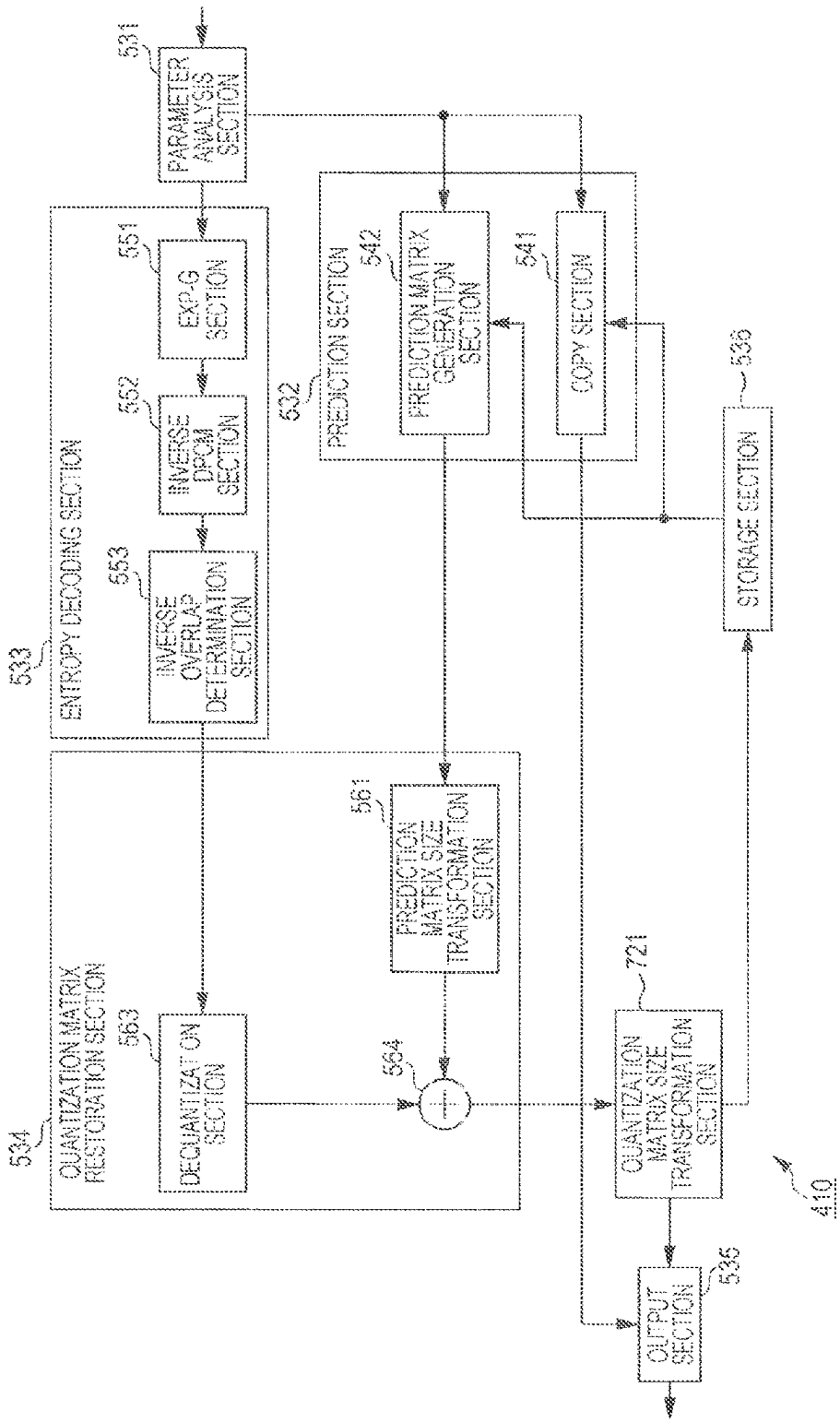
531
PARAMETER ANALYSIS SECTION
533
ENTROPY DECODING SECTION
551
EXP-G SECTION
552
INVERSE DPCM SECTION
553
INVERSE OVERLAP DETERMINATION SECTION
532
PREDICTION SECTION
542
PREDICTION MATRIX GENERATION SECTION
541
COPY SECTION
536
STORAGE SECTION
534
QUANTIZATION MATRIX RESTORATION SECTION
563
DEQUANTIZATION SECTION
561
PREDICTION MATRIX SIZE TRANSFORMATION SECTION
564
721
QUANTIZATION MATRIX SIZE TRANSFORMATION SECTION
535
OUTPUT SECTION
410

FIG. 25

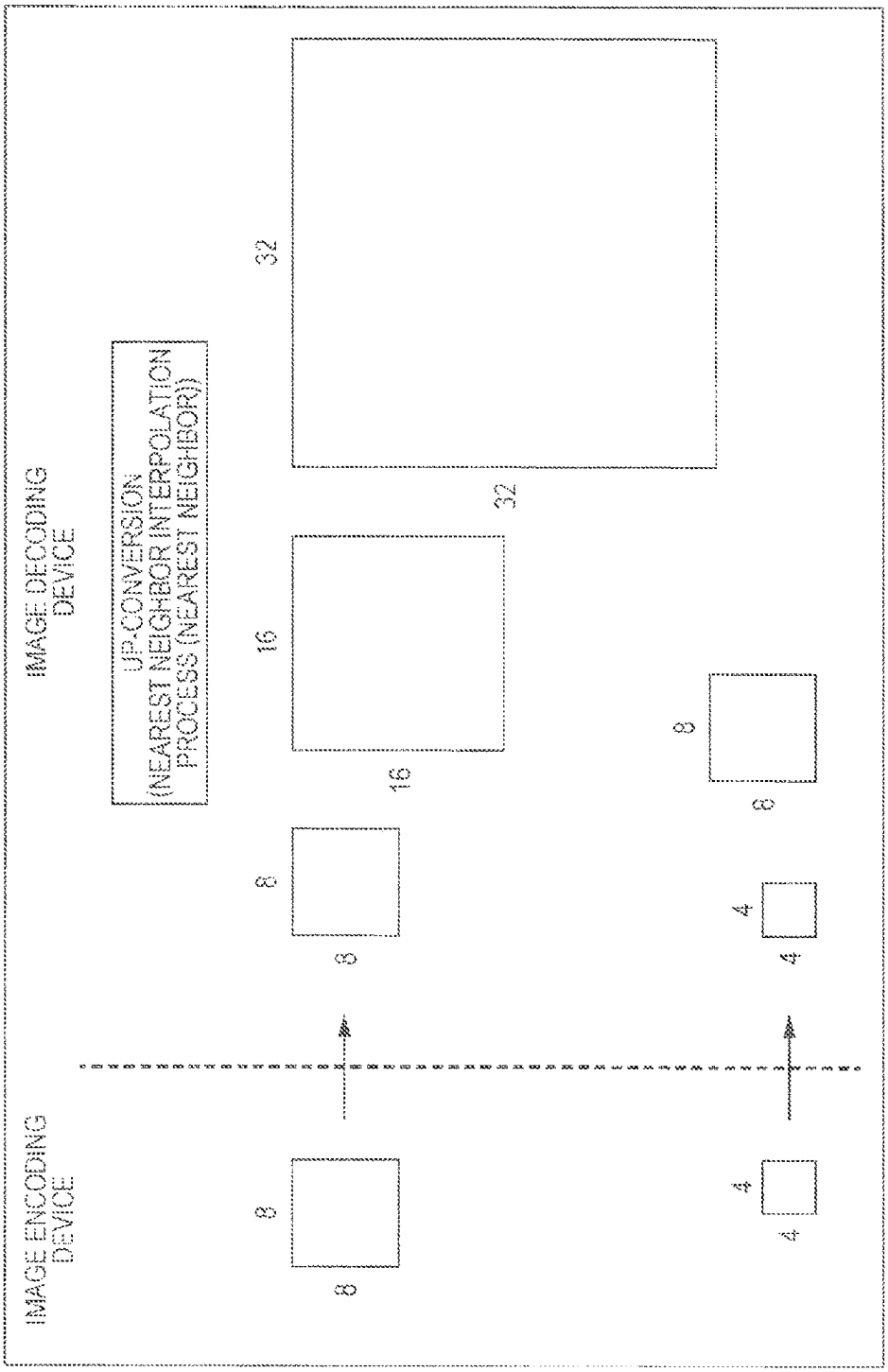
IMAGE ENCODING DEVICE
IMAGE DECODING DEVICE
UP-CONVERSION (NEAREST NEIGHBOR INTERPOLATION PROCESS (NEAREST NEIGHBOR))
8
8
8
8
16
16
32
32
4
4
4
4

FIG. 26

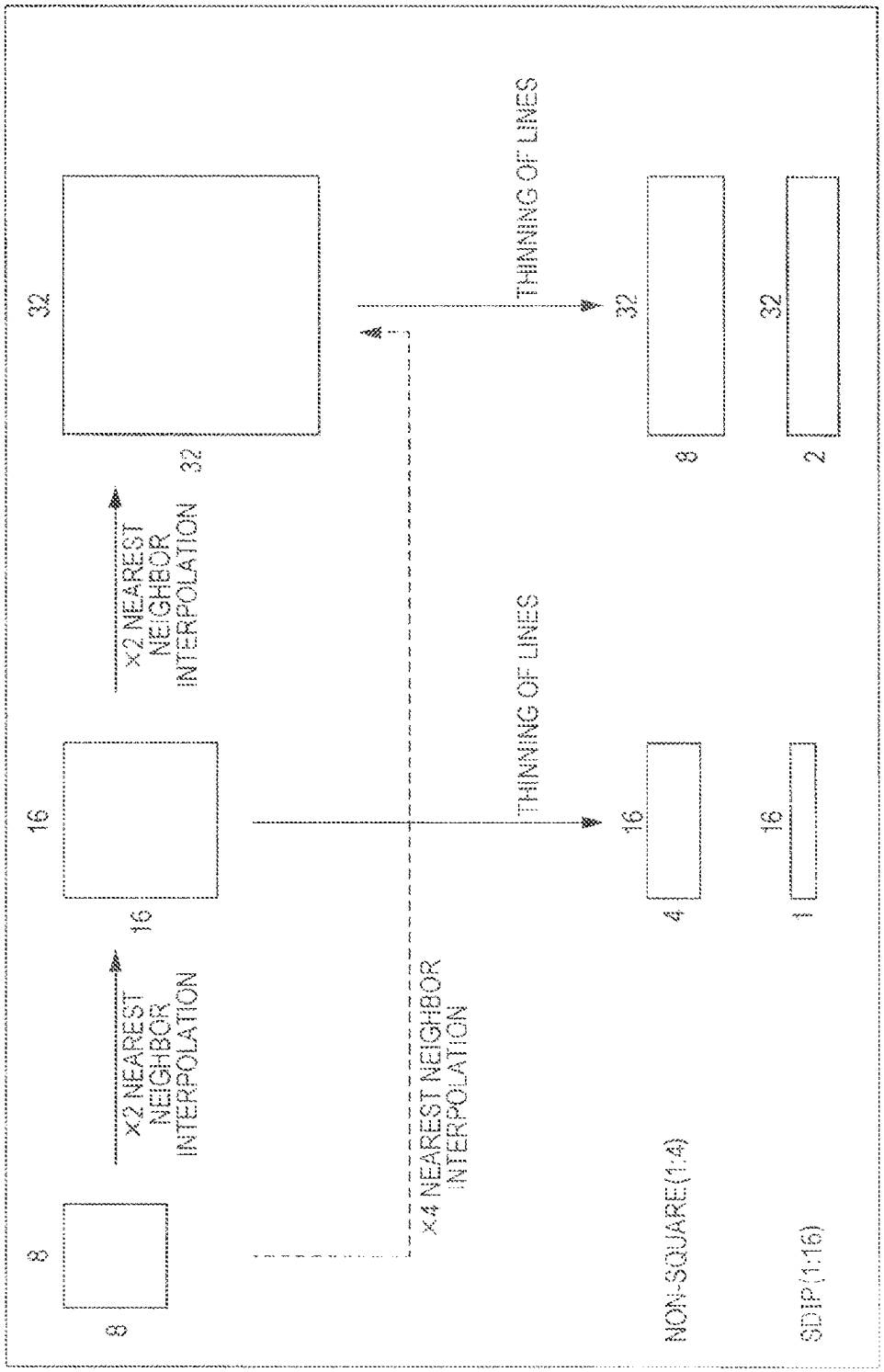
8
8
×2 NEAREST NEIGHBOR INTERPOLATION
16
16
×2 NEAREST NEIGHBOR INTERPOLATION
32
32
×4 NEAREST NEIGHBOR INTERPOLATION
THINNING OF LINES
16
4
THINNING OF LINES
32
8
NON-SQUARE(1:4)
16
1
32
2
SDIP(1:16)

FIG. 27

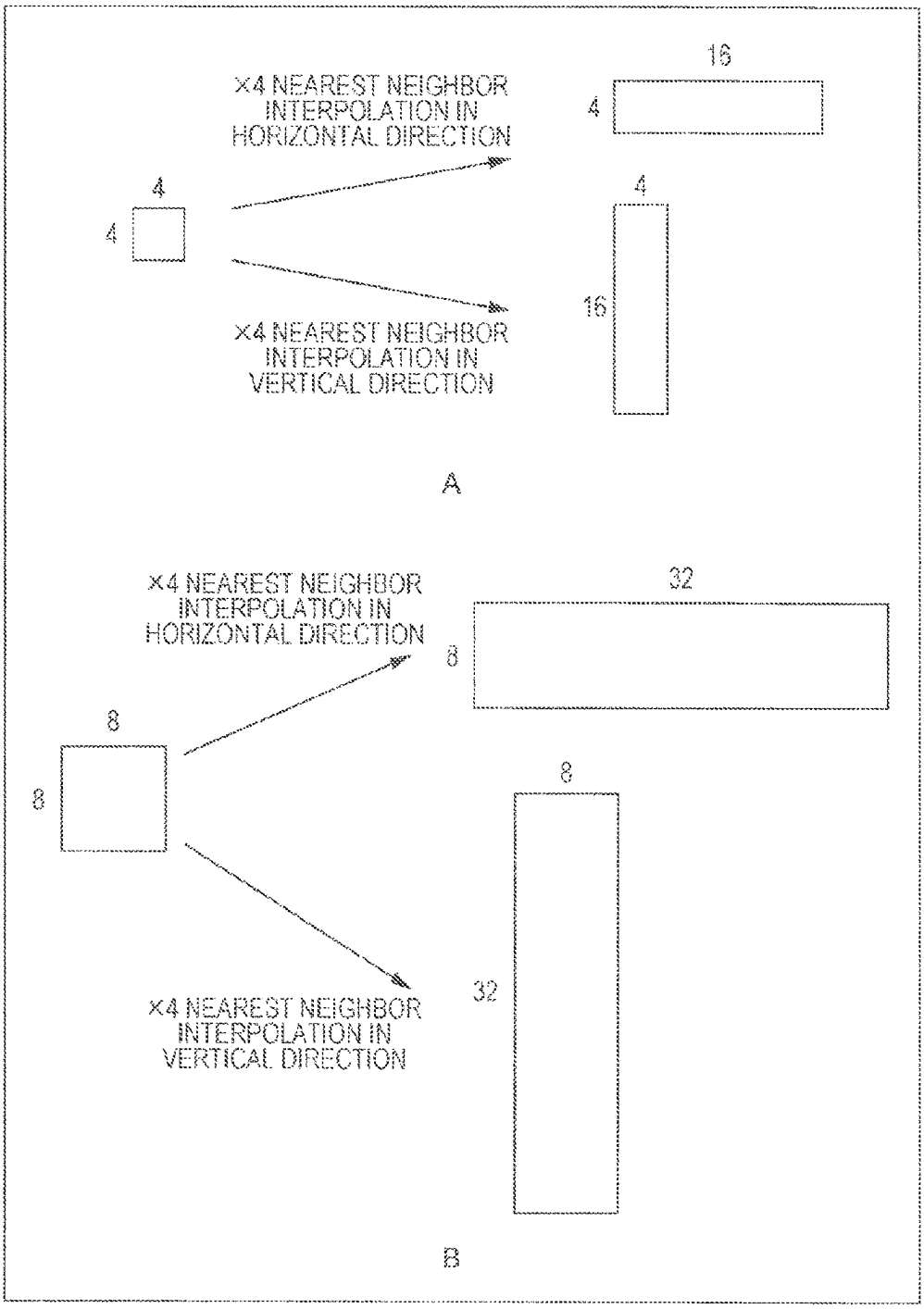
×4 NEAREST NEIGHBOR INTERPOLATION IN HORIZONTAL DIRECTION
16
4
4
4
4
16
×4 NEAREST NEIGHBOR INTERPOLATION IN VERTICAL DIRECTION
A
×4 NEAREST NEIGHBOR INTERPOLATION IN HORIZONTAL DIRECTION
32
8
8
8
8
32
×4 NEAREST NEIGHBOR INTERPOLATION IN VERTICAL DIRECTION
B

FIG. 28

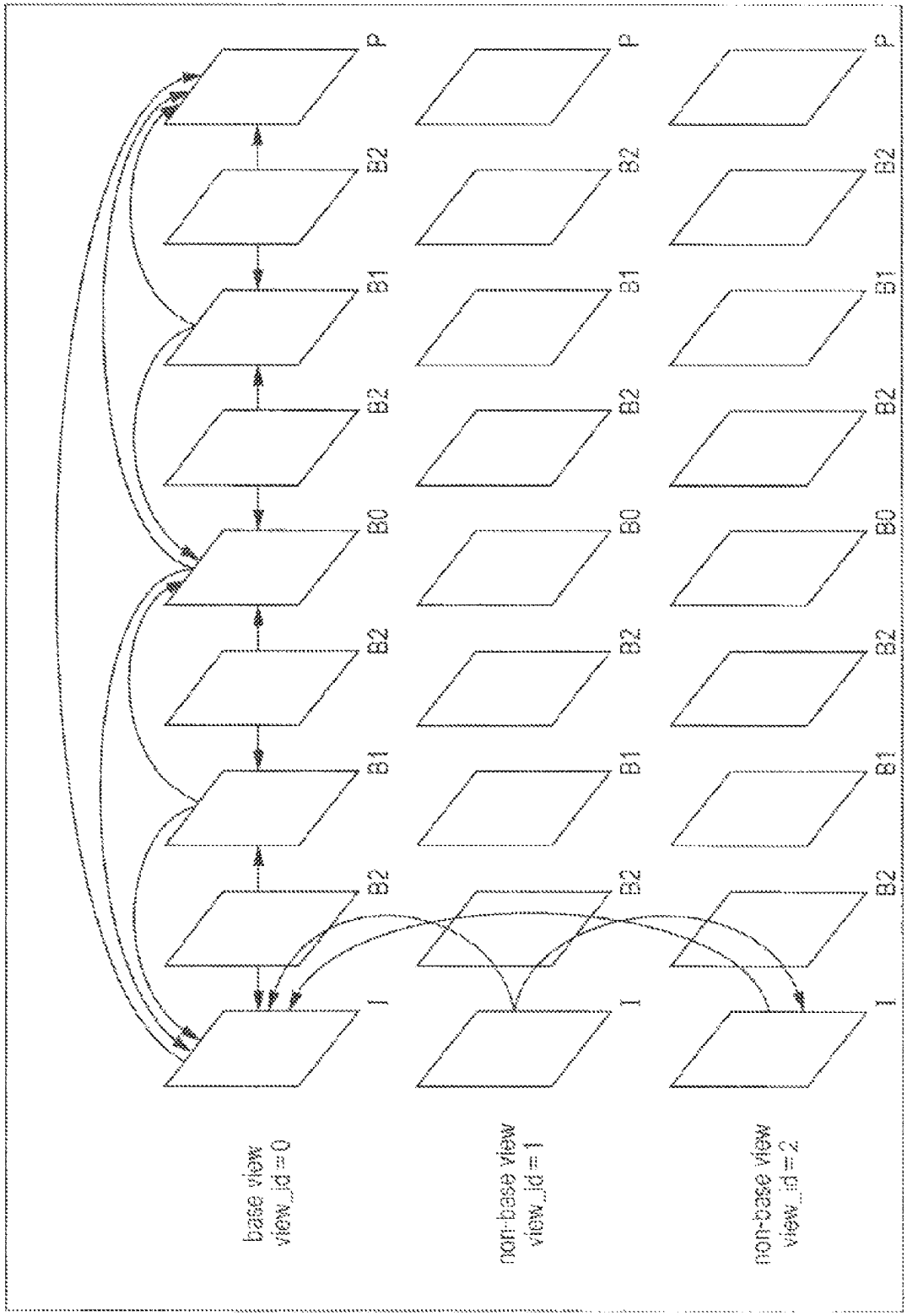
base view
view_id = 0
non-base view
view_id = 1
non-base view
view_id = 2
I
B2
B1
B2
B0
B2
B1
B2
P

FIG. 29

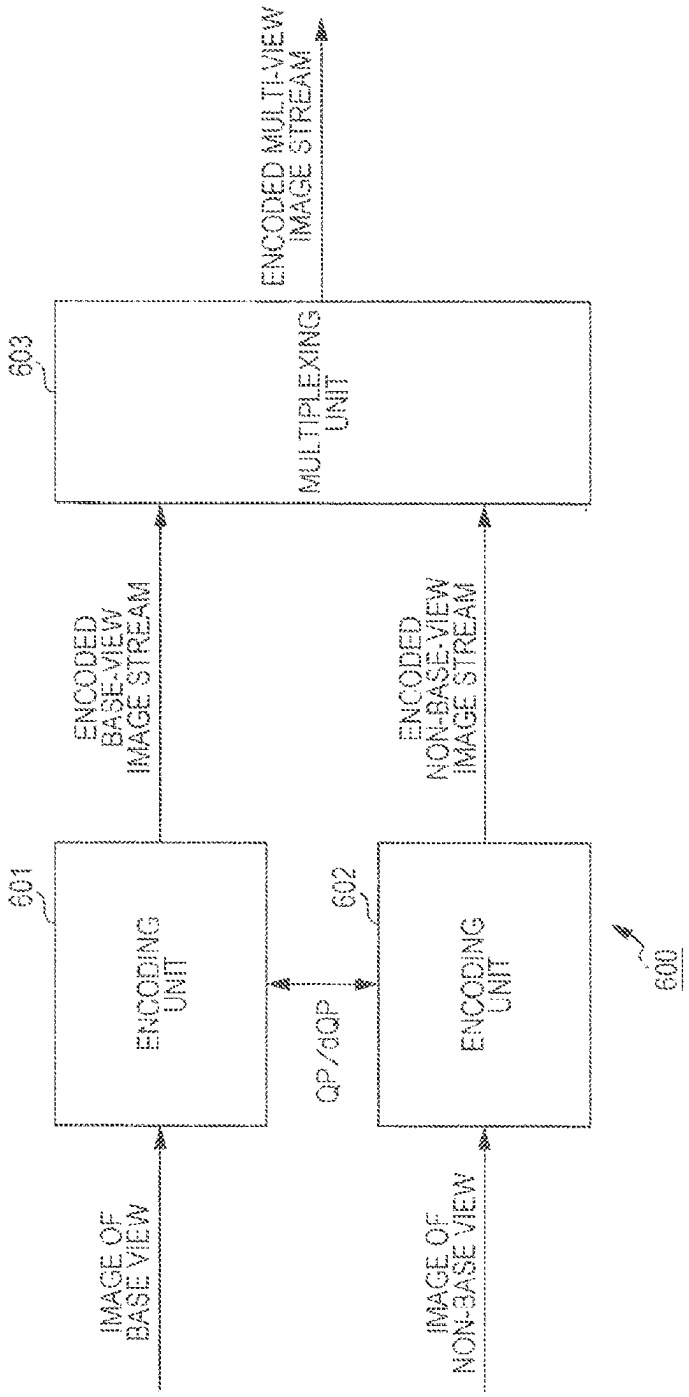
IMAGE OF BASE VIEW
IMAGE OF NON-BASE VIEW
601
ENCODING UNIT
602
ENCODING UNIT
QP/dQP
600
ENCODED BASE-VIEW IMAGE STREAM
ENCODED NON-BASE-VIEW IMAGE STREAM
603
MULTIPLEXING UNIT
ENCODED MULTI-VIEW IMAGE STREAM

FIG. 30

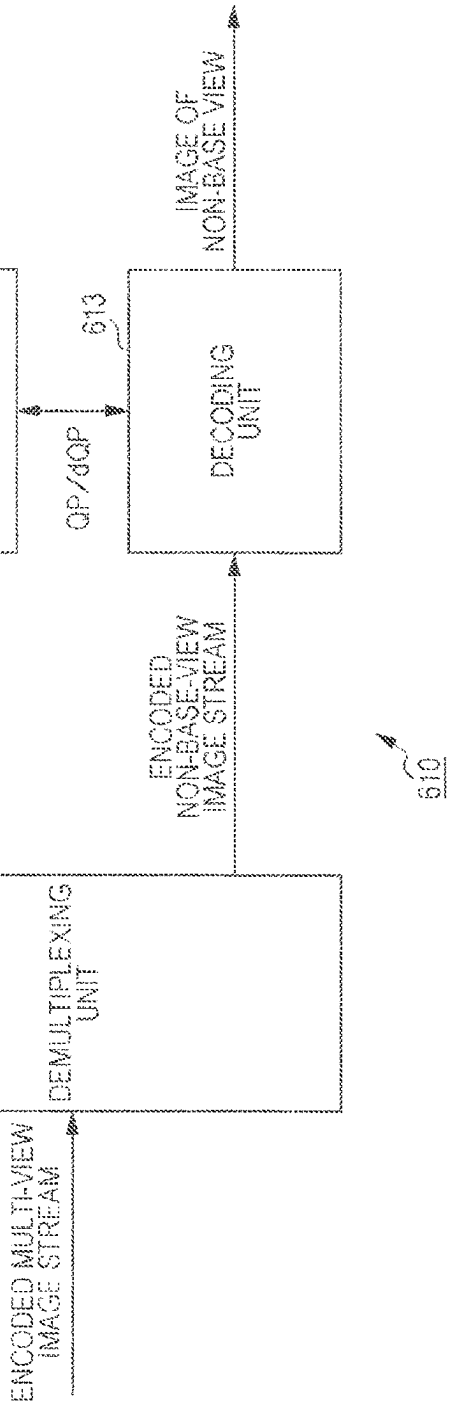
ENCODED MULTI-VIEW IMAGE STREAM
611
DEMULTIPLEXING UNIT
ENCODED BASE-VIEW IMAGE STREAM
ENCODED NON-BASE-VIEW IMAGE STREAM
612
DECODING UNIT
QP/dQP
613
DECODING UNIT
IMAGE OF BASE VIEW
IMAGE OF NON-BASE VIEW
610

FIG. 31

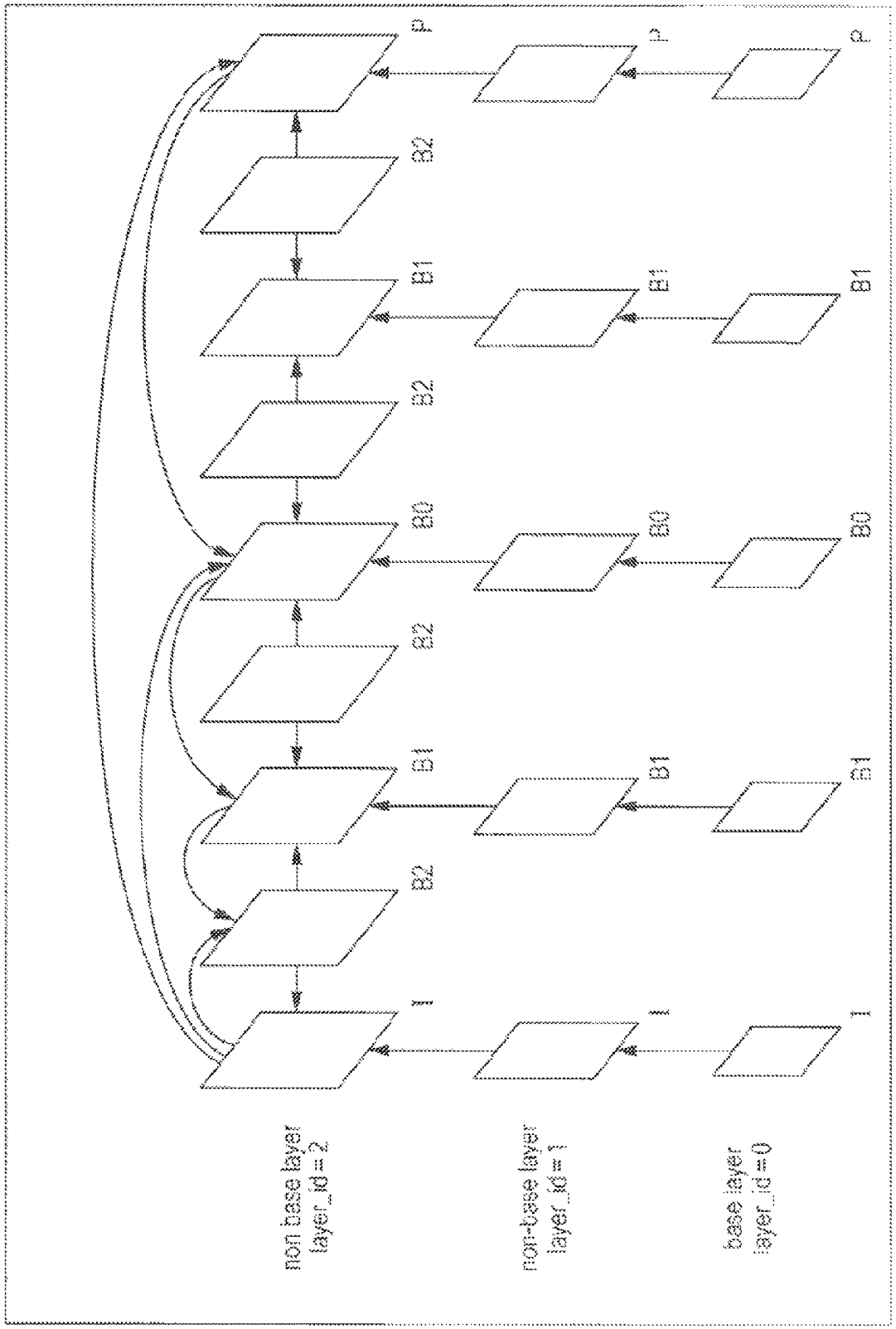
non base layer
layer_id = 2
non-base layer
layer_id = 1
base layer
layer_id = 0
I
B2
B1
B2
B0
B2
B1
B2
P
B1
B0
B1
P
B1
B0
B1
P

FIG. 32

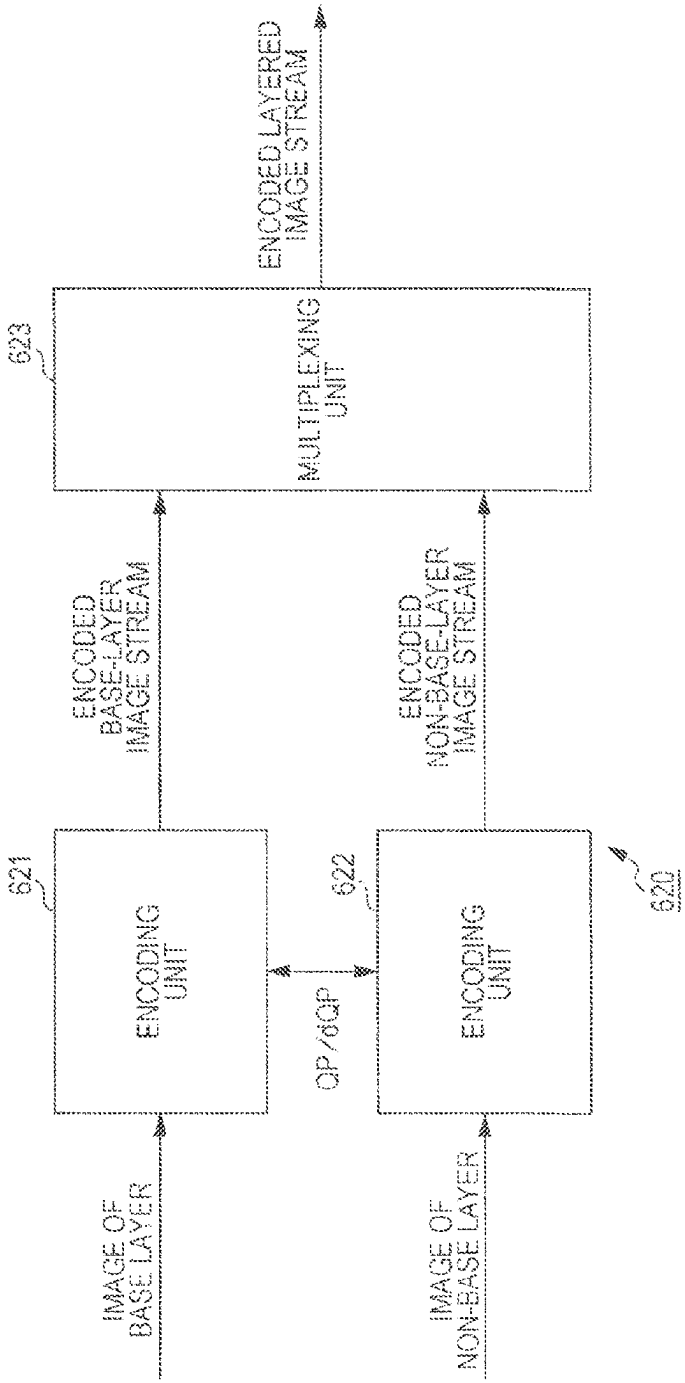
IMAGE OF BASE LAYER
IMAGE OF NON-BASE LAYER
621
ENCODING UNIT
622
ENCODING UNIT
QP/dQP
620
ENCODED BASE-LAYER IMAGE STREAM
ENCODED NON-BASE-LAYER IMAGE STREAM
623
MULTIPLEXING UNIT
ENCODED LAYERED IMAGE STREAM

FIG. 33

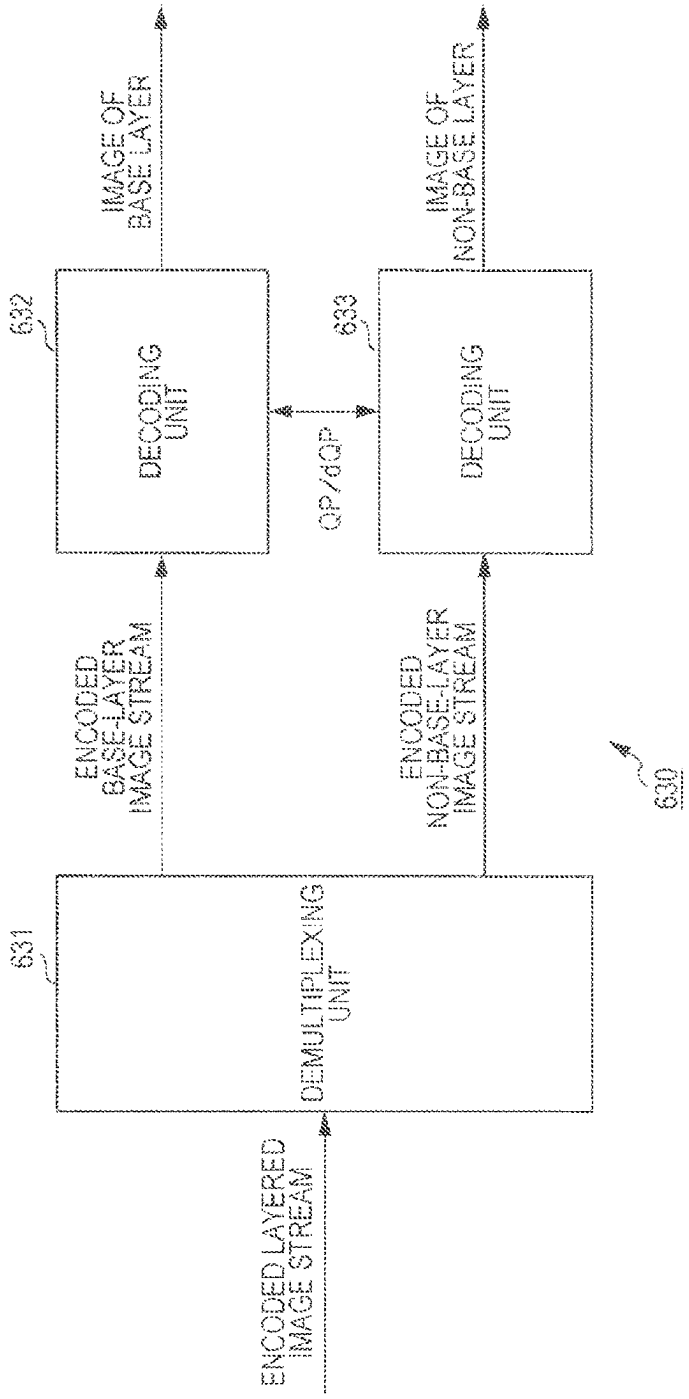
ENCODED LAYERED IMAGE STREAM
631
DEMULTIPLEXING UNIT
ENCODED BASE-LAYER IMAGE STREAM
ENCODED NON-BASE-LAYER IMAGE STREAM
632
DECODING UNIT
QP/dQP
633
DECODING UNIT
IMAGE OF BASE LAYER
IMAGE OF NON-BASE LAYER
630

FIG. 34

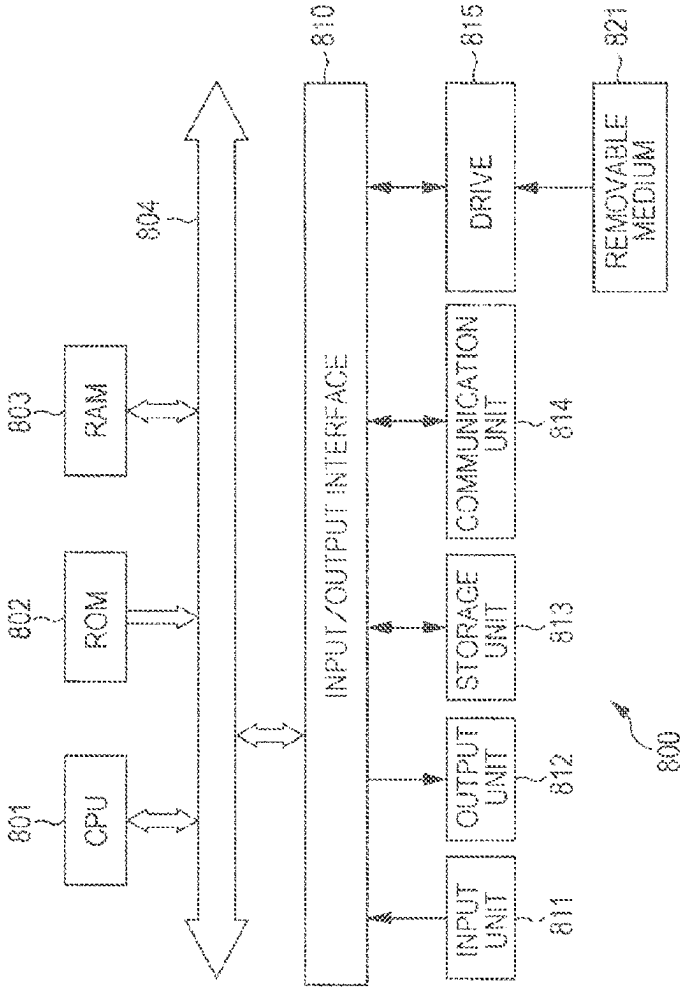
801
CPU
802
ROM
803
RAM
804
810
INPUT/OUTPUT INTERFACE
INPUT UNIT
811
OUTPUT UNIT
812
STORAGE UNIT
813
COMMUNICATION UNIT
814
DRIVE
815
REMOVABLE MEDIUM
821
800

FIG. 35

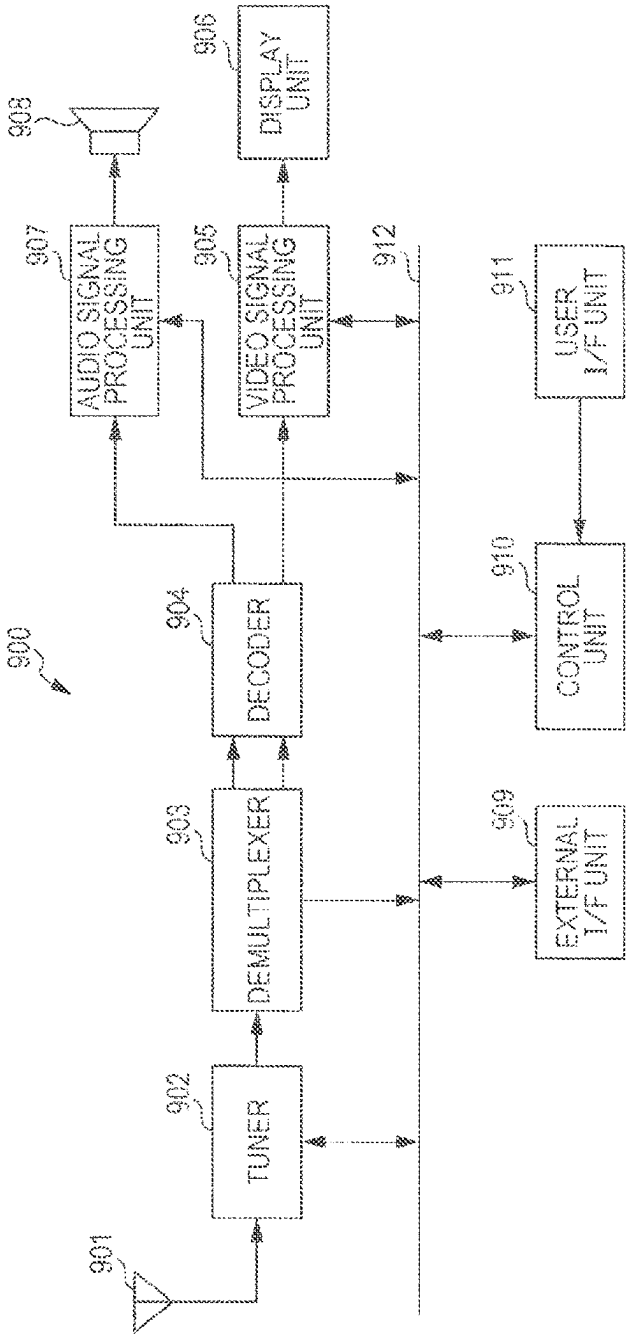
900
901
902
TUNER
903
DEMULTIPLEXER
904
DECODER
905
VIDEO SIGNAL PROCESSING UNIT
906
DISPLAY UNIT
907
AUDIO SIGNAL PROCESSING UNIT
908
912
909
EXTERNAL I/F UNIT
910
CONTROL UNIT
911
USER I/F UNIT

FIG. 36

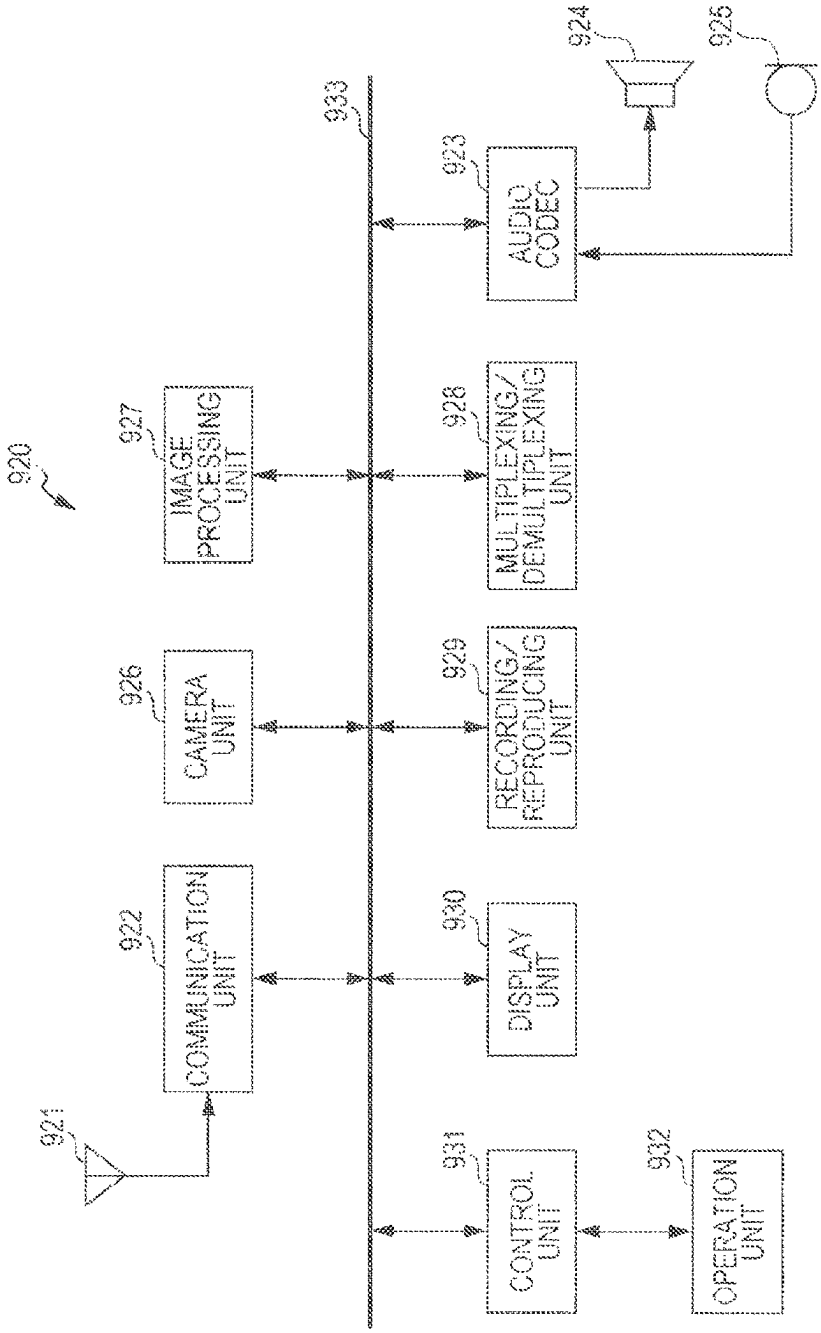
920
921
922
COMMUNICATION UNIT
926
CAMERA UNIT
927
IMAGE PROCESSING UNIT
930
DISPLAY UNIT
929
RECORDING/ REPRODUCING UNIT
928
MULTIPLEXING/ DEMULTIPLEXING UNIT
931
CONTROL UNIT
932
OPERATION UNIT
933
923
AUDIO CODEC
924
925

FIG. 37

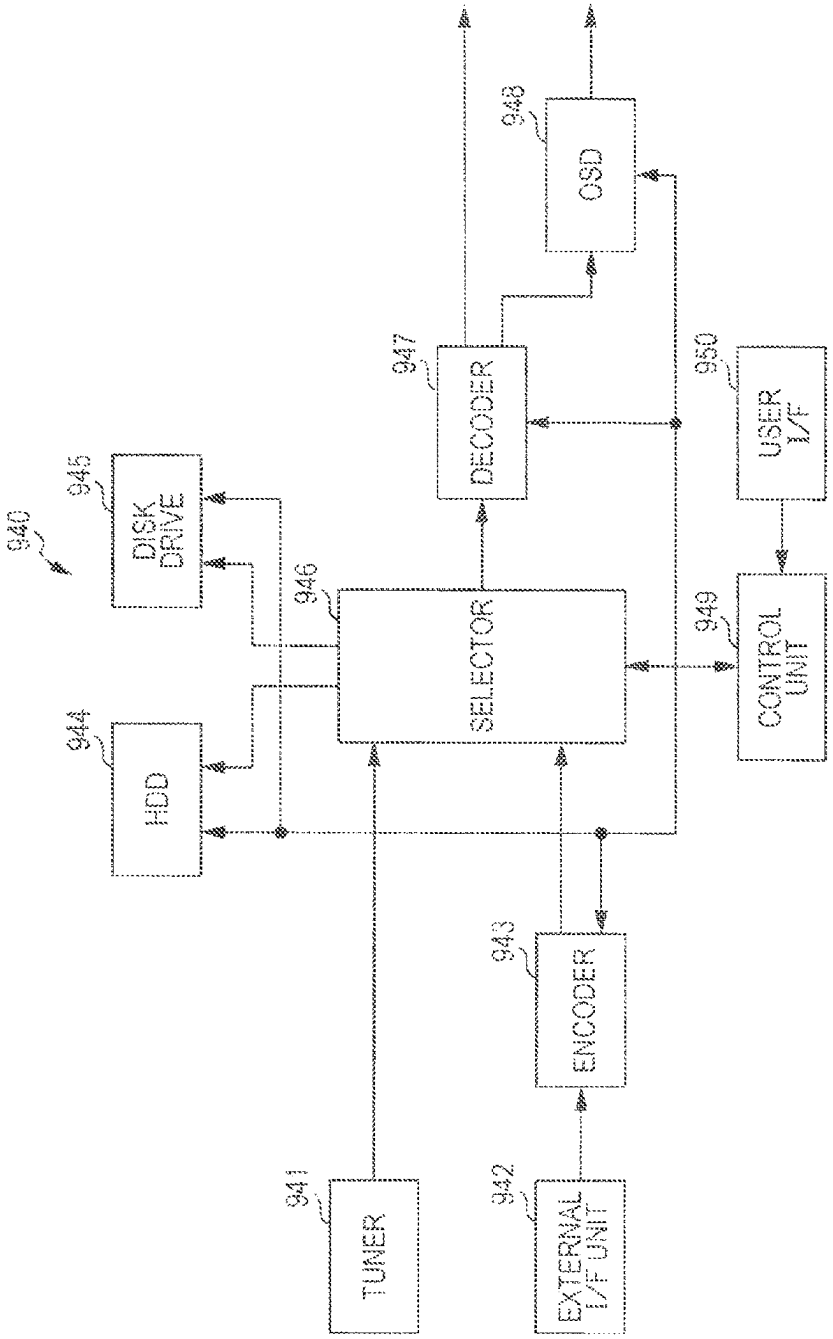
940
945
DISK DRIVE
944
HDD
946
SELECTOR
947
DECODER
948
OSD
950
USER I/F
949
CONTROL UNIT
941
TUNER
942
EXTERNAL I/F UNIT
943
ENCODER

FIG. 38

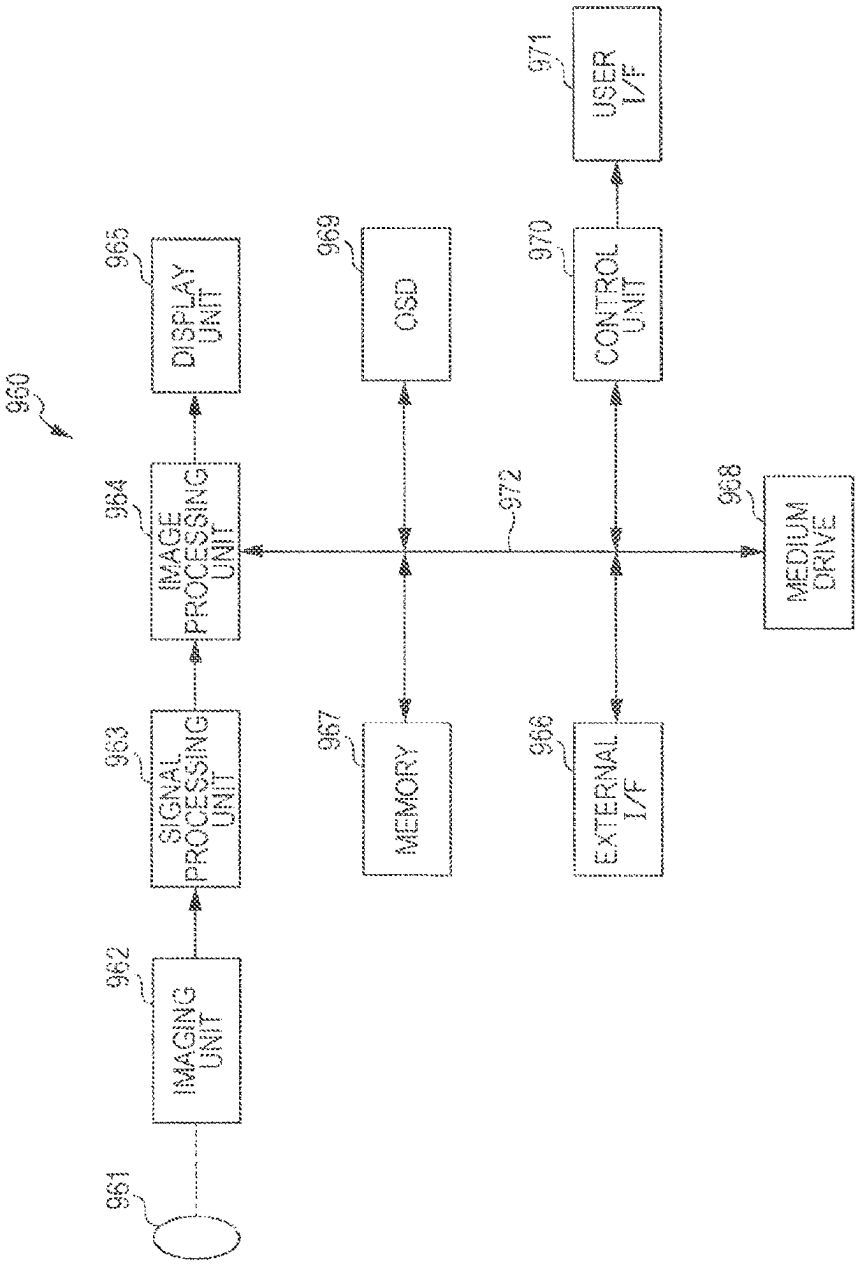
960
961
962
IMAGING UNIT
963
SIGNAL PROCESSING UNIT
964
IMAGE PROCESSING UNIT
965
DISPLAY UNIT
967
MEMORY
969
OSD
972
966
EXTERNAL I/F
970
CONTROL UNIT
971
USER I/F
968
MEDIUM DRIVE

FIG. 39

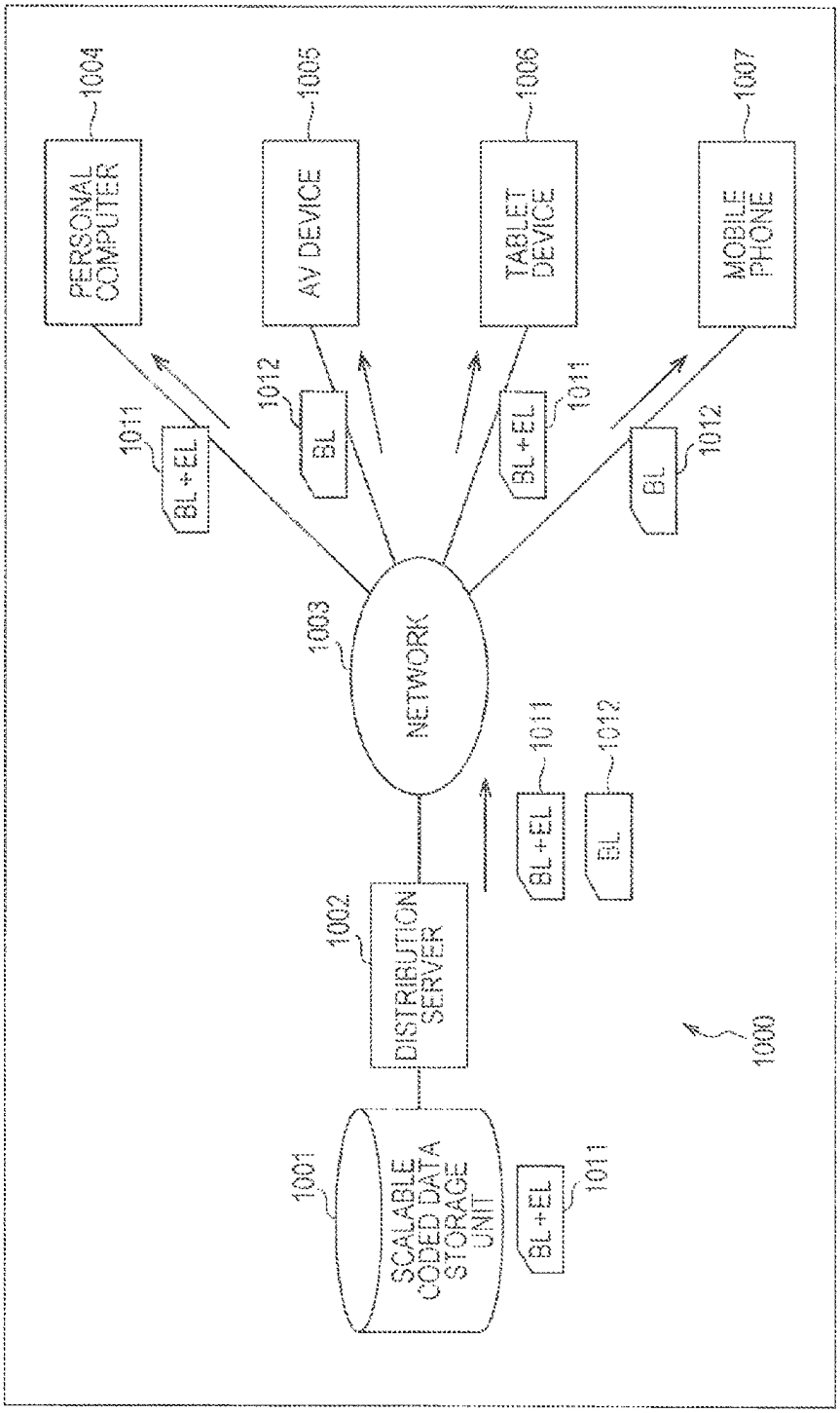
1004
PERSONAL COMPUTER
1005
AV DEVICE
1006
TABLET DEVICE
1007
MOBILE PHONE
1011
BL +EL
1012
BL
1011
BL +EL
1012
BL
1003
NETWORK
1011
BL +EL
1012
BL
1002
DISTRIBUTION SERVER
1000
1001
SCALABLE CODED DATA STORAGE UNIT
BL +EL
1011

FIG. 40

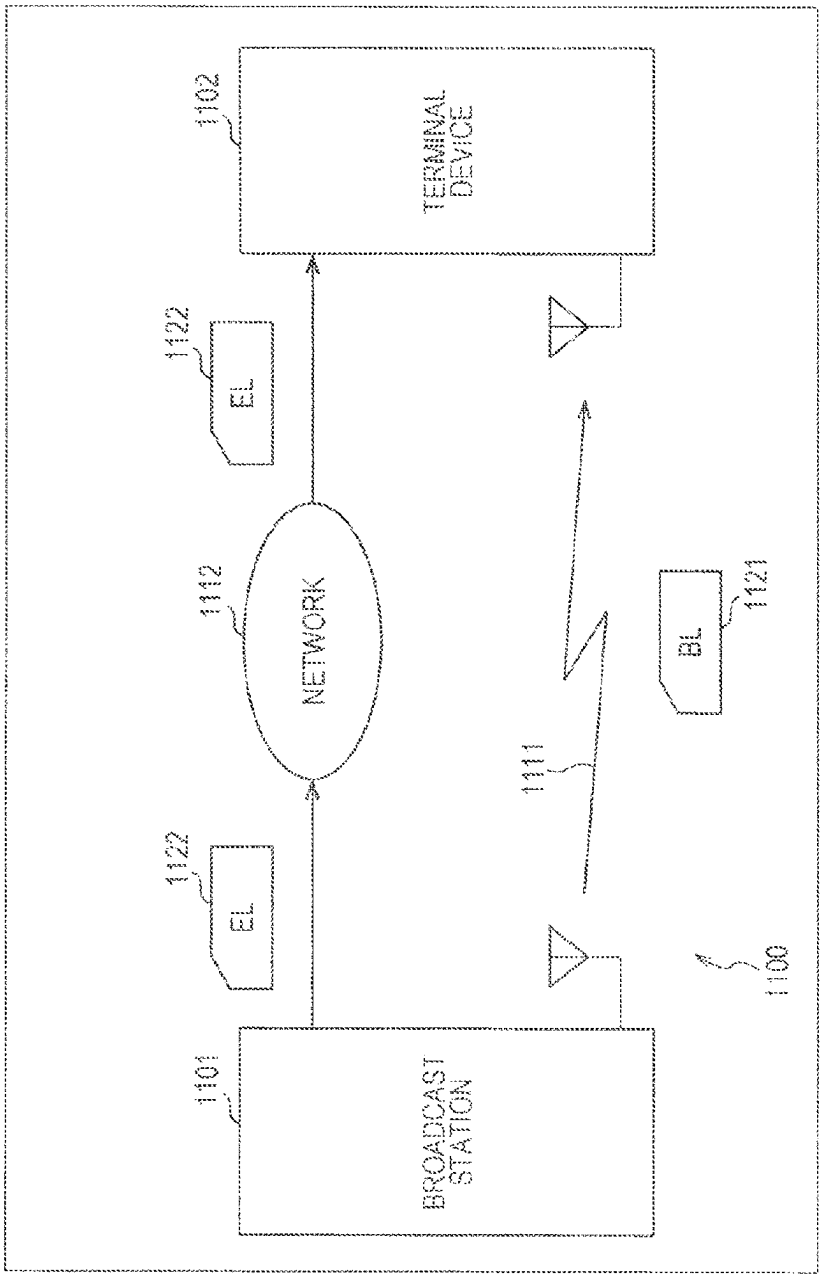
1102
TERMINAL DEVICE
1122
EL
1112
NETWORK
1122
EL
1101
BROADCAST STATION
1111
BL
1121
1100

FIG. 41

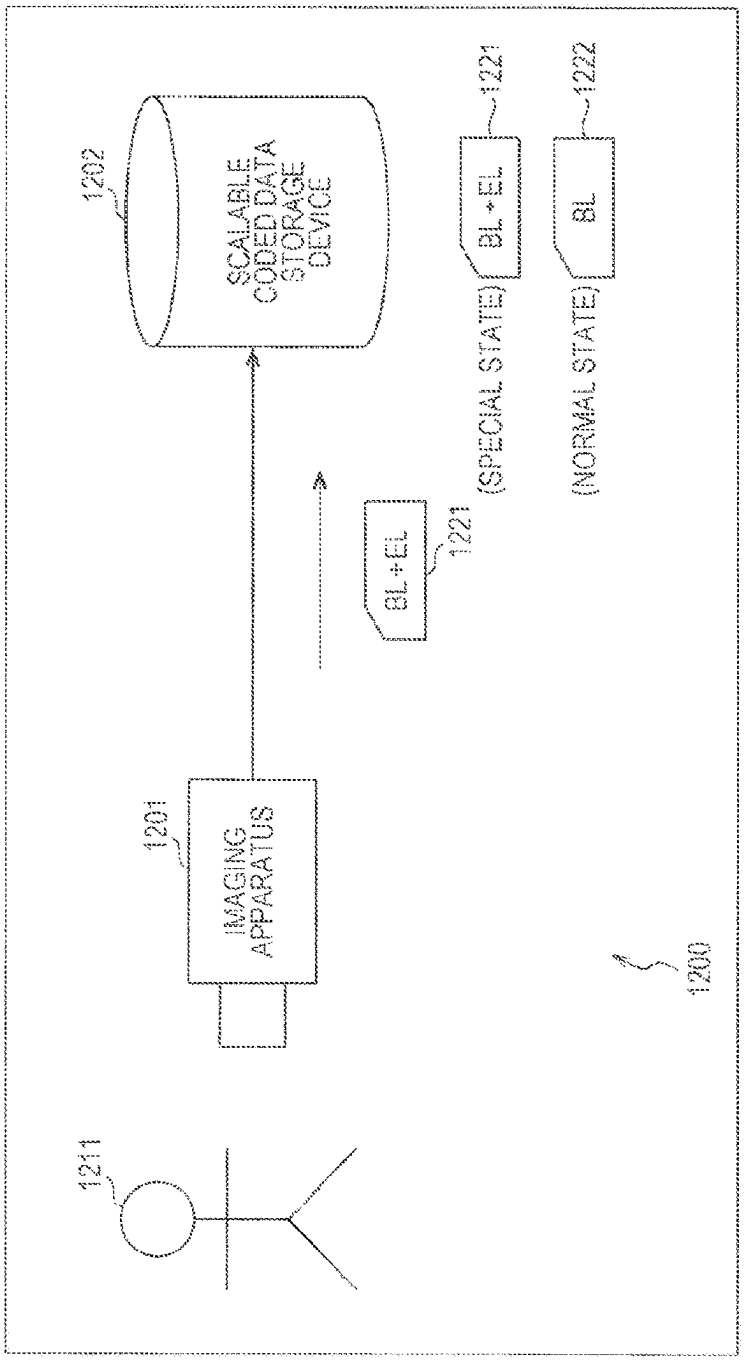
1211
1201
IMAGING APPARATUS
1202
SCALABLE CODED DATA STORAGE DEVICE
BL + EL
1221
(SPECIAL STATE)
BL + EL
1221
BL
1222
(NORMAL STATE)
1200

IMAGE PROCESSING DEVICE AND METHOD

CROSS-REFERENCE TO RELATED APPLICATIONS

The present application is a continuation of U.S. application Ser. No. 17/211,177, filed Mar. 24, 2021, which is a continuation of U.S. application Ser. No. 16/706,832, filed Dec. 9, 2019, which is a continuation of U.S. application Ser. No. 16/138,184, filed Sep. 21, 2018 (now U.S. Pat. No. 10,560,697), which is a continuation of U.S. application Ser. No. 15/687,082, filed Aug. 25, 2017 (now U.S. Pat. No. 10,136,135), which is a continuation of U.S. application Ser. No. 15/429,866, filed Feb. 10, 2017 (now U.S. Pat. No. 9,781,422), which is a continuation of U.S. application Ser. No. 14/359,765, filed May 21, 2014 (now U.S. Pat. No. 9,635,354), which is a National Stage of PCT/JP2012/081057, filed Nov. 30, 2012, which claims priority to Japanese Patent Application No. 2011-277745, filed Dec. 19, 2011, Japanese Patent Application No. 2012-008462, filed Jan. 18, 2012, and Japanese Patent Application No. 2012-039216, filed Feb. 24, 2012, the entire contents of each of which are incorporated herein by reference.

TECHNICAL FIELD

The present disclosure relates to an image processing device and method.

BACKGROUND ART

In H.264/AVC (Advanced Video Coding), which is a video coding standard, the profiles of High Profile or higher can use a quantization step whose size differs from one component of an orthogonal transform coefficient to another for the quantization of image data. The quantization step for each component of the orthogonal transform coefficient may be set based on a reference step value and a quantization matrix (also referred to as a scaling list) defined by a size equivalent to the unit of orthogonal transform.

For example, a specified value of the quantization matrix is determined for each of a transform unit of a 4×4 size in the intra-prediction mode, a transform unit of a 4×4 size in the inter-prediction mode, a transform unit of an 8×8 size in the intra-prediction mode, and a transform unit of an 8×8 size in the inter-prediction mode. Further, users are allowed to specify a unique quantization matrix different from the specified values in a sequence parameter set or a picture parameter set. If no quantization matrices are used, the value of the quantization step to be used for quantization is equal for all the components.

In HEVC (High Efficiency Video Coding), which is under standardization as a next-generation video coding standard and which is a successor to H.264/AVC, the concept of CUs (Coding Units) corresponding to existing macroblocks has been introduced (see, for example, NPL 1). The range of coding unit sizes is specified by a set of values which are powers of 2, called LCU (Largest Coding Unit) and SCU (Smallest Coding Unit), in a sequence parameter set. A specific coding unit size in the range specified by the LCU and the SCU is specified using split_flag.

In HEVC, one coding unit can be partitioned into one or more orthogonal transform units, or one or more transform units (TUs). Any of 4×4, 8×8, 16×16, and 32×32 is available as the size of a transform unit. Accordingly, a quantization matrix can also be specified for each of those candidate transform unit sizes.

In H.264/AVC, only one quantization matrix can be specified in each picture for the size of each transform unit. In contrast, it has been proposed to specify multiple candidate quantization matrices in each picture for the size of each transform unit and adaptively select a quantization matrix for each block in terms of RD (Rate-Distortion) optimization (see, for example, NPL 2).

CITATION LIST

Non Patent Literature

NPL 1: JCTVC-B205, "Test Model under Consideration", Joint Collaborative Team on Video Coding (JCT-VC) of ITU-T SG16 WP3 and ISO/IECJTC1/SC29/WG11 2nd Meeting: Geneva, CH, 21-28 Jul. 2010

NPL 2: VCEG-AD06, "Adaptive Quantization Matrix Selection on KTA Software", ITU—Telecommunications Standardization Sector STUDY GROUP 16 Question 6 Video Coding Experts Group (VCEG) 30th Meeting: Hangzhou, China, 23-24 Oct. 2006

SUMMARY OF INVENTION

Technical Problem

However, as the size of a transform unit increases, the size of a corresponding quantization matrix also increases, resulting in an increase in the amount of coding of a quantization matrix to be transmitted. In addition, an increase in the size of a transform unit causes an increase in overhead, and switching of quantization matrices may cause a problem in terms of compression efficiency.

The present disclosure has been proposed in view of such a situation, and it is an object of the present disclosure to enable suppression of an increase in the amount of coding of a quantization matrix.

Solution to Problem

An aspect of the present disclosure provides an image processing device including a receiving unit configured to receive encoded data obtained by performing an encoding process on an image, and a quantization matrix limited to a size less than or equal to a transmission size that is a maximum size allowed for transmission; a decoding unit configured to perform a decoding process on the encoded data received by the receiving unit to generate quantized data; an up-conversion unit configured to up-convert the quantization matrix received by the receiving unit from the transmission size to a size that is identical to a block size which is a processing unit in which dequantization is performed; and a dequantization unit configured to dequantize the quantized data generated by the decoding unit using the quantization matrix up-converted by the up-conversion unit.

The quantization matrix received by the receiving unit can be configured to have, as the transmission size, a size that is identical to a default quantization matrix size.

The quantization matrix received by the receiving unit can be configured to have, as the transmission size, a size that is identical to a maximum size of a default quantization matrix.

The transmission size can be 8×8, and the quantization matrix received by the receiving unit can be configured to have an 8×8 size.

The up-conversion unit can up-convert the quantization matrix limited to the size less than or equal to the transmission size, by performing an interpolation process on a matrix element in the quantization matrix received by the receiving unit.

The up-conversion unit can up-convert the quantization matrix limited to the size less than or equal to the transmission size, by performing a nearest neighbor interpolation process on a matrix element in the quantization matrix received by the receiving unit.

The transmission size can be 8×8, and the up-conversion unit can up-convert a quantization matrix having an 8×8 size to a quantization matrix having a 16×16 size by performing the nearest neighbor interpolation process on a matrix element in the quantization matrix having an 8×8 size.

The up-conversion unit can up-convert a quantization matrix having an 8×8 size to a quantization matrix having a 32×32 size by performing the nearest neighbor interpolation process on a matrix element in the quantization matrix having an 8× 8 size.

The up-conversion unit can up-convert a square quantization matrix limited to a size less than or equal to the transmission size to a non-square quantization matrix by performing an interpolation process on a matrix element in the square quantization matrix.

The transmission size can be 8×8, and the up-conversion unit can up-convert a quantization matrix having an 8×8 size to a quantization matrix having an 8×32 size or a quantization matrix having a 32× 8 size, by performing the interpolation process on a matrix element in the quantization matrix having an 8×8 size.

The transmission size can be 8×8, and the up-conversion unit can up-convert a quantization matrix having a 4×4 size to a quantization matrix having a 4×16 size or a quantization matrix having a 16× 4 size, by performing the interpolation process on a matrix element in the quantization matrix having a 4× 4 size.

The transmission size can be 8×8, and the up-conversion unit can up-convert a quantization matrix having an 8×8 size to a quantization matrix having a 2× 32 size, a quantization matrix having a 32× 2 size, a quantization matrix having a 1×16 size, or a quantization matrix having a 16×1 size, by performing the interpolation process on a matrix element in the quantization matrix having an 8×8 size.

A coding unit that is a processing unit in which a decoding process is performed and a transform unit that is a processing unit in which a transform process is performed can have a layered structure, the decoding unit can perform a decoding process on the encoded data using a unit having a layered structure, and the up-conversion unit can up-convert the quantization matrix received by the receiving unit from the transmission size to a size of a transform unit that is a processing unit in which dequantization is performed.

The quantization matrix can be set as a quantization matrix having matrix elements which differ in accordance with a block size that is a processing unit in which dequantization is performed, the receiving unit can receive a quantization matrix having matrix elements which differ in accordance with a block size that is a processing unit in which dequantization is performed, and the up-conversion unit can up-convert the quantization matrix received by the receiving unit, using a quantization matrix having matrix elements which differ in accordance with a block size that is a processing unit in which dequantization is performed.

The transmission size can be 8×8, and the up-conversion unit can up-convert a first quantization matrix in a case where a block size that is a processing unit in which dequantization is performed is 16×16, and can up-convert a second quantization matrix having matrix elements different from the first quantization matrix in a case where a block size that is a processing unit in which dequantization is performed is 32×32.

An aspect of the present disclosure further provides an image processing method for an image processing device. The image processing method includes receiving encoded data obtained by performing an encoding process on an image, and a quantization matrix limited to a size less than or equal to a transmission size that is a maximum size allowed for transmission; performing a decoding process on the received encoded data to generate quantized data; up-converting the received quantization matrix from the transmission size to a size that is identical to a block size which is a processing unit in which dequantization is performed; and dequantizing the generated quantized data using the up-converted quantization matrix, wherein the image processing method is performed by the image processing device.

Another aspect of the present disclosure provides an image processing device including a setting unit configured to set a quantization matrix used for up-conversion from a transmission size that is a maximum size allowed for transmission to a size that is identical to a block size, the block size being a processing unit in which quantized data obtained by quantizing an image is dequantized; a quantization unit configured to quantize the image using the quantization matrix set by the setting unit to generate quantized data; an encoding unit configured to perform an encoding process on the quantized data generated by the quantization unit to generate encoded data; and a transmission unit configured to transmit the encoded data generated by the encoding unit and the quantization matrix set by the setting unit, the quantization matrix being limited to a size less than or equal to the transmission size.

The transmission size can be 8×8, and the quantization matrix set by the setting unit can be configured to be 8×8.

The quantization matrix can be configured to be a quantization matrix used for up-conversion from an 8×8 size to a 16×16 size or a 32×32 size.

Another aspect of the present disclosure further provides an image processing method for an image processing device. The image processing method includes setting a quantization matrix used for up-conversion from a transmission size that is a maximum size allowed for transmission to a size that is identical to a block size, the block size being a processing unit in which quantized data obtained by quantizing an image is dequantized; quantizing the image using the set quantization matrix to generate quantized data; performing an encoding process on the generated quantized data to generate encoded data; and transmitting the generated encoded data and the set quantization matrix that is limited to a size less than or equal to the transmission size, wherein the image processing method is performed by the image processing device.

In an aspect of the present disclosure, encoded data obtained by performing an encoding process on an image and a quantization matrix limited to a size less than or equal to a transmission size that is a maximum size allowed for transmission are received; a decoding process is performed on the received encoded data to generate quantized data; the received quantization matrix is up-converted from the transmission size to a size that is identical to a block size which is a processing unit in which dequantization is performed; and the generated quantized data is dequantized using the up-converted quantization matrix.

In another aspect of the present disclosure, a quantization matrix used for up-conversion from a transmission size that is a maximum size allowed for transmission to a size that is identical to a block size which is a processing unit in which quantized data obtained by quantizing an image is dequantized is set; the image is quantized using the set quantization matrix to generate quantized data; an encoding process is performed on the generated quantized data to generate encoded data; and the generated encoded data and the set quantization matrix that is limited to a size less than or equal to the transmission size are transmitted.

Advantageous Effects of Invention

According to the present disclosure, it is possible to process an image. In particular, it is possible to suppress an increase in the amount of coding of a quantization matrix.

BRIEF DESCRIPTION OF DRAWINGS

FIG. **1** is a block diagram illustrating a main example configuration of an image encoding device.

FIG. **2** is a block diagram illustrating a main example configuration of an orthogonal transform/quantization section.

FIG. **3** is a block diagram illustrating a main example configuration of a matrix processing section.

FIG. **4** is a block diagram illustrating a main example configuration of the matrix processing section.

FIG. **5** is a diagram illustrating an example of downsampling.

FIG. **6** is a diagram illustrating an example of how an overlapping portion is removed.

FIG. **7** is a flowchart illustrating an example of the flow of a quantization matrix encoding process.

FIG. **8** is a diagram illustrating an example of syntax.

FIG. **9** is a diagram illustrating an example of syntax.

FIG. **10** is a diagram illustrating an example of syntax.

FIG. **11** is a diagram illustrating an example of syntax.

FIG. **12** is a diagram illustrating an example of syntax.

FIG. **13** is a diagram illustrating an example of syntax.

FIG. **14** is a diagram illustrating an example of a quantization scale setting region.

FIG. **15** is a diagram illustrating an example of a quantization scale setting region.

FIG. **16** is a block diagram illustrating a main example configuration of an image decoding device.

FIG. **17** is a block diagram illustrating a main example configuration of a dequantization/inverse orthogonal transform section.

FIG. **18** is a block diagram illustrating a main example configuration of a matrix generation section.

FIG. **19** is a block diagram illustrating a main example configuration of the matrix generation section.

FIG. **20** is a diagram illustrating an example of a nearest neighbor interpolation process.

FIG. **21** is a flowchart illustrating an example of the flow of a matrix generation process.

FIG. **22** is a block diagram illustrating another example configuration of the matrix processing section.

FIG. **23** is a flowchart illustrating another example of the flow of the quantization matrix encoding process.

FIG. **24** is a block diagram illustrating another example configuration of the matrix generation section.

FIG. **25** is a diagram illustrating an example of how a difference matrix is transmitted.

FIG. **26** is a diagram illustrating an example of how up-conversion is performed.

FIG. **27** includes diagrams illustrating an example of how up-conversion is performed.

FIG. **28** is a diagram illustrating an example of a multi-view image encoding scheme showing images in a base view and an non-base view.

FIG. **29** is a diagram illustrating a main example configuration of a multi-view image encoding device to which the present technology is applied.

FIG. **30** is a diagram illustrating a main example configuration of a multi-view image decoding device to which the present technology is applied.

FIG. **31** is a diagram illustrating an example of a layered image encoding scheme showing images of a base layer and a non-base layer.

FIG. **32** is a diagram illustrating a main example configuration of a layered image encoding device to which the present technology is applied.

FIG. **33** is a diagram illustrating a main example configuration of a layered image decoding device to which the present technology is applied.

FIG. **34** is a block diagram illustrating a main example configuration of a computer.

FIG. **35** is a block diagram illustrating a main example configuration of a television apparatus.

FIG. **36** is a block diagram illustrating a main example configuration of a mobile terminal.

FIG. **37** is a block diagram illustrating a main example configuration of a recorder/reproducer.

FIG. **38** is a block diagram illustrating a main example configuration of an imaging apparatus.

FIG. **39** is a block diagram illustrating an example of the use of scalable coding.

FIG. **40** is a block diagram illustrating another example of the use of scalable coding.

FIG. **41** is a block diagram illustrating still another example of the use of scalable coding.

DESCRIPTION OF EMBODIMENTS

Modes for carrying out the present disclosure (hereinafter referred to as embodiments) will be described hereinafter. Note that the description will be made in the following order.

1. First embodiment (image encoding device, image decoding device)
2. Second embodiment (image encoding device, image decoding device)
3. Third embodiment (up-conversion)
4. Fourth embodiment (multi-view image encoding/multi-view image decoding device)
5. Fifth embodiment (layered image encoding/layered image decoding device)
6. Sixth embodiment (computer)
7. Seventh embodiment (television receiver)
8. Eighth embodiment (mobile phone)
9. Ninth embodiment (recording/reproducing apparatus)
10. Tenth embodiment (imaging apparatus)
11. Exemplary applications of scalable coding

1. First Embodiment

[1-1. Image Encoding Device]

FIG. **1** is a block diagram illustrating an example of a configuration of an image encoding device **10** according to an embodiment of the present disclosure. The image encoding device **10** illustrated in FIG. **1** is an image processing

device to which the present technology is applied, for encoding input image data and outputting obtained encoded data. Referring to FIG. **1**, the image encoding device **10** includes an A/D (Analogue to Digital) conversion section **11** (A/D), a rearrangement buffer **12**, a subtraction section **13**, an orthogonal transform/quantization section **14**, a lossless encoding section **16**, an accumulation buffer **17**, a rate control section **18**, a dequantization section **21**, an inverse orthogonal transform section **22**, an adder section **23**, a deblocking filter **24**, a frame memory **25**, a selector **26**, an intra prediction section **30**, a motion search section **40**, and a mode selection section **50**.

The A/D conversion section **11** converts an image signal input in analog form into image data in digital form, and outputs a digital image data sequence to the rearrangement buffer **12**.

The rearrangement buffer **12** rearranges images included in the image data sequence input from the A/D conversion section **11**. After rearranging the images in accordance with a GOP (Group of Pictures) structure for use in an encoding process, the rearrangement buffer **12** outputs the image data subjected to rearrangement to the subtraction section **13**, the intra prediction section **30**, and the motion search section **40**.

The subtraction section **13** is supplied with the image data input from the rearrangement buffer **12** and prediction image data selected by the mode selection section **50**, which will be described below. The subtraction section **13** calculates prediction error data that represents the difference between the image data input from the rearrangement buffer **12** and the prediction image data input from the mode selection section **50**, and outputs the calculated prediction error data to the orthogonal transform/quantization section **14**.

The orthogonal transform/quantization section **14** performs an orthogonal transform and quantization on the prediction error data input from the subtraction section **13**, and outputs quantized transform coefficient data (hereinafter referred to as quantized data) to the lossless encoding section **16** and the dequantization section **21**. The bit rate of the quantized data output from the orthogonal transform/quantization section **14** is controlled on the basis of a rate control signal supplied from the rate control section **18**. A detailed configuration of the orthogonal transform/quantization section **14** will further be described below.

The lossless encoding section **16** is supplied with the quantized data input from the orthogonal transform/quantization section **14**, information for generating a quantization matrix on the decoder side, and information concerning intra prediction or inter prediction which is selected by the mode selection section **50**. The information concerning intra prediction may include, for example, prediction mode information indicating an optimum intra-prediction mode for each block. Further, the information concerning inter prediction may include, for example, prediction mode information for block-by-block prediction of motion vectors, differential motion vector information, reference image information, and so forth. Further, the information for generating a quantization matrix on the decoder side may include identification information indicating a maximum size of a quantization matrix to be transmitted (or a difference matrix between the quantization matrix and the prediction matrix thereof).

The lossless encoding section **16** performs a lossless encoding process on the quantized data to generate an encoded stream. The lossless encoding performed by the lossless encoding section **16** may be, for example, variable-length coding, arithmetic coding, or the like. Further, the lossless encoding section **16** multiplexes information for generating a quantization matrix, which will be described in detail below, into the encoded stream (e.g., a sequence parameter set, a picture parameter set, a slice header, etc.). Further, the lossless encoding section **16** multiplexes the information concerning intra prediction or inter prediction described above into the encoded stream. The lossless encoding section **16** then outputs the generated encoded stream to the accumulation buffer **17**.

The accumulation buffer **17** temporarily accumulates an encoded stream input from the lossless encoding section **16**, using a storage medium such as a semiconductor memory. Then, the accumulation buffer **17** outputs the accumulated encoded stream at a rate corresponding to the bandwidth of a transmission path (or an output line from the image encoding device **10**).

The rate control section **18** checks the availability of capacity of the accumulation buffer **17**. Further, the rate control section **18** generates a rate control signal in accordance with the available capacity of the accumulation buffer **17**, and outputs the generated rate control signal to the orthogonal transform/quantization section **14**. For example, when the available capacity of the accumulation buffer **17** is low, the rate control section **18** generates a rate control signal for reducing the bit rate of the quantized data. Further, for example, when the available capacity of the accumulation buffer **17** is sufficiently high, the rate control section **18** generates a rate control signal for increasing the bit rate of the quantized data.

The dequantization section **21** performs a dequantization process on the quantized data input from the orthogonal transform/quantization section **14**. The dequantization section **21** outputs transform coefficient data acquired through the dequantization process to the inverse orthogonal transform section **22**.

The inverse orthogonal transform section **22** performs an inverse orthogonal transform process on the transform coefficient data input from the dequantization section **21** to restore prediction error data. The inverse orthogonal transform section **22** then outputs the restored prediction error data to the adder section **23**.

The adder section **23** adds together the restored prediction error data input from the inverse orthogonal transform section **22** and the prediction image data input from the mode selection section **50** to generate decoded image data. The adder section **23** then outputs the generated decoded image data to the deblocking filter **24** and the frame memory **25**.

The deblocking filter **24** performs a filtering process for reducing blocking artifacts caused by the encoding of an image. The deblocking filter **24** filters the decoded image data input from the adder section **23** to remove blocking artifacts, and outputs the filtered decoded image data to the frame memory **25**.

The frame memory **25** stores the decoded image data input from the adder section **23** and the filtered decoded image data input from the deblocking filter **24**, using a storage medium.

The selector **26** reads decoded image data to be filtered, which is used for intra prediction, from the frame memory **25**, and supplies the read decoded image data to the intra prediction section **30** as reference image data. The selector **26** further reads filtered decoded image data, which is used for inter prediction, from the frame memory **25**, and supplies the read decoded image data to the motion search section **40** as reference image data.

The intra prediction section **30** performs an intra prediction process for each intra-prediction mode on the basis of

the image data to be encoded, which is input from the rearrangement buffer **12**, and the decoded image data (i.e., reference image data) supplied via the selector **26**. For example, the intra prediction section **30** evaluates a prediction result obtained in each intra-prediction mode using a predetermined cost function. Then, the intra prediction section **30** selects an intra-prediction mode that minimizes the cost function value, that is, an intra-prediction mode that provides the highest compression ratio, as an optimum intra-prediction mode. Further, the intra prediction section **30** outputs information concerning intra prediction, such as prediction mode information indicating the optimum intra-prediction mode and the cost function value, together with the prediction image data in the selected intra-prediction mode, to the mode selection section **50**.

The motion search section **40** performs an inter prediction process (an inter-frame prediction process) on the basis of the image data to be encoded, which is input from the rearrangement buffer **12**, and the decoded image data supplied via the selector **26**. For example, the motion search section **40** evaluates a prediction result obtained in each prediction mode using a predetermined cost function. Then, the motion search section **40** selects a prediction mode that minimizes the cost function value, that is, a prediction mode that provides the highest compression ratio, as an optimum prediction mode. Further, the motion search section **40** outputs information concerning inter prediction, such as prediction mode information indicating the selected optimum prediction mode and the cost function value, together with the prediction image data in the selected inter prediction mode, to the mode selection section **50**.

The mode selection section **50** compares the cost function value related to intra prediction, which is input from the intra prediction section **30**, with the cost function value related to inter prediction, which is input from the motion search section **40**. Then, the mode selection section **50** selects a prediction technique having a smaller cost function value out of intra prediction and inter prediction. Further, if intra prediction is selected, the mode selection section **50** outputs the information concerning intra prediction to the lossless encoding section **16**, and also outputs the prediction image data to the subtraction section **13** and the adder section **23**. If inter prediction is selected, the mode selection section **50** outputs the information concerning inter prediction to the lossless encoding section **16**, and also outputs the prediction image data to the subtraction section **13** and the adder section **23**.

[1-2. Example Configuration of Orthogonal Transform/Quantization Section]

FIG. **2** is a block diagram illustrating an example of a detailed configuration of the orthogonal transform/quantization section **14** of the image encoding device **10** illustrated in FIG. **1**. Referring to FIG. **2**, the orthogonal transform/quantization section **14** includes a selection section **110**, an orthogonal transform section **120**, a quantization section **130**, a quantization matrix buffer **140**, and a matrix processing section **150**.

(1) Selection Section

The selection section **110** selects a transform unit (TU) to be used for the orthogonal transform of image data to be encoded from among a plurality of transform units having different sizes. For example, the candidate sizes of the transform units selectable by the selection section **110** include 4×4 and 8×8 for H.264/AVC (Advanced Video Coding), and include 4×4, 8×8, 16×16, and 32× 32 for HEVC (High Efficiency Video Coding). The selection section **110** may select a transform unit in accordance with, for example, the size or quality of an image to be encoded, the performance of the device, or the like. The selection of the transform unit by the selection section **110** may be hand-tuned by a user who develops the device. The selection section **110** then outputs information specifying the size of the selected transform unit to the orthogonal transform section **120**, the quantization section **130**, the lossless encoding section **16**, and the dequantization section **21**.

(2) Orthogonal Transform Section

The orthogonal transform section **120** performs an orthogonal transform on the image data (i.e., prediction error data) supplied from the subtraction section **13**, in units of the transform unit selected by the selection section **110**. The orthogonal transform executed by the orthogonal transform section **120** may be, for example, discrete cosine transform (DCT), Karhunen-Loève transform, or the like. The orthogonal transform section **120** then outputs transform coefficient data acquired through the orthogonal transform process to the quantization section **130**.

(3) Quantization Section

The quantization section **130** quantizes the transform coefficient data generated by the orthogonal transform section **120**, using a quantization matrix corresponding to the transform unit selected by the selection section **110**. Further, the quantization section **130** switches the quantization step in accordance with the rate control signal supplied from the rate control section **18** to change the bit rate of the quantized data to be output.

Further, the quantization section **130** causes a set of quantization matrices each corresponding to one of a plurality of transform units selectable by the selection section **110** to be stored in the quantization matrix buffer **140**. For example, as in HEVC, if there are four candidate transform unit sizes, namely, 4×4, 8×8, 16×16, and 32×32, a set of four quantization matrices each corresponding to one of those four sizes may be stored in the quantization matrix buffer **140**. Note that if a specified quantization matrix is used for a given size, only a flag indicating that the specified quantization matrix is used (a quantization matrix defined by the user is not used) may be stored in the quantization matrix buffer **140** in association with the given size.

A set of quantization matrices that can possibly be used by the quantization section **130** may be typically set for each sequence of encoded streams. The quantization section **130** may update a set of quantization matrices set for each sequence on a picture-by-picture basis. Information for controlling such setting and update of a set of quantization matrices may be inserted in, for example, the sequence parameter set and the picture parameter set.

(4) Quantization Matrix Buffer

The quantization matrix buffer **140** temporarily stores a set of quantization matrices each corresponding to one of a plurality of transform units selectable by the selection section **110**, using a storage medium such as a semiconductor memory. The set of quantization matrices stored in the quantization matrix buffer **140** is referenced for a process of the matrix processing section **150** described below.

(5) Matrix Processing Section

The matrix processing section **150** refers to a set of quantization matrices stored in the quantization matrix buffer **140** for each sequence of encoded streams and for each picture, and generates information for generating, from a quantization matrix corresponding to a transform unit of a certain size, a quantization matrix or matrices corresponding to another or other transform units of one or more sizes. The size of the transform unit on which the generation of a quantization matrix is based may be typically the minimum

size among a plurality of transform unit sizes. That is, as in HEVC, if there are four candidate transform unit sizes, namely, 4×4, 8×8, 16×16, and 32×32, information for generating a quantization matrix of another size from, for example, a 4×4 quantization matrix may be generated. The information generated by the matrix processing section **150** may include, for example, fundamental matrix information and difference matrix information, which will be described below. Then, the information generated by the matrix processing section **150** is output to the lossless encoding section **16**, and may be inserted in the header of an encoded stream.

Note that a description will be given herein mainly of an example in which a quantization matrix of a larger size is generated from a quantization matrix of a minimum size. However, this example is not given in a limiting sense, and at least one of a quantization matrix of a smaller size and a quantization matrix of a larger size may be generated from a quantization matrix of a non-minimum size.

[1-3. Detailed Example Configuration of Matrix Processing Section]

FIG. **3** is a block diagram illustrating an example of a more detailed configuration of the matrix processing section **150** of the orthogonal transform/quantization section **14** illustrated in FIG. **2**. Referring to FIG. **3**, the matrix processing section **150** includes a prediction section **152** and a difference computation section **154**.

(1) Prediction Section

The prediction section **152** acquires a set of quantization matrices stored in the quantization matrix buffer **140**, and predicts, from a first quantization matrix included in the acquired set, a second quantization matrix of a larger size (generates a prediction matrix (also referred to as a prediction quantization matrix)).

Upon generating a prediction matrix PSL2 from a 4×4 quantization matrix SL1, the prediction section **152** outputs the generated prediction matrix PSL2 to the difference computation section **154**. The prediction section **152** further predicts, for example, a 16×16 prediction matrix PSL3 from an 8×8 quantization matrix SL2 included in the set of quantization matrices, and outputs the prediction matrix PSL3 to the difference computation section **154**. The prediction section **152** further predicts a 32×32 prediction matrix PSL4 from a 16×16 quantization matrix SL3 included in the set of quantization matrices, and outputs the prediction matrix PSL4 to the difference computation section **154**. The prediction section **152** further outputs fundamental matrix information specifying the 4×4 quantization matrix SL1, on which the generation of the prediction matrices PSL2, PSL3, and PSL4 described above is based, to the lossless encoding section **16**.

(2) Difference Computation Section

The difference computation section **154** calculates difference matrices (also referred to as residual matrices) DSL2, DSL3, and DSL4 representing the differences (also referred to as residues) between the prediction matrices PSL2, PSL3, and PSL4 input from the prediction section **152** and the corresponding quantization matrices SL2, SL3, and SL4, respectively.

The difference computation section **154** then outputs difference matrix information indicating the difference matrices DSL2, DSL3, and DSL4 to the lossless encoding section **16**.

Note that if a specified quantization matrix is used for a given size, the matrix processing section **150** outputs only a flag indicating that the specified quantization matrix is used to the lossless encoding section **16** in association with a corresponding size without executing the prediction of a quantization matrix of the given size or executing difference computation. Further, if the difference between a prediction matrix and a quantization matrix is zero, the difference computation section **154** may output only a flag indicating that no difference is present to the lossless encoding section **16** instead of outputting difference matrix information. Further, if a quantization matrix is not updated at the timing of switching from one picture to another, the matrix processing section **150** may output only a flag indicating that the quantization matrix is not updated to the lossless encoding section **16**.

[1-4. Detailed Example Configuration of Matrix Processing Section]

FIG. **4** is a block diagram illustrating a more detailed example configuration of the matrix processing section **150**. Referring to FIG. **4**, the matrix processing section **150** includes a prediction section **161**, a difference matrix generation section **162**, a difference matrix size transformation section **163**, an entropy encoding section **164**, a decoding section **165**, and an output section **166**.

An important feature of the present technology is as follows. On the encoder side, a residual matrix (residual signal) having a small size (e.g., 16×16) is generated with respect to a quantization matrix of a large size (e.g., 32×32), and is transmitted. On the decoder side, the residual matrix of the small size is enlarged ("upsampled") and is then added to a prediction quantization matrix.

The following approaches are conceivable.

Approach 1:

An approach in which a maximum quantization matrix serving as a threshold is transmitted and upsampling is performed for a larger size. This approach can reduce the used memory because the maximum quantization matrix that the decoder holds can be specified. In this case, identification information indicating the maximum size may be transmitted from the encoder side, and used on the decoder side. In addition, a maximum size may be specified in accordance with the level or profile defined in the standard (e.g., a larger size is specified for a higher profile or level).

Approach 2:

Identification information indicating whether to upsample and the layer to be upsampled are transmitted for each quantization matrix. This approach can be used as an exemplary application of compression although this approach makes it necessary for a decoder to support a quantization matrix of the maximum size in a case where no upsampling is performed.

The prediction section **161** generates a prediction matrix. As illustrated in FIG. **4**, the prediction section **161** includes a copy section **171** and a prediction matrix generation section **172**.

In a copy mode, the copy section **171** creates a copy of a previously transmitted quantization matrix, and uses the copy as a prediction matrix (or predicts a quantization matrix of an orthogonal transform unit to be processed). More specifically, the copy section **171** acquires the size of the previously transmitted quantization matrices and a list ID from a storage section **202** in the decoding section **165**. The size is information indicating the size of quantization matrices (e.g., 4×4 to 32×32, etc.). The list ID is information indicating the type of prediction error data to be quantized.

For example, the list ID includes identification information indicating the quantization target is prediction error data (Intra Luma) of the luminance component which is generated using an intra-predicted prediction image, prediction error data (Intra Cr) of the color difference component (Cr) which is generated using an intra-predicted prediction

image, prediction error data (Intra Cb) of the color difference component (Cb) which is generated using an intra-predicted prediction image, or prediction error data (Inter Luma) of the luminance component which is generated using an inter-predicted prediction image.

The copy section **171** selects, as a copy source quantization matrix, a previously transmitted quantization matrix of the same size as the quantization matrix input to the matrix processing section **150** (the quantization matrix of the orthogonal transform unit to be processed), and supplies the list ID of the copy source quantization matrix to the output section **166** to output the list ID to sections outside the matrix processing section **150** (the lossless encoding section **16** and the dequantization section **21**). That is, in this case, only the list ID is transmitted to the decoder side (is included in encoded data) as information indicating a prediction matrix generated by a copy of the previously transmitted quantization matrix. Accordingly, the image encoding device **10** can suppress an increase in the amount of coding of a quantization matrix.

Furthermore, in a normal case, the prediction matrix generation section **172** acquires a previously transmitted quantization matrix from the storage section **202** in the decoding section **165**, and generates a prediction matrix using the quantization matrix (predicts a quantization matrix of an orthogonal transform unit to be processed). The prediction matrix generation section **172** supplies the generated prediction matrix to the difference matrix generation section **162**.

The difference matrix generation section **162** generates a difference matrix (residual matrix) that is a difference between the prediction matrix supplied from the prediction section **161** (the prediction matrix generation section **172**) and the quantization matrix input to the matrix processing section **150**. As illustrated in FIG. **4**, the difference matrix generation section **162** includes a prediction matrix size transformation section **181**, a computation section **182**, and a quantization section **183**.

The prediction matrix size transformation section **181** transforms (hereinafter also referred to as converts) the size of the prediction matrix supplied from the prediction matrix generation section **172** so as to match the size of the quantization matrix input to the matrix processing section **150**.

For example, if the size of the prediction matrix is larger than the size of the quantization matrix, the prediction matrix size transformation section **181** reduces the size of (hereinafter also referred to as down-converts) the prediction matrix. More specifically, for example, when the prediction matrix has a 16×16 size and the quantization matrix has an 8×8 size, the prediction matrix size transformation section **181** down-converts the prediction matrix to an 8×8 prediction matrix. Note that any down-conversion method may be used. For example, the prediction matrix size transformation section **181** may reduce (hereinafter also referred to as downsample) the number of elements in the prediction matrix (by performing computation) using a filter. Alternatively, the prediction matrix size transformation section **181** may also reduce the number of elements in the prediction matrix by, for example, as illustrated in FIG. **5**, thinning out some of the elements (e.g., only the even numbered elements (in FIG. **5**, the elements in solid black) among the two-dimensional elements) without using a filter (hereinafter also referred to as subsampling).

Further, for example, if the size of the prediction matrix is smaller than the size of the quantization matrix, the prediction matrix size transformation section **181** increases the size of (hereinafter also referred to as up-converts) the prediction matrix. More specifically, for example, when the prediction matrix has an 8×8 size and the quantization matrix has a 16×16 size, the prediction matrix size transformation section **181** up-converts the prediction matrix to a 16×16 prediction matrix. Note that any up-conversion method may be used. For example, the prediction matrix size transformation section **181** may increase (hereinafter also referred to as upsample) the number of elements in the prediction matrix (by performing computation) using a filter. Alternatively, the prediction matrix size transformation section **181** may also increase the number of elements in the prediction matrix by, for example, creating a copy of each of the elements in the prediction matrix without using a filter (hereinafter also referred to as inverse subsampling).

The prediction matrix size transformation section **181** supplies the prediction matrix whose size has been adjusted so as to match that of the quantization matrix to the computation section **182**.

The computation section **182** subtracts the quantization matrix input to the matrix processing section **150** from the prediction matrix supplied from the prediction matrix size transformation section **181**, and generates a difference matrix (residual matrix). The computation section **182** supplies the calculated difference matrix to the quantization section **183**.

The quantization section **183** quantizes the difference matrix supplied from the computation section **182**. The quantization section **183** supplies the result of quantizing the difference matrix to the difference matrix size transformation section **163**. The quantization section **183** further supplies information used for quantization, such as quantization parameters, to the output section **166** to output the information to sections outside the matrix processing section **150** (the lossless encoding section **16** and the dequantization section **21**). Note that the quantization section **183** may be omitted (i.e., the quantization of the difference matrix may not necessarily be performed).

The difference matrix size transformation section **163** converts the size of the difference matrix (quantized data) supplied from the difference matrix generation section **162** (the quantization section **183**) to a size less than or equal to a maximum size allowed for transmission (hereinafter also referred to as a transmission size), if necessary. The maximum size is arbitrary and may be, for example, 8×8.

The encoded data output from the image encoding device **10** is transmitted to an image decoding device corresponding to the image encoding device **10** via, for example, a transmission path or a storage medium, and is decoded by the image decoding device. The upper limit of the size (maximum size) of the difference matrix (quantized data) during such transmission, that is, in the encoded data output from the image encoding device **10**, is set in the image encoding device **10**.

If the size of the difference matrix is larger than the maximum size, the difference matrix size transformation section **163** down-converts the difference matrix so that the size of the difference matrix becomes less than or equal to the maximum size.

Note that this down-conversion may be performed using any method, similarly to the down-conversion of the prediction matrix described above. For example, downsampling may be performed using a filter or the like, or subsampling which involves thinning out elements may be performed.

The down-converted difference matrix may have any size smaller than the maximum size. However, in general, the larger the difference in size between before and after con-

version, the larger the error. Thus, the difference matrix is preferably down-converted to the maximum size.

The difference matrix size transformation section **163** supplies the down-converted difference matrix to the entropy encoding section **164**. Note that if a difference matrix has a size smaller than the maximum size, this down-conversion is not necessary, and therefore the difference matrix size transformation section **163** supplies the difference matrix input thereto to the entropy encoding section **164** as it is (i.e., the down-conversion of the difference matrix is omitted).

The entropy encoding section **164** encodes the difference matrix (quantized data) supplied from the difference matrix size transformation section **163** using a predetermined method. As illustrated in FIG. **4**, the entropy encoding section **164** includes an overlap determination section (135-degree section) **191**, a DPCM (Differential Pulse Code Modulation) section **192**, and an exp-G section **193**.

The overlap determination section **191** determines symmetry of the difference matrix supplied from the difference matrix size transformation section **163**. If the residue represents a 135-degree target matrix, for example, as illustrated in FIG. **6**, the overlap determination section **191** removes the data (matrix elements) of the symmetric part that is overlapping data. If the residue does not represent a 135-degree target matrix, the overlap determination section **191** omits the removal of data (matrix elements). The overlap determination section **191** supplies the data of the difference matrix from which the symmetric part has been removed, if necessary, to the DPCM section **192**.

The DPCM section **192** performs DPCM encoding on the data of the difference matrix from which the symmetric part has been removed, if necessary, which is supplied from the overlap determination section **191**, and generates DPCM data. The DPCM section **192** supplies the generated DPCM data to the exp-G section **193**.

The exp-G section **193** performs signed or unsigned exponential Golomb encoding (hereinafter also referred to as extended Golomb codes) on the DPCM data supplied from the DPCM section **192**. The exp-G section **193** supplies the result of encoding to the decoding section **165** and the output section **166**.

The decoding section **165** restores a quantization matrix from the data supplied from the exp-G section **193**. The decoding section **165** supplies information concerning the restored quantization matrix to the prediction section **161** as a previously transmitted quantization matrix.

As illustrated in FIG. **4**, the decoding section **165** includes a quantization matrix restoration section **201** and the storage section **202**.

The quantization matrix restoration section **201** decodes the extended Golomb codes supplied from the entropy encoding section **164** (the exp-G section **193**) to restore a quantization matrix to be input to the matrix processing section **150**. For example, the quantization matrix restoration section **201** restores the quantization matrix by decoding the extended Golomb codes using the method corresponding to the encoding method for the entropy encoding section **164**, performing transformation opposite to size transformation performed by the difference matrix size transformation section **163**, performing dequantization corresponding to quantization performed by the quantization section **183**, and subtracting an obtained difference matrix from the prediction matrix.

The quantization matrix restoration section **201** supplies the restored quantization matrix to the storage section **202**, and stores the restored quantization matrix in the storage section **202** in association with the size and the list ID of the quantization matrix.

The storage section **202** stores the information concerning the quantization matrix supplied from the quantization matrix restoration section **201**. The information concerning the quantization matrix stored in the storage section **202** is used to generate prediction matrices of other orthogonal transform units which are processed later in time. That is, the storage section **202** supplies the stored information concerning the quantization matrix to the prediction section **161** as information concerning a previously transmitted quantization matrix.

Note that, instead of storing the information concerning the restored quantization matrix, the storage section **202** may store the quantization matrix input to the matrix processing section **150** in association with the size and the list ID of the input quantization matrix. In this case, the quantization matrix restoration section **201** may be omitted.

The output section **166** outputs the supplied various types of information to sections outside the matrix processing section **150**. For example, in a copy mode, the output section **166** supplies the list ID of the prediction matrix supplied from the copy section **171** to the lossless encoding section **16** and the dequantization section **21**. Further, for example, in a normal case, the output section **166** supplies the extended Golomb codes supplied from the exp-G section **193** and the quantization parameter supplied from the quantization section **183** to the lossless encoding section **16** and the dequantization section **21**.

The output section **166** further supplies identification information indicating a maximum size (transmission size) allowed for the transmission of the quantization matrix (difference matrix between the quantization matrix and the prediction matrix thereof) to the lossless encoding section **16** as information for generating a quantization matrix on the decoder side. As described above, the lossless encoding section **16** creates an encoded stream including the information for generating a quantization matrix, and supplies the encoded stream to the decoder side. Note that the identification information indicating the transmission size may be specified in advance by level, profile, and the like. In this case, information concerning the transmission size is shared in advance between the device on the encoder side and the device on the decoder side. Thus, the transmission of the identification information described above may be omitted.

As described above, the matrix processing section **150** down-converts the quantization matrix (difference matrix) to be transmitted to reduce the size of the quantization matrix to a size less than or equal to the transmission size. Accordingly, the image encoding device **10** can suppress an increase in the amount of coding of a quantization matrix.

[1-5. Flow of Quantization Matrix Encoding Process]

Next, an example of the flow of a quantization matrix encoding process executed by the matrix processing section **150** illustrated in FIG. **4** will be described with reference to a flowchart illustrated in FIG. **7**.

When a quantization matrix encoding process is started, in step S**101**, the prediction section **161** acquires a quantization matrix for a current region (also referred to as a region of interest) that is an orthogonal transform unit to be processed.

In step S**102**, the prediction section **161** determines whether or not the current mode is a copy mode. If it is determined that the current mode is not a copy mode, the prediction section **161** causes the process to proceed to step S**103**.

In step S**103**, the prediction matrix generation section **172** acquires a previously transmitted quantization matrix from the storage section **202**, and generates a prediction matrix using the quantization matrix.

In step S**104**, the prediction matrix size transformation section **181** determines whether or not the size of the prediction matrix generated in step S**103** is different from that of the quantization matrix for the current region (region of interest) acquired in step S**101**. If it is determined that both sizes are different, the prediction matrix size transformation section **181** causes the process to proceed to step S**105**.

In step S**105**, the prediction matrix size transformation section **181** converts the size of the prediction matrix generated in step S**103** to the size of the quantization matrix for the current region acquired in step S**101**.

When the processing of step S**105** is completed, the prediction matrix size transformation section **181** causes the process to proceed to step S**106**. If it is determined in step S**104** that the size of the prediction matrix is the same as the size of the quantization matrix, the prediction matrix size transformation section **181** causes the process to proceed to step S**106** while omitting the processing of step S**105** (without performing the processing of step S**105**).

In step S**106**, the computation section **182** subtracts the quantization matrix from the prediction matrix to calculate the difference matrix between the prediction matrix and the quantization matrix.

In step S**107**, the quantization section **183** quantizes the difference matrix generated in step S**106**. Note that this processing may be omitted.

In step S**108**, the difference matrix size transformation section **163** determines whether or not the size of the quantized difference matrix is larger than the transmission size (maximum size allowed for transmission). If it is determined that the size of the quantized difference matrix is larger than the transmission size, the difference matrix size transformation section **163** causes the process to proceed to step S**109**, and down-converts the difference matrix to the transmission size or less.

When the processing of step S**109** is completed, the difference matrix size transformation section **163** causes the process to proceed to step S**110**. Also, if it is determined in step S**108** that the size of the quantized difference matrix is less than or equal to the transmission size, the difference matrix size transformation section **163** causes the process to proceed to step S**110** while omitting the processing of step S**109** (without performing the processing of step S**109**).

In step S**110**, the overlap determination section **191** determines whether or not the quantized difference matrix has 135-degree symmetry. If it is determined that the quantized difference matrix has 135-degree symmetry, the overlap determination section **191** causes the process to proceed to step S**111**.

In step S**111**, the overlap determination section **191** removes the overlapping portion (overlapping data) in the quantized difference matrix. After the overlapping data is removed, the overlap determination section **191** causes the process to proceed to step S**112**.

If it is determined in step S**110** that the quantized difference matrix does not have 135-degree symmetry, the overlap determination section **191** causes the process to proceed to step S**112** while omitting the processing of step S**111** (without performing the processing of step S**111**).

In step S**112**, the DPCM section **192** performs DPCM encoding on the difference matrix from which the overlapping portion has been removed, if necessary.

In step S**113**, the exp-G section **193** determines whether or not the DPCM data generated in step S**112** has a positive or negative sign. If it is determined that such a sign exists, the exp-G section **193** causes the process to proceed to step S**114**.

In step S**114**, the exp-G section **193** performs signed extended Golomb encoding on the DPCM data. The output section **166** outputs the generated extended Golomb codes to the lossless encoding section **16** and the dequantization section **21**. When the processing of step S**114** is completed, the exp-G section **193** causes the process to proceed to step S**116**.

Further, if it is determined in step S**113** that the sign does not exist, the exp-G section **193** causes the process to proceed to step S**115**.

In step S**115**, the exp-G section **193** performs unsigned extended Golomb encoding on the DPCM data. The output section **166** outputs the generated extended Golomb codes to the lossless encoding section **16** and the dequantization section **21**. When the processing of step S**115** is completed, the exp-G section **193** causes the process to proceed to step S**116**.

If it is determined in step S**102** that the current mode is a copy mode, the copy section **171** creates a copy of a previously transmitted quantization matrix, and uses the copy as a prediction matrix. The output section **166** outputs the list ID corresponding to the prediction matrix to the lossless encoding section **16** and the dequantization section **21** as information indicating the prediction matrix. Then, the copy section **171** causes the process to proceed to step S**116**.

In step S**116**, the quantization matrix restoration section **201** restores a quantization matrix. In step S**117**, the storage section **202** stores the quantization matrix restored in step S**116**.

When the processing of step S**117** is completed, the matrix processing section **150** causes the quantization matrix encoding process to end.

The matrix processing section **150** performs the process in the manner described above. Accordingly, the image encoding device **10** can suppress an increase in the amount of coding of a quantization matrix.

[1-6. Syntax]

FIGS. **8** to **13** are diagrams illustrating an example of syntax in a case where the present technology is applied. As illustrated in FIGS. **8** to **13**, for example, various parameters and flags concerning a quantization matrix are added to encoded data, and are transmitted to the decoder side. Note that these pieces of information may be added at arbitrary positions in the encoded data. In addition, these pieces of information may be transmitted to the decoder side separately from encoded data.

[1-7. Quantization Scale]

Here, first to fourth quantization scales illustrated in FIG. **12** will be described. Four quantization scales (Qscale0, Qscale1, Qscale2, Qscale3) are specified. These quantization scales are parameters that can be employed in order to quantize the values of the individual elements in the quantization matrix to reduce the amount of coding.

More specifically, for example, four quantization scale setting regions A**1** to A**4** illustrated in FIGS. **14** and **15** are defined for an 8×8 quantization matrix. The quantization scale setting region A**1** is a region for an element group corresponding to a low-frequency signal including the DC component.

Each of the quantization scale setting regions A**2** and A**3** is a region for an element group corresponding to an intermediate-frequency signal. The quantization scale set-

ting region A4 is a region for an element group corresponding to a high-frequency signal. A quantization scale for quantizing the values of the elements in the quantization matrix may be set for each of the above regions.

For example, referring to FIG. **15**, the first quantization scale (Qscale0) for the quantization scale setting region A**1** is equal to "1". This means that the values of the quantization matrix for the element group corresponding to the low-frequency signal are not quantized.

In contrast, the second quantization scale (Qscale1) for the quantization scale setting region A**2** is equal to "2". The third quantization scale (Qscale2) for the quantization scale setting region A**3** is equal to "3". The fourth quantization scale (Qscale3) for the quantization scale setting region A**4** is equal to "4". The larger the quantization scale, the larger the number of errors caused by quantization.

In general, however, errors are somewhat allowed in the high-frequency signals. In a case where it is desirable that high coding efficiency be achieved, such setting of quantization scales as above for the quantization of a quantization matrix can effectively reduce the amount of coding required for the definition of the quantization matrix without significantly degrading image quality.

Note that the arrangement of quantization scale setting regions illustrated in FIGS. **14** and **15** is merely an example. For example, a different number of quantization scale setting regions may be defined for each quantization matrix size (e.g., the larger the size, the more the quantization scale setting regions may be defined).

Further, the positions of the boundaries between quantization scale setting regions are not limited to those in the example illustrated in FIG. **14**. Generally, the scan pattern in which a quantization matrix is transformed into a one-dimensional array is a zigzag scan. For this reason, preferably, a region boundary extending along a diagonal line from the upper right to the lower left, as illustrated in FIG. **14**, is used.

However, a region boundary extending in a vertical or horizontal direction may also be used in accordance with correlation between elements in the quantization matrix, the scan pattern used, or the like. That is, a region boundary may be inclined at any angle, and a pattern inclined at a desired angle may be selected from among a plurality of candidates. In addition, the arrangement of quantization scale setting regions (the number of regions and the position, inclination, etc. of a boundary) may be adaptively selected in terms of coding efficiency. For example, when a nearly flat quantization matrix is defined, a smaller number of quantization scale setting regions may be selected.

Next, an example configuration of an image decoding device according to an embodiment of the present disclosure will be described.

[1-8. Example Overall Configuration of Image Decoding Device]

FIG. **16** is a block diagram illustrating an example of a configuration of an image decoding device **300** according to an embodiment of the present disclosure. The image decoding device **300** illustrated in FIG. **16** is an image processing device to which the present technology is applied, for decoding encoded data generated by the image encoding device **10**. Referring to FIG. **16**, the image decoding device **300** includes an accumulation buffer **311**, a lossless decoding section **312**, a dequantization/inverse orthogonal transform section **313**, an adder section **315**, a deblocking filter **316**, a rearrangement buffer **317**, a D/A (Digital to Analogue) conversion section **318**, a frame memory **319**, selectors **320** and **321**, an intra prediction section **330**, and a motion compensation section **340**.

The accumulation buffer **311** temporarily accumulates an encoded stream input via a transmission path, using a storage medium.

The lossless decoding section **312** decodes the encoded stream input from the accumulation buffer **311** in accordance with the encoding scheme used for encoding. The lossless decoding section **312** further decodes the information multiplexed in the header region of the encoded stream. The information multiplexed in the header region of the encoded stream may include, for example, the fundamental matrix information and difference matrix information described above for generating a quantization matrix, and information concerning intra prediction and information concerning inter prediction, which are contained in the block header. The lossless decoding section **312** outputs the decoded quantized data and the decoded information for generating a quantization matrix to the dequantization/inverse orthogonal transform section **313**. The lossless decoding section **312** further outputs the information concerning intra prediction to the intra prediction section **330**. The lossless decoding section **312** further outputs the information concerning inter prediction to the motion compensation section **340**.

The dequantization/inverse orthogonal transform section **313** performs dequantization and an inverse orthogonal transform on the quantized data input from the lossless decoding section **312** to generate prediction error data. The dequantization/inverse orthogonal transform section **313** then outputs the generated prediction error data to the adder section **315**.

The adder section **315** adds together the prediction error data input from the dequantization/inverse orthogonal transform section **313** and prediction image data input from the selector **321** to generate decoded image data. The adder section **315** then outputs the generated decoded image data to the deblocking filter **316** and the frame memory **319**.

The deblocking filter **316** filters the decoded image data input from the adder section **315** to remove blocking artifacts, and outputs the filtered decoded image data to the rearrangement buffer **317** and the frame memory **319**.

The rearrangement buffer **317** rearranges images input from the deblocking filter **316** to generate a time-series image data sequence. The rearrangement buffer **317** then outputs the generated image data to the D/A conversion section **318**.

The D/A conversion section **318** converts the digital image data input from the rearrangement buffer **317** into an analog image signal. The D/A conversion section **318** then outputs the analog image signal to, for example, a display (not illustrated) connected to the image decoding device **300** to display an image.

The frame memory **319** stores the decoded image data to be filtered, which is input from the adder section **315**, and the filtered decoded image data input from the deblocking filter **316**, using a storage medium.

The selector **320** switches the destination to which the image data supplied from the frame memory **319** is to be output between the intra prediction section **330** and the motion compensation section **340**, for each block in the image, in accordance with mode information acquired by the lossless decoding section **312**. For example, if an intra-prediction mode is specified, the selector **320** outputs the decoded image data to be filtered, which is supplied from the frame memory **319**, to the intra prediction section **330** as reference image data. Further, if an inter-prediction mode is

specified, the selector **320** outputs the filtered decoded image data supplied from the frame memory **319** to the motion compensation section **340** as reference image data.

The selector **321** switches the source from which prediction image data to be supplied to the adder section **315** is to be output between the intra prediction section **330** and the motion compensation section **340**, for each block in the image, in accordance with mode information acquired by the lossless decoding section **312**. For example, if an intra-prediction mode is specified, the selector **321** supplies the prediction image data output from the intra prediction section **330** to the adder section **315**. If an inter-prediction mode is specified, the selector **321** supplies the prediction image data output from the motion compensation section **340** to the adder section **315**.

The intra prediction section **330** performs intra-screen prediction of a pixel value on the basis of the information concerning intra prediction, which is input from the lossless decoding section **312**, and the reference image data supplied from the frame memory **319**, and generates prediction image data. The intra prediction section **330** then outputs the generated prediction image data to the selector **321**.

The motion compensation section **340** performs a motion compensation process on the basis of the information concerning inter prediction, which is input from the lossless decoding section **312**, and the reference image data supplied from the frame memory **319**, and generates prediction image data. The motion compensation section **340** then outputs the generated prediction image data to the selector **321**.

[1-9. Example Configuration of Dequantization/Inverse Orthogonal Transform Section]

FIG. **17** is a block diagram illustrating an example of a main configuration of the dequantization/inverse orthogonal transform section **313** of the image decoding device **300** illustrated in FIG. **16**. Referring to FIG. **17**, the dequantization/inverse orthogonal transform section **313** includes a matrix generation section **410**, a selection section **430**, a dequantization section **440**, and an inverse orthogonal transform section **450**.

(1) Matrix Generation Section

The matrix generation section **410** generates, from a quantization matrix corresponding to a transform unit of a certain size, a quantization matrix or matrices corresponding to another or other transform units of one or more sizes for each sequence of encoded streams and for each picture. The size of the transform unit on which the generation of a quantization matrix is based may be typically the minimum size among a plurality of sizes of transform units. In this embodiment, the matrix generation section **410** generates 8×8, 16×16, and 32×32 quantization matrices from a 4×4 quantization matrix of the minimum size, using difference matrix information concerning sizes larger than 4×4.

(2) Selection Section

The selection section **430** selects a transform unit (TU) to be used for the inverse orthogonal transform of image data to be decoded from among a plurality of transform units having different sizes. For example, the candidate sizes of the transform unit selectable by the selection section **430** include 4×4 and 8×8 for H.264/AVC, and include 4×4, 8×8, 16×16, and 32×32 for HEVC. The selection section **430** may select a transform unit on the basis of, for example, the LCU, SCU, and split_flag contained in the header of the encoded stream. The selection section **430** then outputs information specifying the size of the selected transform unit to the dequantization section **440** and the inverse orthogonal transform section **450**.

(3) Dequantization Section

The dequantization section **440** dequantizes transform coefficient data quantized when the images were encoded, using a quantization matrix corresponding to the transform unit selected by the selection section **430**. The quantization matrix used here for a dequantization process includes a matrix generated by the matrix generation section **410**. For example, if the selection section **430** selects a transform unit with an 8×8, 16×16, or 32×32 size, a quantization matrix generated from a 4×4 quantization matrix by the matrix generation section **410** may be used as the quantization matrix corresponding to the selected transform unit. The dequantization section **440** then outputs the dequantized transform coefficient data to the inverse orthogonal transform section **450**.

(4) Inverse Orthogonal Transform Section

The inverse orthogonal transform section **450** performs an inverse orthogonal transform on the transform coefficient data dequantized by the dequantization section **440** using the selected transform unit in accordance with the orthogonal transform scheme used for encoding to generate prediction error data. The inverse orthogonal transform section **450** then outputs the generated prediction error data to the adder section **315**.

[1-10. Example Configuration of Matrix Generation Section]

FIG. **18** is a block diagram illustrating an example of a more detailed configuration of the matrix generation section **410** of the dequantization/inverse orthogonal transform section **313** illustrated in FIG. **17**. Referring to FIG. **18**, the matrix generation section **410** includes a fundamental matrix acquisition section **512**, a difference acquisition section **514**, a prediction section **516**, a reconstruction section **518**, and a quantization matrix buffer **520**.

(1) Fundamental Matrix Acquisition Section

The fundamental matrix acquisition section **512** acquires fundamental matrix information input from the lossless decoding section **312**. In this embodiment, as described above, the fundamental matrix information is, for example, information specifying a 4×4 (or 8×8) quantization matrix SL1 having the minimum size. Then, the fundamental matrix acquisition section **512** causes the 4×4 quantization matrix SL1 specified by the acquired fundamental matrix information to be stored in the quantization matrix buffer **520**. Note that if a matrix type flag acquired for each sequence or each picture is equal to "0", the fundamental matrix acquisition section **512** causes a specified 4×4 quantization matrix to be stored in the quantization matrix buffer **520** without acquiring fundamental matrix information. Further, if an update flag acquired for each picture is equal to "0", the fundamental matrix acquisition section **512** does not update the quantization matrix SL1 stored in the quantization matrix buffer **520** in the previous processing. The fundamental matrix acquisition section **512** then outputs the 4×4 quantization matrix SL1 to the prediction section **516**.

(2) Difference Acquisition Section

The difference acquisition section **514** acquires difference matrix information (residual matrix information) input from the lossless decoding section **312**. In this embodiment, as described above, the difference matrix information is information specifying difference matrices DSL2, DSL3, and DSL4 representing the differences between prediction matrices PSL2, PSL3, and PSL4 predicted from the 4×4 quantization matrix SL1 and quantization matrices SL2, SL3, and SL4, respectively. The difference acquisition section **514** outputs the difference matrices DSL2, DSL3, and DSL4 specified by the difference matrix information to the reconstruction section **518**. Note that if a matrix type flag acquired

for each sequence or each picture is equal to "0" or if a difference flag is equal to "0", the difference acquisition section **514** sets the difference matrix of the corresponding size to a zero matrix without acquiring difference matrix information. Further, if an update flag acquired for each picture is equal to "0", the difference acquisition section **514** does not output a difference matrix for the corresponding size.

(3) Prediction Section

The prediction section **516** calculates an 8×8 prediction matrix PSL2 having a larger size from the fundamental matrix input from the fundamental matrix acquisition section **512**, that is, in this embodiment, from the 4×4 quantization matrix SL1. The prediction section **516** further calculates a 16×16 prediction matrix PSL3 from a quantization matrix SL2 reconstructed by the reconstruction section **518** using the calculated 8×8 prediction matrix PSL2. The prediction section **516** further calculates a 32×32 prediction matrix PSL4 from a quantization matrix SL3 reconstructed by the reconstruction section **518** using the calculated 16×16 prediction matrix PSL3. The prediction section **516** outputs the prediction matrices PSL2, PSL3, and PSL4 to the reconstruction section **518**. Note that the prediction section **516** does not generate a prediction matrix for a size for which the matrix type flag is equal to "0", and uses a specified quantization matrix to calculate a prediction matrix of a larger size. Further, the fundamental matrix acquisition section **512** does not also generate a prediction matrix for a size for which the update flag is equal to "0", and uses a quantization matrix generated in the previous processing to calculate a prediction matrix of a larger size.

(4) Reconstruction Section

The reconstruction section **518** adds together the prediction matrices PSL2, PSL3, and PSL4 input from the prediction section **516** and the difference matrices DSL2, DSL3, and DSL4 input from the difference acquisition section **514** to reconstruct the quantization matrices SL2, SL3, and SL4, respectively.

Then, the reconstruction section **518** causes the reconstructed 8×8, 16×16, and 32×32 quantization matrices SL2, SL3, and SL4 to be stored in the quantization matrix buffer **520**. Note that if a matrix type flag acquired for each sequence or each picture is equal to "0", the reconstruction section **518** causes a specified quantization matrix to be stored in the quantization matrix buffer **520** as a quantization matrix of the corresponding size. Further, if an update flag acquired for each picture is equal to "0", the fundamental matrix acquisition section **512** does not update the quantization matrix SL2, SL3, or SL4 having the corresponding size stored in the quantization matrix buffer **520** in the previous processing.

(5) Quantization Matrix Buffer

The quantization matrix buffer **520** temporarily stores the quantization matrix SL1 specified by the fundamental matrix acquisition section **512** and the quantization matrices SL2, SL3, and SL4 reconstructed by the reconstruction section **518**. The quantization matrices SL1, SL2, SL3, and SL4 stored in the quantization matrix buffer **520** are used by the dequantization section **440** to perform a dequantization process on the quantized transform coefficient data.

[1-11. Detailed Example Configuration of Matrix Generation Section]

FIG. **19** is a block diagram illustrating an example of a more detailed configuration of the matrix generation section **410** illustrated in FIG. **18**. Referring to FIG. **19**, the matrix generation section **410** includes a parameter analysis section **531**, a prediction section **532**, an entropy decoding section **533**, a quantization matrix restoration section **534**, an output section **535**, and a storage section **536**.

The parameter analysis section **531** analyzes the various flags and parameters related to the quantization matrix, which are supplied from the lossless decoding section **312**. In accordance with the analysis results, the parameter analysis section **531** supplies various information supplied from the lossless decoding section **312**, such as encoded data of the difference matrix, to the prediction section **532** or the entropy decoding section **533**.

For example, if pred_mode is equal to 0, the parameter analysis section **531** determines that the current mode is a copy mode, and supplies pred_matrix_id_delta to a copy section **541**. Further, for example, if pred_mode is equal to 1, the parameter analysis section **531** determines that the current mode is a full-scan mode (normal case), and supplies pred_matrix_id_delta and pred_size_id_delta to a prediction matrix generation section **542**.

Further, for example, if residual flag is equal to true, the parameter analysis section **531** supplies the encoded data of the quantization matrix (extended Golomb codes) supplied from the lossless decoding section **312** to an exp-G section **551** of the entropy decoding section **533**. The parameter analysis section **531** further supplies residual_symmetry_flag to the exp-G section **551**.

Further, the parameter analysis section **531** supplies residual_down_sampling_flag to a difference matrix size transformation section **562** of the quantization matrix restoration section **534**.

The prediction section **532** generates a prediction matrix in accordance with the control of the parameter analysis section **531**. As illustrated in FIG. **19**, the prediction section **532** includes the copy section **541** and the prediction matrix generation section **542**.

In the copy mode, the copy section **541** creates a copy of a previously transmitted quantization matrix, and uses the copy as a prediction matrix. More specifically, the copy section **541** reads a previously transmitted quantization matrix corresponding to pred_matrix_id_delta and having the same size as the quantization matrix for the current region from the storage section **536**, uses the read quantization matrix as a prediction image, and supplies the prediction image to the output section **535**.

In the normal case, the prediction matrix generation section **542** generates (predicts) a prediction matrix using a previously transmitted quantization matrix. More specifically, the prediction matrix generation section **542** reads a previously transmitted quantization matrix corresponding to pred_matrix_id_delta and pred_size_id_delta from the storage section **536**, and generates a prediction matrix using the read quantization matrix. In other words, the prediction matrix generation section **542** generates a prediction matrix similar to the prediction matrix generated by the prediction matrix generation section **172** (FIG. **4**) of the image encoding device **10**. The prediction matrix generation section **542** supplies the generated prediction matrix to a prediction matrix size transformation section **561** of the quantization matrix restoration section **534**.

The entropy decoding section **533** restores a difference matrix from the extended Golomb codes supplied from the parameter analysis section **531**. As illustrated in FIG. **19**, the entropy decoding section **533** includes the exp-G section **551**, an inverse DPCM section **552**, and an inverse overlap determination section **553**.

The exp-G section **551** performs signed or unsigned exponential Golomb decoding (hereinafter also referred to as extended Golomb decoding) to restore DPCM data. The

exp-G section **551** supplies the restored DPCM data together with residual_symmetry_flag to the inverse DPCM section **552**.

The inverse DPCM section **552** performs DPCM decoding on data from which an overlapping portion has been removed to generate residual data from the DPCM data. The inverse DPCM section **552** supplies the generated residual data together with residual_symmetry_flag to the inverse overlap determination section **553**.

If residual_symmetry_flag is equal to true, that is, if the residual data is a remaining portion of a 135-degree target matrix from which the data (matrix elements) of the overlapping symmetric part has been removed, the inverse overlap determination section **553** restores the data of the symmetric part. In other words, a difference matrix of a 135-degree target matrix is restored. Note that if residual_symmetry_flag is not equal to true, that is, if the residual data represents a matrix that is not a 135-degree target matrix, the inverse overlap determination section **553** uses the residual data as a difference matrix without restoring data of a symmetric part. The inverse overlap determination section **553** supplies the difference matrix restored in the manner described above to the quantization matrix restoration section **534** (the difference matrix size transformation section **562**).

The quantization matrix restoration section **534** restores a quantization matrix. As illustrated in FIG. **19**, the quantization matrix restoration section **534** includes the prediction matrix size transformation section **561**, the difference matrix size transformation section **562**, a dequantization section **563**, and a computation section **564**.

If the size of the prediction matrix supplied from the prediction section **532** (the prediction matrix generation section **542**) is different from the size of the restored quantization matrix for the current region, the prediction matrix size transformation section **561** converts the size of the prediction matrix.

For example, if the size of the prediction matrix is larger than the size of the quantization matrix, the prediction matrix size transformation section **561** down-converts the prediction matrix. Further, for example, if the size of the prediction matrix is smaller than the size of the quantization matrix, the prediction matrix size transformation section **561** up-converts the prediction matrix. The same conversion method as that of the prediction matrix size transformation section **181** (FIG. **4**) of the image encoding device **10** is selected.

The prediction matrix size transformation section **561** supplies the prediction matrix whose size has been made to match that of the quantization matrix to the computation section **564**.

If residual_down_sampling_flag is equal to true, that is, if the size of the transmitted difference matrix is smaller than the size of the current region to be dequantized, the difference matrix size transformation section **562** up-converts the size of the difference matrix to a size corresponding to the current region to be dequantized. Any up-conversion method may be used. For example, a method corresponding to the down-conversion method performed by the difference matrix size transformation section **163** (FIG. **4**) of the image encoding device **10** may be used.

For example, if the difference matrix size transformation section **163** has downsampled the difference matrix, the difference matrix size transformation section **562** may upsample the difference matrix. Further, if the difference matrix size transformation section **163** has subsampled the difference matrix, the difference matrix size transformation section **562** may perform inverse subsampling on the difference matrix.

For example, as illustrated in FIG. **20**, the difference matrix size transformation section **562** may perform interpolation using a nearest neighbor interpolation process interpolation process (a nearest neighbor interpolation process) rather than general linear interpolation. The nearest neighbor interpolation process enables a reduction in memory capacity.

Accordingly, even if a quantization matrix of a large size is not transmitted, there is no need to hold upsampled data when upsampling from a quantization matrix of a small size is performed. In addition, an intermediate buffer or the like is no longer necessary for the storage of data to be used for computation during upsampling.

Note that if residual_down_sampling_flag is not equal to true, that is, if the difference matrix is transmitted with the same size as that when the difference matrix was used for a quantization process, the difference matrix size transformation section **562** omits the up-conversion of the difference matrix (or may up-convert the difference matrix by a factor of 1).

The difference matrix size transformation section **562** supplies the difference matrix up-converted in the manner described above, as necessary, to the dequantization section **563**.

The dequantization section **563** dequantizes the supplied difference matrix (quantized data) using a method corresponding to that for quantization performed by the quantization section **183** (FIG. **4**) of the image encoding device **10**, and supplies the dequantized difference matrix to the computation section **564**. Note that if the quantization section **183** is omitted, that is, if the difference matrix supplied from the difference matrix size transformation section **562** is not quantized data, the dequantization section **563** may be omitted.

The computation section **564** adds together the prediction matrix supplied from the prediction matrix size transformation section **561** and the difference matrix supplied from the dequantization section **563**, and restores a quantization matrix for the current region. The computation section **564** supplies the restored quantization matrix to the output section **535** and the storage section **536**.

The output section **535** outputs the supplied information to a section outside the matrix generation section **410**. For example, in the copy mode, the output section **535** supplies the prediction matrix supplied from the copy section **541** to the dequantization section **440** as a quantization matrix for the current region. Further, for example, in the normal case, the output section **535** supplies the quantization matrix for the current region supplied from the quantization matrix restoration section **534** (the computation section **564**) to the dequantization section **440**.

The storage section **536** stores the quantization matrix supplied from the quantization matrix restoration section **534** (the computation section **564**) together with the size and the list ID of the quantization matrix. The information concerning the quantization matrix stored in the storage section **536** is used to generate prediction matrices of other orthogonal transform units which are processed later in time. In other words, the storage section **536** supplies the stored information concerning the quantization matrix to the prediction section **532** as information concerning a previously transmitted quantization matrix.

As described above, the matrix generation section **410** up-converts a quantization matrix (difference matrix) having

a size less than or equal to the transmission size to a size corresponding to the current region to be dequantized. Accordingly, the image decoding device **300** can suppress an increase in the amount of coding of a quantization matrix.

[1-12. Flow of Quantization Matrix Decoding Process]

An example of the flow of a quantization matrix decoding process executed by the matrix generation section **410** described above will be described with reference to a flowchart illustrated in FIG. **21**.

When a quantization matrix decoding process is started, in step S**301**, the parameter analysis section **531** reads the quantized values (Qscale0 to Qscale3) of regions **0** to **3**.

In step S**302**, the parameter analysis section **531** reads pred_mode. In step S**303**, the parameter analysis section **531** determines whether or not pred_mode is equal to 0. If it is determined that pred_mode is equal to 0, the parameter analysis section **531** determines that the current mode is a copy mode, and causes the process to proceed to step S**304**.

In step S**304**, the parameter analysis section **531** reads pred_matrix_id_delta. In step S**305**, the copy section **541** creates a copy of a quantization matrix that has been transmitted, and uses the copy as a prediction matrix. In the copy mode, the prediction matrix is output as the quantization matrix for the current region. When the processing of step S**305** is completed, the copy section **541** causes the quantization matrix decoding process to end.

Further, if it is determined in step S**303** that pred_mode is not equal to 0, the parameter analysis section **531** determines that the current mode is a full-scan mode (normal case), and causes the process to proceed to step S**306**.

In step S**306**, the parameter analysis section **531** reads pred_matrix_id_delta, pred_size_id_delta, and residual flag. In step S**307**, the prediction matrix generation section **542** generates a prediction matrix from a quantization matrix that has been transmitted.

In step S**308**, the parameter analysis section **531** determines whether or not residual flag is equal to true. If it is determined that residual flag is not equal to true, no residual matrix exists, and the prediction matrix generated in step S**307** is output as the quantization matrix for the current region. In this case, therefore, the parameter analysis section **531** causes the quantization matrix decoding process to end.

Further, if it is determined in step S**308** that residual flag is equal to true, the parameter analysis section **531** causes the process to proceed to step S**309**.

In step S**309**, the parameter analysis section **531** reads residual_down_sampling_flag, and residual_symmetry_flag.

In step S**310**, the exp-G section **551** and the inverse DPCM section **552** decode extended Golomb codes of the residual matrix, and generate residual data.

In step S**311**, the inverse overlap determination section **553** determines whether or not residual_symmetry_flag is equal to true. If it is determined that residual_symmetry_flag is equal to true, the inverse overlap determination section **553** causes the process to proceed to step S**312**, and restores the removed overlapping portion of the residual data (performs an inverse symmetry process). When a difference matrix that is a 135-degree target matrix is generated in the manner described above, the inverse overlap determination section **553** causes the process to proceed to step S**313**.

Further, if it is determined in step S**311** that residual_symmetry_flag is not equal to true (if the residual data is a difference matrix that is not a 135-degree target matrix), the inverse overlap determination section **553** causes the process to proceed to step S**313** while omitting the processing of step S**312** (without performing inverse symmetry processing).

In step S**313**, the difference matrix size transformation section **562** determines whether or not residual_down_sampling_flag is equal to true. If it is determined that residual_down_sampling_flag is equal to true, the difference matrix size transformation section **562** causes the process to proceed to step S**314**, and up-converts the difference matrix to a size corresponding to the current region to be dequantized. After the difference matrix is up-converted, the difference matrix size transformation section **562** causes the process to proceed to step S**315**.

Further, if it is determined in step S**313** that residual_down_sampling_flag is not equal to true, the difference matrix size transformation section **562** causes the process to proceed to step S**315** while omitting the processing of step S**312** (without up-converting the difference matrix).

In step S**315**, the computation section **564** adds the difference matrix to the prediction matrix to generate a quantization matrix for the current region. When the processing of step S**315** is completed, the quantization matrix decoding process ends.

By performing a quantization matrix decoding process in the manner described above, the image decoding device **300** can suppress an increase in the amount of coding of a quantization matrix.

2. Second Embodiment

[2-1. Other Example of Matrix Processing Section]

FIG. **22** is a block diagram illustrating another example configuration of the matrix processing section **150** to which the present technology is applied.

In the example illustrated in FIG. **22**, the matrix processing section **150** does not include the difference matrix size transformation section **163** which is included in the configuration illustrated in FIG. **4**. In other words, the output of the quantization section **183** is supplied to the overlap determination section **191** of the entropy encoding section **164**.

The matrix processing section **150** illustrated in FIG. **22** further includes a quantization matrix size transformation section **701**.

The quantization matrix size transformation section **701** converts the size of a quantization coefficient input to the matrix processing section **150** to a size less than or equal to a maximum size for transmission (transmission size). The converted size is arbitrary as long as the size is less than or equal to the transmission size. A minimum size as much as possible may be used to reduce the amount of coding of a quantization matrix as much as possible. In addition, the processing of the quantization matrix size transformation section **701** or the prediction matrix size transformation section **181** can only be down-conversion, making it possible to simplify (facilitate) the processing of the quantization matrix size transformation section **701** and the prediction matrix size transformation section **181**.

In this case, the prediction matrix size transformation section **181** converts the size of the prediction matrix to the size of the down-converted quantization matrix.

Note that, similarly to the first embodiment, these conversion (down-conversion) methods are arbitrary, and may include downsampling and subsampling.

That is, in this case, a difference matrix of the same size as that of the quantization matrix converted by the quantization matrix size transformation section **701** is encoded and transmitted.

Accordingly, similarly to the first embodiment, the image encoding device **10** can suppress an increase in the amount of coding of a quantization matrix.

[2-2. Other Example of Flow of Quantization Matrix Encoding Process]

An example of the flow of a quantization matrix encoding process in the above-described exemplary case is as illustrated in a flowchart of FIG. **23**.

Specifically, when a quantization matrix encoding process is started, in step S**601**, the quantization matrix size transformation section **701** acquires a quantization matrix for a current region. Then, in step S**602**, the quantization matrix size transformation section **701** down-converts the quantization matrix to a predetermined size.

The processing of steps S**603** to S**608** is executed in a manner similar to that of the processing of steps S**102** to S**107** in FIG. **7**. The processing corresponding to steps S**108** and S**109** in FIG. **7** is not performed (omitted), and the processing of steps S**609** to S**616** is executed in a manner similar to the processing of steps S**110** to S**117** in FIG. **7**.

The matrix processing section **150** performs a quantization matrix encoding process in the manner described above. Accordingly, similarly to the first embodiment, the image encoding device **10** can suppress an increase in the amount of coding of a quantization matrix.

[2-3. Other Example of Matrix Generation Section]

FIG. **24** is a block diagram illustrating another example configuration of the matrix generation section **410** of the image decoding device **300**. The matrix generation section **410** illustrated in FIG. **24** is a processing section corresponding to the matrix processing section **150** illustrated in FIG. **22**. Specifically, the matrix generation section **410** illustrated in FIG. **24** decodes the encoded data (various flags and parameters, extended Golomb codes generated from a difference matrix, etc.) concerning a quantization matrix generated by the matrix processing section **150** illustrated in FIG. **22**, and restores a quantization matrix for the current region.

Also in this case, the matrix generation section **410** basically has a configuration similar to that in the example illustrated in FIG. **19** but does not include the difference matrix size transformation section **562**, unlike the example illustrated in FIG. **19**. Accordingly, the difference matrix output from the inverse overlap determination section **553** is supplied to the dequantization section **563**.

In addition, in the example illustrated in FIG. **24**, unlike the example illustrated in FIG. **19**, the matrix generation section **410** further includes a quantization matrix size transformation section **721**.

The quantization matrix size transformation section **721** is a processing section corresponding to the quantization matrix size transformation section **701** illustrated in FIG. **22**, for performing a process opposite to the process of the quantization matrix size transformation section **701**. Specifically, the quantization matrix size transformation section **721** up-converts a quantization matrix of a smaller size than a maximum size allowed for transmission (transmission size) to a size corresponding to the current region to be dequantized.

The quantization matrix size transformation section **721** acquires the quantization matrix generated by the computation section **564** by adding the prediction matrix to the difference matrix. The size of the quantization matrix is equal to the size obtained by down-conversion by the quantization matrix size transformation section **701**. The quantization matrix size transformation section **721** up-converts the size of the quantization matrix to a size corresponding to the current region to be dequantized. The quantization matrix size transformation section **721** supplies the up-converted quantization matrix to the output section **535** to supply the up-converted quantization matrix to the dequantization section **440**, or supplies the up-converted quantization matrix to the storage section **536** for storage.

Accordingly, also in this case, the matrix generation section **410** up-converts the quantization matrix down-converted to a size less than or equal to the transmission size before being transmitted to a size corresponding to the current region to be dequantized. Accordingly, the image decoding device **300** can suppress an increase in the amount of coding of a quantization matrix.

The flow of the quantization matrix decoding process in this exemplary case is basically similar to that described with reference to the flowchart illustrated in FIG. **21**, except the following processing: Instead of a residual matrix being up-converted in step S**314**, the quantization matrix size transformation section **721** up-converts the quantization matrix generated by the processing of step S**315**.

The matrix generation section **410** performs a quantization matrix decoding process in the manner described above. Accordingly, similarly to the first embodiment, the image decoding device **300** can suppress an increase in the amount of coding of a quantization matrix.

3. Third Embodiment

[Upconversion]

FIG. **25** is a diagram illustrating an example of how a difference matrix is transmitted. The size of a quantization matrix (difference matrix between a quantization matrix and a prediction matrix thereof) to be transmitted from the image encoding device **10** (FIG. **1**) to the image decoding device **300** (FIG. **16**) is limited to a size less than or equal to a predetermined maximum size (transmission size). For example, the size of a quantization matrix to be transmitted from the image encoding device **10** to the image decoding device **300** is limited to the same size as the size (also referred to as a default quantization matrix size) of a fundamental matrix prepared in advance (also referred to as a default quantization matrix). That is, in this case, the transmission size is equal to a maximum value of a default quantization matrix size. For example, if a 4×4 quantization matrix and an 8×8 quantization matrix are set as default quantization matrices, the transmission size is 8×8.

Specifically, if a quantization matrix used in a quantization process is larger than the transmission size, the image encoding device **10** down-converts the quantization matrix or the prediction matrix to the transmission size or less or down-converts a determined difference matrix to the transmission size or less to generate a difference matrix of a size less than or equal to the transmission size. This down-conversion operation is performed by, for example, the difference matrix size transformation section **163**, the prediction matrix size transformation section **181**, the quantization matrix size transformation section **701**, and the like.

The image decoding device **300** up-converts the transmitted difference matrix or a quantization matrix determined from the difference matrix to a size corresponding to the current region to be dequantized, and uses the up-converted matrix in the dequantization process. That is, if the transmission size is equal to the maximum value of the default quantization matrix size, the image decoding device **300** receives a quantization matrix of the same size as the default quantization matrix size. For example, the image decoding device **300** receives a quantization matrix of the same size

as the maximum size of the default quantization matrix. The image decoding device **300** performs a dequantization process using the received quantization matrix or using a quantization matrix obtained by the up-conversion of the quantization matrix. Note that this up-conversion operation is performed by, for example, the difference matrix size transformation section **562**, the prediction matrix size transformation section **561**, the quantization matrix size transformation section **721**, and the like.

Note that the image encoding device **10** may also transmit a quantization matrix (difference matrix) having a smaller size than a maximum size allowed for transmission (transmission size), which is different from the quantization matrix (difference matrix) used in the quantization process, to the image decoding device **300**. For example, the image encoding device **10** may prepare a plurality of quantization matrices (difference matrices) having different sizes, select a quantization matrix from among the quantization matrices, and use the selected quantization matrix for the quantization process. In this case, when performing a quantization process using a quantization matrix of a larger size than the transmission size among a prepared matrix group, the image encoding device **10** may transmit a quantization matrix (difference matrix) having a smaller size than the transmission size among the matrix group, instead of down-converting the quantization matrix. In other words, in this case, the size transformation (down-conversion) operation of the image encoding device **10** is omitted. Additionally, the image encoding device **10** can also up-convert a quantization matrix (difference matrix) having a smaller size than the transmission size and perform a quantization process. Also in this case, similarly, the size transformation (down-conversion) operation of the image encoding device **10** is omitted.

Whatever the case may be, only a quantization matrix (difference matrix) having a size less than or equal to the transmission size is transmitted regardless of whether or not size transformation (down-conversion) is actually to be performed. That is, the image decoding device **300** performs size transformation (up-conversion) on the transmitted quantization matrix to a size corresponding to the current region to be dequantized (such as a CU or a TU) regardless of whether or not the image encoding device **10** has actually performed size transformation (down-conversion).

The image decoding device **300** omits the size transformation (up-conversion) of the quantization matrix (difference matrix) (or may perform size transformation by a factor of 1) only when the size used in the quantization process is the same as the size during transmission.

For example, it is assumed that the transmission size is 8×8. In this case, for example, a difference matrix is transmitted as an 8×8 square matrix or a 4×4 square matrix. For example, as illustrated in the upper part of FIG. **25**, when a difference matrix is to be transmitted as an 8×8 square matrix, the image decoding device **300** up-converts the difference matrix to a size corresponding to the current region to be dequantized, such as a 16×16 square matrix or a 32×32 square matrix. Further, for example, as illustrated in the lower part of FIG. **25**, when a difference matrix is to be transmitted as a 4×4 square matrix, the difference matrix is up-converted to a size corresponding to the current region to be dequantized, such as an 8×8 square matrix.

As a matter of course, this difference matrix may also be up-converted to a size other than the sizes in the example illustrated in FIG. **25** (e.g., a 64×64 square matrix).

Note that if the size of the current region to be dequantized is equal to the size of the transmitted quantization matrix, this up-conversion is omitted (or size transformation by a factor of 1 is performed), and an 8×8 square matrix is used in the form of an 8×8 difference matrix as it is. Also, a 4×4 square matrix is used in the form of a 4×4 difference matrix as it is.

For example, it is assumed that the image encoding device **10** quantizes 4×4 blocks using a 4×4 quantization matrix, quantizes 8×8 blocks using an 8×8 quantization matrix, up-converts the 8×8 quantization matrix to generate a 16×16 quantization matrix, quantizes 16×16 blocks using the 16×16 quantization matrix, up-converts the 8×8 quantization matrix to generate a 32×32 quantization matrix, quantizes 32× 32 blocks using the 32×32 quantization matrix, and transmits the 4×4 quantization matrix and the 8×8 quantization matrix to the image decoding device **300**. Also in this case, similarly to the image encoding device **10**, the image decoding device **300** quantizes 4×4 blocks using the received 4×4 quantization matrix, and quantizes 8×8 blocks using the received 8×8 quantization matrix. Further, similarly to the image encoding device **10**, the image decoding device **300** up-converts the received 8×8 quantization matrix to generate a 16×16 quantization matrix, quantizes 16×16 blocks using the 16×16 quantization matrix, up-converts the received 8×8 quantization matrix to generate a 32×32 quantization matrix, and quantizes 32× 32 blocks using the 32×32 quantization matrix.

Next, a description will be made of how the image decoding device **300** performs size transformation (up-conversion). FIG. **26** illustrates an example of how up-conversion is performed. A process of the difference matrix size transformation section **562** (FIG. **19**) will be described hereinafter as an example.

A specific up-conversion method is arbitrary. For example, up-conversion may be implemented using a nearest neighbor interpolation process. The nearest neighbor interpolation process is a process for interpolating neighboring elements of an element by creating copies of the corresponding element in a matrix before interpolation. The neighboring elements are elements adjacent to an element in a matrix before interpolation or elements that are close to an element in a matrix before interpolation.

For example, a nearest neighbor interpolation process (a×2 nearest neighbor interpolation process) that allows the number of elements to double in each of the vertical and horizontal directions is a process for generating a 2×2 square matrix from each element in a matrix before interpolation. Specifically, three neighboring elements are interpolated using each element in a matrix before interpolation. The three neighboring elements include, for example, right, lower, and lower right elements adjacent to the element in the matrix before interpolation. The above-described process is performed on each element in a matrix before interpolation, thereby allowing the number of vertical elements and the number of horizontal elements in a square matrix to double.

In the example illustrated in FIG. **20**, a nearest neighbor interpolation process is applied to a 4×4 square matrix to generate an 8×8 square matrix. In the matrices illustrated in FIG. **20**, gray rectangular blocks represent elements in a matrix before interpolation. A copy of each of the gray-colored elements is created, and neighboring elements of each element (which are represented by blank rectangular blocks in the matrices illustrated in FIG. **20**) are each interpolated.

As a matter of course, other elements (e.g., an upper adjacent element, a left adjacent element, etc.) may also be used as three neighboring elements. Preferably, elements are

interpolated in a direction corresponding to the processing order. Furthermore, while a description has been given of the use of copies of an original element for interpolation, the values of elements to be interpolated may be determined using certain computation. However, the use of copies in the manner described above can reduce the load of interpolation (can make interpolation easier).

Referring back to FIG. **26**, the transmitted difference matrix can be up-converted to a plurality of sizes. For example, as illustrated in FIG. **26**, an 8×8 difference matrix can be up-converted to a 16×16 square matrix or a 32×32 square matrix.

For example, an 8×8 difference matrix is up-converted to a 16×16 difference matrix using a ×2 nearest neighbor interpolation process. Furthermore, a ×2 nearest neighbor interpolation process is applied to the 16×16 difference matrix to up-convert the 16×16 difference matrix to a 32×32 difference matrix. As a matter of course, a ×2 nearest neighbor interpolation process can further be repeated to implement up-conversion to a 64×64 or larger square matrix. That is, by repeating a ×2 nearest neighbor interpolation process makes it possible to implement up-conversion to a square matrix of a size corresponding to the number of times a ×2 nearest neighbor interpolation process has been repeated.

Note that a matrix may be magnified by an arbitrary factor through a nearest neighbor interpolation process, and the factor is not limited to 2, as described above. For example, a nearest neighbor interpolation process (a ×4 nearest neighbor interpolation process) that allows the number of elements to quadruple in each of the vertical and horizontal directions may also be made feasible. The ×4 nearest neighbor interpolation process is implemented in a manner that is basically similar to that of a ×2 nearest neighbor interpolation process, except for different magnification factors. That is, in the ×4 nearest neighbor interpolation process, a 4×4 square matrix is generated from each element in a matrix before interpolation so that the 4×4 square matrix has the element positioned at the upper left thereof. In other words, on the basis of one element in a matrix before interpolation, 15 neighboring elements thereof are interpolated. The above-described process is performed on each element in a matrix before interpolation, thereby transforming each of the number of vertical elements and the number of horizontal elements in a square matrix into quadruple elements.

In FIG. **26**, as indicated by a dotted line arrow, the 8×8 difference matrix can be up-converted to a 32×32 difference matrix by applying a ×4 nearest neighbor interpolation process. Specifically, one 8×8 quantization matrix (or difference matrix) may be up-converted to generate both a 16×16 quantization matrix (or difference matrix) and a 32×32 quantization matrix (or difference matrix), or the 16×16 quantization matrix (or difference matrix) and the 32×32 quantization matrix (or difference matrix) may be generated by the up-conversion of different 8×8 quantization matrices (or difference matrices). In the former case, a 4×4 quantization matrix (or difference matrix) and an 8×8 quantization matrix (or difference matrix) may be transmitted from the image encoding device **10** to the image decoding device **300**. In the latter case, a 4×4 quantization matrix (or difference matrix), an 8×8 quantization matrix (or difference matrix) which can be up-converted to 16×16, and an 8×8 quantization matrix (or difference matrix) which can be up-converted to 32×32 may be transmitted from the image encoding device **10** to the image decoding device **300**.

By using a nearest neighbor interpolation process in the manner described above, the difference matrix size transformation section **562** can easily perform size transformation on a difference matrix.

In addition, the nearest neighbor interpolation process described above can also be applied to the up-conversion into a non-square matrix.

For example, an 8×8 difference matrix is transformed into a 16×16 square matrix by a ×2 nearest neighbor interpolation process, and is further transformed into a non-square matrix of 4 vertical by 16 horizontal by thinning out elements in certain lines of the square matrix.

In this case, 4 lines out of 16 lines may be extracted, and the lines to be thinned out are arbitrary. For example, one for every four lines may be extracted. Alternatively, for example, the first, fifth, ninth, and thirteenth lines from the top may be extracted. Alternatively, for example, the third, seventh, eleventh, and fifteenth lines from the top may be extracted. The lines to be extracted may be determined in advance, or arbitrary four lines (or one for every four lines) may be selected from among 16 lines using a certain method.

Further, for example, an 8×8 difference matrix is transformed into a 32×32 square matrix by a ×2 nearest neighbor interpolation process performed twice or by a ×4 nearest neighbor interpolation process performed once. The 32×32 square matrix is further transformed into a non-square matrix of 8 vertical by 32 horizontal by thinning out elements in certain lines of the square matrix.

In this case, similarly to the non-square matrix of 4 vertical by 16 horizontal described above, 8 lines out of 32 lines may be extracted, and the lines to be thinned out are arbitrary. For example, the first, fifth, ninth, thirteenth, seventeenth, twenty-first, twenty-fifth, and twenty-ninth lines from the top may be extracted. The lines to be extracted may be determined in advance, or arbitrary eight lines (or one for every four lines) may be selected from among 32 lines using a certain method.

While transformation to a non-square matrix having a ratio of 1 vertical to 4 horizontal has been described, a transformed matrix may have any horizontal and vertical ratio. For example, a square matrix may be transformed in size to a non-square matrix having a ratio of 4 vertical to 1 horizontal by thinning out the elements in the square matrix on a column-by-column basis, instead of on a line-by-line basis, in a manner similar to that in the case of line-by-line thinning.

Furthermore, for example, a short distance intra prediction method for improving coding efficiency by using small-sized non-square prediction units was proposed in "CE6.b1 Report on Short Distance Intra Prediction Method" (JCTVC-E278, March 2011). In the short distance intra prediction method, prediction units of various sizes such as 1×4 pixels, 2×8 pixels, 4×16 pixels, 4×1 pixels, 8×2 pixels, and 16×4 pixels may be set in an image. In this case, which size of the vertical and horizontal sizes of a prediction unit is larger depends on the setting of the prediction unit.

The amount of thinning of lines or columns is adjusted to enable size transformation into non-square matrices having various horizontal and vertical ratios. For example, one line is extracted from a 16×16 square matrix to implement size transformation into a non-square matrix having a ratio of 1 vertical to 16 horizontal. Similarly, arbitrary two lines may be extracted from a 32×32 square matrix to implement size transformation into a non-square matrix having a ratio of 2 vertical to 32 horizontal.

Using a nearest neighbor interpolation process in the manner described above, the difference matrix size transformation section **562** can easily perform size transformation from a difference matrix to a non-square matrix.

While size transformation into a non-square matrix by using both a nearest neighbor interpolation process and thinning of lines (or columns), this is not given in a limiting sense. For example, size transformation into a non-square matrix may also be implemented using only a nearest neighbor interpolation process.

For example, as illustrated in part A of FIG. **27**, a 4×4 square matrix can be quadrupled only in the horizontal direction (a ×4 nearest neighbor interpolation process in the horizontal direction) to implement size transformation into a 4×16 non-square matrix. The ×4 nearest neighbor interpolation process in the horizontal direction is a process for generating a 1×4 non-square matrix from each element in a matrix before interpolation. That is, three neighboring elements are interpolated using each element in a matrix before interpolation. The three neighboring elements include, for example, three elements horizontally arranged right adjacent to an element in a matrix before interpolation. The above-described process is performed on each element in a matrix before interpolation, thereby allowing only the number of horizontal elements in a square matrix to quadruple.

Furthermore, for example, as illustrated in part A of FIG. **27**, a 4×4 square matrix can be quadrupled only in the vertical direction (a ×4 nearest neighbor interpolation process in the vertical direction) to implement size transformation into a 16×4 non-square matrix. The ×4 nearest neighbor interpolation process in the vertical direction is a process for generating a 4×1 non-square matrix from each element in a matrix before interpolation. That is, three neighboring elements are interpolated using each element in a matrix before interpolation. The three neighboring elements include, for example, three elements vertically arranged below and adjacent to an element in a matrix before interpolation. The above-described process is performed on each element in a matrix before interpolation, thereby allowing only the number of vertical elements in a square matrix to quadruple.

An 8×8 square matrix can also be subjected to size transformation in a similar manner. For example, as illustrated in part B of FIG. **27**, an 8×8 square matrix may be subjected to the ×4 nearest neighbor interpolation process in the horizontal direction to implement size transformation into an 8×32 non-square matrix. Further, for example, as illustrated in part B of FIG. **27**, an 8×8 square matrix may be subjected to the ×4 nearest neighbor interpolation process in the vertical direction to implement size transformation into a 32×8 non-square matrix.

In the manner described above, using a nearest neighbor interpolation process the difference matrix size transformation section **562** can easily perform size transformation from a difference matrix to a non-square matrix.

Note that the size transformation using a nearest neighbor interpolation process, described above, may be performed on a matrix of any size. In addition, a quantization matrix or a prediction matrix may also be subjected to size transformation using a nearest neighbor interpolation process in a manner similar to that described above for a difference matrix. That is, the quantization matrix size transformation section **721** can also easily perform size transformation on a quantization matrix using a nearest neighbor interpolation process. The above similarly applies to the prediction matrix size transformation section **561**.

In the foregoing description, a size transformation process for a quantization matrix, a prediction matrix, or a difference matrix between the quantization matrix and the prediction matrix has been described. This size transformation process may be a process for actually generating a matrix whose size has been transformed, or may be a process (read control of matrix data) for setting how to read each element in a matrix from a memory without actually generating data of the matrix.

In the size transformation process describe above, each element in a matrix after size transformation is constituted by any of the elements of the matrix before size transformation. That is, a matrix after size transformation may be generated by reading elements in a matrix before size transformation which is stored in a memory using a certain method, for example, reading some of the elements of the matrix or reading one element a plurality of times. In other words, a method for reading each element is defined (or read control of matrix data is performed) to substantially implement the size transformation described above. With this method, a process such as writing matrix data subjected to size transformation to the memory may become unnecessary. Further, the method of reading matrix data subjected to size transformation basically depends on the way how a nearest neighbor interpolation process is performed and the like, and can thus be implemented by processing with comparatively low load, such as selecting an appropriate one of a plurality of options prepared in advance. Accordingly, such a method enables a reduction in the load of size transformation.

That is, the size transformation process described above, which includes a process for actually generating matrix data subjected to size transformation, also includes such read control of the matrix data.

In the foregoing description, a difference matrix is down-converted and transmitted, or a difference matrix generated from a down-converted quantization matrix is transmitted. In the present technology, it is only required to provide a reduction in the amount of coding of information concerning a quantization matrix. Thus, these examples are not given in a limiting sense. For example, a prediction process may be omitted and a quantization matrix for the current region, instead of a difference matrix, may be down-converted and transmitted. In this case, on the decoder side, it is only required to up-convert the transmitted quantization matrix to a size corresponding to the current region to be dequantized. In this case, the encoding and decoding process using DPCM encoding and decoding described above in the first to third embodiments may or may not be performed on the quantization matrix to be transmitted. It is to be understood that the encoding and decoding process to be performed on the quantization matrix to be transmitted may be of any type, and is not limited to that in the examples described above.

In addition, the amount of coding for information on parameters and flags concerning a quantization matrix, such as the size of the quantization matrix and the list ID, may be reduced by, for example, taking a difference between the information and the previously transmitted information and transmitting the difference.

4. Fourth Embodiment

[Application to Multi-View Image Encoding and Multi-View Image Decoding]

The series of processes described above can be applied to multi-view image encoding and multi-view image decoding. FIG. **28** illustrates an example of a multi-view image encoding scheme.

As illustrated in FIG. **28**, multi-view images include images at a plurality of views, and an image at one of the plurality of views is designated as an image of a base view. The images other than the image of the base view are handled as images of non-base view.

When multi-view images as illustrated in FIG. **28** are to be encoded and decoded, an image of each view is encoded and decoded. The method described above in the first to third embodiments may be applied to the encoding and decoding for each view. Accordingly, an increase in the amount of coding of a quantization matrix can be suppressed.

Furthermore, flags and parameters used in the method described above in the first to third embodiments may be shared between the encoding and decoding for each view. For example, a quantization matrix may be shared between the encoding and decoding for each view. As a matter of course, any other necessary information may also be shared between the encoding and decoding for each view.

For example, when a quantization matrix which is included in a sequence parameter set (SPS) or a picture parameter set (PPS) is to be transmitted, if those (SPS and PPS) are shared among views, the quantization matrix is also shared. Accordingly, an increase in the amount of coding of a quantization matrix can be suppressed.

Furthermore, matrix elements in a quantization matrix for the base view may be changed in accordance with the disparity values between views. Further, an offset value for adjusting non-base view matrix elements with regard to matrix elements in a quantization matrix for the base view may be transmitted. Accordingly, an increase in the amount of coding of a quantization matrix can be suppressed.

For example, a quantization matrix for each view may be separately transmitted in advance. When a quantization matrix is to be changed for each view, only information indicating the difference from the corresponding one of the quantization matrices transmitted in advance may be transmitted. The information indicating the difference is arbitrary, and may be, for example, information in units of 4×4 or 8×8 or a difference between matrices.

Note that if a quantization matrix is shared among views although an SPS or a PPS is not shared, the SPSs or PPSs for other views may be referenced (i.e., quantization matrices for other views may be used).

Moreover, if such multi-view images are represented as images having, as components, YUV images and depth images (Depth) corresponding to the amount of disparity between views, an independent quantization matrix for the image of each component (Y, U, V, and Depth) may be used.

For example, since a depth image (Depth) is an image of an edge, quantization matrices are not necessary. Thus, even though an SPS or a PPS specifies the use of a quantization matrix, a quantization matrix may not be applied (or a quantization matrix in which all the matrix elements are the same (flat) may be applied) to a depth image (Depth).

[Multi-View Image Encoding Device]

FIG. **29** is a diagram illustrating a multi-view image encoding device for performing the multi-view image encoding operation described above. As illustrated in FIG. **29**, a multi-view image encoding device **600** includes an encoding unit **601**, an encoding unit **602**, and a multiplexing unit **603**.

The encoding unit **601** encodes an image of a base view to generate an encoded base-view image stream. The encoding unit **602** encodes an image of a non-base view to generate an encoded non-base-view image stream. The multiplexing unit **603** multiplexes the encoded base-view image stream generated by the encoding unit **601** and the encoded non-base-view image stream generated by the encoding unit **602** to generate an encoded multi-view image stream.

The image encoding device **10** (FIG. **1**) can be used for each of the encoding unit **601** and the encoding unit **602** of the multi-view image encoding device **600**. That is, for example, as described above, the encoding unit **601** and the encoding unit **602** can perform a quantization process or the like using the same quantization matrix. Accordingly, an increase in the amount of coding of a quantization matrix can be suppressed.

[Multi-View Image Decoding Device]

FIG. **30** is a diagram illustrating a multi-view image decoding device for performing the multi-view image decoding operation described above. As illustrated in FIG. **30**, a multi-view image decoding device **610** includes a demultiplexing unit **611**, a decoding unit **612**, and a decoding unit **613**.

The demultiplexing unit **611** demultiplexes an encoded multi-view image stream in which an encoded base-view image stream and an encoded non-base-view image stream have been multiplexed, and extracts the encoded base-view image stream and the encoded non-base-view image stream. The decoding unit **612** decodes the encoded base-view image stream extracted by the demultiplexing unit **611** to obtain an image of a base view. The decoding unit **613** decodes the encoded non-base-view image stream extracted by the demultiplexing unit **611** to obtain an image of a non-base view.

The image decoding device **300** (FIG. **16**) can be used for each of the decoding unit **612** and the decoding unit **613** of the multi-view image decoding device **610**. That is, for example, as described above, the decoding unit **612** and the decoding unit **613** can perform a dequantization process or the like using the same quantization matrix. Accordingly, an increase in the amount of coding of a quantization matrix can be suppressed.

5. Fifth Embodiment

[Application to Layered Image Encoding and Layered Image Decoding]

The series of processes described above is applicable to layered image encoding and layered image decoding. FIG. **31** illustrates an example of a layered image encoding scheme.

As illustrated in FIG. **31**, layered images include images of a plurality of layers, and an image of one of the plurality of layers is designated as an image of a base layer. The images other than the image of the base layer are handled as images of non-base layers (also referred to as enhancement layers).

When layered images as illustrated in FIG. **31** are to be encoded and decoded, an image of each layer is encoded and decoded. The method described above may be applied to the encoding and decoding for each layer. Accordingly, an increase in the amount of coding of a quantization matrix can be suppressed.

Furthermore, flags and parameters used in the method described above in the first to third embodiments may be shared between the encoding and decoding for each layer. For example, a quantization matrix may be shared between the encoding and decoding for each layer. As a matter of course, any other necessary information may also be shared between the encoding and decoding for each layer.

Examples of such layered images include images layered in spatial resolution (also referred to as images with spatial

resolution scalability) (spatial scalability). In layered images with spatial resolution scalability, the resolutions of the images differ from layer to layer. For example, a layer of an image having the spatially lowest resolution is designated as a base layer, and a layer of an image having a higher resolution than the base layer is designated as a non-base layer (or an enhancement layer).

Image data of a non-base layer (an enhancement layer) may be data independent of the other layers, and, similarly to the base layer, an image having a resolution in the corresponding layer may be obtained only using the image data. Generally, however, image data of a non-base layer (an enhancement layer) is data corresponding to a difference image between the image of the corresponding layer and an image of another layer (e.g., a layer one layer below the corresponding layer). In this case, an image having a resolution corresponding to the base layer is obtained only using the image data of the base layer while an image having a resolution corresponding to a non-base layer (an enhancement layer) is obtained by the combination of the image data of the layer and the image data of another layer (e.g., a layer one layer below the layer). Accordingly, redundancy of image data between layers can be suppressed.

In layered images having spatial resolution scalability, the resolutions of the images differ from layer to layer. Thus, the resolutions of the units of encoding and decoding processing for the respective layers also differ from one another. Accordingly, if a quantization matrix is shared between the encoding and decoding for individual layers, the quantization matrix may be up-converted in accordance with the resolution ratio of each layer.

For example, it is assumed that an image of the base layer has a resolution of 2K (e.g., 1920×1080), and an image of a non-base layer (an enhancement layer) has a resolution of 4K (e.g., 3840×2160). In this case, for example, the 16×16 size of the image of the base layer (2K image) corresponds to the 32×32 size of the image of the non-base layer (4K image). The quantization matrix is also up-converted as appropriate in accordance with the corresponding resolution ratio.

For example, a 4×4 quantization matrix used for the quantization and dequantization of a base layer is up-converted to 8×8 and is used in the quantization and dequantization of a non-base layer. Similarly, an 8×8 quantization matrix of a base layer is up-converted to 16×16 in a non-base layer. Similarly, a quantization matrix up-converted to 16×16 and used in a base layer is up-converted to 32×32 in a non-base layer.

Note that parameters which provide scalability properties are not limited to spatial resolution, and may include, for example, temporal resolution (temporal scalability). In layered images having temporal resolution scalability, the frame rates of the images differ from layer to layer. Other examples include bit-depth scalability in which the bit-depth of image data differs from layer to layer, and chroma scalability in which the format of components differs from layer to layer.

Still other examples include SNR scalability in which the signal to noise ratios (SNRs) of the images differ from layer to layer.

In view of improvement in image quality, desirably, the lower the signal-to-noise ratio an image has, the smaller the quantization error is made. To that end, in SNR scalability, desirably, different quantization matrices (non-common quantization matrices) are used for the quantization and dequantization of each layer in accordance with the signal-to-noise ratio. For this reason, as described above, if a quantization matrix is shared among layers, an offset value for adjusting matrix elements for an enhancement layer with regard to matrix elements in a quantization matrix for the base layer may be transmitted. More specifically, information indicating the difference between a common quantization matrix and an actually used quantization matrix may be transmitted on a layer-by-layer basis. For example, the information indicating the difference may be transmitted in a sequence parameter set (SPS) or picture parameter set (PPS) for each layer. The information indicating the difference is arbitrary. For example, the information may be a matrix having elements representing difference values between corresponding elements in both quantization matrices, or may be a function indicating the difference.

[Layered Image Encoding Device]

FIG. **32** is a diagram illustrating a layered image encoding device for performing the layered image encoding operation described above. As illustrated in FIG. **32**, a layered image encoding device **620** includes an encoding unit **621**, an encoding unit **622**, and a multiplexing unit **623**.

The encoding unit **621** encodes an image of a base layer to generate an encoded base-layer image stream. The encoding unit **622** encodes an image of a non-base layer to generate an encoded non-base-layer image stream. The multiplexing unit **623** multiplexes the encoded base-layer image stream generated by the encoding unit **621** and the encoded non-base-layer image stream generated by the encoding unit **622** to generate an encoded layered-image stream.

The image encoding device **10** (FIG. **1**) can be used for each of the encoding unit **621** and the encoding unit **622** of the layered image encoding device **620**. That is, for example, as described above, the encoding unit **621** and the encoding unit **622** can perform a quantization process or the like using the same quantization matrix. Accordingly, an increase in the amount of coding of a quantization matrix can be suppressed.

[Layered Image Decoding Device]

FIG. **33** is a diagram illustrating a layered image decoding device for performing the layered image decoding operation described above. As illustrated in FIG. **33**, a layered image decoding device **630** includes a demultiplexing unit **631**, a decoding unit **632**, and a decoding unit **633**.

The demultiplexing unit **631** demultiplexes an encoded layered-image stream in which an encoded base-layer image stream and an encoded non-base-layer image stream have been multiplexed, and extracts the encoded base-layer image stream and the encoded non-base-layer image stream. The decoding unit **632** decodes the encoded base-layer image stream extracted by the demultiplexing unit **631** to obtain an image of a base layer. The decoding unit **633** decodes the encoded non-base-layer image stream extracted by the demultiplexing unit **631** to obtain an image of a non-base layer.

The image decoding device **300** (FIG. **16**) can be used for each of the decoding unit **632** and the decoding unit **633** of the layered image decoding device **630**. That is, for example, as described above, the decoding unit **632** and the decoding unit **633** can perform a quantization process or the like using the same quantization matrix. Accordingly, an increase in the amount of coding of a quantization matrix can be suppressed.

6. Sixth Embodiment

[Computer]

The series of processes described above can be executed by hardware or can also be executed by software. In this case, for example, a computer as illustrated in FIG. **34** may be constructed.

In FIG. **34**, a CPU (Central Processing Unit) **801** in a computer **800** executes various processing operations in accordance with a program stored in a ROM (Read Only Memory) **802** or a program loaded into a RAM (Random Access Memory) **803** from a storage unit **813**. The RAM **803** also stores, as desired, data and the like necessary for the CPU **801** to execute various processing operations.

The CPU **801**, the ROM **802**, and the RAM **803** are connected to one another via a bus **804**. An input/output interface **810** is also connected to the bus **804**.

The input/output interface **810** is connected to an input unit **811**, an output unit **812**, the storage unit **813**, and a communication unit **814**. The input unit **811** includes a keyboard, a mouse, a touch panel, an input terminal, and so forth. The output unit **812** includes desired output devices, such as a speaker and a display including a CRT (Cathode Ray Tube), an LCD (Liquid Crystal Display), and an OELD (Organic ElectroLuminescence Display), an output terminal, and so forth. The storage unit **813** includes a desired storage medium such as a hard disk or a flash memory, and a control unit that controls the input and output of the storage medium. The communication unit **814** includes desired wired or wireless communication devices such as a modem, a LAN interface, a USB (Universal Serial Bus) device, and a Bluetooth (registered trademark) device. The communication unit **814** performs communication processing with other communication devices via networks including, for example, the Internet.

A drive **815** is further connected to the input/output interface **810**, if necessary. A removable medium **821** such as a magnetic disk, an optical disk, a magneto-optical disk, or a semiconductor memory is placed in the drive **815**, as desired. The drive **815** reads a computer program, data, and the like from the removable medium **821** placed therein in accordance with the control of, for example, the CPU **801**. The read data and computer program are supplied to, for example, the RAM **803**. The computer program read from the removable medium **821** is further installed into the storage unit **813**, if necessary.

When the series of processes described above is executed by software, a program constituting the software is installed from a network or a recording medium.

Examples of the recording medium include, as illustrated in FIG. **34**, the removable medium **821**, which is distributed separately from the device body to deliver the program to a user, such as a magnetic disk (including a flexible disk), an optical disk (including a CD-ROM (Compact Disc-Read Only Memory) and a DVD (Digital Versatile Disc)), a magneto-optical disk (including a MD (Mini Disc)), or a semiconductor memory on which the program is recorded. Other examples of the recording medium include devices delivered to a user in a manner of being incorporated in advance in the device body, such as the ROM **802** and the hard disk included in the storage unit **813** on which the program is recorded.

Note that the program which the computer executes may be a program in which processing operations are performed in a time-series manner in the order stated herein, or may be a program in which processing operations are performed in parallel or at necessary timings such as when called.

In addition, steps describing a program stored in a recording medium, as used herein, include, of course, processing operations performed in a time-series manner in the order stated, and processing operations executed in parallel or individually but not necessarily performed in a time-series manner.

Furthermore, the term "system", as used herein, refers to an overall apparatus including a plurality of devices (apparatuses).

In addition, a configuration described above as a single device (or processing section) may be divided into a plurality of devices (or processing sections). Conversely, a configuration described above as a plurality of devices (or processing sections) may be combined into a single device (or processing section). Additionally, of course, a configuration other than that described above may be added to the configuration of each device (or each processing section). Furthermore, part of the configuration of a certain device (or processing section) may be included in the configuration of another device (or another processing section) if the devices (or processing sections) have substantially the same configuration and/or operation in terms of a whole system. In other words, embodiments of the present technology are not limited to the foregoing embodiments, and a variety of modifications can be made without departing from the scope of the present technology.

The image encoding device **10** (FIG. **1**) and the image decoding device **300** (FIG. **16**) according to the foregoing embodiments may be applied to various pieces of electronic equipment such as a transmitter or a receiver used to deliver data via satellite broadcasting, wire broadcasting such as cable TV, or the Internet or used to deliver data to or from terminals via cellular communication, a recording apparatus for recording images on media such as an optical disk, a magnetic disk, and a flash memory, and a reproducing apparatus for reproducing images from such storage media. Four exemplary applications will be described hereinafter.

7. Seventh Embodiment

[Television Apparatus]

FIG. **35** illustrates an example of a schematic configuration of a television apparatus to which the foregoing embodiments are applied. A television apparatus **900** includes an antenna **901**, a tuner **902**, a demultiplexer **903**, a decoder **904**, a video signal processing unit **905**, a display unit **906**, an audio signal processing unit **907**, a speaker **908**, an external interface **909**, a control unit **910**, a user interface **911**, and a bus **912**.

The tuner **902** extracts a signal in a desired channel from a broadcast signal received via the antenna **901**, and demodulates the extracted signal. Then, the tuner **902** outputs an encoded bit stream obtained by demodulation to the demultiplexer **903**. In other words, the tuner **902** functions as a transmission unit in the television apparatus **900** for receiving an encoded stream including encoded images.

The demultiplexer **903** demultiplexes the encoded bit stream into a video stream and an audio stream of a program to be viewed, and outputs the streams obtained by demultiplexing to the decoder **904**. Further, the demultiplexer **903** extracts auxiliary data such as EPG (Electronic Program Guide) from the encoded bit stream, and supplies the extracted data to the control unit **910**. Note that the demultiplexer **903** may also descramble the encoded bit stream if the encoded bit stream has been scrambled.

The decoder **904** decodes the video stream and audio stream input from the demultiplexer **903**. Then, the decoder

904 outputs video data obtained by the decoding process to the video signal processing unit 905. The decoder 904 further outputs audio data generated by the decoding process to the audio signal processing unit 907.

The video signal processing unit 905 reproduces the video data input from the decoder 904, and causes video to be displayed on the display unit 906. The video signal processing unit 905 may also cause an application screen supplied via a network to be displayed on the display unit 906. The video signal processing unit 905 may further perform additional processing, such as noise removal, on the video data in accordance with the settings. In addition, the video signal processing unit 905 may also generate a GUI (Graphical User Interface) image such as a menu, a button, or a cursor, and superimpose the generated image on an output image.

The display unit 906 is driven by a drive signal supplied from the video signal processing unit 905, and displays video or an image on a video surface of a display device (such as a liquid crystal display, a plasma display, or an OELD (Organic ElectroLuminescence Display) (organic EL display)).

The audio signal processing unit 907 performs reproduction processes, such as D/A conversion and amplification, on the audio data input from the decoder 904, and causes audio to be output from the speaker 908. The audio signal processing unit 907 may further perform additional processing, such as noise removal, on the audio data.

The external interface 909 is an interface for connecting the television apparatus 900 to an external device or a network. For example, a video stream or audio stream received via the external interface 909 may be decoded by the decoder 904. In other words, the external interface 909 also functions as a transmission unit in the television apparatus 900 for receiving an encoded stream including encoded images.

The control unit 910 includes a processor such as a CPU, and memories such as a RAM and a ROM. The memories store a program to be executed by the CPU, program data, EPG data, data acquired via a network, and so forth. The program stored in the memories is read and executed by the CPU when, for example, the television apparatus 900 is started. The CPU executes the program to control the operation of the television apparatus 900 in accordance with, for example, an operation signal input from the user interface 911.

The user interface 911 is connected to the control unit 910. The user interface 911 includes, for example, buttons and switches for allowing the user to operate the television apparatus 900, a receiving unit for a remote control signal, and so forth. The user interface 911 detects an operation of the user via the above-described components to generate an operation signal, and outputs the generated operation signal to the control unit 910.

The bus 912 serves to connect the tuner 902, the demultiplexer 903, the decoder 904, the video signal processing unit 905, the audio signal processing unit 907, the external interface 909, and the control unit 910 to one another.

In the television apparatus 900 having the configuration described above, the decoder 904 has the function of the image decoding device 300 (FIG. 16) according to the foregoing embodiments. Accordingly, the television apparatus 900 can suppress an increase in the amount of coding of a quantization matrix.

8. Eighth Embodiment

[Mobile Phone]

FIG. 36 illustrates an example of a schematic configuration of a mobile phone to which the foregoing embodiments are applied. A mobile phone 920 includes an antenna 921, a communication unit 922, an audio codec 923, a speaker 924, a microphone 925, a camera unit 926, an image processing unit 927, a multiplexing/demultiplexing unit 928, a recording/reproducing unit 929, a display unit 930, a control unit 931, an operation unit 932, and a bus 933.

The antenna 921 is connected to the communication unit 922. The speaker 924 and the microphone 925 are connected to the audio codec 923. The operation unit 932 is connected to the control unit 931. The bus 933 serves to connect the communication unit 922, the audio codec 923, the camera unit 926, the image processing unit 927, the multiplexing/demultiplexing unit 928, the recording/reproducing unit 929, the display unit 930, and the control unit 931 to one another.

The mobile phone 920 performs operations, such as transmitting and receiving an audio signal, transmitting and receiving an electronic mail or image data, capturing an image, and recording data, in various operation modes including a voice call mode, a data communication mode, an image capture mode, and a videophone mode.

In the voice call mode, an analog audio signal generated by the microphone 925 is supplied to the audio codec 923. The audio codec 923 converts the analog audio signal into audio data, and performs A/D conversion and compression on the converted audio data. The audio codec 923 then outputs the compressed audio data to the communication unit 922. The communication unit 922 encodes and modulates the audio data, and generates a transmission signal. The communication unit 922 then transmits the generated transmission signal to a base station (not illustrated) via the antenna 921. Further, the communication unit 922 amplifies a radio signal received via the antenna 921, and performs frequency conversion on the amplified signal to acquire a reception signal. Then, the communication unit 922 demodulates and decodes the reception signal to generate audio data, and outputs the generated audio data to the audio codec 923. The audio codec 923 expands the audio data, and performs D/A conversion to generate an analog audio signal. The audio codec 923 then supplies the generated audio signal to the speaker 924 to cause audio to be output.

Furthermore, in the data communication mode, for example, the control unit 931 generates text data that forms an electronic mail in accordance with an operation of the user via the operation unit 932. Further, the control unit 931 causes text to be displayed on the display unit 930. The control unit 931 further generates electronic mail data in accordance with a transmission instruction given from the user via the operation unit 932, and outputs the generated electronic mail data to the communication unit 922. The communication unit 922 encodes and modulates the electronic mail data to generate a transmission signal. Then, the communication unit 922 transmits the generated transmission signal to the base station (not illustrated) via the antenna 921. Further, the communication unit 922 amplifies a radio signal received via the antenna 921, and performs frequency conversion on the amplified signal to acquire a reception signal. Then, the communication unit 922 demodulates and decodes the reception signal to restore electronic mail data, and outputs the restored electronic mail data to the control unit 931. The control unit 931 causes the content of the electronic mail to be displayed on the display unit 930, and also causes the electronic mail data to be stored in a storage medium of the recording/reproducing unit 929.

The recording/reproducing unit **929** includes a desired readable/writable storage medium. The storage medium may be, for example, a built-in storage medium such as a RAM or a flash memory, or an external storage medium such as a hard disk, a magnetic disk, a magneto-optical disk, an optical disk, a USB memory, or a memory card.

Furthermore, in the image capture mode, for example, the camera unit **926** captures an image of an object to generate image data, and outputs the generated image data to the image processing unit **927**. The image processing unit **927** encodes the image data input from the camera unit **926**, and causes an encoded stream to be stored in the storage medium of the recording/reproducing unit **929**.

Furthermore, in the videophone mode, for example, the multiplexing/demultiplexing unit **928** multiplexes the video stream encoded by the image processing unit **927** and the audio stream input from the audio codec **923**, and outputs a multiplexed stream to the communication unit **922**. The communication unit **922** encodes and modulates the stream to generate a transmission signal. Then, the communication unit **922** transmits the generated transmission signal to the base station (not illustrated) via the antenna **921**. Further, the communication unit **922** amplifies a radio signal received via the antenna **921**, and performs frequency conversion on the amplified signal to acquire a reception signal. The transmission signal and the reception signal may include an encoded bit stream. Then, the communication unit **922** demodulates and decodes the reception signal to restore a stream, and outputs the restored stream to the multiplexing/demultiplexing unit **928**. The multiplexing/demultiplexing unit **928** demultiplexes the input stream into a video stream and an audio stream, and outputs the video stream and the audio stream to the image processing unit **927** and the audio codec **923**, respectively. The image processing unit **927** decodes the video stream to generate video data. The video data is supplied to the display unit **930**, and a series of images is displayed by the display unit **930**. The audio codec **923** expands the audio stream, and performs D/A conversion to generate an analog audio signal. The audio codec **923** then supplies the generated audio signal to the speaker **924** to cause audio to be output.

In the mobile phone **920** having the configuration described above, the image processing unit **927** has the function of the image encoding device **10** (FIG. **1**) and the function of the image decoding device **300** (FIG. **16**) according to the foregoing embodiments. Accordingly, the mobile phone **920** can suppress an increase in the amount of coding of a quantization matrix.

In addition, while a description has been given of the mobile phone **920**, for example, an image encoding device and an image decoding device to which the present technology is applied may be used in, similarly to the mobile phone **920**, any apparatus having an imaging function and a communication function similar to those of the mobile phone **920**, such as a PDA (Personal Digital Assistants), a smartphone, a UMPC (Ultra Mobile Personal Computer), a netbook, or a notebook personal computer.

9. Ninth Embodiment

[Recording/Reproducing Apparatus]

FIG. **37** illustrates an example of a schematic configuration of a recorder/reproducer to which the foregoing embodiments are applied. A recorder/reproducer **940** encodes, for example, audio data and video data of a received broadcast program, and records the encoded audio data and video data on a recording medium. In addition, the recorder/reproducer **940** may also encode audio data and video data acquired from, for example, another apparatus, and record the encoded audio data and video data on a recording medium. Further, the recorder/reproducer **940** reproduces, for example, data recorded on a recording medium using a monitor and a speaker in accordance with an instruction given from a user. In this case, the recorder/reproducer **940** decodes audio data and video data.

The recorder/reproducer **940** includes a tuner **941**, an external interface **942**, an encoder **943**, an HDD (Hard Disk Drive) **944**, a disk drive **945**, a selector **946**, a decoder **947**, an OSD (On-Screen Display) **948**, a control unit **949**, and a user interface **950**.

The tuner **941** extracts a signal in a desired channel from a broadcast signal received via an antenna (not illustrated), and demodulates the extracted signal. The tuner **941** then outputs an encoded bit stream obtained by demodulation to the selector **946**. In other words, the tuner **941** functions as a transmission unit in the recorder/reproducer **940**.

The external interface **942** is an interface for connecting the recorder/reproducer **940** to an external device or a network. The external interface **942** may be, for example, an IEEE 1394 interface, a network interface, a USB interface, a flash memory interface, or the like. For example, video data and audio data received via the external interface **942** are input to the encoder **943**. In other words, the external interface **942** functions as a transmission unit in the recorder/reproducer **940**.

The encoder **943** encodes video data and audio data input from the external interface **942** if the video data and audio data have not been encoded. The encoder **943** then outputs an encoded bit stream to the selector **946**.

The HDD **944** records an encoded bit stream including compressed content data such as video and audio, various programs, and other data on an internal hard disk. Further, the HDD **944** reads the above-described data from the hard disk when reproducing video and audio.

The disk drive **945** records and reads data on and from a recording medium placed therein. The recording medium placed in the disk drive **945** may be, for example, a DVD disk (such as DVD-Video, DVD-RAM, DVD-R, DVD-RW, DVD+R, or DVD+RW) or a Blu-ray (registered trademark) disc.

The selector **946** selects an encoded bit stream input from the tuner **941** or the encoder **943** when recording video and audio, and outputs the selected encoded bit stream to the HDD **944** or the disk drive **945**. When reproducing video and audio, the selector **946** outputs an encoded bit stream input from the HDD **944** or the disk drive **945** to the decoder **947**.

The decoder **947** decodes the encoded bit stream to generate video data and audio data. The decoder **947** then outputs the generated video data to the OSD **948**. The decoder **947** further outputs the generated audio data to an external speaker.

The OSD **948** reproduces the video data input from the decoder **947**, and displays video. In addition, the OSD **948** may also superimpose a GUI image such as a menu, a button, or a cursor on the video to be displayed.

The control unit **949** includes a processor such as a CPU, and memories such as a RAM and a ROM. The memories store a program to be executed by the CPU, program data, and so forth. The program stored in the memories is read and executed by the CPU when, for example, the recorder/reproducer **940** is started. The CPU executes the program to

control the operation of the recorder/reproducer **940** in accordance with, for example, an operation signal input from the user interface **950**.

The user interface **950** is connected to the control unit **949**. The user interface **950** includes, for example, buttons and switches for allowing the user to operate the recorder/reproducer **940**, a receiving unit for a remote control signal, and so forth. The user interface **950** detects an operation of the user via the above-described components to generate an operation signal, and outputs the generated operation signal to the control unit **949**.

In the recorder/reproducer **940** having the configuration described above, the encoder **943** has the function of the image encoding device **10** (FIG. **1**) according to the foregoing embodiments. The decoder **947** has the function of the image decoding device **300** (FIG. **16**) according to the foregoing embodiments. Accordingly, the recorder/reproducer **940** can suppress an increase in the amount of coding of a quantization matrix.

10. Tenth Embodiment

[Imaging Apparatus]

FIG. **38** illustrates an example of a schematic configuration of an imaging apparatus to which the foregoing embodiments are applied. An imaging apparatus **960** captures an image of an object to generate image data, encodes the image data, and records the encoded image data on a recording medium.

The imaging apparatus **960** includes an optical block **961**, an imaging unit **962**, a signal processing unit **963**, an image processing unit **964**, a display unit **965**, an external interface **966**, a memory **967**, a medium drive **968**, an OSD **969**, a control unit **970**, a user interface **971**, and a bus **972**.

The optical block **961** is connected to the imaging unit **962**. The imaging unit **962** is connected to the signal processing unit **963**. The display unit **965** is connected to the image processing unit **964**. The user interface **971** is connected to the control unit **970**. The bus **972** serves to connect the image processing unit **964**, the external interface **966**, the memory **967**, the medium drive **968**, the OSD **969**, and the control unit **970** to one another.

The optical block **961** includes a focus lens, an aperture mechanism, and so forth. The optical block **961** forms an optical image of the object on an imaging surface of the imaging unit **962**. The imaging unit **962** includes an image sensor such as a CCD or CMOS image sensor, and converts the optical image formed on the imaging surface into an image signal serving as an electrical signal by performing photoelectric conversion. The imaging unit **962** then outputs the image signal to the signal processing unit **963**.

The signal processing unit **963** performs various camera signal processing operations, such as knee correction, gamma correction, and color correction, on the image signal input from the imaging unit **962**. The signal processing unit **963** outputs the image data subjected to camera signal processing operations to the image processing unit **964**.

The image processing unit **964** encodes the image data input from the signal processing unit **963** to generate encoded data. The image processing unit **964** then outputs the generated encoded data to the external interface **966** or the medium drive **968**. Further, the image processing unit **964** decodes the encoded data input from the external interface **966** or the medium drive **968** to generate image data. The image processing unit **964** then outputs the generated image data to the display unit **965**. In addition, the image processing unit **964** may also output the image data input from the signal processing unit **963** to the display unit **965** to cause an image to be displayed. In addition, the image processing unit **964** may also superimpose display data acquired from the OSD **969** on the image to be output to the display unit **965**.

The OSD **969** generates a GUI image such as a menu, a button, or a cursor, and outputs the generated image to the image processing unit **964**.

The external interface **966** is formed as, for example, a USB input/output terminal. The external interface **966** connects, for example, the imaging apparatus **960** to a printer when printing an image. A drive is further connected to the external interface **966**, if necessary. A removable medium such as a magnetic disk or an optical disk is placed in the drive, and a program read from the removable medium may be installed into the imaging apparatus **960**. In addition, the external interface **966** may also be formed as a network interface to be connected to a network such as a LAN or the Internet. In other words, the external interface **966** functions as a transmission unit in the imaging apparatus **960**.

The recording medium to be placed in the medium drive **968** may be, for example, any readable/writable removable medium such as a magnetic disk, a magneto-optical disk, an optical disk, or a semiconductor memory. Alternatively, a recording medium may be fixedly attached to the medium drive **968**, and may form a built-in hard disk drive or a non-portable storage section such as an SSD (Solid State Drive).

The control unit **970** includes a processor such as a CPU, and memories such as a RAM and a ROM. The memories store a program to be executed by the CPU, program data, and so forth. The program stored in the memories is read and executed by the CPU when, for example, the imaging apparatus **960** is started. The CPU executes the program to control the operation of the imaging apparatus **960** in accordance with, for example, an operation signal input from the user interface **971**.

The user interface **971** is connected to the control unit **970**. The user interface **971** includes, for example, buttons, switches, and so forth for allowing the user to operate the imaging apparatus **960**. The user interface **971** detects an operation of the user via the above-described components to generate an operation signal, and outputs the generated operation signal to the control unit **970**.

In the imaging apparatus **960** having the configuration described above, the image processing unit **964** has the function of the image encoding device **10** (FIG. **1**) and the function of the image decoding device **300** (FIG. **16**) according to the foregoing embodiments. Accordingly, the imaging apparatus **960** can suppress an increase in the amount of coding of a quantization matrix.

As a matter of course, an image encoding device and an image decoding device to which the present technology is applied may also be used in apparatuses other than the apparatuses described above or in systems.

11. Exemplary Application of Scalable Coding

[First System]

Next, a specific example of use of scalable coded data which has been scalably coded (hierarchically coded) will be described. Scalable coding is used for, for example, the selection of data to be transmitted, as in an example illustrated in FIG. **39**.

In a data transmission system **1000** illustrated in FIG. **39**, a distribution server **1002** reads scalable coded data stored in a scalable coded data storage unit **1001**, and distributes the

scalable coded data to terminal devices, such as a personal computer **1004**, an AV device **1005**, a tablet device **1006**, and a mobile phone **1007**, via a network **1003**.

In this case, the distribution server **1002** selects encoded data having desired quality in accordance with the performance of the terminal device, the communication environment, and the like, and transmits the selected encoded data. Even if the distribution server **1002** transmits data having quality higher than necessary, the terminal device may not always obtain a high-quality image, and delay or overflow may be caused. In addition, such data may occupy communication bandwidth more than necessary, or may increase the load on the terminal device more than necessary. Conversely, even if the distribution server **1002** transmits data having quality lower than necessary, the terminal device may not necessarily obtain an image with a sufficient quality. Thus, the distribution server **1002** reads the scalable coded data stored in the scalable coded data storage unit **1001**, if necessary, as encoded data having quality appropriate for the performance of the terminal device, communication environment, and the like, and transmits the read encoded data.

For example, it is assumed that the scalable coded data storage unit **1001** stores scalable coded data (BL+EL) **1011** which has been scalably coded. The scalable coded data (BL+EL) **1011** is encoded data including a base layer and an enhancement layer, and is data which is decoded to obtain both an image of the base layer and an image of the enhancement layer.

The distribution server **1002** selects an appropriate layer in accordance with the performance of a terminal device that transmits data, the communication environment, and the like, and reads the data of the layer. For example, the distribution server **1002** reads high-quality scalable coded data (BL+EL) **1011** from the scalable coded data storage unit **1001**, and transmits the read scalable coded data (BL+EL) **1011** to devices having high processing capabilities, namely, the personal computer **1004** or the tablet device **1006**, as it is. In contrast, for example, the distribution server **1002** extracts the data of the base layer from the scalable coded data (BL+EL) **1011**, and transmits the extracted data of the base layer to devices having low processing capabilities, namely, the AV device **1005** and the mobile phone **1007**, as scalable coded data (BL) **1012** having the same content as the scalable coded data (BL+EL) **1011** but having lower quality than the scalable coded data (BL+EL) **1011**.

The use of scalable coded data in this manner facilitates the adjustment of the amount of data, thereby suppressing the occurrence of delay or overflow and suppressing an unnecessary increase in the load on a terminal device or a communication medium. Furthermore, the scalable coded data (BL+EL) **1011** has reduced redundancy between layers, and therefore has a smaller amount of data than data having individually encoded data of the respective layers. Accordingly, the storage area of the scalable coded data storage unit **1001** can be more efficiently utilized.

Note that since various devices such as the personal computer **1004**, the AV device **1005**, the tablet device **1006**, and the mobile phone **1007** are applicable as terminal devices, the hardware performance of terminal devices differs from device to device. In addition, since various applications may be executed by terminal devices, the software capabilities of the applications may vary. Furthermore, the network **1003** serving as a communication medium may be implemented as any communication line network which can be wired, wireless, or both, such as the Internet and a LAN (Local Area Network), and have various data transmission capabilities. Such performance and capabilities may vary depending on other communication and the like.

Accordingly, prior to the start of transmission of data, the distribution server **1002** may communicate with a terminal device to which the data is to be transmitted, and may obtain information concerning the capabilities of the terminal device, such as the hardware performance of the terminal device or the performance of application (software) executed by the terminal device, and also information concerning the communication environment, such as the available bandwidth of the network **1003**. In addition, the distribution server **1002** may select an appropriate layer on the basis of the obtained information.

Note that a layer may be extracted by a terminal device. For example, the personal computer **1004** may decode the transmitted scalable coded data (BL+EL) **1011**, and display an image of a base layer or an image of an enhancement layer. Alternatively, for example, the personal computer **1004** may extract the scalable coded data (BL) **1012** of the base layer from the transmitted scalable coded data (BL+EL) **1011**, store the extracted scalable coded data (BL) **1012**, transfer the extracted scalable coded data (BL) **1012** to another device, or decode the extracted scalable coded data (BL) **1012** to display an image of the base layer.

As a matter of course, the number of scalable coded data storage units **1001**, the number of distribution servers **1002**, the number of networks **1003**, and the number of terminal devices may be arbitrary. In addition, while a description has been given of an example in which the distribution server **1002** transmits data to a terminal device, other examples of use may be found. The data transmission system **1000** may be used in any system that selects an appropriate layer, when transmitting encoded data which has been scalably coded to a terminal device, in accordance with the capabilities of the terminal device, the communication environment, and the like.

In addition, the present technology can also be applied to the data transmission system **1000** as illustrated in FIG. **39** described above in a manner similar to application to the hierarchical encoding and hierarchical decoding described above with reference to FIG. **31** to FIG. **33**, thereby achieving advantages similar to the advantages described above with reference to FIG. **31** to FIG. **33**.

[Second System]

Scalable coding is also used for, for example, as in an example illustrated in FIG. **40**, transmission via a plurality of communication media.

In a data transmission system **1100** illustrated in FIG. **40**, a broadcast station **1101** transmits scalable coded data (BL) **1121** of a base layer via terrestrial broadcasting **1111**. The broadcast station **1101** further transmits (e.g. packetizes and transmits) scalable coded data (EL) **1122** of an enhancement layer via a desired network **1112** formed of a communication network which can be wired, wireless, or both.

A terminal device **1102** has a function for receiving the terrestrial broadcasting **1111** from the broadcast station **1101**, and receives the scalable coded data (BL) **1121** of the base layer transmitted via the terrestrial broadcasting **1111**. The terminal device **1102** further has a communication function for performing communication via the network **1112**, and receives the scalable coded data (EL) **1122** of the enhancement layer transmitted via the network **1112**.

The terminal device **1102** decodes the scalable coded data (BL) **1121** of the base layer acquired via the terrestrial broadcasting **1111** in accordance with, for example, a user instruction or the like to obtain an image of the base layer,

stores the scalable coded data (BL) **1121**, or transfers the scalable coded data (BL) **1121** to another device.

Further, the terminal device **1102** combines the scalable coded data (BL) **1121** of the base layer acquired via the terrestrial broadcasting **1111** with the scalable coded data (EL) **1122** of the enhancement layer acquired via the network **1112** in accordance with, for example, a user instruction or the like to obtain scalable coded data (BL+EL), and decodes the scalable coded data (BL+EL) to obtain an image of the enhancement layer, stores the scalable coded data (BL+EL), or transfers the scalable coded data (BL+EL) to another device.

As described above, scalable coded data can be transmitted via, for example, communication media different from one layer to another. Thus, the load can be distributed, and delay or overflow can be suppressed from occurring.

Further, a communication medium to be used for transmission may be selectable for each layer in accordance with the situation. For example, the scalable coded data (BL) **1121** of the base layer having a relatively large amount of data may be transmitted via a communication medium having a large bandwidth, and the scalable coded data (EL) **1122** of the enhancement layer having a relatively small amount of data may be transmitted via a communication medium having a narrow bandwidth. Alternatively, for example, the communication medium via which the scalable coded data (EL) **1122** of the enhancement layer is to be transmitted may be switched between the network **1112** and the terrestrial broadcasting **1111** in accordance with the available bandwidth of the network **1112**. As a matter of course, the above similarly applies to data of an arbitrary layer.

Control in the manner described above can further suppress an increase in the load of data transmission.

As a matter of course, the number of layers is arbitrary, and the number of communication media to be used for transmission is also arbitrary. In addition, the number of terminal devices **1102** to which data is to be distributed is also arbitrary. In addition, while a description has been given in the context of broadcasting from the broadcast station **1101** by way of example, other examples of use may be found. The data transmission system **1100** may be applied to any system that divides encoded data which has been subjected to scalable coding into a plurality of segments in units of layers and transmits the data segments via a plurality of lines.

In addition, the present technology can also be applied to the data transmission system **1100** as illustrated in FIG. **40** described above in a manner similar to application to the hierarchical encoding and hierarchical decoding described above with reference to FIG. **31** to FIG. **33**, thereby achieving advantages similar to the advantages described above with reference to FIG. **31** to FIG. **33**.

[Third System]

Scalable coding is also used for, for example, as in an example illustrated in FIG. **41**, the storage of encoded data.

In an imaging system **1200** illustrated in FIG. **41**, an imaging apparatus **1201** performs scalable coding on image data obtained by capturing an image of an object **1211**, and supplies the resulting data to a scalable coded data storage device **1202** as scalable coded data (BL+EL) **1221**.

The scalable coded data storage device **1202** stores the scalable coded data (BL+EL) **1221** supplied from the imaging apparatus **1201** at the quality corresponding to the situation. For example, in a normal state, the scalable coded data storage device **1202** extracts data of a base layer from the scalable coded data (BL+EL) **1221**, and stores the extracted data of the base layer as scalable coded data (BL) **1222** of the base layer having a low quality and a small amount of data. In contrast, for example, in a special state, the scalable coded data storage device **1202** stores the scalable coded data (BL+EL) **1221** having a high quality and a large amount of data, as it is.

Accordingly, the scalable coded data storage device **1202** can save an image at high quality only when necessary. This can suppress an increase in the amount of data while suppressing a reduction in the worth of the image due to a reduction in quality, and can improve use efficiency of the storage area.

For example, it is assumed that the imaging apparatus **1201** is a security camera. If an object to be monitored (e.g., intruder) does not appear in a captured image (normal state), it may be probable that the captured image does not have important content. Thus, a reduction in the amount of data is prioritized, and the image data (scalable coded data) of the image is stored at low quality. In contrast, if an object to be monitored appears as the object **1211** in a captured image (special state), it may be probable that the captured image has important content. Thus, image quality is prioritized, and the image data (scalable coded data) of the image is stored at high quality.

Note that either the normal state or the special state may be determined by, for example, the scalable coded data storage device **1202** by analyzing an image. Alternatively, the imaging apparatus **1201** may determine the normal state or the special state, and may transmit the determination result to the scalable coded data storage device **1202**.

Note that the determination of either the normal state or the special state may be based on an arbitrary standard, and an image on which the determination is based may have any content. As a matter of course, conditions other than the content of an image may be used as the determination standard. The mode may be changed in accordance with, for example, the magnitude, waveform, or the like of recorded audio, or may be changed at intervals of a predetermined period of time. Alternatively, the mode may be changed in accordance with an external instruction such as a user instruction.

In addition, while a description has been given of an example of changing between two states, namely, normal state and special state, the number of states is arbitrary, and the state change may be made between more than two states, such as a normal state, a less special state, a special state, and a more special state. Note that the upper limit number of states to be changed depends on the number of layers of scalable coded data.

Further, the imaging apparatus **1201** may determine the number of layers of scalable coding in accordance with the state. For example, in a normal state, the imaging apparatus **1201** may generate scalable coded data (BL) **1222** of the base layer having a low quality and a small amount of data, and supply the generated scalable coded data (BL) **1222** to the scalable coded data storage device **1202**. Further, for example, in a special state, the imaging apparatus **1201** may generate scalable coded data (BL+EL) **1221** of the base layer having a high quality and a large amount of data, and supply the generated scalable coded data (BL+EL) **1221** to the scalable coded data storage device **1202**.

While a security camera has been described as an example, the imaging system **1200** may be used in any application, and the application is not limited to a security camera.

In addition, the present technology can also be applied to the imaging system **1200** as illustrated in FIG. **41** described

above in a manner similar to application to the hierarchical encoding and hierarchical decoding described above with reference to FIG. **31** to FIG. **33**, thereby achieving advantages similar to the advantages described above with reference to FIG. **31** to FIG. **33**.

Note that the present technology is also applicable to HTTP streaming, such as MPEG DASH, in which an appropriate piece of encoded data is selected in units of segments from among a plurality of pieces of encoded data prepared in advance and having different resolutions and is used. In other words, information concerning encoding and decoding may also be shared between a plurality of pieces of encoded data.

Note that an example has been described herein in which a quantization matrix and a parameter related to a quantization matrix are transmitted from the encoder side to the decoder side. A technique for transmitting quantization matrices and parameters related to quantization matrices may be to transmit or record the quantization matrix parameters as separate data associated with an encoded bit stream without multiplexing the quantization matrix parameters into the encoded bit stream. The term "associate", as used herein, means allowing an image (which may be part of an image, such as a slice or block) included in a bit stream to be linked to information corresponding to the image when the image is decoded. That is, the information may be transmitted on a transmission path different from that for the image (or bit stream). Further, the information may be recorded on a recording medium different from that for the image (or bit stream) (or recorded in a different recording area of the same recording medium). Furthermore, the information and the image (or bit stream) may be associated with each other in arbitrary units such as a plurality of frames, one frame, or a portion in a frame.

While preferred embodiments of the present disclosure have been described in detail with reference to the accompanying drawings, the technical scope of the present disclosure is not limited to such examples. It is self-explanatory that any person having ordinary knowledge in the technical field of the present disclosure could achieve various changes or modifications within the scope of the technical idea as defined in the appended claims, and it is to be understood that such changes or modifications may also fall within the technical scope of the present disclosure.

Note that the present technology may also provide following configurations.

(1) An image processing device including:

a receiving unit configured to receive encoded data and a quantization matrix, the encoded data being obtained by performing an encoding process on an image, the quantization matrix being limited to a size less than or equal to a transmission size that is a maximum size allowed for transmission;

a decoding unit configured to perform a decoding process on the encoded data received by the receiving unit to generate quantized data;

an up-conversion unit configured to up-convert the quantization matrix received by the receiving unit from the transmission size to a size that is identical to a block size, the block size being a processing unit in which dequantization is performed; and

a dequantization unit configured to dequantize the quantized data generated by the decoding unit using the quantization matrix up-converted by the up-conversion unit.

(2) The image processing device according to any of (1) and (3) through (19), wherein

the quantization matrix received by the receiving unit has, as the transmission size, a size that is identical to a default quantization matrix size.

(3) The image processing device according to any of (1), (2), and (4) through (19), wherein

the quantization matrix received by the receiving unit has, as the transmission size, a size that is identical to a maximum size of a default quantization matrix.

(4) The image processing device according to any of (1) through (3) and (5) through (19), wherein

the transmission size is 8×8, and

the quantization matrix received by the receiving unit has an 8×8 size.

(5) The image processing device according to any of (1) through (4) and (6) through (19), wherein

the up-conversion unit up-converts the quantization matrix limited to the size less than or equal to the transmission size, by performing an interpolation process on a matrix element in the quantization matrix received by the receiving unit.

(6) The image processing device according to any of (1) through (5) and (7) through (19), wherein

the up-conversion unit up-converts the quantization matrix limited to the size less than or equal to the transmission size, by performing a nearest neighbor interpolation process on a matrix element in the quantization matrix received by the receiving unit.

(7) The image processing device according to any of (1) through (6) and (8) through (19), wherein

the transmission size is 8×8, and

the up-conversion unit up-converts a quantization matrix having an 8×8 size to a quantization matrix having a 16× 16 size by performing the nearest neighbor interpolation process on a matrix element in the quantization matrix having an 8×8 size.

(8) The image processing device according to any of (1) through (7) and (9) through (19), wherein

the up-conversion unit up-converts a quantization matrix having an 8×8 size to a quantization matrix having a 32×32 size by performing the nearest neighbor interpolation process on a matrix element in the quantization matrix having an 8×8 size.

(9) The image processing device according to any of (1) through (8) and (10) through (19), wherein

the up-conversion unit up-converts a square quantization matrix limited to a size less than or equal to the transmission size to a non-square quantization matrix by performing an interpolation process on a matrix element in the square quantization matrix.

(10) The image processing device according to any of (1) through (9) and (11) through (19), wherein

the transmission size is 8×8, and

the up-conversion unit up-converts a quantization matrix having an 8× 8 size to a quantization matrix having an 8×32 size or a quantization matrix having a 32× 8 size, by performing the interpolation process on a matrix element in the quantization matrix having an 8×8 size.

(11) The image processing device according to any of (1) through (10) and (12) through (19), wherein

the transmission size is 8×8, and

the up-conversion unit up-converts a quantization matrix having a 4×4 size to a quantization matrix having a 4×16 size or a quantization matrix having a 16× 4 size, by performing the interpolation process on a matrix element in the quantization matrix having a 4×4 size.

(12) The image processing device according to any of (1) through (11) and (13) through (19), wherein

the transmission size is 8×8, and

the up-conversion unit up-converts a quantization matrix having an 8×8 size to a quantization matrix having a 2×32 size, a quantization matrix having a 32× 2 size, a quantization matrix having a 1×16 size, or a quantization matrix having a 16×1 size, by performing the interpolation process on a matrix element in the quantization matrix having an 8×8 size.

(13) The image processing device according to any of (1) through (12) and (14) through (19), wherein

a coding unit that is a processing unit in which a decoding process is performed and a transform unit that is a processing unit in which a transform process is performed have a layered structure,

the decoding unit performs a decoding process on the encoded data using a unit having a layered structure, and

the up-conversion unit up-converts the quantization matrix received by the receiving unit from the transmission size to a size of a transform unit that is a processing unit in which dequantization is performed.

(14) The image processing device according to any of (1) through (13) and (15) through (19), wherein

the quantization matrix is set as a quantization matrix having matrix elements which differ in accordance with a block size that is a processing unit in which dequantization is performed,

the receiving unit receives a quantization matrix having matrix elements which differ in accordance with a block size that is a processing unit in which dequantization is performed, and

the up-conversion unit up-converts the quantization matrix received by the receiving unit, using a quantization matrix having matrix elements which differ in accordance with a block size that is a processing unit in which dequantization is performed.

(15) The image processing device according to any of (1) through (14) and (16) through (19), wherein

the transmission size is 8×8, and

the up-conversion unit up-converts a first quantization matrix in a case where a block size that is a processing unit in which dequantization is performed is 16×16, and up-converts a second quantization matrix having matrix elements which differ from the first quantization matrix in a case where a block size that is a processing unit in which dequantization is performed is 32× 32.

(16) The image processing device according to any of (1) through (15) and (17) through (19), wherein

the receiving unit receives a quantization matrix which differs in accordance with a size to up-convert, and

the up-conversion unit performs up-conversion using a quantization matrix corresponding to a size to up-convert.

(17) The image processing device according to any of (1) through (16), (18), and (19), wherein

the receiving unit receives a first quantization matrix used for up-conversion to a first size, and a second quantization matrix used for up-conversion to a second size larger than the first size, and

the up-conversion unit up-converts the first quantization matrix received by the receiving unit in a case where a transform unit is equal to the first size.

(18) The image processing device according to any of (1) through (17) and (19), wherein

the up-conversion unit up-converts the second quantization matrix received by the receiving unit in a case where a transform unit is equal to the second size.

(19) The image processing device according to any of (1) through (18), wherein

the first size is 16×16, and

the second size is 32×32.

(20) An image processing method for an image processing device, including:

receiving encoded data and a quantization matrix, the encoded data being obtained by performing an encoding process on an image, the quantization matrix being limited to a size less than or equal to a transmission size that is a maximum size allowed for transmission;

performing a decoding process on the received encoded data to generate quantized data;

up-converting the received quantization matrix from the transmission size to a size that is identical to a block size, the block size being a processing unit in which dequantization is performed; and

dequantizing the generated quantized data using the up-converted quantization matrix,

wherein the image processing method is performed by the image processing device.

(21) An image processing device including:

a setting unit configured to set a quantization matrix used for up-conversion from a transmission size that is a maximum size allowed for transmission to a size that is identical to a block size, the block size being a processing unit in which quantized data obtained by quantizing an image is dequantized;

a quantization unit configured to quantize the image using the quantization matrix set by the setting unit to generate quantized data;

an encoding unit configured to perform an encoding process on the quantized data generated by the quantization unit to generate encoded data; and

a transmission unit configured to transmit the encoded data generated by the encoding unit and the quantization matrix set by the setting unit, the quantization matrix being limited to a size less than or equal to the transmission size.

(22) The image processing device according to any of (21) and (23) through (25), wherein

the transmission size is 8×8, and

the quantization matrix set by the setting unit is 8×8.

(23) The image processing device according to any of (21), (22), (24), and (25), wherein

the quantization matrix is a quantization matrix used for up-conversion from an 8×8 size to a 16×16 size or a 32× 32 size.

(24) The image processing device according to any of (21) through (23), and (25), wherein

the quantization matrix is a quantization matrix used for up-conversion to a 32×32 size.

(25) The image processing device according to any of (21) through (24), wherein

a coding unit that is a processing unit in which an encoding process is performed and a transform unit that is a processing unit in which a transform process is performed have a layered structure, and

the encoding unit performs an encoding process on the quantized data using a unit having a layered structure.

(26) An image processing method for an image processing device, including:

setting a quantization matrix used for up-conversion from a transmission size that is a maximum size allowed for

transmission to a size that is identical to a block size, the block size being a processing unit in which quantized data obtained by quantizing an image is dequantized;

quantizing the image using the set quantization matrix to generate quantized data;

performing an encoding process on the generated quantized data to generate encoded data; and

transmitting the generated encoded data and the set quantization matrix, the quantization matrix being limited to a size less than or equal to the transmission size,

wherein the image processing method is performed by the image processing device.

REFERENCE SIGNS LIST

10 image encoding device, **14** orthogonal transform/quantization section, **16** lossless encoding section, **150** matrix processing section, **152** prediction section, **154** difference computation section, **161** prediction section, **162** difference matrix generation section, **163** difference matrix size transformation section, **164** entropy encoding section, **165** decoding section, **166** output section, **171** copy section, **172** prediction matrix generation section, **181** prediction matrix size transformation section, **182** computation section, **183** quantization section, **191** overlap determination section, **192** DPCM section, **193** exp-G section, **201** quantization matrix restoration section, **202** storage section, **300** image decoding device, **313** dequantization/inverse orthogonal transform section, **410** matrix generation section, **531** parameter analysis section, **532** prediction section, **533** entropy decoding section, **534** quantization matrix restoration section, **535** output section, **536** storage section, **541** copy section, **542** prediction matrix generation section, **551** exp-G section, **552** inverse DPCM section, **553** inverse overlap determination section, **561** prediction matrix size transformation section, **562** difference matrix size transformation section, **563** dequantization section, **564** computation section, **701** quantization matrix size transformation section, **721** quantization matrix size transformation section

The invention claimed is:

1. An image processing device, comprising:

circuitry configured to

set a first quantization matrix corresponding to a first transform unit of a first unit size, a second quantization matrix corresponding to a second transform unit of a second unit size larger than the first unit size, and a third quantization matrix different from the second quantization matrix and corresponding to a third transform unit of a third unit size larger than the second unit size; and

transmit a bit stream including the set first quantization matrix, the set second quantization matrix, and the set third quantization matrix, wherein

the second quantization matrix is an 8×8 matrix

the third quantization matrix is an 8×8 matrix

the second unit size is 16×16, and

the third unit size is 32×32.

2. The image processing device according to claim **1**, wherein the first quantization matrix, the second quantization matrix, and the third quantization matrix are included as a picture parameter set of a bitstream.

3. An image processing method, comprising:

setting a first quantization matrix corresponding to a first transform unit of a first unit size, a second quantization matrix corresponding to a second transform unit of a second unit size larger than the first unit size, and a third quantization matrix different from the second quantization matrix and corresponding to a third transform unit of a third unit size larger than the second unit size; and

transmitting a bit stream including the set first quantization matrix, the set second quantization matrix, and the set third quantization matrix, wherein

the second quantization matrix is an 8×8 matrix,

the third quantization matrix is an 8×8 matrix,

the second unit size is 16×16, and

the third unit size is 32×32.

4. The image processing method according to claim **3**, wherein the first quantization matrix, the second quantization matrix, and the third quantization matrix are included as a picture parameter set of a bitstream.

5. A non-transitory computer readable medium storing computer executable instructions which, when executed by a processor, cause the processor to perform a process comprising:

setting a first quantization matrix corresponding to a first transform unit of a first unit size, a second quantization matrix corresponding to a second transform unit of a second unit size larger than the first unit size, and a third quantization matrix different from the second quantization matrix and corresponding to a third transform unit of a third unit size larger than the second unit size; and

transmitting a bit stream including the set first quantization matrix, the set second quantization matrix, and the set third quantization matrix, wherein

the second quantization matrix is an 8×8 matrix,

the third quantization matrix is an 8×8 matrix,

the second unit size is 16×16, and

the third unit size is 32×32.

6. The non-transitory computer readable medium according to claim **5**, wherein the first quantization matrix, the second quantization matrix, and the third quantization matrix are included as a picture parameter set of a bitstream.

* * * * *