US 20250256387A1

(19) United States

(12) Patent Application Publication

Marsh et al.

(10) Pub. No.: US 2025/0256387 A1

(43) Pub. Date: Aug. 14, 2025

(54) **POWER TOOL WITH INTEGRATED DEPTH STOP**

(71) Applicant: **MILWAUKEE ELECTRIC TOOL CORPORATION**, Brookfield, WI (US)

(72) Inventors: **Julia C. Marsh**, Milwaukee, WI (US); **Jeffery D. Spraggon**, Milwaukee, WI (US); **Joy A. Sodon**, Wauwatosa, WI (US); **Adam N. Carter**, Wales, WI (US); **Brittany A. Sellnow**, Milwaukee, WI (US); **Olivia M. Duero**, Wauwatosa, WI (US); **Allison J. Widzinski**, Round Hill, VA (US)

(21) Appl. No.: **19/192,737**

(22) Filed: **Apr. 29, 2025**

Related U.S. Application Data

(63) Continuation of application No. 18/341,572, filed on Jun. 26, 2023, now Pat. No. 12,296,456, which is a continuation-in-part of application No. 17/711,834, filed on Apr. 1, 2022, now Pat. No. 11,872,665.

(60) Provisional application No. 63/211,856, filed on Jun. 17, 2021, provisional application No. 63/169,611, filed on Apr. 1, 2021, provisional application No. 63/355,475, filed on Jun. 24, 2022.

Publication Classification

(51) **Int. Cl.**

B25F 5/02 (2006.01)

B23Q 11/00 (2006.01)

(52) **U.S. Cl.**

CPC ***B25F 5/026*** (2013.01); ***B23Q 11/0046*** (2013.01)

(57) **ABSTRACT**

A power tool includes a housing and a guide rail fixed to the housing. A slide is moveable along the guide rail and a stop is lockable at a plurality of positions along the guide rail to limit movement of the slide along the guide rail.

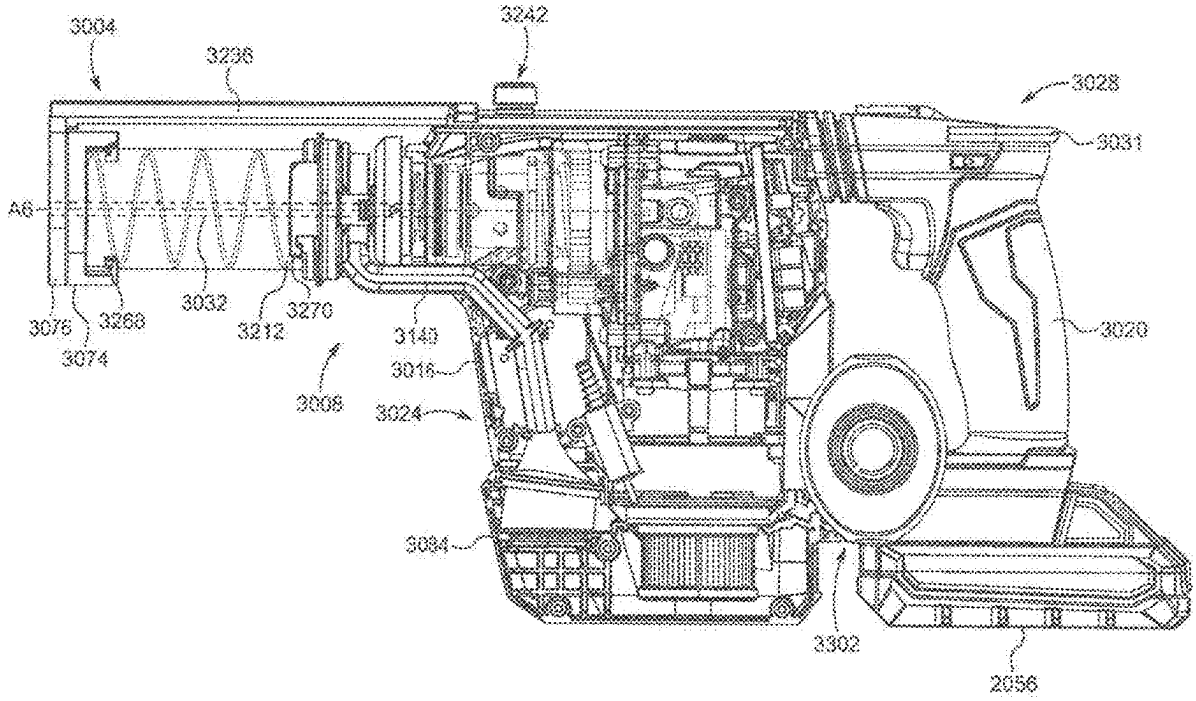

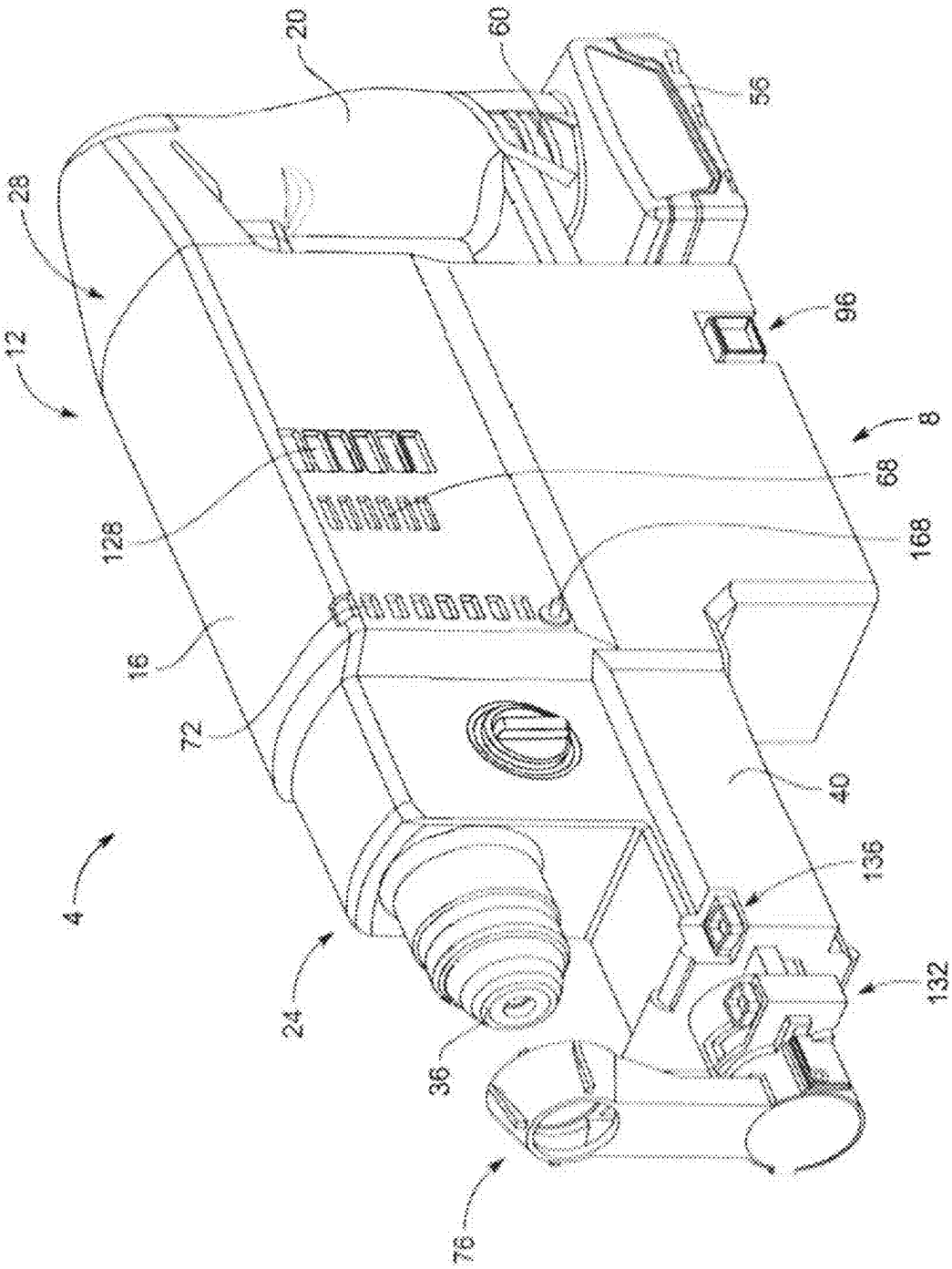

FIG. 1

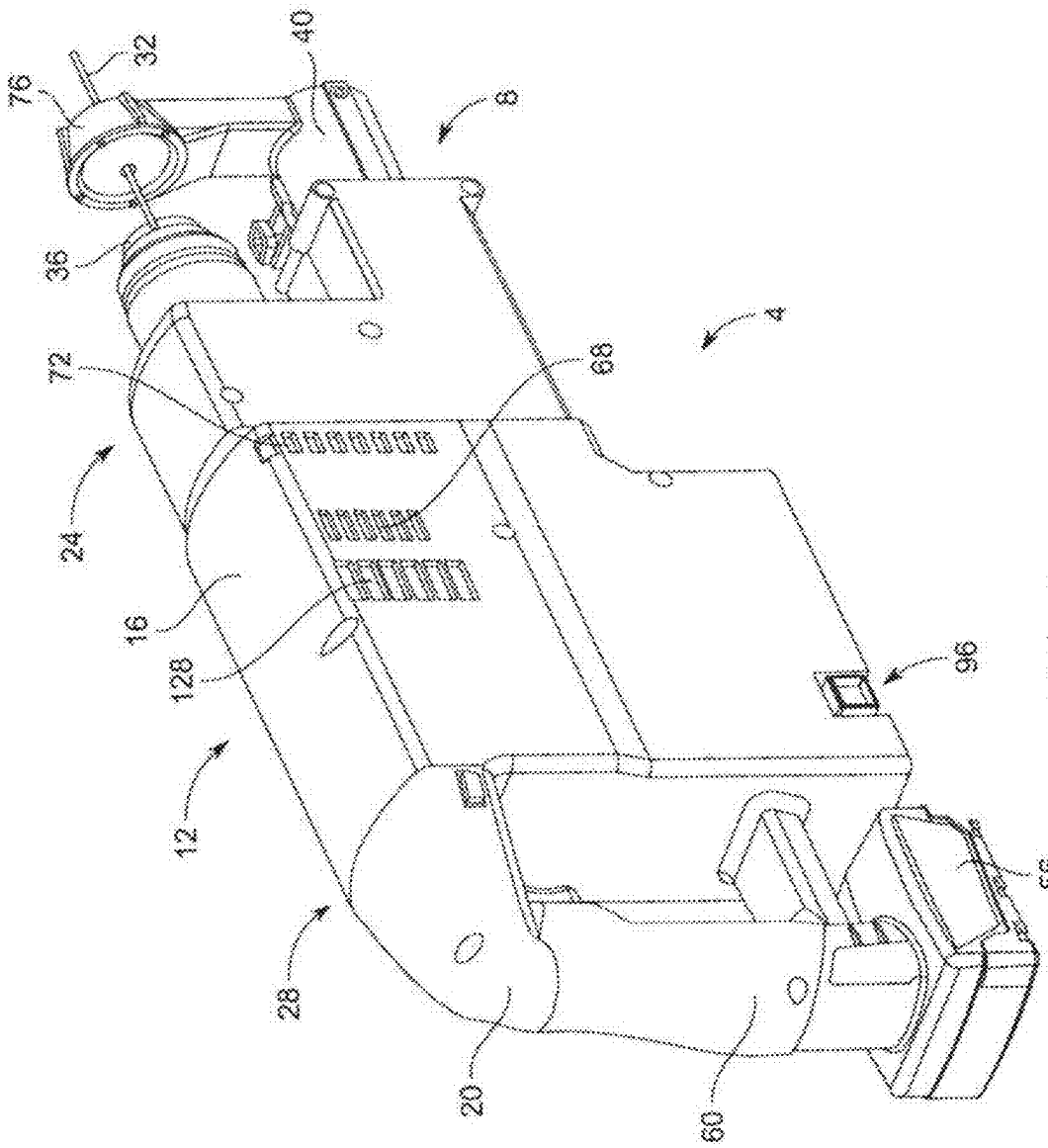

FIG. 2

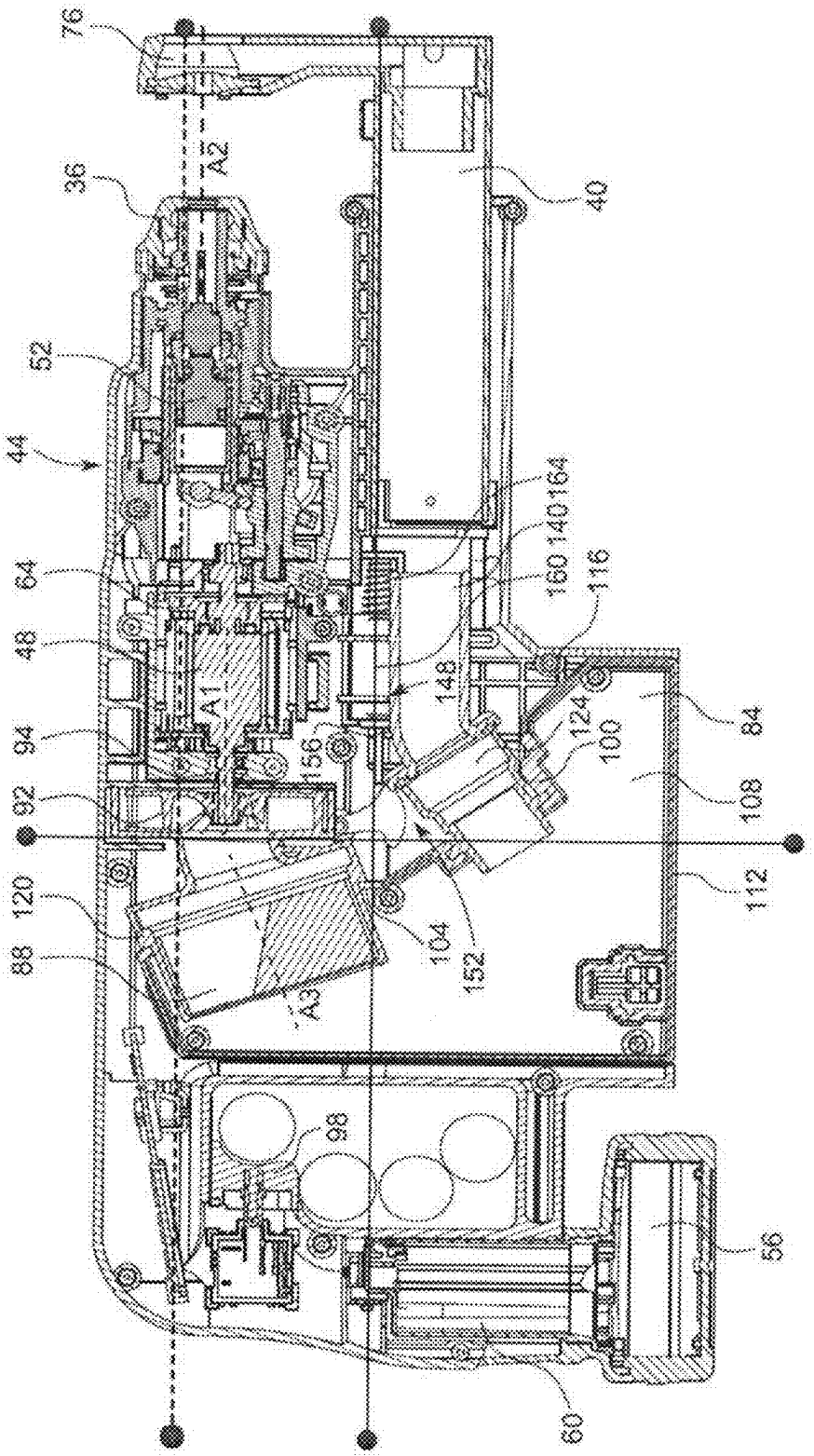
76
36
A2
52
44
64
48
94
92
120
88
A1
A3
40
160 140 164
116
148
156
124
100
84
108
112
104
152
98
56
60

FIG. 3A

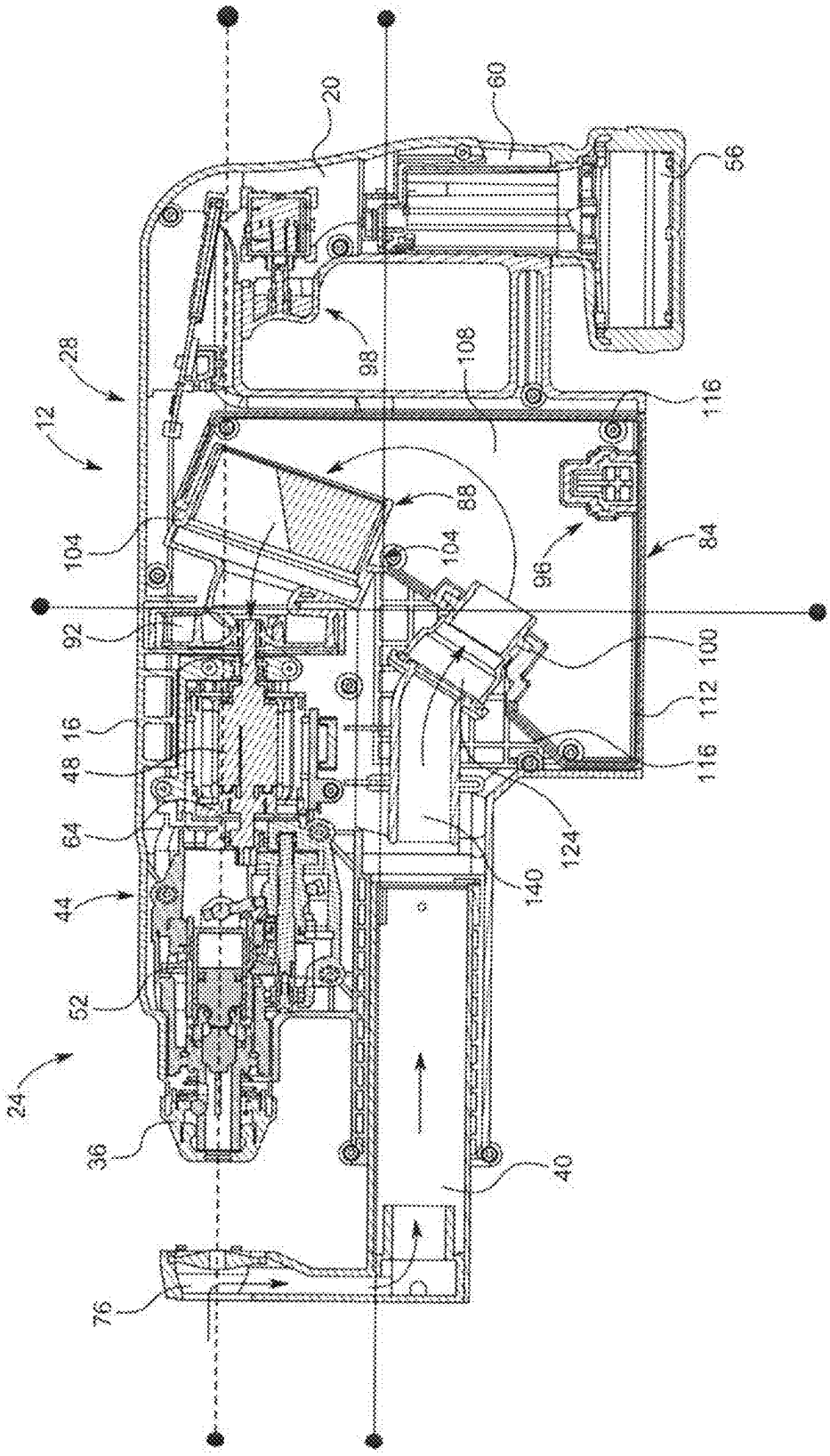
20
60
56
28
12
98
108
116
104
88
104
96
84
92
100
16
112
48
116
64
124
140
44
52
24
36
40
76

FIG. 3B

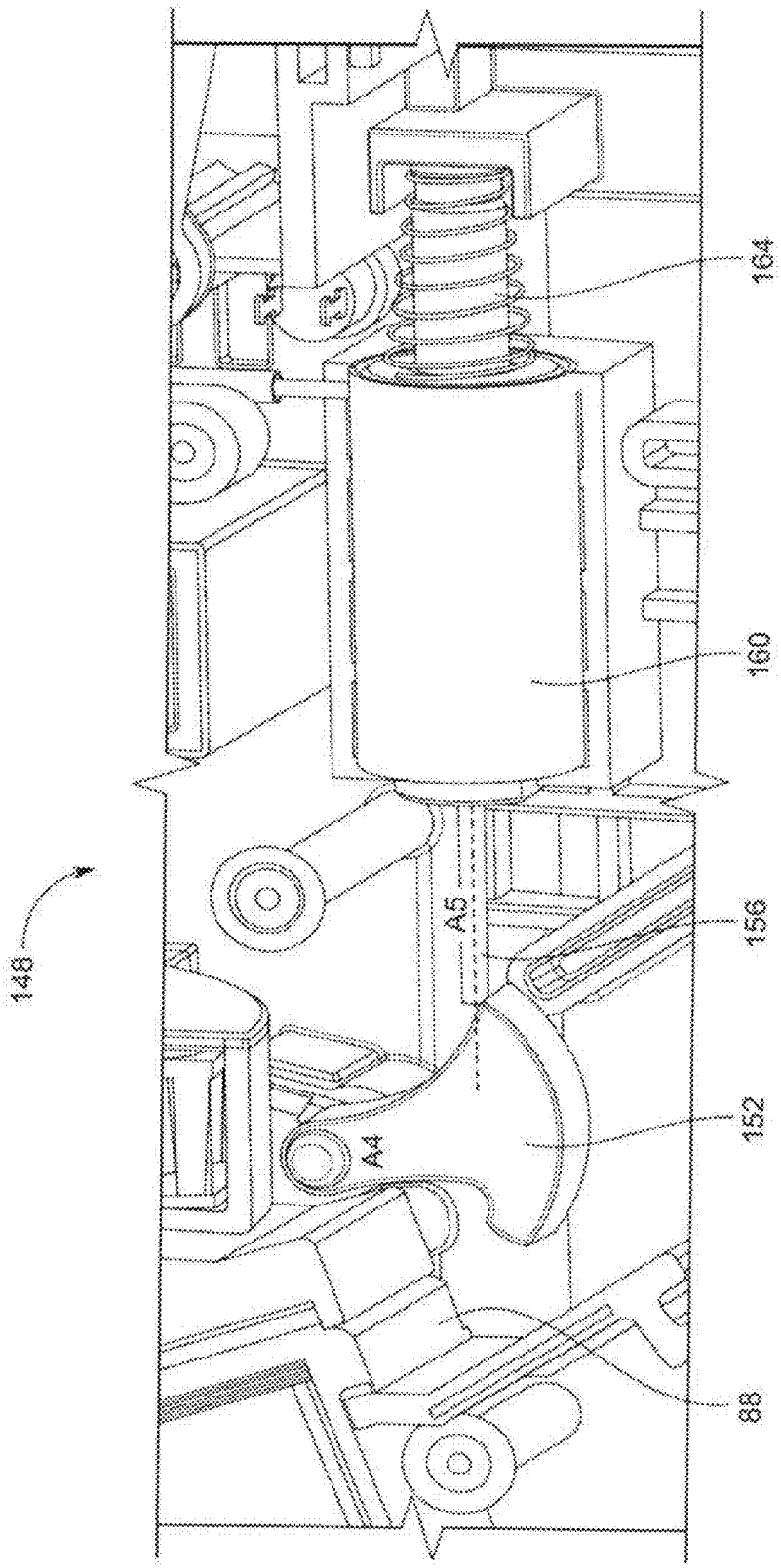

FIG. 4

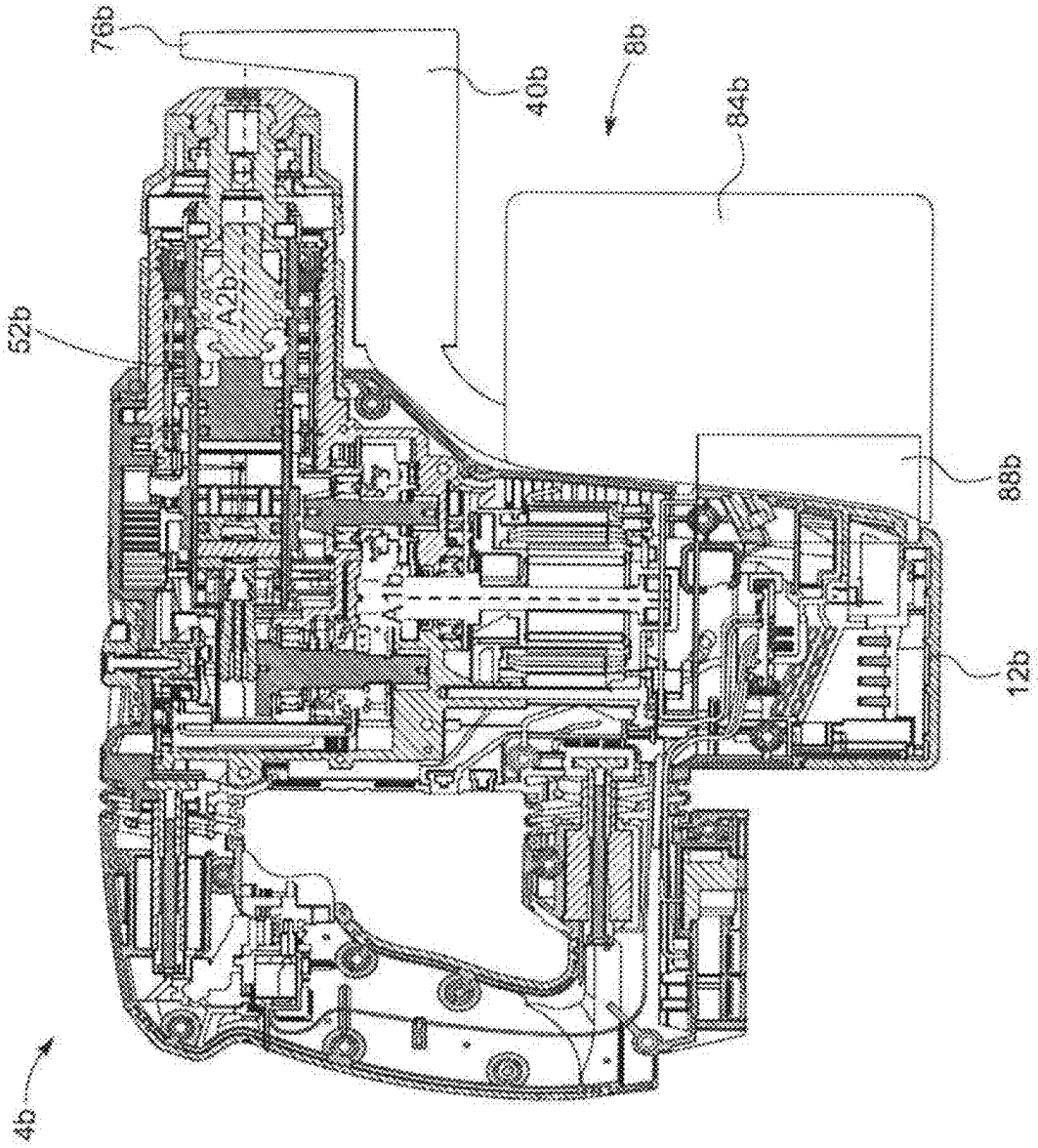

FIG. 5

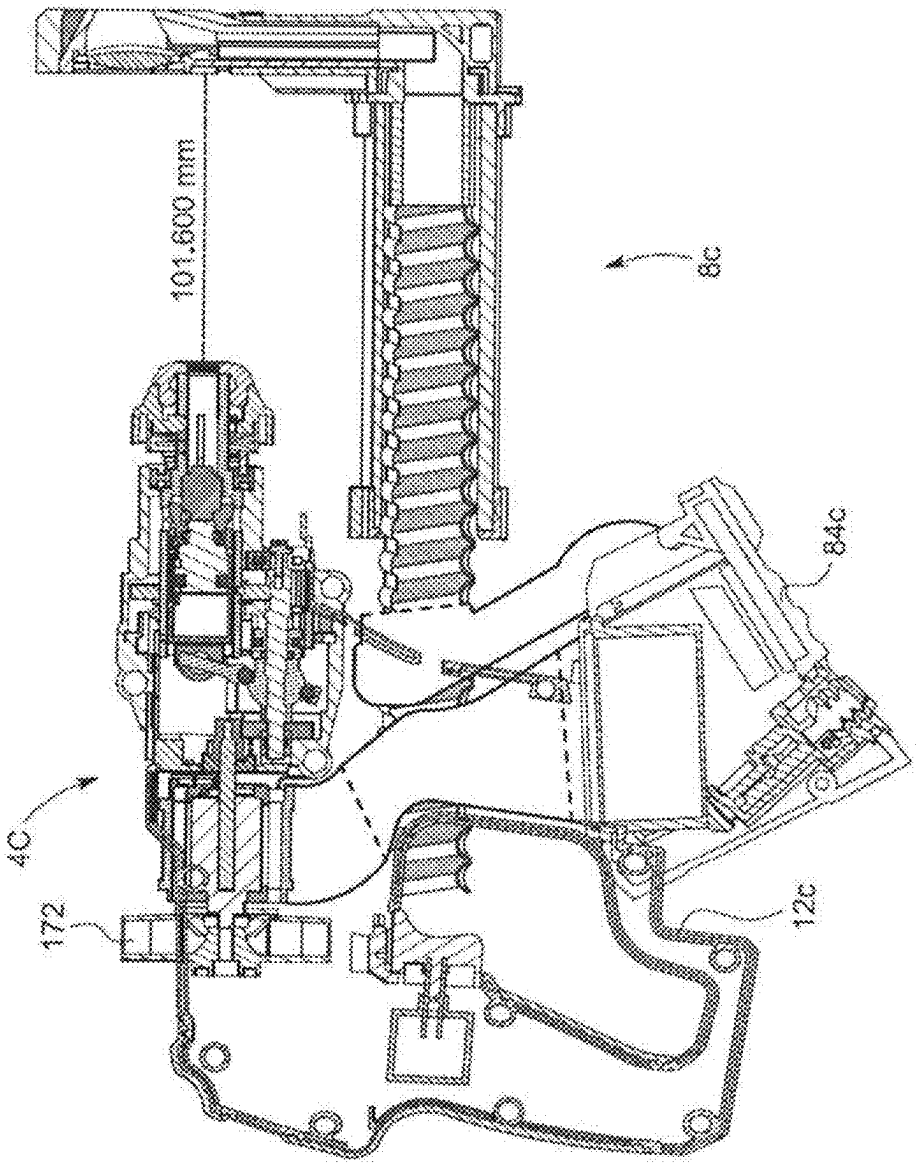

FIG. 6

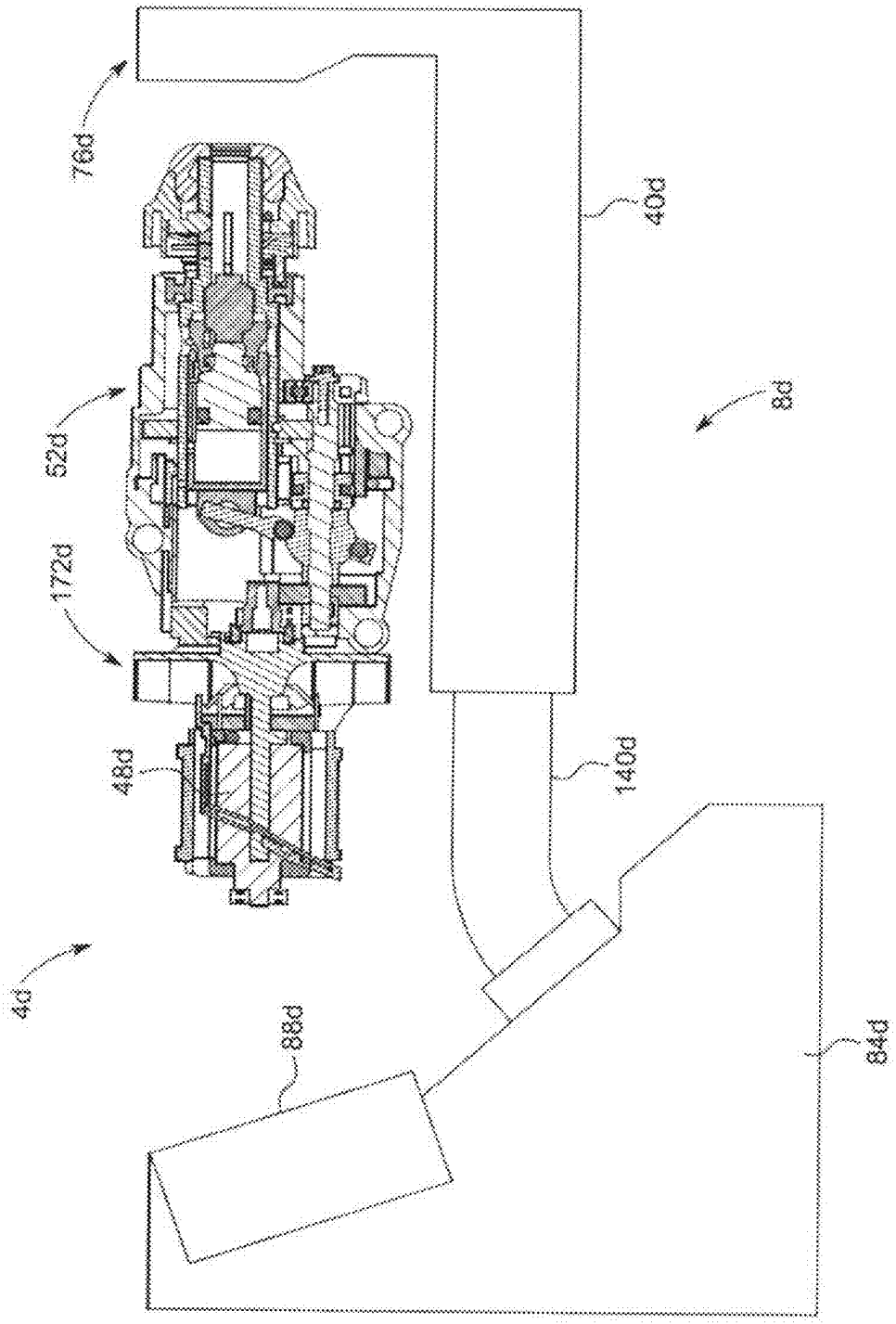

FIG. 7

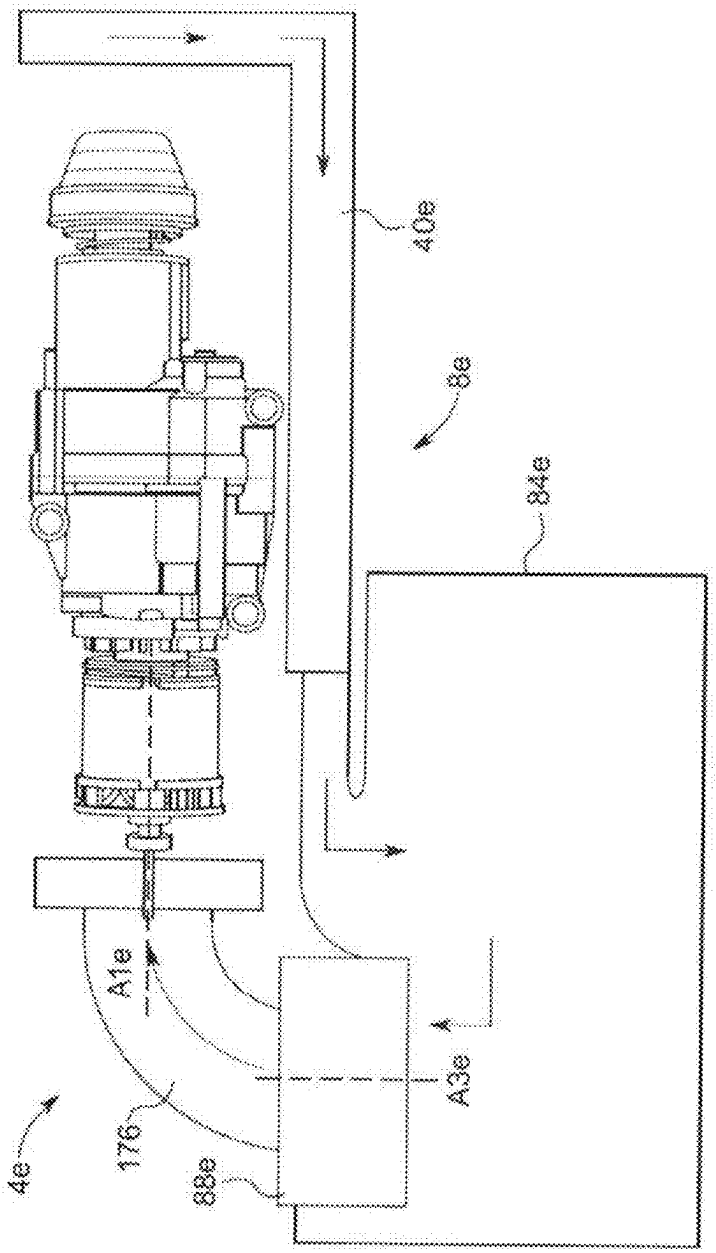

FIG. 8

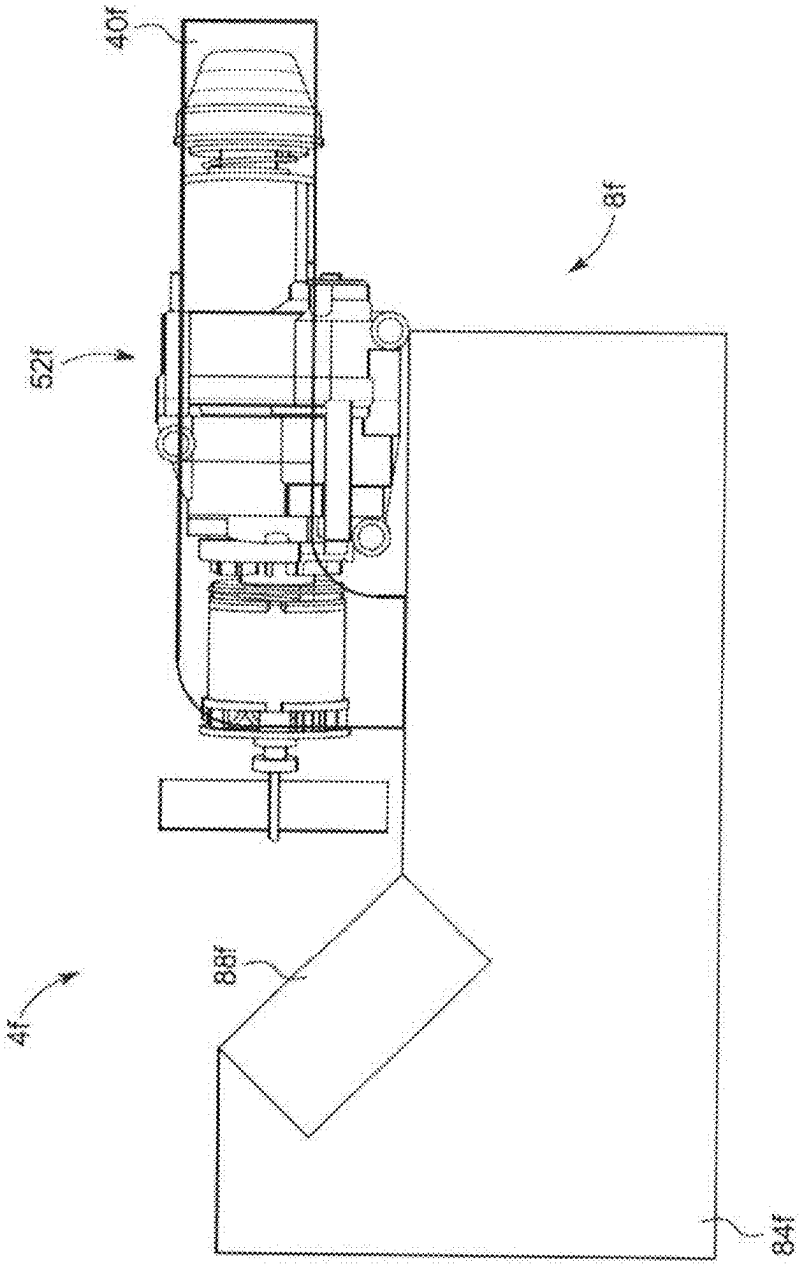

FIG. 9

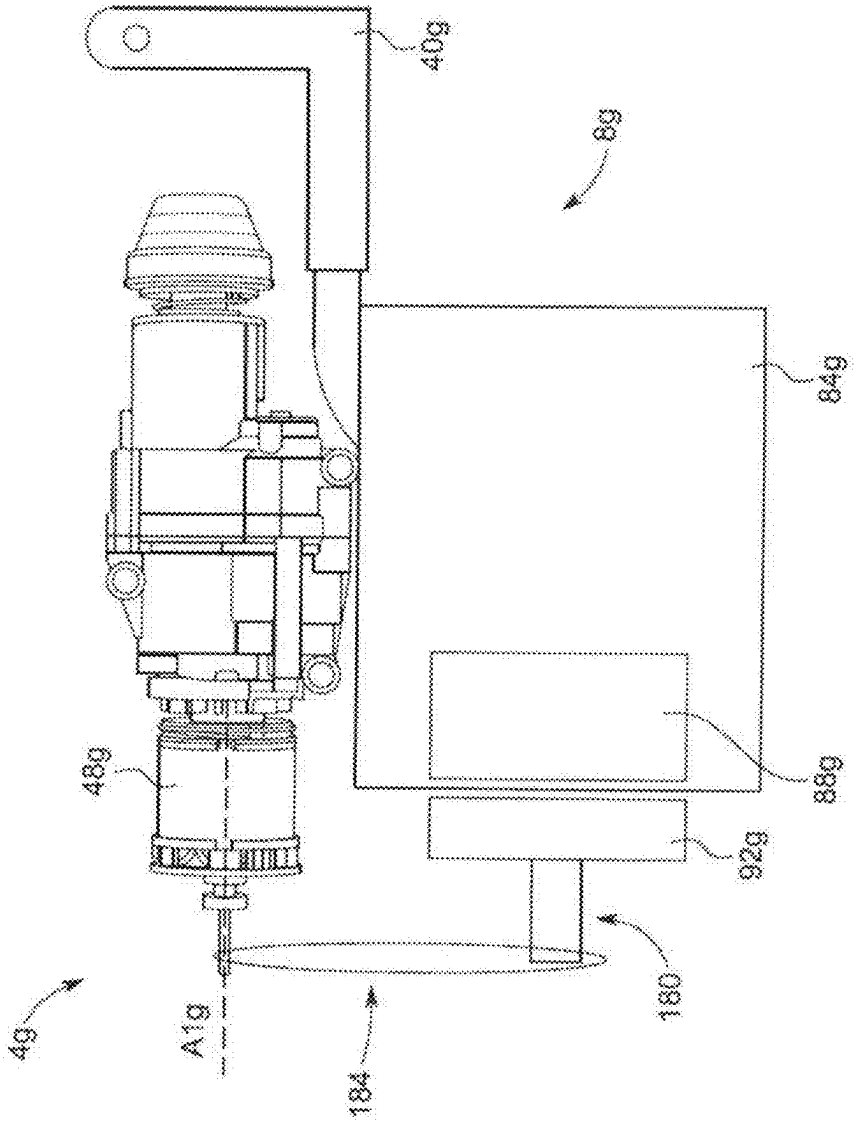

FIG. 10

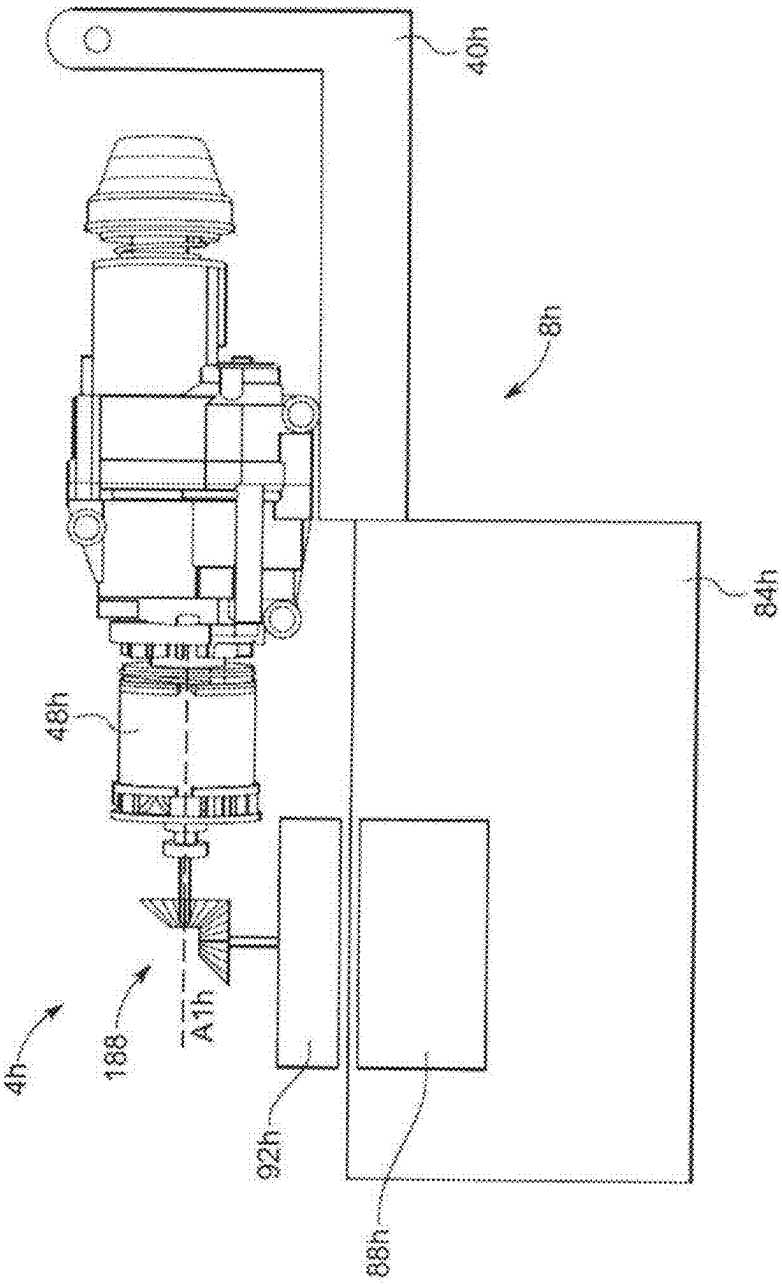

FIG. 11

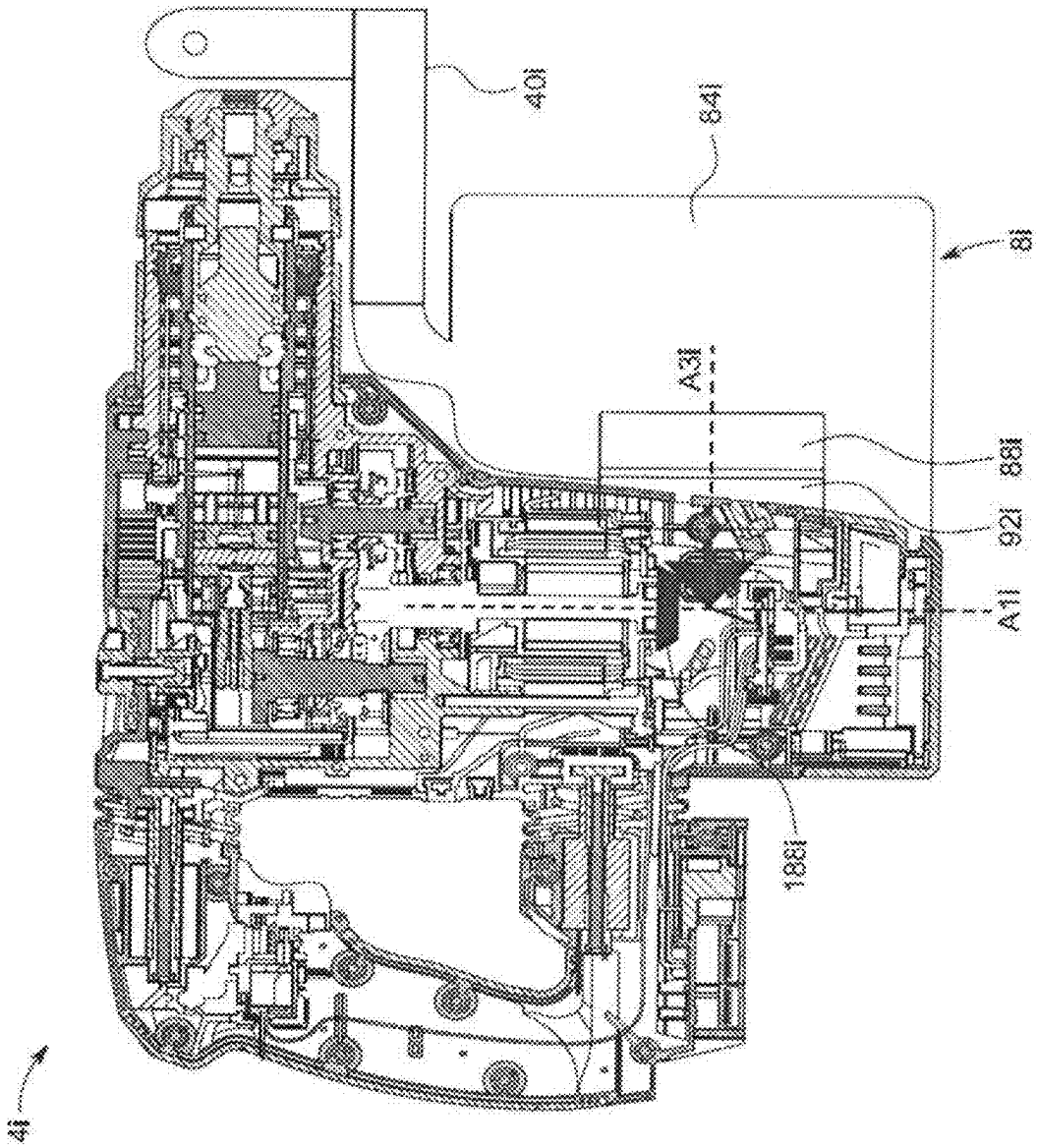

FIG. 12

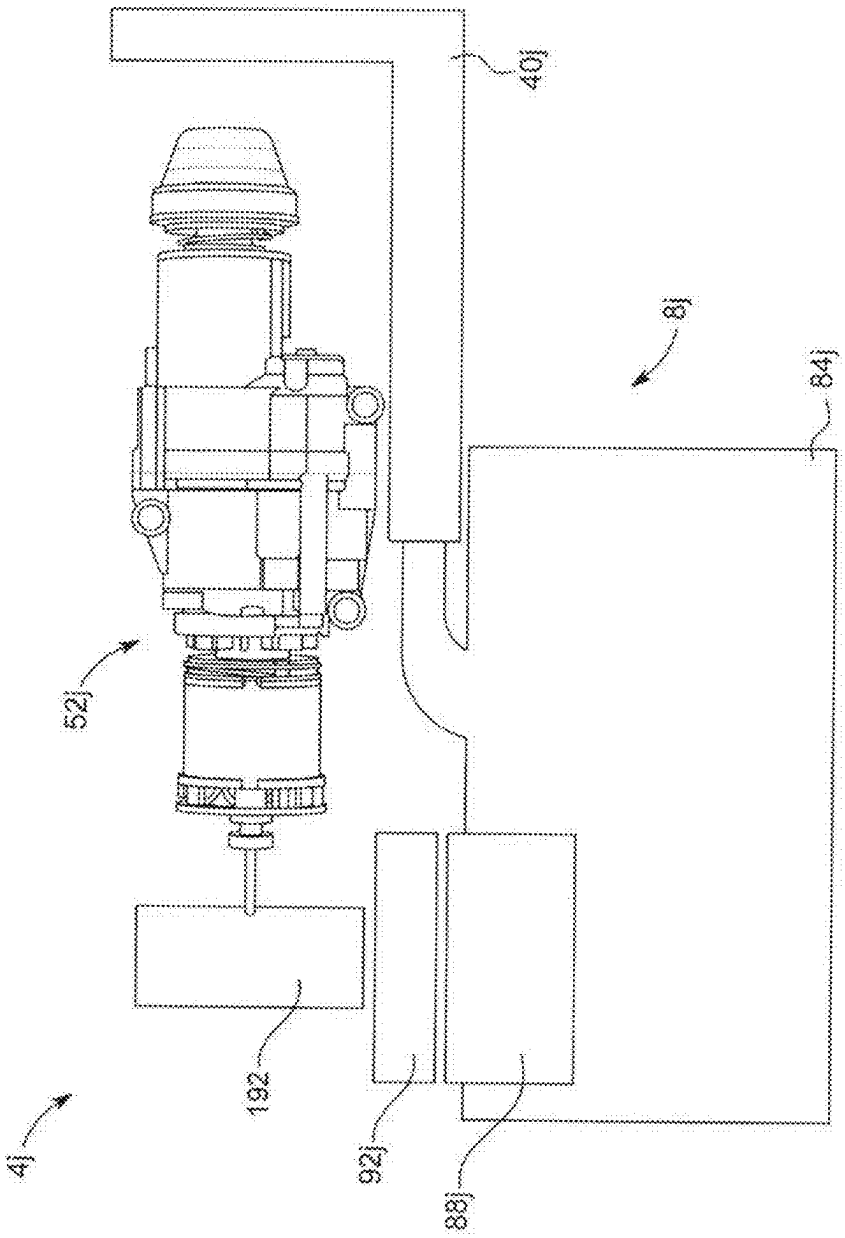

FIG. 13

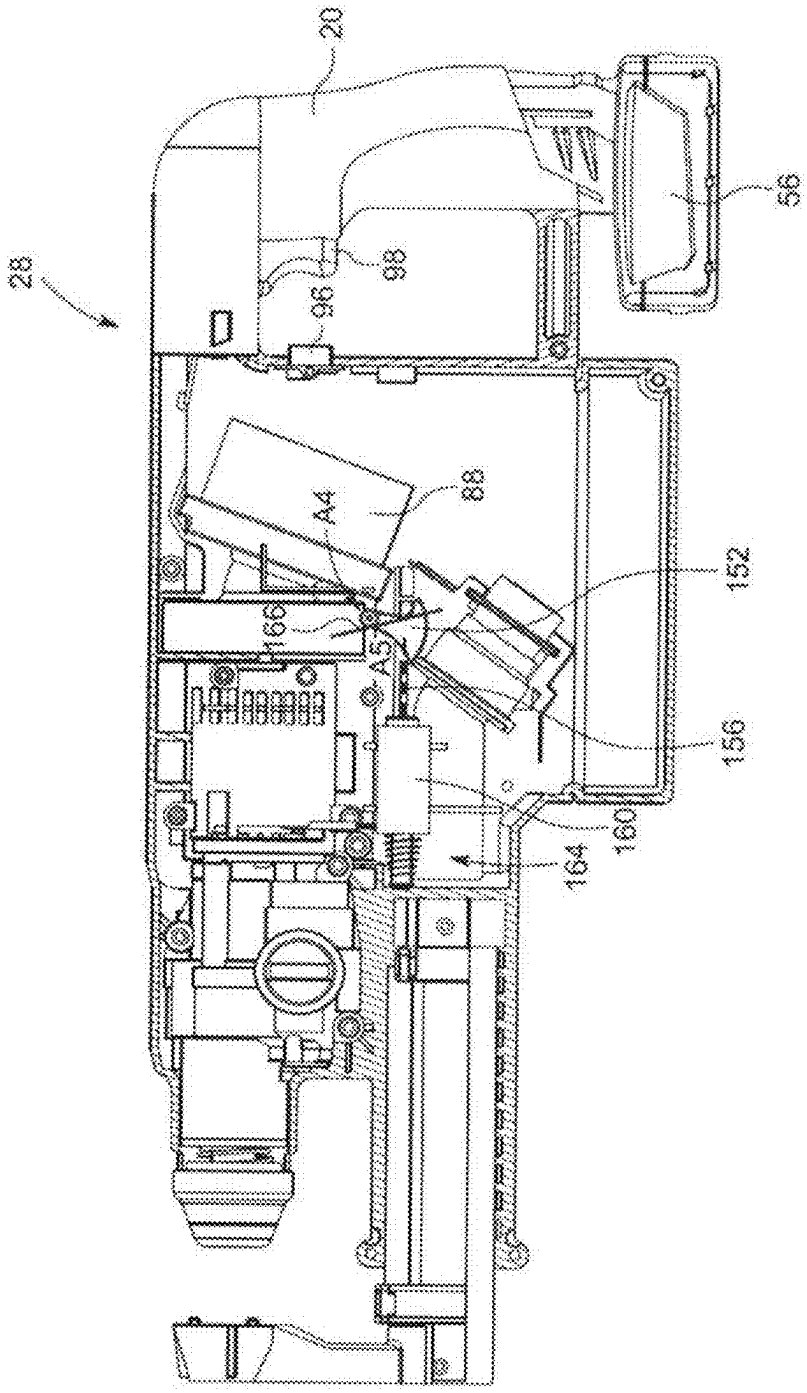

FIG. 14

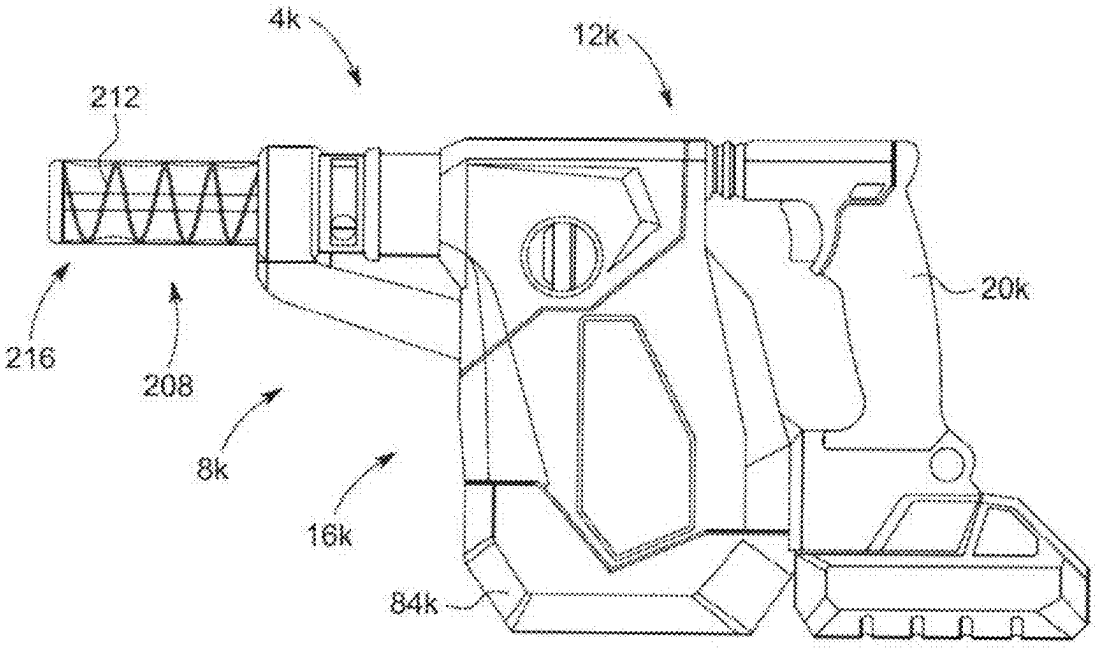

FIG. 15

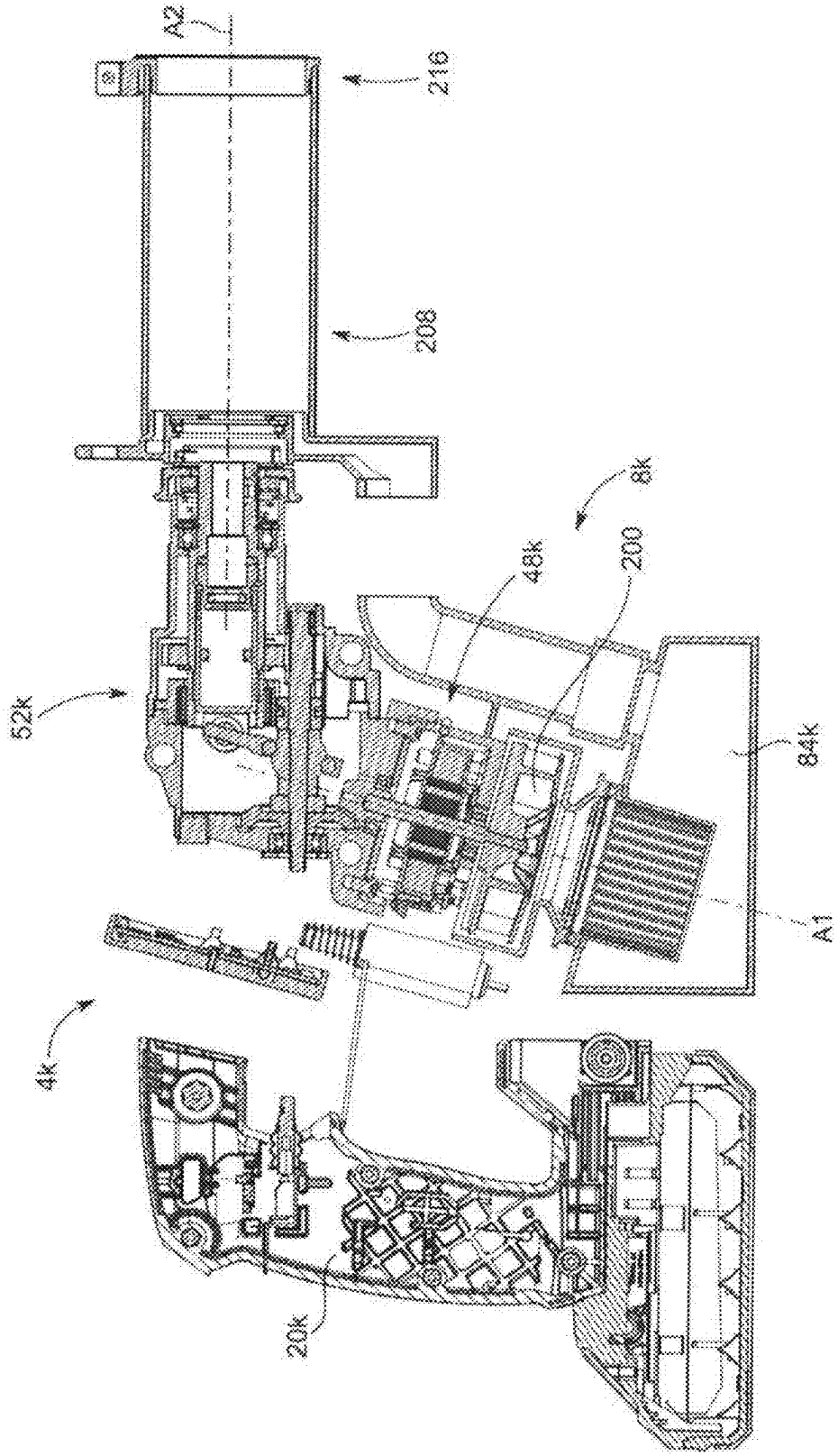

FIG. 16

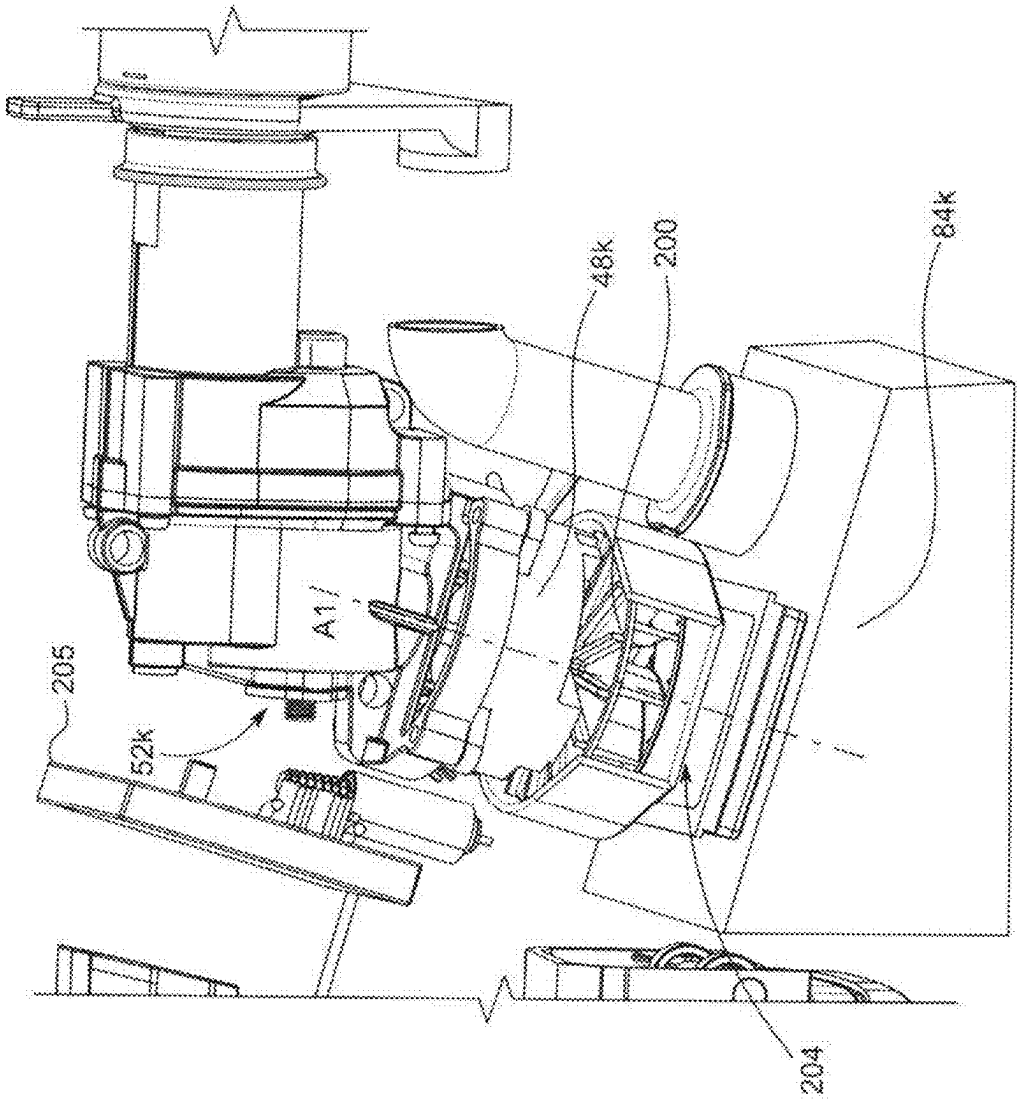

FIG. 17

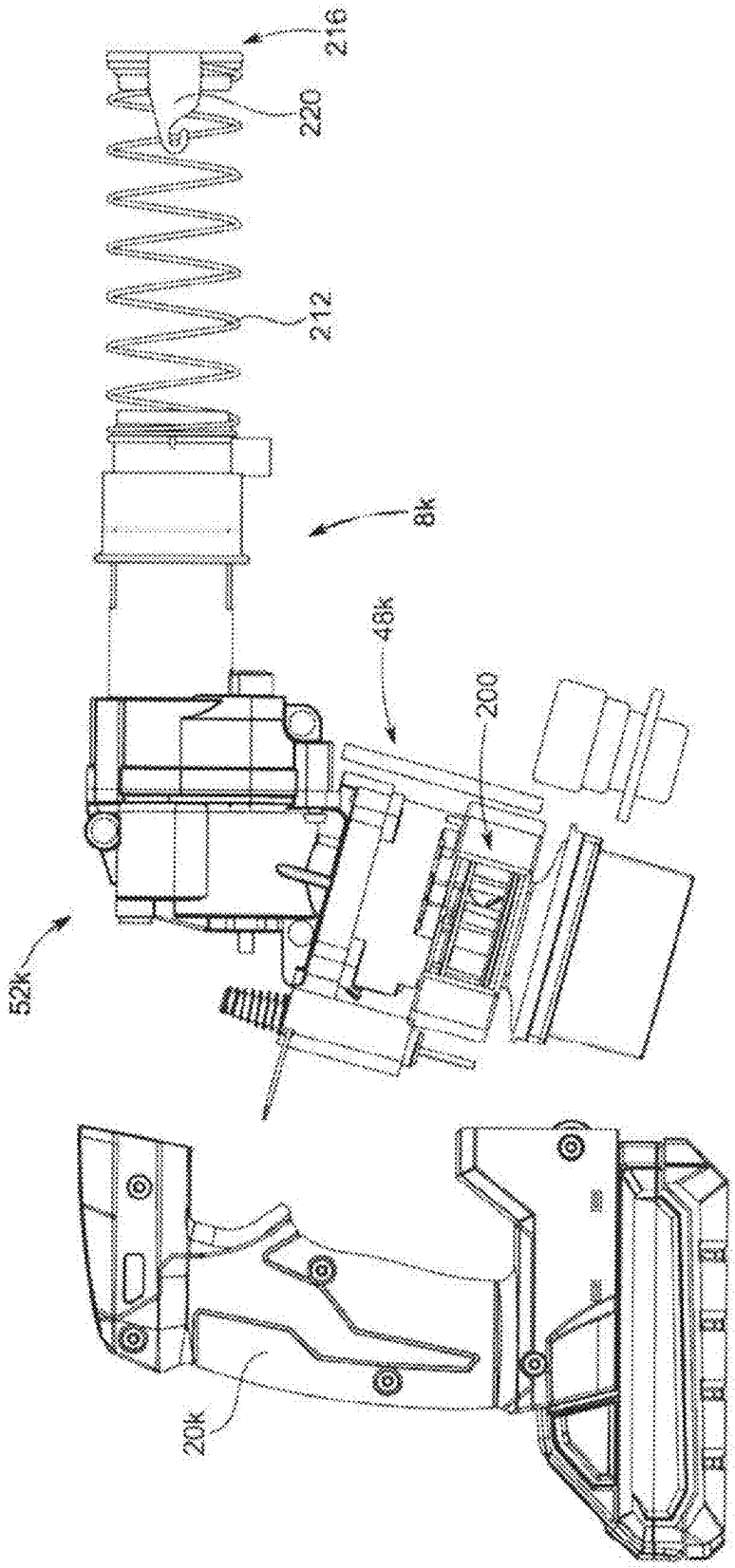

FIG. 18

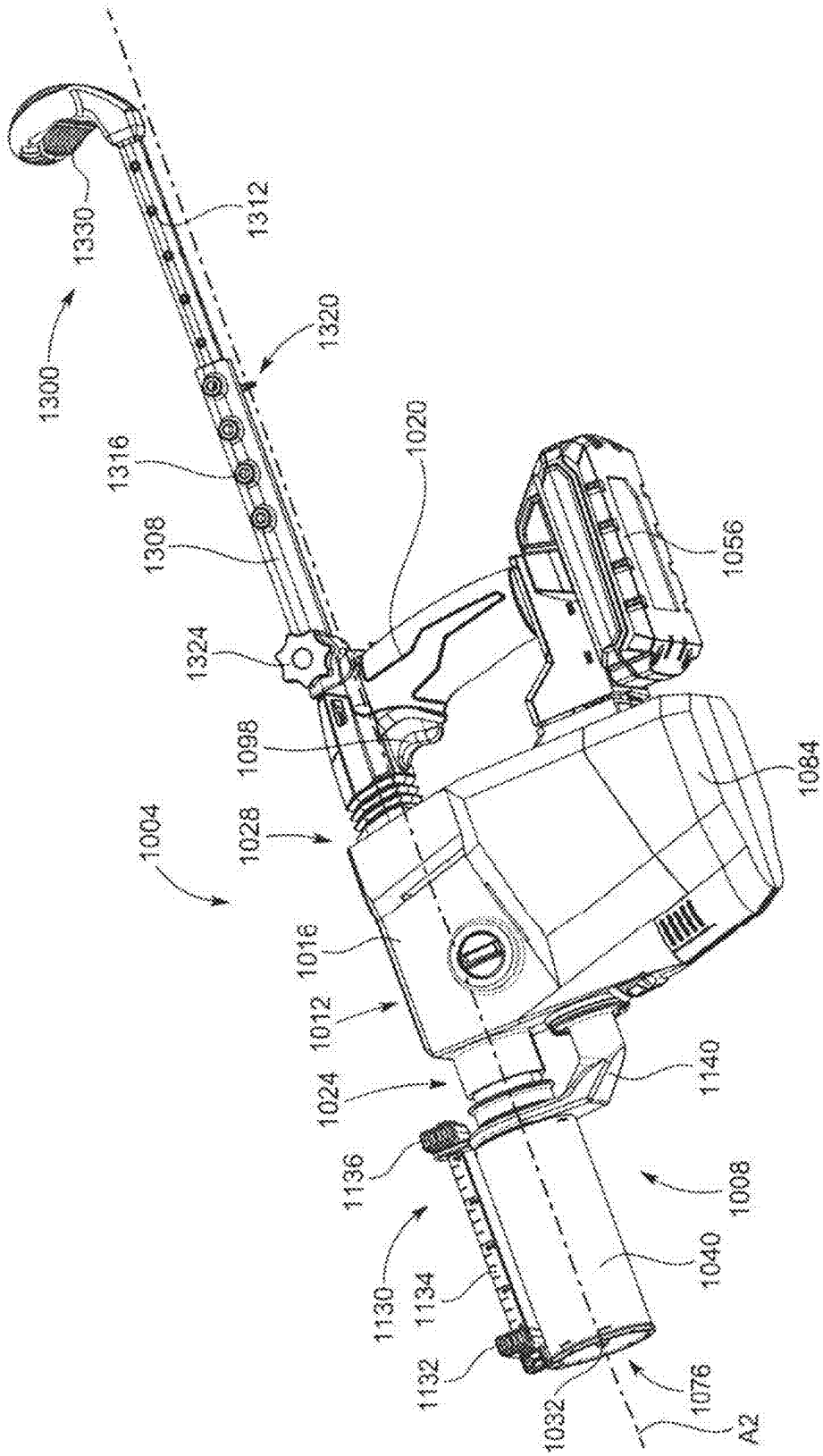
1300
1330
1312
1320
1316
1308
1324
1020
1098
1028
1004
1016
1012
1024
1136
1130
1134
1132
1032
1076
A2
1040
1008
1140
1084
1056

FIG. 19

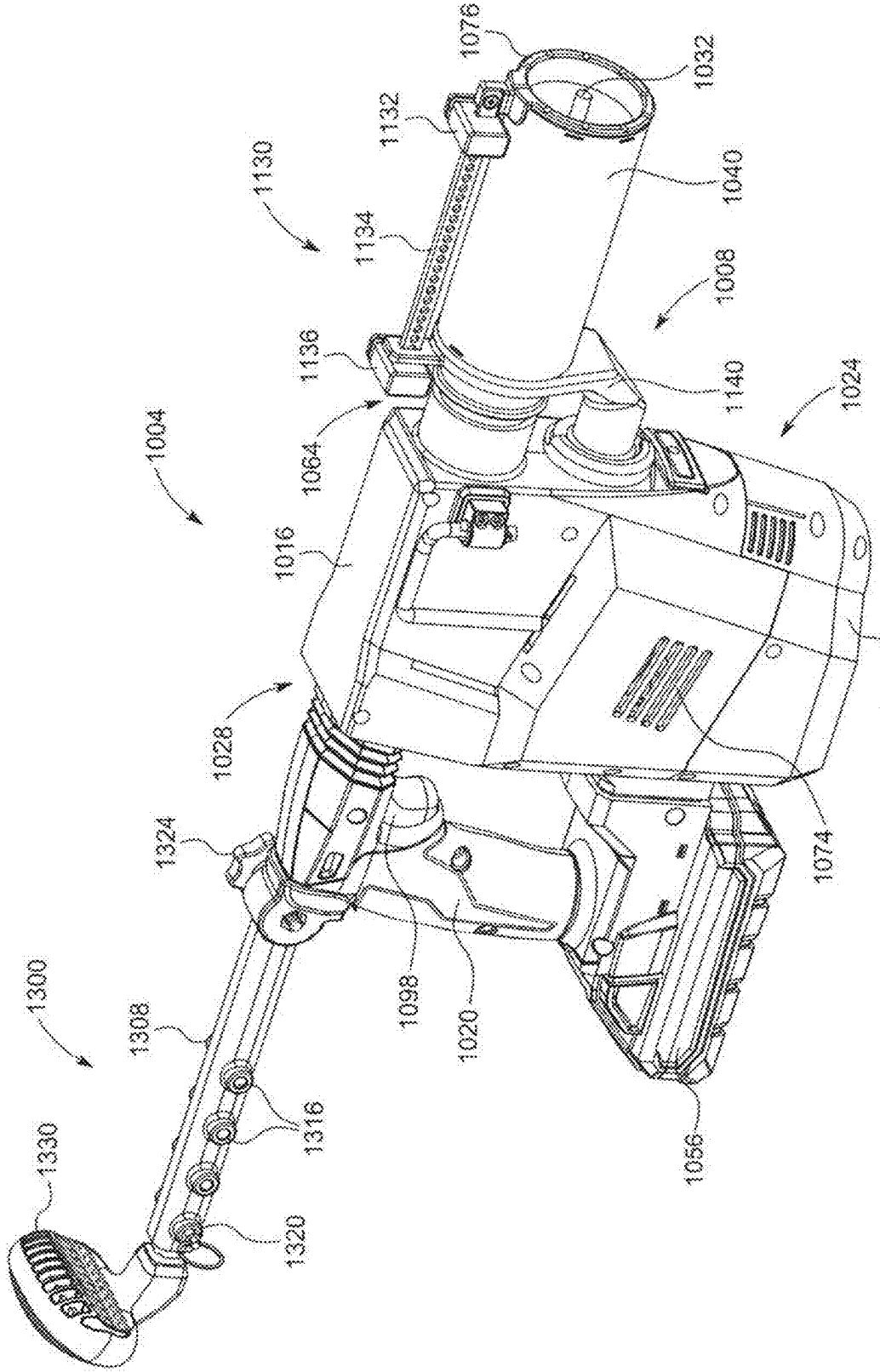
1076
1032
1132
1130
1040
1134
1008
1136
1140
1024
1004
1064
1016
1084
1028
1074
1324
1098
1020
1300
1308
1056
1316
1330
1320

FIG. 20

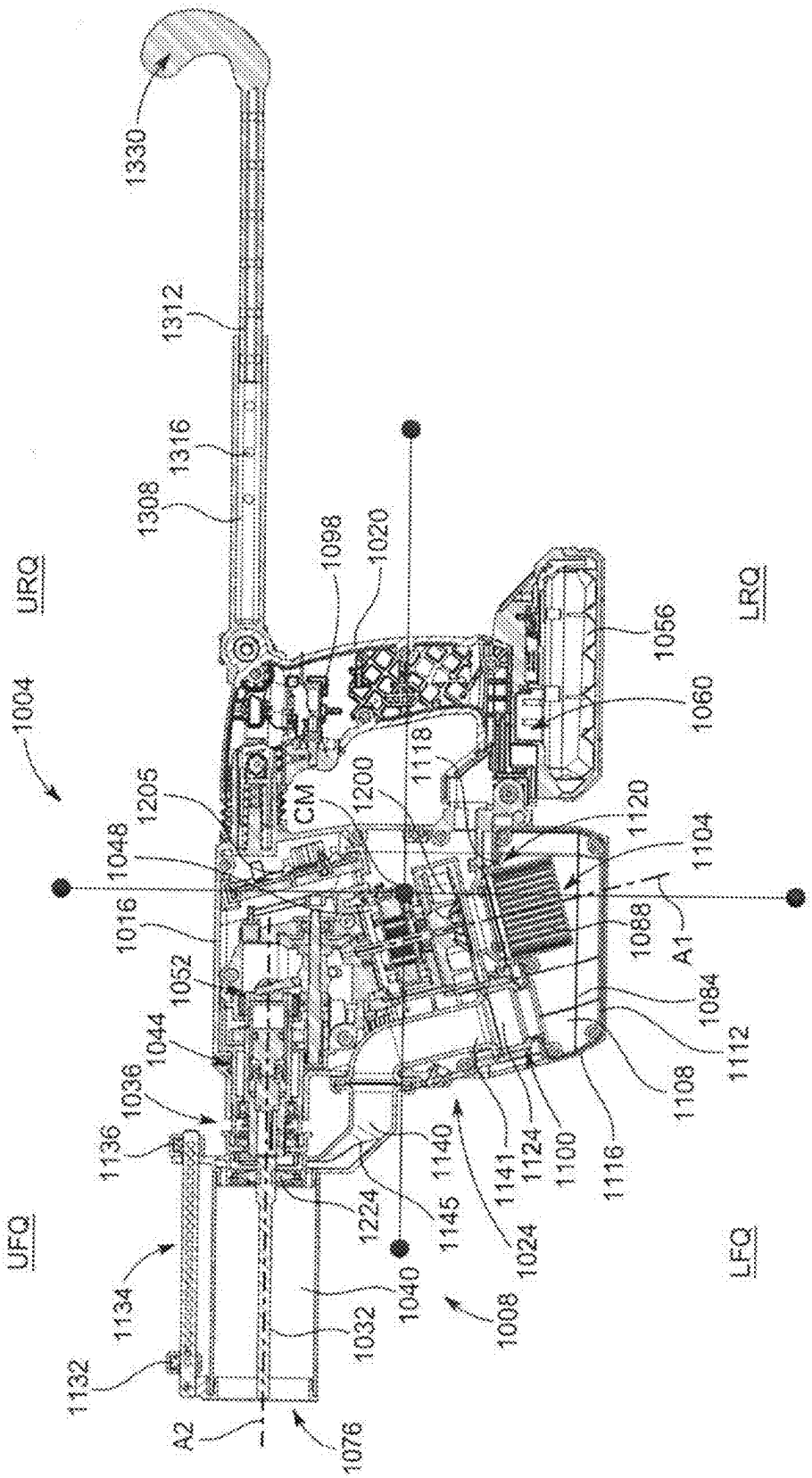
1330
1312
1316
1308
1098
1020
URQ
LRQ
1056
1060
1004
1118
1205
CM
1200
1120
1048
1104
1016
1088
A1
1052
1084
1044
1112
1036
1108
1136
1140
1141
1124
1100
1116
1224
1145
1024
UFQ
LFQ
1134
1040
1032
1008
1132
A2
1076

FIG. 21

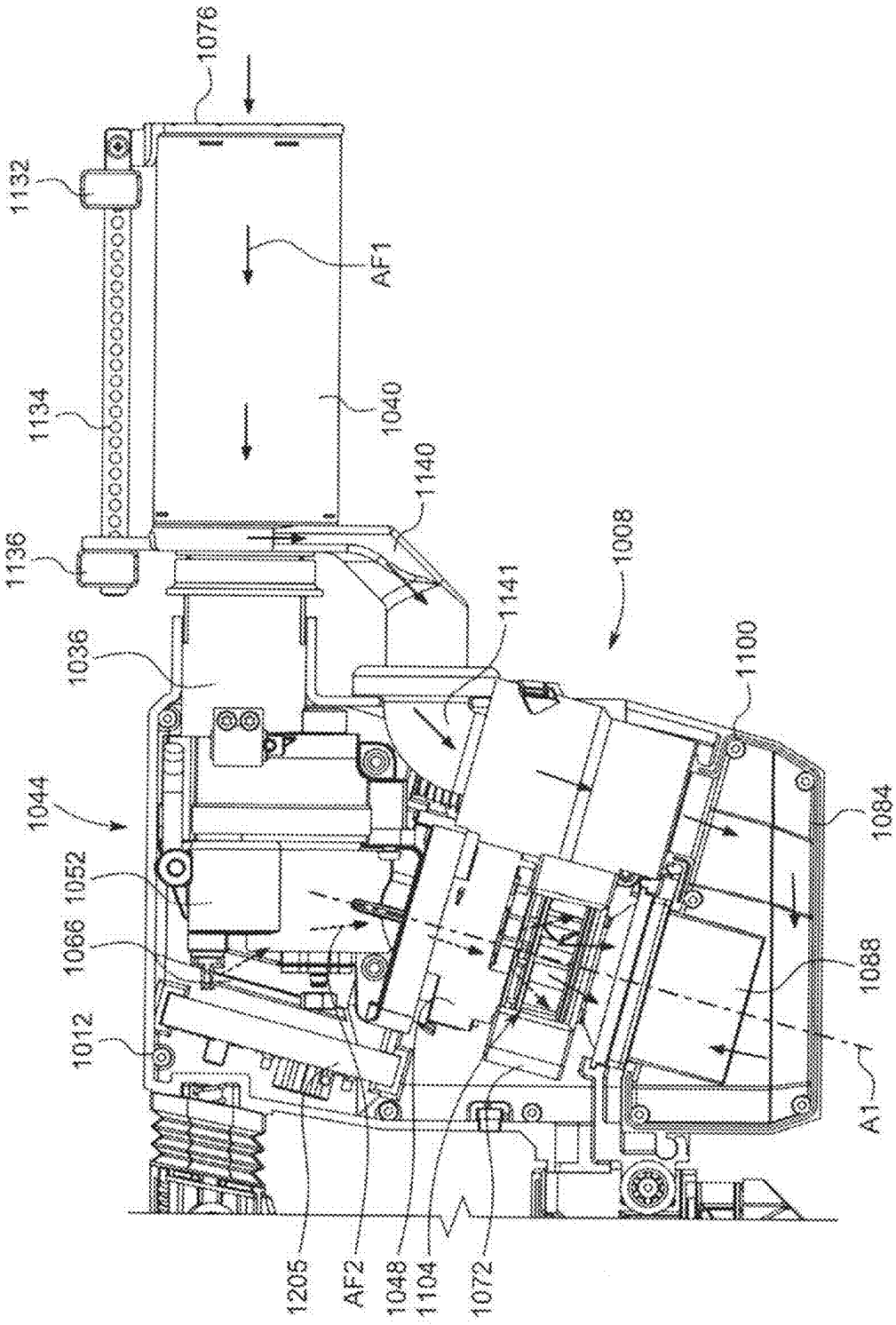
1076
1132
AF1
1134
1040
1140
1136
1008
1141
1036
1100
1044
1084
1052
1066
1088
1012
A1
1205
AF2
1048
1104
1072

FIG. 22

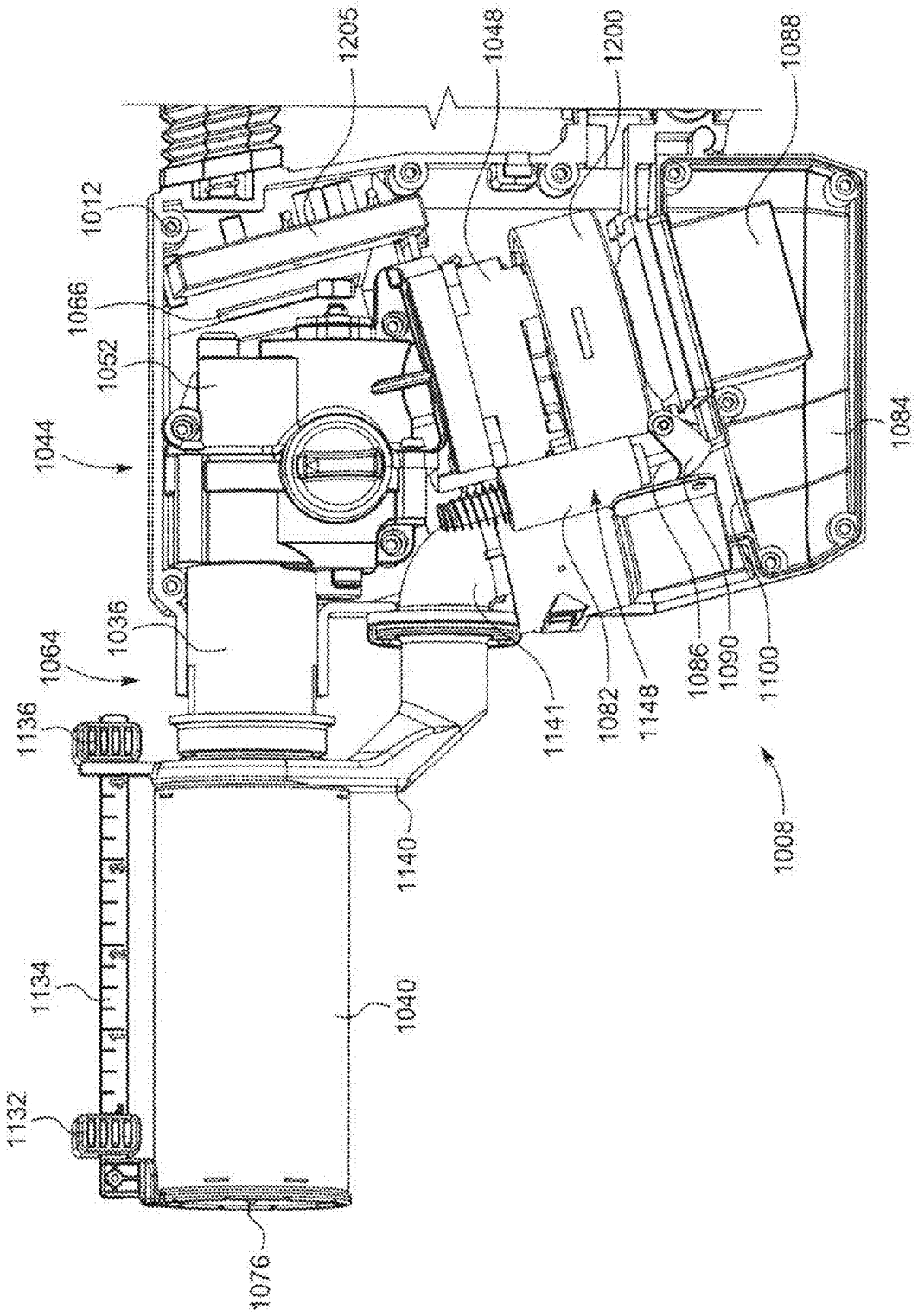
1205
1048
1200
1088
1012
1066
1052
1044
1084
1036
1064
1136
1086
1090
1100
1141
1082
1148
1140
1008
1134
1040
1132
1076

FIG. 23

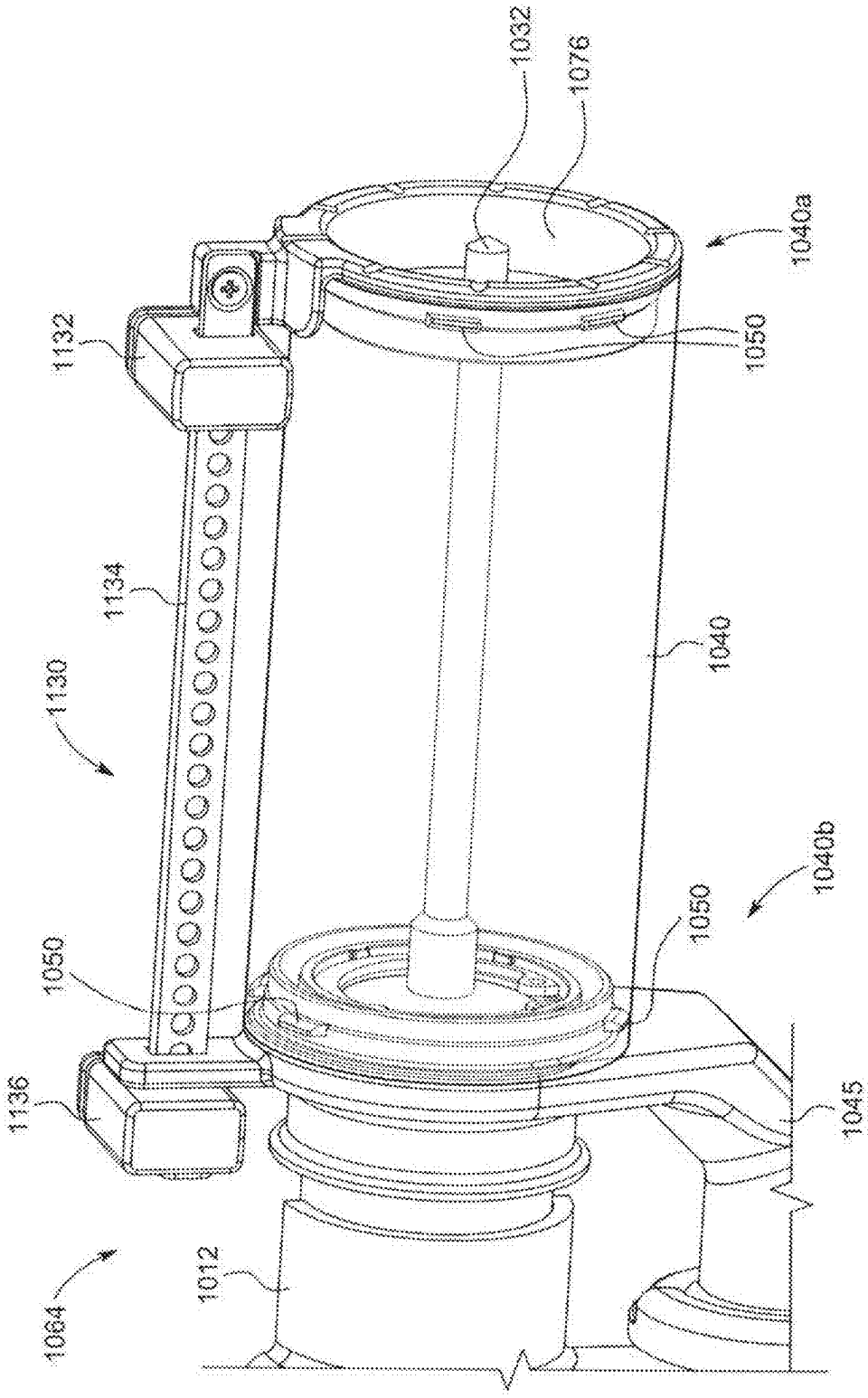
1032
1076
1040a
1132
1050
1134
1130
1040
1040b
1050
1050
1136
1045
1012
1064

FIG. 24

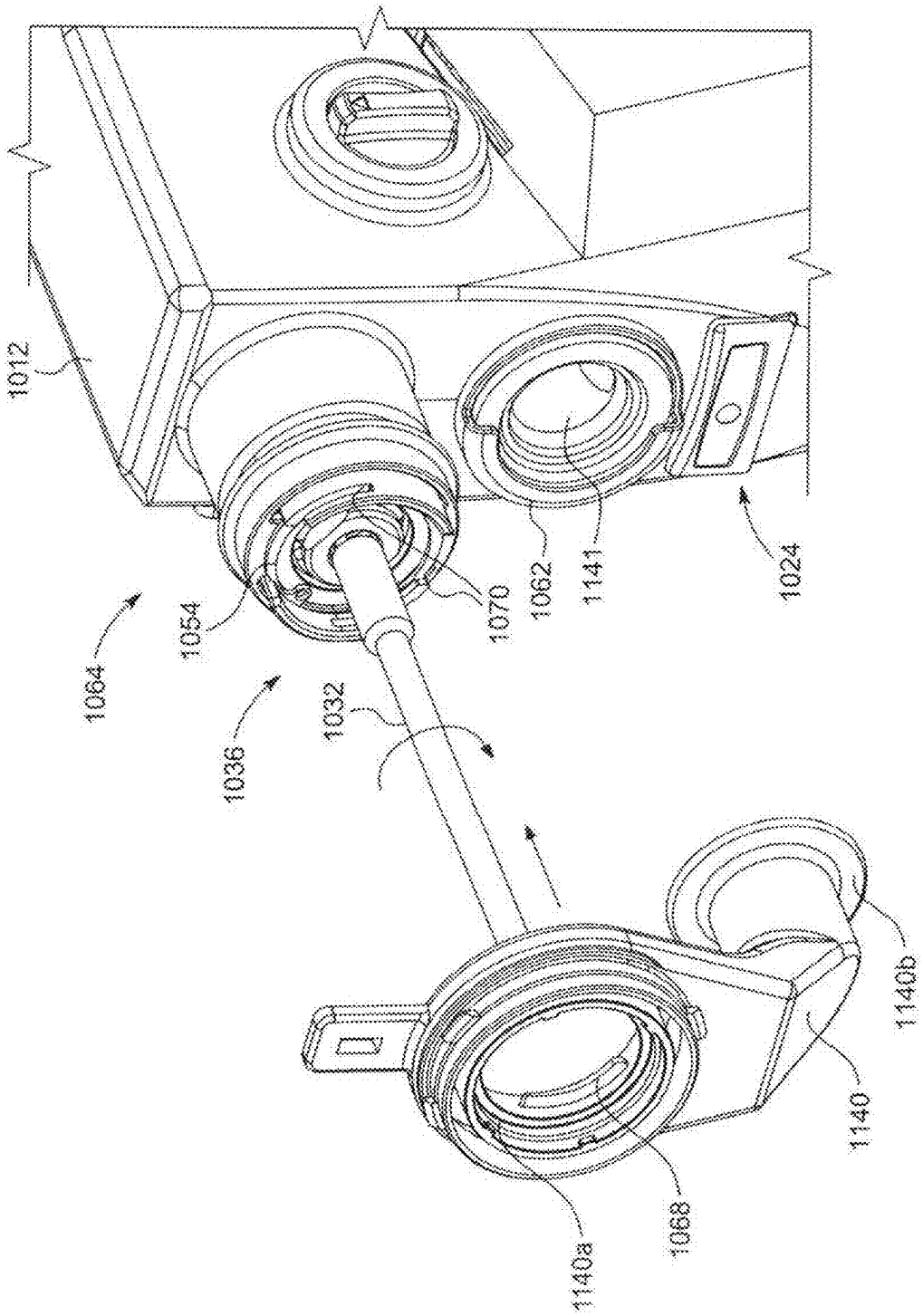
1012
1064
1054
1036
1032
1070
1062
1141
1024
1140a
1068
1140
1140b

FIG. 25

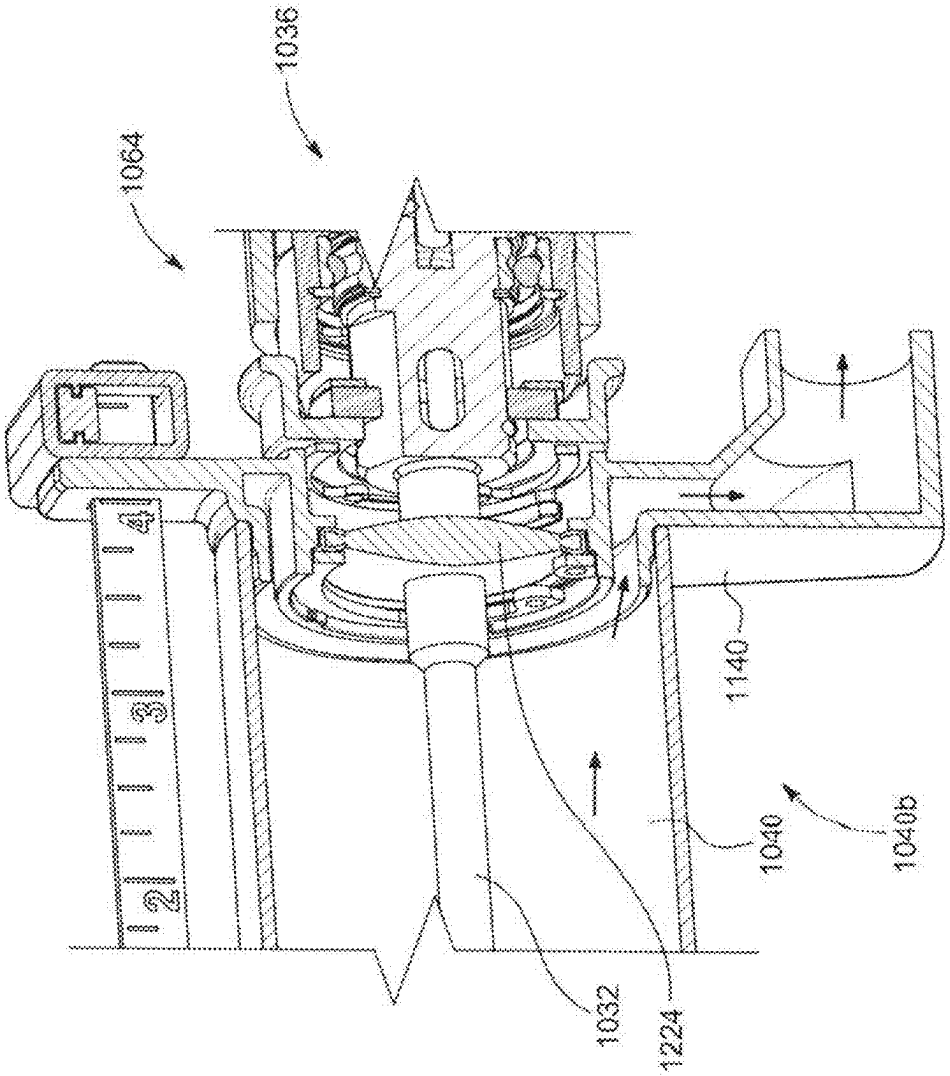

FIG. 26

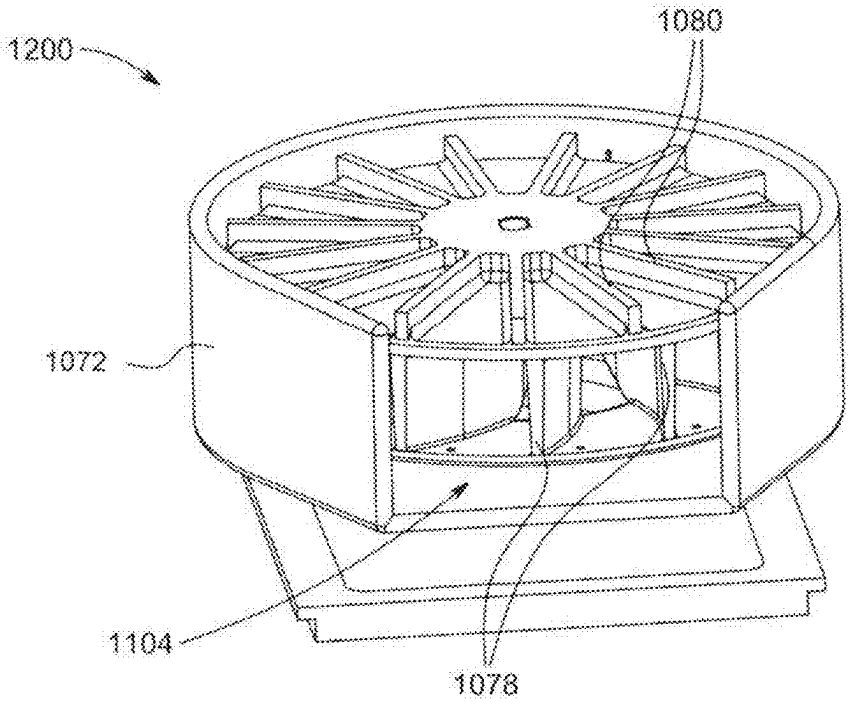
1200
1080
1072
1104
1078

FIG. 27

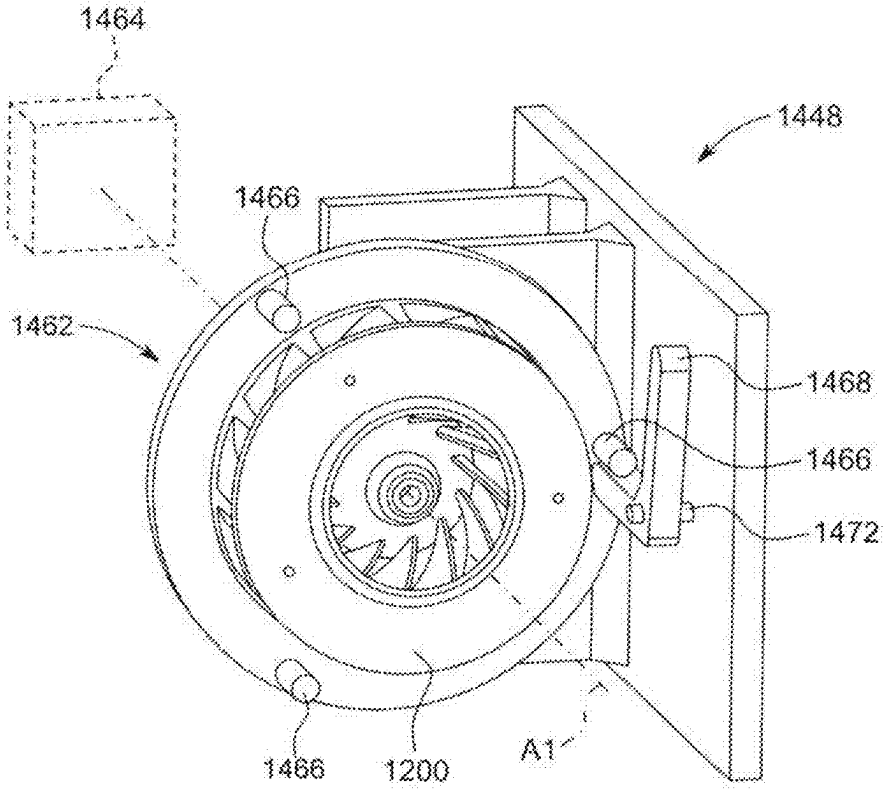
1464
1448
1466
1462
1468
1466
1472
1466
1200
A1

FIG. 28

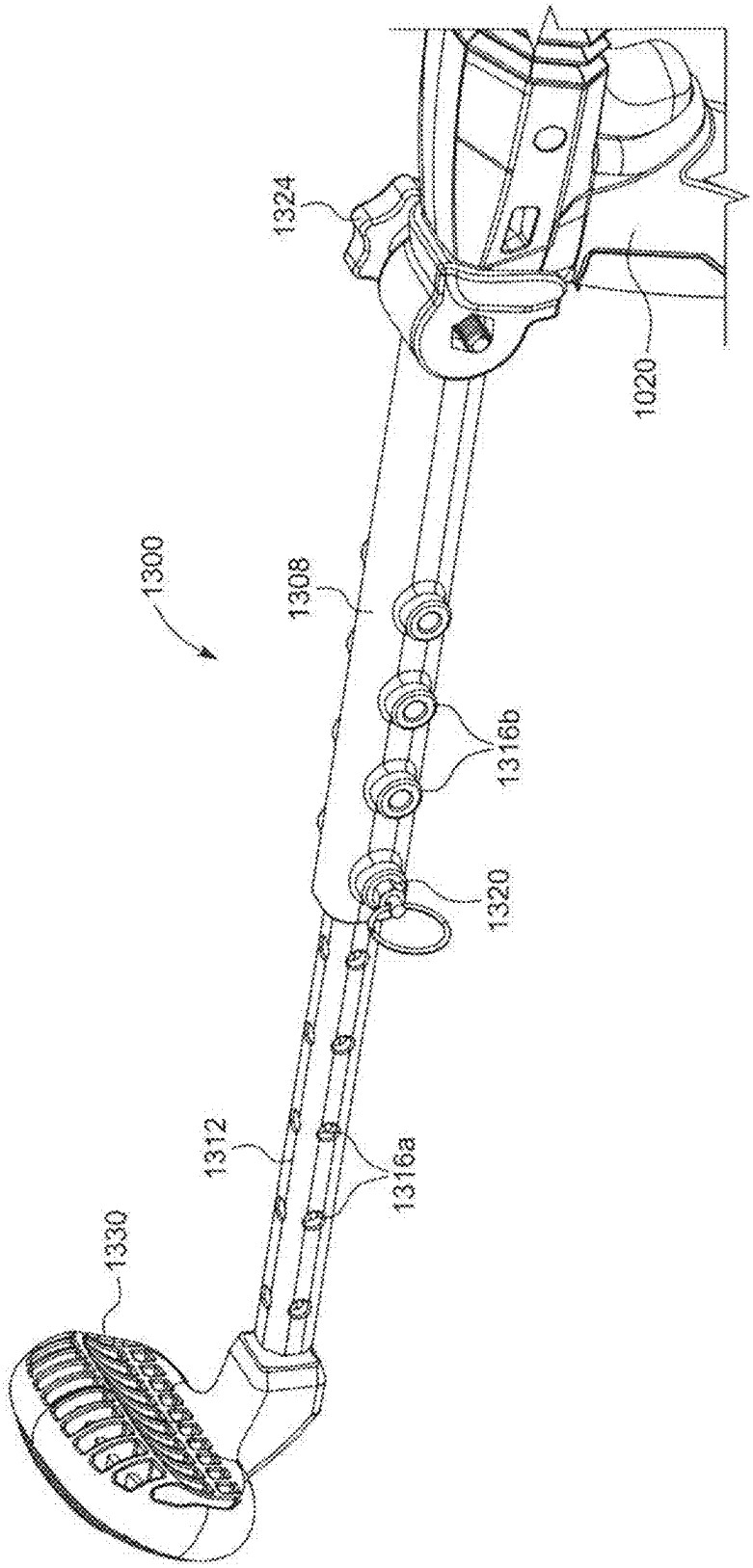

FIG. 29

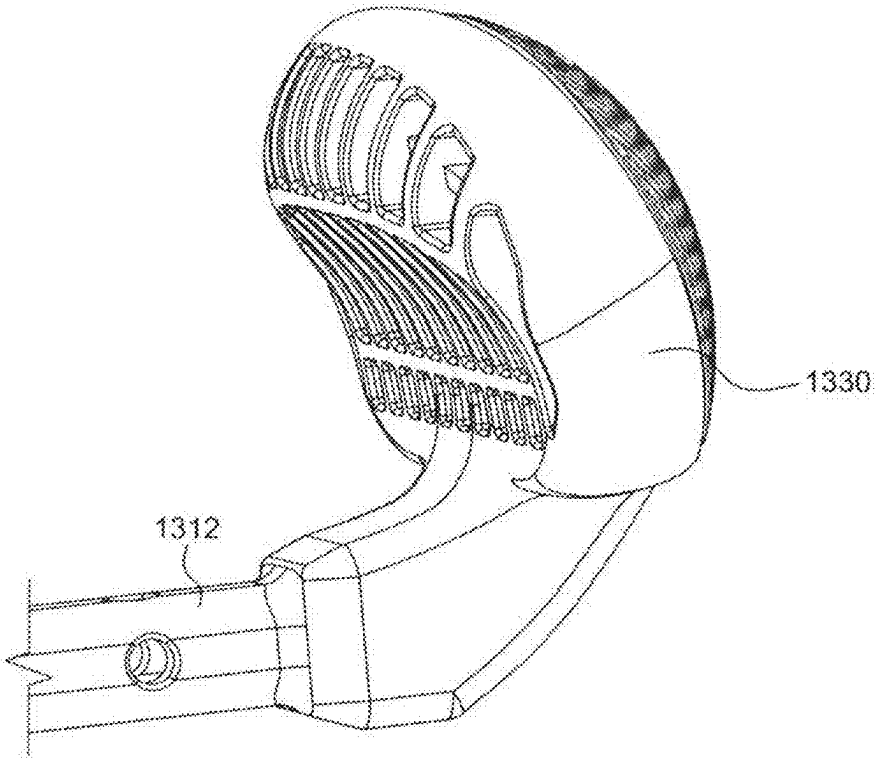

FIG. 30

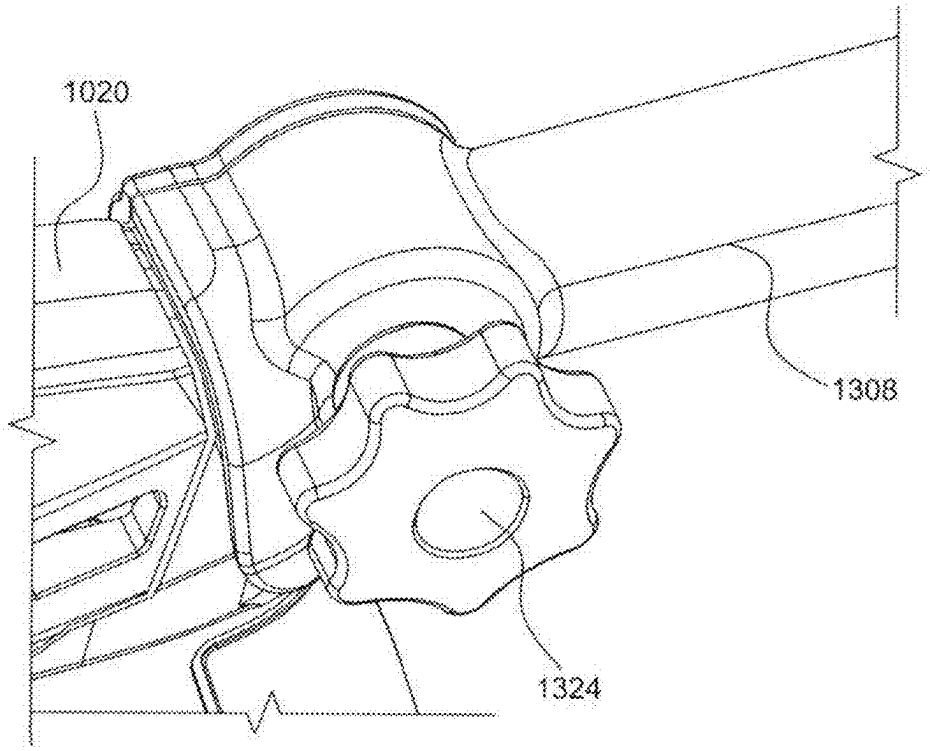

FIG. 31

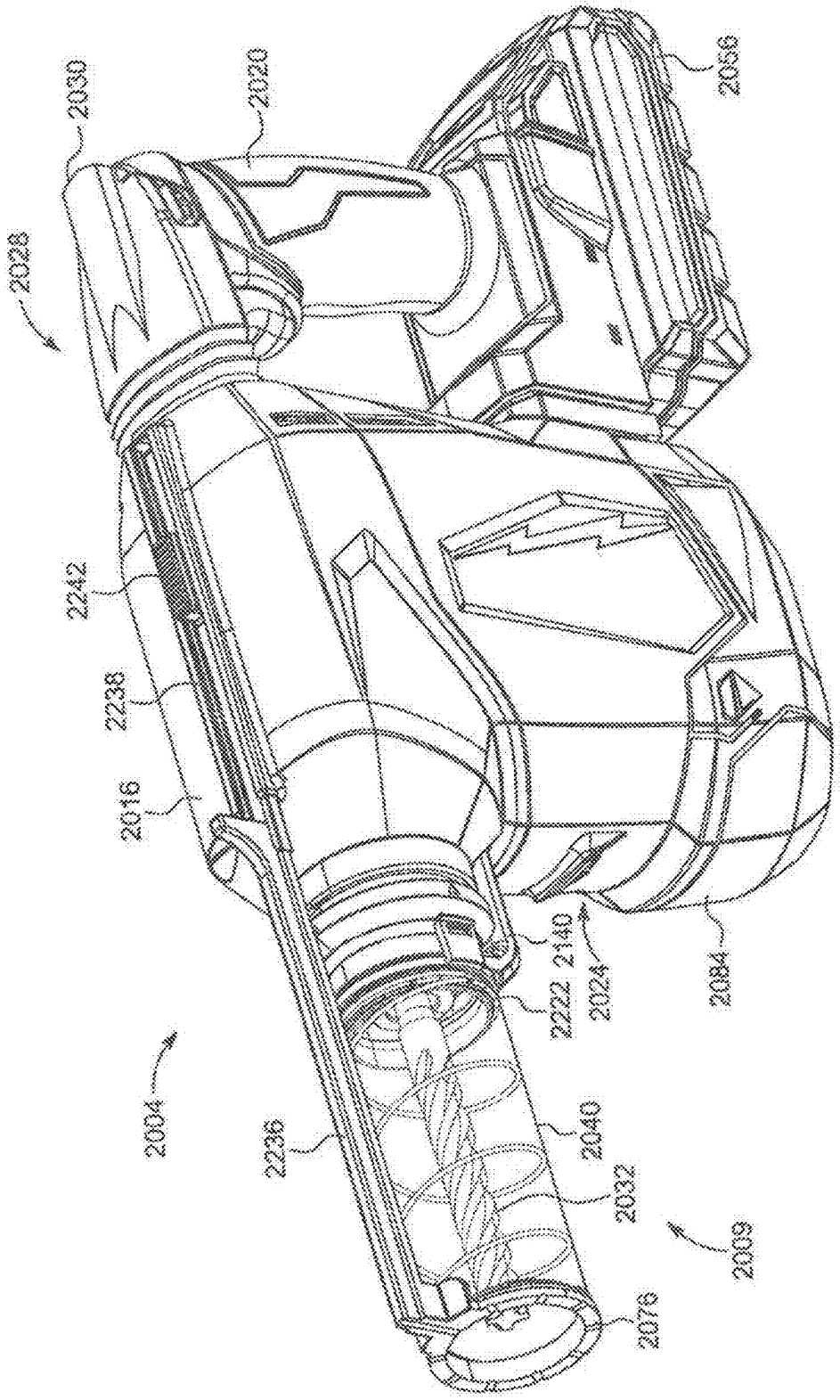
2028
2030
2020
2056
2242
2238
2016
2004
2236
2222
2140
2024
2084
2040
2032
2009
2076

FIG. 32

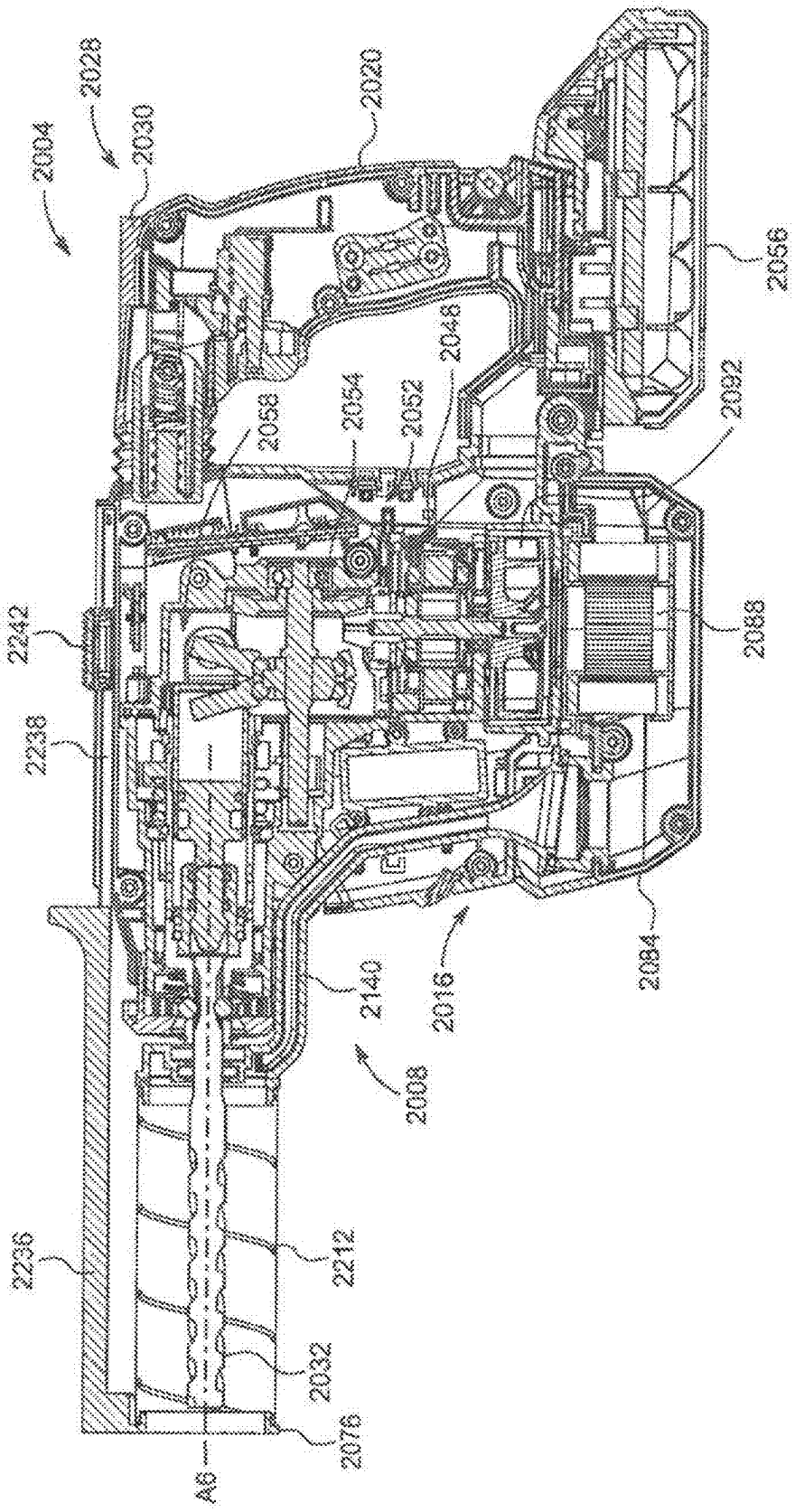
2004
2028
2030
2020
2056
2046
2054
2052
2058
2092
2242
2238
2088
2140
2016
2084
2008
2236
2212
2032
2076
A6

FIG. 33

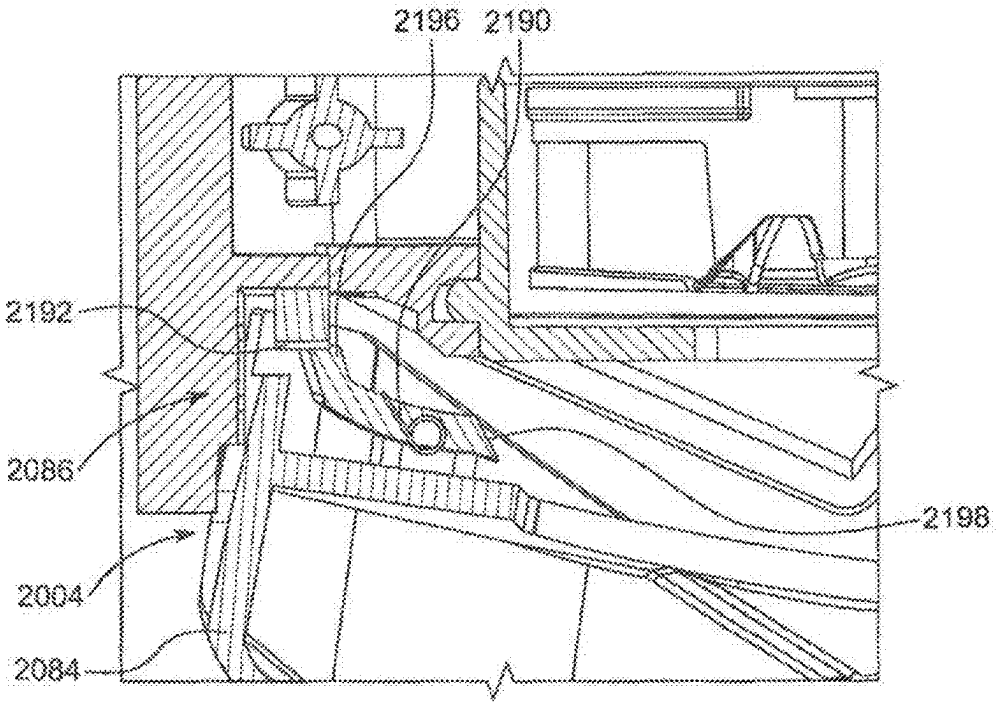

FIG. 34A

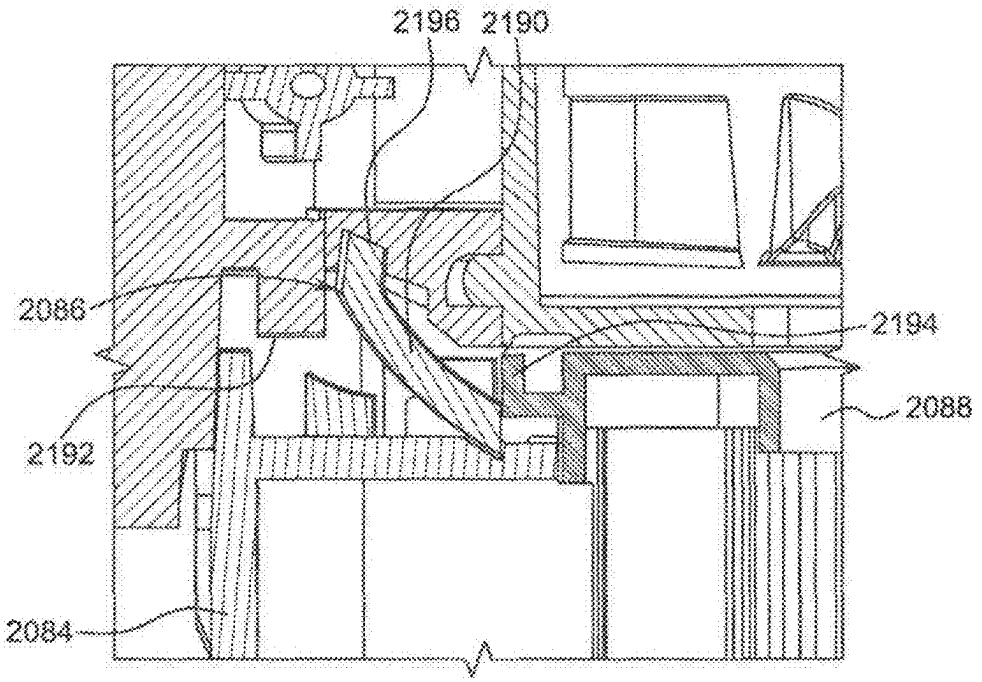

FIG. 34B

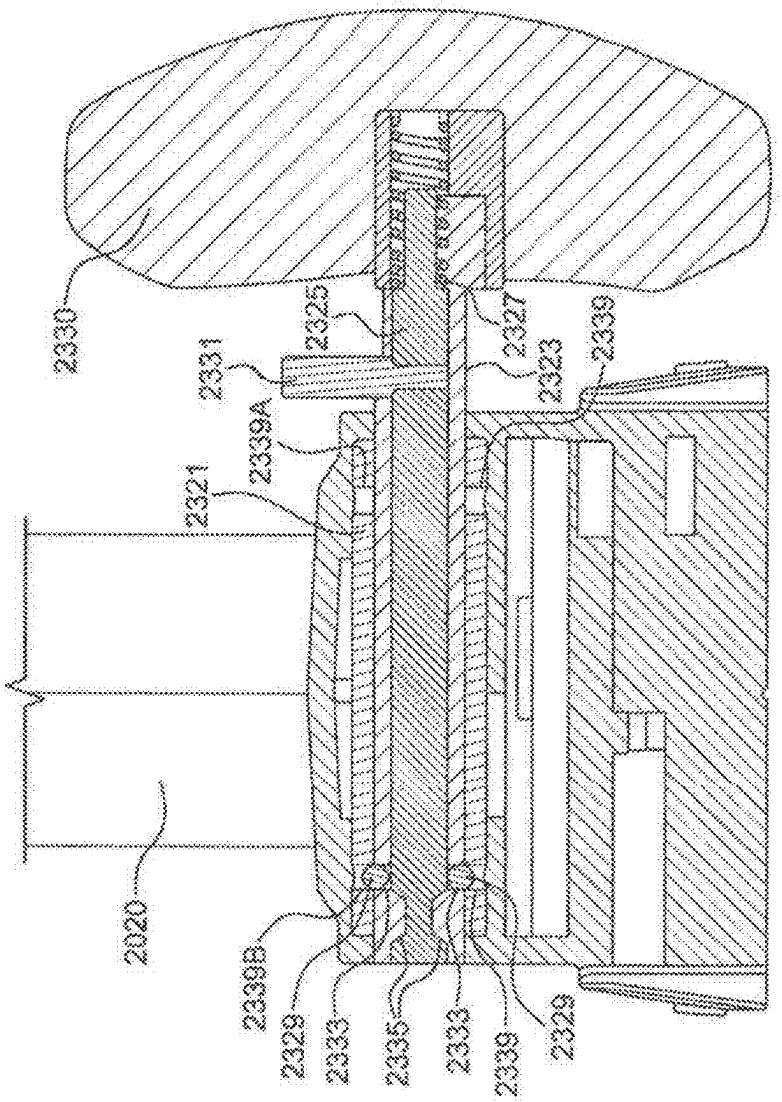
2330
2331
2325
2327
2339
2323
2339A
2321
2020
2339B
2329
2333
2335
2333
2339
2329

FIG. 35A

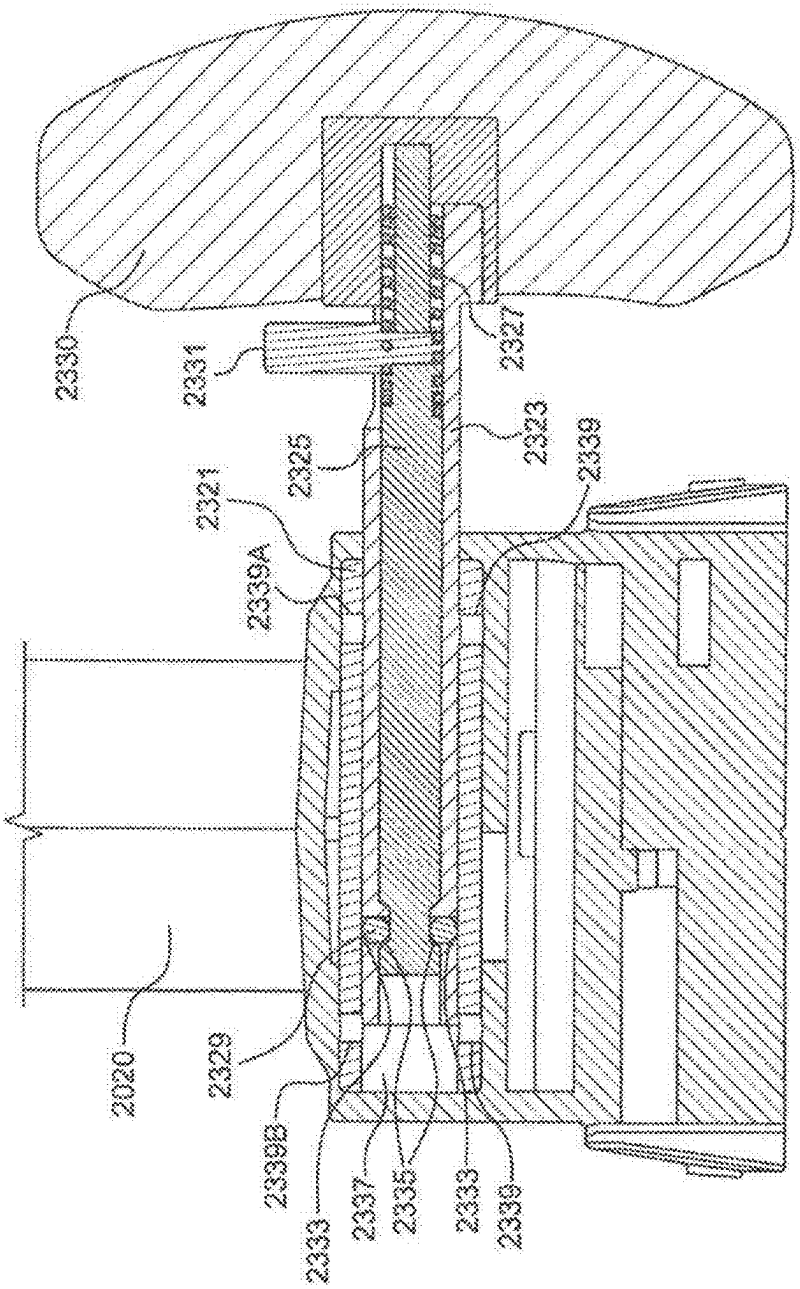
2330
2331
2325
2321
2339A
2020
2329
2339B
2333
2337
2335
2333
2335
2327
2323
2339

FIG. 35B

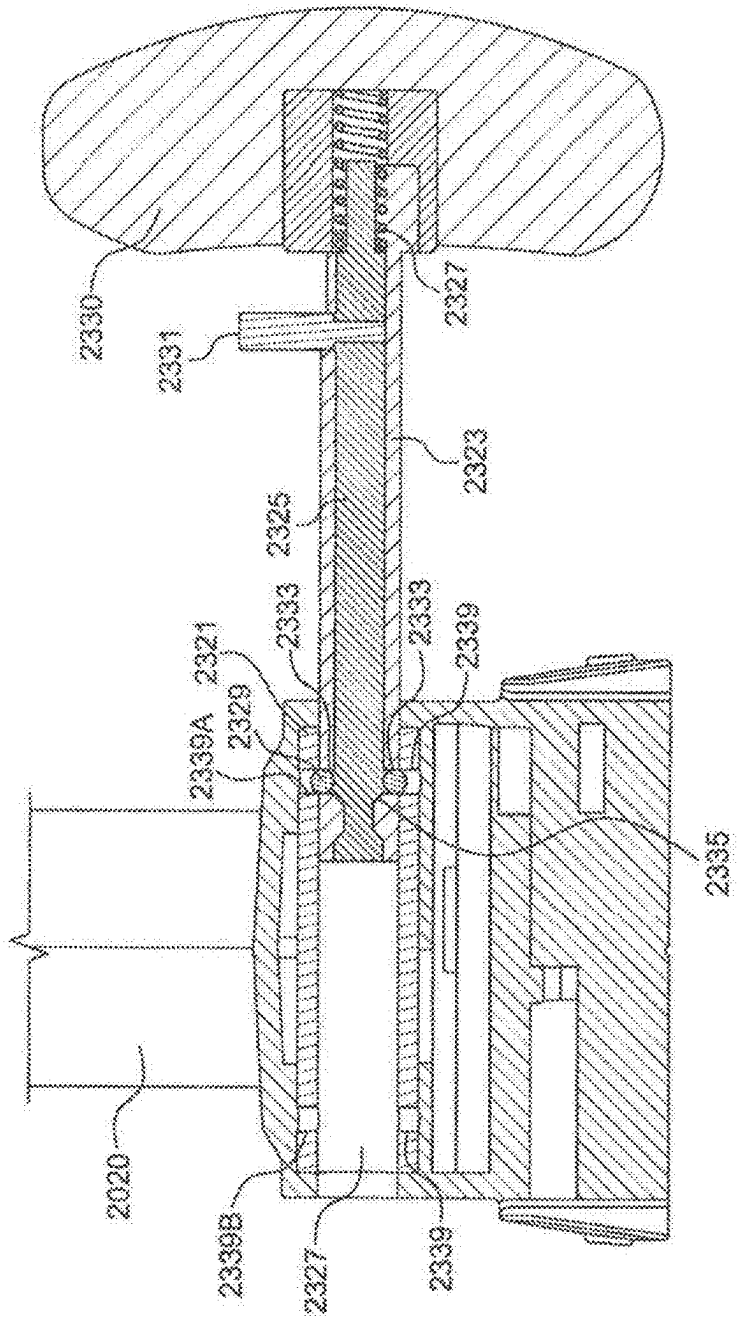
2330
2331
2327
2323
2325
2333
2333
2339
2321
2328
2339A
2335
2020
2339B
2327
2339

FIG. 35C

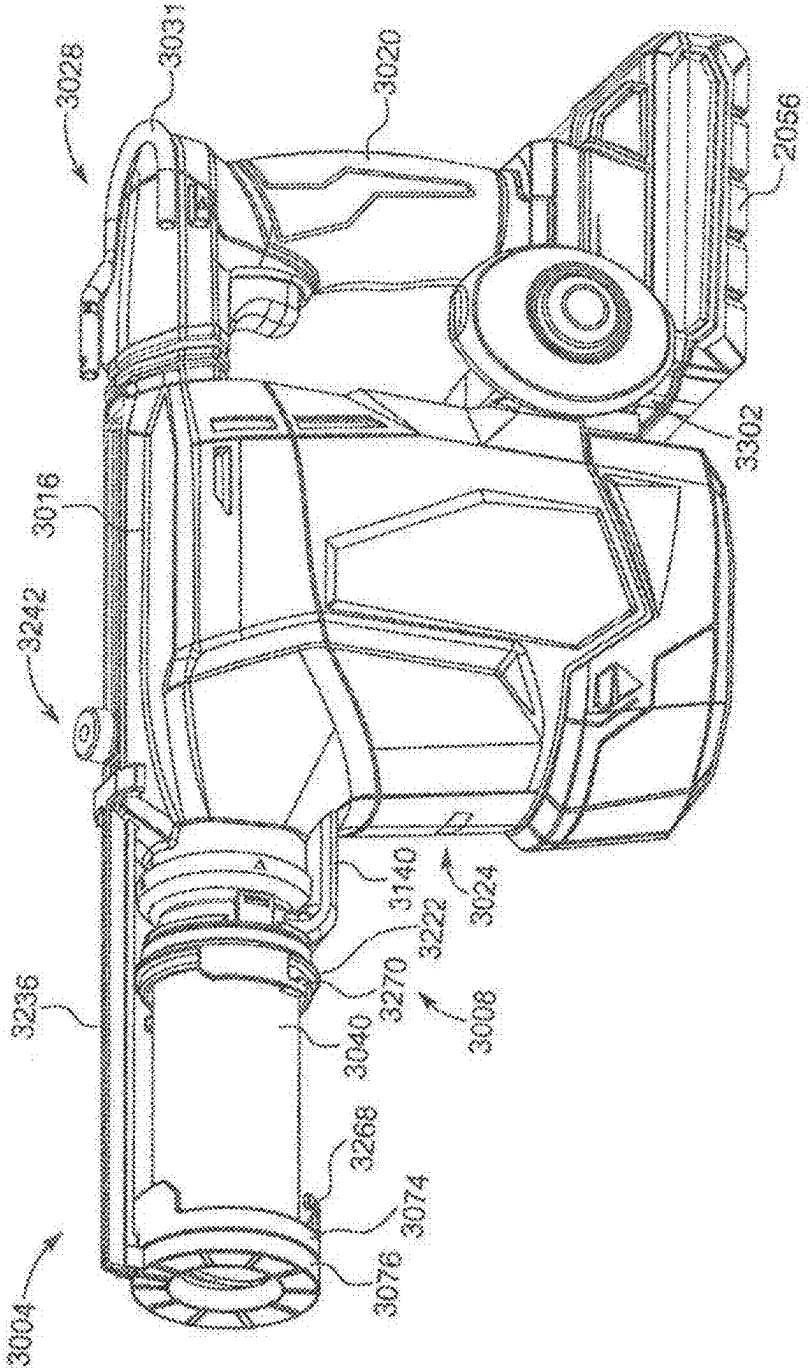
3028
3031
3020
2056
3016
3242
3302
3140
3024
3222
3270
3008
3236
3040
3269
3074
3076
3004

FIG. 36

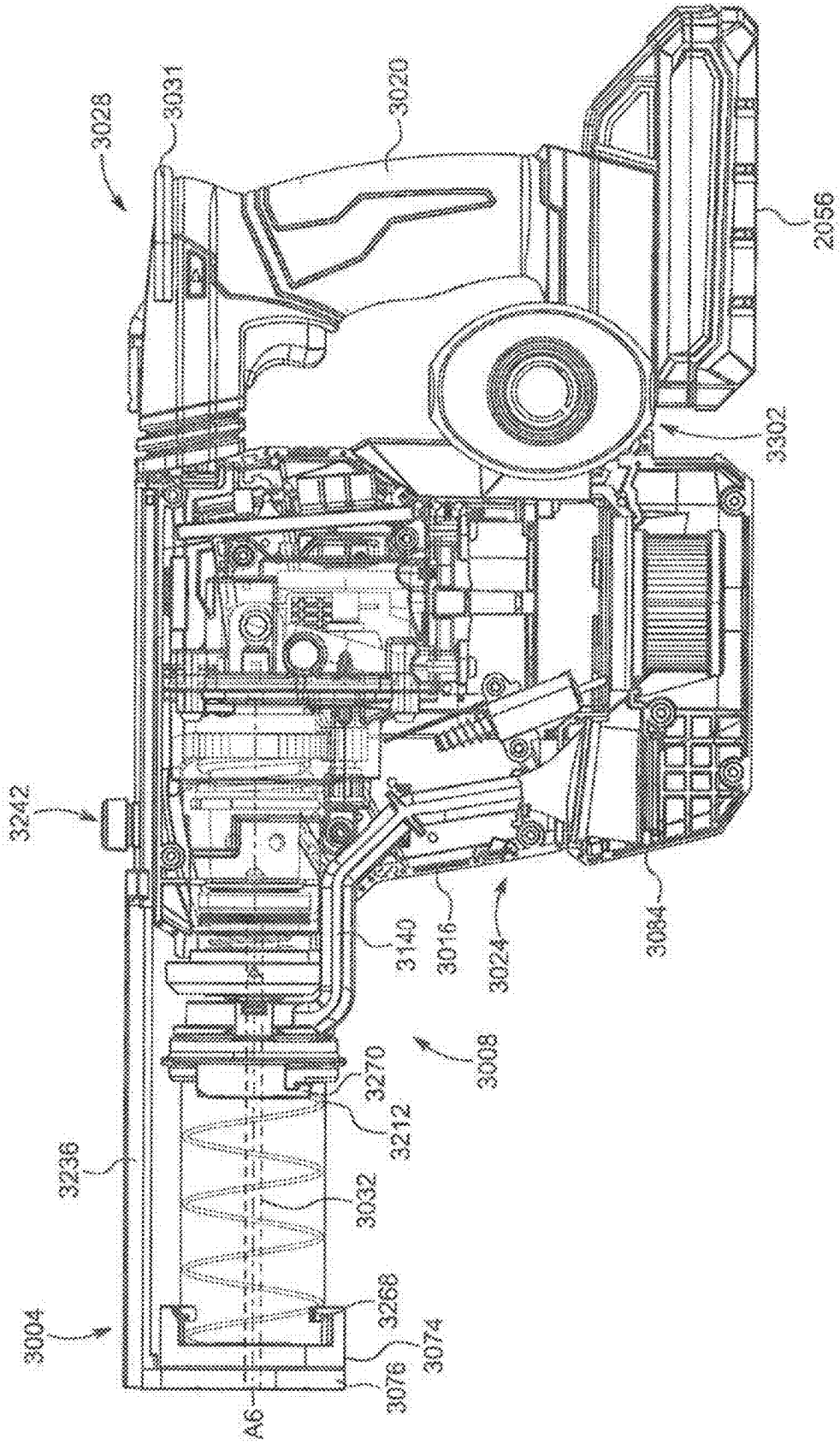
3028
3031
3020
2056
3302
3242
3140
3016
3024
3094
3008
3270
3212
3236
3032
3268
3004
3074
3076
A6

FIG. 37

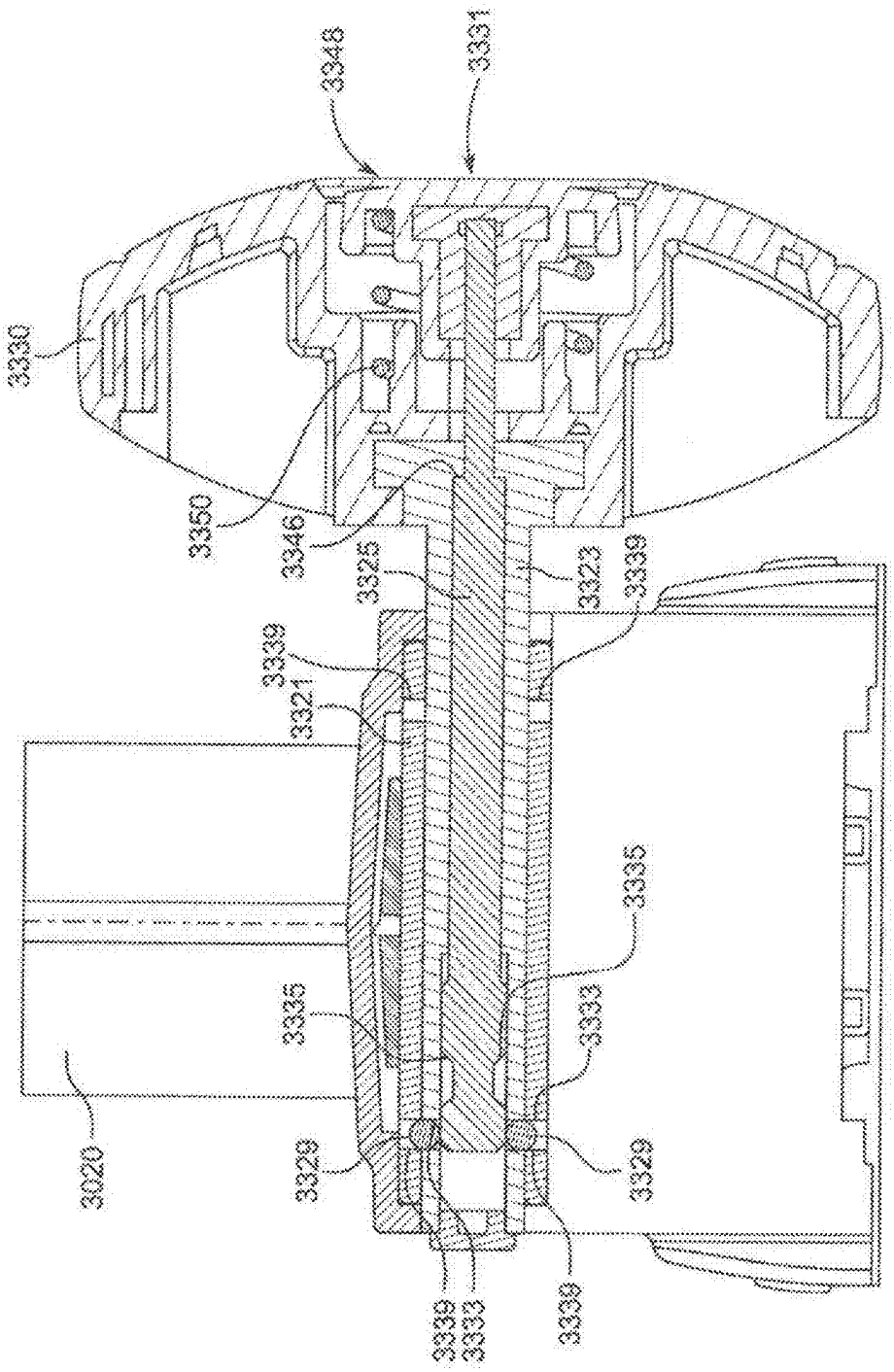
3348
3331
3330
3350
3346
3325
3323
3339
3339
3321
3335
3336
3333
3020
3329
3329
3339
3333
3339

FIG. 38A

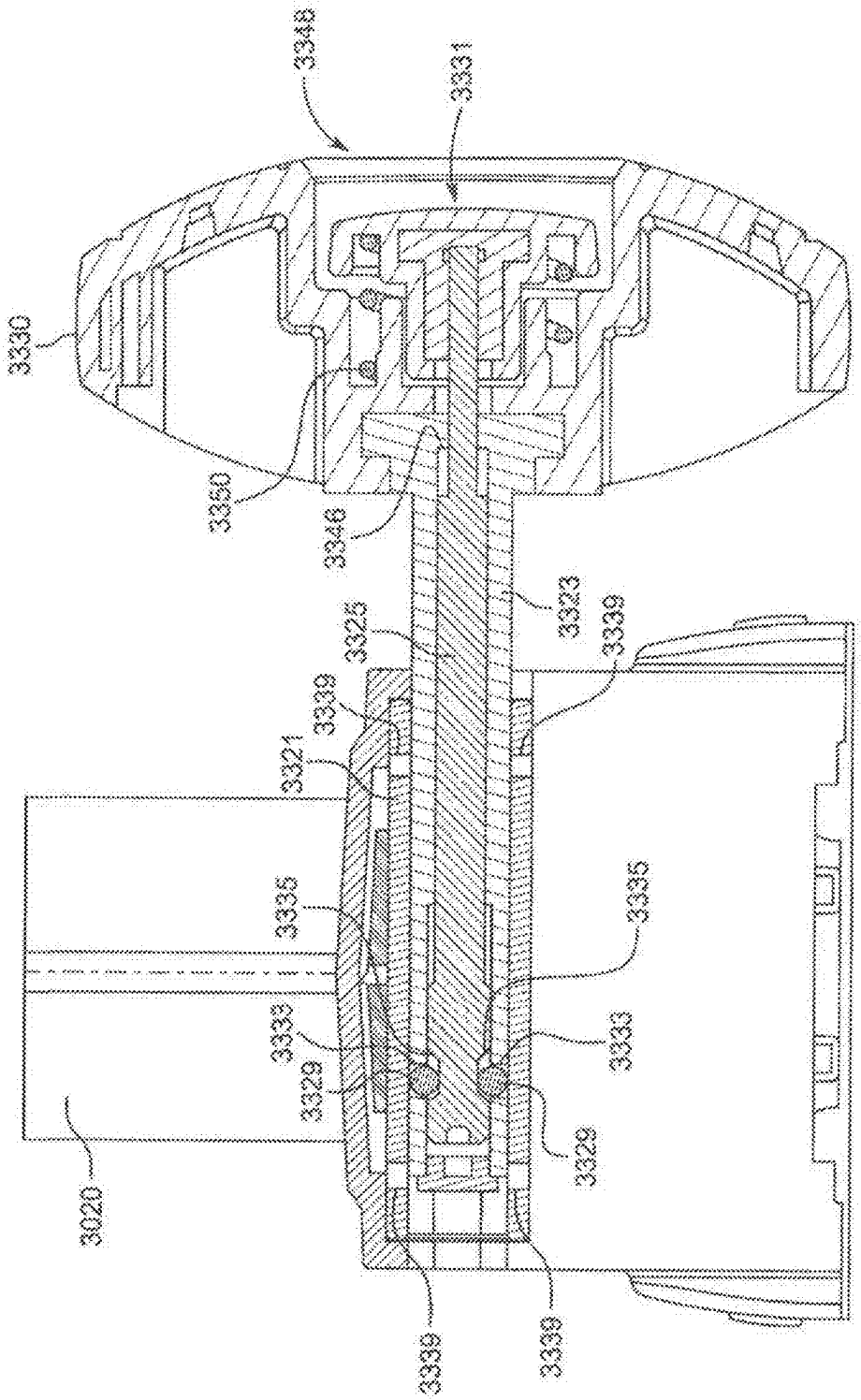
3348
3331
3330
3350
3346
3323
3325
3339
3339
3321
3335
3335
3333
3333
3329
3329
3020
3339
3339

FIG. 38B

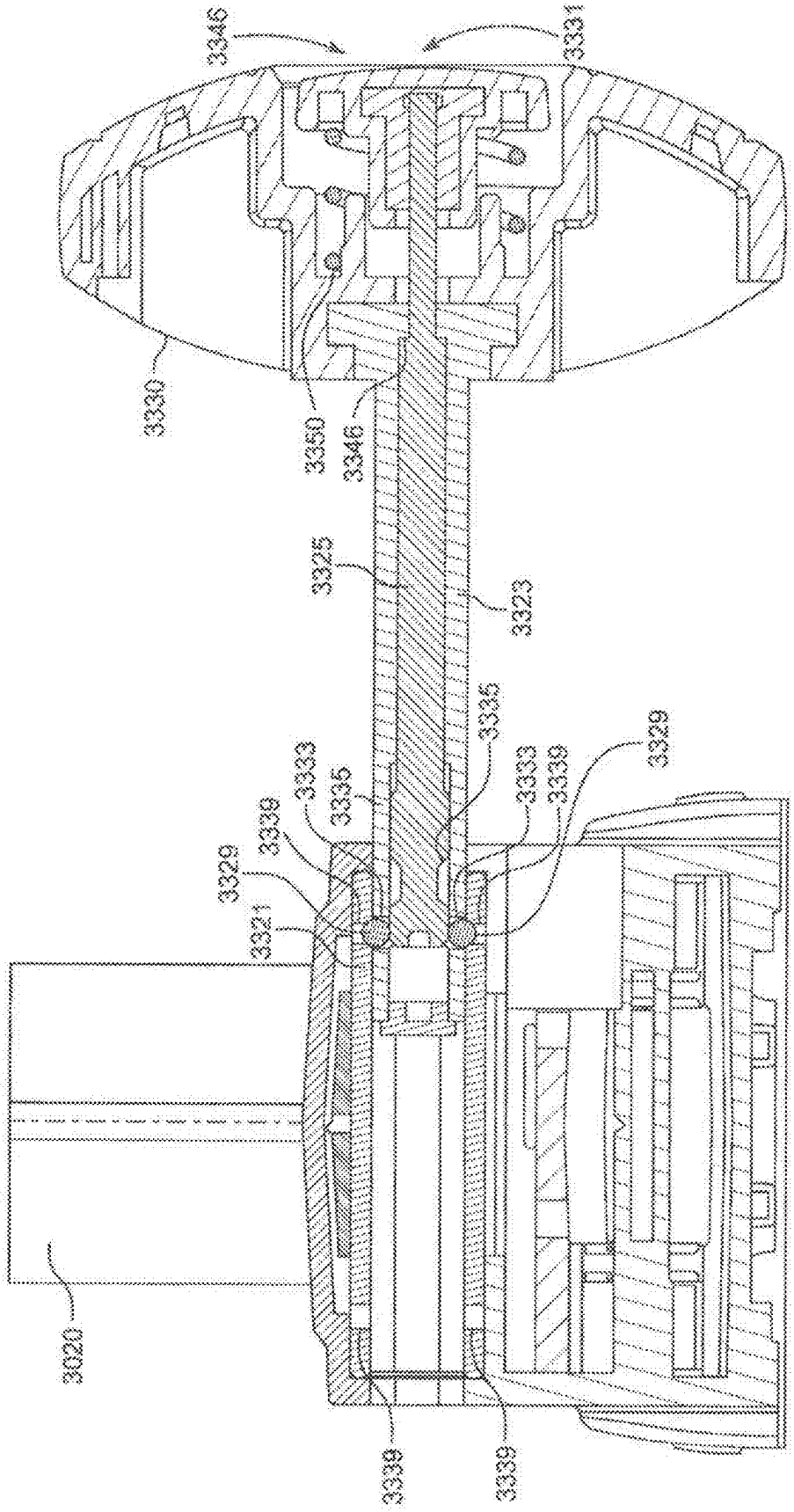
3346
3331
3330
3350
3346
3325
3323
3335
3333
3339
3329
3333
3339
3329
3321
3020
3339
3339

FIG. 38C

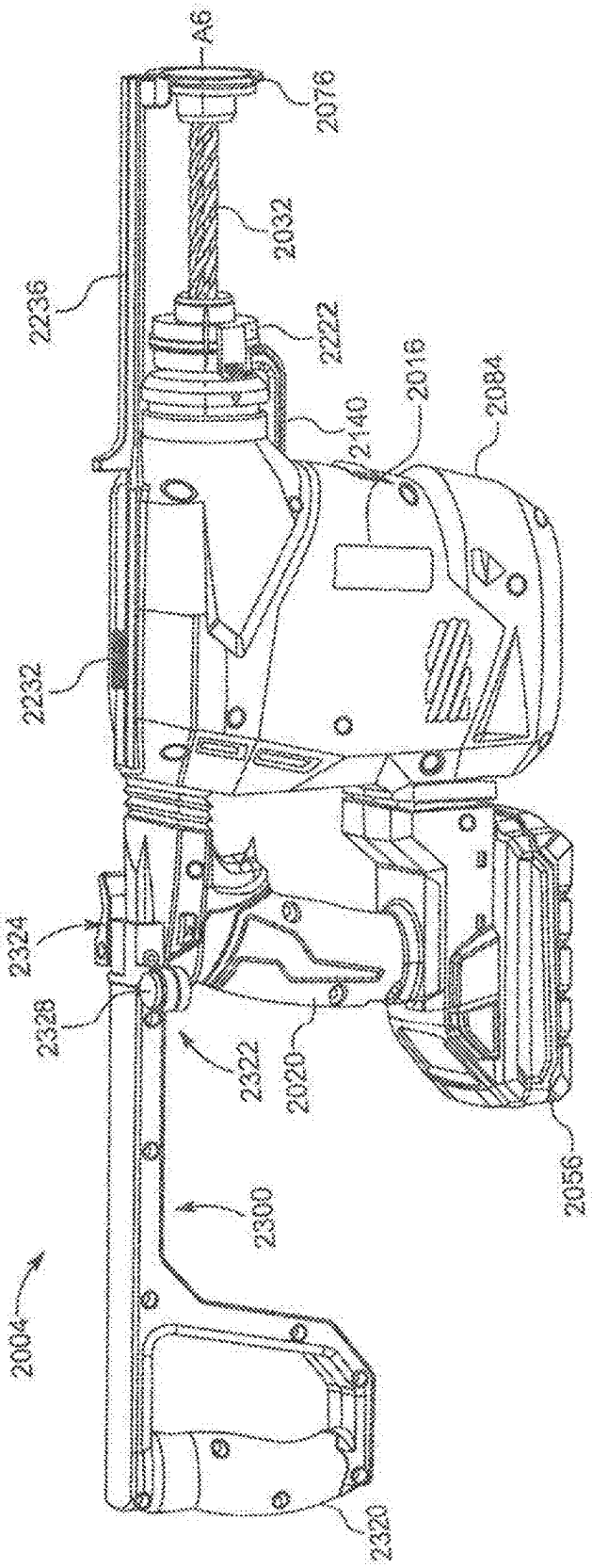
A6
2076
2032
2236
2222
2140
2016
2084
2232
2324
2328
2322
2020
2056
2300
2004
2320

FIG. 39

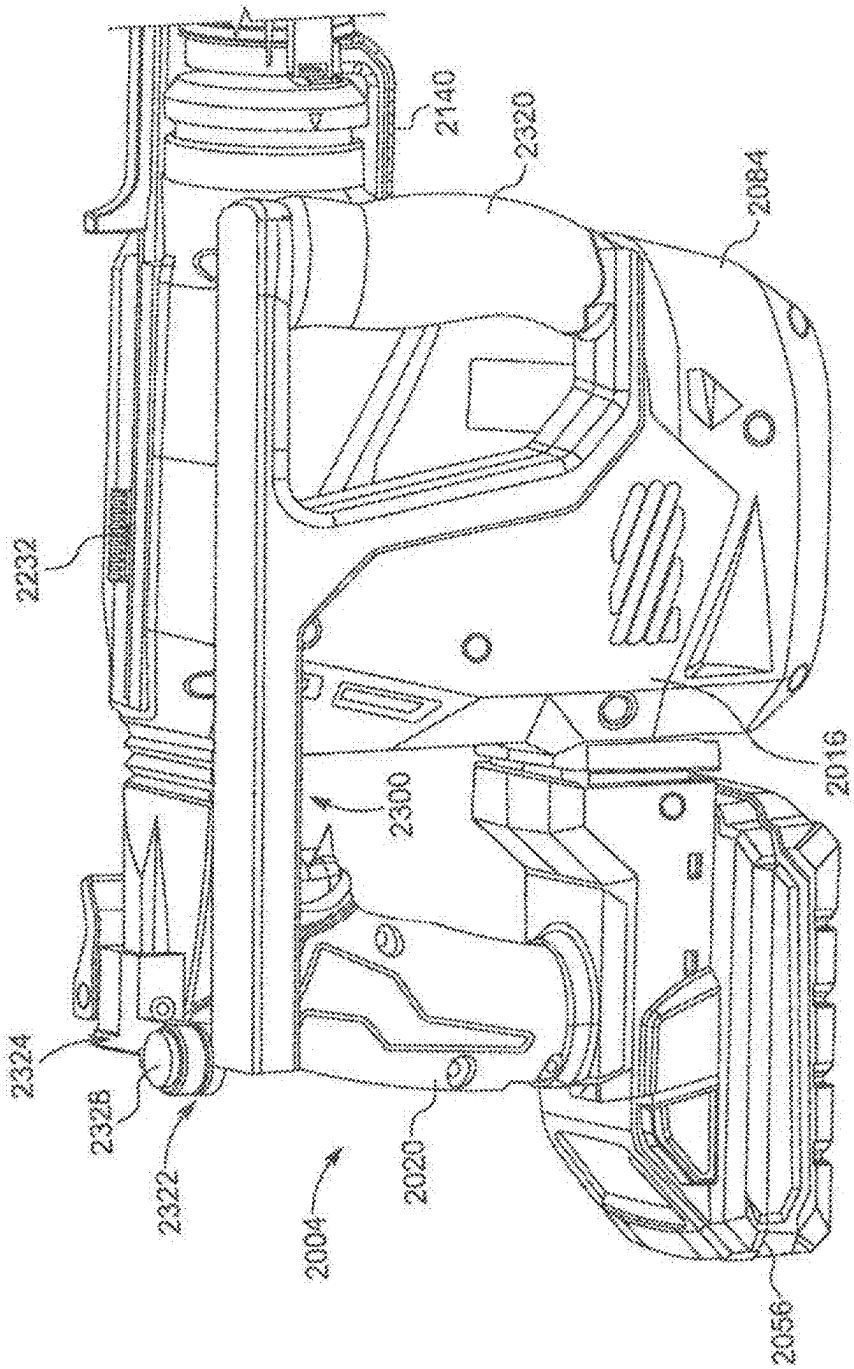

FIG. 40

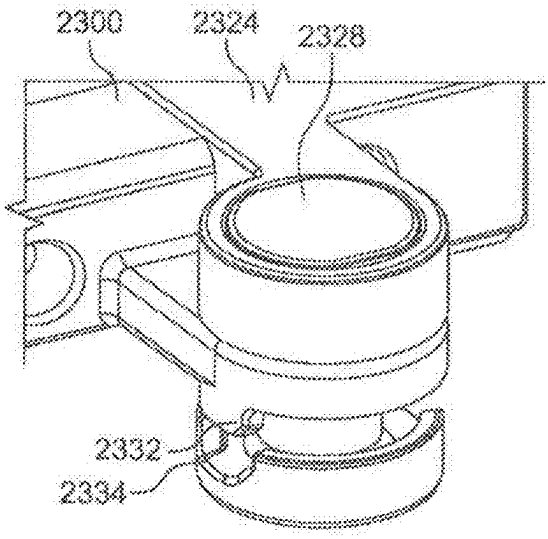

FIG. 41A

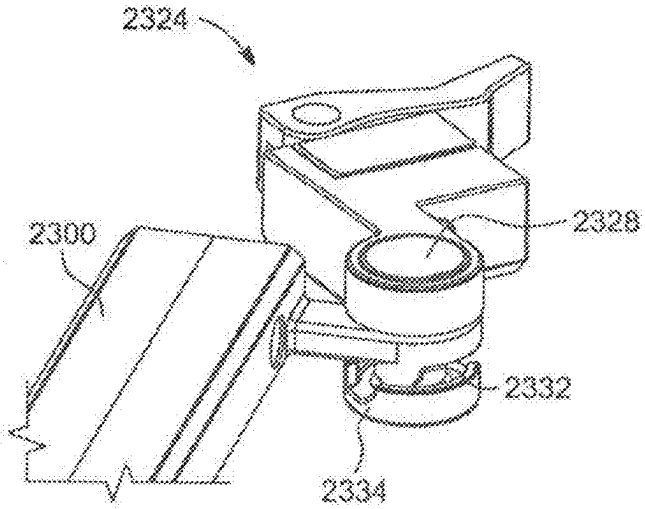

FIG. 41B

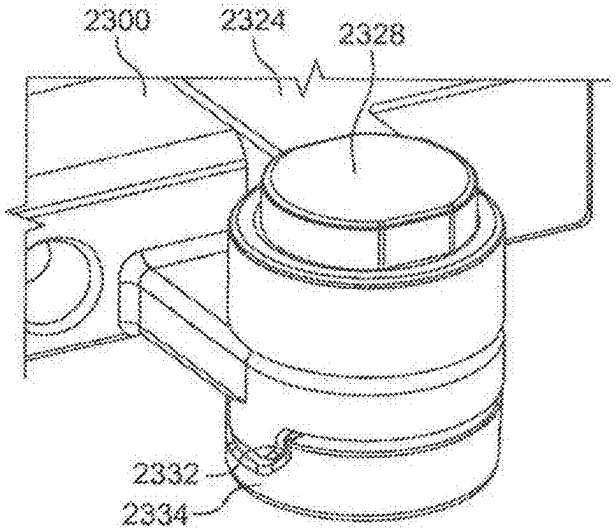

FIG. 41C

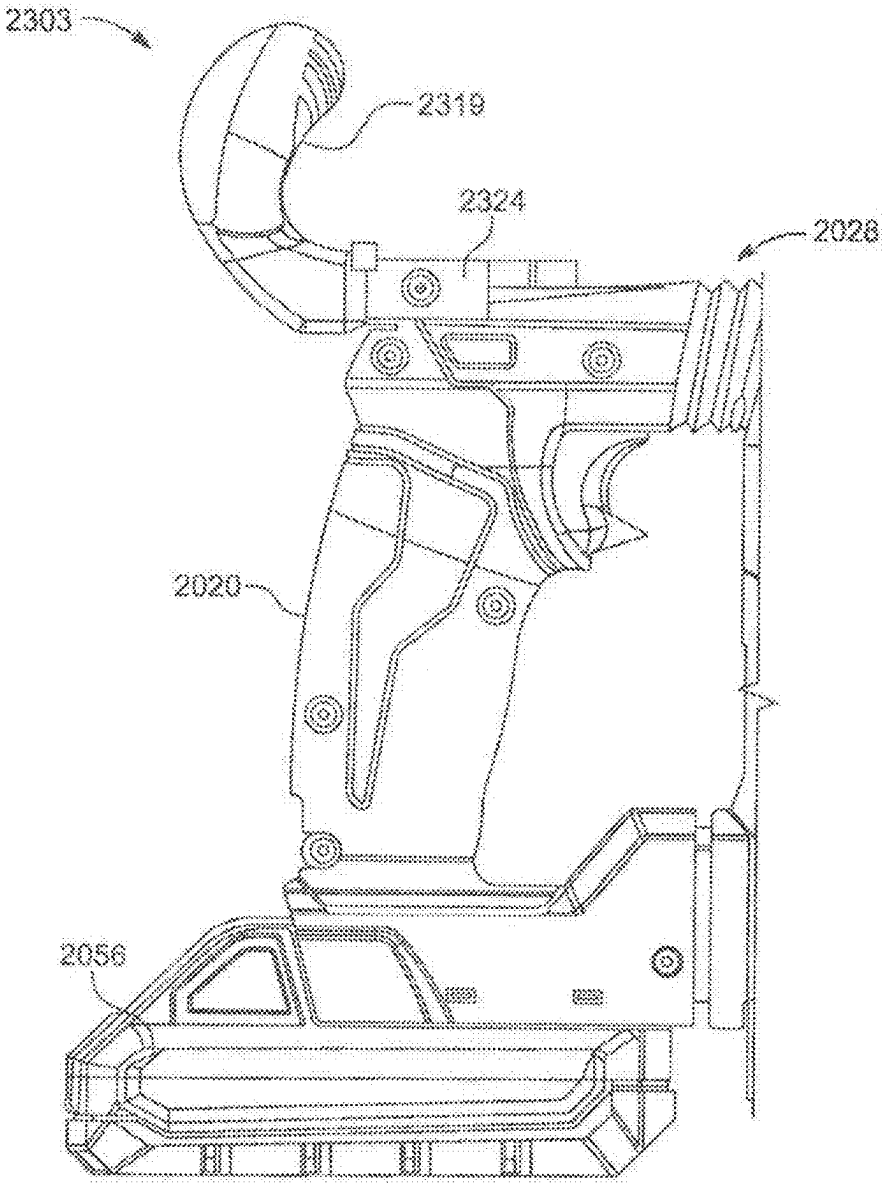

FIG. 42

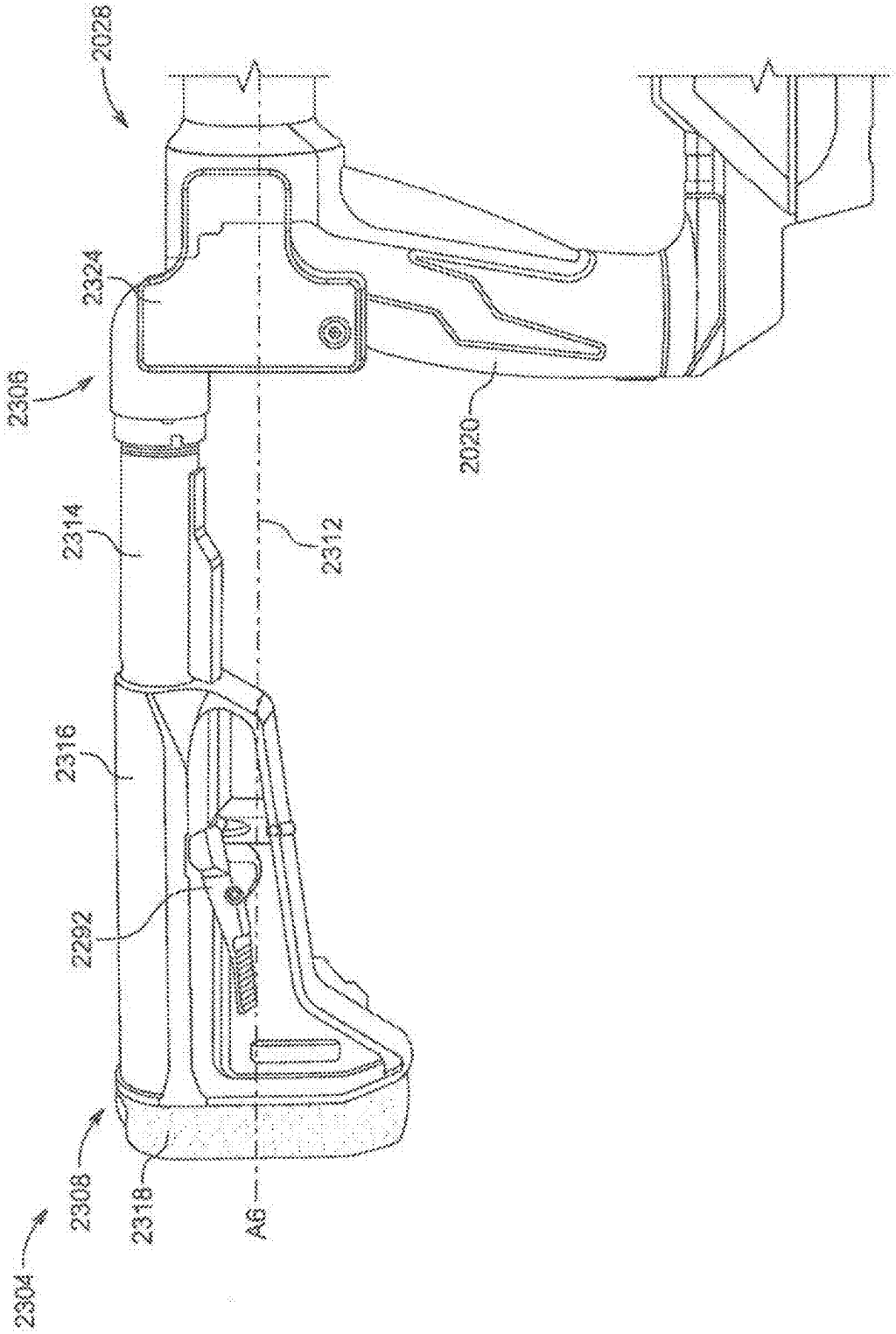

FIG. 43

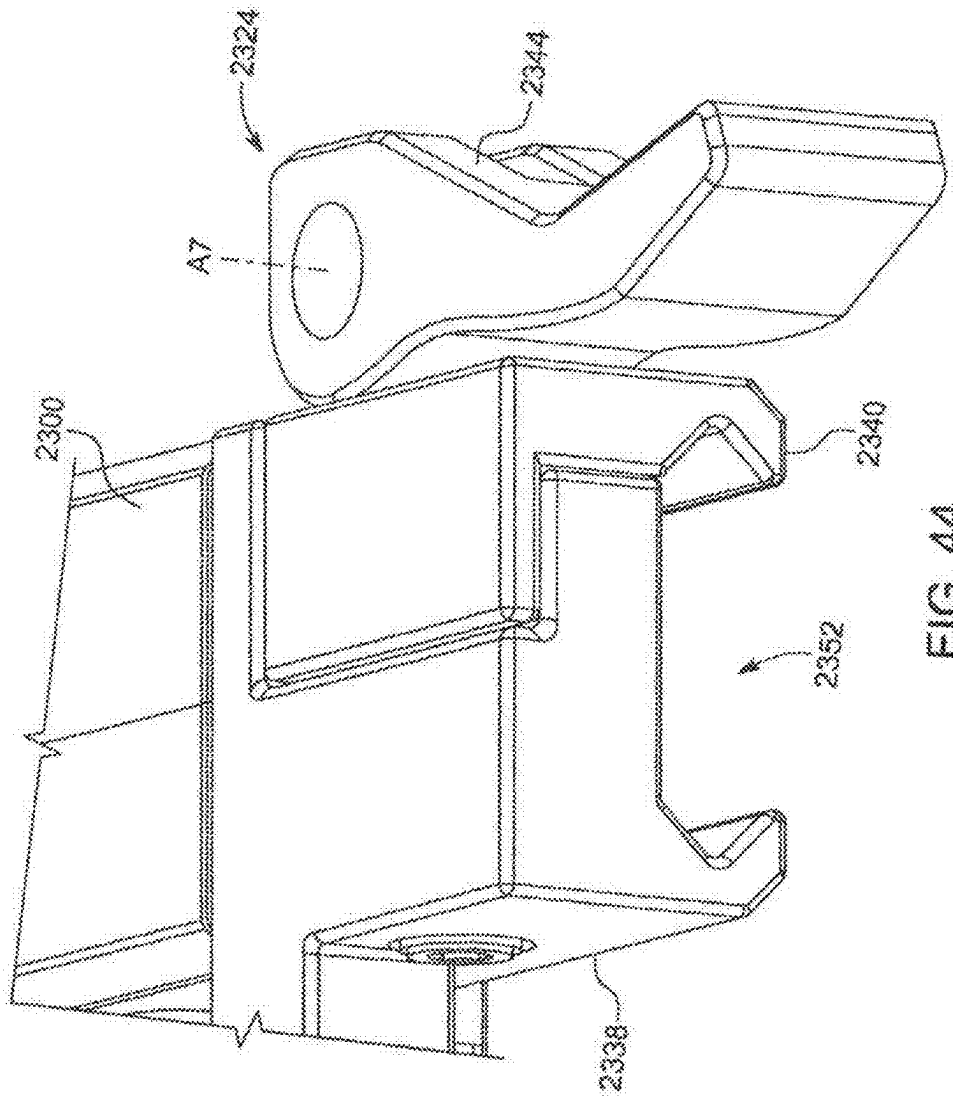

FIG. 44

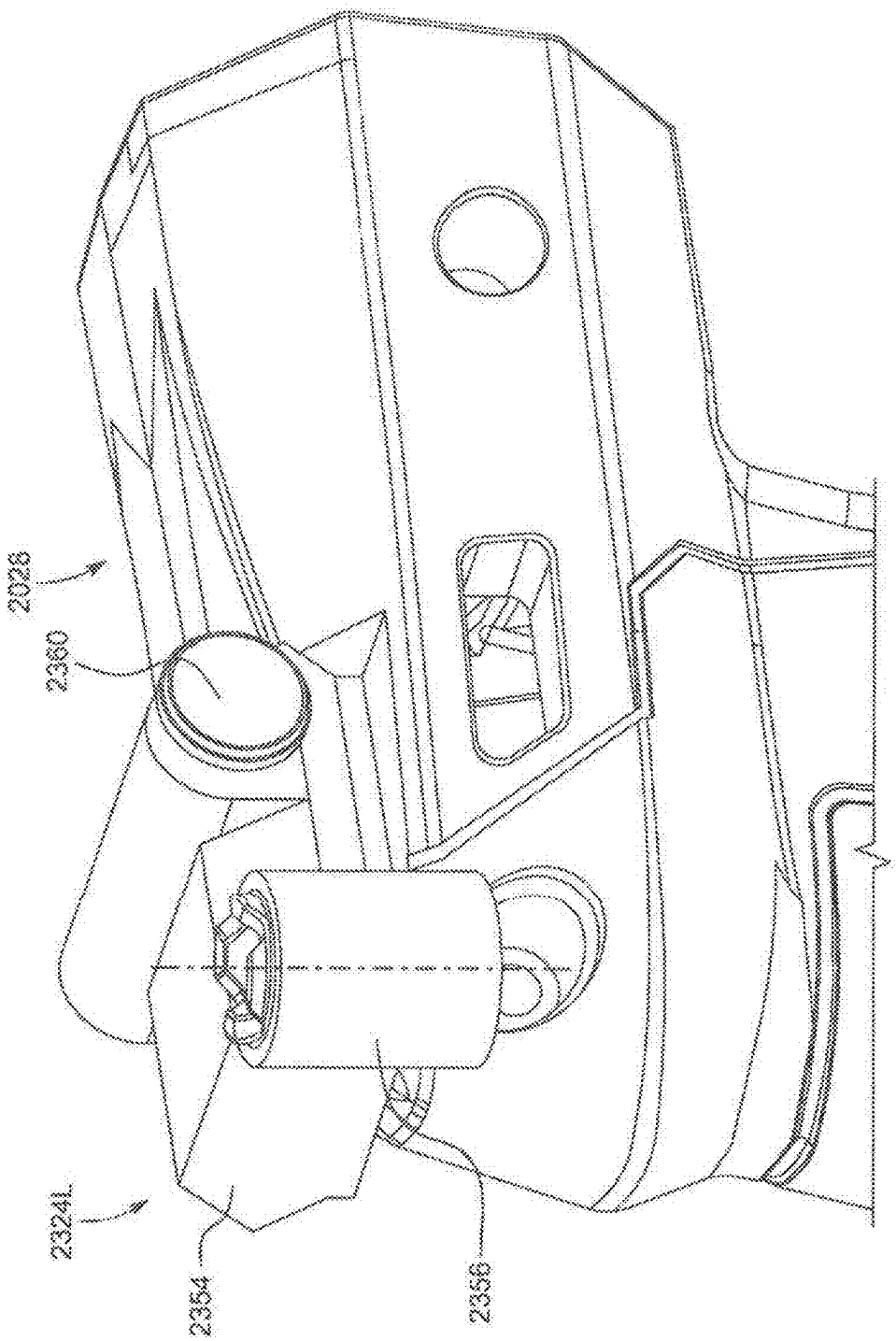

FIG. 45

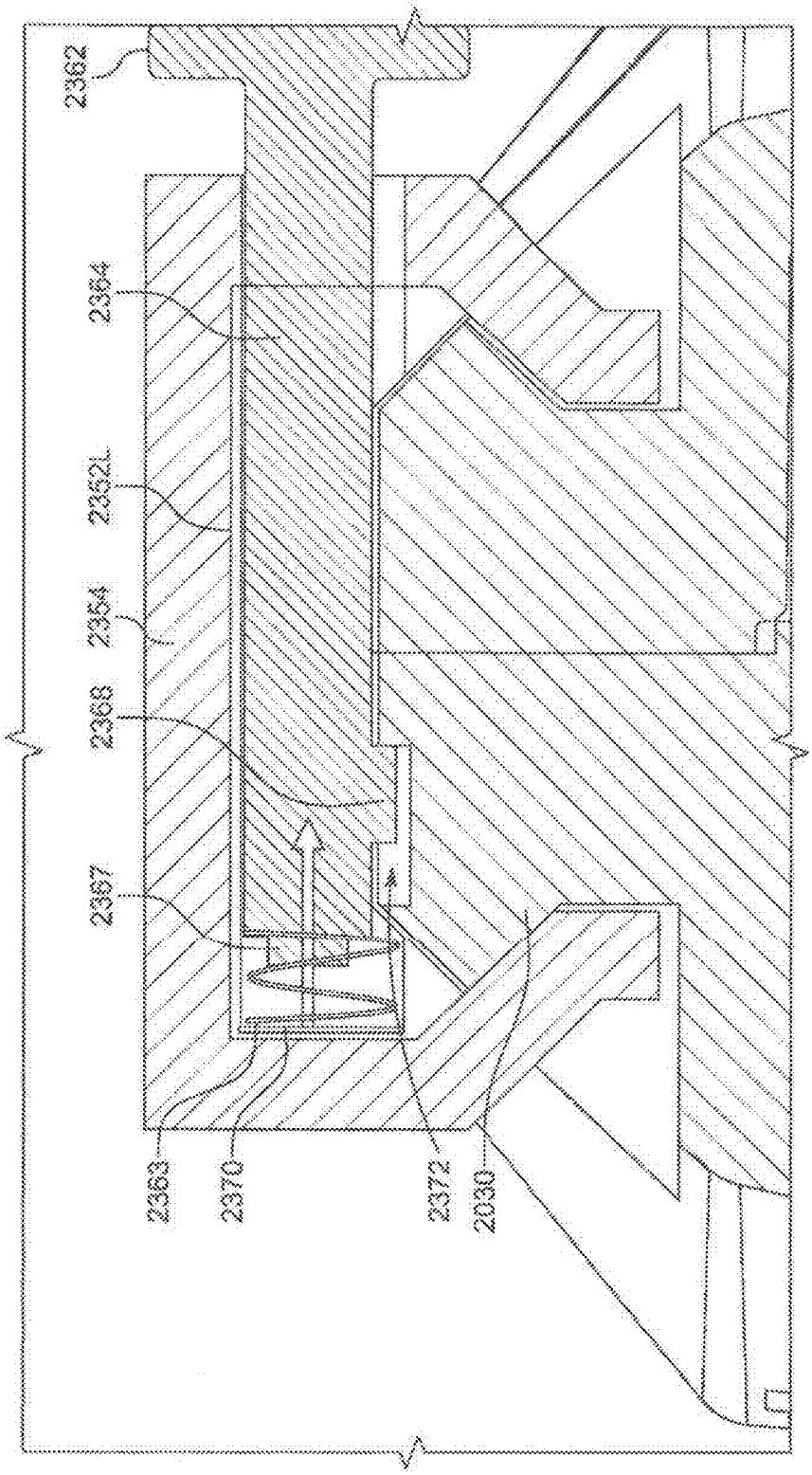

FIG. 46

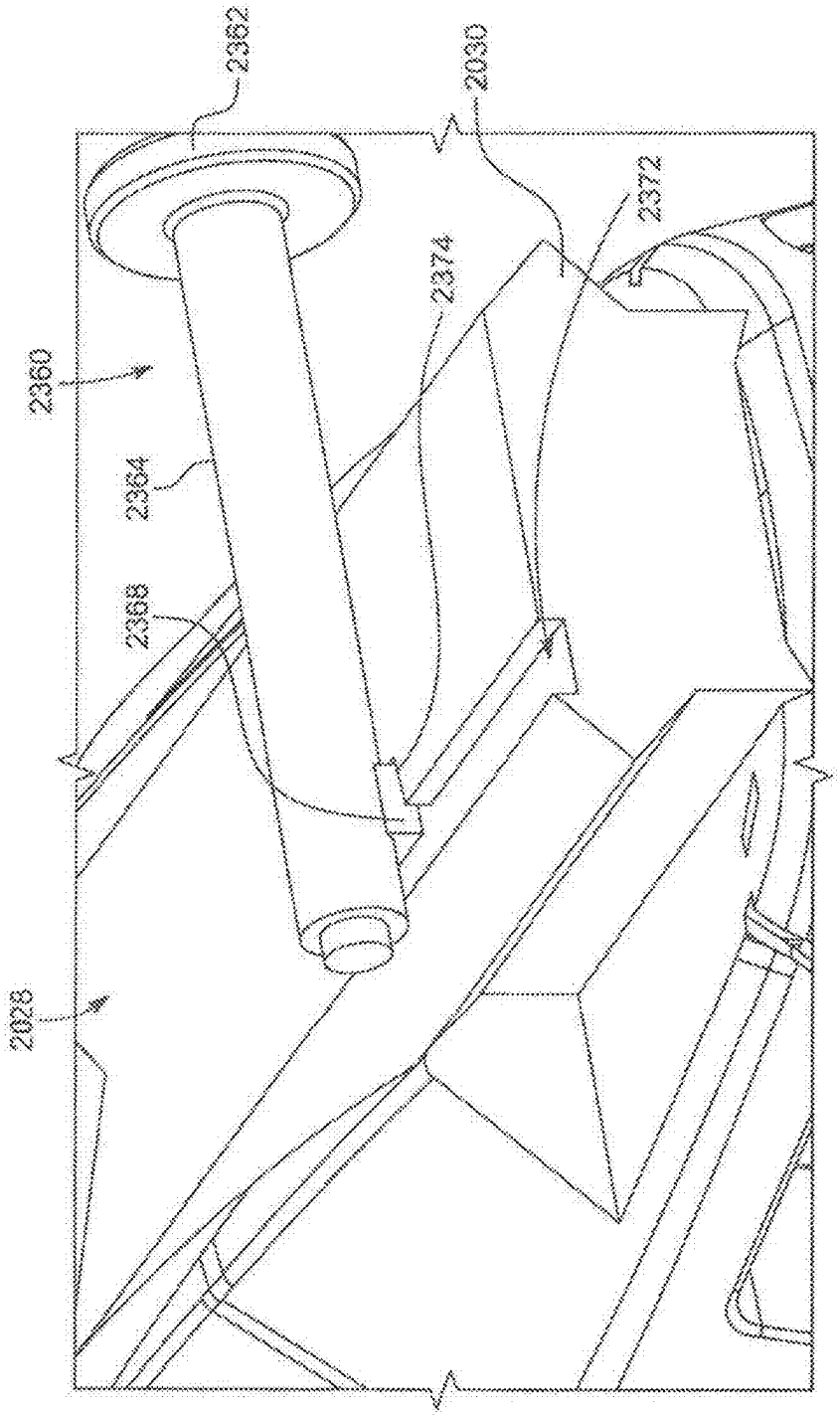

FIG. 47

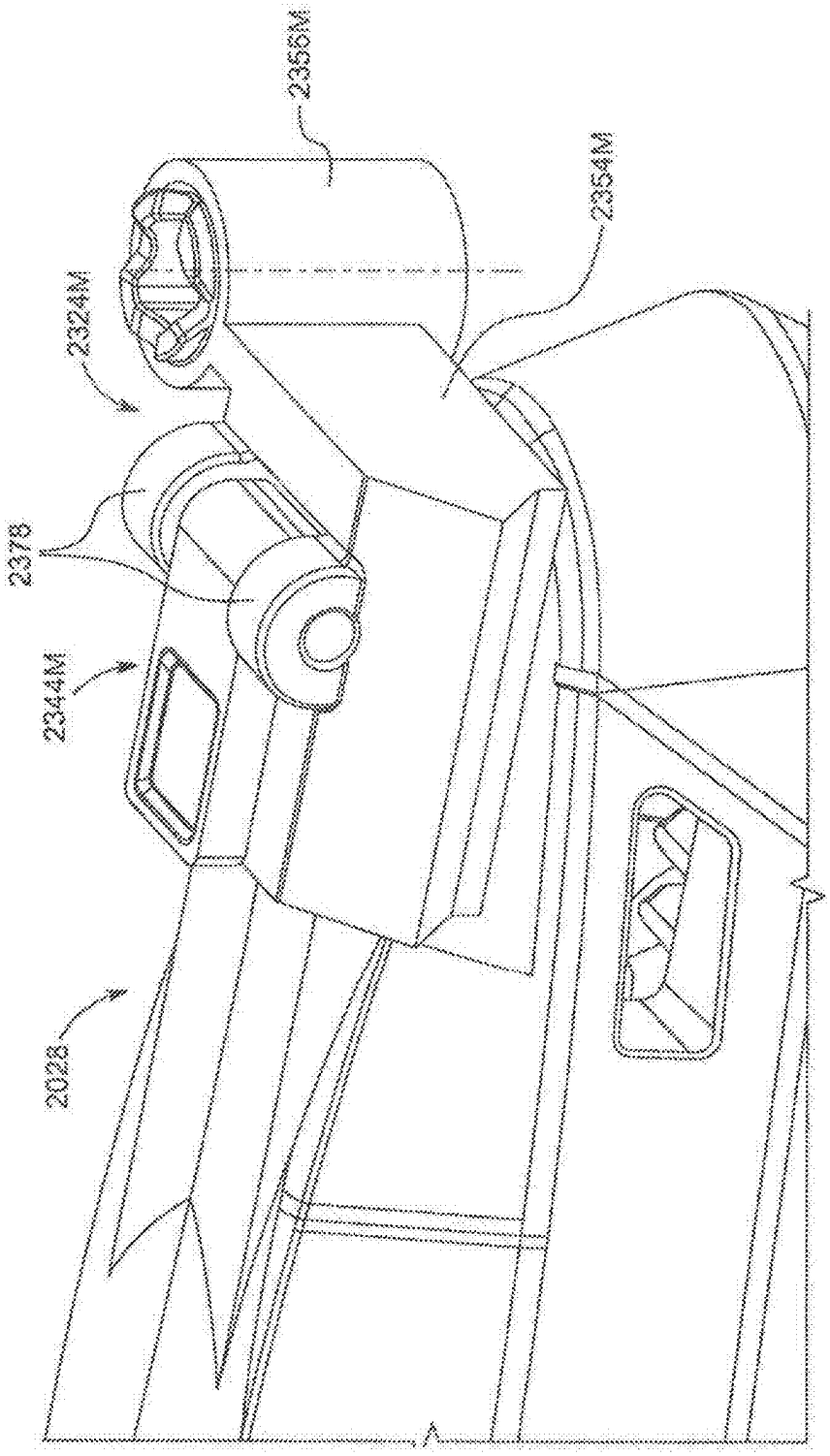

FIG. 48

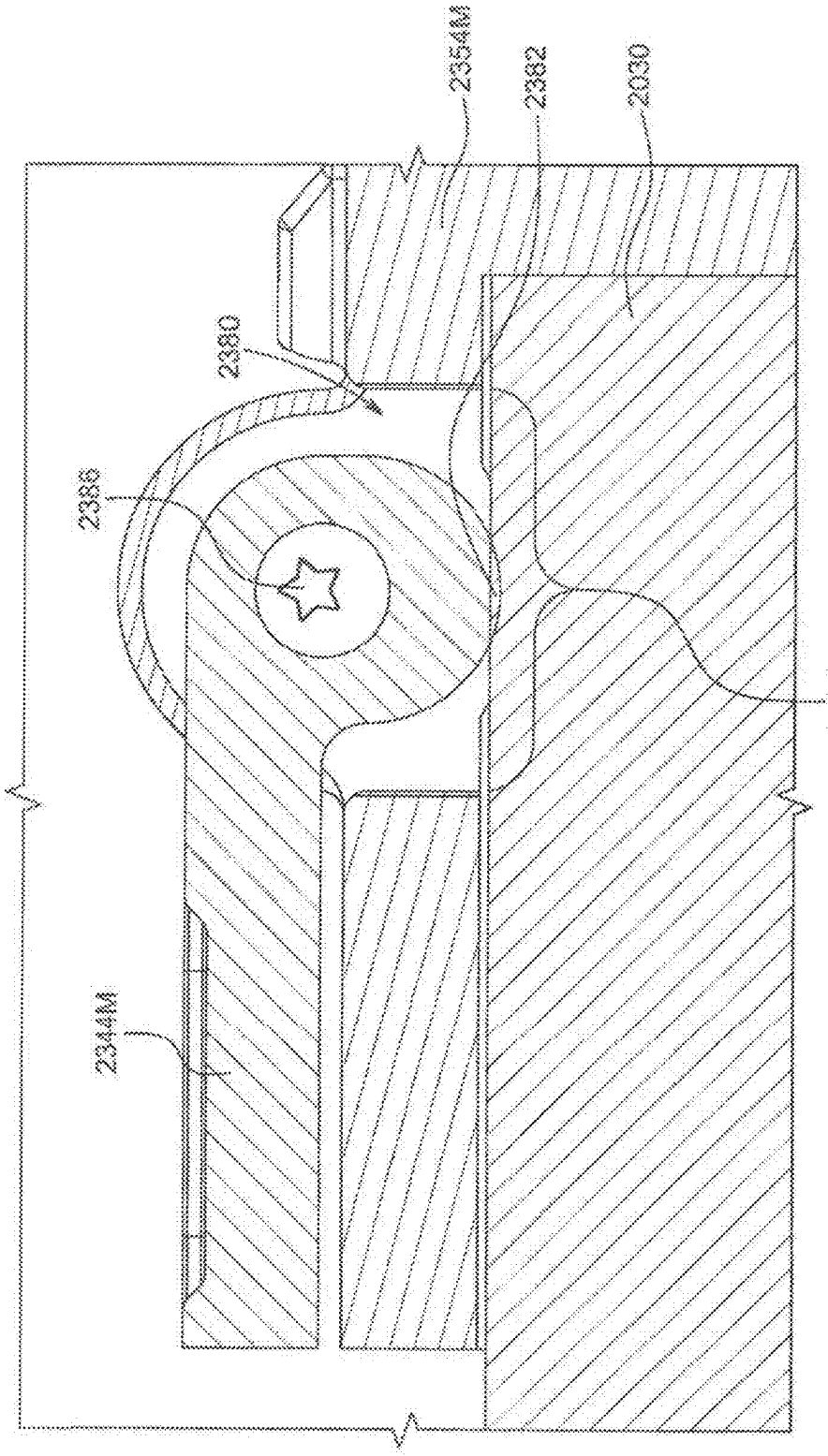

FIG. 49

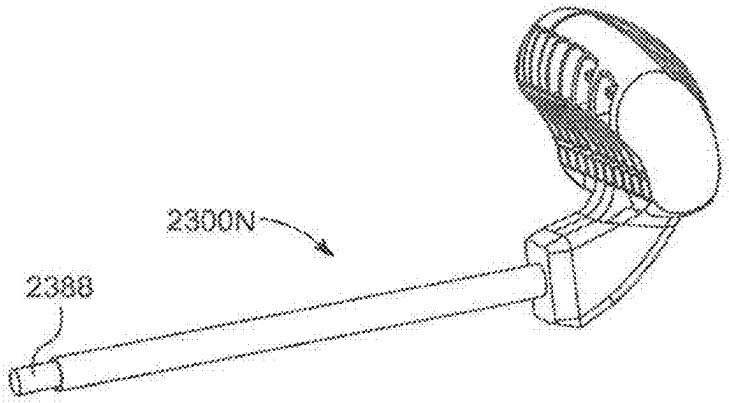

FIG. 50A

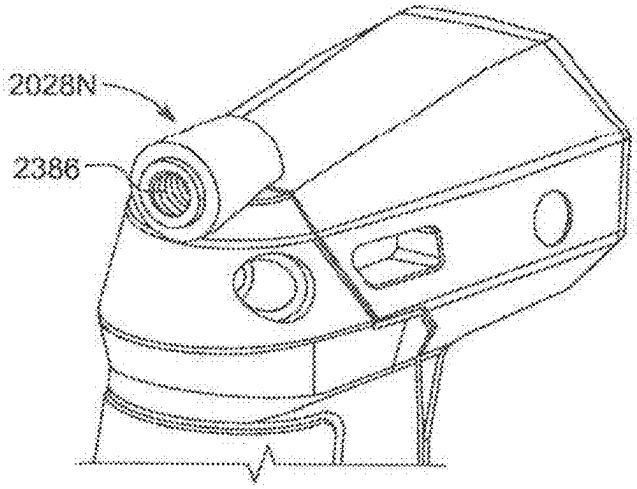

FIG. 50B

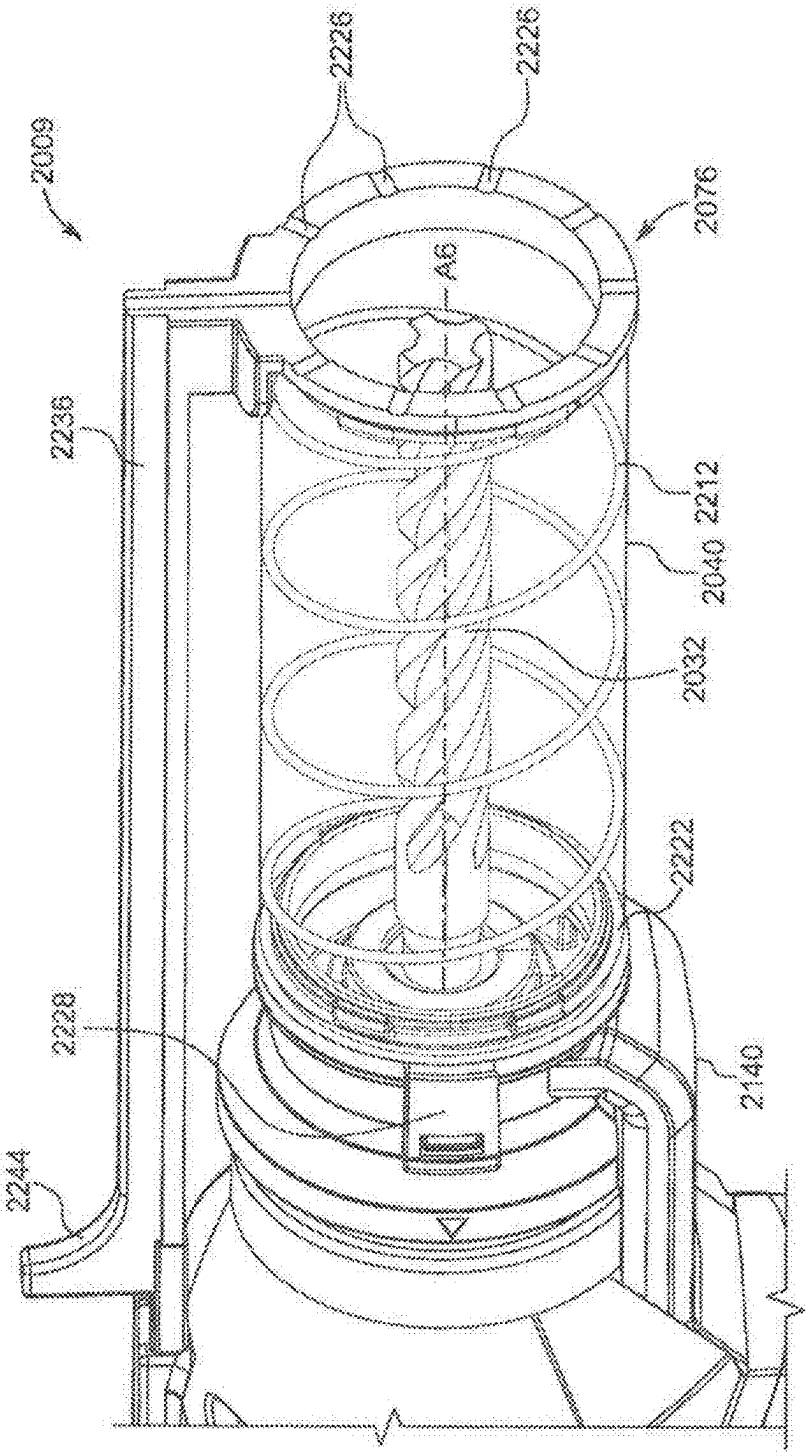
2009
2226
2226
2076
A6
2236
2212
2040
2032
2222
2228
2140
2244

FIG. 51

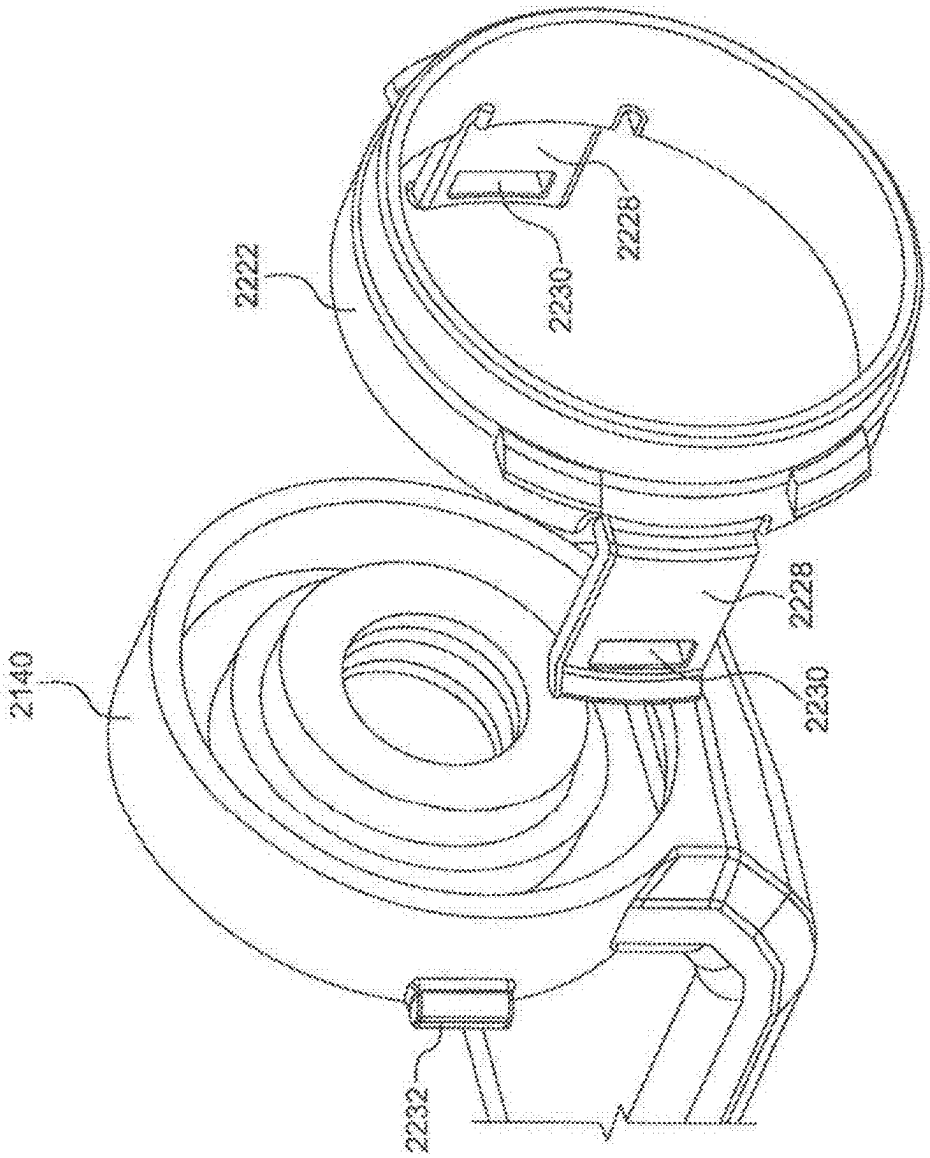

FIG. 52

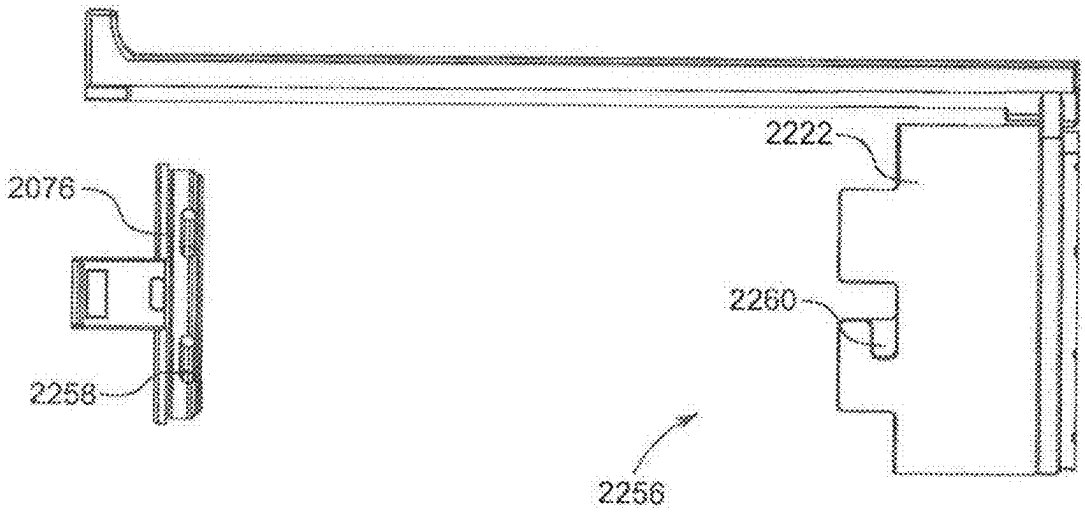

FIG. 53A

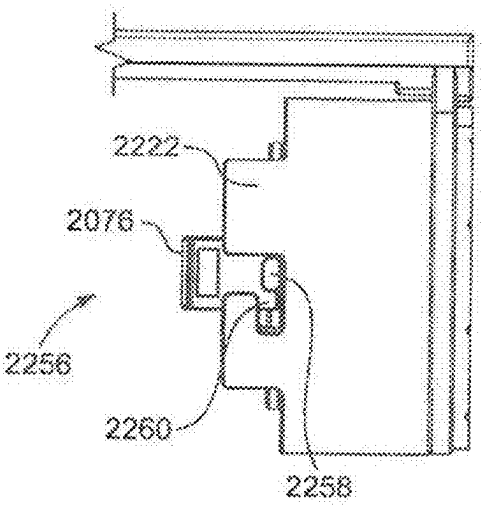

FIG. 53B

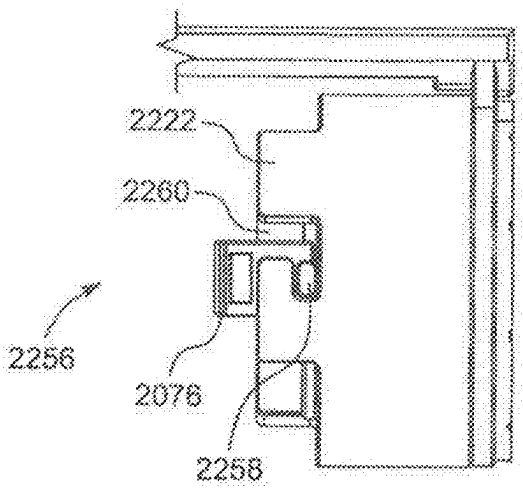

FIG. 53C

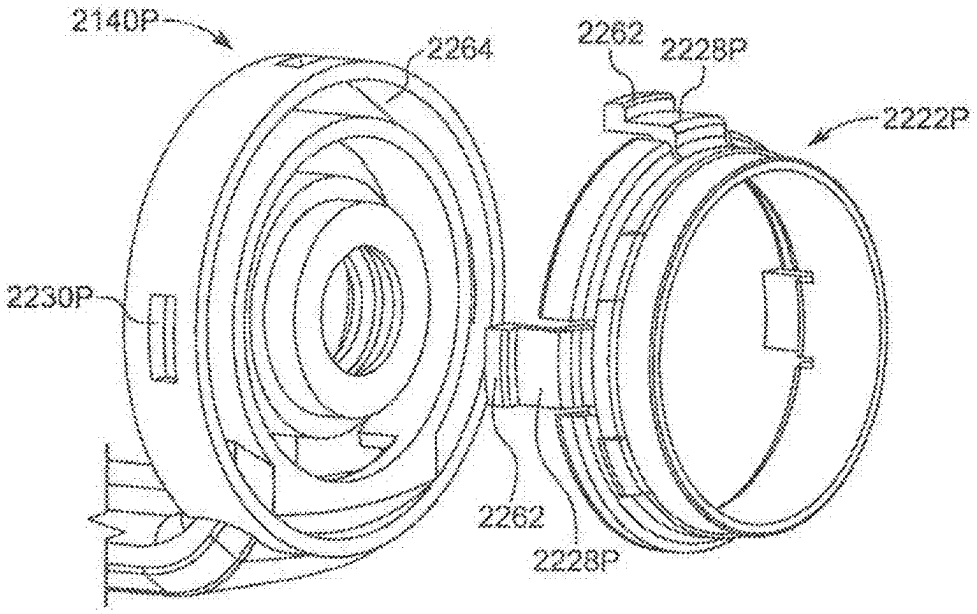

FIG. 54A

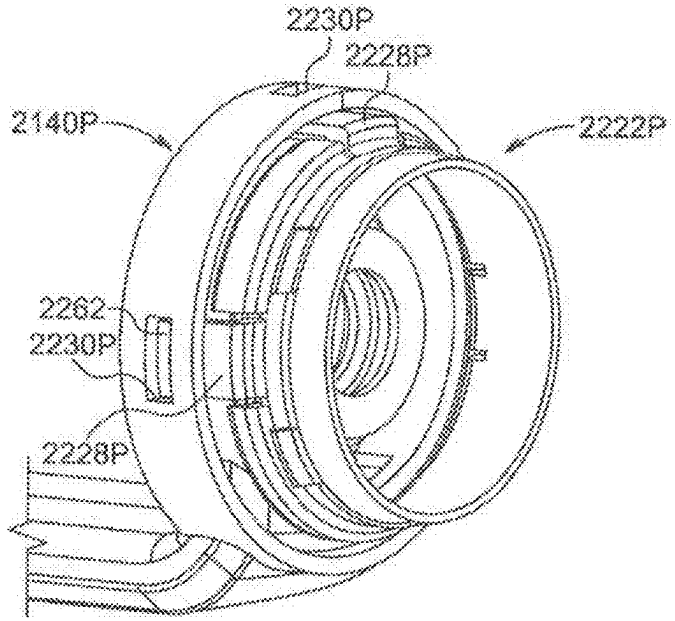

FIG. 54B

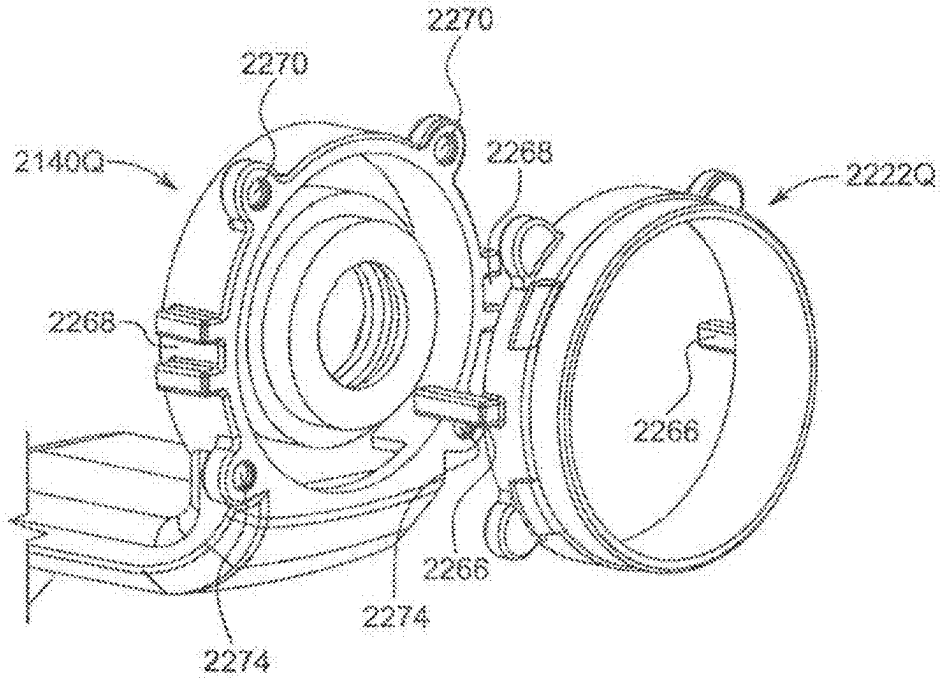

FIG. 55A

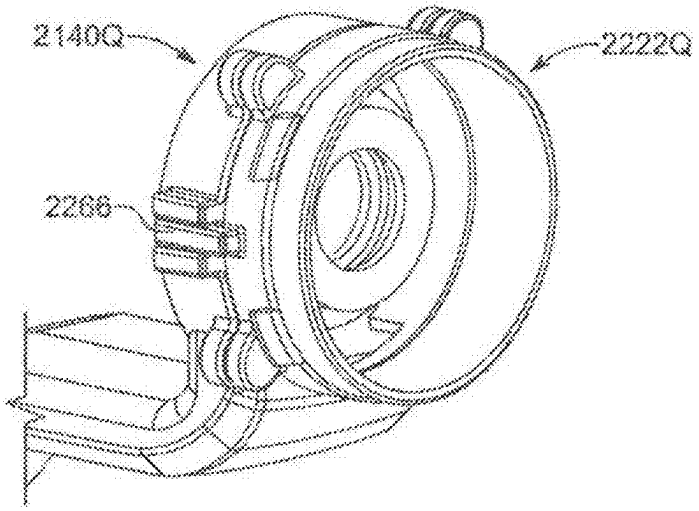

FIG. 55B

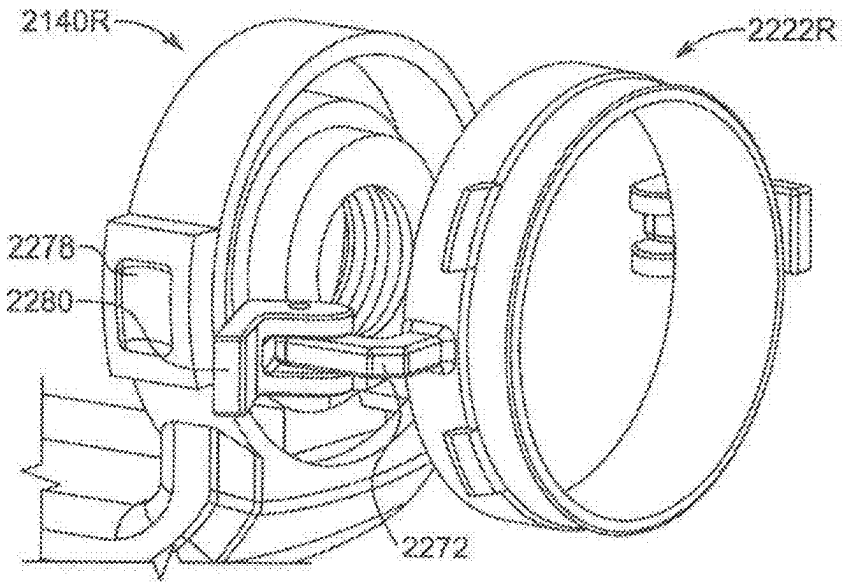

FIG. 56A

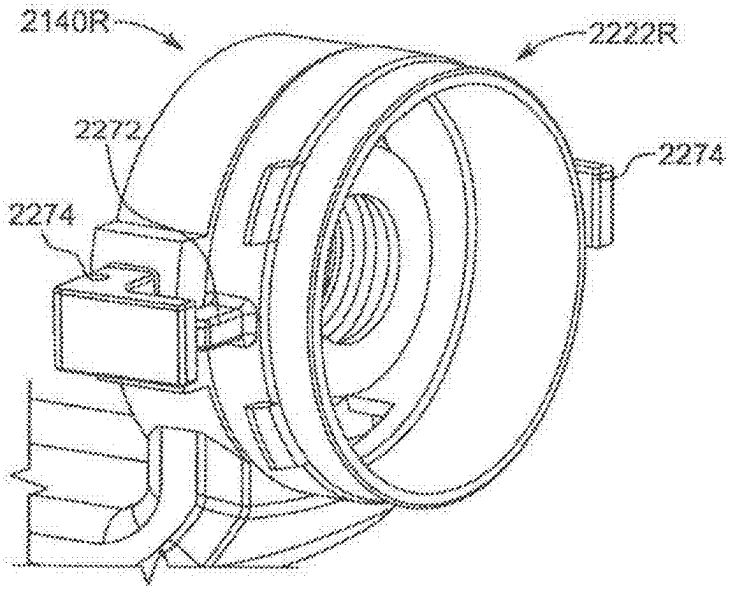

FIG. 56B

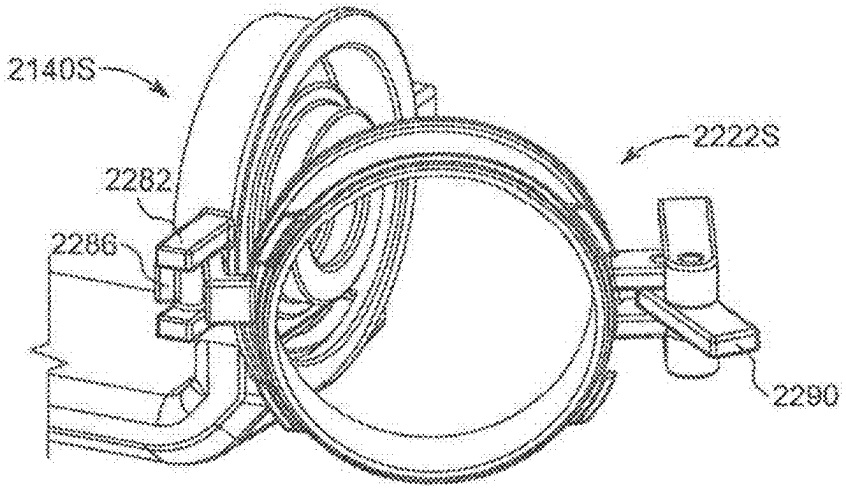

FIG. 57A

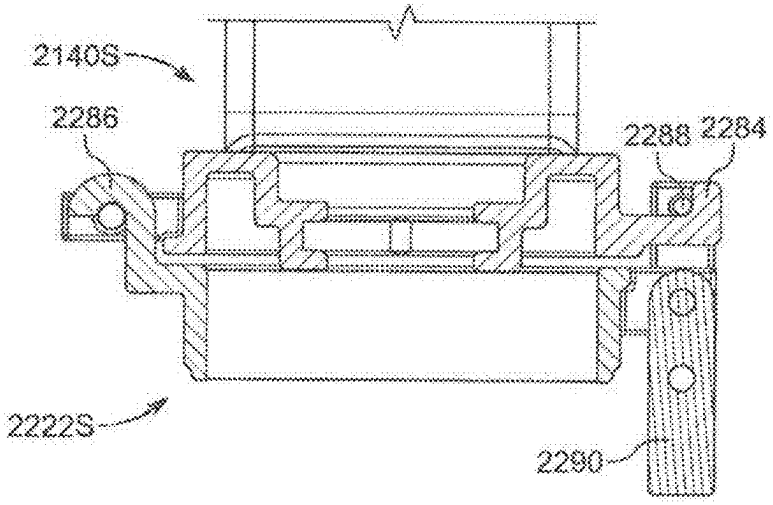

FIG. 57B

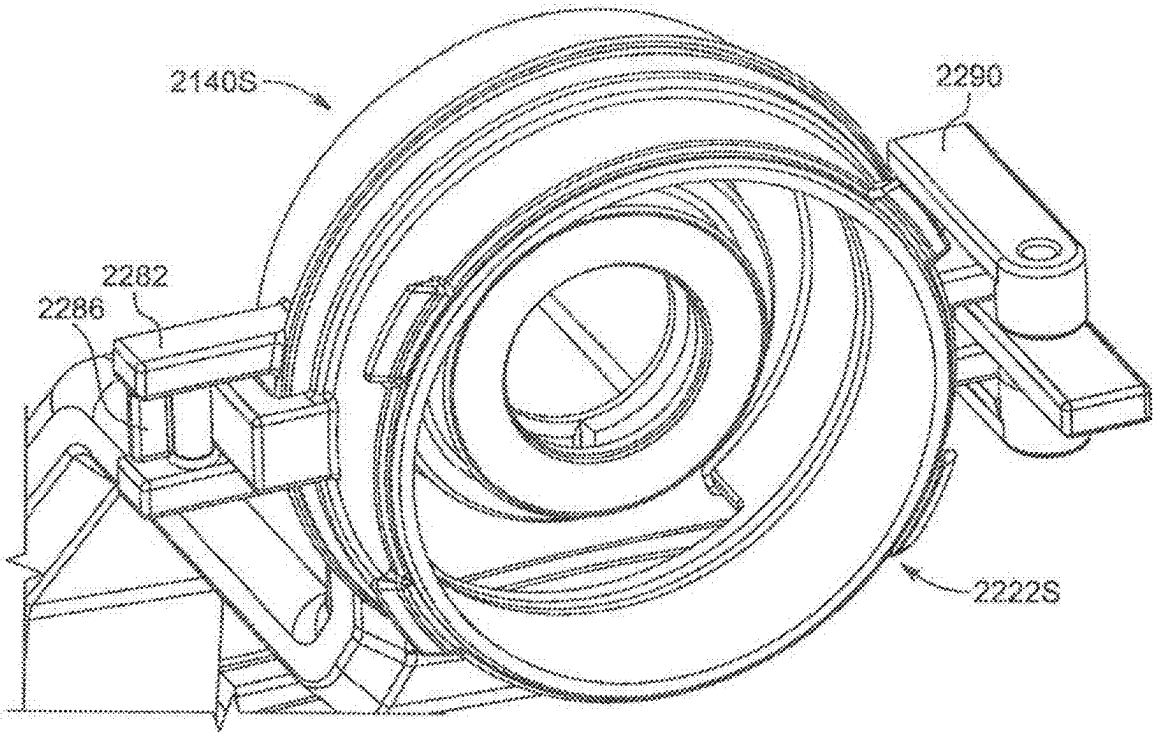

FIG. 57C

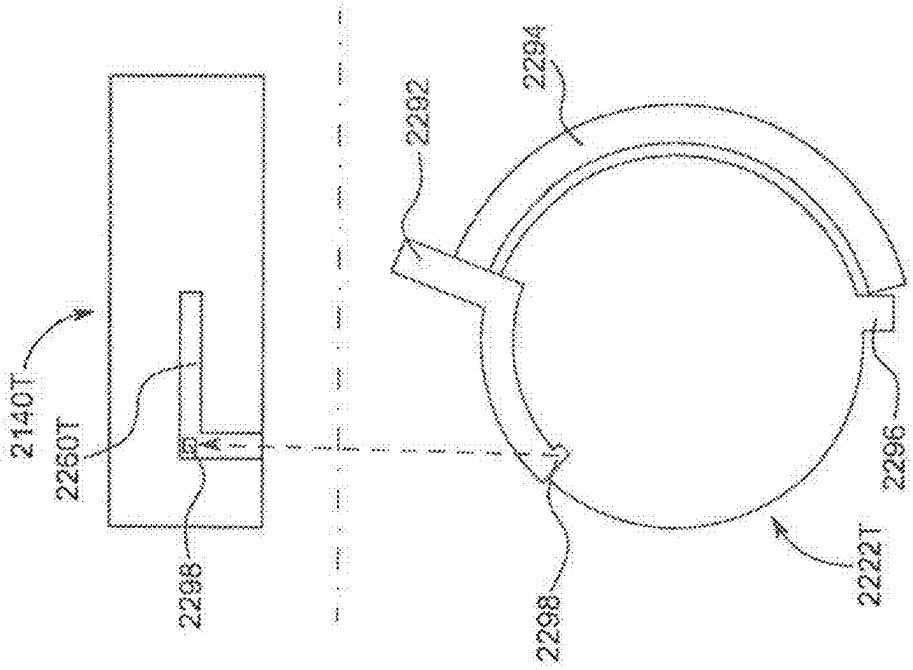

FIG. 58B

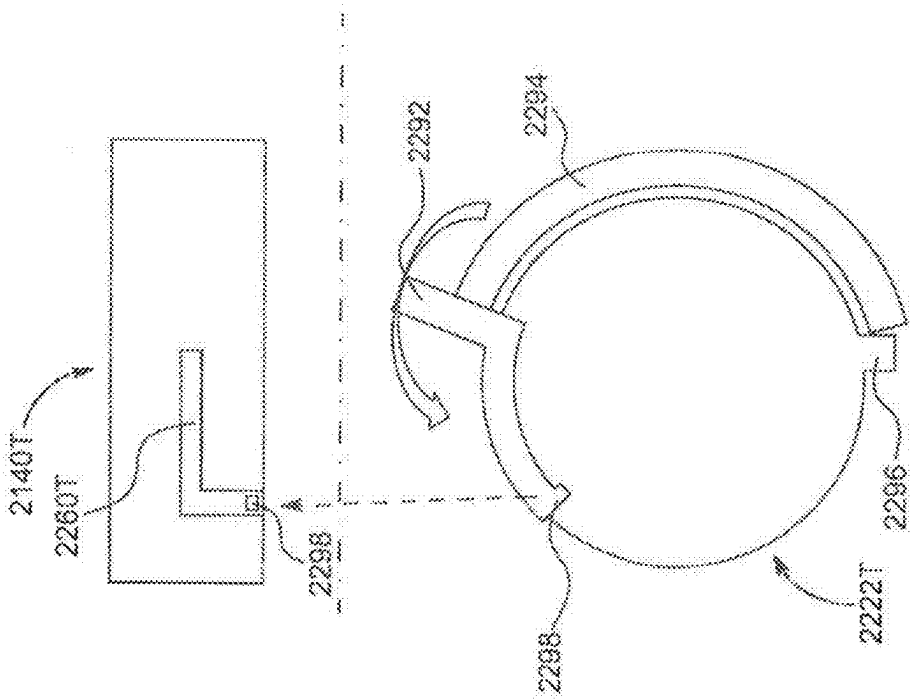

FIG. 58A

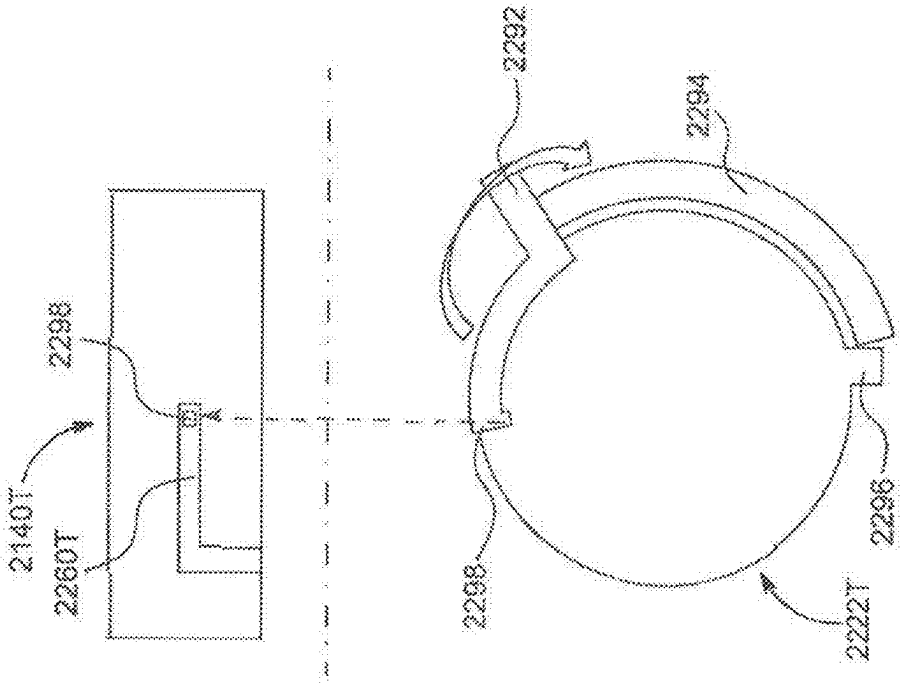

FIG. 58C

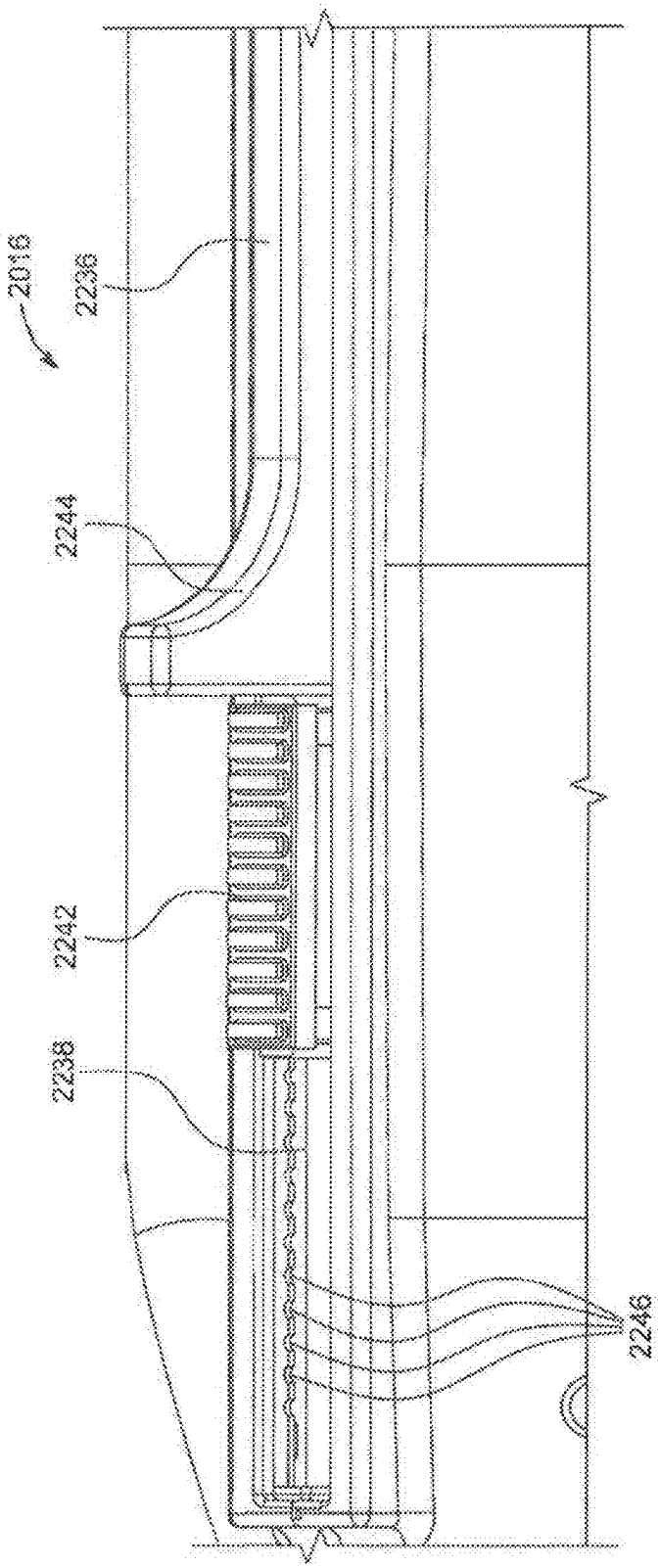

FIG. 59

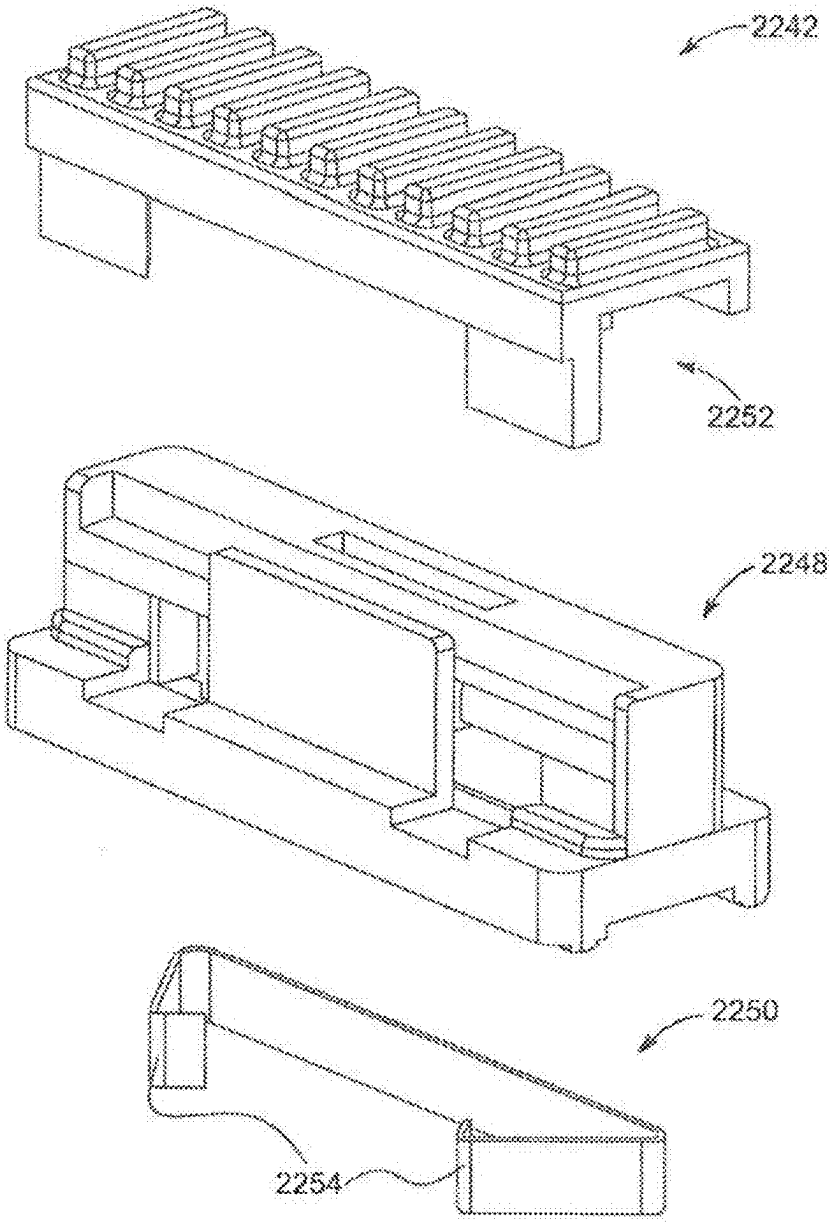

FIG. 60

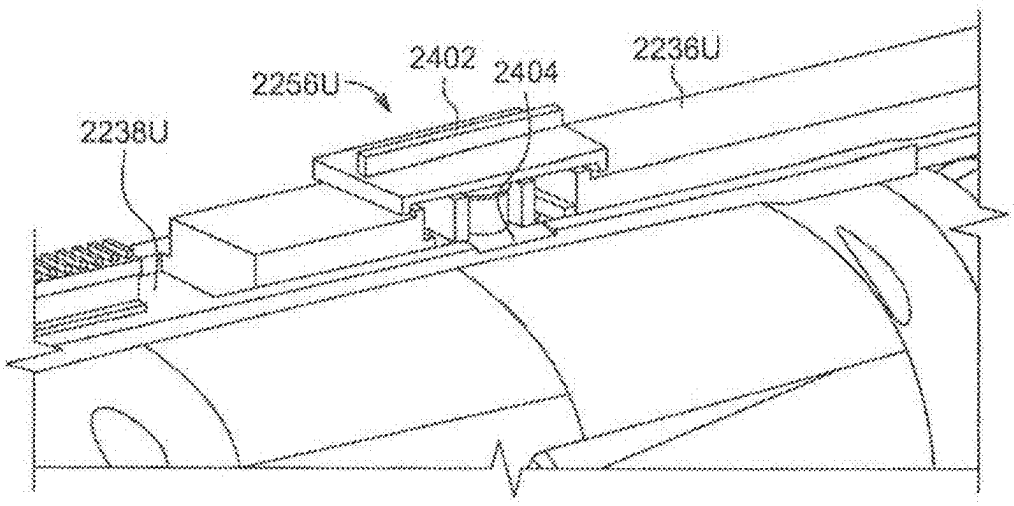

FIG. 61A

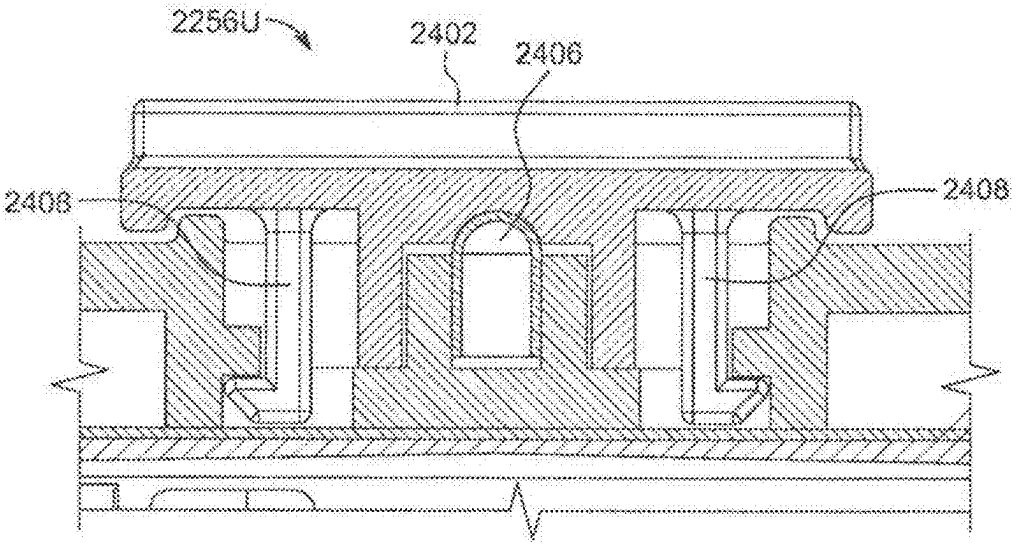

FIG. 61B

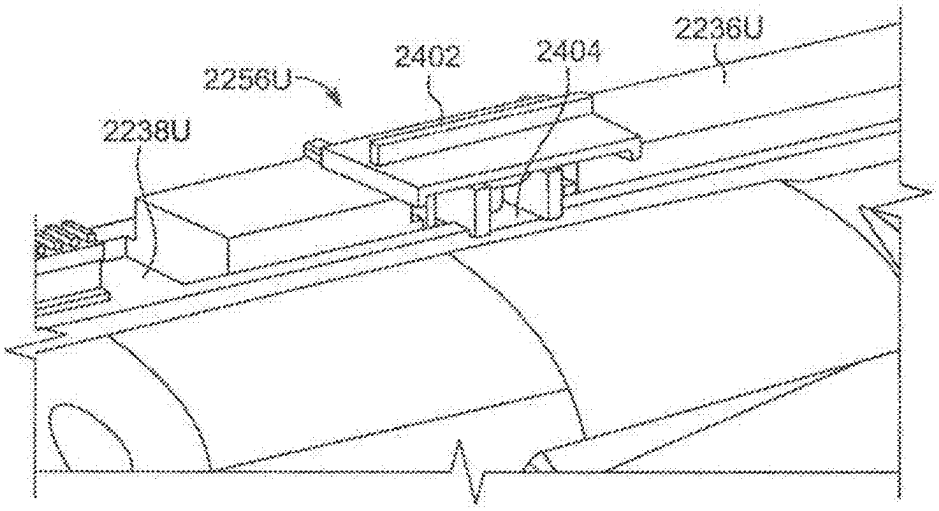

FIG. 61C

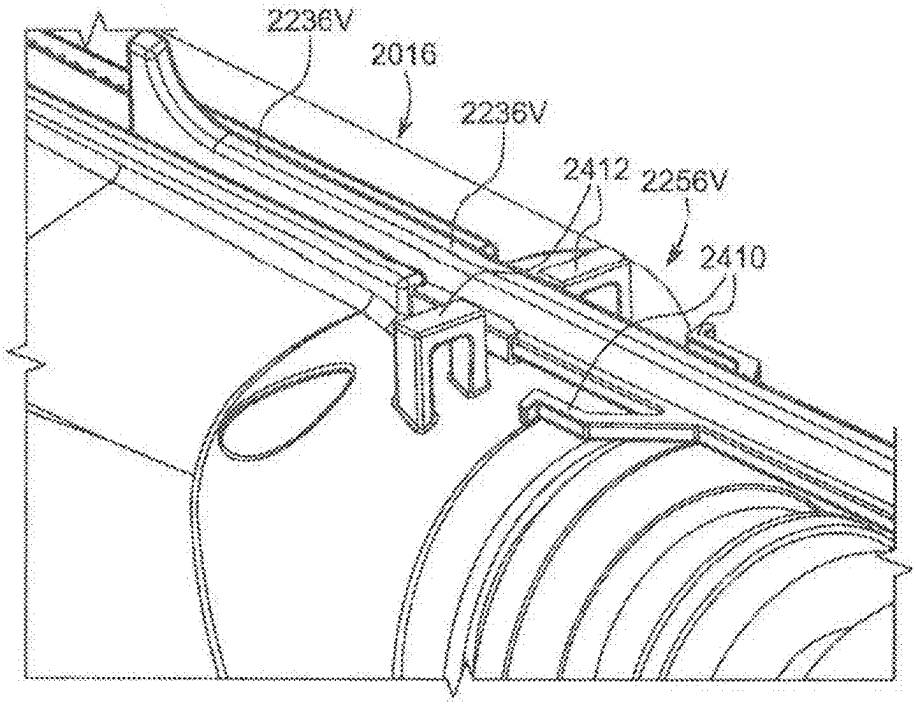

FIG. 62A

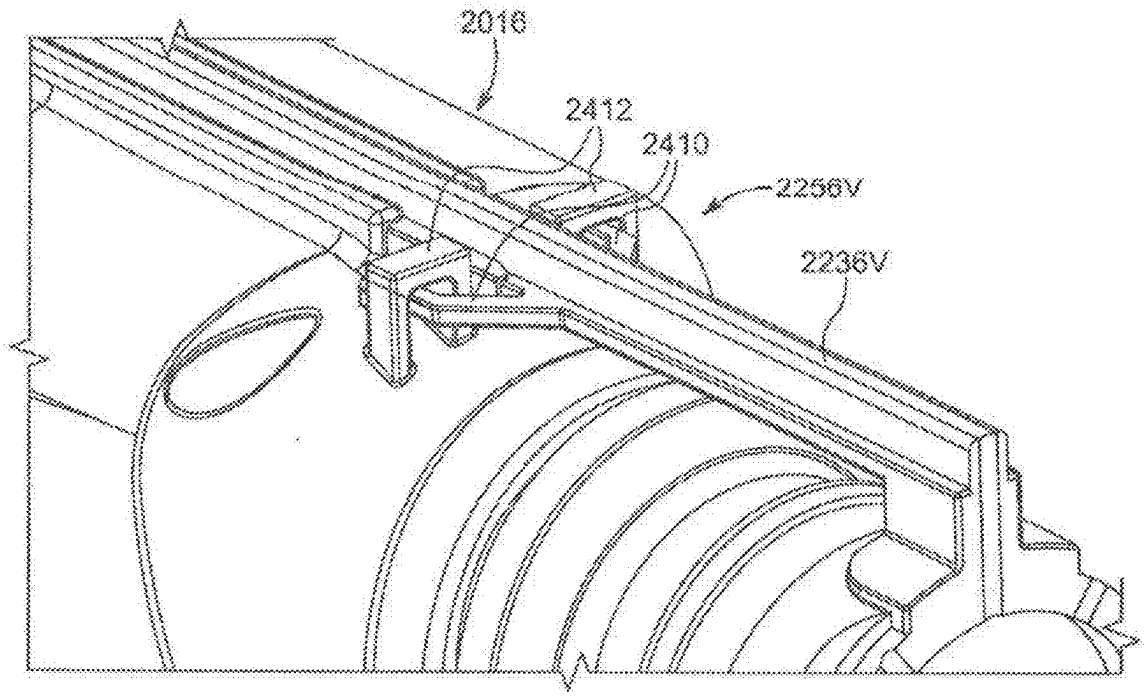

FIG. 62B

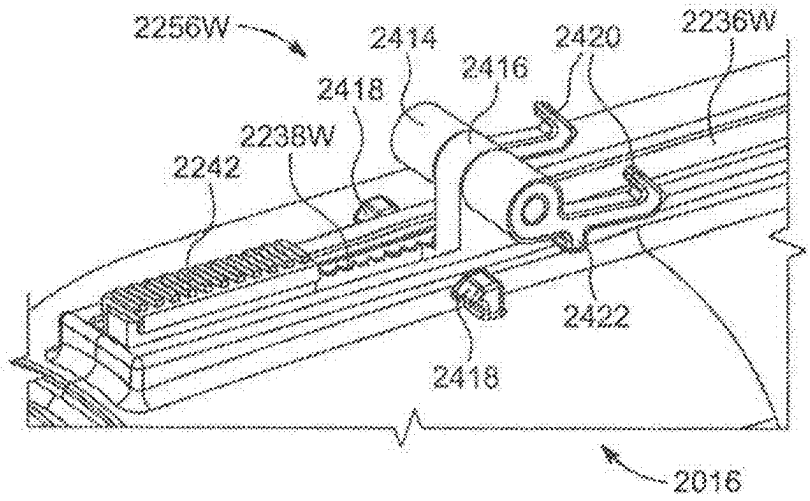

FIG. 63A

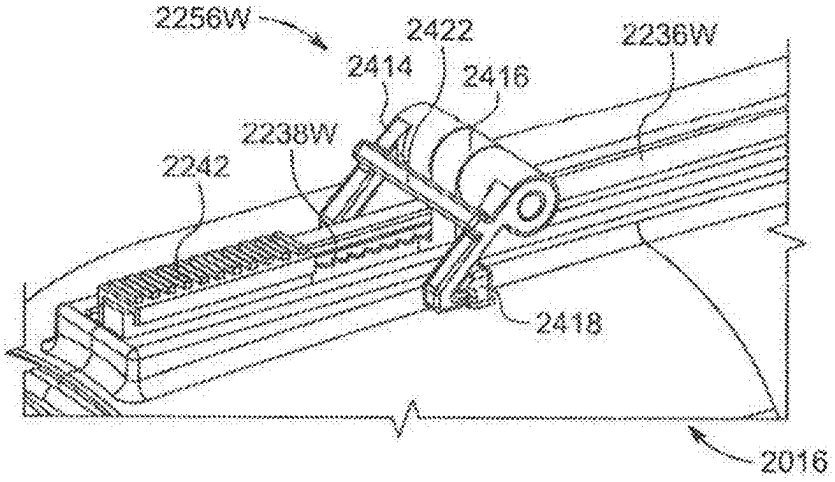

FIG. 63B

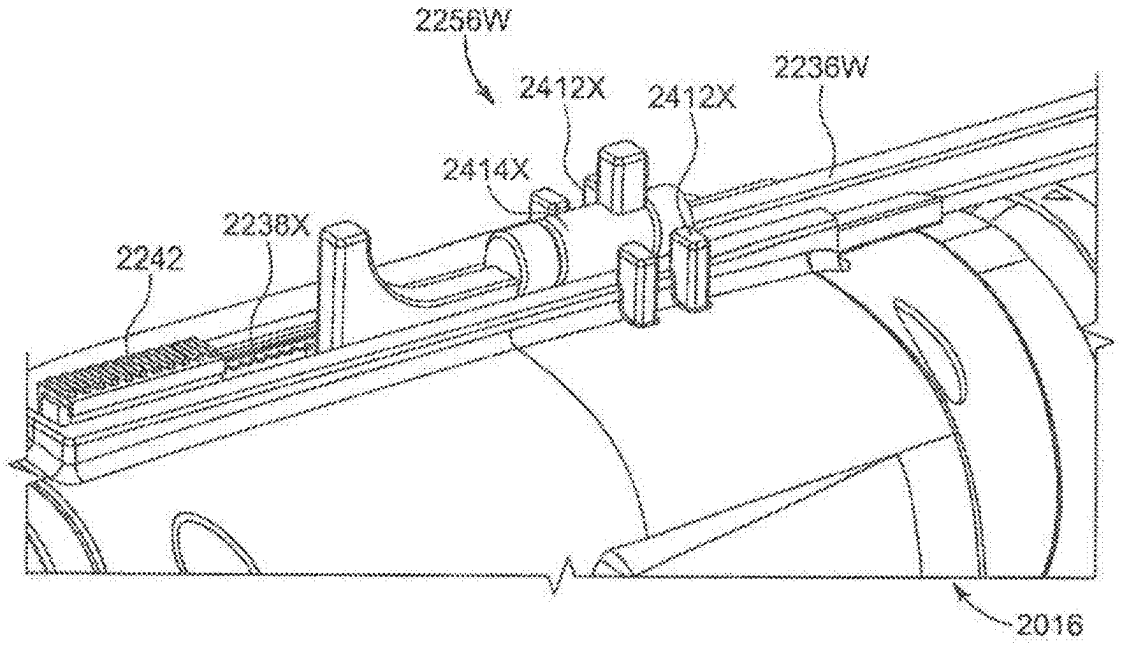

FIG. 64A

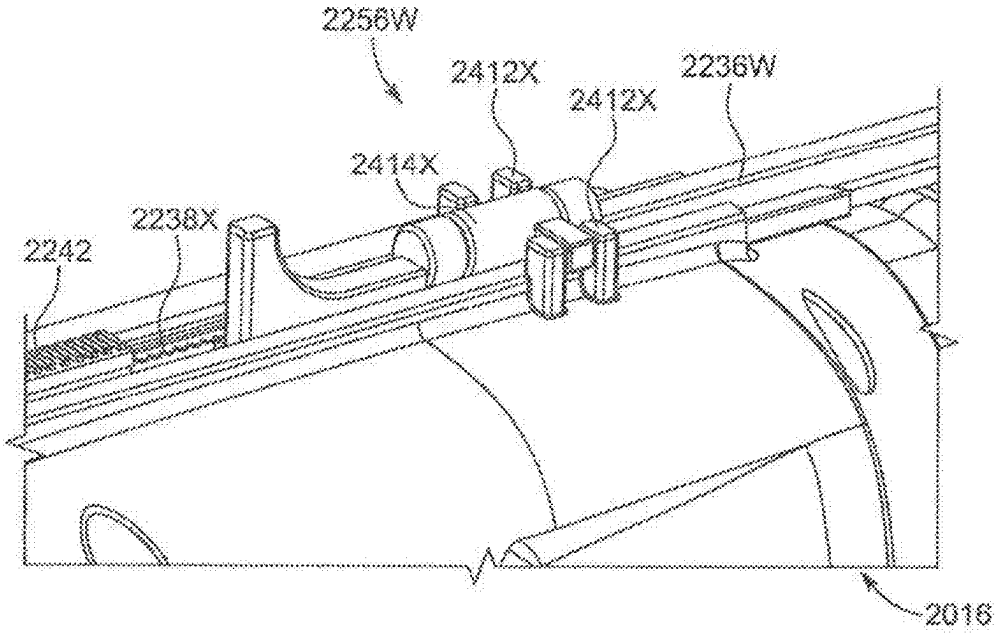

FIG. 64B

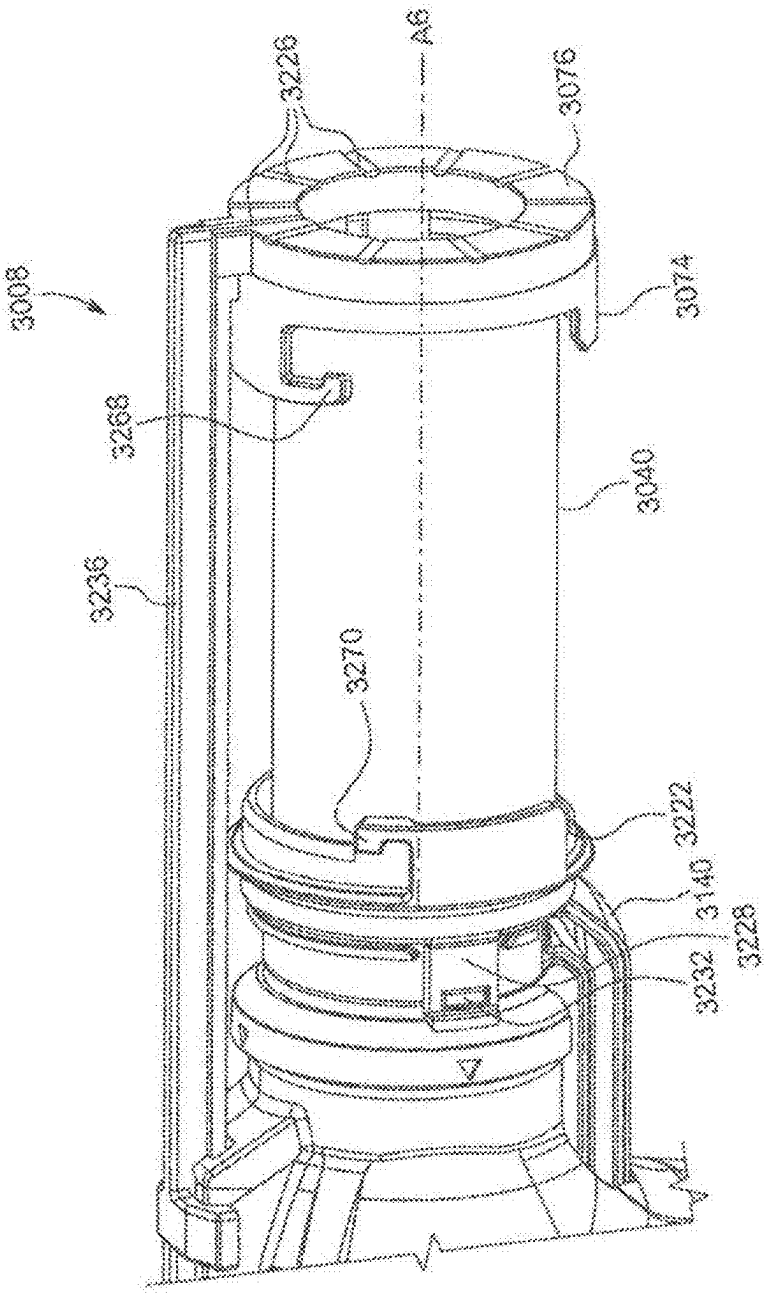
3008
3226
A6
3076
3074
3268
3040
3236
3270
3222
3140
3228
3232

FIG. 65A

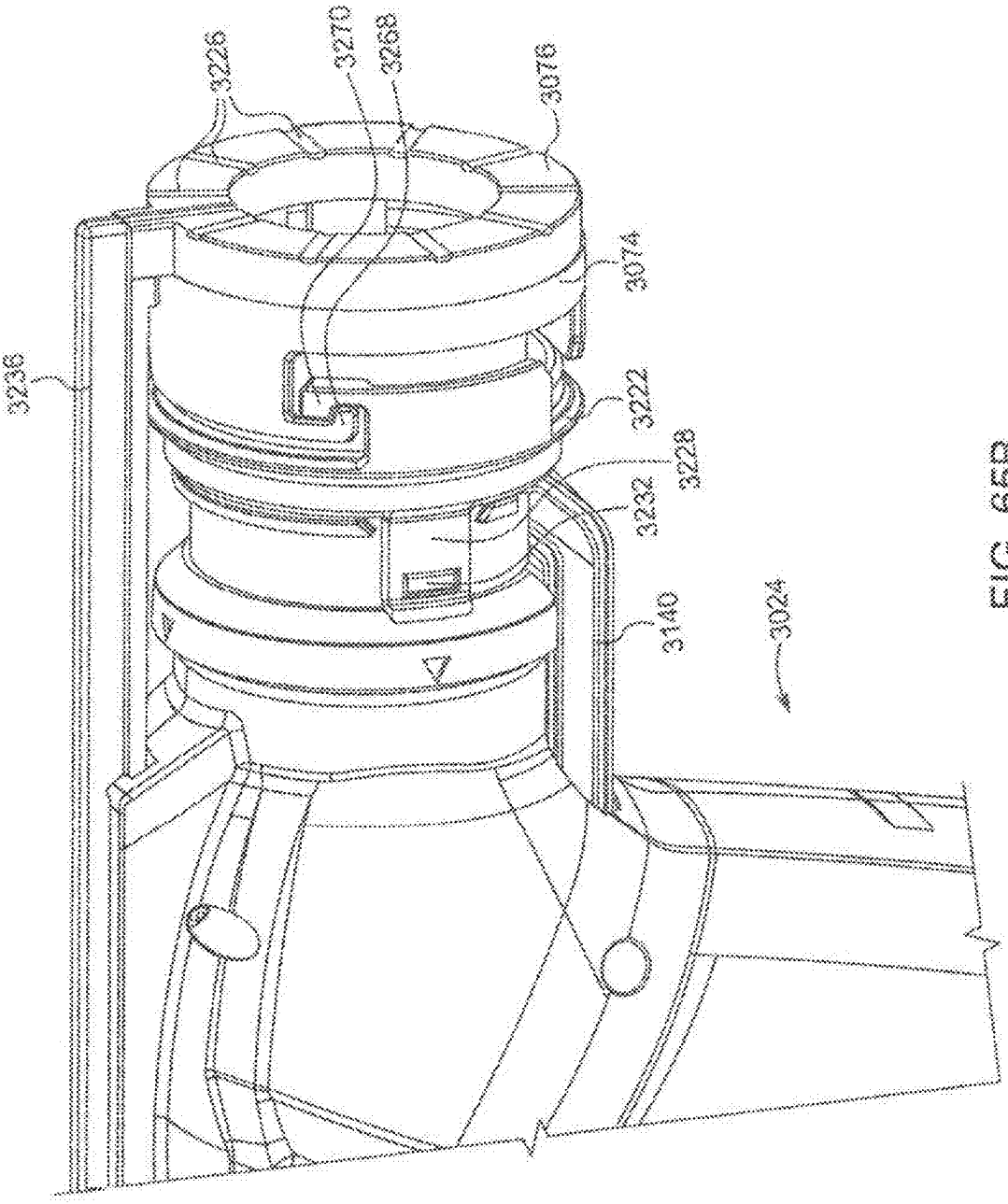

FIG. 65B

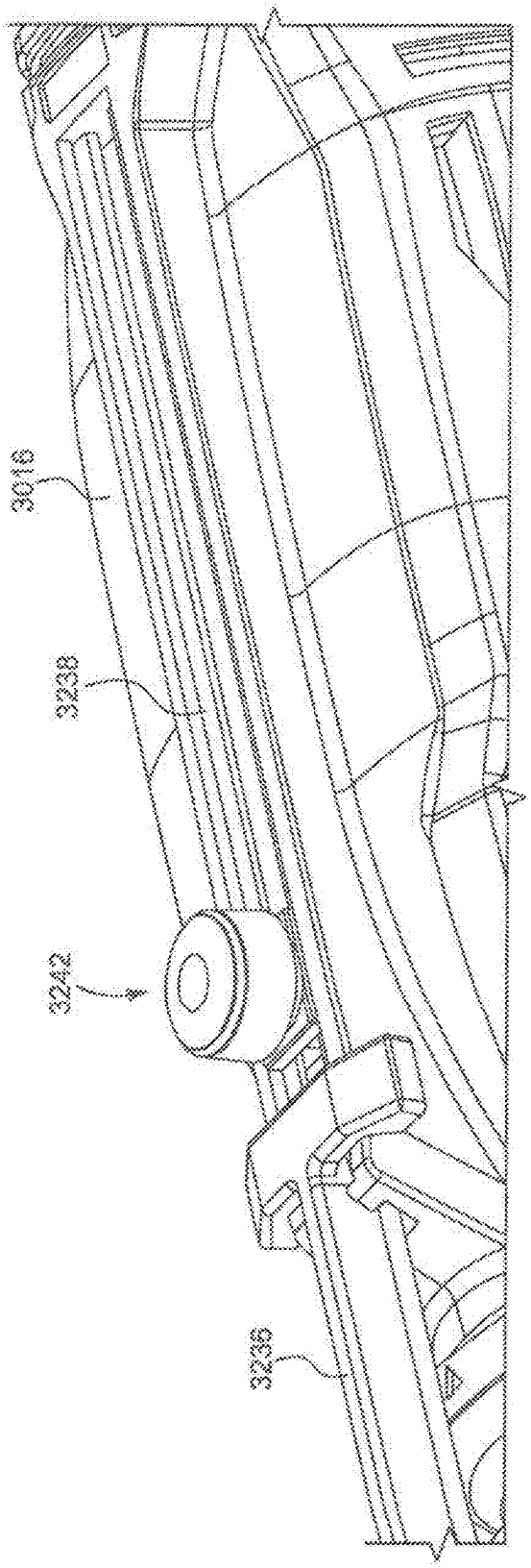

FIG. 66

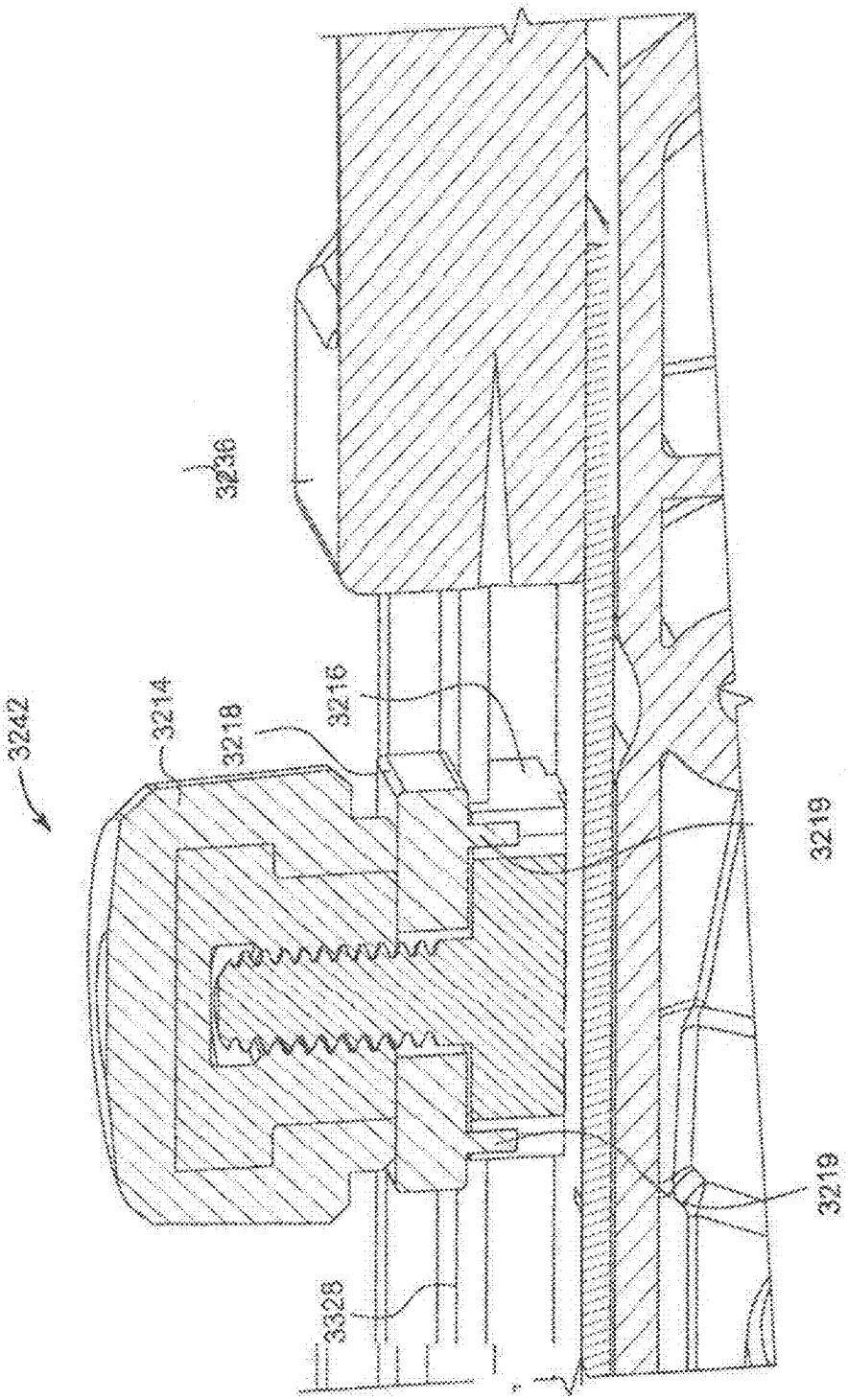

FIG. 67

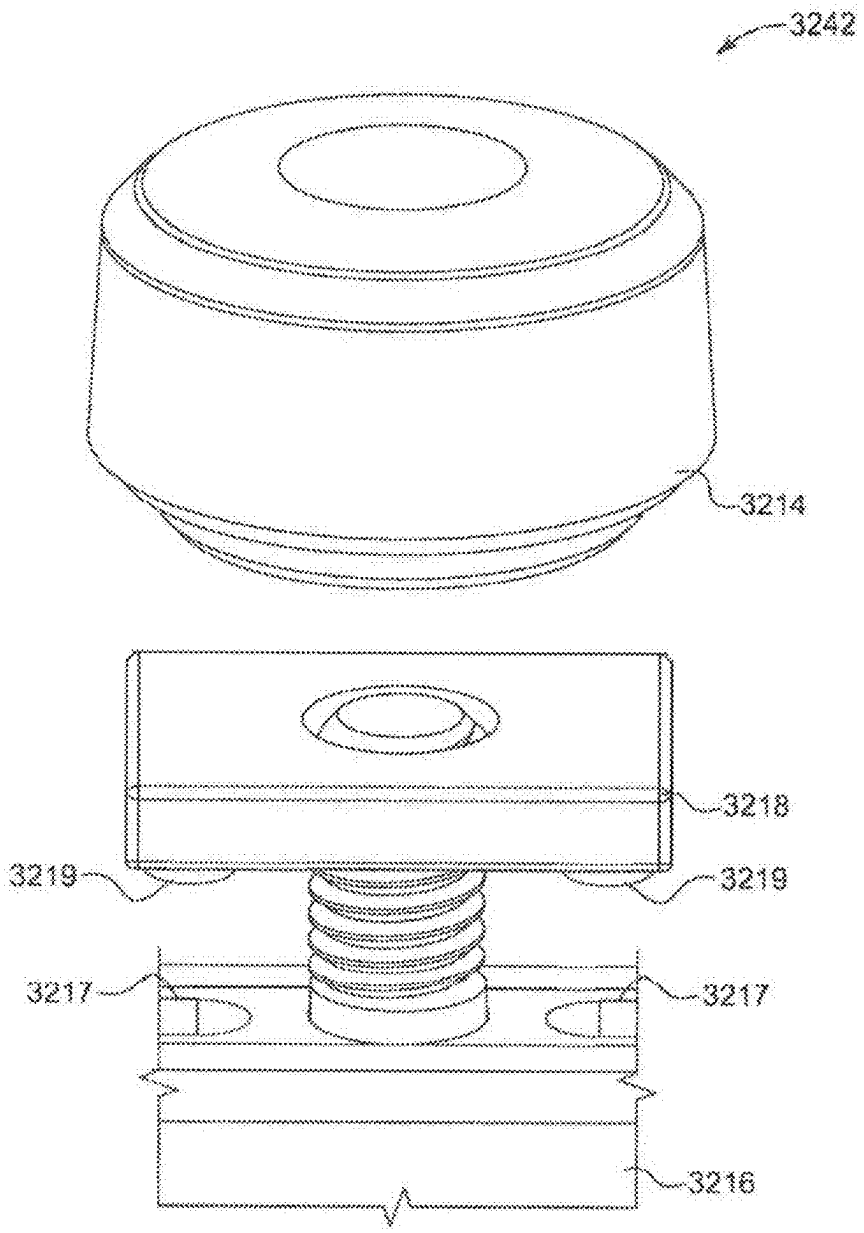

FIG. 68

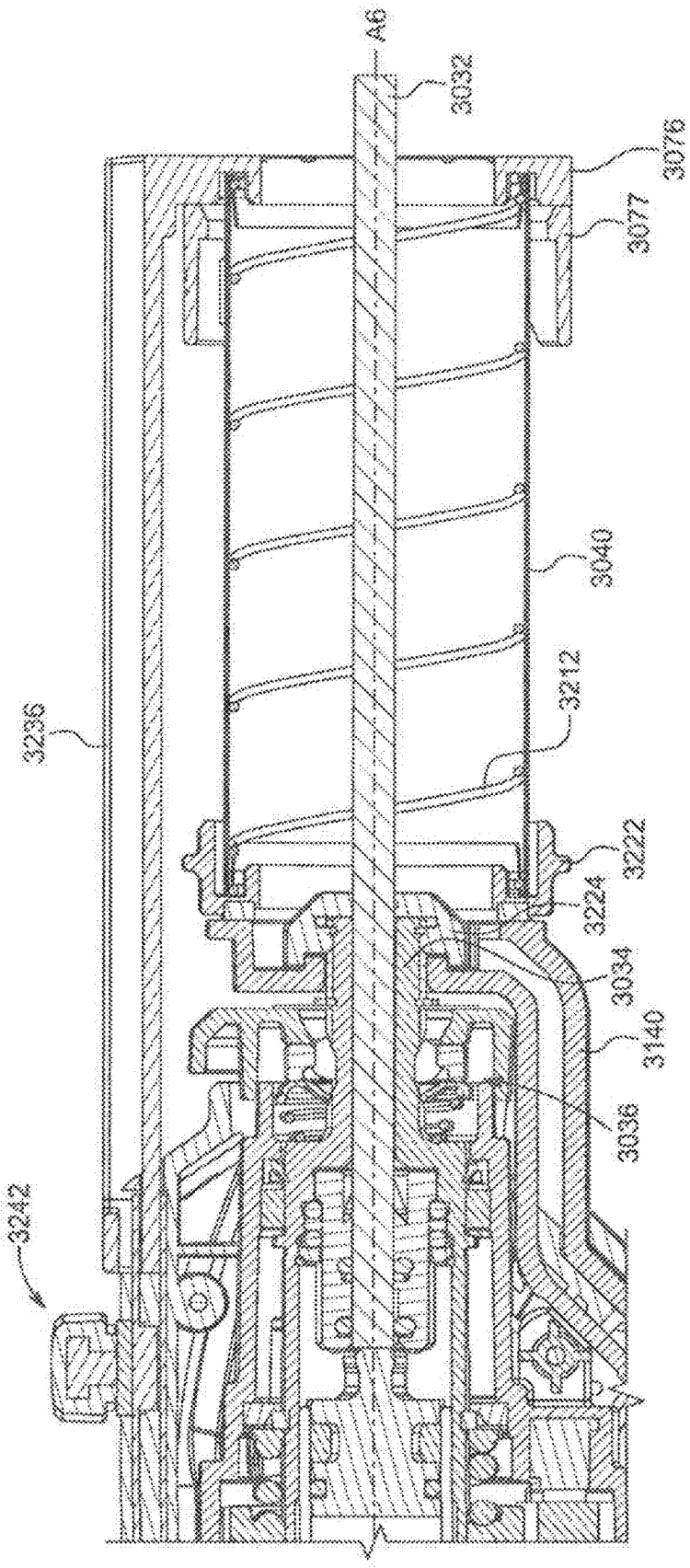
A6
3032
3076
3077
3040
3212
3236
3222
3224
3034
3140
3036
3242

FIG. 69

POWER TOOL WITH INTEGRATED DEPTH STOP

CROSS-REFERENCE TO RELATED APPLICATIONS

[0001] This application claims priority to U.S. Provisional Patent Application No. 63/169,611, filed on Apr. 1, 2021, to U.S. Provisional Patent Application No. 63/211,856, filed on Jun. 17, 2021, to U.S. Provisional Patent Application No. 63/355,475 filed on Jun. 24, 2022, to U.S. Non-provisional patent application Ser. No. 17/711,834, filed on Apr. 1, 2022, and to U.S. Non-provisional patent application Ser. No. 18/341,572, filed on Jun. 26, 2023, the entire content of each of which is incorporated herein by reference.

FIELD OF THE INVENTION

[0002] The present disclosure relates to power tools, and more particularly to dust collection assemblies for use with power tools.

BACKGROUND

[0003] Dust collection assemblies are typically used in tandem with hand-held drilling tools, such as rotary hammers, to collect dust and other debris during a drilling operation preventing dust and other debris from accumulating at a worksite. Such dust collection assemblies may be attached to a rotary hammer to position a suction inlet of the collector proximate a drill bit attached to the rotary hammer. Such dust collection assemblies may also include an on-board dust container in which dust and other debris is accumulated. Such dust containers are often removable from the dust collection assembly to facilitate disposal of the accumulated dust and debris.

SUMMARY

[0004] According to one aspect of the present disclosure, a power tool can include a housing, a guide rail fixed to the housing, a slide that is moveable along the guide rail, and a stop that is lockable at a plurality of positions along the guide rail to limit movement of the slide along the guide rail.

[0005] In some examples, the guide rail can be positioned within a channel formed in the housing.

[0006] In some examples, the guide rail can be formed as a single piece with the housing.

[0007] In some examples, the stop can include a first nut that is received in the channel and a second nut that is screwed to the first nut and can be tightened to lock the stop at a desired position and loosened to allow the stop to be moved along the guide rail.

[0008] In some examples, the first nut can be a T-nut and the second nut can be a thumb nut.

[0009] In some examples, the stop can further include a spacer between the first nut and the second nut.

[0010] In some examples, the spacer can include an alignment extrusion that is received in an alignment notch defined in the first nut.

[0011] In some examples, the guide rail can be positioned between the spacer and the first nut so that loosening the second nut increases a space between the spacer and the first nut to reduce friction on the guide rail.

[0012] In some examples, an end of the slide that engages the guide rail can include a flange.

[0013] In some examples, the slide can be coupled to move with a dust collection assembly that is attachable to the housing.

[0014] In some examples, the dust collection assembly can include a coupler configured to couple to the housing, an end cap that is coupled to the slide, and a dust tube that is collapsible between the coupler and the end cap.

[0015] In some examples, the coupler can include a first locking member and the end cap can include a second locking member that engages the first locking member to selectively lock the dust tube in a collapsed configuration.

[0016] According to another aspect of the present disclosure, a rotary hammer can include a housing defining a channel in an external surface of the housing, a chuck supported on and rotatable relative to the housing, a slide that is moveable within the channel, and a stop that is lockable at a plurality of positions along the channel to limit movement of the slide along the channel.

[0017] In some examples, the rotary hammer can further include a handle coupled to the housing opposite the chuck, wherein the channel can extend from the chuck to the handle in parallel with a rotational axis of the chuck.

[0018] In some examples, the rotary hammer can further include a dust container positioned along a bottom end of the housing, wherein the channel can be positioned along a top end of the housing that is opposite the bottom end of the housing.

[0019] In some examples, the dust container can be coupled directly to the housing.

[0020] According to yet another aspect of the present disclosure, a method of using a depth stop assembly of a power tool can include loosening a depth stop that is at a first position along a channel that is formed in an exterior surface of a housing of the power tool, moving the depth stop to a second position along the channel that is spaced away from the first position, tightening the depth stop to lock the depth stop at the second position, and moving a slide along the channel toward the depth stop, the depth stop preventing further movement of the slide when the slide contacts the depth stop.

[0021] In some examples, loosening the depth stop can include turning a thumb nut that is screwed to a T-nut to reduce friction between a spacer and a guide rail that is positioned within the channel.

[0022] In some examples, the method can further include attaching a dust collection assembly over a chuck that is rotatable relative to the housing, and inserting the slide into an open end of the channel that faces the chuck.

[0023] In some examples, the second position can be at a closed end of the channel that is opposite the open end of the channel, and the method can further include locking the dust collection assembly in a collapsed configuration, and moving the slide to a fully-inserted position within the channel.

[0024] Other features and aspects of the disclosure will become apparent by consideration of the following detailed description and accompanying drawings.

BRIEF DESCRIPTION OF THE DRAWINGS

[0025] FIG. **1** is a front perspective view of a rotary hammer including an integrated dust collection assembly according to one embodiment.

[0026] FIG. **2** is a rear perspective view of a rotary hammer including an integrated dust collection assembly according to one embodiment.

[0027] FIG. **3**A is a first cross-sectional view of the rotary hammer of FIG. **1**.

[0028] FIG. **3**B is a second cross-sectional view of the rotary hammer of FIG. **1**.

[0029] FIG. **4** is an enlarged cross-sectional view of the rotary hammer of FIG. **3**.

[0030] FIG. **5** is a schematic illustration of a rotary hammer including an integrated dust collection assembly according to another embodiment.

[0031] FIG. **6** is a schematic illustration of a rotary hammer including an integrated dust collection assembly according to yet another embodiment.

[0032] FIG. **7** is a schematic illustration of a rotary hammer including an integrated dust collection assembly according to yet another embodiment.

[0033] FIG. **8** is a schematic illustration of a rotary hammer including an integrated dust collection assembly according to yet another embodiment.

[0034] FIG. **9** is a schematic illustration of a rotary hammer including an integrated dust collection assembly according to yet another embodiment.

[0035] FIG. **10** is a schematic illustration of a rotary hammer including an integrated dust collection assembly according to yet another embodiment.

[0036] FIG. **11** is a schematic illustration of a rotary hammer including an integrated dust collection assembly according to yet another embodiment.

[0037] FIG. **12** is a schematic illustration of a rotary hammer including an integrated dust collection assembly according to yet another embodiment.

[0038] FIG. **13** is a schematic illustration of a rotary hammer including an integrated dust collection assembly according to yet another embodiment.

[0039] FIG. **14** is a cross-sectional view of a rotary hammer including an integrated dust collection assembly according to yet another embodiment.

[0040] FIG. **15** is a side view of a rotary hammer including an integrated dust collection assembly according to yet another embodiment.

[0041] FIG. **16** is a side view of the rotary hammer of FIG. **15**, with portions of the rotary hidden for clarity.

[0042] FIG. **17** is detail view of a portion of the rotary hammer of FIG. **15** illustrating the motor and fan.

[0043] FIG. **18** is a side view of the rotary hammer of FIG. **15** with portions of the rotary hammer hidden for clarity.

[0044] FIG. **19** is a first perspective view of a rotary hammer including an integrated dust collection assembly according to yet another embodiment.

[0045] FIG. **20** is a second perspective view of the rotary hammer shown in FIG. **19**.

[0046] FIG. **21** is a cross-sectional view of the rotary hammer of FIG. **20**.

[0047] FIG. **22** is a detailed view of a drive unit and dust collection assembly from a first side.

[0048] FIG. **23** is a detailed view of the drive unit and dust collection assembly from a second side.

[0049] FIG. **24** is a detailed view of a dust tube.

[0050] FIG. **25** is a detailed view of a portion of a dust transfer tube.

[0051] FIG. **26** is a detailed view of a connection between the dust tube and the nose of the rotary hammer.

[0052] FIG. **27** is a detailed view of a fan according to one embodiment.

[0053] FIG. **28** is a detailed view of a fan and filter cleaning mechanism according to one embodiment.

[0054] FIG. **29** is an auxiliary handle according to one embodiment.

[0055] FIG. **30** is a detailed view a portion of the auxiliary handle.

[0056] FIG. **31** is a detailed view of a connection between the auxiliary handle and the rotary hammer.

[0057] FIG. **32** is a perspective view of a rotary hammer including an integrated dust collection assembly according to yet another embodiment.

[0058] FIG. **33** is a section view of a rotary hammer shown in FIG. **32**.

[0059] FIG. **34**A is a first close-up section view of a lockout system in a first position.

[0060] FIG. **34**B is a second close-up section view of the lockout system of FIG. **34**A in a second position.

[0061] FIG. **35**A is a first section view of an auxiliary handle in a collapsed position.

[0062] FIG. **35**B is a second section view of the auxiliary handle of FIG. **35**A in between the collapsed position and an extended position.

[0063] FIG. **35**C is a third section view of the auxiliary handle of FIG. **35**A in the extended position.

[0064] FIG. **36** is a perspective view of another embodiment of a rotary hammer including an integrated dust collection assembly according to yet another embodiment.

[0065] FIG. **37** is a cut away view of a rotary hammer shown in FIG. **36**.

[0066] FIG. **38**A is a first section view of an alternate embodiment of an auxiliary handle in a collapsed position.

[0067] FIG. **38**B is a second section view of an auxiliary handle of FIG. **38**A in-between the collapsed position and an extended position.

[0068] FIG. **38**C is a third section view of the auxiliary handle of FIG. **38**A in collapsed the extended position.

[0069] FIG. **39** is a perspective view of a rotary hammer including an auxiliary handle in an operational position.

[0070] FIG. **40** is a perspective view of the rotary hammer including the auxiliary handle of FIG. **39** in a stowed position.

[0071] FIG. **41**A is a perspective view of a lockable hinge of the auxiliary handle of FIG. **39** with a locking element depressed.

[0072] FIG. **41**B is a perspective view of the lockable hinge of the auxiliary handle of FIG. **39** as the auxiliary handle is being rotated.

[0073] FIG. **41**C is a perspective view of the lockable hinge of the auxiliary handle of FIG. **39** with the locking element raised.

[0074] FIG. **42** is a side view of an alternate embodiment of an auxiliary handle.

[0075] FIG. **43** is a side view of an alternate embodiment of an auxiliary handle.

[0076] FIG. **44** is a perspective view of a coupling system of the auxiliary handle of FIG. **39** or FIG. **42**.

[0077] FIG. **45** is a perspective view of an alternate embodiment of a coupling system.

[0078] FIG. **46** is a section view the coupling system of FIG. **45**.

[0079] FIG. **47** is an internal view of the coupling system of FIG. **45**.

[0080] FIG. **48** is a perspective view of an alternate embodiment of a coupling system.

[0081] FIG. **49** is a section view the coupling system of FIG. **48**.

[0082] FIG. **50**A is a perspective view an alternate embodiment of an auxiliary handle.

[0083] FIG. **50**B is a perspective view of an alternate embodiment a back end of the rotary hammer.

[0084] FIG. **51** is a perspective view of the dust tube assembly.

[0085] FIG. **52** is an exploded view of a tube coupler and an exterior transfer tube.

[0086] FIG. **53**A is a side view of a storage locking assembly in a home position.

[0087] FIG. **53**B is a side view of the storage locking assembly with a plurality of radial cams aligned with a plurality of locking slots.

[0088] FIG. **53**C is a side view of the storage locking assembly in a retracted position.

[0089] FIG. **54**A is an exploded view of an alternate embodiment of a tube coupler and a transfer tube.

[0090] FIG. **54**B is a perspective view the tube coupler and the transfer tube of FIG. **54**A.

[0091] FIG. **55**A is an exploded view of an alternate embodiment of a tube coupler and a transfer tube.

[0092] FIG. **55**B is a perspective view the tube coupler and the transfer tube of FIG. **55**A.

[0093] FIG. **56**A is an exploded view of an alternate embodiment of a tube coupler and a transfer tube.

[0094] FIG. **56**B is a perspective view the tube coupler and the transfer tube of FIG. **56**A.

[0095] FIG. **57**A is a perspective view of an alternate embodiment of a tube coupler and a transfer tube that are partially assembled.

[0096] FIG. **57**B is a fully assembled top view the tube coupler and the transfer tube of FIG. **57**A.

[0097] FIG. **57**C is a fully assembled perspective view the tube coupler and the transfer tube of FIG. **57**A.

[0098] FIG. **58**A is a plan view of an alternate embodiment of a tube coupler and a transfer tube with a locking feature aligned with a locking notch.

[0099] FIG. **58**B is a plan view of the tube coupler and the transfer tube of FIG. **58**A with the locking feature partially inserted into the locking notch.

[0100] FIG. **58**C is a plan view of the tube coupler and the transfer tube of FIG. **58**A with the locking feature fully inserted into the locking notch.

[0101] FIG. **59** is a perspective view of a depth setting assembly.

[0102] FIG. **60** is an exploded view of an adjustable stop.

[0103] FIG. **61**A is a perspective view of an alternate embodiment of a storage locking mechanism in an unlocked configuration.

[0104] FIG. **61**B is a section view of a slidable lock of the storage locking assembly of FIG. **61**A.

[0105] FIG. **61**C is a perspective view of the storage locking assembly of FIG. **61**A in a locked configuration.

[0106] FIG. **62**A is a perspective view of an alternate embodiment of a storage locking mechanism in an unlocked configuration.

[0107] FIG. **62**B is a perspective view of the storage locking assembly of FIG. **62**A in a locked configuration.

[0108] FIG. **63**A is a perspective view of an alternate embodiment of a storage locking mechanism in an unlocked configuration.

[0109] FIG. **63**B is a perspective view of the storage locking assembly of FIG. **63**A in a locked configuration.

[0110] FIG. **64**A is a perspective view of an alternate embodiment of a storage locking mechanism in an unlocked configuration.

[0111] FIG. **64**B is a perspective view of the storage locking assembly of FIG. **64**A in a locked configuration.

[0112] FIG. **65**A is a perspective view of an alternate embodiment of a dust tube assembly in an expanded configuration.

[0113] FIG. **65**B is a perspective view the dust tube assembly of FIG. **65**A in a collapsed position.

[0114] FIG. **66** is a perspective view of an alternate embodiment of a depth setting assembly.

[0115] FIG. **67** is a section view of the depth setting assembly of FIG. **66**.

[0116] FIG. **68** is an exploded view of an alternate embodiment of an adjustable stop.

[0117] FIG. **69** is a section view of the dust tube assembly.

[0118] Before any embodiments of the disclosure are explained in detail, it is to be understood that the present disclosure is not limited in its application to the details of construction and the arrangement of components set forth in the following description or illustrated in the following drawings. The present disclosure is capable of other embodiments and of being practiced or of being carried out in various ways. Also, it is to be understood that the phraseology and terminology used herein is for the purpose of description and should not be regarded as limiting.

DETAILED DESCRIPTION

[0119] Power tools, such as rotary hammers, generate a large amount of dust and debris when operating the tool. Accordingly, dust extractors or dust collection systems have been implemented to try and capture the dust rather than allowing the dust to be expelled into the air or breathed in by a user. Existing dust collection systems are generally separate tools that may be used in conjunction with the power tool. For example, some dust collections systems are contained within a separate tool housing and may be connected to the housing of the power tool. Other dust collection systems utilize a separate shop vacuum and dust passage to collect dust. Current dust collections systems can be bulky, awkward, or heavy when connected to the power tool. Likewise, dust collection systems that utilize a separate shop vacuum may limit movement and maneuverability of the power tool due to the fact that it is restrained by the shop vacuum. Furthermore, because existing dust collections are typically realized as an independent tool, the overall tool system may be more costly since duplicate parts may be included in the power tool and the dust collection system. For example, the power tool and the dust collection systems may each have their own battery, motor, fan, controller, housing, etc.

[0120] The present disclosure addresses some of these issues and provides a series of other improvements that may be implemented to one or both a power tool and/or a dust collection assembly. The present disclosure provides a power tool with an integrated dust collection assembly contained within the power tool. As used in the present disclosure, integration of the dust collection assembly is intended to mean that at least some parts of the dust collection assembly are not removable from the power tool and/or are integrated within the same housing as the power

tool. While some parts of the dust collection assembly may be removably coupled to the power tool, such as a dust tube and/or a dust container, other parts, such as a fan and/or a fan motor are not intended to be removed from the power tool. Additionally, integration of the dust collection assembly into the power tool may result in at least some of the components being utilized in a shared manner between the power tool and the dust collection assembly. However, this does not require all parts to be shared. Some parts of dust collection assembly may be separate from the power tool or may be duplicative of the parts in the power tool.

[0121] The integration of the dust collection assembly within the power tool may provide several different benefits. For example, the integration of the dust collection assembly within the power tool may allow for a reduced number of parts for the operation of the power tool and dust collection assembly. This may in turn reduce the overall cost of the system. Additionally, in some embodiments, the reduction of parts may also reduce the overall weight and size of the system. Likewise, in some embodiments, the profile of the tool system is more compact, which may allow a user to maneuver and hold the tool system more easily.

[0122] As will be understood by a person of ordinary skill in the art, although the present disclosure is described with respect to a rotary hammer, the features described herein may be applied to other handheld power tools which generate dust when operating. For example, in some embodiments, the present disclosure may be applied to other types of power tools, such as drills, grinders, polishers, sanders, cutting tools, or other power tools which generate dust.

[0123] FIGS. **1** and **2** illustrate a power tool, such as a rotary hammer **4**, according to one embodiment. The illustrated rotary hammer **4** includes a dust collection assembly **8** integrated within the body of the tool. In other embodiments, one or more portion of the dust collection assembly **8** may be realized as a separate element from the rotary hammer **4** or may be positioned externally of the rotary hammer **4**. As will be appreciated based on the present disclosure, the integration of the dust collection assembly **8** within the rotary hammer **4** may allow for a reduced number of parts for the operation of the rotary hammer **4** and dust collection assembly **8**. For example, in some embodiments, the dust collection assembly **8** and the rotary hammer **4** may share certain parts. In some embodiments, this may reduce the overall cost of the system. Similarly, in some embodiments, this may reduce the overall weight and size of the system. Likewise, in some embodiments, the profile of the tool system is more compact, which may allow a user to maneuver and hold the tool system more easily. It should be understood that the various features and embodiments described in the present disclosure may be mixed or interchanged into different combinations of features and embodiments. In other words, the specific combinations of features disclosed herein are not intended to be limiting but are purely for the sake of illustrating example embodiments including various features of the overall disclosure.

[0124] The rotary hammer **4** includes a housing **12** having a main body **16** and a handle **20** extending rearward of the main body **16**. The main body **16** includes a first end **24** to which a tool bit **32** may be coupled, and a second end **28** from which the handle **20** extends. The tool bit **32** may be received within a chuck assembly **36** formed in the first end **24** of the main body **16**. Additionally, a suction pipe **40** is slidably engaged with the first end **24** of the main body **16**. As shown in FIGS. **3**A and **3**B, the housing **12** may be divided into quadrants defined by an upper half, a lower half, a front half, and a rear half. In the illustrated embodiment, the upper half begins above the suction pipe **40** of the dust collection assembly **8**. Additionally, in the illustrated embodiment, the front half begins at the first end **24** of the housing **12** and extends to a midway point between the first end **24** of the main body **16** and a rear end of the handle **20**. Accordingly, this provides for an upper front quadrant (UFQ), an upper rear quadrant (URQ), a lower front quadrant (LFQ), and a lower rear quadrant (LRQ). However, in other embodiments, the quadrants may be defined by different divisions.

[0125] A drive unit **44** is positioned within the main body **16** of the housing **12**. The drive unit **44** includes a motor **48** and a drive assembly **52** operatively coupled to the motor **48** for receiving torque from the motor **48**. The motor **48** defines a motor axis A**1** that is parallel with a working axis A**2** of the rotary hammer **4**. The working axis A**2** of the rotary hammer **4** is defined as the axis through the tool bit **32** and the drive assembly **52**. Power to the motor **48** is provided by a battery **56**, which may be received within a battery receptacle **60** on a bottom portion of the handle **20**. However, in other embodiments, the battery receptacle **60** may be disposed within other portions of the housing **12**.

[0126] A cooling fan **64** is operably coupled to the motor **48** and shares a rotational axis with the motor axis A**1**. The motor **48** thereby drives both the drive assembly **52** and the cooling fan **64**. In the illustrated embodiment, the cooling fan **64** is positioned on a forward side of the motor **48** between the chuck **36** and the motor **48**. In another embodiment, the cooling fan **64** is operably coupled to the motor **48** and positioned below the drive unit **44**. As will be described in further detail herein, the cooling fan **64** draws air along an airflow path which extends across the motor **48** to cool the motor **48**. More specifically, the cooling fan **64** draws in air via a cooling air intake **68** disposed in the housing **12** on a rearward side of the motor **48**, and exhausts air via a cooling air exhaust **72** disposed in the housing **12** on a forward side of the motor **48**.

[0127] In the illustrated embodiment, the drive unit **44** and the cooling fan **64** are positioned within the upper half of the housing **12**. Accordingly, the drive unit **44** and the cooling fan **64** are positioned above the suction pipe **40**. Further, the drive unit **44** and the cooling fan **64** are positioned within a front half of the housing **12**. The arrangement of the drive unit **44** and the cooling fan **64** within the upper front quadrant provides for additional space for the dust collection assembly **8**. For example, the drive unit **44** does not extend (or only minimally extends) into the upper rear quadrant. Accordingly, a space exists between the drive unit **44** and the second end **28** of the main body **16**. Likewise, the drive unit **44** does not extend (or only minimally extends) into the lower front quadrant and the lower rear quadrant, leaving sufficient space for the dust collection assembly **8**.

[0128] The rotary hammer **4** also includes a dust collection assembly **8**. In the illustrated embodiment, the dust collection assembly **8** is integrated within the main body **16** of rotary hammer **4**. However, in other embodiments, one or more part of the dust collection assembly **8** may be disposed within the handle **20** of the rotary hammer **4** or may be positioned externally of the housing **12**. With reference to FIGS. **3**A-**3**B, the dust collection assembly **8** includes a nozzle **76**, a telescoping suction pipe **40**, a dust container **84**,

a filter **88**, and a suction fan **92**. The nozzle **76** is located at a first end of the telescoping suction pipe **40** and proximate to the tool bit **32** of the rotary hammer **4** such that the tool bit **32** extends through the nozzle **76**. A second end of the telescoping suction pipe **40** extends into the housing **12** such that the suction pipe **40** extends and retracts from the first end **24** of the main body **16**.

[0129] The dust container **84** is selectively attachable to the housing **12**. The dust container **84** is detachable from the housing **12** of the rotary hammer **4** and may be removed to allow an operator to empty the dust and other debris from the dust container **84**. A latch **96** operable by a user to selectively decouple the dust container **84** from the housing **12** is located on the housing **12** proximate the handle **20**. In the embodiment of FIG. **2**, the latch **96** is positioned near the bottom edge of the housing **12**. In another embodiment, as shown in FIG. **14**, the latch **96** may be located on the second end **28** of the housing **12** such that it is facing the handle **20** and positioned to be operated by a user while the user grasps the handle **20**. In the illustrated embodiment, the latch **96** is located opposite a trigger switch **98** which selectively operates the rotary hammer **4**. In the illustrated embodiment, the dust container **84** is prevented from being secured to the housing **12** without the filter **88** in place. For example, the filter **88** acts as a portion of the connection between the dust container **84** and the housing **12**. Thus, without the filter **88** in place, the dust container **84** is prevented from being coupled to the housing **12**.

[0130] When coupled to the rotary hammer **4**, the dust container **84** is substantially received within the main body **16** of the housing **12** such that it does not extend (or only minimally extends) outside of the housing **12** when coupled to the housing **12**. However, in other embodiments, the dust container **84** may only be partially received within the housing **12** or may be attached to an outer portion of the housing **12**. In the illustrated embodiment, the dust container **84** extends along the width of bottom portion of the main body **16**. Additionally, the dust container **84** extends into the upper rear quadrant and into the space between the drive unit **44** and the second end **28** of the main body **16**.

[0131] The dust container **84** includes an inlet **100** for a dust laden air stream and an outlet **104** defined by an outlet end of the filter **88**. More specifically, the dust container **84** includes opposite side walls **108** and a bottom wall **112** extending between the side walls **108**. The dust container **84** additionally includes end walls **116** adjacent each of the side walls **108** and the bottom wall **112**. An opening **120** is defined in a first end wall **116** through which the filter **88** is received. The first end wall **116** further includes the inlet **100** for dust laden air. A connection port **124** extends through the inlet **100** to direct the dust laden air from the suction pipe **40** into the dust container **84**. In some embodiments, the connection port **124** is a DEC **26** connection. The dust container **84** is operable to collect dust and other debris from a workpiece during drilling and/or hammering operation performed by the rotary hammer **4** to maintain a user's work area substantially clear of dust and other debris.

[0132] As mentioned, the dust container **84** extends upward into to the housing **12** of the rotary hammer **4** between the motor **48** and the handle **20**. The filter **88** is positioned within the dust container **84** in the section of the dust container **84** extending into the space between the motor **48** and the second end **28** of the main body **16** (i.e., the upper rear quadrant). In other embodiments, the filter **88** may be positioned in other sections of the dust container **84**. In some embodiments, the filter **88** is a high efficiency particulate air ("HEPA") filter positioned between the dust container **84** and a suction fan **92**.

[0133] The suction fan **92** is positioned rearwardly of the motor **48** adjacent the filter **88** to draw dust laden air through the filter **88**. The suction fan **92** is directly mounted to an output shaft **94** of the motor **48** and shares a rotational axis with the motor axis A**1**. In some embodiments, however, the suction fan **92** is operatively coupled to the motor **48** via other mechanical means such as a clutch, belt, or power take off. The motor **48**, suction fan **92**, and filter **88** are located within the upper half of the housing **12** as seen in FIG. **3**. More specifically, the filter **88** is in-line with the suction fan **92**, motor **48**, the cooling fan **64**, and drive unit **44**. An axis A**3** through the center of the filter **88** intersects the rotational axis A**1** of the suction fan **92** at an obtuse angle. In the illustrated embodiment, the axis A**3** through the filter **88** is defined as extending perpendicular from the surface of the filter **88** facing the suction fan **92**. The angled orientation of the filter **88** results in an overall length of the rotary hammer **4** as measured from a rearmost point on the handle **20** of the housing **12** to a forwardmost point on the nozzle **76** of the dust collection assembly **8** being reduced. The obtuse angle of the filter **88** may improve the vertical-up operation of the rotary hammer **4**. Additionally, the obtuse angle of the filter **88** may provide for an improved sealing surface between the dust container **84** and the filter **88**.

[0134] When rotated by the motor **48**, the suction fan **92** creates an air flow which generates a vacuum in the suction pipe **40** to draw dust and other debris into the dust container **84** and through the filter **88**. After the dust is separated from the air via the filter **88**, the clean air is exhausted through an exhaust port **128** formed in the housing **12** adjacent the suction fan **92**. As shown in FIG. **1**, the exhaust port **128** is positioned rearward of the motor **48** and adjacent the suction fan **92**.

[0135] With continued reference to FIGS. **3**A-**3**B, the suction pipe **40** extends longitudinally within the rotary hammer **4** housing in a direction parallel to the working axis A**2**. The suction pipe **40** is configured to move along the same longitudinal axis, thereby adjusting the length of the suction pipe **40** and the location of the nozzle **76**. As the tool bit **32** plunges into the workpiece, the suction pipe **40** retracts into the housing **12** in a telescoping manner. Included within the rotary hammer housing **12** is a plunge depth stop **132**, which limits the extent to which the suction pipe **40** may retract into the housing **12**, and in turn, limits the extent to which the tool bit **32** can plunge into the workpiece. The plunge depth stop **132** is movable along the length of the suction pipe **40** and is selectively fixed to limit the extent to which the suction pipe **40** may retract into the housing **12**. Also included on the housing **12** is an extension stop **136**. The extension stop **136** limits the extent to which the suction pipe **40** may extend out of the housing **12** by selectively fixing to the suction pipe **40** along the length of the suction pipe **40**. This feature can be used to adjust the extension length of the suction pipe **40** to correspond to the size of the tool bit **32** being used. For example, when using a 2-inch tool bit, the extension length of the suction pipe **40** can be reduced to 2 inches to correspond to the length of the tool bit **32**. If the length of the suction pipe **40** is not limited, then the end of the suction pipe **40** may extend far beyond the end of the tool bit **32**.

[0136] Coupled to the suction pipe **40** is a transfer tube **140**. The transfer tube **140** is stationary with respect to the housing **12** and functions as a connection between the suction pipe **40** and dust container **84**. A first end of the transfer tube **140** proximate the dust container **84** has a bend of between 0 and 90 degrees. The connection port **124** is coupled to the first end of the transfer tube **140** to facilitate the connection with the dust container **84**. In some embodiments the connection port **124** may be a DEC **26** port. The bend in the transfer tube **140** and the connection port **124** may provide for an improved seal between the transfer tube **140** and dust container **84**. Additionally, the connection port **124** allows a user to remove the dust container **84**, for the purpose of emptying the dust container **84**, without exposure to the dust within the dust container **84**.

[0137] With reference to FIGS. **3**A and **4**, a filter cleaning mechanism **148** is disposed within the housing **12** and positioned proximate a forwardmost edge of the filter **88**. In other embodiments, the filter cleaning mechanism **148** can be positioned proximate any edge of the filter **88**. The filter cleaning mechanism **148** includes an anvil **152** for impacting the filter **88**, a striker **156** for striking the anvil **152**, a solenoid **160** for causing the striker **156** to strike the anvil **152**, and a biasing member **164** for biasing the striker **156**. The anvil **152** is positioned proximate the filter **88** and coupled to the housing **12** about an anvil axis A**4**. The anvil **152** rotates about the anvil axis A**4** to move between a first anvil position spaced from the filter **88** and a second anvil position in contact with an impact location on the filter **88**. The striker **156** has a longitudinal axis A**5** parallel to the working axis A**2** of the rotary hammer **4** along which the striker **156** moves between a first striker position and a second striker position. In the first striker position, the striker **156** is in contact with the anvil **152** at the first anvil position. In other embodiments, the striker **156** may be spaced from the anvil **152** while in the first striker position. In the second striker position, the striker **156** is in contact with the anvil **152** such that the anvil **152** rotates to the second anvil position and contacts the filter **88** at an impact location. In some embodiments, the filter cleaning mechanism **148** does not include an anvil **152**. Rather, the striker **156** directly impacts the filter **88** when in the second striker position. The solenoid **160** is supported by the housing **12** and surrounds at least a portion of the striker **156**. The biasing member **164** is located on the opposite end of the striker **156** and solenoid **160** with respect to the anvil **152** and filter **88**. In the illustrated embodiment, the biasing member **164** is a compression spring. The biasing member **164** biases the striker **156** toward the first striker position until the solenoid **160** is activated, at which point the solenoid **160** overpowers the biasing member **164** causing the striker **156** to move to the second striker position. In the embodiment of FIG. **14**, a second biasing member **166**, illustrated as a torsion spring, is coupled to the anvil **152** for biasing the anvil **152** to the first anvil position.

[0138] The filter cleaning mechanism **148** operates as follows. In one embodiment, the filter cleaning mechanism **148** is automatically actuated when the suction fan **92** becomes inactive. A controller (not shown) controls activation of the solenoid **160** to move the striker **156**. Triggering the solenoid **160** may be based on detection of inactivity of the suction fan **92** or inactivity of the motor **48**. As used herein, the suction fan **92** may be considered inactive when it has stopped rotating, or the suction fan **92** may be considered inactive when the suction fan **92** is rotating at a speed below a predetermined threshold when the airflow induced by the suction fan **92** has effectively stopped. Similarly, the motor **48** may be considered inactive when it has stopped rotating, or it is operating below a predetermined threshold of rotational speed. In another embodiment, the filter cleaning mechanism **148** may be actuated while the suction fan **92** or motor **48** is active. In the illustrated embodiment an actuator, such as a push button **168**, is disposed on the outside of the housing **12** and allows the user to manually initiate the filter cleaning mechanism **148** (FIG. **1**). The push button **168** allows an operator to clean the filter **88** at will or intermediately between the automatic cleaning operation.

[0139] In a rest state, the anvil **152** is in the first anvil position, the striker **156** is in the first striker position, and the solenoid **160** is not energized. To initiate the operational state, the solenoid **160** must be energized either automatically or through the push button **168**. Once energized, the solenoid **160** overpowers the biasing member **164** causing the striker **156** to move from the first striker position to the second striker position. Once at the second striker position, the striker **156** strikes the anvil **152** causing the anvil **152** to move from the first anvil position to the second anvil position and impact the filter **88** at the impact location. The impact of the anvil **152** on the filter **88** causes the dislodging of dust and other debris from the filter **88**. After the anvil **152** impacts the filter **88**, the solenoid **160** is automatically deactivated, thereby allowing the anvil **152** and striker **156** to return to the first anvil and striker positions, respectively.

[0140] The rotary hammer **4** of the embodiment of FIGS. **1-4** utilizes a single power source (e.g., a battery **56**) and single electric motor **48** to operate the drive assembly **52** and dust collection assembly **8**. Portions of the dust collection assembly **8** being integral with the housing **12** may allow for an improved component layout for vertical up operations. Two distinct air flow paths are designated within the housing **12**. The first air flow path is the dust collector flow path in which dust laden air enters through a suction air inlet in the nozzle **76**, travels through the suction pipe **40**, into the transfer tube **140**, and deposits the dust with the help of the filter **88** into the dust container **84**. After passing through the dust container **84** and filter **88**, the now clean air exits the housing **12** through the suction air exhaust **128**. The air flow in the dust collector flow path is driven by the suction fan **92** and motor **48**. The second air flow path is characterized as a cooling air flow path. The cooling air flow path includes the cooling air intake **68** on the housing **12** and the cooling air exhaust **72** on housing **12** spaced away from the cooling air intake **68**. Air in the cooling air flow path enters through the cooling air intake **68**, is directed over the motor **48** to cool the motor **48** and exits through the cooling air exhaust **72**. The cooling air path is powered by the cooling fan **64** which is mounted coaxially on the motor **48** with the suction fan **92**.

[0141] FIG. **5** illustrates another embodiment of a rotary hammer **4***b* with an integrated dust collection assembly **8***b*, with like parts having like reference numerals plus the letter "b", and the following differences explained below. In the embodiment illustrated in FIG. **5**, the motor axis Alb of this embodiment is perpendicular to the drive assembly **52***b* and working axis A**2***b*. The dust container **84***b* is selectively coupled to the housing **12***b* on a lower front portion beneath the drive assembly **52***b*. The orientation of this embodiment

may improve vertical down operation and results in a rotary hammer **4***b* of reduced length.

[0142] FIG. **6** illustrates yet another embodiment of a rotary hammer **4***c* with an integrated dust collection assembly **8***c*, with like parts having like reference numerals plus the letter "c", and the following differences explained below. The housing **12***c* includes a lower housing portion designed to interface with a dust container **84***c*. A single fan **172**, driven by the motor **48***c*, provides suction for the dust collector air flow and the cooling air flow. The rotary hammer **4***c* of this embodiment may improve horizontal drilling. Advantageously, this embodiment has only a single fan **172** for cooling the motor and driving the dust extractor.

[0143] FIG. **7** illustrates yet another embodiment of a rotary hammer **4***d* with an integrated dust collection assembly **8***d*, with like parts having like reference numerals plus the letter "d", and the following differences explained below. A single fan **172***d*, located axially between the motor **48***d* and drive assembly **52***d* within the housing **12***d*, provides the suction for both the dust collector air flow and cooling air flow. The arrangement of dust collection assembly **8***d* components, namely the filter **88***d*, dust container **84***d*, transfer tube **140***d*, suction pipe **40***d*, and nozzle **76***d*, remains unchanged from the embodiment of FIGS. **1-4**. This orientation results in a rotary hammer **4***d* with improved vertical up operations.

[0144] FIG. **8** illustrates yet another embodiment of a rotary hammer **4***e* with an integrated dust collection assembly **8***e*, with like parts having like reference numerals plus the letter "e", and the following differences explained below. A secondary transfer tube **176** is located between the filter **88***e* and the suction pipe **40***e*. Additionally, the filter axis A**3***e* is oriented perpendicularly to the motor axis Ale. This housing **12***e* orientation results in a reduced tool height and increased tool length. The tool orientation of this embodiment may improve horizontal operations.

[0145] FIG. **9** illustrates yet another embodiment of a rotary hammer **4***f* with an integrated dust collection assembly **8***f*, with like parts having like reference numerals plus the letter "f", and the following differences explained below. The suction pipe **40***f* is located horizontally next to the drive assembly **52***f*. This results in a shorter tool height and is optimized for horizontal drilling.

[0146] FIG. **10** illustrates yet another embodiment of a rotary hammer **4***g* with an integrated dust collection assembly **8***g*, with like parts having like reference numerals plus the letter "g", and the following differences explained below. The suction fan **92***g* is located on a suction fan drive shaft **180**, separate from the motor **48***g*. The suction fan drive shaft **180** is parallel to the motor axis Alg. A belt or chain **184** couples the suction fan drive shaft **180** to the motor **48***g* and allows the motor **48***g* to drive the suction fan **92***g*. Advantageously, the suction drive of this embodiment allows for different rotational speeds of the motor **48***g* and suction fan **92***g*.

[0147] FIG. **11** illustrates yet another embodiment of a rotary hammer **4***h* with an integrated dust collection assembly **8***h*, with like parts having like reference numerals plus the letter "h", and the following differences explained below. The suction fan **92***h* is oriented perpendicular to the motor axis A**1***h* and driven through a bevel gear train **188**.

[0148] FIG. **12** illustrates yet another embodiment of a rotary hammer **4***i* with an integrated dust collection assembly **8***i*, with like parts having like reference numerals plus the letter "i", and the following differences explained below. The dust collection assembly **8***i* is oriented similar to the embodiment of FIG. **6**; however, the suction fan **92***i* is oriented perpendicularly to the motor axis Ali and driven through a bevel gear train **188***i*.

[0149] FIG. **13** illustrates yet another embodiment of a rotary hammer **4***j* with an integrated dust collection assembly **8***j*, with like parts having like reference numerals plus the letter "j", and the following differences explained below. A second motor **192** is disposed within the housing **12***j* for driving the suction fan **92***j* of the dust collection assembly **8***j*. Advantageously, this embodiment allows for independent control of the dust collection assembly **8***j* and drive assembly **52***j* speeds. In this embodiment, the dust collection assembly **8***j* is operable even when the drive assembly **52***j* is not engaged.

[0150] FIGS. **15-18** illustrate yet another embodiment of a rotary hammer **4***k* with an integrated dust collection assembly **8***k*, with like parts having like reference numerals plus the letter "k", and the following differences explained below. Referring to FIG. **15**, the rotary hammer **4***k* includes a housing **12***k* having a main body **16***k* and a handle **20***k* extending rearward of the main body **16***k*. Referring to FIG. **16**, disposed within the main body **16***k* are a motor **48***k*, a drive assembly **52***k*, and a fan **200**. Each of the drive assembly **52***k* and the fan **200** are operatively coupled to the motor **48***k* for receiving torque from the motor **48***k*. The motor **48***k* is oriented within the main body **16***k* to be non-parallel with the working axis A**2** of the rotary hammer **4***k*. In particular, the motor **48***k* is oriented such that the motor axis A**1**, defined as the rotational axis of the motor **48***k*, is transverse to the working axis A**2** of the rotary hammer **4***k*. In some embodiments, the motor **48***k* may be oriented such that the motor axis A**1** is vertically oriented and perpendicular to the working axis A**2**. The main body **16***k* of the rotary hammer **4***k* supports the dust container **84***k* at a lower half such that the motor **48***k*, the fan **200**, and the dust container **84***k* are aligned along the motor axis A**1** with the fan **200** disposed between the motor **48***k* and the dust container **84***k*.

[0151] With reference to FIG. **17**, the fan **200** is a bi-axial fan. Torque from the motor **48***k* causes rotation of the fan **200** which draws air towards the fan **200**. In the illustrated embodiment, air enters the fan **200** along the rotational axis A**1** of the fan **200** from two opposing directions, as shown by the arrows in FIG. **17**. Specifically, a first air flow enters the fan **200** from a top side of the fan **200** while a second air flow enters the fan **200** from a bottom side of the fan **200**. Once the air reaches the fan **200**, the air is directed radially outwards from the fan **200** to be exhausted. In particular, the fan **200** draws cooling air into the rotary hammer **4**K through openings in the housing of the rotary hammer **4**K. The cooling airflow is then drawn over the motor **48***k* to cool the motor **48**K. The fan **200** may further draw cooling air across a controller **205** to cool the controller **205**. After passing one or both the motor **48**K and the controller **205**, the cooling airflow enters the fan **200** from a top side of the fan **200**.

[0152] The fan **200** also creates a suction air flow in which air is directed through the dust collection assembly **8***k* toward the fan **200**, in an opposite direction of the cooling air flow, before being directed radially out the exhaust **204**. Rotation of the fan **200** simultaneously creates the motor cooling air flow and the suction air flow. In some embodiments, the cooling air flow and the dust extraction air flow

may be two separate streams of air, which are isolated from one another until merging within the fan **200** and being exhausted together as a merged air flow stream. In some embodiments, the cooling air flow is directed over other components (e.g., circuit boards) of the rotary hammer **4***k* to cool these components as well. As will be described in greater detail later, the suction air flow draws dust and/or debris into the dust container.

[0153] With reference to FIGS. **15-18**, the dust collection assembly **8***k* includes a collapsible suction pipe **208** in place of the telescoping suction pipe **40**. The collapsible suction pipe **208** is configured to be selectively coupled to the housing **12***k* of the rotary hammer **4***k* and to surround the tool bit **32***k*. In other words, the dust collection assembly **8***k* utilizes an over-bit suction pipe **208**. In the illustrated embodiment, the collapsible suction pipe **208** is secured to the housing **12***k* via a snap fit. However, other securement methods, such as a threaded connection or a latch connection, will be understood by one of ordinary skill in the art to perform the same function as the snap fit and may be used in place of the snap fit. With reference to FIG. **19**, the collapsible suction pipe **208** includes a biasing member **212**, illustrated as a spring, configured to bias the suction pipe **208** to an extended state. As the tool bit **32***k* is inserted into a workpiece, a front end **216** of the suction pipe **208** will engage the workpiece. Further insertion of the tool bit **32***k* into the workpiece results in the suction pipe **208** collapsing, or folding, against the force of the spring **212** while the front end **216** maintains contact with the workpiece. The entirety of the collapsible suction pipe **208** remains outside of the housing **12***k* of the rotary hammer **4***k*, even when collapsed, thereby creating more room for the other components of the rotary hammer **4***k* within the housing **12***k* without increasing the overall size of the housing **12***k*.

[0154] In some embodiments, the collapsible suction pipe **208** further includes a locking mechanism **220**, illustrated as a hook, to selectively secure the collapsible suction pipe **208** in the collapsed state. When collapsed, the hook **220** engages a corresponding lock on the housing **12***k* to counteract the force from the biasing spring **212**. Securement of the suction pipe **208** in the collapsed state allows for easy changing of the tool bit **32***k* without removal of the collapsible suction pipe **208** from the housing **12***k*.

[0155] When the collapsible suction pipe **208** is secured to the housing **12***k*, an uninterrupted fluid pathway is formed between an opening in the front end **216** of the suction pipe **208** and the fan **200**. Therefore, the suction air flow draws dust and/or debris created by the tool bit **32***k* through the collapsible suction pipe **208** and into the dust container **84***k* before the air is combined with the motor cooling air flow to be expelled through the exhaust **204**.

[0156] FIGS. **19-21** illustrate a power tool, such as a rotary hammer **1004**, according to another embodiment of the present disclosure. The illustrated rotary hammer **1004** includes a dust collection assembly **1008** integrated within the body of the tool. In some embodiments, one or more portion of the dust collection assembly **1008** may be realized as a separate element from the rotary hammer **1004** or may be positioned externally of the rotary hammer **1004**.

[0157] The rotary hammer **1004** includes a housing **1012** having a main body **1016** and a handle **1020** extending rearward of the main body **1016**. The main body **1016** includes a first end **1024** to which a tool accessory may be coupled, and a second end **1028** from which the handle **1020** extends. The tool accessory may be, for example, a tool bit **1032**, a polisher, a sander, a grinder, a cutter, or any other accessory intended to operate on a worksurface, which may result in dust being expelled during machining operation of the rotary hammer **1004**. The tool bit **1032** may be received within a chuck assembly **1036** formed in the first end **1024** of the main body **1016**. The tool bit **1032** defines a working axis A**2** (FIG. **21**) of the rotary hammer **1004**. The handle **1020** includes a trigger **1098** adapted to actuate the rotary hammer **1004**. In the illustrated embodiment, the trigger **1098** is disposed on the handle **1020** in a position proximate the working axis A**2** of the rotary hammer **1004**. In other words, the vertical position (i.e., the vertical direction as shown in the Figures) of the trigger **1098** along the handle **1020** is close to or along the working axis A**2** of the rotary hammer **1004**. This allows the trigger **1098** to be generally aligned with the tool bit **1032** so that user's finger is also aligned with the tool bit **1032**.

[0158] In some embodiments, the rotary hammer **1004** may be equipped with an auxiliary handle **1300**, which is selectively coupled to a rear of the handle **1020**. The auxiliary handle **1300** may help the user control the rotary hammer **1004**, particular when engaging in overhead drilling or when positioned at an awkward angle relative to a working surface. For example, the auxiliary handle **1300** may function as an extension arm, which allows the user to reach farther away while still being able to hold and support the rotary hammer **1004**. On the other hand, the auxiliary handle **1300** also allows the user to hold the rotary hammer **1004** closer to the user's body so that the user does not have to extend his/her arms out as far. Holding the rotary hammer **1004** closer to the user's body provides for a more secure and steady support of the rotary hammer **1004**. Furthermore, like the trigger **1098**, the auxiliary handle **1300** is aligned generally along the working axis A**2** of the rotary hammer **1004**. This arrangement provides for better aim and control of the working axis A**2** all the way from one end to the other end of the rotary hammer **1004**. In other words, the user has greater control and stability over the orientation of the working axis A**2** and can more easily adjust and/or maintain the angle of the working axis A**2** relative to the worksurface.

[0159] FIGS. **29-31** provide detailed views of the auxiliary handle **1300**. The auxiliary handle **1300** includes a curved grip **1330**, which allows a user to grasp the grip **1330** in the palm of their hands and wrap their fingers around toward the front of the grip. This style of grip allows the user to grip the auxiliary handle **1300** directly from behind to help support the weight of the rotary hammer **1004** when engaging in overhead drilling. Additionally, because the user may hold the curved grip **1330** directly from behind, it is also easier to maneuver the rotary hammer without twisting or torque their wrist. The illustrated auxiliary handle **1300** includes a telescoping body having a first shaft **1308** and a second shaft **1312** slidable within the first shaft **1308**. Accordingly, the telescoping body allows the auxiliary handle **1300** to be extended to different lengths. For example, FIG. **19** illustrates the auxiliary handle **1300** in a fully extended state, while FIG. **20** illustrates the auxiliary handle **1300** in a retracted state. However, the auxiliary handle **1300** may be extended to a plurality of different lengths between the full extended and the retracted state. Specifically, the first shaft **1308** and the second shaft **1312** include securement holes **1316** that, when aligned, allow for a securement pin **1320** to

secure the second shaft **1312** relative to the first shaft **1308**. This helps maintain the auxiliary handle **1300** at a desired length.

[0160] Additionally, the auxiliary handle **1300** may be rotated to a stowed position when not in use. For example, the auxiliary handle **1300** may be rotated towards the top of the rotary hammer **1004** (counterclockwise in FIG. **19**) and stowed along the top surface of the main body **1016**. Alternatively, the auxiliary handle may be rotated towards the rear end of the handle **1020** (clockwise in FIG. **19**) and stowed along the length of the handle. This may be accomplished through a rotation lock **1324**, which selectively couples the auxiliary handle **1300** to the rotary hammer **1004** at various orientations. Specifically, the rotational lock **1324** both releasably couples the auxiliary handle **1300** to the rear end of the rotary hammer **1004** and maintains the auxiliary handle **1300** in different orientations relative to the rotary hammer **1004**. The rotational lock **1324** may include a hinge, which allows for rotation of the auxiliary handle **1300** relative to the rotary hammer **1004**. Furthermore, the auxiliary handle **1300** may be removable from the rotary hammer **1004** altogether.

[0161] Referring to FIG. **21**, the housing **1012** may be divided into quadrants defined by an upper half, a lower half, a front half, and a rear half. In the illustrated embodiment, the upper half begins proximate the electric motor **1048**. Additionally, in the illustrated embodiment, the front half begins at the first end **1024** of the housing **1012** and extends to a midway point between the first end **1024** of the main body **1016** and a rear end of the handle **1020**. Accordingly, this provides for an upper front quadrant (UFQ), an upper rear quadrant (URQ), a lower front quadrant (LFQ), and a lower rear quadrant (LRQ). In the illustrated embodiment, a center of mass CM of the tool is positioned proximate the intersection of the upper front quadrant (UFQ), the upper rear quadrant (URQ), the lower front quadrant (LFQ), and the lower rear quadrant (LRQ).

[0162] Referring to FIGS. **21-23**, a drive unit **1044** is positioned within the main body **1016** of the housing **1012**. However, in other embodiments, one or more component of the drive unit **1044** may be positioned in the handle **1020**. In the illustrated embodiment, the drive unit **1044** is positioned primarily within the upper half of the housing **1012**. The arrangement of the drive unit **1044** provides for additional space for the dust collection assembly **1008**. The drive unit **1044** includes a motor **1048** and a drive assembly **1052** operatively coupled to the motor **1048** for receiving torque from the motor **1048**. The motor **1048** defines a motor axis A**1** that is angled relative to the working axis A**2** of the rotary hammer **1004**. For example, in some embodiments, the included angle between the motor axis A**1** and the working axis A**2** is between 80 and 135 degrees. In some embodiments the included angle between the motor axis A**1** and the working axis A**2** is between 90 and 115 degrees. In some embodiments, the angle is 105 degrees. In yet other embodiments, the angle is 90 degrees so that the motor axis A**1** extends perpendicular to the working axis A**2**. The working axis A**2** of the rotary hammer **1004** is defined as the axis through the tool bit **1032** and the drive assembly **1052**. In the illustrated embodiment, the motor **1048** is positioned proximate the center of mass CM. In some embodiments, the motor **1048** is positioned in the front half near the center line between the upper half and the lower half of the housing **1012**.

[0163] Power for the motor **1048** is provided by a battery **1056**, which may be received within a battery receptacle **1060** on a bottom portion of the handle **1020**. In other embodiments, the battery receptacle **1060** may be disposed within other portions of the housing **1012**. In some embodiments, the battery **1056** may be a removable rechargeable battery.

[0164] Operation of the rotary hammer **1004** is controlled by a single controller **1205**. The illustrated controller **1205** controls both the motor **1048** as well as the dust collection assembly **1008**. However, in other embodiments, there may be two or more controllers included in the rotary hammer **1004** for separately controlling various components of the drive unit **1044** and the dust collection assembly **1008**. The controller **1205** is located in the upper rear quadrant (URQ). In particular, the controller **1205** is positioned behind the drive assembly **1052** and above the motor **1048**.

[0165] A fan **1200** is operably coupled to the motor **1048** and shares a rotational axis with the motor axis A**1**. The motor **1048** thereby drives both the drive assembly **1052** and the fan **1200**. In the illustrated embodiment, the fan **1200** is positioned below the motor **1048** and the drive assembly **1052**. Therefore, in the illustrated embodiment, the fan **1200** is positioned below the center of mass of the rotary hammer **1004**. As will be described in further detail herein, the fan **1200** draws air along a cooling air flow path which extends across the motor **1048** to cool the motor **1048**. In some embodiments, the cooling air flow path is directed over other components (e.g., controller **1205**, circuit boards) of the rotary hammer **1004** to cool these components as well. Simultaneously, the fan **1200** draws air along a suction air flow path to draw dust and/or debris into the dust collection assembly **1008**. However, in other embodiments, there may be two separate fans generating a cooling air flow and a dust collection air flow.

[0166] The rotary hammer **1004** also includes a dust collection assembly **1008**. In the illustrated embodiment, the dust collection assembly **1008** is integrated within the main body **1016** of the rotary hammer **1004**. However, in other embodiments, one or more part of the dust collection assembly **1008** may be positioned within the handle **1020** or externally of the housing **1012**. The dust collection assembly **1008** includes a nozzle **1076**, a dust tube **1040**, a dust container **1084**, a filter **1088**, and the fan **1200**.

[0167] As shown in FIG. **24**, the nozzle **1076** is located at a first end **1040***a* of the dust tube **1040**. The nozzle **1076** and the dust tube **1040** surround at least a portion of the tool bit **1032** of the rotary hammer **1004**. In other words, the dust collection assembly **1008** utilizes an over-bit dust tube **1040**. Additionally, in the illustrated embodiment, the dust tube **1040** is a collapsible style dust tube. In other words, the dust tube **1040** is composed of a compressible material that may expand and collapse in an accordion style manner. A spring, such as the spring **212**, biases the dust tube **1040** towards an expanded position. As the tool bit **1032** is inserted into a workpiece, the nozzle **1076** will engage the workpiece. Further insertion of the tool bit **1032** into the workpiece results in the dust tube **1040** collapsing, or folding, against the force of the spring **212** while the nozzle **1076** maintains contact with the workpiece.

[0168] In some embodiments, a depth stop **1130** is coupled to the dust tube **1040** to limit the extent to which the tool bit **1032** can be inserted into a workpiece. The depth stop **1130** includes a plunge depth stop **1132**, which limits the extent to

which the dust tube **1040** may retract, and in turn, limits the extent to which the tool bit **1032** can plunge into the workpiece. The plunge depth stop **1132** is movable along a length of a rule **1134** coupled to the dust tube **1040** and is selectively fixed to limit the extent to which the dust tube **1040** may retract. Also included on an extension stop **1136**. The extension stop **1136** limits the extent to which the dust tube **1040** may extend by selectively fixing to the rule **1134**. This feature can be used to adjust an extension length of the dust tube **1040** to correspond to the size of the tool bit **1032** being used. Furthermore, in some embodiments, the dust tube **1040** may not include a depth stop **1130** or may only include one of the plunge depth stop **1132** or the extension stop **1136**.

[0169] Furthermore, in some embodiments, the dust tube **1040** may also be equipped with a locking mechanism **220**, as shown in an earlier embodiment, to maintain the dust tube **1040** in a collapsed state. However, in other embodiments, the dust tube **1040** may be a sliding style dust tube or a telescoping dust tube (e.g., as shown in FIGS. **3**A and **3**B) rather than a collapsible dust tube. Additionally, in other embodiments, the dust tube **1040** may be arranged adjacent to the tool bit **1032** instead of being configured as an over-bit dust tube **1040**. For example, the dust tube **1040** may be arranged above, below, or on the side of the tool bit **1032** with only the nozzle **1076** extending over the tool bit **1032**.

[0170] With continued reference to FIG. **24**, a first end of the dust tube **1040** is coupled to the nozzle **1076** and a second end **1040***b* of the dust tube **1040** is coupled to the housing **1012** of the rotary hammer **1004**. In the illustrated embodiment, the second end **1040***b* of the dust tube **1040** is coupled to the housing **1012** via an exterior transfer tube **1140**. The dust tube **1040** is secured to the nozzle **1076** and exterior transfer tube **1140** by tabs **1050** which help retain and support the dust tube **1040** at each end. In turn, the exterior transfer tube **1140** is removably coupled to the housing **1012** via a combination of a snap fit and rotational connection.

[0171] As illustrated in FIG. **25**, the exterior transfer tube **1140** is first snap fit onto the first end **1024** of the housing **1012** and then rotated (e.g., clockwise in FIG. **25**) to secure the exterior transfer tube **1140** to the housing **1012**. Specifically, a first end **1140***a* of the exterior transfer tube **1140** is snap fit onto the housing **1012** while a second end **1140***b* of the exterior transfer tube **1140** is rotated into a locked position. The first end **1140***a* of the exterior transfer tube **1140** forms a collar, which may be is snap fit onto a nose **1064** of the rotary hammer **1004** by a snap ring **1054**. The snap fit is accomplished by moving the exterior transfer tube **1140** linearly until a snap ring **1054** axially locks the first end **1140***a* of the exterior transfer tube **1140** to the housing **1012**. Once secured to the housing **1012**, the first end **1140***a* of the exterior transfer tube **1140** (i.e., the collar) surrounds the circumference of the nose **1064** such that the chuck assembly **1036** and/or tool bit **1032** extend through an opening in the first end **1140***a* of the exterior transfer tube **1140**.

[0172] In order to rotationally lock the exterior transfer tube **1140**, the exterior transfer tube **1140** is rotated until it reaches a locked position. To accomplish this, the first end **1140***a* of the exterior transfer tube **1140** includes one or more annular projection **1068** formed within the opening of the collar which are received within corresponding annular recesses **1070** on the nose **1064** of the rotary hammer **1004** to help rotational engagement therebetween. The exterior transfer tube **1140** is rotated until the second end **1140***b* is received within an annular groove **1062** formed on the first end **1024** of the housing **1012**. The annular groove **1062** prevents further rotation of the exterior transfer tube **1140** relative to the housing **1012**. Furthermore, the annular groove **1062** helps align the second end **1140***b* of the exterior transfer tube **1140** with an opening in the housing **1012** that meets an internal transfer tube **1141**. Together, the external transfer tube **1140** and the internal transfer tube **1141** lead dust laden air from the dust tube **1040** into the dust container **1084**. The second end **1140***b* of the exterior transfer tube **1140** is fluidly connected to the internal transfer tube **1141** in order to form an airtight connection. It should be understood by one of ordinary skill in the art that other securement methods, such as a threaded or latch connection, which perform the same function as the snap fit and rotational connection may be used in the alternative.

[0173] As shown in FIG. **26**, the rotary hammer **1004** includes a brush seal **1224** disposed within the dust tube **1040** to prevent dust from entering the main body **1016** via the chuck assembly **1036**. In the illustrated embodiment, the brush seal **1224** is positioned proximate the second end **1040***b* of the dust tube **1040**, which connects to the housing **1012**. However, in other embodiments, the brush seal **1224** may be disposed within a bit retention area of the housing **1012**, rather than within the dust tube **1040**. In yet another embodiment, the brush seal **1224** may be disposed proximate the first end **1040***a* of the dust tube **1040**. The illustrated brush seal **1224** surrounds and engages a portion of the tool bit **1032** to prevent dust and/or debris that is drawn into the dust tube **1040** from entering the housing **1012**. The brush seal **1224** prevents the dust transferred via the dust extractor air flow to enter through the nose **1064** of the tool and/or the bit retention assembly **1036**. Rather, air will flow through the dust tube **1040**, through the exterior transfer tube **1140**, through the interior transfer tube **1141**, and into the dust container **1084** without entering the chamber of the main body **1016** that houses the drive unit **1044** and the controller **1205**.

[0174] Referring back to FIGS. **21**-**23**, the exterior transfer tube **1140** extends from the dust tube **1040** to the housing **1012**, and the interior transfer tube **1141** extends from the exterior transfer tube **1140** to the inlet **1100** of the dust container **1084**. Together, the exterior transfer tube **1140** and the interior transfer tube **1141** form the dust transfer tube **1145**. As discussed, the exterior transfer tube **1140** is selectively coupled to the dust tube **1040** and the nose **1064** of the rotary hammer **1004** to create the suction air flow path for the dust extractor. The interior transfer tube **1141** extends along the first end **1024** of the main body **1016** from the upper portion to the lower portion, at which point it is coupled to the inlet **1100** of the dust container **1084**.

[0175] The dust container **1084** is selectively attachable to the housing **1012**. The dust container **1084** is detachable from the housing **1012** of the rotary hammer **1004** and may be removed to allow an operator to empty the dust or other debris from the dust container **1084**. In the illustrated embodiment, the dust container **1084** is prevented from being secured to the housing **1012** without the filter **1088** in place. For example, the filter **1088** acts as a portion of the connection between the dust container **1084** and the housing **1012**. Thus, without the filter **1088** in place, the dust container **1084** is prevented from being coupled to the housing **1012**. The filter **1088** is connected to a bottom side

of the fan **1200**. In particular, the filter **1088** is connected to a shroud **1072** of the fan **1200** that extends around the circumference of the fan **1200** and below the fan **1200**. Both the fan **1200** and the filter **1088** are positioned in the lower portion of the main body **1016** below the center of mass (CM).

[0176] The dust container **1084** includes an inlet **1100** for a dust laden air stream and an outlet **1104** defined by an outlet end of the filter **1088**. More specifically, the dust container **1084** includes opposite side walls **1108** and a bottom wall **1112** extending between the side walls **1108**. The dust container **1084** additionally includes end walls **1116** adjacent each of the side walls **1108** and the bottom wall **1112**. An opening **1120** is defined in a top wall **1118** through which the filter **1088** is received. The top wall **1118** further includes an inlet **1100** for dust laden air. A connection port **1124** extends through the inlet **1100** to direct dust laden air from the dust tube **1040** into the dust container **1084**. In some embodiments, the connection port **1124** is a DEC **26** connection. The dust container **1084** is operable to collect dust and other debris from a workpiece during drilling and/or hammering operation performed by the rotary hammer **1004** to maintain a user's work area substantially clear of dust and other debris.

[0177] As previously mentioned, the fan **1200** creates both a suction air flow path (AF**1**) and a cooling air flow path (AF**2**). The fan **1200** is a bi-axial, radial exhaust fan positioned between the motor **1048** and the filter **1088**. The fan **1200** is mounted to an output shaft of the motor **1048** such that torque from the motor **1048** drives rotation of the fan **1200**. Accordingly, the rotational axis of the fan **1200** is coaxial with the motor axis A**1**. As best shown in FIG. **22**, air enters the fan **1200** along the rotational axis A**1** of the fan **1200** from two opposing directions. Specifically, the cooling air flow path (AF**2**) enters the fan **1200** from a top side of the fan **1200** while the suction air flow path (AF**1**) enters the fan **1200** from a bottom side of the fan **1200**. Once the air from either air flow path reaches the fan **1200**, the air is directed radially outwards from the fan **1200** to be exhausted.

[0178] In particular, the fan **1200** draws cooling air into the rotary hammer **1004** through inlet openings **1066** in the housing **1012** of the rotary hammer **1004**. The cooling airflow (AF**2**) is then drawn over the motor **1048** to cool the motor **1048**. In some embodiments, an inner surface of the housing **1012** includes a rib to guide the cooling airflow (AF**2**) into the motor **1048**, thereby ensuring that the cooling airflow (AF**2**) passes over the motor **1048**. The fan **1200** may further draw cooling air across a controller **1205** to cool the controller **1205**. After passing one or both the motor **1048** and the controller **1205**, the cooling airflow (AF**2**) enters the fan **1200** from a top side of the fan **1200** and exits radially through an outlet **1104** of the fan **1200**. The cooling air flow (AF**2**) is then exhausted from the rotary hammer **1004** through outlet openings **1074** (FIG. **20**) in the housing **1012** of the rotary hammer **1004**. Specifically, the outlet **1104** is formed as a radial opening in a shroud **1072** of the fan **1200**, which is aligned with the outlet openings **1074** to direct air exterior of the rotary hammer **1004**. In some embodiments, the outlet openings **1074** are provided on a single side of the housing **1012**, and the outlet **1104** of the shroud **1072** is provided on a single side of the housing **1012**.

[0179] The fan **1200** also creates a suction air flow (AF**1**) in which air is directed through the dust collection assembly **1008** toward the fan **1200**, in an opposite direction of the cooling air flow (AF**2**), before being directed radially out the exhaust **1204**. In particular, air is suctioned into the nozzle **1076**, through the dust tube **1040**, through the dust transfer tube **1045** (i.e., the exterior transfer tube **1140** and the interior transfer tube **1141**), and into the dust container **1084** where the dust is trapped. Clean air is the drawn up through the filter **1088** into the fan **1200** and exhausted through the outlet **1104** and openings **1074**. After dust is separated from the air via the filter **1088**, the clean air is exhausted. In some embodiments, the filter **1088** is a high efficiency particulate air ("HEPA") filter.

[0180] Accordingly, rotation of the fan **1200** simultaneously creates the suction air flow (AF**1**) and the cooling air flow (AF**2**). In the illustrated embodiment, the fan **1200** is a dual finned fan with a first set of fan blades **1078** and a second set of fan blades **1080**, as best shown in FIG. **27**. The first set of fan blades **1078** is used to create the suction air flow (AF**1**) and the second set of fan blades **1080** is used to create the cooling air flow (AF**2**). However, other types of fans may be used to create one or both airflows. For example, in some embodiments, a fan having a single set of fan blades may create both the suction airflow (AF**1**) and the cooling airflow (AF**2**). In some embodiments, the cooling air flow (AF**2**) and the dust extraction air flow (AF**2**) may be two separate streams of air, which are isolated from one another until merging within the fan **1200** and being exhausted together as a merged air flow stream. In some embodiments, the cooling air flow is directed over other components (e.g., circuit boards) of the rotary hammer **1004** to cool these components as well.

[0181] In some embodiments, the dust collection assembly **1008** may have additional features. For example, in the illustrated embodiment, the hall board for the motor **1048** is positioned between the motor **1048** and the fan **1200**. Additionally, a bearing **1202** supporting the output shaft of the motor **1048** is also disposed between the motor **1048** and the fan **1200** so that the cooling air flow travels over the bearing **1202**. This arrangement allows air from the suction air flow to move from the dust tube **1040** into the filter **1088** and through the fan **1200** without having to be guided around any bearings. Furthermore, this arrangement causes the cooling air to cool the motor **1048** and/or the fan to move through the stator of the motor **1048** and guided around the bearing support structure before reaching the fan **1200**.

[0182] The dust collection assembly **1008** may further include a filter cleaning mechanism **1148** (FIG. **23**), which clears dust from the filter **1088**. In one embodiment, the filter cleaning mechanism **1148** includes a solenoid **1082**, which is activated to extend a pin **1086**. The pin **1086**, in turn, engages an anvil **1090**, which rotates to knock on the filter **1088** and release debris. As mentioned above, the controller **1205** is adapted to operate the dust collection assembly **1008** and the drive unit **1044**. This allows for coordination between both assemblies. In one embodiment, the filter cleaning mechanism **1148** is automatically actuated when the fan **1200** transitions from an active state to an inactive state. In another embodiment, the filter cleaning mechanism **1148** is automatically actuated when the motor **1048** transitions from an active state to an inactive state. As used herein, the fan **1200** transitions from the active state to the inactive state when the fan **1200** stops rotating, or when the fan **1200** slows to a rotational speed below a predetermined threshold such that the airflow induced by the fan **1200** has effectively stopped. The controller **1205** may monitor an

indicator of the rotational state of the fan **1200**. In some embodiments, the controller **1205** may be configured to monitor the rotation of the fan **1200** by using a Hall-effect sensor for directly detecting the rotational speed of the fan **1200** (e.g., by using a magnet that rotates with the fan **1200**). In another embodiment, the fan **1200** transitions from the active state to the inactive state when the motor **1048** is no longer transmitting a rotational force to the fan **1200**. Similarly, the motor **1048** can transition from an active state to an inactive state when the motor **1048** stops rotating or when the motor **1048** slows to a predetermined threshold of rotational speed. For example, the controller **1205** may monitor a sensor that detects the voltage or current applied to the motor **1048** to determine whether the motor **1048** has transitioned from the active state (i.e., providing torque to the fan **1200**) to the inactive state.

[0183] FIG. **28** provides another embodiment of a filter cleaning mechanism **1448**. In the illustrated embodiment, the filter cleaning mechanism **1448** includes an actuator in in the form of a clutch bearing **1464** (i.e., a one-way bearing) located between the shaft of the motor **1048** and a rotatable plate **1462** having a plurality of cogs **1466**. Under normal operation, the motor **1048** and the fan **1200** rotate about the rotational axis A**1** in a first direction (i.e., in a counterclockwise direction in FIG. **28**). When rotating in the first direction, the torque from the motor **1048** is not transferred to the plate **1462**. However, once the fan **1200** transitions from the active state to the inactive state (i.e., slows to a stop or slows to below a predetermined threshold speed), the motor **1048** is configured to pulse in a second, or a reverse direction (i.e., in a clockwise direction in FIG. **28**). Due to the effect of the clutch bearing **1464**, torque is transferred to the plate **1462** when the motor **1048** pulses in the reverse direction. The cogs **1466** extending from the plate **1462** sequentially engage a linkage **1468**, which in turn, impacts the filter **1088**. In the illustrated embodiment, the linkage **1468** rotates about a pivot **1472**.

[0184] The integration of the dust collection assembly **1008** within the rotary hammer **1004** may provide several different benefits. For example, the integration of the dust collection assembly **1008** within the rotary hammer **1004** may allow for a reduced number of parts for the operation of the rotary hammer **1004** and dust collection assembly **1008**. This may in turn reduce the overall cost of the system. Additionally, in some embodiments, the reduction of parts may also reduce the overall weight and size of the system. Likewise, in some embodiments, the profile of the tool system is more compact, which may allow a user to maneuver and hold the tool system more easily. It should be understood that the various features and embodiments described in the present disclosure may be mixed or interchanged into different combinations of features and embodiments.

[0185] For example, the disclosed rotary hammer **1004** utilizes a single power source (e.g., the battery **1056**) and a single electric motor **1048** to operate the drive assembly **1052** and the dust collection assembly **1008**. Furthermore, the rotary hammer **1004** includes a single controller adapted to control operation of the drive assembly **1052** and the dust collection assembly **1008**. Additionally, a single fan **1200** may be used to generate two distinct air flow paths, including a suction air flow path and a cooling air flow path. The first air flow path is the dust collector flow path in which dust laden air enters through the nozzle **1076**, travels through the dust tube **1040**, into the exterior and interior transfer tubes **1140**, **1141**, and deposits the dust with the help of the filter **1088** into the dust container **1084**. The air flow in the dust collector flow path is driven by the fan **1200** and the motor **1048**. The second flow path is characterized as a cooling flow path, which directs clean air over the motor **1048** and/or the controller **1205**, or other components of the drive assembly to cool these components.

[0186] In some embodiments, the rotary hammer **1004** is compatible with ONE-KEY®. In particular, the rotary hammer **1004** is capable of wireless communication (e.g., using Bluetooth or other nearfield communication protocol), thereby allowing the rotary hammer **1004** to be monitored and/or controlled via a remote device (e.g., a smartphone). When wirelessly connected to the remote device, it is possible for the remote device to track a location of the rotary hammer **1004**, monitor the battery **1056**, remotely lock the trigger **1098**, and control other aspects of the rotary hammer **1004**. For example, a user can control or adjust the rotational speed and/or torque output of the motor **1048**. Likewise, a user can adjust other operational settings of the tool. In some embodiments, the ONE-KEY electronics are incorporated within the controller **1205**. However, in other embodiments, the ONE-KEY electronics may be provided through a separate controller PCB.

[0187] While multiple embodiments of a rotary hammer have been described above, it will be understood by one of ordinary skill in the art that the various features and components of the described embodiments are interchangeable. Furthermore, although the disclosure has been described in detail with reference to certain preferred embodiments, variations and modifications exist within the scope and spirit of one or more independent aspects of the disclosure as described.

[0188] FIGS. **32-33** illustrates a rotary hammer **2004**, according to one embodiment, including a main body **2016**, a dust collection assembly **2008**, and a drive assembly **2052**. The main body **2016** includes a front end **2024** and a back end **2028**. The front end **2024** includes a tool accessory such as a tool bit **2032**, a polisher, a sander, a grinder, a cutter, or other accessories. The dust collection assembly **2008** is also positioned on the front end **2024** and fluidly connects an area around the tool bit **2032** to a dust collection bin **2084**. The dust collection bin **2084** is removably coupled to a bottom of the main body **2016** and receives dust and debris from a transfer tube **2140**. The back end **2028** includes a handle **2020** and a dovetail rail **2030** able to receive an auxiliary handle **2300** (shown in FIGS. **39**, **40**, and **42**). Referring to FIG. **33**, the drive assembly **2052** positioned inside the main body **2016** and is powered by a single power source (e.g., a battery **2056**) and an electric motor **2048**. The motor **2048** drives an impact mechanism **2058** through a set of bevel gears **2054** and causes the tool bit **2032** to reciprocate and perform work on a workpiece. The impact mechanism **2058** utilized for this rotary hammer **2004** may include or otherwise be similar to the impact mechanism disclosed in U.S. Pat. No. 9,289,890.

[0189] As illustrated in FIGS. **34**A and **34**B, the dust collection bin **2084** may include a lockout system **2086**, which prevents the dust collection bin **2084** from connecting to the main housing **2016** when a filter **2088** is not installed. It should be understood that some parts of the lockout system **2086** may be disposed on the dust collection bin **2084** while other parts of the lockout system **2086** may be

disposed on the main housing **2016**. The lockout system includes a stopping lever **2190**, a stopping surface **2192**, and an actuation feature **2194**. The stopping lever **2190** and the stopping surface **2192** may function to interfere with the attachment of the dust collection bin **2084** to the main housing **2016** when the filter **2088** is not installed. For example, the stopper surface **2192** and the stopping lever **2190** may collide or be arranged in an incompatible manner unless the filter **2088** is installed. The actuator feature **2194** may be operated to adjust one or both the stopping surface **2192** and the stopping lever **2190** so that they may be arranged in a compatible manner which allows the connection of the dust collection bin **2084** to the main housing **2016**. For example, the actuation feature **2194** may be a component on the filter **2088** or a component activated by installation of the filter **2088**, which adjusts one or both the stopper surface **2192** and the stopping lever **2190** so that they no longer interfere with the installation of the dust bin **2084** on the main housing **2016**.

[0190] FIGS. **34**A and **34**B illustrate one exemplary embodiment of a lockout system **2086**. However, it should be understood that variations may be applicable so long as the components function in a manner as described. In the illustrated embodiment, the stopping lever **2190** is formed on the dust collection bin **2084** and includes a first contact surface **2196** and a second contact surface **2198**. The stopping surface **2192** is a part of the housing **2016** and is configured to selectively contact the first contact surface **2196** of the stopping lever **2190**. The actuation feature **2194** is formed on a filter **2088** and is configured to contact the second contact surface **2198** of the stopping lever **2190** when the filter **2088** is properly installed in the dust collection bin **2084**. When the stopping lever **2190** is in a first position, the dust collection bin **2084** cannot be installed onto the housing **2016**, as the first contact surface **2196** of the stopping lever **2190** impacts the stopping surface **2192** during installation thereby preventing the dust collection bin **2084** to be positioned close enough to the housing **2016** to engage a latch mechanism (not shown) between the dust collection bin **2084** and the housing **2016**. When the filter **2088** is installed, the actuation feature **2194** contacts the second contact surface **2198** of the stopping lever **2190**, and the stopping lever **2190** moves to a second position. When the stopping lever **2190** is in the second position, the first contact surface **2196** no longer blocks the stopping surface **2192** when installing the dust collection bin **2084**, thereby allowing the dust collection bin **2084** to be positioned adjacent to the housing **2016** such that the latch mechanism can engage and connect the dust collection bin **2084** to the housing **2016**.

[0191] FIGS. **35**A, **35**B, and **35**C show an auxiliary handle **2302**, which provides a secondary support for the user to hold when maneuvering the rotary hammer **2004**. The auxiliary handle **2302** may optionally be removably attached to the rotary hammer **2004**. The auxiliary handle **2302** extends at least partially through the main body **2016** or other housing section of the rotary hammer **2004**. In the illustrated embodiment, auxiliary handle **2302** is positioned between the main body **2016** and the handle **2020**. The auxiliary handle **2302** extends from the side of the rotary hammer **2004** in a crosswise direction from the primary handle **2020**. In some embodiments, the auxiliary handle **2302** may extend generally orthogonal to the handle **2020** and/or the working axis **6**A of the rotary hammer **2004**. However, in other embodiments, the auxiliary handle **2302** may be positioned in different locations and/or different orientations on the rotary hammer **2004** housing. Additionally, in some embodiments, the auxiliary handle **2302** may be positioned on either the lefthand side or the righthand side of the rotary hammer **2004**. Furthermore, in some embodiments, the auxiliary handle **2302** may be positioned in an extended position or a collapsed position.

[0192] FIGS. **35**A, **35**B, and **35**C show an exemplary embodiment of an auxiliary handle **2302**, which may be removably attached to the rotary hammer **2004**. The illustrated auxiliary handle **2302** includes a tube **2321**, a pommel grip **2330**, a pin case **2323**, a pin **2325**, a pin spring **2327**, a plurality of balls **2329**, and an actuator **2331**. The tube **2321** is fixed to the rotary hammer **2004** and supports the other components of the auxiliary handle **2302** on the rotary hammer **2004**. In some embodiments the tube **2321** is formed as a separate component while in other embodiments, the tube **2321** is integrally formed into the housing of the rotary hammer **2004**. The tube **2321** may removably receive the other components of the auxiliary handle **2303** in order to allow the auxiliary handle **2302** to be selectively attachable and removable from the rotary hammer **2004**. The tube **2321** extends through at least a portion of the housing of the rotary hammer **2004**. In embodiments where the tube **2321** extends through the entire width of the rotary hammer **2004**, the auxiliary handle **2302** may be used as ambidextrous handle, which may be positioned on either the lefthand side or the righthand side of the rotary hammer **2004**.

[0193] The pommel grip **2330** provides an area for the user to grab to stabilize the rotary hammer **2004**. In other embodiments, other shapes and styles of grips and handles may be used to provide an area for the user to grip. The pommel grip **2330** is attached to an end of the pin case **2323**, which houses the pin **2325** and the plurality of balls **2329**. The pin case **2323** and the pin **2325** are slidably received within a port **2337** created by tube **2321**.

[0194] The auxiliary handle **2302** may be positioned in a variety of different arrangement on the rotary hammer **2004** by changing the position of the pin case **2323** relative to the tube **2321**. In the illustrated embodiment, the pin case **2323** and pin **2325** may be inserted into the tube **2321** from either the lefthand side or the righthand side of the tube **2321** to arrange the auxiliary handle on either side of the rotary hammer **2004**. Additionally, the auxiliary handle **2302** may be positioned on a lefthand side of the rotary hammer **2004** in either a collapsed or an extended position. Likewise, the auxiliary handle **2302** may be positioned on a righthand side of the rotary hammer **2004** in either a collapse or an extended position. In other embodiments, the auxiliary handle **2302** may be positioned a plurality of positions between the collapsed and extended position.

[0195] The various arrangement of the auxiliary handle **2302** may be accomplished by utilizing the balls **2329** and pin **2325** to lock the pin case **2323** in different positions relative to the tube **2321**. The pin case **2323** may include ball apertures **2333** to carry the balls **2329**. In the illustrated embodiment, the balls **2329** are carried by the pin case **2323**, however, it is to be understood that in other embodiments, the balls **2329** may be carried by the tube **2321**. The pin **2325** extends through a central bore in pin case **2323** and is slidable relative to the pin case **2323** between a locked position (FIGS. **35**A and **35**C) and an unlocked position (FIG. **35**B). When in the locked position, the pin case **2323**

is fixed relative to the tube **2321**. When in the unlocked position, the pin case **2323** is slidable relative to the tube **2321**.

[0196] The pin **2325** may include a pin groove **2335**, which selectively receives the balls **2329** when the pin **2325** is in an unlocked position. The balls **2329** are generally retained within the ball apertures **2333** of the pin case **2323**. However, the balls **2329** have limited movement radially inward and outward. When the pin **2325** is positioned within the pin case **2323** such that the pin groove **2335** is aligned with the balls **2329** and the ball apertures **2333**, the balls **2329** may move radially inward to at least partially recede into the pin groove **2335**. When the pin groove **2335** is not aligned with the ball apertures **2333**, the balls **2329** are pushed radially outward by the pin **2325** such that the balls **2329** extend beyond the outer perimeter of the pin case **2323**. When the balls **2329** extend beyond the outer circumference of the pin case **2323**, they may engage with receiving openings **2339** in the tube **2321** to lock the axial position of the pin case **2323** relative to the tube **2321**. In this way, the pin **2325** and the balls **2329** function as a locking mechanism.

[0197] When in a default position, the auxiliary handle **2302** is biased towards the locked position, as shown in FIGS. **35**A and **35**C. A pin spring **2327** may bias the pin **2325** axially (towards the left in FIGS. **35**A-C) so that the pin groove **2335** is misaligned with the balls **2329**, thereby pushing the balls **2329** radially outward towards a locked position. To unlock the auxiliary handle **2302**, a user may squeeze an actuator **2331** towards the pommel grip **2330**, which slides the pin **2325** axially within the pin case **2323** until the pin groove **2335** is aligned with the balls **2329**, thereby allowing the balls **2329** to recede into the pin groove **2335** (as shown in FIG. **35**B). When in the unlocked position, the auxiliary handle **2302** may be adjusted to different positions or may be removed entirely from the rotary hammer **2004**. Releasing the actuator **2331** causes the pin spring **2327** to bias the pin **2325** back towards the locked position with the pin groove **2335** misaligned with the balls **2329** and the balls **2329** biased radially outward.

[0198] The auxiliary handle **2302** may be arranged in a variety of positions on the rotary hammer **2004** or may be removed entirely. The tube **2321** may include one or more receiving opening **2339** for locking the auxiliary handle **2302** in different positions on the rotary hammer **2004**. It should be understood that a greater or fewer number of openings in the tube **2321** may be provided to created different positions of the auxiliary handle **2302**. The following is a description of some of the possible configurations of the auxiliary handle **2302** based on which openings **2339** are engaged by the balls **2329**. In the illustrated embodiment, the tube **2321** includes a first receiving opening **2339**A (or right opening—as depicted in FIGS. **35**A-C) and a second receiving opening **2339**B (or left opening—as depicted in FIGS. **35**A-C) for selectively receiving the balls **2329**. FIG. **35**A illustrates the auxiliary handle **2302** positioned on a righthand side of the rotary hammer **2004** in a collapsed position. In this configuration, the pin case **2323** and pin **2325** are inserted into the tube **2321** from a first side (e.g., a right side—as depicted in FIG. **35**A) with the balls **2329** engaged with the second receiving opening **2339**B (e.g., on the left side). As such, the pin case **2323** and the pin **2325** are inserted deeper into the tube **2321** with only small portion of the auxiliary handle **2302** extending outside of the rotary hammer **2004**. The auxiliary handle **2302** may be pulled further out of the tube **2321** to be placed in an extended position, as shown in FIG. **35**C. In the extended position, the balls **2329** engage with a first receiving opening **2339**A (e.g., on the right side), with a greater portion of the auxiliary handle **2302** extending out of the rotary hammer **2004**.

[0199] In this way, the auxiliary handle **2302** functions as a telescoping handle capable of extending to different lengths. When the actuator **2331** is actuated and the balls **2329** receded from the receiving openings **2339**, the auxiliary handle **2302** may be removed from the rotary hammer **2004** entirely. This allows a user to insert the auxiliary handle **2302** from both the lefthand side and the righthand side of the rotary hammer **2004**. When inserted into the tube **2321** from the lefthand side, the auxiliary handle **2302** may also be positioned in both the collapse and extended position. Before inserting the auxiliary handle **2302** into the tube **2321**, a user must actuate the actuator **2331** in order to move the balls **2329** into the unlocked position.

[0200] In operation, the pin case **2323** of the pommel grip **2330** can be inserted into either side of the tube **2321**, depending on the user's preference. Additionally, the auxiliary handle **2302** can be positioned in a collapsed position (FIG. **35**A) or in an extended position (FIG. **35**C). Before inserting the pin case **2323**, the user must squeeze the actuator **2331** to retract the balls **2329** to allow the pin case **2323** to fit into a port **2337** in the tube **2321**. As the pin case **2323** is moved through the port **2337** and the actuator **2331** is released, the balls **2329** eventually catch on the receiving openings **2339** of the tube **2321**. When the balls **2329** are engaged with the receiving openings **2339**, the auxiliary handle **2302** is axially locked in place. The receiving openings **2339** are positioned to lock the auxiliary handle **2302** in either a collapsed or an extended position depending on which set of receiving openings **2339** the balls **2329** are engaged with. To release the auxiliary handle **2302** from the tube **2321**, the actuator **2331** is squeezed, and the balls **2329** retract from the receiving openings **2339**. This allows for the pin case **2323** to be slid to another position or out of the tube **2321** entirely.

[0201] FIGS. **36-37** shows another embodiment of a rotary hammer **3004**, with like parts to the rotary hammer **2004**. The illustrated embodiment in FIGS. **36-37** having like reference numerals plus "3000", and the following differences explained below. As shown in FIGS. **59-37** the rotary hammer **3004** includes a main body **3016**, a handle **3020**, a dust collection assembly **3008**, an auxiliary handle **3302**. The main body **3016** includes a front end **3024** and a rear end **3028**. The handle **3020** is formed on the rear end **3028** of the main body **3016** and includes a hook **3031**. The hook **3031** can be attached to a harness worn by the user to support the rear end **3028** of the rotary hammer **3004**.

[0202] FIGS. **38**A-C illustrates the auxiliary handle **3302**, which can replace the auxiliary handle **2302**. Accordingly, much of the description of the auxiliary handle **2302** may be applied to the auxiliary handle **3302**, with the primary difference being the actuator. The auxiliary handle **3302** is received in a tube **3321** disposed on the rotary hammer **3004** and may be removably coupled to the rotary hammer **3004**. The tube **3321** includes a plurality of receiving openings **3339** positioned at various depths to allow the auxiliary handle **3302** to be configured at different lengths/depths or arranged on different sides of the rotary hammer **3004**. The

auxiliary handle **3302** includes a pommel grip **3330**, a pin case **3323**, a pin **3325**, a set of balls **3329**, and an actuator **3331**.

[0203] The pommel grip **3330** is supported on the pin case **3323** and may be used to better stabilize the rotary hammer **3004**. The pin case **3323** and the pin **3325** are slidably received within a port **3337** created by tube **3321**. The auxiliary handle **3302** may be positioned in a variety of different arrangement on the rotary hammer **3004** by changing the position of the pin case **3323** relative to the tube **3321**. The pin case **3323** slidable supports the pin **3325** such that the pin **3325** may slide axially within the pin case **3323** between a locked position (FIG. **38**A—locked and collapsed; FIG. **38**C-locked an extended) and an unlocked position (FIG. **38**B). The pin case **3323** also supports the balls **3329** within ball apertures **3333** that allow for limited radial movement of the balls **3329**. The pin **3325** also includes a pin grove **3335** shaped to at least partially receive the balls **3329** when the pin groove **3335** is axially aligned with the balls **3329**.

[0204] When in a default position, the auxiliary handle **3302** is biased towards the locked position by a pin spring **3350**. The pin spring **3350** may bias the pin **3325** axially (towards the right in FIGS. **38**A-C) so that the pin groove **3335** is misaligned with the balls **3329** and the balls **2329** are pushed radially outward towards a locked position. The pin spring **3350** pulls the pin **3325** towards the pommel grip **3330** until a rear end of the pin **3325** engages a limiting surface **3346** formed by either the pin case **3323** or the pommel grip **3330**.

[0205] An actuator **3331** is mounted in a cavity **3348** of the pommel grip **3330** and is biased by the pin spring **3350** to be flush with an outer surface of the pommel grip **3330**. To unlock the auxiliary handle **3302**, a user may press the actuator **3331** into the central cavity **3324** so that the actuator **3331** is no longer flush with the outside surface of the pommel grip **3330**. The actuator **3331** is coupled to the pin **3325**, and therefore, slides the pin **3325** axially (towards the left in FIGS. **38**A-C) within the pin case **3323** so that the rear end of the pin **3325** no longer engages with the limiting surface **3364**, as depicted in FIG. **38**B. Pressing the actuator **3331** also slides the pin **3325** until the pin groove **3335** is aligned with the balls **3329**, thereby allowing the balls **3329** to recede into the pin groove **3335**, thereby unlocking the auxiliary handle **3302**.

[0206] To install the auxiliary handle **3302**, the user first must depress the actuator **3331**. When the set of balls **3329** sit in the pin grooves **2335**, the auxiliary handle **3302** can be inserted into either side of the tube **3321**. Once in the tube **3321**, the auxiliary handle can be positioned in an extended position (FIG. **38**C) or a retracted position (FIG. **38**B). The actuator **3331** is released and the pin **3325** is moved towards the pommel grip **3330** until it strikes the limiting surface **3346**. The balls **3329** are moved radially outward and into engagement with the aligned receiving openings **3339**. When the balls **3329** are engaged with the receiving openings **3339**, the auxiliary handle **3302** is axially locked, until the actuator **3331** is depressed again.

[0207] In other embodiments, the rotary hammer **2004** may include an auxiliary handle **2300**, as shown in FIGS. **39** and **40**. The auxiliary handle **2300** includes a D-shaped grip **2320**, a lockable hinge **2322**, and a coupling mechanism **2324**. The D-shaped grip **2320** allows for the user to wrap their hand around a rear of the grip **2320** to better support the rotary hammer **2004**. This style of grip **2320** may be helpful when a desired drilling location is above or offset from the user. The lockable hinge **2322** connects the coupling mechanism **2324** and the auxiliary handle **2300** and allows the auxiliary handle to hold either an operational position (FIG. **39**) or a stowed position (FIG. **40**). In the operational position (FIG. **39**), the auxiliary handle **2300** is aligned generally along a working axis A**6** of the rotary hammer **2004**. In the stowed position (FIG. **40**), the auxiliary handle **2300** is located alongside the main housing **2016**, and the rotary hammer **2004** has a shorter length than when the auxiliary handle **2300** is in the operational position. As shown in FIGS. **41**A-C, the lockable hinge **2322** includes a button **2328**, a set of locking cams **2332**, a locking element **2334**, and a button spring (not shown). To transition between the operational and stowed positions, the button **2328** is depressed by a user (FIG. **41**A), and then the locking element **2334** is pushed outward and out of engagement with the set of locking cams **2332** formed into the auxiliary handle **2300**. The user rotates the auxiliary handle **2300** to either the operational or stowed position (FIG. **41**B), and when either position is reached the locking element **2334** is biased back into engagement with the locking cams **2332** by the button spring (not shown). Lastly, the locking element **2334** pushes the button **2328** upward, as seen in FIG. **41**C, and the auxiliary handle **2300** can no longer be rotated.

[0208] FIG. **42** illustrates a compact auxiliary handle **2303** including a curved grip **2319** and the coupling mechanism **2324**. The compact auxiliary handle **2303** with the curved grip **2319** creates a space for a user's second hand and is more compact allowing for the rotary hammer **2004** to fit in tighter spaces. Additionally, the more compact rotary hammer **2004** allows for the user to apply more pressure during a drilling operation.

[0209] FIG. **43** illustrates a shoulder stock auxiliary handle **2304** for use with the rotary hammer **2004**. The shoulder stock auxiliary handle **2304** includes a first end **2306** adjacent the handle **2020** and a back end **2308** opposite the first end **2306**. An alternate embodiment of coupling mechanism **2324** selectively couples the shoulder stock auxiliary handle **2304** to the rear of the handle **2020** adjacent the first end **2306**. The shoulder stock auxiliary handle **2304** extends from the back end **2028** in the same direction as the working axis A**6**. In some embodiments, the shoulder stock assembly **2304** may be coaxially arranged with the tool bit axis **2312** while in other embodiments, the shoulder stock auxiliary handle **2304** may be arranged parallel to the working axis A**6**. In some embodiments, the coupling mechanism **2324** may include a snap-fit or rotational connection (e.g., including threads or a lock ring to restrict rotation). The shoulder stock auxiliary handle **2304** includes a telescoping tube **2314** and a stock **2316**. The telescoping tube **2314** extends between the first end **2306** and the second end **2308** and connects the coupling mechanism **2324** to the stock **2316**. Additionally, the stock **2316** is movable relative to the telescoping tube **2314** to adjust the position of the stock **2316** relative to the rotary hammer **2004** to accommodate users having different length arms. In other embodiments, the shoulder stock auxiliary handle **2304** may include additional telescoping tubes to further extend the stock **2316**. In the illustrated embodiment, the telescoping tube **2314** is formed of a first material, such as a rigid plastic, and the stock **2316** is formed of a second material that may be the same or different from the first material, such as another

plastic or metal. In some embodiments, the shoulder stock assembly **2304** may be formed using an additive manufacturing process such as 3D printing. In other embodiments, the shoulder stock assembly **2304** may be formed from other processes, such as a plastic molding process or the like.

[0210] With continued reference to FIG. **43**, the shoulder stock auxiliary handle **2304** includes a cushion **2318** coupled to the rear end of the stock **2316** and a locking actuator **2292** operable to adjust the position of the stock **2316** along the telescoping tube **2314** between an extended position and a retracted position, and subsequently lock the stock **2316** in the selected position. In the illustrated embodiment, the locking actuator **2292** is a spring-biased lever that may be pivoted to adjust the position of the stock **2316** relative to the telescoping tube **2314**. In other embodiments, the locking actuator **2292** may be a push button or the like. The cushion **2318** provides comfort to the user by providing additional shock absorption, thus preventing bruising and fatigue while applying pressure to the rotary hammer **2004**. In some embodiments, the cushion **2318** may be formed of a polyurethane gel pad or polyethylene foam. The stock **2316** further may be placed against a user's arm or shoulder to support the rotary hammer **2004** during operation. When against a user's shoulder, the stock **2316** adds additional stability, control, and comfort by adding additional contact area. Specifically, the additional contact area benefits the user for drilling or chiseling applications to counteract the impacts caused by the impact mechanism **2058**. In addition, the shoulder stock assembly **2304** allows the user to grip the stock **2316** directly from behind to help support the weight of the rotary hammer **2004** when engaging in overhead drilling.

[0211] The coupling mechanism **2324**, shown in FIG. **44**, attaches either one of the auxiliary handles **2300** or **2303** to the dovetail rail **2030** and includes a rail support **2338**, a rail grip **2340**, and a lever **2344**. The rail support **2338** and the rail grip **2340** form a rail opening **2352** that is shaped to fit the dovetail rail **2030**. The rail opening **2352** is slightly larger than the dovetail rail **2030** to allow for the coupling mechanism **2324** to slide on. Then, the lever **2344** is rotated around a lever axis A7 to compress the rail grip **2340** onto the dovetail rail **2030**. As a result, the rail opening **2352** shrinks and holds the auxiliary handle **2300** onto the rotary hammer **2004**. To release the auxiliary handle **2300**, the lever **2344** is rotated in a opposite direction and the rail grip **2340** expands the opening **2352**, which allows the auxiliary handle **2300** to be removed from the rotary hammer **2004**.

[0212] An alternate embodiment of a coupling mechanism **2324**L is shown in FIGS. **45-47**. In the illustrated embodiment, the coupling mechanism **2324**L includes a coupler body **2354**, a slidable button **2360**, and a button spring **2363**. The coupler body **2354**, as shown in FIG. **46**, has a rail opening **2352**L shaped to fit the dovetail rail **2030**, and an auxiliary handle support **2356**. The slidable button **2360** includes a button handle **2362**, a button shaft **2364**, a spring support **2367**, and a locking extrusion **2368**. The button spring **2363** is positioned between an inner wall **2370** of the coupler body **2354** and the spring support **2367**. A locking notch **2372** is formed on the dovetail rail **2030** and is L-shaped. To begin the coupling process, the slidable button **2360** is pushed against the button spring **2363** so the locking extrusion **2368** is aligned with the locking notch **2372** in the dovetail rail **2030**. When aligned, the coupling body **2354** is slid onto the dovetail rail **2030** via the rail opening **2352**L, until the locking extrusion **2366** cannot be slid any further. At an end of the locking notch **2372**, the button spring **2362** biases the slidable button **2360** outward, and the locking extrusion **2368** fits into a locking portion **2374** of the locking notch **2372**, as seen in FIG. **47**. To decouple the coupling mechanism **2324**L, the slidable button **2360** is pushed inward against the button spring **2363**, and the coupling body **2354** can be slid off the dovetail rail **2030** of the rotary hammer **2004**.

[0213] Another embodiment of a coupling mechanism **2324**M is shown in FIGS. **48** and **49**. In the illustrated embodiment, the coupling mechanism **2324**M includes a coupler body **2354**M, a shaft (not shown), and a locking lever **2344**M. The coupler body **2354**M includes a pair of shaft supports **2378** configured to receive the shaft, a rail opening (not shown) for the dovetail rail **2030**, an engagement opening **2380** and an auxiliary handle support **2356**M. The locking lever **2344**M includes an engagement surface **2382** and a through hole **2384** configured to receive the shaft. The shaft supports **2376** are positioned on top of the coupler body **2354**M, and the locking lever **2344**M fits in between the shaft supports **2376**. In operation, the rail opening (not shown) is slid onto the dovetail rail **2030**, and the user rotates the locking lever **2344**M. When rotated, the engagement surface **2384** presses against the dovetail rail **2030** through the engagement opening **2380** of the coupler body **2354**M, as seen in FIG. **49**. When the engagement surface **2384** is pressed against the rail **2030**, the friction between the rail **2030** and the coupling body **2354**M increases, effectively locking the rail **2030** and coupling body **2354**M together. To release the coupling body **2354**M from the rail **2030**, the locking lever **2344**M is rotated in a opposite direction and then the coupling body **2354**M can be slid off the rail **2030**.

[0214] Another embodiment of a coupling mechanism **2324**N is shown in FIGS. **50**A and **50**B. In the illustrated embodiment, the back end **2028**N of the rotary hammer **2004** can include a threaded insert **2386**. An auxiliary handle **2300**N includes a threaded portion **2388** that can be screwed into the threaded insert **2386**. To release the auxiliary handle **2300**N, the threaded portion **2388** is unscrewed from the threaded insert **2386**.

[0215] FIG. **48** shows the dust collection assembly **2008**, which includes a dust tube **2040**, a tube spring **2212**, a nozzle **2076**, and a tube coupler **2222**. It is noted that the illustrated dust tube **2040** is a collapsible style dust tube, however, other types of dust tubes may be used. The dust tube **2040** surrounds the tool bit **2032** and prevents debris from a tooling operation from entering a surrounding environment. Instead, the debris is collected by a suction airflow generated by a suction fan **2092** and is transported from a work surface to a dust container **2084** through the dust tube **2040** and the exterior transfer tube **2140** (see FIG. **33**). The tube spring **2212** is fit in between the nozzle **2076** and the tube coupler **2222** and serves to bias the dust tube **2040** into the worksurface. The nozzle **2076** is positioned on a first end of the dust tube **2040** and includes a plurality of airflow grooves **2226**. The air flow grooves **2226** are formed radially around the dust tube **2040** and allow for intake of air when pressed against the work surface.

[0216] FIG. **52** shows how the tube coupler **2222** attaches a second end of the dust tube **2040** to the exterior transfer tube **2140**, which creates the suction airflow path. FIG. **52** shows the tube coupler **2222**, which includes a set of locking

tabs **2228** formed radially on the tube coupler **2222** and each locking tab **2228** includes a locking aperture **2230**. On the exterior transfer tube **2140**, a set of locking protrusions **2232** are formed radially and are shaped to fit into the locking apertures **2230**. To connect the tube coupler **2222** and the second end of the dust tube **2040**, the user aligns the locking apertures **2230** on the locking tabs **2228** with the locking protrusions **2232** and slides the tube coupler **2222** along working axis A**6**. When the locking tabs **2228** reach the locking protrusions **2232**, the locking tabs **2228** flex outward until the locking protrusions **2232** fit into the locking apertures **2230**. To detach the tube coupler **2222**, the user must manually flex the locking tab **2228** outward so the locking protrusion **2232** is no longer inserted into the locking aperture **2220** and slide the tube coupler **2222** outward along working axis A**6**.

[0217] FIGS. **53**A, **53**B, and **53**C show a storage locking assembly **2256** of the dust collection assembly **2008**. When storing the rotary hammer **2004**, the user may want to retract the dust tube **2040** to reduce the overall length of the rotary hammer **2004**. The storage locking assembly **2256** includes a plurality of radial cams **2258** on the tube end cap **2074** and a plurality of locking slots **2260** on the tube coupler **2222**. To move the dust tube **2040** into a collapsed configuration from an expanded configuration (FIG. **53**A), the user must compress the dust tube **2040** against the biasing force of the tube spring **2212** using the tube end cap **2074**. As the tube end cap **2074** moves closer to the tube coupler **2222**, the user must rotate the tube end cap **2074** so the plurality of radial cams **2258** align with the plurality of locking slots **2260**, as shown in FIG. **53**B. Next, the user inserts the radial cams **2258** into the locking slots **2260** and twists the nozzle **2076** until the radial cams **2258** contact the end of the locking slots **2260**, as shown in FIG. **53**C. Now, the dust tube **2040** is in a retracted position, and holds this position until the tube end cap **2074** is twisted in the opposite direction.

[0218] In another embodiment shown in FIGS. **54**A and **54**B, a tube coupler **2222**P including a plurality of locking tabs **2228**P and a plurality of locking extrusions **2262**. As shown in FIG. **54**A, a transfer tube **2140**P includes an annular recess **2264** and a plurality of apertures **2230**P shaped to fit the locking extrusions **2228**P of the tube coupler **2222**P. To couple the tube coupler **2222**P and the transfer tube **2140**P, the user slides the tube coupler **2222**P into the annular recess **2264** and aligns the apertures **2230**P with the locking extrusions **2262**. When properly aligned, the locking extrusions **2228**P are inserted into the apertures **2230**P and lock rotatably and axially onto the transfer tube **2140**P, as shown in FIG. **54**B. To remove the tube coupler **2222**P, the operator will flex the locking extrusions **2228**P inwardly out of engagement with the apertures **2230**P.

[0219] In another embodiment shown in FIGS. **55**A and **55**B, a tube coupler **2222**Q includes a set of alignment extrusions **2266**, a first plurality of magnets (not shown), and a first plurality of magnet pockets (not shown) to receive the first plurality of magnets. A transfer tube **2140**Q includes a set of alignment slots **2268** shaped to receive the alignment extrusions **2266**, a second plurality of magnets (not shown), and a second plurality of pockets **2270** to receive a second plurality of magnets. To couple the tube coupler **2222**Q and the transfer tube **2140**Q, the user must match the alignment extrusions **2266** on the tube coupler **2222**Q with the alignment slots **2268** of the transfer tube **2140**Q and slide the tube coupler **2222**Q until the first plurality of magnets attracts the second plurality of magnets, or vice versa. When the first and second plurality of magnets contact each other, the tube coupler **2222**Q is coupled axially and rotatably to the transfer tube **2140**Q, as shown in FIG. **55**B.

[0220] In another embodiment shown in FIGS. **56**A and **56**B a tube coupler **2222**R includes a set of cam levers **2274**, and a set of cam lever supports **2272**, The cam levers **2274** are hinged on the cam lever supports **2272**. A transfer tube **2140**R includes a cam opening **2278** shaped to receive an insertion end **2280** of the cam lever **2274**. To couple the tube coupler **2222**R to the transfer tube **2140**R, the user aligns the cam levers **2274** with the cam openings **2278**. The user then rotates each of the cam levers **2274** and presses the insertion end **2280** of the cam lever **2274** into the corresponding cam opening **2278**. When the insertion end **2280** is pressed into the cam opening **2278**, the tube coupler **2222**R is locked axially and rotatably onto the transfer tube **2140**R.

[0221] In another embodiment shown in FIGS. **57**A, **57**B, and **57**C, a transfer tube **2140**S includes an open hinge **2282** and a retaining member **2284**. A tube coupler **2222**S includes a hinge hook **2286**, a locking pin **2288**, and a latch **2290**. The open hinge **2282** on the transfer tube **2140**S can receive a hinge hook **2286**, as shown in FIG. **57**A. Once the open hinge **2282** receives the hinge hook **2286**, the tube coupler **2222**S can be rotated to sit flat against the transfer tube **2140**S, and the locking pin **2288** can engage with the retaining member **2284** of the transfer tube **2140**S, as shown in FIG. **57**B. Once the locking pin **2288** is engaged, the latch **2290** can be rotated to surround the retaining member **2284** and lock the rotational position of the tube coupler **2222**S. When the latch **2290** is closed and the hinge hook **2286** is engaged, the tube coupler **2222**S is axial and rotatably locked to the transfer tube **2140**S, as shown in FIG. **57**C.

[0222] In another embodiment shown in FIGS. **58**A-C, a transfer tube **2140**T includes a locking notch **2260**T, and a tube coupler **2222**T includes a latch **2290**T, a latch spring **2294**, and a spring anchor **2296**. The locking notch **2260**T is formed radially around transfer tube **2140**T and can receive a locking feature **2298** of the latch **2290**T. To couple the tube coupler **2222**T with the transfer tube **2140**T, the user rotates the latch **2290**T, so the locking feature **2298** lines up with the locking notch **2260**T, as shown in FIG. **58**A. Once lined up, the user slides the tube coupler **2222**T into the locking notch **2260**T (FIG. **58**B) and releases the latch **2290**T. When the latch **2290**T is released, the latch spring **2294**, connected to both the latch **2290**T and the spring anchor **2296**, radially biases the locking feature **2298** into the rest of the locking notch **2260**T, as shown in FIG. **57**C. To uncouple the transfer tube **2140**T and the tube coupler **2222**T, the user rotates the latch **2290**T in an opposite direction and slides the locking feature **2298** outward out of the locking notch **2260**T.

[0223] FIGS. **59** and **60** show a depth setting assembly **2234**, which allows the user to set a maximum drill depth for the tool bit **2032** by preventing the compression of the dust tube **2040**. To accomplish this, the depth setting assembly **2234** includes a slidable feature (e.g., slidable feature **2236**) axially fixed to the dust tube **2040** and slidable therewith. For example, the slidable feature may be fixed to a first end of the dust tube **2040** and slidable when the dust tube **2040** collapses. A guide member (e.g., guide rail **2238**) is configured to guide the slidable feature. For example, the guide rail maybe be an elongated channel, a tubular member (long or short) that guides the slidable feature, or the like capable of guiding the slidable feature for axially movement along the

direction of the working axis. The axial movement of the slidable feature relative to the guide rail defines the maximum drill depth for the tool bit **2032**. Accordingly, the depth setting assembly **2234** also includes an adjustable stop (e.g., **2242**), which is capable of limiting axial movement of the slidable feature, thereby limiting the drill depth for the tool bit **2032**.

[0224] FIGS. **59** and **60** provide one exemplary embodiment of a depth setting assembly **2234**. The illustrated depth setting assembly **2234** includes a slidable feature **2236** on the nozzle **2076**, a guide rail **2238**, and an adjustable stop **2242**, as shown in FIG. **59**. The slidable feature **2236** on the nozzle **2076** moves along the guide rail **2238** as the dust tube **2040** is compressed. Also, the user can compress the dust tube **2040** with a manual slide feature **2244** formed into the slidable feature **2236**. The guide rail **2238** mounts to a top of the main housing **2016**, but in other embodiments the guide rail **2238** could be mounted on a left or right side of the main housing **2016**. Additionally, the guide rail **2238** includes a plurality of adjustment notches **2246** that hold the adjustable stop **2242** in place. The adjustable stop **2242** slides along the guide rail **2238** when unlocked and holds its position in the guide rail **2238** when locked. The adjustable stop **2242** comprises of a stop body **2248**, a leaf spring **2250**, and a direction slider **2252**, as shown in FIG. **60**. The stop body **2248** holds the leaf spring **2250** and the direction slider **2252** and blocks the slidable feature **2236** from moving further into the guide rail **2238**. The leaf spring **2250** provides a locking force to prevent the movement of the adjustable stop **2242** and consists of a set of engagement features **2254**. The engagement features **2254** are shaped to fit the adjustment notches **2246** in the guide rail **2238** and are more resilient in one direction along the working axis A**6** than the other. The direction slider **2252** is attached to the top of the stop body **2248** and can move in a first direction or a second direction. When moved in either a first or second direction, the direction slider **2252** decouples one of the engagement features **2254** to unlock the adjustable stop **2242**. When unlocked, the user moves the adjustable stop **2242** to a new desired location, and then moves the direction slider **2252** in an opposing direction to re-couple the engagement feature **2254** to the adjustment notches **2246** and lock the position of the adjustable stop **2242**.

[0225] Another embodiment of a storage locking mechanism **2256**U is shown in FIGS. **61**A-C. The storage locking mechanism **2256**U keeps the dust tube **2040** in a retracted state for storage, and includes a slidable lock **2402**, a lock retainer **2404**, and a spring-loaded detent **2406**. To engage the storage locking mechanism **2256**U, a slidable feature **2236**U is slid along the guide rail **2238**U into the minimum position. At the minimum position, the slidable lock **2402**, fitted to the slidable feature **2236**U via a pair of snap tabs **2408**, is aligned to the lock retainer **2404** formed into the guide rail **2238**U, as shown in FIG. **58**A. To lock the slidable feature **2236**U, the user must push the slidable lock **2402** laterally toward the lock retainer **2404**, thereby moving the spring-loaded ball detent **2406** (FIG. **61**B) downward away from the slidable lock **2402** to release the slidable lock **2402**. Further pressing will then move the slidable lock **2402** outward into engagement with the lock retainer **2404**. When the slidable lock is in engagement with the lock retainer **2404**, as shown in FIG. **61**C, the slidable feature **2236**U cannot slide along the guide rail **2238**U.

[0226] Another embodiment of a storage locking mechanism **2256**V is shown in FIGS. **62**A and **62**B. The storage locking mechanism **2256**V includes a pair of snap arms **2410** and a pair of receiving receptacles **2412**, as shown in FIG. **62**A. The snap arms **2410** are formed into a slidable feature **2236**V, which can be slid along a guide rail **2238**V to adjust the position of the collapsible dust tube **2040**. To engage the storage locking mechanism **2256**V, the slidable feature **2236**V is slid along the guide rail **2238**V to the minimum position. At the minimum position, the snap arms **2410** engage with the receiving receptacles **2412** and prevent the movement of slidable feature **2236**V along the guide rail **2238**V, as shown in FIG. **62**B. To unlock the slidable feature **2236**V, the user must simultaneously press on both snap arms **2410** and slide the slidable feature **2236**V away from the receiving receptacles **2412**.

[0227] Another embodiment of a storage locking mechanism **2256**W is shown in FIGS. **63**A and **63**B The storage locking mechanism **2256**W includes a rotational locking element **2414**, mounting interface **2416**, and a pair of stationary hooks **2418**. The rotational locking element **2414** includes is rotatably coupled to the mounting interface **2416**, and includes a pair of lock hooks **2420**, and a cross bar **2422** connecting the pair of lock hooks **2420**, as shown in FIG. **63**A. The mounting interface **2416** is formed onto a slidable feature **2236**W, which can be slid along a guide rail **2238**W to a minimum position. Once at the minimum position, a user can pivot the rotational locking element **2414** via the cross bar **2422** and to engage the lock hooks **2420** with the stationary hooks **2418** formed into a main housing **2016** of a rotary hammer **2004**, as shown in FIG. **64**B. When the lock hooks **2420** are engaged with the stationary hooks **2418**, the slidable feature **2236**W cannot slide along the guide rail **2238**W. To unlock the slidable feature **2236**W, the user must pivot the rotational locking element **2414** in an opposite direction, and out of engagement with the stationary hooks **2418**.

[0228] Another embodiment of a storage locking mechanism **2256**X is shown in FIGS. **64**A and **64**B. The storage locking mechanism **2256**X includes a rotational locking element **2414**X, and a pair of receiving receptacles **2412**X, as shown in FIG. **64**. The rotational locking element **2414**X is mounted to a slidable feature **2236**X. The receiving receptacles **2414**X are formed on the main housing **2016** of a rotary hammer tool **2004** and are shaped to fit the rotational locking element **2414**X. To engage the rotational locking element **2414**X, the slidable feature **2236**X is slid along a guide rail **2238**X to a minimum position. Once at the minimum position, a user can rotate the rotational locking element **2414**X either clockwise or counterclockwise 90 degrees and engage the rotational locking element **2414**X with one of the pair of receiving receptacles **2412**X, as shown in FIG. **64**B. When the rotational locking element **2414**X is engaged with one of the pair of receiving receptacles **2412**X, the slidable feature **2236**X can no longer be slid along the guide rail **2238**X. To unlock the slidable feature **2236**X, the user pivots the rotational locking element **2414**X in 90 degrees in an opposite direction, and out of engagement with the receiving receptacles **2412**X.

[0229] FIGS. **65**A-B illustrates a dust collection assembly **3008**, which can replace the dust collection assembly **2008**. The dust collection assembly **3008** includes a dust tube **3040**, a tube spring **3312** (FIG. **37**), a nozzle **3076**, a tube coupler **3222**, a tube end cap **3074**, and a transfer tube **3140**.

However, it should be understood that in some embodiments the dust collection assembly **2008** may not include all of these components.

[0230] In the illustrated embodiment, the dust tube **3040** is composed of a flexible material, such as a fabric (e.g., nylon) or flexible plastic able to be compressed as the dust tube **3040** is moved along working axis A**6** between an expanded configuration and a collapsed configuration. In other embodiments, the dust tube **3040** may be a rigid tube or a telescoping tube. The dust tube **3040** is biased towards the expanded configuration and is moved towards the collapsed position either during a drilling operation or for storage. The tube spring **3312** is disposed between the tube coupler **3222** and tube end cap **3074** and biases the dust tube **3040** to an expanded configuration (FIG. **65**A). The nozzle **3076** and the tube end cap **3074** are disposed on a second end of the dust tube **3040**. It should be understood that in some embodiments, the nozzle **3076** may be integrally formed on the end cap **3074** while in other embodiments, the nozzle **3076** and the end cap **3074** are formed as separate pieces. The nozzle **3076** may further includes a plurality of airflow grooves **3226**.

[0231] The dust tube **3040** is removably coupled to the housing of the power tool by the tube coupler **3222**. The tube coupler **3222** is positioned on the first end of the dust tube **2040** and includes a set of locking tabs **3228** that selectively couple to a set of locking protrusions **2232** on the transfer tube **3140**. In some embodiments, the locking tabs **3228** may be coupled directly to the housing of the power tool. Likewise, in some embodiments, there may be a greater or fewer number of locking tabs **3228**. In other embodiments, the dust tube **3040** may not be removably coupled to the housing.

[0232] The tube coupler **3222** and the tube end cap **3074** may also form another embodiment of a storage locking assembly **3256**. The storage locking assembly **3256** is configured to hold the dust tube **3040** in a collapsed configuration for storage and transport, wherein the length of the dust tube **3040** is less than the length of the dust tube **3040** when in the expanded configuration. The tube end cap **3074** includes a first locking feature **3268**, which may be selectively coupled to a second locking feature **3270** on the tube coupler **3222**. In the illustrated embodiment, the first locking features is in the form of a pair of first locking arms **3268** and the second locking feature is in the form of a pair of second locking arms **3270**. The first pair of locking arms **3268** is selectively engageable with the second pair of locking arms **3270** to selectively lock the dust tube **3040** in the collapsed position. In some embodiments, there may be a greater or few number of locking arms **3268** and **3270**. Furthermore, in other embodiments, the first locking feature **3268** and the second locking feature **3270** may be other types of locking features, such as detent members, hooks, snap fit connectors, etc. that are capable of selectively locking the axial position of the tube end cap **3074** relative to the tube coupler **3222** in order to maintain the dust tube **3040** in the collapsed position.

[0233] In a default position, the dust tube **3040** is biased towards the expanded configuration and the first pair of locking arms **3268** and the second pair of locking arms **3270** are not engaged. To transition the dust tube **3040** into the collapsed configuration, the user compresses the dust tube **3040** along working axis A**6**, which also moves first pair of locking arms **3268** and the tube end cap **3074** along the working axis A**6**. Once the dust tube **3040** is fully compressed, the user can rotate the tube end cap **3074** in a first direction (e.g., counterclockwise) around the working axis A**6** until the first locking arms **3268** contact the tube coupler **3222**. Next, the user releases the tube end cap **3074**, and the tube spring **3312** biases the first locking arms **3268** partially outward and into engagement with the second pair of locking arms **3270**, as shown in FIG. **65**B. The dust tube **3040** is now in a collapsed configuration.

[0234] To transition the dust tube **3040** to the expanded configuration, the user once again compresses the dust tube along working axis A**6** and twists the tube end cap **3074** in a second direction (e.g., clockwise) until the second locking arms are no longer in line with the first locking arms **3268**. Then, the user can release the dust tube **3040** and the tube spring **3212** will bias the dust tube **3040** outward along working axis A**6**. In other embodiments, the tube end cap **3074** is rotated in a clockwise direction around the working axis A**6** to hold the dust tube **3040** in a collapsed position and the dust tube is released by rotating the tube end cap **3074** in a counterclockwise direction. The tube end cap **3074** may be rotated about the working axis and relative to the nozzle **3076**, which may remain stationary as the tube end cap **3074** rotates.

[0235] FIGS. **66-68** illustrate another embodiment of a depth setting assembly **3234**, which includes a slidable feature **3236** and an adjustable stop **3242**. The slidable features **3236** is formed on the nozzle **3076** and fits into a guide rail **3238** formed into the main housing **3016**. The adjustable stop **3242** is slidable along the guide rail **3238** and can selectively be locked at any point on the guide rail **3238**. The adjustable stop includes a thumb nut **3214**, a T-nut **3216**, and a spacer **3218**, as shown in FIG. **68**. The thumb nut **3214** is screwed to the T-nut **3216** and includes knurled outer surface in some embodiments. The T-nut fits in the guide rail **3238** and includes a set of alignment notches **3217**. The spacer **3218** sits in-between the T-nut **3216** and the thumb nut **3214** and includes a set of alignment extrusions **3219**. The alignment extrusions **3219** are shaped to fit the alignment notches **3217**, when the thumb nut **3214** is fully tightened.

[0236] When locked on the guide rail **3238**, the adjustable stop **3242** limits the insertion depth of the slidable feature **3236** to where the adjustable stop **3242** is secured on the guide rail **3238**. To adjust the position of the adjustable stop **3242**, the user rotates the thumb nut **3214** to increase the spacing between the spacer **3218** and the T-nut **3216**. The increased spacing reduces the friction between the spacer **3218** and the guide rail **3238** and allows the user to freely move the adjustable stop **3242**. Once the user finds a new desired position, the thumb nut **3214** can be tightened and the alignment extrusions **3219** of the spacer **3218** are lowered into the alignment notches **3217** of the T-nut **3218**. When the spacer **3218** is fully lowered, the adjustable stop **3242** is frictionally locked against guide rail **3238**.

[0237] As shown in FIG. **69**, the rotary hammer **3004** further includes a dust cap **3224** disposed within the dust tube. More specifically, the dust cap **3224** is coupled to a spindle **3034** of a chuck assembly **3036** through an interference fit. The spindle **3034** and the dust cap **3224** are configured to receive a tool bit **3032** and are all configured to rotate together while the dust tube **3040** is stationary. When the tool bit **3032** is inserted into the spindle **3034**, the dust cap **3224** removes dust and debris from the tool bit **3032**

from previous operations to prevent dust and debris from entering the main body **3016**. The dust cap **3224** also seals gaps in between the spindle **3034** and the transfer tube **3140** and is configured to rotate with the spindle **3034** to maintain the seal during operation. As result, the dust generated during the operation of the rotary hammer **3004** will not travel past the transfer tube **3140** and into the main body **3016** or into the air outside the dust tube **2040 3040**. In the illustrated embodiments, the dust cap **3224** is made of nitrile rubber (NBR). In other embodiments, the dust cap **3224** may be made of other elastomers, such as silicon, polyurethane, neoprene, or a combination of multiple elastomers. Various features of the disclosure are set forth in the following claims.

What is claimed is:

1. A power tool comprising:
a housing;
a guide rail fixed to the housing;
a slide that is moveable along the guide rail; and
a stop that is lockable at a plurality of positions along the guide rail to limit movement of the slide along the guide rail.

2. The power tool of claim **1**, wherein the guide rail is positioned within a channel formed in the housing.

3. The power tool of claim **2**, wherein the guide rail is formed as a single piece the housing.

4. The power tool of claim **2**, wherein the stop includes a first nut that is received in the channel and a second nut that is screwed to the first nut and can be tightened to lock the stop at a desired position and loosened to allow the stop to be moved along the guide rail.

5. The power tool of claim **4**, wherein the first nut is a T-nut and the second nut is a thumb nut.

6. The power tool of claim **4**, wherein the stop further includes a spacer between the first nut and the second nut.

7. The power tool of claim **6**, wherein the spacer includes an alignment extrusion that is received in an alignment notch defined in the first nut.

8. The power tool of claim **6**, wherein the guide rail is positioned between the spacer and the first nut so that loosening the second nut increases a space between the spacer and the first nut to reduce friction on the guide rail.

9. The power tool of claim **1**, wherein an end of the slide that engages the guide rail includes a flange.

10. The power tool of claim **1**, wherein the slide is coupled to move with a dust collection assembly that is attachable to the housing.

11. The power tool of claim **10**, wherein the dust collection assembly includes:
a coupler configured to couple to the housing;
an end cap that is coupled to the slide; and
a dust tube that is collapsible between the coupler and the end cap.

12. The power tool of claim **11**, wherein the coupler includes a first locking member and the end cap includes a second locking member that engages the first locking member to selectively lock the dust tube in a collapsed configuration.

13. A rotary hammer comprising:
a housing defining a channel in an external surface of the housing;
a chuck supported on and rotatable relative to the housing;
a slide that is moveable within the channel; and
a stop that is lockable at a plurality of positions along the channel to limit movement of the slide along the channel.

14. The rotary hammer of claim **13** further comprising:
a handle coupled to the housing opposite the chuck,
wherein the channel extends from the chuck to the handle in parallel with a rotational axis of the chuck.

15. The rotary hammer of claim **14** further comprising:
a dust container positioned along a bottom end of the housing,
wherein the channel is positioned along a top end of the housing that is opposite the bottom end of the housing.

16. The rotary hammer of claim **15**, wherein the dust container is coupled directly to the housing.

17. A method of using a depth stop assembly of a power tool, the method comprising:
loosening a depth stop that is at a first position along a channel that is formed in an exterior surface of a housing of the power tool;
moving the depth stop to a second position along the channel that is spaced away from the first position;
tightening the depth stop to lock the depth stop at the second position; and
moving a slide along the channel toward the depth stop, the depth stop preventing further movement of the slide when the slide contacts the depth stop.

18. The method of claim **17**, wherein loosening the depth stop includes turning a thumb nut that is screwed to a T-nut to reduce friction between a spacer and a guide rail that is positioned within the channel.

19. The method of claim **17** further comprising:
attaching a dust collection assembly over a chuck that is rotatable relative to the housing; and
inserting the slide into an open end of the channel that faces the chuck.

20. The method of claim **19**, wherein the second position is at a closed end of the channel that is opposite the open end of the channel, and further comprising:
locking the dust collection assembly in a collapsed configuration; and
moving the slide to a fully-inserted position within the channel.

* * * * *