US012396005B2

(12) **United States Patent**
Cirik et al.

(10) **Patent No.: US 12,396,005 B2**
(45) **Date of Patent: *Aug. 19, 2025**

(54) **CONFIGURED GRANT PROCESSES FOR WIRELESS DEVICES**

(71) Applicant: **Honor Device Co., Ltd.**, Guangdong (CN)

(72) Inventors: **Ali Cagatay Cirik**, Chantilly, VA (US); **Esmael Hejazi Dinan**, McLean, VA (US); **Alireza Babaei**, Fairfax, VA (US); **Hyoungsuk Jeon**, Centreville, VA (US); **Hua Zhou**, Vienna, VA (US); **Nazanin Rastegardoost**, McLean, VA (US); **Yunjung Yi**, Vienna, VA (US); **Kai Xu**, Great Falls, VA (US); **Youngwoo Kwak**, Woodbury, NY (US); **Kyungmin Park**, Vienna, VA (US); **Bing Hui**, Nanjing (CN)

(73) Assignee: **HONOR DEVICE CO., LTD.**, Shenzhen (CN)

(*) Notice: Subject to any disclaimer, the term of this patent is extended or adjusted under 35 U.S.C. 154(b) by 195 days.

This patent is subject to a terminal disclaimer.

(21) Appl. No.: **18/210,774**

(22) Filed: **Jun. 16, 2023**

(65) **Prior Publication Data**

US 2023/0337247 A1 Oct. 19, 2023

Related U.S. Application Data

(63) Continuation of application No. 16/827,006, filed on Mar. 23, 2020, now Pat. No. 11,743,904.

(Continued)

(51) **Int. Cl.**

H04W 72/23 (2023.01)
H04L 5/00 (2006.01)

(Continued)

(52) **U.S. Cl.**

CPC ***H04W 72/23*** (2023.01); ***H04L 5/0092*** (2013.01); ***H04L 5/0098*** (2013.01); ***H04W 74/0808*** (2013.01); ***H04W 80/02*** (2013.01)

(58) **Field of Classification Search**

CPC H04L 5/0092; H04L 5/0098; H04W 72/23; H04W 74/0808; H04W 80/02

See application file for complete search history.

(56) **References Cited**

U.S. PATENT DOCUMENTS

11,743,904 B2 * 8/2023 Cirik H04L 5/0098 370/329
2019/0103954 A1 4/2019 Lee et al.

(Continued)

OTHER PUBLICATIONS

R1-1901528; 3GPP TSG RAN WG1 Meeting #96; Athens, Greece, Feb. 25-Mar. 1, 2019; Agenda Item: 7.2.2.2.4; Source: Huawei, HiSilicon; Title: Transmission with configured grant in NR unlicensed band.

(Continued)

Primary Examiner — Kevin M Cunningham
(74) *Attorney, Agent, or Firm* — Conley Rose, P.C.

(57) **ABSTRACT**

A wireless device receives downlink control information (DCI) comprising one or more fields set to one or more values. The wireless device validates, based on the one or more values, the DCI as an activation or a release of a configured grant of a bandwidth part (BWP) of BWPs of a cell. The wireless device transmits, based on validating the DCI, a confirmation of receiving the DCI, wherein the confirmation comprises an identifier of the BWP and an identifier of a sub-band of a plurality of sub-bands of the BWP.

20 Claims, 41 Drawing Sheets

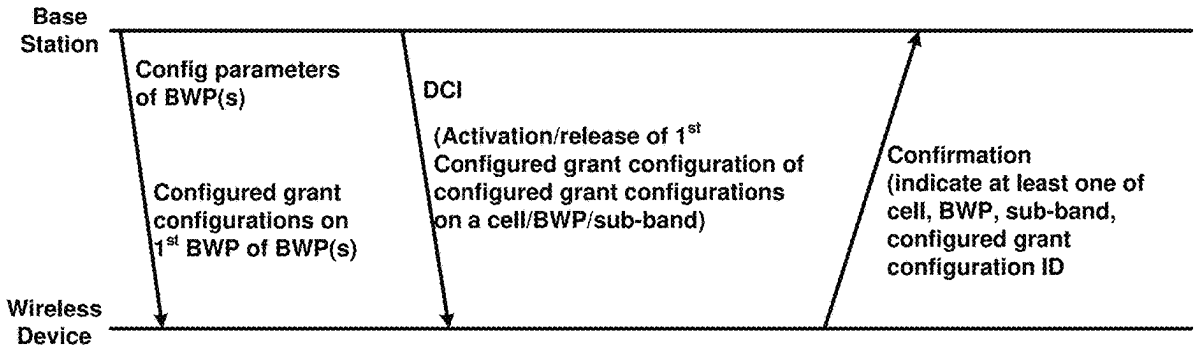

Related U.S. Application Data

(60) Provisional application No. 62/825,314, filed on Mar. 28, 2019.

(51) **Int. Cl.**
H04W 74/0808 (2024.01)
H04W 80/02 (2009.01)

(56) **References Cited**

U.S. PATENT DOCUMENTS

2019/0253230	A1*	8/2019	Loehr	H04W 72/0453
2019/0349983	A1	11/2019	Loehr et al.	
2019/0393989	A1	12/2019	Jung et al.	
2020/0015176	A1	1/2020	Li et al.	
2020/0359409	A1	11/2020	Karaki et al.	
2021/0329599	A1	10/2021	Zhang	
2021/0410177	A1	12/2021	Takeda et al.	

OTHER PUBLICATIONS

R1-1901562; 3GPP TSG RAN WG1 Meeting #96; Athens, Greece, Feb. 25-Mar. 1, 2019; Agenda Item: 7.2.6.3; Source: Huawei, HiSilicon; Title:Enhanced UL configured grant transmissions.

R1-1901598; 3GPP TSG RAN WG1 Meeting #96; Athens, Greece, Feb. 25-Mar. 1, 2019; Agenda Item: 7.2.6.3; Source: Ericsson; Title:Enhancement of Configured Grant for NR URLLC; Document for:Discussion, Decision.

R1-1901612; 3GPP TSG RAN WG1 #96; Athens, Greece, Feb. 25-Mar. 1, 2019; Title: Discussion on configured grant for NR-U; Source: ZTE, Sanechips; Agenda Item: 7.2.2.2.4.

R1-1901678; 3GPP TSG RAN WG1 #96; Athens, Greece, Feb. 25-Mar. 1, 2019; Source: vivo; Title: Discussion on the enhancements to configured grants; Agenda Item: 7.2.2.2.4.

R1-1901697; 3GPP TSG RAN WG1 #96; Athens, Greece, Feb. 25-Mar. 1, 2019; Source: vivo; Title: Enhanced UL grant-free transmission for URLLC; Agenda Item: 7.2.6.3.

R1-1901773; 3GPP TSG RAN WG1 #96; Athens, Greece, Feb. 25-Mar. 1, 2019; Source: ZTE; Title: Enhancements for UL grant-free transmissions; Agenda item: 7.2.6.3; Document for: Discussion and Decision.

R1-1901801; 3GPP TSG RAN WG1 #96; Athens, Greece, Feb. 25-Mar. 1, 2019; Agenda Item: 7.2.2.2.4; Source: MediaTek Inc.; Title: Discussion on NR-U configured grant.

R1-1901827; 3GPP TSG RAN WG1 Meeting #96; Athens, Greece, Feb. 25-Mar. 1, 2019; Agenda Item: 7.2.6.3; Source: MediaTek Inc.; Title: Evaluation and enhancements of configured-grant for URLLC; Document for: Discussion and Decision.

R1-1901925; 3GPP TSG RAN WG1 #96; Athens, Greece, Feb. 25-Mar. 1, 2019; Source: OPPO; Title: On configured grant for NR-U; Agenda Item: 7.2.2.2.4.

R1-1902007; 3GPP TSG RAN WG1 Meeting #96; Athens, Greece, Feb. 25-Mar. 1, 2019; Source: CATT; Title: On enhancements to configured UL grant; Agenda Item: 7.2.6.3.

R1-1902043; 3GPP TSG RAN WG1 Meeting 1901; Athens, Greece, Feb. 25-Mar. 1, 2019; Agenda Item: 7.2.2.2.4; Source: LG Electronics; Title: Discussion on configured grant for NR-U.

R1-1902050; 3GPP TSG RAN WG1 #96; Athens, Greece, Feb. 25-Mar. 1, 2019; Agenda Item: 7.2.6.3; Source: LG Electronics; Title: Discussion on enhancement for grant-free transmission; Document for: Discussion and decision.

R1-1902110; 3GPP TSG RAN WG1 Meeting #96; Athens, Greece, Feb. 25-Mar. 1, 2019; Agenda item: 7.2.2.2.4; Source: Nokia, Nokia Shanghai Bell; Title: On support of UL transmission with configured grants in NR-U.

R1-1902127; 3GPP TSG RAN WG1 #96; Athens, Greece, Feb. 25-Mar. 1, 2019; Agenda Item: 7.2.6.3; Source: Sequans; Title: Enhancements for grant free transmissions.

R1-1902172; 3GPP TSG RAN WG1 meeting #96; Athens, Greece, Feb. 25-Mar. 1, 2019; Agenda Item: 7.2.2.2.4; Source: Sony; Title: Enhancements to Configured Grants in NR-U.

R1-1902181; 3GPP TSG RAN WG1 #96; Athens, Greece, Feb. 25-Mar. 1, 2019; Agenda Item: 7.2.6.3; Source: Sony; Title: Consideration on enhanced UL grant-free transmissions.

R1-1902260; 3GPP TSG RAN WG1 WG1 #96; Athens, Greece, Feb. 25-Mar. 1, 2019; Agenda item: 7.2.2.2.4; Source: Samsung; Title: Enhancements on configured grant for NR-U.

R1-1902301; 3GPP TSG RAN WG1 #96; Athens, Greece, Feb. 25-Mar. 1, 2019; Agenda Item: 7.2.6.3; Source: Samsung; Title: Potential enhancement for UL grant-free transmission.

R1-1902396; 3GPP TSG RAN WG1 #96; Athens, Greece, Feb. 25-Mar. 1, 2019; Source: Panasonic; Title: Discussion on URLLC enhancements for grant-free transmission; Agenda Item: 7.2.6.3.

R1-1902474; 3GPP TSG RAN WG1 Meeting #96 ; Greece, Feb. 25-Mar. 1, 2019; Agenda Item: 7.2.2.2.4; Source: Intel Corporation; Title: Enhancements to configured grants for NR-unlicensed.

R1-1902498; 3GPP TSG RAN WG1 RAN1#96; Athens, Greece, Feb. 25-Mar. 1, 2019; Source: Intel Corporation; Title: On enhancements to configured grant PUSCH for eURLLC; Agenda item: 7.2.6.3.

R1-1902543; 3GPP TSG RAN WG1 #96; Athens, Greece, Feb. 25-Mar. 1, 2019; Agenda item: 7.2.2.2.4 (Configured grant enhancement); Title: Discussion on multiplexing issues for configured grants in NR-U; Source: TCL Communications.

R1-1902590; 3GPP TSG RAN WG1 #96; Athens, Greece, Feb. 25-Mar. 1, 2019; Agenda Item: 7.2.2.2.4; Source: InterDigital Inc.

R1-1902611; 3GPP TSG RAN WG1 #96; Athens, Greece, Feb. 25-Mar. 1, 2019; Agenda Item: 7.2.6.3; Source: InterDigital Inc.

R1-1902684; 3GPP TSG RAN WG1 #96; Athens, Greece, Feb. 25-Mar. 1, 2019; Agenda item: 7.2.2.2.4; Source: NEC; Title: Discussion on configured grant enhancement in NR-U.

R1-1902718; 3GPP TSG RAN WG1 #96; Athens, Greece, Feb. 25-Mar. 1, 2019; Agenda item: 7.2.6.3; Source: Spreadtrum Communications; Title: Discussion on UL grant-free transmission enhancements for URLLC.

R1-1902809; 3GPP TSG RAN WG1 #96; Athens, Greece, Feb. 25-Mar. 1, 2019; Source: NTT Docomo, Inc.; Title: Enhanced UL transmission with configured grant for URLLC; Agenda Item: 7.2.6.3.

R1-1902854; 3GPP TSG RAN WG1 #96; Athens, Greece, Feb. 25-Mar. 1, 2019; Source: Panasonic; Title: Configured grant enhancements for NR-U.

R1-1902886; 3GPP TSG-RAN WG1#96; Athens, Feb. 25-Mar. 1, 2019; Agenda Item: 7.2.2.2.4; Source: Ericsson; Title: Configured UL grant for NR-U.

R1-1902931; 3GPP TSG RAN WG1 #96; Athens, Greece, Feb. 25-Mar. 1, 2019; Agenda item: 7.2.6.3; Source: Institute for Information Industry (III); Title: Discussion on Configured Grant Enhancements; Document for: Discussion and Decision.

R1-1902951; 3GPP TSG RAN WG1 #96; Athens, Greece, Feb. 25-Mar. 1, 2019; Agenda Item: 7.2.6.3; Source: KDDI; Title: Discussion on enhanced UL grant-free transmissions.

R1-1902988; 3GPP TSG RAN WG1 Meeting #96; Athens, Greece; Feb. 25-Mar. 1, 2019; Agenda item: 7.2.2.2.4; Source: Qualcomm Incorporated; Title: Enhancement to configured grants in NR unlicensed.

R1-1903009; 3GPP TSG-RAN WG1 Meeting #96; Feb. 25-Mar. 1, 2019; Athens, Greece; Agenda item: 7.2.6.3; Title: Enhanced Grant-Free Transmissions for eURLLC.

R1-1903409; 3GPP TSG RAN WG1 #96; Athens, Greece, Feb. 25-Mar. 1, 2019; Agenda Item: 7.2.2.2.4; Source: vivo; Title: Feature lead summary for Configured grant enhancement.

R1-1903476; 3GPP TSG RAN WG1 #96; Athens, Greece, Feb. 25-Mar. 1, 2019; Agenda Item: 7.2.2.2.4; Source: vivo; Title: Outcome of offline discussion on Configured grant enhancement.

R1-1903502 (Revision of R1-1901952); 3GPP TSG RAN WG1 Meeting #96; Athens, Greece, Feb. 25-Mar. 1, 2019; Agenda item: 7.2.6.3; Source: Nokia, Nokia Shanghai Bell; Title: On Configured Grant enhancements for NR URLLC.

R1-1903585; 3GPP TSG RAN WG1 Meeting #96; Athens, Greece, Feb. 25-Mar. 1, 2019; Agenda Item: 7.2.6.3; Source: NTT Docomo, Inc.; Title: Summary of 7.2.6.3 Enhanced configured grant PUSCH transmissions.

(56) **References Cited**

OTHER PUBLICATIONS

R1-1903698; 3GPP TSG RAN WG1 #96; Athens, Greece, Feb. 25-Mar. 1, 2019; Source: OPPO; Title: UL grant-free transmission enhancement; Agenda Item: 7.2.6.3.
R1-1903707; 3GPP TSG RAN WG1 Meeting #96; Athens, Greece, Feb. 25-Mar. 1, 2019; Agenda Item: 7.2.6.3; Source: NTT Docomo, Inc.; Title: Offline discussions for enhanced configured grant PUSCH transmissions.
R2-1900235; 3GPP TSG-RAN WG2 Meeting #105; Athens, Greece, Feb. 25-Mar. 1, 2019; Source: vivo; Title: Discussion on the Configurations of Configured Grant in NR-U; Agenda Item: 11.2.1.2.
R2-1900250; 3GPP TSG-RAN WG2 Meeting #105 ; Athens, Greece, Feb. 25-Mar. 1, 2019; Agenda Item: 11.2.1.2; Source: OPPO; Title: Enhancements of configured grant in NR-U; Document for: Discussion, Decision.
R2-1900719; 3GPP TSG-RAN WG2 105; Athens, Greece, Feb. 25-Mar. 1, 2019; Agenda Item:11.2.1.2; Source: Intel Corporation; Title: Configured UL grant enhancement for NR Unlicense.
R2-1900939; 3GPP TSG-RAN WG2 Meeting #105; Athens, Greece, Feb. 25-Mar. 1, 2019; Agenda item: 11.2.1.2; Title: Autonomous Uplink Transmission in NR-U; Source: Spreadtrum Communications.
R2-1901334; 3GPP TSG-RAN WG2 #105; Athens, Greece, Feb. 25-Mar. 1, 2019; Agenda Item: 11.2.1.2; Source: Huawei, HiSilicon; Title: Transmission with configured grant for NR-U.
R2-1901335; 3GPP TSG-RAN WG2 Meeting #105; Athens, Greece, Feb. 25-Mar. 1, 2019; Agenda Item: 11.2.1.2; Source: Huawei, HiSilicon; Title: Coexistence between configured grant and dynamic grant in NR-U; Document for: Discussion and decision.
R2-1901670; 3GPP TSG RAN WG2 #105; Athens, Greece, Feb. 25-Mar. 1, 2019; Agenda Item: 11.2.1.2; Source: Ericsson; Title: Coexistence Between Configured and Dynamically Scheduled UL Grants.
R2-1901675 (Revision of R2-1817972); 3GPP TSG-RAN WG2 #105; Athens, Greece, Feb. 25-Mar. 1, 2019; Agenda Item: 11.2.1.2; Source: Ericsson; Title: On Autonomous UL Transmissions for NR-U; Document for: Discussion, Decision.
R2-1901810 (Revision of R2-1818232); 3GPP TSG-RAN WG2 Meeting #105; Athens, Greece, Feb. 25-Mar. 1, 2019; Agenda Item: 11.2.1.2 MAC; Source: LG Electronics Inc.; Title: Consideration on configured uplink grant.
R2-1901812 (Revision of R2-1818223); 3GPP TSG-RAN WG2 Meeting #105; Athens, Greece, Feb. 25-Mar. 1, 2019; Agenda Item: 11.2.1.2 MAC; Source: LG Electronics Inc.; Title: Consideration on collision avoidance between uplink grants.
R2-1900152; 3GPPP TSG-RAN WG2 Meeting 105; Athens, Greece, Feb. 25-Mar. 1, 2019; Source: CATT; Title: Multiple active SPS and Configured Grant Configurations; Agenda Item: 11.7.2.2; Document for: Discussion and Decision.
R2-1802851; 3GPPP TSG-RAN WG2 Meeting #101; Athens, Greece, Feb. 25-Mar. 1, 2018; Agenda Item: 9.12.2; Source: LG Electronics Inc.; Title: Necessity of multi-bit confirmation MAC CE; Document for: Discussion and Decision.

* cited by examiner

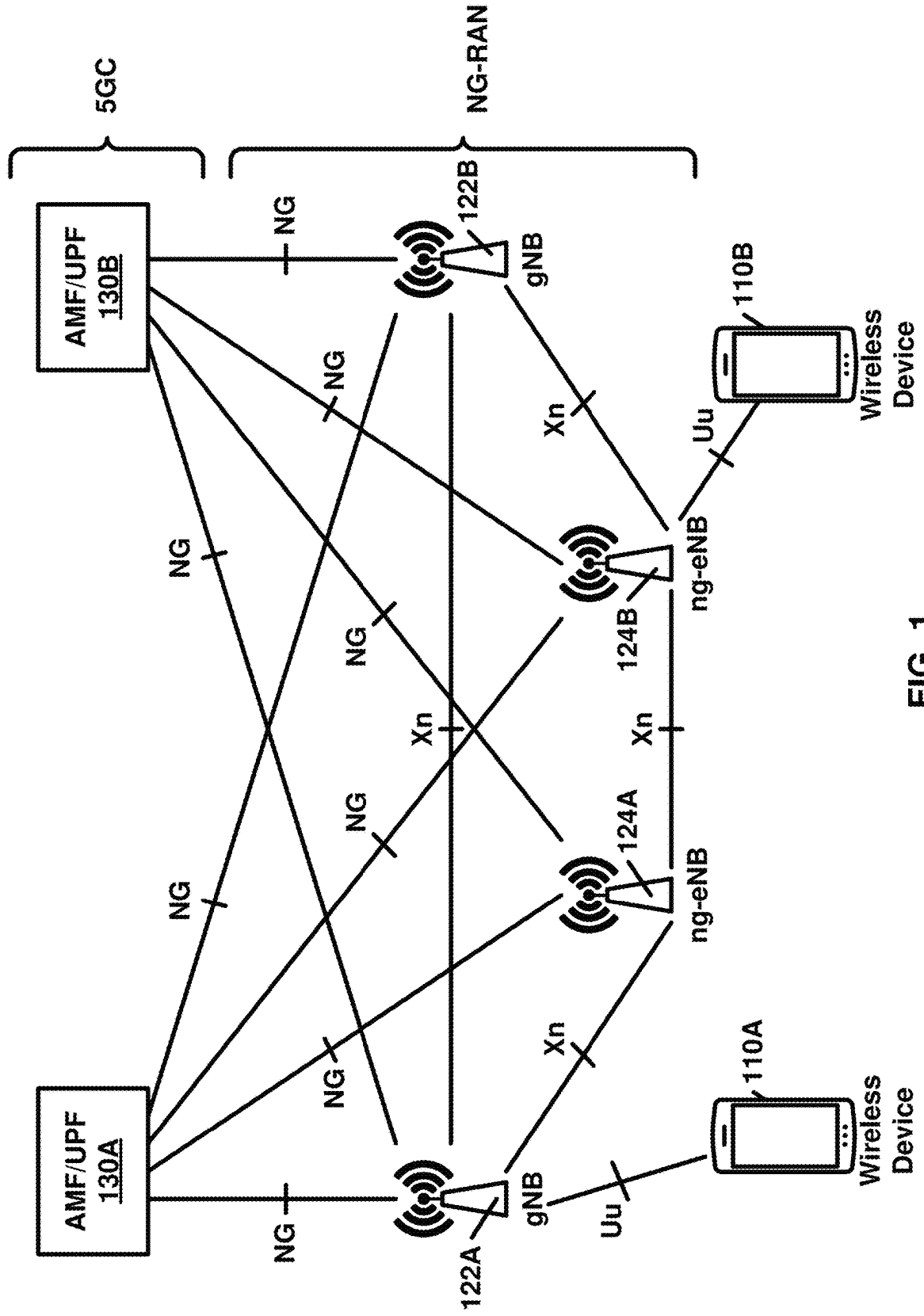
5GC
NG-RAN
AMF/UPF
130B
AMF/UPF
130A
NG
NG
NG
NG
NG
NG
NG
NG
122B
gNB
124B
ng-eNB
124A
ng-eNB
122A
gNB
Xn
Xn
Xn
Uu
Uu
110B
Wireless
Device
110A
Wireless
Device

FIG. 1

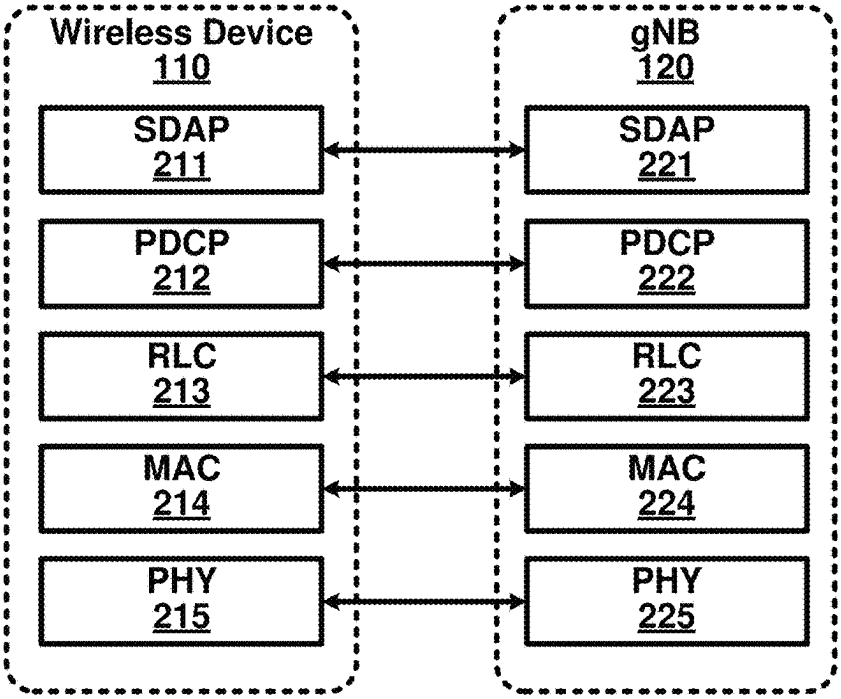

User Plane Protocol Stack

FIG. 2A

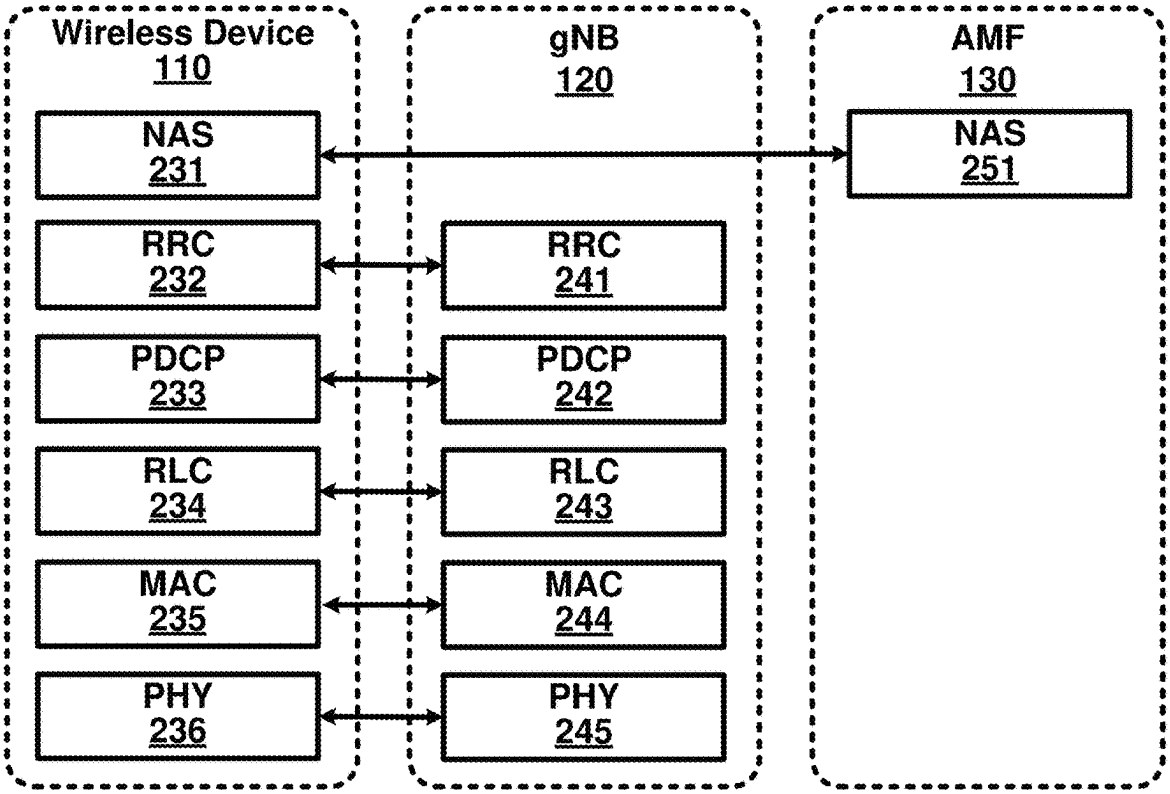

Control Plane Protocol Stack

FIG. 2B

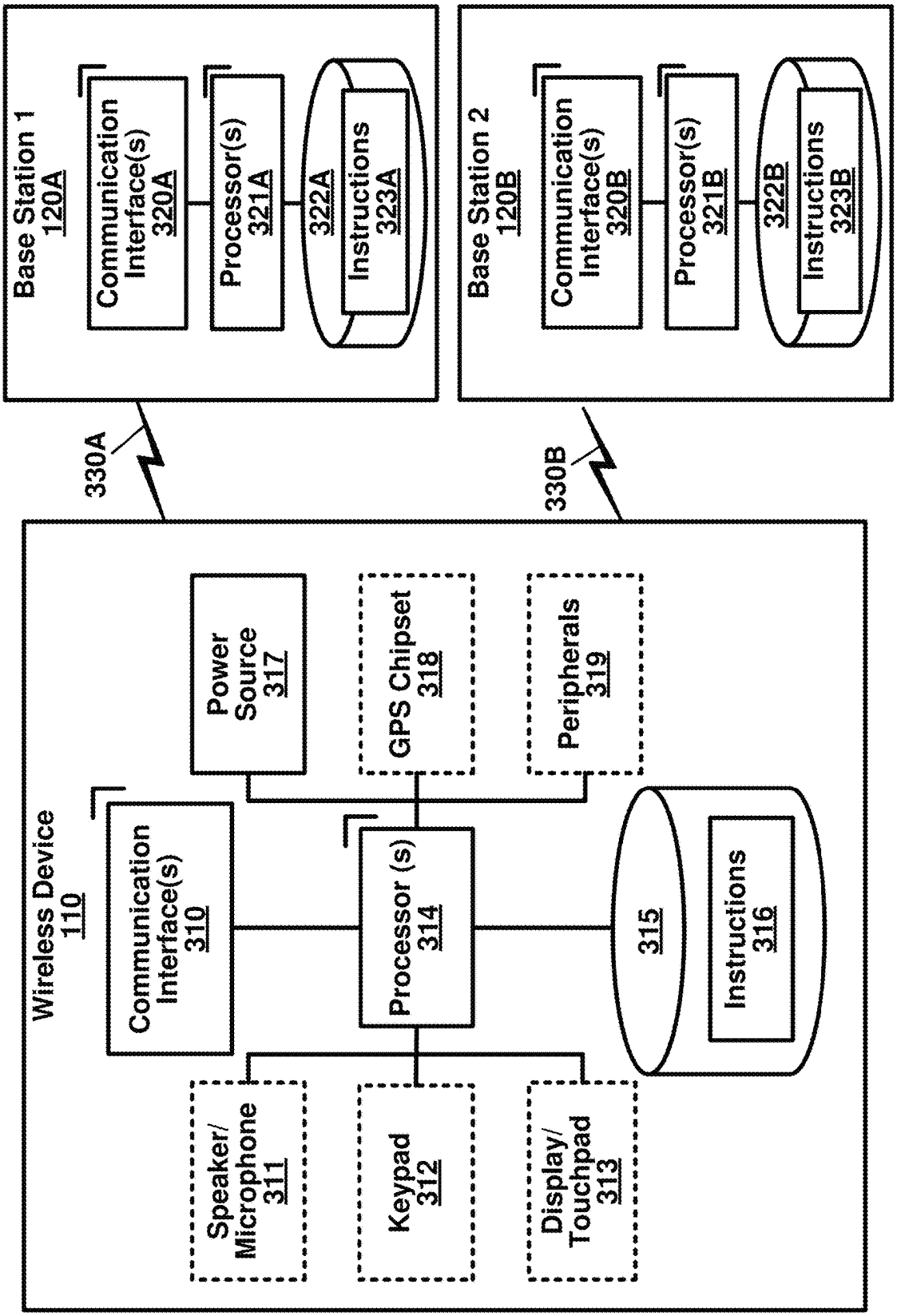
Base Station 1
120A
Communication Interface(s)
320A
Processor(s)
321A
322A
Instructions
323A
Base Station 2
120B
Communication Interface(s)
320B
Processor(s)
321B
322B
Instructions
323B
330A
330B
Wireless Device
110
Communication Interface(s)
310
Power Source
317
GPS Chipset
318
Peripherals
319
Processor (s)
314
315
Instructions
316
Speaker/ Microphone
311
Keypad
312
Display/ Touchpad
313

FIG. 3

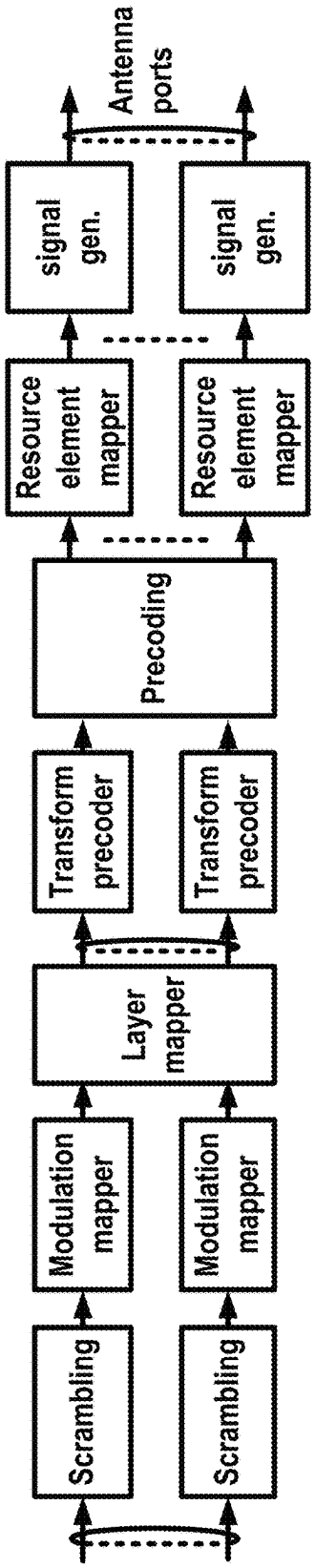

FIG. 4A

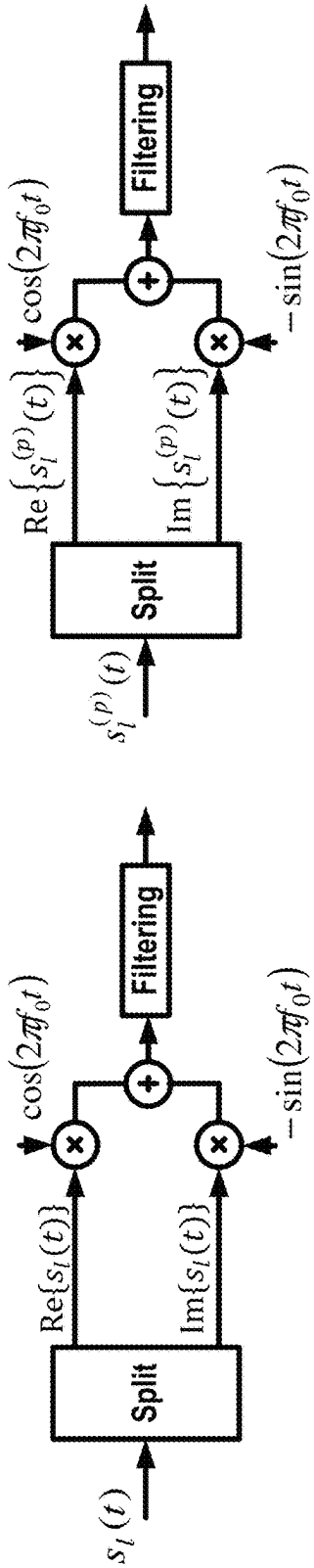

FIG. 4B

FIG. 4D

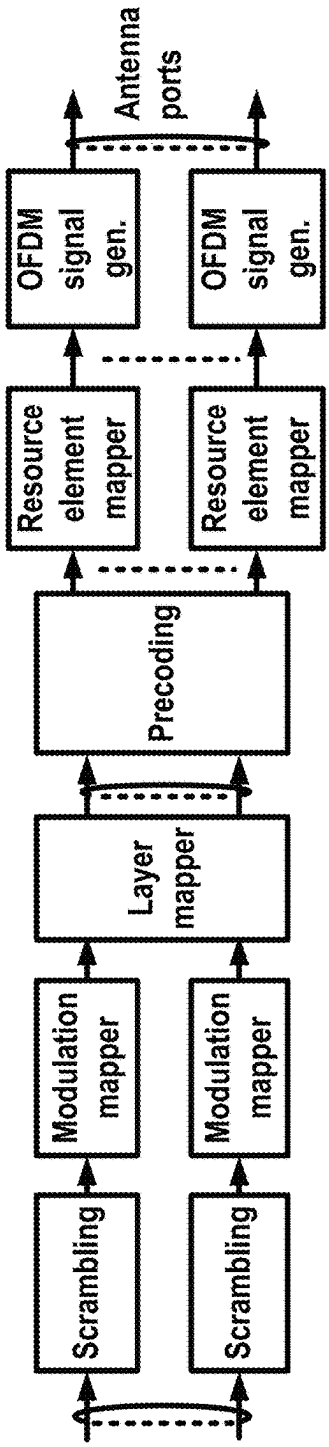

FIG. 4C

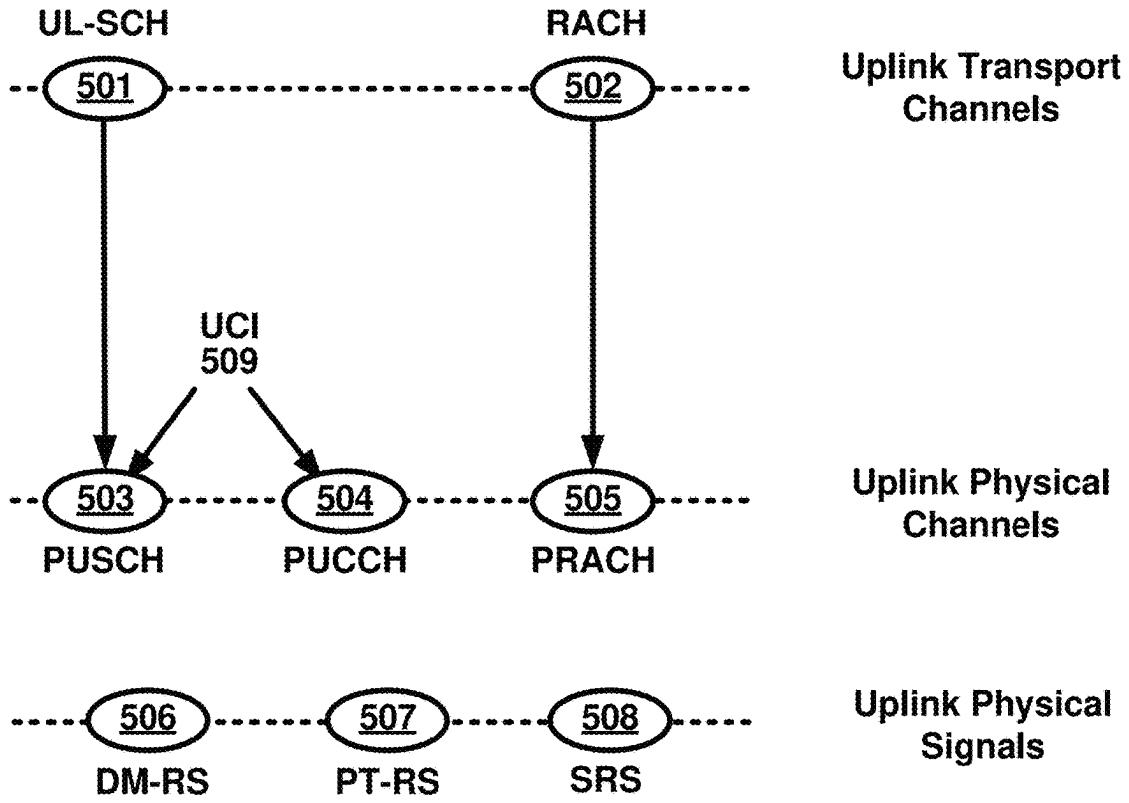
UL-SCH
RACH
501
502
Uplink Transport Channels
UCI
509
503
504
505
Uplink Physical Channels
PUSCH
PUCCH
PRACH
506
507
508
Uplink Physical Signals
DM-RS
PT-RS
SRS

FIG. 5A

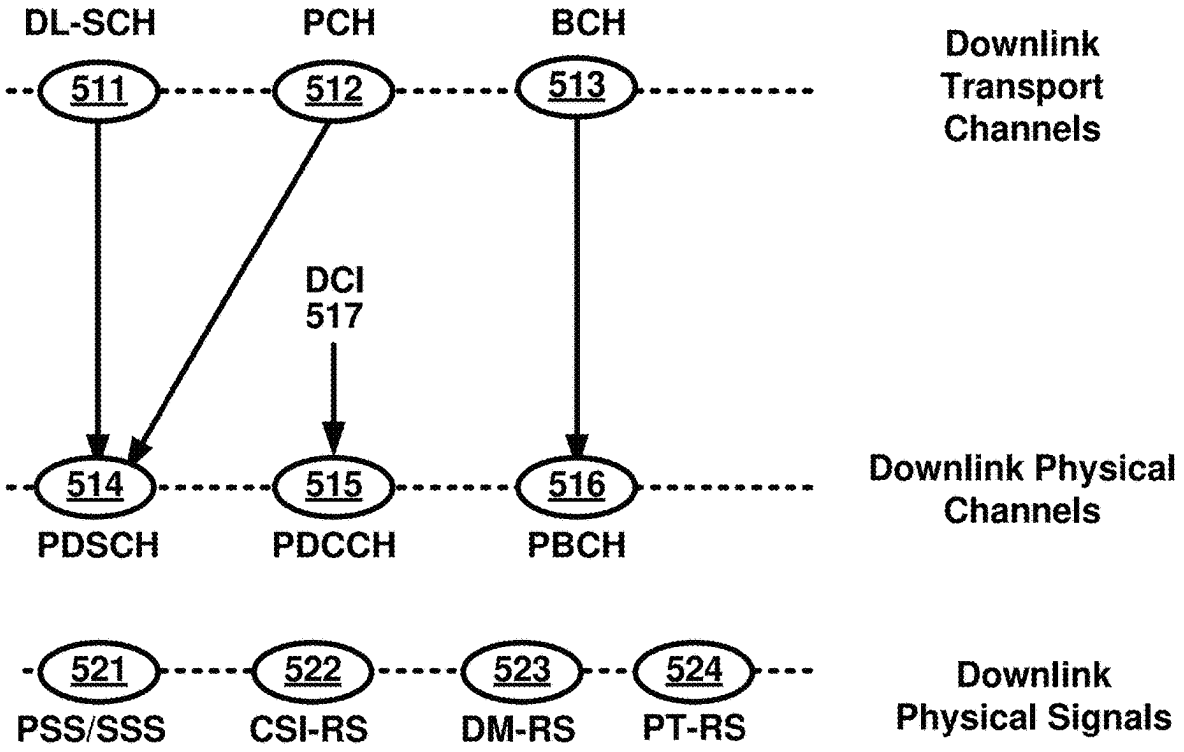
DL-SCH
PCH
BCH
511
512
513
Downlink Transport Channels
DCI
517
514
515
516
Downlink Physical Channels
PDSCH
PDCCH
PBCH
521
522
523
524
Downlink Physical Signals
PSS/SSS
CSI-RS
DM-RS
PT-RS

FIG. 5B

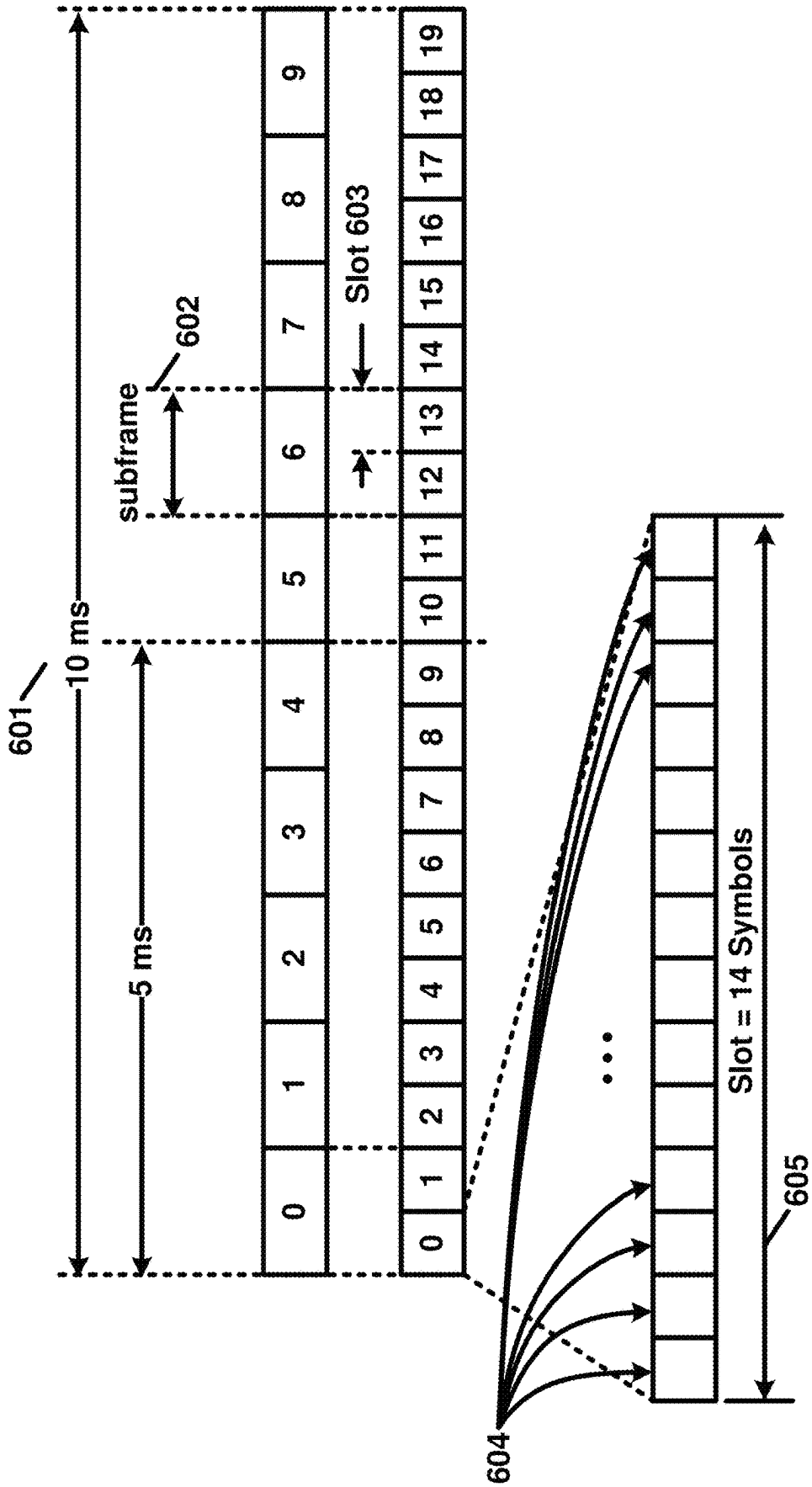
601
10 ms
5 ms
subframe
602
0
1
2
3
4
5
6
7
8
9
Slot 603
0
1
2
3
4
5
6
7
8
9
10
11
12
13
14
15
16
17
18
19
604
Slot = 14 Symbols
605

FIG. 6

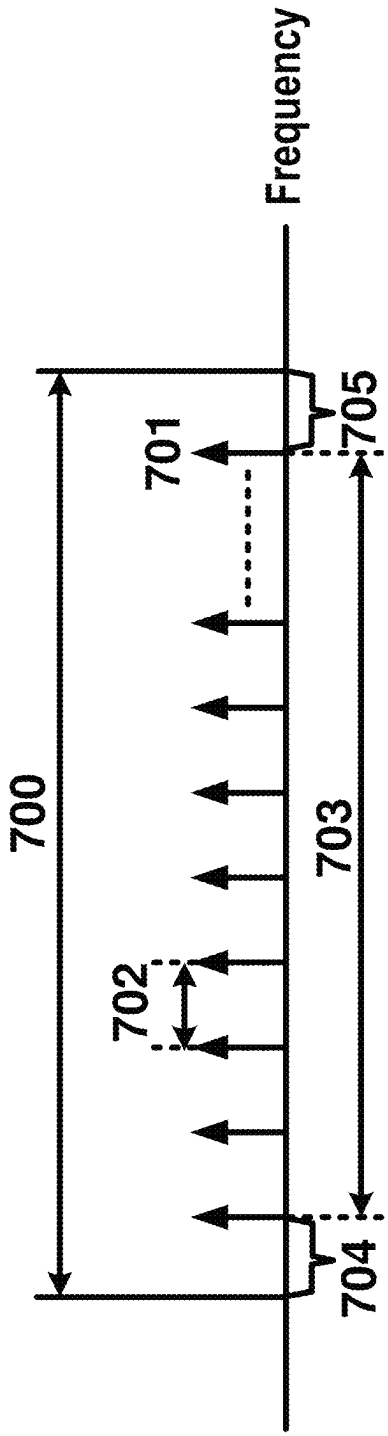
Frequency
700
701
702
703
704
705

FIG. 7A

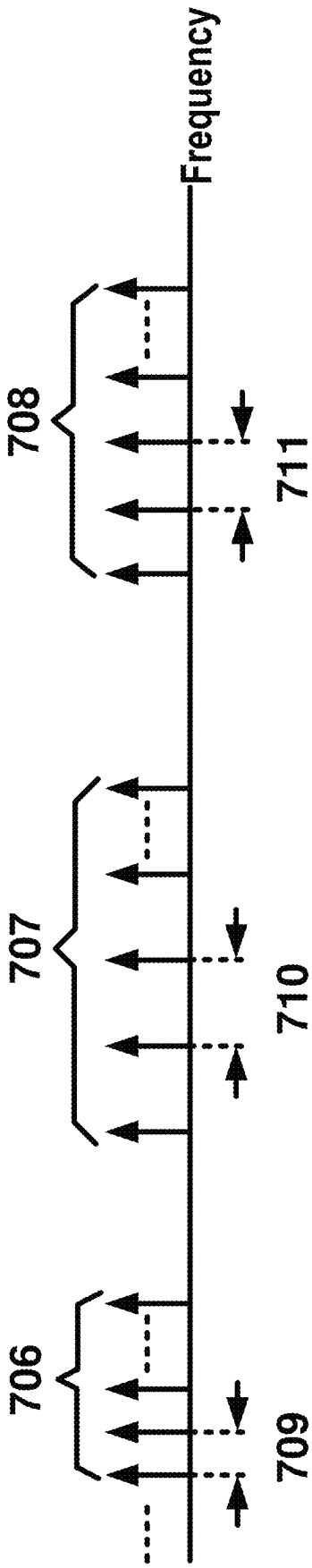
Frequency
706
707
708
709
710
711

FIG. 7B

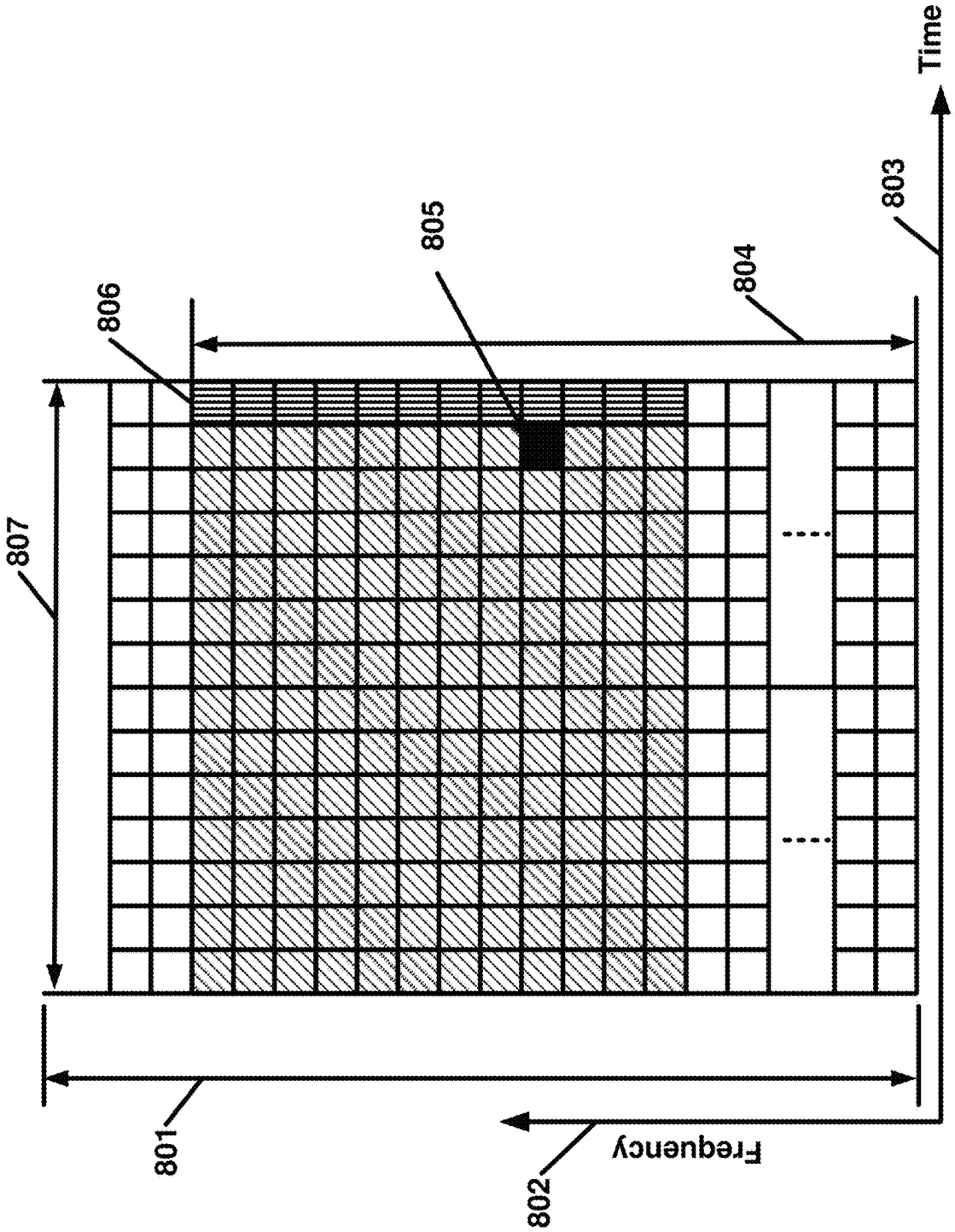

FIG. 8

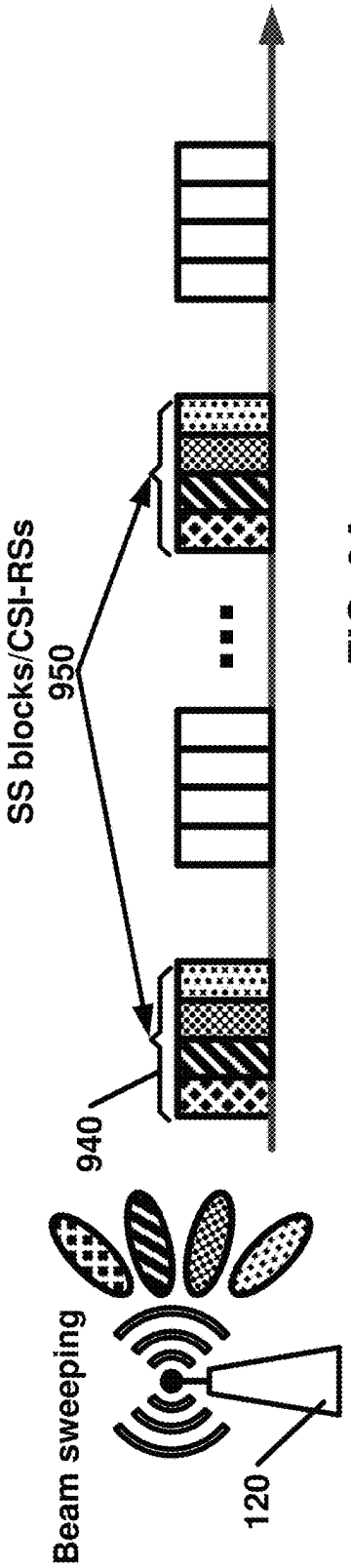
SS blocks/CSI-RSs
950
940
Beam sweeping
120

FIG. 9A

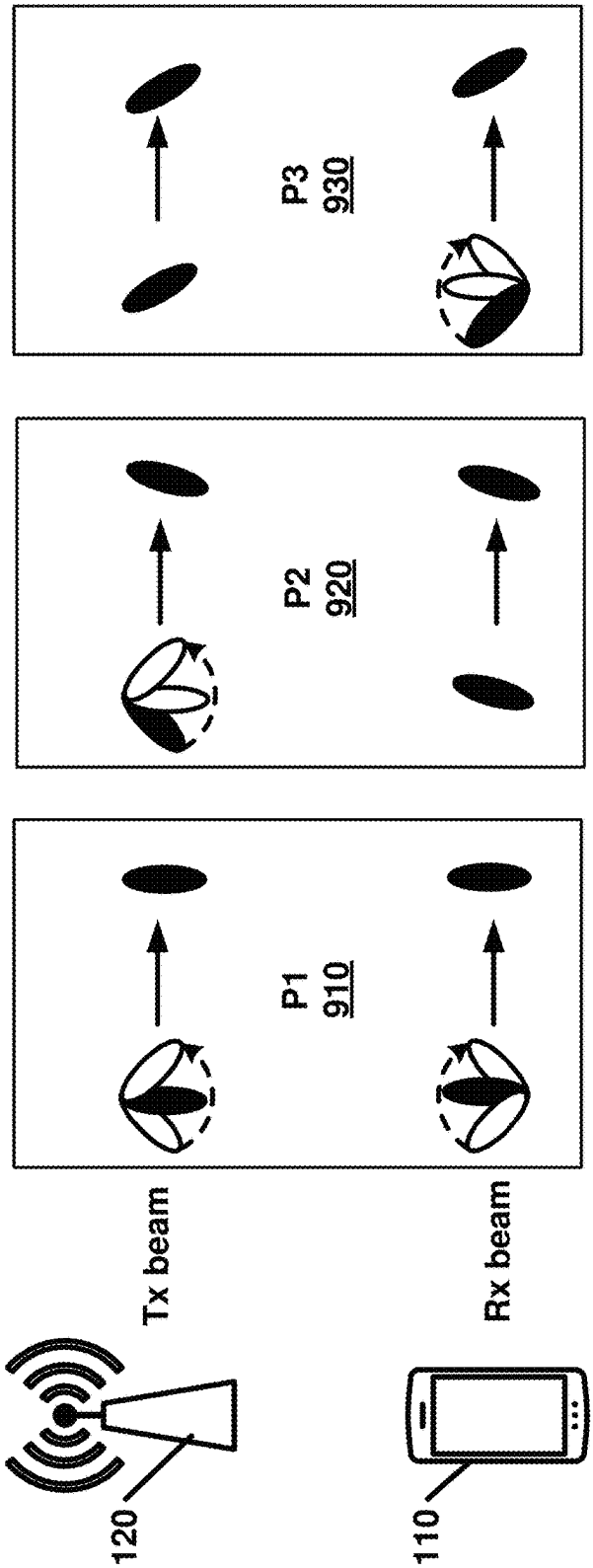
P1
910
P2
920
P3
930
Tx beam
Rx beam
120
110

FIG. 9B

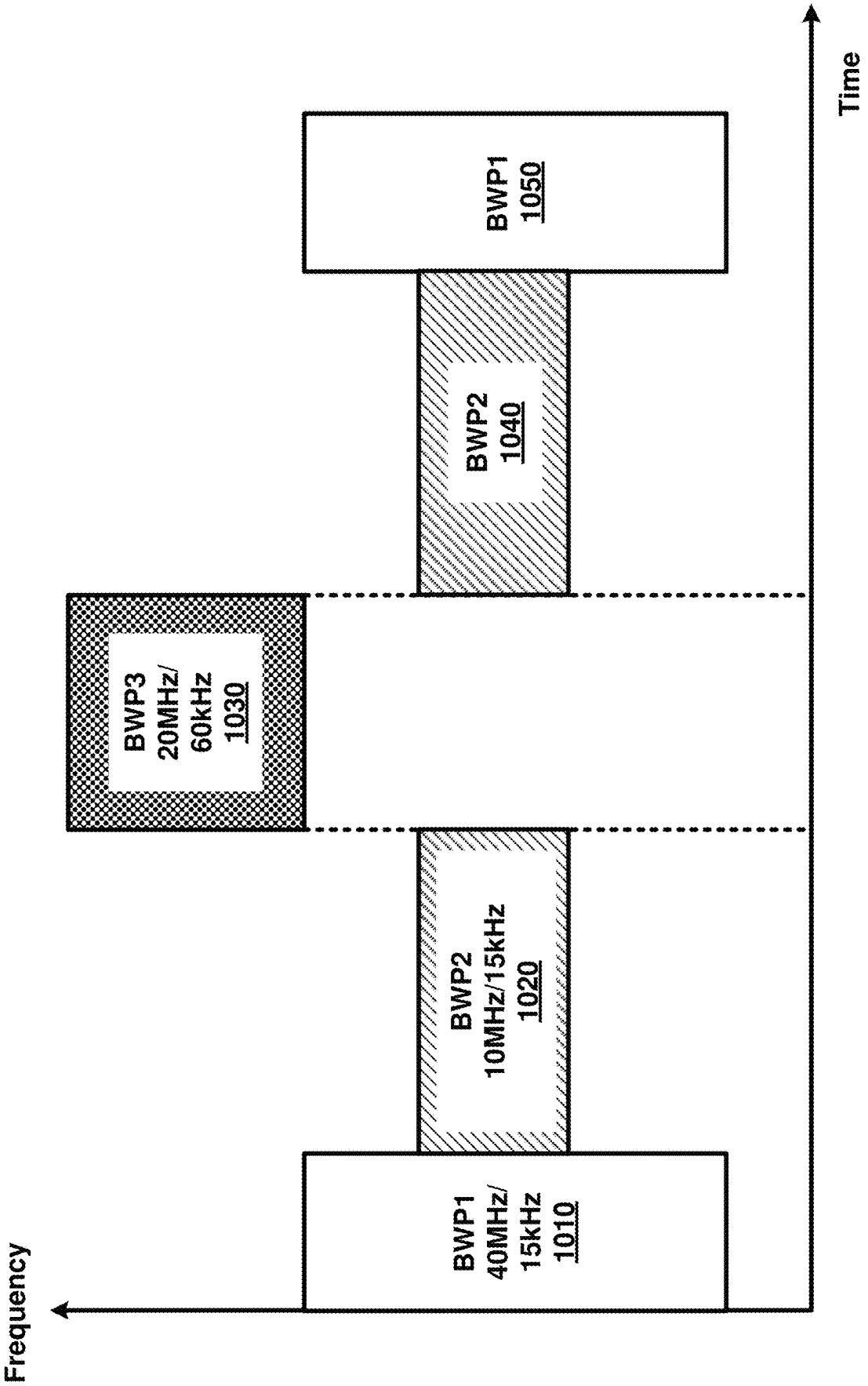
Frequency
BWP1
40MHz/
15kHz
1010
BWP2
10MHz/15kHz
1020
BWP3
20MHz/
60kHz
1030
BWP2
1040
BWP1
1050
Time

FIG. 10

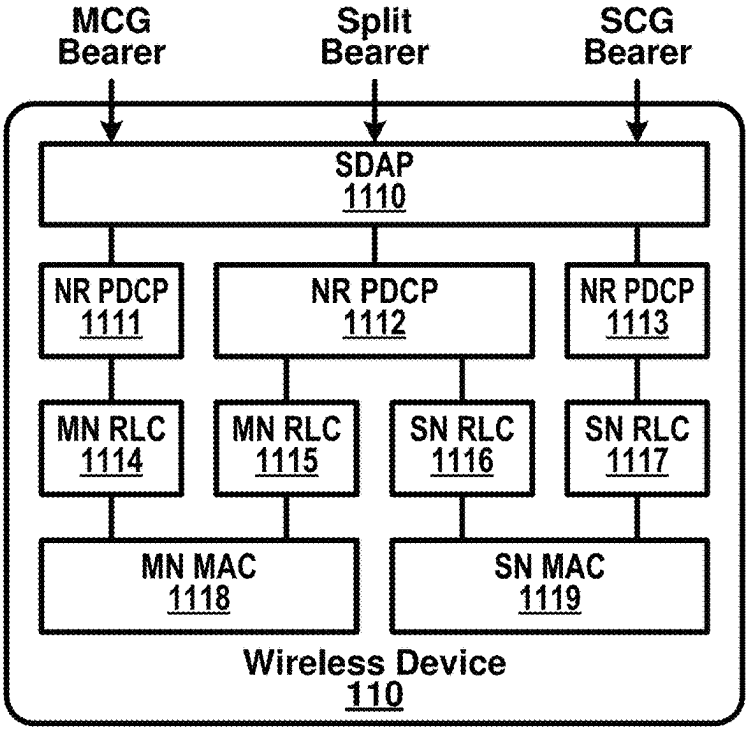

FIG. 11A

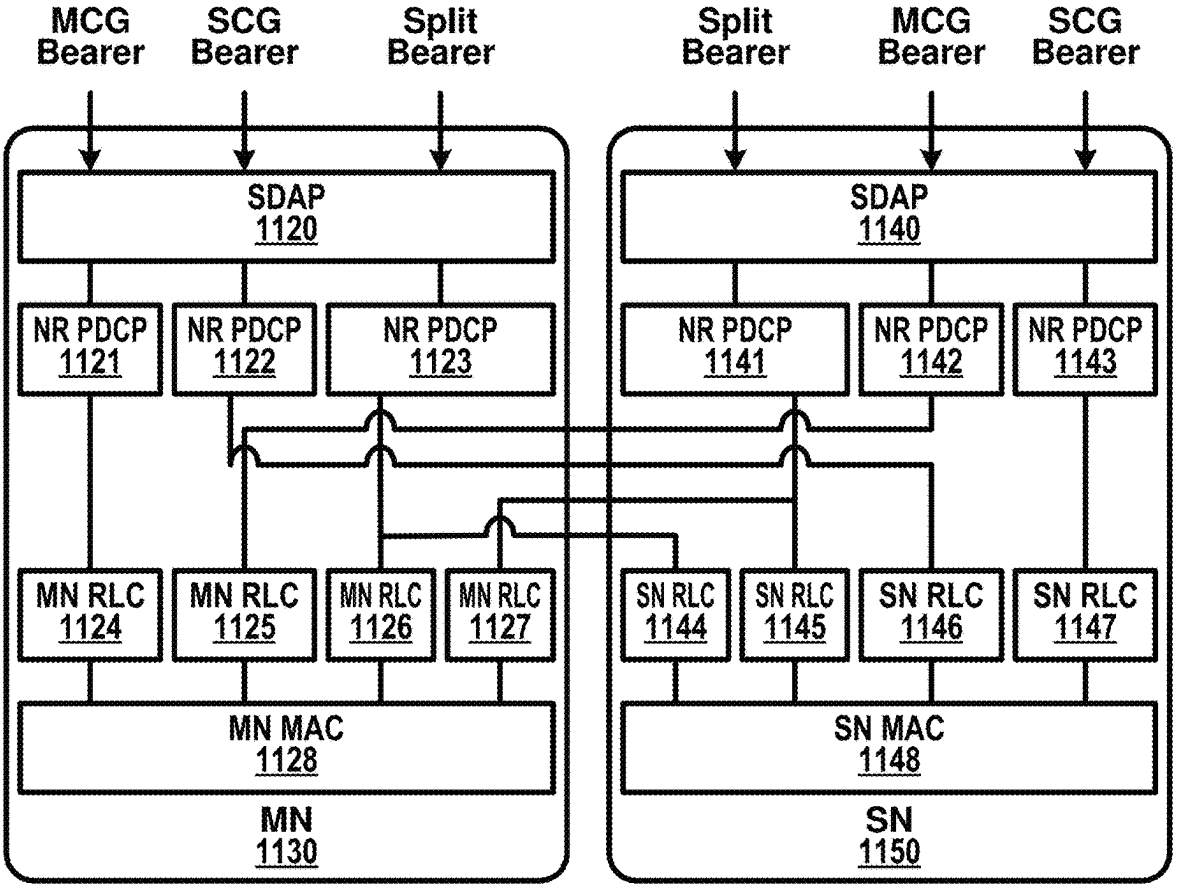

FIG. 11B

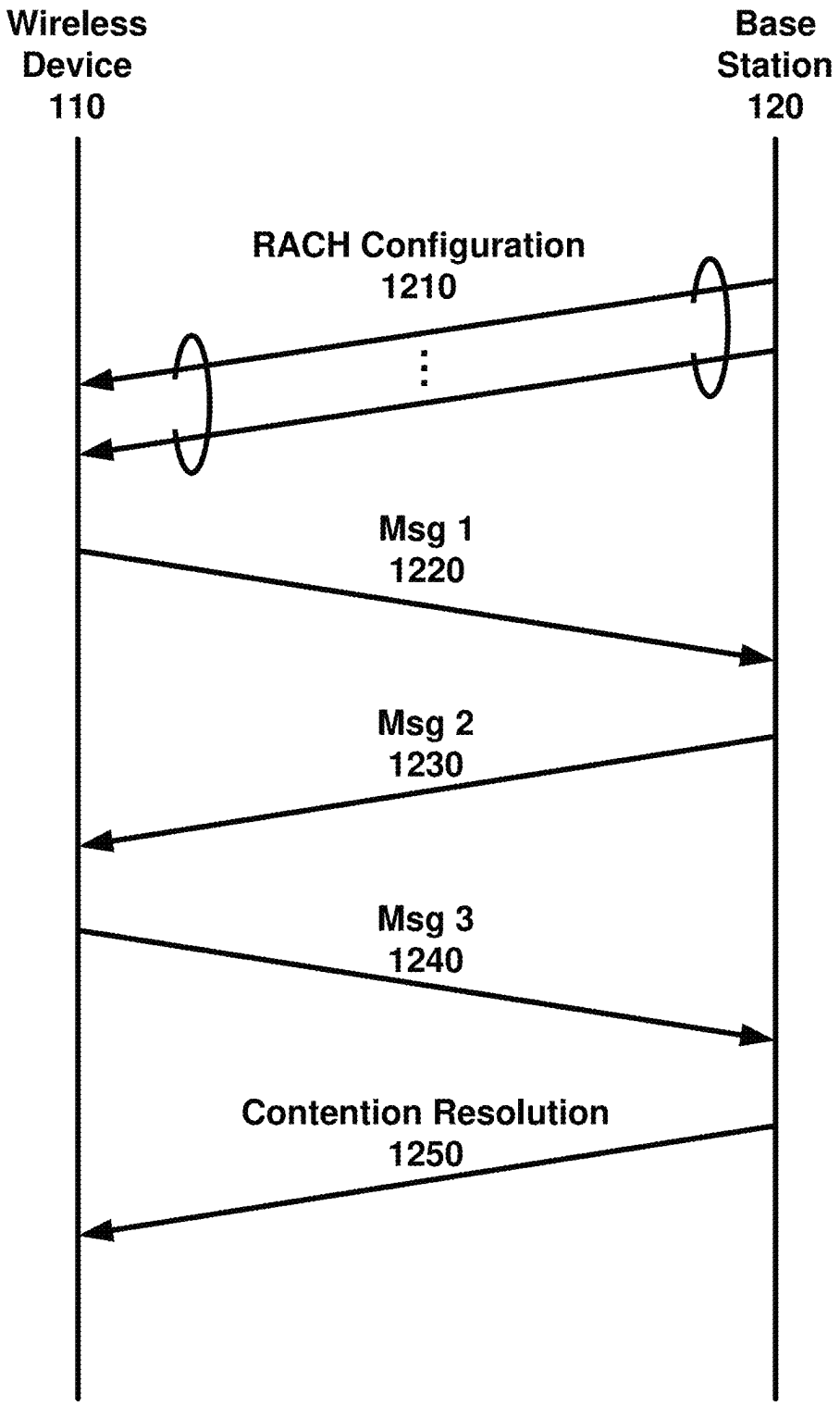
Wireless Device 110
Base Station 120
RACH Configuration 1210
Msg 1 1220
Msg 2 1230
Msg 3 1240
Contention Resolution 1250

FIG. 12

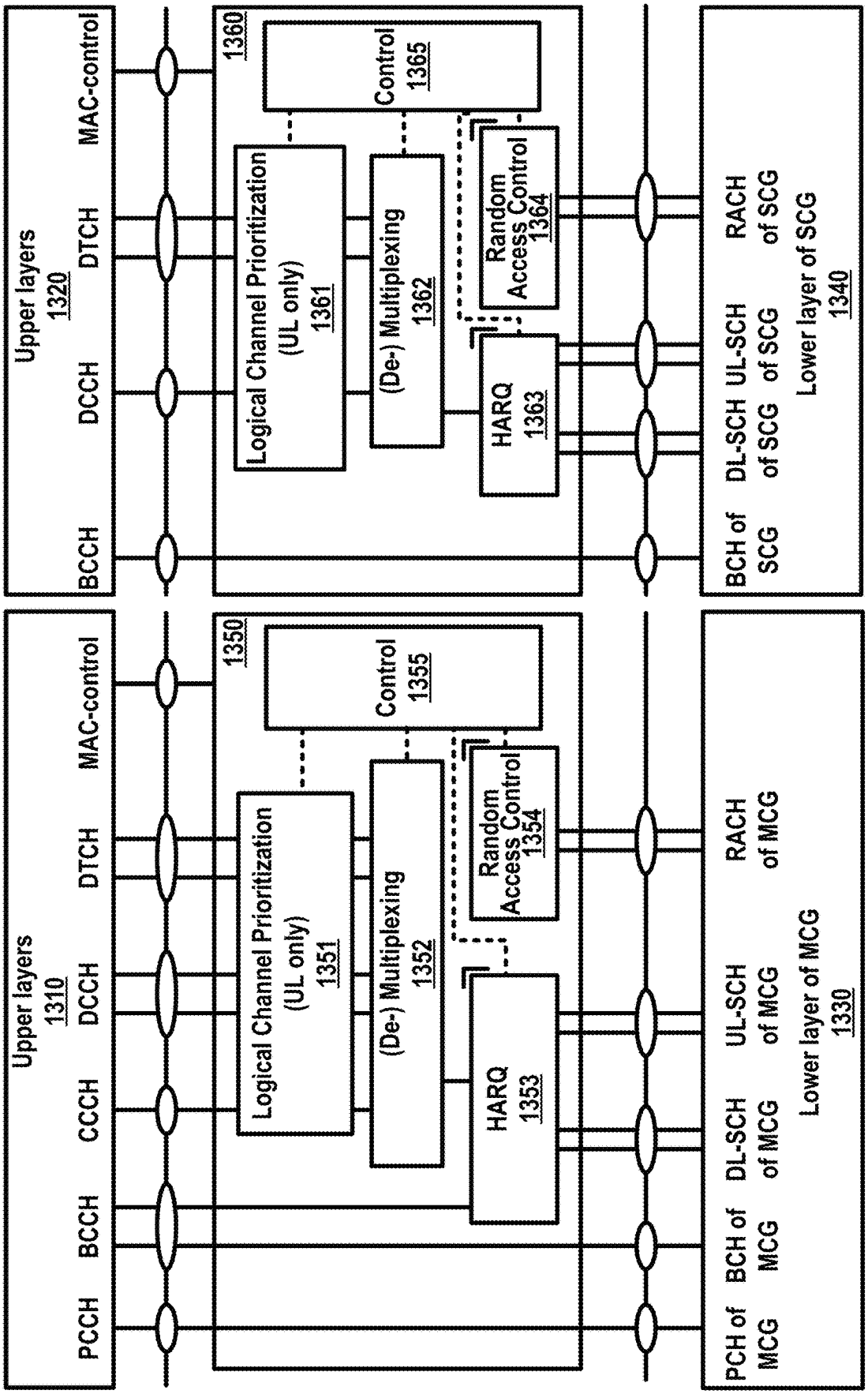
Upper layers
1320
BCCH
DCCH
DTCH
MAC-control
1360
Logical Channel Prioritization
(UL only)
1361
(De-) Multiplexing
1362
Control
1365
Random
Access Control
1364
HARQ
1363
BCH of
SCG
DL-SCH
of SCG
UL-SCH
of SCG
RACH
of SCG
Lower layer of SCG
1340
Upper layers
1310
PCCH
BCCH
CCCH
DCCH
DTCH
MAC-control
1350
Logical Channel Prioritization
(UL only)
1351
(De-) Multiplexing
1352
Control
1355
Random
Access Control
1354
HARQ
1353
PCH of
MCG
BCH of
MCG
DL-SCH
of MCG
UL-SCH
of MCG
RACH
of MCG
Lower layer of MCG
1330

FIG. 13

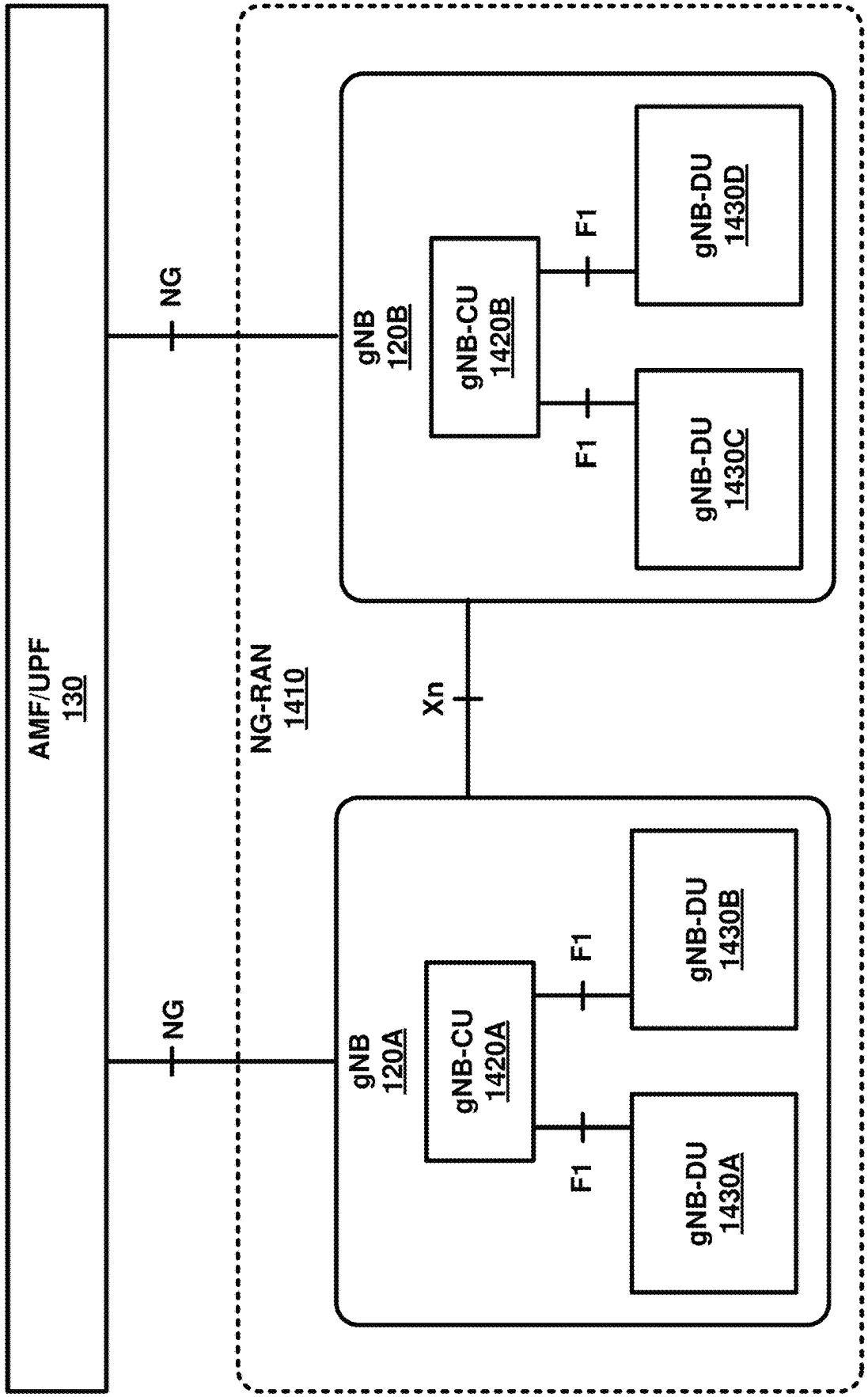
AMF/UPF
130
NG
NG
NG-RAN
1410
gNB
120A
gNB-CU
1420A
F1
F1
gNB-DU
1430A
gNB-DU
1430B
Xn
gNB
120B
gNB-CU
1420B
F1
F1
gNB-DU
1430C
gNB-DU
1430D

FIG. 14

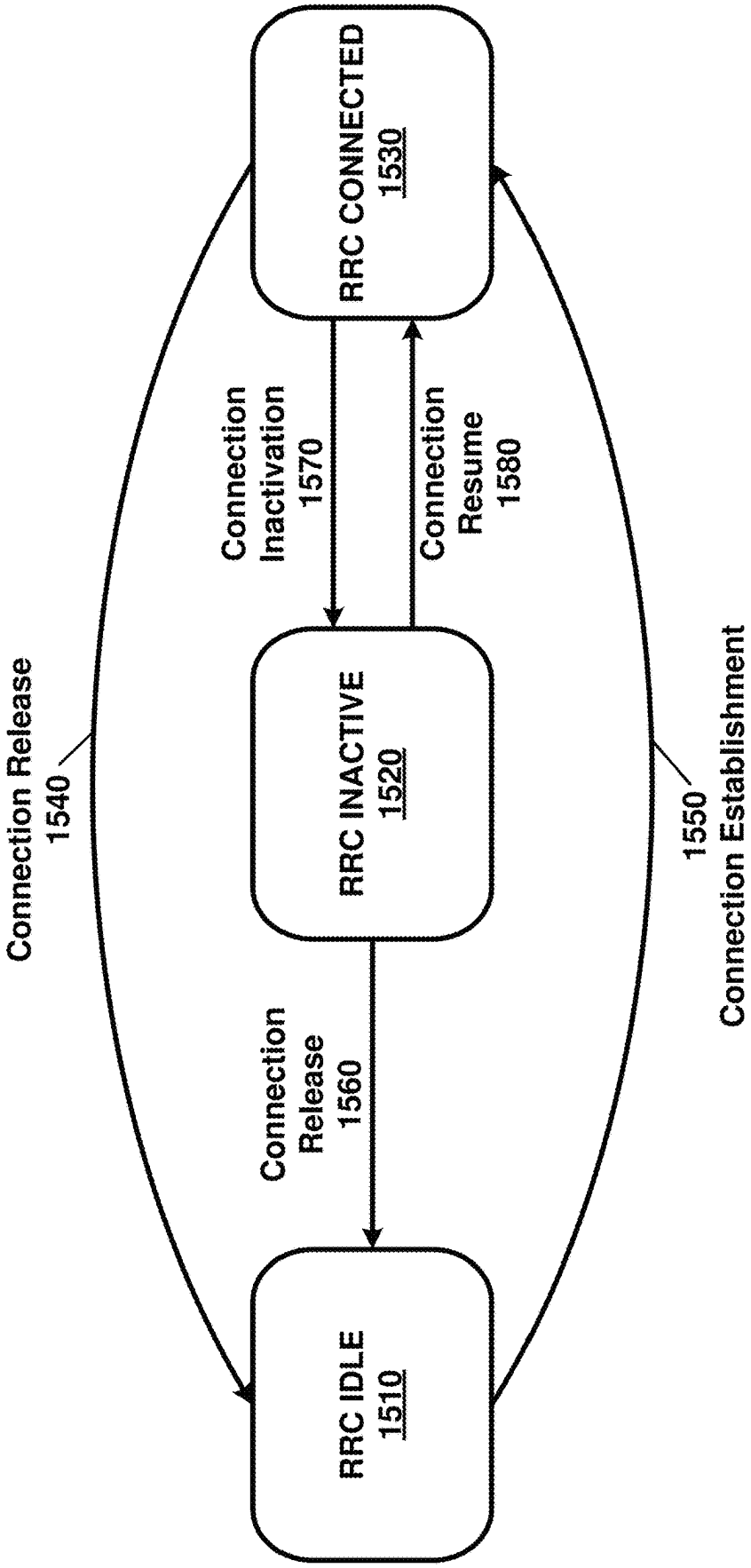
RRC CONNECTED
1530
Connection Inactivation
1570
Connection Resume
1580
RRC INACTIVE
1520
Connection Release
1540
1550
Connection Establishment
Connection Release
1560
RRC IDLE
1510

FIG. 15

Channel Access Priority Class (p)	QCI
1	1, 3, 5, 65, 66, 69, 70
2	2, 7
3	4, 6, 8, 9
4	-

FIG. 16

Channel Access Priority Class (p)	m_p	$CW_{\min,p}$	$CW_{\max,p}$	$T_{ulmcot,p}$	allowed CW_p sizes
1	2	3	7	2 ms	{3,7}
2	2	7	15	4 ms	{7,15}
3	3	15	1023	6ms or 10 ms	{15,31,63,127,255,511,1023}
4	7	15	1023	6ms or 10 ms	{15,31,63,127,255,511,1023}

FIG. 17

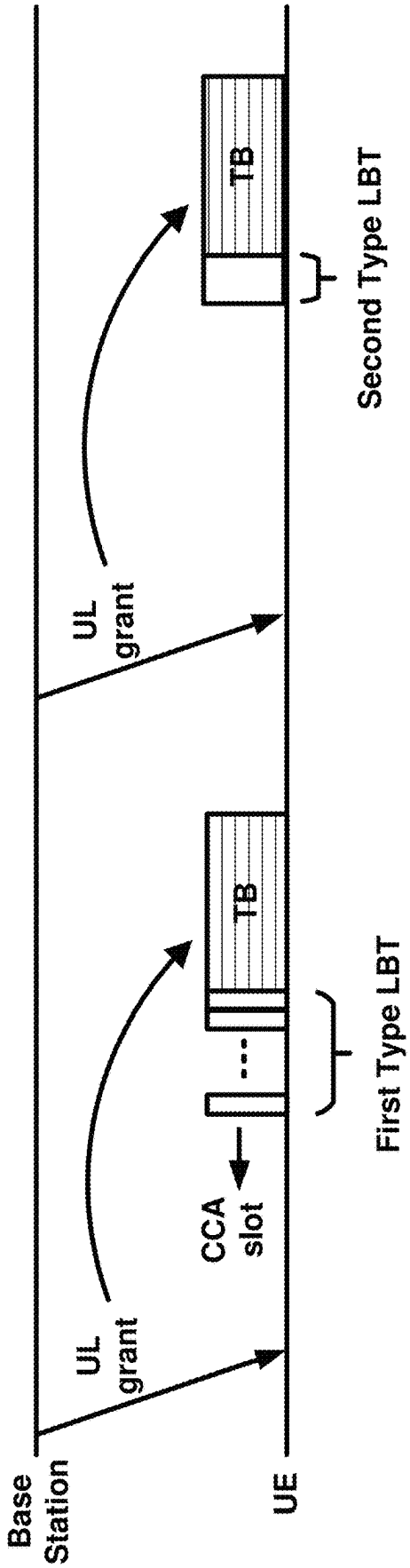
Base Station
UE
UL grant
UL grant
CCA slot
TB
TB
First Type LBT
Second Type LBT

FIG. 18

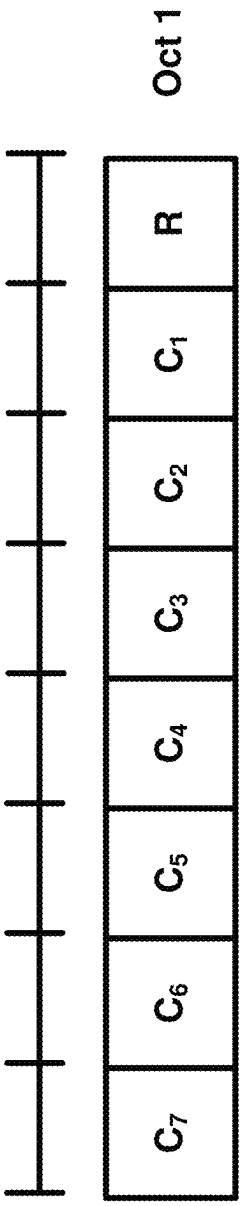

FIG. 19A

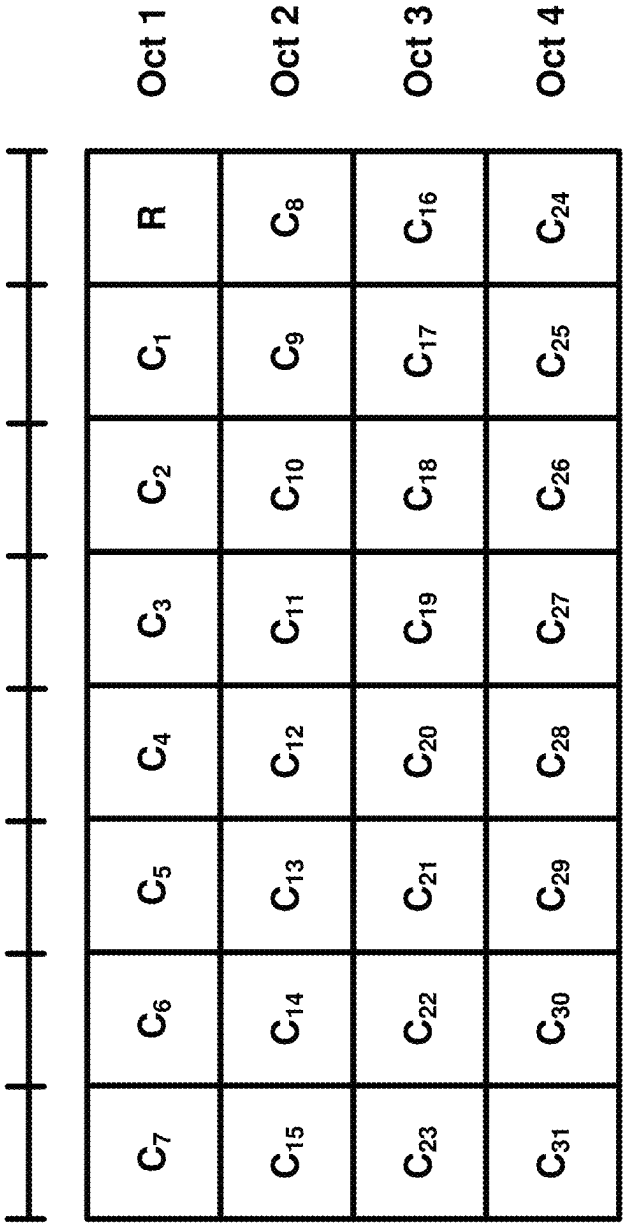

FIG. 19B

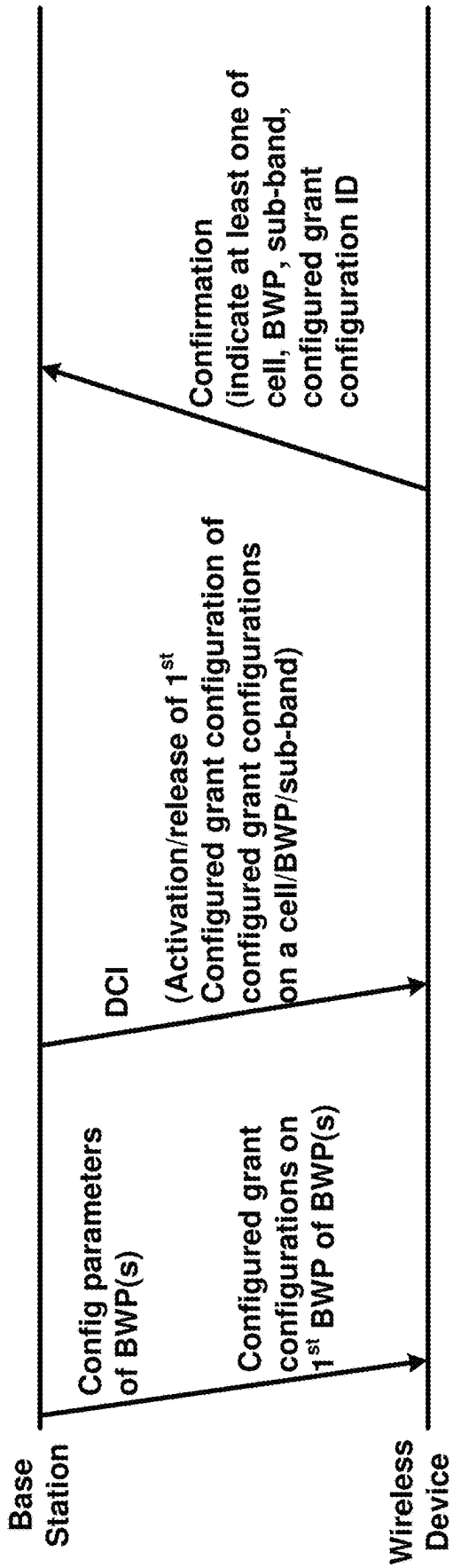
Base Station
Wireless Device
Config parameters of BWP(s)
Configured grant configurations on 1st BWP of BWP(s)
DCI
(Activation/release of 1st Configured grant configuration of configured grant configurations on a cell/BWP/sub-band)
Confirmation (indicate at least one of cell, BWP, sub-band, configured grant configuration ID

FIG. 20

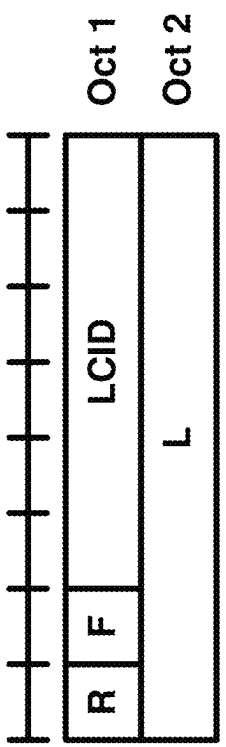

FIG. 21A

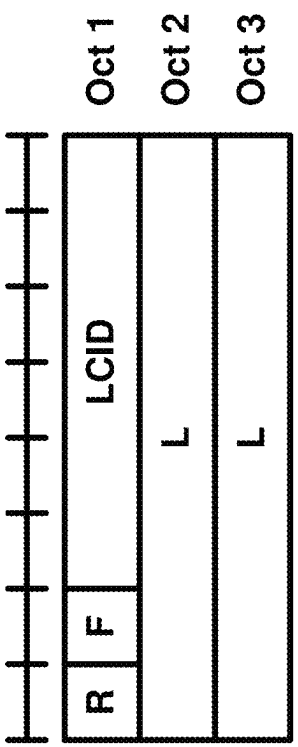

FIG. 21B

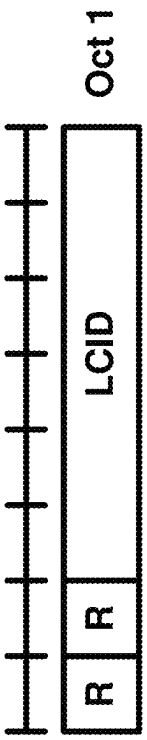

FIG. 21C

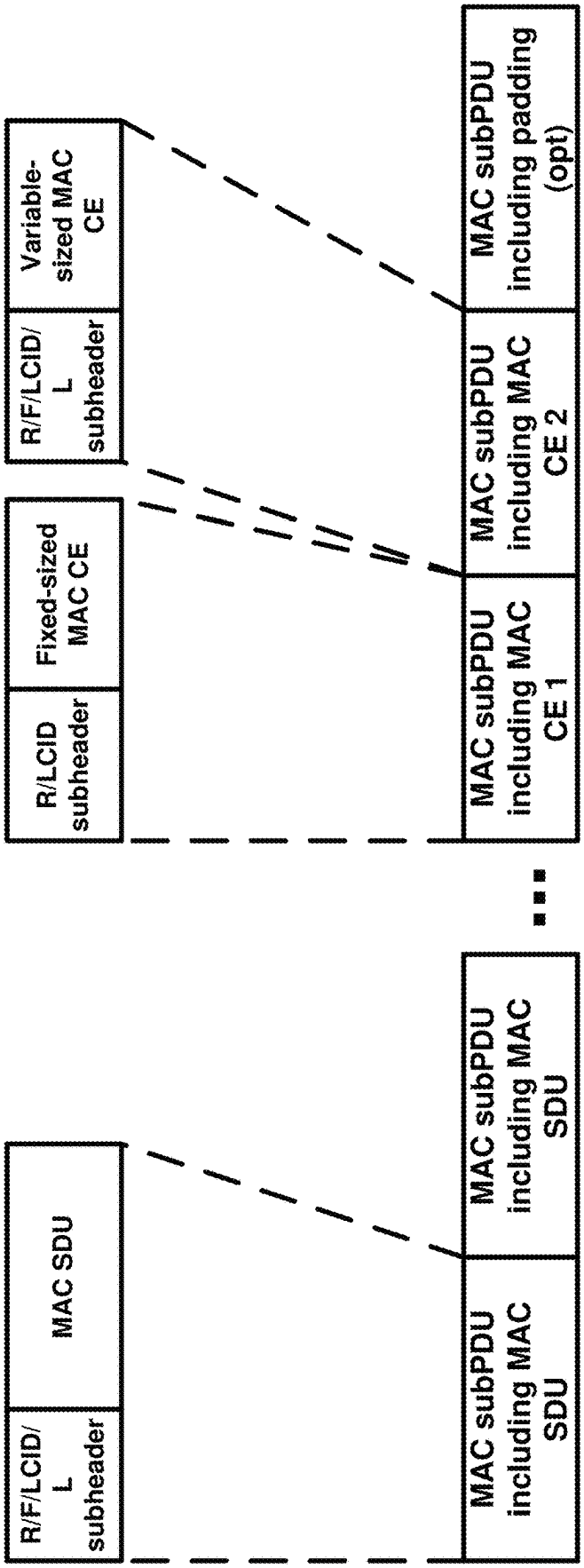
R/F/LCID/
L
subheader
MAC SDU
R/LCID
subheader
Fixed-sized
MAC CE
R/F/LCID/
L
subheader
Variable-
sized MAC
CE
MAC subPDU
including MAC
SDU
MAC subPDU
including MAC
SDU
MAC subPDU
including MAC
CE 1
MAC subPDU
including MAC
CE 2
MAC subPDU
including padding
(opt)

FIG. 22

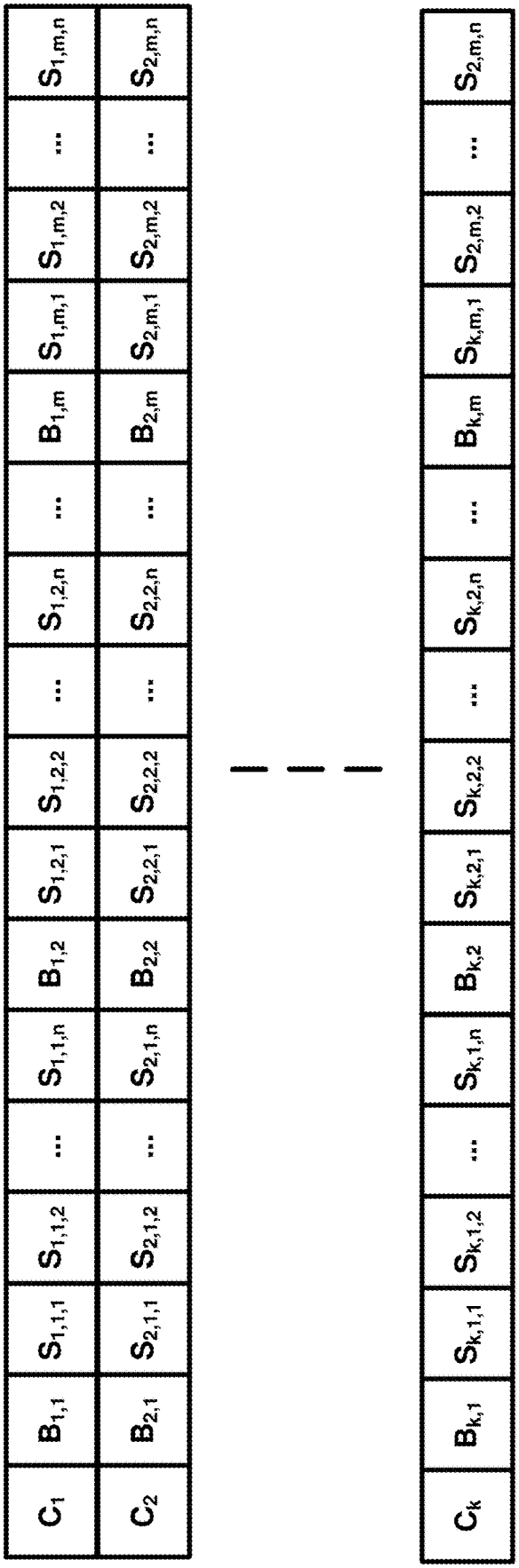
C_1
$B_{1,1}$
$S_{1,1,1}$
$S_{1,1,2}$
...
$S_{1,1,n}$
$B_{1,2}$
$S_{1,2,1}$
$S_{1,2,2}$
...
$S_{1,2,n}$
...
$B_{1,m}$
$S_{1,m,1}$
$S_{1,m,2}$
...
$S_{1,m,n}$
C_2
$B_{2,1}$
$S_{2,1,1}$
$S_{2,1,2}$
...
$S_{2,1,n}$
$B_{2,2}$
$S_{2,2,1}$
$S_{2,2,2}$
...
$S_{2,2,n}$
...
$B_{2,m}$
$S_{2,m,1}$
$S_{2,m,2}$
...
$S_{2,m,n}$
C_k
$B_{k,1}$
$S_{k,1,1}$
$S_{k,1,2}$
...
$S_{k,1,n}$
$B_{k,2}$
$S_{k,2,1}$
$S_{k,2,2}$
...
$S_{k,2,n}$
...
$B_{k,m}$
$S_{k,m,1}$
$S_{k,m,2}$
...
$S_{2,m,n}$

FIG. 23

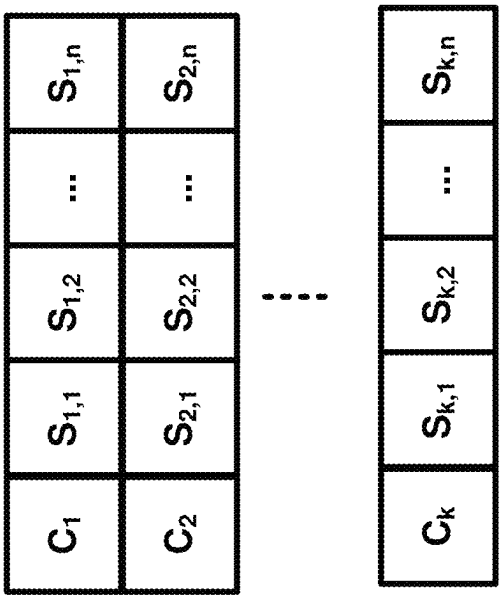

FIG. 24

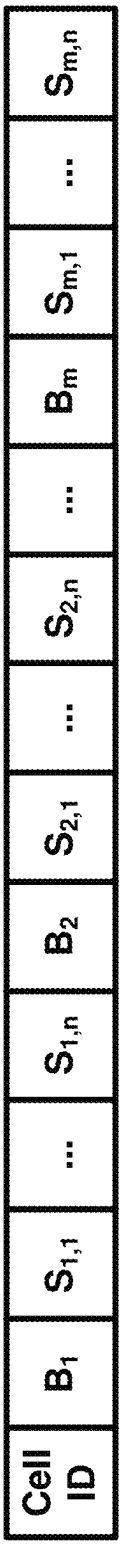

FIG. 25A

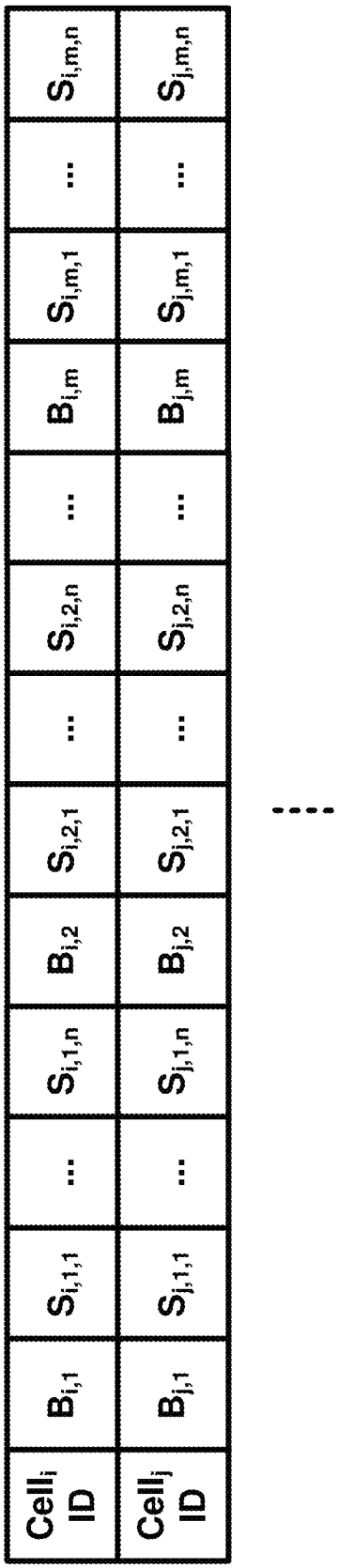

FIG. 25B

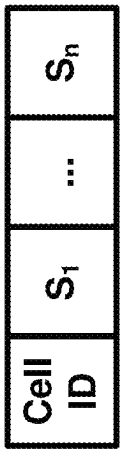

FIG. 26A

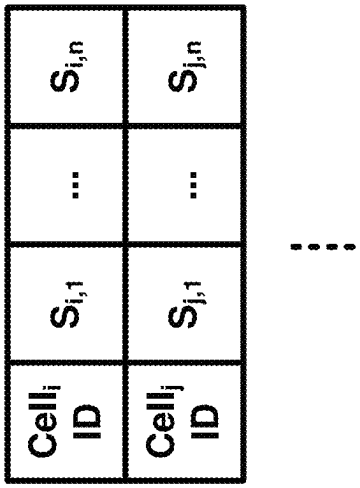

FIG. 26B

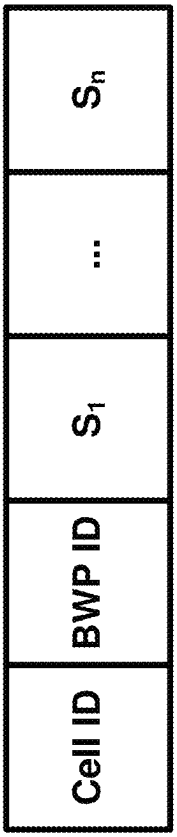

FIG. 27A

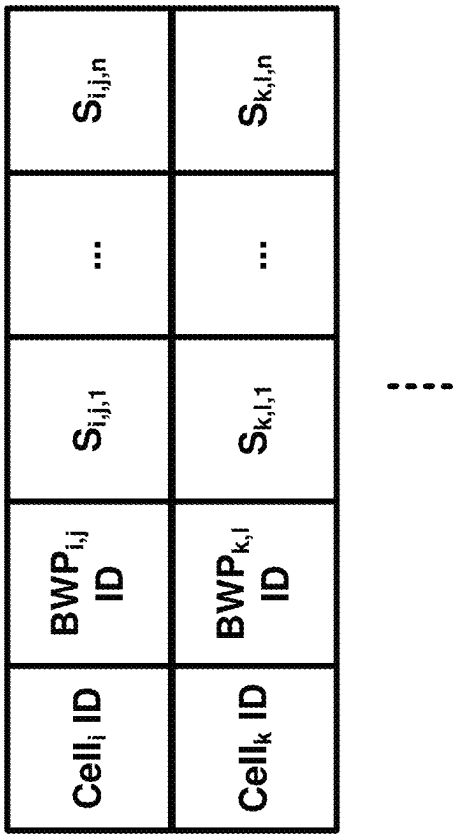

FIG. 27B

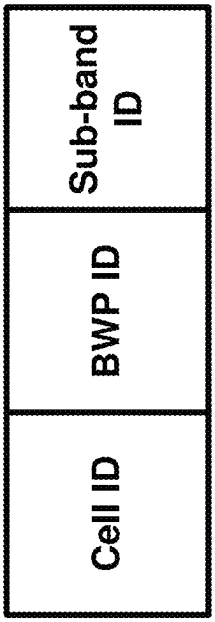

FIG. 28A

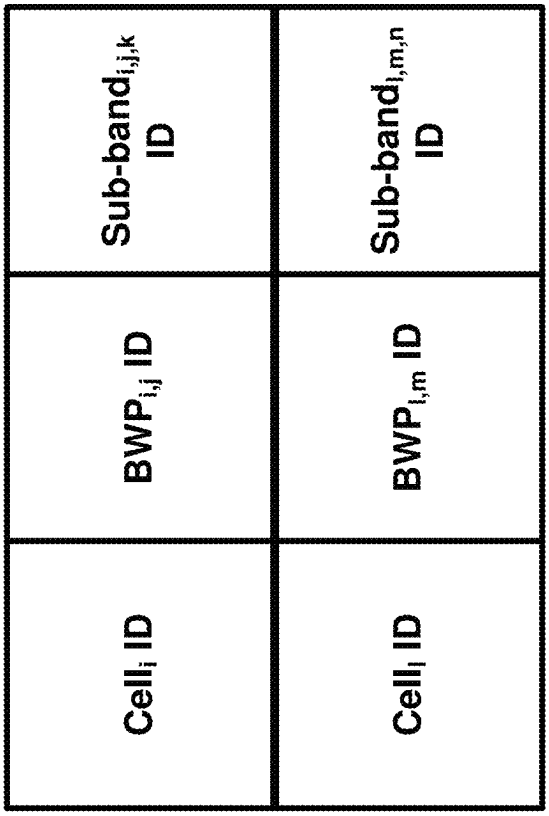

FIG. 28B

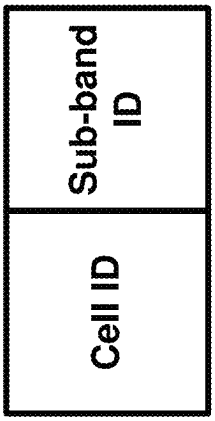

FIG. 29A

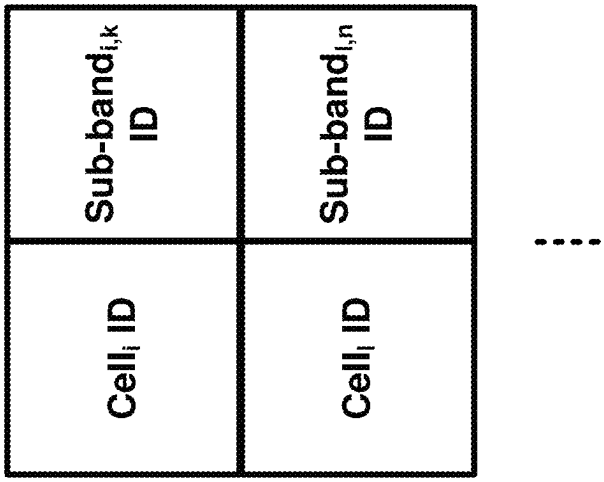

FIG. 29B

C_1	$B_{1,1}$	CGC 1,1,1	CGC 1,1,2	...	CGC 1,1,n	$B_{1,2}$	CGC 1,2,1	CGC 1,2,2	...	CGC 1,2,n	...	$B_{1,m}$	CGC 1,m,1	CGC 1,m,2	...	CGC 1,m,n
C_2	$B_{2,1}$	CGC 2,1,1	CGC 2,1,2	...	CGC 2,1,n	$B_{2,2}$	CGC 2,2,1	CGC 2,2,2	...	CGC 2,2,n	...	$B_{2,m}$	CGC 2,m,1	CGC 2,m,2	...	CGC 2,m,n
C_k	$B_{k,1}$	CGC k,1,1	CGC k,1,2	...	CGC k,1,n	$B_{k,2}$	CGC k,2,1	CGC k,2,2	...	CGC k,2,n	...	$B_{k,m}$	CGC k,m,1	CGC 2,m,2	...	CGC 2,m,n

CGC: Configured Grant Configuration

FIG. 30

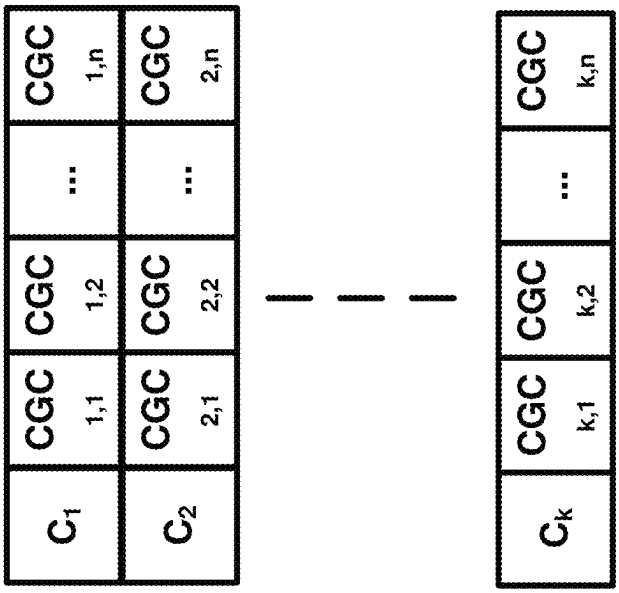

CGC: Configured Grant Configuration

FIG. 31

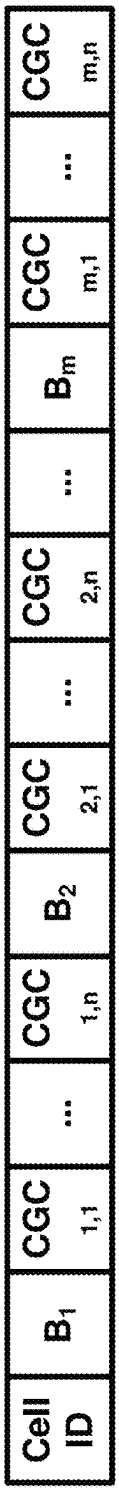

FIG. 32A

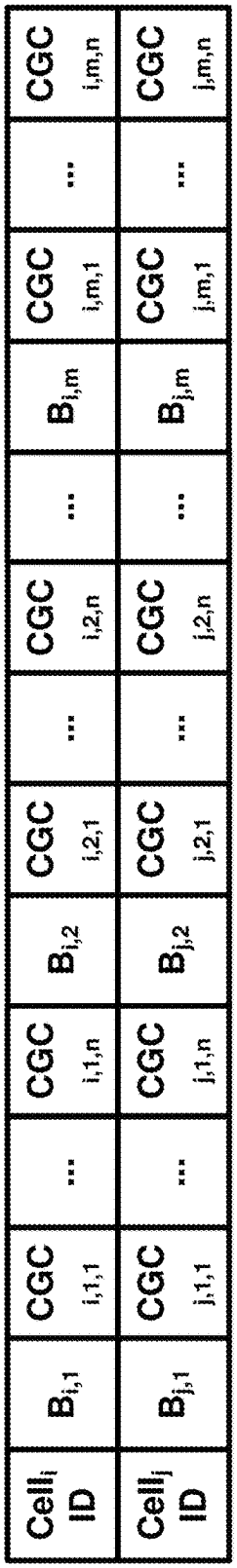

FIG. 32B

CGC: Configured Grant Configuration

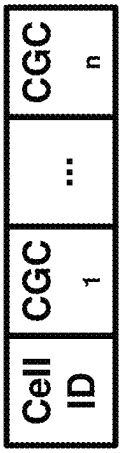

FIG. 33A

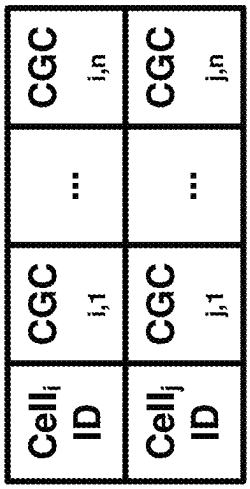

FIG. 33B

CGC: Configured Grant Configuration

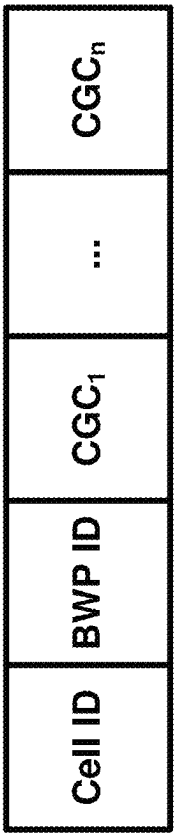

FIG. 34A

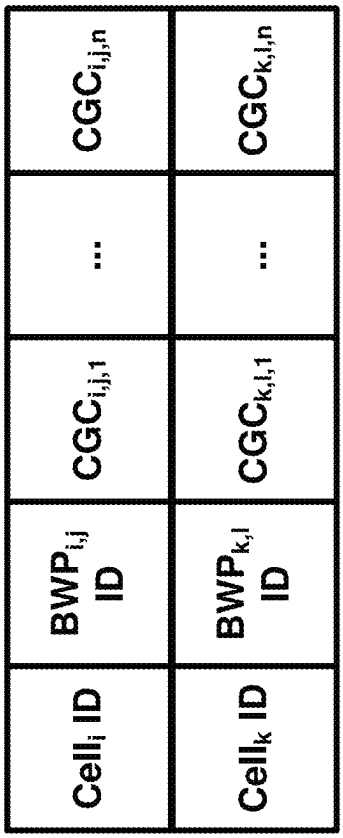

FIG. 34B

CGC: Configured Grant Configuration

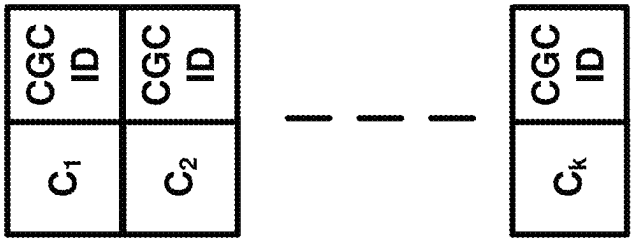

FIG. 35

CGC: Configured Grant Configuration

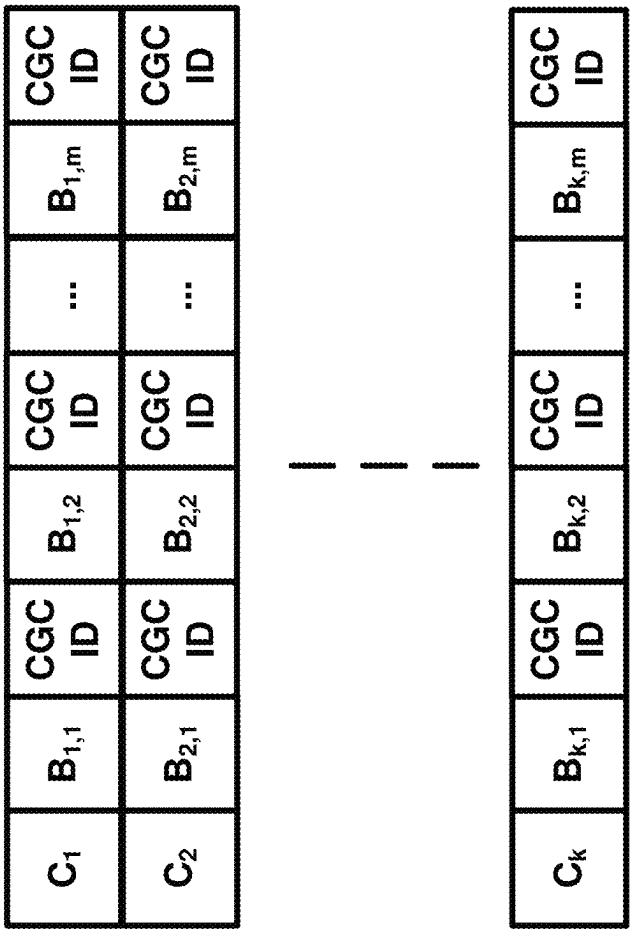

CGC: Configured Grant Configuration

FIG. 36

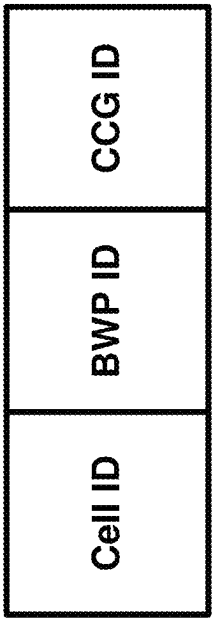

FIG. 37A

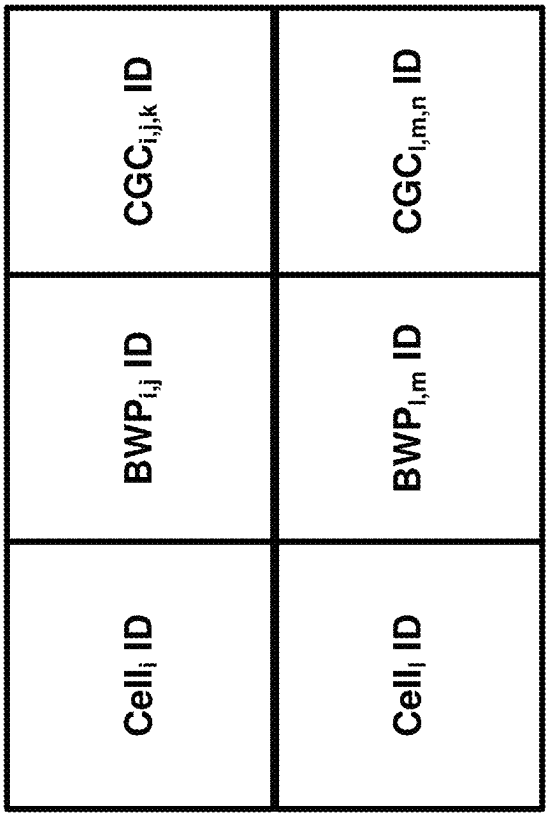

CGC: Configured Grant Configuration

FIG. 37B

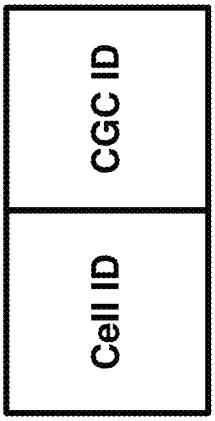

FIG. 38A

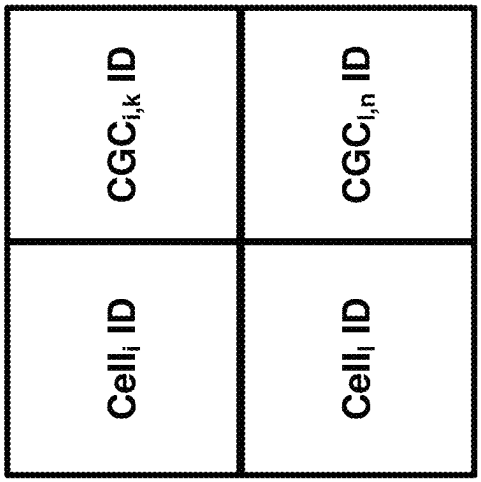

FIG. 38B

CGC: Configured Grant Configuration

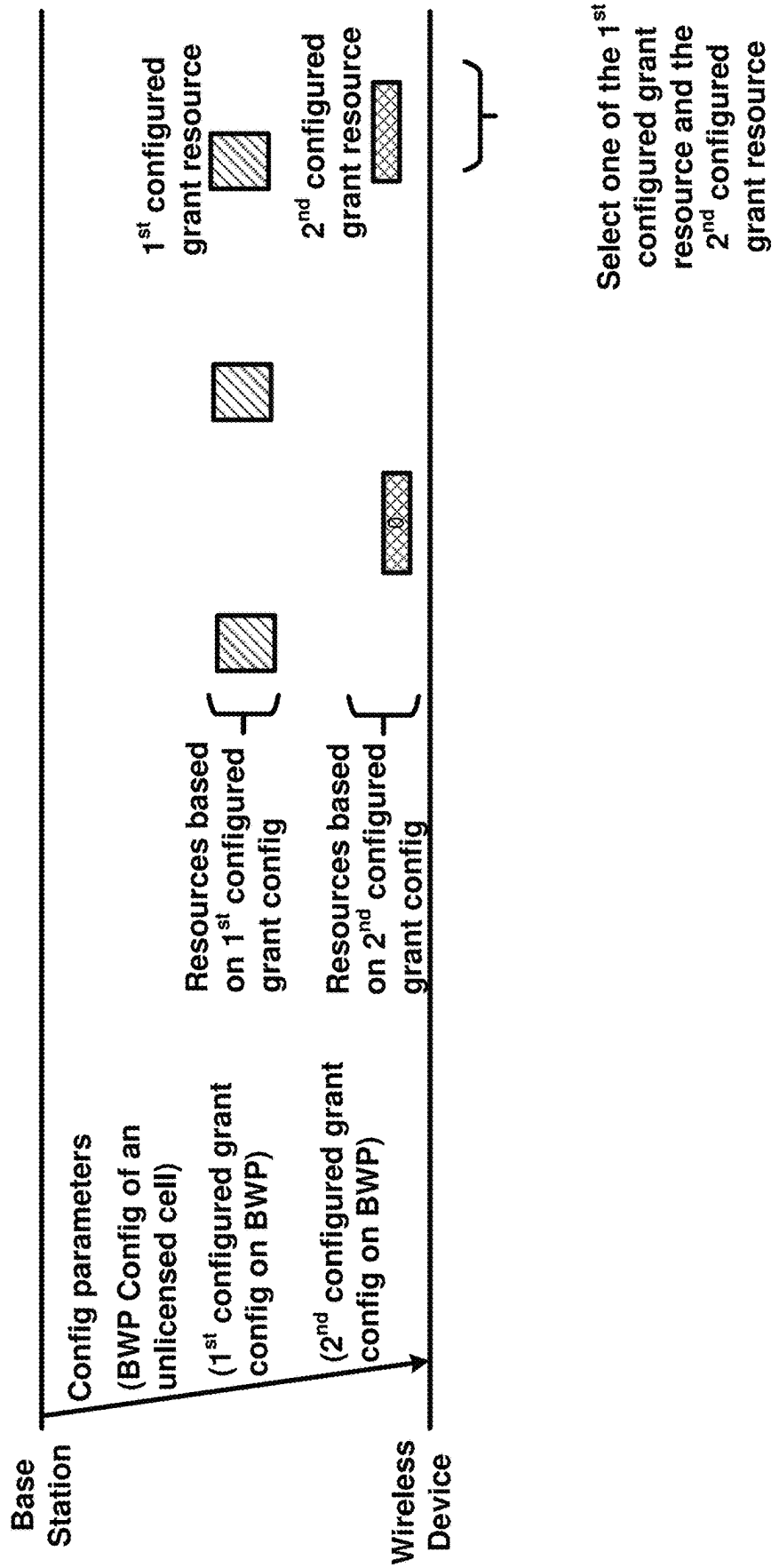
Base Station
Wireless Device
Config parameters (BWP Config of an unlicensed cell)
(1st configured grant config on BWP)
(2nd configured grant config on BWP)
Resources based on 1st configured grant config
Resources based on 2nd configured grant config
1st configured grant resource
2nd configured grant resource
Select one of the 1st configured grant resource and the 2nd configured grant resource

FIG. 39

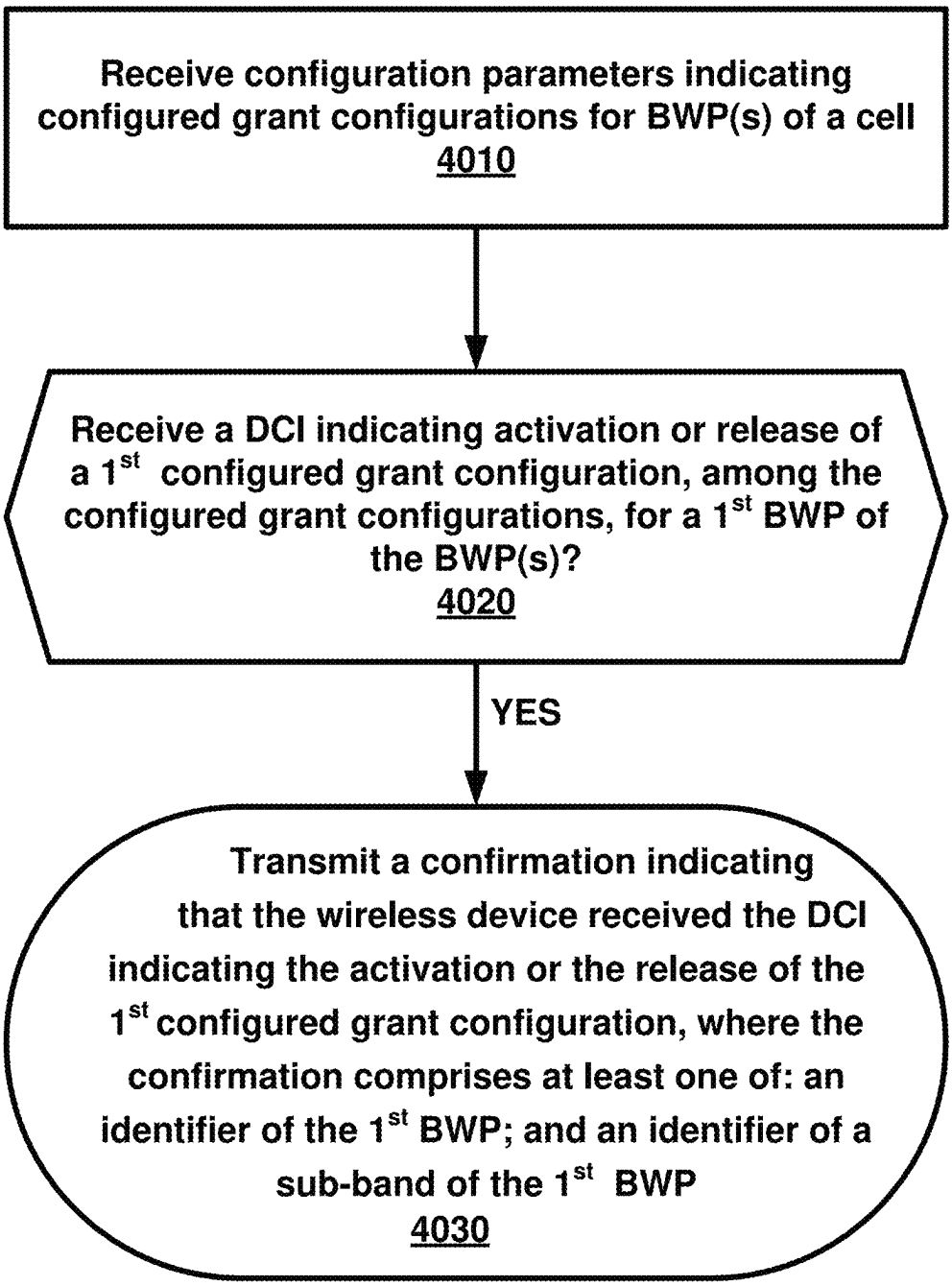
Receive configuration parameters indicating configured grant configurations for BWP(s) of a cell
4010
Receive a DCI indicating activation or release of a 1st configured grant configuration, among the configured grant configurations, for a 1st BWP of the BWP(s)?
4020
YES
Transmit a confirmation indicating that the wireless device received the DCI indicating the activation or the release of the 1st configured grant configuration, where the confirmation comprises at least one of: an identifier of the 1st BWP; and an identifier of a sub-band of the 1st BWP
4030

FIG. 40

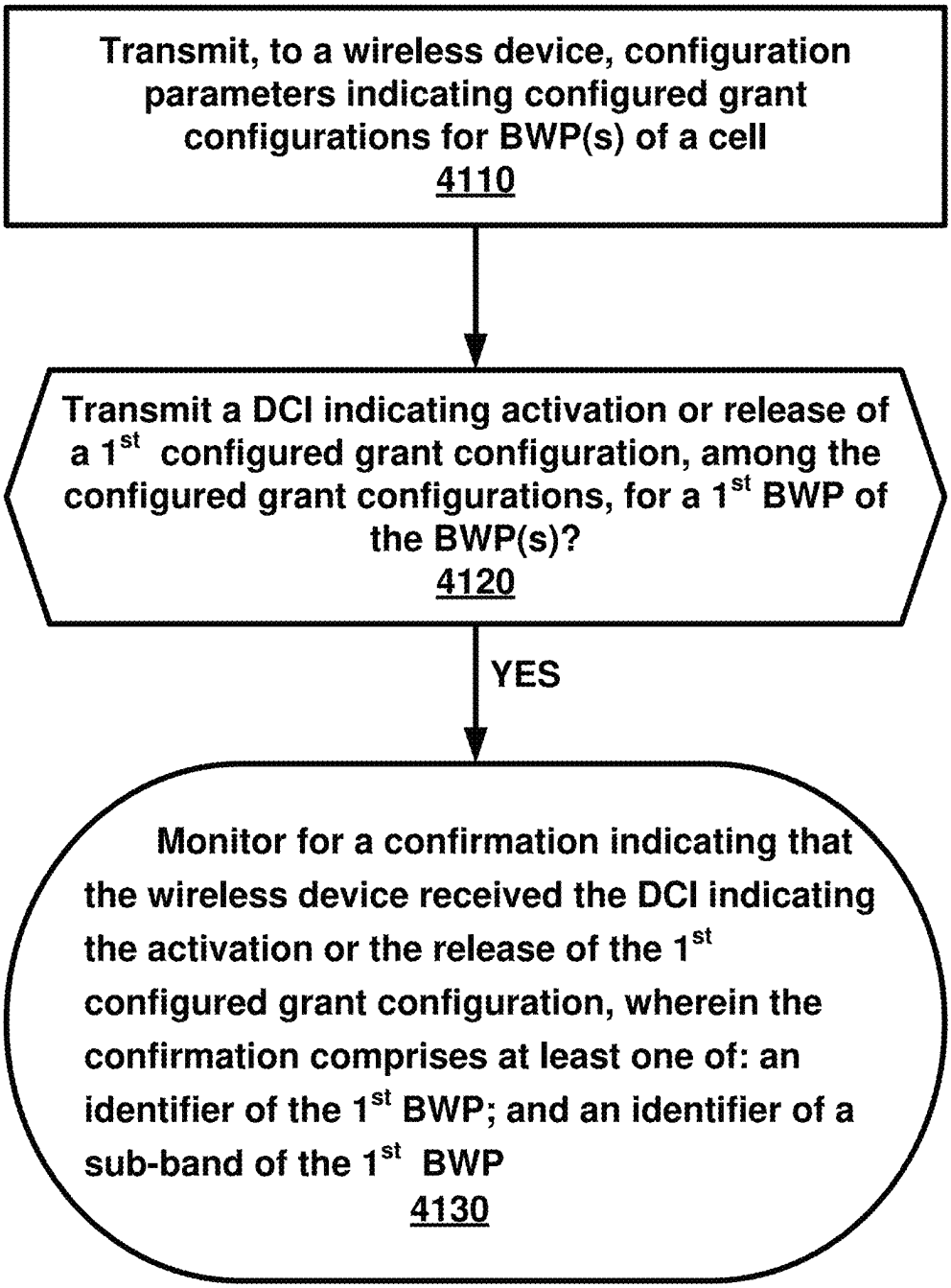
Transmit, to a wireless device, configuration parameters indicating configured grant configurations for BWP(s) of a cell
4110
Transmit a DCI indicating activation or release of a 1st configured grant configuration, among the configured grant configurations, for a 1st BWP of the BWP(s)?
4120
YES
Monitor for a confirmation indicating that the wireless device received the DCI indicating the activation or the release of the 1st configured grant configuration, wherein the confirmation comprises at least one of: an identifier of the 1st BWP; and an identifier of a sub-band of the 1st BWP
4130

FIG. 41

CONFIGURED GRANT PROCESSES FOR WIRELESS DEVICES

CROSS-REFERENCE TO RELATED APPLICATIONS

This application is a continuation of U.S. patent application Ser. No. 16/827,006, filed Mar. 23, 2020, which claims the benefit of U.S. Provisional Application No. 62/825,314, filed Mar. 28, 2019, all of which are hereby incorporated by reference in their entireties.

BRIEF DESCRIPTION OF THE DRAWINGS

Examples of several of the various embodiments of the present disclosure are described herein with reference to the drawings.

FIG. **1** is a diagram of an example RAN architecture as per an aspect of an embodiment of the present disclosure.

FIG. **2**A is a diagram of an example user plane protocol stack as per an aspect of an embodiment of the present disclosure.

FIG. **2**B is a diagram of an example control plane protocol stack as per an aspect of an embodiment of the present disclosure.

FIG. **3** is a diagram of an example wireless device and two base stations as per an aspect of an embodiment of the present disclosure.

FIG. **4**A, FIG. **4**B, FIG. **4**C and FIG. **4**D are example diagrams for uplink and downlink signal transmission as per an aspect of an embodiment of the present disclosure.

FIG. **5**A is a diagram of an example uplink channel mapping and example uplink physical signals as per an aspect of an embodiment of the present disclosure.

FIG. **5**B is a diagram of an example downlink channel mapping and example downlink physical signals as per an aspect of an embodiment of the present disclosure.

FIG. **6** is a diagram depicting an example frame structure as per an aspect of an embodiment of the present disclosure.

FIG. **7**A and FIG. **7**B are diagrams depicting example sets of OFDM subcarriers as per an aspect of an embodiment of the present disclosure.

FIG. **8** is a diagram depicting example OFDM radio resources as per an aspect of an embodiment of the present disclosure.

FIG. **9**A is a diagram depicting an example CSI-RS and/or SS block transmission in a multi-beam system.

FIG. **9**B is a diagram depicting an example downlink beam management procedure as per an aspect of an embodiment of the present disclosure.

FIG. **10** is an example diagram of configured BWPs as per an aspect of an embodiment of the present disclosure.

FIG. **11**A, and FIG. **11**B are diagrams of an example multi connectivity as per an aspect of an embodiment of the present disclosure.

FIG. **12** is a diagram of an example random access procedure as per an aspect of an embodiment of the present disclosure.

FIG. **13** is a structure of example MAC entities as per an aspect of an embodiment of the present disclosure.

FIG. **14** is a diagram of an example RAN architecture as per an aspect of an embodiment of the present disclosure.

FIG. **15** is a diagram of example RRC states as per an aspect of an embodiment of the present disclosure.

FIG. **16** is an example of channel access priority classes for a listen before talk procedure as per an aspect of an embodiment of the present disclosure.

FIG. **17** is an example of listen before talk parameters corresponding to channel access priority classes as per an aspect of an embodiment of the present disclosure.

FIG. **18** is an example of different listen before talk types as per an aspect of an embodiment of the present disclosure.

FIG. **19**A and FIG. **19**B are example MAC CE formats as per an aspect of an embodiment of the present disclosure.

FIG. **20** is an example procedure as per an aspect of an embodiment of the present disclosure.

FIG. **21**A, FIG. **21**B and FIG. **21**C are example MAC subheaders as per an aspect of an embodiment of the present disclosure.

FIG. **22** is an example MAC PDU format as per an aspect of an embodiment of the present disclosure.

FIG. **23** is example MAC CE formats as per an aspect of an embodiment of the present disclosure.

FIG. **24** is example MAC CE formats as per an aspect of an embodiment of the present disclosure.

FIG. **25**A and FIG. **25**B are example MAC CE formats as per an aspect of an embodiment of the present disclosure.

FIG. **26**A and FIG. **26**B are example MAC CE formats as per an aspect of an embodiment of the present disclosure.

FIG. **27**A and FIG. **27**B are example MAC CE formats as per an aspect of an embodiment of the present disclosure.

FIG. **28**A and FIG. **28**B are example MAC CE formats as per an aspect of an embodiment of the present disclosure.

FIG. **29**A and FIG. **29**B are example MAC CE formats as per an aspect of an embodiment of the present disclosure.

FIG. **30** is example MAC CE formats as per an aspect of an embodiment of the present disclosure.

FIG. **31** is example MAC CE formats as per an aspect of an embodiment of the present disclosure.

FIG. **32**A and FIG. **32**B are example MAC CE formats as per an aspect of an embodiment of the present disclosure.

FIG. **33**A and FIG. **33**B are example MAC CE formats as per an aspect of an embodiment of the present disclosure.

FIG. **34**A and FIG. **34**B are example MAC CE formats as per an aspect of an embodiment of the present disclosure.

FIG. **35** is example MAC CE formats as per an aspect of an embodiment of the present disclosure.

FIG. **36** is example MAC CE formats as per an aspect of an embodiment of the present disclosure.

FIG. **37**A and FIG. **37**B are example MAC CE formats as per an aspect of an embodiment of the present disclosure.

FIG. **38**A and FIG. **38**B are example MAC CE formats as per an aspect of an embodiment of the present disclosure.

FIG. **39** is an example of different listen before talk types as per an aspect of an embodiment of the present disclosure.

FIG. **40** is a flowchart as per an aspect of an example embodiment of the present disclosure.

FIG. **41** is a flowchart as per an aspect of an example embodiment of the present disclosure.

DETAILED DESCRIPTION

Example embodiments of the present disclosure enable operation of Configured grant processes. Embodiments of the technology disclosed herein may be employed in the technical field of multicarrier communication systems. More particularly, the embodiments of the technology disclosed herein may relate to configured grant processes in multicarrier communication systems.

The following Acronyms are used throughout the present disclosure:

3GPP 3rd Generation Partnership Project
5GC 5G Core Network
ACK Acknowledgement

AMF Access and Mobility Management Function
ARQ Automatic Repeat Request
AS Access Stratum
ASIC Application-Specific Integrated Circuit
BA Bandwidth Adaptation
BCCH Broadcast Control Channel
BCH Broadcast Channel
BPSK Binary Phase Shift Keying
BWP Bandwidth Part
CA Carrier Aggregation
CC Component Carrier
CCCH Common Control CHannel
CDMA Code Division Multiple Access
CN Core Network
CP Cyclic Prefix
CP-OFDM Cyclic Prefix-Orthogonal Frequency Division Multiplex
C-RNTI Cell-Radio Network Temporary Identifier
CS Configured Scheduling
CSI Channel State Information
CSI-RS Channel State Information-Reference Signal
CQI Channel Quality Indicator
CSS Common Search Space
CU Central Unit
DC Dual Connectivity
DCCH Dedicated Control CHannel
DCI Downlink Control Information
DL Downlink
DL-SCH Downlink Shared CHannel
DM-RS DeModulation Reference Signal
DRB Data Radio Bearer
DRX Discontinuous Reception
DTCH Dedicated Traffic CHannel
DU Distributed Unit
EPC Evolved Packet Core
E-UTRA Evolved UMTS Terrestrial Radio Access
E-UTRAN Evolved-Universal Terrestrial Radio Access Network
BUD Frequency Division Duplex
FPGA Field Programmable Gate Arrays
F1-C F1-Control plane
F1-U F1-User plane
gNB next generation Node B
HARQ Hybrid Automatic Repeat reQuest
HDL Hardware Description Languages
IE Information Element
IP Internet Protocol
LCID Logical Channel IDentifier
LTE Long Term Evolution
MAC Media Access Control
MCG Master Cell Group
MCS Modulation and Coding Scheme
MeNB Master evolved Node B
MIB Master Information Block
MME Mobility Management Entity
MN Master Node
NACK Negative Acknowledgement
NAS Non-Access Stratum
NG CP Next Generation Control Plane
NGC Next Generation Core
NG-C NG-Control plane
ng-eNB next generation evolved Node B
NG-U NG-User plane
NR New Radio
NR MAC New Radio MAC
NR PDCP New Radio PDCP
NR PHY New Radio PHYsical
NR RLC New Radio RLC
NR RRC New Radio RRC
NSSAI Network Slice Selection Assistance Information
O&M Operation and Maintenance
OFDM Orthogonal Frequency Division Multiplexing
PBCH Physical Broadcast CHannel
PCC Primary Component Carrier
PCCH Paging Control CHannel
PCell Primary Cell
PCH Paging CHannel
PDCCH Physical Downlink Control CHannel
PDCP Packet Data Convergence Protocol
PDSCH Physical Downlink Shared CHannel
PDU Protocol Data Unit
PHICH Physical HARQ Indicator CHannel
PHY PHYsical
PLMN Public Land Mobile Network
PMI Precoding Matrix Indicator
PRACH Physical Random Access CHannel
PRB Physical Resource Block
PSCell Primary Secondary Cell
PSS Primary Synchronization Signal
pTAG primary Timing Advance Group
PT-RS Phase Tracking Reference Signal
PUCCH Physical Uplink Control CHannel
PUSCH Physical Uplink Shared CHannel
QAM Quadrature Amplitude Modulation
QFI Quality of Service Indicator
QoS Quality of Service
QPSK Quadrature Phase Shift Keying
RA Random Access
RACH Random Access CHannel
RAN Radio Access Network
RAT Radio Access Technology
RA-RNTI Random Access-Radio Network Temporary Identifier
RB Resource Blocks
RBG Resource Block Groups
RI Rank Indicator
RLC Radio Link Control
RRC Radio Resource Control
RS Reference Signal
RSRP Reference Signal Received Power
SCC Secondary Component Carrier
SCell Secondary Cell
SCG Secondary Cell Group
SC-FDMA Single Carrier-Frequency Division Multiple Access
SDAP Service Data Adaptation Protocol
SDU Service Data Unit
SeNB Secondary evolved Node B
SFN System Frame Number
S-GW Serving GateWay
SI System Information
SIB System Information Block
SMF Session Management Function
SN Secondary Node
SpCell Special Cell
SRB Signaling Radio Bearer
SRS Sounding Reference Signal
SS Synchronization Signal
SSS Secondary Synchronization Signal
sTAG secondary Timing Advance Group
TA Timing Advance
TAG Timing Advance Group
TAI Tracking Area Identifier
TAT Time Alignment Timer

TB Transport Block
TC-RNTI Temporary Cell-Radio Network Temporary Identifier
TDD Time Division Duplex
TDMA Time Division Multiple Access
TTI Transmission Time Interval
UCI Uplink Control Information
UE User Equipment
UL Uplink
UL-SCH Uplink Shared CHannel
UPF User Plane Function
UPGW User Plane Gateway
VHDL VHSIC Hardware Description Language
Xn-C Xn-Control plane
Xn-U Xn-User plane

Example embodiments of the disclosure may be implemented using various physical layer modulation and transmission mechanisms. Example transmission mechanisms may include, but are not limited to: Code Division Multiple Access (CDMA), Orthogonal Frequency Division Multiple Access (OFDMA), Time Division Multiple Access (TDMA), Wavelet technologies, and/or the like. Hybrid transmission mechanisms such as TDMA/CDMA, and OFDM/CDMA may also be employed. Various modulation schemes may be applied for signal transmission in the physical layer. Examples of modulation schemes include, but are not limited to: phase, amplitude, code, a combination of these, and/or the like. An example radio transmission method may implement Quadrature Amplitude Modulation (QAM) using Binary Phase Shift Keying (BPSK), Quadrature Phase Shift Keying (QPSK), 16-QAM, 64-QAM, 256-QAM, and/or the like. Physical radio transmission may be enhanced by dynamically or semi-dynamically changing the modulation and coding scheme depending on transmission requirements and radio conditions.

FIG. **1** is an example Radio Access Network (RAN) architecture as per an aspect of an embodiment of the present disclosure. As illustrated in this example, a RAN node may be a next generation Node B (gNB) (e.g. **120**A, **120**B) providing New Radio (NR) user plane and control plane protocol terminations towards a first wireless device (e.g. **110**A). In an example, a RAN node may be a next generation evolved Node B (ng-eNB) (e.g. **124**A, **124**B), providing Evolved UMTS Terrestrial Radio Access (E-UTRA) user plane and control plane protocol terminations towards a second wireless device (e.g. **110**B). The first wireless device may communicate with a gNB over a Uu interface. The second wireless device may communicate with a ng-eNB over a Uu interface. In this disclosure, wireless device **110**A and **110**B are structurally similar to wireless device **110**. Base stations **120**A and/or **120**B may be structurally similarly to base station **120**. Base station **120** may comprise at least one of a gNB (e.g. **122**A and/or **122**B), ng-eNB (e.g. **124**A and/or **124**B), and or the like.

A gNB or an ng-eNB may host functions such as: radio resource management and scheduling, IP header compression, encryption and integrity protection of data, selection of Access and Mobility Management Function (AMF) at User Equipment (UE) attachment, routing of user plane and control plane data, connection setup and release, scheduling and transmission of paging messages (originated from the AMF), scheduling and transmission of system broadcast information (originated from the AMF or Operation and Maintenance (O&M)), measurement and measurement reporting configuration, transport level packet marking in the uplink, session management, support of network slicing, Quality of Service (QoS) flow management and mapping to data radio bearers, support of UEs in RRC_INACTIVE state, distribution function for Non-Access Stratum (NAS) messages, RAN sharing, and dual connectivity or tight interworking between NR and E-UTRA.

In an example, one or more gNBs and/or one or more ng-eNBs may be interconnected with each other by means of Xn interface. A gNB or an ng-eNB may be connected by means of NG interfaces to 5G Core Network (5GC). In an example, 5GC may comprise one or more AMF/User Plan Function (UPF) functions (e.g. **130**A or **130**B). A gNB or an ng-eNB may be connected to a UPF by means of an NG-User plane (NG-U) interface. The NG-U interface may provide delivery (e.g. non-guaranteed delivery) of user plane Protocol Data Units (PDUs) between a RAN node and the UPF. A gNB or an ng-eNB may be connected to an AMF by means of an NG-Control plane (NG-C) interface. The NG-C interface may provide, for example, NG interface management, UE context management, UE mobility management, transport of NAS messages, paging, PDU session management, configuration transfer and/or warning message transmission, combinations thereof, and/or the like.

In an example, a UPF may host functions such as anchor point for intra-/inter-Radio Access Technology (RAT) mobility (when applicable), external PDU session point of interconnect to data network, packet routing and forwarding, packet inspection and user plane part of policy rule enforcement, traffic usage reporting, uplink classifier to support routing traffic flows to a data network, branching point to support multi-homed PDU session, QoS handling for user plane, e.g. packet filtering, gating, Uplink (UL)/Downlink (DL) rate enforcement, uplink traffic verification (e.g. Service Data Flow (SDF) to QoS flow mapping), downlink packet buffering and/or downlink data notification triggering.

In an example, an AMF may host functions such as NAS signaling termination, NAS signaling security, Access Stratum (AS) security control, inter Core Network (CN) node signaling for mobility between 3rd Generation Partnership Project (3GPP) access networks, idle mode UE reachability (e.g., control and execution of paging retransmission), registration area management, support of intra-system and inter-system mobility, access authentication, access authorization including check of roaming rights, mobility management control (subscription and policies), support of network slicing and/or Session Management Function (SMF) selection.

FIG. **2**A is an example user plane protocol stack, where Service Data Adaptation Protocol (SDAP) (e.g. **211** and **221**), Packet Data Convergence Protocol (PDCP) (e.g. **212** and **222**), Radio Link Control (RLC) (e.g. **213** and **223**) and Media Access Control (MAC) (e.g. **214** and **224**) sublayers and Physical (PHY) (e.g. **215** and **225**) layer may be terminated in wireless device (e.g. **110**) and gNB (e.g. **120**) on the network side. In an example, a PHY layer provides transport services to higher layers (e.g. MAC, RRC, etc.). In an example, services and functions of a MAC sublayer may comprise mapping between logical channels and transport channels, multiplexing/demultiplexing of MAC Service Data Units (SDUs) belonging to one or different logical channels into/from Transport Blocks (TBs) delivered to/from the PHY layer, scheduling information reporting, error correction through Hybrid Automatic Repeat request (HARQ) (e.g. one HARQ entity per carrier in case of Carrier Aggregation (CA)), priority handling between UEs by means of dynamic scheduling, priority handling between logical channels of one UE by means of logical channel prioritization, and/or padding. A MAC entity may support

one or multiple numerologies and/or transmission timings. In an example, mapping restrictions in a logical channel prioritization may control which numerology and/or transmission timing a logical channel may use. In an example, an RLC sublayer may supports transparent mode (TM), unacknowledged mode (UM) and acknowledged mode (AM) transmission modes. The RLC configuration may be per logical channel with no dependency on numerologies and/or Transmission Time Interval (TTI) durations. In an example, Automatic Repeat Request (ARQ) may operate on any of the numerologies and/or TTI durations the logical channel is configured with. In an example, services and functions of the PDCP layer for the user plane may comprise sequence numbering, header compression and decompression, transfer of user data, reordering and duplicate detection, PDCP PDU routing (e.g. in case of split bearers), retransmission of PDCP SDUs, ciphering, deciphering and integrity protection, PDCP SDU discard, PDCP re-establishment and data recovery for RLC AM, and/or duplication of PDCP PDUs. In an example, services and functions of SDAP may comprise mapping between a QoS flow and a data radio bearer. In an example, services and functions of SDAP may comprise mapping Quality of Service Indicator (QFI) in DL and UL packets. In an example, a protocol entity of SDAP may be configured for an individual PDU session.

FIG. **2**B is an example control plane protocol stack where PDCP (e.g. **233** and **242**), RLC (e.g. **234** and **243**) and MAC (e.g. **235** and **244**) sublayers and PHY (e.g. **236** and **245**) layer may be terminated in wireless device (e.g. **110**) and gNB (e.g. **120**) on a network side and perform service and functions described above. In an example, RRC (e.g. **232** and **241**) may be terminated in a wireless device and a gNB on a network side. In an example, services and functions of RRC may comprise broadcast of system information related to AS and NAS, paging initiated by 5GC or RAN, establishment, maintenance and release of an RRC connection between the UE and RAN, security functions including key management, establishment, configuration, maintenance and release of Signaling Radio Bearers (SRBs) and Data Radio Bearers (DRBs), mobility functions, QoS management functions, UE measurement reporting and control of the reporting, detection of and recovery from radio link failure, and/or NAS message transfer to/from NAS from/to a UE. In an example, NAS control protocol (e.g. **231** and **251**) may be terminated in the wireless device and AMF (e.g. **130**) on a network side and may perform functions such as authentication, mobility management between a UE and an AMF for 3GPP access and non-3GPP access, and session management between a UE and a SMF for 3GPP access and non-3GPP access.

In an example, a base station may configure a plurality of logical channels for a wireless device. A logical channel in the plurality of logical channels may correspond to a radio bearer and the radio bearer may be associated with a QoS requirement. In an example, a base station may configure a logical channel to be mapped to one or more TTIs/numerologies in a plurality of TTIs/numerologies. The wireless device may receive a Downlink Control Information (DCI) via Physical Downlink Control CHannel (PDCCH) indicating an uplink grant. In an example, the uplink grant may be for a first TTI/numerology and may indicate uplink resources for transmission of a transport block. The base station may configure each logical channel in the plurality of logical channels with one or more parameters to be used by a logical channel prioritization procedure at the MAC layer of the wireless device. The one or more parameters may comprise priority, prioritized bit rate, etc. A logical channel in the plurality of logical channels may correspond to one or more buffers comprising data associated with the logical channel. The logical channel prioritization procedure may allocate the uplink resources to one or more first logical channels in the plurality of logical channels and/or one or more MAC Control Elements (CEs). The one or more first logical channels may be mapped to the first TTI/numerology. The MAC layer at the wireless device may multiplex one or more MAC CEs and/or one or more MAC SDUs (e.g., logical channel) in a MAC PDU (e.g., transport block). In an example, the MAC PDU may comprise a MAC header comprising a plurality of MAC sub-headers. A MAC sub-header in the plurality of MAC sub-headers may correspond to a MAC CE or a MAC SUD (logical channel) in the one or more MAC CEs and/or one or more MAC SDUs. In an example, a MAC CE or a logical channel may be configured with a Logical Channel IDentifier (LCID). In an example, LCID for a logical channel or a MAC CE may be fixed/pre-configured. In an example, LCID for a logical channel or MAC CE may be configured for the wireless device by the base station. The MAC sub-header corresponding to a MAC CE or a MAC SDU may comprise LCID associated with the MAC CE or the MAC SDU.

In an example, a base station may activate and/or deactivate and/or impact one or more processes (e.g., set values of one or more parameters of the one or more processes or start and/or stop one or more timers of the one or more processes) at the wireless device by employing one or more MAC commands. The one or more MAC commands may comprise one or more MAC control elements. In an example, the one or more processes may comprise activation and/or deactivation of PDCP packet duplication for one or more radio bearers. The base station may transmit a MAC CE comprising one or more fields, the values of the fields indicating activation and/or deactivation of PDCP duplication for the one or more radio bearers. In an example, the one or more processes may comprise Channel State Information (CSI) transmission of on one or more cells. The base station may transmit one or more MAC CEs indicating activation and/or deactivation of the CSI transmission on the one or more cells. In an example, the one or more processes may comprise activation or deactivation of one or more secondary cells. In an example, the base station may transmit a MA CE indicating activation or deactivation of one or more secondary cells. In an example, the base station may transmit one or more MAC CEs indicating starting and/or stopping one or more Discontinuous Reception (DRX) timers at the wireless device. In an example, the base station may transmit one or more MAC CEs indicating one or more timing advance values for one or more Timing Advance Groups (TAGs).

FIG. **3** is a block diagram of base stations (base station 1, **120**A, and base station 2, **120**B) and a wireless device **110**. A wireless device may be called a UE. A base station may be called a NB, eNB, gNB, and/or ng-eNB. In an example, a wireless device and/or a base station may act as a relay node. The base station 1, **120**A, may comprise at least one communication interface **320**A (e.g. a wireless modem, an antenna, a wired modem, and/or the like), at least one processor **321**A, and at least one set of program code instructions **323**A stored in non-transitory memory **322**A and executable by the at least one processor **321**A. The base station 2, **120**B, may comprise at least one communication interface **320**B, at least one processor **321**B, and at least one set of program code instructions **323**B stored in non-transitory memory **322**B and executable by the at least one processor **321**B.

A base station may comprise many sectors for example: 1, 2, 3, 4, or 6 sectors. A base station may comprise many cells, for example, ranging from 1 to 50 cells or more. A cell may be categorized, for example, as a primary cell or secondary cell. At Radio Resource Control (RRC) connection establishment/re-establishment/handover, one serving cell may provide the NAS (non-access stratum) mobility information (e.g. Tracking Area Identifier (TAI)). At RRC connection re-establishment/handover, one serving cell may provide the security input. This cell may be referred to as the Primary Cell (PCell). In the downlink, a carrier corresponding to the PCell may be a DL Primary Component Carrier (PCC), while in the uplink, a carrier may be an UL PCC. Depending on wireless device capabilities, Secondary Cells (SCells) may be configured to form together with a PCell a set of serving cells. In a downlink, a carrier corresponding to an SCell may be a downlink secondary component carrier (DL SCC), while in an uplink, a carrier may be an uplink secondary component carrier (UL SCC). An SCell may or may not have an uplink carrier.

A cell, comprising a downlink carrier and optionally an uplink carrier, may be assigned a physical cell ID and a cell index. A carrier (downlink or uplink) may belong to one cell. The cell ID or cell index may also identify the downlink carrier or uplink carrier of the cell (depending on the context it is used). In the disclosure, a cell ID may be equally referred to a carrier ID, and a cell index may be referred to a carrier index. In an implementation, a physical cell ID or a cell index may be assigned to a cell. A cell ID may be determined using a synchronization signal transmitted on a downlink carrier. A cell index may be determined using RRC messages. For example, when the disclosure refers to a first physical cell ID for a first downlink carrier, the disclosure may mean the first physical cell ID is for a cell comprising the first downlink carrier. The same concept may apply to, for example, carrier activation. When the disclosure indicates that a first carrier is activated, the specification may equally mean that a cell comprising the first carrier is activated.

A base station may transmit to a wireless device one or more messages (e.g. RRC messages) comprising a plurality of configuration parameters for one or more cells. One or more cells may comprise at least one primary cell and at least one secondary cell. In an example, an RRC message may be broadcasted or unicasted to the wireless device. In an example, configuration parameters may comprise common parameters and dedicated parameters.

Services and/or functions of an RRC sublayer may comprise at least one of: broadcast of system information related to AS and NAS; paging initiated by 5GC and/or NG-RAN; establishment, maintenance, and/or release of an RRC connection between a wireless device and NG-RAN, which may comprise at least one of addition, modification and release of carrier aggregation; or addition, modification, and/or release of dual connectivity in NR or between E-UTRA and NR. Services and/or functions of an RRC sublayer may further comprise at least one of security functions comprising key management; establishment, configuration, maintenance, and/or release of Signaling Radio Bearers (SRBs) and/or Data Radio Bearers (DRBs); mobility functions which may comprise at least one of a handover (e.g. intra NR mobility or inter-RAT mobility) and a context transfer; or a wireless device cell selection and reselection and control of cell selection and reselection. Services and/or functions of an RRC sublayer may further comprise at least one of QoS management functions; a wireless device measurement configuration/reporting; detection of and/or recovery from radio link failure; or NAS message transfer to/from a core network entity (e.g. AMF, Mobility Management Entity (MME)) from/to the wireless device.

An RRC sublayer may support an RRC_Idle state, an RRC_Inactive state and/or an RRC_Connected state for a wireless device. In an RRC_Idle state, a wireless device may perform at least one of: Public Land Mobile Network (PLMN) selection; receiving broadcasted system information; cell selection/re-selection; monitoring/receiving a paging for mobile terminated data initiated by 5GC; paging for mobile terminated data area managed by 5GC; or DRX for CN paging configured via NAS. In an RRC_Inactive state, a wireless device may perform at least one of: receiving broadcasted system information; cell selection/re-selection; monitoring/receiving a RAN/CN paging initiated by NG-RAN/5GC; RAN-based notification area (RNA) managed by NG-RAN; or DRX for RAN/CN paging configured by NG-RAN/NAS. In an RRC_Idle state of a wireless device, a base station (e.g. NG-RAN) may keep a 5GC-NG-RAN connection (both C/U-planes) for the wireless device; and/or store a UE AS context for the wireless device. In an RRC_Connected state of a wireless device, a base station (e.g. NG-RAN) may perform at least one of: establishment of 5GC-NG-RAN connection (both C/U-planes) for the wireless device; storing a UE AS context for the wireless device; transmit/receive of unicast data to/from the wireless device; or network-controlled mobility based on measurement results received from the wireless device. In an RRC_Connected state of a wireless device, an NG-RAN may know a cell that the wireless device belongs to.

System information (SI) may be divided into minimum SI and other SI. The minimum SI may be periodically broadcast. The minimum SI may comprise basic information required for initial access and information for acquiring any other SI broadcast periodically or provisioned on-demand, i.e. scheduling information. The other SI may either be broadcast, or be provisioned in a dedicated manner, either triggered by a network or upon request from a wireless device. A minimum SI may be transmitted via two different downlink channels using different messages (e.g. MasterInformationBlock and SystemInformationBlockType1). Another SI may be transmitted via SystemInformationBlockType2. For a wireless device in an RRC_Connected state, dedicated RRC signaling may be employed for the request and delivery of the other SI. For the wireless device in the RRC_Idle state and/or the RRC_Inactive state, the request may trigger a random-access procedure.

A wireless device may report its radio access capability information which may be static. A base station may request what capabilities for a wireless device to report based on band information. When allowed by a network, a temporary capability restriction request may be sent by the wireless device to signal the limited availability of some capabilities (e.g. due to hardware sharing, interference or overheating) to the base station. The base station may confirm or reject the request. The temporary capability restriction may be transparent to 5GC (e.g., static capabilities may be stored in 5GC).

When CA is configured, a wireless device may have an RRC connection with a network. At RRC connection establishment/re-establishment/handover procedure, one serving cell may provide NAS mobility information, and at RRC connection re-establishment/handover, one serving cell may provide a security input. This cell may be referred to as the PCell. Depending on the capabilities of the wireless device, SCells may be configured to form together with the PCell a

set of serving cells. The configured set of serving cells for the wireless device may comprise one PCell and one or more SCells.

The reconfiguration, addition and removal of SCells may be performed by RRC. At intra-NR handover, RRC may also add, remove, or reconfigure SCells for usage with the target PCell. When adding a new SCell, dedicated RRC signaling may be employed to send all required system information of the SCell i.e. while in connected mode, wireless devices may not need to acquire broadcasted system information directly from the SCells.

The purpose of an RRC connection reconfiguration procedure may be to modify an RRC connection, (e.g. to establish, modify and/or release RBs, to perform handover, to setup, modify, and/or release measurements, to add, modify, and/or release SCells and cell groups). As part of the RRC connection reconfiguration procedure, NAS dedicated information may be transferred from the network to the wireless device. The RRCConnectionReconfiguration message may be a command to modify an RRC connection. It may convey information for measurement configuration, mobility control, radio resource configuration (e.g. RBs, MAC main configuration and physical channel configuration) comprising any associated dedicated NAS information and security configuration. If the received RRC Connection Reconfiguration message includes the sCellToReleaseList, the wireless device may perform an SCell release. If the received RRC Connection Reconfiguration message includes the sCellToAddModList, the wireless device may perform SCell additions or modification.

An RRC connection establishment (or reestablishment, resume) procedure may be to establish (or reestablish, resume) an RRC connection. an RRC connection establishment procedure may comprise SRB1 establishment. The RRC connection establishment procedure may be used to transfer the initial NAS dedicated information/message from a wireless device to E-UTRAN. The RRCConnectionReestablishment message may be used to re-establish SRB1.

A measurement report procedure may be to transfer measurement results from a wireless device to NG-RAN. The wireless device may initiate a measurement report procedure after successful security activation. A measurement report message may be employed to transmit measurement results.

The wireless device **110** may comprise at least one communication interface **310** (e.g. a wireless modem, an antenna, and/or the like), at least one processor **314**, and at least one set of program code instructions **316** stored in non-transitory memory **315** and executable by the at least one processor **314**. The wireless device **110** may further comprise at least one of at least one speaker/microphone **311**, at least one keypad **312**, at least one display/touchpad **313**, at least one power source **317**, at least one global positioning system (GPS) chipset **318**, and other peripherals **319**.

The processor **314** of the wireless device **110**, the processor **321**A of the base station 1 **120**A, and/or the processor **321**B of the base station 2 **120**B may comprise at least one of a general-purpose processor, a digital signal processor (DSP), a controller, a microcontroller, an application specific integrated circuit (ASIC), a field programmable gate array (FPGA) and/or other programmable logic device, discrete gate and/or transistor logic, discrete hardware components, and the like. The processor **314** of the wireless device **110**, the processor **321**A in base station 1 **120**A, and/or the processor **321**B in base station 2 **120**B may perform at least one of signal coding/processing, data processing, power control, input/output processing, and/or any other functionality that may enable the wireless device **110**, the base station 1 **120**A and/or the base station 2 **120**B to operate in a wireless environment.

The processor **314** of the wireless device **110** may be connected to the speaker/microphone **311**, the keypad **312**, and/or the display/touchpad **313**. The processor **314** may receive user input data from and/or provide user output data to the speaker/microphone **311**, the keypad **312**, and/or the display/touchpad **313**. The processor **314** in the wireless device **110** may receive power from the power source **317** and/or may be configured to distribute the power to the other components in the wireless device **110**. The power source **317** may comprise at least one of one or more dry cell batteries, solar cells, fuel cells, and the like. The processor **314** may be connected to the GPS chipset **318**. The GPS chipset **318** may be configured to provide geographic location information of the wireless device **110**.

The processor **314** of the wireless device **110** may further be connected to other peripherals **319**, which may comprise one or more software and/or hardware modules that provide additional features and/or functionalities. For example, the peripherals **319** may comprise at least one of an accelerometer, a satellite transceiver, a digital camera, a universal serial bus (USB) port, a hands-free headset, a frequency modulated (FM) radio unit, a media player, an Internet browser, and the like.

The communication interface **320**A of the base station 1, **120**A, and/or the communication interface **320**B of the base station 2, **120**B, may be configured to communicate with the communication interface **310** of the wireless device **110** via a wireless link **330**A and/or a wireless link **330**B respectively. In an example, the communication interface **320**A of the base station 1, **120**A, may communicate with the communication interface **320**B of the base station 2 and other RAN and core network nodes.

The wireless link **330**A and/or the wireless link **330**B may comprise at least one of a bi-directional link and/or a directional link. The communication interface **310** of the wireless device **110** may be configured to communicate with the communication interface **320**A of the base station 1 **120**A and/or with the communication interface **320**B of the base station 2 **120**B. The base station 1 **120**A and the wireless device **110** and/or the base station 2 **120**B and the wireless device **110** may be configured to send and receive transport blocks via the wireless link **330**A and/or via the wireless link **330**B, respectively. The wireless link **330**A and/or the wireless link **330**B may employ at least one frequency carrier. According to some of various aspects of embodiments, transceiver(s) may be employed. A transceiver may be a device that comprises both a transmitter and a receiver. Transceivers may be employed in devices such as wireless devices, base stations, relay nodes, and/or the like. Example embodiments for radio technology implemented in the communication interface **310**, **320**A, **320**B and the wireless link **330**A, **330**B are illustrated in FIG. **4**A, FIG. **4**B, FIG. **4**C, FIG. **4**D, FIG. **6**, FIG. **7**A, FIG. **7**B, FIG. **8**, and associated text.

In an example, other nodes in a wireless network (e.g. AMF, UPF, SMF, etc.) may comprise one or more communication interfaces, one or more processors, and memory storing instructions.

A node (e.g. wireless device, base station, AMF, SMF, UPF, servers, switches, antennas, and/or the like) may comprise one or more processors, and memory storing instructions that when executed by the one or more processors causes the node to perform certain processes and/or

functions. Example embodiments may enable operation of single-carrier and/or multi-carrier communications. Other example embodiments may comprise a non-transitory tangible computer readable media comprising instructions executable by one or more processors to cause operation of single-carrier and/or multi-carrier communications. Yet other example embodiments may comprise an article of manufacture that comprises a non-transitory tangible computer readable machine-accessible medium having instructions encoded thereon for enabling programmable hardware to cause a node to enable operation of single-carrier and/or multi-carrier communications. The node may include processors, memory, interfaces, and/or the like.

An interface may comprise at least one of a hardware interface, a firmware interface, a software interface, and/or a combination thereof. The hardware interface may comprise connectors, wires, electronic devices such as drivers, amplifiers, and/or the like. The software interface may comprise code stored in a memory device to implement protocol(s), protocol layers, communication drivers, device drivers, combinations thereof, and/or the like. The firmware interface may comprise a combination of embedded hardware and code stored in and/or in communication with a memory device to implement connections, electronic device operations, protocol(s), protocol layers, communication drivers, device drivers, hardware operations, combinations thereof, and/or the like.

FIG. **4**A, FIG. **4**B, FIG. **4**C and FIG. **4**D are example diagrams for uplink and downlink signal transmission as per an aspect of an embodiment of the present disclosure. FIG. **4**A shows an example uplink transmitter for at least one physical channel. A baseband signal representing a physical uplink shared channel may perform one or more functions. The one or more functions may comprise at least one of: scrambling; modulation of scrambled bits to generate complex-valued symbols; mapping of the complex-valued modulation symbols onto one or several transmission layers; transform precoding to generate complex-valued symbols; precoding of the complex-valued symbols; mapping of precoded complex-valued symbols to resource elements; generation of complex-valued time-domain Single Carrier-Frequency Division Multiple Access (SC-PUMA) or CP-OFDM signal for an antenna port; and/or the like. In an example, when transform precoding is enabled, a SC-FDMA signal for uplink transmission may be generated. In an example, when transform precoding is not enabled, an CP-OFDM signal for uplink transmission may be generated by FIG. **4**A. These functions are illustrated as examples and it is anticipated that other mechanisms may be implemented in various embodiments.

An example structure for modulation and up-conversion to the carrier frequency of the complex-valued SC-FDMA or CP-OFDM baseband signal for an antenna port and/or the complex-valued Physical Random Access CHannel (PRACH) baseband signal is shown in FIG. **4**B. Filtering may be employed prior to transmission.

An example structure for downlink transmissions is shown in FIG. **4**C. The baseband signal representing a downlink physical channel may perform one or more functions. The one or more functions may comprise: scrambling of coded bits in a codeword to be transmitted on a physical channel; modulation of scrambled bits to generate complex-valued modulation symbols; mapping of the complex-valued modulation symbols onto one or several transmission layers; precoding of the complex-valued modulation symbols on a layer for transmission on the antenna ports; mapping of complex-valued modulation symbols for an antenna port to resource elements; generation of complex-valued time-domain OFDM signal for an antenna port; and/or the like. These functions are illustrated as examples and it is anticipated that other mechanisms may be implemented in various embodiments.

In an example, a gNB may transmit a first symbol and a second symbol on an antenna port, to a wireless device. The wireless device may infer the channel (e.g., fading gain, multipath delay, etc.) for conveying the second symbol on the antenna port, from the channel for conveying the first symbol on the antenna port. In an example, a first antenna port and a second antenna port may be quasi co-located if one or more large-scale properties of the channel over which a first symbol on the first antenna port is conveyed may be inferred from the channel over which a second symbol on a second antenna port is conveyed. The one or more large-scale properties may comprise at least one of: delay spread; doppler spread; doppler shift; average gain; average delay; and/or spatial Receiving (Rx) parameters.

An example modulation and up-conversion to the carrier frequency of the complex-valued OFDM baseband signal for an antenna port is shown in FIG. **4**D. Filtering may be employed prior to transmission.

FIG. **5**A is a diagram of an example uplink channel mapping and example uplink physical signals. FIG. **5**B is a diagram of an example downlink channel mapping and a downlink physical signal. In an example, a physical layer may provide one or more information transfer services to a MAC and/or one or more higher layers. For example, the physical layer may provide the one or more information transfer services to the MAC via one or more transport channels. An information transfer service may indicate how and with what characteristics data are transferred over the radio interface.

In an example embodiment, a radio network may comprise one or more downlink and/or uplink transport channels. For example, a diagram in FIG. **5**A shows example uplink transport channels comprising Uplink-Shared CHannel (UL-SCH) **501** and Random Access CHannel (RACH) **502**. A diagram in FIG. **5**B shows example downlink transport channels comprising Downlink-Shared CHannel (DL-SCH) **511**, Paging CHannel (PCH) **512**, and Broadcast CHannel (BCH) **513**. A transport channel may be mapped to one or more corresponding physical channels. For example, UL-SCH **501** may be mapped to Physical Uplink Shared CHannel (PUSCH) **503**. RACH **502** may be mapped to PRACH **505**. DL-SCH **511** and PCH **512** may be mapped to Physical Downlink Shared CHannel (PDSCH) **514**. BCH **513** may be mapped to Physical Broadcast CHannel (PBCH) **516**.

There may be one or more physical channels without a corresponding transport channel. The one or more physical channels may be employed for Uplink Control Information (UCI) **509** and/or Downlink Control Information (DCI) **517**. For example, Physical Uplink Control CHannel (PUCCH) **504** may carry UCI **509** from a UE to a base station. For example, Physical Downlink Control CHannel (PDCCH) **515** may carry DCI **517** from a base station to a UE. NR may support UCI **509** multiplexing in PUSCH **503** when UCI **509** and PUSCH **503** transmissions may coincide in a slot at least in part. The UCI **509** may comprise at least one of CSI, Acknowledgement (ACK)/Negative Acknowledgement (NACK), and/or scheduling request. The DCI **517** on PDCCH **515** may indicate at least one of following: one or more downlink assignments and/or one or more uplink scheduling grants

In uplink, a UE may transmit one or more Reference Signals (RSs) to a base station. For example, the one or more RSs may be at least one of Demodulation-RS (DM-RS) **506**, Phase Tracking-RS (PT-RS) **507**, and/or Sounding RS (SRS) **508**. In downlink, a base station may transmit (e.g., unicast, multicast, and/or broadcast) one or more RSs to a UE. For example, the one or more RSs may be at least one of Primary Synchronization Signal (PSS)/Secondary Synchronization Signal (SSS) **521**, CSI-RS **522**, DM-RS **523**, and/or PT-RS **524**.

In an example, a UE may transmit one or more uplink DM-RSs **506** to a base station for channel estimation, for example, for coherent demodulation of one or more uplink physical channels (e.g., PUSCH **503** and/or PUCCH **504**). For example, a UE may transmit a base station at least one uplink DM-RS **506** with PUSCH **503** and/or PUCCH **504**, wherein the at least one uplink DM-RS **506** may be spanning a same frequency range as a corresponding physical channel. In an example, a base station may configure a UE with one or more uplink DM-RS configurations. At least one DM-RS configuration may support a front-loaded DM-RS pattern. A front-loaded DM-RS may be mapped over one or more OFDM symbols (e.g., 1 or 2 adjacent OFDM symbols). One or more additional uplink DM-RS may be configured to transmit at one or more symbols of a PUSCH and/or PUCCH. A base station may semi-statistically configure a UE with a maximum number of front-loaded DM-RS symbols for PUSCH and/or PUCCH. For example, a UE may schedule a single-symbol DM-RS and/or double symbol DM-RS based on a maximum number of front-loaded DM-RS symbols, wherein a base station may configure the UE with one or more additional uplink DM-RS for PUSCH and/or PUCCH. A new radio network may support, e.g., at least for CP-OFDM, a common DM-RS structure for DL and UL, wherein a DM-RS location, DM-RS pattern, and/or scrambling sequence may be same or different.

In an example, whether uplink PT-RS **507** is present or not may depend on an RRC configuration. For example, a presence of uplink PT-RS may be UE-specifically configured. For example, a presence and/or a pattern of uplink PT-RS **507** in a scheduled resource may be UE-specifically configured by a combination of RRC signaling and/or association with one or more parameters employed for other purposes (e.g., Modulation and Coding Scheme (MCS)) which may be indicated by DCI. When configured, a dynamic presence of uplink PT-RS **507** may be associated with one or more DCI parameters comprising at least MCS. A radio network may support plurality of uplink PT-RS densities defined in time/frequency domain. When present, a frequency domain density may be associated with at least one configuration of a scheduled bandwidth. A UE may assume a same precoding for a DMRS port and a PT-RS port. A number of PT-RS ports may be fewer than a number of DM-RS ports in a scheduled resource. For example, uplink PT-RS **507** may be confined in the scheduled time/frequency duration for a UE.

In an example, a UE may transmit SRS **508** to a base station for channel state estimation to support uplink channel dependent scheduling and/or link adaptation. For example, SRS **508** transmitted by a UE may allow for a base station to estimate an uplink channel state at one or more different frequencies. A base station scheduler may employ an uplink channel state to assign one or more resource blocks of good quality for an uplink PUSCH transmission from a UE. A base station may semi-statistically configure a UE with one or more SRS resource sets. For an SRS resource set, a base station may configure a UE with one or more SRS resources. An SRS resource set applicability may be configured by a higher layer (e.g., RRC) parameter. For example, when a higher layer parameter indicates beam management, an SRS resource in each of one or more SRS resource sets may be transmitted at a time instant. A UE may transmit one or more SRS resources in different SRS resource sets simultaneously. A new radio network may support aperiodic, periodic and/or semi-persistent SRS transmissions. A UE may transmit SRS resources based on one or more trigger types, wherein the one or more trigger types may comprise higher layer signaling (e.g., RRC) and/or one or more DCI formats (e.g., at least one DCI format may be employed for a UE to select at least one of one or more configured SRS resource sets. An SRS trigger type 0 may refer to an SRS triggered based on a higher layer signaling. An SRS trigger type 1 may refer to an SRS triggered based on one or more DCI formats. In an example, when PUSCH **503** and SRS **508** are transmitted in a same slot, a UE may be configured to transmit SRS **508** after a transmission of PUSCH **503** and corresponding uplink DM-RS **506**.

In an example, a base station may semi-statistically configure a UE with one or more SRS configuration parameters indicating at least one of following: a SRS resource configuration identifier, a number of SRS ports, time domain behavior of SRS resource configuration (e.g., an indication of periodic, semi-persistent, or aperiodic SRS), slot (mini-slot, and/or subframe) level periodicity and/or offset for a periodic and/or aperiodic SRS resource, a number of OFDM symbols in a SRS resource, starting OFDM symbol of a SRS resource, a SRS bandwidth, a frequency hopping bandwidth, a cyclic shift, and/or a SRS sequence ID.

In an example, in a time domain, an SS/PBCH block may comprise one or more OFDM symbols (e.g., 4 OFDM symbols numbered in increasing order from 0 to 3) within the SS/PBCH block. An SS/PBCH block may comprise PSS/SSS **521** and PBCH **516**. In an example, in the frequency domain, an SS/PBCH block may comprise one or more contiguous subcarriers (e.g., 240 contiguous subcarriers with the subcarriers numbered in increasing order from 0 to 239) within the SS/PBCH block. For example, a PSS/SSS **521** may occupy 1 OFDM symbol and 127 subcarriers. For example, PBCH **516** may span across 3 OFDM symbols and 240 subcarriers. A UE may assume that one or more SS/PBCH blocks transmitted with a same block index may be quasi co-located, e.g., with respect to Doppler spread, Doppler shift, average gain, average delay, and spatial Rx parameters. A UE may not assume quasi co-location for other SS/PBCH block transmissions. A periodicity of an SS/PBCH block may be configured by a radio network (e.g., by an RRC signaling) and one or more time locations where the SS/PBCH block may be sent may be determined by sub-carrier spacing. In an example, a UE may assume a band-specific sub-carrier spacing for an SS/PBCH block unless a radio network has configured a UE to assume a different sub-carrier spacing.

In an example, downlink CSI-RS **522** may be employed for a UE to acquire channel state information. A radio network may support periodic, aperiodic, and/or semi-persistent transmission of downlink CSI-RS **522**. For example, a base station may semi-statistically configure and/or reconfigure a UE with periodic transmission of downlink CSI-RS **522**. A configured CSI-RS resources may be activated ad/or deactivated. For semi-persistent transmission, an activation and/or deactivation of CSI-RS resource may be triggered dynamically. In an example, CSI-RS configuration may comprise one or more parameters indicating at least a number of antenna ports. For example, a base station may

configure a UE with 32 ports. A base station may semi-statistically configure a UE with one or more CSI-RS resource sets. One or more CSI-RS resources may be allocated from one or more CSI-RS resource sets to one or more UEs. For example, a base station may semi-statistically configure one or more parameters indicating CSI RS resource mapping, for example, time-domain location of one or more CSI-RS resources, a bandwidth of a CSI-RS resource, and/or a periodicity. In an example, a UE may be configured to employ a same OFDM symbols for downlink CSI-RS **522** and control resource set (coreset) when the downlink CSI-RS **522** and coreset are spatially quasi co-located and resource elements associated with the downlink CSI-RS **522** are the outside of PRBs configured for coreset. In an example, a UE may be configured to employ a same OFDM symbols for downlink CSI-RS **522** and SSB/PBCH when the downlink CSI-RS **522** and SSB/PBCH are spatially quasi co-located and resource elements associated with the downlink CSI-RS **522** are the outside of PRBs configured for SSB/PBCH.

In an example, a UE may transmit one or more downlink DM-RSs **523** to a base station for channel estimation, for example, for coherent demodulation of one or more downlink physical channels (e.g., PDSCH **514**). For example, a radio network may support one or more variable and/or configurable DM-RS patterns for data demodulation. At least one downlink DM-RS configuration may support a front-loaded DM-RS pattern. A front-loaded DM-RS may be mapped over one or more OFDM symbols (e.g., 1 or 2 adjacent OFDM symbols). A base station may semi-statistically configure a UE with a maximum number of front-loaded DM-RS symbols for PDSCH **514**. For example, a DM-RS configuration may support one or more DM-RS ports. For example, for single user-MIMO, a DM-RS configuration may support at least 8 orthogonal downlink DM-RS ports. For example, for multiuser-MIMO, a DM-RS configuration may support 12 orthogonal downlink DM-RS ports. A radio network may support, e.g., at least for CP-OFDM, a common DM-RS structure for DL and UL, wherein a DM-RS location, DM-RS pattern, and/or scrambling sequence may be same or different.

In an example, whether downlink PT-RS **524** is present or not may depend on an RRC configuration. For example, a presence of downlink PT-RS **524** may be UE-specifically configured. For example, a presence and/or a pattern of downlink PT-RS **524** in a scheduled resource may be UE-specifically configured by a combination of RRC signaling and/or association with one or more parameters employed for other purposes (e.g., MCS) which may be indicated by DCI. When configured, a dynamic presence of downlink PT-RS **524** may be associated with one or more DCI parameters comprising at least MCS. A radio network may support plurality of PT-RS densities defined in time/frequency domain. When present, a frequency domain density may be associated with at least one configuration of a scheduled bandwidth. A UE may assume a same precoding for a DMRS port and a PT-RS port. A number of PT-RS ports may be fewer than a number of DM-RS ports in a scheduled resource. For example, downlink PT-RS **524** may be confined in the scheduled time/frequency duration for a UE.

FIG. **6** is a diagram depicting an example frame structure for a carrier as per an aspect of an embodiment of the present disclosure. A multicarrier OFDM communication system may include one or more carriers, for example, ranging from 1 to 32 carriers, in case of carrier aggregation, or ranging from 1 to 64 carriers, in case of dual connectivity. Different radio frame structures may be supported (e.g., for FDD and for TDD duplex mechanisms). FIG. **6** shows an example frame structure. Downlink and uplink transmissions may be organized into radio frames **601**. In this example, radio frame duration is 10 ms. In this example, a 10 ms radio frame **601** may be divided into ten equally sized subframes **602** with 1 ms duration. Subframe(s) may comprise one or more slots (e.g. slots **603** and **605**) depending on subcarrier spacing and/or CP length. For example, a subframe with 15 kHz, 30 kHz, 60 kHz, 120 kHz, 240 kHz and 480 kHz subcarrier spacing may comprise one, two, four, eight, sixteen and thirty-two slots, respectively. In FIG. **6**, a subframe may be divided into two equally sized slots **603** with 0.5 ms duration. For example, 10 subframes may be available for downlink transmission and 10 subframes may be available for uplink transmissions in a 10 ms interval. Uplink and downlink transmissions may be separated in the frequency domain. Slot(s) may include a plurality of OFDM symbols **604**. The number of OFDM symbols **604** in a slot **605** may depend on the cyclic prefix length. For example, a slot may be 14 OFDM symbols for the same subcarrier spacing of up to 480 kHz with normal CP. A slot may be 12 OFDM symbols for the same subcarrier spacing of 60 kHz with extended CP. A slot may contain downlink, uplink, or a downlink part and an uplink part and/or alike.

FIG. **7**A is a diagram depicting example sets of OFDM subcarriers as per an aspect of an embodiment of the present disclosure. In the example, a gNB may communicate with a wireless device with a carrier with an example channel bandwidth **700**. Arrow(s) in the diagram may depict a subcarrier in a multicarrier OFDM system. The OFDM system may use technology such as OFDM technology, SC-FDMA technology, and/or the like. In an example, an arrow **701** shows a subcarrier transmitting information symbols. In an example, a subcarrier spacing **702**, between two contiguous subcarriers in a carrier, may be any one of 15 KHz, 30 KHz, 60 KHz, 120 KHz, 240 KHz etc. In an example, different subcarrier spacing may correspond to different transmission numerologies. In an example, a transmission numerology may comprise at least: a numerology index; a value of subcarrier spacing; a type of cyclic prefix (CP). In an example, a gNB may transmit to/receive from a UE on a number of subcarriers **703** in a carrier. In an example, a bandwidth occupied by a number of subcarriers **703** (transmission bandwidth) may be smaller than the channel bandwidth **700** of a carrier, due to guard band **704** and **705**. In an example, a guard band **704** and **705** may be used to reduce interference to and from one or more neighbor carriers. A number of subcarriers (transmission bandwidth) in a carrier may depend on the channel bandwidth of the carrier and the subcarrier spacing. For example, a transmission bandwidth, for a carrier with 20 MHz channel bandwidth and 15 KHz subcarrier spacing, may be in number of 1024 subcarriers.

In an example, a gNB and a wireless device may communicate with multiple CCs when configured with CA. In an example, different component carriers may have different bandwidth and/or subcarrier spacing, if CA is supported. In an example, a gNB may transmit a first type of service to a UE on a first component carrier. The gNB may transmit a second type of service to the UE on a second component carrier. Different type of services may have different service requirement (e.g., data rate, latency, reliability), which may be suitable for transmission via different component carrier having different subcarrier spacing and/or bandwidth. FIG. **7**B shows an example embodiment. A first component carrier may comprise a first number of subcarriers **706** with a first subcarrier spacing **709**. A second component carrier

may comprise a second number of subcarriers **707** with a second subcarrier spacing **710**. A third component carrier may comprise a third number of subcarriers **708** with a third subcarrier spacing **711**. Carriers in a multicarrier OFDM communication system may be contiguous carriers, non-contiguous carriers, or a combination of both contiguous and non-contiguous carriers.

FIG. **8** is a diagram depicting OFDM radio resources as per an aspect of an embodiment of the present disclosure. In an example, a carrier may have a transmission bandwidth **801**. In an example, a resource grid may be in a structure of frequency domain **802** and time domain **803**. In an example, a resource grid may comprise a first number of OFDM symbols in a subframe and a second number of resource blocks, starting from a common resource block indicated by higher-layer signaling (e.g. RRC signaling), for a transmission numerology and a carrier. In an example, in a resource grid, a resource unit identified by a subcarrier index and a symbol index may be a resource element **805**. In an example, a subframe may comprise a first number of OFDM symbols **807** depending on a numerology associated with a carrier. For example, when a subcarrier spacing of a numerology of a carrier is 15 KHz, a subframe may have 14 OFDM symbols for a carrier. When a subcarrier spacing of a numerology is 30 KHz, a subframe may have 28 OFDM symbols. When a subcarrier spacing of a numerology is 60 Khz, a subframe may have 56 OFDM symbols, etc. In an example, a second number of resource blocks comprised in a resource grid of a carrier may depend on a bandwidth and a numerology of the carrier.

As shown in FIG. **8**, a resource block **806** may comprise 12 subcarriers. In an example, multiple resource blocks may be grouped into a Resource Block Group (RBG) **804**. In an example, a size of an RBG may depend on at least one of: an RRC message indicating a RBG size configuration; a size of a carrier bandwidth; or a size of a bandwidth part of a carrier. In an example, a carrier may comprise multiple bandwidth parts. A first bandwidth part of a carrier may have different frequency location and/or bandwidth from a second bandwidth part of the carrier.

In an example, a gNB may transmit a downlink control information comprising a downlink or uplink resource block assignment to a wireless device. A base station may transmit to or receive from, a wireless device, data packets (e.g. transport blocks) scheduled and transmitted via one or more resource blocks and one or more slots according to parameters in a downlink control information and/or RRC message(s). In an example, a starting symbol relative to a first slot of the one or more slots may be indicated to the wireless device. In an example, a gNB may transmit to or receive from, a wireless device, data packets scheduled on one or more RBGs and one or more slots.

In an example, a gNB may transmit a downlink control information comprising a downlink assignment to a wireless device via one or more PDCCHs. The downlink assignment may comprise parameters indicating at least modulation and coding format; resource allocation; and/or HARQ information related to DL-SCH. In an example, a resource allocation may comprise parameters of resource block allocation; and/or slot allocation. In an example, a gNB may dynamically allocate resources to a wireless device via a Cell-Radio Network Temporary Identifier (C-RNTI) on one or more PDCCHs. The wireless device may monitor the one or more PDCCHs in order to find possible allocation when its downlink reception is enabled. The wireless device may receive one or more downlink data package on one or more PDSCH scheduled by the one or more PDCCHs, when successfully detecting the one or more PDCCHs.

In an example, a gNB may allocate Configured Scheduling (CS) resources for down link transmission to a wireless device. The gNB may transmit one or more RRC messages indicating a periodicity of the CS grant. The gNB may transmit a DCI via a PDCCH addressed to a Configured Scheduling-RNTI (CS-RNTI) activating the CS resources. The DCI may comprise parameters indicating that the downlink grant is a CS grant. The CS grant may be implicitly reused according to the periodicity defined by the one or more RRC messages, until deactivated.

In an example, a gNB may transmit a downlink control information comprising an uplink grant to a wireless device via one or more PDCCHs. The uplink grant may comprise parameters indicating at least modulation and coding format; resource allocation; and/or HARQ information related to UL-SCH. In an example, a resource allocation may comprise parameters of resource block allocation; and/or slot allocation. In an example, a gNB may dynamically allocate resources to a wireless device via a C-RNTI on one or more PDCCHs. The wireless device may monitor the one or more PDCCHs in order to find possible resource allocation. The wireless device may transmit one or more uplink data package via one or more PUSCH scheduled by the one or more PDCCHs, when successfully detecting the one or more PDCCHs.

In an example, a gNB may allocate CS resources for uplink data transmission to a wireless device. The gNB may transmit one or more RRC messages indicating a periodicity of the CS grant. The gNB may transmit a DCI via a PDCCH addressed to a CS-RNTI activating the CS resources. The DCI may comprise parameters indicating that the uplink grant is a CS grant. The CS grant may be implicitly reused according to the periodicity defined by the one or more RRC message, until deactivated.

In an example, a base station may transmit DCI/control signaling via PDCCH. The DCI may take a format in a plurality of formats. A DCI may comprise downlink and/or uplink scheduling information (e.g., resource allocation information, HARQ related parameters, MCS), request for CSI (e.g., aperiodic CQI reports), request for SRS, uplink power control commands for one or more cells, one or more timing information (e.g., TB transmission/reception timing, HARQ feedback timing, etc.), etc. In an example, a DCI may indicate an uplink grant comprising transmission parameters for one or more transport blocks. In an example, a DCI may indicate downlink assignment indicating parameters for receiving one or more transport blocks. In an example, a DCI may be used by base station to initiate a contention-free random access at the wireless device. In an example, the base station may transmit a DCI comprising slot format indicator (SFI) notifying a slot format. In an example, the base station may transmit a DCI comprising pre-emption indication notifying the PRB(s) and/or OFDM symbol(s) where a UE may assume no transmission is intended for the UE. In an example, the base station may transmit a DCI for group power control of PUCCH or PUSCH or SRS. In an example, a DCI may correspond to an RNTI. In an example, the wireless device may obtain an RNTI in response to completing the initial access (e.g., C-RNTI). In an example, the base station may configure an RNTI for the wireless (e.g., CS-RNTI, TPC-CS-RNTI, TPC-PUCCH-RNTI, TPC-PUSCH-RNTI, TPC-SRS-RNTI). In an example, the wireless device may compute an RNTI (e.g., the wireless device may compute RA-RNTI based on resources used for transmission of a preamble). In

an example, an RNTI may have a pre-configured value (e.g., P-RNTI or SI-RNTI). In an example, a wireless device may monitor a group common search space which may be used by base station for transmitting DCIs that are intended for a group of UEs. In an example, a group common DCI may correspond to an RNTI which is commonly configured for a group of UEs. In an example, a wireless device may monitor a UE-specific search space. In an example, a UE specific DCI may correspond to an RNTI configured for the wireless device.

A NR system may support a single beam operation and/or a multi-beam operation. In a multi-beam operation, a base station may perform a downlink beam sweeping to provide coverage for common control channels and/or downlink SS blocks, which may comprise at least a PSS, a SSS, and/or PBCH. A wireless device may measure quality of a beam pair link using one or more RSs. One or more SS blocks, or one or more CSI-RS resources, associated with a CSI-RS resource index (CRI), or one or more DM-RSs of PBCH, may be used as RS for measuring quality of a beam pair link. Quality of a beam pair link may be defined as a reference signal received power (RSRP) value, or a reference signal received quality (RSRQ) value, and/or a CSI value measured on RS resources. The base station may indicate whether an RS resource, used for measuring a beam pair link quality, is quasi-co-located (QCLed) with DM-RSs of a control channel. An RS resource and DM-RSs of a control channel may be called QCLed when channel characteristics from a transmission on an RS to a wireless device, and that from a transmission on a control channel to a wireless device, are similar or same under a configured criterion. In a multi-beam operation, a wireless device may perform an uplink beam sweeping to access a cell.

In an example, a wireless device may be configured to monitor PDCCH on one or more beam pair links simultaneously depending on a capability of a wireless device. This may increase robustness against beam pair link blocking. A base station may transmit one or more messages to configure a wireless device to monitor PDCCH on one or more beam pair links in different PDCCH OFDM symbols. For example, a base station may transmit higher layer signaling (e.g. RRC signaling) or MAC CE comprising parameters related to the Rx beam setting of a wireless device for monitoring PDCCH on one or more beam pair links. A base station may transmit indication of spatial QCL assumption between an DL RS antenna port(s) (for example, cell-specific CSI-RS, or wireless device-specific CSI-RS, or SS block, or PBCH with or without DM-RSs of PBCH), and DL RS antenna port(s) for demodulation of DL control channel Signaling for beam indication for a PDCCH may be MAC CE signaling, or RRC signaling, or DCI signaling, or specification-transparent and/or implicit method, and combination of these signaling methods.

For reception of unicast DL data channel, a base station may indicate spatial QCL parameters between DL RS antenna port(s) and DM-RS antenna port(s) of DL data channel. The base station may transmit DCI (e.g. downlink grants) comprising information indicating the RS antenna port(s). The information may indicate RS antenna port(s) which may be QCL-ed with the DM-RS antenna port(s). Different set of DM-RS antenna port(s) for a DL data channel may be indicated as QCL with different set of the RS antenna port(s).

FIG. **9**A is an example of beam sweeping in a DL channel. In an RRC_INACTIVE state or RRC_IDLE state, a wireless device may assume that SS blocks form an SS burst **940**, and an SS burst set **950**. The SS burst set **950** may have a given periodicity. For example, in a multi-beam operation, a base station **120** may transmit SS blocks in multiple beams, together forming a SS burst **940**. One or more SS blocks may be transmitted on one beam. If multiple SS bursts **940** are transmitted with multiple beams, SS bursts together may form SS burst set **950**.

A wireless device may further use CSI-RS in the multi-beam operation for estimating a beam quality of a links between a wireless device and a base station. A beam may be associated with a CSI-RS. For example, a wireless device may, based on a RSRP measurement on CSI-RS, report a beam index, as indicated in a CRI for downlink beam selection, and associated with a RSRP value of a beam. A CSI-RS may be transmitted on a CSI-RS resource including at least one of one or more antenna ports, one or more time or frequency radio resources. A CSI-RS resource may be configured in a cell-specific way by common RRC signaling, or in a wireless device-specific way by dedicated RRC signaling, and/or L1/L2 signaling. Multiple wireless devices covered by a cell may measure a cell-specific CSI-RS resource. A dedicated subset of wireless devices covered by a cell may measure a wireless device-specific CSI-RS resource.

A CSI-RS resource may be transmitted periodically, or using aperiodic transmission, or using a multi-shot or semi-persistent transmission. For example, in a periodic transmission in FIG. **9**A, a base station **120** may transmit configured CSI-RS resources **940** periodically using a configured periodicity in a time domain. In an aperiodic transmission, a configured CSI-RS resource may be transmitted in a dedicated time slot. In a multi-shot or semi-persistent transmission, a configured CSI-RS resource may be transmitted within a configured period. Beams used for CSI-RS transmission may have different beam width than beams used for SS-blocks transmission.

FIG. **9**B is an example of a beam management procedure in an example new radio network. A base station **120** and/or a wireless device **110** may perform a downlink L1/L2 beam management procedure. One or more of the following downlink L1/L2 beam management procedures may be performed within one or more wireless devices **110** and one or more base stations **120**. In an example, a P-1 procedure **910** may be used to enable the wireless device **110** to measure one or more Transmission (Tx) beams associated with the base station **120** to support a selection of a first set of Tx beams associated with the base station **120** and a first set of Rx beam(s) associated with a wireless device **110**. For beamforming at a base station **120**, a base station **120** may sweep a set of different TX beams. For beamforming at a wireless device **110**, a wireless device **110** may sweep a set of different Rx beams. In an example, a P-2 procedure **920** may be used to enable a wireless device **110** to measure one or more Tx beams associated with a base station **120** to possibly change a first set of Tx beams associated with a base station **120**. A P-2 procedure **920** may be performed on a possibly smaller set of beams for beam refinement than in the P-1 procedure **910**. A P-2 procedure **920** may be a special case of a P-1 procedure **910**. In an example, a P-3 procedure **930** may be used to enable a wireless device **110** to measure at least one Tx beam associated with a base station **120** to change a first set of Rx beams associated with a wireless device **110**.

A wireless device **110** may transmit one or more beam management reports to a base station **120**. In one or more beam management reports, a wireless device **110** may indicate some beam pair quality parameters, comprising at least, one or more beam identifications; RSRP; Precoding Matrix

Indicator (PMI)/Channel Quality Indicator (CQI)/Rank Indicator (RI) of a subset of configured beams. Based on one or more beam management reports, a base station **120** may transmit to a wireless device **110** a signal indicating that one or more beam pair links are one or more serving beams. A base station **120** may transmit PDCCH and PDSCH for a wireless device **110** using one or more serving beams.

In an example embodiment, new radio network may support a Bandwidth Adaptation (BA). In an example, receive and/or transmit bandwidths configured by a UE employing a BA may not be large. For example, a receive and/or transmit bandwidths may not be as large as a bandwidth of a cell. Receive and/or transmit bandwidths may be adjustable. For example, a UE may change receive and/or transmit bandwidths, e.g., to shrink during period of low activity to save power. For example, a UE may change a location of receive and/or transmit bandwidths in a frequency domain, e.g. to increase scheduling flexibility. For example, a UE may change a subcarrier spacing, e.g. to allow different services.

In an example embodiment, a subset of a total cell bandwidth of a cell may be referred to as a Bandwidth Part (BWP). A base station may configure a UE with one or more BWPs to achieve a BA. For example, a base station may indicate, to a UE, which of the one or more (configured) BWPs is an active BWP.

FIG. **10** is an example diagram of 3 BWPs configured: BWP1 (**1010** and **1050**) with a width of 40 MHz and subcarrier spacing of 15 kHz; BWP2 (**1020** and **1040**) with a width of 10 MHz and subcarrier spacing of 15 kHz; BWP3 **1030** with a width of 20 MHz and subcarrier spacing of 60 kHz.

In an example, a UE, configured for operation in one or more BWPs of a cell, may be configured by one or more higher layers (e.g. RRC layer) for a cell a set of one or more BWPs (e.g., at most four BWPs) for receptions by the UE (DL BWP set) in a DL bandwidth by at least one parameter DL-BWP and a set of one or more BWPs (e.g., at most four BWPs) for transmissions by a UE (UL BWP set) in an UL bandwidth by at least one parameter UL-BWP for a cell.

To enable BA on the PCell, a base station may configure a UE with one or more UL and DL BWP pairs. To enable BA on SCells (e.g., in case of CA), a base station may configure a UE at least with one or more DL BWPs (e.g., there may be none in an UL).

In an example, an initial active DL BWP may be defined by at least one of a location and number of contiguous PRBs, a subcarrier spacing, or a cyclic prefix, for a control resource set for at least one common search space. For operation on the PCell, one or more higher layer parameters may indicate at least one initial UL BWP for a random access procedure. If a UE is configured with a secondary carrier on a primary cell, the UE may be configured with an initial BWP for random access procedure on a secondary carrier.

In an example, for unpaired spectrum operation, a UE may expect that a center frequency for a DL BWP may be same as a center frequency for a UL BWP.

For example, for a DL BWP or an UL BWP in a set of one or more DL BWPs or one or more UL BWPs, respectively, a base statin may semi-statistically configure a UE for a cell with one or more parameters indicating at least one of following: a subcarrier spacing; a cyclic prefix; a number of contiguous PRBs; an index in the set of one or more DL BWPs and/or one or more UL BWPs; a link between a DL BWP and an UL BWP from a set of configured DL BWPs and UL BWPs; a DCI detection to a PDSCH reception timing; a PDSCH reception to a HARQ-ACK transmission timing value; a DCI detection to a PUSCH transmission timing value; an offset of a first PRB of a DL bandwidth or an UL bandwidth, respectively, relative to a first PRB of a bandwidth.

In an example, for a DL BWP in a set of one or more DL BWPs on a PCell, a base station may configure a UE with one or more control resource sets for at least one type of common search space and/or one UE-specific search space. For example, a base station may not configure a UE without a common search space on a PCell, or on a PSCell, in an active DL BWP.

For an UL BWP in a set of one or more UL BWPs, a base station may configure a UE with one or more resource sets for one or more PUCCH transmissions.

In an example, if a DCI comprises a BWP indicator field, a BWP indicator field value may indicate an active DL BWP, from a configured DL BWP set, for one or more DL receptions. If a DCI comprises a BWP indicator field, a BWP indicator field value may indicate an active UL BWP, from a configured UL BWP set, for one or more UL transmissions.

In an example, for a PCell, a base station may semi-statistically configure a UE with a default DL BWP among configured DL BWPs. If a UE is not provided a default DL BWP, a default BWP may be an initial active DL BWP.

In an example, a base station may configure a UE with a timer value for a PCell. For example, a UE may start a timer, referred to as BWP inactivity timer, when a UE detects a DCI indicating an active DL BWP, other than a default DL BWP, for a paired spectrum operation or when a UE detects a DCI indicating an active DL BWP or UL BWP, other than a default DL BWP or UL BWP, for an unpaired spectrum operation. The UE may increment the timer by an interval of a first value (e.g., the first value may be 1 millisecond or 0.5 milliseconds) if the UE does not detect a DCI during the interval for a paired spectrum operation or for an unpaired spectrum operation. In an example, the timer may expire when the timer is equal to the timer value. A UE may switch to the default DL BWP from an active DL BWP when the timer expires.

In an example, a base station may semi-statistically configure a UE with one or more BWPs. A UE may switch an active BWP from a first BWP to a second BWP in response to receiving a DCI indicating the second BWP as an active BWP and/or in response to an expiry of BWP inactivity timer (for example, the second BWP may be a default BWP). For example, FIG. **10** is an example diagram of 3 BWPs configured, BWP1 (**1010** and **1050**), BWP2 (**1020** and **1040**), and BWP3 (**1030**). BWP2 (**1020** and **1040**) may be a default BWP. BWP1 (**1010**) may be an initial active BWP. In an example, a UE may switch an active BWP from BWP1 **1010** to BWP2 **1020** in response to an expiry of BWP inactivity timer. For example, a UE may switch an active BWP from BWP2 **1020** to BWP3 **1030** in response to receiving a DCI indicating BWP3 **1030** as an active BWP. Switching an active BWP from BWP3 **1030** to BWP2 **1040** and/or from BWP2 **1040** to BWP1 **1050** may be in response to receiving a DCI indicating an active BWP and/or in response to an expiry of BWP inactivity timer.

In an example, if a UE is configured for a secondary cell with a default DL BWP among configured DL BWPs and a timer value, UE procedures on a secondary cell may be same as on a primary cell using the timer value for the secondary cell and the default DL BWP for the secondary cell.

In an example, if a base station configures a UE with a first active DL BWP and a first active UL BWP on a secondary cell or carrier, a UE may employ an indicated DL

BWP and an indicated UL BWP on a secondary cell as a respective first active DL BWP and first active UL BWP on a secondary cell or carrier.

FIG. **11**A and FIG. **11**B show packet flows employing a multi connectivity (e.g. dual connectivity, multi connectivity, tight interworking, and/or the like). FIG. **11**A is an example diagram of a protocol structure of a wireless device **110** (e.g. UE) with CA and/or multi connectivity as per an aspect of an embodiment. FIG. **11**B is an example diagram of a protocol structure of multiple base stations with CA and/or multi connectivity as per an aspect of an embodiment. The multiple base stations may comprise a master node, MN **1130** (e.g. a master node, a master base station, a master gNB, a master eNB, and/or the like) and a secondary node, SN **1150** (e.g. a secondary node, a secondary base station, a secondary gNB, a secondary eNB, and/or the like). A master node **1130** and a secondary node **1150** may co-work to communicate with a wireless device **110**.

When multi connectivity is configured for a wireless device **110**, the wireless device **110**, which may support multiple reception/transmission functions in an RRC connected state, may be configured to utilize radio resources provided by multiple schedulers of a multiple base stations. Multiple base stations may be inter-connected via a non-ideal or ideal backhaul (e.g. Xn interface, X2 interface, and/or the like). A base station involved in multi connectivity for a certain wireless device may perform at least one of two different roles: a base station may either act as a master base station or as a secondary base station. In multi connectivity, a wireless device may be connected to one master base station and one or more secondary base stations. In an example, a master base station (e.g. the MN **1130**) may provide a master cell group (MCG) comprising a primary cell and/or one or more secondary cells for a wireless device (e.g. the wireless device **110**). A secondary base station (e.g. the SN **1150**) may provide a secondary cell group (SCG) comprising a primary secondary cell (PSCell) and/or one or more secondary cells for a wireless device (e.g. the wireless device **110**).

In multi connectivity, a radio protocol architecture that a bearer employs may depend on how a bearer is setup. In an example, three different type of bearer setup options may be supported: an MCG bearer, an SCG bearer, and/or a split bearer. A wireless device may receive/transmit packets of an MCG bearer via one or more cells of the MCG, and/or may receive/transmits packets of an SCG bearer via one or more cells of an SCG. Multi-connectivity may also be described as having at least one bearer configured to use radio resources provided by the secondary base station. Multi-connectivity may or may not be configured/implemented in some of the example embodiments.

In an example, a wireless device (e.g. Wireless Device **110**) may transmit and/or receive: packets of an MCG bearer via an SDAP layer (e.g. SDAP **1110**), a PDCP layer (e.g. NR PDCP **1111**), an RLC layer (e.g. MN RLC **1114**), and a MAC layer (e.g. MN MAC **1118**); packets of a split bearer via an SDAP layer (e.g. SDAP **1110**), a PDCP layer (e.g. NR PDCP **1112**), one of a master or secondary RLC layer (e.g. MN RLC **1115**, SN RLC **1116**), and one of a master or secondary MAC layer (e.g. MN MAC **1118**, SN MAC **1119**); and/or packets of an SCG bearer via an SDAP layer (e.g. SDAP **1110**), a PDCP layer (e.g. NR PDCP **1113**), an RLC layer (e.g. SN RLC **1117**), and a MAC layer (e.g. MN MAC **1119**).

In an example, a master base station (e.g. MN **1130**) and/or a secondary base station (e.g. SN **1150**) may transmit/receive: packets of an MCG bearer via a master or secondary node SDAP layer (e.g. SDAP **1120**, SDAP **1140**), a master or secondary node PDCP layer (e.g. NR PDCP **1121**, NR PDCP **1142**), a master node RLC layer (e.g. MN RLC **1124**, MN RLC **1125**), and a master node MAC layer (e.g. MN MAC **1128**); packets of an SCG bearer via a master or secondary node SDAP layer (e.g. SDAP **1120**, SDAP **1140**), a master or secondary node PDCP layer (e.g. NR PDCP **1122**, NR PDCP **1143**), a secondary node RLC layer (e.g. SN RLC **1146**, SN RLC **1147**), and a secondary node MAC layer (e.g. SN MAC **1148**); packets of a split bearer via a master or secondary node SDAP layer (e.g. SDAP **1120**, SDAP **1140**), a master or secondary node PDCP layer (e.g. NR PDCP **1123**, NR PDCP **1141**), a master or secondary node RLC layer (e.g. MN RLC **1126**, SN RLC **1144**, SN RLC **1145**, MN RLC **1127**), and a master or secondary node MAC layer (e.g. MN MAC **1128**, SN MAC **1148**).

In multi connectivity, a wireless device may configure multiple MAC entities: one MAC entity (e.g. MN MAC **1118**) for a master base station, and other MAC entities (e.g. SN MAC **1119**) for a secondary base station. In multi-connectivity, a configured set of serving cells for a wireless device may comprise two subsets: an MCG comprising serving cells of a master base station, and SCGs comprising serving cells of a secondary base station. For an SCG, one or more of following configurations may be applied: at least one cell of an SCG has a configured UL CC and at least one cell of a SCG, named as primary secondary cell (PSCell, PCell of SCG, or sometimes called PCell), is configured with PUCCH resources; when an SCG is configured, there may be at least one SCG bearer or one Split bearer; upon detection of a physical layer problem or a random access problem on a PSCell, or a number of NR RLC retransmissions has been reached associated with the SCG, or upon detection of an access problem on a PSCell during a SCG addition or a SCG change: an RRC connection re-establishment procedure may not be triggered, UL transmissions towards cells of an SCG may be stopped, a master base station may be informed by a wireless device of a SCG failure type, for split bearer, a DL data transfer over a master base station may be maintained; an NR RLC acknowledged mode (AM) bearer may be configured for a split bearer; PCell and/or PSCell may not be de-activated; PSCell may be changed with a SCG change procedure (e.g. with security key change and a RACH procedure); and/or a bearer type change between a split bearer and a SCG bearer or simultaneous configuration of a SCG and a split bearer may or may not supported.

With respect to interaction between a master base station and a secondary base stations for multi-connectivity, one or more of the following may be applied: a master base station and/or a secondary base station may maintain RRM measurement configurations of a wireless device; a master base station may (e.g. based on received measurement reports, traffic conditions, and/or bearer types) may decide to request a secondary base station to provide additional resources (e.g. serving cells) for a wireless device; upon receiving a request from a master base station, a secondary base station may create/modify a container that may result in configuration of additional serving cells for a wireless device (or decide that the secondary base station has no resource available to do so); for a UE capability coordination, a master base station may provide (a part of) an AS configuration and UE capabilities to a secondary base station; a master base station and a secondary base station may exchange information about a UE configuration by employing of RRC containers (inter-node messages) carried via Xn messages; a secondary base station may initiate a reconfiguration of the secondary base station existing serving cells (e.g. PUCCH towards the

secondary base station); a secondary base station may decide which cell is a PSCell within a SCG; a master base station may or may not change content of RRC configurations provided by a secondary base station; in case of a SCG addition and/or a SCG SCell addition, a master base station may provide recent (or the latest) measurement results for SCG cell(s); a master base station and secondary base stations may receive information of SFN and/or subframe offset of each other from OAM and/or via an Xn interface, (e.g. for a purpose of DRX alignment and/or identification of a measurement gap). In an example, when adding a new SCG SCell, dedicated RRC signaling may be used for sending required system information of a cell as for CA, except for an SFN acquired from a MIB of a PSCell of a SCG.

FIG. **12** is an example diagram of a random access procedure. One or more events may trigger a random access procedure. For example, one or more events may be at least one of following: initial access from RRC_IDLE, RRC connection re-establishment procedure, handover, DL or UL data arrival during RRC_CONNECTED when UL synchronization status is non-synchronized, transition from RRC_Inactive, and/or request for other system information. For example, a PDCCH order, a MAC entity, and/or a beam failure indication may initiate a random access procedure.

In an example embodiment, a random access procedure may be at least one of a contention based random access procedure and a contention free random access procedure. For example, a contention based random access procedure may comprise, one or more Msg 1 **1220** transmissions, one or more Msg2 **1230** transmissions, one or more Msg3 **1240** transmissions, and contention resolution **1250**. For example, a contention free random access procedure may comprise one or more Msg 1 **1220** transmissions and one or more Msg2 **1230** transmissions.

In an example, a base station may transmit (e.g., unicast, multicast, or broadcast), to a UE, a RACH configuration **1210** via one or more beams. The RACH configuration **1210** may comprise one or more parameters indicating at least one of following: available set of PRACH resources for a transmission of a random access preamble, initial preamble power (e.g., random access preamble initial received target power), an RSRP threshold for a selection of a SS block and corresponding PRACH resource, a power-ramping factor (e.g., random access preamble power ramping step), random access preamble index, a maximum number of preamble transmission, preamble group A and group B, a threshold (e.g., message size) to determine the groups of random access preambles, a set of one or more random access preambles for system information request and corresponding PRACH resource(s), if any, a set of one or more random access preambles for beam failure recovery request and corresponding PRACH resource(s), if any, a time window to monitor RA response(s), a time window to monitor response(s) on beam failure recovery request, and/or a contention resolution timer.

In an example, the Msg1 **1220** may be one or more transmissions of a random access preamble. For a contention based random access procedure, a UE may select a SS block with a RSRP above the RSRP threshold. If random access preambles group B exists, a UE may select one or more random access preambles from a group A or a group B depending on a potential Msg3 **1240** size. If a random access preambles group B does not exist, a UE may select the one or more random access preambles from a group A. A UE may select a random access preamble index randomly (e.g. with equal probability or a normal distribution) from one or more random access preambles associated with a selected group. If a base station semi-statistically configures a UE with an association between random access preambles and SS blocks, the UE may select a random access preamble index randomly with equal probability from one or more random access preambles associated with a selected SS block and a selected group.

For example, a UE may initiate a contention free random access procedure based on a beam failure indication from a lower layer. For example, a base station may semi-statistically configure a UE with one or more contention free PRACH resources for beam failure recovery request associated with at least one of SS blocks and/or CSI-RSs. If at least one of SS blocks with a RSRP above a first RSRP threshold amongst associated SS blocks or at least one of CSI-RSs with a RSRP above a second RSRP threshold amongst associated CSI-RSs is available, a UE may select a random access preamble index corresponding to a selected SS block or CSI-RS from a set of one or more random access preambles for beam failure recovery request.

For example, a UE may receive, from a base station, a random access preamble index via PDCCH or RRC for a contention free random access procedure. If a base station does not configure a UE with at least one contention free PRACH resource associated with SS blocks or CSI-RS, the UE may select a random access preamble index. If a base station configures a UE with one or more contention free PRACH resources associated with SS blocks and at least one SS block with a RSRP above a first RSRP threshold amongst associated SS blocks is available, the UE may select the at least one SS block and select a random access preamble corresponding to the at least one SS block. If a base station configures a UE with one or more contention free PRACH resources associated with CSI-RSs and at least one CSI-RS with a RSRP above a second RSPR threshold amongst the associated CSI-RSs is available, the UE may select the at least one CSI-RS and select a random access preamble corresponding to the at least one CSI-RS.

A UE may perform one or more Msg1 **1220** transmissions by transmitting the selected random access preamble. For example, if a UE selects an SS block and is configured with an association between one or more PRACH occasions and one or more SS blocks, the UE may determine an PRACH occasion from one or more PRACH occasions corresponding to a selected SS block. For example, if a UE selects a CSI-RS and is configured with an association between one or more PRACH occasions and one or more CSI-RSs, the UE may determine a PRACH occasion from one or more PRACH occasions corresponding to a selected CSI-RS. A UE may transmit, to a base station, a selected random access preamble via a selected PRACH occasions. A UE may determine a transmit power for a transmission of a selected random access preamble at least based on an initial preamble power and a power-ramping factor. A UE may determine a RA-RNTI associated with a selected PRACH occasions in which a selected random access preamble is transmitted. For example, a UE may not determine a RA-RNTI for a beam failure recovery request. A UE may determine an RA-RNTI at least based on an index of a first OFDM symbol and an index of a first slot of a selected PRACH occasions, and/or an uplink carrier index for a transmission of Msg1 **1220**.

In an example, a UE may receive, from a base station, a random access response, Msg 2 **1230**. A UE may start a time window (e.g., ra-ResponseWindow) to monitor a random access response. For beam failure recovery request, a base station may configure a UE with a different time window (e.g., bfr-Response Window) to monitor response on beam

failure recovery request. For example, a UE may start a time window (e.g., ra-Response Window or bfr-ResponseWindow) at a start of a first PDCCH occasion after a fixed duration of one or more symbols from an end of a preamble transmission. If a UE transmits multiple preambles, the UE may start a time window at a start of a first PDCCH occasion after a fixed duration of one or more symbols from an end of a first preamble transmission. A UE may monitor a PDCCH of a cell for at least one random access response identified by a RA-RNTI or for at least one response to beam failure recovery request identified by a C-RNTI while a timer for a time window is running.

In an example, a UE may consider a reception of random access response successful if at least one random access response comprises a random access preamble identifier corresponding to a random access preamble transmitted by the UE. A UE may consider the contention free random access procedure successfully completed if a reception of random access response is successful. If a contention free random access procedure is triggered for a beam failure recovery request, a UE may consider a contention free random access procedure successfully complete if a PDCCH transmission is addressed to a C-RNTI. In an example, if at least one random access response comprises a random access preamble identifier, a UE may consider the random access procedure successfully completed and may indicate a reception of an acknowledgement for a system information request to upper layers. If a UE has signaled multiple preamble transmissions, the UE may stop transmitting remaining preambles (if any) in response to a successful reception of a corresponding random access response.

In an example, a UE may perform one or more Msg 3 **1240** transmissions in response to a successful reception of random access response (e.g., for a contention based random access procedure). A UE may adjust an uplink transmission timing based on a timing advanced command indicated by a random access response and may transmit one or more transport blocks based on an uplink grant indicated by a random access response. Subcarrier spacing for PUSCH transmission for Msg3 **1240** may be provided by at least one higher layer (e.g. RRC) parameter. A UE may transmit a random access preamble via PRACH and Msg3 **1240** via PUSCH on a same cell. A base station may indicate an UL BWP for a PUSCH transmission of Msg3 **1240** via system information block. A UE may employ HARQ for a retransmission of Msg 3 **1240**.

In an example, multiple UEs may perform Msg 1 **1220** by transmitting a same preamble to a base station and receive, from the base station, a same random access response comprising an identity (e.g., TC-RNTI). Contention resolution **1250** may ensure that a UE does not incorrectly use an identity of another UE. For example, contention resolution **1250** may be based on C-RNTI on PDCCH or a UE contention resolution identity on DL-SCH. For example, if a base station assigns a C-RNTI to a UE, the UE may perform contention resolution **1250** based on a reception of a PDCCH transmission that is addressed to the C-RNTI. In response to detection of a C-RNTI on a PDCCH, a UE may consider contention resolution **1250** successful and may consider a random access procedure successfully completed. If a UE has no valid C-RNTI, a contention resolution may be addressed by employing a TC-RNTI. For example, if a MAC PDU is successfully decoded and a MAC PDU comprises a UE contention resolution identity MAC CE that matches the CCCH SDU transmitted in Msg3 **1250**, a UE may consider the contention resolution **1250** successful and may consider the random access procedure successfully completed.

FIG. **13** is an example structure for MAC entities as per an aspect of an embodiment. In an example, a wireless device may be configured to operate in a multi-connectivity mode. A wireless device in RRC_CONNECTED with multiple RX/TX may be configured to utilize radio resources provided by multiple schedulers located in a plurality of base stations. The plurality of base stations may be connected via a non-ideal or ideal backhaul over the Xn interface. In an example, a base station in a plurality of base stations may act as a master base station or as a secondary base station. A wireless device may be connected to one master base station and one or more secondary base stations. A wireless device may be configured with multiple MAC entities, e.g. one MAC entity for master base station, and one or more other MAC entities for secondary base station(s). In an example, a configured set of serving cells for a wireless device may comprise two subsets: an MCG comprising serving cells of a master base station, and one or more SCGs comprising serving cells of a secondary base station(s). FIG. **13** illustrates an example structure for MAC entities when MCG and SCG are configured for a wireless device.

In an example, at least one cell in a SCG may have a configured UL CC, wherein a cell of at least one cell may be called PSCell or PCell of SCG, or sometimes may be simply called PCell. A PSCell may be configured with PUCCH resources. In an example, when a SCG is configured, there may be at least one SCG bearer or one split bearer. In an example, upon detection of a physical layer problem or a random access problem on a PSCell, or upon reaching a number of RLC retransmissions associated with the SCG, or upon detection of an access problem on a PSCell during a SCG addition or a SCG change: an RRC connection re-establishment procedure may not be triggered, UL transmissions towards cells of an SCG may be stopped, a master base station may be informed by a UE of a SCG failure type and DL data transfer over a master base station may be maintained.

In an example, a MAC sublayer may provide services such as data transfer and radio resource allocation to upper layers (e.g. **1310** or **1320**). A MAC sublayer may comprise a plurality of MAC entities (e.g. **1350** and **1360**). A MAC sublayer may provide data transfer services on logical channels. To accommodate different kinds of data transfer services, multiple types of logical channels may be defined. A logical channel may support transfer of a particular type of information. A logical channel type may be defined by what type of information (e.g., control or data) is transferred. For example, BCCH, PCCH, CCCH and DCCH may be control channels and DTCH may be a traffic channel. In an example, a first MAC entity (e.g. **1310**) may provide services on PCCH, BCCH, CCCH, DCCH, DTCH and MAC control elements. In an example, a second MAC entity (e.g. **1320**) may provide services on BCCH, DCCH, DTCH and MAC control elements.

A MAC sublayer may expect from a physical layer (e.g. **1330** or **1340**) services such as data transfer services, signaling of HARQ feedback, signaling of scheduling request or measurements (e.g. CQI). In an example, in dual connectivity, two MAC entities may be configured for a wireless device: one for MCG and one for SCG. A MAC entity of wireless device may handle a plurality of transport channels. In an example, a first MAC entity may handle first transport channels comprising a PCCH of MCG, a first BCH of MCG, one or more first DL-SCHs of MCG, one or more

first UL-SCHs of MCG and one or more first RACHs of MCG. In an example, a second MAC entity may handle second transport channels comprising a second BCH of SCG, one or more second DL-SCHs of SCG, one or more second UL-SCHs of SCG and one or more second RACHs of SCG.

In an example, if a MAC entity is configured with one or more SCells, there may be multiple DL-SCHs and there may be multiple UL-SCHs as well as multiple RACHs per MAC entity. In an example, there may be one DL-SCH and UL-SCH on a SpCell. In an example, there may be one DL-SCH, zero or one UL-SCH and zero or one RACH for an SCell. A DL-SCH may support receptions using different numerologies and/or TTI duration within a MAC entity. A UL-SCH may also support transmissions using different numerologies and/or TTI duration within the MAC entity.

In an example, a MAC sublayer may support different functions and may control these functions with a control (e.g. **1355** or **1365**) element. Functions performed by a MAC entity may comprise mapping between logical channels and transport channels (e.g., in uplink or downlink), multiplexing (e.g. **1352** or **1362**) of MAC SDUs from one or different logical channels onto transport blocks (TB) to be delivered to the physical layer on transport channels (e.g., in uplink), demultiplexing (e.g. **1352** or **1362**) of MAC SDUs to one or different logical channels from transport blocks (TB) delivered from the physical layer on transport channels (e.g., in downlink), scheduling information reporting (e.g., in uplink), error correction through HARQ in uplink or downlink (e.g. **1363**), and logical channel prioritization in uplink (e.g. **1351** or **1361**). A MAC entity may handle a random access process (e.g. **1354** or **1364**).

FIG. **14** is an example diagram of a RAN architecture comprising one or more base stations. In an example, a protocol stack (e.g. RRC, SDAP, PDCP, RLC, MAC, and PHY) may be supported at a node. A base station (e.g. **120**A or **120**B) may comprise a base station central unit (CU) (e.g. gNB-CU **1420**A or **1420**B) and at least one base station distributed unit (DU) (e.g. gNB-DU **1430**A, **1430**B, **1430**C, or **1430**D) if a functional split is configured. Upper protocol layers of a base station may be located in a base station CU, and lower layers of the base station may be located in the base station DUs. An F1 interface (e.g. CU-DU interface) connecting a base station CU and base station DUs may be an ideal or non-ideal backhaul. F1-C may provide a control plane connection over an F1 interface, and F1-U may provide a user plane connection over the F1 interface. In an example, an Xn interface may be configured between base station CUs.

In an example, a base station CU may comprise an RRC function, an SDAP layer, and a PDCP layer, and base station DUs may comprise an RLC layer, a MAC layer, and a PHY layer. In an example, various functional split options between a base station CU and base station DUs may be possible by locating different combinations of upper protocol layers (RAN functions) in a base station CU and different combinations of lower protocol layers (RAN functions) in base station DUs. A functional split may support flexibility to move protocol layers between a base station CU and base station DUs depending on service requirements and/or network environments.

In an example, functional split options may be configured per base station, per base station CU, per base station DU, per UE, per bearer, per slice, or with other granularities. In per base station CU split, a base station CU may have a fixed split option, and base station DUs may be configured to match a split option of a base station CU. In per base station DU split, a base station DU may be configured with a different split option, and a base station CU may provide different split options for different base station DUs. In per UE split, a base station (base station CU and at least one base station DUs) may provide different split options for different wireless devices. In per bearer split, different split options may be utilized for different bearers. In per slice splice, different split options may be applied for different slices.

FIG. **15** is an example diagram showing RRC state transitions of a wireless device. In an example, a wireless device may be in at least one RRC state among an RRC connected state (e.g. RRC Connected **1530**, RRC_Connected), an RRC idle state (e.g. RRC Idle **1510**, RRC_Idle), and/or an RRC inactive state (e.g. RRC Inactive **1520**, RRC_Inactive). In an example, in an RRC connected state, a wireless device may have at least one RRC connection with at least one base station (e.g. gNB and/or eNB), which may have a UE context of the wireless device. A UE context (e.g. a wireless device context) may comprise at least one of an access stratum context, one or more radio link configuration parameters, bearer (e.g. data radio bearer (DRB), signaling radio bearer (SRB), logical channel, QoS flow, PDU session, and/or the like) configuration information, security information, PHY/MAC/RLC/PDCP/SDAP layer configuration information, and/or the like configuration information for a wireless device. In an example, in an RRC idle state, a wireless device may not have an RRC connection with a base station, and a UE context of a wireless device may not be stored in a base station. In an example, in an RRC inactive state, a wireless device may not have an RRC connection with a base station. A UE context of a wireless device may be stored in a base station, which may be called as an anchor base station (e.g. last serving base station).

In an example, a wireless device may transition a UE RRC state between an RRC idle state and an RRC connected state in both ways (e.g. connection release **1540** or connection establishment **1550**; or connection reestablishment) and/or between an RRC inactive state and an RRC connected state in both ways (e.g. connection inactivation **1570** or connection resume **1580**). In an example, a wireless device may transition its RRC state from an RRC inactive state to an RRC idle state (e.g. connection release **1560**).

In an example, an anchor base station may be a base station that may keep a UE context (a wireless device context) of a wireless device at least during a time period that a wireless device stays in a RAN notification area (RNA) of an anchor base station, and/or that a wireless device stays in an RRC inactive state. In an example, an anchor base station may be a base station that a wireless device in an RRC inactive state was lastly connected to in a latest RRC connected state or that a wireless device lastly performed an RNA update procedure in. In an example, an RNA may comprise one or more cells operated by one or more base stations. In an example, a base station may belong to one or more RNAs. In an example, a cell may belong to one or more RNAs.

In an example, a wireless device may transition a UE RRC state from an RRC connected state to an RRC inactive state in a base station. A wireless device may receive RNA information from the base station. RNA information may comprise at least one of an RNA identifier, one or more cell identifiers of one or more cells of an RNA, a base station identifier, an IP address of the base station, an AS context identifier of the wireless device, a resume identifier, and/or the like.

In an example, an anchor base station may broadcast a message (e.g. RAN paging message) to base stations of an RNA to reach to a wireless device in an RRC inactive state, and/or the base stations receiving the message from the anchor base station may broadcast and/or multicast another message (e.g. paging message) to wireless devices in their coverage area, cell coverage area, and/or beam coverage area associated with the RNA through an air interface.

In an example, when a wireless device in an RRC inactive state moves into a new RNA, the wireless device may perform an RNA update (RNAU) procedure, which may comprise a random access procedure by the wireless device and/or a UE context retrieve procedure. A UE context retrieve may comprise: receiving, by a base station from a wireless device, a random access preamble; and fetching, by a base station, a UE context of the wireless device from an old anchor base station. Fetching may comprise: sending a retrieve UE context request message comprising a resume identifier to the old anchor base station and receiving a retrieve UE context response message comprising the UE context of the wireless device from the old anchor base station.

In an example embodiment, a wireless device in an RRC inactive state may select a cell to camp on based on at least a on measurement results for one or more cells, a cell where a wireless device may monitor an RNA paging message and/or a core network paging message from a base station. In an example, a wireless device in an RRC inactive state may select a cell to perform a random access procedure to resume an RRC connection and/or to transmit one or more packets to a base station (e.g. to a network). In an example, if a cell selected belongs to a different RNA from an RNA for a wireless device in an RRC inactive state, the wireless device may initiate a random access procedure to perform an RNA update procedure. In an example, if a wireless device in an RRC inactive state has one or more packets, in a buffer, to transmit to a network, the wireless device may initiate a random access procedure to transmit one or more packets to a base station of a cell that the wireless device selects. A random access procedure may be performed with two messages (e.g. **2** stage random access) and/or four messages (e.g. **4** stage random access) between the wireless device and the base station.

In an example embodiment, a base station receiving one or more uplink packets from a wireless device in an RRC inactive state may fetch a UE context of a wireless device by transmitting a retrieve UE context request message for the wireless device to an anchor base station of the wireless device based on at least one of an AS context identifier, an RNA identifier, a base station identifier, a resume identifier, and/or a cell identifier received from the wireless device. In response to fetching a UE context, a base station may transmit a path switch request for a wireless device to a core network entity (e.g. AMF, MME, and/or the like). A core network entity may update a downlink tunnel endpoint identifier for one or more bearers established for the wireless device between a user plane core network entity (e.g. UPF, S-GW, and/or the like) and a RAN node (e.g. the base station), e.g. changing a downlink tunnel endpoint identifier from an address of the anchor base station to an address of the base station.

A gNB may communicate with a wireless device via a wireless network employing one or more new radio technologies. The one or more radio technologies may comprise at least one of: multiple technologies related to physical layer; multiple technologies related to medium access control layer; and/or multiple technologies related to radio resource control layer. Example embodiments of enhancing the one or more radio technologies may improve performance of a wireless network. Example embodiments may increase the system throughput, or data rate of transmission. Example embodiments may reduce battery consumption of a wireless device. Example embodiments may improve latency of data transmission between a gNB and a wireless device. Example embodiments may improve network coverage of a wireless network. Example embodiments may improve transmission efficiency of a wireless network.

The amount of data traffic carried over cellular networks is expected to increase for many years to come. The number of users/devices is increasing, and each user/device accesses an increasing number and variety of services, e.g. video delivery, large files, images. This requires not only high capacity in the network, but also provisioning very high data rates to meet customers' expectations on interactivity and responsiveness. More spectrum is therefore needed for cellular operators to meet the increasing demand Considering user expectations of high data rates along with seamless mobility, it is beneficial that more spectrum be made available for deploying macro cells as well as small cells for cellular systems.

Striving to meet the market demands, there has been increasing interest from operators in deploying some complementary access utilizing unlicensed spectrum to meet the traffic growth. This is exemplified by the large number of operator-deployed Wi-Fi networks and the 3GPP standardization of LTE/WLAN interworking solutions. This interest indicates that unlicensed spectrum, when present, can be an effective complement to licensed spectrum for cellular operators to help addressing the traffic explosion in some scenarios, such as hotspot areas. LAA offers an alternative for operators to make use of unlicensed spectrum while managing one radio network, thus offering new possibilities for optimizing the network's efficiency.

In an example embodiment, Listen-before-talk (clear channel assessment) may be implemented for transmission in an LAA cell. In a listen-before-talk (LBT) procedure, equipment may apply a clear channel assessment (CCA) check before using the channel. For example, the CCA utilizes at least energy detection to determine the presence or absence of other signals on a channel in order to determine if a channel is occupied or clear, respectively. For example, European and Japanese regulations mandate the usage of LBT in the unlicensed bands. Apart from regulatory requirements, carrier sensing via LBT may be one way for fair sharing of the unlicensed spectrum.

In an example embodiment, discontinuous transmission on an unlicensed carrier with limited maximum transmission duration may be enabled. Some of these functions may be supported by one or more signals to be transmitted from the beginning of a discontinuous LAA downlink transmission Channel reservation may be enabled by the transmission of signals, by an LAA node, after gaining channel access via a successful LBT operation, so that other nodes that receive the transmitted signal with energy above a certain threshold sense the channel to be occupied. Functions that may need to be supported by one or more signals for LAA operation with discontinuous downlink transmission may include one or more of the following: detection of the LAA downlink transmission (including cell identification) by UEs; time & frequency synchronization of UEs.

In an example embodiment, DL LAA design may employ subframe boundary alignment according to LTE-A carrier aggregation timing relationships across serving cells aggregated by CA. This may not imply that the eNB transmissions

can start only at the subframe boundary. LAA may support transmitting PDSCH when not all OFDM symbols are available for transmission in a subframe according to LBT. Delivery of necessary control information for the PDSCH may also be supported.

LBT procedure may be employed for fair and friendly coexistence of LAA with other operators and technologies operating in unlicensed spectrum. LBT procedures on a node attempting to transmit on a carrier in unlicensed spectrum require the node to perform a clear channel assessment to determine if the channel is free for use. An LBT procedure may involve at least energy detection to determine if the channel is being used. For example, regulatory requirements in some regions, e.g., in Europe, specify an energy detection threshold such that if a node receives energy greater than this threshold, the node assumes that the channel is not free. While nodes may follow such regulatory requirements, a node may optionally use a lower threshold for energy detection than that specified by regulatory requirements. In an example, LAA may employ a mechanism to adaptively change the energy detection threshold, e.g., LAA may employ a mechanism to adaptively lower the energy detection threshold from an upper bound. Adaptation mechanism may not preclude static or semi-static setting of the threshold. In an example Category 4 LBT mechanism or other type of LBT mechanisms may be implemented.

Various example LBT mechanisms may be implemented. In an example, for some signals, in some implementation scenarios, in some situations, and/or in some frequencies no LBT procedure may performed by the transmitting entity. In an example, Category 2 (e.g. LBT without random back-off) may be implemented. The duration of time that the channel is sensed to be idle before the transmitting entity transmits may be deterministic. In an example, Category 3 (e.g. LBT with random back-off with a contention window of fixed size) may be implemented. The LBT procedure may have the following procedure as one of its components. The transmitting entity may draw a random number N within a contention window. The size of the contention window may be specified by the minimum and maximum value of N. The size of the contention window may be fixed. The random number N may be employed in the LBT procedure to determine the duration of time that the channel is sensed to be idle before the transmitting entity transmits on the channel. In an example, Category 4 (e.g. LBT with random back-off with a contention window of variable size) may be implemented. The transmitting entity may draw a random number N within a contention window. The size of contention window may be specified by the minimum and maximum value of N. The transmitting entity may vary the size of the contention window when drawing the random number N. The random number N is used in the LBT procedure to determine the duration of time that the channel is sensed to be idle before the transmitting entity transmits on the channel.

LAA may employ uplink LBT at the UE. The UL LBT scheme may be different from the DL LBT scheme (e.g. by using different LBT mechanisms or parameters) for example, since the LAA UL is based on scheduled access which affects a UE's channel contention opportunities. Other considerations motivating a different UL LBT scheme include, but are not limited to, multiplexing of multiple UEs in a single subframe.

In an example, a DL transmission burst may be a continuous transmission from a DL transmitting node with no transmission immediately before or after from the same node on the same CC. An UL transmission burst from a UE perspective may be a continuous transmission from a UE with no transmission immediately before or after from the same UE on the same CC. In an example, UL transmission burst is defined from a UE perspective. In an example, an UL transmission burst may be defined from an eNB perspective. In an example, in case of an eNB operating DL+UL LAA over the same unlicensed carrier, DL transmission burst(s) and UL transmission burst(s) on LAA may be scheduled in a TDM manner over the same unlicensed carrier. For example, an instant in time may be part of a DL transmission burst or an UL transmission burst.

In an example, single and multiple DL to UL and UL to DL switching within a shared gNB COT may be supported. Example LBT requirements to support single or multiple switching points, may include: for gap of less than 16 us: no-LBT may be used; for gap of above 16 us but does not exceed 25 us: one-shot LBT may be used; for single switching point, for the gap from DL transmission to UL transmission exceeds 25 us: one-shot LBT may be used; for multiple switching points, for the gap from DL transmission to UL transmission exceeds 25 us, one-shot LBT may be used.

In an example, a signal that facilitates its detection with low complexity may be useful for UE power saving; Improved coexistence; Spatial reuse at least within the same operator network, Serving cell transmission burst acquisition, etc.

In an example, operation of new radio on unlicensed bands (NR-U) may employ a signal that contains at least SS/PBCH block burst set transmission. In an example, other channels and signals may be transmitted together as part of the signal. The design of this signal may consider there are no gaps within the time span the signal is transmitted at least within a beam. In an example, gaps may be needed for beam switching. In an example, the occupied channel bandwidth may be satisfied.

In an example, a block-interlaced based PUSCH may be employed. In an example, the same interlace structure for PUCCH and PUSCH may be used. In an example, interlaced based PRACH may be used.

In an example, initial active DL/UL BWP may be approximately 20 MHz for 5 GHz band. In an example, initial active DL/UL BWP may be approximately 20 MHz for 6 GHz band if similar channelization as 5 GHz band is used for 6 GHz band.

In an example, HARQ A/N for the corresponding data may be transmitted in the same shared COT. In some examples, the HARQ A/N may be transmitted in a separate COT from the one the corresponding data was transmitted.

In an example, when UL HARQ feedback is transmitted on unlicensed band, NR-U may consider mechanisms to support flexible triggering and multiplexing of HARQ feedback for one or more DL HARQ processes.

In an example, the dependencies of HARQ process information to the timing may be removed. In an example, UCI on PUSCH may carry HARQ process ID, NDI, RVID. In an example, Downlink Feedback Information (DFI) may be used for transmission of HARQ feedback for configured grant.

In an example, both CBRA and CFRA may be supported on NR-U SpCell and CFRA may be supported on NR-U SCells. In an example, RAR may be transmitted via SpCell. In an example, a predefined HARQ process ID for RAR.

In an example, carrier aggregation between licensed band NR (PCell) and NR-U (SCell) may be supported. In an example, NR-U SCell may have both DL and UL, or DL-only. In an example, dual connectivity between licensed

band LTE (PCell) and NR-U (PSCell) may be supported. In an example, Stand-alone NR-U where all carriers are in unlicensed spectrum may be supported. In an example, an NR cell with DL in unlicensed band and UL in licensed band may be supported. In an example, dual connectivity between licensed band NR (PCell) and NR-U (PSCell) may be supported.

In an example, if absence of Wi-Fi cannot be guaranteed (e.g. by regulation) in a band (e.g., sub-7 GHz) where NR-U is operating, the NR-U operating bandwidth may be an integer multiple of 20 MHz. In an example, at least for band where absence of Wi-Fi cannot be guaranteed (e.g. by regulation), LBT can be performed in units of 20 MHz. In an example, receiver assisted LBT (e.g., RTS/CTS type mechanism) and/or on-demand receiver assisted LBT (e.g., for example receiver assisted LBT enabled only when needed) may be employed. In an example, techniques to enhance spatial reuse may be used. In an example, preamble detection may be used.

In an example, with scheduled PUSCH transmissions on an unlicensed carrier, the network first needs to gain access to the channel to transmit PDCCH and then the UE needs to perform LBT again prior to transmitting on the resource. Such procedure tends to increase latency especially when the channel is loaded. In an example, a mechanism of autonomous uplink transmission may be used. In an example, a UE may be pre-allocated a resource for transmission similar to UL SPS and performs LBT prior to using the resource. In an example, autonomous uplink may be based on the Configured Grant functionality (e.g., Type 1 and/or Type 2).

In an example, the HARQ process identity may be transmitted by the UE (e.g., as UCI). This may enable a UE to use the first available transmission opportunity irrespective of the HARQ process. In an example, UCI on PUSCH may be used to carry HARQ process ID, NDI and RVID.

For unlicensed band, UL dynamic grant scheduled transmission may increase the delay and transmission failure possibility due to at least two LBTs of UE and gNB. Pre-configured grant such as configured grant in NR may be used for NR-U, which may decrease the number of LBTs performed and control signaling overhead.

In an example, in a Type 1 configured grant, an uplink grant is provided by RRC, and stored as configured uplink grant. In an example, in Type 2 configured grant, an uplink grant is provided by PDCCH, and stored or cleared as configured uplink grant based on L1 signaling indicating configured grant activation or deactivation.

In an example, there may not be a dependency between HARQ process information to the timing. In an example, UCI on PUSCH may carry HARQ process ID, NDI, RVID, etc. In an example, UE may autonomously select one HARQ process ID which is informed to gNB by UCI.

In an example, a UE may perform non-adaptive retransmission with the configured uplink grant. When dynamic grant for configured grant retransmission is blocked due to LBT, UE may try to transmit in the next available resource with configured grant.

In an example, Downlink Feedback Information (DFI) may be transmitted (e.g., using DCI) may include HARQ feedback for configured grant transmission. The UE may perform transmission/retransmission using configured grant according to DFI including HARQ feedback. In an example, wideband carrier with more than one channels is supported on NR-based unlicensed cell.

In an example, there may be one active BWP in a carrier. In an example, a BWP with multiple channels may be activated. In an example, when absence of Wi-Fi cannot be guaranteed (e.g. by regulation), LBT may be performed in units of 20 MHz. In this case, there may be multiple parallel LBT procedures for this BWP. The actual transmission bandwidth may be subject to sub-band with LBT success, which may result in dynamic bandwidth transmission within this active wideband BWP.

In an example, multiple active BWPs may be supported. To maximize the BWP utilization efficiency, the BWP bandwidth may be the same as the bandwidth of sub-band for LBT, e.g., LBT is carried out on each BWP. The network may activate/deactivate the BWPs based on data volume to be transmitted.

In an example, multiple non overlapped BWPs may be activated for a UE within a wide component carrier, which may be similar as carrier aggregation in LTE LAA. To maximize the BWP utilization efficiency, the BWP bandwidth may be the same as the bandwidth of sub-band for LBT, i.e. LBT is carrier out on each BWP. When more than one sub-band LBT success, it requires UE to have the capability to support multiple narrow RF or a wide RF which includes these multiple activated BWPs.

In an example, a single wideband BWP may be activated for a UE within a component carrier. The bandwidth of wideband BWP may be in the unit of sub-band for LBT. For example, if the sub-band for LBT is 20 MHz in 5 GHz band, the wideband BWP bandwidth may consist of multiple 20 MHz. The actual transmission bandwidth may be subject to sub-band with LBT success, which may result in dynamic bandwidth transmission within this active wideband BWP.

In an example, active BWP switching may be achieved by use of scheduling DCI. In an example, the network may indicate to the UE a new active BWP to use for an upcoming, and any subsequent, data transmission/reception. In an example, a UE may monitor multiple, configured BWPs to determine which has been acquired for DL transmissions by the gNB. For example, a UE may be configured with monitoring occasion periodicity and offset for each configured BWP. The UE may attempt to determine if a BWP has been acquired by the gNB during those monitoring occasions. In an example, upon successfully determining that the channel is acquired, the UE may continue with that BWP as its active BWP, at least until indicated otherwise or MCOT has been reached. In an example, when a UE has determined that a BWP is active, it may attempt blind detection of PDCCH in configured CORESETs and it might also perform measurements on aperiodic or SPS resources.

In an example, for UL transmissions, a UE may be configured with multiple UL resources, possibly in different BWPs. The UE may have multiple LBT configurations, each tied to a BWP and possibly a beam pair link. The UE may be granted UL resources tied to one or more LBT configurations. Similarly, the UE may be provided with multiple AUL/grant-free resources each requiring the use of different LBT configurations. Providing a UE with multiple AUL resources over multiple BWPs may ensure that if LBT fails using a first LBT configuration for one AUL resource in one BWP a UE can attempt transmission in another AUL resource in another BWP. This may reduce the channel access latency and make better use of the over-all unlicensed carrier.

The carrier aggregation with at least one SCell operating in the unlicensed spectrum may be referred to as Licensed-Assisted Access (LAA). In LAA, the configured set of serving cells for a UE may include at least one SCell

operating in the unlicensed spectrum according to a first frame structure (e.g., frame structure Type 3). The SCell may be called LAA SCell.

In an example, if the absence of IEEE802.11n/11ac devices sharing the carrier cannot be guaranteed on a long term basis (e.g., by level of regulation), and for if the maximum number of unlicensed channels that network may simultaneously transmit on is equal to or less than 4, the maximum frequency separation between any two carrier center frequencies on which LAA SCell transmissions are performed may be less than or equal to 62 MHz. In an example, the UE may be required to support frequency separation.

In an example, base station and UE may apply Listen-Before-Talk (LBT) before performing a transmission on LAA SCell. When LBT is applied, the transmitter may listen to/sense the channel to determine whether the channel is free or busy. If the channel is determined to be free/clear, the transmitter may perform the transmission; otherwise, it may not perform the transmission. In an example, if base station uses channel access signals of other technologies for the purpose of channel access, it may continue to meet the LAA maximum energy detection threshold requirement.

In an example, the combined time of transmissions compliant with the channel access procedure by a base station may not exceed 50 ms in any contiguous 1 second period on an LAA SCell.

In an example, which LBT type (e.g., type 1 or type 2 uplink channel access) the UE applies may be signaled via uplink grant for uplink PUSCH transmission on LAA SCells. In an example, for Autonomous Uplink (AUL) transmissions the LBT may not be signaled in the uplink grant.

In an example, for type 1 uplink channel access on AUL, base station may signal the Channel Access Priority Class for a logical channel and UE may select the highest Channel Access Priority Class (e.g., with a lower number in FIG. **16**) of the logical channel(s) with MAC SDU multiplexed into the MAC PDU. In an example, the MAC CEs except padding BSR may use the lowest Channel Access Priority Class.

In an example, for type 2 uplink channel access on AUL, the UE may select logical channels corresponding to any Channel Access Priority Class for UL transmission in the subframes signaled by base station in common downlink control signaling.

In an example, for uplink LAA operation, the base station may not schedule the UE more subframes than the minimum necessary to transmit the traffic corresponding to the selected Channel Access Priority Class or lower (e.g., with a lower number in FIG. **16**), than the channel Access Priority Class signaled in UL grant based on the latest BSR and received uplink traffic from the UE if type 1 uplink channel access procedure is signaled to the UE; and/or Channel Access Priority Class used by the base station based on the downlink traffic, the latest BSR and received UL traffic from the UE if type 2 uplink channel access procedure is signaled to the UE.

In an example, a first number (e.g., four) Channel Access Priority Classes may be used when performing uplink and downlink transmissions in LAA carriers. In an example in FIG. **16** shows which Channel Access Priority Class may be used by traffic belonging to the different standardized QCIs. A non-standardized QCI (e.g., Operator specific QCI) may use suitable Channel Access Priority Class based on the FIG. **16** for example, e.g., the Channel Access Priority Class used for a non-standardized QCI should be the Channel Access Priority Class of the standardized QCIs which best matches the traffic class of the non-standardized QCI.

In an example, for uplink, the base station may select the Channel Access Priority Class by considering the lowest priority QCI in a Logical Channel Group.

In an example, four Channel Access Priority Classes may be used. If a DL transmission burst with PDSCH is transmitted, for which channel access has been obtained using Channel Access Priority Class P (1 . . . 4), the base station may ensure the following where a DL transmission burst refers to the continuous transmission by base station after a successful LBT: the transmission duration of the DL transmission burst may not exceed the minimum duration needed to transmit all available buffered traffic corresponding to Channel Access Priority Class(es)≤P; the transmission duration of the DL transmission burst may not exceed the Maximum Channel Occupancy Time for Channel Access Priority Class P; and additional traffic corresponding to Channel Access Priority Class(s)>P may be included in the DL transmission burst once no more data corresponding to Channel Access Priority Class≤P is available for transmission. In such cases, base station may maximize occupancy of the remaining transmission resources in the DL transmission burst with this additional traffic.

In an example, when the PDCCH of an LAA SCell is configured, if cross-carrier scheduling applies to uplink transmission, it may be scheduled for downlink transmission via its PDCCH and for uplink transmission via the PDCCH of one other serving cell. In an example, when the PDCCH of an LAA SCell is configured, if self-scheduling applies to both uplink transmission and downlink transmission, it may be scheduled for uplink transmission and downlink transmission via its PDCCH.

In an example, Autonomous uplink may be supported on the SCells. In an example, one or more autonomous uplink configuration may be supported per SCell. In an example, multiple autonomous uplink configurations may be active simultaneously when there is more than one SCell.

In an example, when autonomous uplink is configured by RRC, the following information may be provided in an AUL configuration information element (e.g., AUL-Config): AUL C-RNTI; HARQ process IDs aul-harq-processes that may be configured for autonomous UL HARQ operation, the time period aul-retransmissionTimer before triggering a new transmission or a retransmission of the same HARQ process using autonomous uplink; the bitmap aul-subframes that indicates the subframes that are configured for autonomous UL HARQ operation.

In an example, when the autonomous uplink configuration is released by RRC, the corresponding configured grant may be cleared.

In an example, if AUL-Config is configured, the MAC entity may consider that a configured uplink grant occurs in those subframes for which aul-subframes is set to 1.

In an example, if AUL confirmation has been triggered and not cancelled, if the MAC entity has UL resources allocated for new transmission for this TTI, the MAC entity may instruct a Multiplexing and Assembly procedure to generate an AUL confirmation MAC Control Element; the MAC entity may cancel the triggered AUL confirmation.

In an example, the MAC entity may clear the configured uplink grant for the SCell in response first transmission of AUL confirmation MAC Control Element triggered by the AUL release for this SCell. In an example, retransmissions for uplink transmissions using autonomous uplink may continue after clearing the corresponding configured uplink grant.

In an example, a MAC entity may be configured with AUL-RNTI for AUL operation. In an example, an uplink grant may be received for a transmission time interval for a Serving Cell on the PDCCH for the MAC entity's AUL C-RNTI. In an example, if the NDI in the received HARQ information is 1, the MAC entity may consider the NDI for the corresponding HARQ process not to have been toggled. The MAC entity may deliver the uplink grant and the associated HARQ information to the HARQ entity for this transmission time interval. In an example, if the NDI in the received HARQ information is 0 and if PDCCH contents indicate AUL release, the MAC entity may trigger an AUL confirmation. If an uplink grant for this TTI has been configured, the MAC entity may consider the NDI bit for the corresponding HARQ process to have been toggled. The MAC entity may deliver the configured uplink grant and the associated HARQ information to the HARQ entity for this TTI. In an example, if the NDI in the received HARQ information is 0 and if PDCCH contents indicate AUL activation, the MAC entity may trigger an AUL confirmation.

In an example, if the aul-retransmissionTimer is not running and if there is no uplink grant previously delivered to the HARQ entity for the same HARQ process; or if the previous uplink grant delivered to the HARQ entity for the same HARQ process was not an uplink grant received for the MAC entity's C-RNTI; or if the HARQ_FEEDBACK is set to ACK for the corresponding HARQ process, the MAC entity may deliver the configured uplink grant, and the associated HARQ information to the HARQ entity for this TTI.

In an example, the NDI transmitted in the PDCCH for the MAC entity's AUL C-RNTI may be set to 0.

In an example, for configured uplink grants, if UL HARQ operation is autonomous, the HARQ Process ID associated with a TTI for transmission on a Serving Cell may be selected by the UE implementation from the HARQ process IDs that are configured for autonomous UL HARQ operation by upper layers for example, in aul-harq-processes.

In an example, for autonomous HARQ, a HARQ process may maintain a state variable e.g., HARQ_FEEDBACK, which may indicate the HARQ feedback for the MAC PDU currently in the buffer, and/or a timer aul-retransmissionTimer which may prohibit new transmission or retransmission for the same HARQ process when the timer is running.

In an example, when the HARQ feedback is received for a TB, the HARQ process may set HARQ_FEEDBACK to the received value; and may stop the aul-retransmissionTimer if running.

In an example, when PUSCH transmission is performed for a TB and if the uplink grant is a configured grant for the MAC entity's AUL C-RNTI, the HARQ process start the aul-retransmissionTimer.

In an example, if the HARQ entity requests a new transmission, the HARQ process may set HARQ_FEEDBACK to NACK if UL HARQ operation is autonomous asynchronous. if the uplink grant was addressed to the AUL C-RNTI, set CURRENT_IRV to 0.

In an example, if aperiodic CSI requested for a TTI, the MAC entity may not generate a MAC PDU for the HARQ entity in case the grant indicated to the HARQ entity is a configured uplink grant activated by the MAC entity's AUL C-RNTI.

In an example, if the UE detects on the scheduling cell for UL transmissions on an LAA SCell a transmission of DCI (e.g., Format 0A/4A) with the CRC scrambled by AUL C-RNTI carrying AUL-DFI, the UE may use the autonomous uplink feedback information according to the following procedures: for a HARQ process configured for autonomous uplink transmission, the corresponding HARQ-ACK feedback may be delivered to higher layers. For the HARQ processes not configured for autonomous uplink transmission, the corresponding HARQ-ACK feedback may not delivered to higher layers; for an uplink transmission in subframe/slot/TTI n, the UE may expect HARQ-ACK feedback in the AUL-DFI at earliest in subframe n+4; If the UE receives AUL-DFI in a subframe indicating ACK for a HARQ process, the UE may not be expected to receive AUL-DFI indicating ACK for the same HARQ process prior to 4 ms after the UE transmits another uplink transmission associated with that HARQ process;

In an example, a UE may validate an autonomous uplink assignment PDCCH/EPDCCH if all the following conditions are met: the CRC parity bits obtained for the PDCCH/EPDCCH payload are scrambled with the AUL C-RNTI; and the 'Flag for AUL differentiation' indicates activating/releasing AUL transmission. In an example, one or more fields in an activation DCI may be pre-configured values for validation.

In an example, a base station may configure consecutive configured grant resources in time. There may be no gaps between the consecutive configured grant resources. In an example, the base station may configure non-consecutive configured grant resources. In an example, the non-consecutive configured grant resources may have a periodicity. In an example, the non-consecutive configured grant resources may be non-periodic. In an example, a first pattern of configured grant resources may be repeated in time wherein the resources of the first configured resources are non-periodic.

In an example, a wireless device may select an HARQ process ID from an RRC configured set of HARQ IDs for transmission of packet via a configured grant resource on an unlicensed cell.

In an example, a downlink control information may comprise downlink feedback information (DFI), wherein the DFI includes pending HARQ ACK feedback for prior configured grant transmissions from the same UE. In an example, DFI may include HARQ feedback for dynamically scheduled UL transmissions using HARQ IDs configured for NR-unlicensed configured grant transmission.

In an example, a packet/transport block corresponding to a HARQ process that was initially transmitted via a configured grant resource may be retransmitted via a configured grant resource. In an example, a packet/transport block corresponding to a HARQ process that was initially transmitted via a configured grant resource may be retransmitted via resources dynamically scheduled by an UL grant. In an example, a wireless device may autonomously initiate retransmission for a HARQ process that was initially transmitted via configured grant mechanism for NR-unlicensed when a NACK is received (e.g., via DFI) for the corresponding HARQ process. In an example, a wireless device may autonomously initiate retransmission for a HARQ process that was initially transmitted via configured grant mechanism for NR-unlicensed when no feedback is received gNB before a timer is expired.

In an example, UE multiplexing and collision avoidance mechanisms between configured grant transmissions and between configured grant and scheduled grant transmissions may be used.

In an implementation, NR-unlicensed configured grant transmission may not be allowed during the time when it overlaps with occasions configured for potential NR-U DRS of the serving cell.

In an example, an RRC configured bitmap may be used to the allowed time resource for configured grant transmission on subframe/slot/symbol level. For example, in FeLAA, an RRC configured bitmap of 40 bits may be used. Such a mechanism may provide flexibility to assign or exclude certain subframes/slots/symbols for configured UL.

In an example, RRC signaling may indicate (e.g., for Type 1 configured grants) the time domain resource allocation e.g., periodicity, offset in the frame, start symbol and length of PUSCH and K-repetition of the configured grant resource. In an example for Type 2 configured grant, RRC may indicate periodicity and K-repetition in time domain. The other time domain related parameters may be given through DCI activation scrambled with a corresponding RNTI for configured grants (e.g., CS-RNTI). In an example, some enhancements may be used in different application scenario such as URLLC. For example, the granularity of time domain allocation may be based on slot instead of OFDM symbol. In an example, the K-repetition may be reinterpreted as number of configured resources within a period. In an example, UE may start configured grant transmission from any configured resource boundary and occupy any number of the configured resource.

In an example, resource allocation in NR-U may be based on frequency interlaces. In an example, to comply with the regulatory requirements in the unlicensed spectrum such as the minimum OCB and maximum PSD requirements, the resource configuration may include the frequency interlace (s) to be used within the configured frequency resources.

In an example, a wireless device may be configured with a wideband carrier and/or a wideband UL BWP that spans multiple sub-bands. In an example a sub-band may be a 20 MHz unlicensed channel. In order to increase the resiliency to LBT failure, a wireless device may be configured with a frequency-domain resource, e.g., one or more frequency interlaces, across multiple sub-bands. In an example, a wireless device may perform multiple sub-band LBT procedures. Based on the results of the sub-band LBT procedures, the wireless device may transmit on one or more sub-bands for which the LBT procedure(s) are successful. In an example, the wireless device may select the number of sub-bands to use based on the traffic type or the TB size.

In an example, for the uplink transmission with configured grant in NR-U, configuration of frequency-domain resources may include one or more frequency interlaces. In an example, frequency-domain resources may be configured across multiple sub-bands of a wideband UL BWP configured to the UE for transmission with configured grant in NR-U.

In an example, a wireless device operating in unlicensed bands may be transmitting uplink packets from different traffic classes (e.g., QCIs) with different latency and/or bit rate requirements for which a single resource configuration, e.g., periodicity and TBS, may not be adequate. In an example, a wireless device may be configured with multiple active UL configured grants in a BWP of a cell. A wireless device may be configured with multiple resource configurations per UE for the uplink transmission with configured grant to satisfy the diverse QoS requirements anticipated in NR-U.

In an example, to improve the resource utilization with pre-configured resources one or more wireless devices may be configured with same time-domain resources, and either orthogonal or same frequency interlaces on the same unlicensed channel. In an example, the transmission starting points of the one or more wireless devices may be aligned to avoid mutual blocking during the LBT. In an example, if a collision occurs, the receiving base station may identify the UEs using other pre-configured resources, such as DMRS, and resolve the collision in the spatial or code domains.

Due to the uncertainty of the unlicensed channel availability in NR-U, a UE with data ready to transmit may not gain access to the pre-configured resources as a result of LBT failure. The missing of the pre-configured transmission opportunity may lead to underutilized resources and/or excessive latencies. In an example, the wireless device that missed a pre-configured periodic transmission opportunity may defer its channel access for the remaining time span of the configured period until the following transmission opportunity.

In an example, a wireless device may be configured with multiple transmission occasions over the pre-configured time-domain resource within a CG period. In an example, before the beginning of the pre-configured period, the wireless device may perform the LBT procedure towards accessing the first transmission occasion/burst starting position. If the LBT is successful, the UE may start transmitting one or more PUSCHs up to the end of the CG resource within the pre-configured period. In an example, if the LBT fails, the UE may not defer the channel access for the remaining period. The wireless device may resume its channel access attempt by performing LBT towards accessing the second transmission occasion, and so on.

In an example, a base station may dynamically allow a group of wireless devices to transmit on additional resources in accordance with a configured grant (for example except for periodicity and time offset) by sending a DL common alignment signal such as a DCI. In an example, the DCI may be scrambled by a group ID.

In an example, transmission start time of multiple UEs configured with the same time-domain resources and either same or orthogonal frequency interlaces on a given unlicensed channel may be aligned. In an example, base station may align uplink transmission with configured grant using an Alignment Signal (e.g., a group common DCI).

In an example, a retransmission may be scheduled with an uplink grant for a HARQ process that was initially transmitted with configured grant.

In an example, UCI multiplexed with data and transmitted via PUSCH may carry HARQ process ID, NDI, RVID and other information related to the transmitted data. UCI multiplexed with data and carrying information related to data may need to be encoded and decoded separately before the data to enable the soft combining of the packet at the base station.

In an example, the HARQ process ID may be determined based on the frequency interlace and/or the DMRS cyclic shift (such that initial and retransmission of a UE TB may be identified).

In an example, the base station may provide pending HARQ feedback for one or more PUSCH transmitted with configured grant within previous UL bursts using a GC-DCI scrambled with a group RNTI.

In an example, a base station may perform a CAT4 LBT and acquire an MCOT. The base station may transmit a DL Alignment signal to trigger a transmission from one or more UEs based on the configured grant. The UEs with data to transmit may share the base station acquired MCOT and either access the channel immediately, if the PUSCH transmission can start after gap that is less than 16 μsec or using

CAT2 LBT otherwise. In such case, the UEs transmitting in response to the DL Alignment signal limit their COT by the gNB-acquired MCOT.

In an example, the base station may provide HARQ feedback for one or more PUSCH transmitted with CG within the UE-acquired MCOT in either a GC-DCI or frequency multiplexed UE-specific DCIs. The base station may share one or more UE-acquired MCOT(s) and access the channel with CAT2 LBT.

In an example, a wireless device may update its configured-grant transmission parameters such as MCS, RI and PMI, and indicate the changes to the base station within the uplink burst. In an example, a pre-configured pool of pilot signals may indicate the change, e.g., DMRS and cyclic shifts. In an example, UCI multiplexed with PUSCH may indicate the UE updated transmission parameters.

In an example, the base station may update the configured grant transmission parameters, e.g., based on received signal quality such as SINR or BLER, and indicate the new parameters in a DCI. In an example, the base station may use a GC-DCI. In an example, a UE-specific DCI may be used.

In an example, multiple candidate transmission occasions within a period may be configured. In an example, the candidate transmission occasions within a period can be configured by network or derived by UE according to the configuration. In an example, for NR-U UL configured grant, a wireless device may determine multiple candidate transmission occasions within a period. In an example, the multiple transmission occasions may be based on the first candidate transmission occasion, duration of PUSCH and period P.

In an example, a wireless device may perform multiple LBTs when it is configured with a BWP with frequency bandwidth larger than 20 MHz for UL configured grant transmission. In an example, if a sub-band is sensed to be busy, UE may not transmit an UL signal in the active BWP on the unlicensed spectrum. In an example, UE may transmit the UL signal unless all the sub-bands of the frequency bandwidth are sensed to be idle.

In an example, a wireless device may have multiple frequency resource allocations per BWP. In an example, a UE may be configured with multiple configured grant resource configurations in a BWP by RRC. Multiple configured grant configurations may be activated and different configured grant configurations may have different combinations of sub-bands. In an example, a configuration may be indexed, and the index may be carried by the activation/deactivation DCI to indicate the target configuration. In an example, for NR-U UL configured grant, multiple resource configurations may be supported per BWP. Different resource configurations may correspond to different sub-band combinations.

In an example, for a HARQ process that was initially transmitted via configured grant resource, retransmission may be via a configured grant resource or resource scheduled by UL grant.

In an example, NR-U UCI for configured grant may be mapped to the REs after the symbols carrying DMRS in PUSCH on the allocated sub-bands. In an example, UCI may be mapped from the symbol of the PUSCH before which the channel is sensed to be idle.

In an example, for NR-U UL configured grant, UCI may be mapped on the resource of the actual transmission occasion. In an example, NR-U UCI for configured grant is mapped to the REs after the symbols carrying DMRS in the transmitted PUSCH.

In an example, multiple UEs in NR unlicensed spectrum may be configured with configured grant resources with aligned starting timing in time domain. The UEs may perform LBT simultaneously when there are packets in their buffers before the transmission occasion of configured grant resource. In an example, each UE may sense the channel is idle and may start PUSCH transmission. This would lead to collision of UL transmissions among multiple UEs.

In an example, DMRS may be used for UE identification since DMRS configuration(s)/parameter(s) are UE-specifically configured. In an example, when collision happens, base station may identify colliding UEs via DMRS detection. If multiple UEs transmit UL data simultaneously using the same starting position in time domain, base station may identify the UEs transmitting UL data via DMRS detection. In an example, base station may schedule retransmission or feedback NACK for the corresponding UE.

For NR grant-free uplink (GUL) transmission in unlicensed band, due to the uncertainty of channel availability, a UE may be configured/scheduled with multiple transmission opportunities in time/frequency domain.

In an example in time domain, a UE can be configured with multiple consecutive transmission occasions within a periodic window for GUL transmission. The UE may perform multiple LBT attempts until it succeeds. To enable more LBT attempts at a finer channel access granularity for the UE, the UE may be configured with mini-slot level time domain resources for the periodic window. The consecutive time domain resources for the periodic window may be configured through either a bitmap or a tuple of parameters including start position, temporal length, and periodicity. In an example, a bitmap may be used to indicate slots/symbols/subframes that are configured with configured grant within a time duration. The bitmap may indicate a pattern and the pattern may be repeated for consecutive time durations.

In an example in NR-U, a UE with capability of sub-band LBT may be configured to operate multiple 20 MHz unlicensed channels. The base station may configure a set of candidate resources distributed across the multiple unlicensed channels for GUL transmission. The UE may perform sub-band LBTs for each unlicensed channel. The UE may select the available candidate resource(s) to transmit the data. These candidate resources may be shared with multiple UEs by managing the transmission starting positions to avoid the inefficient resource utilization. In an example, the base station may blindly detect the actual transmission(s) on the configured multiple candidate resources. In an example, a UE may be configured with multiple candidate resources across multiple unlicensed channels for grant-free UL transmission, and the UE may transmit data on one or more candidate resources based on sub-band LBT results.

In an example, for NR-U configured grant, downlink signals and/or channels such as PDCCH/PDSCH may be shared in a UE-initiated COT.

In an example, configured grant UCI (CG-UCI) on GUL transmission may carry HARQ process ID, NDI, RVID, etc. and may remove the timing dependency of HARQ process. In an example, a UE may select the HARQ process ID from an RRC configured set of HARQ process IDs. In an example, if the configured resource(s) for GUL transmission is shared with multiple UEs, the CG-UCI may comprise the UE ID.

In an example, to support UE-initiated COT sharing for PDCCH and/or PDSCH transmission, the CG-UCI may carry COT sharing information. In an example, besides HARQ related information, CG-UCI may include at least

UE ID, COT-sharing related information, CSI report for DL transmission in a same UE-initiated COT, etc.

In an example, Downlink Feedback Information (DFI) may be transmitted via a downlink control information (DCI) and may include HARQ feedback for configured grant transmission. In an example, time domain resource allocation for the configured grant transmissions may provide flexibility.

In an example, a base station may configure a UE with a periodicity and repetition times by RRC. In an example, repetition times may be considered as pre-configured transmission occasions within the periodicity. The UE may transmit PUSCH after a successful LBT before any of the candidate transmission opportunities scheduled by the configured grant, and gNB can perform blind detection on uplink data according to the configuration.

In an example, in order to increase UL transmission opportunities, multiple frequency domain opportunities may be considered for NR-U. Multiple BWPs may be configured to UE. In an example, when data is available for transmission, the UE may attempt to perform LBT in multiple BWPs according to the resource configuration for configured grant. If any LBT on these BWPs succeeds, the UE may transmit on either multiple BWPs or a selected one.

In an example, transmission at the configured grants may be code block group (CBG) based. In an example, the HARQ feedback information in DFI or UCI may be considered CBG based. For example, DFI may provide CBG level HARQ feedback (e.g., ACK/NACK information per CBG of a TB). For example, UCI may indicate the CBGs of the TB that are transmitted via a configured grant resource. The UE may select the configured grant UL CBG and the transmitted CBGs information may be carried in the UCI. Or the DFI may provide CBG level feedback indication while UE can retransmit the failed CBGs based on the DFI indication.

In an example, UE initiated MCOT sharing between configured grant UL and DL may be used in NR-U. In an example, a UE performing grant-free transmission indicates in the grant-free UCI at least the following information: HARQ process ID, UE-ID, NDI, PUSCH duration and COT sharing information. In an example, the grant-free UCI is scrambled with a cell-specific RNTI. In an example, COT acquired by a UE may be shared for configured grant transmission.

In an example, DFI may carry HARQ feedback for configured grant transmission. HARQ-ACK information corresponding to HARQ processes at least configured for CGU (configured grant for NR-U) may be included also in CGU-DFI.

In an example, a UE may transmit the UCI corresponding to a PUSCH transmission via a configured grant resource via the PUSCH and the UCI may comprise at least HARQ process ID, NDI, RVID, etc. In an example, the mapping position of UCI may be from the second symbol to the second last symbol to minimize the effect of multiple starting/ending symbol positions of PUSCH. If the PUSCH for configured grant has multiple starting/ending positions, UCI mapping may avoid puncturing due to the LBT failure. In an example, the position of DM-RS for the PUSCH may be considered in the UCI mapping. In an example, the UCI can be mapped close to DM-RS symbol to guarantee its reliability. In an example, UCI mapping on PUSCH may consider multiple starting/ending positions and the position of DM-RS for PUSCH and multiplexing with NR-UCI (e.g., HARQ-ACK, CSI part 1, and CSI part 2).

In an example, the time-domain resource allocation for configured grant may be given by the combination of offset value from SFN=0 and symbol-level periodicity. To increase flexibility for time-domain resource allocation, the time-domain resource may be allocated using a bitmap for a fixed period time. In an example, various numerologies for bitmap based time domain resource allocation may be considered. For example, the bitmap with fixed size may be interpreted as a scalable manner with respect to numerology (e.g., one slot allocation for each bit in case of 15 kHz SCS and two slot allocation for each bit in case of 30 kHz SCS), or different bitmap size can be configured for each SCS (e.g., 40-bit bitmap for 15 kHz SCS and 80-bit bitmap for 30 kHz SCS).

In an example, a wireless device or base station may employ CBG based transmission. A UE may provide HARQ-ACK feedback for each CBG and base station may retransmit the NACKed CBGs rather than the whole TB. The CBG-based transmission may be useful for large TB scenario and especially when some CBGs are punctured by URLLC or time-selective interference.

In an example, CBG-based transmission may be realized by CBGTI (CBG transmission indication) in scheduling DCI, for a retransmission of a TB, the bit value '0' means that the corresponding CBG is not transmitted/not to be transmitted and '1' indicates that it is transmitted/to be transmitted for DL/UL.

In an example in NR-U, CBG based transmission may be used for PDSCH/PUSCH.

In an example, CBG-based transmission may be used for PUSCH transmission via configured grant resources. In an example, some symbols may not be transmitted due to LBT failure (e.g., puncturing) if multiple starting positions for CGU PUSCH are allowed in NR-U. In an example, the UE may retransmit CBG(s) only belonging to the not-transmitted symbols. In order to support efficient CBG based transmission for CGU, we may need to consider how to configure control information (e.g., DFI, UCI). For example, CBGTI bits in the UCI may be included for UE to inform the base station which CBGs are/were transmitted. In an example, CBG-level HARQ feedback via DFI may be adopted for UE to retransmit the NACKed CBGs based on the DFI. In an example, if CBG-level HARQ-ACK feedback by DFI is adopted, it is necessary to devise the way to reduce the signaling overhead (e.g., CBG-level HARQ-ACK for a limited number of HARQ process IDs or TB-level HARQ-ACK for granted UL transmission).

In an example, a base station may indicate which slots configured grant UL transmission are allowed using a bitmap, comprising a plurality of bits, via RRC signaling

In an example, to improve the efficiency of configured grant transmission in NR-U, one potential enhancement is defining a periodic transmission window instead of only one periodic transmission occasion.

In an example, configured grant UL transmission may be allowed within the gNB acquired COT. In an example, the collisions between configured grant UL transmission and scheduled transmission may be managed by the transmission starting positions. In an example, UE-selected starting offset and RRC configured starting offset may be used to coordinate UE multiplexing for NR-U configured grant operation.

In an example, a timer may be used for autonomous configured grant retransmission for NR-U. The timer may be RRC configured with e.g. a slot granularity.

In an example, CBG operation for configured grant may overcome bursty interference. With CBG based operation, the retransmission efficiency may be increased. In an

example, a UE may start configured grant UL transmission after successful LBT. Some symbols or partial symbol may be discarded based on when the UE finishes the LBT. In case the gNB received the rest of the CBGs correctly, the UE may need to retransmit CBG(s) belonging to the not-transmitted symbols instead of the full TB.

In an example, a HARQ process corresponding to a configured grant may not have a dependency to the timing of the configured grant. In an example, UCI on PUSCH may carry HARQ process ID, NDI, RVID, etc. In an example, downlink feedback information (DFI) may be transmitted via downlink control signaling. The DFI may comprise HARQ feedback for configured grant transmission. In an example, time domain resource allocation of configured grant transmissions may have flexibility. In an example, a retransmission may be based on a configured grant resource.

In an example, Type 1 and Type 2 configured grant mechanism may be used for operation of NR in unlicensed spectrum.

In an example, consecutive configured grant resources in time without any gaps in between the resources may be configured. In an example, non-consecutive configured grant resources (periodic or non-periodic) with gaps in between the resources may be configured.

In an example, a wireless device may select a HARQ process ID from an RRC configured set of HARQ IDs for NR-unlicensed configured grant transmission.

In an example, DFI may include pending HARQ ACK feedback for prior configured grant transmissions from the same wireless device. In an example, DFI may include HARQ ACK feedback for scheduled UL transmissions using HARQ IDs configured for NR-unlicensed configured grant transmission.

In an example, a HARQ process may be initially transmitted via configured grant resource. The retransmission of the HARQ process may be via a configured grant resource. In an example, a HARQ process that was initially transmitted via configured grant resource may be retransmitted via resource scheduled by UL grant.

In an example, a wireless device may autonomously initiate retransmission for a HARQ process that was initially transmitted via configured grant mechanism for NR-unlicensed, for example when one or more of the following conditions is met: reception of NACK feedback via DFI for the corresponding HARQ process, no reception of feedback from gNB upon a timer expiration, etc.

In an example, NR-unlicensed configured grant transmission may not be allowed during the time when it overlaps with occasions configured for potential NR-U DRS of the serving cell irrespective of the configured time domain resource for configured grant transmission.

In an example, to provide flexibility on time domain resource allocation of configured grants, a bitmap-based approach and configured parameters comprising, for example, periodicity, offset in the frame, start symbol, length of PUSCH and K-repetition signaling, etc. may be used.

In an example, CBG based retransmissions for configured grant based transmissions may be used. CBG related control information may be transmitted as part of DFI and UCI

In an example, collision between configured grant and scheduled grant based transmission may be avoided by management of starting point of the transmission for configured grant and scheduled grant based transmission.

In an example, the resources utilized by the UCI, and multiplexing of UCI and data information of PUSCH require consideration of DMRS placement and starting and ending symbols of the configured grant based transmissions.

In an example, UCI corresponding to a configured grant transmission may comprise UE-ID, COT sharing information, PUSCH duration, etc.

In an example, it may be problematic for the UE to assume ACK in absence of reception of feedback, which may include explicit feedback or feedback in the form of uplink grants. In an example, assuming NACK upon a timer expiration may be a candidate solution to avoid LBT impact on reception of feedback.

In an example, sharing resources with gNB within COT(s) that is acquired by UE(s) as part of configured grant based transmissions may be supported. In an example, allowing configured grant based transmissions within a gNB acquired COT may be supported

In an example, a wireless device may be configured with a codeBlockGroupTransmission parameter. The parameter indicates whether a PUSCH-CodeBlockGroupTransmisison IE is configured or not. The PUSCH-CodeBlockGroup-Transmisison IE comprises a maxCodeBlockGroupsPer-TransportBlock parameter indicating a maximum number of code block groups (CBGs) per TB

In an example, a DCI (e.g., DCI format 0_1) may comprise a CBG transmission information (CBGTI) field. A size of the CBGTI field may be based on the maxCodeBlock-GroupsPerTransportBlock parameter. The CBGTI field may be a bitmap comprising a plurality of bits. A value of a bit in the plurality of bits may indicate whether a CBG of the TB is scheduled.

In an example, a wireless device may use a procedure for grouping of code blocks to code block groups. In an example, if a UE is configured to receive code block group (CBG) based transmissions by receiving the higher layer parameter codeBlockGroupTransmission in PUSCH-ServingCellConfig, the UE may determine the number of CBGs for a PUSCH transmission as M=min(N, C), where N is the maximum number of CBGs per transport block as configured by maxCodeBlockGroupsPerTransportBlock in PUSCH-ServingCellConfig, and C is the number of code blocks in the PUSCH. Defining M_1=mod (C, M),

$$K_1 = \left\lceil \frac{C}{M} \right\rceil, \text{ and } K_2 = \left\lfloor \frac{C}{M} \right\rfloor.$$

If $M_1 \geq 0$, CBG m, m=0, 1, . . . , M_1-1, may consist of code blocks with indices $m \cdot K_1+k$, k=0, 1, . . . , K_1-1. CBG m, m=M_1, M_1+1, . . . , M−1, may consist of code blocks with indices $M_1 \cdot K_1+(m-M_1) \cdot K_2+k$, k=0, 1, . . . , K_2-1.

In an example, a UE may be configured to transmit code block group based transmissions by receiving the higher layer parameter codeBlockGroupTransmission in PUSCH-ServingCellConfig. For an initial transmission of a TB as indicated by the New Data Indicator field of the scheduling DCI, the UE may expect that the CBGTI field indicates all the CBGs of the TB are to be transmitted, and the UE may include all the code block groups of the TB. For a retransmission of a TB as indicated by the New Data Indicator field of the scheduling DCI, the UE may include only the CBGs indicated by the CBGTI field of the scheduling DCI. A bit value of 0' in the CBGTI field may indicate that the corresponding CBG is not to be transmitted and 1' may indicate that it is to be transmitted. The order of CBGTI field bits may be such that the CBGs are mapped in order from CBG #0 onwards starting from the MSB.

In an example, HARQ process IDs may be configured for configured grant operation. In case tm1 is configured, a

number of configured HARQ processes may equal to field value. In case tm2 is configured, the number of configured HARQ processes may equal to double of the field value. The largest value of the HARQ process ID may be equal to the number of configured HARQ processes.

In an example, for configured uplink grants, if UL HARQ operation is autonomous, the HARQ Process ID associated with a TTI for transmission on a Serving Cell may be selected by the UE implementation from the HARQ process IDs that are configured for configured grant UL HARQ operation by upper layers.

In an example, CBG based transmission may been introduced in NR. A UE may provide individual ACK/NACK for a CBG. The gNB may retransmit the failed CBGs instead of the entire TB. In an example, the UL grant may indicate the CB G bitmap for retransmission. The CBG based transmission may be useful when some CBGs suffer from bursty interference.

In an example, an initial transmission from UE may be based on TB level and gNB may always use grant-based retransmission where the grant indicates the failed CBGs for retransmission. In this case, the DFI may provide TB level feedback. In an example, DFI may provide CBG level feedback indication, if a limited number of HARQ processes are configured to the UE, while UE may retransmit the failed CBGs based on the DFI indication.

In an example, if a base station schedules an UL transmission for an incorrectly decoded configured grant transmission, the base station may indicate a CBG based retransmission in the DCI. In an example, if a number of configured HARQ processes for configured grants is small enough to fit CBG based ACK/NACK feedback in the DCI, the UE may perform CBG level retransmission, else the gNB provides only TB level feedback and the UE retransmits the entire TB. In an example, if the wireless device did not receive DFI, then the wireless device may attempt a TB based retransmission once again.

In an example, a UE may provide HARQ-ACK feedback for a CBG and the base station may retransmit the NACKed CBGs. In an example, a scheduling DCI may comprise a CBGTI (CBG transmission indication) for a retransmission of a TB. The bit value '0' may indicate that a corresponding CBG is not transmitted/not to be transmitted and '1' may indicate that the corresponding CBG is transmitted/to be transmitted for DL/UL.

In an example, Downlink Feedback Information (DFI) including HARQ-ACK feedback for configured grant PUSCH data may be transmitted to UE after demodulation of PUSCH data. If the HARQ-ACK feedback of one HARQ process is NACK, the base station may schedule a grant-based retransmission for the same HARQ process, or the base station may indicate the NACK information to UE so that UE may start the retransmission for the same HARQ process via a configured grant resource.

In an example and as shown in FIG. **18**, channel access procedure for transmission of a first PUSCH may be based on a first Type channel access. The first Type channel access may be based on sensing the channel for a first number of durations (e.g., CCA slots). The first duration may have a first fixed value. The first number may be based on a random number drawn from an interval based on the priority class. In an example, channel access procedure for transmission of a second PUSCH may be based on a second Type channel access. The second Type channel access procedure may be based on sensing the channel based on a second fixed duration.

In an example, the UE may use the first Type channel access procedure for transmitting SRS transmissions not including a PUSCH transmission. In an example, UL channel access priority class p=1 may be used for SRS transmissions not including a PUSCH.

In an example, if the UE is scheduled to transmit PUSCH and SRS in subframe/slot/mini-slot/TTI n, and if the UE cannot access the channel for PUSCH transmission in subframe/slot/mini-slot/TTI n, the UE may attempt to make SRS transmission in subframe/slot/mini-slot/TTI n according to uplink channel access procedures specified for SRS transmission.

In an example, channel access priority classes and its associated parameters are shown in FIG. **17**. In an example, for p=3, 4, $T_{ulm\ cot,\ p}$ may be 10 ms if a higher layer parameter (e.g., absenceOfAnyOtherTechnology) indicates TRUE, otherwise, $T_{ulm\ cot,p}$ may be 6 ms.

In an example, when $T_{ulm\ cot,p}$ is Ems it may be increased to 8 ms by inserting one or more gaps. The minimum duration of a gap may be 100 μs. The maximum duration before including any such gap may be 6 ms.

In an example, if a first field (e.g., an UL duration and offset field) configures an UL offset l and an UL duration d for subframe/slot/mini-slot/TTI n, the scheduled UE may use the second Type channel access for transmissions in subframes/slots/mini-slots/TTIs n+l+i where i=0, 1, . . . d−1, irrespective of the channel access Type signaled in the UL grant for those subframes/slots/mini-slots/TTIs, if the end of UE transmission occurs in or before subframe/slot/mini-slot/TTI n+l+d−1.

In an example, if one or more first fields (e.g., an UL duration and offset field) configure an UL offset l and an UL duration d for subframe/slot/mini-slot/TTI n and one or more second fields (e.g., COT sharing indication for AUL field) are set to true, a UE configured with autonomous UL may use the second Type channel access for autonomous UL transmissions corresponding to any priority class in subframes/slots/mini-slots/TTIs n+l+i where i=0, 1, . . . d−1, if the end of UE autonomous UL transmission occurs in or before subframe/slot/mini-slot/TTI n+l+d−1 and the autonomous UL transmission between n+l and n+l+d−1 may be contiguous.

In an example, if one or more first fields (e.g., an UL duration and offset field) configures an UL offset l and an UL duration d for subframe/slot/mini-slot/TTI n and one or more second fields (e.g., a COT sharing indication for AUL field) is set to false, a UE configured with autonomous UL may not transmit autonomous UL in subframes/slots/mini-slots/TTIs n+l+i where i=0, 1, . . . d−1.

In an example, if the UE scheduled to transmit transmissions including PUSCH in a set subframes/slots/mini-slots/TTIs n_0, n_1, . . . , n_{w-1} using one or more PDCCH DCI Formats and if the UE cannot access the channel for a transmission in subframe/slot/mini-slot/TTI n_k, the UE may attempt to make a transmission in subframe/slot/mini-slot/TTI n_{k+1} according to a channel access type indicated in the DCI, where $k \in \{0, 1, \ldots w-2\}$, and w is the number of scheduled subframes/slots/mini-slots/TTIs indicated in the DCI.

In an example, if the UE is scheduled to transmit transmissions without gaps including PUSCH in a set of subframes/slots/mini-slots/TTIs n_0, n_1, . . . , n_{w-1} using one or more PDCCH DCI Formats and the UE performs a transmission in subframe/slot/mini-slot/TTI n_k after accessing the carrier according to one of first Type or second Type UL

channel access procedures, the UE may continue transmission in subframes/slots/mini-slots/TTIs after n_k where $k \in \{0, 1, \ldots w-1\}$.

In an example, if the beginning of UE transmission in subframe/slot/mini-slot/TTI n+1 immediately follows the end of UE transmission in subframe/slot/mini-slot/TTI n, the UE may not be expected to be indicated with different channel access types for the transmissions in those subframes/slots/mini-slots/TTIs.

In an example, if a UE is scheduled to transmit transmissions including a first mode PUSCH in a set subframes/slots/mini-slots/TTIs $n_0, n_1, \ldots, n_{w-1}$ using one or more PDCCH DCI Formats and a first Type channel access procedure, and if the UE cannot access the channel for a transmission in subframe/slot/mini-slot/TTI n_k according to the PUSCH starting position indicated in the DCI, the UE may attempt to make a transmission in subframe/slot/mini-slot/TTI n_k with an offset o_i of OFDM symbol and according to the channel access type indicated in the DCI, where $k \in \{0, 1, \ldots w-1\}$ and $i \in \{0, 7\}$, for i=0 the attempt is made at the PUSCH starting position indicated in the DCI, and w is the number of scheduled subframes/slots/mini-slots/TTIs indicated in the DCI. In an example, there may be no limit on the number of attempts the UE should make for the transmission.

In an example, if the UE is scheduled to transmit transmissions including a first mode PUSCH in a set subframes/slots/mini-slots/TTI $sn_0, n_1, \ldots, n_{w-1}$ using one or more PDCCH DCIs and a second Type channel access procedure, and if the UE cannot access the channel for a transmission in subframe/slot/mini-slot/TTI n_k according to the PUSCH starting position indicated in the DCI, the UE may attempt to make a transmission in subframe/slot/mini-slot/TTI n_k with an offset o_i of OFDM symbol and according to the channel access type indicated in the DCI, where $k \in \{0, 1, \ldots w-1\}$ and $i \in \{0, 7\}$, for i=0 the attempt is made at the PUSCH starting position indicated in the DCI, and w is the number of scheduled subframes/slots/mini-slots/TTIs indicated in the DCI. In an example, the number of attempts the UE may make for the transmission may be limited to w+1, where w is the number of scheduled subframes/slots/mini-slots/TTIs indicated in the DCI.

In an example, if a UE is scheduled to transmit without gaps in subframes/slots/mini-slots/TTIs $n_0, n_1, \ldots, n_{w-1}$ using one or more PDCCH DCI Formats, and if the UE has stopped transmitting during or before subframe/slot/mini-slot/TTI n_{k1}, $k_1 \in \{0, 1, \ldots w-2\}$, and if the channel is sensed by the UE to be continuously idle after the UE has stopped transmitting, the UE may transmit in a later subframe/slot/mini-slot/TTI n_{k2}, $k2 \in \{1, \ldots w-1\}$ using a second Type channel access procedure. If the channel sensed by the UE is not continuously idle after the UE has stopped transmitting, the UE may transmit in a later subframe/slot/mini-slot/TTI n_{k2}, $k_2 \in \{1, \ldots w-1\}$ using a first Type channel access procedure with the UL channel access priority class indicated in the DCI corresponding to subframe/slot/mini-slot/TTI n_{k2}.

In an example, if the UE receives an UL grant and the DCI indicates a PUSCH transmission starting in subframe/slot/mini-slot/TTI n using s first Type channel access procedure, and if the UE has an ongoing first Type channel access procedure before subframe/slot/mini-slot/TTI n: if a UL channel access priority class value p_1 used for the ongoing first Type channel access procedure is same or larger than the UL channel access priority class value p_2 indicated in the DCI, the UE may transmit the PUSCH transmission in response to the UL grant by accessing the carrier by using the ongoing first Type channel access procedure.

In an example, if the UE receives an UL grant and the DCI indicates a PUSCH transmission starting in subframe/slot/mini-slot/TTI n using s first Type channel access procedure, and if the UE has an ongoing first Type channel access procedure before subframe/slot/mini-slot/TTI n: if the UL channel access priority class value p_1 used for the ongoing first Type channel access procedure is smaller than the UL channel access priority class valuep_2 indicated in the DCI, the UE may terminate the ongoing channel access procedure.

In an example, if the UE is scheduled to transmit on a set of carriers C in subframe/slot/mini-slot/TTI n, and if the UL grants scheduling PUSCH transmissions on the set of carriers C indicate a first Type channel access procedure, and if the same PUSCH starting position is indicated for all carriers in the set of carriers C, or if the UE intends to perform an autonomous uplink transmission on the set of carriers C in subframe/slot/mini-slot/TTI n with first Type channel access procedure, and if the same N_{start}^{FS3} is used for all carriers in the set of carriers C: the UE may transmit on carrier $c_i \in C$ using a second Type channel access procedure, if the second Type channel access procedure is performed on carrier c_i immediately before the UE transmission on carrier $c_j \in C$, $i \neq j$, and if the UE has accessed carrier c_j using first Type channel access procedure, where carrier c_j is selected by the UE uniformly randomly from the set of carriers C before performing the first Type channel access procedure on any carrier in the set of carriers C.

In an example, if the UE is scheduled to transmit on carrier c_i by a UL grant received on carrier c_j, $i \neq j$, and if the UE is transmitting using autonomous UL on carrier c_i, the UE may terminate the ongoing PUSCH transmissions using the autonomous UL at least one subframe/slot/mini-slot/TTI before the UL transmission according to the received UL grant.

In an example, if the UE is scheduled by a UL grant received on a carrier to transmit a PUSCH transmission(s) starting from subframe/slot/mini-slot/TTI n on the same carrier using first Type channel access procedure and if at least for the first scheduled subframe/slot/mini-slot/TTI occupies N_{RB}^{UL} resource blocks and the indicated 'PUSCH starting position is OFDM symbol zero, and if the UE starts autonomous UL transmissions before subframe/slot/mini-slot/TTI n using first Type channel access procedure on the same carrier, the UE may transmit UL transmission(s) according to the received UL grant from subframe/slot/mini-slot/TTI n without a gap, if the priority class value of the performed channel access procedure is larger than or equal to priority class value indicated in the UL grant, and the autonomous UL transmission in the subframe/slot/mini-slot/TTI preceding subframe/slot/mini-slot/TTI n may end at the last OFDM symbol of the subframe/slot/mini-slot/TTI regardless of the higher layer parameter AulEndingPosition. The sum of the lengths of the autonomous UL transmission(s) and the scheduled UL transmission(s) may not exceed the maximum channel occupancy time corresponding to the priority class value used to perform the autonomous uplink channel access procedure. Otherwise, the UE may terminate the ongoing autonomous UL transmission at least one subframe/slot/mini-slot/TTI before the start of the UL transmission according to the received UL grant on the same carrier.

In an example, a base station may indicate a second Type channel access procedure in the DCI of an UL grant scheduling transmission(s) including PUSCH on a carrier in subframe/slot/mini-slot/TTI n when the base station has

transmitted on the carrier according to a channel access procedure, or when a base station may indicate using the 'UL duration and offset' field that the UE may perform a second Type channel access procedure for transmissions(s) including PUSCH on a carrier in subframe/slot/mini-slot/TTI n when the base station has transmitted on the carrier according to a channel access procedure, or when a base station may indicate using the 'UL duration and offset' field and 'COT sharing indication for AUL' field that a UE configured with autonomous UL may perform a second Type channel access procedure for autonomous UL transmissions(s) including PUSCH on a carrier in subframe/slot/mini-slot/TTI n when the base station has transmitted on the carrier according to a channel access procedure and acquired the channel using the largest priority class value and the base station transmission includes PDSCH, or when or when a base station may schedule transmissions including PUSCH on a carrier in subframe/slot/mini-slot/TTI n, that follows a transmission by the base station on that carrier with a duration of T_{short_ul}=25 us, if subframe/slot/mini-slot/TTI n occurs within the time interval starting at t_0 and ending at t_0+T_{CO}, where $T_{CO}=T_{m\ cot,p}+T_g$, where t_0 may be the time instant when the base station has started transmission, $T_{m\ cot,p}$ value may be determined by the base station, T_g may be total duration of all gaps of duration greater than 25 us that occur between the DL transmission of the base station and UL transmissions scheduled by the base station, and between any two UL transmissions scheduled by the base station starting from t_0.

In an example, the base station may schedule UL transmissions between t_0 and t_0+T_{CO} in contiguous subframes/slots/mini-slots/TTIs if they can be scheduled contiguously.

In an example, for an UL transmission on a carrier that follows a transmission by the base station on that carrier within a duration of T_{short_ul}=25 us, the UE may use a second Type channel access procedure for the UL transmission.

In an example, if the base station indicates second Type channel access procedure for the UE in the DCI, the base station may indicate the channel access priority class used to obtain access to the channel in the DCI.

In an example, the UE may transmit the transmission using first Type channel access procedure after first sensing the channel to be idle during the slot durations of a defer duration T_d; and after the counter Nis zero in step 4. In an example, the counter N may be adjusted by sensing the channel for additional slot duration(s) according to a procedure.

In an example, if the UE has not transmitted a transmission including PUSCH or SRS on a carrier on which unlicensed Scell(s) transmission(s) are performed, the UE may transmit a transmission including PUSCH or SRS on the carrier, if the channel is sensed to be idle at least in a slot duration T_{sl} when the UE is ready to transmit the transmission including PUSCH or SRS, and if the channel has been sensed to be idle during all the slot durations of a defer duration T_d immediately before the transmission including PUSCH or SRS. If the channel has not been sensed to be idle in a slot duration T_{sl} when the UE first senses the channel after it is ready to transmit, or if the channel has not been sensed to be idle during any of the slot durations of a defer duration T_d immediately before the intended transmission including PUSCH or SRS, the UE may proceeds to step 1 after sensing the channel to be idle during the slot durations of a defer duration T_d.

In an example, the defer duration T_d may consist of duration T_f=16 us immediately followed by m_p consecutive slot durations where each slot duration is T_{sl}=9 us, and T_f may include an idle slot duration T_{sl} at start of T_f.

In an example, a slot duration T_{sl} may be considered to be idle if the UE senses the channel during the slot duration, and the power detected by the UE for at least 4 us within the slot duration is less than energy detection threshold X_{Thresh}. Otherwise, the slot duration T_{sl} may be considered to be busy.

In an example, $CW_{min,p} \leq CW_p \leq CW_{max,p}$ may be the contention window. In an example, $CW_{min,p}$ and $CW_{max,p}$ may be chosen before the channel access procedure. In an example, m_p, $CW_{min,p}$, and $CW_{max,p}$ may be based on channel access priority class signaled to the UE, as shown in FIG. **17**.

In an example, if the UL UE uses second Type channel access procedure for a transmission including PUSCH, the UE may transmit the transmission including PUSCH immediately after sensing the channel to be idle for at least a sensing interval T_{short_ul}=25 us. In an example, T_{short_ul} may consists of a duration T_f=16 us immediately followed by one slot duration T_{sl}=9 us and T_f may include an idle slot duration T_{sl} at start of T_f. The channel may be considered to be idle for T_{short_ul} if it is sensed to be idle during the slot durations of T_{short_ul}.

In an example, if the UE transmits transmissions using a first Type channel access procedure that are associated with channel access priority class p on a carrier, the UE may maintain the contention window value CW_p and may adjust CW_p for those transmissions before the channel access procedure.

In an example, if the UE receives an UL grant or an AUL-DFI, the contention window size for the priority classes may be adjusted as following:

if the NDI value for at least one HARQ process associated with HARQ_ID_ref is toggled, or if the HARQ-ACK value(s) for at least one of the HARQ processes associated with HARQ_ID_ref received in the earliest AUL-DFI after n_{ref}+3 indicates ACK: for every priority classp$\in\{1, 2, 3, 4\}$ set $CW_p=CW_{min,p}$. Otherwise, CW_p may be increased for every priority class p$\in\{1, 2, 3, 4\}$ to the next higher allowed value.

In an example, if there exist one or more previous transmissions $\{T_0, \ldots, T_n\}$ using the first Type channel access procedure, from the start subframe(s)/slot(s)/mini-slot(s)/TTI(s) of the previous transmission(s) of which, N or more subframes/slots/mini-slots/TTIs have elapsed and neither UL grant nor AUL-DFI was received, where N=max (Contention Window Size adjustment timer X, T_i burst length+1) if X>0 and N=0 otherwise, for each transmission T_i, CW_p is adjusted as following:

increase CW_p for every priority class p$\in\{1, 2, 3, 4\}$ to the next higher allowed value; The CW_p is adjusted once. Otherwise if the UE transmits transmissions using first Type channel access procedure before N subframes/slots/mini-slots/TTIs have elapsed from the start of previous UL transmission burst using first Type channel access procedure and neither UL grant nor AUL-DFI is received, the CW_p is unchanged.

In an example, if the UE receives an UL grant or an AUL-DFI indicates feedback for one or more previous transmissions $\{T_0, \ldots, T_n\}$ using first Type channel access procedure, from the start subframe(s)/slot(s)/mini-slot(s)/TTI(s) of the previous transmission(s) of which, N or more subframes/slots/mini-slots/TTIs have elapsed and neither UL grant nor AUL-DFI was received, where N=max (Contention Window Size adjustment timer X, T_i burst length+1) if X>0 and N=0 otherwise, the UE may recompute CW_p as follows: the UE reverts CW_p to the value used to transmit at

n_{T0} using first Type channel access procedure; the UE updates CW_p sequentially in the order of the transmission $\{T_0, \ldots, T_n\}$. If the NDI value for at least one HARQ process associated with HARQ_ID_ref is toggled, or if the HARQ-ACK value(s) for at least one of the HARQ processes associated with HARQ_ID_ref received in the earliest AUL-DFI after $n_{Ti}+3$ indicates ACK. For every priority classp$\in\{1, 2, 3, 4\}$ set $CW_p=C_{min,p}$. Otherwise, increase CW_p for every priority class p$\in\{1, 2, 3, 4\}$ to the next higher allowed value.

If the UE transmits transmissions using first Type channel access procedure before N subframes/slots/mini-slots/TTIs have elapsed from the start of previous UL transmission burst using first Type channel access procedure and neither UL grant nor AUL-DFI is received, the CW_p may be unchanged.

In an example, the HARQ_ID_ref may be the HARQ process ID of UL-SCH in reference subframe/slot/mini-slot/TTI n_{ref}. The reference subframe/slot/mini-slot/TTI n_{ref} may be determined as follows: If the UE receives an UL grant or an AUL-DFI in subframe/slot/mini-slot/TTI n_g, subframe/slot/mini-slot/TTI n_w may be the most recent subframe/slot/mini-slot/TTI before subframe/slot/mini-slot/TTI n_g-3 in which the UE has transmitted UL-SCH using first Type channel access procedure. In an example, if the UE transmits transmissions including UL-SCH without gaps starting with subframe/slot/mini-slot/TTI n_0 and in subframes/slots/mini-slots/TTIs $n_0, n_1, \ldots, n_w$ and the UL-SCH in subframe/slot/mini-slot/TTI n_0 is not PUSCH Mode 1 that starts in the second slot of the subframe/slot/mini-slot/TTI, reference subframe/slot/mini-slot/TTI n_{ref} may be subframe/slot/mini-slot/TTI n_0. In an example, if the UE transmits transmissions including a first PUSCH Mode without gaps starting with second slot of subframe/slot/mini-slot/TTI n_0 and in subframe/slot/mini-slot/TTI $n_0, n_1, \ldots, n_w$ and the, reference subframe/slot/mini-slot/TTI n_{ref} is subframe/slot/mini-slot/TTI n_0 and n_1, otherwise, reference subframe/slot/mini-slot/TTI n_{ref} may be subframe/slot/mini-slot/TTI n_w.

In an example, HARQ_ID_ref may be the HARQ process ID of UL-SCH in reference subframe/slot/mini-slot/TTI n_{Ti}. The reference subframe/slot/mini-slot/TTI n_{Ti} may be determined as the start subframe/slot/mini-slot/TTI of a transmission T_i using a first Type channel access procedure and of which, N subframes/slots/mini-slots/TTIs have elapsed and neither UL grant nor AUL-DFI was received.

In an example, if the AUL-DFI with a first DCI format is indicated to a UE that is activated with AUL transmission and a second transmission mode is configured for the UE for grant-based uplink transmissions, the spatial HARQ-ACK bundling may be performed by logical OR operation across multiple codewords for the HARQ process not configured for autonomous UL transmission.

In an example, if CW_p changes during an ongoing channel access procedure, the UE may draw a counter N_{init} and applies it to the ongoing channel access procedure.

In an example, the UE may keep the value of CW_p unchanged for every priority classp$\in\{1, 2, 3, 4\}$, if the UE scheduled to transmit transmissions without gaps including PUSCH in a set of subframes/slots/mini-slots/TTIs $n_0, n_1, \ldots, n_{w-1}$ using a first Type channel access procedure, and if the UE is not able to transmit any transmission including PUSCH in the set of subframes/slots/mini-slots/TTIs.

In an example, the UE may keep the value of CW_p for every priority classp$\in\{1, 2, 3, 4\}$ the same as that for the last scheduled transmission including PUSCH using first Type channel access procedure, if the reference subframe/slot/mini-slot/TTI for the last scheduled transmission is also n_{ref}.

In an example, if $CW_p=CW_{max,p}$, the next higher allowed value for adjusting CW_p is $CW_{max,p}$.

In an example, if the $CW_p=CW_{max,p}$ is consecutively used K times for generation of N_{init}, CW_p may be reset to $CW_{min,p}$ for that priority class p for which $CW_p=CW_{max,p}$ is consecutively used K times for generation of N_{init}. In an example, K may be selected by UE from the set of values $\{1, 2, \ldots, 8\}$ fora priority class p$\in\{1, 2, 3, 4\}$.

In an example, a UE accessing a carrier on which LAA Scell(s) transmission(s) are performed, may set the energy detection threshold (X_{Thresh}) to be less than or equal to the maximum energy detection threshold X_{Thresh_max}.

In an example, if the UE is configured with higher layer parameter maxEnergyDetectionThreshold, X_{Thresh_max} may be set equal to the value signaled by the higher layer parameter. Otherwise, the UE may determine X'_{Thresh_max} according to a first procedure for determining energy detection threshold. In an example, if the UE is configured with higher layer parameter energyDetectionThresholdOffset, X_{Thresh_max} may be set by adjusting X'_{Thresh_max} according to the offset value signaled by the higher layer parameter. Otherwise, the UE may set $X_{Thresh_max}=X'_{Thresh_max}$.

In an example, the first procedure for determining the energy detection threshold may be as follows: if the higher layer parameter absenceOfAnyOtherTechnology indicates TRUE,

$$X'_{Thresh_max} = \min\left\{ \begin{matrix} T_{max} \\ X_r \end{matrix} \right\}$$

where X_r is Maximum energy detection threshold defined by regulatory requirements in dBm when such requirements are defined, otherwise $X_r=T_{max}$. Otherwise,

$$X' \max\left\{ \begin{matrix} -72 + 10\cdot\log10(BWMHz/20\ \text{MHz}) \rightleftarrows \text{dBm}, \\ \min\left\{ \begin{matrix} T_{max}, \\ TA(P_H + \\ 10\cdot\log10(BWMHz/20\ \text{MHz}) \rightleftarrows -P_{TX})_{max} \end{matrix} \right\} \end{matrix} \right\}_{Thresh_max},$$

where T_A=10 dB, P_H=23 dBm; P_{TX} may be the set to the value of PCMAX_H,c; T dBm log 1 $(3.16228\cdot10^{-8}$ (mW/MHz)·BWMHz (MHz))$_{max}$; BWMHz may be the single carrier bandwidth in MHz.

In an example, an LBT operation may follow a back-off algorithm based on CWS (contention window size) management. In an example, CWS update for DL/UL may be based on the decoding results of TB(s) in reference subframe(s). In an example, separate HARQ operation may be possible for different code blocks (CBs) for a same TB. In an example, CWS management may be based on CBG operation.

In an example, CWS update for DL/UL may be based on the decoding results of TB(s) in reference subframe(s) and the minimum(/maximum) timing gap between a reference subframe and the corresponding CWS update timing may be defined. In an example, base station scheduler may adapt timing relationship between PDSCH and UL HARQ feedback, between PUSCH transmission and retransmission, and so on. In an example, UEs may report different capabilities on those timing relationships. In an example, flexible DL/UL scheduling timing and the related UE capabilities may impact CWS management.

In an example, UCI multiplexing in PUSCH may be performed. In an example, UCI multiplexing in PUSCH may

be performed when UCI and PUSCH transmissions coincide in time. In an example, UCI multiplexing in PUSCH may be due to transmission of a UL-SCH transport block or due to triggering of A-CSI transmission without UL-SCH transport block. In an example, UCI (e.g. UCI carrying HARQ-ACK feedback with small payload, e.g., 1 or 2 bits) may be multiplexed by puncturing PUSCH. In an example, UCI may be multiplexed by rate matching PUSCH. In an example for puncturing, a TB may be mapped to radio resources and one or more resources elements may be punctured for transmission of the UCI. In an example, for rate matching, the UCI and data may be jointly coded and mapped to the radio resources.

In an example, autonomous uplink (AUL) may be supported on one or more SCells. In an example, one autonomous uplink configuration may be supported per SCell. In an example, multiple autonomous uplink configurations may be activated and be active simultaneously when there is more than one SCell. In an example, autonomous uplink and uplink semi-persistent Scheduling/configured grants may not be active simultaneously on the same SCell.

In an example, a wireless device may be configured by RRC with an IE (e.g., AUL-Config) configuring AUL parameters. The AUL configuration parameters may comprise an AUL C-RNTI, HARQ process IDs aul-HARQ-Processes that may be configured for autonomous UL HARQ operation, a time period aul-RetransmissionTimer before triggering a new transmission or a retransmission of the same HARQ process using autonomous uplink; the bitmap aul-Subframes that indicates the subframes that are configured for autonomous UL HARQ operation.

In an example, when the autonomous uplink configuration is released by RRC, the corresponding configured grant may be cleared. In an example, if AUL-Config is configured, the MAC entity may consider that a configured uplink grant occurs in those subframes for which aul-Subframes is set to 1.

In an example, if AUL confirmation has been triggered and not cancelled, if the MAC entity has UL resources allocated for new transmission for a TTI, the MAC entity may instruct the Multiplexing and Assembly procedure to generate an AUL confirmation MAC Control Element. The wireless device may cancel the triggered AUL confirmation.

In an example, the MAC entity may clear the configured uplink grant for the SCell after first transmission of AUL confirmation MAC Control Element triggered by the AUL release for this SCell. In an example, retransmissions for uplink transmissions using autonomous uplink may continue after clearing the corresponding configured uplink grant.

In an example, a base station may allocate a semi-persistent uplink resource or autonomous uplink resource for the first HARQ transmissions and potentially retransmissions to UEs. In an example, RRC may define the periodicity of the semi-persistent uplink grant or the bitmap of the autonomous uplink grant.

In an example, an IE (e.g., ConfiguredGrantConfig) may be used to configure uplink transmission without dynamic grant according to a plurality of possible schemes. In an example, an uplink grant may be configured via RRC (e.g., type1) or provided via the PDCCH (e.g., addressed to CS-RNTI) (e.g., type2).

In an example, a configuration parameter antennaPort may indicate the antenna port(s) to be used for a configuration. In an example, a configuration parameter cg-DMRS-Configuration indicates the DMRS configuration. In an example, a configuration parameter configuredGrantTimer indicates an initial value of a configured grant timer. In an example, a configuration parameter dmrs-SeqInitialization may be configured if transformPrecoder is disabled. Otherwise the field is absent. In an example, a configuration parameter frequencyDomainAllocation may indicate frequency domain resource allocation. In an example, an intraSlot value of a configuration parameter frequencyHopping enables 'Intra-slot frequency hopping' and a value interSlot enables 'Inter-slot frequency hopping'. If the field is absent, frequency hopping is not configured. In an example, a configuration parameter frequencyHoppingOffset enables intra-slot frequency hopping with the given frequency hopping offset. Frequency hopping offset may be used when frequency hopping is enabled.

In an example, a configuration parameter mcs-Table may indicate the MCS table the UE may use for PUSCH with transform precoding. If the field is absent the UE may apply the value 64QAM. In an example, a configuration parameter mcs-TableTransformPrecoder indicates the MCS table the UE may use for PUSCH with transform precoding. If the field is absent the UE applies the value 64QAM. In an example, the configuration parameter mcsAndTBS may indicate a modulation order, target code rate and TB size. In an example, a configuration parameter p0-PUSCH-Alpha indicates index of the PO-PUSCH-AlphaSet to be used for this configuration. In an example, a configuration parameter Periodicity may indicate a periodicity for UL transmission without UL grant. In an example, a configuration parameter powerControlLoopToUse indicates closed control loop to apply. In an example, a configuration parameter rbg-Size indicates selection between configuration 1 and configuration 2 for RBG size for PUSCH. The UE does not apply this field if resourceAllocation is set to resourceAllocationType1. Otherwise, the UE applies the value config1 when the field is absent. In an example, rbg-Size is used when the transformPrecoder parameter is disabled. In an example, a configuration parameter repK-RV may indicate the redundancy version (RV) sequence to use. The network may configure this field if repetitions are used, i.e., if repK is set to n2, n4 or n8. Otherwise, the field is absent.

In an example, a configuration parameter repK indicates the number of repetitions of K. In an example, a configuration parameter resourceAllocation indicates configuration of resource allocation type 0 and resource allocation type 1. For Type 1 UL data transmission without grant, "resourceAllocation" may be resourceAllocationType0 or resourceAllocationType1. In an example, a configuration parameter rrc-ConfiguredUplinkGrant may indicate configuration for "configured grant" transmission with fully RRC-configured UL grant (Type1). If this field is absent the UE uses UL grant configured by DCI addressed to CS-RNTI (Type2). Type 1 configured grant may be configured for UL or SUL, but not for both simultaneously.

In an example, a configuration parameter srs-ResourceIndicator indicates the SRS resource to be used. In an example, a configuration parameter timeDomainAllocation indicates a combination of start symbol and length and PUSCH mapping type. In an example, timeDomainOffset indicates offset related to SFN=0. In an example, transformPrecoder enables or disables transform precoding for type1 and type2. If the field is absent, the UE enables or disables transform precoding in accordance with the field msg3-transformPrecoder in RACH-ConfigCommon. In an example, uci-OnPUSCH indicates selection between and configuration of dynamic and semi-static beta-offset. For Type 1 UL data transmission without grant, uci-OnPUSCH should be set to semiStatic.

In an example, a serving Cell may be configured with one or a plurality of BWPs. In an example, the BWP switching for a Serving Cell may be used to activate an inactive BWP and deactivate an active BWP at a time. The BWP switching may be controlled by a PDCCH indicating a downlink assignment or an uplink grant, by the bwp-InactivityTimer, by RRC signalling, or by the MAC entity upon initiation of Random Access procedure. In an example, upon RRC (re-)configuration of firstActiveDownlinkBWP-Id and/or firstActiveUplinkBWP-Id for SpCell or activation of an SCell, the DL BWP and/or UL BWP indicated by firstActiveDownlinkBWP-Id and/or firstActiveUplinkBWP-Id respectively may be active without receiving PDCCH indicating a downlink assignment or an uplink grant. The active BWP for a serving cell may be indicated by either RRC or PDCCH. In an example, for unpaired spectrum, a DL BWP may be paired with an UL BWP, and BWP switching may be common for both UL and DL.

In an example, for an activated serving cell configured with a BWP, if a BWP is activated, the MAC entity may transmit on UL-SCH on the BWP; the MAC entity may transmit on RACH on the BWP, if PRACH occasions are configured; the MAC entity may monitor the PDCCH on the BWP; the MAC entity may transmit PUCCH on the BWP, if configured; the MAC entity may report CSI for the BWP; the MAC entity may transmit SRS on the BWP, if configured; the MAC entity may receive DL-SCH on the BWP; the MAC entity may (re-)initialize suspended configured uplink grants of configured grant Type 1 on the active BWP according to the stored configuration, if any, and to start in the symbol according to rules.

In an example, if a BWP is deactivated, the MAC entity may not transmit on UL-SCH on the BWP; the MAC entity may not transmit on RACH on the BWP; the MAC entity may not monitor the PDCCH on the BWP; the MAC entity may not transmit PUCCH on the BWP; the MAC entity may not report CSI for the BWP; the MAC entity may not transmit SRS on the BWP; the MAC entity may not receive DL-SCH on the BWP; the MAC entity may clear a configured downlink assignment and configured uplink grant of configured grant Type 2 on the BWP; the MAC entity may suspend a configured uplink grant of configured grant Type 1 on the inactive BWP.

In an example, Random Access procedure may be initiated on a serving cell. The MAC entity may select a carrier for performing Random Access procedure. If PRACH occasions are not configured for the active UL BWP, the MAC entity may, for the selected carrier of this Serving Cell, switch the active UL BWP to BWP indicated by initialUplinkBWP. If the Serving Cell is a SpCell, the MAC entity may switch the active DL BWP to BWP indicated by initialDownlinkBWP. If PRACH occasions are configured for the active UL BWP, if the Serving Cell is a SpCell: if the active DL BWP does not have the same bwp-Id as the active UL BWP: the MAC entity may, for the selected carrier of this Serving Cell, switch the active DL BWP to the DL BWP with the same bwp-Id as the active UL BWP. The MAC entity may stop the bwp-InactivityTimer associated with the active DL BWP of this Serving Cell, if running. If the Serving Cell is SCell: the MAC entity may stop the bwp-InactivityTimer associated with the active DL BWP of SpCell, if running. The MAC entity may perform the Random Access procedure on the active DL BWP of SpCell and active UL BWP of this Serving Cell.

If the MAC entity receives a PDCCH for BWP switching of a Serving Cell, if there is no ongoing Random Access procedure associated with this Serving Cell; or if the ongoing Random Access procedure associated with this Serving Cell is successfully completed upon reception of this PDCCH addressed to C-RNTI: the MAC entity may perform BWP switching to a BWP indicated by the PDCCH.

In an example, if the MAC entity receives a PDCCH for BWP switching for a Serving Cell while a Random Access procedure associated with that Serving Cell is ongoing in the MAC entity, it may be up to UE implementation whether to switch BWP or ignore the PDCCH for BWP switching, except for the PDCCH reception for BWP switching addressed to the C-RNTI for successful Random Access procedure completion in which case the UE may perform BWP switching to a BWP indicated by the PDCCH. In an example, upon reception of the PDCCH for BWP switching other than successful contention resolution, if the MAC entity decides to perform BWP switching, the MAC entity may stop the ongoing Random Access procedure and initiate a Random Access procedure after performing the BWP switching; if the MAC decides to ignore the PDCCH for BWP switching, the MAC entity may continue with the ongoing Random Access procedure on the Serving Cell.

In an example, upon reception of RRC (re-)configuration for BWP switching for a serving cell while a Random Access procedure associated with that Serving Cell is ongoing in the MAC entity, the MAC entity may stop the ongoing Random Access procedure and initiate a Random Access procedure after performing the BWP switching.

In an example, the defaultDownlinkBWP-Id may be configured, and the active DL BWP may not be the BWP indicated by the defaultDownlinkBWP-Id; or the defaultDownlinkBWP-Id may not be configured, and the active DL BWP may not be the initialDownlinkBWP. In an example, a PDCCH addressed to C-RNTI or CS-RNTI indicating downlink assignment or uplink grant may be received on the active BWP. In an example, a PDCCH addressed to C-RNTI or CS-RNTI indicating downlink assignment or uplink grant may be received for the active BWP. In an example, a MAC PDU may be transmitted in a configured uplink grant or received in a configured downlink assignment.

In an example, no ongoing Random Access procedure may be associated with this Serving Cell; or the ongoing Random Access procedure associated with this Serving Cell may be successfully completed upon reception of this PDCCH addressed to C-RNTI. The MAC entity may start or restart the bwp-InactivityTimer associated with the active DL BWP.

In an example, the defaultDownlinkBWP-Id may be configured, and the active DL BWP may not be the BWP indicated by the defaultDownlinkBWP-Id; or the defaultDownlinkBWP-Id may not be configured, and the active DL BWP may not be the initialDownlinkBWP. In an example, the bwp-InactivityTimer associated with the active DL BWP may expires. If the defaultDownlinkBWP-Id is configured, the MAC entity may perform BWP switching to a BWP indicated by the defaultDownlinkBWP-Id. If the defaultDownlinkBWP-Id is not configured, the MAC entity may perform BWP switching to the initialDownlinkBWP.

In an example, if a Random Access procedure is initiated on an SCell, both this SCell and the SpCell may be associated with this Random Access procedure.

In an example, a PDCCH for BWP switching may be received. The MAC entity may switch the active DL BWP. If the defaultDownlinkBWP-Id is configured, and the MAC entity switches to the DL BWP which is not indicated by the defaultDownlinkBWP-Id; or if the defaultDownlinkBWP-Id is not configured, and the MAC entity switches to the DL

BWP which is not the initialDownlinkBWP: the MAC entity may start or restart the bwp-InactivityTimer associated with the active DL BWP.

A wireless device may be configured for operation in bandwidth parts (BWPs) of a serving cell. The wireless device may receive configuration parameters of a set of at most N (e.g., N=4) bandwidth parts (BWPs), for receptions by the UE (e.g., DL BWP set) in the serving cell, in a DL bandwidth by parameter BWP-Downlink and a set of at most M (e.g., M=4) BWPs for transmissions by the UE (e.g., UL BWP set) in an UL bandwidth by parameter BWP-Uplink.

In an example, if a wireless device is not provided initialDownlinkBWP, an initial active DL BWP may be defined by a location and number of contiguous PRBs, starting from a PRB with the lowest index and ending at a PRB with the highest index among PRBs of a CORESET for Type0-PDCCH CSS set, and a SCS and a cyclic prefix for PDCCH reception in the CORESET for Type0-PDCCH CSS set; otherwise, the initial active DL BWP may be provided by initialDownlinkBWP. For operation on the primary cell or on a secondary cell, a UE may be provided an initial active UL BWP by initialuplinkBWP. If the UE is configured with a supplementary UL carrier, the UE may be provided an initial active UL BWP on the supplementary UL carrier by initialUplinkBWP in supplementaryUplink.

In an example, if a UE has dedicated BWP configuration, the UE may be provided by firstActiveDownlinkBWP-Id a first active DL BWP for receptions and by firstActiveUplinkBWP-Id a first active UL BWP for transmissions on a carrier of the primary cell.

In an example, for a DL BWP or UL BWP in a set of DL BWPs or UL BWPs, respectively, the UE may be provided the following parameters for the serving cell: a SCS by subcarrierSpacing, a cyclic prefix by cyclicPrefix, a common RB $N_{BWP}^{start}=O_{carrier}+RB_{start}$ and a number of contiguous RBs $N_{BWP}^{size}=L_{RB}$ provided by locationAndBandwidth that indicates an offset RB_{start} and a length L_{RB} as RIV, setting $N_{BWP}^{size}=275$, and a value $O_{carrier}$ provided by offsetToCarrier for the subcarrierSpacing, an index in the set of DL BWPs or UL BWPs by respective bwp-Id, a set of BWP-common and a set of BWP-dedicated parameters by bwp-Common and bwp-Dedicated.

In an example, for unpaired spectrum operation, a DL BWP from the set of configured DL BWPs with index provided by bwp-Id may be linked with an UL BWP from the set of configured UL BWPs with index provided by bwp-Id when the DL BWP index and the UL BWP index are same. For unpaired spectrum operation, a UE may not expect to receive a configuration where the center frequency for a DL BWP is different than the center frequency for an UL BWP when the bwp-Id of the DL BWP is same as the bwp-Id of the UL BWP.

For a DL BWP in a set of DL BWPs of the PCell, or of the PUCCH-SCell, a UE may be configured CORESETs for every type of CSS sets and for USS. The UE may not expect to be configured without a CSS set on the PCell, or on the PUCCH-SCell, of the MCG in the active DL BWP.

If a UE is provided controlResourceSetZero and searchSpaceZero in PDCCH-ConfigSIB1 or PDCCH-ConfigCommon, the UE may determine a CORESET for a search space set from controlResourceSetZero, and may determine corresponding PDCCH monitoring occasions. If the active DL BWP is not the initial DL BWP, the UE may determine PDCCH monitoring occasions for the search space set if the CORESET bandwidth is within the active DL BWP and the active DL BWP has same SCS configuration and same cyclic prefix as the initial DL BWP.

In an example, for an UL BWP in a set of UL BWPs of the PCell or of the PUCCH-SCell, the UE may be configured resource sets for PUCCH transmissions.

In an example, a UE may receive PDCCH and PDSCH in a DL BWP according to a configured SCS and CP length for the DL BWP. A UE may transmit PUCCH and PUSCH in an UL BWP according to a configured SCS and CP length for the UL BWP.

In an example, if a bandwidth part indicator field is configured in DCI format 1_1, the bandwidth part indicator field value indicates the active DL BWP, from the configured DL BWP set, for DL receptions. If a bandwidth part indicator field is configured in DCI format 0_1, the bandwidth part indicator field value indicates the active UL BWP, from the configured UL BWP set, for UL transmissions.

In an example, a bandwidth part indicator field may be configured in DCI format 0_1 or DCI format 1_1 and may indicate an UL BWP or a DL BWP different from the active UL BWP or DL BWP, respectively, the UE may, for an information field in the received DCI format 0_1 or DCI format 1_1, if the size of the information field is smaller than the one required for the DCI format 0_1 or DCI format 1_1 interpretation for the UL BWP or DL BWP that is indicated by the bandwidth part indicator, respectively, the UE may prepend zeros to the information field until its size is the one required for the interpretation of the information field for the UL BWP or DL BWP prior to interpreting the DCI format 0_1 or DCI format 1_1 information fields, respectively.

In an example, a bandwidth part indicator field may be configured in DCI format 0_1 or DCI format 1_1 and may indicate an UL BWP or a DL BWP different from the active UL BWP or DL BWP, respectively, the UE may, for an information field in the received DCI format 0_1 or DCI format 1_1, if the size of the information field is larger than the one required for the DCI format 0_1 or DCI format 1_1 interpretation for the UL BWP or DL BWP that is indicated by the bandwidth part indicator, respectively, the UE may use a number of least significant bits of DCI format 0_1 or DCI format 1_1 equal to the one required for the UL BWP or DL BWP indicated by bandwidth part indicator prior to interpreting the DCI format 0_1 or DCI format 1_1 information fields, respectively.

In an example, a bandwidth part indicator field may be configured in DCI format 0_1 or DCI format 1_1 and may indicate an UL BWP or a DL BWP different from the active UL BWP or DL BWP, respectively, the UE may, for an information field in the received DCI format 0_1 or DCI format 1_1, set the active UL BWP or DL BWP to the UL BWP or DL BWP indicated by the bandwidth part indicator in the DCI format 0_1 or DCI format 1_1, respectively.

In an example, a UE may not expect to detect a DCI format 1_1 or a DCI format 0_1 indicating respectively an active DL BWP or an active UL BWP change with the corresponding time domain resource assignment field providing a slot offset value for a PDSCH reception or PUSCH transmission that is smaller than a delay required by the UE for an active DL BWP change or UL BWP change.

In an example, if a wireless device detects a DCI format 1_1 indicating an active DL BWP change for a cell, the wireless device may not be required to receive or transmit in the cell during a time duration from the end of the third symbol of a slot where the UE receives the PDCCH that includes the DCI format 1_1 in a scheduling cell until the

beginning of a slot indicated by the slot offset value of the time domain resource assignment field in the DCI format 1_1.

In an example, if a wireless device detects a DCI format 0_1 indicating an active UL BWP change for a cell, the wireless device may not be required to receive or transmit in the cell during a time duration from the end of the third symbol of a slot where the UE receives the PDCCH that includes the DCI format 0_1 in the scheduling cell until the beginning of a slot indicated by the slot offset value of the time domain resource assignment field in the DCI format 0_1.

In an example, a wireless device may not expect to detect a DCI format 1_1 indicating an active DL BWP change or a DCI format 0_1 indicating an active UL BWP change for a cell in a slot other than the first slot of a set of slots for the SCS of the cell that overlaps with a time duration where the UE is not required to receive or transmit for an active BWP change in a different cell.

In an example, a wireless device may expect to detect a DCI format 0_1 indicating active UL BWP change, or a DCI format 1_1 indicating active DL BWP change, if a corresponding PDCCH is received within the first 3 symbols of a slot.

For a serving cell, a UE may be provided by defaultDownlinkBWP-Id a default DL BWP among the configured DL BWPs. If a UE is not provided a default DL BWP by defaultDownlinkBWP-Id, the default DL BWP may be the initial active DL BWP.

In an example, if a wireless device is provided by bwpInactivityTimer a timer value for the primary cell and the timer is running, the wireless device may decrement the timer at the end of a subframe for FR1 or at the end of a half subframe for FR2 if the restarting conditions are not met during the interval of the subframe for FR1 or of the half subframe for FR2.

In an example, for a cell where a wireless device changes an active DL BWP due to a BWP inactivity timer expiration and for accommodating a delay in the active DL BWP change or the active UL BWP change required by the wireless device, the wireless device may not be required to receive or transmit in the cell during a time duration from the beginning of a subframe for FR1, or of half of a subframe for FR2, that is immediately after the BWP inactivity timer expires until the beginning of a slot where the UE may receive or transmit.

In an example, when a BWP inactivity timer of a wireless device, for a cell, expires within a time duration where the wireless device is not required to receive or transmit for an active UL/DL BWP change in the cell or in a different cell, the wireless device may delay the active UL/DL BWP change triggered by the BWP inactivity timer expiration until a subframe for FR1 or half a subframe for FR2 that is immediately after the wireless device completes the active UL/DL BWP change in the cell or in the different cell.

In an example, if a wireless device is provided by firstActiveDownlinkBWP-Id a first active DL BWP and by firstActiveUplinkBWP-Id a first active UL BWP on a carrier of a secondary cell, the wireless device may use the indicated DL BWP and the indicated UL BWP as the respective first active DL BWP on the secondary cell and first active UL BWP on the carrier of the secondary cell.

In an example, for paired spectrum operation, a wireless device may not expect to transmit a PUCCH with HARQ-ACK information on a PUCCH resource indicated by a DCI format 1_0 or a DCI format 1_1 if the wireless device changes its active UL BWP on the PCell between a time of a detection of the DCI format 1_0 or the DCI format 1_1 and a time of a corresponding PUCCH transmission with HARQ-ACK information.

In an example, a wireless device may not expect to monitor PDCCH when the wireless device performs RRM measurements over a bandwidth that is not within the active DL BWP for the wireless device.

In an example, configured grants/autonomous uplink may be supported on the SCells. In an example, one or more configured grant/autonomous uplink configurations may be supported per SCell. In an example, a plurality of configured grant/autonomous uplink configurations may be activated and be active simultaneously when there is more than one SCell.

In an example, the configured grant/AUL confirmation MAC control element of one octet may be identified by a MAC PDU subheader. In an example as shown in FIG. **19**A, the confirmation MAC control element may have a fixed size and may comprise of a single octet comprising seven C-fields and one R-field. In an example, the configured grant/AUL confirmation MAC control element with one octet may be employed.

In an example, the configured grant/AUL confirmation MAC control element of four octets may be identified by a MAC PDU subheader with a corresponding LCID. In an example as shown in FIG. **19**B, the confirmation MAC control element may have a fixed size and may comprise four octets containing 31 C-fields and one R-field. The configured grant/AUL confirmation MAC control element of four octets may be employed.

In an example, for the case with no serving cell with a ServCellIndex larger than 7, configured grant/AUL confirmation MAC control element of one octet may be applied, otherwise configured grant/AUL confirmation MAC control element of four octets may be applied.

In an example, if there is an SCell configured with SCellIndex i, a Ci field may indicate whether a PDCCH containing configured grant/AUL activation or configured grant/AUL release of the configured grant/autonomous uplink configuration in the SCell with SCellIndex i has been received, else the MAC entity may ignore the Ci field. The Ci field may set to "1" to indicate that a PDCCH containing configured grant/AUL activation or configured grant/AUL release of the autonomous uplink configuration in the SCell with SCellIndex i has been received in the TTI in which configured grant/AUL confirmation has been triggered. The Ci field may be set to "0" to indicate that a PDCCH containing configured grant/AUL activation or configured grant/AUL release of the configured grant/autonomous uplink configuration in the SCell with SCellIndex i has not been received in the TTI in which configured grant/AUL confirmation has been triggered. In an example, R may be Reserved bit and may be set to "0".

Existing mechanisms for configured grant activation/release comprise transmission of a confirmation MAC CE, by the wireless device, in response to activation/release of a configured grant configuration. The legacy configured grant confirmation processes and MAC CE designs may not properly indicate an activated/released configured grant configuration and lead to inefficient network performance when a plurality of configured grant configurations are configured in a bandwidth part (e.g., different sub-bands of a bandwidth part). There is a need to enhance the legacy configured grant confirmation processes. Example embodiments enhance the legacy configured grant confirmation and MAC CE designs.

In an example embodiment as shown in FIG. **20**, a wireless device may receive one or more messages com-

prising configuration parameters. The one or more messages may comprise one or more RRC messages. The one or more messages may comprise configuration parameters of one or more cells. In an example, a cell in the one or more cells may be a licensed cell. In an example, a cell in the one or more cells may be an unlicensed cell. In an example, an unlicensed cell may be a licensed assisted access cell. In an example, a cell in the one or more cells may be a primary cell. In an example, a cell in the one or more cells may be a secondary cell. The one or more messages may comprise first configuration parameters of one or more bandwidth parts of a cell of the one or more cells.

In an example, the BWP IE may be used to configure generic parameters of a bandwidth part. For a serving cell, the network may configure at least an initial downlink bandwidth part and one (if the serving cell is configured with an uplink) or two (if using supplementary uplink (SUL)) initial uplink bandwidth parts. Furthermore, the network may configure additional uplink and downlink bandwidth parts for a serving cell. The uplink and downlink bandwidth part configurations may be divided into common and dedicated parameters.

In an example, a cyclicPrefix parameter may indicate whether to use the extended cyclic prefix for a bandwidth part. If not set, the wireless device may use the normal cyclic prefix. Normal CP may be supported for all subcarrier spacings and slot formats. Extended CP may be supported for 60 kHz subcarrier spacing.

In an example, a locationAndBandwidth parameter may indicate frequency domain location and bandwidth of a bandwidth part. A value of the field may be interpreted as resource indicator value (RIV). The first PRB may be a PRB determined by subcarrierSpacing of this BWP and offsetToCarrier (configured in SCS-SpecificCarrier contained within FrequencyInfoDL/FrequencyInfoUL/FrequencyInfoUL-SIB/FrequencyInfoDL-SIB) corresponding to this subcarrier spacing. In case of TDD, a BWP-pair (UL BWP and DL BWP with the same bwp-Id) may have the same center frequency.

In an example, a subcarrierSpacing parameter may indicate a subcarrier spacing to be used in a BWP for channels and reference signals unless explicitly configured elsewhere. The value kHz 15 may correspond to $\mu=0$, kHz 30 to $\mu=1$, and so on.

In an example, a subcarrierSpacing parameter may indicate a subcarrier spacing to be used in a BWP for channels and reference signals unless explicitly configured elsewhere. The value kHz 15 may correspond to $\mu=0$, kHz 30 to $\mu=1$, and so on.

In an example, the IE BWP-Downlink may be used to configure an additional downlink bandwidth part (not for the initial BWP). The field bwp-Id in this IE may not take the value 0 since that may be reserved for the initial BWP.

The parameter bwp-Id may indicate an identifier for a bandwidth part. Other parts of the RRC configuration use the BWP-Id to associate themselves with a particular bandwidth part. The network may configure the BWPs with consecutive IDs.

In an example, the IE BWP-Uplink may be used to configure an additional uplink bandwidth part (not for the initial BWP). In an example, the field bwp-Id in this IE may not take the value 0 since that may be reserved for the initial BWP.

The one or more messages may comprise second configuration parameters of a plurality of configured grant configurations on a first bandwidth part of the one or more bandwidth parts.

In an example, the IE ConfiguredGrantConfig may be used to configure uplink transmission without dynamic grant according to two possible schemes. The actual uplink grant may either be configured via RRC (type1) or provided via the PDCCH (addressed to CS-RNTI) (type2). In an example, the frequency domain and time domain resources of the configured grants may be based on the configured grant configuration parameters. In an example, the frequency domain and time domain resources of the configured grants may be based on the configured grant configuration parameters and a PDCCH indicating activation a configured grant configuration. In an example, a configured grant configuration, in a plurality of configured grant configurations, may be identified by an identifier.

The wireless device may receive a DCI indicating activation/release of a first configured grant configuration in the plurality of configured grant configurations. In an example, the DCI may indicate activation/release of the first configured grant configuration in the first bandwidth part of the cell. In an example, the DCI may indicate activation/release of the first configured grant configuration in a first sub-band of the first bandwidth part of the cell.

In an example, a bandwidth part may comprise a plurality of sub-bands. In an example, a bandwidth part in an unlicensed band may comprise a plurality of sub-bands. A sub-band may be a unit of listen-before-talk (LBT). In an example, a sub-band may be 20 MHz.

The wireless device may validate the DCI as a configured grant activation/release DCI based on an RNTI associated with the DCI and/or one or more values of one or more fields of the DCI. In an example, the one or more fields may comprise the HARQ process number, the redundancy version, the new data indicator, transmit power control, etc. If validation is achieved, the wireless device may consider the information in the DCI format as a valid activation or valid release of the configured grant. If validation is not achieved, the wireless device may discard the information in the DCI format. In response to the validation of the DCI, the wireless device may activate/release the first configured grant in the plurality of configured grants.

In an example, an uplink grant for a PDCCH occasion may be received for a Serving Cell on the PDCCH for the MAC entity's CS-RNTI and the NDI in the received HARQ information may be 0. If PDCCH contents indicate configured grant activation or deactivation, the wireless device may trigger configured grant confirmation. In an example, if the configured grant confirmation is triggered and not cancelled and if the MAC entity has UL resources allocated for new transmission, the MAC entity may instruct the Multiplexing and Assembly procedure to generate a Configured Grant Confirmation MAC CE and cancel the triggered configured grant confirmation. In an example, for a configured grant, the MAC entity may clear the configured uplink grant immediately after first transmission of Configured Grant Confirmation MAC CE triggered by the configured uplink grant deactivation.

The wireless device may transmit a confirmation indicating that the wireless device received the downlink control information that indicates activation/release of the first configured grant configuration. In an example, the wireless device may transmit the confirmation in response to the validation being successful. In an example, the confirmation may be a MAC control element.

In an example, the confirmation may indicate the cell on which the first configured grant is configured. In an example, the confirmation may indicate an identifier of the cell on which the first configured grant is configured. In an example,

the confirmation may comprise the identifier of the cell on which the first configured grant is configured. The one or messages may indicate the identifier of the cell. In an example, the confirmation may comprise a bitmap, a bit in the bitmap corresponding to a cell in a plurality of cells. A value of the bit in the bitmap may indicate whether the wireless device received the downlink control information that indicates activation/release of the first configured grant configuration on the cell.

In an example, the confirmation may indicate the first bandwidth part on which the first configured grant is configured. In an example, the confirmation may indicate an identifier of the first bandwidth part on which the first configured grant is configured. In an example, the confirmation may comprise an identifier of the first bandwidth part on which the first configured grant is configured. The one or messages may indicate the identifier of the first bandwidth part. In an example, the confirmation may comprise a bitmap, a bit in the bitmap corresponding to a bandwidth part in a plurality of bandwidth parts. A value of the bit in the bitmap may indicate whether the wireless device received the downlink control information that indicates activation/release of the first configured grant configuration on the bandwidth part.

In an example, the confirmation may indicate the first configured grant configuration. In an example, the confirmation may indicate an identifier of the first configured grant configuration. In an example, the confirmation may comprise an identifier of the first configured grant configuration. In an example the second configuration parameters may comprise the identifier of the first configured grant configuration. In an example, the confirmation may comprise a bitmap, a bit in the bitmap corresponding to a configured grant configuration in a plurality of configured grant configurations. A value of the bit in the bitmap may indicate whether the wireless device received the downlink control information that indicates activation/release of the first configured grant configuration.

In an example, the first bandwidth part may comprise one or more sub-bands. The confirmation may indicate a sub-band of the first bandwidth part in which the first configured grant is configured. In an example, the confirmation may indicate an identifier of a sub-band of the first bandwidth part on which the first configured grant is configured. In an example, the confirmation may comprise an identifier of a sub-band of the first bandwidth part on which the first configured grant is configured. In an example, the one or more messages may indicate the identifier of the sub-band. In an example, the confirmation may comprise a bitmap, a bit in the bitmap corresponding to a sub-band in a plurality of sub-bands. A value of the bit in the bitmap may indicate whether the wireless device received the downlink control information that indicates activation/release of the first configured grant configuration on the sub-band.

In an example embodiment, a wireless device may receive one or more messages comprising first configuration parameters and second configuration parameters. The first configuration parameters may be for one or more bandwidth parts of a cell. The second configuration parameters may be for a plurality of configured grant configurations on a first BWP of the one or more BWPs. The wireless device may receive a DCI indicating activation/release of a first configured grant configuration in the plurality of configured grant configurations. The wireless device may transmit a confirmation indicating the receiving the DCI indicating activation/release of the first configured grant configuration.

In an example, the conformation may be a MAC CE. In an example, the confirmation MAC CE may be a fixed-size MAC CE. In an example, the conformation MAC CE may be a variable-size MAC CE. A MAC CE may be identified by a corresponding MAC sub-header. FIG. **21**A, FIG. **21**B and FIG. **21**C are example MAC sub-header for variable-size (FIG. **21**A and FIG. **21**B) and fixed-size (FIG. **21**C) MAC CEs.

In an example, a MAC PDU may comprise of one or more MAC subPDUs. A MAC subPDU may comprise one of the following: a MAC subheader (including padding); a MAC subheader and a MAC SDU; A MAC subheader and a MAC CE; a MAC subheader and padding. In an example, the MAC SDUs may be of variable sizes. A MAC subheader may correspond to either a MAC SDU, a MAC CE, or padding.

In an example, a MAC subheader may, except for fixed sized MAC CE, padding, and a MAC SDU containing UL CCCH, comprise of the four header fields R/F/LCID/L. A MAC subheader for fixed sized MAC CE, padding, and a MAC SDU containing UL CCCH may comprise of the two header fields R/LCID.

FIG. **22** is an example uplink MAC PDU. In an example, MAC CEs may be placed together. UL MAC subPDU(s) with MAC CE(s) may be placed after the MAC subPDU(s) with MAC SDU and before the MAC subPDU with padding in the MAC PDU. In an example, the size of padding may be zero.

FIG. **23** is an example confirmation MAC CE. The confirmation MAC CE in FIG. **23** has a fixed size. In an example, Ci corresponds to cell i (e.g., a cell with serving cell index i), Bi,j corresponds to BWP j (e.g., a BWP with BWP ID j) in cell i and Si,j,k corresponds to sub-band k (e.g., a sub-band with sub-band ID k) of BWP j in cell i. A value of Si,j,k indicates whether the wireless device received the downlink control information that indicates activation/release of the first configured grant configuration on Si,j,k. In an example, a value of '1' for Si,j,k indicates that downlink control information that indicating activation/release of a configured grant configuration on Si,j,k is received. In an example, if Si,j,k has a value of '1', Ci and Bi,j also have a value of '1'.

In an example, there is one active bandwidth part in an activated cell. FIG. **24** is an example confirmation MAC CE. In an example, Ci corresponds to cell i (e.g., a cell with serving cell index i) and Si,j corresponds to sub-band j (e.g., a sub-band with sub-band ID j) of the active BWP in cell i. A value of Si,j indicates whether the wireless device received the downlink control information that indicates activation/release of the first configured grant configuration on Si,j. In an example, a value of '1' for Si,j indicates that downlink control information indicating activation/release of a configured grant configuration on Si,j is received. In an example, if Si,j has a value of '1', Ci also has a value of '1'.

FIG. **25**A is an example fixed-size confirmation MAC CE. Cell ID indicates an identifier of the cell on which the configured grant configuration is activated/released. Cell ID may be an identifier of the cell and may be configured by RRC. Bi corresponds to BWP i (e.g., BWP with BWP with BWP ID i). Si,j corresponds to sub-band j (e.g., a sub-band with sub-band ID j) of the BWPi of the cell. A value of Si,j indicates whether the wireless device received the downlink control information that indicates activation/release of the first configured grant configuration on Si,j. In an example, a value of '1' for Si,j indicates that downlink control information indicating activation/release of a configured grant

configuration on Si,j is received. In an example, if Si,j has a value of '1', Bi also has a value of '1'.

FIG. **25**B is an example variable-size confirmation MAC CE. Celli ID indicates an identifier of the cell i on which the configured grant configuration is activated/released. Celli ID may be an identifier of the cell i and may be configured by RRC. Bi,j corresponds to BWP j (e.g., BWP with BWP with BWP ID j) of cell i. Si,j,k corresponds to sub-band k (e.g., a sub-band with sub-band ID k) of the BWPj of the cell i. A value of Si,j,k indicates whether the wireless device received the downlink control information that indicates activation/release of the first configured grant configuration on Si,j,k. In an example, a value of '1' for Si,j,k indicates that downlink control information indicating activation/release of a configured grant configuration on Si,j,k is received. In an example, if Si,j,k has a value of '1', Bi,j also has a value of '1'.

In an example, there is one active bandwidth part in an activated cell. FIG. **26**A is an example fixed-size one-octet confirmation MAC CE. Cell ID indicates an identifier of the cell on which the configured grant configuration is activated/released. Cell ID may be an identifier of the cell and may be configured by RRC. Si corresponds to sub-band i (e.g., a sub-band with sub-band ID i) of active BWP of the cell. A value of Si indicates whether the wireless device received the downlink control information that indicates activation/release of the first configured grant configuration on Si. In an example, a value of '1' for Si indicates that downlink control information indicating activation/release of a configured grant configuration on Si is received. FIG. **26**B is an example variable-size confirmation MAC CE. Celli ID indicates an identifier of the cell i on which the configured grant configuration is activated/released. Celli ID may be an identifier of the cell i and may be configured by RRC. Si,j corresponds to sub-band j (e.g., a sub-band with sub-band ID j) of cell i.

FIG. **27**A is an example fixed-size confirmation MAC CE. Cell ID indicates an identifier of the cell on which the configured grant configuration is activated/released. Cell ID may be an identifier of the cell and may be configured by RRC. BWP ID indicates an identifier of the BWP (e.g., the BWP of the cell identified by the cell ID) on which the configured grant configuration is activated/released. BWP ID may be an identifier of the BWP and may be configured by RRC. Si corresponds to sub-band i (e.g., a sub-band with sub-band ID i) of the BWP (e.g., the BWP identified by the BWP ID) of the cell (e.g., the cell identified by cell ID) on which the configured grant configuration is activated/released.

FIG. **27**B is an example variable-size confirmation MAC CE. Celli ID indicates an identifier of the cell i on which the configured grant configuration is activated/released. Celli ID may be an identifier of the cell and may be configured by RRC. BWPi,j ID indicates an identifier of BWP j of cell i (e.g., the BWP with BWP ID j of the cell identified by the cell ID i) on which the configured grant configuration is activated/released. BWPi,j ID may be an identifier of the BWP and may be configured by RRC. Si,j,k corresponds to sub-band k (e.g., a sub-band with sub-band ID i) of the BWP j (e.g., the BWP identified by the BWPi,j ID) of the cell i (e.g., the cell identified by cell ID i) on which the configured grant configuration is activated/released.

FIG. **28**A is an example fixed-size confirmation MAC CE. Cell ID indicates an identifier of the cell on which the configured grant configuration is activated/released. Cell ID may be an identifier of the cell and may be configured by RRC. BWP ID indicates an identifier of the BWP (e.g., the BWP of the cell identified by the cell ID) on which the configured grant configuration is activated/released. BWP ID may be an identifier of the BWP and may be configured by RRC. Sub-band ID indicates an identifier of a sub-band on which the configured grant configuration is activated/released.

FIG. **28**B is an example variable-size confirmation MAC CE. Celli ID indicates an identifier of the cell i on which the configured grant configuration is activated/released. Celli ID may be an identifier of the cell and may be configured by RRC. BWPi,j ID indicates an identifier of BWP j of cell i (e.g., the BWP with BWP ID j of the cell identified by the cell ID i) on which the configured grant configuration is activated/released. BWPi,j ID may be an identifier of the BWP and may be configured by RRC. Si,j,k ID indicates an identifier of sub-band k (e.g., a sub-band with sub-band ID k) of the BWP j (e.g., the BWP identified by the BWPi,j ID) of the cell i (e.g., the cell identified by cell ID i) on which the configured grant configuration is activated/released.

In an example, there is one active bandwidth part in an activated cell. FIG. **29**A is an example fixed-size one-octet confirmation MAC CE. Cell ID indicates an identifier of the cell on which the configured grant configuration is activated/released. Cell ID may be an identifier of the cell and may be configured by RRC. Sub-band ID indicates an identifier of a sub-band of the active bandwidth part of a cell (e.g., the cell identified by the cell ID) on which the configured grant configuration is activated/released.

In an example, there is one active bandwidth part in an activated cell. FIG. **29**B is an example variable-size confirmation MAC CE. Celli ID indicates an identifier of the cell i on which the configured grant configuration is activated/released. Celli ID may be an identifier of the cell and may be configured by RRC. Sub-bandi,k ID indicates an identifier of sub-band k (e.g., a sub-band with sub-band ID k) of the active bandwidth part of the cell i (e.g., the cell identified by cell ID i) on which the configured grant configuration is activated/released.

FIG. **30** is an example confirmation MAC CE. The confirmation MAC CE in FIG. **30** has a fixed size. In an example, Ci corresponds to cell i (e.g., a cell with serving cell index i), Bi,j corresponds to BWP j (e.g., a BWP with BWP ID j) in cell i and CGCi,j,k corresponds to configured grant configuration k (e.g., a configured grant configuration with configured grant configuration ID k) of BWP j in cell i. A value of CGCi,j,k indicates whether the wireless device received the downlink control information that indicates activation/release of the first configured grant configuration k. In an example, a value of '1' for CGCi,j,k indicates that a downlink control information that indicates activation/release of a configured grant configuration k is received. In an example, if CGCi,j,k has a value of '1', Ci and Bi,j also have a value of '1'.

In an example, there is one active bandwidth part in an activated cell. FIG. **31** is an example confirmation MAC CE. The confirmation MAC CE in FIG. **31** has a fixed size. In an example, CGC,j indicates whether the wireless device received the downlink control information that indicates activation/release of the first configured grant configuration j. In an example, a value of '1' for CGCi,j indicates that a downlink control information that indicates activation/release of a configured grant configuration j is received. In an example, if CGCi,j has a value of '1', Ci also has a value of '1'.

FIG. **32**A is an example fixed-size confirmation MAC CE. Cell ID indicates an identifier of the cell on which the configured grant configuration is activated/released. Cell ID

may be an identifier of the cell and may be configured by RRC. Bi corresponds to BWP i (e.g., BWP with BWP with BWP ID i). CGCi,j corresponds to configured grant configuration j (e.g., a configured grant configuration with configured grant configuration ID j) of the BWP i of the cell. A value of CGCi,j indicates whether the wireless device received the downlink control information that indicates activation/release of the first configured grant configuration j. In an example, a value of '1' for CGCi,j indicates that downlink control information indicating activation/release of a configured grant configuration j is received. In an example, if Ci,j has a value of '1', Bi also has a value of '1'.

FIG. **32**B is an example variable-size confirmation MAC CE. Celli ID indicates an identifier of the cell i on which the configured grant configuration is activated/released. Celli ID may be an identifier of the cell i and may be configured by RRC. Bi,j corresponds to BWP j (e.g., BWP with BWP with BWP ID j) of cell i. Ci,j,k corresponds to configured grant configuration k (e.g., a configured grant configuration with configured grant configuration ID k) of the BWPj of the cell i. A value of Ci,j,k indicates whether the wireless device received the downlink control information that indicates activation/release of the first configured grant configuration k. In an example, a value of '1' for Ci,j,k indicates that downlink control information indicating activation/release of a configured grant configuration on k is received. In an example, if Ci,j,k has a value of '1', Bi,j also has a value of '1'.

In an example, there is one active bandwidth part in an activated cell. FIG. **33**A is an example fixed-size one-octet confirmation MAC CE. Cell ID indicates an identifier of the cell on which the configured grant configuration is activated/released. Cell ID may be an identifier of the cell and may be configured by RRC. CGCi corresponds to configured grant configuration i (e.g., a configured grant configuration with configured grant configuration ID i) of active BWP of the cell. A value of CGCi indicates whether the wireless device received the downlink control information that indicates activation/release of the first configured grant configuration i. In an example, a value of '1' for CGCi indicates that a downlink control information that indicates activation/release of a configured grant configuration i is received. FIG. **33**B is an example variable-size confirmation MAC CE. Celli ID indicates an identifier of the cell i on which the configured grant configuration is activated/released. Celli ID may be an identifier of the cell i and may be configured by RRC. CGCi,j corresponds to configured grant configuration j (e.g., a configured grant configuration with configured grant configuration ID j) of cell i.

FIG. **34**A is an example fixed-size confirmation MAC CE. Cell ID indicates an identifier of the cell on which the configured grant configuration is activated/released. Cell ID may be an identifier of the cell and may be configured by RRC. BWP ID indicates an identifier of the BWP (e.g., the BWP of the cell identified by the cell ID) on which the configured grant configuration is activated/released. BWP ID may be an identifier of the BWP and may be configured by RRC. CGCi corresponds to configured grant configuration i (e.g., a configured grant configuration with configured grant configuration ID i) of the BWP (e.g., the BWP identified by the BWP ID) of the cell (e.g., the cell identified by cell ID) on which the configured grant configuration is activated/released.

FIG. **34**B is an example variable-size confirmation MAC CE. Celli ID indicates an identifier of the cell i on which the configured grant configuration is activated/released. Celli ID may be an identifier of the cell and may be configured by RRC. BWPi,j ID indicates an identifier of BWP j of cell i (e.g., the BWP with BWP ID j of the cell identified by the cell ID i) on which the configured grant configuration is activated/released. BWPi,j ID may be an identifier of the BWP and may be configured by RRC. Ci,j,k corresponds to configured grant configuration k (e.g., a configured grant configuration with configured grant configuration ID i) of the BWP j (e.g., the BWP identified by the BWPi,j ID) of the cell i (e.g., the cell identified by cell ID i) on which the configured grant configuration is activated/released.

FIG. **35** is an example fixed-size confirmation MAC CE. Ci corresponds to a cell (e.g., a cell with cell ID i) on which the configured grant configuration is activated/released. CGC ID is an identifier of a configured grant configuration. In an example, CGC ID may take a pre-configured value indicating no reception of a DCI for configured grant configuration activation/release. If a DCI for activation/release of a configured grant configuration is received on cell i, the identifier of the configured grant configuration may be included in the MAC CE.

FIG. **36** is an example fixed-size confirmation MAC CE. Ci corresponds to a cell (e.g., a cell with cell ID i) on which the configured grant configuration is activated/released. Bi,j corresponds to bandwidth part j (e.g., a BWP with BWP ID j) of cell i. CGC ID is an identifier of a configured grant configuration. In an example, CGC ID may take a pre-configured value indicating no reception of a DCI for configured grant configuration activation/release. If a DCI for activation/release of a configured grant configuration is received on cell i, the identifier of the configured grant configuration may be included in the MAC CE.

FIG. **37**A is a fixed size confirmation MAC CE. Cell ID is an identifier of a cell for which a configured grant configuration activation/release DCI is received. BWP ID is an identifier of a BWP of the cell for which a configured grant configuration activation/release DCI is received. CGC ID is an identifier of a configured grant configuration for the BWP of the cell for which a configured grant configuration activation/release DCI is received.

FIG. **37**B is a variable size confirmation MAC CE. Celli ID is an identifier of cell i for which a configured grant configuration activation/release DCI is received. BWPi,j ID is an identifier of BWP j of cell i for which a configured grant configuration activation/release DCI is received. CGCi,j,k ID is an identifier of configured grant configuration k for BWP j of cell i for which a configured grant configuration activation/release DCI is received.

In an example, there may be one active BWP in a cell. FIG. **38**A is a fixed size confirmation MAC CE. Cell ID is an identifier of a cell for which a configured grant configuration activation/release DCI is received. CGC ID is an identifier of a configured grant configuration on an active BWP of the cell (indicated by the cell ID) for which a configured grant configuration activation/release DCI is received.

FIG. **38**B is a variable size confirmation MAC CE. Celli ID is an identifier of cell i for which a configured grant configuration activation/release DCI is received. CGCi,j ID is an identifier of configured grant configuration k for the active bandwidth part of cell i for which a configured grant configuration activation/release DCI is received.

Existing mechanisms for uplink transmission via a configured grant lead to inefficient network performance when a plurality of configured grant configurations are configured and configured grant resources in different configured grant configurations overlap in time. There is a need to enhance the legacy transmission processes based on configured grant

configurations. Example embodiments enhance the legacy transmission processes based on configured grants.

In an example embodiment as shown in FIG. **39**, a wireless device may receive one or more messages comprising configuration parameters. The one or more messages may comprise one or more RRC messages. The one or more messages may comprise first configuration parameters of a plurality of bandwidth parts comprising a bandwidth part of a cell. In an example, the cell may be a licensed cell. In an example, the cell may be an unlicensed cell. In an example, the cell may be a licensed assisted access (LAA) cell. The one or more messages may comprise second configuration parameters of a plurality of configured grant configurations on the BWP. The plurality of configured grant configurations may comprise a first configured grant configuration and a second configured grant configuration.

A first configured grant resource may be based on the first configured configuration. In an example, the first configured grant resource may be available/active for the wireless device in response to receiving the second configuration parameters. In an example, the first configured grant resource may be available/active for the wireless device in response to the receiving the second configuration parameters and receiving a DCI indicating activation of configured resources based on the first configured grant configuration.

A second configured grant resource may be based on the second configured configuration. In an example, the second configured grant resource may be available/active for the wireless device in response to receiving the second configuration parameters. In an example, the second configured grant resource may be available/active for the wireless device in response to the receiving the second configuration parameters and receiving a DCI indicating activation of configured resources based on the second configured grant configuration.

In an example, there may be an overlap between the first configured grant resource and the second configured grant resource. In an example, the first configured grant resource and the second configured grant resource may overlap in one or more symbols. In an example, the first configured grant resource and the second configured grant resource may be configured in the same slot and may overlap in one or more symbols.

The wireless device may select, as a selected resource, one of the first configured grant resource and the second configured grant resource. The wireless device may transmit one or more transport blocks based on the selected configured grant resource.

In an example embodiment, a wireless device may receive one or more messages comprising first configuration parameters and second configuration parameters. The first configuration parameters may be for a BWP of a cell. The second configuration parameters may be for a plurality of configured grant configurations for the BWP of the cell. The plurality of configured grant configurations may comprise a first configured grant configuration and a second configured grant configuration. The wireless device may select, as a selected resource, one of a first configured grant resource and a second configured grant resource, wherein the first configured grant resource is based on the first configured grant configuration and the second configured grant resource is based on the second configured grant configuration and the first configured grant resource and the second configured grant resource overlap in time. The wireless device may transmit one or more transport block based on the selected configured grant resource.

In an example, the selecting may be based on a first LBT procedure before the first configured grant resource and a second LBT procedure before the second configured grant resource. In an example, the wireless device may select the first configured grant resource if the first LBT procedure indicates a clear channel and the second LBT procedure indicates an occupied channel. In an example, the wireless device may select the second configured grant resource if the first LBT procedure indicates an occupied channel and the second LBT procedure indicates a clear channel. In an example, the wireless device may select one of the first configured grant and the second configured grant based on other criteria if the first LBT procedure and the second LBT procedure indicate clear channel.

In an example, the first configured grant may be on a first sub-band of the BWP and the second configured grant may be a second sub-band of the BWP. The selecting may be based on a first identifier of the first sub-band and a second identifier of the second BWP. In an example, the wireless device may select a configured grant resource on a sub-band with lower sub-band ID. In an example, the wireless device may select a configured grant resource on a sub-band with higher sub-band ID.

In an example, the wireless may receive an indication of a preferred configured grant resource from the base station. In an example, the configuration parameters of the first configured grant configuration may indicate that the first configured grant configuration is a preferred configure grant configuration. In an example, a DCI indicating activation of the first configured grant configuration may indicate that the first configured grant configuration is a preferred configured grant configuration. The wireless device may select the first configured grant resource in response to receiving an indication that the first configured configuration is a preferred configured grant configuration.

In an example, the wireless device may select one of the first configured grant resource or the second configured grant resource based on whether the first configured grant resource or the second configured grant resource is for initial transmission or retransmission. In an example, the wireless device may select the first configured grant resource if the first configured grant resource is for a retransmission of a transport block and the second configured grant is for an initial transmission of a transport block. In an example, the wireless device may select the second configured grant resource if the first configured grant resource is for a retransmission of a transport block and the second configured grant is for an initial transmission of a transport block.

In an example, the wireless device may select one of the first configured grant resource or the second configured grant resource based on a first number of CBGs scheduled for transmission via the first configured grant resource and a second number of CBGs scheduled for transmission via the second configured grant resource. In an example, the wireless device may select the first configured grant resource if the first number is larger than the second number. In an example, the wireless device may select the second configured grant resource if the first number is larger than the second number.

In an example, the wireless device may select one of the first configured grant resource or the second configured grant resource based on whether UCI is multiplexed with the first configured grant resource or the second configured grant resource. In an example, the wireless device may select one of the first configured grant resource or the second configured grant resource based on types of UCI (e.g., UCI corresponding to URLLC, eMBB, etc.) multiplexed with the

first configured grant resource and the second configured grant resource. In an example, the wireless device may select the first configured grant resource if UCI is multiplexed with the first configured grant resource and not multiplexed with the second configured grant resource. In an example, the wireless device may select the first configured grant resource if UCI corresponding to a first type of data/logical channels (e.g., URLLC) is multiplexed with data in the first configured grant resource and UCI corresponding to a second type of data/logical channels (e.g., eMBB) is multiplexed with data in the second configured grant resource.

In an example, the wireless device may select one of the first configured grant resource or the second configured grant resource based on data contents transmitted via the first configured grant resource (e.g., data from one or more first logical channel transmitted via the first configured grant resource) or data contents transmitted via the second configured grant resource (e.g., data from one or more second logical channel transmitted via the second configured grant resource). In an example, the wireless device may select the first configured grant resource in response to the one or more first logical channels correspond URLLC service type and the one or more second logical channels correspond to eMBB service type.

FIG. **40** is a flow diagram as per an aspect of an example embodiment of the present disclosure. At **4010**, a wireless device may receive one or more messages. The one or more messages may comprise configuration parameters. The configuration parameters may indicate a plurality of configured grant configurations for one or more bandwidth parts (BWPs) of a cell. At **4020**, the wireless device may receive a downlink control information. The downlink control information may indicate activation or release of a first configured grant configuration, among the plurality of configured grant configurations, for a first BWP of the one or more BWPs. At **4030**, the wireless device may transmit a confirmation indicating that the wireless device received the downlink control information indicating the activation or the release of the first configured grant configuration. The confirmation may comprise an identifier of the first BWP. The confirmation may comprise an identifier of a sub-band of the first BWP.

FIG. **41** is a flow diagram as per an aspect of an example embodiment of the present disclosure. At **4110**, a base station may transmit, to a wireless device, one or more messages. The one or more messages may comprise configuration parameters. The configuration parameters may indicate a plurality of configured grant configurations for one or more bandwidth parts (BWPs) of a cell. At **4120**, the base station may transmit, to the wireless device, a downlink control information. The downlink control information may indicate activation or release of a first configured grant configuration, among the plurality of configured grant configurations, for a first BWP of the one or more BWPs. At **4130**, the base station may monitor for a confirmation, from the wireless device, indicating that the wireless device received the downlink control information indicating the activation or the release of the first configured grant configuration. The confirmation may comprise an identifier of the first BWP. The confirmation may comprise an identifier of a sub-band of the first BWP. The base station may receive the confirmation indicating that the wireless device received the downlink control information.

According to an example embodiment, a wireless device may receive one or more messages. The one or more messages may comprise configuration parameters. The configuration parameters may indicate a plurality of configured grant configurations for one or more bandwidth parts (BWPs) of a cell. According to an example embodiment, the wireless device may receive a downlink control information. The downlink control information may indicate activation or release of a first configured grant configuration, among the plurality of configured grant configurations, for a first BWP of the one or more BWPs. According to an example embodiment, the wireless device may transmit a confirmation indicating that the wireless device received the downlink control information indicating the activation or the release of the first configured grant configuration. According to an example embodiment, the confirmation may comprise an identifier of the first BWP. According to an example embodiment, the confirmation may comprise an identifier of a sub-band of the first BWP.

According to an example embodiment, the first BWP may comprise one or more sub-bands comprising the sub-band. According to an example embodiment, the first configured grant configuration may be for the sub-band of the first BWP. According to an example embodiment, the sub-band may be a unit of listen-before-talk.

According to an example embodiment, the confirmation may comprise an identifier of the cell. According to an example embodiment, the confirmation may comprise a bitmap. A bit in the bitmap may correspond to the identifier of the cell. According to an example embodiment, the configuration parameters may indicate the identifier of the cell.

According to an example embodiment, the configuration parameters may indicate the identifier of the first BWP. According to an example embodiment, the confirmation may comprise a bitmap. A bit in the bitmap may correspond to the identifier of the first BWP.

According to an example embodiment, the configuration parameters may indicate the identifier of the sub-band. According to an example embodiment, the confirmation may comprise a bitmap. A bit in the bitmap may correspond to the identifier of the sub-band.

According to an example embodiment, the confirmation may comprise an identifier of the first configured grant configuration. According to an example embodiment, the configuration parameters may indicate the identifier of the first configured grant configuration. According to an example embodiment, the confirmation may comprise a bitmap. A bit in the bitmap may correspond to the identifier of the first configured grant configuration.

According to an example embodiment, the confirmation may be a medium-access control control element (MAC CE). According to an example embodiment, the MAC CE may have a fixed size or a variable size.

According to an example embodiment, the cell may be an unlicensed cell.

According to an example embodiment, the wireless device may validate the downlink control information as a configured grant activation or a configured grant release based on one or more values of one or more fields of the downlink control information. According to an example embodiment, the transmitting the confirmation indicating that the wireless device received the downlink control information may be based on the validating the downlink control information as the configured grant activation or the configured grant release. According to an example embodiment, the wireless device may activate or release the first configured grant configuration based on the validating the downlink control information as the configured grant activation or the configured grant release.

Embodiments may be configured to operate as needed. The disclosed mechanism may be performed when certain criteria are met, for example, in a wireless device, a base station, a radio environment, a network, a combination of the above, and/or the like. Example criteria may be based, at least in part, on for example, wireless device or network node configurations, traffic load, initial system set up, packet sizes, traffic characteristics, a combination of the above, and/or the like. When the one or more criteria are met, various example embodiments may be applied. Therefore, it may be possible to implement example embodiments that selectively implement disclosed protocols.

A base station may communicate with a mix of wireless devices. Wireless devices and/or base stations may support multiple technologies, and/or multiple releases of the same technology. Wireless devices may have some specific capability(ies) depending on wireless device category and/or capability(ies). A base station may comprise multiple sectors. When this disclosure refers to a base station communicating with a plurality of wireless devices, this disclosure may refer to a subset of the total wireless devices in a coverage area. This disclosure may refer to, for example, a plurality of wireless devices of a given LTE or 5G release with a given capability and in a given sector of the base station. The plurality of wireless devices in this disclosure may refer to a selected plurality of wireless devices, and/or a subset of total wireless devices in a coverage area which perform according to disclosed methods, and/or the like. There may be a plurality of base stations or a plurality of wireless devices in a coverage area that may not comply with the disclosed methods, for example, because those wireless devices or base stations perform based on older releases of LTE or 5G technology.

In this disclosure, "a" and "an" and similar phrases are to be interpreted as "at least one" and "one or more." Similarly, any term that ends with the suffix "(s)" is to be interpreted as "at least one" and "one or more." In this disclosure, the term "may" is to be interpreted as "may, for example." In other words, the term "may" is indicative that the phrase following the term "may" is an example of one of a multitude of suitable possibilities that may, or may not, be employed to one or more of the various embodiments.

If A and B are sets and every element of A is also an element of B, A is called a subset of B. In this specification, only non-empty sets and subsets are considered. For example, possible subsets of B={cell1, cell2} are: {cell1}, {cell2}, and {cell1, cell2}. The phrase "based on" (or equally "based at least on") is indicative that the phrase following the term "based on" is an example of one of a multitude of suitable possibilities that may, or may not, be employed to one or more of the various embodiments. The phrase "in response to" (or equally "in response at least to") is indicative that the phrase following the phrase "in response to" is an example of one of a multitude of suitable possibilities that may, or may not, be employed to one or more of the various embodiments. The phrase "depending on" (or equally "depending at least to") is indicative that the phrase following the phrase "depending on" is an example of one of a multitude of suitable possibilities that may, or may not, be employed to one or more of the various embodiments. The phrase "employing/using" (or equally "employing/using at least") is indicative that the phrase following the phrase "employing/using" is an example of one of a multitude of suitable possibilities that may, or may not, be employed to one or more of the various embodiments.

The term configured may relate to the capacity of a device whether the device is in an operational or non-operational state. Configured may also refer to specific settings in a device that effect the operational characteristics of the device whether the device is in an operational or non-operational state. In other words, the hardware, software, firmware, registers, memory values, and/or the like may be "configured" within a device, whether the device is in an operational or nonoperational state, to provide the device with specific characteristics. Terms such as "a control message to cause in a device" may mean that a control message has parameters that may be used to configure specific characteristics or may be used to implement certain actions in the device, whether the device is in an operational or non-operational state

In this disclosure, various embodiments are disclosed. Limitations, features, and/or elements from the disclosed example embodiments may be combined to create further embodiments within the scope of the disclosure.

In this disclosure, parameters (or equally called, fields, or Information elements: IEs) may comprise one or more information objects, and an information object may comprise one or more other objects. For example, if parameter (IE) N comprises parameter (IE) M, and parameter (IE) M comprises parameter (IE) K, and parameter (IE) K comprises parameter (information element) J. Then, for example, N comprises K, and N comprises J. In an example embodiment, when one or more (or at least one) message(s) comprise a plurality of parameters, it implies that a parameter in the plurality of parameters is in at least one of the one or more messages, but does not have to be in each of the one or more messages. In an example embodiment, when one or more (or at least one) message(s) indicate a value, event and/or condition, it implies that the value, event and/or condition is indicated by at least one of the one or more messages, but does not have to be indicated by each of the one or more messages.

Furthermore, many features presented above are described as being optional through the use of "may" or the use of parentheses. For the sake of brevity and legibility, the present disclosure does not explicitly recite each and every permutation that may be obtained by choosing from the set of optional features. However, the present disclosure is to be interpreted as explicitly disclosing all such permutations. For example, a system described as having three optional features may be embodied in seven different ways, namely with just one of the three possible features, with any two of the three possible features or with all three of the three possible features.

Many of the elements described in the disclosed embodiments may be implemented as modules. A module is defined here as an element that performs a defined function and has a defined interface to other elements. The modules described in this disclosure may be implemented in hardware, software in combination with hardware, firmware, wetware (i.e. hardware with a biological element) or a combination thereof, all of which may be behaviorally equivalent. For example, modules may be implemented as a software routine written in a computer language configured to be executed by a hardware machine (such as C, C++, Fortran, Java, Basic, Matlab or the like) or a modeling/simulation program such as Simulink, Stateflow, GNU Octave, or LabVIEWMathScript. Additionally, it may be possible to implement modules using physical hardware that incorporates discrete or programmable analog, digital and/or quantum hardware. Examples of programmable hardware comprise: computers, microcontrollers, microprocessors, application-specific inte-

grated circuits (ASICs); field programmable gate arrays (FPGAs); and complex programmable logic devices (CPLDs). Computers, microcontrollers and microprocessors are programmed using languages such as assembly, C, C++ or the like. FPGAs, ASICs and CPLDs are often programmed using hardware description languages (HDL) such as VHSIC hardware description language (VHDL) or Verilog that configure connections between internal hardware modules with lesser functionality on a programmable device. The above mentioned technologies are often used in combination to achieve the result of a functional module.

The disclosure of this patent document incorporates material which is subject to copyright protection. The copyright owner has no objection to the facsimile reproduction by anyone of the patent document or the patent disclosure, as it appears in the Patent and Trademark Office patent file or records, for the limited purposes required by law, but otherwise reserves all copyright rights whatsoever.

While various embodiments have been described above, it should be understood that they have been presented by way of example, and not limitation. It will be apparent to persons skilled in the relevant art(s) that various changes in form and detail can be made therein without departing from the scope. In fact, after reading the above description, it will be apparent to one skilled in the relevant art(s) how to implement alternative embodiments. Thus, the present embodiments should not be limited by any of the above described exemplary embodiments.

In addition, it should be understood that any figures which highlight the functionality and advantages, are presented for example purposes only. The disclosed architecture is sufficiently flexible and configurable, such that it may be utilized in ways other than that shown. For example, the actions listed in any flowchart may be re-ordered or only optionally used in some embodiments.

Further, the purpose of the Abstract of the Disclosure is to enable the U.S. Patent and Trademark Office and the public generally, and especially the scientists, engineers and practitioners in the art who are not familiar with patent or legal terms or phraseology, to determine quickly from a cursory inspection the nature and essence of the technical disclosure of the application. The Abstract of the Disclosure is not intended to be limiting as to the scope in any way.

Finally, it is the applicant's intent that only claims that include the express language "means for" or "step for" be interpreted under 35 U.S.C. § 112. Claims that do not expressly include the phrase "means for" or "step for" are not to be interpreted under 35 U.S.C. § 112.

What is claimed is:

1. A method comprising:

receiving downlink control information (DCI) comprising one or more fields set to one or more values;

validating, based on the one or more values, the DCI as an activation or a release of a configured grant of a bandwidth part (BWP) of BWPs of a cell; and

transmitting, based on validating the DCI, a confirmation of the receiving the DCI, wherein the confirmation comprises:

an identifier of the BWP; and

an identifier of a sub-band of a plurality of sub-bands of the BWP.

2. The method of claim **1**, wherein the configured grant is for the sub-band of the BWP.

3. The method of claim **2**, wherein the sub-band is a listen-before-talk sub-band.

4. The method of claim **1**, wherein the confirmation further comprises an identifier of the cell.

5. The method of claim **1**, wherein the confirmation further comprises an identifier of the configured grant.

6. The method of claim **1**, wherein the confirmation is a medium-access control control element (MAC CE).

7. The method of claim **1**, wherein the confirmation further comprises a bitmap, wherein one or more bits of the bitmap correspond to one or both of the identifier of the BWP and the identifier of the sub-band.

8. A wireless device, comprising:

one or more processors; and

a memory coupled to the one or more processors and configured to store instructions that, when executed by the one or more processors, cause the wireless device to:

receive downlink control information (DCI) comprising one or more fields set to one or more values;

validate, based on the one or more values, the DCI as an activation or a release of a configured grant of a bandwidth part (BWP) of BWPs of a cell; and

transmit, based on validating the DCI, a confirmation of receiving the DCI, wherein the confirmation comprises:

an identifier of the BWP; and

an identifier of a sub-band of a plurality of sub-bands of the BWP.

9. The wireless device of claim **8**, wherein the configured grant is for the sub-band of the BWP.

10. The wireless device of claim **9**, wherein the sub-band is a listen-before-talk sub-band.

11. The wireless device of claim **8**, wherein the confirmation further comprises an identifier of the cell.

12. The wireless device of claim **8**, wherein the confirmation further comprises an identifier of the configured grant.

13. The wireless device of claim **8**, wherein the confirmation is a medium-access control control element (MAC CE).

14. The wireless device of claim **8**, wherein the confirmation further comprises one or more bits of a bitmap corresponding to one or both of the identifier of the BWP and the identifier of the sub-band.

15. A non-transitory computer-readable medium comprising instructions that, when executed by one or more processors of a wireless device, cause the wireless device to:

receive downlink control information (DCI) comprising one or more fields set to one or more values;

validate, based on the one or more values, the DCI as an activation or a release of a configured grant of a bandwidth part (BWP) of BWPs of a cell; and

transmit, based on validating the DCI, a confirmation of receiving the DCI, wherein the confirmation comprises:

an identifier of the BWP; and

an identifier of a sub-band of a plurality of sub-bands of the BWP.

16. The non-transitory computer-readable medium of claim **15**, wherein the configured grant is for the sub-band of the BWP.

17. The non-transitory computer-readable medium of claim **16**, wherein the sub-band is a listen-before-talk sub-band.

18. The non-transitory computer-readable medium of claim **15**, wherein the confirmation further comprises an identifier of the cell.

19. The non-transitory computer-readable medium of claim **15**, wherein the confirmation further comprises an identifier of the configured grant.

20. The non-transitory computer-readable medium of claim **15**, wherein the confirmation is a medium-access control control element (MAC CE).

* * * * *