US 20250262407A1

(19) United States
(12) Patent Application Publication
TILSON et al.
(10) Pub. No.: US 2025/0262407 A1
(43) Pub. Date: Aug. 21, 2025

(54) **METHODS OF PERFORMING VASCULAR PROCEDURES USING A RIGIDIZING DEVICE**

(71) Applicant: **Neptune Medical Inc.**, Burlingame, CA (US)

(72) Inventors: **Alexander Q. TILSON**, Burlingame, CA (US); **Stephen J. MORRIS**, Sunnyvale, CA (US); **Garrett J. GOMES**, San Mateo, CA (US); **Adam S. WIGGINTON**, Sunnyvale, CA (US); **Mark C. SCHEEFF**, San Francisco, CA (US); **Charles S. LOVE**, Santa Barbara, CA (US)

(21) Appl. No.: **19/192,242**

(22) Filed: **Apr. 28, 2025**

Related U.S. Application Data

(60) Continuation of application No. 18/809,322, filed on Aug. 19, 2024, now Pat. No. 12,285,571, which is a continuation of application No. 18/751,188, filed on Jun. 21, 2024, which is a continuation of application No. 18/343,561, filed on Jun. 28, 2023, which is a division of application No. 17/902,770, filed on Sep. 2, 2022, now Pat. No. 11,724,065, which is a continuation of application No. 17/493,785, filed on Oct. 4, 2021, now Pat. No. 11,478,608, which is a continuation of application No. 17/152,706, filed on Jan. 19, 2021, now Pat. No. 11,135,398, which is a continuation of application No. PCT/US2019/042650, filed on Jul. 19, 2019.

(60) Provisional application No. 62/835,101, filed on Apr. 17, 2019, provisional application No. 62/854,199, filed on May 29, 2019, provisional application No. 62/780,820, filed on Dec. 17, 2018, provisional application No. 62/700,760, filed on Jul. 19, 2018.

Publication Classification

(51) **Int. Cl.**

A61M 25/00	(2006.01)
A61B 1/00	(2006.01)
A61M 25/01	(2006.01)
A61M 25/09	(2006.01)

(52) **U.S. Cl.**

CPC ***A61M 25/005*** (2013.01); ***A61M 25/0102*** (2013.01); ***A61M 25/0147*** (2013.01); *A61B 1/00078* (2013.01); *A61B 1/00135* (2013.01); *A61M 2025/0063* (2013.01); *A61M 2025/015* (2013.01); *A61M 2025/0915* (2013.01)

(57) **ABSTRACT**

A rigidizing device includes an elongate flexible tube, a braid layer positioned over the elongate flexible tube, an outer layer over the flexible tube and the braid layer, and an inlet between the elongate flexible tube and the outer layer and configured to attach to a source of vacuum or pressure. The braid layer has a plurality of strands braided together at a braid angle of 5-40 degrees relative to a longitudinal axis of the elongate flexible tube when the elongate flexible tube is straight. The rigidizing device is configured to have a rigid configuration when vacuum or pressure is applied through the inlet and a flexible configuration when vacuum or pressure is not applied through the inlet. The braid angle is configured to change as the rigidizing device bends when the rigidizing device is in the flexible configuration.

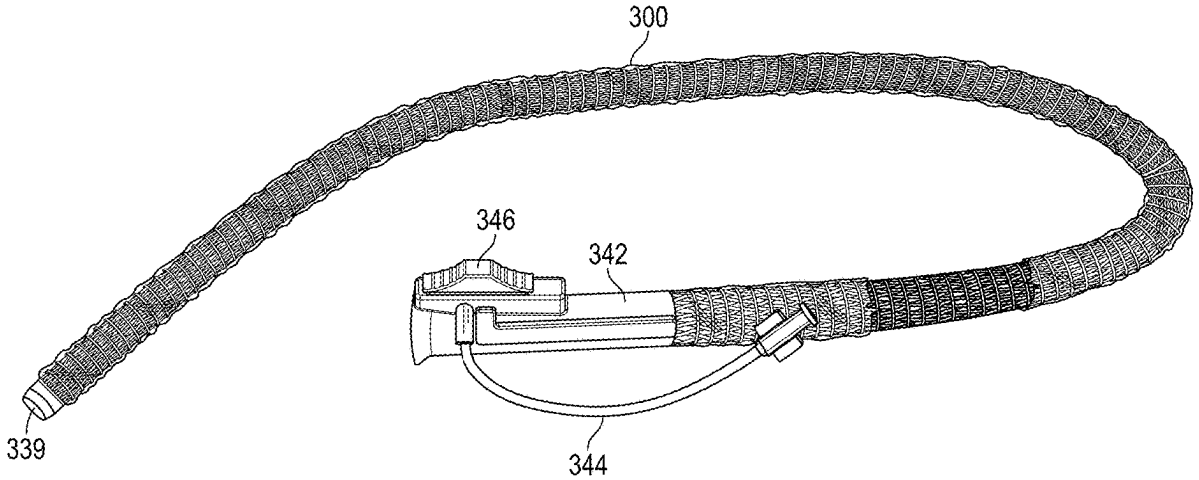

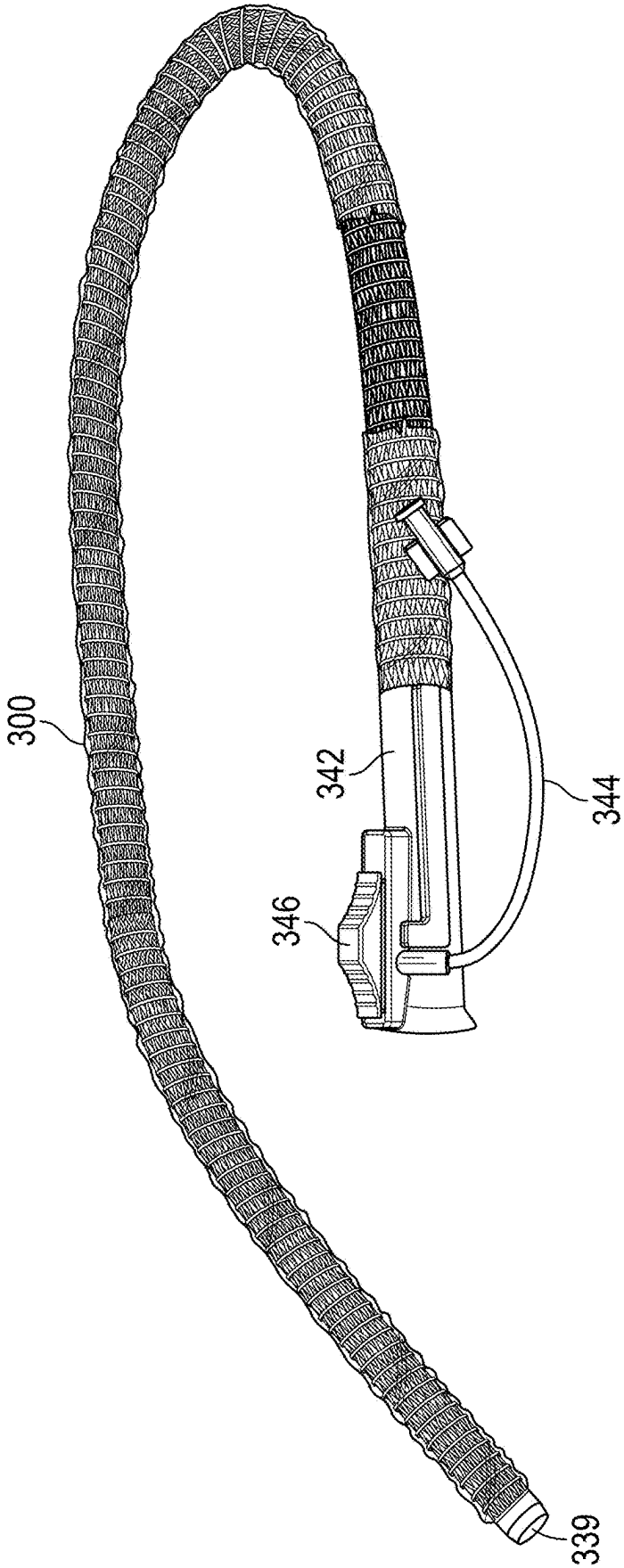

FIG. 1

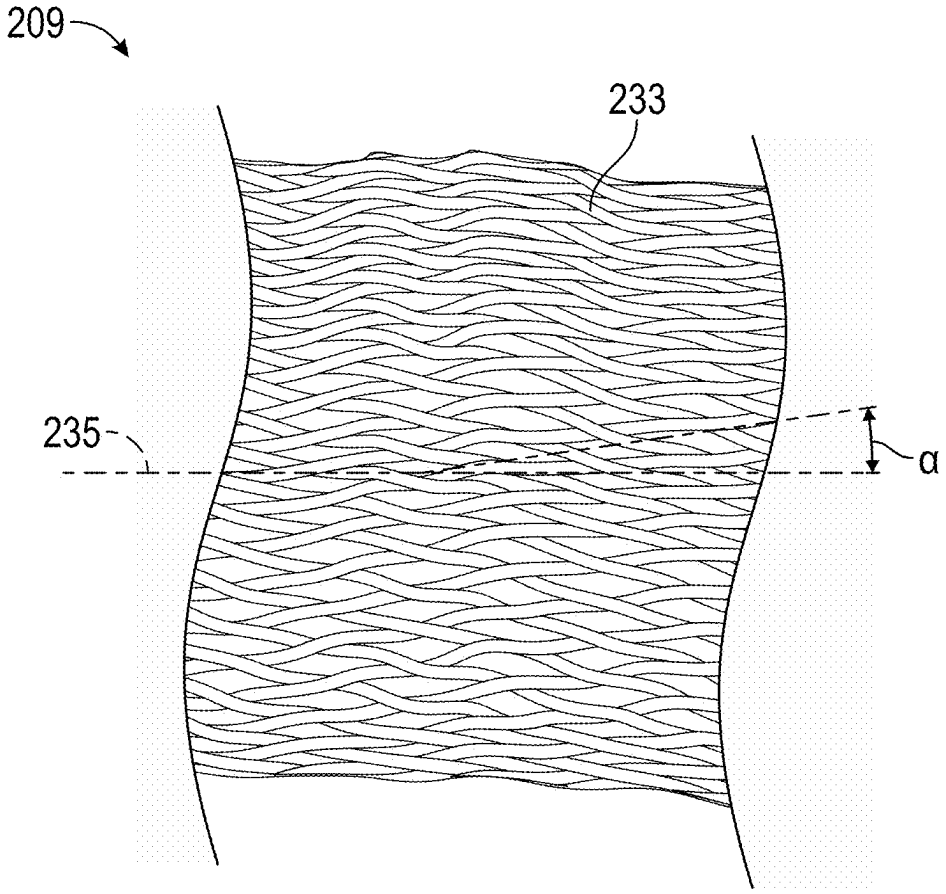

FIG. 2A

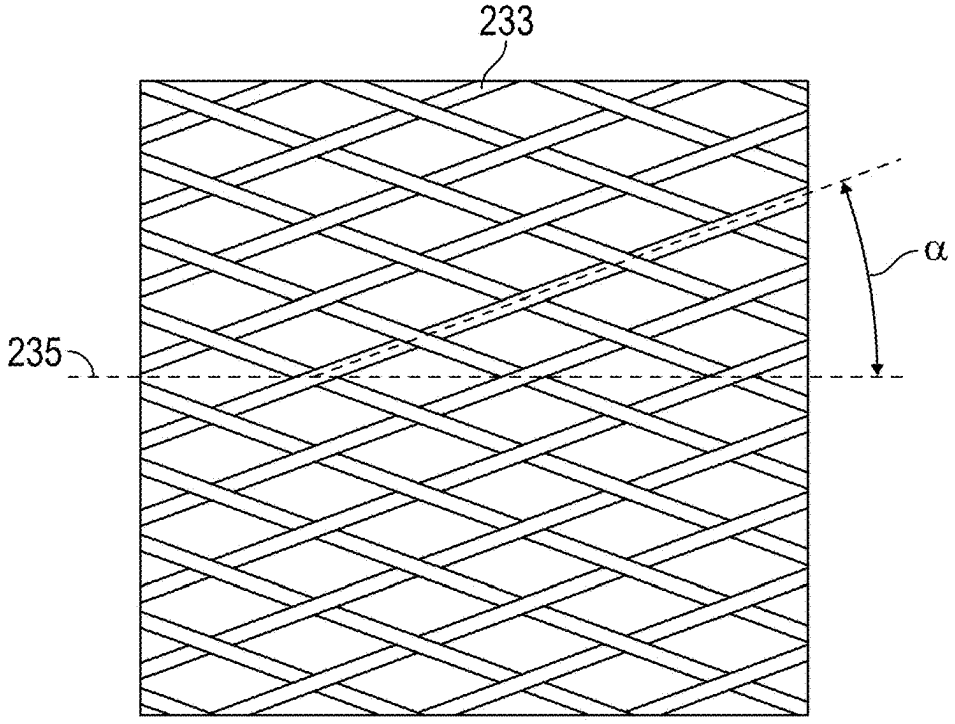
233
α
235

FIG. 2B

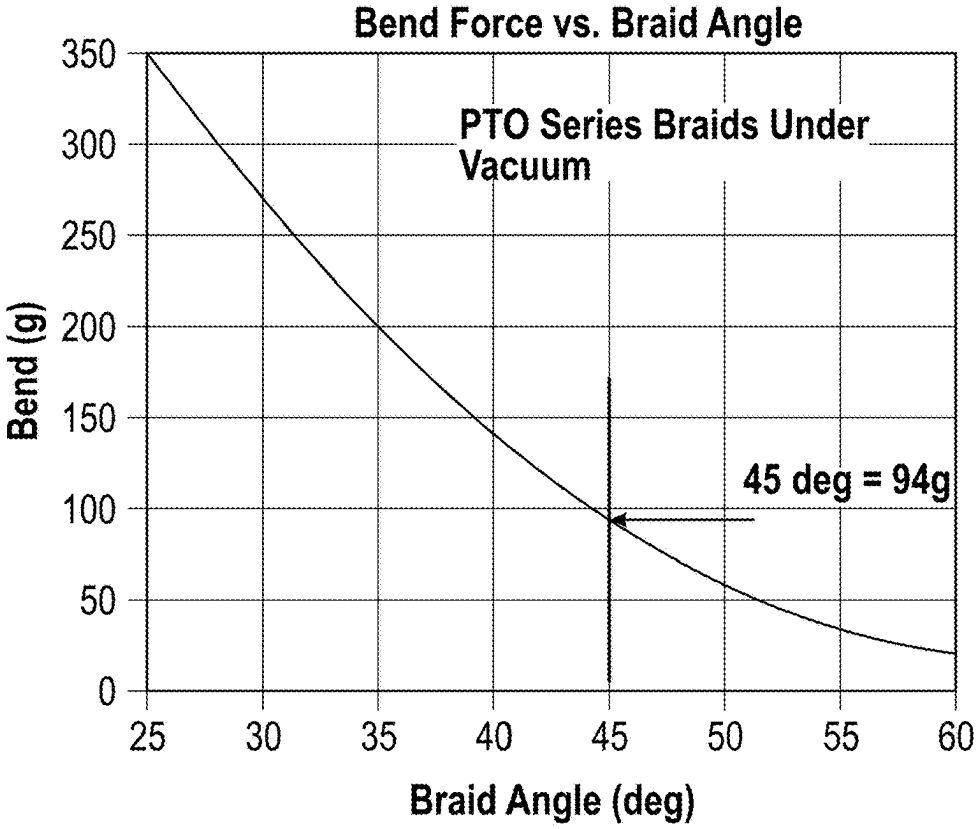
Bend Force vs. Braid Angle
PTO Series Braids Under Vacuum
45 deg = 94g
Bend (g)
350
300
250
200
150
100
50
0
25
30
35
40
45
50
55
60
Braid Angle (deg)

FIG. 3

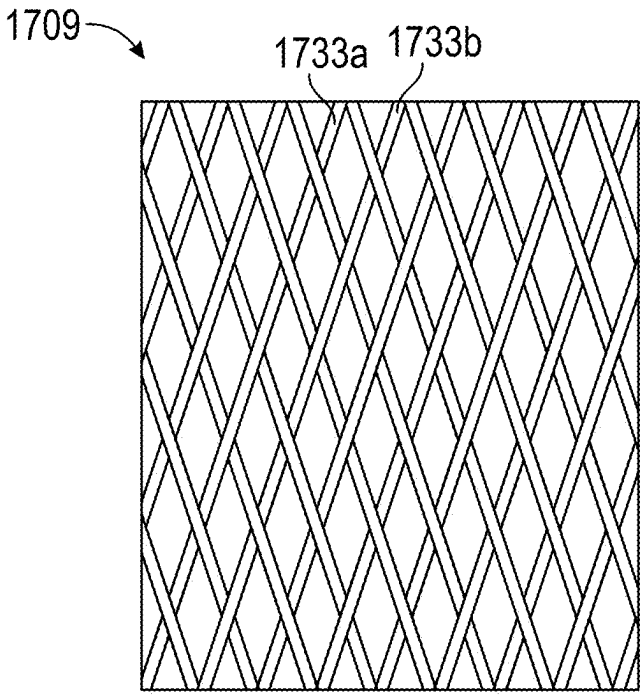

FIG. 4A

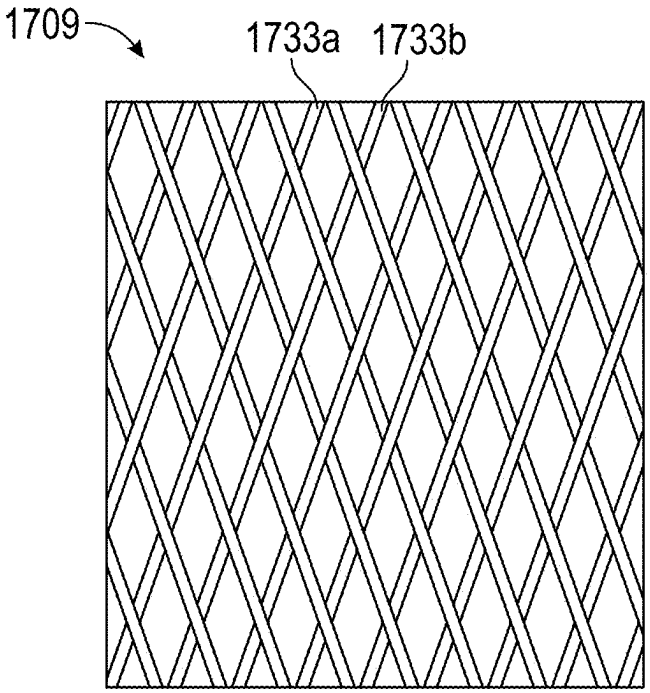

FIG. 4B

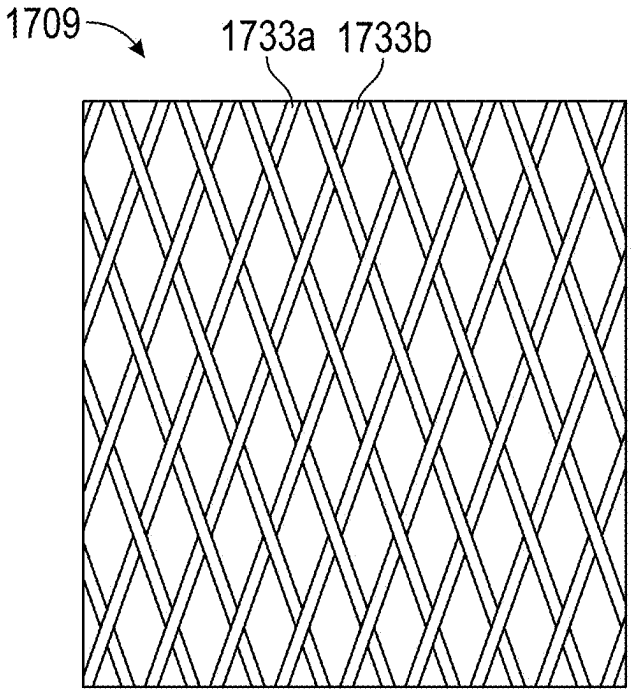

FIG. 4C

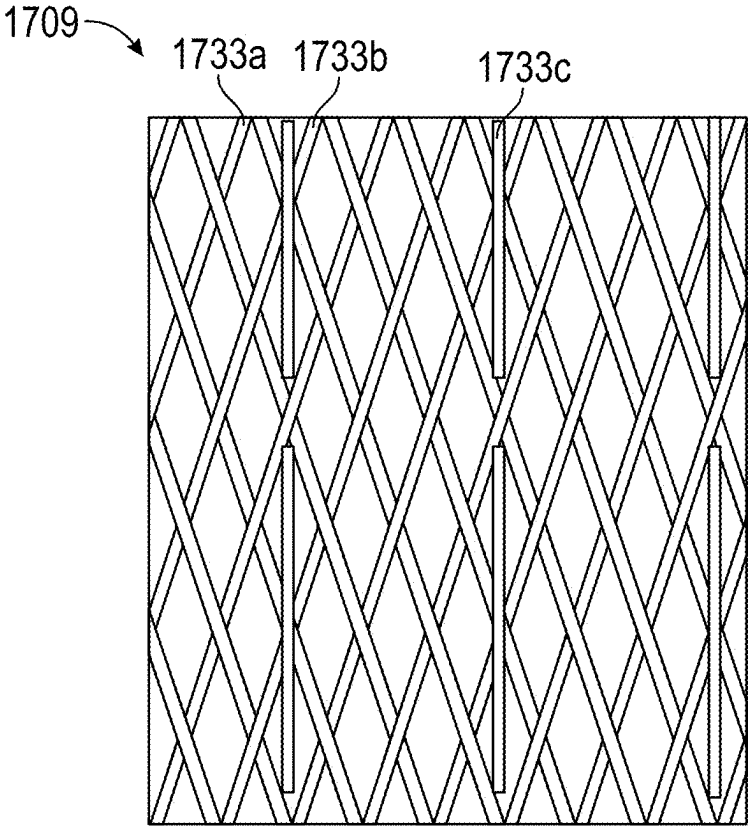

FIG. 4D

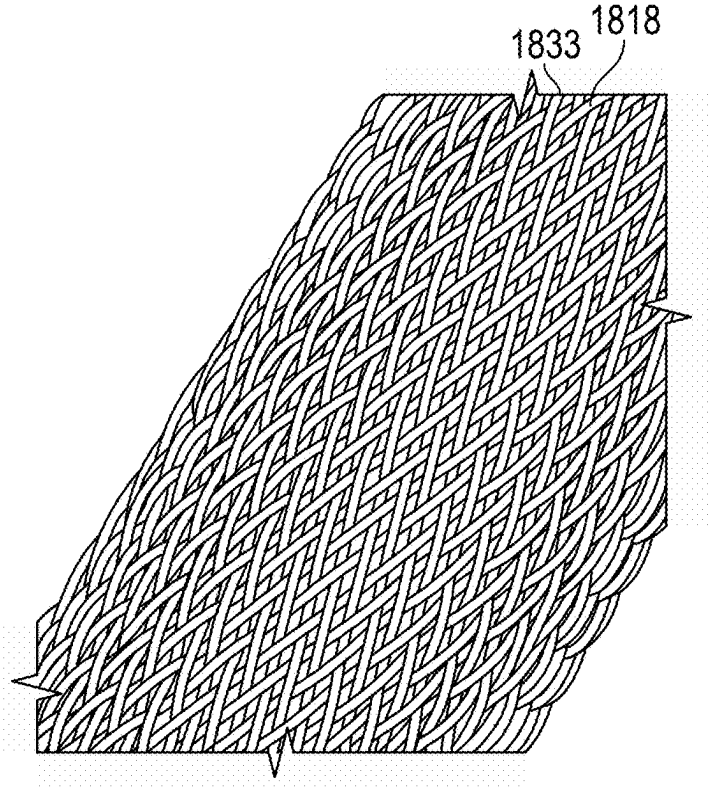

FIG. 5A

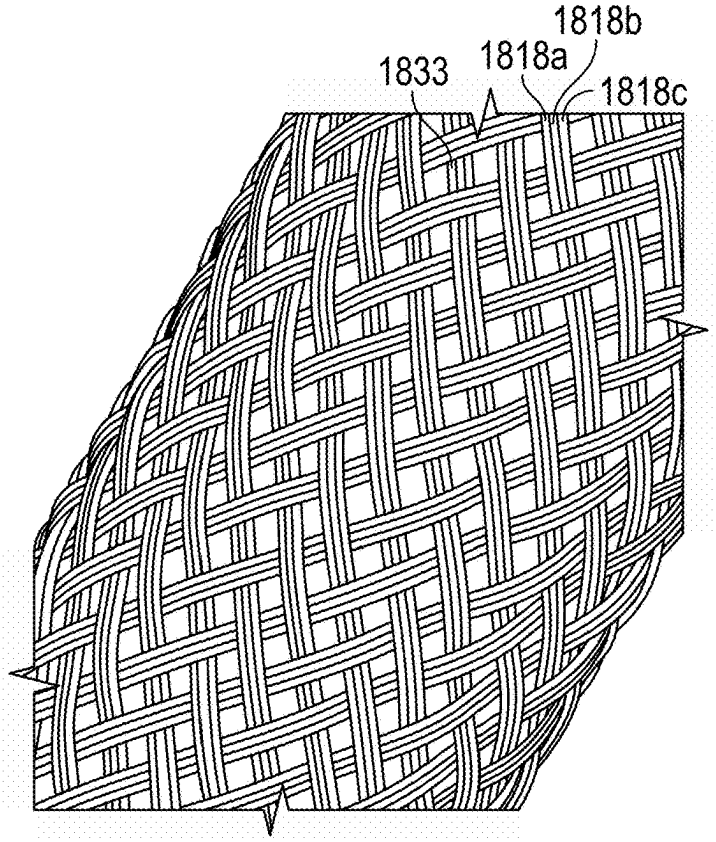

FIG. 5B

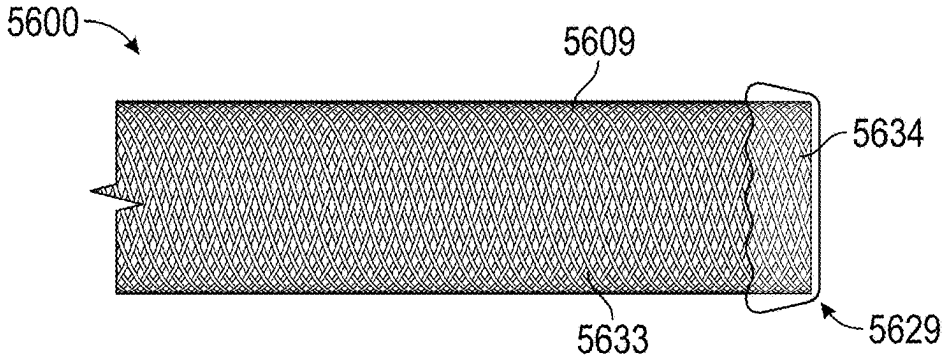

FIG. 6A

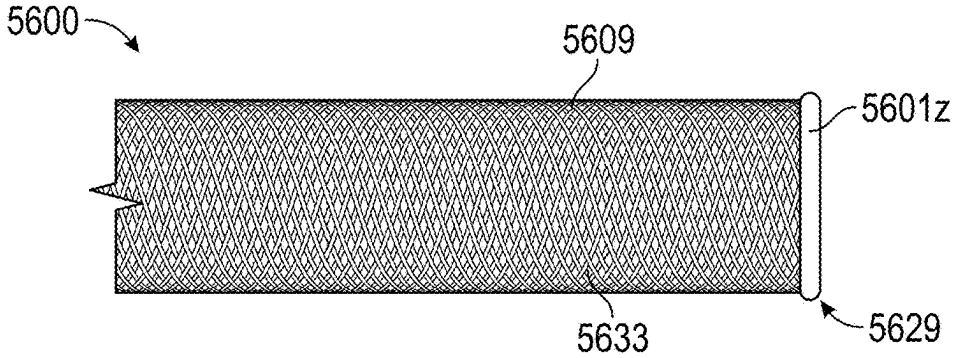

FIG. 6B

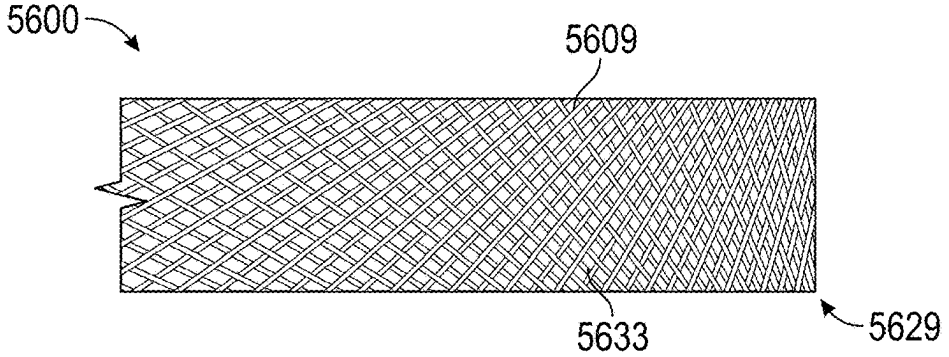

FIG. 6C

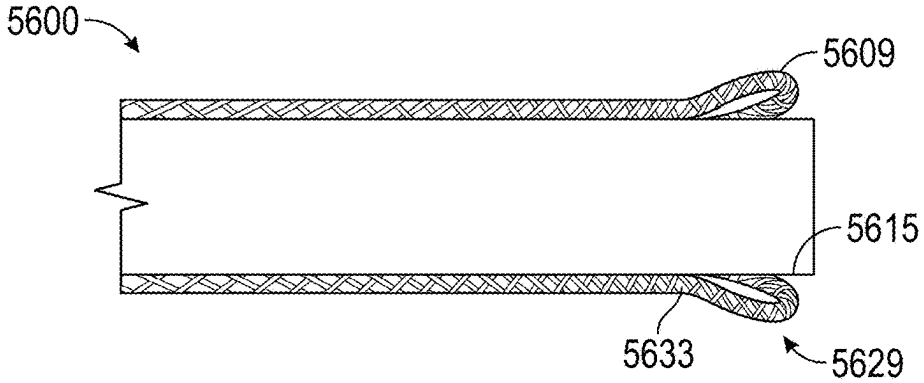

FIG. 6D

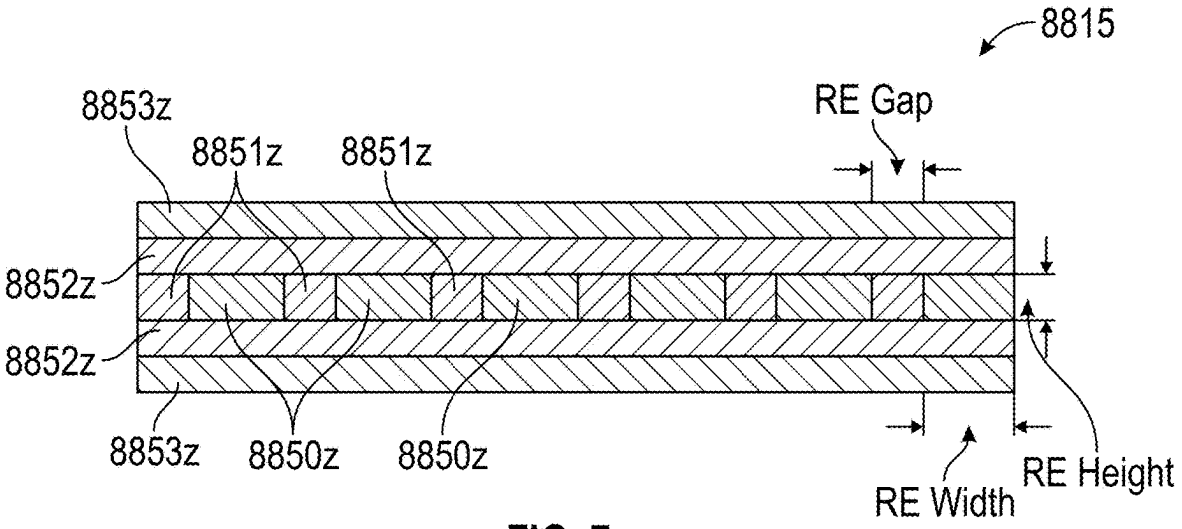
8815
RE Gap
8853z
8851z
8851z
8852z
8852z
8853z
8850z
8850z
RE Width
RE Height

FIG. 7

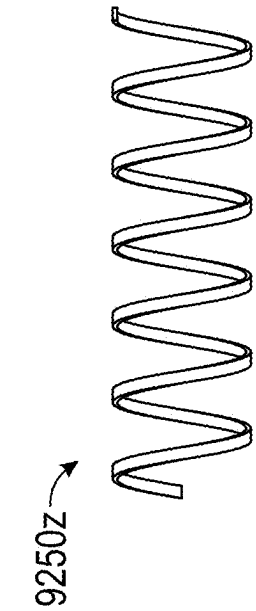

FIG. 8A

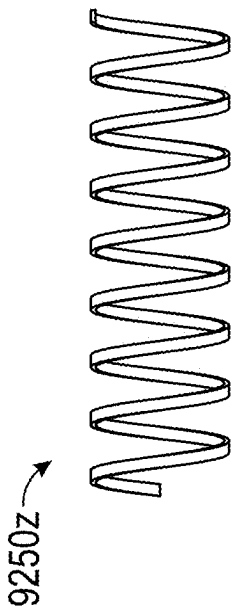

FIG. 8B

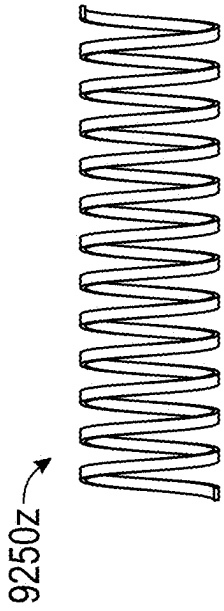

FIG. 8C

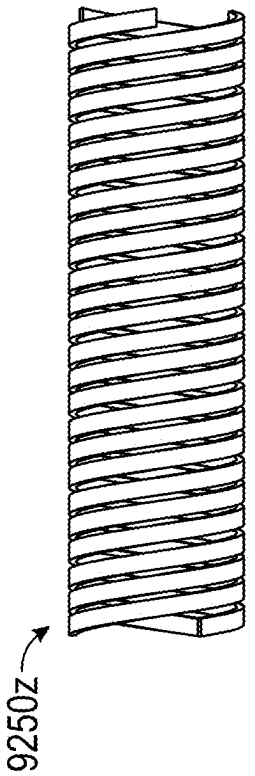

FIG. 8D

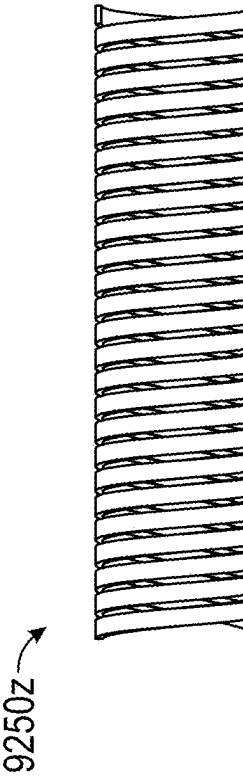

FIG. 8E

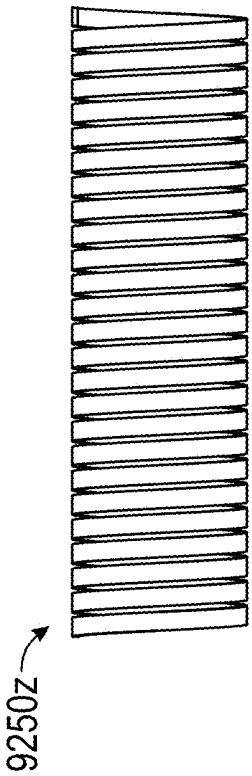

FIG. 8F

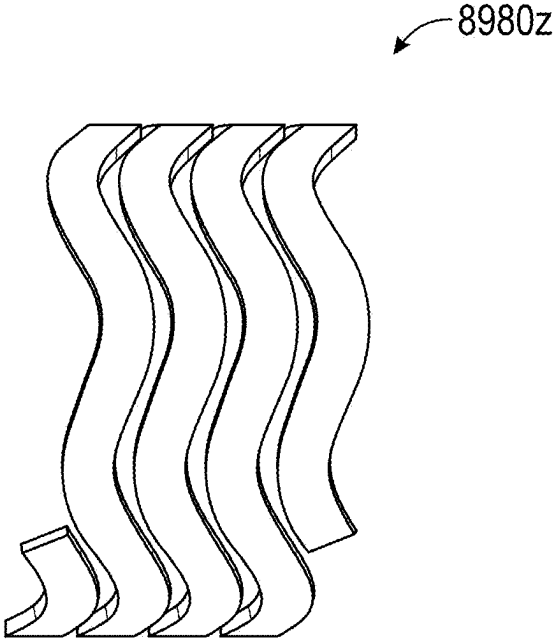

FIG. 9A

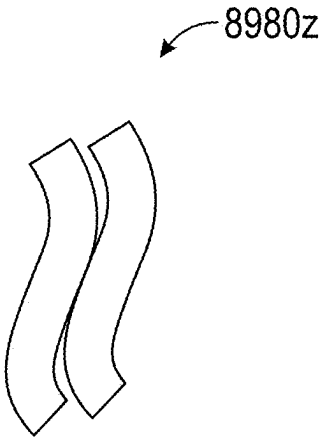

FIG. 9B

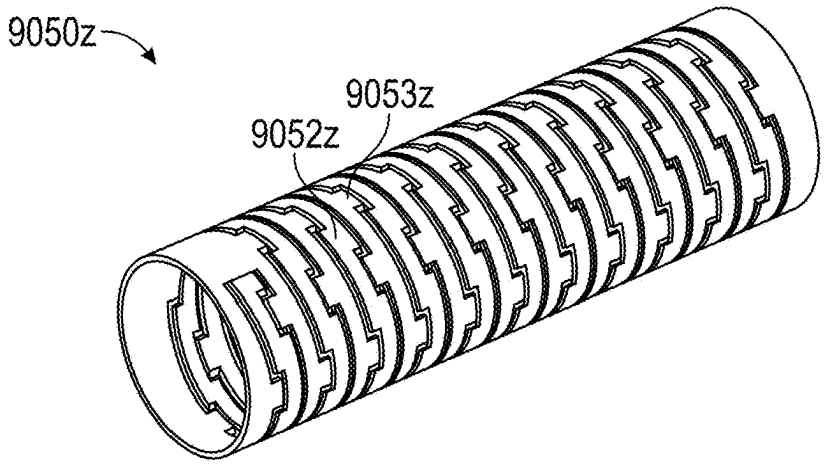

FIG. 10A

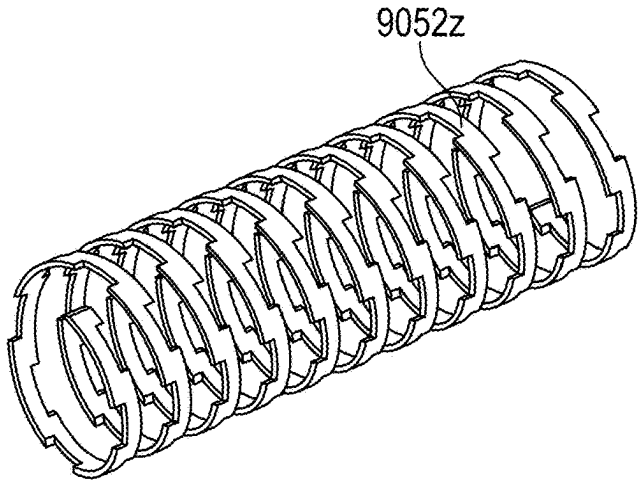

FIG. 10B

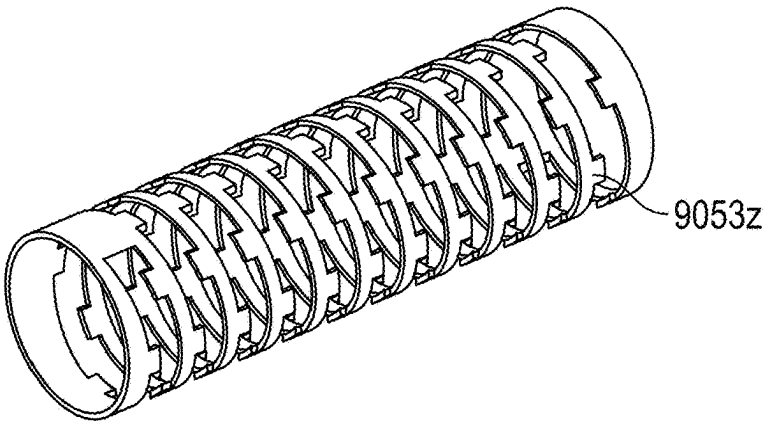

FIG. 10C

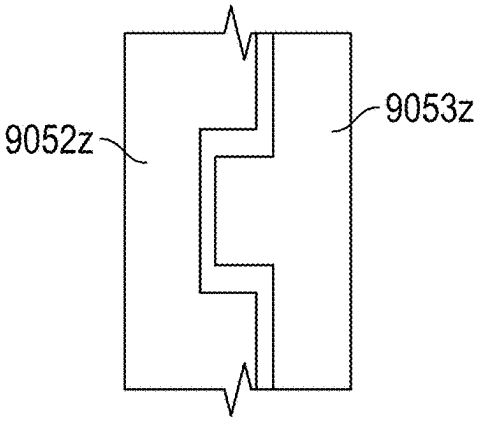

FIG. 10D

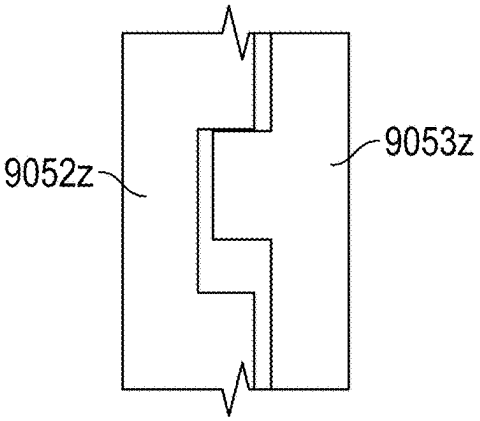

FIG. 10E

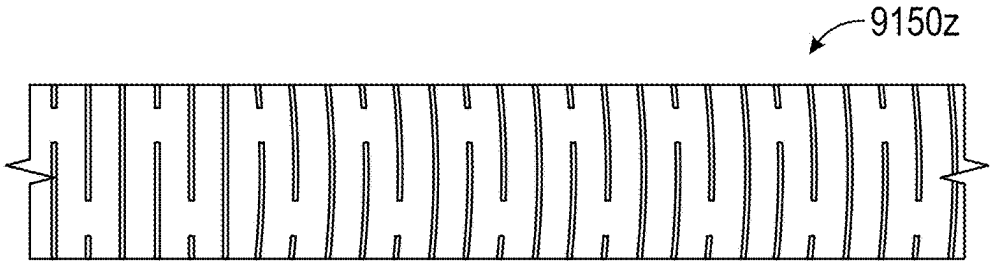

FIG. 11A

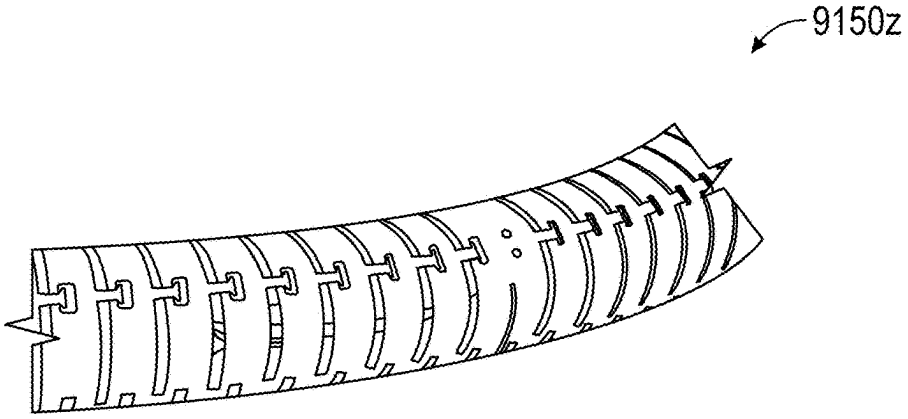

FIG. 11B

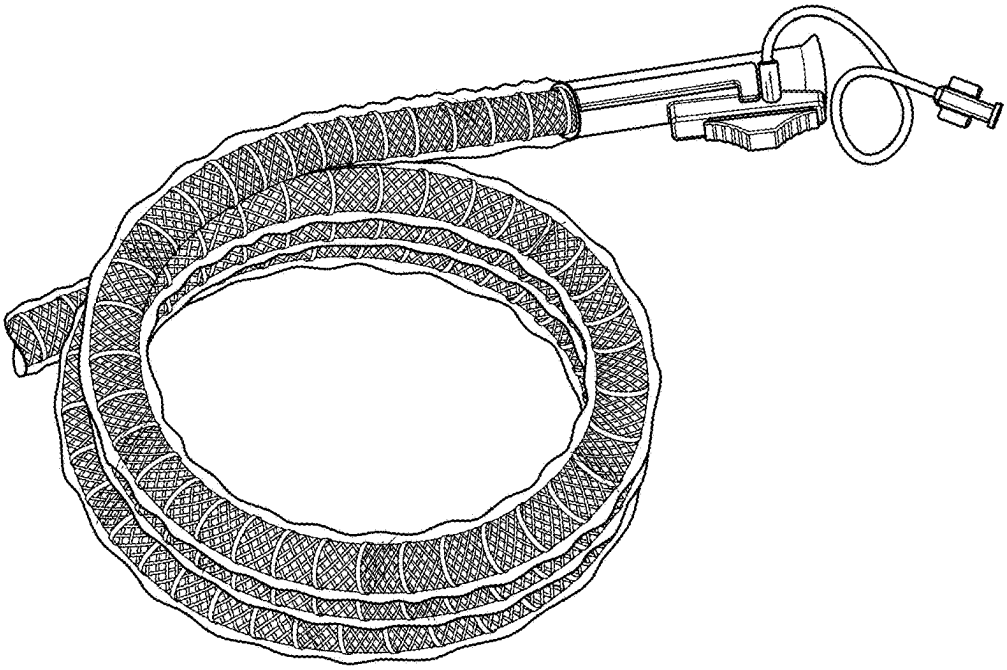

FIG. 12A

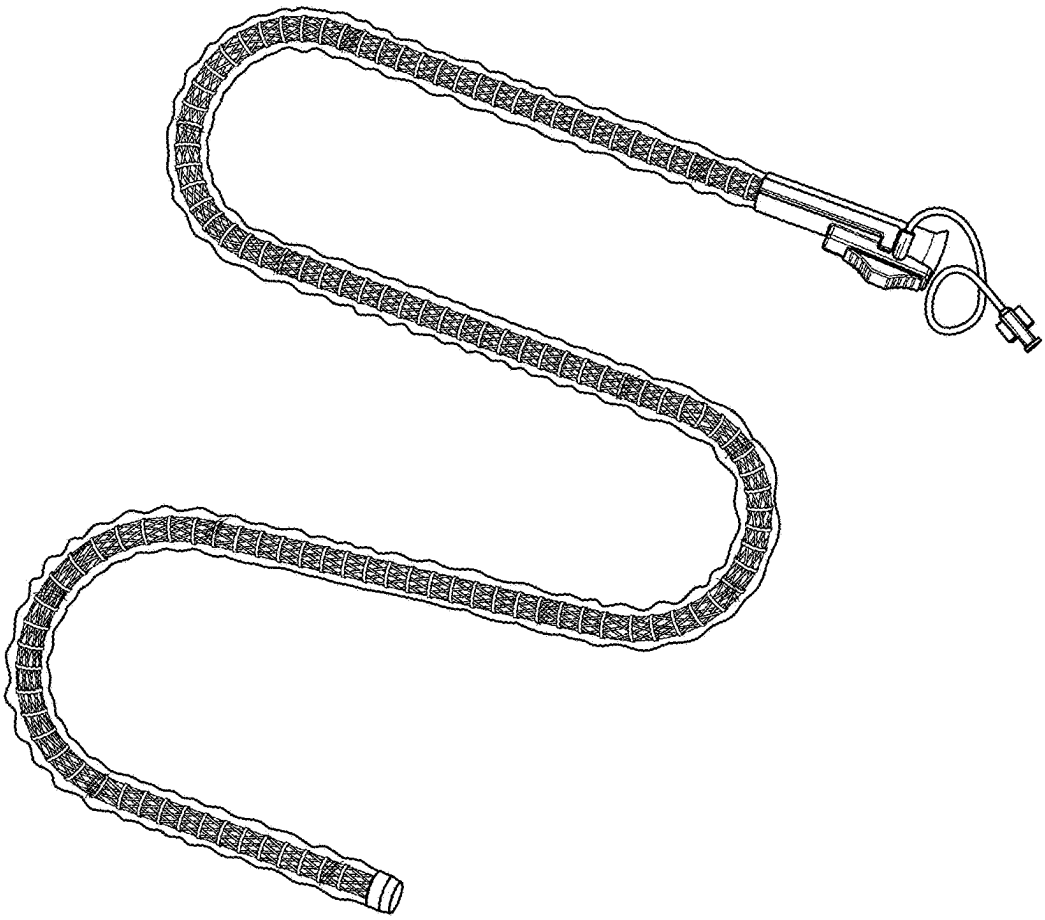

FIG. 12B

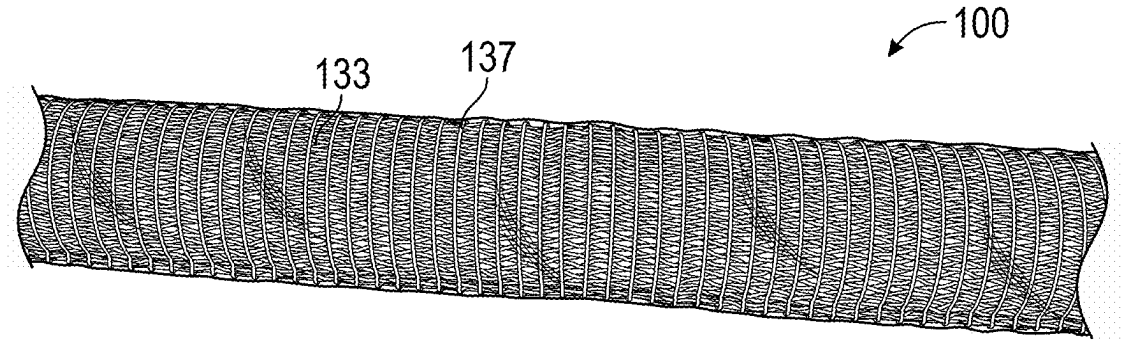

FIG. 13A

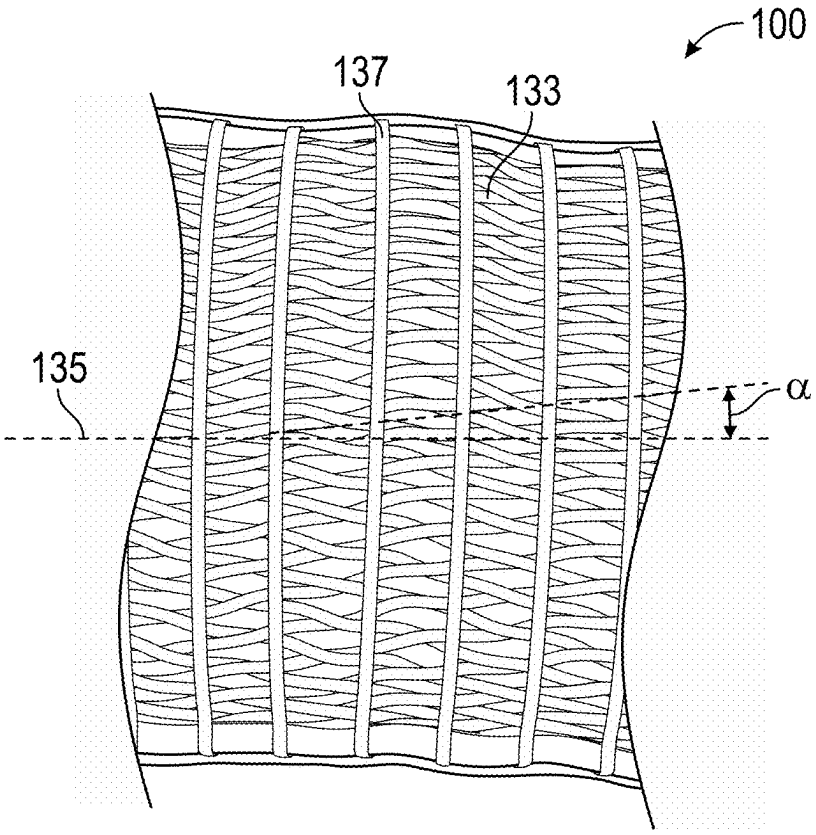

FIG. 13B

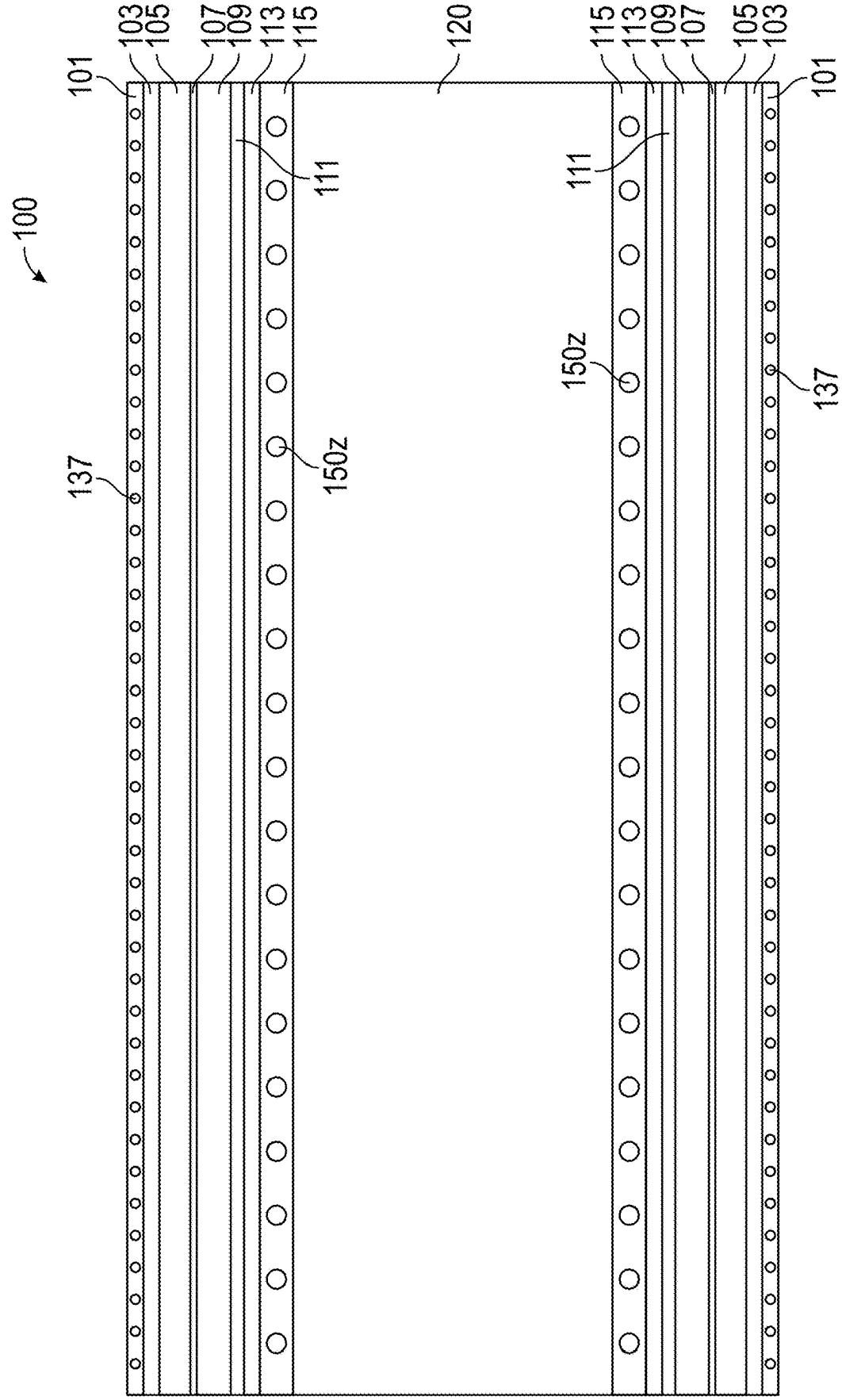

FIG. 13C

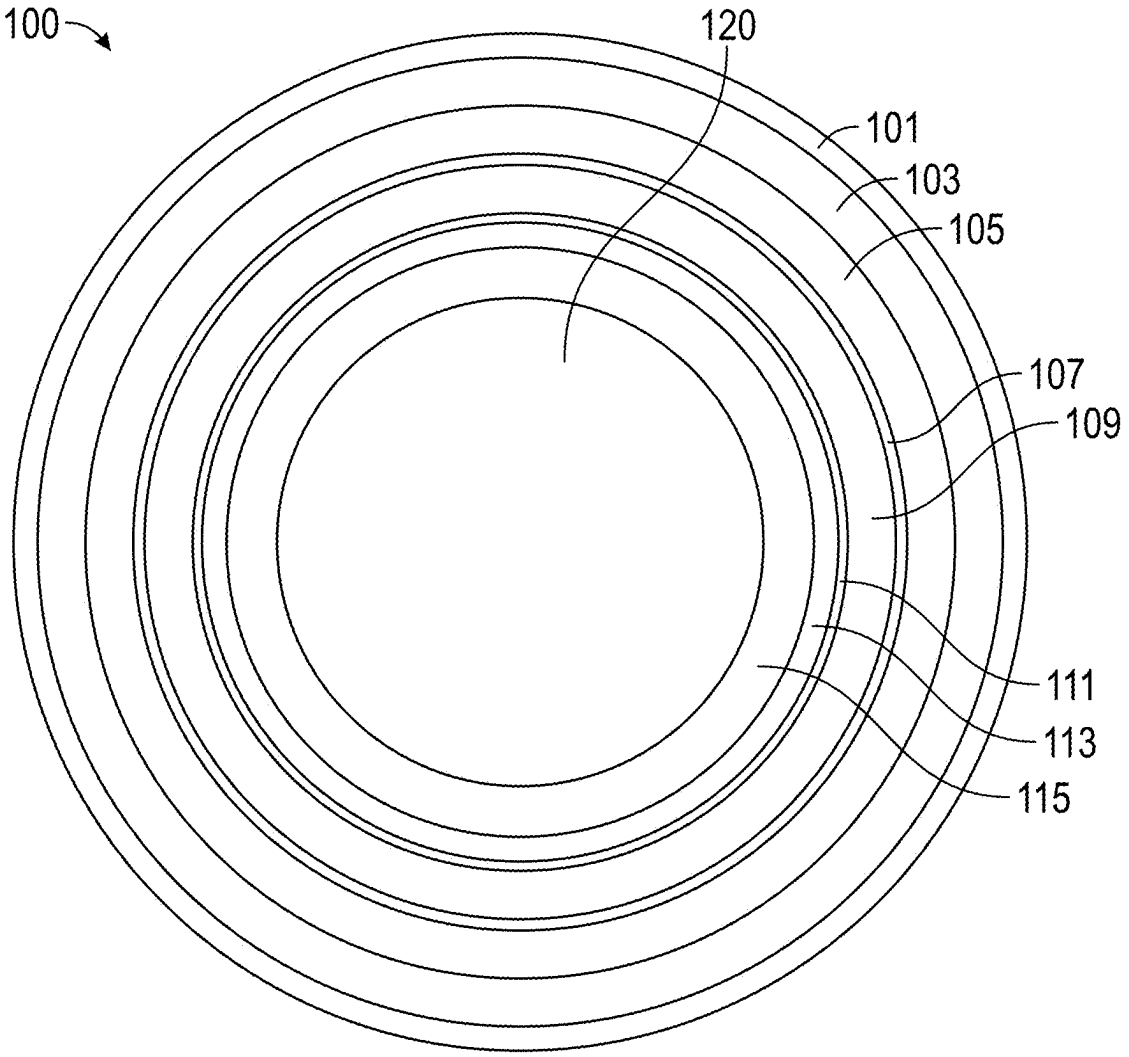

FIG. 13D

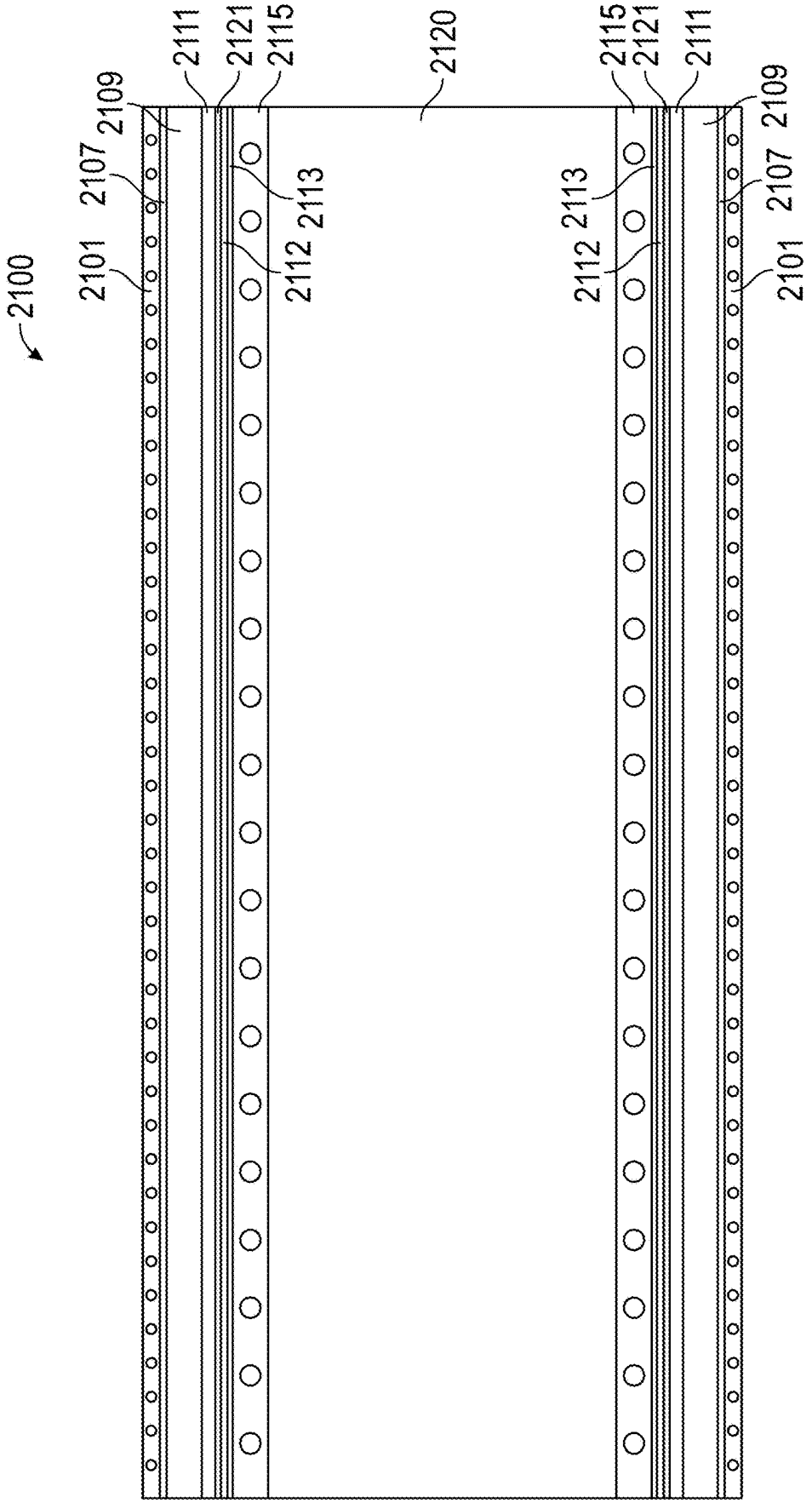
2100
2101
2107
2109
2111
2121
2115
2112
2113
2120
2113
2112
2115
2121
2111
2109
2107
2101

FIG. 14A

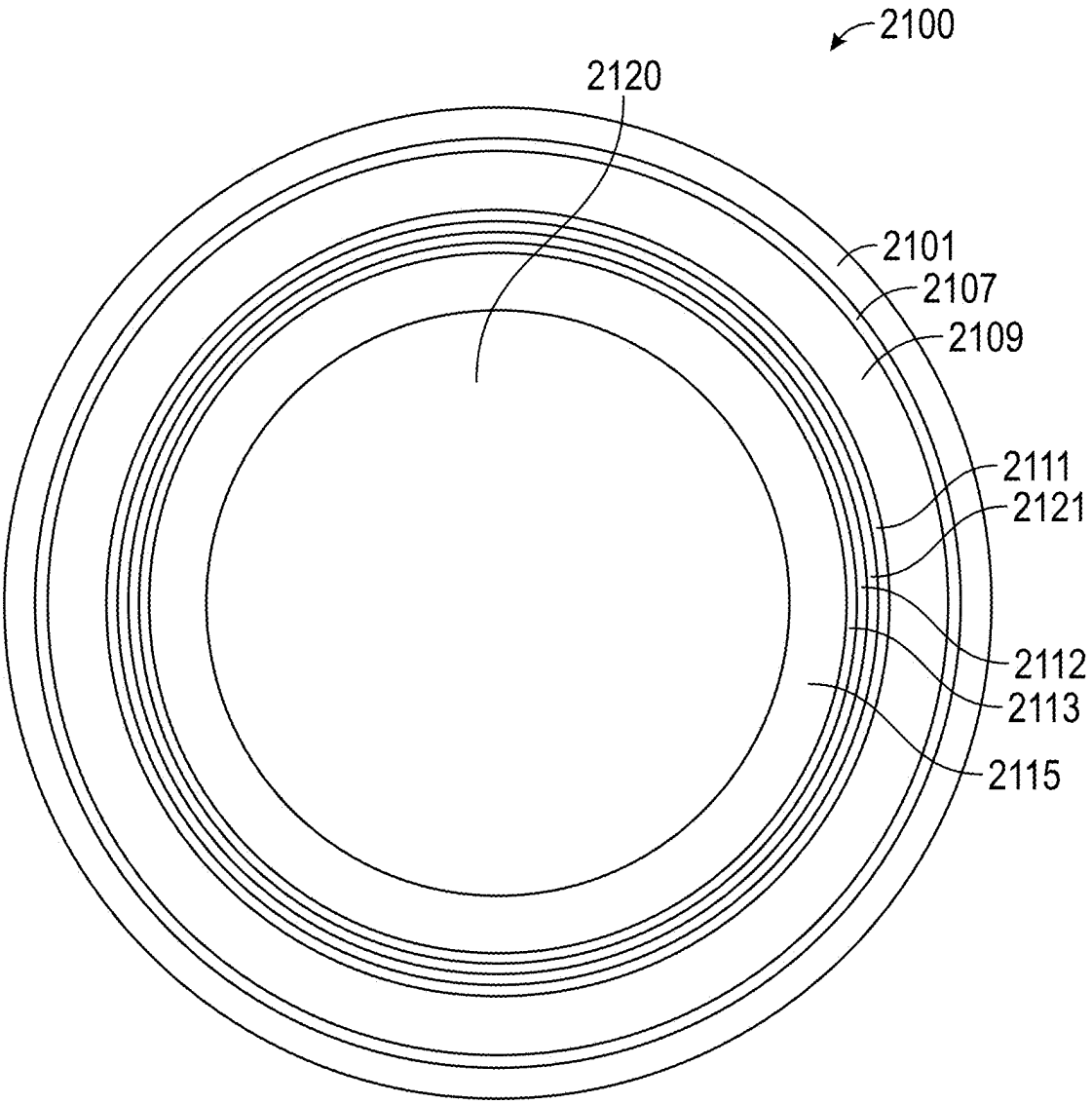

FIG. 14B

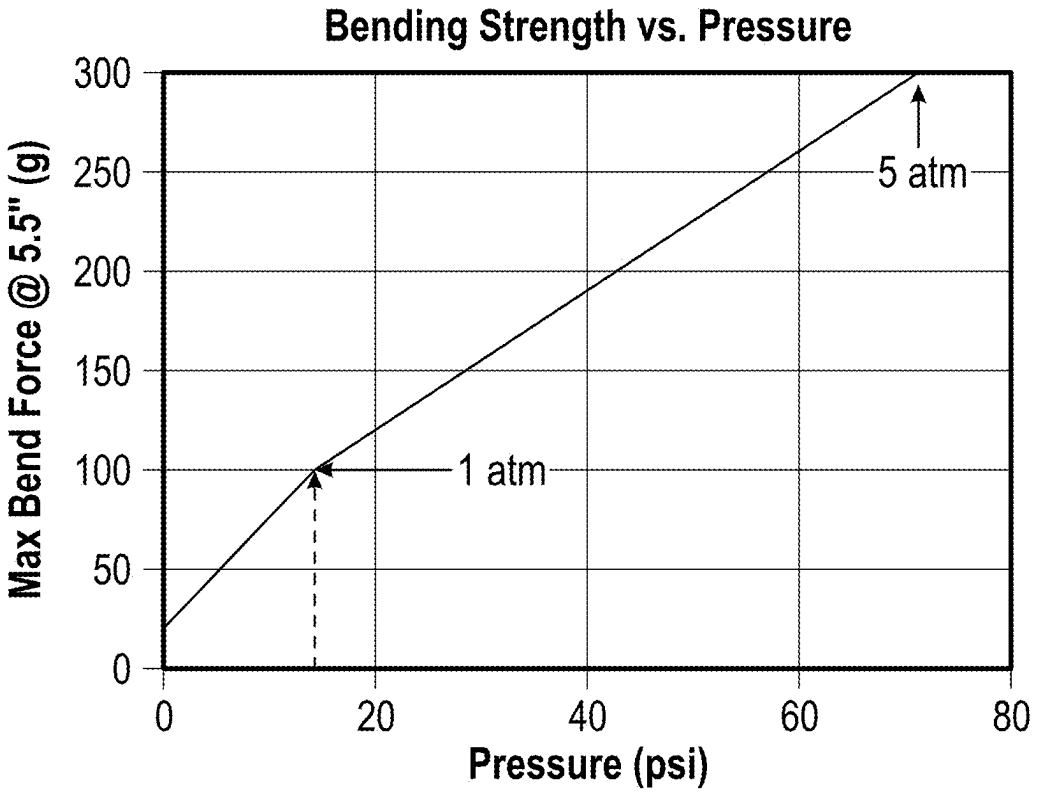
Bending Strength vs. Pressure
Max Bend Force @ 5.5" (g)
300
250
200
150
100
50
0
5 atm
1 atm
0
20
40
60
80
Pressure (psi)

FIG. 15

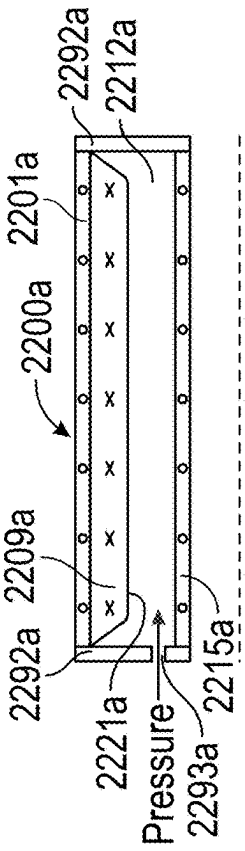

FIG. 16A

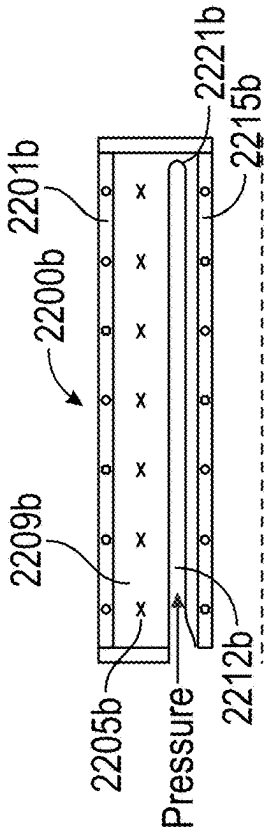

FIG. 16B

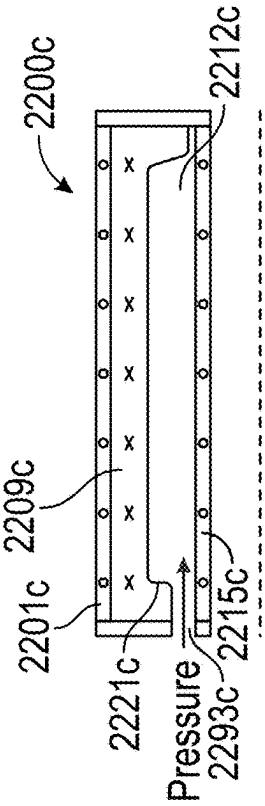

FIG. 16C

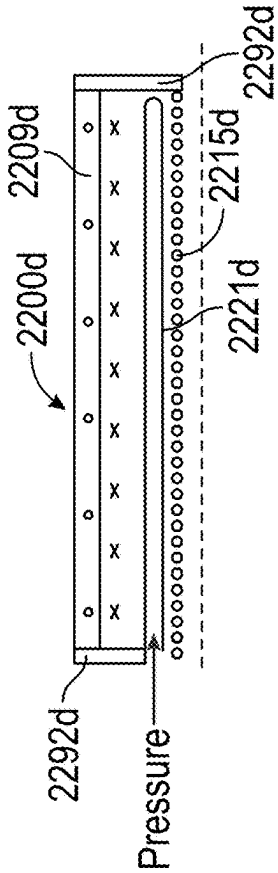

FIG. 16D

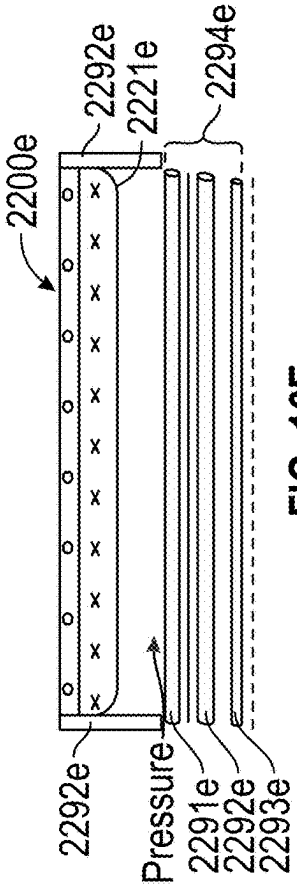

FIG. 16E

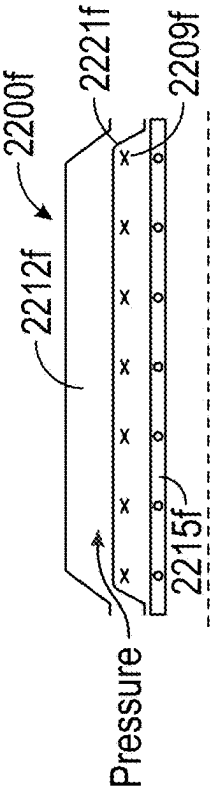

FIG. 16F

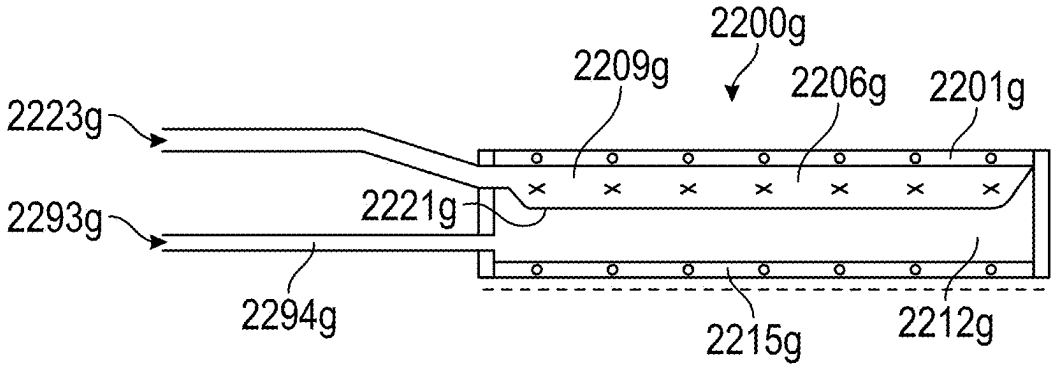

FIG. 16G

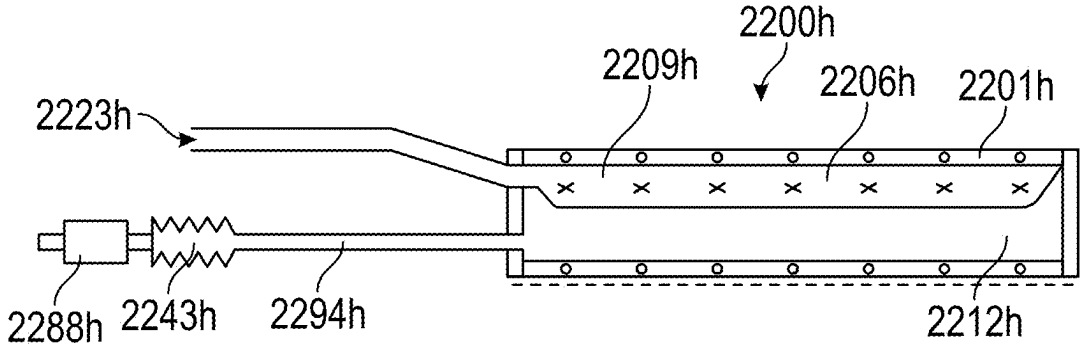

FIG. 16H

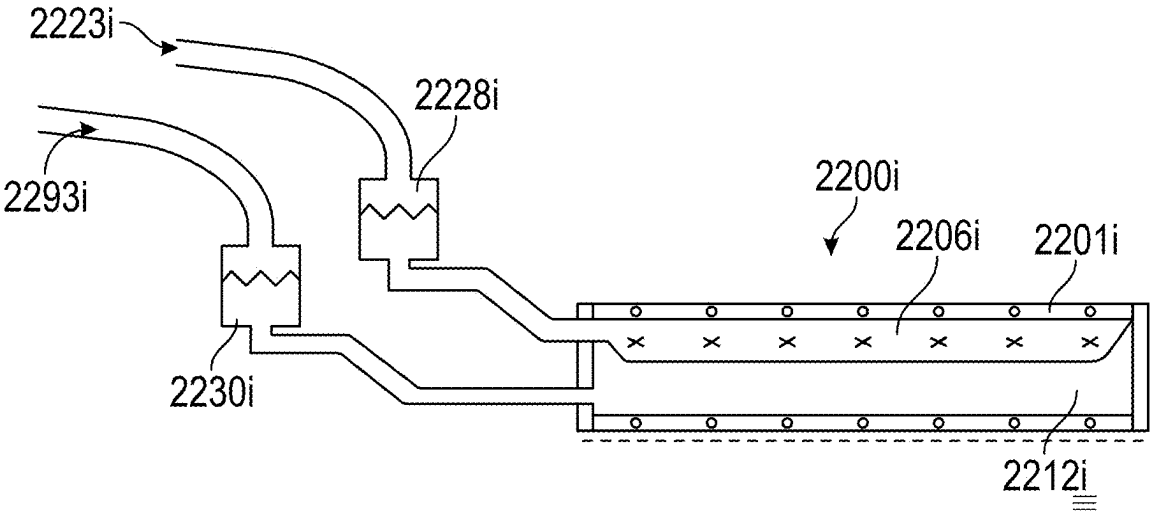

FIG. 16I

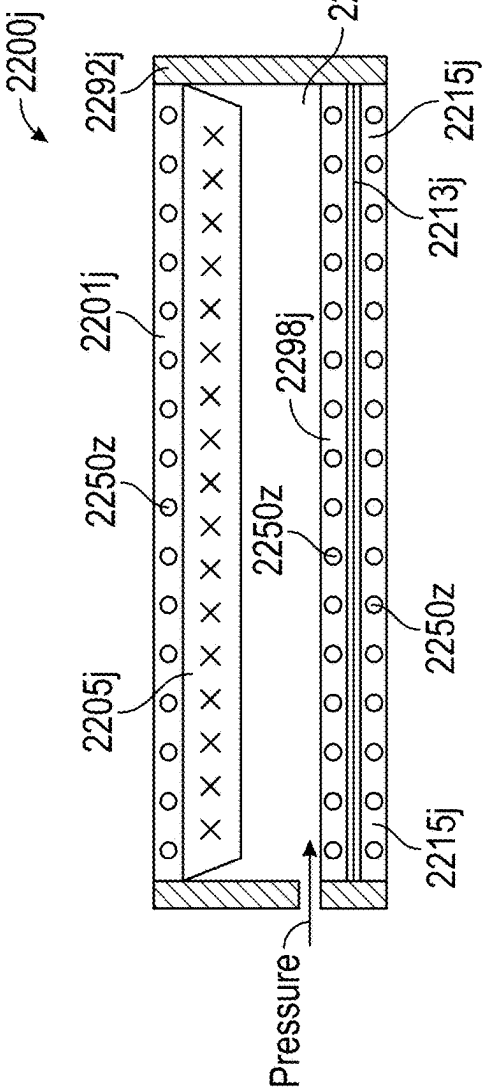

FIG. 16J

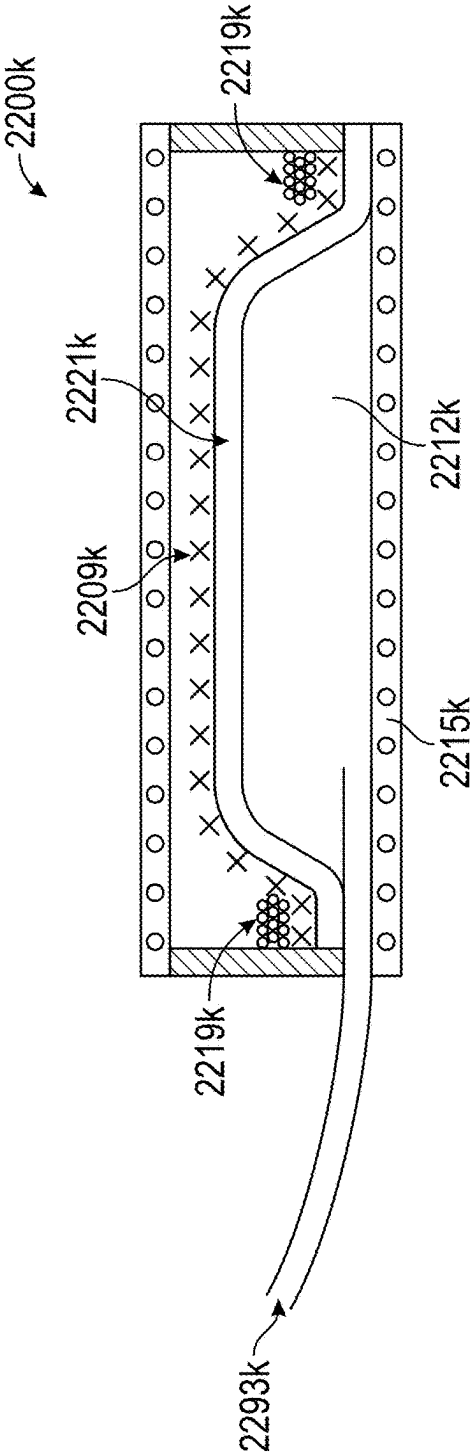

FIG. 16K

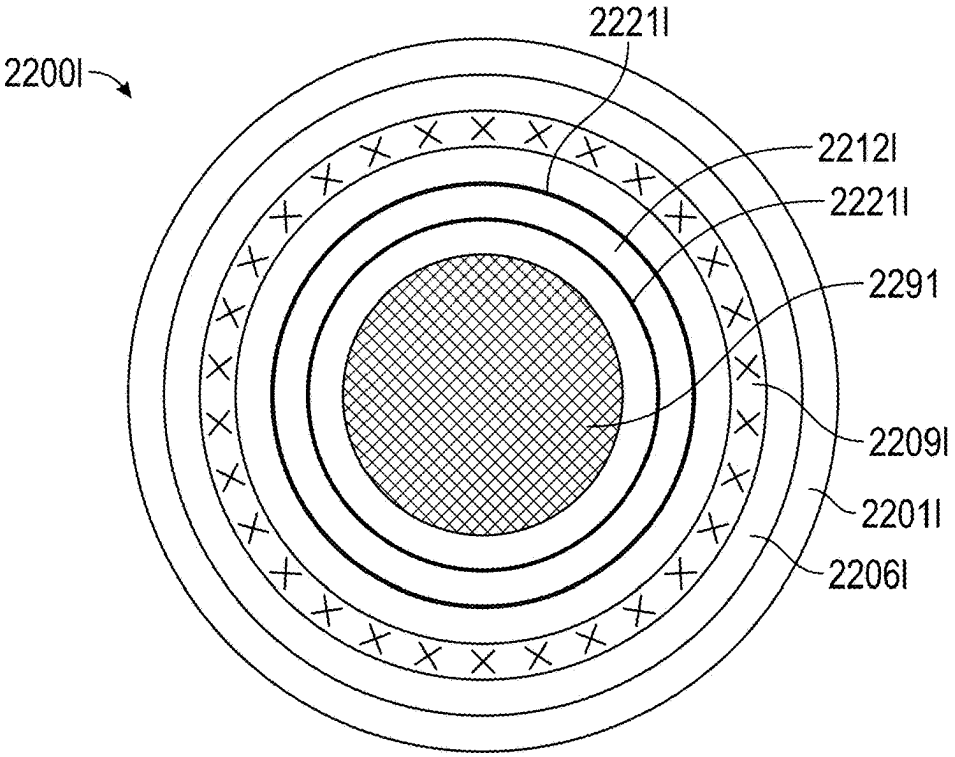

FIG. 16L

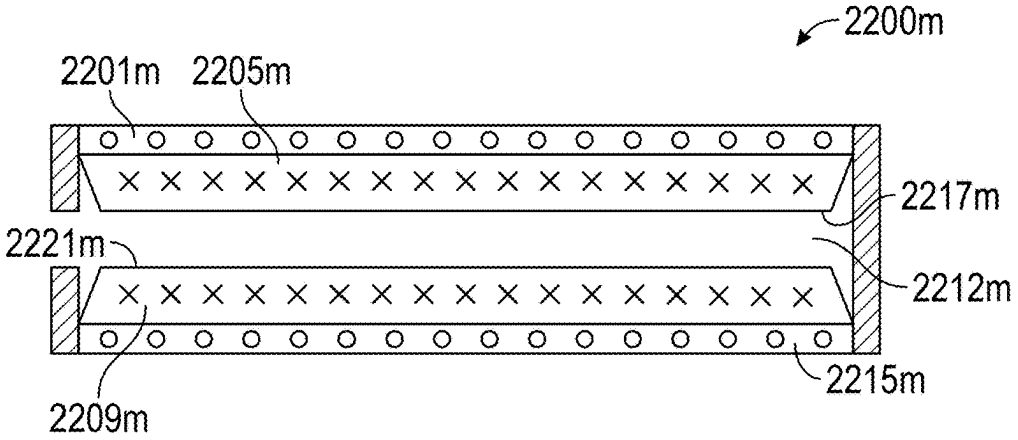

FIG. 16M

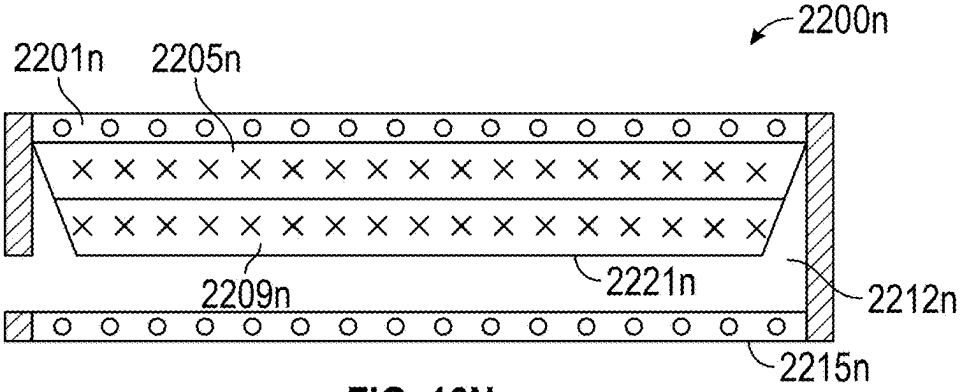

FIG. 16N

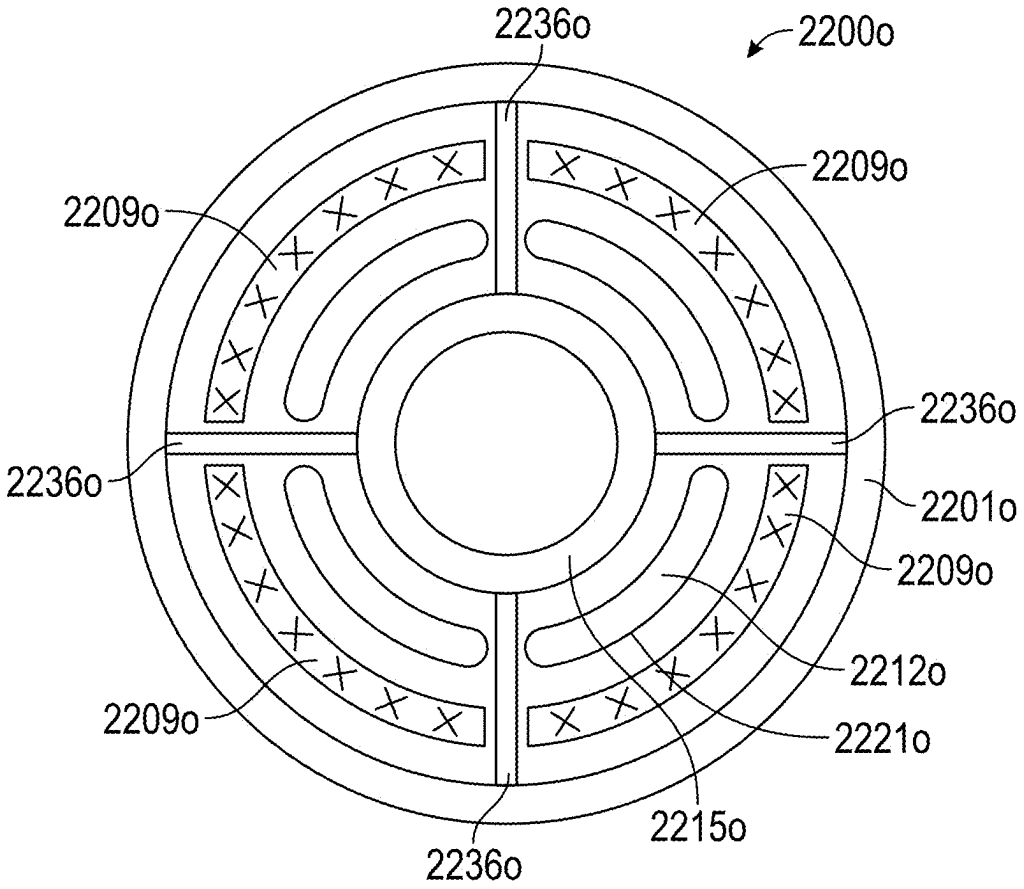
2236o
2200o
2209o
2209o
2236o
2236o
2201o
2209o
2212o
2209o
2221o
2215o
2236o

FIG. 16O

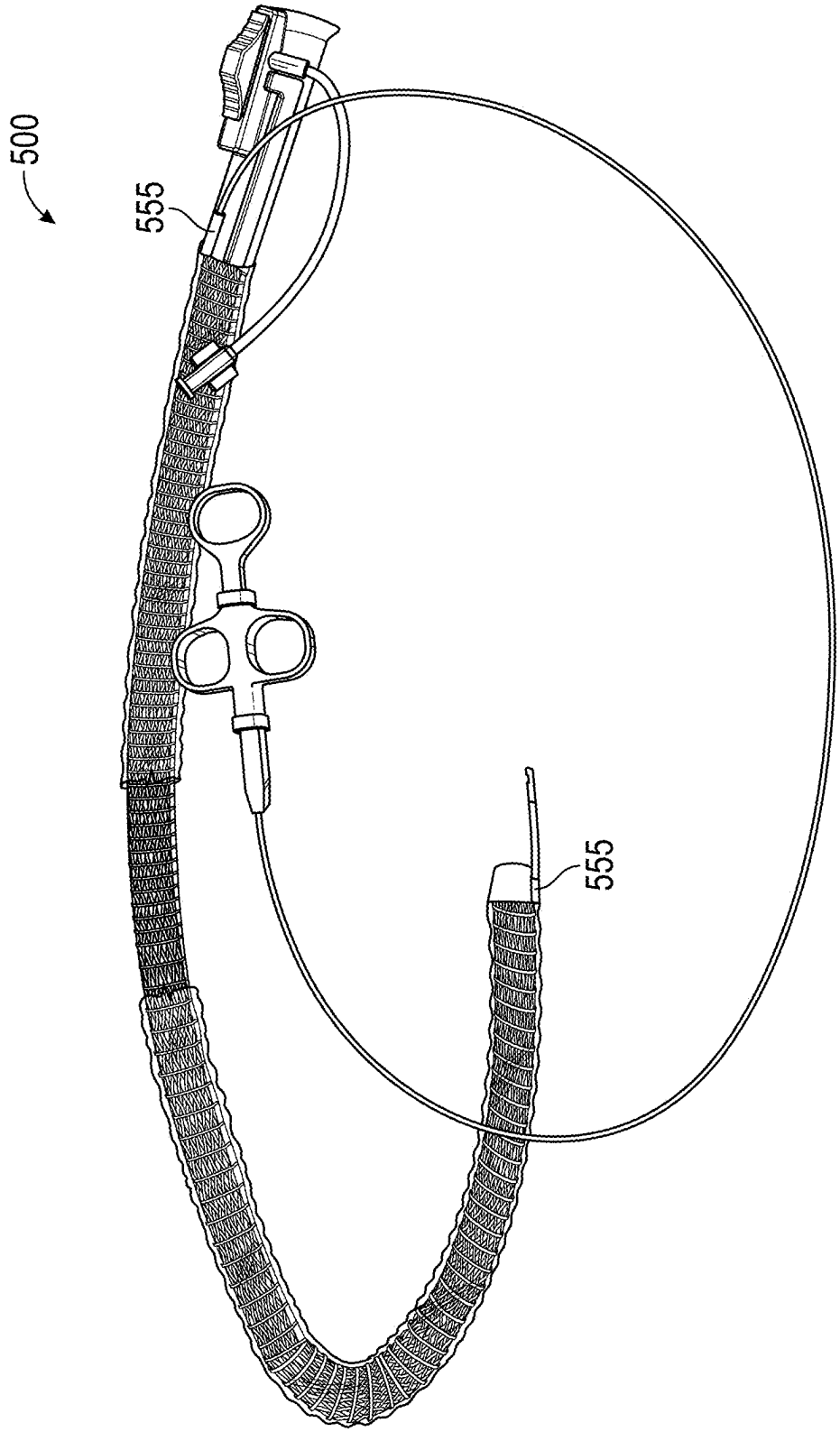

FIG. 17A

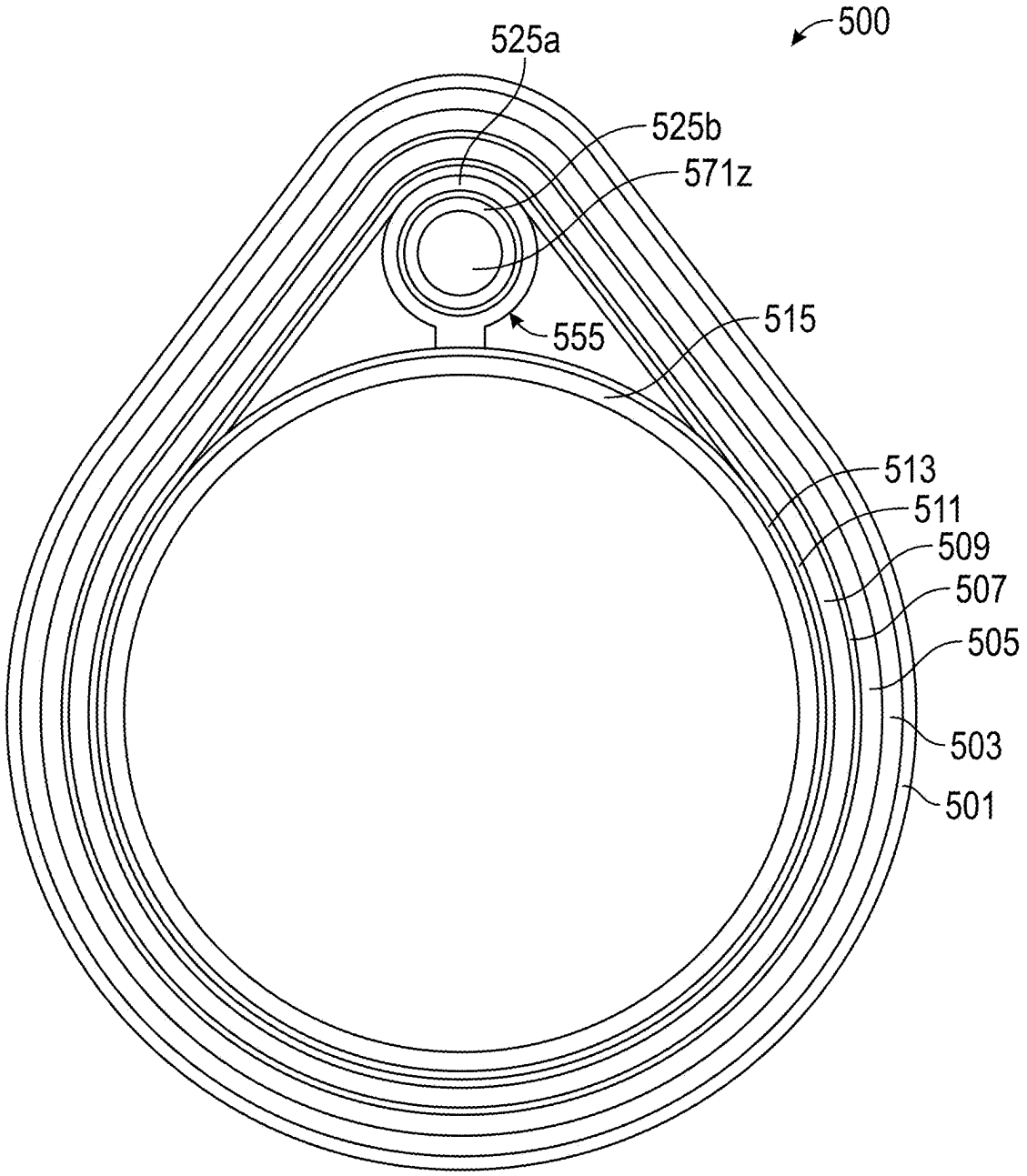

FIG. 17B

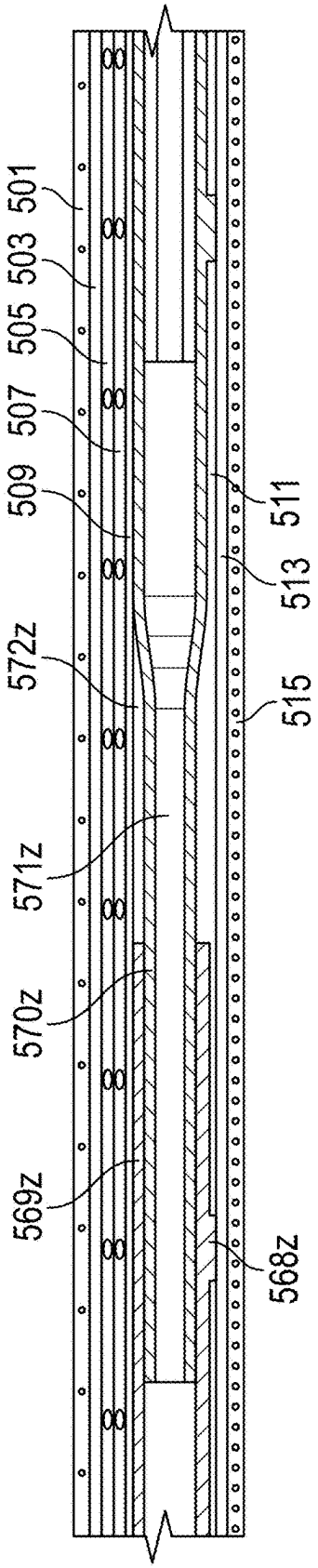

FIG. 17C

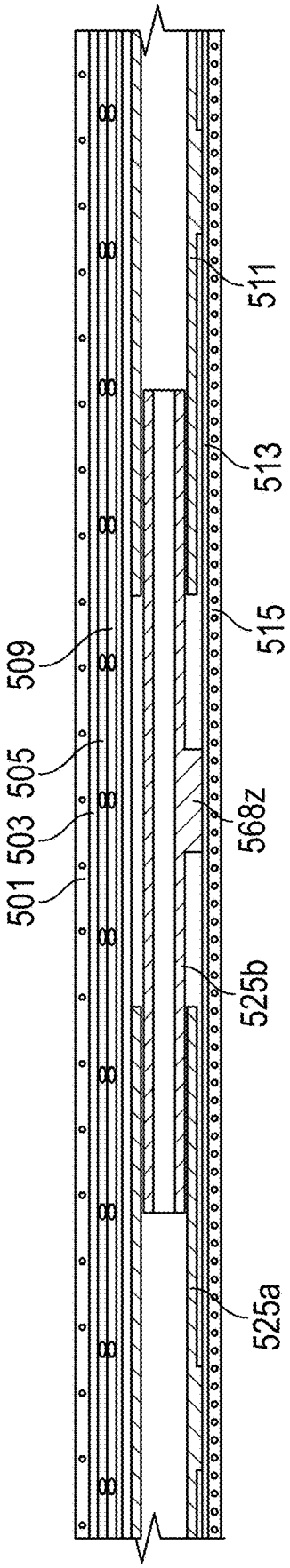

FIG. 17D

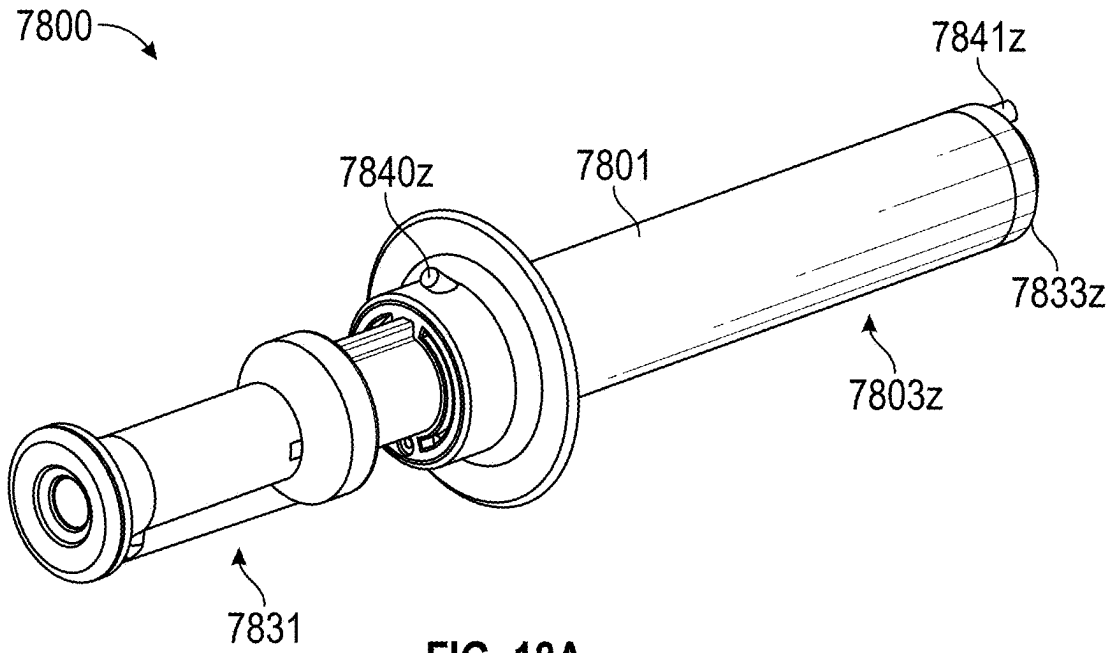

FIG. 18A

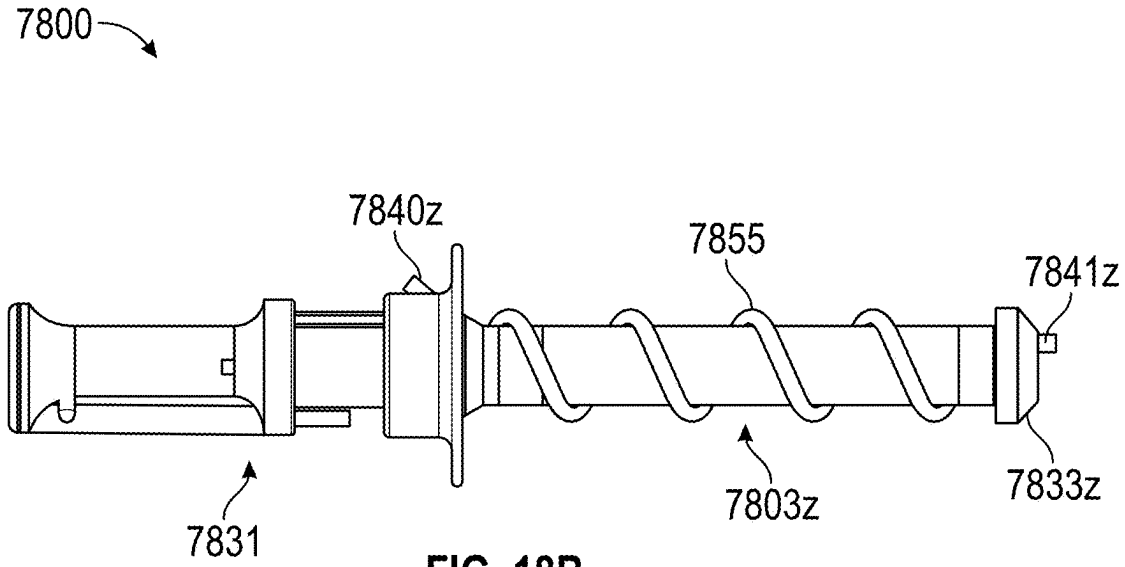

FIG. 18B

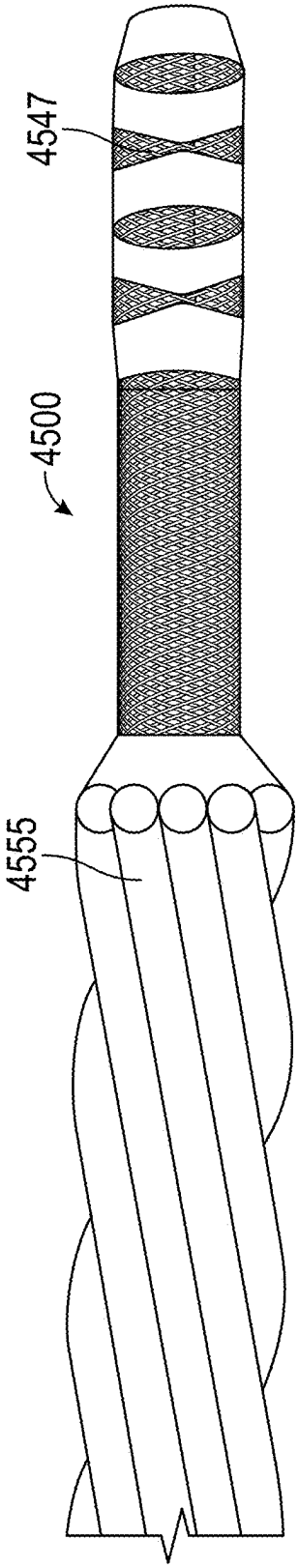

FIG. 19A

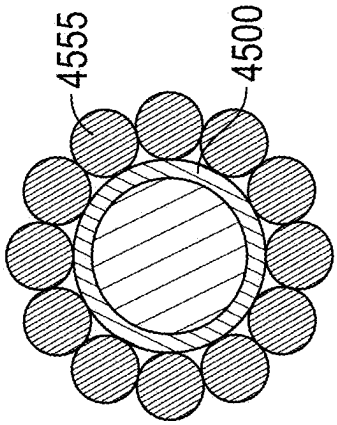

FIG. 19B

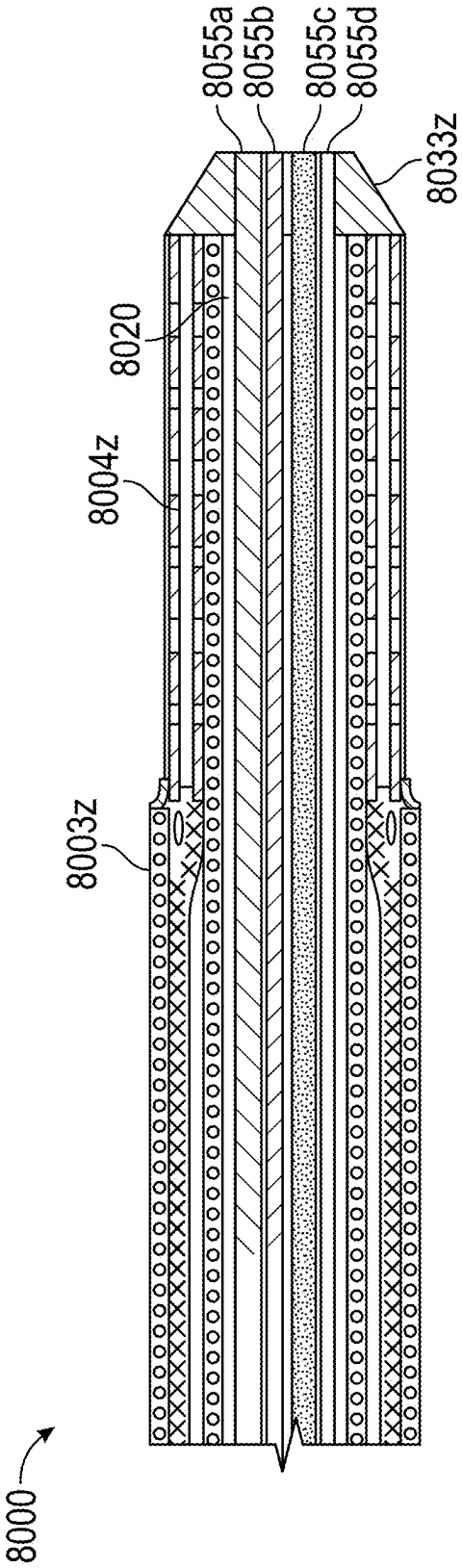

FIG. 20A

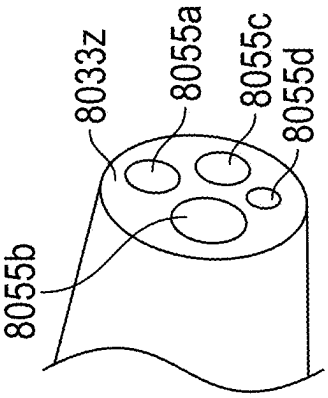

FIG. 20B

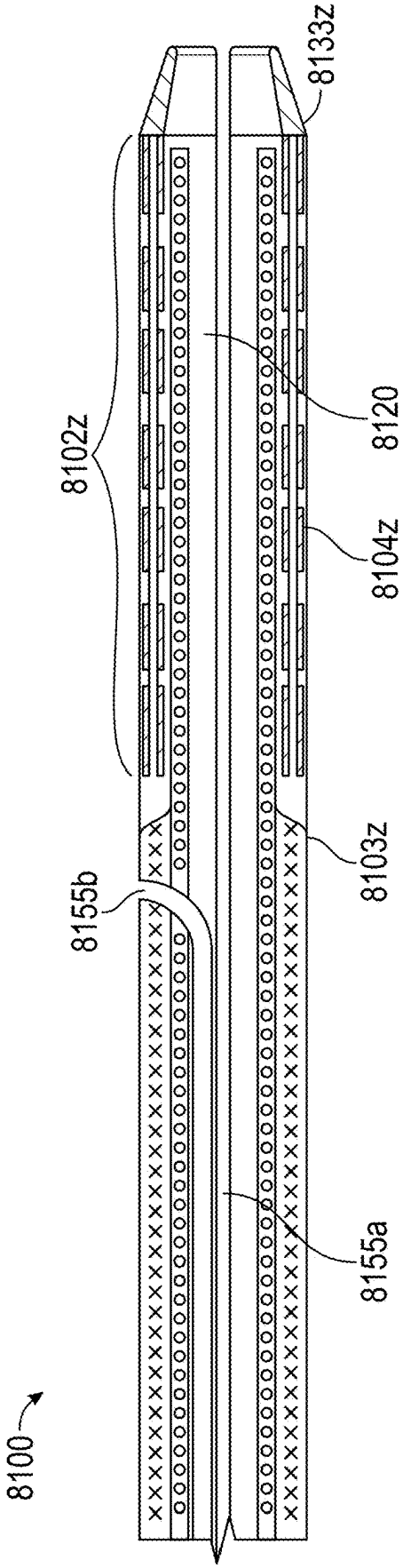

FIG. 21

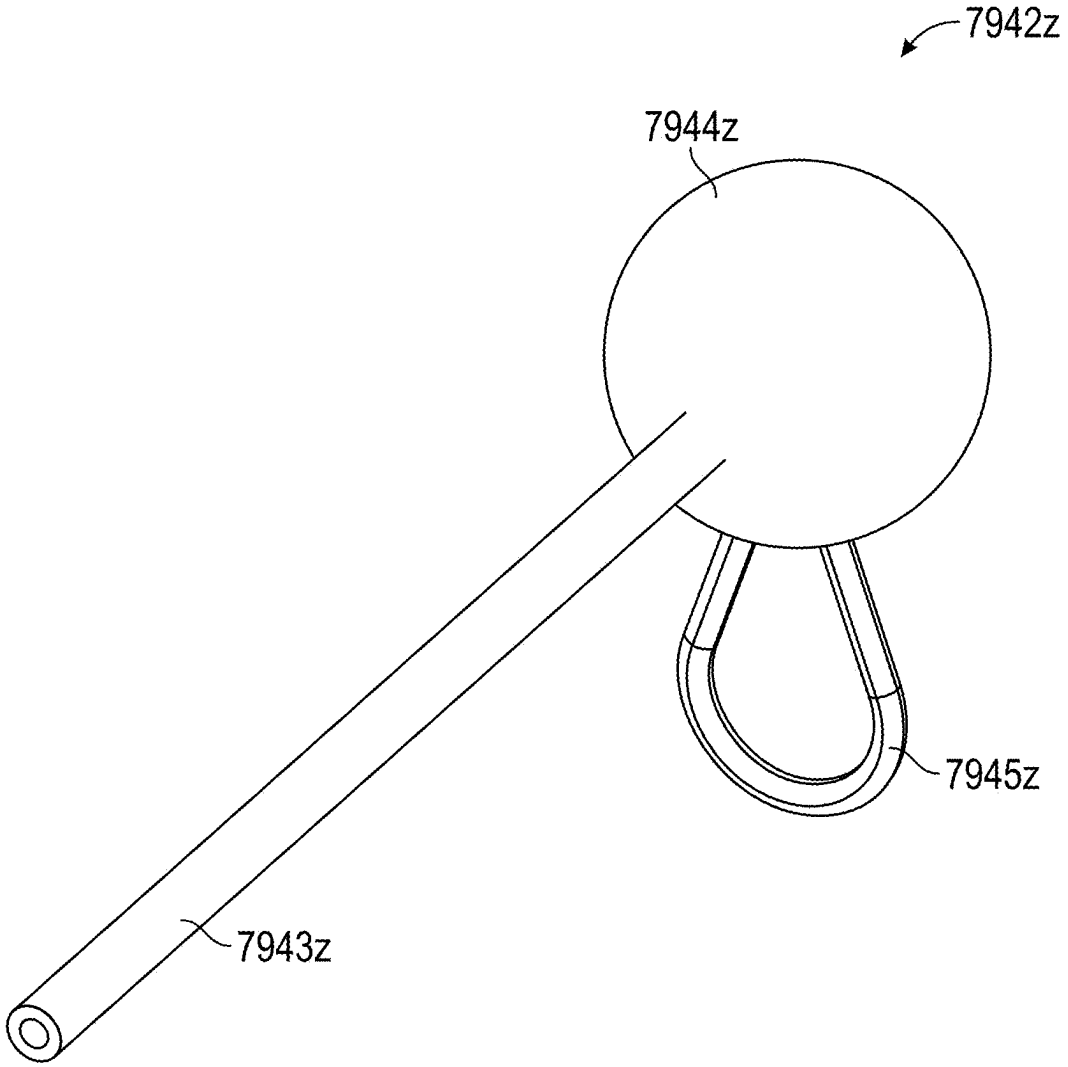

FIG. 22

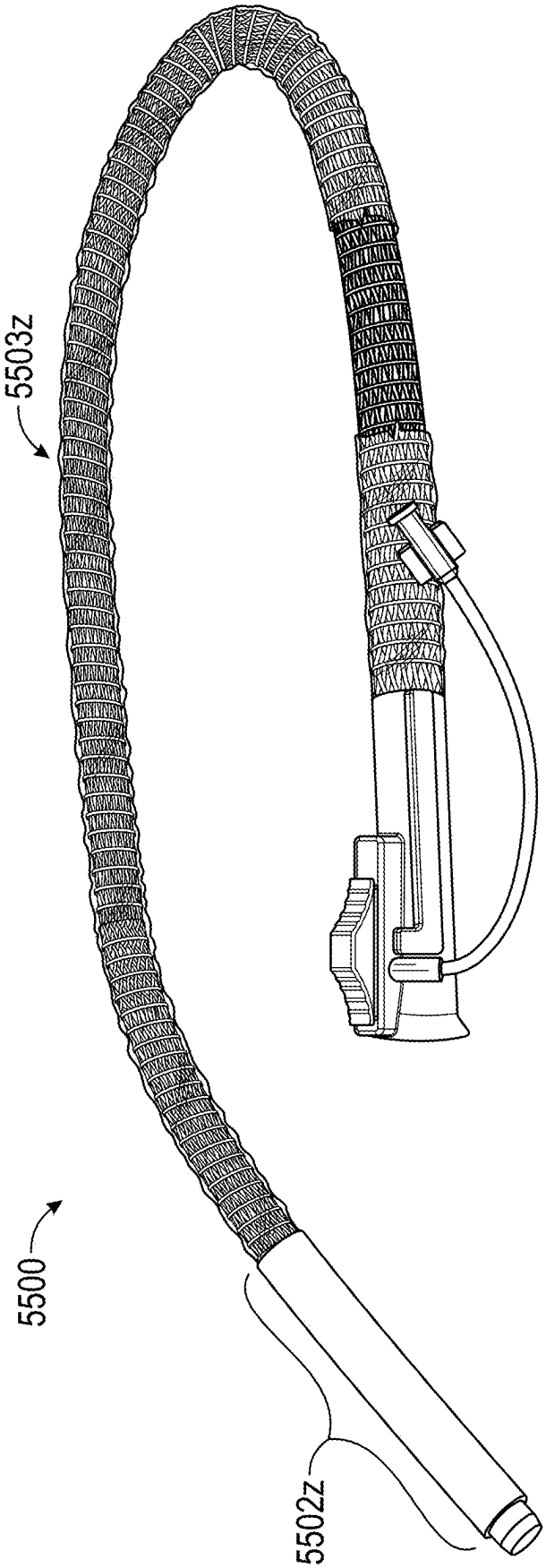

FIG. 23

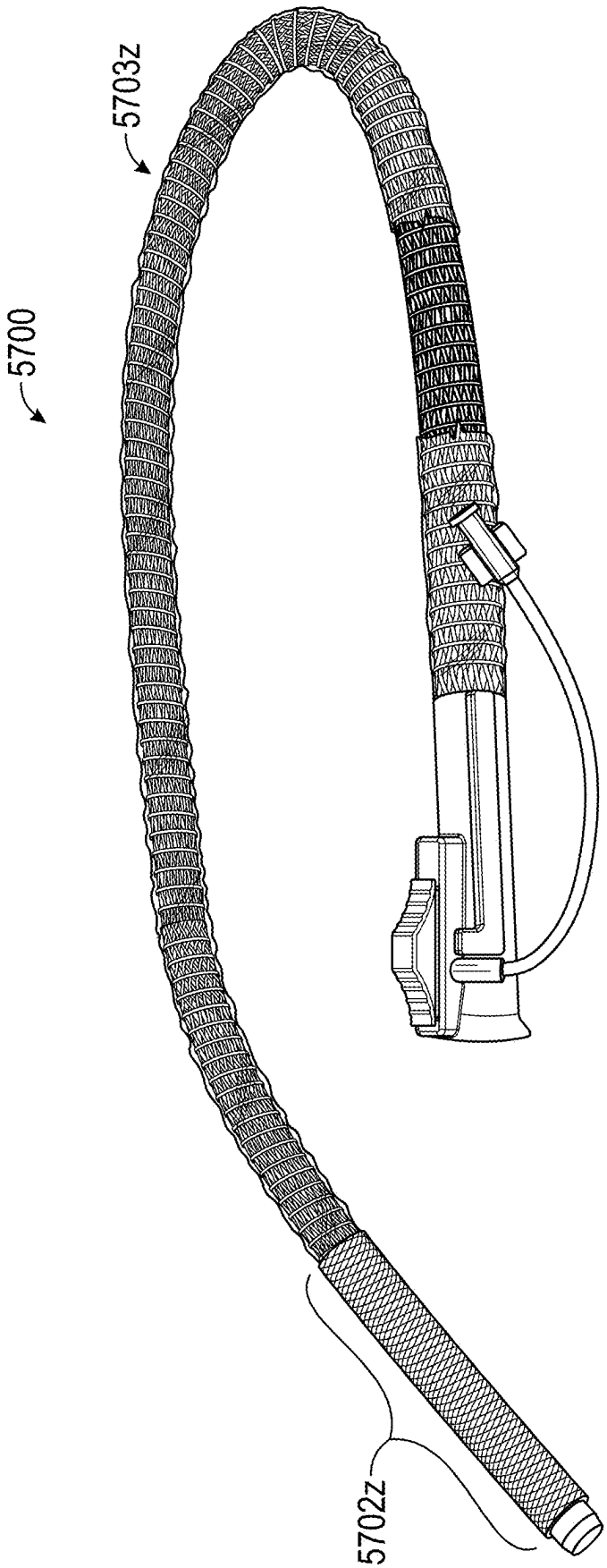

FIG. 24

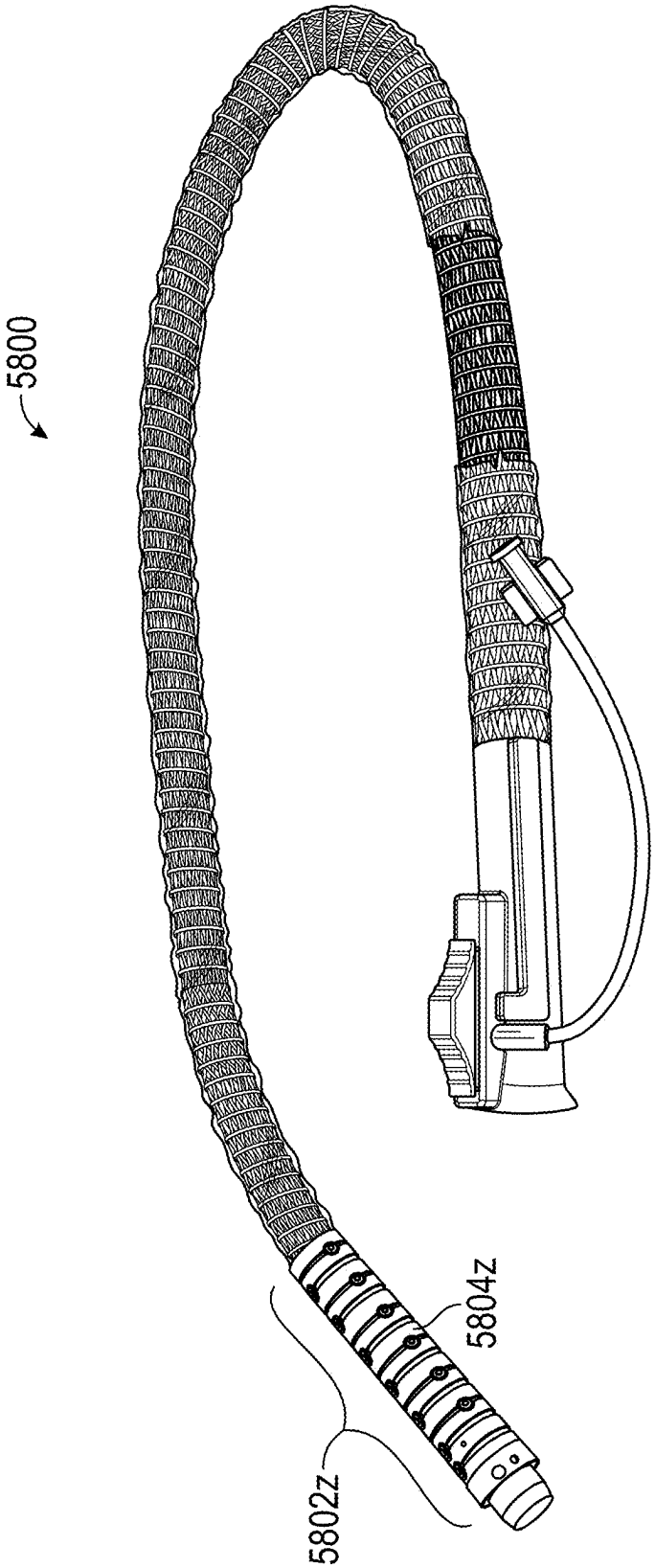

FIG. 25

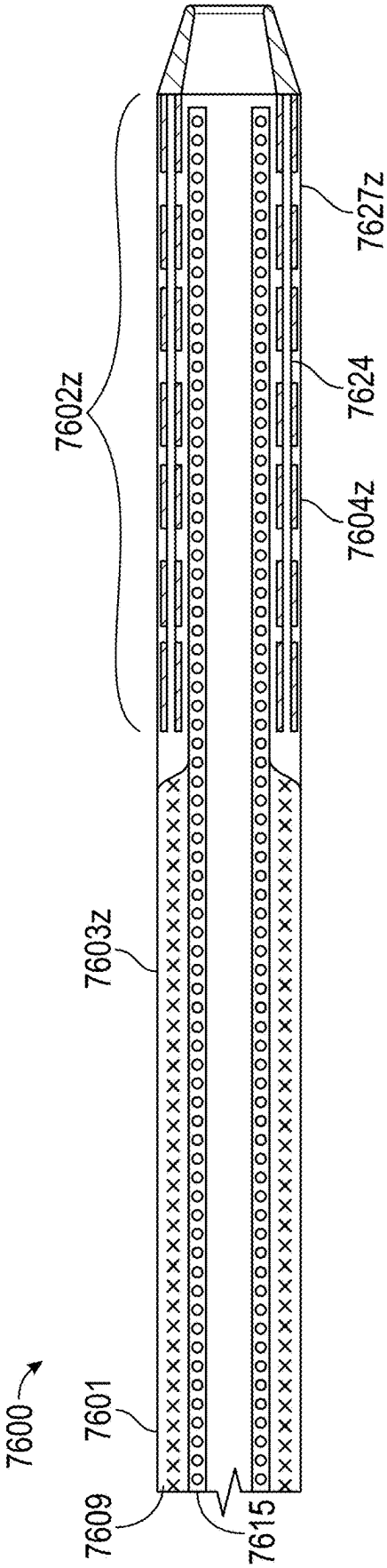

FIG. 26

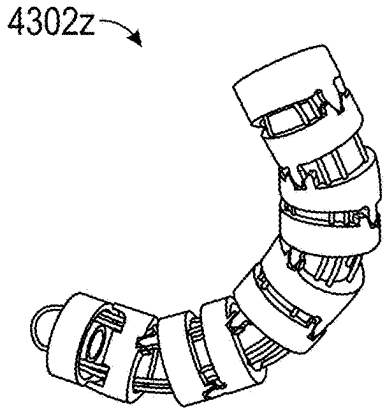

FIG. 27A

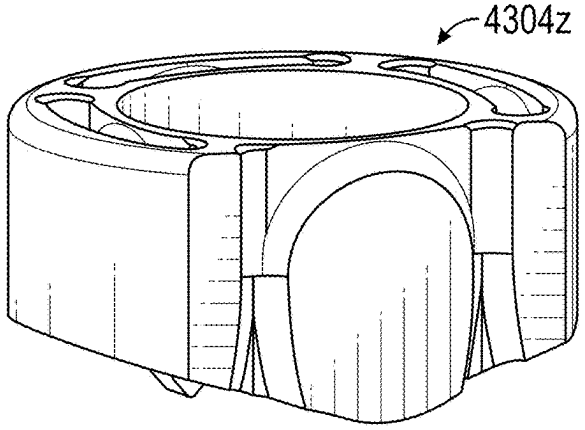

FIG. 27B

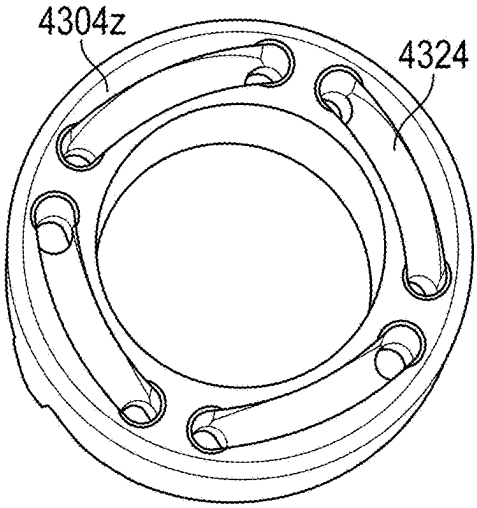

FIG. 27C

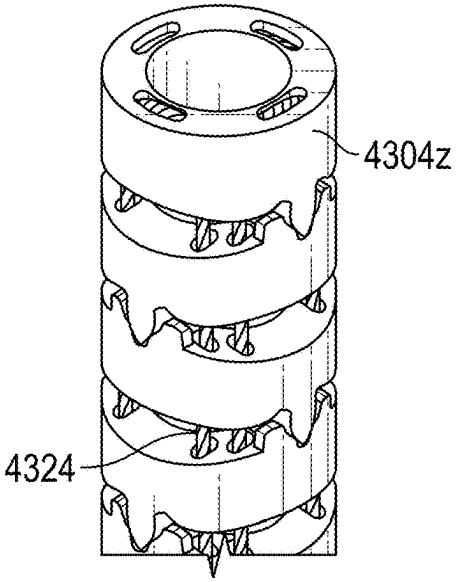

FIG. 27D

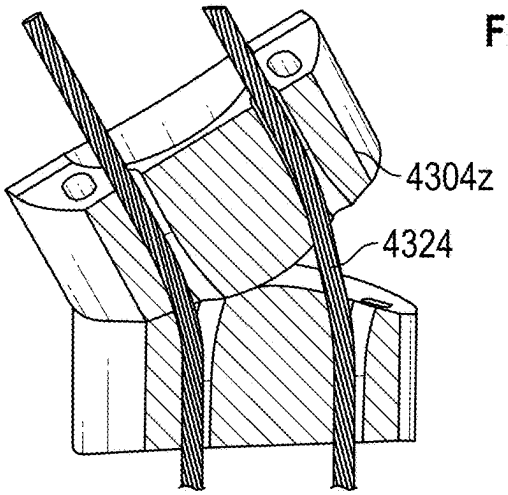

FIG. 27E

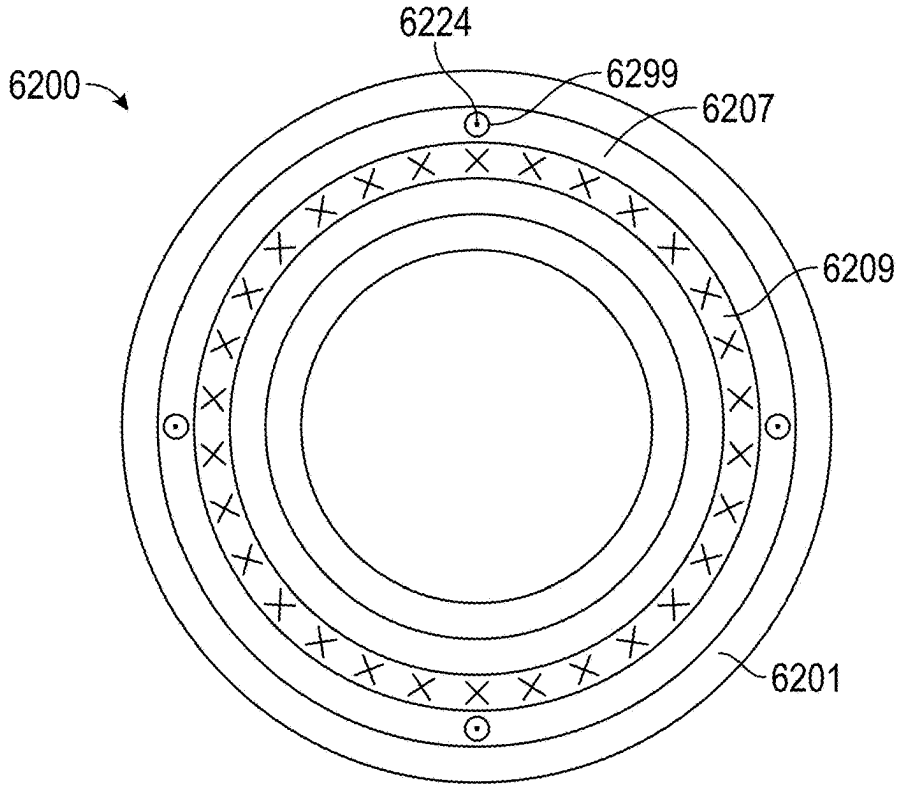
6224
6299
6200
6207
6209
6201

FIG. 28

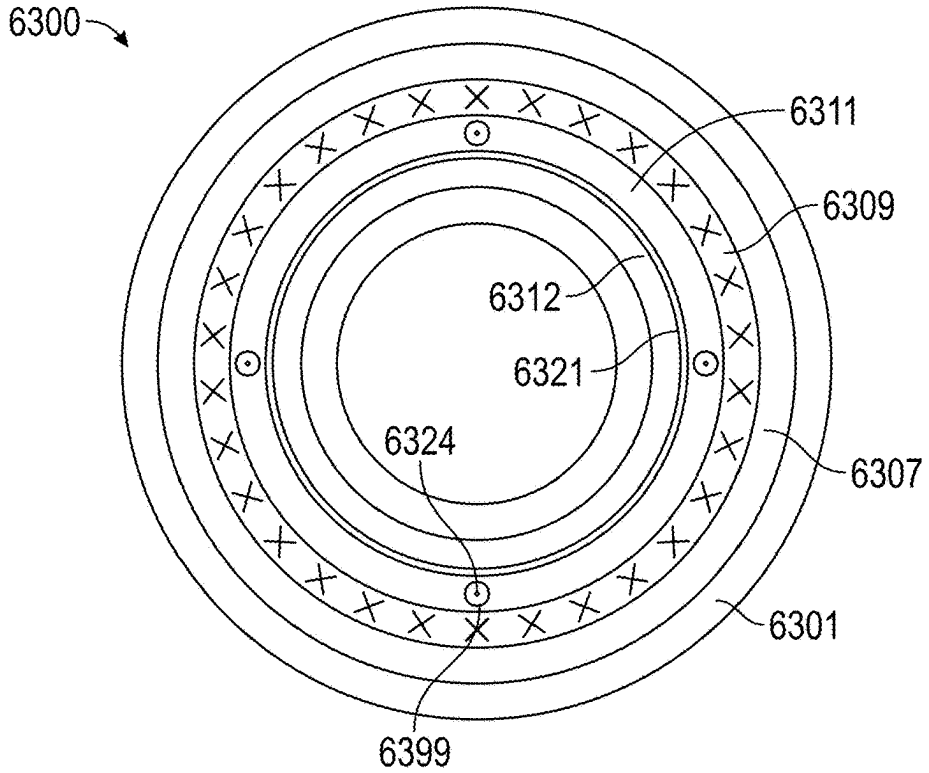
6300
6311
6309
6312
6321
6324
6307
6301
6399

FIG. 29

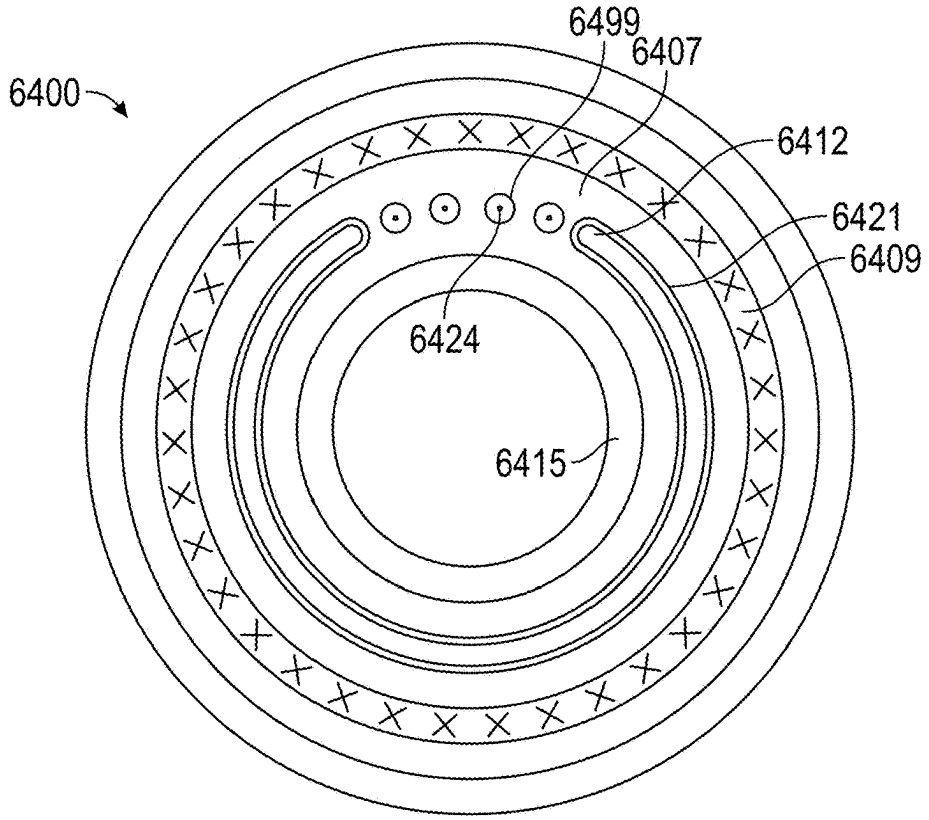
6499
6407
6400
6412
6421
6409
6424
6415

FIG. 30

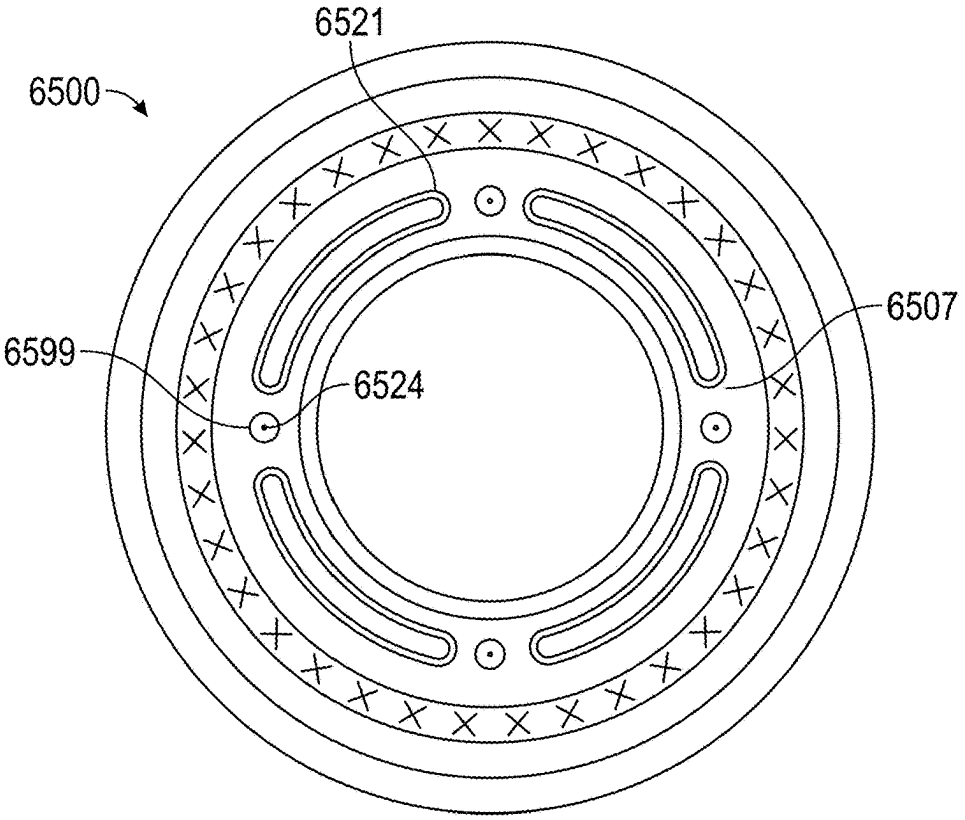
6521
6500
6507
6599
6524

FIG. 31

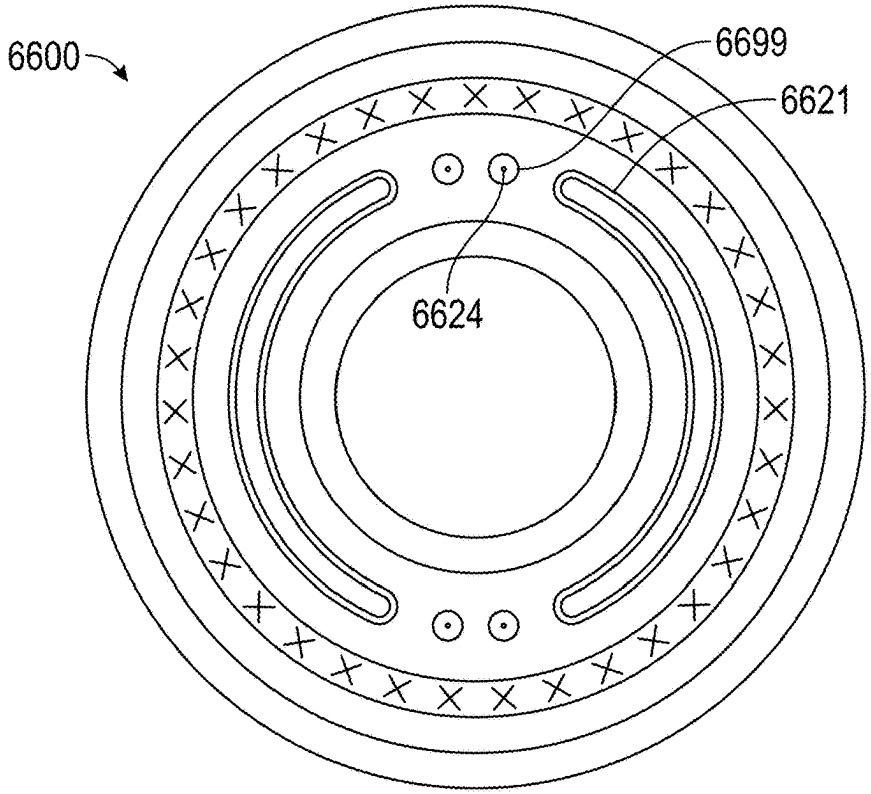

FIG. 32

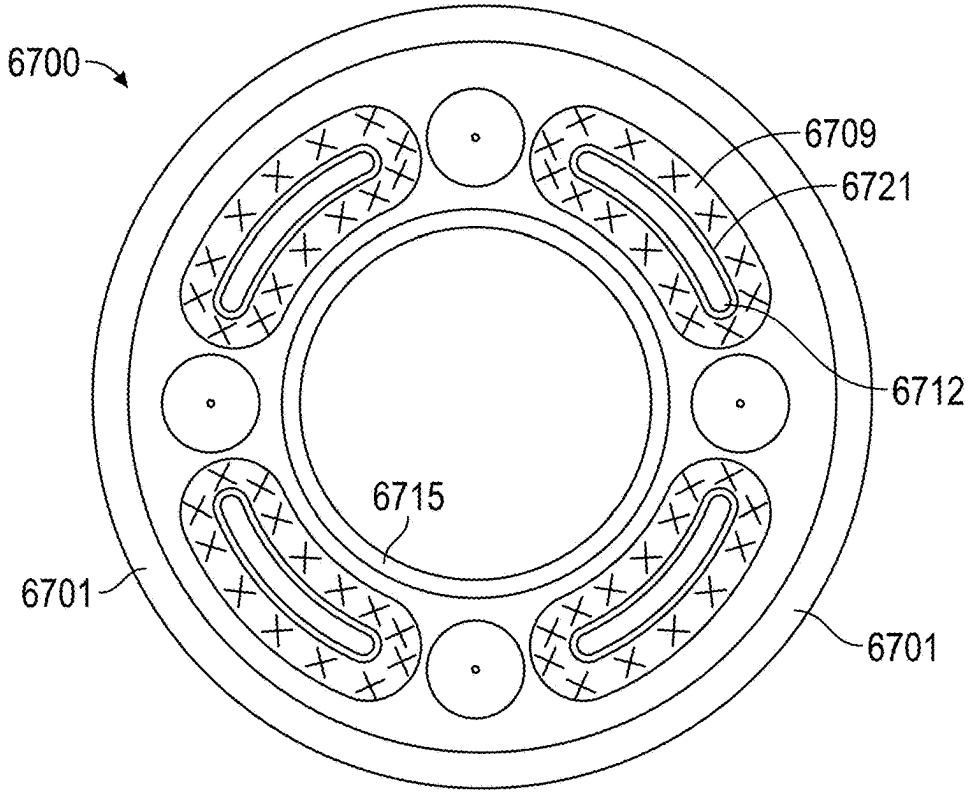

FIG. 33

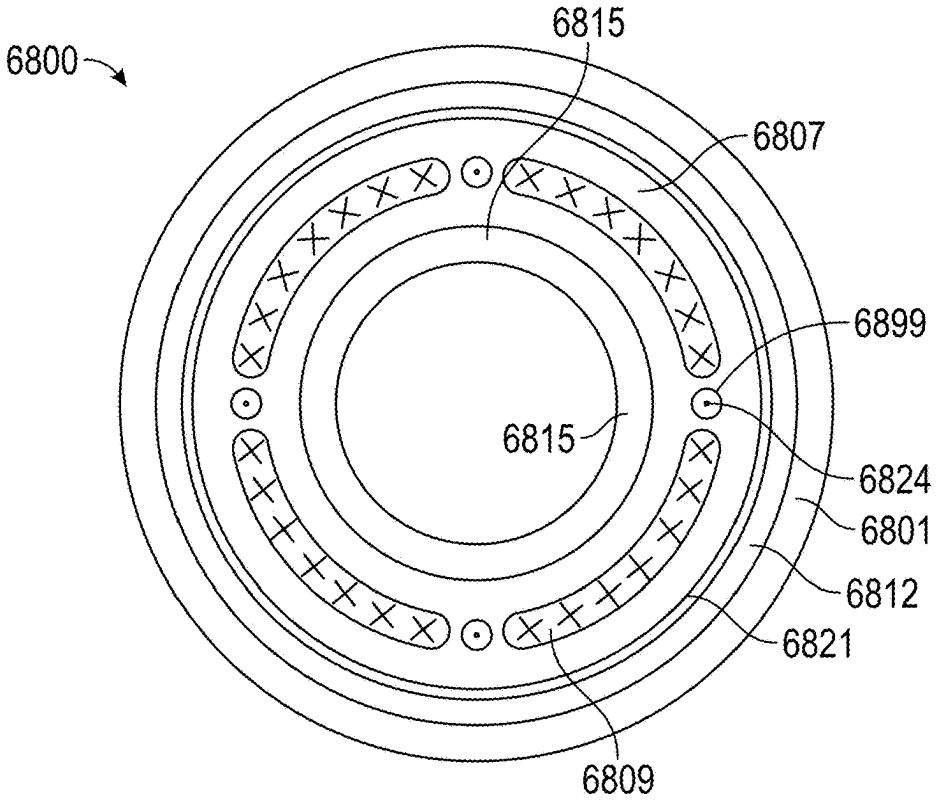
6800
6815
6807
6899
6815
6824
6801
6812
6821
6809

FIG. 34

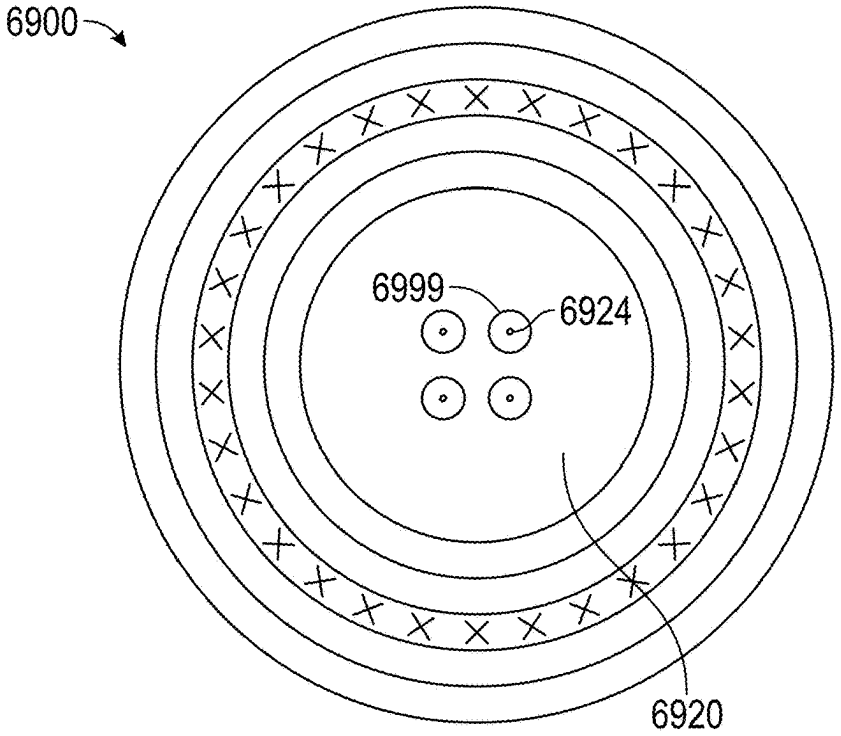
6900
6999
6924
6920

FIG. 35

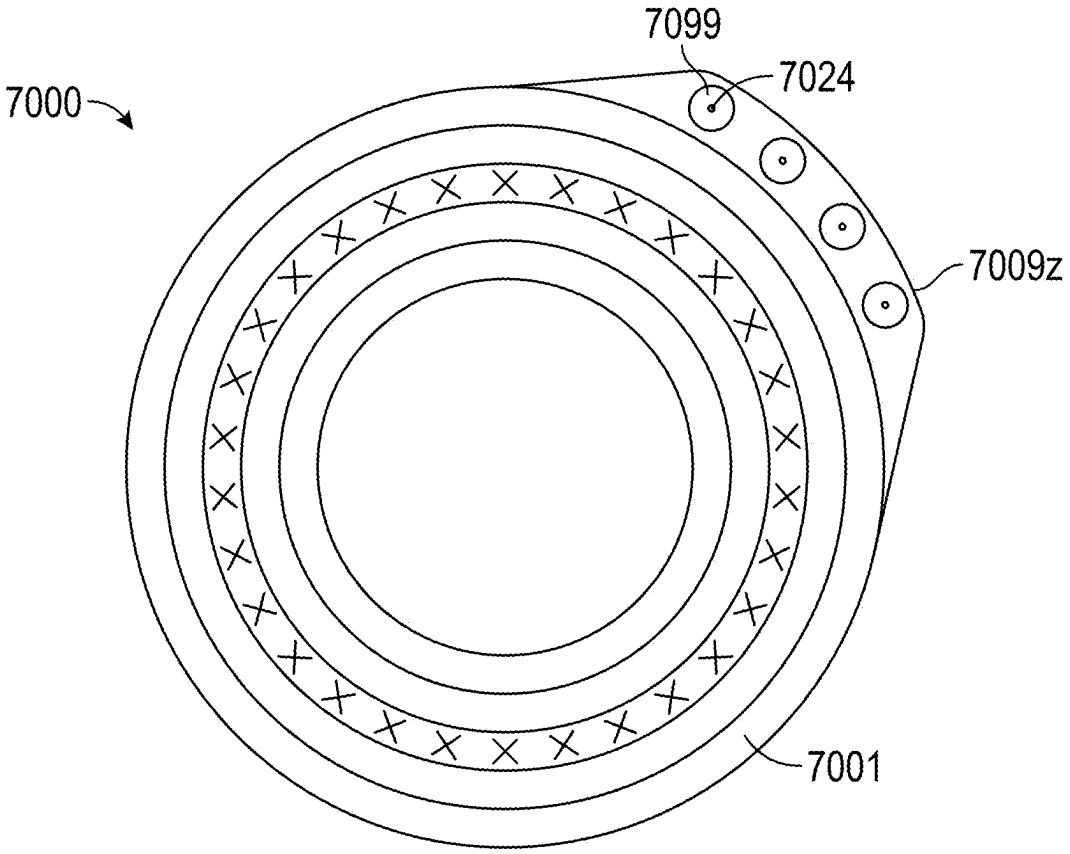

FIG. 36

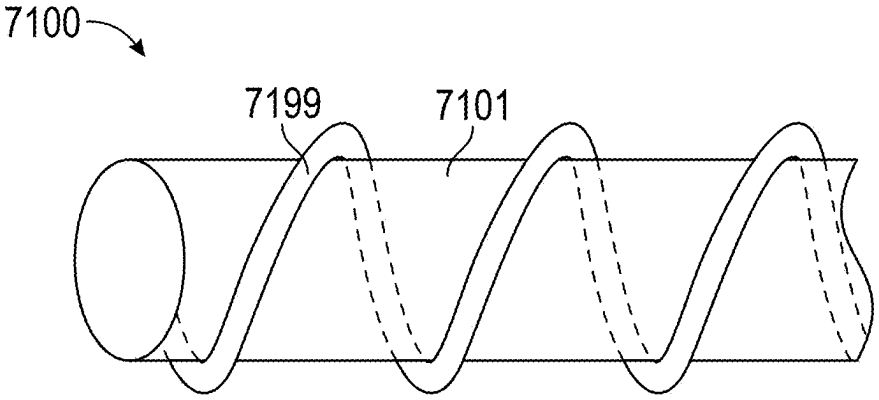

FIG. 37

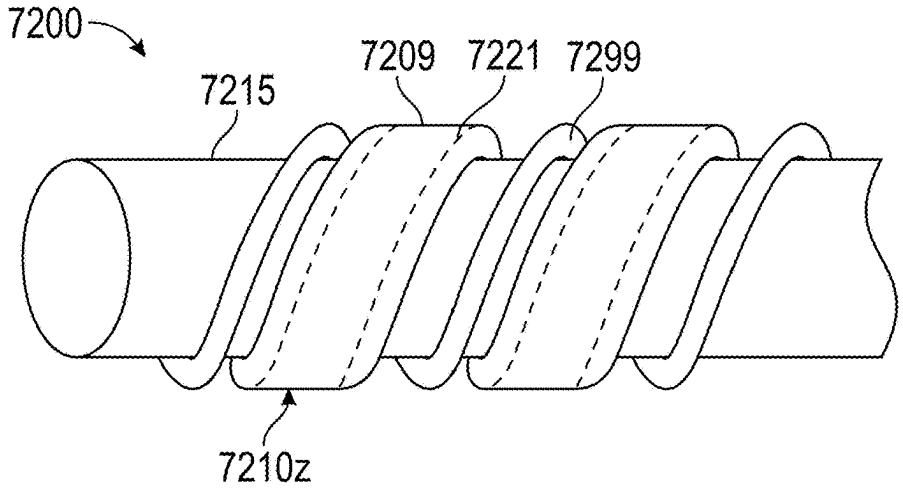

FIG. 38A

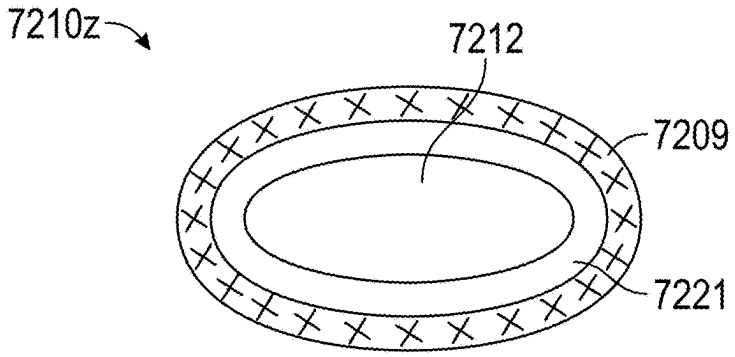

FIG. 38B

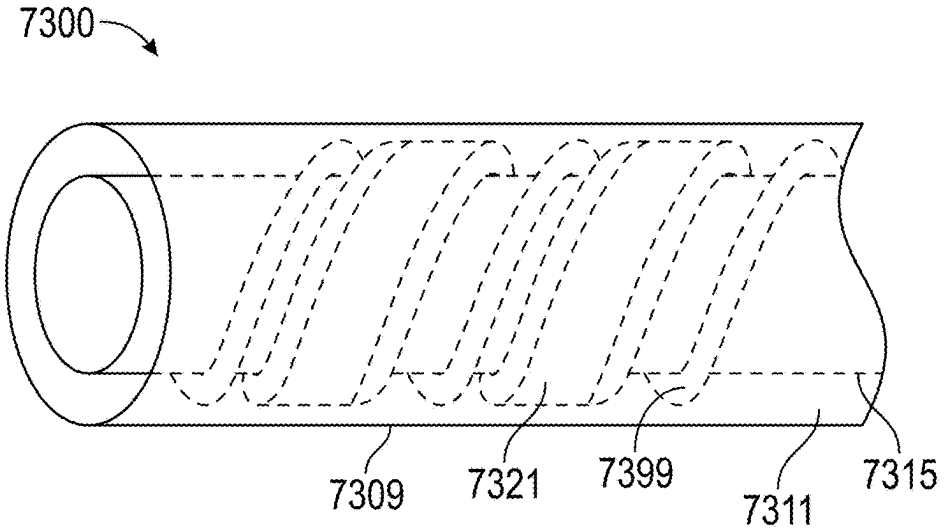

FIG. 39A

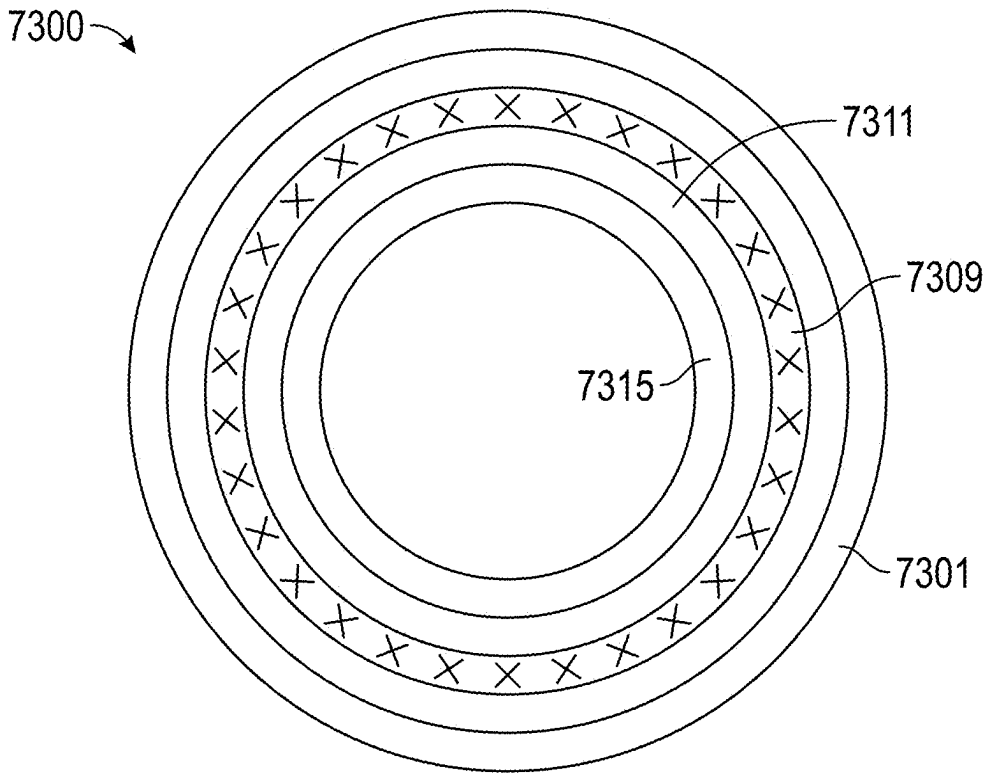

FIG. 39B

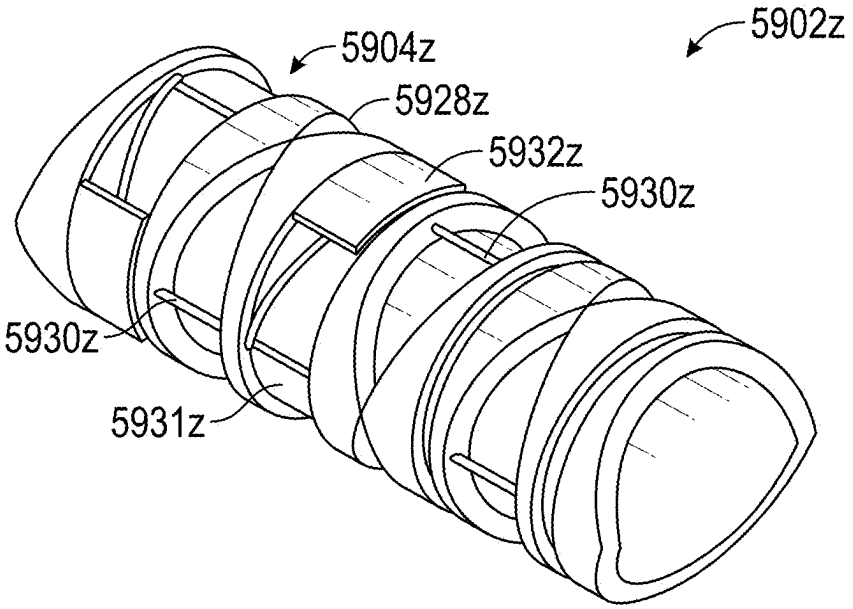

FIG. 40A

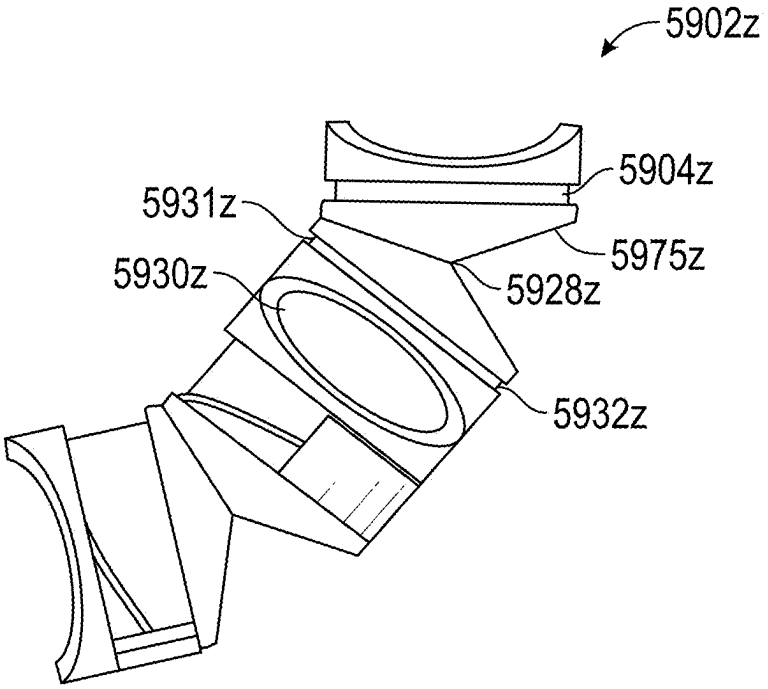

FIG. 40B

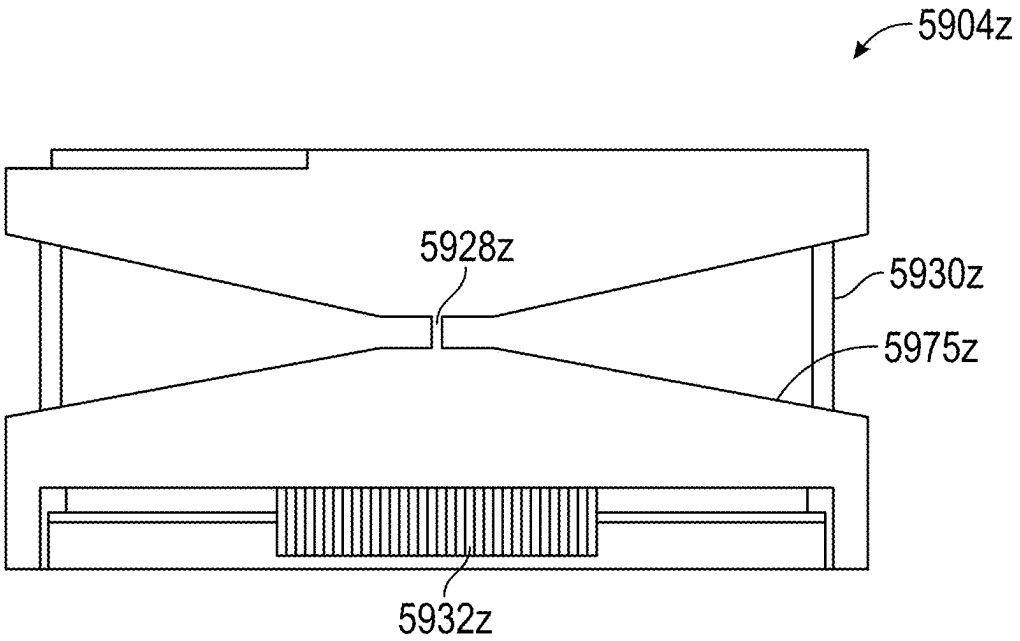

FIG. 40C

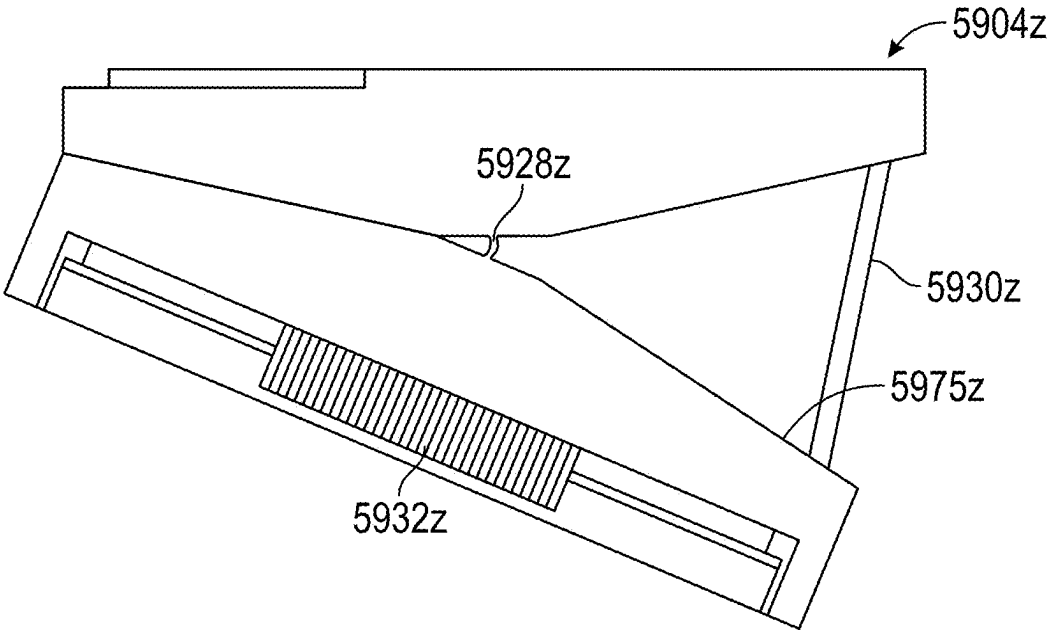

FIG. 40D

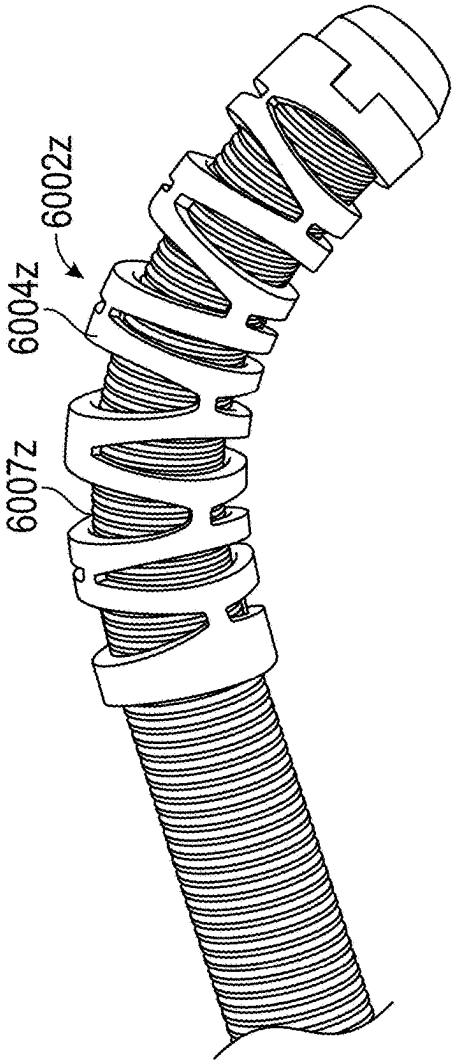

FIG. 41A

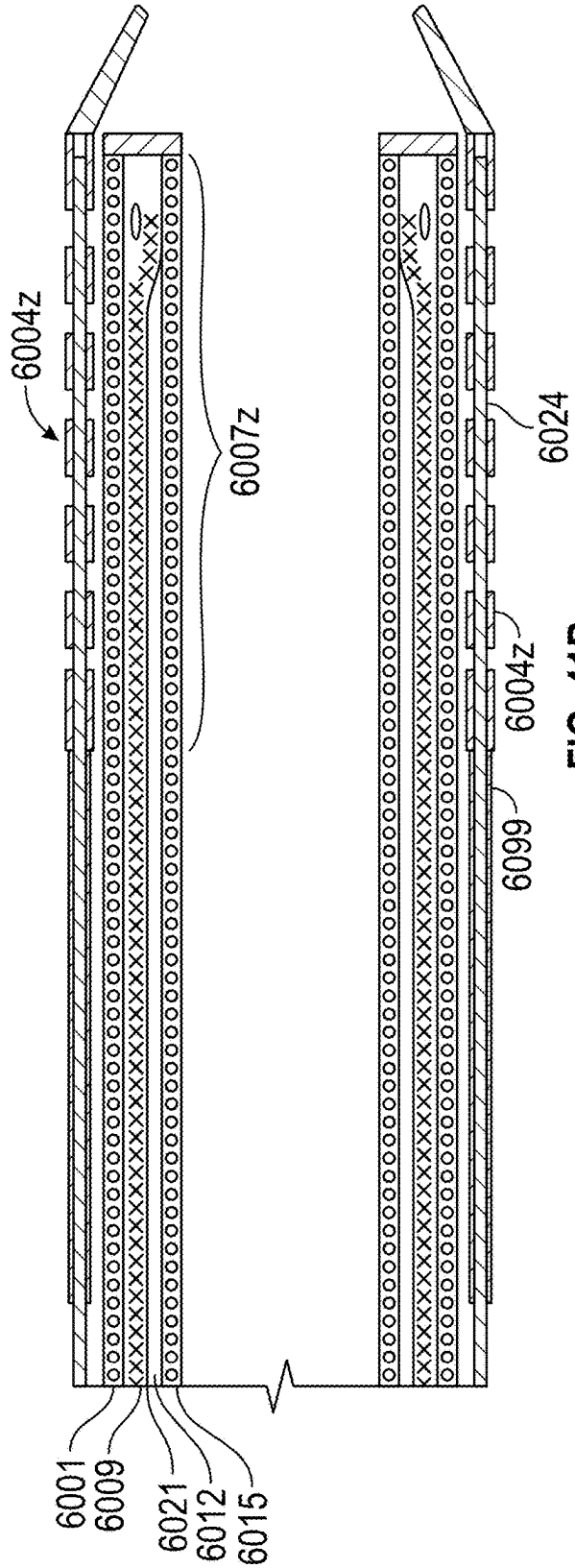

FIG. 41B

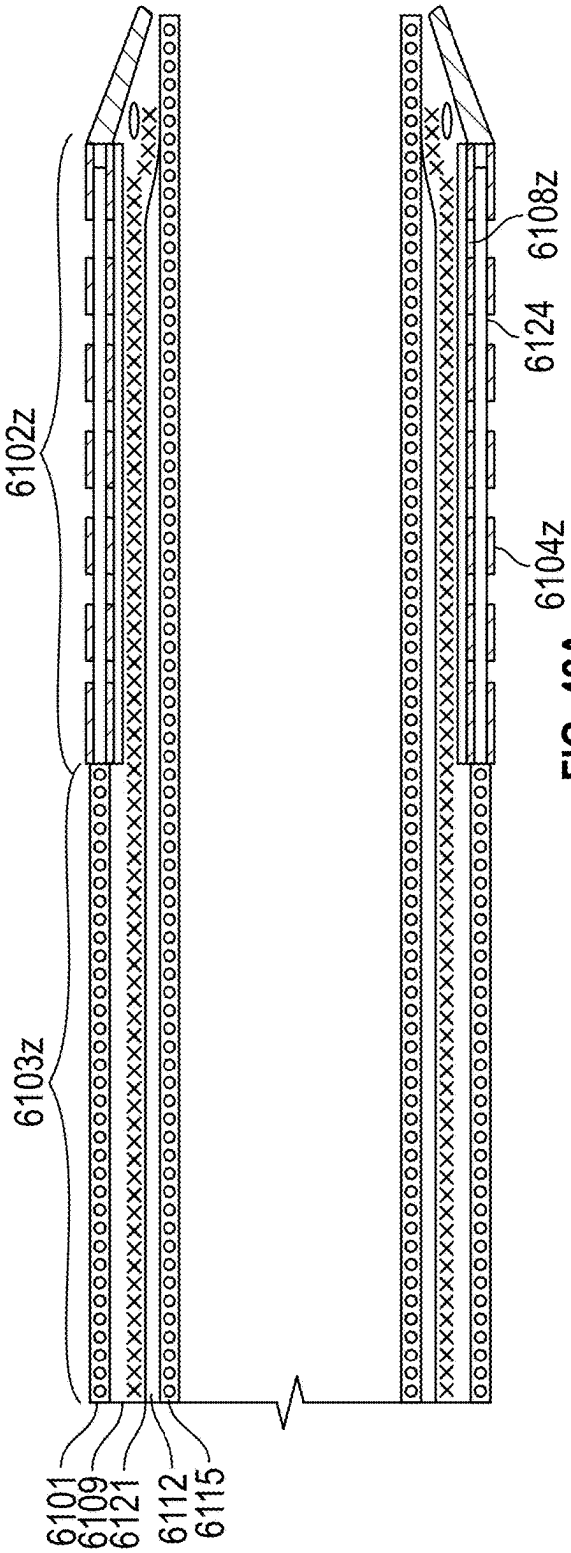

FIG. 42A

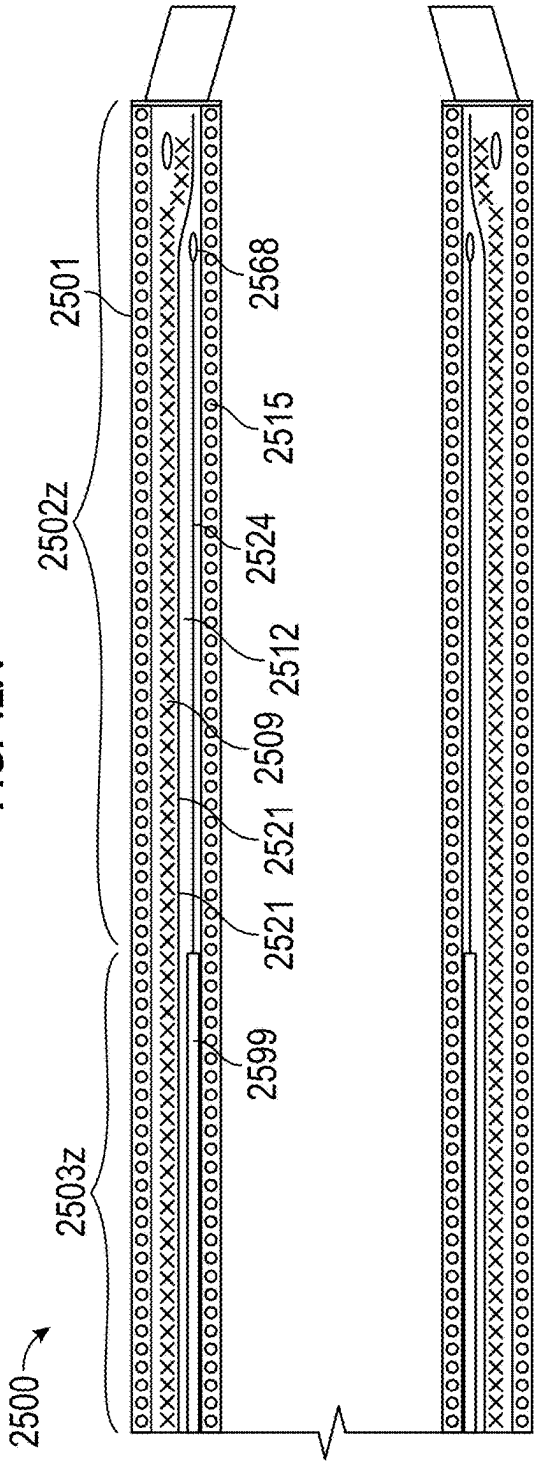

FIG. 42B

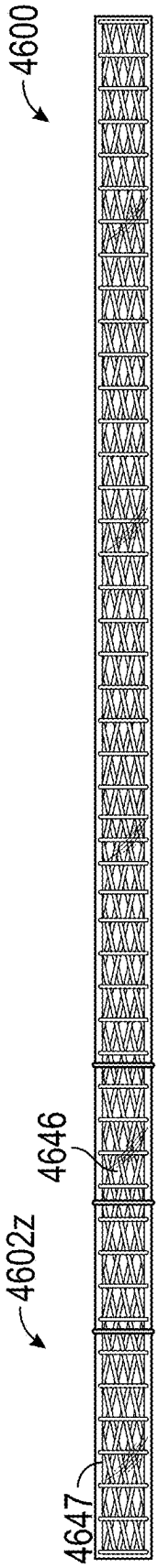

FIG. 43A

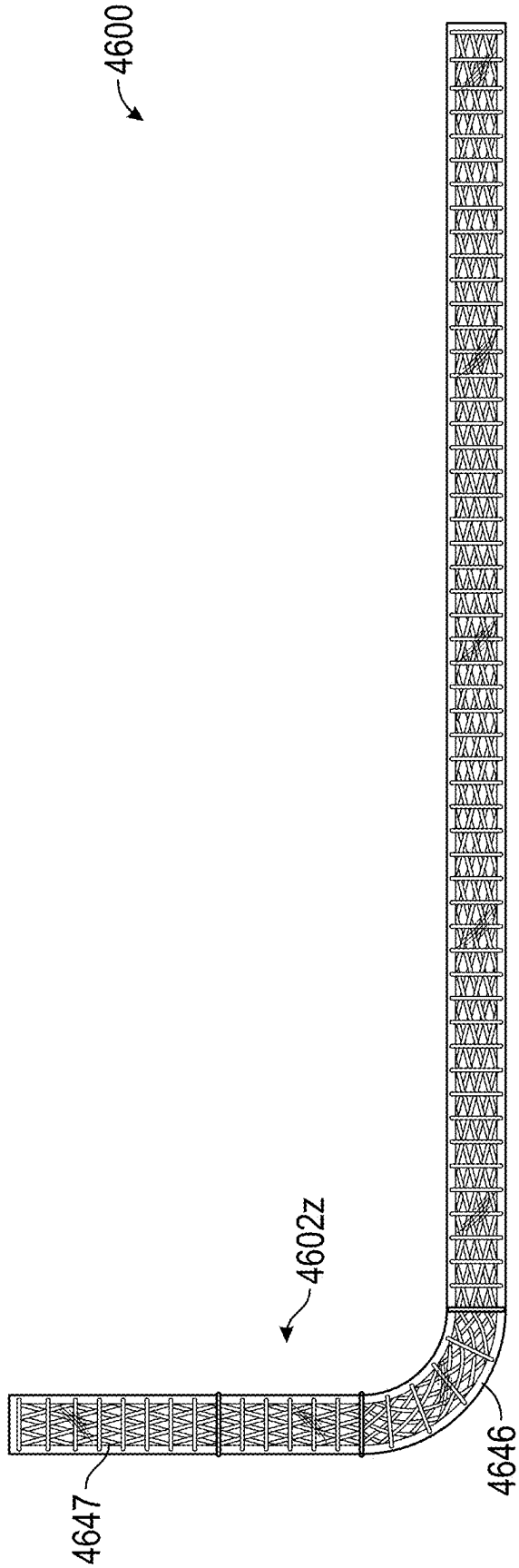

FIG. 43B

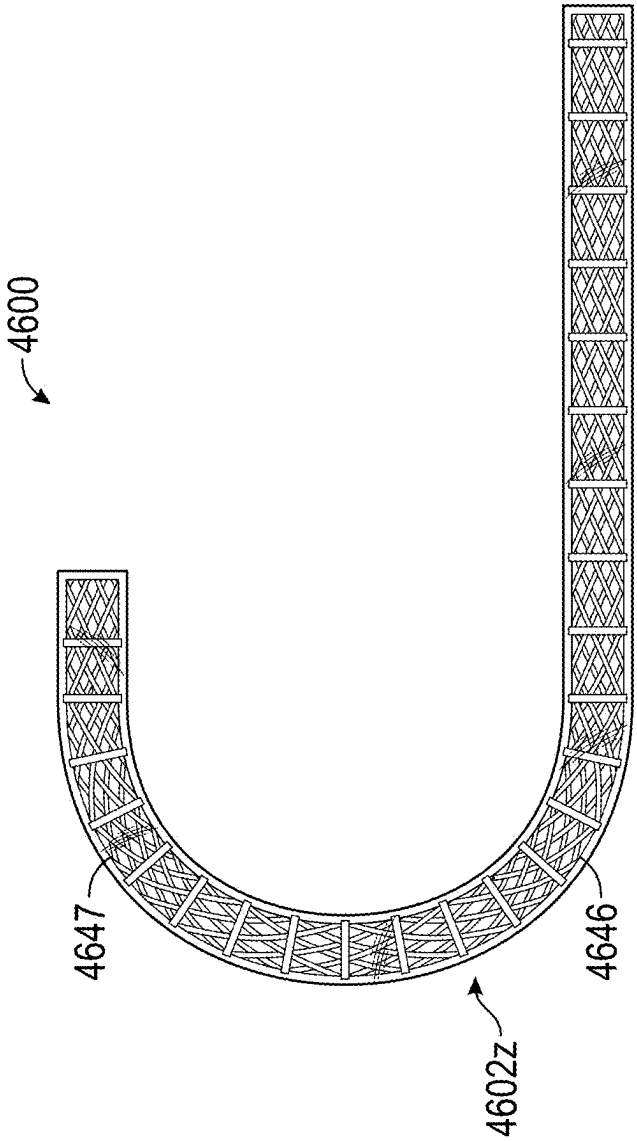

FIG. 43C

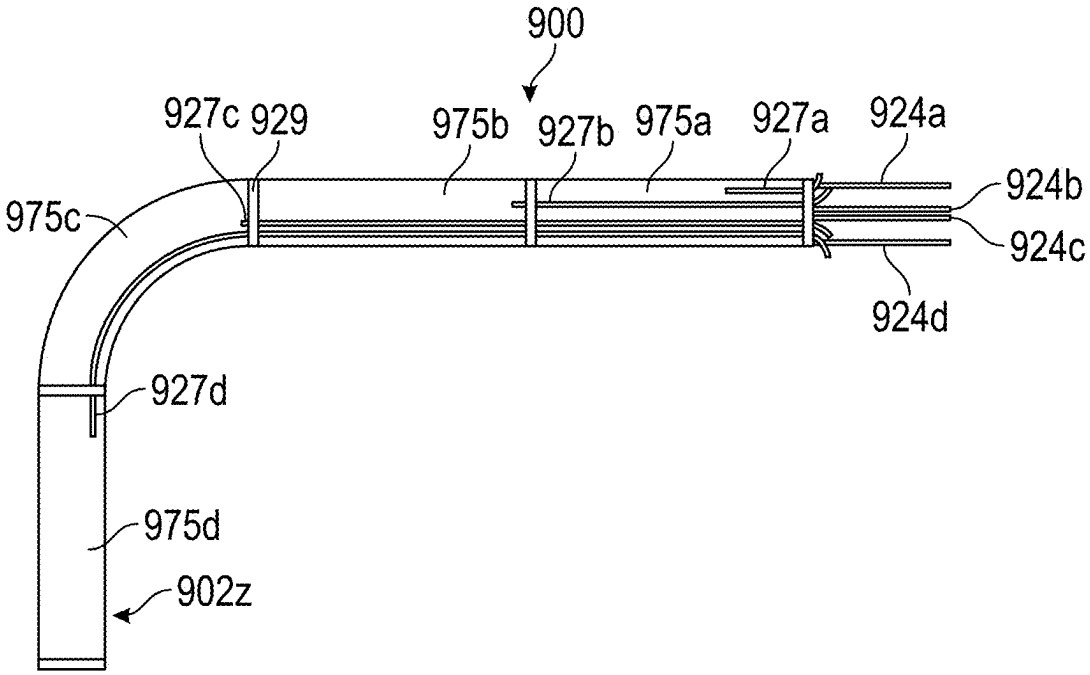
900
927c
929
975b
927b
975a
927a
924a
924b
975c
924c
924d
927d
975d
902z

FIG. 44A

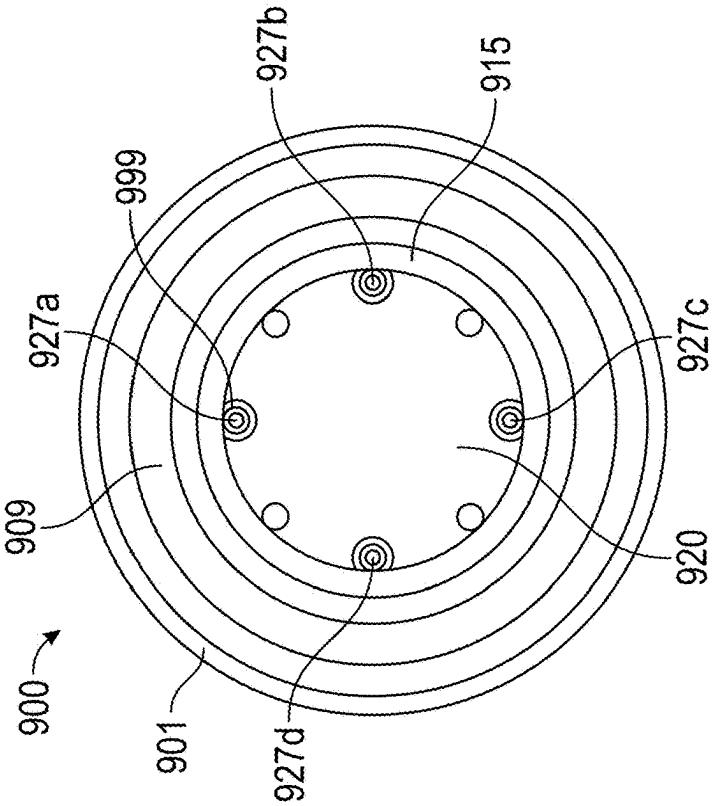

FIG. 44C

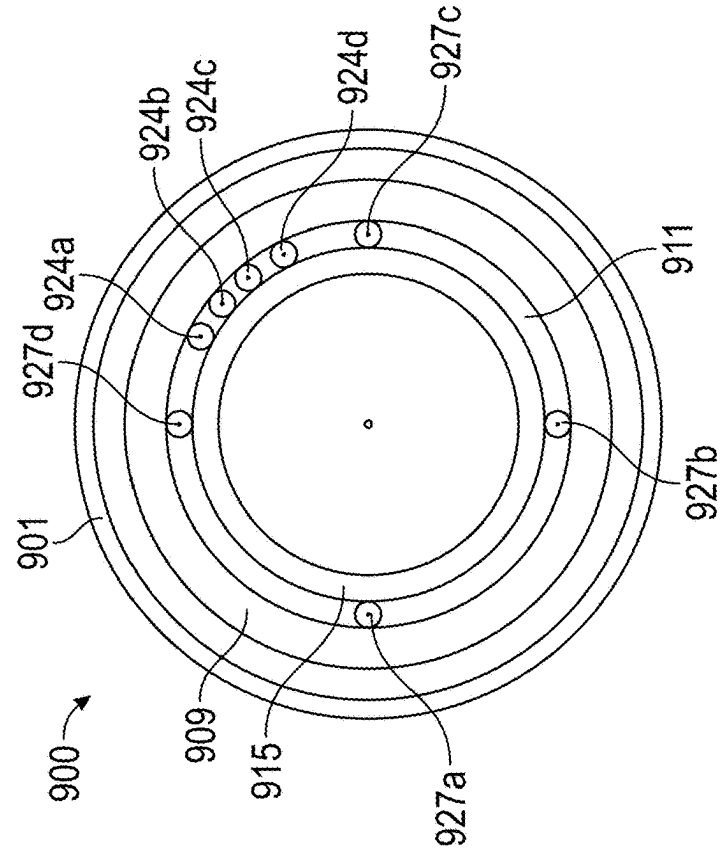

FIG. 44B

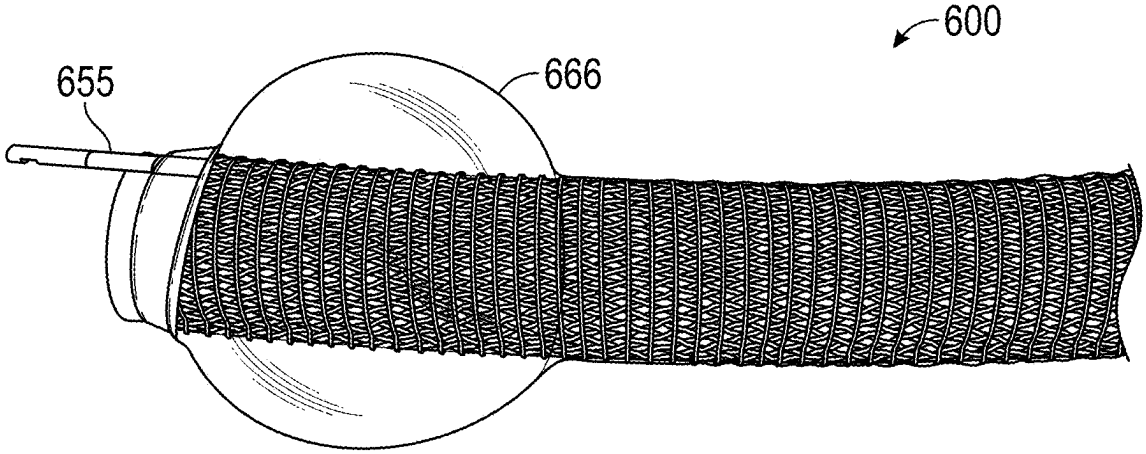

FIG. 45A

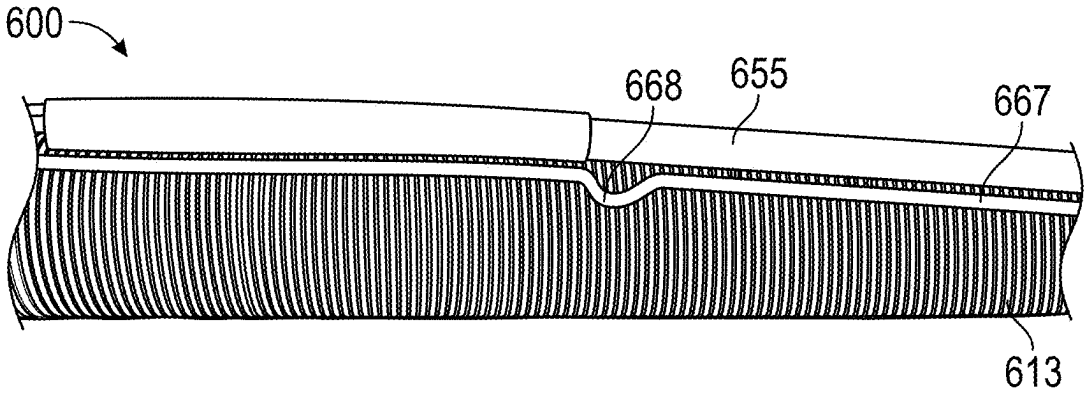

FIG. 45B

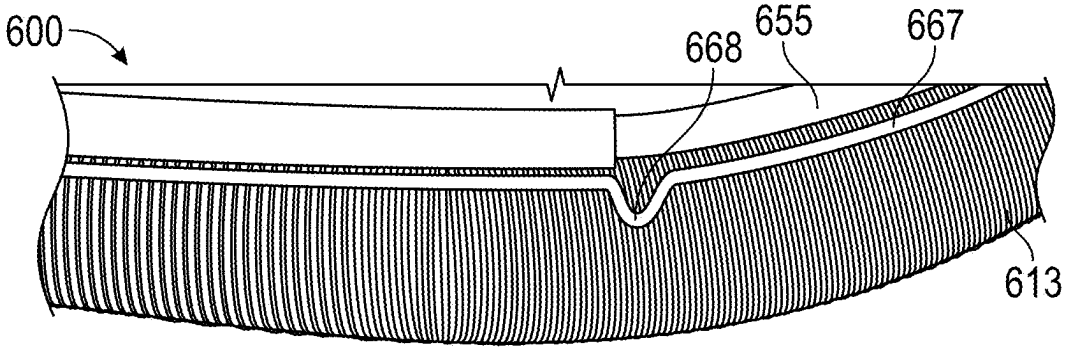

FIG. 45C

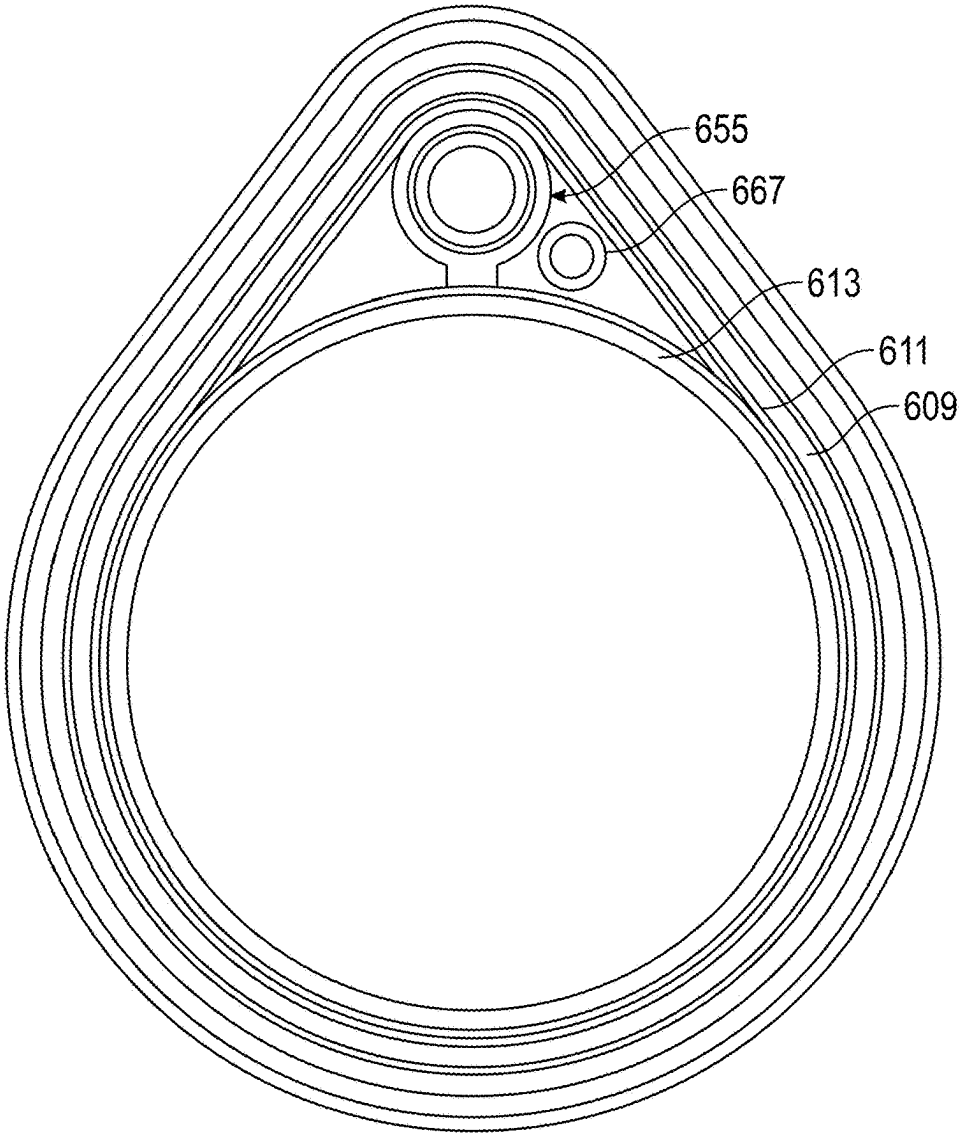

FIG. 45D

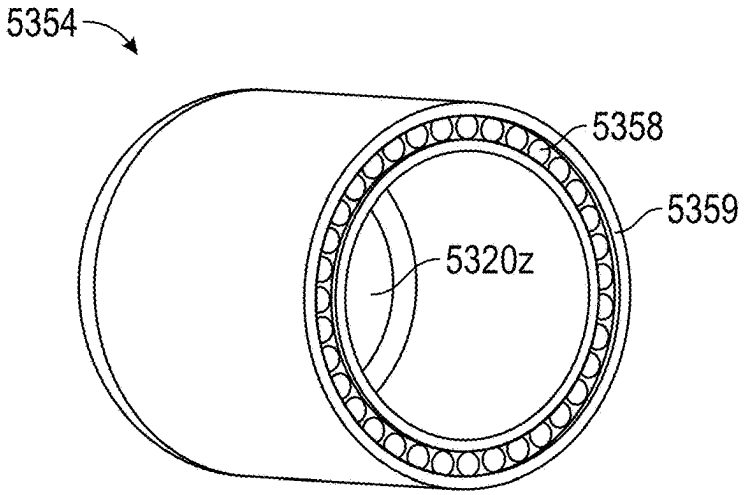

FIG. 46A

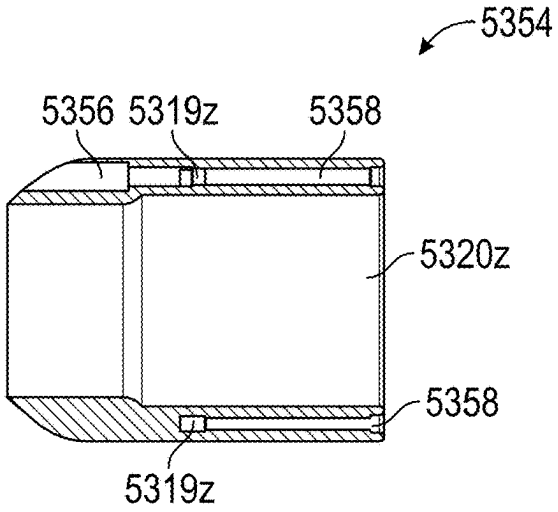

FIG. 46B

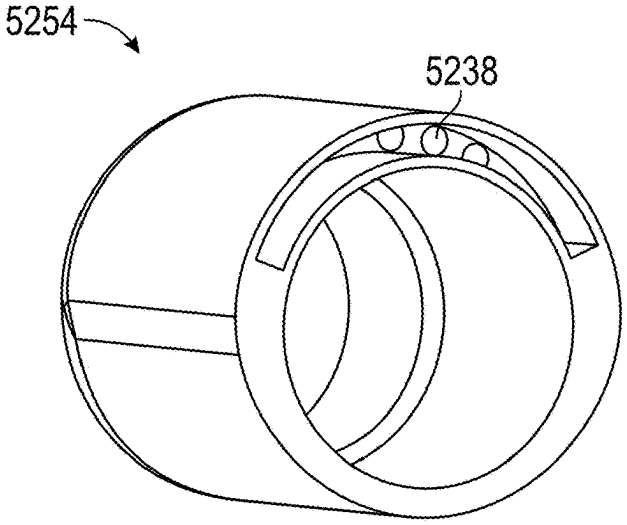

FIG. 47A

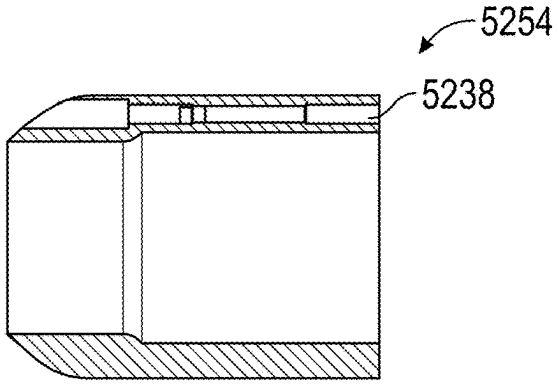

FIG. 47B

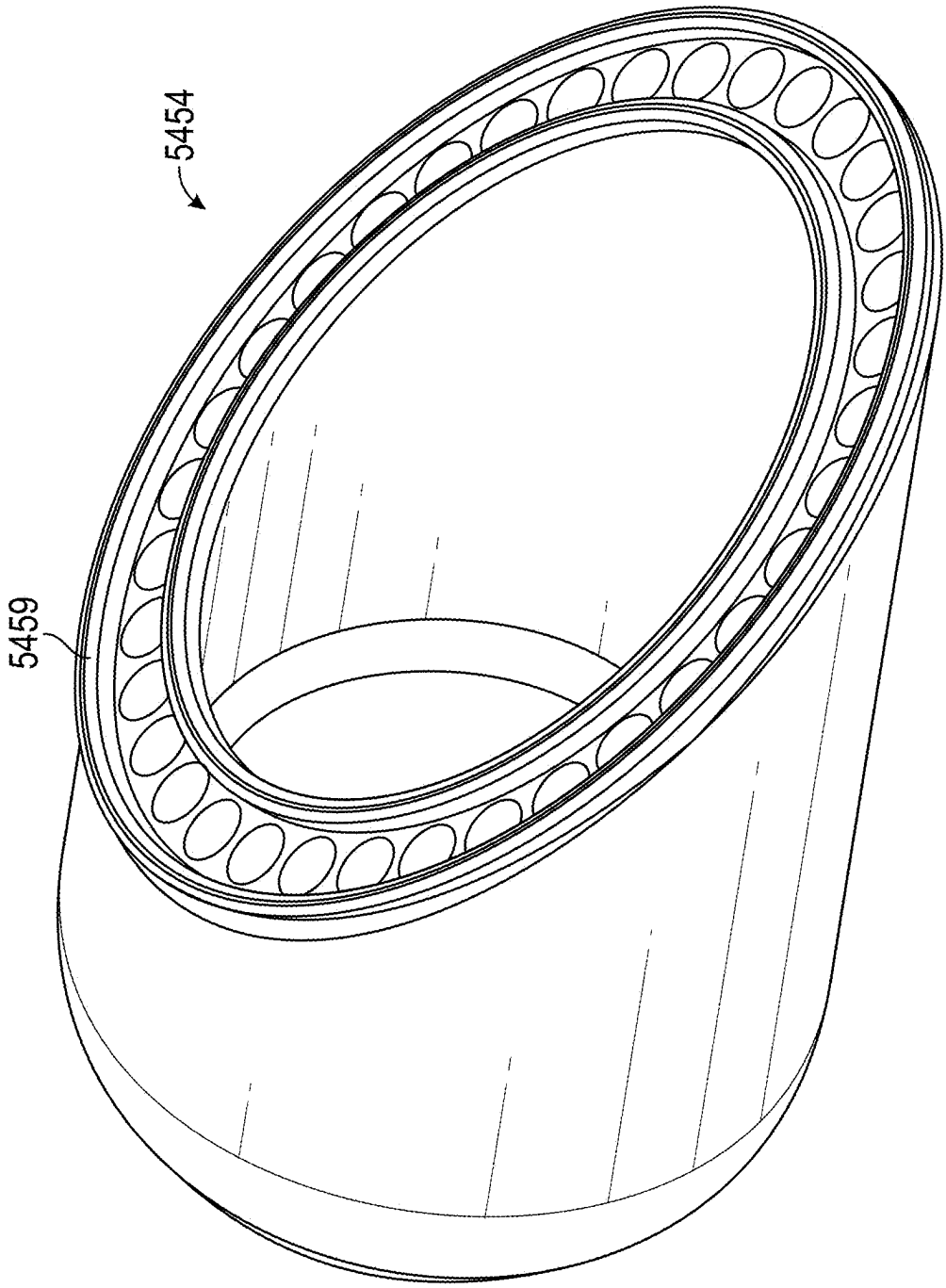

FIG. 48A

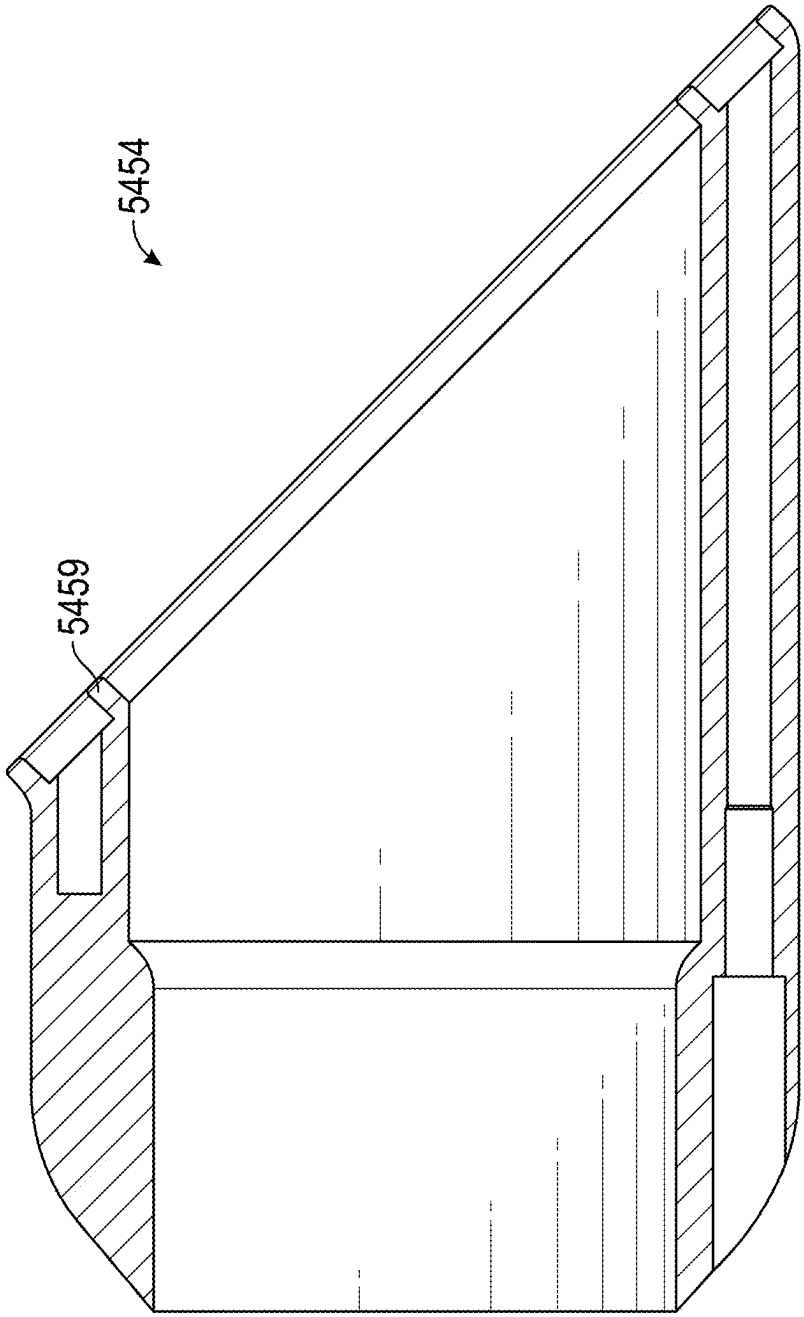

FIG. 48B

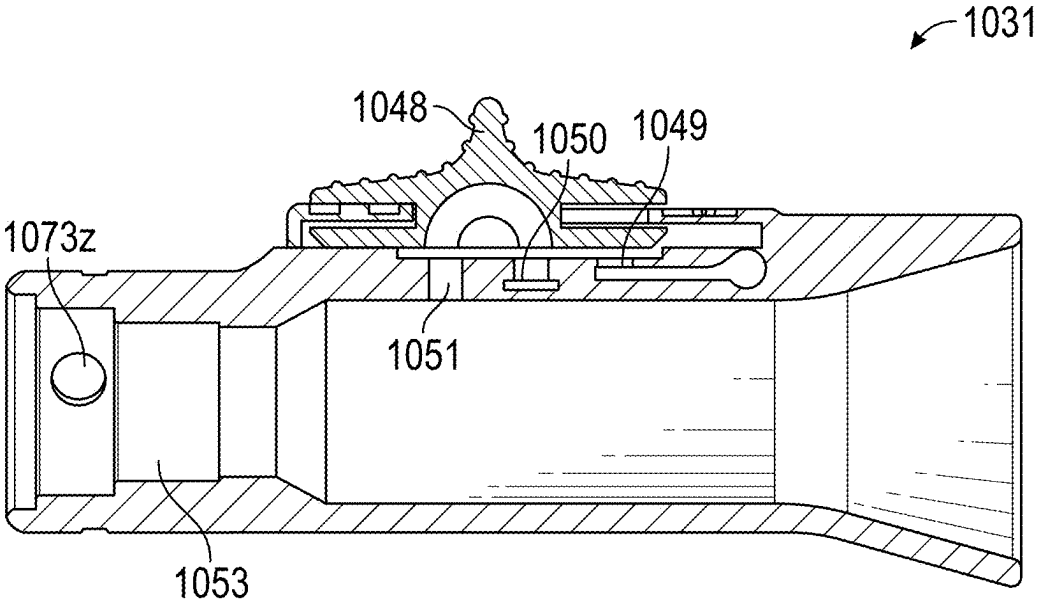

FIG. 49A

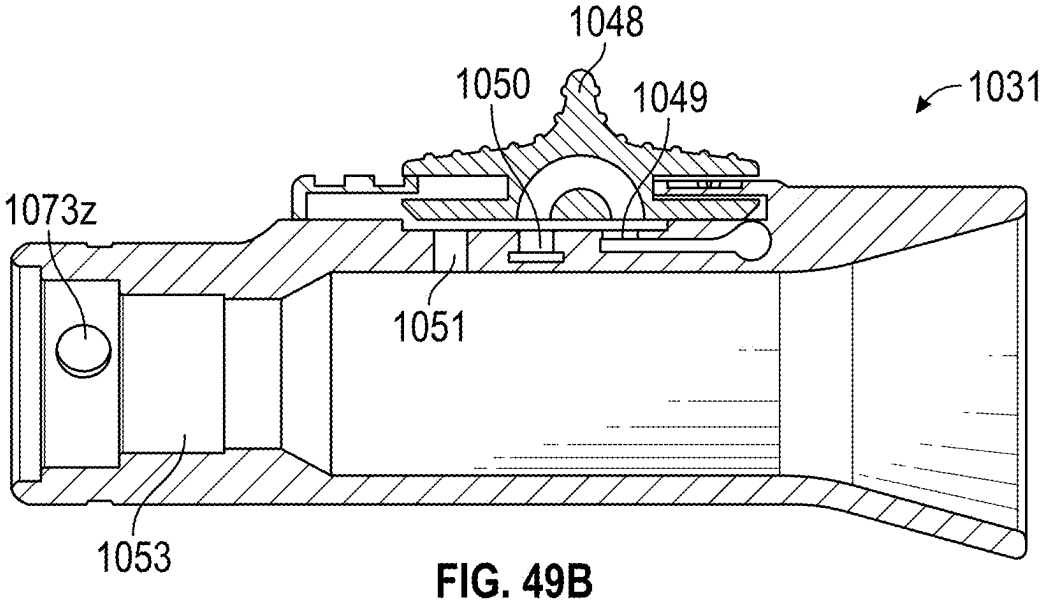

FIG. 49B

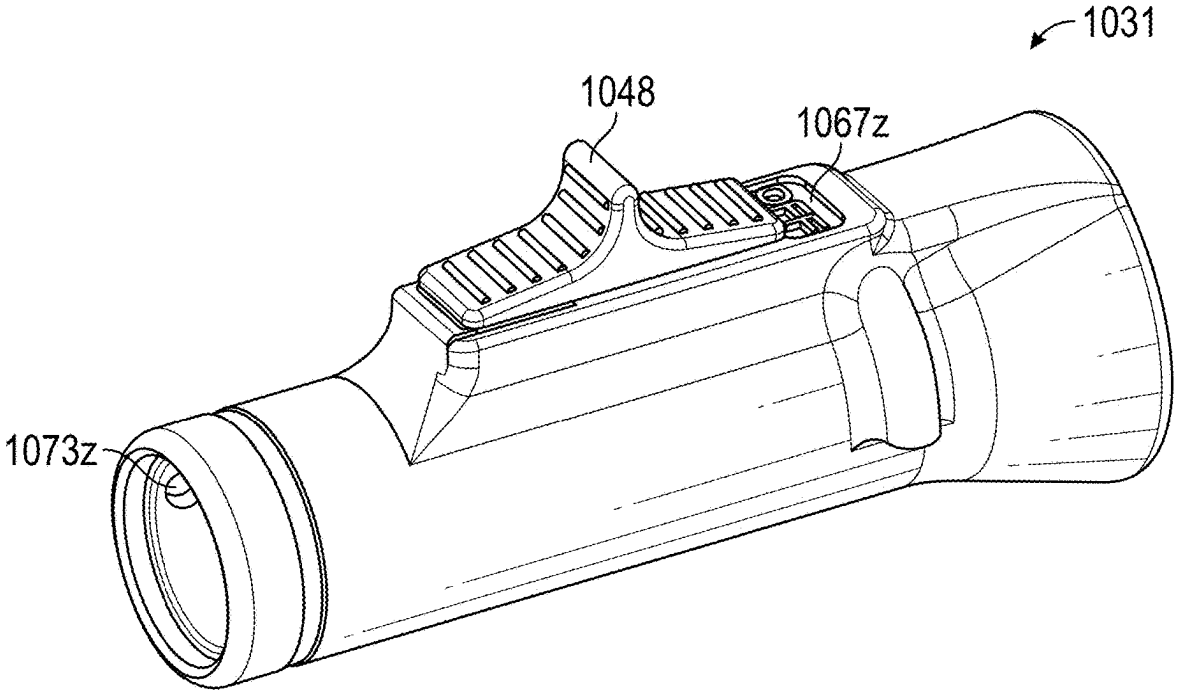

FIG. 49C

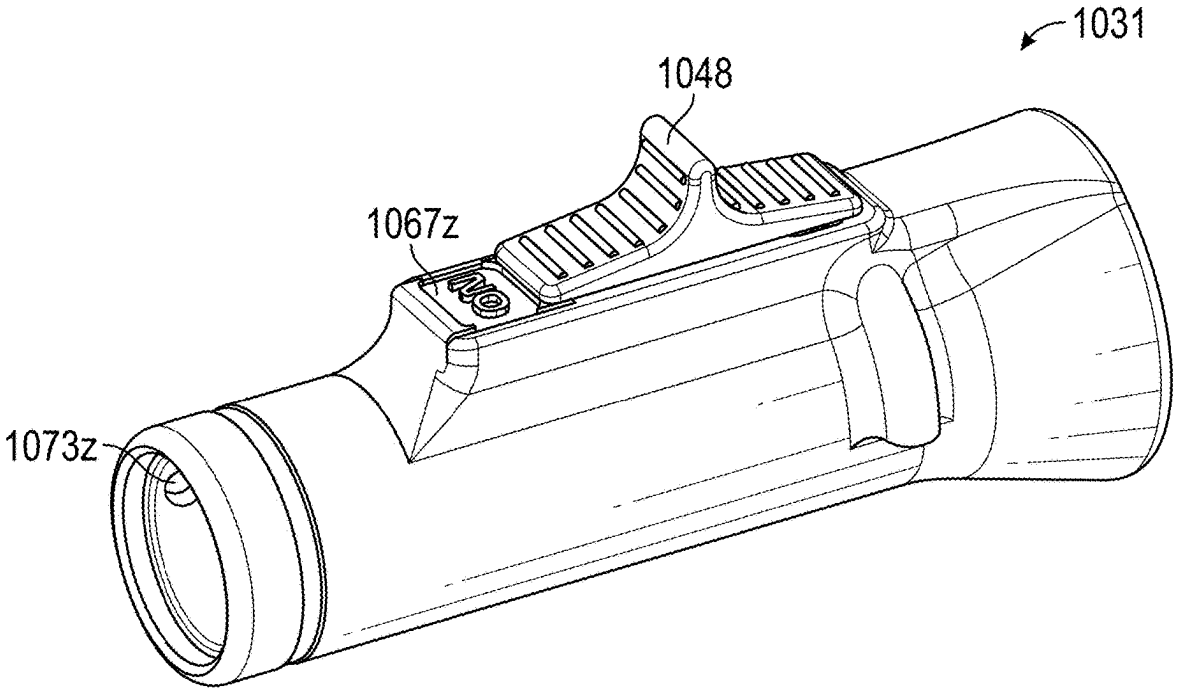

FIG. 49D

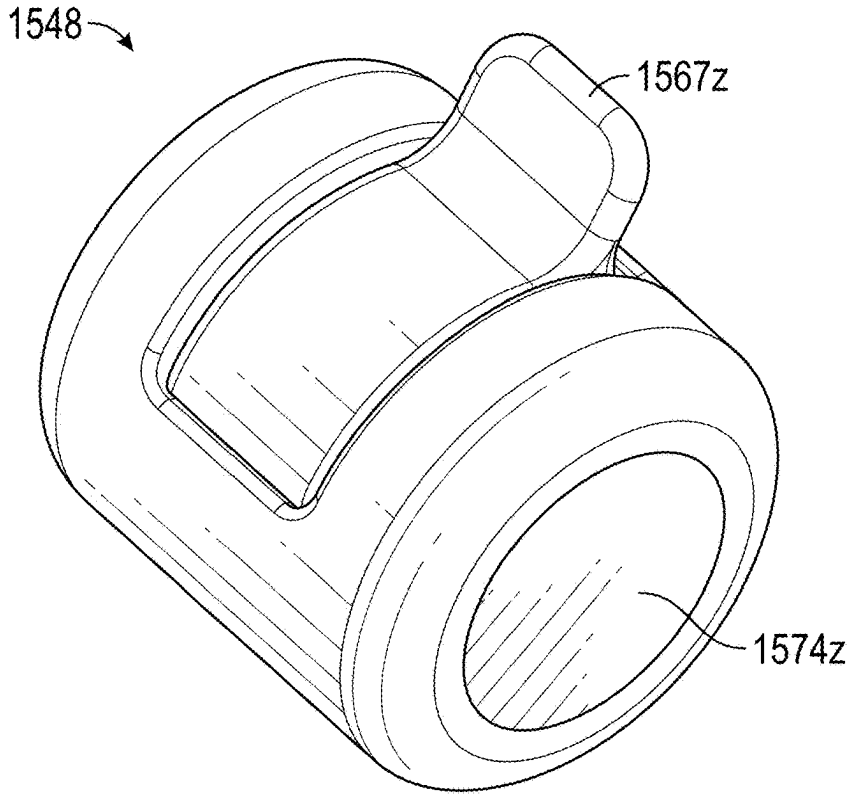

FIG. 50A

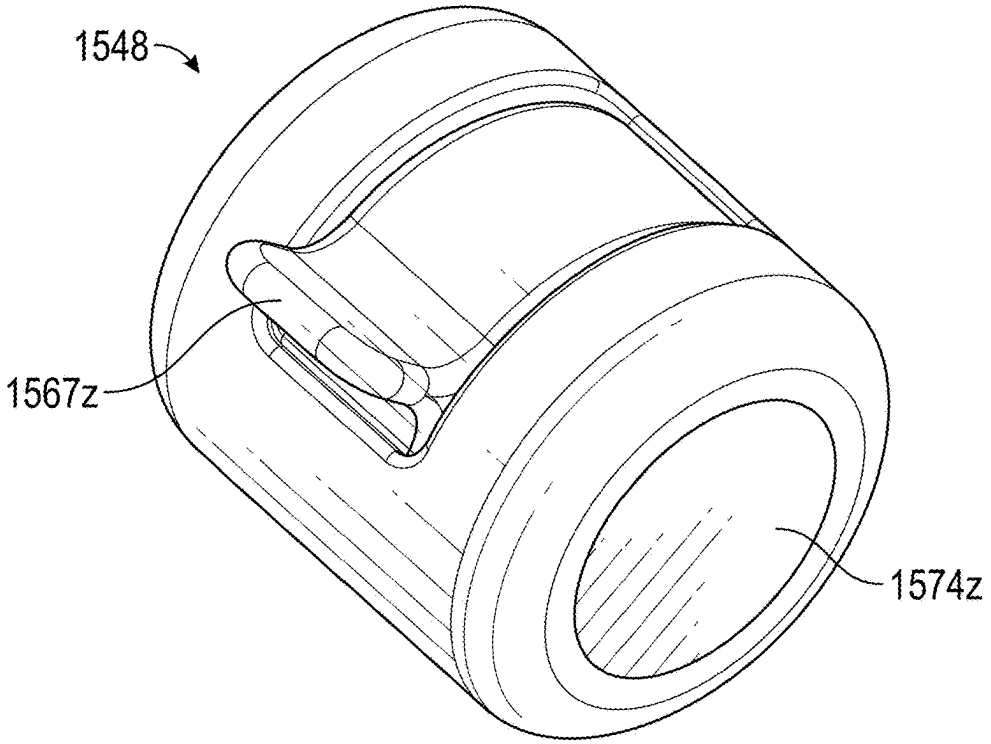

FIG. 50B

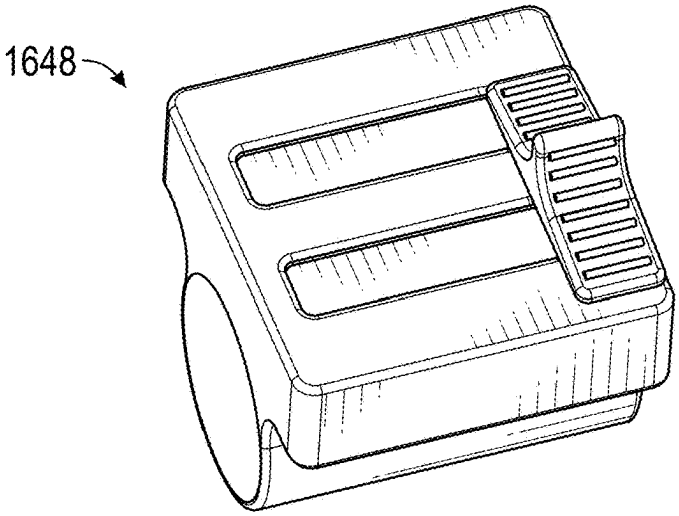

FIG. 51A

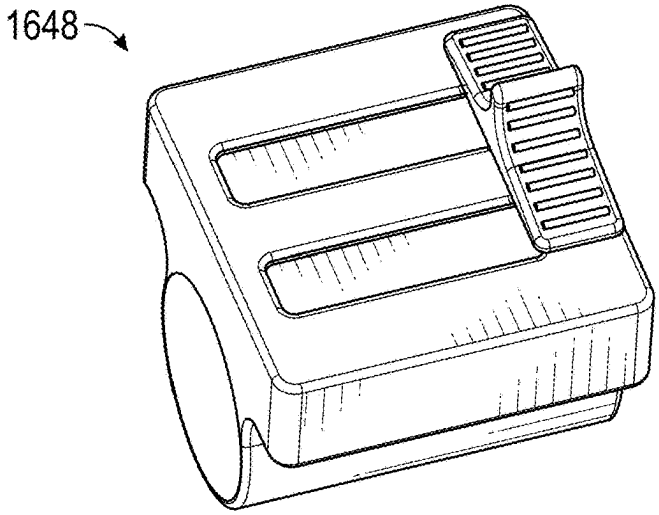

FIG. 51B

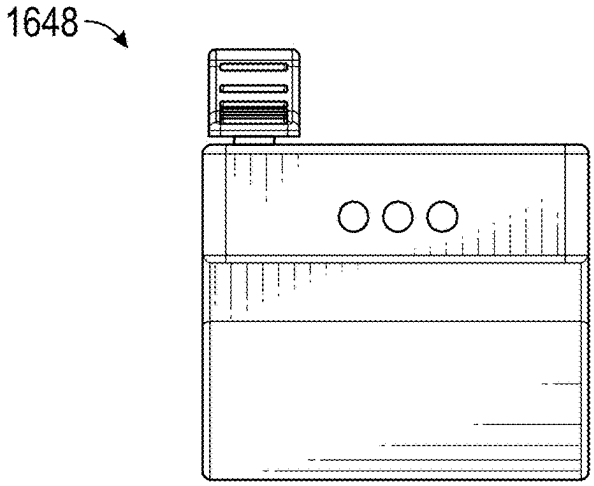

FIG. 51C

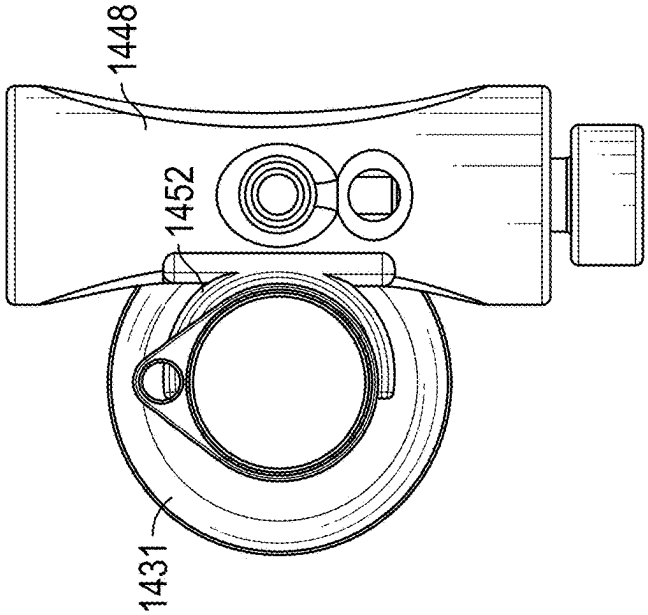

FIG. 52B

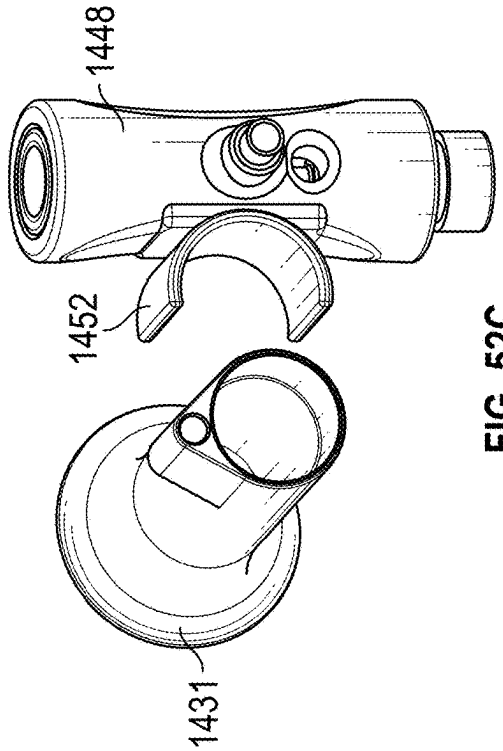

FIG. 52C

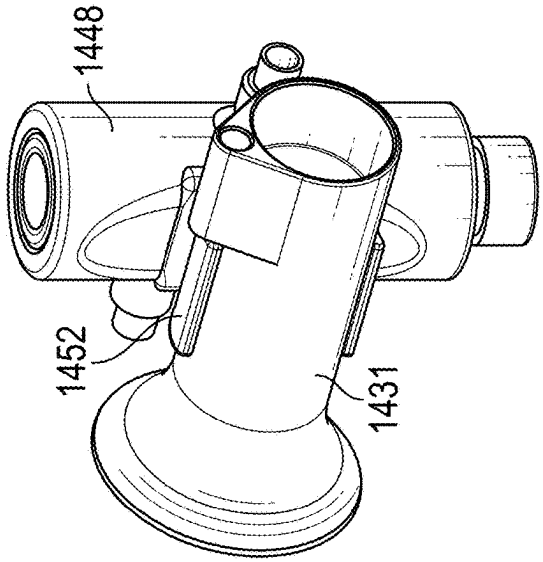

FIG. 52A

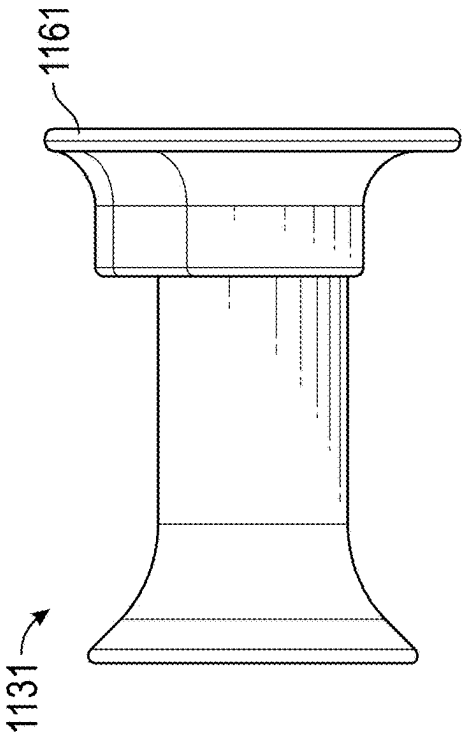

FIG. 53B

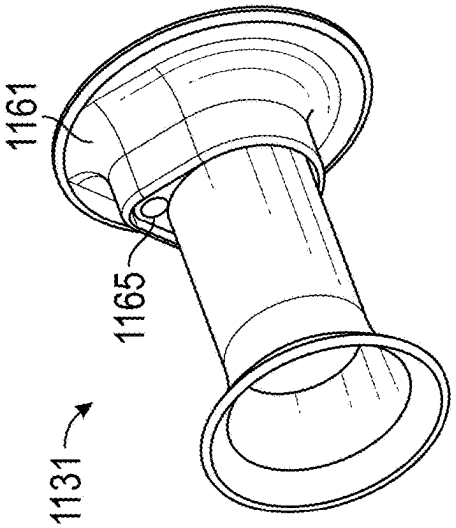

FIG. 53A

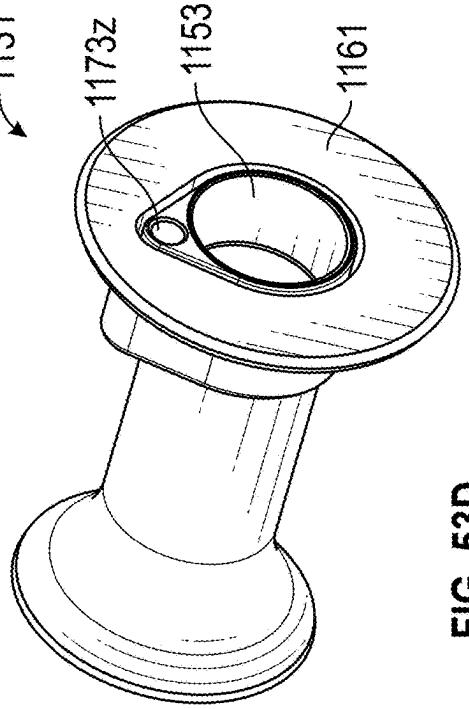

FIG. 53D

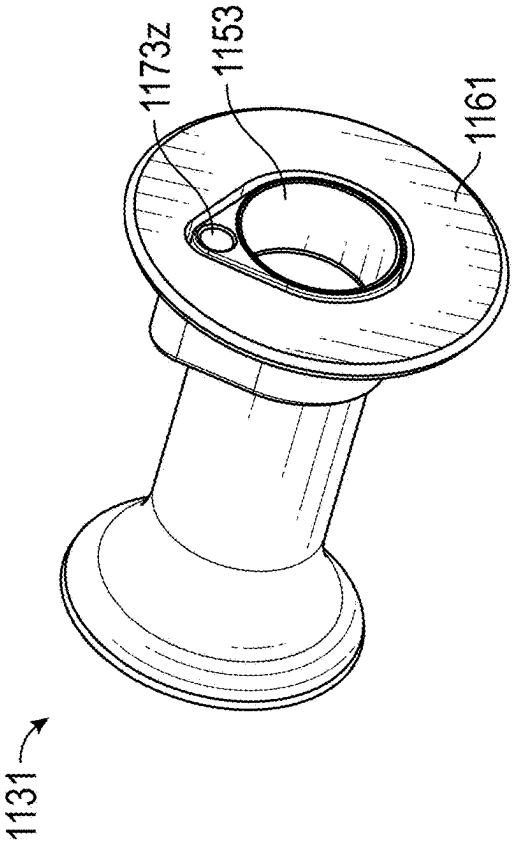

FIG. 53C

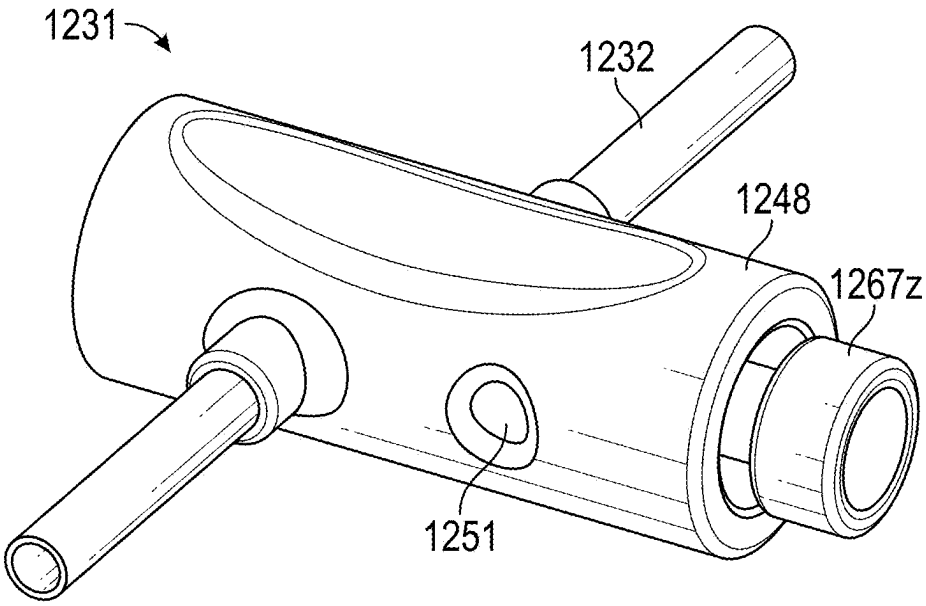

FIG. 54A

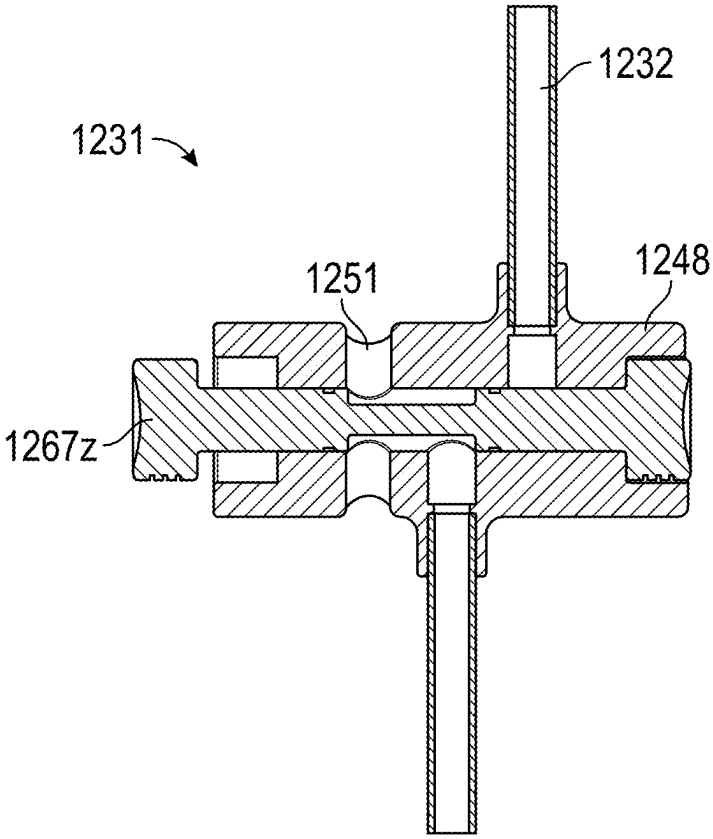

FIG. 54B

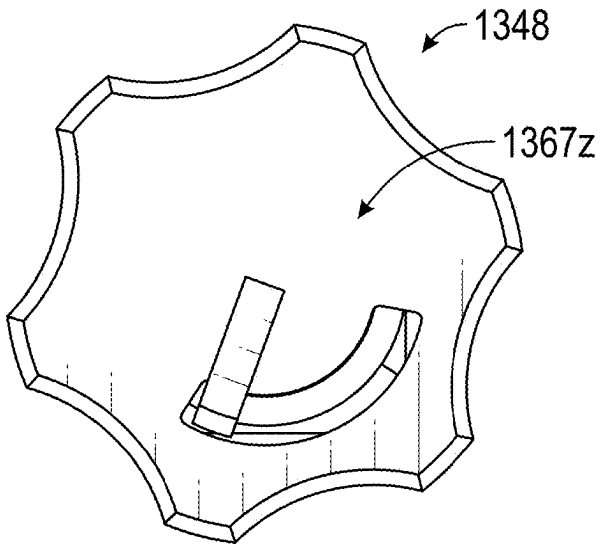

FIG. 55A

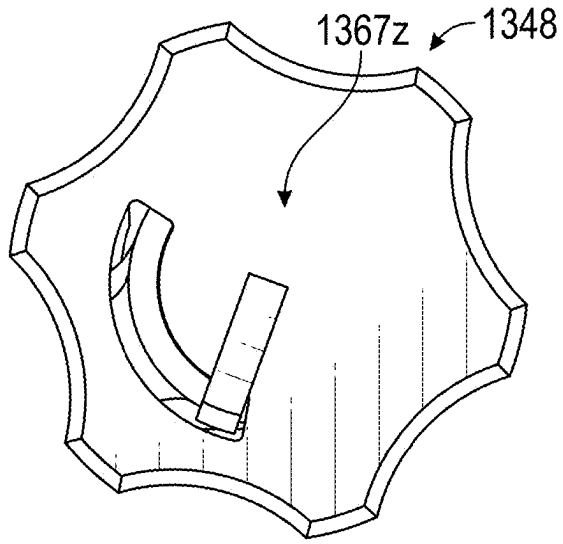

FIG. 55B

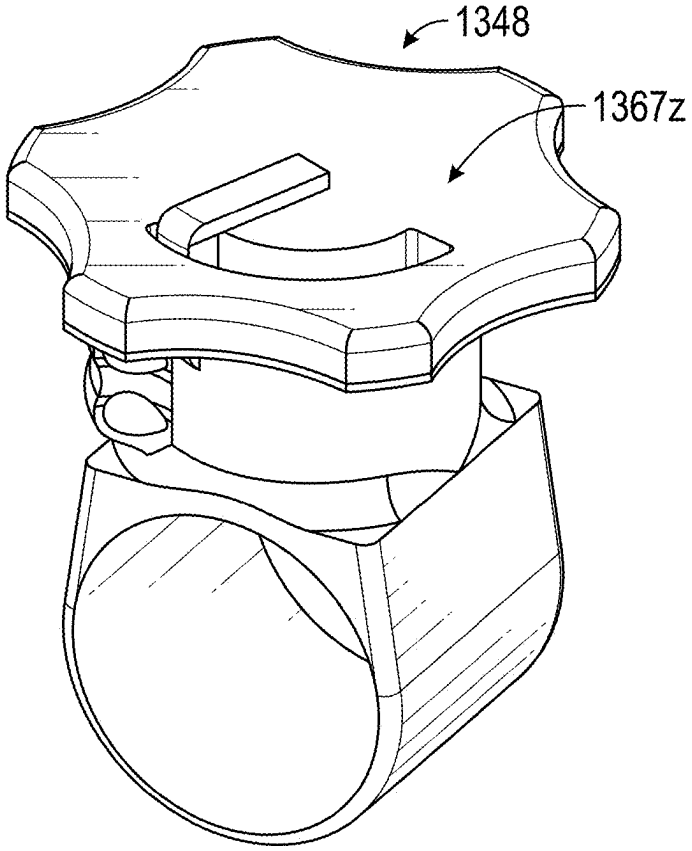

FIG. 55C

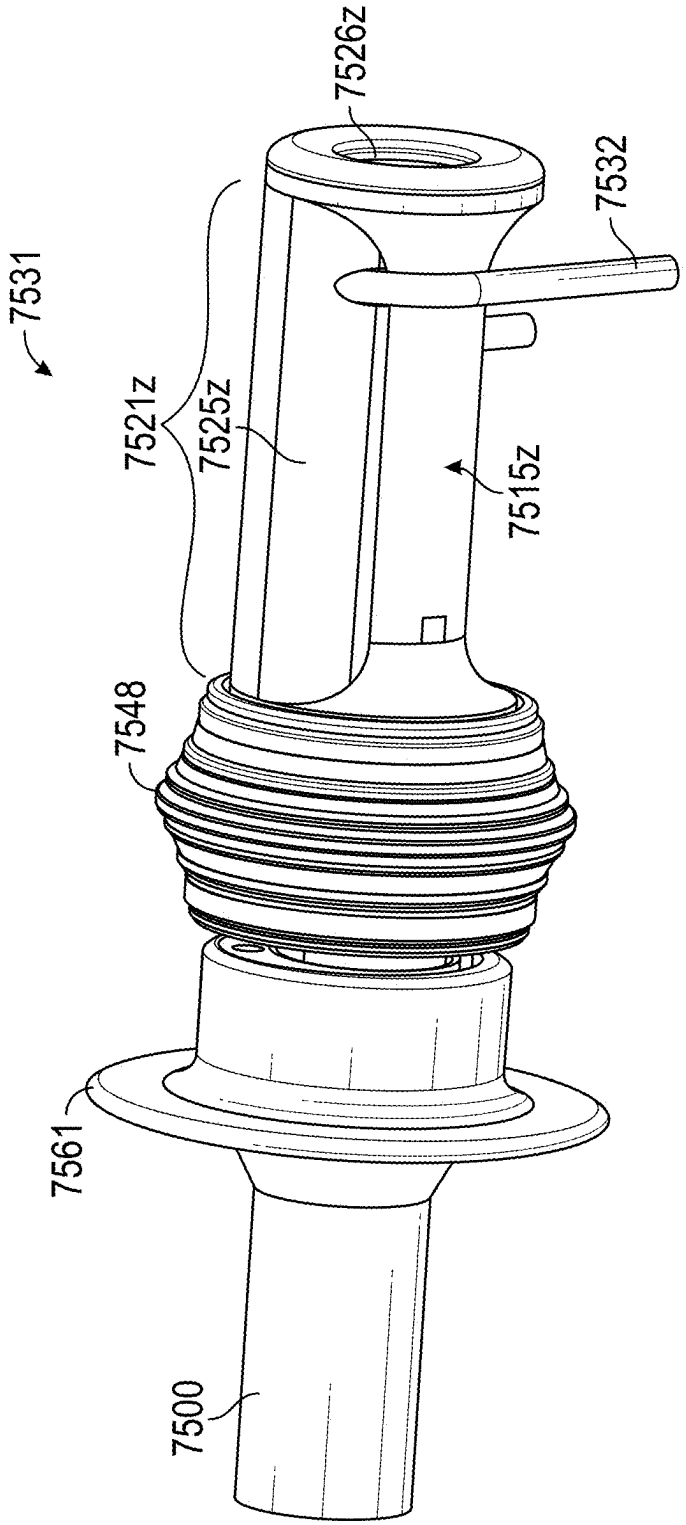

FIG. 56A

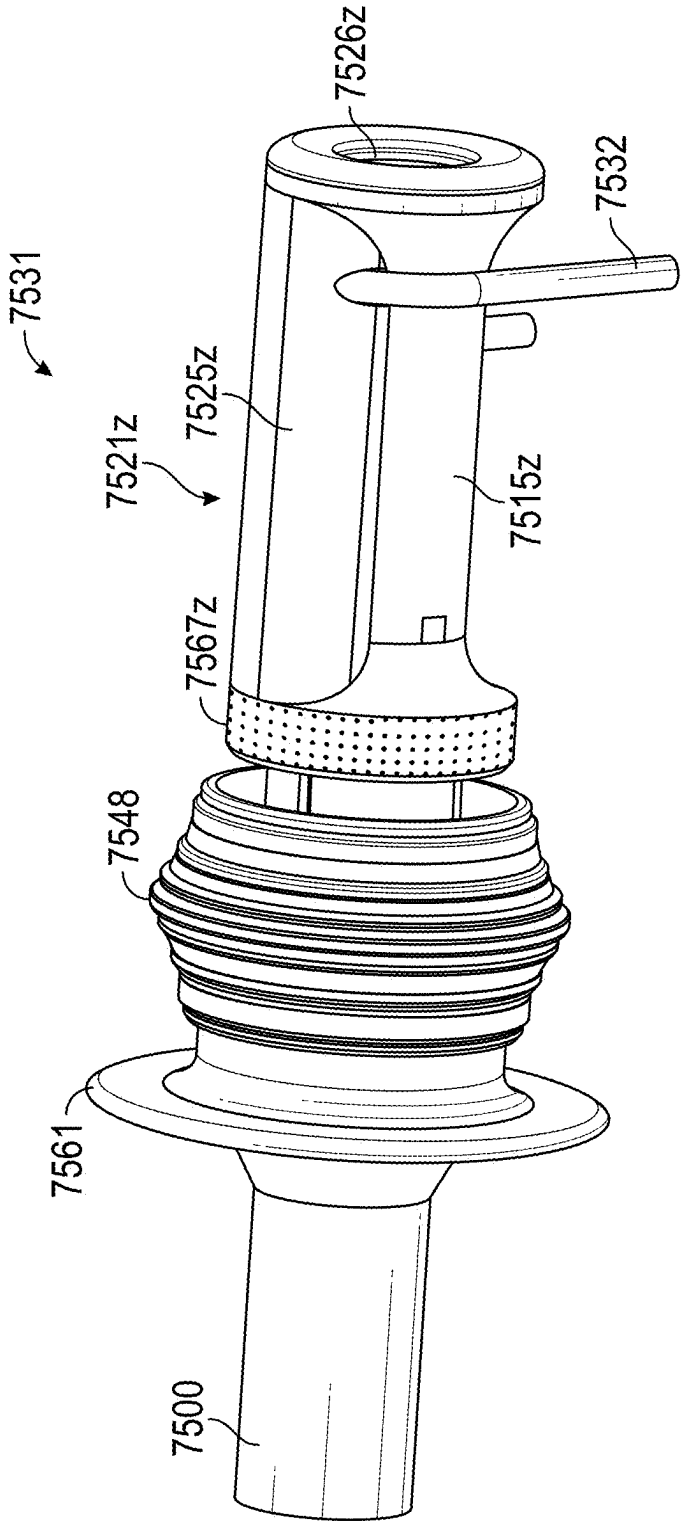

FIG. 56B

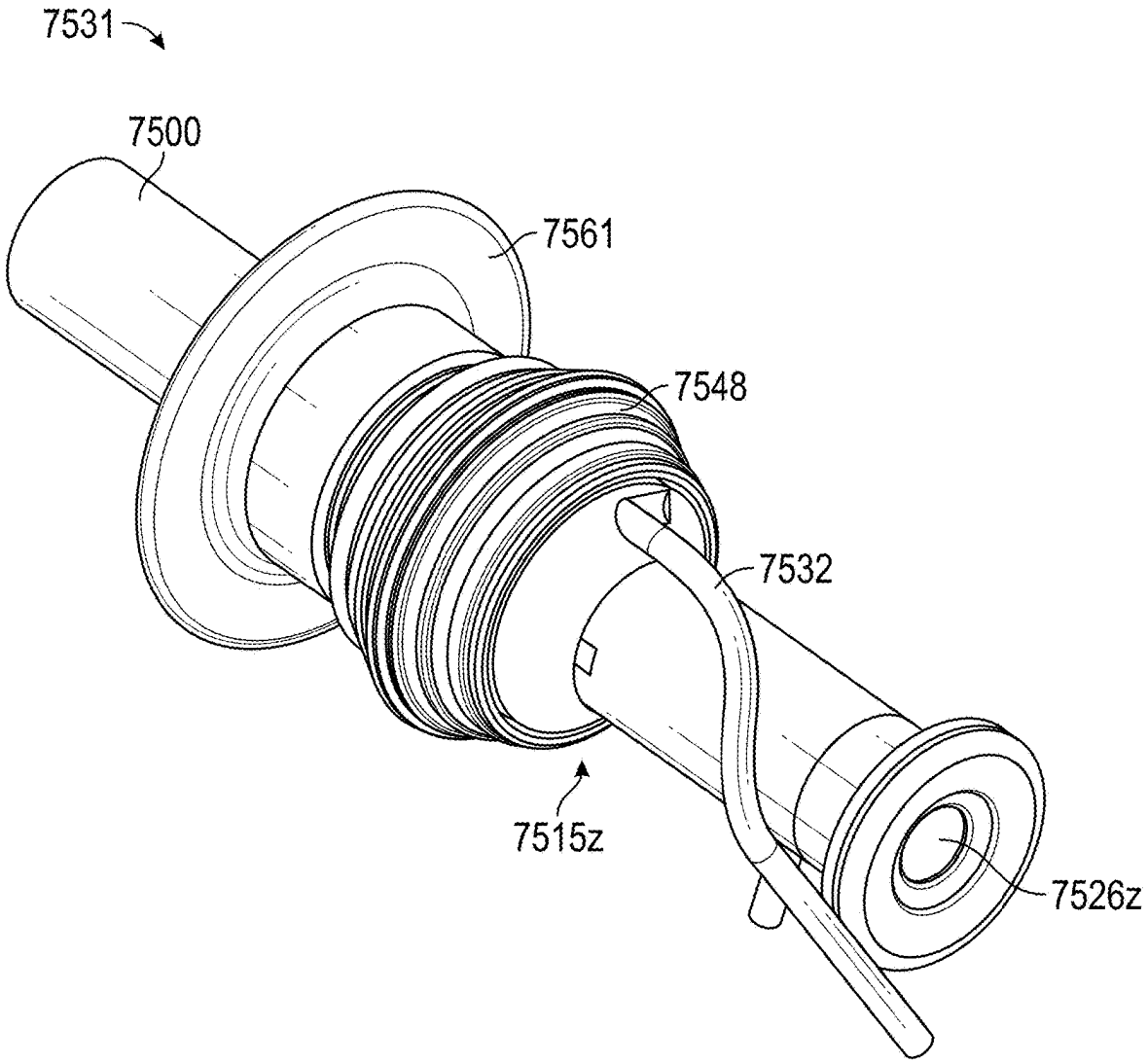

FIG. 56C

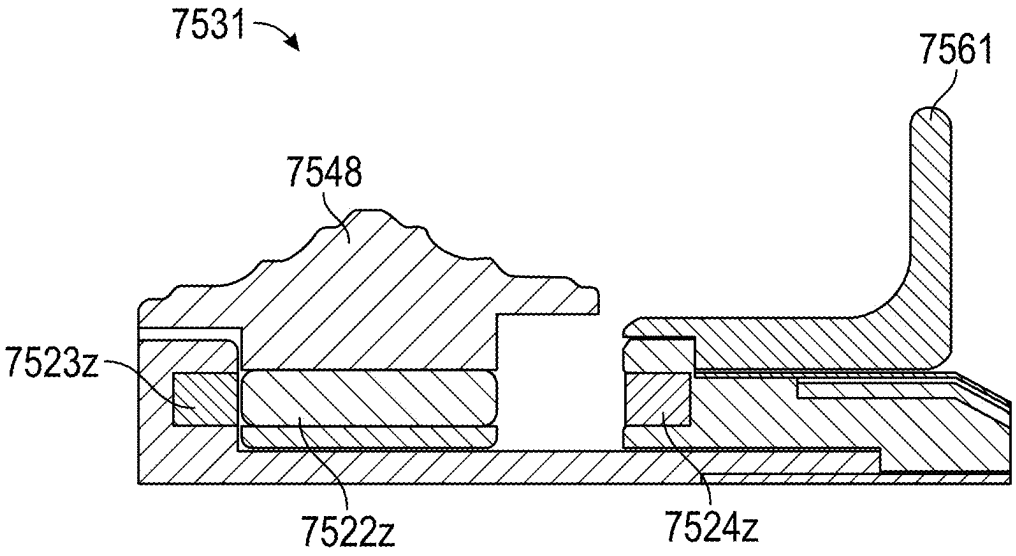

FIG. 56D

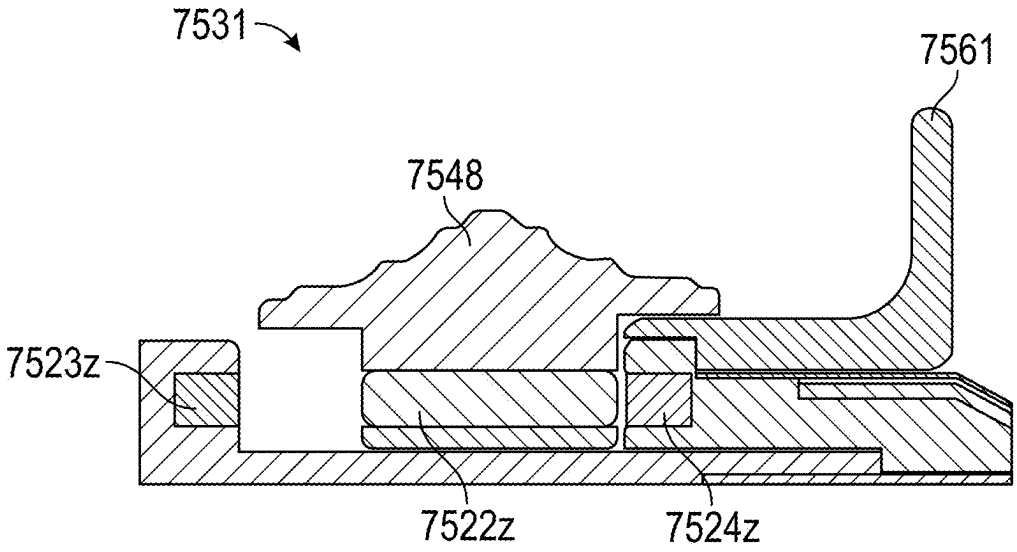

FIG. 56E

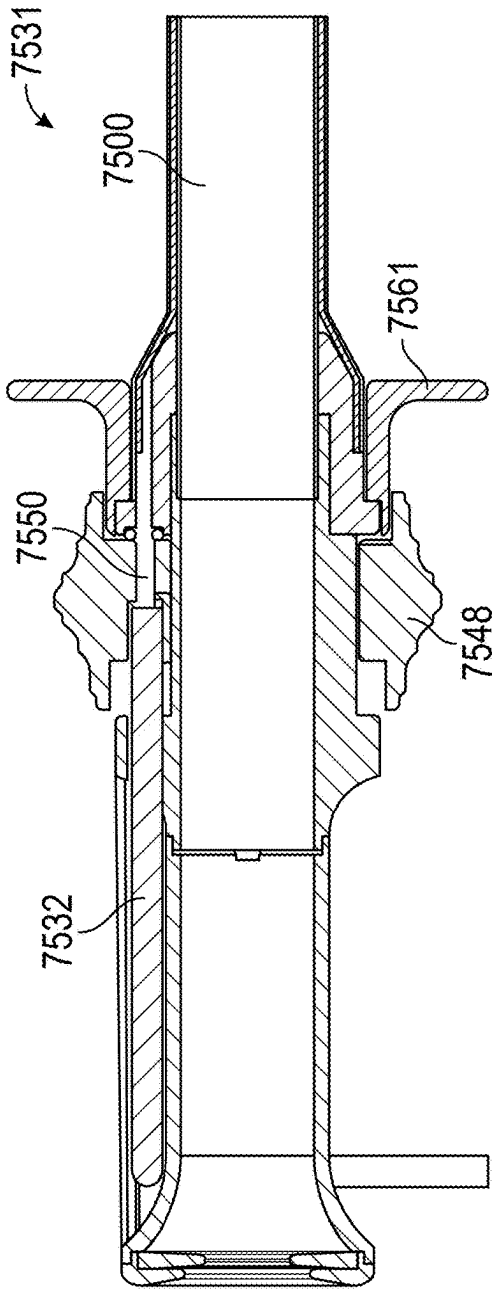

FIG. 56F

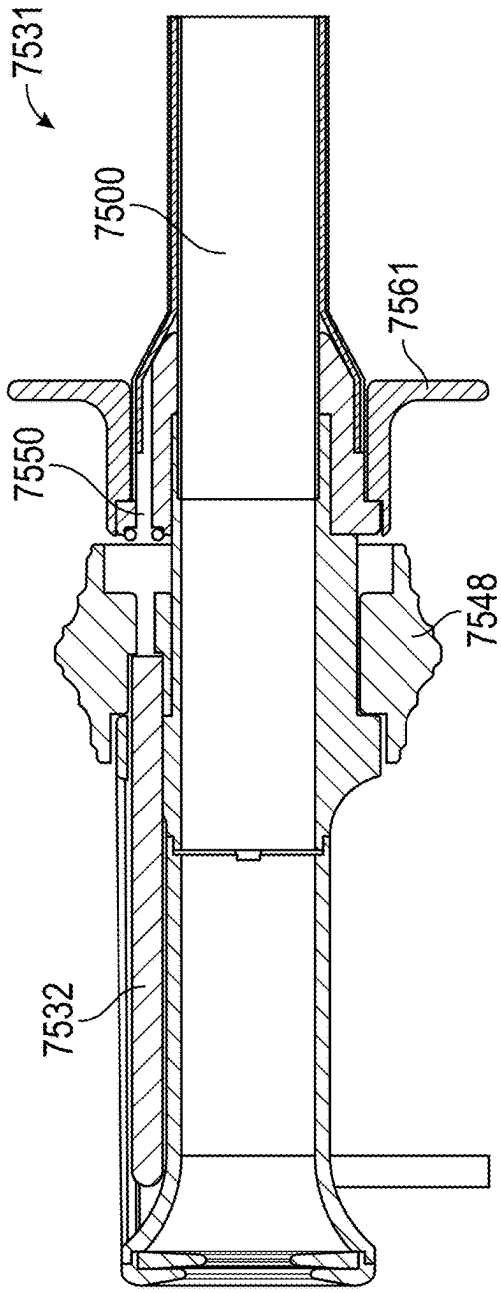

FIG. 56G

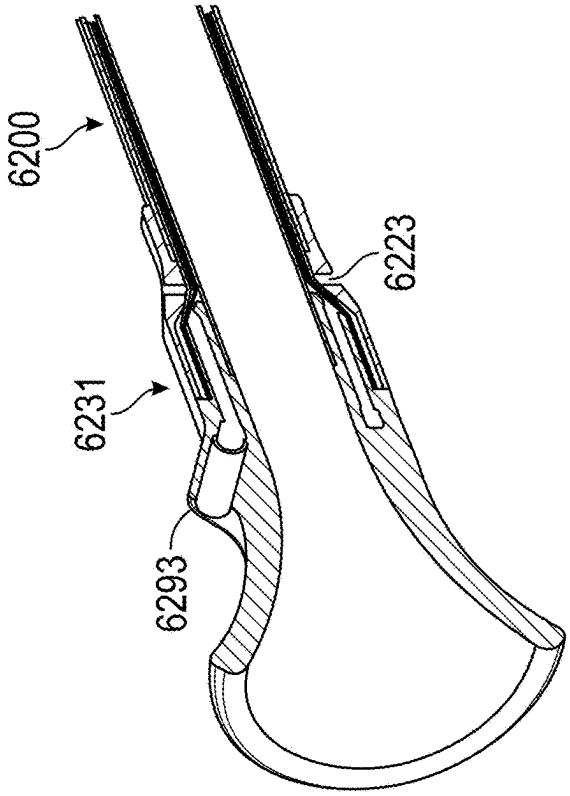

FIG. 57B

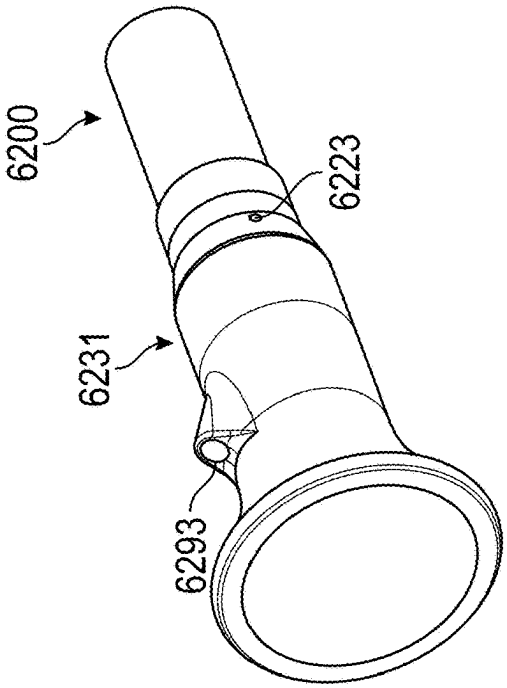

FIG. 57A

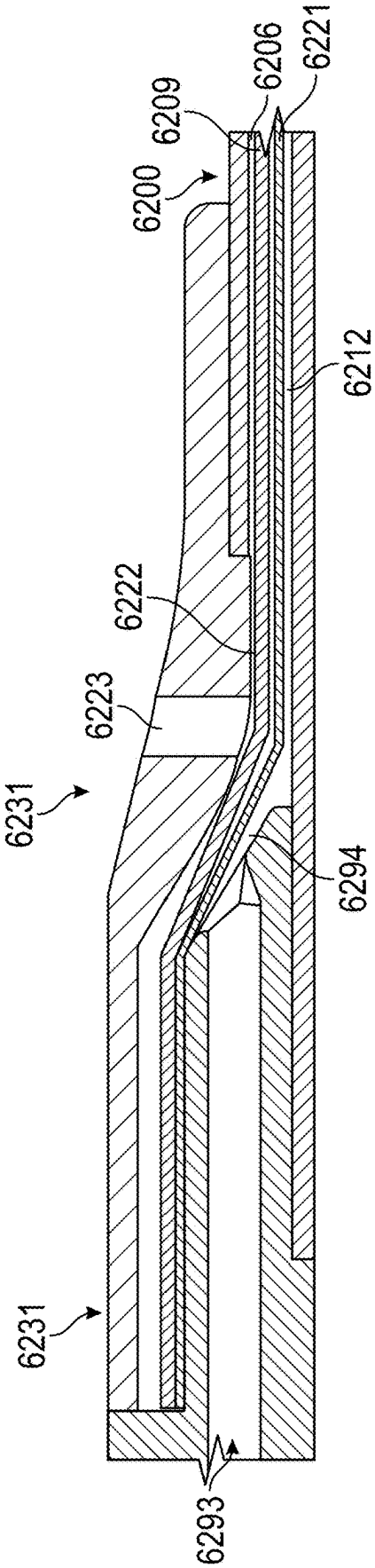

FIG. 57C

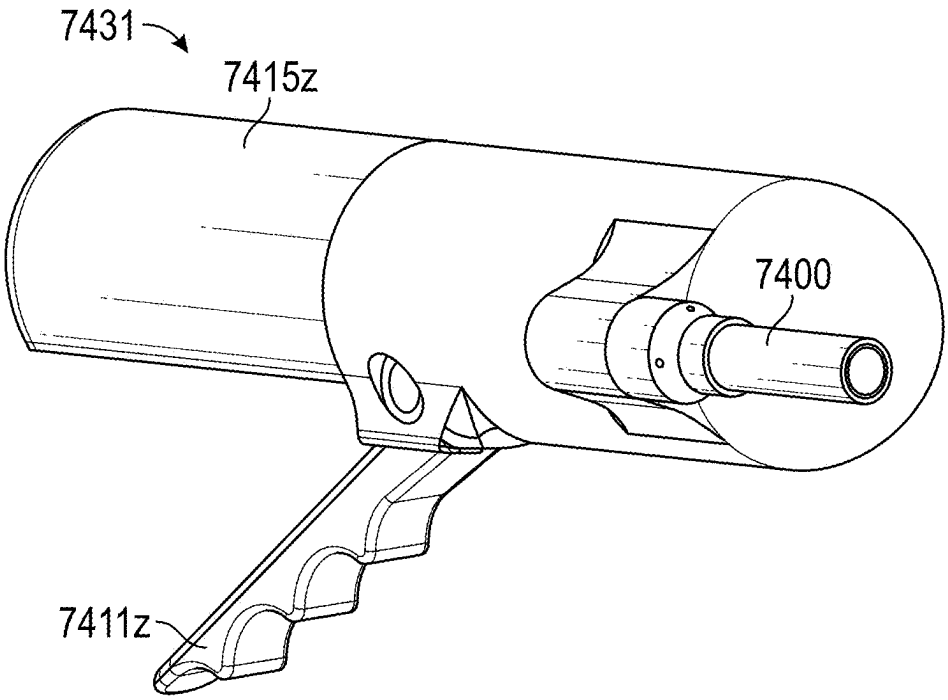

FIG. 58A

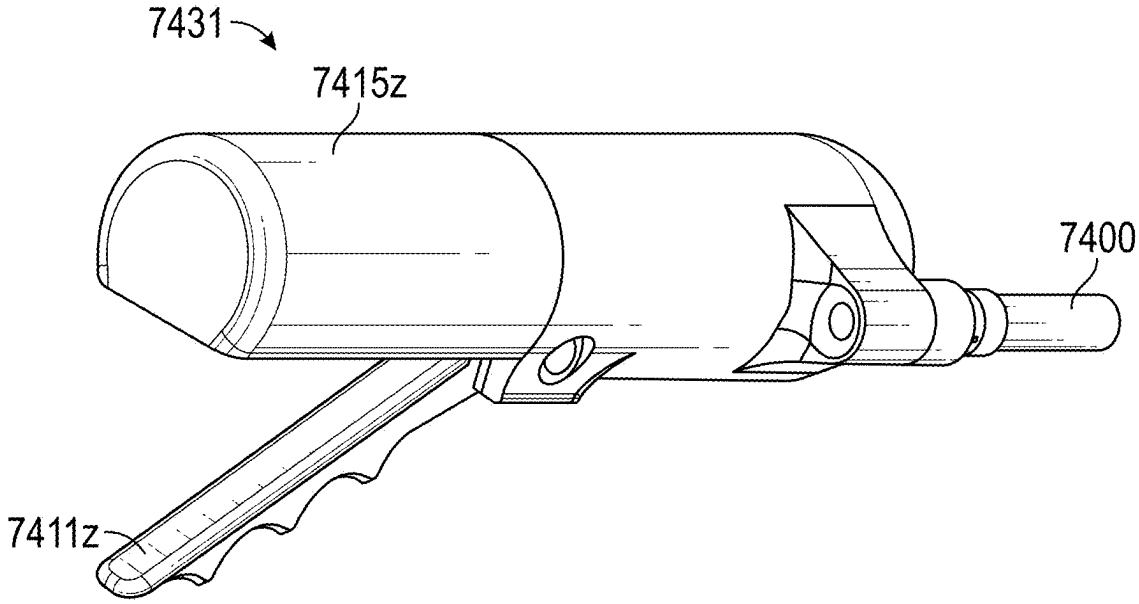

FIG. 58B

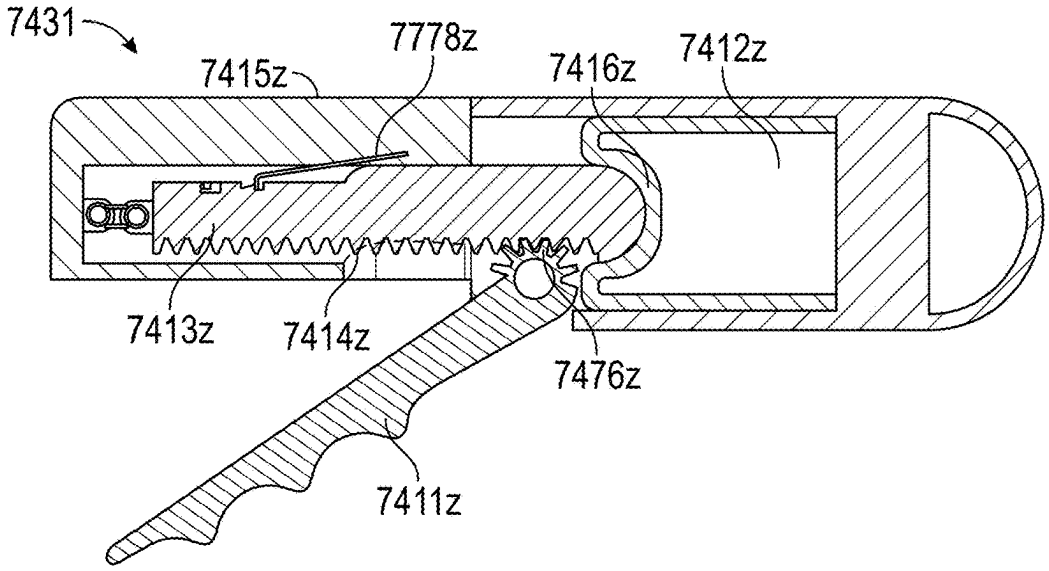

FIG. 58C

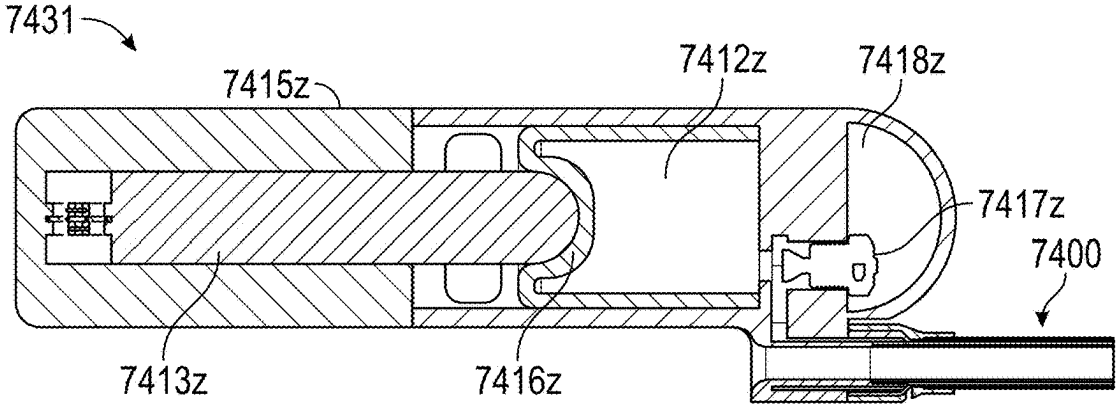

FIG. 58D

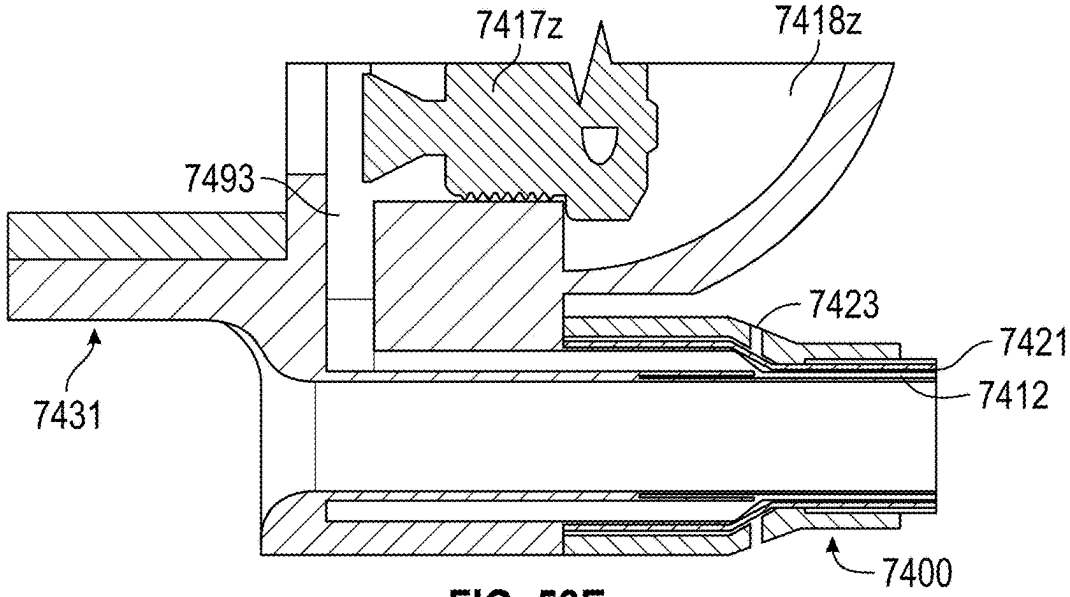

FIG. 58E

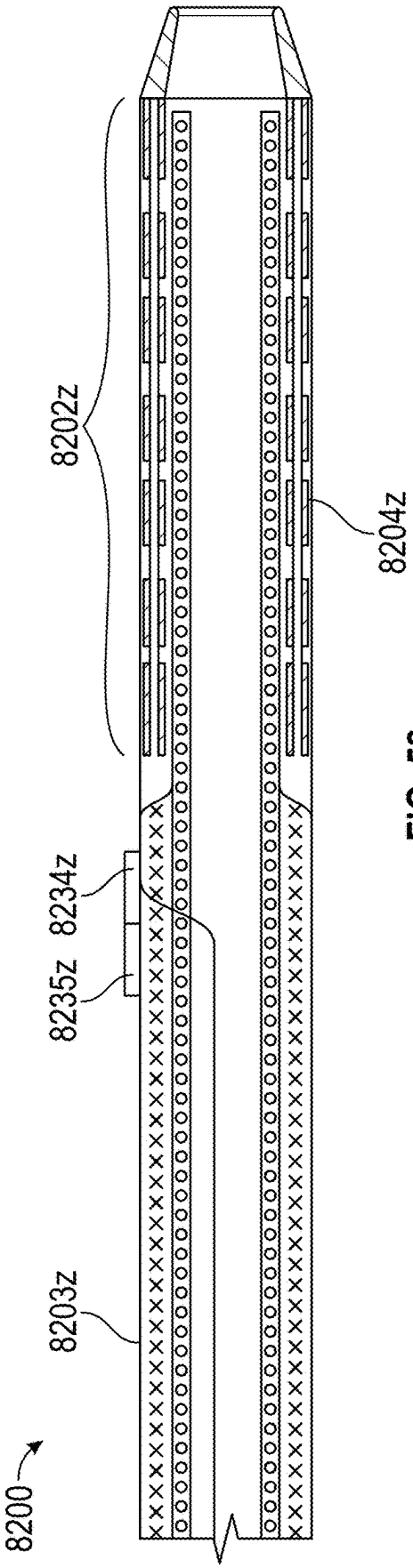

FIG. 59

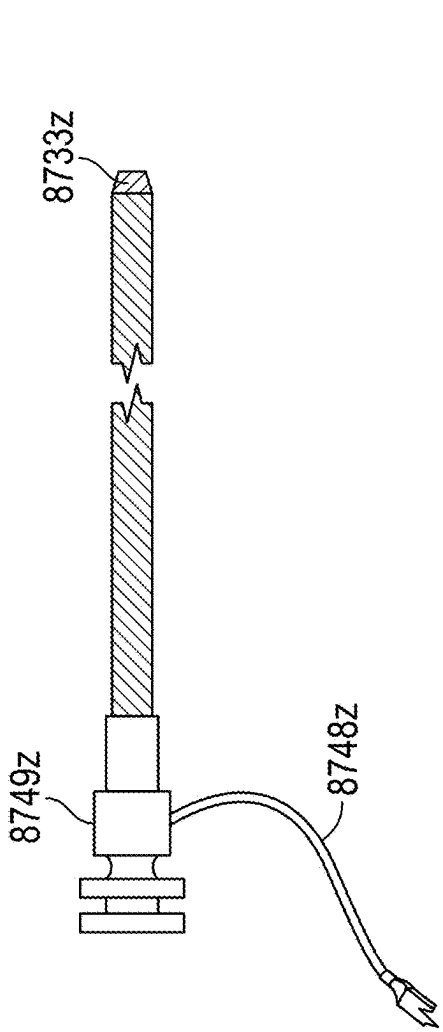

FIG. 60

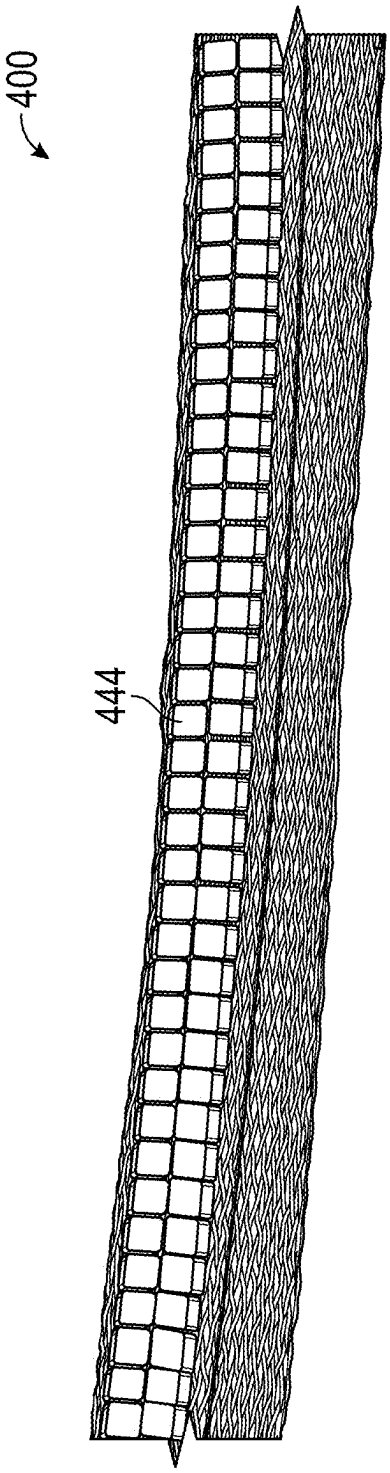

FIG. 61A

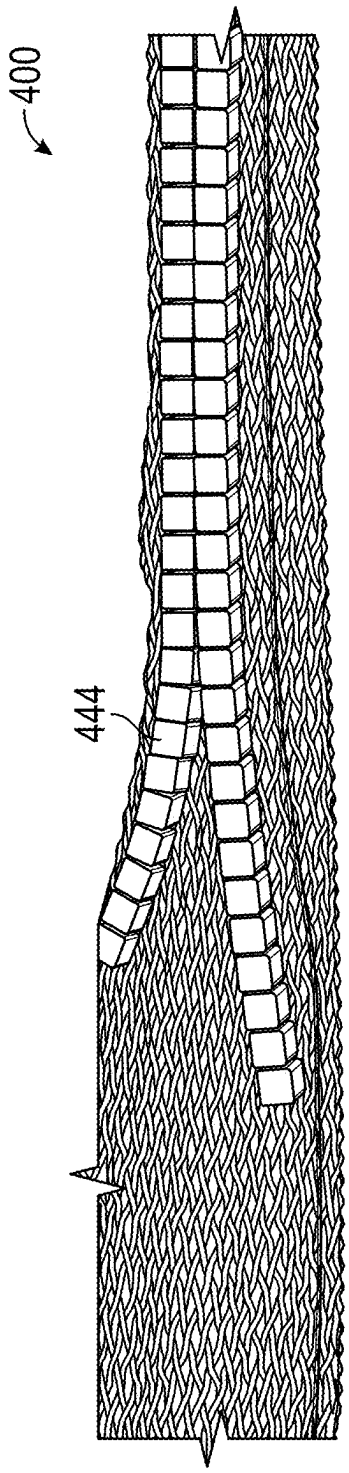

FIG. 61B

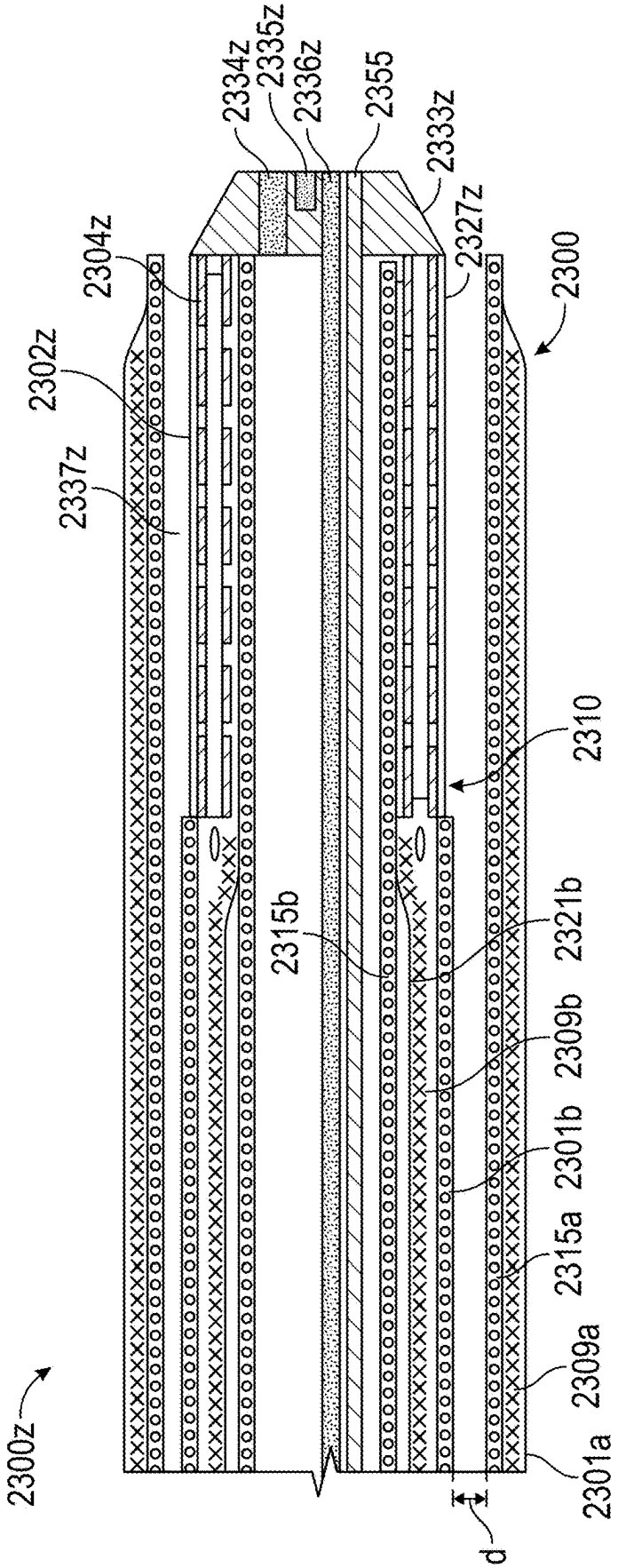
2300z
2304z
2302z
2337z
2334z
2335z
2336z
2355
2333z
2327z
2300
2310
2315b
2321b
2309b
2301b
2315a
2309a
2301a
d

FIG. 62

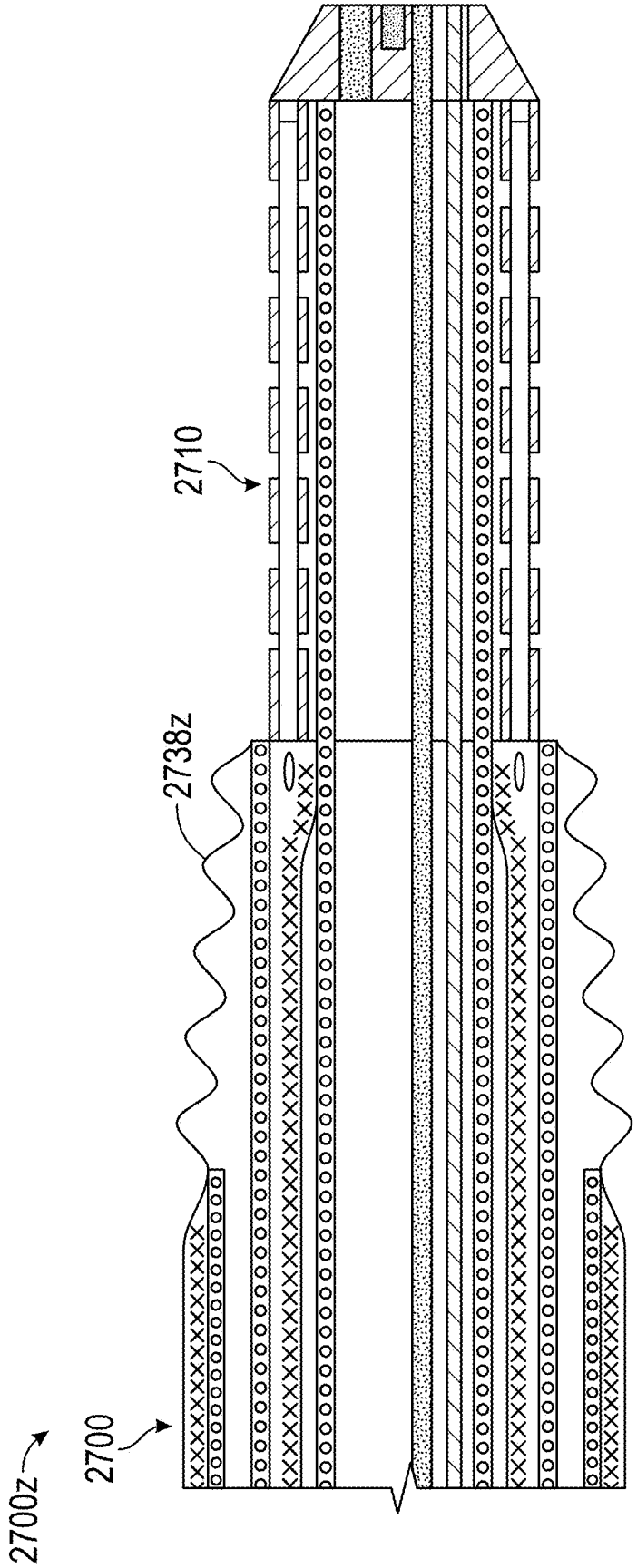

FIG. 63

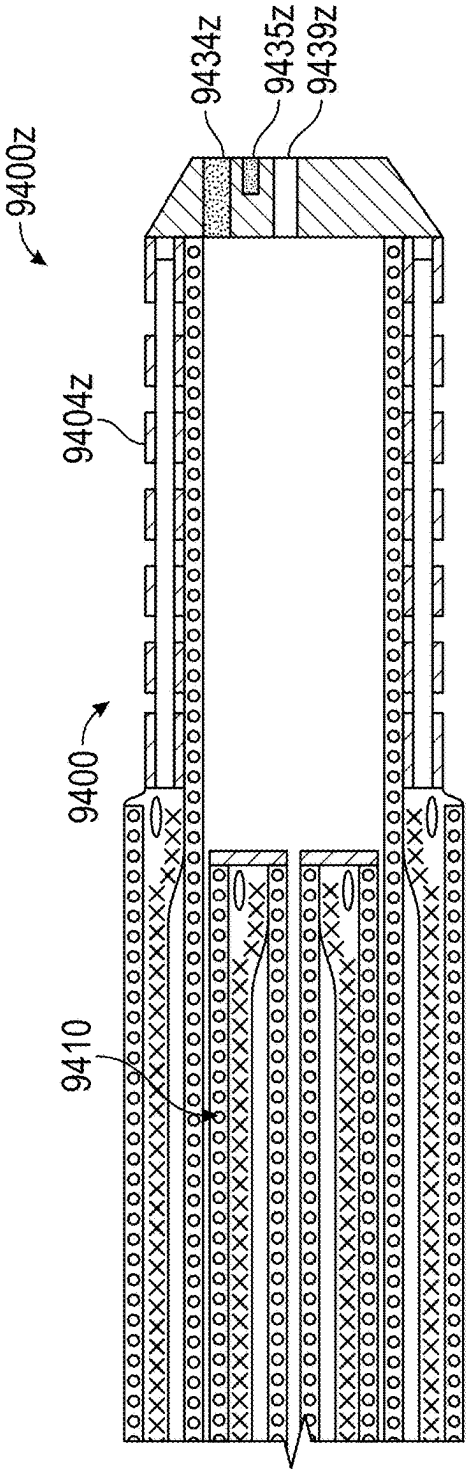

FIG. 64A

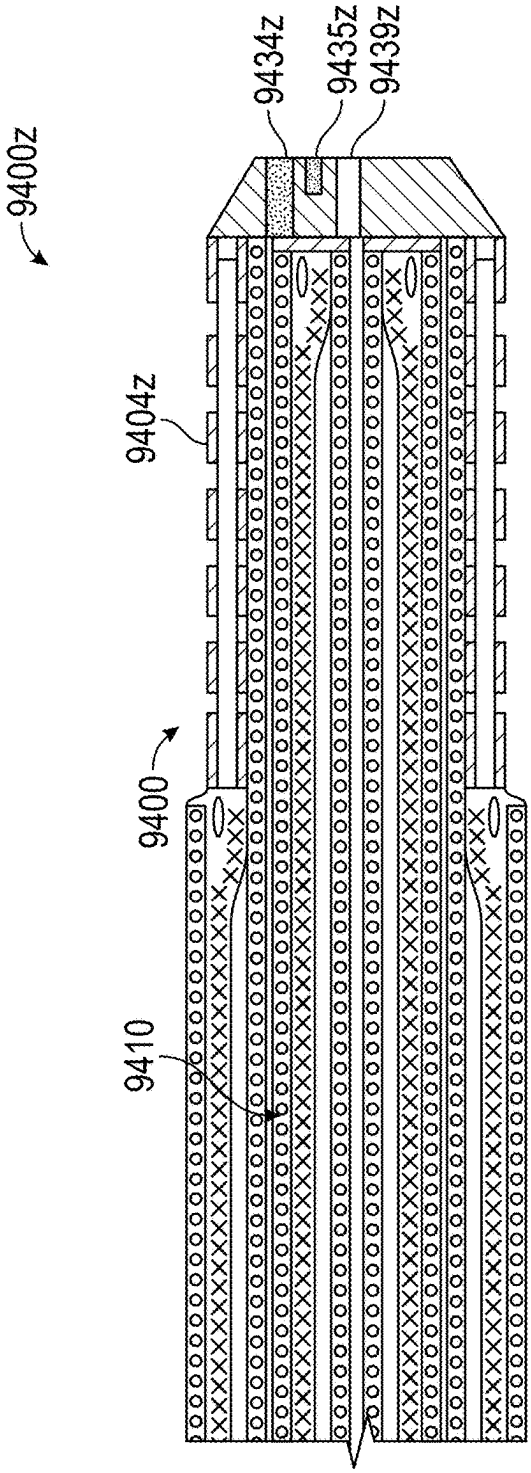

FIG. 64B

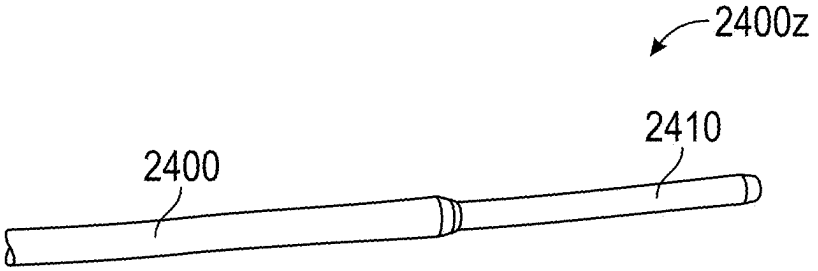

FIG. 65A

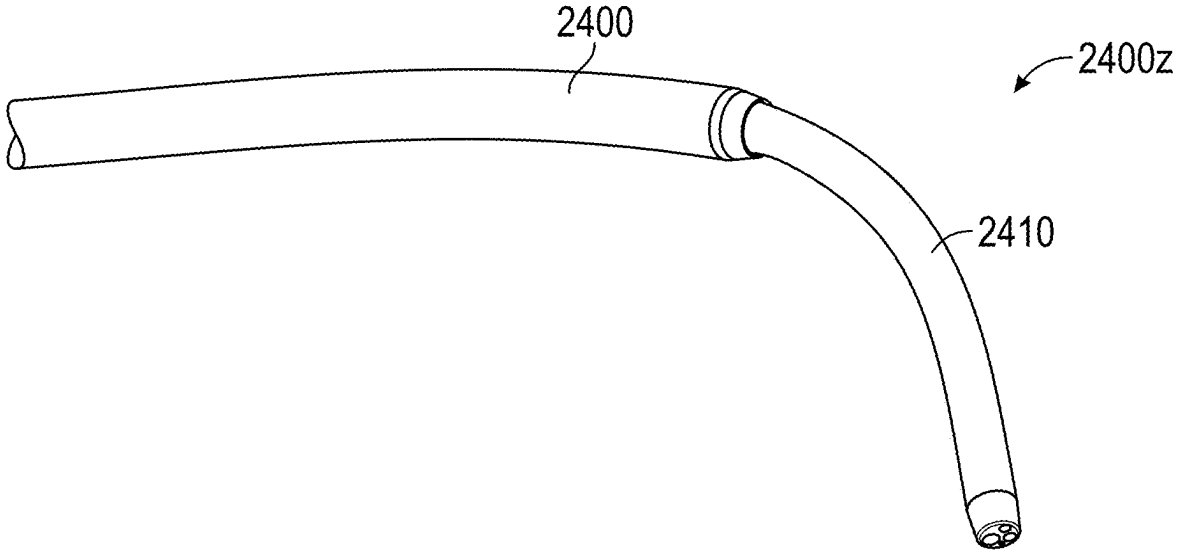

FIG. 65B

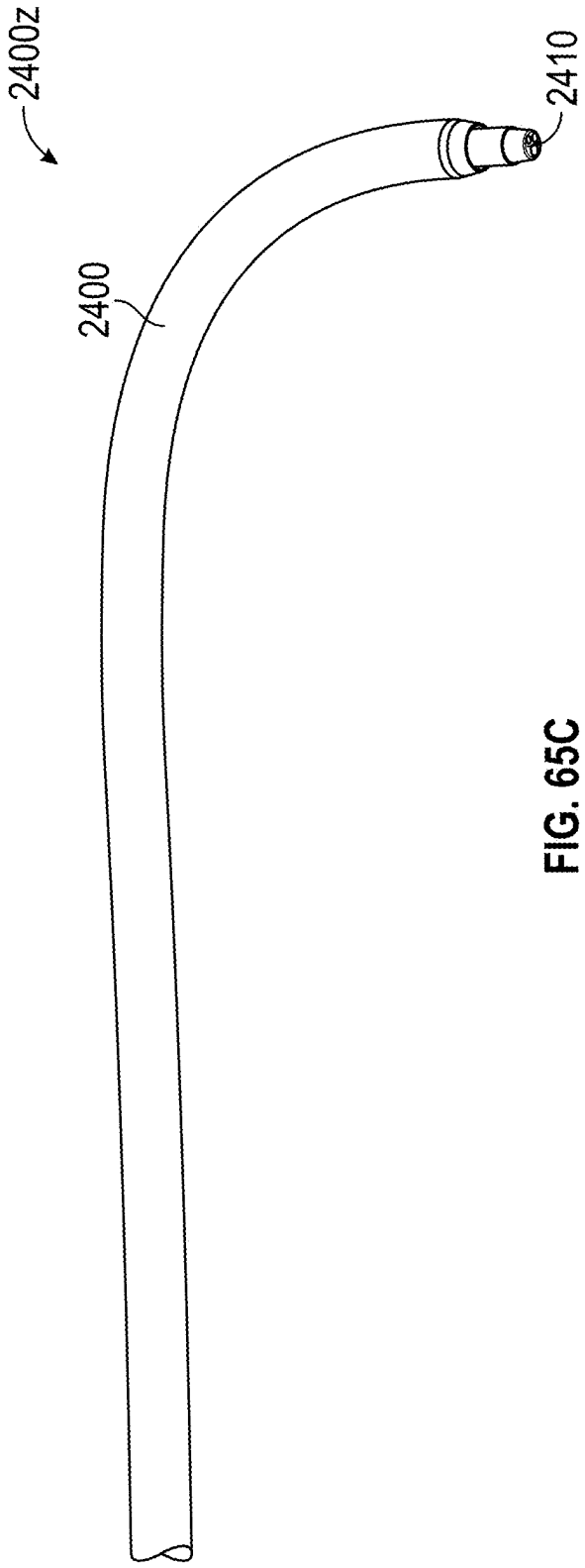

FIG. 65C

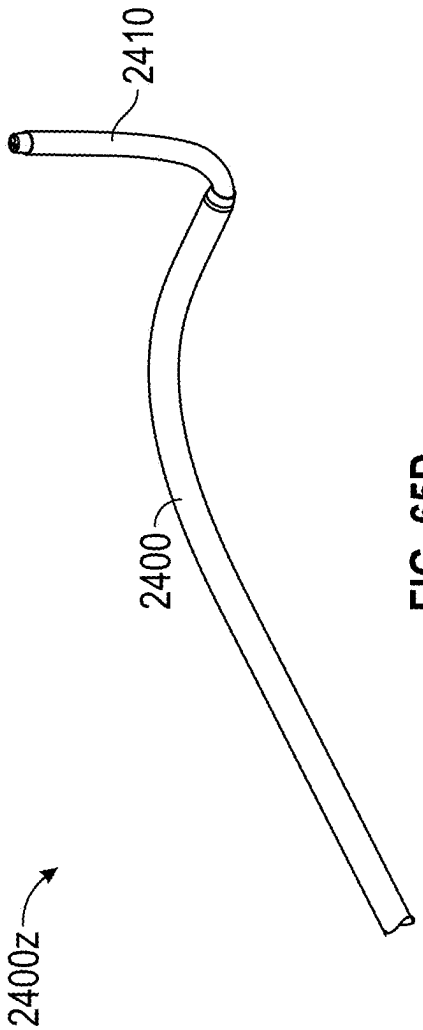

FIG. 65D

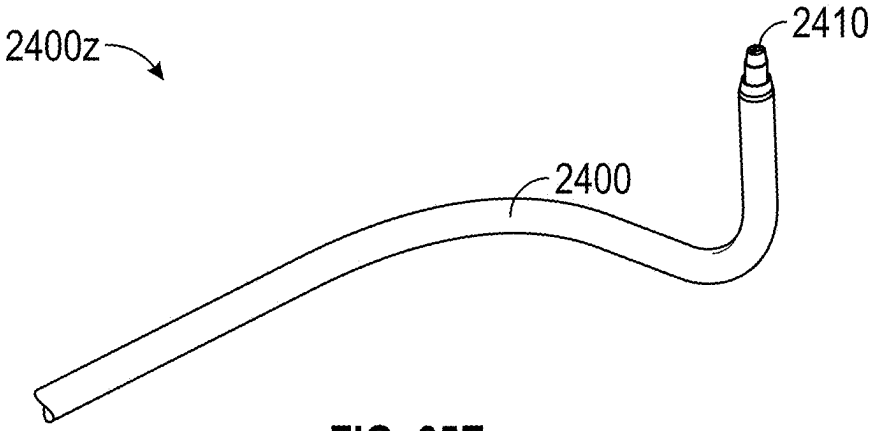

FIG. 65E

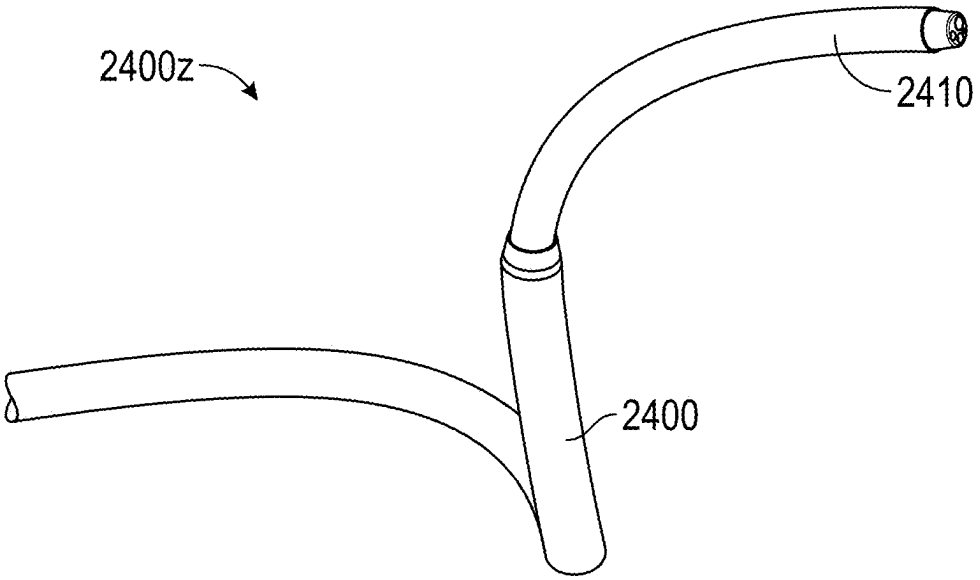

FIG. 65F

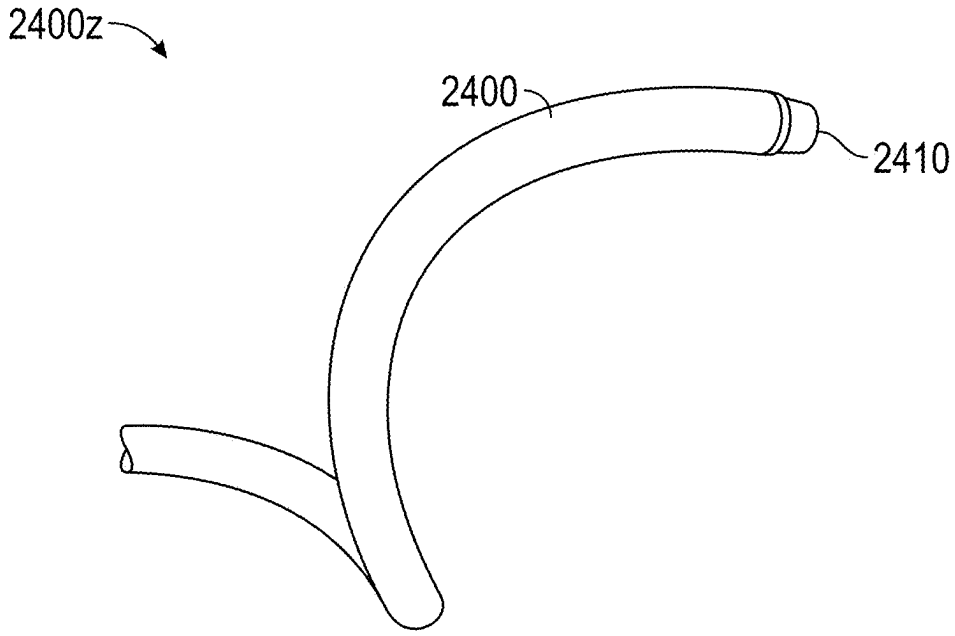

FIG. 65G

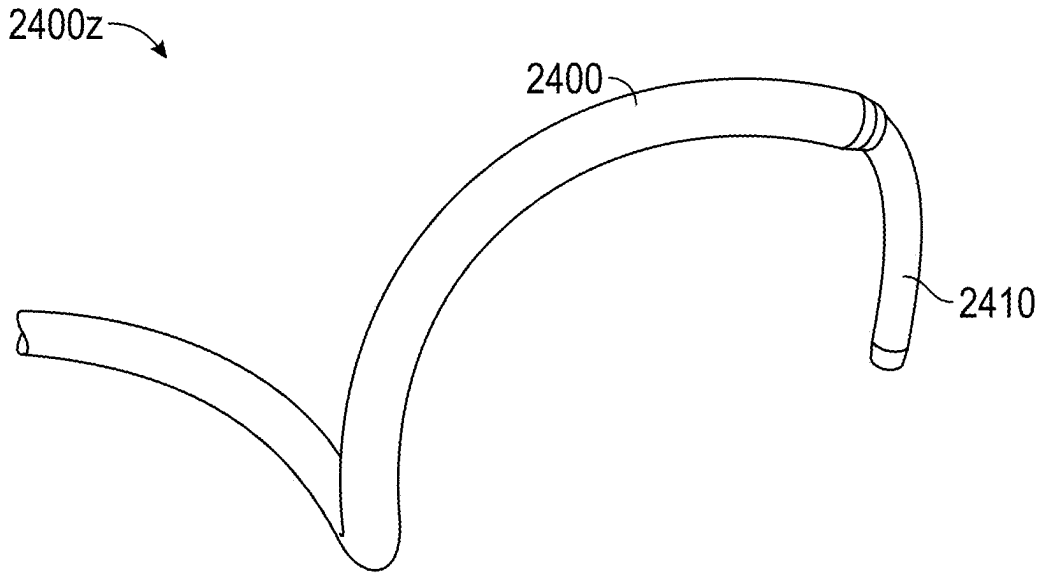

FIG. 65H

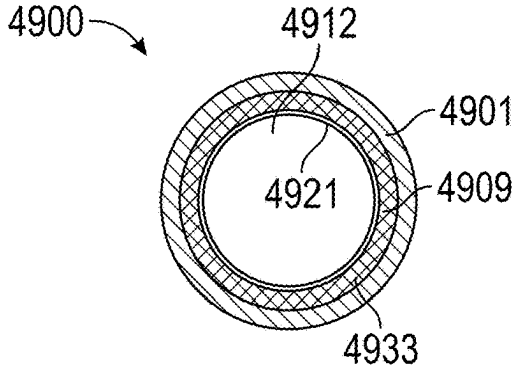

FIG. 66

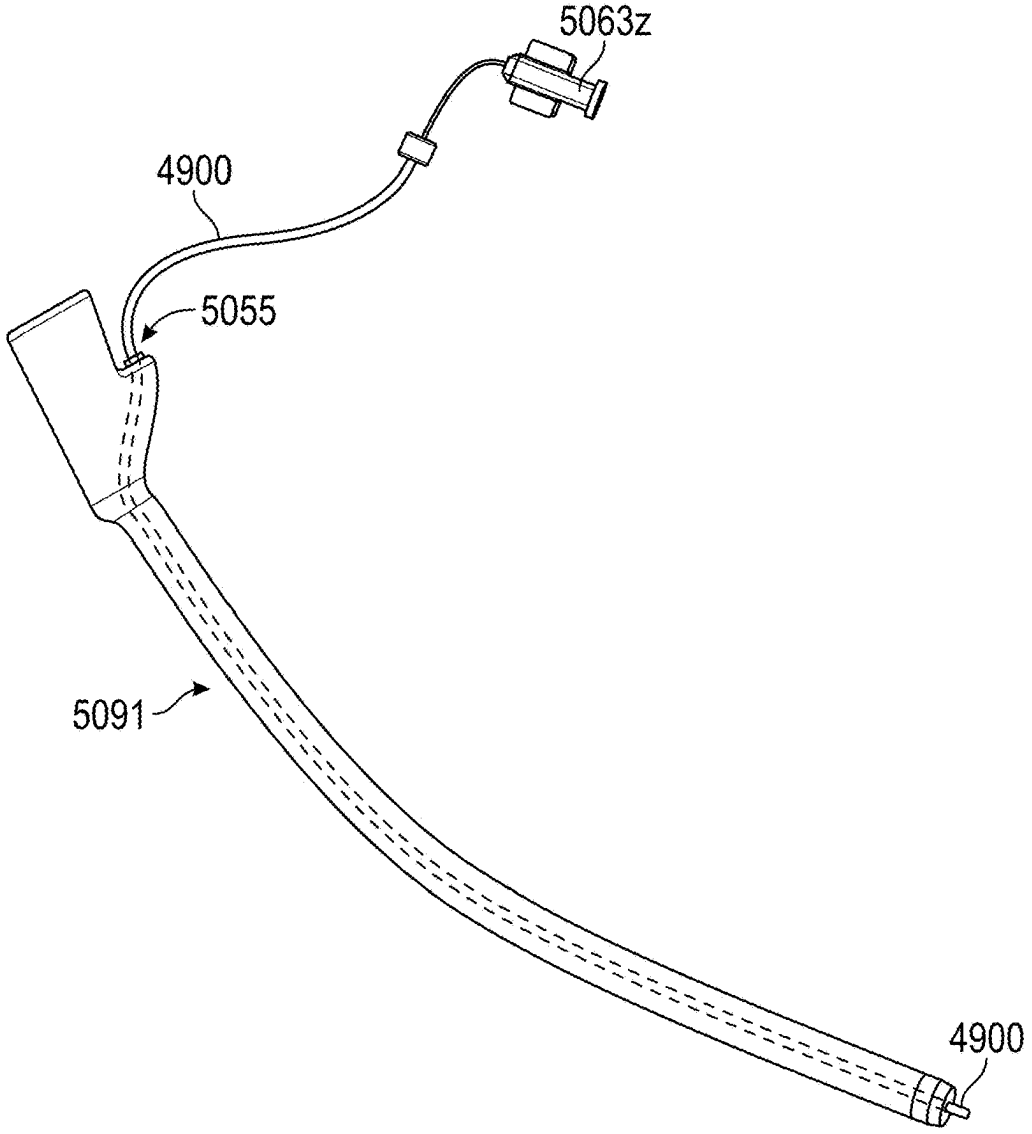

FIG. 67

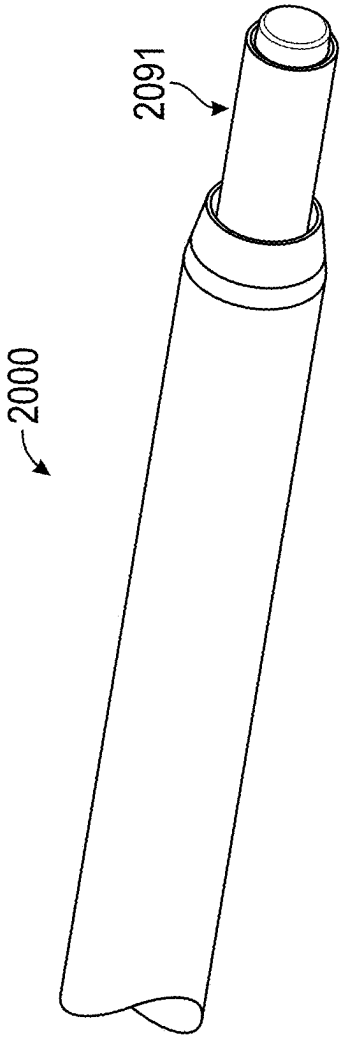

FIG. 68A

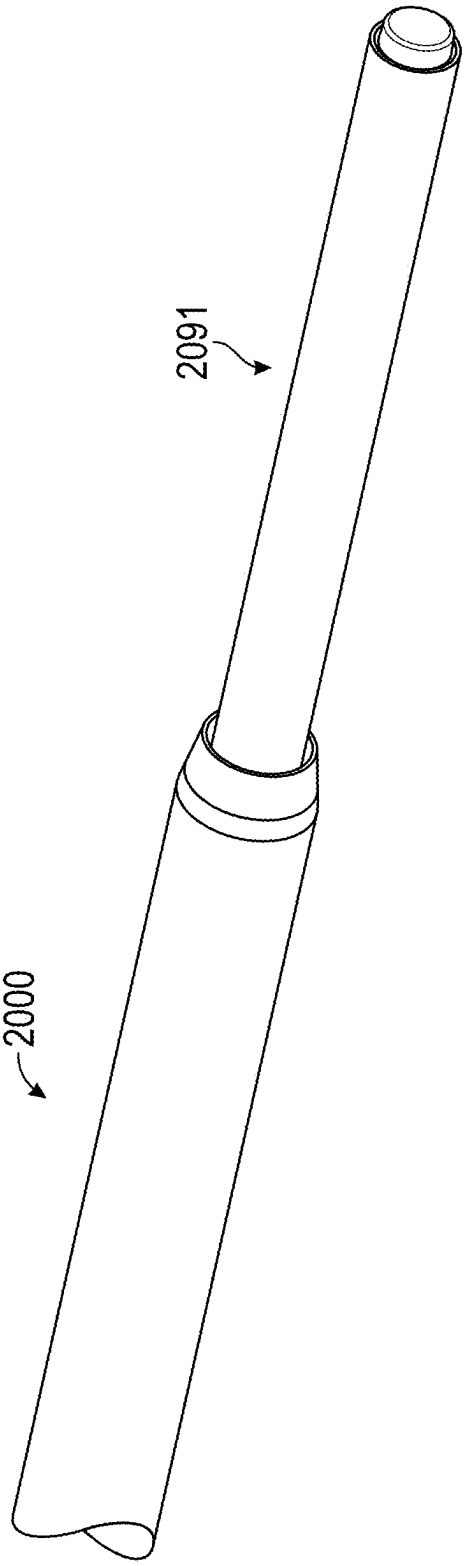

FIG. 68B

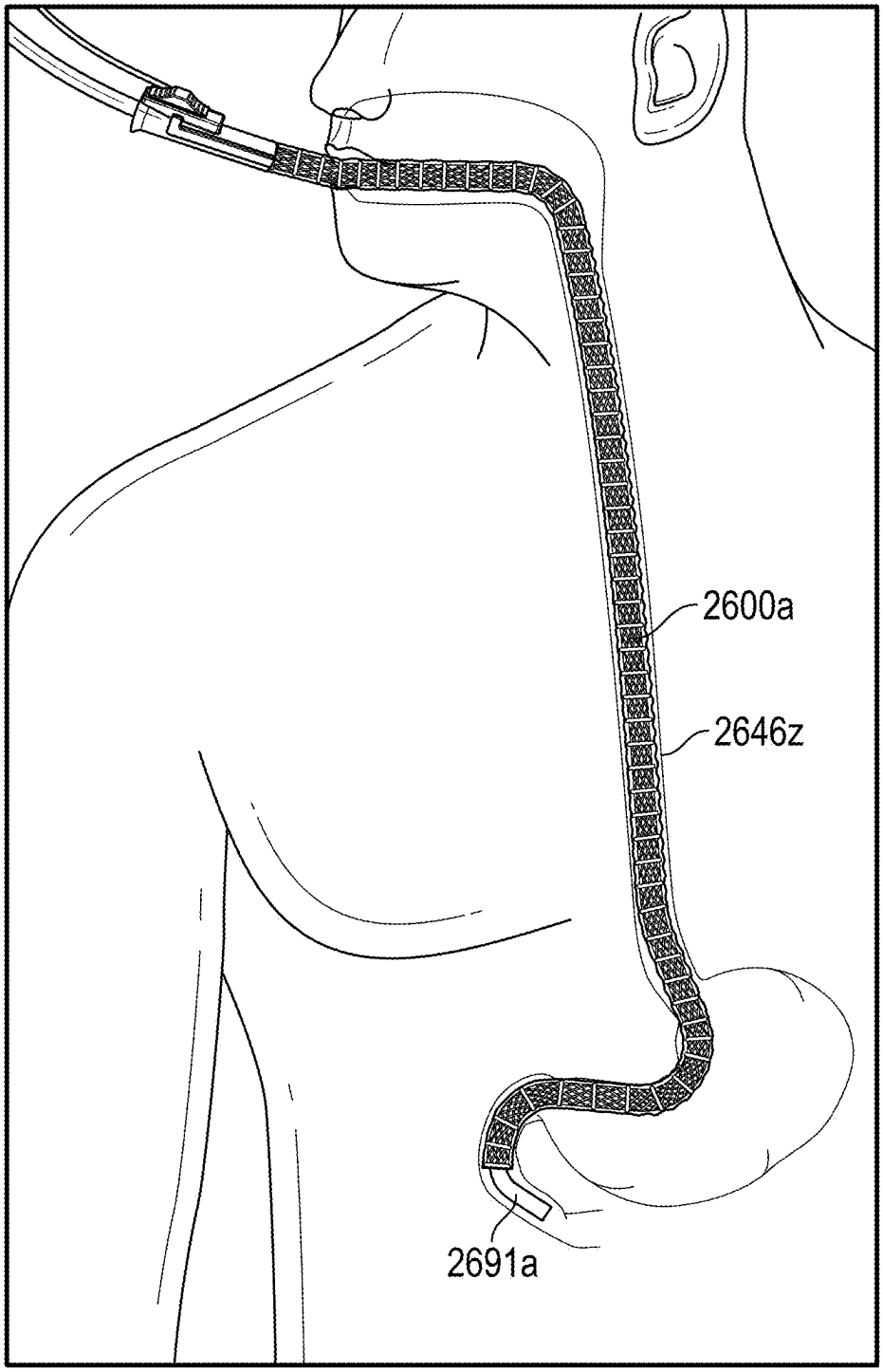

FIG. 69A

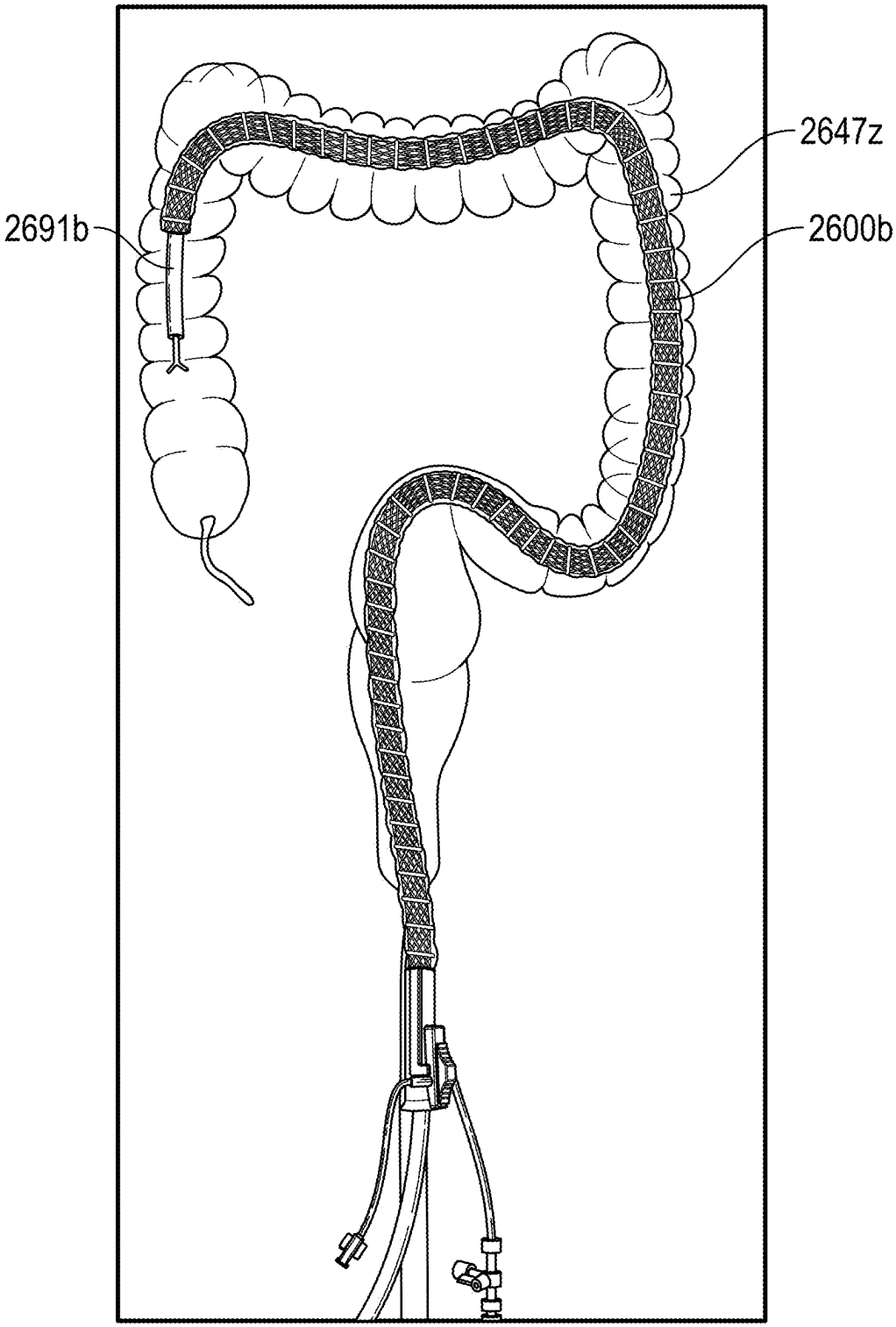

FIG. 69B

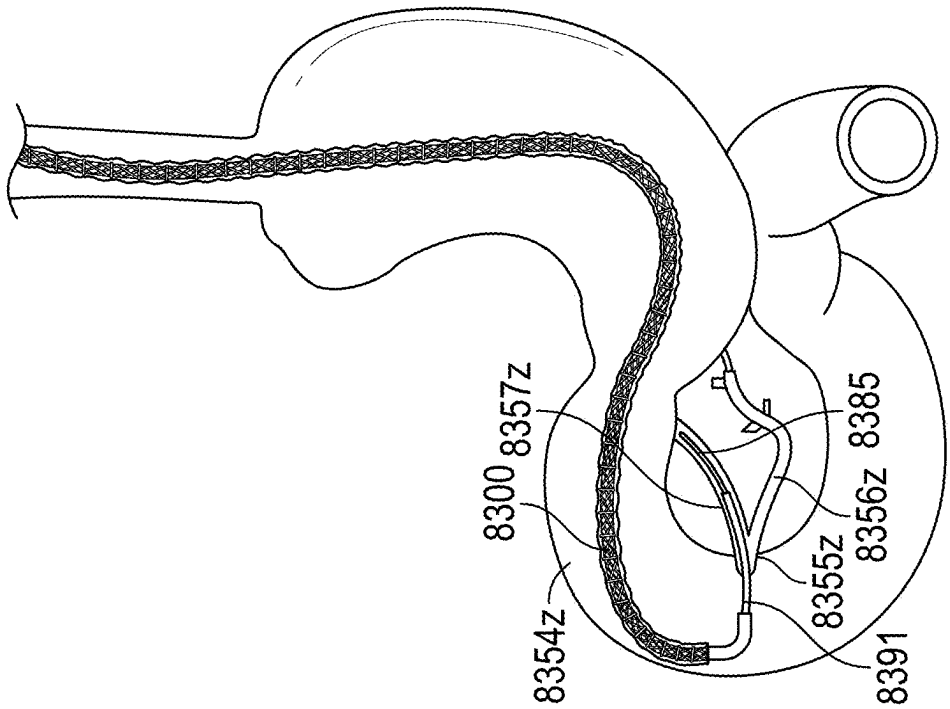

FIG. 70B

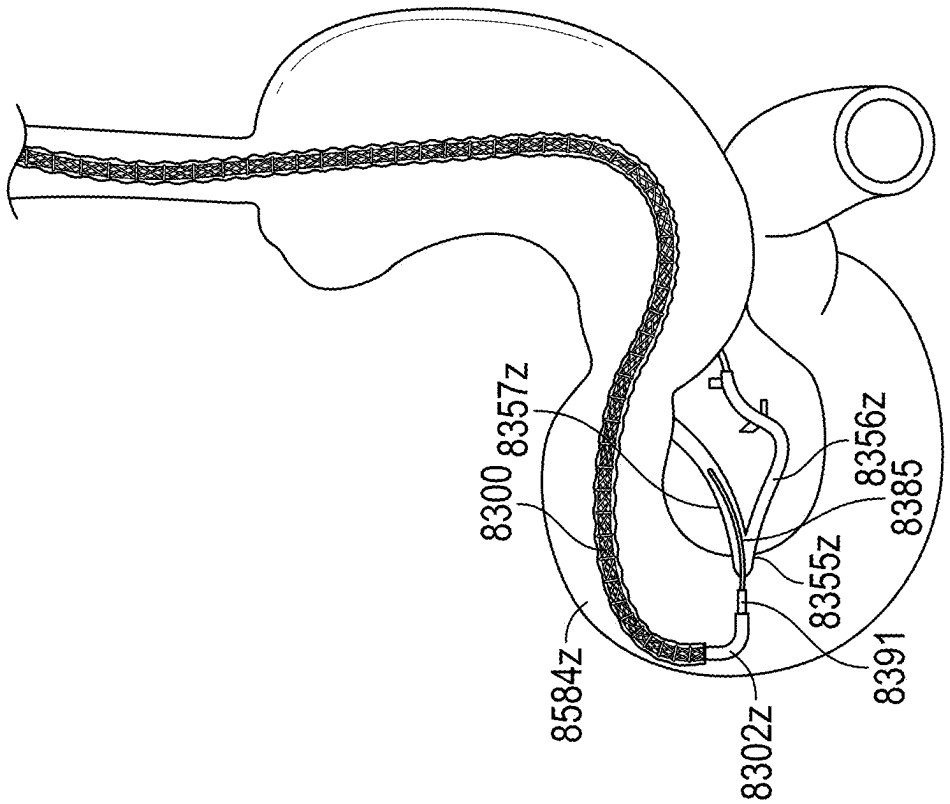

FIG. 70A

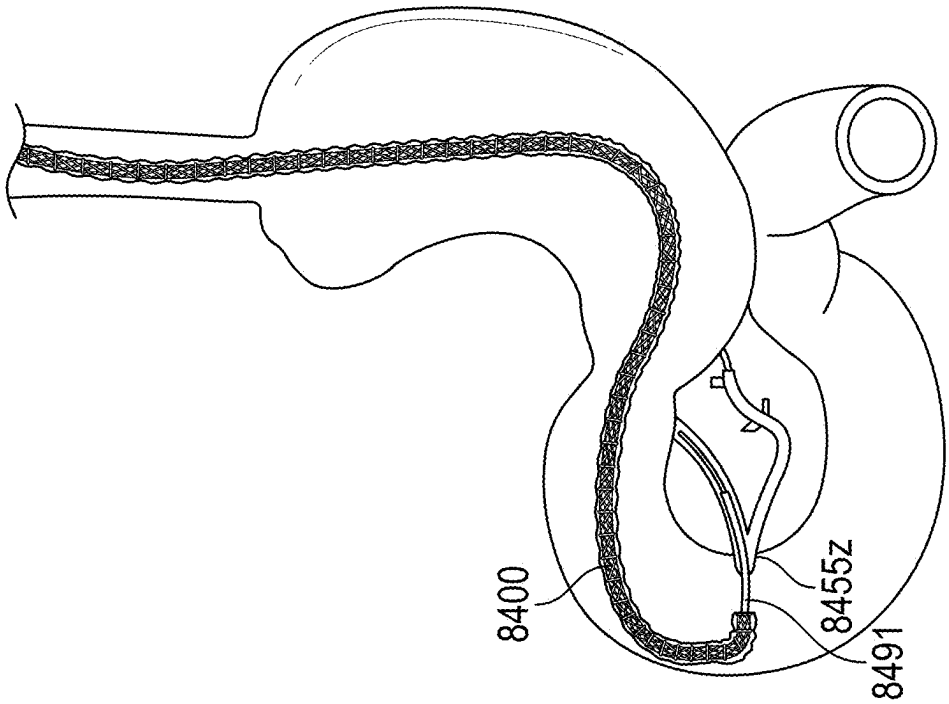

FIG. 71B

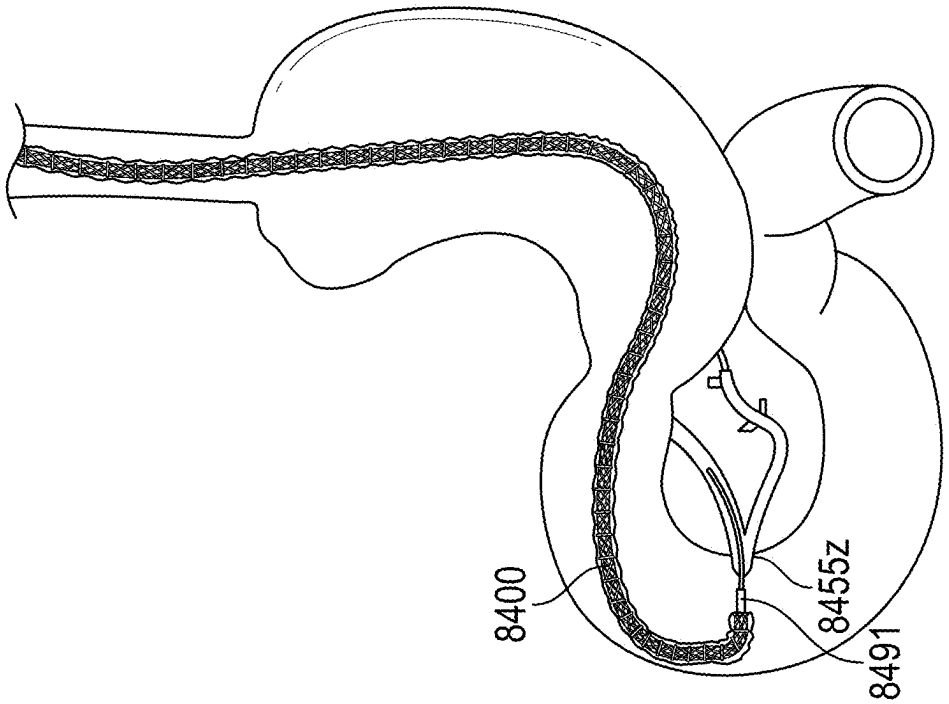

FIG. 71A

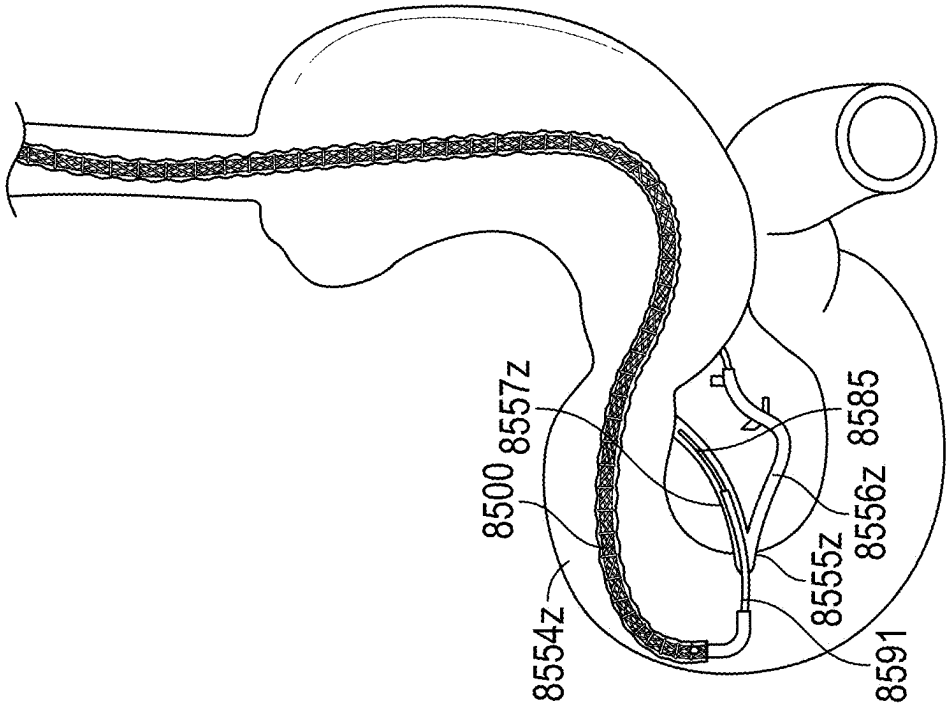

FIG. 72B

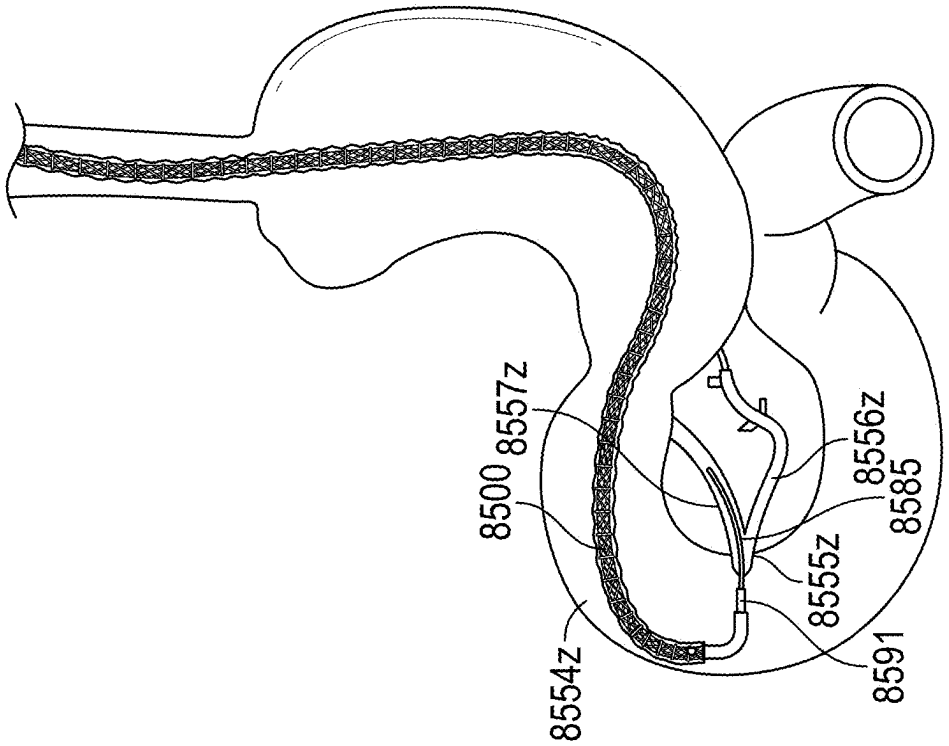

FIG. 72A

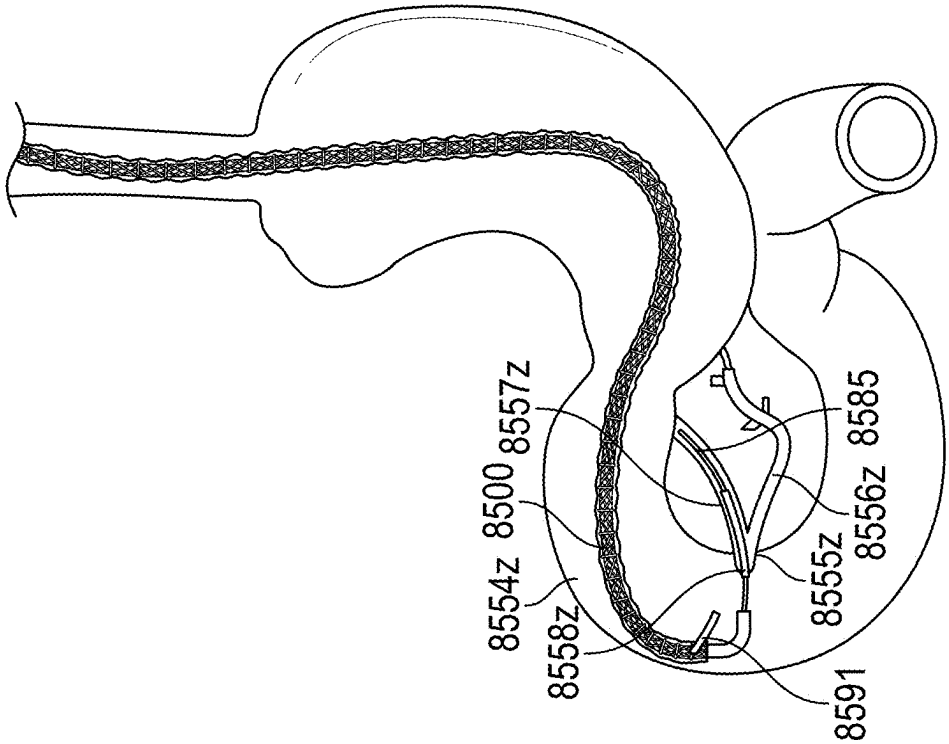

FIG. 72D

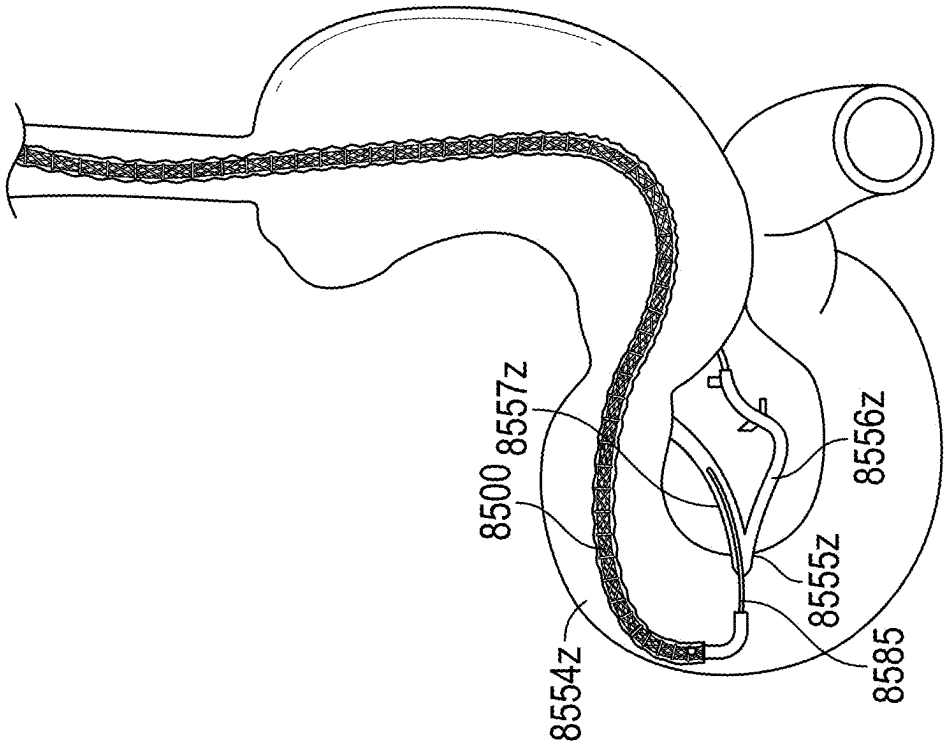

FIG. 72C

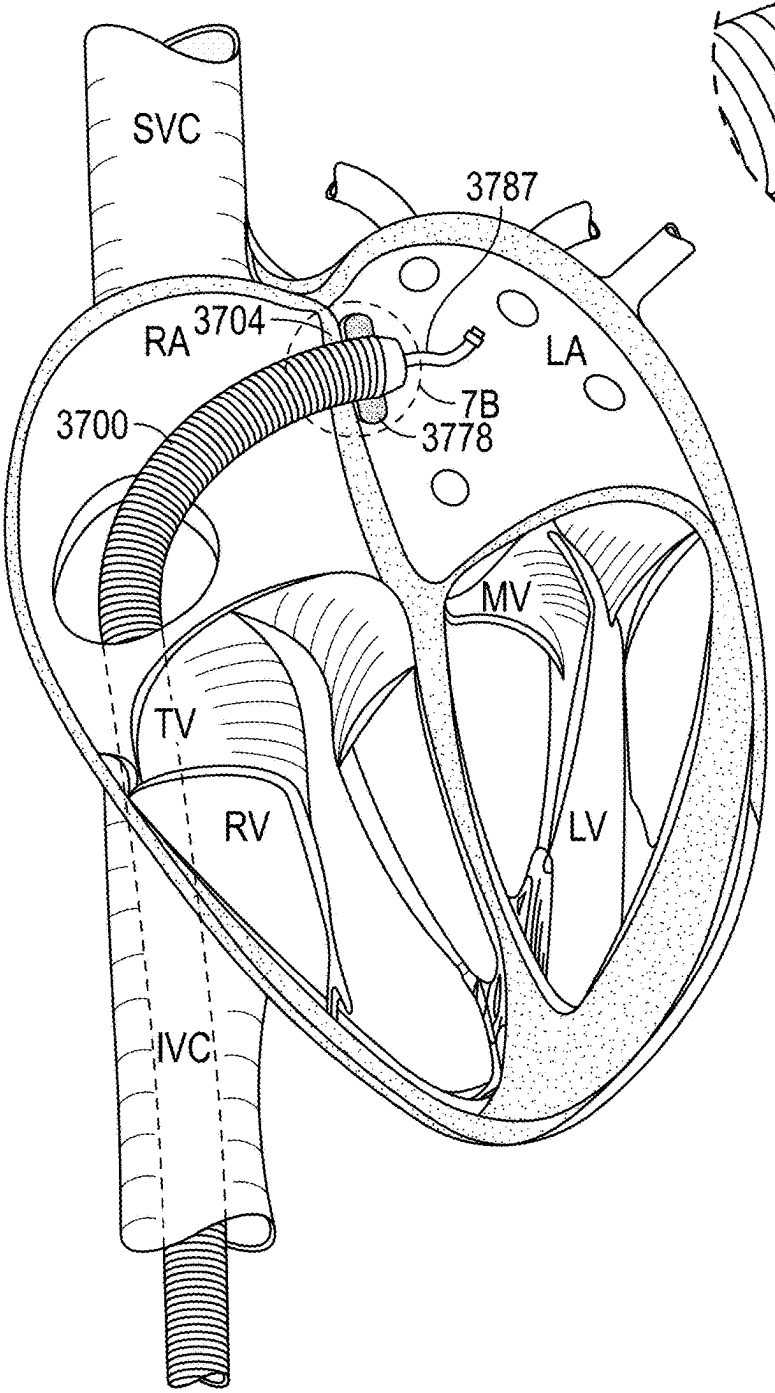

FIG. 73A

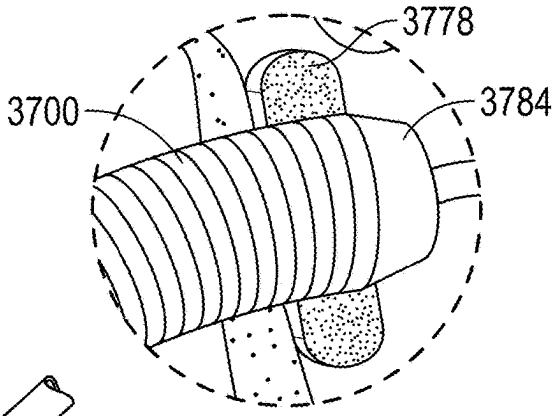

FIG. 73B

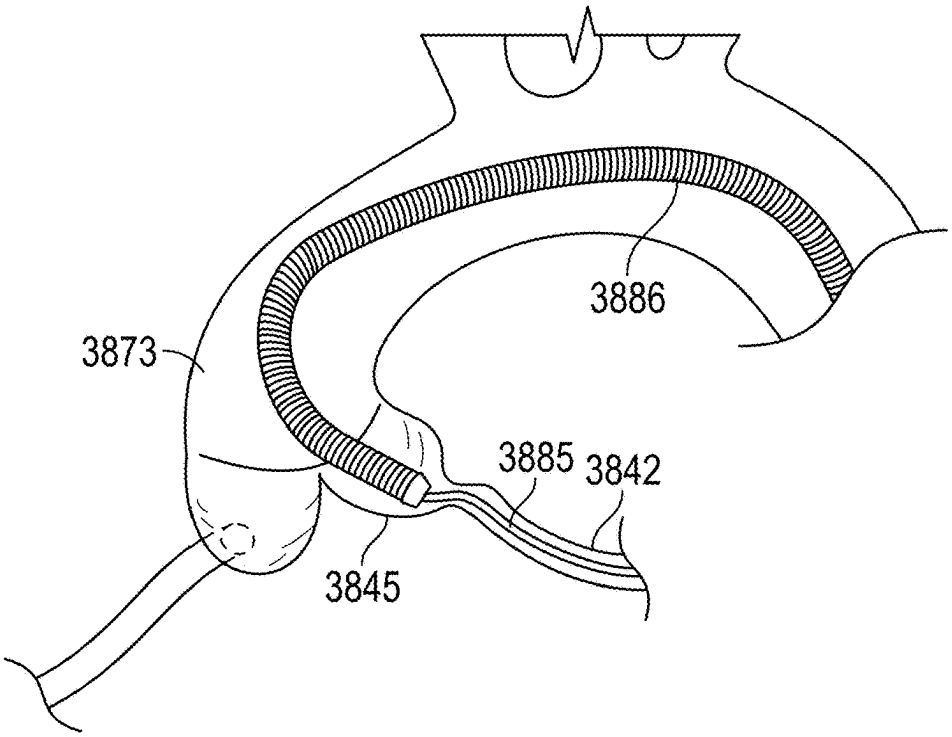

FIG. 74A

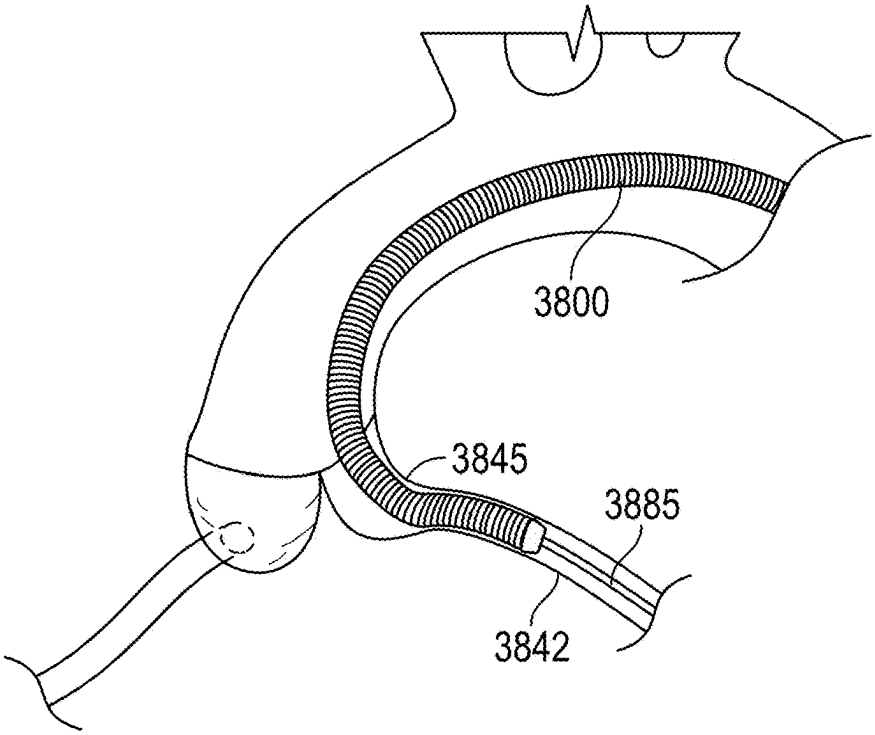

FIG. 74B

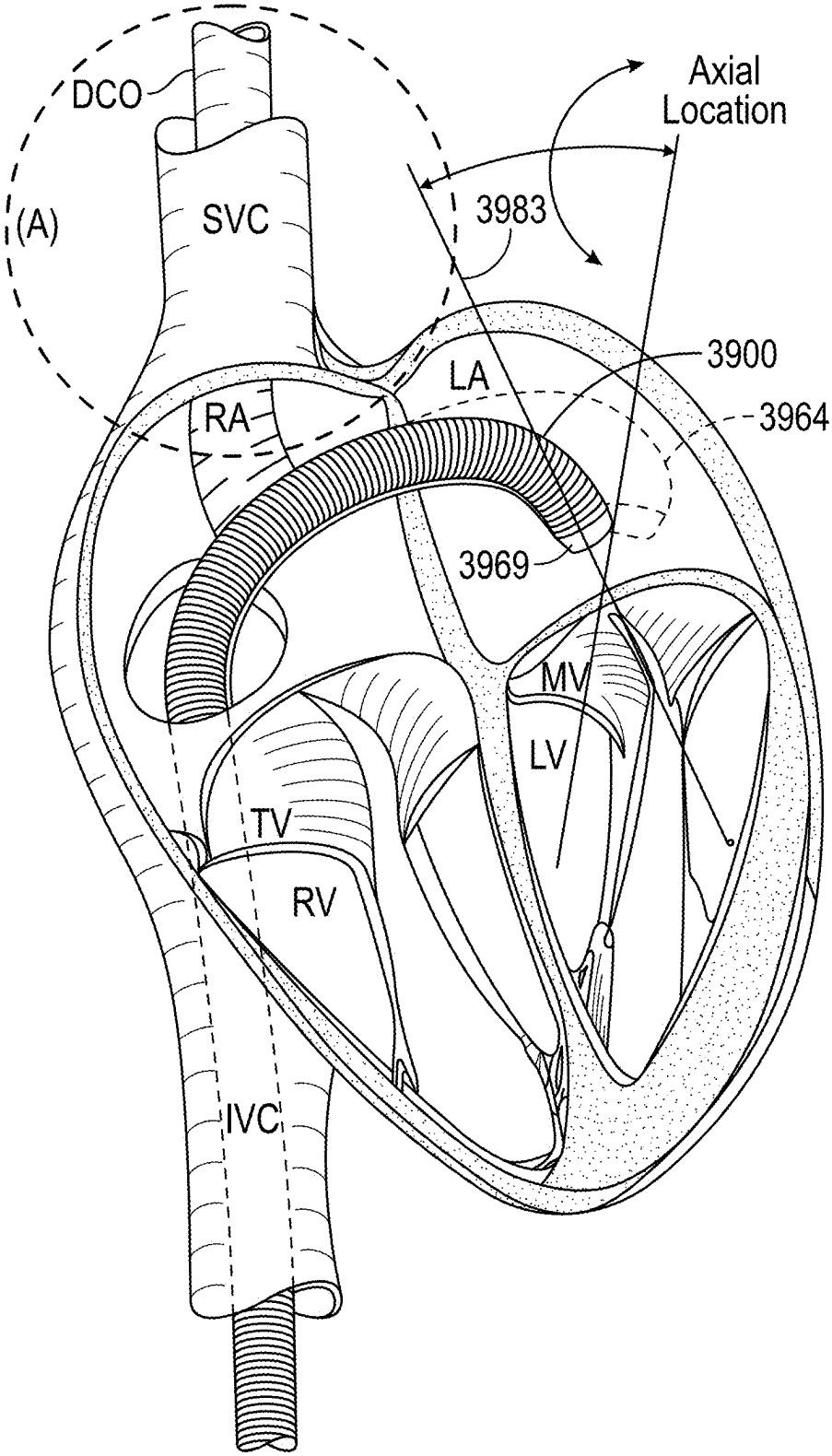
DCO
(A)
SVC
Axial
Location
3983
3900
LA
3964
RA
3969
MV
LV
TV
RV
IVC

FIG. 75A

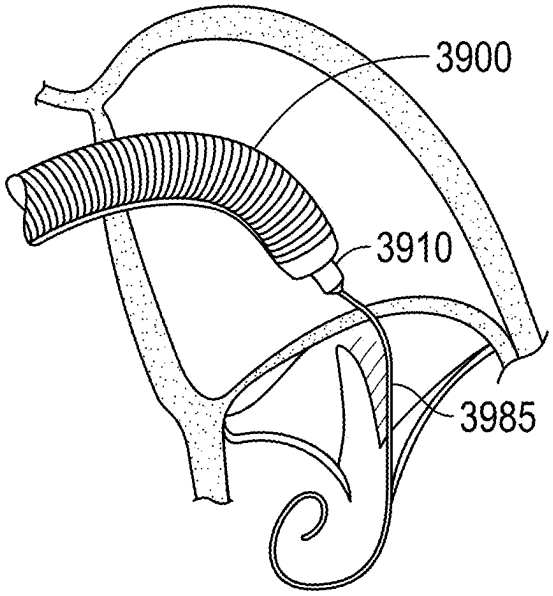

FIG. 75B

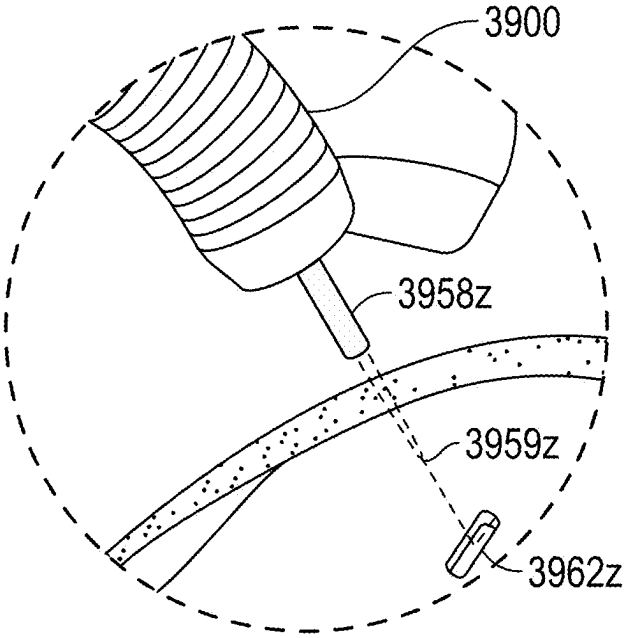

FIG. 75C

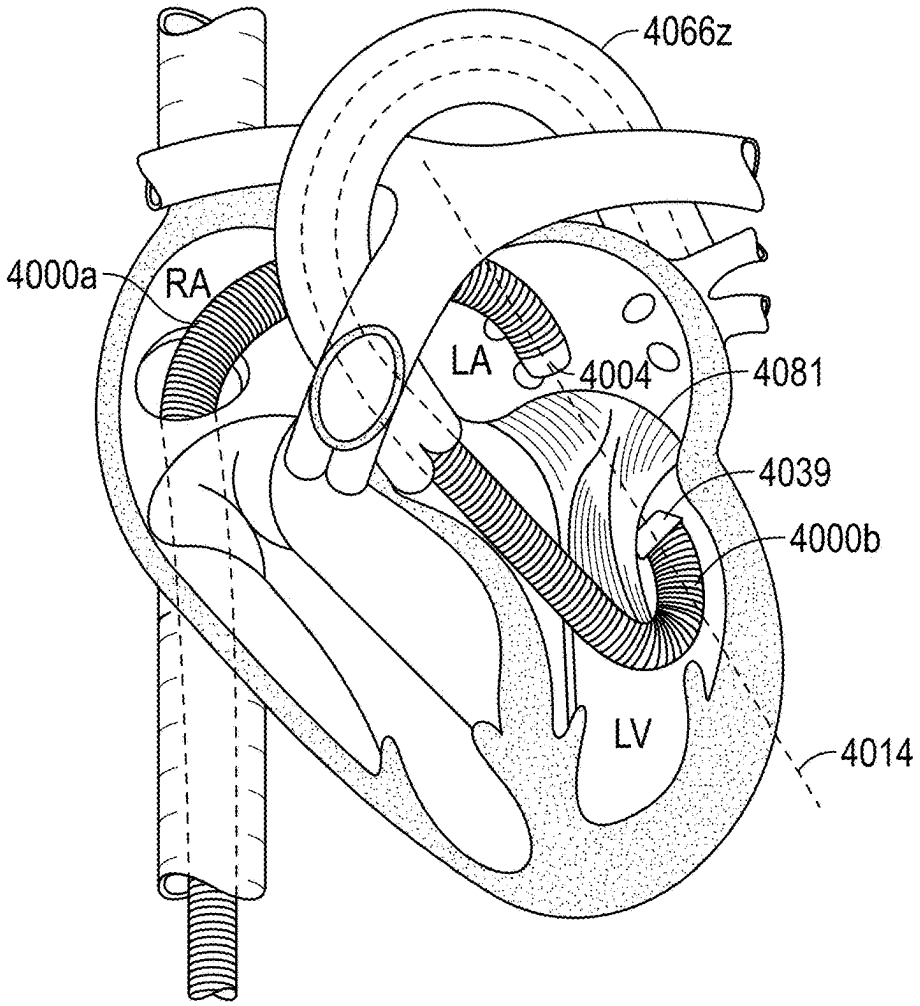

FIG. 76A

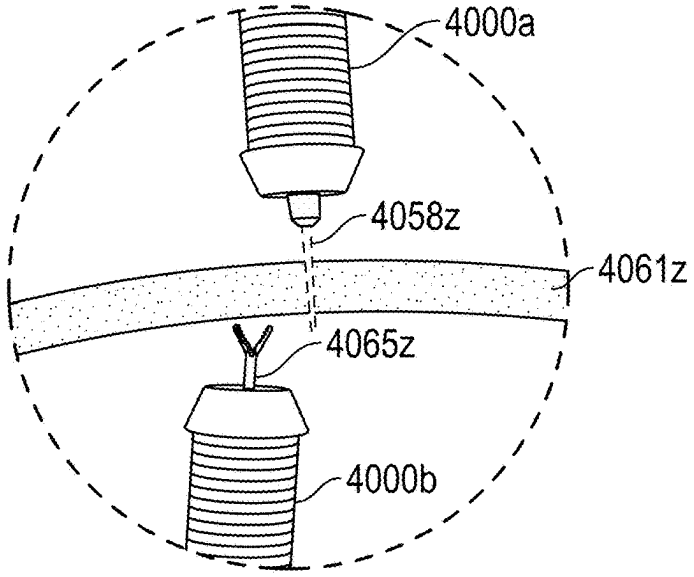

FIG. 76B

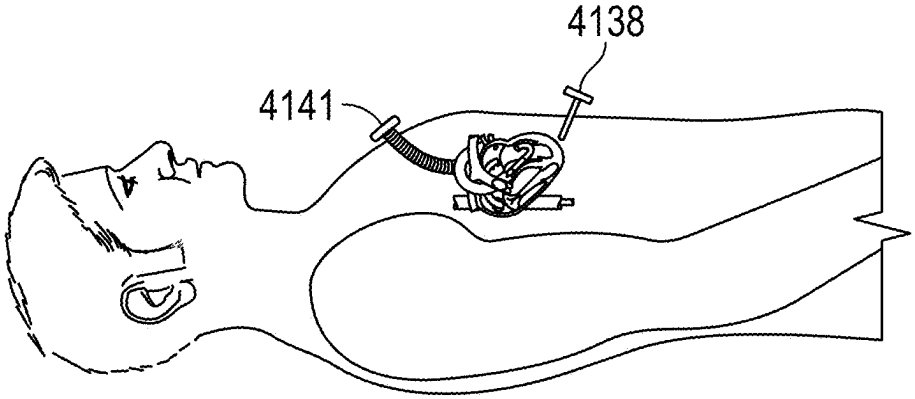

FIG. 77

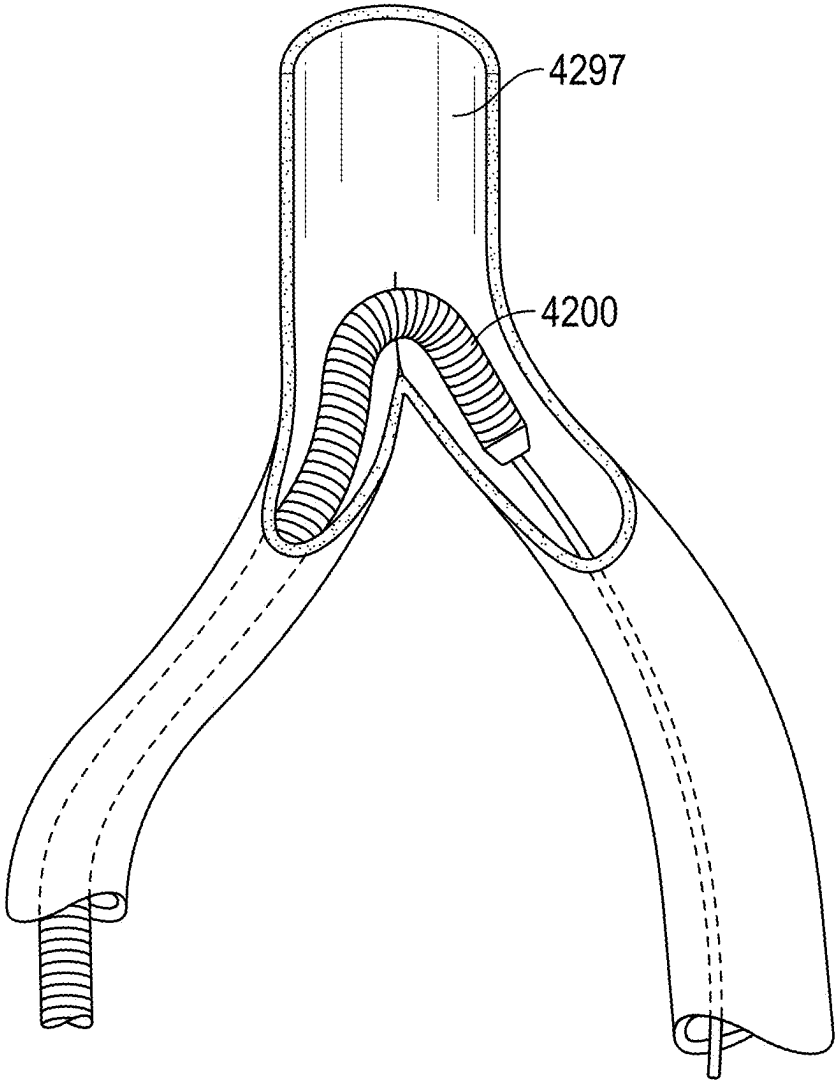

FIG. 78

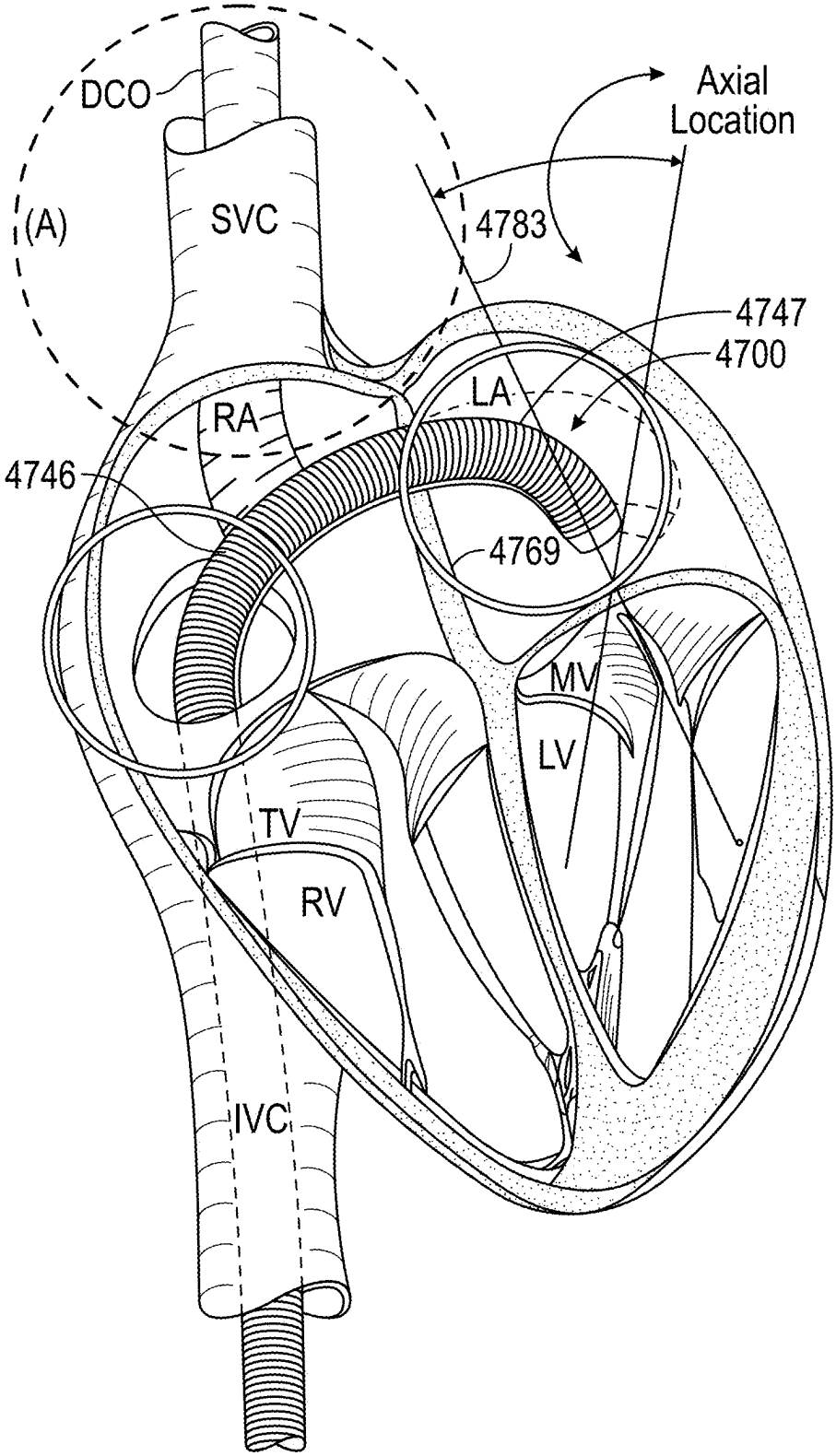
DCO
(A)
SVC
Axial
Location
4783
4747
4700
LA
RA
4746
4769
MV
LV
TV
RV
IVC

FIG. 79

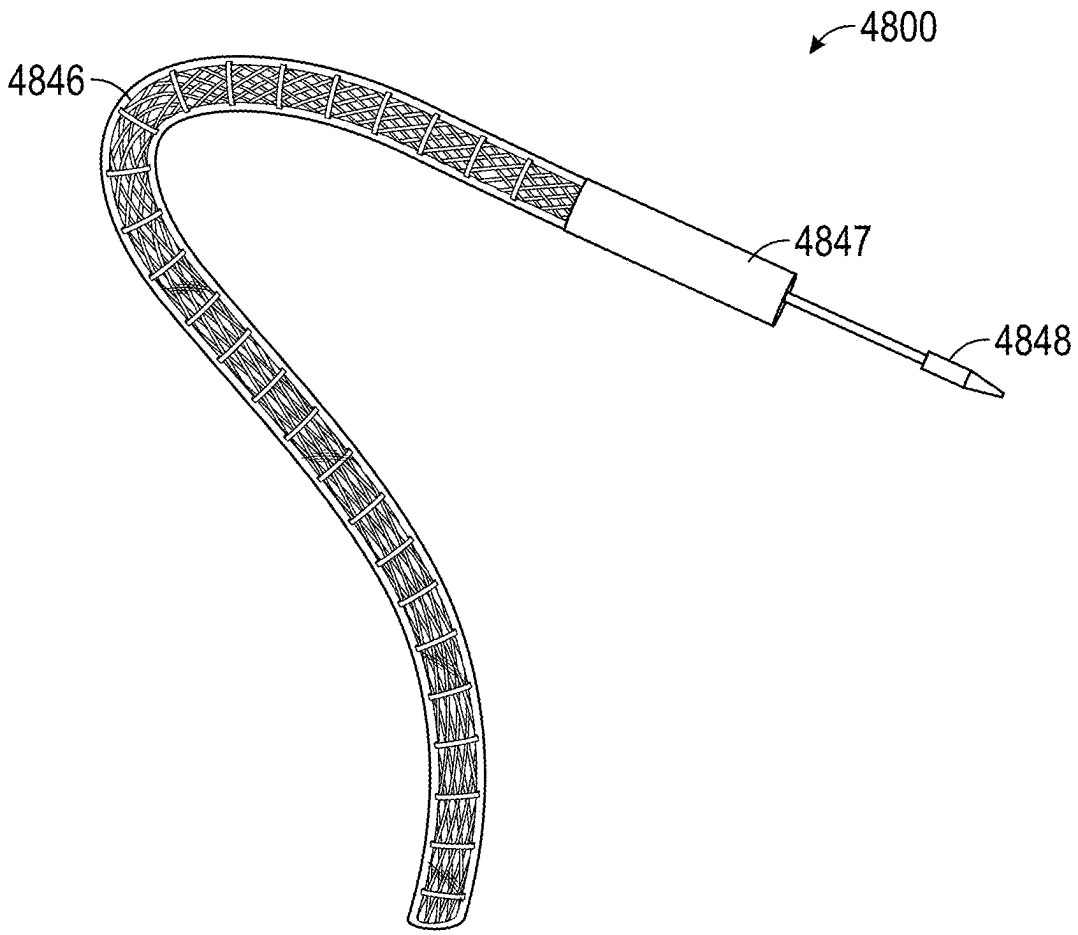

FIG. 80

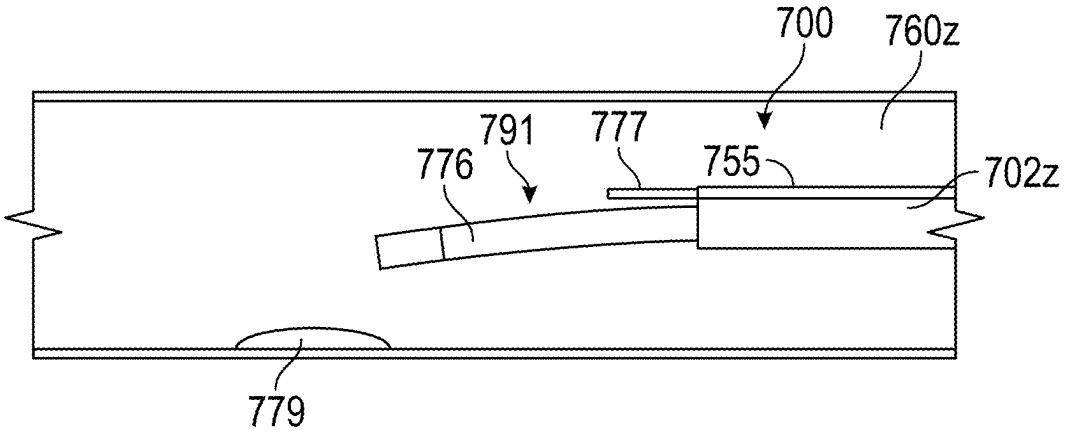

FIG. 81A

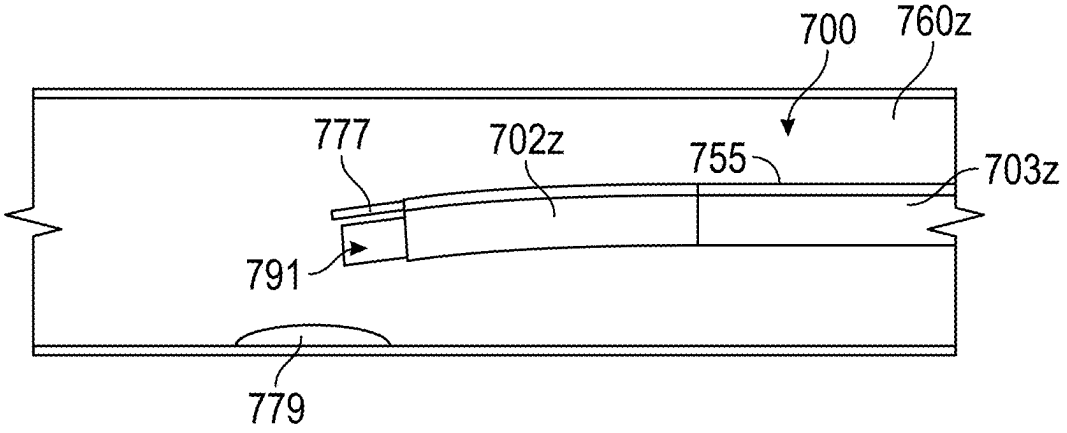

FIG. 81B

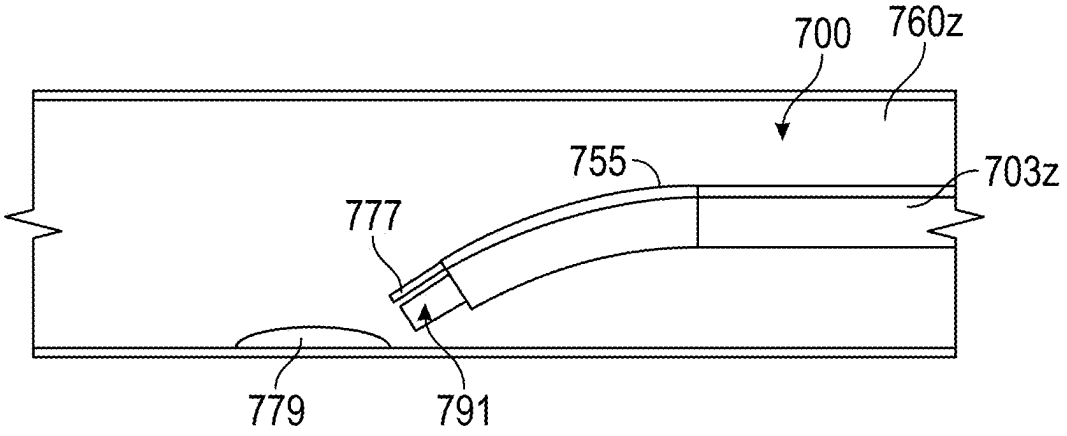

FIG. 81C

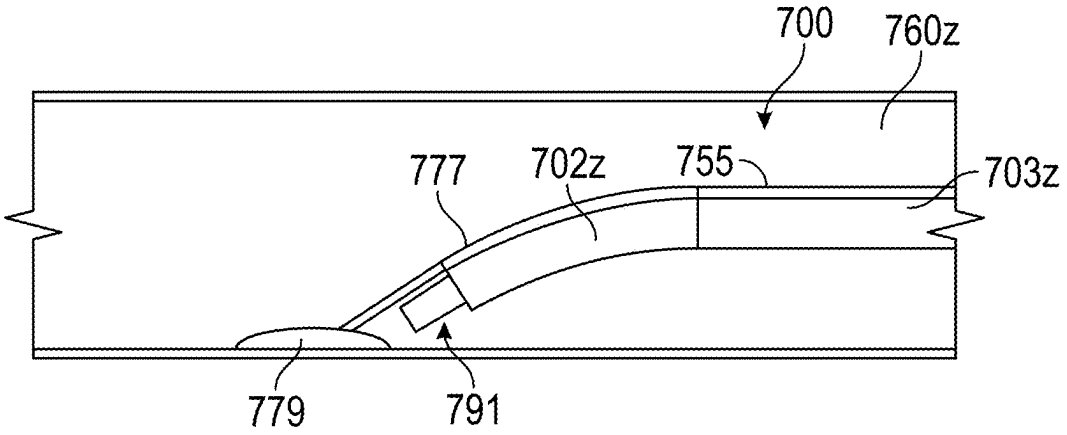

FIG. 81D

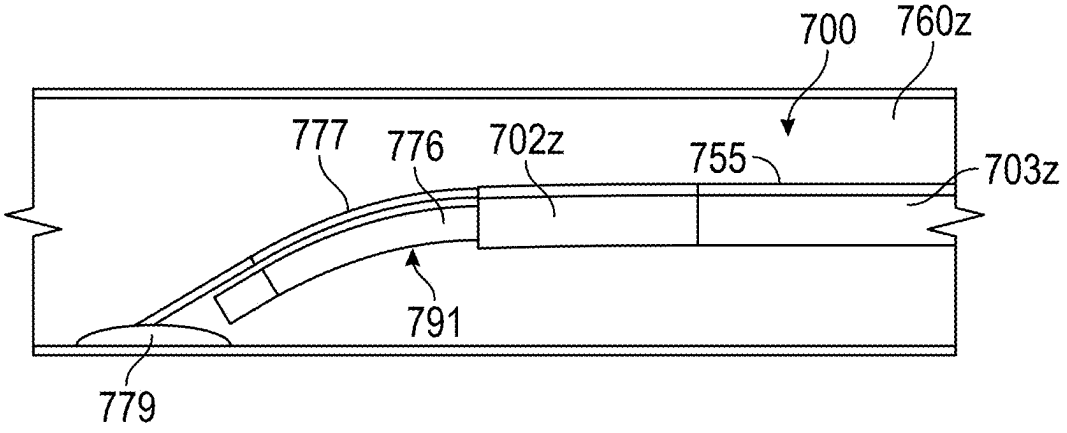

FIG. 81E

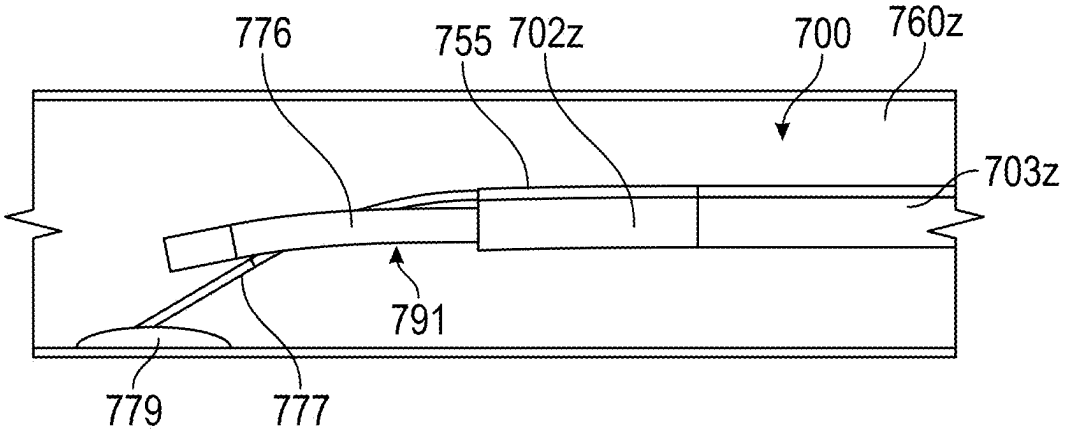

FIG. 81F

METHODS OF PERFORMING VASCULAR PROCEDURES USING A RIGIDIZING DEVICE

CROSS REFERENCE TO RELATED APPLICATIONS

[0001] This application is a continuation of U.S. patent application Ser. No. 18/809,322, filed Aug. 19, 2024, titled "METHODS OF PERFORMING VASCULAR PROCEDURES USING A RIGIDIZING DEVICE," now U.S. Pat. No. 12,285,571, which is a continuation of U.S. patent application Ser. No. 18/751,188, filed Jun. 21, 2024, titled "RIGIDIZING OVERTUBE," now U.S. Patent Application Publication No. 2024/0350768, which is a continuation of U.S. patent application Ser. No. 18/343,561, filed Jun. 28, 2023, titled "NESTED RIGIDIZING DEVICES," now U.S. Patent Application Publication No. 2023/0338702, which is a divisional of U.S. patent application Ser. No. 17/902,770, filed Sep. 2, 2022, titled "NESTED RIGIDIZING DEVICES," now U.S. Pat. No. 11,724,065, which is a continuation of U.S. patent application Ser. No. 17/493,785, filed Oct. 4, 2021, titled "DYNAMICALLY RIGIDIZING COMPOSITE MEDICAL STRUCTURES," now U.S. Pat. No. 11,478,608, which is a continuation of U.S. patent application Ser. No. 17/152,706, filed Jan. 19, 2021, titled "DYNAMICALLY RIGIDIZING COMPOSITE MEDICAL STRUCTURES," now U.S. Pat. No. 11,135,398, which is a continuation of International Application No. PCT/US2019/042650, filed Jul. 19, 2019, titled "DYNAMICALLY RIGIDIZING COMPOSITE MEDICAL STRUCTURES," which claims priority to U.S. Provisional Application No. 62/835,101, filed Apr. 17, 2019, titled "DYNAMICALLY RIGIDIZING COMPOSITE MEDICAL STRUCTURES," U.S. Provisional Application No. 62/854,199, filed May 29, 2019, titled "DYNAMICALLY RIGIDIZING COMPOSITE MEDICAL STRUCTURES," U.S. Provisional Application No. 62/780,820, filed Dec. 17, 2018, titled "DYNAMICALLY RIGIDIZING COMPOSITE MEDICAL STRUCTURES," and U.S. Provisional Patent Application No. 62/700,760, filed Jul. 19, 2018, titled "BRAIDED DYNAMICALLY RIGIDIZING OVERTUBE," the entireties of which are incorporated by reference herein.

[0002] This application may also be related to International Patent Application No. PCT/US2018/042946, filed Jul. 19, 2018, titled "DYNAMICALLY RIGIDIZING OVERTUBE," which claims priority to U.S. Provisional Patent Application No. 62/672,444, filed May 16, 2018, titled "DYNAMICALLY RIGIDIZING OVERTUBE," and U.S. Provisional Patent Application No. 62/535,134, filed Jul. 20, 2017, titled "DYNAMICALLY RIGIDIZING OVERTUBE," the entireties of which are incorporated by reference herein.

[0003] This application may also be related to U.S. patent application Ser. No. 15/757,230, filed Mar. 2, 2018, titled "DEVICE FOR ENDOSCOPIC ADVANCEMENT THROUGH THE SMALL INTESTINE," now U.S. Patent Application Publication No. US2018/0271354, which national phase application under 35 USC 371 of International Patent Application No. PCT/US2016/050290, filed Sep. 2, 2016, titled "DEVICE FOR ENDOSCOPIC ADVANCEMENT THROUGH THE SMALL INTESTINE," now International Publication No. WO 2017/041052, which claims priority to U.S. Provisional Patent Application No. 62,339,593, filed May 20, 2016, titled "DEVICE FOR ENDOSCOPIS ADVANCEMENT THROUGH THE SMALL INTESTINE," and U.S. Provisional Patent Application No. 62/213,908, filed Sep. 3, 2015, and titled "DEVICE FOR ENDOSCOPIC ADVANCEMENT THROUGH THE SMALL INTESTINE," the entireties of which are incorporated by reference herein.

INCORPORATION BY REFERENCE

[0004] All publications and patent applications mentioned in this specification are herein incorporated by reference to the same extent as if each individual publication or patent application was specifically and individually indicated to be incorporated by reference.

BACKGROUND

[0005] During medical procedures, the interventional medical device can curve or loop through the anatomy, making advancement of the medical device difficult.

[0006] Gastrointestinal looping, caused when the endoscope can no longer advance due to excessive curving or looping of the gastrointestinal tract, is a particularly well-known clinical challenge for endoscopy. Indeed, one study found that looping occurred in 91 of 100 patients undergoing colonoscopy [Shah et al, "Magnetic Imaging of Colonoscopy: An Audit of Looping, Accuracy and Ancillary maneuvers." *Gastrointest Endosc* 2000; 52:1-8]. Gastrointestinal looping prolongs the procedure and can cause pain to the patient because it can stretch the vessel wall and the mesentery. Furthermore, gastrointestinal looping leads to an increased incidence of perforations. In severe cases of gastrointestinal looping, complete colonoscopies are impossible since looping stretches the length of the colon and the colonoscope is not long enough to reach the end. Gastrointestinal looping is an impediment to precise tip control, denying the user the coveted one-to-one motion relationship between the handle and the endoscope tip. Such problems commonly occur across a wide range of endoscopic procedures, including colonoscopy, esophagogastroduodenoscopy (EGD), enteroscopy, endoscopic retrograde cholangiopancreatography (ERCP), interventional endoscopy procedures (including ESD (Endoscopic Submucosal Dissection) and EMR (Endoscopic Mucosal Resection)), robotic flexible endoscopy, trans-oral robotic surgery (TORS), altered anatomy cases (including Roux-en-Y), and during NOTES (Natural Orifice Transluminal Endoscopic Surgery) procedures. Accordingly, there is a need for device that helps prevent gastrointestinal looping to provide more successful access to the gastrointestinal tract.

[0007] Similar difficulties in advancing medical instruments can arise, for example, during interventional procedures in the lungs, kidneys, brain, cardiac space, and other anatomical locations. Accordingly, there is a need for a device that can provide safe, efficient, and precise access to otherwise difficult to reach anatomical locations.

SUMMARY OF THE DISCLOSURE

[0008] In general, in one embodiment, a rigidizing device includes an elongate flexible tube, a braid layer positioned over the elongate flexible tube, an outer layer over the flexible tube and the braid layer, and an inlet between the elongate flexible tube and the outer layer and configured to attach to a source of vacuum or pressure. The braid layer has

a plurality of strands braided together at a braid angle of 5-40 degrees relative to a longitudinal axis of the elongate flexible tube when the elongate flexible tube is straight. The rigidizing device is configured to have a rigid configuration when vacuum or pressure is applied through the inlet and a flexible configuration when vacuum or pressure is not applied through the inlet. The braid angle is configured to change as the rigidizing device bends when the rigidizing device is in the flexible configuration.

[0009] This and other embodiments can include one or more of the following features. The braid angle can be between 10 and 35 degrees. The braid angle can be between 15 and 25 degrees. The rigidizing device in the rigid configuration can be at least two times stiffer than the rigidizing device in the flexible configuration. The rigidizing device in the rigid configuration can be at least 5 times stiffer than the rigidizing device in the flexible configuration. The rigidizing can further include a slip layer adjacent to the braid layer and having a lower coefficient of friction than the braid layer. The elongate flexible tube can include a reinforcement element extending therein. The reinforcement element can include a coil or plurality of hoop elements. The plurality of strands can be braided together at 4-60 picks per inch. The strands can include polyethylene terephthalate or stainless steel. The braid layer can provide a coverage of 30-70% relative to the elongate flexible tube. The plurality of strands can include 96 strands or more. The inlet can be configured to attach to a source of pressure, and the rigidizing device can further include a bladder layer therein. The bladder layer can be configured to be pushed against the braid layer when pressure is supplied through the inlet. The outer layer can further include a plurality of reinforcement elements therein. The inlet can be configured to attach to a source of vacuum, and the outer layer can be a thin flexible sheath. The rigidizing device can further include a radial gap between the braid layer and the outer layer. The gap can have a thickness of 0.00002"-0.04". The rigidizing device can further include a steerable distal end. The rigidizing device can further include a sealed channel between the elongate flexible tube and the outer layer. The sealed channel can include a working channel, a cable guide, or an inflation lumen.

[0010] In general, in one embodiment, a method of advancing a rigidizing device through a body lumen includes: (1) inserting a rigidizing device into the body lumen while the rigidizing device is in a flexible configuration, where the rigidizing device includes an elongate flexible tube, a braid layer having a plurality of strands braided together at a braid angle of 5-40 degrees when the rigidizing device is straight, and an outer layer, and where the braid angle changes as the flexible tube bends in the flexible configuration; and (2) when the rigidizing device has reached a desired location in the body lumen, activating vacuum or pressure between the flexible tube and the outer layer to transition the rigidizing device into a rigid configuration that is stiffer than the flexible configuration.

[0011] This and other embodiments can include one or more of the following features. The method can further include releasing vacuum or pressure after activating the vacuum or pressure to transition the rigidizing device back to the flexible configuration. The braid angle can be between 10 and 35 degrees. The braid angle can be between 15 and 25 degrees. The method can further include passing a scope through the rigidizing device while the rigidizing device is in the rigid configuration. The method can further include steering a steerable distal end of the rigidizing device through the body lumen. The body lumen can be in the gastrointestinal tract. The body lumen can be in the heart. The body lumen can be in the kidneys. The body lumen can be in the lungs. The body lumen can be in the brain.

[0012] In general, in one embodiment, a rigidizing device includes an elongate flexible tube, a braid layer positioned over the elongate flexible tube, an outer layer over the flexible tube and the braid layer, and an inlet between the elongate flexible tube and the outer layer and configured to attach to a source of vacuum or pressure. The rigidizing device is configured to have a rigid configuration when vacuum or pressure is applied through the inlet and a flexible configuration when vacuum or pressure is not applied through the inlet. A ratio of stiffness of the rigidizing device in the rigid configuration to stiffness of the rigidizing device in the flexible configuration is greater than 5.

[0013] This and other embodiments can include one or more of the following features. The ratio can be greater than 6. The ratio can be greater than 10. The braid layer can have a plurality of strands braided together at a braid angle of 5-40 degrees relative to a longitudinal axis of the elongate flexible tube when the elongate flexible tube is straight. The braid angle can be between 10 and 35 degrees. The rigidizing device can further include a slip layer adjacent to the braid layer and having a lower coefficient of friction than the braid layer. The elongate flexible tube can include a reinforcement element extending therein. The reinforcement element can include a coil or plurality of hoop elements. The braid layer can include a plurality of strands braided together at 4-60 picks per inch. The braid layer can include a plurality of strands braided together, and the strands can include polyethylene terephthalate or stainless steel. The braid layer can provide a coverage of 30-70% relative to the elongate flexible tube. The braid layer can include 96 strands or more strands braided together. The inlet can be configured to attach to a source of pressure. The rigidizing device can further include a bladder layer therein, and the bladder layer can be configured to be pushed against the braid layer when pressure is supplied through the inlet. The outer layer can further include a plurality of reinforcement elements therein. The inlet can be configured to attach to a source of vacuum. The outer layer can be a thin flexible sheath. The rigidizing device can further include a radial gap between the braid layer and the outer layer. The gap can have a thickness of 0.00002"-0.04". The rigidizing device can further include a steerable distal end. The rigidizing device can further include a sealed channel between the elongate flexible tube and the outer layer. The sealed channel can include a working channel, a cable guide, or an inflation lumen.

[0014] In general, in one embodiment, a method of advancing a rigidizing device through a body lumen includes: (1) inserting a rigidizing device into the body lumen while the rigidizing device is in a flexible configuration, where the rigidizing device includes an elongate flexible tube, a braid layer, and an outer layer; and (2) when the rigidizing device has reached a desired location in the body lumen, activating vacuum or pressure between the flexible tube and the outer layer to transition the rigidizing device into a rigid configuration that is stiffer than the flexible configuration. A ratio of stiffness in the rigid configuration to stiffness in the flexible configuration is greater than 5.

[0015] This and other embodiments can include one or more of the following features. The method can further include releasing vacuum or pressure after activating the vacuum or pressure to transition the rigidizing device back to the flexible configuration. The ratio can be greater than 6. The ratio can be greater than 10. The method can further include passing a scope through the rigidizing device while the rigidizing device is in the rigid configuration. The method can further include steering a steerable distal end of the rigidizing device through the body lumen. The body lumen can be in the gastrointestinal tract. The body lumen can be in the heart. The body lumen can be in the kidneys. The body lumen can be in the lungs. The body lumen can be in the brain.

[0016] In general, in one embodiment, a rigidizing device includes an elongate flexible tube, a braid layer positioned radially outwards the elongate flexible tube, a slip layer adjacent to the braid layer, an outer layer, and a vacuum or pressure inlet between the elongate flexible tube and the outer layer. The outer layer is over the flexible tube, the braid layer, and the slip layer. The inlet is configured to attach to a source of vacuum or pressure. The rigidizing device is configured to have a rigid configuration when vacuum or pressure is applied through the inlet and a flexible configuration when vacuum or pressure is not applied through the inlet. The slip layer is configured to reduce friction between the braid layer and the elongate flexible tube or the outer layer when the rigidizing device is in the flexible configuration.

[0017] This and other embodiments can include one or more of the following features. The slip layer can have a lower coefficient of friction than the braid layer. The slip layer can include a powder. The rigidizing device in the rigid configuration can be at least two times stiffer than the rigidizing device in the flexible configuration. The rigidizing device in the rigid configuration can be at least 5 times stiffer than the rigidizing device in the flexible configuration. The braid layer can have a plurality of strands braided together at a braid angle of 5-40 degrees relative to a longitudinal axis of the elongate flexible tube when the elongate flexible tube is straight. The braid angle can be between 10 and 35 degrees. The elongate flexible tube can include a reinforcement element extending therein. The reinforcement element can include a coil or plurality of hoop elements. The braid layer can include a plurality of strands braided together at 4-60 picks per inch. The braid layer can include a plurality of strands braided together, and the strands can include polyethylene terephthalate or stainless steel. The braid layer can provide a coverage of 30-70% relative to the elongate flexible tube. The braid layer can include 96 strands or more strands braided together. The inlet can be configured to attach to a source of pressure. The rigidizing device can further include a bladder layer therein. The bladder layer can be configured to be pushed against the braid layer when pressure is supplied through the inlet. The outer layer can further include a plurality of reinforcement elements therein. The inlet can be configured to attach to a source of vacuum. The outer layer can be a thin flexible sheath. The rigidizing device can further include a radial gap between the braid layer and the outer layer. The gap can have a thickness of 0.00002"-0.04". The rigidizing device can further include a steerable distal end. The rigidizing device can further include a sealed channel between the elongate flexible tube and the outer layer. The sealed channel can include a working channel, a cable guide, or an inflation lumen.

[0018] In general, in one embodiment, a method of advancing a rigidizing device through a body lumen includes: (1) inserting a rigidizing device into the body lumen while the rigidizing device is in a flexible configuration, where the rigidizing device includes an elongate flexible tube, a braid layer, a slip layer adjacent to the braid layer, and an outer layer, and where the slip layer reduces friction between the braid layer and the elongate flexible tube or the outer layer while the rigidizing device is in the flexible configuration; and (2) when the rigidizing device has reached a desired location in the body lumen, activating vacuum or pressure between the flexible tube and the sheath to transition the rigidizing device into a rigid configuration that is stiffer than the flexible configuration.

[0019] This and other embodiments can include one or more of the following features. The method can further include releasing vacuum or pressure after activating the vacuum or pressure to transition the rigidizing device back to the flexible configuration. The slip layer can have a lower coefficient of friction than the braid layer. The slip layer can include a powder. The method can further include passing a scope through the rigidizing device while the rigidizing device is in the rigid configuration. The method can further include steering a steerable distal end of the rigidizing device through the body lumen. The body lumen can be in the gastrointestinal tract. The body lumen can be in the heart. The body lumen can be in the kidneys. The body lumen can be in the lungs. The body lumen can be in the brain.

[0020] In general, in one embodiment, a rigidizing device includes an inner elongate flexible tube including a reinforcement element and a matrix, a braid layer positioned radially outwards the elongate flexible tube, an outer layer over the braid layer, and a vacuum or pressure inlet between the elongate flexible tube and the outer layer and configured to attach to a source of vacuum or pressure. The reinforcement element has a width to thickness aspect ratio of over 5:1. The rigidizing device is configured to have a rigid configuration when vacuum or pressure is applied through the vacuum inlet and a flexible configuration when vacuum or pressure is not applied through the vacuum inlet.

[0021] This and other embodiments can include one or more of the following features. The reinforcement element can be a coil. The reinforcement element can include a plurality of closed rings. The closed rings can include a plurality of pockets and notches. The reinforcement element can include an undulating wire. The reinforcement element can be a fiber or a metal wire. The aspect ratio can be over 10:1 The aspect ratio can be over 11:1. There can be a plurality of reinforcement elements in the elongate flexible tube. A spacing between each of the reinforcement elements can be 0.0006" inches or less. The elongate flexible tube can further include a matrix within which the reinforcement element is embedded. The matrix can include TPU or TPE.

[0022] In general, in one embodiment, a method of advancing a rigidizing device through a body lumen includes: (1) inserting a rigidizing device into the body lumen while the rigidizing device is in a flexible configuration, where the rigidizing device includes an elongate flexible tube having a reinforcement element and a matrix, a braid layer, and an outer layer, and where the reinforcement element has a width to thickness aspect ratio of over 10:1; and (2) when the rigidizing device has reached a

desired location in the body lumen, activating vacuum or pressure between the flexible tube and the outer layer to transition the rigidizing device into a rigid configuration that is stiffer than the flexible configuration.

[0023] This and other embodiments can include or more of the following features. The elongate flexible tube can resist compression when vacuum or pressure is applied.

[0024] In general, in one embodiment, a rigidizing device includes an elongate flexible tube, a braid layer positioned over the elongate flexible tube, an outer layer over the flexible tube and the braid layer, and an inlet between the elongate flexible tube and the outer layer and configured to attach to a source of vacuum or pressure. The braid layer has a plurality of strands braided together. The rigidizing device is configured to have a rigid configuration when vacuum or pressure is applied through the inlet and a flexible configuration when vacuum or pressure is not applied through the inlet. Ends of the strands are embedded in or surrounded by an annular ring that allows relative movement of the ends when the rigidizing device is in the flexible configuration.

[0025] This and other embodiments can include one or more of the following features. The annular ring can include a coating of material. The annular ring can include silicone or urethane. The annular ring can be approximately 0.005-0.250 inches thick.

[0026] In general, in one embodiment, a method of advancing a rigidizing device through a body lumen includes: (1) inserting a rigidizing device into the body lumen while the rigidizing device is in a flexible configuration, where the rigidizing device includes an elongate flexible tube, a braid layer having a plurality of strands braided together, and an outer layer; and (2) when the rigidizing device has reached a desired location in the body lumen, activating vacuum or pressure between the flexible tube and the sheath to transition the rigidizing device into a rigid configuration that is stiffer than the flexible configuration. Ends of the strands are embedded in or surrounded by an annular ring such that the ends move relative to one another while the rigidizing device is in the flexible configuration. The ends are substantially fixed relative to one another while the rigidizing device is in the rigid configuration.

[0027] In general, in one embodiment, a rigidizing device includes an elongate flexible tube, a braid layer positioned over the elongate flexible tube, an outer layer sealed over the flexible tube and the braid layer, and an inlet between the elongate flexible tube and the outer layer and configured to attach to a source of vacuum. The braid layer has a plurality of strands braided together and a plurality of hoop fibers woven into the braid. The rigidizing device is configured to have a rigid configuration when vacuum is applied through the inlet and a flexible configuration when vacuum is not applied through the inlet.

[0028] In general, in one embodiment, a method of advancing a rigidizing device through a body lumen includes: (1) inserting a rigidizing device into the body lumen while the rigidizing device is in a flexible configuration, where the rigidizing device includes an elongate flexible tube, a braid layer and an outer layer; and (2) when the rigidizing device has reached a desired location in the body lumen, activating vacuum between the flexible tube and the outer layer to transition the rigidizing device into a rigid configuration that is stiffer than the flexible configuration. The braid layer has a plurality of strands braided together and a plurality of hoop fibers woven into the braid.

[0029] In general, in one embodiment, a rigidizing device includes an elongate flexible tube, a bladder layer positioned over the elongate flexible tube, a braid layer positioned over the bladder layer, an outer layer positioned over the flexible tube and the braid layer, a pressure inlet between the bladder layer and the elongate flexible tube, and a vent outlet between the bladder layer and the outer layer. The pressure inlet configured to attach to a source of pressure. The braid layer includes a plurality of strands braided together. The rigidizing device is configured to achieve a rigid configuration when pressure is supplied through the pressure inlet and a flexible configuration when pressure is not supplied through the pressure inlet. Fluid or gas surrounding the strands moves out of the vent outlet as the rigidizing device transitions from the flexible configuration to the rigid configuration.

[0030] This and other embodiments can include one or more of the following features. The rigidizing device can further include a handle attached to the elongate flexible tube. The handle can include a vent port in communication with the vent outlet.

[0031] In general, in one embodiment, a method of advancing a rigidizing device through a body lumen includes: (1) inserting a rigidizing device into the body lumen while the rigidizing device is in a flexible configuration, where the rigidizing device includes an elongate flexible tube, a bladder layer, a braid layer having a plurality of strands braided together, and an outer layer; and (2) when the rigidizing device has reached a desired location in the body lumen, providing pressure through an inlet between the elongate flexible tube and the bladder layer and venting gas or fluid surrounding the strands out of a vent outlet to transition the rigidizing device into a rigid configuration that is stiffer than the flexible configuration.

[0032] In general, in one embodiment, a rigidizing device includes an elongate flexible tube, a braid layer positioned over the elongate flexible tube, an outer layer over the flexible tube and the braid layer, a channel extending between the outer layer and the elongate flexible tube, and an inlet. The inlet is between the elongate flexible tube and the outer layer and configured to attach to a source of vacuum or pressure. The channel includes a working channel, a steering cable channel, or an inflation lumen. The rigidizing device is configured to have a rigid configuration when vacuum or pressure is applied through the inlet and a flexible configuration when vacuum or pressure is not applied through the inlet.

[0033] In general, in one embodiment, a method of advancing a medical tool through a body lumen includes: (1) inserting a rigidizing device into the body lumen while the rigidizing device is in a flexible configuration, where the rigidizing device includes an elongate flexible tube, a braid layer, and an outer layer; (2) when the rigidizing device has reached a desired location in the body lumen, activating vacuum or pressure between the flexible tube and the outer layer to transition the rigidizing device into a rigid configuration that is stiffer than the flexible configuration; and (3) passing a medical tool through a sealed working channel that is positioned between the elongate flexible tube and the outer layer.

[0034] In general, in one embodiment, a method of advancing a medical tool through a body lumen includes: (1)

inserting a rigidizing device into the body lumen while the rigidizing device is in a flexible configuration, where the rigidizing device comprises an elongate flexible tube, a braid layer, and an outer layer; (2) when the rigidizing device has reached a desired location in the body lumen, activating vacuum or pressure between the flexible tube and the outer layer to transition the rigidizing device into a rigid configuration that is stiffer than the flexible configuration; and (3) activating at least one cable that is positioned between the elongate flexible tube and the outer layer to orient a distal end of the rigidizing device.

[0035] In general, in one embodiment, a method of advancing a medical tool through a body lumen includes: (1) inserting a rigidizing device into the body lumen while the rigidizing device is in a flexible configuration, where the rigidizing device includes an elongate flexible tube, a braid layer, and an outer layer; (2) when the rigidizing device has reached a desired location in the body lumen, activating vacuum or pressure between the flexible tube and the outer layer to transition the rigidizing device into a rigid configuration that is stiffer than the flexible configuration; and (3) inflating a balloon on the rigidizing device by passing an inflation medium through a sealed inflation lumen that is positioned between the elongate flexible tube and the outer layer.

[0036] In general, in one embodiment, a rigidizing device includes an elongate flexible tube having a central lumen, a braid layer positioned over the elongate flexible tube, an outer layer over the flexible tube and the braid layer, a plurality of sealed working channels extending within the central lumen, and an inlet between the elongate flexible tube and the outer layer and configured to attach to a source of vacuum or pressure. The rigidizing device is configured to have a rigid configuration when vacuum or pressure is applied through the inlet and a flexible configuration when vacuum or pressure is not applied through the inlet.

[0037] In general, in one embodiment, a method of advancing a plurality of medical tools through a body lumen includes: (1) inserting a rigidizing device into the body lumen while the rigidizing device is in a flexible configuration, where the rigidizing device includes an elongate flexible tube, a braid layer, and an outer layer; (2) and when the rigidizing device has reached a desired location in the body lumen, activating vacuum or pressure between the flexible tube and the outer layer to transition the rigidizing device into a rigid configuration that is stiffer than the flexible configuration; (3) passing a first medical tool through a first sealed working channel of the rigidizing device, and (4) passing a second medical tool through a second sealed working channel of the rigidizing device.

[0038] In general, in one embodiment, an overtube includes an elongate tube and a distal tip attached to the elongate tube. The distal tip has an annular distal face with one or more vacuum holes extending therethrough. The one or more vacuum holes are configured to draw tissue towards the annular distal face upon application of vacuum therethrough.

[0039] This and other embodiments can include one or more of the following features. The elongate tube can be a rigidizing device, and the rigidizing device can be configured to have a rigid configuration when vacuum or pressure is applied to a wall thereof and a flexible configuration when vacuum or pressure is not applied to the wall. The elongate tube can include a braid layer and an outer layer thereover. The annular distal face can be angled relative to a longitudinal axis of the elongate tube.

[0040] In general, in one embodiment, a rigidizing device includes an elongate flexible tube, a braid layer positioned over the elongate flexible tube, an outer layer over the flexible tube and the braid layer, and a distal tip attached to the elongate flexible tube. The braid layer has a plurality of strands braided together at a first braid angle relative to a longitudinal axis of the elongate flexible tube when the elongate flexible tube is straight. The distal tip includes a second braid layer having a plurality of strands braided together at a second braid angle that is different from the first braid angle. An inlet between the elongate flexible tube and the outer layer is configured to attach to a source of vacuum or pressure. The rigidizing device is configured to have a rigid configuration when vacuum or pressure is applied through the inlet and a flexible configuration when vacuum or pressure is not applied through the inlet.

[0041] This and other embodiments can include one or more of the following features. The second braid angle can be greater than the first braid angle. The first and second braid layers can be bonded to one another.

[0042] In general, in one embodiment, a rigidizing device includes an elongate flexible tube including a plurality of reinforcement elements therein. The elongate flexible tube includes a proximal section and a distal section. A braid layer is positioned over the proximal section and not the distal section. The braid layer has a plurality of strands braided together at a first braid angle relative to a longitudinal axis of the elongate flexible tube when the elongate flexible tube is straight. An outer layer is positioned over the braid layer. A plurality of steerable linkages extend over the distal section and not the proximal section. An inlet is between the elongate flexible tube and the outer layer and is configured to attach to a source of vacuum or pressure. The rigidizing device is configured to have a rigid configuration when vacuum or pressure is applied through the inlet and a flexible configuration when vacuum or pressure is not applied through the inlet.

[0043] This and other embodiment can include one or more of the following features. The rigidizing device can further include a plurality of cables attached to the steerable linkages. The cables can extend between the elongate flexible tube and the outer layer.

[0044] In general, in one embodiment, a rigidizing device includes a rigidizing assembly and plurality of linkages. The rigidizing assemble includes an elongate flexible tube, a braid layer positioned over the elongate flexible tube, an outer layer over the flexible tube and the braid layer, and an inlet. The inlet is between the elongate flexible tube and the outer layer and is configured to attach to a source of vacuum or pressure. The plurality of steering linkages are mounted over a distal portion of the rigidizing assembly. The rigidizing assembly is configured to have a rigid configuration when vacuum or pressure is applied through the inlet and a flexible configuration when vacuum or pressure is not applied through the inlet.

[0045] This and other embodiments can include one or more of the following features. The rigidizing device can further include a plurality of cables attached to the steerable linkages. The cables can extend between the elongate flexible tube and the outer layer.

[0046] In general, in one embodiment, a rigidizing device includes an elongate flexible tube, a plurality of steerable

linkages and an outlet. The elongate flexible tube includes a proximal section and a distal section. The elongate flexible tube includes a plurality of reinforcement elements therein, a braid layer positioned over the proximal section the distal section, an outer layer including a plurality of reinforcement elements. The plurality of steerable linkages extends over the distal section and not the proximal section. The inlet is between the elongate flexible tube and the outer layer and configured to attach to a source of vacuum or pressure. The braid layer has a plurality of strands braided together at a first braid angle relative to a longitudinal axis of the elongate flexible tube when the elongate flexible tube is straight. The outer layer is positioned over the proximal section and not the distal section. The rigidizing device is configured to have a rigid configuration when vacuum or pressure is applied through the inlet and a flexible configuration when vacuum or pressure is not applied through the inlet.

[0047] This and other embodiments can include one or more of the following features. The rigidizing device can further include a plurality of cables attached to the steerable linkages. The cables can extend between the elongate flexible tube and the outer layer.

[0048] In general, in one embodiment, a rigidizing device includes a rigidizing assembly and a plurality of linkages. The rigidizing assembly includes an elongate flexible tube, a braid layer positioned over the elongate flexible tube, an outer layer over the flexible tube and the braid layer, and an inlet between the elongate flexible tube and the outer layer and configured to attach to a source of vacuum or pressure. A spine extends through a distal section of the rigidizing assembly. The spine is configured to provide bending of the rigidizing assembly in a set direction. The plurality of steering linkages are distal to the rigidizing assembly. The rigidizing assembly is configured to have a rigid configuration when vacuum or pressure is applied through the inlet and a flexible configuration when vacuum or pressure is not applied through the inlet.

[0049] This and other embodiments can include one or more of the following features. The rigidizing device can further include a pullwire configured to bend the device at the spine when activated. The rigidizing device can further include a plurality of cables attached to the steerable linkages. The cables can extend between the elongate flexible tube and the outer layer.

[0050] In general, in one embodiment, a rigidizing device includes a rigidizing assembly and a distal tip. The rigidizing assembly includes an elongate flexible tube, a braid layer positioned over the elongate flexible tube, an outer layer over the flexible tube and the braid layer, and an inlet between the elongate flexible tube and the outer layer and configured to attach to a source of vacuum or pressure. The distal tip is attached to the elongate flexible tube. The distal tip includes a plurality of linkages connected together at pivot points. The rigidizing assembly and the distal tip are configured to assume a rigid configuration when vacuum or pressure is applied through the inlet and a flexible configuration when vacuum or pressure is not applied through the inlet.

[0051] In general, in one embodiment, a handle for use with a rigidizing device includes a handle body configured to attach to a rigidizing device, a vacuum feed line attached to the handle body and configured to connect to a source of vacuum, a vacuum port in communication with a wall of the rigidizing device, and an activation element on the handle body. The activation element is configured to move between a first position and a second position. The activation element in the first position connects the vacuum feed line with the vacuum port to provide vacuum to the wall of the rigidizing device, and the activation element in the second position disconnects the vacuum feed line from the vacuum port to vent the wall of the rigidizing device.

[0052] This and other embodiments can include one or more of the following features. The activation element can include a magnetic element thereon. The magnetic element can be configured to hold the activation element in the first position or the second position. The vacuum feed line can be coiled within the handle.

[0053] In general, in one embodiment, a method of advancing a rigidizing device through a body lumen includes: (1) holding a handle of the rigidizing device; (2) inserting an elongate body of the rigidizing device into the body lumen while the rigidizing device is in a flexible configuration; (3) when the rigidizing device has reached a desired location in the body lumen, moving an activation element in a first direction to connect a vacuum feed line of the handle with a vacuum port to a wall of the elongate body such that vacuum flows into the wall of the elongate body to transition the elongate body to a rigid configuration; and (4) moving the activation element in a second direction to disconnect the vacuum feed line from the vacuum port such that the elongate body vents to transition the elongate body to the flexible configuration.

[0054] In general, in one embodiment, a handle for use with a rigidizing device includes a handle body configured to attach to a rigidizing device, a fluid chamber within the handle body, an outlet in fluid communication with the fluid chamber and with a wall of the rigidizing device, and an activation element configured to move between a first position and a second position. The activation element is configured to transfer fluid from the fluid chamber to the wall of the rigidizing device when moving from the first position to the second position and to transfer fluid back into the fluid chamber when moving from the second position to the first position.

[0055] This and other embodiments can include one or more of the following features. The handle can further include an overflow chamber within the handle body and a pressure relief valve between the fluid chamber and the overflow chamber. The pressure relief valve can be configured to open to allow fluid to flow into the overflow chamber when pressure in the fluid chamber reaches a predetermined maximum pressure. The handle can further include a piston and rolling diaphragm within the handle body. The piston can be configured to push on the rolling diaphragm as the activation element is moved between the first position and the second position.

[0056] In general, in one embodiment, a method of advancing a rigidizing device through a body lumen includes: (1) holding a handle of the rigidizing device, (2) inserting an elongate body of the rigidizing device into the body lumen while the rigidizing device is in a flexible configuration; (3) when the rigidizing device has reached a desired location in the body lumen, moving an activation element in a first direction to move fluid from a fluid chamber of the handle into a wall of the rigidizing element to transition the rigidizing device to a rigid configuration; and (4) moving the activation in a second direction to move

fluid from the wall of the rigidizing element back into the handle to transition the rigidizing device to the flexible configuration.

[0057] In general, in one embodiment, a nested system includes a first rigidizing device and a second rigidizing device positioned radially within the first rigidizing device. The second rigidizing device is axially slideable relative to the first rigidizing device. The first and second rigidizing devices are configured to be alternately rigidized by vacuum or pressure.

[0058] This and other embodiments can include one or more of the following features. The pressure can be greater than 1 atm. The first rigidizing device can be configured to be rigidized by vacuum and the second rigidizing device can be configured to be rigidized by pressure of greater than 1 atm. Each of the first and second rigidizing devices can include a plurality of layers. The vacuum or pressure can be configured to be supplied between the plurality of layers. At least one of the plurality of layers can be a braid layer.

[0059] In general, in one embodiment, a method of advancing through a body lumen includes: (1) inserting a first rigidizing device into the body lumen while the first rigidizing device is in a flexible configuration; (2) supplying vacuum or pressure to the first rigidizing device to transition the first rigidizing device into a rigid configuration that is stiffer than the flexible configuration; (3) inserting a second rigidizing device in a flexible configuration through the first rigidizing device while the first rigidizing device is in the rigid configuration such that the second rigidizing device takes on a shape of the first rigidizing device in the rigid configuration; and (4) supplying vacuum or pressure to the second rigidizing device to transition the second rigidizing device from the flexible configuration to a rigid configuration.

[0060] This and other embodiments can include one or more of the following features. Each rigidizing device can include an elongate flexible tube and a braid layer. Supplying vacuum or pressure can compress the braid layer to transition the rigidizing device to the rigid configuration.

[0061] In general, in one embodiment, a method of advancing through a body lumen includes: (1) moving a first rigidizing device in a flexible configuration until the first rigidizing device reaches a desired location; (2) after the first rigidizing device has reached the desired location, transitioning the first rigidizing device into a rigid configuration by supplying vacuum or pressure to the first rigidizing device; (3) after the first rigidizing device is rigidized, moving a second rigidizing device in a flexible configuration over the first rigidizing device in the rigidized configuration; (4) transitioning the second rigidizing element into a rigid configuration by supplying vacuum or pressure to the second rigidizing device; (5) transitioning the first rigidizing device into a flexible configuration by removing the vacuum or pressure; and (6) moving the first rigidizing device in the flexible configuration through the second elongate rigidizing device until the first rigidizing device reaches a desired location.

[0062] This and other embodiments can include one or more of the following features. The method can further include periodically moving both the first and second rigidizing devices into a flexible configuration to allow a curvature of the first and second rigidizing devices to increase to match surrounding anatomy.

[0063] In general, in one embodiment, a rigidizing rod includes an inner bladder layer, a braid layer positioned over the inner bladder layer, an outer sheath sealed over the inner bladder layer and the braid layer, and an inlet between the outer sheath and the inner bladder layer configured to attach to a source of vacuum. The rigidizing rod is configured to have a rigid configuration when vacuum is applied through the inlet and a flexible configuration when vacuum or pressure is not supplied through the inlet. The rigidizing rod does not have a through-lumen extending therethrough.

[0064] In general, in one embodiment, a method of advancing a rigidizing device through a body lumen includes: (1) advancing the rigidizing device through the body lumen; (2) inserting a rod having an elongate flexible tube, a braid layer, and a bladder into a lumen of the rigidizing device while the rod is in a flexible configuration; (3) when the rod has reached a desired location in the lumen of the rigidizing device, supplying pressure of greater than 1 atm to a central sealed lumen of the rod to force the braid layer against the elongate flexible tube to transition the rigidizing device into a rigid configuration that is stiffer than the flexible configuration; and (4) further advancing the rigidizing device over the rod while the rod is in the rigid configuration.

[0065] In general, in one embodiment, a method of performing cholangioscopy includes: (1) inserting an overtube into colon while the overtube is in a flexible configuration, where the overtube includes an elongate flexible tube, a braid layer having a plurality of strands braided together, and an outer layer; (2) steering a distal end of the overtube towards a papilla; (3) activating vacuum or pressure between the flexible tube and the outer layer to transition the overtube into a rigid configuration that is stiffer than the flexible configuration; (4) while the overtube is in the rigid configuration, advancing a guidewire through the overtube and into a bile duct or pancreatic duct; and (5) advancing a scope over the guidewire to the bile duct or pancreatic duct.

[0066] In general, in one embodiment, a method of accessing the cardiac anatomy includes: (1) inserting a sheath into the cardiac anatomy while the sheath is in the flexible configuration, where the sheath includes an elongate flexible tube, a braid layer having a plurality of strands braided together, and an outer layer; (2) steering a distal end of the sheath towards a desired final location; (3) activating vacuum or pressure between the flexible tube and the outer layer to transition the overtube into a rigid configuration that is stiffer than the flexible configuration; and (4) passing a cardiac device through the rigid sheath.

[0067] This and other embodiments can include one or more of the following features. The desired final location can be the aortic valve. The cardiac device can be a transcatheter aortic valve replacement. The desired final location can be the mitral valve. The cardiac device can be a mitral valve replacement or a mitral valve repair element.

[0068] Any of the devices described here can include one or more of the following. The rigidizing device can further include a slip layer adjacent to the braid layer. The slip layer can have a lower coefficient of friction than the braid layer. The rigidizing device in the rigid configuration can be at least two times stiffer than the rigidizing device in the flexible configuration. The rigidizing device in the rigid configuration can be at least 5 times stiffer than the rigidizing device in the flexible configuration. The braid layer can have a plurality of strands braided together at a braid angle

of 5-40 degrees relative to a longitudinal axis of the elongate flexible tube when the elongate flexible tube is straight. The braid angle can be between 10 and 35 degrees. The elongate flexible tube can include a reinforcement element extending therein. The reinforcement element can include a coil or plurality of hoop elements. The braid layer can include a plurality of strands braided together at 4-60 picks per inch. The braid layer can include a plurality of strands braided together. The strands can include polyethylene terephthalate or stainless steel. The braid layer can provide a coverage of 30-70% relative to the elongate flexible tube. The braid layer can include 96 strands or more strands braided together. The inlet can be configured to attach to a source of pressure. The rigidizing device can further include a bladder layer therein. The bladder layer can be configured to be pushed against the braid layer when pressure is supplied through the inlet. The outer layer can further include a plurality of reinforcement elements therein. The inlet can be configured to attach to a source of vacuum. The outer layer can be a thin flexible sheath. The rigidizing device can further include a radial gap between the braid layer and the outer layer. The gap can have a thickness of 0.00002"-0.04". The rigidizing device can further include a steerable distal end. The rigidizing device can further include a sealed channel between the elongate flexible tube and the outer layer. The sealed channel can include a working channel, a cable guide, or an inflation lumen.

[0069] Any of the methods described here can include one or more of the following. The method can further include releasing vacuum or pressure after activating the vacuum or pressure to transition the rigidizing device back to the flexible configuration. The method can be performed in the gastrointestinal tract. The method can be performed in the heart. The method can be performed in the kidneys. The method can be performed in the lungs. The method can be performed in the brain.

BRIEF DESCRIPTION OF THE DRAWINGS

[0070] The novel features of the invention are set forth with particularity in the claims that follow. A better understanding of the features and advantages of the present invention will be obtained by reference to the following detailed description that sets forth illustrative embodiments, in which the principles of the invention are utilized, and the accompanying drawings of which:

[0071] FIG. **1** shows a rigidizing device.

[0072] FIGS. **2**A-**2**B show portions of a braid layer of a rigidizing device.

[0073] FIG. **3** is a graph of bend force vs braid angle when a rigidizing device is placed under vacuum.

[0074] FIGS. **4**A-**4**D show exemplary braid formations.

[0075] FIGS. **5**A-**5**B show exemplary braid formations.

[0076] FIGS. **6**A-**6**D various designs for the termination of braid layers of a rigidizing device.

[0077] FIG. **7** shows an inner layer of a rigidizing device.

[0078] FIGS. **8**A-**8**F show different coil designs for a layer of a rigidizing device.

[0079] FIGS. **9**A-**9**B show undulating reinforcement elements for a layer of a rigidizing device.

[0080] FIGS. **10**A-**10**E show notch and pocket reinforcement elements for a layer of a rigidizing device.

[0081] FIGS. **11**A-**11**B show a cut tubing reinforcement element for a layer of a rigidizing device.

[0082] FIGS. **12**A-**12**B show exemplary rigidized shapes of a rigidizing device.

[0083] FIGS. **13**A-**13**D show an exemplary vacuum rigidizing device.

[0084] FIGS. **14**A-**14**B show an exemplary pressure rigidizing device.

[0085] FIG. **15** is a graph of bending strength vs pressure for a rigidizing device.

[0086] FIG. **16**A-**16**O show various examples of pressure rigidizing devices.

[0087] FIGS. **17**A-**17**D show a rigidizing device with an incorporated working channel.

[0088] FIGS. **18**A-**18**B show a rigidizing device with a spiraled working channel.

[0089] FIGS. **19**A-**19**B show a rigidizing device with a plurality of spiraled working channels.

[0090] FIGS. **20**A-**20**B show a rigidizing device with a plurality of working channels extending down the central lumen.

[0091] FIG. **21** shows a rigidizing device with a working channel extending out the side thereof.

[0092] FIG. **22** shows a tool that can be used with a working channel of a device, such as a rigidizing device.

[0093] FIG. **23** shows a rigidizing device with a distal end section.

[0094] FIG. **24** shows a rigidizing device with a distal end section having a separate braid pattern from the proximal section of the device.

[0095] FIG. **25** shows a rigidizing device with a distal end section having a plurality of passive linkages.

[0096] FIG. **26** shows a rigidizing device with a distal end section having a plurality of actively controlled linkages.

[0097] FIGS. **27**A-**27**E shows a plurality of actively controlled linkages.

[0098] FIG. **28** shows one embodiment of a rigidizing device including cables extending within the layered wall.

[0099] FIG. **29** shows one embodiment of a rigidizing device including cables extending within the layered wall.

[0100] FIG. **30** shows one embodiment of a rigidizing device including cables extending within the layered wall.

[0101] FIG. **31** shows one embodiment of a rigidizing device including cables extending within the layered wall.

[0102] FIG. **32** shows one embodiment of a rigidizing device including cables extending within the layered wall.

[0103] FIG. **33** shows one embodiment of a rigidizing device including cables extending within the layered wall.

[0104] FIG. **34** shows one embodiment of a rigidizing device including cables extending within the layered wall.

[0105] FIG. **35** shows a rigidizing device including cables extending down the central lumen.

[0106] FIG. **36** shows an embodiment of rigidizing device including a cable spiraled therearound.

[0107] FIG. **37** shows an embodiment of a rigidizing device with a cable spiraled therearound.

[0108] FIGS. **38**A-**38**B show an embodiment of a rigidizing device with a cable spiraled therearound.

[0109] FIGS. **39**A-**39**B show a rigidizing device with a cable spiraled therein.

[0110] FIGS. **40**A-**40**D show exemplary linkages for a distal end section.

[0111] FIGS. **41**A-**41**B show a rigidizing device with a distal end section having linkages over a rigidizing section.

[0112] FIG. **42**A shows a rigidizing device with a distal end section having linkages within a rigidizing section.

[0113] FIG. **42**B shows a rigidizing device with a steering cable attached to a wall near the distal end thereof.

[0114] FIGS. **43**A-**43**C show a rigidizing device having an actively deflected distal end section.

[0115] FIGS. **44**A-**44**C show a rigidizing device with separate rigidizing chambers along the length thereof.

[0116] FIGS. **45**A-**45**D show a rigidizing device with a balloon and inflation lumen.

[0117] FIGS. **46**A-**46**B show an embodiment of a suction tip for a device such as a rigidizing device.

[0118] FIGS. **47**A-**47**B show an embodiment of a suction tip for a device such as a rigidizing device.

[0119] FIGS. **48**A-**48**B show an embodiment of a suction tip for a device such as a rigidizing device.

[0120] FIGS. **49**A-**49**D show an embodiment of a handle for use with a rigidizing device.

[0121] FIGS. **50**A-**50**B show an embodiment of an activation element for a handle of a rigidizing device.

[0122] FIGS. **51**A-**51**C show an embodiment of an activation element for a handle of a rigidizing device.

[0123] FIGS. **52**A-**52**C show an embodiment of an activation element with a coupling for a handle of a rigidizing device.

[0124] FIGS. **53**A-**53**D show an embodiment of a handle for use with a rigidizing device.

[0125] FIGS. **54**A-**54**B show an embodiment of a handle for use with a rigidizing device.

[0126] FIGS. **55**A-**55**C show an embodiment of an activation element for a handle of a rigidizing device.

[0127] FIGS. **56**A-**56**G show an embodiment of a handle for use with a vacuum rigidizing device.

[0128] FIGS. **57**A-**57**C show an embodiment of a handle for use with a pressure rigidizing device.

[0129] FIGS. **58**A-**58**E show a pre-filled handle for use with a pressure rigidizing device.

[0130] FIG. **59** shows a rigidizing device with imaging elements mounted on a side thereof.

[0131] FIG. **60** shows a rigidizing introducer.

[0132] FIGS. **61**A-**61**B show a rigidizing device with a side-access mechanism.

[0133] FIG. **62** shows a nested rigidizing system.

[0134] FIG. **63** shows a nested rigidizing system with a cover between the inner and outer rigidizing devices.

[0135] FIGS. **64**A-**64**B show a nested rigidizing system where the outer rigidizing device includes steering and imaging.

[0136] FIGS. **65**A-**65**H show exemplary use of a nested rigidizing system.

[0137] FIG. **66** shows a rigidizing rod.

[0138] FIG. **67** shows a rigidizing rod in use with a colonoscope.

[0139] FIGS. **68**A-**68**B show an exemplary rigidizing device with a scope therein.

[0140] FIGS. **69**A-**69**B show use of a rigidizing device in the gastrointestinal tract.

[0141] FIGS. **70**A-**70**B show a method of use of a rigidizing device for ERCP.

[0142] FIGS. **71**A-**71**B show a method of use of a rigidizing device for ERCP.

[0143] FIGS. **72**A-**72**D show a method of use of a rigidizing device for ERCP.

[0144] FIGS. **73**A-**73**B show a method of use of a rigidizing device in the heart to create access to the left atrium.

[0145] FIGS. **74**A-**74**B show a method of use of a rigidizing device in the heart to perform treatment of a branching vessel.

[0146] FIGS. **75**A-**75**C show a method of use of a rigidizing device in the heart for mitral valve repair.

[0147] FIGS. **76**A-**76**B show a method of use of a dual rigidizing device in the heart.

[0148] FIG. **77** shows a rigidizing device used as a trocar.

[0149] FIG. **78** shows a rigidizing device in use at the aortic bifurcation.

[0150] FIG. **79** shows a rigidizing device for mitral valve repair.

[0151] FIG. **80** shows a rigidizing device with a distal payload for mitral valve repair.

[0152] FIGS. **81**A-**81**F show a method of using a rigidizing device to control a working tool.

DETAILED DESCRIPTION

[0153] In general, described herein are rigidizing devices (e.g., overtubes) that are configured to aid in transporting a scope (e.g., endoscope) or other medical instrument through a curved or looped portion of the body (e.g., a vessel). The rigidizing devices can be long, thin, and hollow and can transition quickly from a flexible configuration (i.e., one that is relaxed, limp, or floppy) to a rigid configuration (i.e., one that is stiff and/or holds the shape it is in when it is rigidized). A plurality of layers (e.g., coiled or reinforced layers, slip layers, braided layers, bladder layers and/or sealing sheaths) can together form the wall of the rigidizing devices. The rigidizing devices can transition from the flexible configuration to the rigid configuration, for example, by applying a vacuum or pressure to the wall of the rigidizing device or within the wall of the rigidizing device. With the vacuum or pressure removed, the layers can easily shear or move relative to each other. With the vacuum or pressure applied, the layers can transition to a condition in which they exhibit substantially enhanced ability to resist shear, movement, bending, and buckling, thereby providing system rigidization.

[0154] The rigidizing devices described herein can provide rigidization for a variety of medical applications, including catheters, sheaths, scopes (e.g., endoscopes), wires, or laparoscopic instruments. The rigidizing devices can function as a separate add-on device or can be integrated into the body of catheters, sheaths, scopes, wires, or laparoscopic instruments. The devices described herein can also provide rigidization for non-medical structures.

[0155] An exemplary rigidizing device system is shown in FIG. **1**. The system includes a rigidizing device **300** having a wall with a plurality of layers including a braid layer, an outer layer (part of which is cut away to show the braid thereunder), and an inner layer. The system further includes a handle **342** having a vacuum or pressure inlet **344** to supply vacuum or pressure to the rigidizing device **300**. An actuation element **346** can be used to turn the vacuum or pressure on and off to thereby transition the rigidizing device **300** between flexible and rigid configurations. The distal tip **339** of the rigidizing device **300** can be smooth, flexible, and atraumatic to facilitate distal movement of the rigidizing device **300** through the body. Further, the tip **339** can taper from the distal end to the proximal end to further facilitate distal movement of the rigidizing device **300** through the body.

[0156] A portion of an exemplary braid layer **209** for a rigidizing device similar to device **300** is shown in FIGS. **2**A-**2**B. The braid layer **209** can included braided strands **233**. The braid layer **209** can, for example, be a tubular braid.

[0157] The braid angle α of the strands **233** relative to the longitudinal axis **235** of the rigidizing device when the rigidizing device (e.g., device **300**) is in a straight (unbent) configuration can be less than 45 degrees, such as less than or equal to 40 degrees, less than or equal to 35 degrees, or less than or equal to 25 degrees. Referring to FIG. **3**, the bending strength of the rigidizing device decreases as the braid angle α (when the rigidizing device is straight or unbent) increases. That is, the bending strength under vacuum of the rigidizing device with a braid angle of 45 degrees (a typical minimum angle for a torque or torsion braid. Still larger angles are typically used for catheter shaft reinforcement) under vacuum is 27% of the bending strength under vacuum of a rigidizing device with a braid angle of 25 degrees. Accordingly, having a lower braid angle (e.g., less than 45 degrees, such as 40 degrees or less or 35 degrees or less) advantageously ensures that the rigidizing device (e.g., device **300**) remains stiff in bending (resistant to a change in configuration) under vacuum (and similarly under pressure). Additionally, the braid angle α when the rigidizing device is in a straight (unbent) configuration can be greater than 5 degrees, such as greater than 8 degrees, such as greater than 10 degrees, such as 15 degrees or greater. Having a braid angle α within this range ensures that the braid remains flexible enough to bend when in the flexible configuration (i.e., when not rigidized under vacuum or pressure). Thus, the braid angle α of the strands **233** relative to the longitudinal axis **235** of the rigidizing device when the rigidizing device is in a straight configuration can be 5 to 40 degrees, such as 10 to 35 degrees, such as 15 to 25 degrees, such as approximately 5, 10, 15, 20, 25, 30, 35, or 40 degrees. The braid angle α of the strands **233** relative to the longitudinal axis **235** of the rigidizing device when the rigidizing device is in a straight (unbent) configuration of 5-40 degrees ensures that the rigidizing device is flexible enough to bend in the flexible configuration (e.g., when not under vacuum/pressure) yet stiff when in the rigid configuration (e.g., when placed under vacuum or pressure). Additionally, it should be understood that the strands **233** are configured to slide over one another, and therefore that the braid angle α will change the rigidizing device flexes and bends. Having an angle α that is between 5 and 40 degrees also advantageously ensures that the strands **233** can move freely relative to one another without causing the fibers to collide with one another and prevent further angular change.

[0158] Further, the braid for braid layer **209** can be between 4-60 picks per inch, such as 8, 10, 12, 14, 16, 18, 20, or 25 picks/inch. In one embodiment, the tube formed by the layer **209** has a diameter of 0.578", and the braid is 12-14 picks per inch.

[0159] In some embodiments, the braid layer **209** (or any braid layer described herein) can be configured such that the rigidizing devices described herein have a high stiffness ratio (i.e., the ratio of the stiffness in the rigid configuration, such as when vacuum or pressure is applied, to stiffness in the flexible configuration, such as when vacuum or pressure is not applied). For example, the stiffness ratio can be greater than 5, such as greater than 6, greater than 9, greater than 9, or greater than 10. Referring to Table 1 below, six vacuum rigidizing devices (samples A-F) were built and tested over a length of 4" and a deflection of ½" for cantilevered bending stiffnesses at atmospheric pressure (flexible configuration) and under vacuum (rigid configuration). As shown, lowering the braid angles raises the stiffness of the rigidized devices. Samples E and F show, in particular, the stiffness difference between a braid at a typical torque angle (sample E, 47.7 degrees and rigid stiffness of 0.529 lbf) and a braid with a lower angle (sample F, 27.2 degrees, and a rigid stiffness of 1.455 lbf). As is also shown in Table 1, rigidizing devices with lower angles (e.g., angles under 45 degrees or 35 degrees, such as samples A-D and F) can have a much higher stiffness ratio (e.g., ratio of greater than 5, greater than 6, greater than 9, or greater than 10) than rigidizing devices with higher angles (e.g., angles of 45 degrees or above, such as sample F), which can have a stiffness ratio of under 5. It can also be observed from Table 1 that both samples A and B have a stiffness ratio above 5. Sample B, at a 14.9 degree braid angle, has a lower stiffness ratio but a higher absolute stiffness than sample because the strands of sample B are oriented close to the longitudinal axis (and therefore sample B has a higher stiffness in the flexible configuration).

TABLE 1

Vacuum Rigidizing Devices

Sample	Inside diameter (Inches)	Braid angle (degrees)	Strand	Picks per Inch	Flexible stiffness (lbf)	Rigid stiffness (lbf)	Stiffness ratio	Change in Stiffness (lbf)
A	0.37	20.4	0.010" PET	14.3	0.046	0.441	9.6	0.395
B	0.37	14.9	0.010" PET	12.8	0.097	0.653	6.7	0.556
C	0.576	32.8	0.010" PET	16.2	0.099	0.661	6.7	0.562
D	0.576	20	0.010" PET	11.5	0.115	1.102	9.6	0.987
E	0.77	47.7	0.010" PET	19.8	0.115	0.529	4.6	0.414
F	0.77	27.2	0.010" PET	12.2	0.137	1.455	10.6	1.318

[0160] Referring to Table 2 below, three pressure rigidizing devices (samples G-I) were built and tested over a length of 4" and a deflection of ½" for cantilevered bending stiffnesses at atmospheric pressure atmospheric pressure

(flexible configuration) and under 4 atm pressure (rigid configuration). The samples all included a coverage of 35-45% and a braid with 96 strands and one filament per strand. As shown, lowering the braid angles raises the stiffness of the rigidizing devices. As is also shown in Table 2, rigidizing devices with lower angles can have a higher stiffness ratio than rigidizing devices with higher angles. In some embodiments, the pressure rigidizing devices described herein have a stiffness ratio of greater than 10, such as greater than 15, such as greater than 20.

TABLE 2

Pressure Rigidizing Devices

Sample	Inside diameter (inches)	Braid angle (degrees)	Strand	Picks per inch	Flexible stiffness (lbf)	Rigid stiffness (lbf)	Stiffness ratio	Change in Stiffness (lbf)
G	0.35	30	0.005" stainless steel	24.1	0.044	0.448	10.2	0.404
H	0.35	22.7	0.005" stainless steel	17.5	0.037	0.611	16.5	0.574
I	0.35	15.6	0.005" stainless steel	11.7	0.051	1.091	21.4	1.04

[0161] Further, in some embodiments, the braid of braid layer **209** can have a coverage of 30%-70%, such as 40%-60%, e.g., 30%, 40%, 50%, 60%, or 70%, where the coverage area is the percentage of an underlying surface that is covered or obstructed by the braid.

[0162] In some embodiments, the braid layer **209** can be formed by running each individual strand around an inner tube or the rigidizing device and/or a separate mandrel in a helix such that the strands **233** are interlaced with one another. In one embodiment, the braid layer **209** can be heat formed over a 0.50"-0.60", e.g., 0.56" mandrel. Further, in some embodiments, the braid layer during manufacturing can be mounted over a tube or mandrel to a diameter that is smaller than the core diameter (i.e., smaller than the diameter at which the braid was originally manufactured). Compressing the braid radially in this way can decrease the braid angle in the range that provides a high rigidization multiple (while also decreasing the PPI, increasing the total length of the tubular braid layer, and increasing the braid coverage percentage).

[0163] The strands **233** can be rectangular/flat (e.g., with a long edge of 0.001"-0.060", such as 0.005", 0.007", 0.010", or 0.012", and a short edge of 0.0003"-0.030", such as 0.001", 0.002", or 0.003"), round (e.g., with a diameter of 0.001"-0.020", such as 0.005", 0.01", or 0.012"), or oval. In some embodiments, some of the strands **233** can be flat and some of the strands **233** can be round.

[0164] In some embodiments, the strands **233** can be made of metal filaments (e.g., stainless steel, aluminum, nitinol, tungsten, or titanium), plastic (nylon, polyethylene terephthalate, PEEK, polyetherimide), or high strength fiber (e.g., aramids, ultra-high molecular weight UHMW polyethylene, or liquid crystal polymers such as Vectran). In some embodiments, the strands **233** can be made of a multi-layer composite, such as a metal core with a thin elastomeric coating. In one specific example, the strands **233** can include round nylon having a diameter of 0.010" (or metal filaments having a diameter of 0.003") intertwined with flat aluminized PET with cross-sectional dimensions of 0.002" by 0.002". In some embodiments, the material for the strands **233** of the braid can be a material with a known high coefficient of friction. For example, the strands **233** can be a monolithic structure or have a coating such that the strands include aluminum on aluminum, copper on copper, silver on silver, or gold on gold. As another example, the strands **233** can be coated with an elastomeric material (e.g., lower durometer elastomers can be coated on top of a higher modulus substrate). As another example, the strands **233** can be made of styrene co-polymer, polycarbonate, or acrylic.

[0165] There can be between 12-800 strands **233**, such as 24, 48, 96, 120, 144 or more strands **233** extending within braid layer **209**. In some embodiments, there are 96 strands or more, 120 strands or more, 200 strands or more, or 240 strands or more. A higher number of strands may advantageously help rigidize the braid due to the increased interaction between strands.

[0166] Referring to FIGS. **4**A-**4**D, the braid of any of the rigidizing devices described herein can be in a variety of different braid patterns. For example, referring to FIG. **4**A, the braid of layer **1709** can be a diamond full load pattern in which two neighboring strands **1733***a,b* extend over two strands and then under two strands. Referring to FIG. **4**B, the braid of layer **1709** can be a full load pattern, in which each strand **1733***a* extends over two strands and under two strands in a manner that is opposite to the neighboring strand **1733***b*. Referring to FIG. **4**C, the braid of layer **1709** can be a diamond half load pattern in which each strand **1733***a* extends over one strand and under one strand opposite to the neighboring strand **1733***b*. Referring to FIG. **4**D, the braid of layer **1709** can include one or more longitudinal strands **1733***c* running through the crossed strands **1733***a*, **1733***b*.

[0167] Referring to FIGS. **5**A-**5**B, each strand **1833** can include a single filament **1818** (FIG. **5**A) or multiple filaments **1818***a-c* (three filaments **1818***a-c* are shown in each strand **1833** in FIG. **5**B). The filaments **1818** can be chosen (i.e., diameter, spacing, and modulus can be specifically tailored) to reduce crimp (the waviness or bending of the filaments). Reduced crimp can help the system provide enhanced compression buckling resistance, which can translate to enhanced system stiffness.

[0168] Exemplary specific braid layer embodiments J-N are shown in Table 3.

TABLE 3

Exemplary braids									
Sample	Inside diameter (inches)	Braid angle (degrees)	Strand	Picks per inch	Number of strands	Number of filaments per strand	Pattern of crossing	Braid coverage	Rigidizing medium
J	0.576	20	PET, round, 0.010"	12	120	1	Full load	56.7%	Vacuum
K	0.21	15.1	Stainless steel, round, 0.005"	18.7	96	1	Full load	59%	Pressure
L	0.35	25.7	Stainless steel, round, 0.005"	20.45	96	1	Full load	42%	Pressure
M	0.21	15.1	Stainless steel, round, 0.004"	18.7	96	1	Full load	50%	Pressure
N	0.33	14	Stainless steel, round, 0.005"	11.7	96	1	Full load	42%	Pressure

[0169] In use, vacuum or pressure can be supplied between the walls of the rigidizing devices described herein, causing the braided layer and neighboring layer(s) to constrict and/or separate to transition between flexible and rigid configurations. The rigidizing devices described herein can thus advantageously transition from very flexible to very stiff upon activation by the user. When a vacuum or pressure is applied, the braids or strands can radially constrict or expand to become mechanically fixed or locked in place relative to one another. As a result, the rigidizing device can go from a flexible configuration to a rigid configuration when vacuum or pressure is applied (thereby fixing the rigidizing device in the shape that the rigidizing device was in just prior to application of the vacuum or pressure).

[0170] Referring to FIGS. **6**A-**6**D, in some embodiments, one or both ends of the braid layer **5609** of a rigidizing device **5600** as described herein can be bonded to another layer of the device **5600** to prevent the strands **5633** of the braid from coming unbraided. Further, the ends of the strands **5633** can be bonded in such a way so as to allow relative movement of the strands **5633** during flexing of the rigidizing device **5600** when it is in the flexible configuration (i.e., so as to prevent rigidity or buckling of the device **5600**, which in turn can lead to drag at the tip **5629**, that might otherwise occur if the strands **5633** were constrained).

[0171] For example, as shown in FIG. **6**A, the tip **5629** of the braid layer **5609** can include a coating **5634** thereover of low durometer material, such as silicone or urethane, that is stretchable and/or flexible. As a result, the ends of the strands **5633** can be encapsulated by the coating **5634** (and therefore prevented from unbraiding) while still moving with coating **5634** as it stretches and/or flexes. The coating **5634** can be thin, such as between 0.005-0.250 thick (e.g., approximately 1/32" thick).

[0172] As another example, as shown in FIG. **6**B, the tip **5629** of the braid layer **5609** can include an annular ring **5601***z* therearound. In some embodiments, the ring **5601***z* can be formed by melting the tips of the strands **5633**. In other embodiments, the ring **5601***z* can be a separate element that is bonded to the strands **5633** (e.g., bonded to less than 20%, less than 10%, or less than 5% of the strands **5633**). In some embodiments, there can be two bonding positions approximately 180 degrees apart from one another. The ring **56012** can advantageously ensure that the strands **5633** do not unwind and yet can substantially move relative to one another underneath the ring **56012**. The ring **56012** can be made, for example, of rubber, Kapton, PTFE, silicone, urethane, latex, or ePTFE.

[0173] As another example, as shown in FIG. **6**C, the tip **5629** of the braid layer **5609** can have a varying pick count along the tip **5629** with a greater pick count at the tip and a lower pick count towards the center. As a result, the strands **5633** can have a greater angle relative to the longitudinal axis at the tip **5629** than in the rest of the layer **5609**. For example, while the strands **5633** in the central portion of the device **5600** can have an angle of 45° or less relative to the longitudinal axis of the device **5600** (for example, 40 degrees or less, 35 degrees or less, 25 degrees or less, or 20 degrees or less), the strands **5633** at the tip **5629** can have an angle of greater than 45°, such as between 45° and 60°, relative to the longitudinal axis (for example, 35 degrees, 45 degrees, or 55 degrees). The change in braid angle can be a continuous change at the tip **5629** and/or can be created by joining two separate braids together. The strands **5633** of greater angle can be glued down to the innermost layer at the tip **5629**. By having a braid with a greater angle at the tip **5629**, the tip **5629** can remain flexible as it curves or bends even when the strands **5633** are fixed to the inner layer **5615**. In some embodiments, the increasing braid angle at the tip **5629** can be created by changing the speed of pulling the core inside the tubular braid during manufacturing.

[0174] As another example, as shown in FIG. **6**D, the tip **5629** of the braid layer **5609** can be everted and bonded to the innermost layer **5615** (and/or other layer that is radially inwards of the braid layer **5609**). The tip **5629** can be more flexible relative to a non-everted tip **5629** because it includes an extra (everted) length within which to allowed the strands **5633** to move.

[0175] In some embodiments, the proximal and distal ends of the braid layer **5609** can have different treatments (e.g.,

the distal end may have a first treatment as described in FIGS. **6**A-**6**D while the proximal end may have a second treatment as described in FIGS. **6**A-**6**D).

[0176] In some embodiments, the rigidizing devices described herein (e.g., rigidizing device **300**) can include one or more slip layers bordering the braid layer (e.g., braid layer **209**). The slip layer can be configured to reduce friction between the braid and the bordering layers to allow the bordering layers (and in particular the braid layer) to more easily shear or move relative to each other, particularly when no vacuum or pressure is applied to the rigidizing device, to maximize flexibility in the flexible configuration. The slip layer can advantageously enhance the baseline flexibility of the rigidizing device to allow the layers to move relative to one another. In one embodiment, the slip layer can include a powder, such as talcum or cornstarch. In particular, a powder slip layer can advantageously reduce friction without adding significant thickness to the device, thereby enhancing flexibility of the rigidizing device in the flexible configuration. The slip layer can be made of a low coefficient of friction material, such as a thin film fluoropolymer (FEP, Chemfilm, PTFE, with thicknesses from 2-50 microns). In one embodiment, the slip layer can be a coating. In one embodiment, the slip layer can be a slip additive added to an elastomer. In one embodiment, the slip layer can be a sheath of thin plastic film that is inherently lubricious, such as low-density polyethylene (LDPE). In one embodiment, the slip layer can be made of a thin spiral-wrapped film, such at 0.0005" FEP or 0.00025" Chemfilm (St. Gobain). In one embodiment, the slip layer can be made of a grease, oil or other liquid.

[0177] The rigidizing devices described herein can include an innermost layer configured to provide an inner surface against which the additional layers (e.g., braid layer) can be consolidated, for example, when a vacuum or pressure is applied within the walls of the rigidizing device. The layer can further provide a seal for the wall (i.e., can be leak-proof) and can be strong enough to provide resistance to diametrical collapse even during bending of the rigidizing device and/or compression of the rigidizing device during rigidization. Referring to FIG. **7**, in some embodiments, the innermost layer **8815** can include a reinforcement element **8850***z* or coil within a matrix **8851***z*. The reinforcement element **8850***z* can be a continuous spiral coil or closed rings with gaps in between them (which may exhibit more resistance to collapse than a spiral coil). Additionally, the inner layer **8815** can include an inner film **8852***z* and an outer film **8853***z* on one or both sides thereof. In some embodiments, each of the elements **8853***z*, **8852***z*, **8850***z*/**8851***z* can have a thickness of 0.0002"-0.015".

[0178] The reinforcement element **8850***z* can be, for example, a metal wire, such as a metal wire made of stainless steel, nitinol, or Tungsten. The reinforcement element **8850***z* can be, for example, a high strength fiber (e.g., Kevlar, Dyneema, Vectran, Technora, or carbon fiber). The reinforcement element **8850***z* can be, for example, a stent, a structure cut from a tube, or a braid. In some embodiments, the reinforcement element **8850***z* can be a round wire (e.g., 0.0005"-0.030" in diameter, such as 0.001", 0.003", 0.005", 0.007" or 0.009" in diameter). In some embodiments, the reinforcement element **8850***z* can be a rectangular wire (e.g., having a width of 0.001" to 0.100" inch, for instance, 0.010", 0.020", 0.030", 0.040", 0.050", 0.060", 0.070", 0.080", 0.090", or 0.100" and/or The rectangular wire can have a thickness from 0.0003" to 0.020", for instance, 0.001", 0.003", 0.005", 0.007" or 0.010"). In other embodiments, the reinforcement element **8850***z* can have an oval cross-section and/or can include a plurality of individual strands and/or can have a rectangular cross section in which the four sharp corners are rounded. In some embodiments, the reinforcement element **8850***z* can be cut from a single tube using, for instance, a laser to create the gaps. In some embodiments, no reinforcement element is used.

[0179] In some embodiments, the reinforcement element **8850***z* can be an element with a high aspect ratio (e.g., have a high RE width relative to RE height, such as an aspect ratio of over 5:1, such as over 10:1, such as over 11:1, such as approximately 12:1). Note that in FIG. **7**, RE width is the width of reinforcement element **8850***z*, RE height is height or thickness of reinforcement element **8850***z*, and RE Gap is distance between reinforcement elements **8850***z*. The high ratio of width to height of the reinforcement element **8850***z* can advantageously help prevent external pressure caused parallelogramming-type collapse of the reinforcement elements **8850***z* within the innermost layer **8815**. Parallelogramming-type collapse occurs when the spirals of the coil move from being approximately normal to the axis of the center of the coil towards being parallel to the axis of the center of the coil (the spirals essentially "tip over"). Further, it may be advantageous in preventing parallelogramming if the RE gap between the reinforcement elements **8850***z* is no more than 3 times the RE height, such as no more than 2 times the RE height, such as no more than 1.5 times the RE height. Additionally, a ratio of the inner diameter of a hollow tube with an innermost layer **8815** to the width of the reinforcement layer **8850***z* in the innermost layer **8815** of less than 5, such as less than 4.5, such as approximately 4.3, can likewise help prevent parallelogramming-type collapse.

[0180] The matrix **8851***z* may be a very low durometer, for example a TPU or TPE, with a durometer equal to or less than 60 A, 50 A, 40 A, 30 A, 20 A or 10 A. In some embodiments, the matrix **8851***z* can be TPU, TPE, PET, PEEK, Mylar, urethane, or silicone. Inner and outer films **8852***z*, **8853***z* can similarly include TPU, TPE, PET, PEEK, Mylar, urethane, or silicone. In some embodiments, the inner and outer films **8852***z*, **8853***z* can be applied by spraying, dipping, wrapping as a sheet or tube, pulling through a bath of solvent, melted, and/or consolidated. In some embodiments, the layer **8815** does not include inner and/or outer films **8852***z*, **8853***z* and/or additional films can be included. The inner and/or outer films **88522**, **8853***z* can create a smooth inner and outer surface.

[0181] In a specific example of an innermost layer **8815** for a pressure system, the layer is made at 0.260" inside diameter as a hollow tube with an RE width of 0.050", an RE height of 0.008", and an RE Gap of 0.010". Film **8853***z* is omitted on both sides. Film **8852***z* (on both sides of the matrix **8851***z* and reinforcement elements **8850***z*) are all made of urethane (600 psi to 100% strain). The thickness of both the matrix **8851***z* and each film **8852***z* is about 0.006", giving a total wall thickness of 0.018". This structure can resist collapse at over 10 atm of external pressure.

[0182] In a second specific example of an innermost layer **8815** for a pressure system, film **8853***z* is omitted on both sides. The RE width is 0.050", the RE height is 0.008", and the RE Gap is 0.010". The film **8852***z* is a higher durometer elastomer, for example an elastomer that has a stress of 2000 psi@100% strain and has a thickness of about 0.001" thick.

The matrix **8851***z* can be an 50 A urethane. The matrix **8851***z* can be deposited as thermoplastic elastomer cord stock, for example at 0.008" rectangular cross section or 0.010" round cross section. This cord stock can also be deposited with increased axial modulus (but not transverse modulus) by co-extruding the stock with a wire (for example, 0.001" diameter) or fiber at its core.

[0183] In a third specific example of an innermost layer **8815** for a pressure system, the reinforcement element **8850***z* can be a wire with a high aspect ratio. For example, the layer **8815** can have an RE height of 0.005", an RE width of 0.060" and an RE gap of 0.006" in a square stainless steel wire. The inner diameter of the tube formed with the innermost layer **8815** is 0.26". Elements **8852***z* and **8851***z* can be 80 A urethane and can be approximately 0.002" thick. Further, layer **8851***z* can be a 50 A urethane (e.g., deposited from a heated tank with melted urethane therein and an orifice for precise dispensing via pressure). The structure of this exemplary innermost layer **8815** can resist collapse at over 10 atm of external pressure, such as over 12 atm of pressure, such as over 13 atm of pressure.

[0184] In a specific example of an innermost layer **8815** for a vacuum system, the outer film **8853***z* on one side (e.g., the outer or top side) is omitted, the film **8852***z* above (outside of) the reinforcement/matrix includes a 0.005" 50 A urethane, the matrix **8851***z* is made of 0.005" thick 50 A urethane, the reinforcement element **8850***z* is a stainless steel wire, the film **8852***z* below (inside of) the reinforcement/matrix includes 0.0025" thick 50 A urethane, and the bottom outer film **8853***z* is a 0.004" thick 80 A urethane. The RE width is 0.020", the RE height is 0.005", and the RE Gap is 0.010". The bottom outer film **8853***z* is hydrophilically coated. The inner diameter of the tube formed by layer **8815** is 0.551".

[0185] Although shown in FIG. **7** as symmetrical, it should be understood that the innermost layer **8815** need not have a symmetrical arrangement of films **8852***z*, **8853***z*. For example, neither layer may be on the bottom (inside of the matrix/reinforcement) while both layers are present on top. Additionally, it should be understood that the material for both innermost films **8852***z* need not be the same, nor need the material for the both of the outermost films **8853***z* be the same.

[0186] The reinforcement elements of the innermost layer can be in a variety of configurations. As shown in FIGS. **8**D-**8**F, the reinforcement element **9205***z* can be a multi-start coil winding (e.g., 2 starts as shown in FIG. **8**F, three starts as shown in FIG. **8**E, or four starts as shown in FIG. **8**D). When multi-start coil windings are used the gap between reinforcement elements along the longitudinal axis can be the same as with a single coil, but number of starts can be 2, 3, 4, 5, 6, 7, 8, 9 or even more. While a single start creates a wire angle that is nearly vertical (for example, 2 degrees off of vertical), a multi-start approach creates a wire angle that biases the coils to tilt in one direction, much further away from vertical (for example, 4, 6, 10, 15, or even 20 degrees). This larger angle may serve to make the innermost layer less likely to tilt or structurally collapse under pressure, as the coils with the larger pitch tend to brace against one another for stability. FIGS. **8**A-**8**C show individual starts (coils) from the multistart reinforcement elements **9205**Z. FIG. **8**C shows one coil from FIG. **8**F, FIG. **8**B shows one coil from FIG. **8**E and FIG. **8**A shows one coil from FIG. **8**D.

[0187] In some embodiments, referring to FIGS. **9**A-**9**B, the reinforcement elements **8950***z* can be a series of wavy or undulated wires (or an undulated wire that is coiled as described herein). As shown in FIG. **9**B, when the device is loaded, the undulated reinforcement elements **8950***z* moves toward colliding with itself, compressing the matrix **8851**Z in between the wires and resisting a parallelogram-type collapse. In one specific embodiment, an innermost layer with such an undulating wire can have an RE height of 0.005", an RE width of 0.060" and an RE gap of just 0.006". The undulating wave can vary +/−0.03" from a centerline (that is, have a wave amplitude of 0.060"). The wave can repeat every 0.3" (that is, have a wavelength of 0.3").

[0188] In some embodiments, referring to FIGS. **10**A-**10**C, the reinforcement elements **9050***z* can include alternating pocket wires **9052***z* and notched wires **9053***z*. When unloaded, the pockets and notches of each respective element can be separate (as shown in FIG. **10**D). However, when loaded, the notch of wire **9053***z* moves toward colliding with the pocket of wire **9052***z* (as shown in FIG. **10**E) compressing the matrix **8851***z* in between the wires and resisting a parallelogram-type collapse.

[0189] In some embodiments, referring to FIGS. **11**A-**11**B, the reinforcing elements **9150***z* can be a flexure design, e.g., cut from a laser tube.

[0190] In some instances, the reinforcement element can be separate from the inner layer. For instance, the reinforcement element can be positioned diametrically inside or outside the inner layer. The innermost layer can have a hardness, for example, of 30 A to 80 A. Further, the innermost layer can have a wall thickness of between 0.0005" and 0.060". In some embodiments, the innermost layer can include lubrication or a coating (e.g., hydrophilic coating) on the inner surface thereof to improve sliding of an endoscope or other instrument therethrough. The coating can be hydrophilic (e.g., a Hydromer® coating or a Surmodics® coating) or hydrophobic (e.g., a fluoropolymer). The coating can be applied, for example, by dipping, painting, or spraying the coating thereon. The innermost layer can be a laminated layer with a low frictional coefficient.

[0191] Exemplary rigidizing devices in the rigidized configuration are shown in FIGS. **12**A and **12**B. As the rigidizing device is rigidized, it does so in the shape it was in before vacuum or pressure was applied, i.e., it does not straighten, bend, or otherwise substantially modify its shape (e.g., it may stiffen in a looped configuration as shown in FIG. **12**A or in a serpentine shape as shown in FIG. **12**B). This can be because the air stiffening effect on the inner or outer layers (e.g., made of coil-wound tube) can be a small percentage (e.g., 5%) of the maximum load capability of the rigidizing device in bending, thereby allowing the rigidizing device to resist straightening. Upon release of the vacuum or pressure, braids or strands can unlock relative to one another and again move so as to allow bending of the rigidizing device. Again, as the rigidizing device is made more flexible through the release of vacuum or pressure, it does so in the shape it was in before the vacuum or pressure was released, i.e., it does not straighten, bend, or otherwise substantially modify its shape. Thus, the rigidizing devices described herein can transition from a flexible, less-stiff configuration to a rigid configuration of higher stiffness by restricting the motion between the strands of braid (e.g., by applying vacuum or pressure).

[0192] The rigidizing devices described herein can toggle between the rigid and flexible configurations quickly, and in some embodiments with an indefinite number of transition cycles. As interventional medical devices are made longer and inserted deeper into the human body, and as they are expected to do more exacting therapeutic procedures, there is an increased need for precision and control. Selectively rigidizing devices (e.g., overtubes) as described herein can advantageously provide both the benefits of flexibility (when needed) and the benefits of stiffness (when needed). Further, the rigidizing devices described herein can be used, for example, with classic endoscopes, colonoscopes, robotic systems, and/or navigation systems, such as those described in International Patent Application No. PCT/US2016/050290, filed Sep. 2, 2016, titled "DEVICE FOR ENDOSCOPIC ADVANCEMENT THROUGH THE SMALL INTESTINE," the entirety of which is incorporated by referenced herein.

[0193] The rigidizing devices described herein can be provided in multiple configurations, including different lengths and diameters. In some embodiments, the rigidizing devices can include working channels (for instance, for allowing the passage of typical endoscopic tools within the body of the rigidizing device), balloons, nested elements, and/or side-loading features.

[0194] Referring to FIGS. **13**A-**13**D, in one embodiment, a tubular rigidizing device **100** can include a wall having a plurality of layers positioned around the lumen **120** (e.g., for placement of an instrument or endoscope therethrough). A vacuum can be supplied between the layers to rigidize the rigidizing device **100**.

[0195] The innermost layer **115** can be configured to provide an inner surface against which the remaining layers can be consolidated, for example, when a vacuum is applied within the walls of the rigidizing device **100**. The structure can be configured to minimize bend force/maximize flexibility in the non-vacuum condition. In some embodiments, the innermost layer **115** can include a reinforcement element **150***z* or coil within a matrix, as described above.

[0196] The layer **113** over (i.e., radially outwards of) the innermost layer **115** can be a slip layer.

[0197] The layer **111** can be a radial gap (i.e., a space). The gap layer **111** can provide space for the braided layer(s) thereover to move within (when no vacuum is applied) as well as space within which the braided or woven layers can move radially inward (upon application of vacuum).

[0198] The layer **109** can be a first braid layer including braided strands **133** similar to as described elsewhere herein. The braid layer can be, for example, 0.001" to 0.040" thick. For example, a braid layer can be 0.001", 0.003", 0.005", 0.010", 0.015", 0.020", 0.025" or 0.030" thick.

[0199] In some embodiments, as shown in FIG. **13**B, the braid can have tensile or hoop fibers **137**. Hoop fibers **137** can be spiraled and/or woven into a braid layer. Further, the hoop fibers **137** can be positioned at 2-50, e.g., 20-40 hoops per inch. The hoop fibers **137** can advantageously deliver high compression stiffness (to resist buckling or bowing out) in the radial direction, but can remain compliant in the direction of the longitudinal axis **135** of the rigidizing device **100**. That is, if compression is applied to the rigidizing device **100**, the braid layer **109** will try to expand in diameter as it compresses. The hoop fibers **137** can resist this diametrical expansion and thus resist compression. Accordingly, the hoop fiber **137** can provide a system that is flexible in bending but still resists both tension and compression.

[0200] The layer **107** can be another radial gap layer similar to layer **111**.

[0201] In some embodiments, the rigidizing devices described herein can have more than one braid layer. For example, the rigidizing devices can include two, three, or four braid layers. Referring to FIG. **13**C, the layer **105** can be a second braid layer **105**. The second braid layer **105** can have any of the characteristics described with respect to the first braid layer **109**. In some embodiments, the braid of second braid layer **105** can be identical to the braid of first braid layer **109**. In other embodiments, the braid of second braid layer **105** can be different than the braid of the first braid layer **109**. For example, the braid of the second braid layer **105** can include fewer strands and have a larger braid angle α than the braid of the first braid layer **109**. Having fewer strands can help increase the flexibility of the rigidizing device **100** (relative to having a second strand with equivalent or greater number of strands), and a larger braid angle α can help constrict the diameter of the of the first braid layer **109** (for instance, if the first braid layer is compressed) while increasing/maintaining the flexibility of the rigidizing device **100**. As another example, the braid of the second braid layer **105** can include more strands and have a larger braid angle α than the braid of the first braid layer **109**. Having more strands can result in a relatively tough and smooth layer while having a larger braid angle α can help constrict the diameter of the first braid layer **109**.

[0202] The layer **103** can be another radial gap layer similar to layer **111**. The gap layer **103** can have a thickness of 0.0002-0.04", such as approximately 0.03". A thickness within this range can ensure that the strands **133** of the braid layer(s) can easily slip and/or bulge relative to one another to ensure flexibility during bending of the rigidizing device **100**.

[0203] The outermost layer **101** can be configured to move radially inward when a vacuum is applied to pull down against the braid layers **105**, **109** and conform onto the surface(s) thereof. The outermost layer **101** can be soft and atraumatic and can be sealed at both ends to create a vacuum-tight chamber with layer **115**. The outermost layer **101** can be elastomeric, e.g., made of urethane. The hardness of the outermost layer **101** can be, for example, 30 A to 80 A. Further, the outermost layer **101** can be have a thickness of 0.0001-0.01", such as approximately 0.001", 0.002, 0.003" or 0.004". Alternatively, the outermost layer can be plastic, including, for example, LDPE, nylon, or PEEK.

[0204] In some embodiments, the outermost layer **101** can, for example, have tensile or hoop fibers **137** extending therethrough. The hoop fibers **137** can be made, for example, of aramids (e.g., Technora, nylon, Kevlar), Vectran, Dyneema, carbon fiber, fiber glass or plastic. Further, the hoop fibers **137** can be positioned at 2-50, e.g., 20-40 hoops per inch. In some embodiments, the hoop fibers **137** can be laminated within an elastomeric sheath. The hoop fibers can advantageously deliver higher stiffness in one direction compared to another (e.g., can be very stiff in the hoop direction, but very compliant in the direction of the longitudinal axis of the rigidizing device). Additionally, the hoop fibers can advantageously provide low hoop stiffness until the fibers are placed under a tensile load, at which point the hoop fibers can suddenly exhibit high hoop stiffness.

[0205] In some embodiments, the outermost layer **101** can include a lubrication, coating and/or powder (e.g., talcum powder) on the outer surface thereof to improve sliding of the rigidizing device through the anatomy. The coating can be hydrophilic (e.g., a Hydromer® coating or a Surmodics® coating) or hydrophobic (e.g., a fluoropolymer). The coating can be applied, for example, by dipping, painting, or spraying the coating thereon.

[0206] The innermost layer **115** can similarly include a lubrication, coating (e.g., hydrophilic or hydrophobic coating), and/or powder (e.g., talcum powder) on the inner surface thereof configured to allow the bordering layers to more easily shear relative to each other, particularly when no vacuum is applied to the rigidizing device **100**, to maximize flexibility.

[0207] In some embodiments, the outermost layer **101** can be loose over the radially inward layers. For instance, the inside diameter of layer **101** (assuming it constitutes a tube) may have a diametrical gap of 0"-0.200" with the next layer radially inwards (e.g., with a braid layer). This may give the vacuum rigidized system more flexibility when not under vacuum while still preserving a high rigidization multiple. In other embodiments, the outermost layer **101** may be stretched some over the next layer radially inwards (e.g., the braid layer). For instance, the zero-strain diameter of a tube constituting layer **101** may be from 0-0.200" smaller in diameter than the next layer radially inwards and then stretched thereover. When not under vacuum, this system may have less flexibility than one wherein the outer layer **101** is looser. However, it may also have a smoother outer appearance and be less likely to tear during use.

[0208] In some embodiments, the outermost layer **101** can be loose over the radially inward layers. A small positive pressure may be applied underneath the layer **101** in order to gently expand layer **101** and allow the rigidizing device to bend more freely in the flexible configuration. In this embodiment, the outermost layer **101** can be elastomeric and can maintain a compressive force over the braid, thereby imparting stiffness. Once positive pressure is supplied (enough to nominally expand the sheath off of the braid, for example, 2 psi), the outermost layer **101** is no longer is a contributor to stiffness, which can enhance baseline flexibility. Once rigidization is desired, positive pressure can be replaced by negative pressure (vacuum) to deliver stiffness.

[0209] A vacuum can be carried within rigidizing device **100** from minimal to full atmospheric vacuum (e.g., approximately 14.7 psi). In some embodiments, there can be a bleed valve, regulator, or pump control such that vacuum is bled down to any intermediate level to provide a variable stiffness capability. The vacuum pressure can advantageously be used to rigidize the rigidizing device structure by compressing the layer(s) of braided sleeve against neighboring layers. Braid is naturally flexible in bending (i.e. when bent normal to its longitudinal axis), and the lattice structure formed by the interlaced strands distort as the sleeve is bent in order for the braid to conform to the bent shape while resting on the inner layers. This results in lattice geometries where the corner angles of each lattice element change as the braided sleeve bends. When compressed between conformal materials, such as the layers described herein, the lattice elements become locked at their current angles and have enhanced capability to resist deformation upon application of vacuum, thereby rigidizing the entire structure in bending when vacuum is applied. Further, in some embodiments, the hoop fibers through or over the braid can carry tensile loads that help to prevent local buckling of the braid at high applied bending load.

[0210] The stiffness of the rigidizing device **100** can increase from 2-fold to over 30-fold, for instance 10-fold, 15-fold, or 20-fold, when transitioned from the flexible configuration to the rigid configuration. In one specific example, the stiffness of a rigidizing device similar to rigidizing device **100** was tested. The wall thickness of the test rigidizing device was 1.0 mm, the outer diameter was 17 mm, and a force was applied at the end of a 9.5 cm long cantilevered portion of the rigidizing device until the rigidizing device deflected 10 degrees. The forced required to do so when in flexible mode was only 30 grams while the forced required to do so in rigid (vacuum) mode was 350 grams.

[0211] In some embodiments of a vacuum rigidizing device **100**, there can be only one braid layer. In other embodiments of a vacuum rigidizing device **100**, there can be two, three, or more braid layers. In some embodiments, one or more of the radial gap layers or slip layers of rigidizing device **100** can be removed. In some embodiments, some or all of the slip layers of the rigidizing device **100** can be removed.

[0212] The braid layers described herein can act as a variable stiffness layer. The variable stiffness layer can include one or more variable stiffness elements or structures that, when activated (e.g., when vacuum is applied), the bending stiffness and/or shear resistance is increased, resulting in higher rigidity. Other variable stiffness elements can be used in addition to or in place of the braid layer. In some embodiments, engagers can be used as a variable stiffness element, as described in International Patent Application No. PCT/US2018/042946, filed Jul. 19, 2018, titled "DYNAMICALLY RIGIDIZING OVERTUBE," the entirety of which is incorporated by reference herein. Alternatively or additionally, the variable stiffness element can include particles or granules, jamming layers, scales, rigidizing axial members, rigidizers, longitudinal members or substantially longitudinal members.

[0213] In some embodiments, the rigidizing devices described herein can rigidize through the application of pressure rather than vacuum. For example, referring to FIGS. **14**A-**14**B, the rigidizing device **2100** can be similar to rigidizing device **100** except that it can be configured to hold pressure (e.g., of greater than 1 atm) therein for rigidization rather than vacuum. The rigidizing device **2100** can thus include a plurality of layers positioned around the lumen **2120** (e.g., for placement of an instrument or endoscope therethrough). The rigidizing device **2100** can include an innermost layer **2115** (similar to innermost layer **115**), a slip layer **2113** (similar to slip layer **113**), a pressure gap **2112**, a bladder layer **2121**, a gap layer **2111** (similar to gap layer **111**), a braid layer **2109** (similar to braid layer **109**) or other variable stiffness layer as described herein, a gap layer **2107** (similar to layer **107**), and an outermost containment layer **2101**.

[0214] The pressure gap **2112** can be a sealed chamber that provides a gap for the application of pressure to layers of rigidizing device **2100**. The pressure can be supplied to the pressure gap **2112** using a fluid or gas inflation/pressure media. The inflation/pressure media can be water or saline or, for example, a lubricating fluid such as soil or glycerin. The lubricating fluid can, for example, help the layers of the rigidizing device **2100** flow over one another in the flexible

configuration. The inflation/pressure media can be supplied to the gap **2112** during rigidization of the rigidizing device **2100** and can be partially or fully evacuated therefrom to transform the rigidizing device **2100** back to the flexible configuration. In some embodiments, the pressure gap **2112** of the rigidizing device **2100** can be connected to a pre-filled pressure source, such as a pre-filled syringe or a pre-filled insufflator, thereby reducing the physician's required set-up time.

[0215] The bladder layer **2121** can be made, for example, of a low durometer elastomer (e.g., of shore 20 A to 70 A) or a thin plastic sheet. The bladder layer **2121** can be formed out of a thin sheet of plastic or rubber that has been sealed lengthwise to form a tube. The lengthwise seal can be, for instance, a butt or lap joint. For instance, a lap joint can be formed in a lengthwise fashion in a sheet of rubber by melting the rubber at the lap joint or by using an adhesive. In some embodiments, the bladder layer **2121** can be 0.0002-0.020" thick, such as approximately 0.005" thick. The bladder layer **2121** can be soft, high-friction, stretchy, and/or able to wrinkle easily. In some embodiments, the bladder layer **2121** is a polyolefin or a PET. The bladder **2121** can be formed, for example, by using methods used to form heat shrink tubing, such as extrusion of a base material and then wall thinning with heat, pressure and/or radiation. When pressure is supplied through the pressure gap **2112**, the bladder layer **2121** can expand through the gap layer **2111** to push the braid layer **2109** against the outermost containment layer **2101** such that the relative motion of the braid strands is reduced.

[0216] The outermost containment layer **2101** can be a tube, such as an extruded tube. Alternatively, the outermost containment layer **2101** can be a tube in which a reinforcing member (for example, metal wire, including round or rectangular cross-sections) is encapsulated within an elastomeric matrix, similar to as described with respect to the innermost layer for other embodiments described herein. In some embodiments, the outermost containment layer **2101** can include a helical spring (e.g., made of circular or flat wire), and/or a tubular braid (such as one made from round or flat metal wire) and a thin elastomeric sheet that is not bonded to the other elements in the layer. The outermost containment layer **2101** can be a tubular structure with a continuous and smooth surface. This can facilitate an outer member that slides against it in close proximity and with locally high contact loads (e.g., a nested configuration as described further herein). Further, the outer layer **2101** can be configured to support compressive loads, such as pinching. Additionally, the outer layer **2101** (e.g., with a reinforcement element therein) can be configured to prevent the rigidizing device **2100** from changing diameter even when pressure is applied.

[0217] Because both the outer layer **2101** and the inner layer **2115** include reinforcement elements therein, the braid layer **2109** can be reasonably constrained from both shrinking diameter (under tensile loads) and growing in diameter (under compression loads).

[0218] By using pressure rather than vacuum to transition from the flexible state to the rigid state, the rigidity of the rigidizing device **2100** can be increased. For example, in some embodiments, the pressure supplied to the pressure gap **2112** can be between 1 and 40 atmospheres, such as between 2 and 40 atmospheres, such as between 4 and 20 atmospheres, such as between 5 and 10 atmospheres. In some embodiments, the pressure supplied is approximate 2 atm, approximately 4 atmospheres, approximately 5 atmospheres, approximately 10 atmospheres, approximately 20 atmospheres. In some embodiments, the rigidizing device **2100** can exhibit change in relative bending stiffness (as measured in a simple cantilevered configuration) from the flexible configuration to the rigid configuration of 2-100 times, such as 10-80 times, such as 20-50 times. For example, the rigidizing device **2100** can have a change in relative bending stiffness from the flexible configuration to the rigid configuration of approximately 10, 15, 20, or 25, 30, 40, 50, or over 100 times. FIG. **15** shows a graph of bending strength vs pressure for a rigidizing device as described herein. As shown, the bending strength of the rigidizing device increases as the pressure supplied to the wall increases.

[0219] Simplified versions of a wall of various pressurized rigidizing devices similar to rigidizing device **2100** are shown in FIGS. **16**A-**16**O. For example, rigidizing device **2200***a* of FIG. **16**A includes the innermost layer **2215***a*, pressure gap **2212***a*, bladder layer **2221***a* that is scaled to the outermost layer **2201***a*, braid layer **2209***a*, and outer containment layer **2201***a* (similar as described with respect to rigidizing device **2100**). The rigidizing device **2200***a* further includes end caps **2292***a* at the proximal and distal ends thereof to seal the pressure therein. When pressure is supplied to the pressure gap **2212***a* via inlet **2293***a*, the bladder layer **2221***a* is pressed against the braid layer **2209***a*, which in turn is pressed against the outermost layer **2201***a*, preventing the strands of the braid from moving relative to one another.

[0220] Referring to FIG. **16**J, rigidizing device **2200***j* is similar to rigidizing device **2200***a* except that slip layer **2213***j* and stiffening layer **2298***j* are added. Layer **2213***j* can be a slip layer as described herein, for example comprising a coating film or powder. Layer **2298***j* can be a stiffening layer that, similar to layers **2201***j* and **2215***j*, can include a reinforcement element **2250***z* as described elsewhere herein. The additional stiffening layer **2298***j* can work in concert with the inner layer **2215***j*. For example, the two layers **2215***j* and **2298***j* can easily slip past one another (via slip layer **2213***j*) in the flexible configuration and stick to one another to form a stiff composite structure in the rigid configuration (i.e., when pressure is applied). Layer **2298***j* can be a high durometer elastomeric rubber, for example a TPU or TPE with a durometer greater than or equal to 60 A, 70 A, 80 A or 90 A. When the tube is in a flexible state, layers **2215***j* and **2298***j* may easily shear or move with respect to each other (e.g., due to slip layer **2213***j*) such that the flexibility of the system is lower than it would be if the layers were bonded together. When the tube is in a rigid state (for example, when pressure is applied), layers **2215***j*, **2298***j* and **2213***j* may lock to each other and act like a single bonded layer in order to resist collapse of the wall of the rigidizing device **2200***j*. Similar to other embodiments, the braid layer **2205***j* can push against the outer layer **2201***j* when pressure is supplied to gap **2212***j* to rigidize the device **2200***j*.

[0221] Referring to FIG. **16**B, rigidizing device **2200***b* is similar to rigidizing device **2200***a* except that the pressure gap **2212***b* is surrounded by an everted bladder layer **2221***b* (or a double-layered bladder), i.e., such that the bladder layer **2221***b* includes one side that borders the braid layer **2205***b* and one side that borders the innermost layer **2215***b*. As pressure is supplied to the pressure gap **2212***b* (inside of

the two sides of the bladder layer **2221***b*), the bladder layer **2221***b* can expand both against the innermost layer **2215***b* and against the braid **2209***b* (which in turn can be pushed against the outermost layer **2201***b*).

[0222] Referring to FIG. **16**C, rigidizing device **2200***c* is similar to rigidizing device **2200***a* except that the bladder layer **2221***c* is sealed to the innermost layer **2215***c* rather than the outermost layer **2201***c*. When pressure is supplied to the pressure gap **2212***c* via inlet **2293***c*, the bladder layer **2221***c* is pressed against the braid layer **2209***c*, which in turn is pressed against the outermost layer **2201***c*.

[0223] Referring to FIG. **16**D, rigidizing device **2200***d* is similar to rigidizing device **2200***b* except that the innermost layer **2215***d* is a spring element rather than a coil-wound tube. Because the pressure is in the everted bladder layer **2221***d*, the inner layer **2215***d* need not be sealed itself.

[0224] Referring to FIG. **16**E, rigidizing device **2200***e* is similar to rigidizing device **2200***a* except that the innermost layer **2215***a* is replaced with an inner payload **2294***e* that is sealed at both the proximal and distal ends and can include a plurality of lumens therein (e.g., a working channel **2291***e*, a pressure channel **2292***e*, and a rinse channel **2293***e*).

[0225] Referring to FIG. **16**F, rigidizing device **2200***f* is similar to rigidizing device **2200***a* except that the braid layer **2209***f* is inside of the pressure gap **2212***f* and the bladder layer **2221***f* such that pressure supplied to the pressure gap **2212***f* causes the bladder layer **2221***f* to push inwards against the braid layer **2209***f*, which in turn pushes against innermost layer **2215***f*.

[0226] In some embodiments, a pressure rigidizing device can include two braid layers (e.g., of the same or different braid characteristics). For example, an exemplary rigidizing device **2200***m* with two braid layers **2209***m* and **2205***m* is shown in FIG. **16**M. The two braid layers **2209***m* and **2205***m* sandwich two bladders **2221***m* and **2217***m* (and/or a single annular bladder) therebetween. When pressure is supplied to the pressure gap **2212***m* between the two bladders, the outer braid layer **2205***m* will be pushed radially outwards against the outer layer **2201***m* while the inner braid layer **2209***m* will be pushed radially inwards against the inner braid layer **2215***m* to rigidize the device **2200***m*.

[0227] Another exemplary rigidizing device **2200***n* with two braid layers **2209***n*, **2205***n* is shown in FIG. **16**N. The two braid layers **2209***n*, **2205***n* are positioned adjacent to one another between the bladder layer **2221***n* (not labeled in figure) and the outer tube **2201***n*. When pressure is supplied to the pressure gap **2212***n*, the bladder **2221***n* forces the two braid layers **2209***n*, **2205***n* together and against the outer tube **2201***n*. The braid layers **2209***n*, **2205***n* may interdigitate with one another when pressurized, thereby strengthening the rigidity of the device **2200***n*.

[0228] Referring to FIG. **16**K, rigidizing device **2200***k* is similar to rigidizing device **2200***a* except that an annular ring **2219***k*, e.g., including fibers and adhesive, is positioned around each of the ends of the braid layer **2209***k* and bladder layer **2221***k* to attach the bladder layer **2221***k* to the innermost layer **2215***k* (and thereby hold pressure within the pressure gap **2212***k* when pressure is supplied through the inlet **2293***k*). The annular ring **2219***k* can, for example, include a high strength fiber, such as Kevlar or Dyneema. Further, the adhesive can be, for example, a cyanoacrylate. In some embodiments, adhesive can also be placed at the ends between the innermost layer **2215***k* and the bladder layer **2221***k* and also encompassing the inlet tube.

[0229] FIG. **16**G shows a rigidizing device **2200***g* with gap inlet **2293***g* and vent inlet **2223***g*. Inlet **2293***g* connects to pressure gap **2212***g* (via pressure line **2294***g*). Inlet **2223***g* connects to gap **2206***g* around the braid layer **2209***g* (between bladder **2221***g* and outermost layer **2201***g*). The device **2200***g* can be rigidized in one or more different configurations. In a first rigidizing configuration, pressure can be applied to inlet **2293***g* while the vent inlet **2223***g* can be open or vented to atmospheric pressure. The pressure supplied to the pressure gap **2212***g* through the inlet **2293***g* can thus push the braid **2209***g* against the outermost layer **2201***g*, which in turn can force any air in the gap **2206***g* out through the vent inlet **2223***g*. Allowing the air to escape through the vent inlet **2223***g* can enable a tighter mechanical fit between the braid layer **2209***g* and the outer layer **2201***g*, thereby strengthening the rigidization of the device **2200***g*. In a second rigidizing configuration, pressure can be applied to inlet **2293***g* and a vacuum can be applied to vent inlet **2223***g*. This may cause the rigidizing device **2200***g* to become even stiffer than in the first configuration, as the vacuum can assist in moving the braid layer **2209***g* towards the outer layer **2201***g*. The device **2200***g* can likewise be made flexible in one or more different configurations. In a first flexible configuration, both inlet **2293***g* and vent inlet **2223***g* can be opened to atmospheric pressure. This will loosen the braid layer **2209***g* relative to the outer layer **2201***g* and cause the rigidizing device **2200***g* to be flexible as the braid layer **2209***g* moves freely relative to the outer layer **2201***g*. In a second flexible configuration, a low pressure (e.g., 5-10% above atmospheric pressure) can be provided to both inlet **2293***g* and vent inlet **2223***g*. This may cause the outermost layer **2201***g* and the innermost layer **2215***g* to separate slightly, which can provide additionally area for the braid layer **2209***g* to move freely. As a result, this may cause the rigidizing device **2200***g* to become even more flexible than in the first rigidizing configuration. Additionally, providing a low pressure above atmospheric pressure in the flexible configuration can allow the rigidizing device **2200***g* to be introduced into the body with a very small diameter (e.g., such that the pressure gap **2212***g* is essentially zero) and then the low pressure can be provided to both inlet **2293***g* and vent inlet **2223***g* to slightly expand the pressure gap **2212***g* to provide more room for the braid layer **2209***g* to move freely.

[0230] FIG. **16**H shows a rigidizing device **2200***h* with bellows **2243***h* connected to pressure line **2294***h*. Pressure gap **2212***h*, pressure line **2294***h*, and bellows **2243***h* can all be configured to be filled with a sealed pressure transmitting medium, such as distilled water or saline solution or an oil. The pressure transmitting medium may be a radiopaque fluid that advantageously will show the rigidized device more clearly during a procedure using fluoroscopy. The pressure transmitting medium can be added to the rigidizing device immediately before use and/or when the device is being manufactured. In use, activating the actuator **2288***h* can compress bellows **2243***h*, thus reducing the volume of pressure medium in the bellows **2243***h*, which flows through the pressure line **2294***h* to the pressure gap **2212***h*, causing a rise in pressure in the pressure gap **2212***h* and movement of the braid layer **2209***h* against the outer layer **2201***h*. The vent inlet **2223***h* can be open to the atmosphere to allow gas to escape from the space **2206***h* around the braid layer **2209***h*. Further, reversing the action of the actuator **2288***h* can cause the pressure in the pressure gap **2212***h* to fall as

the pressure medium moves back to the bellows **2243***h*. Actuator **2288***h* can be, for example, a solenoid, a voice coil, a lead screw, a valve, or a rotary cam. In some embodiments, the pressure line **2294***h* can be pinched or flattened to raise the pressure in pressure gap **2212***h* rather than using bellows **2243***h*.

[0231] FIG. **16**I shows a rigidizing device **2200***i* including sumps **2230***i* and **2228***i* respectively. Sumps **2230***i* and **2228***i* may comprise a fluid medium, such as water and a gaseous medium such as air. Pressure or vacuum or combinations thereof may be applied to inlets **2293***i*, **2223***i*. Using the sump configuration shown may mean that there is no air or gas in the rigidizing device regardless of the pressurization state of each gap **2206***i* or **2212***i* (increased pressure, vacuum or atmospheric pressure). In the event that the gaps leaks during a procedure, this may mean that only the fluid medium enters into the patient. This may offer patient protection from gaseous (e.g. air) embolization.

[0232] In some embodiments, the rigidizing devices described herein can include a plurality of individual bladders running longitudinally down the length of the device. For example, referring to FIG. **16**O, device **2200***o* includes four different circumferential bladders **2221***o* surrounding pressure gaps **2212***o*. In this embodiment, the braid layer is likewise divided into four longitudinal flat braids **2209***o*, each of which is positioned radially outwards from a bladder **2221***o*. In other embodiments, the braid layer can include tubular braids wrapped around the bladders **2221***o* (similar to as described with respect to FIG. **67** below). Further, the outer and inner layers **2201***o*, **2215***o* are connected by dividers **2236***o*. In some embodiments, the dividers **2236***o* can be formed by elements of the outer or inner layers **2201***o*, **2215***o* (e.g., be continuous elements of one or both layers **2201***o*, **2215***o*). In some embodiments, the dividers **2236***o* can be configured to help maintain the thickness of the wall. When pressure is supplied to the pressure gaps **2212***o*, the bladders **2221***o* expand to push the flat braids **2209***o* against the outer layer **2201***o*.

[0233] In some embodiments, referring to FIG. **16**L, the pressure rigidizing devices described herein do not include an innermost layer (e.g., do not include an innermost layer with a reinforcement element therein). Rather, the rigidizing device **2200***l* can include an outer layer **2201***l*, gap layer **2206***l*, braid layer **2209***l*, and an everted or tubular bladder **2221***l* (with a pressure gap **2212***l* therein). The tubular bladder **2221***l* can be configured to be positioned around the inner device (such as a scope **229***l*). As the pressure gap **2212***l* is filled with pressurizing medium, the bladder **2221***l* can expand against the scope **2291** and the braid layer **2209***l*. It should be understood that any of the features described herein with respect to vacuum rigidizing devices can be substituted or replaced with any of the features described with respect to pressure rigidizing devices.

[0234] In some embodiments, the rigidizing devices described herein can incorporate a tool or working channel therein. The working channel can be designed so as to not significantly add to the rigidizing device's bending stiffness. Referring to FIGS. **17**A-**17**C, in one embodiment, a rigidizing device **500** can include a working channel **555** extending therethrough. The working channel **555** can include a central lumen **571***z* (e.g., for passage of a working element therethrough) formed by alternating telescoping tubular sections that are locally necked or tapered from a larger diameter end **569***z* to a smaller diameter end **570***z*. Each of the sections can be connected to the underlying layer of the wall (e.g., the slip layer **513** over the innermost layer **515**) at a discrete location or anchor point **568***z* and can be otherwise free to move. As the rigidizing device **500** bends, the smaller diameter end **570***z* can move within the larger diameter end **559***z* of a neighboring section so as to allow for bending of the working channel **555**. The working channel **555** can be positioned within the wall of the rigidizing device **500**, such as in the radial gap **511** between the slip layer **513** and the first braid layer **509** (and can therefore also be positioned underneath the radial gap layer **507**, the second braid layer **505**, the radial gap layer **503**, and the outermost layer **501**). The working channel **555** can thus be positioned within the sealed vacuum (or pressure chamber) of the rigidizing device **500**. In some embodiments, the working channel **555** can itself be positioned within a sealed bag or layer **572***z* so as to ensure that there is no vacuum or pressure leak path. In other embodiments, the sections can include sliding seals therebetween to ensure that there is no vacuum or pressure leak path. In some embodiments, as shown in FIG. **17**D, rather than having tapered sections, there can be alternative large diameter sections **525***a* and small diameter sections **525***b*. The smaller diameter sections **525***b* can move within the large diameter sections **525***a* during bending over the rigidizing device **500**. The working channel can be placed within the sealed volume formed by layers **501** and **515** or it can be placed outside of this sealed volume, such as on top of layer **501**.

[0235] Referring to FIGS. **18**A-**18**B, in some embodiments, a rigidizing device **7800** can include a working channel **7855** spiraled around a portion of the elongate body **7803***z* of the rigidizing device **7800**. For example, the working channel **7855** can be spiraled at a 40-50 degree angle, such as approximately a 45 degree angle, relative to the longitudinal axis of the device **7800**. A spiraled working channel **7855** can advantageously deform into a curved path as the rigidizing device **7800** bends without resisting bending and/or without forcing path length adjustments along its length. The working channel **7855** can include a proximal port **7840***z* integrated into the handle **7831** and a distal port **7841***z* (through which a working tool may exit) molded onto end of the tip **7833***z* of the rigidizing device **7800**. The spiraled working channel **7855** can be positioned over the outermost layer **7801**, under the outer layer **7801** (as shown in FIGS. **18**A-**18**B where the outer layer **7801** has been removed for clarity), or further within the layers of the wall (.e., under the braid layer).

[0236] Referring to FIGS. **19**A-**19**B, in some embodiments, a rigidizing device **4500** can include a plurality of working channels **4555** spiraled around the outside thereof. As shown in FIGS. **19**A-**19**B, the working channels **4555** can, for example, form a spiral shield around the rigidizing device **4500**. In some embodiments, the working channels **4555** can be configured together to form a second rigidizing element that can be rigidized separately from the inner rigidizing device **4500**. The second rigidizing element can advantageously be highly flexible due to the relative movement of the individual spiraling working channels **4555**. In some embodiments, the working channels **4555** can include a thin flexible ring and/or thin flexible sheath to contain the working channels **4555** in a circular cross section. In some embodiments, the device **4500** can further include a steerable distal tip **4547**, e.g., to help with placement of the tools that extend through the working channels **4555**.

[0237] Referring to FIGS. **20**A-**20**B, in some embodiments, a rigidizing device **8000** can include a rigidizing elongate body **8003***z* with a plurality of working channels **8055***a-d* (such as 1-10, 3-5, or 4-5 working channels) extending down the central lumen **8020** thereof to the tip **8033***z*. The working channels **8055***a-d* can be used for a plurality of different tools throughout a procedure. For example, one of the working channels **8055***a-d* can be used for a catheter with a camera and lighting, another could be used for traction, another could be used for cutting, another could be used for suction, etc. The elements extended down the working channels **8055***a-d* can be interchanged throughout the procedure. In some embodiments, the rigidizing elongate body **8003***z* can be disposable while the tools can be cleanable and/or sterilizable. In some embodiments, the rigidizing device **8000** can further include passive or active linkages **8004***z*.

[0238] Referring to FIG. **21**, in some embodiments, a rigidizing device **8100** can include a first working channel **8155***a* and a second working channel **8155***b*. The first working channel **8155***b* can extend down the central lumen **8120** (or within the walls of the elongate body **8103***z*) to the distal end **8133***z*. The second working channel can similarly extend down the central lumen **8120** or within the walls of the elongate body **8103***z*, but can exit the side of the elongate body **8103***z* proximal to the distal section **8102***z* (e.g., prior to the linkages **8104***z*). Having tool channel **8155***b* exit proximal to the distal section can advantageously limit interference with steering or bending of the linkages **8104***z*.

[0239] Referring to FIG. **22**, in some embodiments, a tool **7942***z* can be specifically designed for use with a working channel of a rigidizing device as described herein. The tool **7942***z* can include a flexible shaft **7943***z* and an expandable atraumatic tip **7944***z*. The atraumatic tip **7944***z* can be an expandable balloon or a nitinol cage with foam therearound. In some embodiments, the expandable tip **7944***z* can be configured to be collapsed (e.g., sheathed) for delivery through the working channel and to self-expand after sheath withdrawal and placement through the working channel. The atraumatic tip **7944***z* can be sized, for example, so as to not fill the lumen of the gastrointestinal tract and therefore so as to not contact the walls of the gastrointestinal tract. The tool **7942***z* can further have a flexible loop **7945***z* that is attached to the tip **7944***z* or to the shaft **7943***z*. In some embodiments, the loop **7945***z* can be attached to an endoscopic clip (often used to close a variety of defects in the GI tract) to provide traction during an ESD procedure. By sliding the shaft **7943***z* longitudinally, the user can provide traction to the clip. The expandable atraumatic tip **7944***z* can advantageously allow the tool **7942***z* to be advanced freely ahead of the rigidizing device without being concerned that it will cause trauma or get caught in the GI tract. By hooking the flexible loop **7945***z* onto the clip, the tool **7942***z* can get good traction with a simple back and forth motion of the flexible shaft **7943***z*.

[0240] Any of the rigidizing devices described herein can have a distal end section or sections with a different design that the main elongate body of the rigidizing device. As shown in FIG. **23**, for example, rigidizing device **5500** can have a main elongate body **5503***z* and a distal end section **5502***z*. Only the distal end section **5502***z*, only the main elongate body **5503***z*, or both the distal end section **5502***z* and the main elongate body **5503***z* can be rigidizing as described herein (e.g., by vacuum and/or pressure). In some embodiments, one section **5502***z*, **5503***z* is activated by pressure and the other section **5502***z*, **5503***z* is activated by vacuum. In other embodiments, both sections **5502***z*, **5503***z* are activated by pressure or vacuum, respectively.

[0241] Referring to FIG. **24**, in some embodiments, the distal section **5702***z* can include a rigidizing braid that differs from the braid of the main elongate section **5703***z*. For example, in one embodiment, the braid angle relative to the longitudinal axis in the distal end section **5702***z* can be greater than the braid angle of the main elongate body **5703***z*. For instance, the braid angle in distal section may be 40 degrees while the braid angle in the main elongate body may be 20 degrees. The braids may overlap somewhat and be joined with a flexible adhesive. These designs may give the distal end section **5702***z* more bending flexibility in a non-rigidized state than the main elongate section **5703***z*. Having a more flexible distal tip can, for example, advantageously prevent buckling and drag at the tip (caused by fixing the braid ends) and/or can advantageously provide flexibility during navigation through a body lumen to prevent trauma to the anatomy. In another embodiment, the braid angle relative to the longitudinal axis in the distal end section **5702***z* can be less than the braid angle of the main elongate body **5703***z*. This may give distal end section **5702***z* more stiffness in the rigidized state relative to the main elongate body **5703***z*. Having more stiffness in the distal end section **5702***z* can, for example, advantageously provide a stable platform for movement or delivery of a medical device through the central lumen and out the distal end of the rigidizing device **5700**.

[0242] Referring to FIG. **25**, in some embodiments, the distal end section **5802***z* can include a plurality of linkages **5804***z* that are passively activated. The linkages **5804***z* can be connected together at one or more pivot points and can advantageously provide deterministic bending (i.e., bending in a specific and predetermined direction). Additionally, the linkages **5804***z* can advantageously provide torsional rigidity to the distal end section **5802***z* while providing high flexibility for bending. The linkages **5804***z* can be activated passively, e.g., via flexing as the device **5800** is moved through the anatomy. The distal end section **5802***z* may, for example, include 1-100 linkages **5804***z*, such as 1, 2, 4, 6, 8, 10, 16, 20, 30, or 40 links **5504***z*. In some embodiments, the linkages **5804***z* can be formed by passively cut flexures, such as laser cut tubes or stents.

[0243] Referring to FIG. **26**, in other embodiments, the distal end section **7602***z* can include a plurality of linkages **7604***z* that are actively controlled, such as via cables **7624**, for steering of the rigidizing device **7600**. The device **7600** is similar to device **5800** except that it includes cables **7624** configured to control movement of the device. While the passage of the cables **7624** through the rigidizing elongate body **7603***z* (i.e., with outer wall **7601**, braid layer **7609**, and inner layer **7615**) is not shown in FIG. **26**, the cables **7624** can extend therethrough in any manner as described elsewhere herein. In some embodiments, one or more layers of the rigidizing elongate body **7603***z* can continue into the distal end section **7602***z*. For example, and as shown in FIG. **26**, the inner layer **7615** can continue into the distal end section **7602***z*, e.g., can be located radially inwards of the linkages **7604***z*. Similarly, any of the additional layers from the rigidizing proximal section (e.g., the braid layer **7609** or the outer layer **7601** may be continued into the distal end section **7602***z* and/or be positioned radially inwards of the

linkages **7604***z*). In other embodiments, none of the layers of the rigidizing elongate body **7603***z* continue into the distal end section **7602***z*. The linkages **7604***z* (and any linkages described herein) can include a covering **7627***z* thereover. The covering **7627***z* can advantageously make the distal end section **7602***z* atraumatic and/or smooth. The covering **7627***z* can be a film, such as expanded PTFE. Expanded PTFE can advantageously provide a smooth, low friction surface with low resistance to bending but high resistance to buckling.

[0244] FIGS. **27**A-E show another exemplary distal end section **4302***z* that includes a plurality of linkages **4304***z* that are actively controlled, such as via cables **4324**, for steering of the rigidizing device. In some embodiments, the pivots for the linkages **4304***z* can be involutes, similar to gear teeth, as shown in FIGS. **27**A-E, to reduce the local contact drag. The cables **4324** can be positioned within cable guides (e.g., jackets or coil pipes) that extend the length of the rigidizing device. In some embodiments, the cables **4324** (and cable guides) can extend within the wall of the rigidizing device. The cable guides can advantageously ensure that tensile load is carried through the cable guide, rather than through the wall of the rigidizing device, so that the structure of the wall is not adversely deflected as the load is applied to the linkages **4304***z*. In some embodiments, the cable guides and cables **4324** can have excess length to account for bending of the rigidizing device. This excess length can, for example, be woven or curled within the wall of the rigidizing device. Further, the cables **4324** can run through apertures and/or grooves in the linkages **4304***z* (see, e.g., FIG. **27**C) while remaining otherwise free to float within the wall (and thereby to account for bending of the rigidizing device. As the cables **4324** are activated, the linkages **4304***z* pivot relative to one another, thereby providing steering for the distal end section of a rigidizing device. Articulation of the linkages **4304***z* and cables **4324** for steering can be achieved by actuators (e.g., local motors, current-activated (heat) nitinol wires, proximal actuators (typically stainless steel, tungsten, or composites), hydraulics, and/or EAP (electro-active polymers)). Such steering mechanisms can advantageously provide increased clinical utility. Further, such steering allows the device that is positioned through the central lumen (for example, an endoscope or a guidewire) be steered towards and more easily reach the desired anatomical location.

[0245] When cables are used for steering the distal end section, the cables (which can be in cable guides or not) can be routed through the wall of the rigidizing devices described herein in a number of different ways. FIGS. **28**-**39**B show exemplary configurations of rigidizing devices with cable guides (some wall layers have been omitted in FIGS. **28**-**39**B for clarity). For example, FIG. **28** shows a rigidizing device **6200** having cables **6224** extending in cable guides **6299** within the outer radial gap layer **6207** (and thus between the braid layer **6209** and the outer layer **6201**). In some embodiments, each of the cables **6224** and cable guides **6299** can be positioned approximately equidistant around the circumference (i.e., approximately 90 degrees away from neighboring cables when four cables are used). In other embodiments, one or more of the cables **6224** and cable guides **6299** can be grouped closely together (e.g., within the same quadrant) rather than spaced apart. Further, in some embodiments, the cables **6224** and/or guides **6299** can be asymmetrically positioned around the circumference of the rigidizing device **6200**.

[0246] FIG. **29** shows a rigidizing device **6300** in which the cables **6324** and cable guides **6399** are positioned within the inner radial gap layer **6311** (and thus between the braid layer **6309** and the inner layers of the rigidizing device, such as the bladder **6321**). When, for example, pressure is supplied to pressure gap **6312**, the bladder **6321** can push against the braid layer **6309**, and the braid layer and correspondingly push against the outer layer **6301** without the braid layer **6309** squeezing or otherwise impacting the cables **6324**. Again, the cables **6324** and cable guides can be positioned equidistant or asymmetrically about the circumference of the rigidizing device **6300**.

[0247] Referring to FIG. **30**, in some embodiments, the rigidizing device **6400** can have cables **6424** and cable guides **6499** at least partially separated from the pressurized or vacuum zone. For example, as shown in FIG. **30**, a tubular bladder layer **6421** can surround the pressure gap **6412**. Some or all of the cables **6424** and cable guides **6499** can be positioned in the gap **6407** between the inner layer **6415** and the braid layer **6409** and circumferentially adjacent to the tubular bladder layer **6421**. Advantageously, in this configuration, the cables **6424** and cable guides **6499** can both be minimally impacted by pressurization of the bladder layer **6421** and provide substantially no additive stack height or thickness to the wall.

[0248] Referring to FIG. **31**, in some embodiments, the rigidizing device **6500** can include a plurality of tubular bladders **6521** spaced circumferentially apart such that each cable **6524** and cable guide **6599** can fit in the gap **6507** between adjacent tubular bladders **6521**.

[0249] Referring to FIG. **32**, rigidizing device **6600** is similar to device **6500** except that cables **6624** and guides **6699** are grouped in pairs to reduce the number of tubular bladders **6621** necessary (e.g., there can be two tubular bladders **6621** and a two pair of cables **6624** and guides **6699** positioned therebetween).

[0250] Referring to FIG. **33**, rigidizing device **6700** is similar to device **6500** except that each tubular bladder **6721** includes a tubular braid layer **6709** therearound (i.e., rather than having a single braid layer **6509** as with device **6500**). As pressurizing medium is provided to pressure gaps **6712**, the bladder **6721** can expand to press each individual tubular braid **6709**, which can expand to press against the inner and outer layers **6715**, **6701**. Alternately, not all of the bladders can be pressurized at the same time (for instance, just 1 or 2) such that the device is only stiffened partway around the circumference. This may create stiffness along only a portion of the device, while still enabling flexibility amongst the other portion, which may create preferential motion should the device be imparted with a deflection load.

[0251] Referring to FIG. **34**, in some embodiments, a rigidizing device **6800** can include strips of braid layer **6809** (i.e., flat braid rather than tubular braid). Each strip of braid layer **6809** and each cable **6824** and cable guide **6899** can be positioned in the radial gap **6807**. Further, the strips of braid layer **6809** can alternate with the cables **6824**/**6899** so as to minimize the thickness of the wall of the rigidizing device **6800**. The bladder **6821** can be positioned radially outwards of the strips of braid layer **6809** and cables **6824**/guides **6899**. When pressure medium is supplied to the pressure gap **6812**, the bladder **6821** can push the strips of braid layer **6809** radially inwards against the innermost layer **6815** to

rigidize the device **6800**. In other embodiments, the bladder **6821** can be radially inwards of the strips of braid layer **6809** (and cables **6824**/guides **6899**) and be configured to push the strips of braid layer **6809** against the outer layer **6801**.

[0252] In some embodiments, referring to FIG. **35**, the cables **6924** and cable guides **6999** can be positioned so as to extend down the central lumen **6920** of the rigidizing device **6900**.

[0253] In some embodiments, referring to FIG. **36**, the cables **7024** and cable guides **7099** can be positioned radially outwards of the outer layer **7001**. The cables **7024** and guides **7099** can, for example, be positioned in a sheath **7009***z* that can extend only over the cables **7024** or that can fully encompass the outer layer **7001**. The guides **7099** can be only minimally constrained within the sheath **7009***z* so as to freely bend during movement of the device **7000** (e.g., so as to curl or extend to full length depending on whether the guides **7099** are positioned on the inside or outside of the cure of the rigidizing device **7000** as it bends).

[0254] Referring to FIG. **37**, in some embodiments, a cable guide **7199** (with one or more cables therein) can be spiraled around the outside of the outer layer **7101** of the rigidizing device **7100**. Additional cable guides can likewise be spiraled therearound. In some embodiments, the cable guide **7199** can be spiraled around other layers of the rigidizing device **7100**, such as around the inner layer.

[0255] Referring to FIGS. **38**A-**38**B, in some embodiments, a cable guide **7299** (with one or more cables therein) and a tubular element **7210***z* can be alternately spiraled around the inner layer **7215** (i.e., such that the cable guide **7299** and the tubular element **7210***z* form approximately a single layer down the length of the rigidizing device **7200**. The tubular element **7210***z* can include an outer tubular braid **7209** with an inner tubular bladder **7221**. As pressurizing medium is provided to pressure gap **7212**, the bladder **7221** can expand to press outwards on the tubular braid **7209**, which can push outwards on the outer layer (not shown for clarity).

[0256] Referring to FIGS. **39**A-**39**B, a rigidizing device **7300** can be similar to device **7200** except that only the cable guide **7399** and a tubular bladder **7321** can be spiraled around the inner layer **7315** within gap **7311** (note that cable guide **7399** and tubular bladder **7321** are not shown in FIG. **39**B for clarity). A braid layer **7309** can then be wrapped radially around the gap **7311**. When a pressure medium is supplied to the tubular bladder **7321**, the bladder **7321** can expand to push the braid layer **7309** against the outer layer **7301** (not shown in FIG. **39**A for clarity).

[0257] It should be understood that the cable configurations described with respect to FIGS. **28**-**39**B can be used with any number of cables (such as 1, 2, 3, 4, 5, 6, 8, 12, or 16 cables). Further, the cables can be used to steer any tip or a rigidizing device and/or to steer any distal end section (e.g., sections with linkages or different braid angles). Further, the cable guides described herein can be round with round cables, flat, rectangular with flat ribbon tensile elements, or a combination thereof. Further, in some embodiments, other steering elements can be used in addition to or in place of the cables (e.g., pneumatics, hydraulics, shape memory alloys, EAP (electro-active polymers), or motors). Intentionally separating the elements required for steering and the elements required for rigidization can enable the structure to exhibit a continuously high rigidization performance as a function of length, even if the forces available for steering are demonstrably lower than the forces required for nested system rigidization.

[0258] Additionally, it should be understood that the cable configurations and placement described with respect to FIGS. **28**-**39**B can similarly be used for the placement of working channels or other lumens (for example, inflation lumens for balloons) within the rigidizing devices.

[0259] Referring to FIGS. **40**A-**40**D, in some embodiments, the distal end section **5902***z* may include a series of linkages **5904***z* (either active or passive) that are specifically designed to rigidize via the application of pressure or vacuum. For example, the linkages **5904***z* can be connected to each other through a pivot point **5928***z* (which can, for example, be wire pivot points). Each pivot point **5928***z* can allow bending with one degree of freedom between linkages. Further, the linkages **5904***z* can be arranged in alternating fashion with every other linkage connected with the pivot points **5928***z* positioned 90 degrees away from the previous linkage. Each linkage **5904***z* can have cut-outs **5975***z* at the proximal and distal ends thereof extending from the pivot-points **5928***z* to as to allow bending of the linkages **5904***z* relative to one another. Further, each linkage **5904***z* can be connected to a neighboring linkage **5904***z* by a respective tensile member **5930***z*. The tensile member **5930***z* can be fixed relative to one linkage and at least partially movable within a track **5931***z* of the neighboring linkage (e.g., within track **5931***z* of linkage **5904***z*). Movement of the linkages **5904***z* allows the tensile member **5930***z* to lengthen when on the outside of the curve and shorten when on the inside of the curve during bending of the rigidizing device. Further, the proximal end section **5902***z* can include two sliding clamps **5932***z* attached to tensile member **5930***z* along opposite axis (i.e., 90 degrees away from one another). The two tensile members **5930***z* extend from each of the sliding clamps **5932***z* to the distal-most end of the distal section **5902***z*. As the distal end section **5902***z* is bent, one cable element of each sliding clamp **5932***z* gets shorter and one cable element of each sliding clamp **5932***z* gets longer, resulting in circumferential movement of the sliding clamps **5932***z*. When vacuum or pressure is applied, the outer sleeve can compress the sliding clamps **5932***z* to the track **5931***z* surface. The sliding clamps **5932**Z and the track **5931***z* surface may be smooth, rough or have teeth. This compression force may case the sliding clamps **5932**Z to lock in place with respect to the links **5904***z*, thereby fixing the position of tensile members **5930***z* and making the distal end section stiffer in its current shape. Additional rigidizing linkages and/or engages are described in International Patent Application No. PCT/US2018/042946, filed Jul. 19, 2018, titled "DYNAMICALLY RIGIDIZING OVERTUBE," now PCT Publication No. WO 2019/018682, the entirety of which is incorporated by reference herein.

[0260] Referring to FIGS. **41**A-**41**B, in some embodiments, the distal end section **6002***z* can include linkages **6004***z* (either active or passive) that are placed over a section **6007***z* that rigidizes via vacuum or pressure as otherwise described herein (i.e., over a rigidizing wall with inner layer **6015**, pressure gap **6012**, bladder **6021**, braid layer **6009**, and outer layer **6001**). Placing the linkages **6004***z* over the rigidizing section can provide the advantages of a linked system (e.g., flexibility in bending and torsional stiffness) together with a steering or deterministic bending tip that can be rigidized when the remaining structure is rigidized.

Alternatively, linkages can be positioned radially inwards of a rigidizing section. As shown in FIG. **41**B, cables **6024** in cable guides **6099** can extend through linkages **6004***z* to provide optional active steering of the linkages **6004***z*.

[0261] Referring to FIG. **42**A, in some embodiments, the distal end section **6102***z* can include a series of linkages **6104***z* (either active or passive) sealed within a thin layer of material **6108***z* (e.g., made of an elastomer, PVC, or PEEK). The linkages **6104***z* and thin layer of material **6108***z* can, for example, be positioned over (i.e., radially outwards from) the braid layer **6109** and can be continuous with the coil wound tube **6101** of the main elongate body **6103***z*. In this embodiment, when pressure or vacuum is supplied to the gap **6112**, the braid layer **6109** can be compressed by the bladder **6121** against the coil wound tube **6101** in the main elongate body **6103***z* and against the linkage sheath **6108***z* in the distal end section **6102***z* to rigidize. The linkage sheath **6108***z* is supported by the linkages **6104***z* such that it can resist the pressure of the braid expanding. This design advantageously provides both rigidization and linkages while maintaining a low wall thickness and/or diameter. The distal end section **6102***z* can, for example, include cables **6124** extending within cable guides to activate the linkages **6104***z*.

[0262] In some embodiments, the rigidizing structure can be steered from within the wall of the rigidizing structure and optionally without any links. FIG. **42**B shows a cross section of a pressure rigidizing structure **2500** where a cable guide **2599** is placed in the pressure gap **2512** and can be attached to the inner layer **2515**. The cable **2524** extends from the cable guide **2599** into the distal end section **2502***z* and is anchored to the inner layer **2515** at anchor point **2568**. Pulling on the cable **2524** will cause the distal end section **2502***z* (distal to the end of the cable guide **2599**) to deflect. In some embodiments, the cable guide **2599** can be omitted, and the rigidizing device **2500** will bend along its entire length when the cable **2524** is pulled. In some embodiments, the device **2500** can be built with a distal end section **2502***z* that has a lower bending stiffness than the proximal elongate body **2503***z* (as described herein, for instance by varying the braid angle or using a more flexible reinforcement element in either the inner or outer layer) so that the distal end section **2502***z* bends more than the body **2503***z*. The cable guide **2599** and cables **2524** can be located between the bladder **2521** and the braid **2509** or between the braid **2509** and outer layer **2501**. The cable guide **2599** and/or the cables **2524** can be attached to the outer wall **2501**. Alternately, in a vacuum rigidized structure, the cable guide **2599** and cables **2524** can be located between the inner layer and the braid or between the braid and the outer layer. In some embodiments, the bladder **2521** and the braid of the braid layer **2509** can be omitted in the section where the cable **2524** is not inside the cable guide **2599**, leaving only inner and outer layers **2515**, **2501**, or just an outer layer or just an inner layer.

[0263] Referring to FIGS. **43**A-**43**C, in some embodiments, the distal end section **4602***z* can include active deflection segment **4646**. The deflection segment **4646** can include a ribbon or spine extending therethrough that provides bending only in one or more predetermined directions upon activation. The active deflection segment **4646** can be deflected, for example, using one or more cables, bladders, pullwires, and/or introduction of a guide wire, to a predetermined shape. The active deflection segment **4646** can thus provide bending of the rigidizing device **4600** at a fixed location and in a fixed direction. In some embodiments, markers (e.g., radiopaque markers) can be positioned within or proximate to the active deflection segment **4646** to indicate where the bend will occur and/or in which direction the active deflection segment **4646** will bend. Bending of the rigidizing device **4600** using the active deflection segment **4646** can be advantageous, for example, where bending is required without assistance from the anatomy (i.e., when the anatomical path for the rigidizing device **4600** is not predefined or constrained by the anatomy). For example, such bending might be useful to create a bend across the open or relatively unconstrained space between the inferior vena cava (IVC) and the atrial septum during transseptal procedures in the mitral valve. The active bending segment **4646** can be configured to be rigidized (i.e., via pressure or vacuum) as described herein to fix or lock the active deflection segment **4646** in the bent configuration. Further, the rigidizing device **4600** can include a steerable distal section **4647** (e.g., with linkages) in addition to the active deflection segment **4646**. The steerable distal section **4647** can be used to point or orient the distal end of the rigidizing device **4646** in the desired direction (e.g., via cables and/or along four axes), as described elsewhere herein.

[0264] Any of the rigidizing devices described herein can include one or more separately rigidizing sections. For example, referring to FIGS. **44**A-**44**C, in some embodiments, a rigidizing device **900** can have separate vacuum/pressure chambers **975***a-d* (e.g., four vacuum or pressure chambers) along the length thereof. Each chambers **975***a,b,c,d* can have its own vacuum/pressure line **927***a-d* extending thereto for individual rigidization of the chambers **975***a,b,c,d*. Pressure seals **929** can extend between each chamber and/or at the distal end. The rigidizing device **900** with separately rigidizing chambers **975***a,b,c,d* can, in some embodiments, include a steerable distal section **902***z* (e.g., with linkages as otherwise described herein). The cables **924***a-d* to control the steerable distal section **902***z* can be managed using cable guides **999** (e.g., there can be at least one, such as 1-4 cable guides **999** in each vacuum chamber **975**). In some embodiments, shown in FIG. **44**B, the cables **924***a-d*, cable guides **999***a-d*, and/or vacuum/pressure lines **927***a-d* can extend within a radial gap **911** between the innermost layer **915** and the braid layer **909** (and thus also beneath the outermost layer **901**). In other embodiments, shown in FIG. **44**C, the cables **924***a-d*, cable guides **999***a-d*, and/or vacuum/pressure lines **927***a-d* can extend within the central lumen **920** of the rigidizing device **900**. In use of the rigidizing device **900**, any of the chambers **975***a-d* that are in the flexible state can be steered or deflected in the direction of cable tension while the chambers **975***a-d* that are rigidized will remain in their position and not be deflected. Advantageously, this design allows alternating which chambers **975***a-d* are under vacuum/pressure and/or direction of steering to form a variety of complex shapes and provide navigation through the anatomy with minimal looping.

[0265] In some embodiments, the distal end section of the rigidizing devices described herein can include an element for local tissue stabilization, such as suction, a balloon or a cage element. For example, referring to FIGS. **45**A-**45**D, in one embodiment, a rigidizing device **600** can include a balloon **666** and a balloon inflation lumen or tube **667** extending thereto. As shown in FIGS. **45**B-**45**D (the outer layers have been removed in **6**B-**6**C for clarity), the balloon

inflation tube **667** can extend alongside the working channel **655** (and thus within the radial gap **611** between the slip layer **613** and the first braid layer **609**). As shown in FIGS. **45**B-**45**C, the inflation tube **667** can be configured to include a service loop **668** that can change lengths (i.e., straighten as in FIG. **45**B or obtain a greater bend as in **45**C) to accommodate bending of the rigidizing device **600**. In some embodiments, the balloon inflation tube can be spiraled about its axis to accommodate bending. In some embodiments, a vacuum rigidizing device can include a balloon inflation tube between the innermost layer and the braid, between the braid and the outer layer, radially inwards of the inner layer, or radially outwards of the outer layer. In some embodiments, a pressure rigidizing device can include an inflation lumen in the pressure gap, between the bladder and braid, between the braid and outer layer, radially inwards if the inner layer, or radially outwards of the outer layer. For example, the inflation lumen can be positioned similar to as described herein with respect to working channels and/or cables.

[0266] As another example, FIGS. **46**A-**46**B show an exemplary vacuum tip **5354** for use with a rigidizing device. The vacuum tip **5354** can include a circumferential array of vacuum holes **5358** on the distal-most face **5359**. Further, the array of vacuum holes **5358** can be connected to a vacuum line **5356** that runs along the rigidizing device (e.g., within or alongside the layered walls of the rigidizing device). The vacuum line **5356** can be connected to a source of vacuum such that, when activated, vacuum is provided through the vacuum line **5356** to each of the holes **5358** of the array (e.g., through an annular inlet **5319***z*). As a result, suction can be provided on the distal-most face **5359** of the tip **5354** (and thus the distal-most face of the rigidizing device). Such suction can be useful, for example, to suction tissue thereto (e.g., for stabilization during interventional procedures such as for cannulation of the papilla, e.g., for access to the pancreatic duct or bile duct). The suction can also be useful, for example, for Endoscopic Submucosa Dissection (ESD), or Endoscopic Full Thickness Resection (EFTR).

[0267] In some embodiments, the vacuum tip **5354** can be positioned just distal to a steering section of the rigidizing device, which can advantageously be used to orient the vacuum tip **5354** in the desired direction. Further, in some embodiments, a tool (e.g., guidewire or scope) can pass through the central lumen **5320***z* of the tip **5354** and between the array of vacuum holes **5358** to allow for procedures to be performed while suction is activated.

[0268] Referring to FIGS. **47**A-**47**B, in some embodiments, the vacuum tip **5254** can include a semi-annular array of holes **5238** at the distal-most face **5259** rather than a circumferential array of holes.

[0269] Referring to FIGS. **48**A-**48**B, in some embodiments, the vacuum tip **5454** can have an angled distal face **5459** (e.g., angled at 30-80 degrees relative to the longitudinal axis of the tip **5454**, such as 30, 45, 60, 70, or 80 degrees). The angled distal face can advantageously help approach angled anatomy to more easily adhere to the local surface.

[0270] The vacuum tips described herein can advantageously provide suction without causing "red-out" of the endoscopic lens, as the suction can occur locally (e.g., at the holes **5358**) and not at the lens of the scope. Accordingly, the scope can provide visualization of the tissue even when suction is applied.

[0271] In some embodiments, the vacuum tips described herein can include a metallized portion and/or have co-joined wires such that the vacuum tips can conduct current. Such current can be used, for example, to cut or coagulate the suctioned tissue.

[0272] In some embodiments, the vacuum tips described herein can be used with a standard endoscope or endoscopic type device that does not include rigidization.

[0273] Any of the rigidizing devices described herein can be used with a handle configured to allow manual manipulation and/or activation of the device.

[0274] An exemplary handle **1031** is shown in FIGS. **49**A-**49**D. The handle **1031** includes an activation element **1048** in the form of a button configured to activate the vacuum or pressure (the button is shown off in FIGS. **49**A and **49**C and on in FIGS. **49**B and **49**D). Further, a flow path within the handle **1031** can include a vacuum or pressure inlet port **1049** configured to be attached to the vacuum or pressure source, a rigidizing device port **1050** that connects to the rigidizing device via output **10732**, and a vent port **1051** that connects to atmosphere. As shown in FIG. **49**A, when the activation element **1048** is in a distal "off" position (i.e., such that vacuum or pressure for rigidization to the rigidizing device is off), the vent port **1051** and rigidizing device port **1050** are in communication with one another, thereby venting any rigidizing pressure or vacuum to the air and allowing the rigidizing device to be in a flexible configuration. As shown in FIG. **49**B, when the activation element **1048** is in a proximal "on" position (i.e., such that vacuum or pressure to the rigidizing device is on), the rigidizing device port **1050** and the vacuum or pressure inlet port **1049** are in communication with one another, thereby supplying pressure or vacuum to the rigidizing device to allow the device to rigidize. In some embodiments, the handle **1031** can be configured to be bonded to the rigidizing device (e.g., to an inner coil wound tube over the rigidizing device) at bonding region **1053**. As shown in FIGS. **49**C-D, the handle includes a status indicator element **1067***z* to indicate whether the rigidizing device is in the flexible or rigid configuration. In this embodiment, the status indicator **1067***z* is such that the word "on" shows when the button is placed in the "on" position, and the word "off" shows when the button is placed in the "off" position. In other embodiments, the status indicator can be a symbol, color, light, or moving indicator.

[0275] The activation element for a rigidizing device handle as described herein can be a button, switch, toggle, slider, screwed connection, squeeze handle, or stop-cock. Further, the activation element can be planar, a sector, or omnidirectional. The indicator element can include words, lights, or an element that spins with flow of vacuum or pressure. For example, referring to FIGS. **50**A-**50**B, in some embodiments, the activation element **1548** can be a slider element. The activation element **1548** can include a connection element **1574***z* (e.g., a hollow tube or snap-fit element) configured to slide over a handle. The indicator element **1567***z* can be built into the slider (e.g., indicate "rigid" when the slider is in one position and "flexible" when the slider is in another position). A similar slider actuation element **1648** (this one orthogonal) can be seen in FIGS. **51**A-**51**C.

[0276] In some embodiments, rather than including the activation element and indicator element on the handle, one or both can be on separate elements. For example, the activation element can be positioned along the vacuum or pressure line between the handle and the vacuum or pressure pump, can be actuated by a foot pedal, can be on the scope umbilical, on the scope shaft, or can be clipped on the patient's bed. In some embodiments, the actuation element can be separate from the handle, but can clip onto the handle during part of the procedure. For example, FIGS. **52**A-**52**C show an activation element **1448** that includes an attachment mechanism **1452** (e.g., a c-shaped clip) for detachable coupling to a handle **1431**. Having the indicator element and/or activation element separate from the handle can advantageously allow the actuator and indicator to be seen more clearly (i.e., not be obstructed by the person's anatomy) and/or can allow the actuator and indicator to be controlled/used more easily by an additional person (e.g., a procedural assistant).

[0277] FIGS. **53**A-D show a handle **1131** that is designed to allow manipulation of a rigidizing device, but that does not include an activation element or an indicator element. The handle **1131** includes a large stopper or flange **1161** at the distal end thereof that can act as an insertion blocker for the handle **1131** (i.e., to stop the handle **1131** from moving into the anatomy) and to act as a face against which the operator can push during use. The rigidizing device can connect at bond region **1153**. Further, the handle **1131** can include an input **1165** from the remote activation element connected to an output **1173***z* to the rigidizing device.

[0278] In some embodiments, a handle for use with a vacuum rigidizing device can include a vent port to vent the rigidizing device when vacuum is not supplied (i.e., when the rigidizing device is in the flexible configuration). For example, FIGS. **54**A-**54**B show a handle **1231** having spool valve activation element **1248** that is shuttled in one direction to activate the vacuum in the rigidizing device and can be shuttled in the opposite direction to deactivate the vacuum or pressure. When deactivating vacuum or pressure to the rigidizing device, the activation element **1248** can provide venting via vent port **1251**. The activation element **1248** can be positioned on the vacuum or pressure line **1232** leading to the handle, such as 4"-8", e.g., 6" away from the handle. As shown in FIG. **54**A, the spool valve with end button indicator element **1267***z* can indicate that the rigidizing device is in the flexible configuration (as shown) or the rigid configuration (when pushed in the opposite direction).

[0279] Referring to FIGS. **55**A-**55**C, the activation element **1348** can be a rotary valve (e.g., connected to the handle or elsewhere as described herein), and a sliding indicator **1367***z* on the rotary valve activation element **1348** can show that the vacuum or pressure is on (as shown in FIGS. **55**A and **55**C) or off and vented (as shown in FIG. **55**B).

[0280] In some embodiments, a handle for use with a vacuum rigidizing device can include a mechanism configured to automatically lock the handle in the vacuum or vented configuration. For example, handle **7531** for use with a vacuum rigidizing device **7500** is shown in FIGS. **56**A-**56**G. The handle **7531** includes a handle body **7515***z* configured to attach to the rigidizing device **7500**. The handle **7531** further includes an activation element **7548** in the form of a switch ring for supplying vacuum to the rigidizing device **7500**. The switch ring activation element **7548** can include a magnet **7522***z* that is configured to mate with either a proximal magnet **7523***z* (as shown in FIG. **56**D) or a distal magnet **7524***z* (as shown in FIG. **56**E). When the switch ring magnet **7522***z* is mated with the proximal magnet **7523***z*, the vacuum feed line **7532** in the handle **7531** is disconnected from the vacuum port **7550** to the rigidizing device, and both the rigidizing device and the vacuum are vented or open to the atmosphere (as shown in FIG. **56**F). When the switch ring magnet **7522***z* is mated with the distal magnet **7523***z*, the vacuum feed line **7532** in the handle **7531** is connected to the vacuum port **7550** to the rigidizing device so as to supply vacuum thereto (as shown in FIG. **56**G). Advantageously, the magnets **7522***z*, **7523***z*, **7524***z* can lock the switch ring **7548** in the vacuum or vent configurations, thereby preventing harm to the patient that could result if in the unintended configuration (e.g., attempted movement of the device **7500** through the anatomy when in a rigid configuration when it could damage the anatomy). In some embodiments, the magnet **7522***z* can be a ferrous material while the magnets **7523***z*, **7524***z* can be magnets or vice versa. As shown in FIGS. **56**A-**56**B, the handle **7531** can further include a user grip **7521***z* for the user's hand with a grip cover **7525***z* configured to cover the vacuum feed tube line **7532** in the handle **7531**. Further, the vacuum feed tube line **7532** can connect directly to the switch ring activation element **7548**. The vacuum feed line **7532** may have a spiral or winding shape under the grip cover **7525***z*, which can allow the switch ring activation element **7548** to move proximally and distally without restricted motion caused by the vacuum feed line **7532**. The spiraling of the vacuum feed line **7532** may be from 30 to about 1440 degrees. For instance, 90 degrees (as shown in FIG. **56**C where the grip cover is removed for clarity) 180, 360 and 720 degrees. The grip cover **7525***z* may be designed such that it covers the whole vacuum feed line **7532** even when the spiral goes all the way around the handle **7531**. The handle **7531** can further include a stopper flange **7561** to prevent the handle **7531** from moving into the anatomy (for instance, the stopper flange may prevent the device from passing through the anus or through an oral bite guard), a proximal handle port **7526***z* for insertion of a scope or other working tool therethrough, and/or an indicator element **7567***z*. The indicator element **7567***z* is a band that is visible only when the switch ring activation element **7548** is in the distal position. The indicator element **7567***z* may have a different color and or value than the rest of the handle, preferably a color that contrasts sharply and is visible in reduced lighting configurations. For instance, the handle **7531** may be white and the indicator element **7567***z* may be a medium to dark blue. The indicator element **7567***z* band may also have a different texture than the rest of the handle **7531**. For instance, it may have raised bumps or a crosshatching. This may allow a physician to easily feel the state of the handle **7531**.

[0281] In some embodiments, a handle for use with a pressure rigidizing device can include a pressure gap inlet and a vent gap inlet. An exemplary handle **6231** attached to a pressure rigidizing device **6200** is shown in FIGS. **57**A-**57**C. The handle includes a gap inlet **6293** and a vent gap inlet **6223**. Pressure gap inlet **6293** connects to pressure gap **6212** (via pressure line **6294**). Vent gap inlet **6223** (which can extend all the way through the handle to exit on both sides thereof) connects to gap **6206** around the braid layer **6209** (between the bladder **6221** and the outermost layer **6201**). The vent inlet **6223** can be open to atmosphere while

the gap inlet **6293** can be connected to a pressure source (e.g., and activated with an activation element). The handle **6231** can, for example, be used to operate the device **2200***g* described with respect to FIG. **16**G. In some embodiments, a fitting can be added to the gap inlet **6293** so that the handle **6231** can be used to operate the device **2200***i* as described with respect to FIG. **16**I.

[0282] In some embodiments, a handle for use with a pressure rigidizing device can include a pre-filled pressure medium therein. For example, an exemplary handle **7431** attached to a pressure rigidizing device **7400** is shown in FIGS. **58**A-**58**E. The handle **7431** includes a handle body **7415***z* and a grip/lever **7411***z* that can be activated to provide pressure medium to the rigidizing device **7400**, such as pressure medium pre-filled or stored in the fluid chamber **7412***z* of the handle **7431**. The chamber **7412***z* can, for example, be bordered by a rolling diaphragm **7416***z*. The grip/lever **7411***z* can include teeth **7476***z* that mate with a rack **7414***z* of a piston **7413***z*. As the grip/lever **7411***z* is moved towards the handle body **7415***z*, the piston **7413***z* can move distally towards the rolling diaphragm **7416***z* of the fluid chamber **7412***z*. As the rolling diaphragm **7416***z* is pushed distally, it forces the pressure medium from the chamber **7412***z* through the gap inlet **7493** to the pressure gap **7412** outside of the bladder **7421** for stiffening (and air or other fluids can likewise escape from around the braid layer via vent **7423**). In some embodiments, the handle **7431** can include a locking mechanism (e.g., via a click on/click off mechanism, such as that found in a ball point pen) with spring and feeler **7778***z* configured to lock the grip/lever **7411***z* against the body **7415***z* so as to lock the rigidizing device **7400** in the rigid configuration. Similarly, when the grip/lever **7411***z* is pushed against the body again, the grip/lever **7411** can be released, and the fluid can move back into the fluid chamber **7412***z* via inlet **7493**.

[0283] In some embodiments, the handle **7431** can further include a pressure relief valve **7417***z* between the chamber **7412***z* and an overflow chamber **7418***z*. When the pressure in the fluid chamber **7412***z* reaches a predetermined maximum pressure (e.g., 5 atm), the pressure relief valve **7417***z* can open to allow fluid to be channeled into the overflow chamber **7418***z*. The fluid chamber **7412***z* can be overfilled during manufacturing such that the valve **7417** always opens upon the first activation of the grip/lever **7411***z*, which can ensure calibration of the handle **7431** to the desired pressure. One exemplary method of filling the fluid chamber **7412***z* can include: (1) attaching the handle **7431** to a filling fitting that attaches to a tube leading to the pressure system; (2) drawing a vacuum on the handle to remove air through that filling fitting; (3) while maintaining vacuum, introducing water, DI, Saline, an oil or another incompressible fluid into the system through the filling fitting; and (4) crimping and sealing the tube (via a mechanical crimp, via melting the tube, etc.) distal to the pressure fitting and then removing the pressure fitting, leaving the crimped/sealed tube in the handle.

[0284] Any of the handles described herein can have a pressure indicating feature built in. For instance, the handles may have a pressure gauge. The handles may include a feature, such as a piston, that is displaced to give a visual indication that the device is pressurized. The handles may have a feature that flips or turns such that it displays a different color; for instance, it may display a green dot at atmospheric pressure and red dot when rigidized. In some embodiments, the visual indication can be seen on fluoroscopy.

[0285] Any of the pressure rigidizing handles described may have an emergency venting feature if, for some reason, the handle passageways became clogged. The emergency venting feature can, for example, allow for incising of the device, thereby breaking its pressure cavity. The emergency venting feature can, for example, be a valve distal to the handle (for example, a swabable valve), such that should the valve be actuated, the device would vent pressure and therefore de-rigidize.

[0286] Any of the rigidizing devices described herein can include built-in cameras, lighting, etc. to provide for on-board imaging. In some embodiments (and as shown below in FIG. **63**), the cameras and lighting can be positioned at the distal tip of the device. In other embodiments, and as shown in FIG. **59**, a rigidizing device **8200** can include a camera **8234***z* and lighting **8235***z* mounted on the elongate body **8203***z* proximal to the distal end **8202***z* of the device (e.g., proximal to steering linkages **8204***z*).

[0287] In some embodiments, the rigidizing devices described herein can be configured as an introducer (i.e., an instrument for introduction of a flexible device, such as an introducer sheath for interventional cardiology). For example, referring to FIG. **60**, a rigidizing device **8700** can include a rigidizing elongate body **8703***z* with a tapered distal tip **8733***z*. The device **8700** can further include a hemostatic valve **8749***z* and/or a flush line **8748***z*.

[0288] The braid described herein can include or be replaced by a mesh, a woven material, a ribbon or a cloth. In some embodiments, the braid can be non-woven (i.e., fibers at different angles may not go over and under each other but instead be on separate layers that do not cross each other). Similarly, the braid can be replaced by a stent or a structure (e.g., metal structure) cut from a hypodermic tube.

[0289] In some embodiments, the rigidizing devices described herein can be configured to be loaded over the side of the scope or other instrument (e.g., rather than requiring insertion of the scope/instrument into the proximal end of the rigidizing device). For example, as shown in FIGS. **61**A-**61**B, the rigidizing device **400** can be split along the length thereof (i.e., split longitudinally through the wall from the proximal end to the distal end). Further, a connection feature **444** can connect the split wall together. In some embodiments, the connection feature **444** can be reusable. For example, the connection feature **444** can be a series of magnets that can engage (FIG. **61**A) to hold the rigidizing device **400** together and disengage (FIG. **61**B) to provide side access for the scope/instrument. Other exemplary reusable connection features include zippers, interlocking zip-lock male and female configuration, or reusable tape. In some embodiments, the connection feature **444** can be permanent and not reusable, such as permanent tape or adhesive.

[0290] In some embodiments, the vacuum and pressure multi-layered systems described herein can be used to create stiffness for non-cylindrical or non-tubular structures. For example, the systems described herein could be used to create a balloon that assumes the desired shape when pressurized and/or rigidized. Such a structure can be a flexible structure that nevertheless contains elements that exhibit high hoop stiffness, such as wire (tension or compression) or thin fiber strands (tension).

[0291] In some embodiments, the rigidizing devices described herein can include proximal and distal seals within the innermost layer to create a space between the scope or instrument and the innermost layer to hold lubrication.

[0292] In some embodiments, the rigidizing devices described herein can be used in conjunction with other versions of the product. For example, an endoscope can include the rigidizing mechanisms described herein, and a rigidizing device can include the rigidizing mechanisms described herein. Used together, they can create a nested system that can advance, one after the other, allowing one of the elements to always remain stiffened, such that looping is reduced or eliminated (i.e., they can create a sequentially advancing nested system).

[0293] An exemplary nested system **2300***z* is shown in FIG. **62**. The system **2300***z* can include an outer rigidizing device **2300** and an inner rigidizing device **2310** (here, configured as a rigidizing scope) that are axially movable with respect to one another either concentrically or non-concentrically. The outer rigidizing device **2300** and the inner rigidizing device **2310** can include any of the rigidizing features as described herein. For example, the outer rigidizing device **2300** can include an outermost layer **2301***a*, a braided layer **2309***a*, and an inner layer **2315***a* including a coil wound therethrough. The outer rigidizing device **2300** can be, for example, configured to receive vacuum between the outermost layer **2301***a* and the inner layer **2315***a* to provide rigidization. Similarly, the inner scope **2310** can include an outer layer **2301***b* (e.g., with a coil wound therethrough), a braid layer **2309***b*, a bladder layer **2321***b*, and an inner layer **2315***b* (e.g., with a coil wound therethrough). The inner scope **2310** can be, for example, configured to receive pressure between the bladder **2321***b* and the inner layer **2315***b* to provide rigidization. Further, an air/water channel **2336***z* and a working channel **2355** can extend through the inner rigidizing device **2310**. Additionally, the inner rigidizing scope **2310** can include a distal section **2302***z* with a camera **2334***z*, lights **2335***z*, and steerable linkages **2304***z*. A cover **2327***z* can extend over the distal section **2302***z*. In another embodiment, the camera and/or lighting can be delivered in a separate assembly (e.g., the camera and lighting can be bundled together in a catheter and delivered down the working channel **2355** and/or an additional working channel to the distal-most end **2333***z*).

[0294] An interface **2337***z* can be positioned between the inner rigidizing device **2310** and the outer rigidizing device **2300**. The interface **2337***z* can be a gap, for example, having a dimension d (see FIG. **62**) of 0.001"-0.050", such as 0.0020", 0.005", or 0.020" thick. In some embodiments, the interface **2337***z* can be low friction and include, for example, powder, coatings, or laminations to reduce the friction. In some embodiments, there can be seals between the inner rigidizing device **2310** and outer rigidizing device **2300**, and the intervening space can be pressurized, for example, with fluid or water, to create a hydrostatic bearing. In other embodiments, there can be seals between the inner rigidizing device **2310** and outer rigidizing device **2300**, and the intervening space can be filled with small spheres to reduce friction.

[0295] The inner rigidizing device **2310** and outer rigidizing device **2300** can move relative to one another and alternately rigidize so as to transfer a bend or shape down the length of the nested system **2300***z*. For example, the inner device **2310** can be inserted into a lumen and bent or steered into the desired shape. Pressure can be applied to the inner rigidizing device **2310** to cause the braid elements to engage and lock the inner rigidizing device **2310** in the configuration. The rigidizing device (for instance, in a flexible state) **2300** can then be advanced over the rigid inner device **2310**. When the outer rigidizing device **2300** reaches the tip of the inner device **2310**, vacuum can be applied to the rigidizing device **2300** to cause the layers to engage and lock to fix the shape of the rigidizing device. The inner device **2310** can be transitioned to a flexible state, advanced, and the process repeated. Although the system **2300***z* is described as including a rigidizing device and an inner device configured as a scope, it should be understood that other configurations are possible. For example, the system might include two overtubes, two catheters, or a combination of overtube, catheter, and scope.

[0296] FIG. **63** shows another exemplary nested system **2700***z*. System **2700***z* is similar to system **2300***z* except that it includes a cover **2738***z* attached to both the inner and outer rigidizing device **2710**, **2700**. The cover **2738***z* may be, for example, low-durometer and thin-walled to allow elasticity and stretching. The cover **2738***z* may be a rubber, such as urethane, latex, or silicone. The cover **2738***z* may protect the interface/radial gap between the inner and outer devices **2710**, **2700**. The cover **2738***z* may prevent contamination from entering the space between the inner and outer tubes. The cover **2738***z* may further prevent tissue and other substances from becoming trapped in the space between the inner and outer tubes. The cover **2738***z* may stretch to allow the inner device **2710** and outer device **2700** to travel independently of one another within the clastic limits of the material. The cover **2738***z* may be bonded or attached to the rigidizing devices **2710**, **2700** in such a way that the cover **2738***z* is always at a minimum slightly stretched. This embodiment may be wiped down externally for cleaning. In some embodiments, the cover **2738***z* can be configured as a "rolling" seal, such as disclosed in U.S. Pat. No. 6,447,491, the entire disclosure of which is incorporated by reference herein.

[0297] FIGS. **64**A-**64**B show another exemplary nested system **9400***z*. In this system **9400***z*, the outer rigidizing device **9400** includes steering and imaging (e.g., similar to a scope) while the inner device includes only rigidization (though it could include additional steering elements as described elsewhere herein). Thus, outer device **9400** includes linkages or other steering means disclosed herein **9404***z*, camera **9434***z*, and lighting **9435***z*. The outer device **9400** can further include a central passageway **9439***z* for access to the inner device **9410** (e.g., lumens such as working channels therein). In some embodiments, bellows or a loop of tubing can connect the passageway **9439***z* to lumens of the inner device **9410**. Similar to the other nested systems, at least one of the devices **9410**, **9400** can be rigidized at a time while the other can conform to the rigidization and/or move through the anatomy. Here, the outer device **9400** can lead the inner device **9410** (the inner device **9410** is shown retracted relative to the outer device **9400** in FIG. **64**A and extended substantially even with the outer device **9400** in FIG. **64**B). Advantageously, system **9400***z* can provide a smooth exterior surface to avoid pinching the anatomy and/or entrance of fluid between the inner and outer devices **9410**, **9400**. Having the steering on the outer device **9400** can also provide additional leverage for steering the tip. Also, the outer device can facilitate better

imaging capabilities due to the larger diameter of the outer device **9400** and its ability to accommodate a larger camera.

[0298] FIGS. **65**A-**65**H show the exemplary use of a nested system **2400***z* as described herein. At FIG. **65**A, the inner rigidizing device **2410** is positioned within the outer rigidizing device **2400** such that the distal end of the inner rigidizing device **2410** extends outside of the outer rigidizing device **2400**. At FIG. **65**B, the distal end of the inner rigidizing device **2410** is bent in the desired direction/orientation and then rigidized (e.g., using vacuum or pressure as described herein). At FIG. **65**C, the outer rigidizing device **2400** (in the flexible configuration) is advanced over the rigidized inner rigidizing device **2410** (including over the bending distal section). Once the distal end of the outer rigidizing device **2400** is sufficiently advanced over the distal end of the inner rigidizing device **2410**, then the outer rigidizing device **2400** can be rigidized (e.g., using vacuum or pressure as described herein). At FIG. **65**D, the inner rigidizing device **2410** can then be transitioned to the flexible state (e.g., by removing the vacuum or pressure as described herein and by allowing the steering cables to go slack such that tip can move easily) and can be advanced and directed/oriented/steered as desired. Alternately, in FIG. **65**D, the inner rigidizing device **2410** can be actively steered (either manually or via computational control) as it emerges such that is minimizes the load on the rigidized outer tube. Minimizing the load on the outer rigidizing device **2400** makes it easier for this tube to hold the rigidized shape. Once the inner rigidizing device **2410** is rigidized, the outer rigidizing device **2400** can be transitioned to the flexible state and advanced thereover (as shown in FIG. **65**E). The process can then be repeated as shown in FIGS. **65**F-H.

[0299] In some embodiments, at the completion of the sequence shown in FIGS. **65**A-H, a third rigidizing device can be slid over the first two rigidizing devices (**2400**, **2410**) and rigidized. Rigidizing devices **2400** and **2410** can then be withdrawn. Finally, a fourth rigidizing device can be inserted through the inner lumen of the third tube. This fourth rigidizing device may have a larger diameter and more features than rigidizing device **2410**. For instance, it may have a larger working channel, more working channels, a better camera, or combinations thereof. This technique can allow two smaller tubes, which tend to be more flexible and maneuverable, to reach deep into the body while still ultimately deliver a larger tube for therapeutic purposes. Alternately, in the example above, the fourth rigidizing device can be a regular endoscope as is known in the art.

[0300] In some embodiments, at the completion of the sequence shown in FIGS. **65**A-H, outer rigidizing device **2400** may be rigidized and then the inner rigidizing device **2410** may be removed. For example, the rigidizing device **2410** may be a "navigation" device comprising a camera, lighting and a distal steering section. The "navigation" device **2410** may be well sealed such that it is easy to clean between procedures. A second inner device may then be placed inside the rigidized outer device **2400** and advanced past the distal end of the outer device **2400**. The second inner device may be a "therapeutic" tube comprising such elements as a camera, lights, water, suction and various tools. The "therapeutic" device may not have a steering section or the ability to rigidize, thereby giving additional room in the body of the therapeutic tube for the inclusion of other features, for example, tools for performing therapies. Once in place, the tools on the "therapeutic" tube may be used to perform a therapy in the body, such as, for example, a mucosal resection or dissection in the human GI tract.

[0301] In another embodiment, after or during the completion of the sequence shown in FIGS. **65**A-H, a third device may be inserted inside inner tube **2410**. The third device may be rigidizing and/or an endoscope.

[0302] Although the outer rigidizing device for the nested systems described herein is often referred to as rigidizing via vacuum and the inner scope rigidizing device as rigidizing via pressure, the opposite can be true (i.e., the outer rigidizing device can rigidize via pressure and the inner rigidizing device via vacuum) and/or both can have the same rigidizing source (pressure and/or vacuum).

[0303] Although the inner and outer elements of the nested systems are generally described as including integrated rigidizing elements, the rigidizing elements can be separate (e.g., so as to allow relative sliding between the imaging scope elements and the rigidizing elements).

[0304] The rigidizing devices of the nested systems described herein can be designed such that inner rigidizing device can't rotate substantially within outer rigidizing device when they are assembled. For instance, the outer surface of the inner rigidizing device can have longitudinal ridges and grooves that form a spline. The inner surface of the outer rigidizing device can have corresponding ridges and grooves that mate with the same features in the outer rigidizing device.

[0305] Either or both of the rigidizing devices of the nested systems described herein can be steerable. If both rigidizing devices are steerable, an algorithm can be implemented that steers whichever rigidizing device is flexible and moving longitudinally. The algorithm can steer the flexible rigidizing device to anticipate the shape of the rigidized device thus minimizing the tendency for the moving, flexible rigidizing device to straighten the rigid device.

[0306] If one rigidizing device of the nested systems described herein requires vacuum and the other rigidizing device requires pressure, user controls can be constructed in which moving one vs. the other (outer and inner) involves flipping a switch, with the switch toggling between a first condition in which, for example, one is pressurized for rigidity when the other is vented for flexibility and a second condition in which one is vented for flexibility and the other is vacuumed for stiffness. This, for example, could be a foot pedal or a hand switch.

[0307] In some embodiments, the alternate movement of the nested systems described herein can be controlled manually. In other embodiments, the alternate movement can be controlled automatically, via a computer and/or with a motorized motion control system.

[0308] The nested systems described herein can advantageously be of similar stiffness. This can ensure that the total stiffnesses of the nested system is relatively continuous. The nested systems described herein can be small so as to fit in a variety of different anatomies. For example, for neurology applications, the outside diameter of the system can be between 0.05"-0.15", such as approximately 0.1". For cardiology applications, the outside diameter of the system can be between 0.1"-0.3", such as approximately 0.2". For gastrointestinal applications, the outside diameter of the system can be between 0.3"-1.0", such as 0.8". Further, the nested systems described herein can maintain high stiffness even at a small profile. For example, the change in relative stiffness from the flexible configuration to the rigid configu-

ration can be multiples of 10×, 20×, 30×, and even larger. Additionally, the nested systems described herein can advantageously move smoothly relative to one another.

[0309] The nested systems described herein can advantageously navigate an arbitrary path, or an open, complex, or tortuous space, and create a range of free-standing complex shapes. The nested systems can further advantageously provide shape propagation, allowing for shape memory to be imparted from one element to another. In some embodiments, periodically, both tubes can be placed in a partially or fully flexible state such that, for instance, the radii or curvature of the system increases, and the surrounding anatomy provides support to the system. The pressure or vacuum being used to rigidize the tubes can be reduced or stopped to place the tubes in a partially or fully flexible state. This momentary relaxation (for instance, for 1-10 seconds) may allow the system to find a shape that more closely matches the anatomy it is travelling through. For instance, in the colon, this relaxation may gently open tight turns in the anatomy.

[0310] In some embodiments, the stiffness capabilities of the inner or outer rigidizing devices may be designed such that tight turns formed by the inner rigidizing device at its tip, when copied by the outer rigidizing device, are gradually opened up (made to have a larger radius) as the shape propagates proximally down the outer tube. For instance, the outer rigidizing device may be designed to have a higher minimum radius of curvature when rigidized.

[0311] The nested systems are continuous (i.e., non-segmented) and therefor provide smooth and continuous movement through the body (e.g., the intestines). The nested systems can be disposable and low-cost.

[0312] In some embodiments, the outer rigidizing device can be a dynamically rigidizing overtube (e.g., as described in PCT/US18/42946, the entirety of which is incorporated by reference herein). In some embodiments, the inner rigidizing device can be a rigidizing system or a commercially available scope, for example a 5 mm diameter nasal scope. Utilizing rigidization and a nested system enables the utilization of a smaller scope that delivers, compared to a duodenoscope, more flexibility if desired, more stiffness if desired, enhanced maneuverability, and the ability to articulate at a much smaller radius of curvature.

[0313] In some embodiments, upon reaching the target destination, the inner rigidizing device of a nested system can be withdrawn. The outer rigidizing device can remain rigidized and contrast can be injected through the inner element's space to fluoroscopically image.

[0314] RF coils can be used in any of the nested systems described herein to provide a 3-D representation of whatever shape the nested system takes. That representation can be used to re-create a shape or return to a given point (e.g., for reexamination by the doctor after an automated colonoscopy).

[0315] In some embodiments, the nested systems described herein can be useful as a complete endoscope, with the internal structure carrying the payload of working channels, pressurization lines, vacuum lines, tip wash, and electronics for lighting and imaging (vision systems, ultrasound, x-ray, MRI).

[0316] The nested systems described herein can be used, for example, for colonoscopy. Such a colonoscopy nested system can reduce or eliminate looping. It could eliminate the need for endoscopic reduction. Without looping, the procedure can combine the speed and low cost of a sigmoidoscopy with the efficacy of a colonoscopy. Additionally, colonoscopy nested systems can eliminate conscious sedation and its associated costs, time, risks, and facility requirements. Further, procedural skill can be markedly reduced for such colonoscopy procedures by using the nested systems described herein. Further, in some embodiments, the nested systems described herein can provide automated colonoscopy, wherein a vision system automatically drives the nested system down the center of the colon while looking for polyps. Such an automated system would advantageously not require sedation nor a doctor for the basic exam while allowing the doctor to follow up for further examination if required.

[0317] In some embodiments, a rigidizing device as described herein can be configured as a rigidizing rod. Referring to FIG. **66**, the rod **4900** can include an outer layer **4901**, a braid layer **4909**, and an inner bladder layer **4921**. Further, the gap **4912** within the bladder layer can be sealed and filled, for example, with air or water (e.g., to push the bladder layer **4921** radially outwards). The outer layer **4901** can be a wire-reinforced layer, such as a coil reinforced urethane tube. The braid layer **4901** can include braided strands **4933** and can include any of the features of other braid layers described herein. The inner bladder layer **4921** can be made of a low durometer elastomer. The rod **4900** can further include an atraumatic tip that is soft and/or tapered.

[0318] In some embodiments, the distal end of the inner bladder layer **4921** can be sealed to the outer layer **4901**, and the rod **4900** can include an inlet between the outer layer **4901** and the inner bladder layer **4921** to provide vacuum for rigidization. In other embodiments, the distal end of the inner bladder layer **4921** can be sealed to itself or to the atraumatic distal tip and the proximal end can be configured to have an inlet to the inside of the inner bladder layer **4921** (i.e., radially inward of the inner bladder layer **4921**) to provide pressure rigidization. When pressure rigidization is used, the rod **4900** can further include a vent on the distal and/or proximal end to allow venting of air from between the inner bladder layer **4921** and outer layer **4901** (thereby allowing the bladder **4921** to fully push the braid layer **4909** against the outer layer **4901**).

[0319] In some embodiments, the outer surface of the outer layer **4901** can be coated to provide a low friction surface including a hydrophilic coating. In some embodiments, the outer diameter of the rod **4900** can be less than 5 mm, less than 4 mm, or less than 3 mm. For example, the outer diameter can be between 2 mm and 5 mm, such as between 2.5 mm and 3 mm, such as approximately 2.8 mm. In some embodiments, an angle of the braid of the braid layer **4909** can be less than 25 degrees relative to a longitudinal axis of the tube, such as approximately 5-15 degrees. In some embodiments, there can be between 10 and 50 strands, such as 20-40 strands, extending within the braid layer **4909**.

[0320] Referring to FIG. **67**, the rod **4900** can be used, for example, as a stiffening wire for colonoscopy. In use as such, the colonoscope **5091** can be inserted into the patient's colon. If looping occurs (thereby hindering advancement of the colonoscope), the scope **5091** can be left in place, the working channel **5055** of the scope **5091** can be flushed, water can be applied to the outer surface of the rod **4900** to activate the hydrophilic coating, and the rod **4900** can be inserted in the flexible state (i.e., un-rigidized) through the

working channel **5055**. Once the rod **4900** is fully inserted into the endoscope such that the distal end of the rod **4900** is flush with the distal end of the colonoscope **5091** vacuum or pressure can be applied to the rod **4900** (e.g., via pressure inlet and/or connector **5063***z*), thereby rigidizing the rod. In some embodiments, the pressure or vacuum can be supplied to the rod **4900** through a syringe or locking insufflator The colonoscope **5091** can be advanced over the rod **4900** and relative to the patient while holding the rod **4900** stationary relative to the patient. The vacuum or pressure can be removed to advance or remove the rigidizing rod **4900**.

[0321] Advantageously, the rod **4900** can thus be inserted into the scope **5091** in a flexible configuration so as to navigate around turns easily relative to a standard stiffening wire (i.e., relative to a stiffening wire of fixed rigidity). Further, the rod **4900** can conform to the shape of the looped colon in the flexible configuration while providing a rigid track for the scope to ride along in the rigid configuration. Dynamic transitions of the rod **4900** between flexible and stiff configurations can prevent unwanted straightening of the scope **5091** (which can otherwise occur with standard stiffening wires). Further, the atraumatic tip of the rod **4900** can prevent damaging of the working channel **5055**. The rigidizing rod **4900** can further be relatively long (e.g., longer than the scope) without prohibiting navigation of the scope because the scope moves over and along the rigidizing rod **4900**, and thus the rod **4900** can work with a variety of scopes regardless of length of the scope. Similarly, the rod **4900** can have a diameter of 3.2 mm or less and can thus work with a variety of endoscopes regardless of diameter (as most endoscopes have a working channel that is 3.2 mm or larger).

[0322] The rigidizing systems and devices described herein can be used to treat or access a number of different anatomical locations.

[0323] In one method of use, during a surgical procedure, a rigidizing device as described herein can be introduced to the patient in the flexible configuration. Once the distal end of the rigidizing device is positioned past the challenging anatomy (e.g., a portion of the anatomy that would cause looping or is otherwise difficult to pass with a standard instrument), the rigidizing device can be transitioned to the rigid configuration. An instrument (e.g., a scope) can then be passed over or through the rigid device.

[0324] For example, the devices described herein can be used to navigate the gastrointestinal tract, to reach anatomical locations in the stomach, for abdominal access to anatomical locations otherwise blocked by other organs, for interventional endoscopic procedures (including ESD (Endoscopic Submucosal Dissection) and EMR (Endoscopic Mucosal Resection)), for direct cholangioscopy, for endoscopic retrograde cholangiopancreatography, for cardiac applications, for resection or snaring of a lesion in the gastrointestinal tract, for enteroscopy, for EUS, to access the lungs, to access the kidneys, for neuro applications, for treatment of chronic total occlusions, for laparoscopic manual tools, for contralateral leg access, for ear nose and throat applications, during esophagogastroduodenoscopy, for transoral robotic surgery, for flexible robotic endoscopy, for natural orifice transluminal endoscopic surgery, or for altered anatomy cases. Specific examples are further described below.

[0325] Further, the rigidizing devices described herein can have different dimensions depending upon the desired application. For example, a rigidizing device can have an inner diameter of approximately 0.3"-0.8" (e.g., 0.5"), an outer diameter of 0.4"-1.0" (e.g., 0.6"), and a length of 50-200 cm, such as 75-150 cm, when designed, for example, for use in the gastrointestinal tract. The rigidizing device can have an inner diameter of, for example, 0.04"-0.3" (e.g., 0.2"), an outer diameter of 0.06"-0.4", and a length of 30-130 cm when designed, for example, for use in the cardiac vessels.

[0326] The rigidizing devices described herein can be used as overtubes for scopes in at least three different manners: (I) placement of the overtube after the scope has reached the destination; (II) overtube follows the scope closely, but remains proximal to the tip of the scope until the scope has reached its destination; or (III) the point and shoot method. An exemplary rigidizing device **2000** and scope **2091** is shown in FIGS. **68**A-**68**B

[0327] For method I, the scope **2091** can be placed in the body at the desired location using standard technique, and then the rigidizing device **2000** can be advanced from the proximal end until the rigidizing device **2000** is sufficiently supporting the scope **2091**. For instance, in order to perform a resection in the colon, a doctor may advance a colonoscope to the target site and then advance a rigidizing device almost or completely to the tip of the endoscope. The rigidizing device **2000** may then be rigidized. The rigidized device **2000** can, for example, advantageously enhance control during resection of a colon by providing a stable surgical platform. The rigidized device **2000** can also advantageously facilitate a good connection between the doctor's hand motion of the shaft of the scope **2091** external to the patient and motion of the tip of the scope **2091** (so called "1 to 1" motion).

[0328] For method II, the scope **2091** may lead the rigidizing device **2000** (for example, the distal end of the scope **2091** and the distal end of the rigidizing device **2000** may never approximately align) with the rigidizing device repeatedly being switched between a flexible and rigid state to aid advancement of the scope. For example, when advancing the scope **2091**, the rigidizing device **2000** may be rigid, helping to prevent scope looping and aiding in scope force transmission. Once the scope **2091** has been advanced, the rigidizing device may be made flexible again and advanced distally on the scope. The process may be repeated.

[0329] Method III may include the following steps: (1) rigidizing device **2000** can be in a flexible state with the distal end of the rigidizing device **2000** approximately aligned with the distal end of the scope **2091**; (2) scope **2091** can be steered with the distal end of the rigidizing device **2000** positioned thereover and therefore being steered by the scope **2091**; (3) rigidizing device **2000** can be placed in a rigid state that mirrors the steering position of the scope **2091**; (4) the distal end of scope **2091** can be advanced. This point and shoot method can advantageously allow the scope **2091** to be advanced in the direction to which the tip of the scope **2091** is pointing. In some embodiments, the steps can be repeated to advance the rigidizing device **2000** and scope **2091** within a body cavity or lumen.

[0330] It should be understood that methods I-III can be used in combination with one another. Further, in some embodiments, the rigidizing device can be steerable to further provide direction for the scope.

[0331] The three different manners of control can be used in the digestive tract. For example, these techniques may allow an endoscope **2691***a* to be positioned in the upper

digestive tract **2646***z* with a rigidizing device **2600***a* as shown in FIG. **69**A. As another example, a rigidizing device **2600***b* may be used to position an endoscope **2691***b* in the lower digestive tract **2647***z* as shown in FIG. **69**B. The described manners of control may make the positioning shown in FIGS. **69**A and **69**B easier and faster to achieve, while minimizing risk of complications (such as GI tract perforation) and reducing or eliminating patient discomfort form endoscopic looping.

[0332] The rigidizing devices and systems described herein can be used for endoscopic retrograde cholangiopancreatography (ERCP) and/or direct cholangioscopy (DC). The goal of endoscopic retrograde cholangiopancreatography is to diagnose and treat disease in the bile and pancreatic ducts. This is most commonly performed with a side viewing duodenoscope by navigating a guidewire into the bile and pancreatic ducts, injecting contrast into the ducts, viewing under fluoroscopy, and passing various tools through the ducts over the wire. It is desirable to directly visualize the ducts with a camera rather than using radiation and contrast injections. By passing a small endoscope into the bile ducts, one can directly visualize the ducts without radiation. However, it is very difficult to navigate such a small endoscope through the stomach and into the bile duct as the scope will tend to loop.

[0333] Cannulation of the bile or pancreatic duct is made difficult due to two reasons. First, the endoscope must be small in order to fit inside the small ducts which means it is very flexible and buckles inside the stomach when trying to exit the stomach. Second, the duct entrance (papilla) is on the side of the duodenum wall which means the endoscope must bend and advance at an angle relative to the long axis of the endoscope which cannot be done without a surface to deflect against. The rigidizing devices described herein can be used to create more optimal access and stabilization during ERCP and DC, including the kinematically and clinically challenging tasks of cannulating the papilla. For example, the devices described herein can be used both for getting to the papilla (which is typically performed with a duodenoscope) and to cannulate the biliary and pancreatic trees.

[0334] Referring to FIGS. **70**A-**72**D, the rigidizing devices described herein can be used for ERCP and direct visualization of the pancreatic or bile duct (cholangioscopy) in a variety of ways. For example, as shown in FIGS. **70**A-**70**B, a rigidizing device **8300** (which can be similar to the rigidizing device of FIG. **25**) with a steerable distal end **8302***z* may be used over a cholangioscope **8391**. The cholangioscope **8391** can be a flexible endoscope with a camera, lighting, and optionally a tool channel designed to achieve the bend radius and diameter necessary to navigate into the bile ducts. The bend radius of the cholangioscope **8391** can be 0.5" with a distal tip and insertion tube diameter of 2 mm-6 mm. The cholangioscope **8391** can be placed inside the rigidizing device **8300**, and the rigidizing device **8300** can begin in the flexible condition. The two devices **8300**, **8391** may be navigated together through the upper gastrointestinal tract to the duodenum **8354***z* (or the cholangioscope **8391** may be advanced ahead of the rigidizing device **8300** with the rigidizing device **8300** following it when deemed necessary by the operator). Once in the duodenum **8354***z*, the rigidizing device **8300** can be rigidized and steered to angle the cholangioscope **8391** towards the entrance to the ducts (papilla **8355***z*). The rigidizing device **8300** steering can be locked in place and the cholangioscope **8391** can be advanced towards the papilla **8355***z*. A guidewire **8385** can be pushed through the cholangioscope **8391** and aimed at the entrance to the papilla **8355***z* and pushed through into the bile duct **8357***z* or the pancreatic duct **8356***z* (positioning in the bile duct **8355***z* is shown in FIG. **70**A). As shown in FIG. **70**B, the cholangioscope **8391** can be advanced into the bile duct **8357***z* over the wire **8385** to achieve direct cannulation. This rigidizing device **8300** in this method can advantageously support the small cholangioscope **8391** to keep it from buckling in the stomach, and the steering section **8302***z* of the rigidizing device **8300** can advantageously deflect the cholangioscope **8391** and direct it towards the papilla. As a result, direct visualization can be achieved, reducing the amount of radiation required during ERCP.

[0335] Another exemplary ERCP method is shown in FIGS. **71**A-**71**B. In this embodiment, a rigidizing device **8400** without a steerable distal end can be used. The cholangioscope **8491** can be used to steer the rigidizing device **8400** while in the flexible configuration to point the rigidizing device **8400** towards the papilla **8455***z*. Once pointed in the correct direction, the rigidizing device **8400** can be rigidized. The cholangioscope **8491** can then be advanced in the same manner as described above with respect to FIGS. **70**A-**70**B. This method can be referred to as the "point and shoot" method of direct cholangioscopy.

[0336] Another exemplary ERCP method is shown in FIGS. **72**A-**72**D. In this embodiment, the rigidizing device **8500** includes at least two working channels therein (e.g., similar to the device of FIGS. **20**A-**20**B and **21**A-**21**B). The cholangioscope **8591** is placed down the first tool channel initially for navigation and cannulation of the papilla **8555***z*. Once the guidewire **8585** has been crossed into the bile duct **8557***z* (as shown in FIG. **72**B) or pancreatic duct (**8556***z*), the cholangioscope **8591** can be removed from the first tool channel with the wire **8585** remaining in place inside the duct **8557***z* (as shown in FIG. **72**C). The cholangioscope **8591** can then be placed into the second tool channel (e.g., which may extend sideways out of the wall of the device **8500** as shown in FIG. **81**) such that the duodenal side of the papilla **85552** can be seen (as shown in FIG. **72**D). The first tool channel can be used to place larger instruments therethrough, such as a stent **8558***z* to be placed into the duct **8557***z*. In some embodiments, it may be useful to have to have exterior (duodenal) visualization of the papilla **8555***z* during stent placement since the stent **8558***z* takes up most of the diameter of the duct **8557***z* and a portion of the stent **8558***z* remains inside the duodenum **8554***z*.

[0337] In another exemplary ERCP method, a rigidizing device similar to the device of FIG. **59** includes a single tool channel running the entire length of the device. The rigidizing device includes a camera attached to the outside of the rigidizing device just proximal to the steering section. Cannulation, ERCP, and direct cholangioscopy can be performed similar to the methods described above. When a stent or larger tools are to be used, the cholangioscope can be removed from the tool channel and the rigidizing device camera can be used to view the exterior of the papilla while larger instruments or stents are used.

[0338] In another exemplary ERCP method, the rigidizing device includes a suction tip on the distal end thereof as described in FIGS. **46**A-**46**B. The suction tip can surround the papilla, and suction can be applied at the tip. This action

can stabilize the papilla and make it easier for the cholangioscope to aim to the appropriate location to cross the wire. Holding the surrounding tissue of the papilla can also provide some counter-tension when pushing on the papilla with the wire or cholangioscope. Providing counter tension to the compression force of the cholangioscope or other tools could decrease the number of sphincterotomies (cutting open the papilla) required.

[0339] Advantageously, the rigidizing devices used for ERCP as described herein can be disposable and sterile, reducing risk of infection or cross-patient contamination. The methods further result in less radiation and easy of navigation to the papilla with steering capabilities on the rigidizing device and/or the scope.

[0340] The rigidizing devices and systems described herein can be used for cardiology and cardiac surgery, including in the aortic and mitral valves.

[0341] Typically, in transcatheter, percutaneous procedures, the clinician affects motion from the access site (e.g., an artery or vein in the groin, arm, etc.) using some sort of flexible rod or shaft that has adequate stiffness to advance the catheter to the treatment site but is flexible enough to conform to the anatomy. This means that all the force or leverage is developed at the remote access site and may be reflected off of more local anatomy to: (a) bend the flexible rod or shaft to navigate to the procedure site; and to (b) provide localized forces (linear and torque) at the procedure site. In contrast, a dynamically rigidizing device as described herein effectively moves the access site to the treatment site by providing a means to both navigate through tortuous anatomy to the treatment site and to rigidize and form a stable port at the treatment site independent of anatomical reflections.

[0342] One of the advantages of the rigidizing devices described herein is the ability to conform to surrounding anatomy (e.g., the vasculature). Devices such as guide catheters need to provide a certain amount of stiffness to be advanced through the anatomy (e.g. vasculature) and perform the functions required. Stiff systems, however, can prevent the device from being advanced to the target anatomy due, at least in part, to highly tortuous paths, forcing the anatomy to conform to the device, which can lead to trauma to surrounding tissues and vessels. In contrast, the rigidizing devices described herein can be flexible enough to be moved through the vasculature, conforming to the vasculature instead of remodeling the vasculature. The inch-worming allowed by a rigidizing device or nested system as described herein allows for this flexible forward movement. Once the device has advanced to a target site, the rigidization allows for preservation and utilization of the created path through the vasculature. The rigidizing devices described herein, for example, can be 1/10 as stiff as a typical guide catheter when in a flexible state and 5 times stiffer than a typical guide catheter when in a rigid state.

[0343] In some embodiments, a rigidizing device as described herein can be used during percutaneous procedures in the heart or vasculature. The rigidizing device can both conform to the cardiac anatomy and provide a local distal fulcrum for instrument manipulation. Currently, when performing a percutaneous procedure, the mechanical fixation and stabilization occurs at the access site (e.g., femoral vein, radial artery, iliac vein, etc.). As described above, this fixation point creates a long moment arm extending from the access site to the procedure site. Further, as described in further detail below, the mechanical linkage created by typical stiff catheter systems between the access site and target anatomy relies on anatomical reflections to direct the catheter tip and transmit force to the tools being used. Stiff catheter systems create potential energy along the access route when they are bent to conform to the anatomy. This energy can be released when there is voluntary or involuntary patient movement or unintentional movement by the operator at the access site. In contrast, the rigidizing devices described herein conform to the anatomical pathway prior to rigidization, eliminating stored energy associated with stiff catheter systems. Once rigidized, the mechanical fixation is achieved independently of anatomical reflections, greatly reducing the moment arm and increasing a physician's control over the procedure tools leading to more predictable results. In some embodiments, the rigidizing device can comprise an integrated hemostasis valve, obviating the need for a separate access sheath.

[0344] In some embodiments, the rigidizing devices described herein can be used to stiffen a guide sheath in interventional cardiology or structural heart cases. For example, the rigidizing devices can be used to provide a "rail" for the transcatheter aortic valve replacement (TAVR) device, thereby keeping the tip of the TAVR catheter from scraping and skiving the top of the aortic arch where there is often thrombus burden (current systems tend to ride the outside of the arch, rubbing against plaques, creating embolic debris). The rigidizing devices can help enable superior alignment and placement as well as lower paravalvular leakage and optimal placement relative to pacing nodes.

[0345] In some embodiments, the rigidizing devices described herein can be used as a delivery system that may be passed from the venous circulation through the right atrium and atrial septum into the left atrium through the mitral valve and antegrade into the left ventricular outflow tract and aortic valve. In this manner, a transcatheter aortic valve implantation (TAVI) may be facilitated avoiding contact with the aortic arch and ascending aorta typical with retrograde deployment

[0346] In some embodiments, the rigidizing devices described herein can be used to deliver a mitral valve replacement. That is, crossing the septal wall during mitral valve replacement can be particularly difficult, as it involves multiple curves, a beating heart, and the need for precisely aligned entry and stabilization before delivery of the implant. Current valve delivery platforms can be quite rigid, which can be dangerous for anatomy that it straightens (such as the femoral artery, which can be highly calcified and friable). The rigidizing devices described herein can advantageously create a conduit that goes in flexibly, then rigidizes in whatever shape the particular person's anatomy provided, such that the rigidizing device conforms to the entire anatomical track. As a result, the rigidizing devices described herein can allow the clinician to create a stable mechanical lumen leading directly to the anatomy, to locate it without significant local anatomical load, then to stabilize rigidly in that shape as a device is delivered through it.

[0347] FIG. **73**A depicts an embodiment of a rigidizing device **3700** advanced through the right atrium RA to the left atrium of the heart. A guidewire or other piercing member and dilator can be used to puncture the atrial septum **3704** to create access to the left atrium LA. The rigidizing device **3700** can be advanced to the treatment site using the methods described herein. A cardiac tool **3787** (which may

or may not be rigidizing) can be advanced within with the rigidizing device **3700**. For example, the cardiac tool **3787** and rigidizing device **3700** can be advanced as described with respect to the nested system shown herein, such as in FIGS. **65**A-H. The dynamic nature of the rigidization allows the device **3700** and tool **3787** to be advanced through tortuous anatomy. The rigidizing device **3700** can be rigidized once at the treatment site to provide a stable base for the treatment. Optionally, the rigidizing device **3700** may comprise an anchoring balloon **3778** near its distal tip to anchor the rigidizing device **3700** to chambers in the heart, e.g., to the atrial septum **3704** to maintain the tip of the tube **3700** in the left atrium LA. The detailed view of FIG. **73**B shows the balloon **3778**. The balloon **3778** can be positioned at any location around a circumference of the tube **3700**. In some embodiments, the balloon is annular and surrounds a circumference of the tube **3700**. The rigidizing device **3700** may include an echogenic tip. Other tips allowing real time visualization are also possible (e.g., radiographic tip, a scope within a saline filled bag, etc.).

[0348] FIGS. **74**A-**74**B show an exemplary method for use of a dynamically rigidizing device in performing treatment of a in a small branching vessel, such as the coronary arteries. When navigating to these smaller vessels, oftentimes, applying force in these areas can cause the guide catheter or other advanced devices to be pushed out of the area. Sometimes, access sheaths are used in such situations to provide a bit of mechanical advantage. Still, using such an access sheath, when applying force, for example, to push through an occlusion, the whole device can be pushed out of the area. FIG. **74**A-**74**B compare the use of a standard guide catheter to a rigidizing device as described herein. In FIG. **74**A, a standard guide catheter **3886** is used to navigate to the ostium **3845** of one of the main coronary arteries **3842**. A guidewire **3885** extends from the tip of the guide catheter **3886** and can be used to perform a procedure (e.g., placing a stent). The guide catheter **3886** can, in some embodiments, reflect off of adjacent anatomy **3873** to achieve mechanical advantage, prevent catheter push back, and/or provide more local force. In contrast, FIG. **74**B show a rigidizing device **3800** as described herein advanced through the ostium **3845** and into the coronary artery **3842**. Because of the rigidization capability of the device **3800**, it does not need to reflect off local anatomy and can instead provide inherent stabilization at the treatment site. Additionally, because of the dynamic rigidization capabilities of the rigidizing device, it can be advanced past the ostium **3845** and into the coronary artery **3842**.

[0349] FIG. **75**A shows an exemplary method of using a dynamically rigidizing overtube system for performing a mitral valve repair. This method illustrates how the rigidizing device **3900** can be positioned in the left atrium LA such that it independently maintains axial alignment with the treatment site, in this example, the mitral valve. As shown in FIG. **75**A, the rigidizing device **3900** is advanced through the vasculature to the right atrium RA, through the atrial septum, and into the left atrium LA. The end of the rigidizing device can be steered such that a longitudinal axis **3983** extending through the end **3969** of the tube aligns with the desired treatment area (e.g., portion of the valve). The steering, dynamically rigidizing, and tip visualization capabilities can allow for precise positioning of the rigidizing device. For example, the axis **3983** extends through the mitral valve MV into the left ventricle LV. Another position **3964** of the rigidizing device **3900** is shown in phantom with the axis extending through a leaflet of the mitral valve MV. Current methods of mitral valve repair utilize a guide catheter to navigate to the left atrium LA, and often reliable axial alignment is not possible. The presently disclosed method of using the rigidizing device **3900** to achieve axial alignment in a flexible state prior to rigidization provides a significant benefit over currently used methods of positioning during procedures such as mitral valve repair. This sort of precise alignment can be beneficial in other areas of the anatomy as well (e.g., across other valves, in transseptal access sites, within a vessel lumen, etc.), including the ability to place sutures, clips and other devices within the heart with equivalent precision normally reserved for open heart surgery.

[0350] Referring to FIG. **75**B, the rigidizing device **3900** used in a procedure such as that shown in FIG. **75**A can comprise various configurations. In some embodiments, the rigidizing device **3900** can be steered and positioned using a guidewire **3985**. In some embodiments, the rigidizing device **3900** can comprise a nested system comprising an inner rigidizing device **3910**.

[0351] As shown in FIG. **75**C, in one embodiment, at needle-tipped catheter **3958***z* can be advanced through the rigidizing device **3900** and positioned within the cardiac anatomy, such as above a mitral valve leaflet. In some embodiments, the needle-tipped catheter **3958***z* can contain an anchoring device **3962***z* (pledget, stainless steel pledget, etc.) attached to a length of suture **3959***z* that can be passed through the tissue creating an anchor for the suture. Suture and anchors delivered through the rigidizing device can be used to sew tissue structures together, such as leaflet plication for mitral valve repair.

[0352] It will be appreciated that a system comprising one or more rigidizing devices as described herein can be used in heart procedures other than mitral valve repair. For example, the system may be used in complex mitral valve procedures where the goal may be to effect leaflet repair and mitral annuloplasty during the same procedure. The system can be used to perform transseptal delivery of an aortic prosthesis (e.g., TAVI). In some embodiments, the system is used to perform aortic valve repair via transseptal access. A combination of dynamically rigidizing overtubes can used in synchrony to pass suture or other instruments from one heart chamber to another. In any of these procedures, the dynamically rigidizing systems described herein can advantageously provide a cannula or access sheath providing universal access to the various chambers of the heart.

[0353] FIG. **76**A shows an exemplary dual rigidizing cannula system that can be simultaneously placed in multiple chambers of the heart. The two rigidizing cannulas **4000***a*, **4000***b* can be axially aligned and provide the capability for clinicians to pass instruments from one cannula to the other. In use, the first rigidizing cannula **4000***a* can be navigated through the right atrium RA to the left atrium LA with the tip **4004** of the cannula facing towards the mitral valve **4081**. The rigidizing cannula **4000***a* can be rigidized in this position. The cannula **4004***a* may comprise a bending section near the tip **4004** to properly position the tip and steer the device. The second cannula **4000***b* can be navigated retrograde through the aorta **4066***z* into the left ventricle LV. The cannula **4000***b* can be steered and positioned such that a tip **4039** is positioned below the mitral valve and facing the tip **40004** of the first cannula **4000***a*. The cannula **4000***b* can

be rigidized in this position. The axis **4014** extending between the tip **4004** of the first cannula and the tip **4039** of the second cannula can be aligned with the area to be treated. This dual access can allow, for example, a suture to be passed from one cannula to the other and/or to allow tools to be passed therebetween. Using two cannulas can also allow the procedure to be performed with a greater degree of precision and accuracy (for example, the treatment site can be approached from the top, or bottom, or both). Examples of procedures that can be performed with two such rigidizing cannulas **4000***a*, **400***b* include leaflet plication with standard suture techniques and annuloplasty with conventional rings. Each cannula **4000***a*, **4000***b* can include multiple working channels and provide fixed access sites within the heart. The provision of these dual fixation sites can allow for replication of standard open heart surgical procedures through far less invasive percutaneous access.

[0354] FIG. **76**B shows the dual rigidizing cannula system of FIG. **76**A being used to pass suture through a tissue. The first rigidizing device **4000***a* is positioned on a first side of tissue **4061***z* to be sutured. The second rigidizing device **4000***b* is positioned on an opposite side of the tissue **4061***z*. A needle catheter **4058***z* positioned by the first device **4000***a* can be used in combination with a tool **4065***z* such as a grasper, snare, or the like positioned by the second device **4000***b* to pass suture through the tissue **4061***z*.

[0355] Referring to FIG. **77**, in some embodiments, a rigidizing device as described herein can be used as a trocar during endoscopic procedures. FIG. **77** shows a dynamically rigidizing trocar **4141** and a standard trocar **4138**. Typically, when using a standard trocar **4138**, the initial placement of the trocar **4138** can be incorrect, requiring removal and repositioning. In contrast, the dynamically rigidizing trocar **4141** can allow for minor adjustments during or after placement of the trocar. The dynamically rigidizing trocar **4141** can have steering capability, as described with respect to other dynamically rigidizing devices disclosed herein. Using this capability, the trocar **4141** can be bent or deflected in a desired direction and then rigidized, allowing far greater control than standard trocars. The dynamically rigidizing trocar **4141** can be used in cardiac applications and/or elsewhere in the body. Additionally, the trocar **4141** can be provided in different sizes or shapes depending on the application.

[0356] Referring to FIG. **78**, a dynamically rigidizing device **4200** can be used at the aortic bifurcation **4297**. This area of the vasculature can commonly become diseased and require complex repair based on the extreme tortuous anatomy at this site. Currently, many catheters or other delivery devices used to treat this area travel up to the apex of the bifurcation and then deploy tools down from there. As shown in FIG. **78**, a dynamically rigidizing device **4200** can use a combination of steering and dynamic (e.g., periodic) rigidization to navigate around the bifurcation **4297** and be able to reach any treatment site in the area. For example, the system shown in FIG. **78** can be used to treat a CTO (chronic total occlusion) in one leg by making percutaneous access in the other leg.

[0357] Referring to FIG. **79**, a rigidizing device **4700** with an active deflection segment **4746** and a steerable distal section **4747** can be used in the heart to perform mitral valve repair. The rigidizing device **4700** can be positioned in the left atrium LA such that it independently maintains axial alignment with the treatment site, in this example, the mitral valve MV. The rigidizing device **4700** can thus be advanced through the vasculature to the right atrium RA, through the atrial septum, and into the left atrium LA. The end of the rigidizing device can be steered such that a longitudinal axis **4783** extending through the end **4769** of the tube aligns with the desired treatment area (e.g., portion of the valve). To achieve the desired positioning, the active deflection segment **4746** can be bent in the relatively unconstrained space between the IVC and the atrial septum while the distal steerable section **4747** can be positioned within the left atrium LA and steered or oriented towards the mitral valve MV. In such a position, the rigidizing device **4700** can have a bend with an arc radius of approximately 4-6 cm, such as 5 cm, at an angle of 90 degrees or more.

[0358] Referring to FIG. **80**, a rigidizing device **4800** for use in mitral valve repair (with active deflection segment **4846** and steerable distal section **4847**) can include a distal payload **4848** (e.g., a mitral clip, mitral valve replacement, or annuloplasty ring) attached thereto. Having the distal payload **4848** attached thereto while still incorporating the active deflection segment **4846** and steerable distal section **4847** can advantageously reduce or eliminate the need for an outer large-bore guide catheter during such procedures. The catheter **4800** (or **4700**) for use in mitral valve procedures can, for example, be 14-40 Fr with a length of 80-120 cm.

[0359] A method of using the rigidizing device **4700** or **4800** can include: (1) introducing the device into the distal circulation; (2) advancing the device to the target anatomy (e.g. heart valve); (3) making a first bend with the active deflection segment (e.g., negotiating the bend between the IVC and septal wall, which is approximately) 90°; (4) locking the active deflection segment in the bent configuration using pressure or vacuum; and (5) using the steerable distal section to get to the mitral plane and mitral valve; and (6) delivering a therapy or payload.

[0360] A rigidizing device with an active deflection section and a steerable distal section as described herein can also be used, for example, for placement of fenestrated grafts for thoracic artery or for abdominal aneurysm repair that involves critical branch vessels that require treatment.

[0361] The rigidizing devices and systems described herein can be used for resection or snaring of a lesion in the gastrointestinal tract.

[0362] Referring to FIGS. **81**A-**81**F, in some embodiments, the rigidizing device **700** can be configured so as to control the directionality of a working tool **777** that extends through the working channel **755**. For example, the rigidizing device **700** can include a flexible distal section **702***z* that is highly flexible relative to the proximal rigidizing elongate body **703***z* (which can include rigidizing features as described herein) extending proximally thereof. Referring to FIG. **81**A, the endoscope **791** with a scope steering section **776** can be placed within the rigidizing device **700** in vessel **760***z*. Referring to FIG. **81**B, the rigidizing device **700** can be moved distally such that the flexible distal section **702***z* is positioned over the steering section **776** of the endoscope **791**. As shown in FIG. **81**C, as the steering section **776** bends, the flexible distal section **702***z* and the connected working channel **755** can bend with it, thereby providing steering of the tool **777** in the working channel **755** (e.g., towards the lesion **779** in the vessel **736**). As shown in FIG. **81**D, the tool **777** can then be advanced out of the working channel **755** to the desired location (e.g., the lesion **779**). Referring to FIG. **81**E, the rigidizing device **700** can then be

pulled proximally to move the flexible distal portion **702***z* off of the steerable section **776** and to move the working channel **755** further proximally as well. As shown in FIG. **81**F, this can allow the scope **791** to be steered (with the steerable section **776**) without disturbing the placement or direction of the working tool **777**.

[0363] The rigidizing devices and systems described herein can be used for enteroscopy to navigate substantially all of the small intestine to diagnose and/or treat disease.

[0364] Enteroscopy is kinematically challenging for several reasons, including because the scopes are relatively small diameter (9 mm), they are very long (2 meters), and they frequently loop as they navigate the gastrointestinal tract to get to the beginning or end of the small intestine (the pylorus or the ileocecal valve, respectively).

[0365] The rigidizing devices and systems described herein can be used for IEUS.

[0366] The rigidizing devices and systems described herein can be used to access the lungs. For example, a rigidizing device **2100** and a scope **2191** can be assembled concentrically (the scope inside the rigidizing device) and then placed through the mouth down the trachea to the carina. As detailed herein, a "Point and Shoot" method may be employed at the carina to advance the scope into the left main or right main bronchus. The "Point and Shoot" method may be repeatedly used to select additional, deeper branches in the lungs.

[0367] The rigidizing devices and systems described herein can be used to access the kidneys. For example, a rigidizing device **2100** and a scope **2191** can be assembled concentrically (the scope inside the rigidizing device) and then placed through the urethra into the bladder. As detailed herein, a "Point and Shoot" method may be employed in the bladder to advance the scope into the left or right ureter. The "Point and Shoot" method may be repeatedly used to help the scope reach the kidneys

[0368] The rigidizing devices and systems described herein can be used to navigate through neurological anatomy.

[0369] Systems described herein may be used to access the carotid arteries or the distal vessels leading to or in the brain.

[0370] For example, a guidewire may be placed into the carotid artery. A rigidizing device or sheath may be placed over the guidewire and directed into the carotid artery. Once the overtube or sheath is placed at the target site, it may be rigidized to decrease the likelihood of the catheter or guidewire prolapsing into the aortic arch during the procedure.

[0371] The rigidizing devices and systems described herein can be used for access and/or treatment of chronic total occlusions (CTO).

[0372] Thus, in some embodiments, the rigidizing devices can be incorporated into catheters for interventional cardiology, such that they track very easily (flexible), then can be rigidized for instances when the device is used to push through locally anatomy, such as for instance when treating a CTO.

[0373] The rigidizing devices and systems described herein can be used with laparoscopic manual tools.

[0374] The rigidizing devices and systems described herein can be used for contralateral leg access.

[0375] The rigidizing devices and systems described herein can be used for ear, nose, and throat (ENT) applications.

[0376] The rigidizing devices and systems described herein can be used to perform therapies during esophagogastroduodenoscopy (EGD), for example, on the roof of the stomach.

[0377] The rigidizing devices and systems described herein can be used for TORS (transoral robotic surgery).

[0378] The rigidizing devices and systems described herein can be used for NOTES (Natural Orifice Transluminal Endoscopic Surgery).

[0379] The rigidizing devices and systems described herein can be used for altered anatomy cases, including Roux-en-Y.

[0380] It should be understood that any feature described herein with respect to one embodiment can be combined with or substituted for any feature described herein with respect to another embodiment. For example, the various layers and/or features of the rigidizing devices described herein can be combined, substituted, and/or rearranged relative to other layers.

[0381] Additional details pertinent to the present invention, including materials and manufacturing techniques, may be employed as within the level of those with skill in the relevant art. The same may hold true with respect to method-based aspects of the invention in terms of additional acts commonly or logically employed. Also, it is contemplated that any optional feature of the inventive variations described may be set forth and claimed independently, or in combination with any one or more of the features described herein. Likewise, reference to a singular item, includes the possibility that there are a plurality of the same items present. More specifically, as used herein and in the appended claims, the singular forms "a," "and," "said," and "the" include plural referents unless the context clearly dictates otherwise. It is further noted that the claims may be drafted to exclude any optional element. As such, this statement is intended to serve as antecedent basis for use of such exclusive terminology as "solely," "only" and the like in connection with the recitation of claim elements, or use of a "negative" limitation. Unless defined otherwise herein, all technical and scientific terms used herein have the same meaning as commonly understood by one of ordinary skill in the art to which this invention belongs. The breadth of the present invention is not to be limited by the subject specification, but rather only by the plain meaning of the claim terms employed.

[0382] When a feature or element is herein referred to as being "on" another feature or element, it can be directly on the other feature or element or intervening features and/or elements may also be present. In contrast, when a feature or element is referred to as being "directly on" another feature or element, there are no intervening features or elements present. It will also be understood that, when a feature or element is referred to as being "connected", "attached" or "coupled" to another feature or element, it can be directly connected, attached or coupled to the other feature or element or intervening features or elements may be present. In contrast, when a feature or element is referred to as being "directly connected", "directly attached" or "directly coupled" to another feature or element, there are no intervening features or elements present. Although described or shown with respect to one embodiment, the features and elements so described or shown can apply to other embodiments. It will also be appreciated by those of skill in the art

that references to a structure or feature that is disposed "adjacent" another feature may have portions that overlap or underlie the adjacent feature.

[0383] Terminology used herein is for the purpose of describing particular embodiments only and is not intended to be limiting of the invention. For example, as used herein, the singular forms "a", "an" and "the" are intended to include the plural forms as well, unless the context clearly indicates otherwise. It will be further understood that the terms "comprises" and/or "comprising," when used in this specification, specify the presence of stated features, steps, operations, elements, and/or components, but do not preclude the presence or addition of one or more other features, steps, operations, elements, components, and/or groups thereof. As used herein, the term "and/or" includes any and all combinations of one or more of the associated listed items and may be abbreviated as "/".

[0384] Spatially relative terms, such as "under", "below", "lower", "over", "upper" and the like, may be used herein for ease of description to describe one element or feature's relationship to another element(s) or feature(s) as illustrated in the figures. It will be understood that the spatially relative terms are intended to encompass different orientations of the device in use or operation in addition to the orientation depicted in the figures. For example, if a device in the figures is inverted, elements described as "under" or "beneath" other elements or features would then be oriented "over" the other elements or features. Thus, the exemplary term "under" can encompass both an orientation of over and under. The device may be otherwise oriented (rotated 90 degrees or at other orientations) and the spatially relative descriptors used herein interpreted accordingly. Similarly, the terms "upwardly", "downwardly", "vertical", "horizontal" and the like are used herein for the purpose of explanation only unless specifically indicated otherwise.

[0385] Although the terms "first" and "second" may be used herein to describe various features/elements, these features/elements should not be limited by these terms, unless the context indicates otherwise. These terms may be used to distinguish one feature/element from another feature/element. Thus, a first feature/element discussed below could be termed a second feature/element, and similarly, a second feature/element discussed below could be termed a first feature/element without departing from the teachings of the present invention.

[0386] As used herein in the specification and claims, including as used in the examples and unless otherwise expressly specified, all numbers may be read as if prefaced by the word "about" or "approximately," even if the term does not expressly appear. The phrase "about" or "approximately" may be used when describing magnitude and/or position to indicate that the value and/or position described is within a reasonable expected range of values and/or positions. For example, a numeric value may have a value that is +/−0.1% of the stated value (or range of values), +/−1% of the stated value (or range of values), +/−2% of the stated value (or range of values), +/−5% of the stated value (or range of values), +/−10% of the stated value (or range of values), etc. Any numerical range recited herein is intended to include all sub-ranges subsumed therein.

What is claimed is:

1. A method, the method comprising:

advancing an elongate rigidizing device over a guidewire within a patient's vasculature with the rigidizing device in a flexible configuration to position a distal end region of the rigidizing device at a target region within the vasculature;

converting the rigidizing device from the flexible configuration to a more rigid configuration by applying pressure to compress a plurality of lengths of filaments between a bladder layer and a support layer within the rigidizing device; and

performing one or more procedures at the target region through a lumen of the rigidizing device while the rigidizing device is maintained in the more rigid configuration.

2. The method of claim **1**, wherein applying pressure comprises applying positive pressure.

3. The method of claim **1**, wherein applying pressure comprises applying negative pressure.

4. The method of claim **1**, wherein performing one or more procedures at the target region comprises removing an occlusion from the target region.

5. The method of claim **1**, wherein applying pressure comprises applying positive or negative pressure.

6. The method of claim **1**, wherein advancing the elongate rigidizing device over the guidewire comprises advancing the distal end region of the rigidizing device into a region of the patient's heart.

7. The method of claim **1**, wherein advancing the elongate rigidizing device over the guidewire comprises advancing the distal end region of the elongate rigidizing device adjacent to a pulmonary embolism.

8. The method of claim **1**, wherein advancing the elongate rigidizing device over the guidewire comprises advancing the distal end region of the elongate rigidizing device adjacent to a chronic total occlusion.

9. The method of claim **1**, wherein advancing the elongate rigidizing device over the guidewire comprises inserting the elongate rigidizing device through a neurological anatomy.

10. The method of claim **1**, wherein performing one or more procedures at the target region comprises inserting a grasper or snare through the lumen of the rigidizing device.

11. The method of claim **1**, wherein advancing the elongate rigidizing device over the guidewire comprises advancing the distal end region of the elongate rigidizing device to a vascular bifurcation.

12. The method of claim **1**, wherein advancing the elongate rigidizing device over the guidewire comprises advancing through a tortuous pathway of the vasculature in the flexible configuration.

13. The method of claim **1**, wherein advancing comprises switching the elongate rigidizing device between the flexible configuration and the more rigid configuration as the elongate rigidizing device is navigated through the vasculature.

14. The method of claim **13**, wherein switching comprises applying and/or releasing pressure within a layered region forming a wall of the rigidizing device.

15. The method of claim **1**, further comprising converting the rigidizing device to the flexible configuration and removing the elongate rigidizing device from the patient's vasculature or repositioning the elongate rigidizing device within the patient's vasculature.

16. The method of claim **1**, wherein performing one or more procedures at the target region comprises applying suction through the lumen.

17. The method of claim **1**, wherein performing one or more procedures at the target region comprises passing an implant device through the lumen.

18. The method of claim **17**, wherein the implant device comprises a replacement valve.

19. A method, the method comprising:

advancing an elongate rigidizing device over a guidewire within a patient's vasculature with the rigidizing device in a flexible configuration to position a distal end region of the rigidizing device at an occlusion within the vasculature;

converting the rigidizing device from the flexible configuration to a more rigid configuration by applying pressure to compress a plurality of lengths of filaments between a bladder layer and a support layer within the rigidizing device; and

removing an occlusion from the target region through a lumen of the rigidizing device while the rigidizing device is maintained in the more rigid configuration.

20. A method, the method comprising:

advancing an elongate rigidizing device over a guidewire within a patient's vasculature with the rigidizing device in a flexible configuration to position a distal end region of the rigidizing device near an occlusion within the vasculature;

converting the rigidizing device from the flexible configuration to a more rigid configuration by applying pressure within the rigidizing device to drive a bladder layer within the rigidizing device against a plurality of lengths of filaments to compress the plurality of lengths of filaments between the bladder layer and a support layer within the rigidizing device; and

treating an occlusion within the vasculature at the target region through a lumen of the rigidizing device while the rigidizing device is maintained in the more rigid configuration.

* * * * *