US 20250257579A1

(19) United States
(12) Patent Application Publication
Rashid et al.
(10) Pub. No.: US 2025/0257579 A1
(43) Pub. Date: Aug. 14, 2025

(54) **LIGHTWEIGHT COMPOSITE ROOFING SUPPORT SYSTEM**

(71) Applicant: **Phil Squared Roof Jack Systems LLC**, Highland, MI (US)

(72) Inventors: **Philip F. Rashid**, Brighton, MI (US); **Phillip A. Tesolin**, Hartland, MI (US)

(73) Assignee: **Phil Squared Roof Jack Systems LLC**, Highland, MI (US)

(21) Appl. No.: **19/192,272**

(22) Filed: **Apr. 28, 2025**

Related U.S. Application Data

(63) Continuation of application No. 17/163,200, filed on Jan. 29, 2021, now Pat. No. 12,286,806, which is a continuation-in-part of application No. 17/101,330, filed on Nov. 23, 2020, which is a continuation of application No. 15/981,491, filed on May 16, 2018, now Pat. No. 10,844,616, said application No. 17/163,200 is a continuation of application No. 29/741,731, filed on Jul. 15, 2020, now Pat. No. Des. 983,411.

(60) Provisional application No. 62/506,835, filed on May 16, 2017.

Publication Classification

(51) **Int. Cl.**

E04G 3/26	(2006.01)
E04D 13/12	(2006.01)
E04D 15/02	(2006.01)
E04G 3/34	(2006.01)

(52) **U.S. Cl.**

CPC ***E04G 3/26*** (2013.01); ***E04D 13/12*** (2013.01); ***E04D 15/02*** (2013.01); ***E04G 3/265*** (2013.01); *E04G 3/34* (2013.01)

(57) **ABSTRACT**

A lightweight composite roofing support system comprises a longitudinally-extending core member comprising a longitudinally-extending first roof contact side comprising a first edge and opposed second edge, a longitudinally-extending second side comprising a second side working surface having a second width and a second length that is greater than the second width, the second side tapering toward the first edge at a first predetermined acute angle, and a longitudinally-extending third side comprising a third side working surface having a third width and a third length that is greater than the third width, the third side tapering toward the second edge at a second predetermined acute angle that is different than the first predetermined acute angle, a first end comprising an integral first recess defining a first handle, and an opposed second end comprising an integral second recess defining a second handle, the core member comprising a wedge-shaped lateral cross-section.

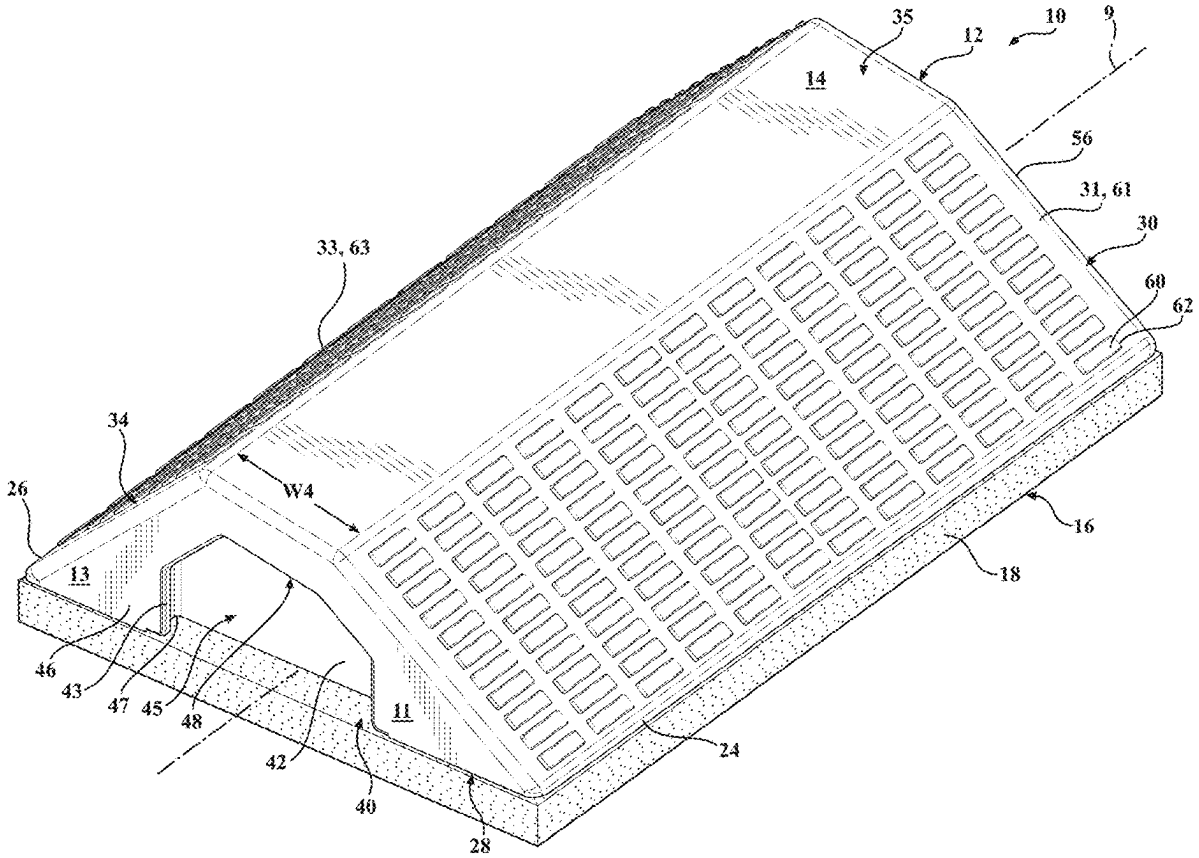

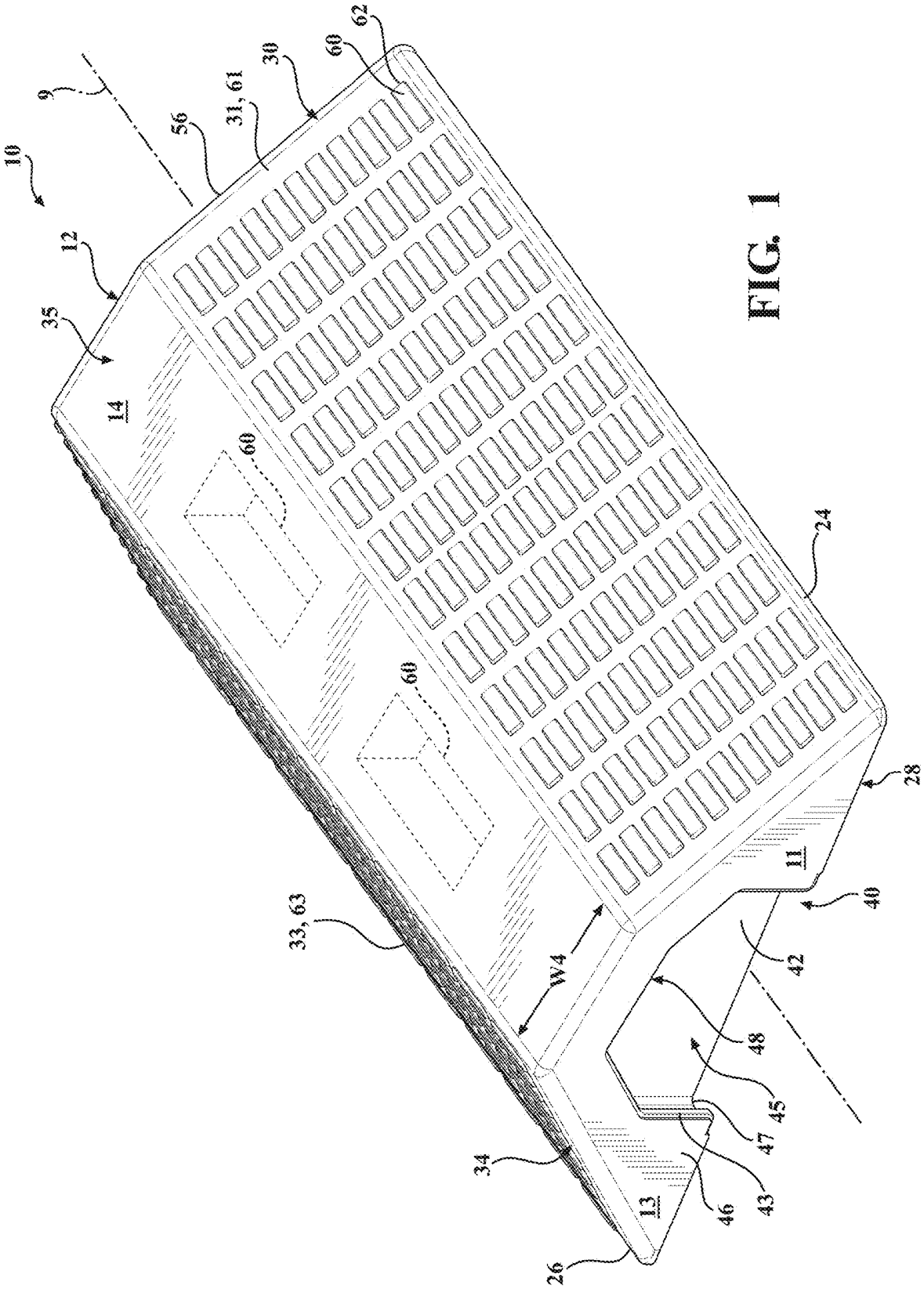
10
9
56
31, 61
30
60
62
12
35
14
60
60
24
28
11
40
42
48
45
47
43
46
13
26
34
33, 63
W4

FIG. 1

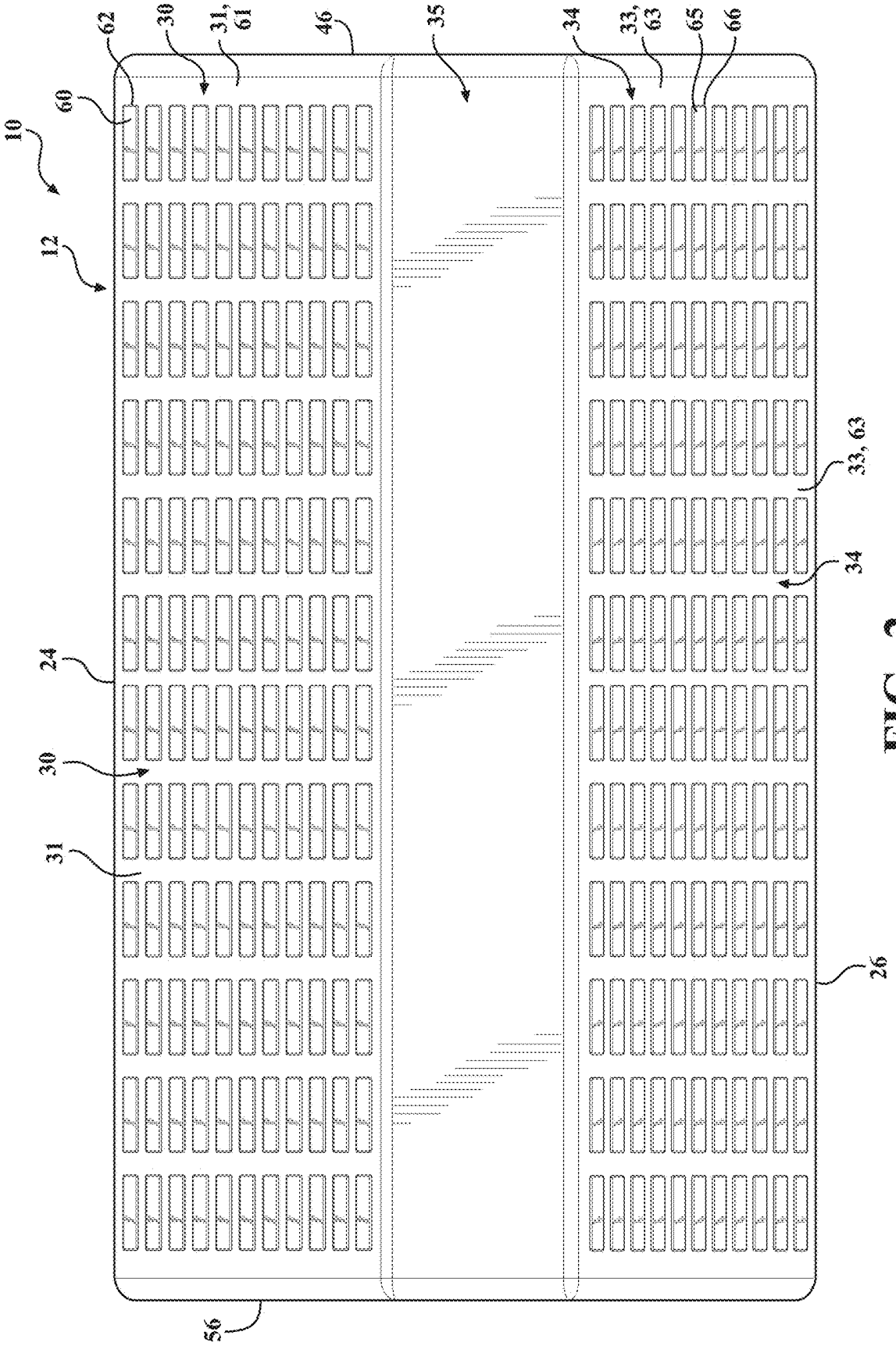

FIG. 2

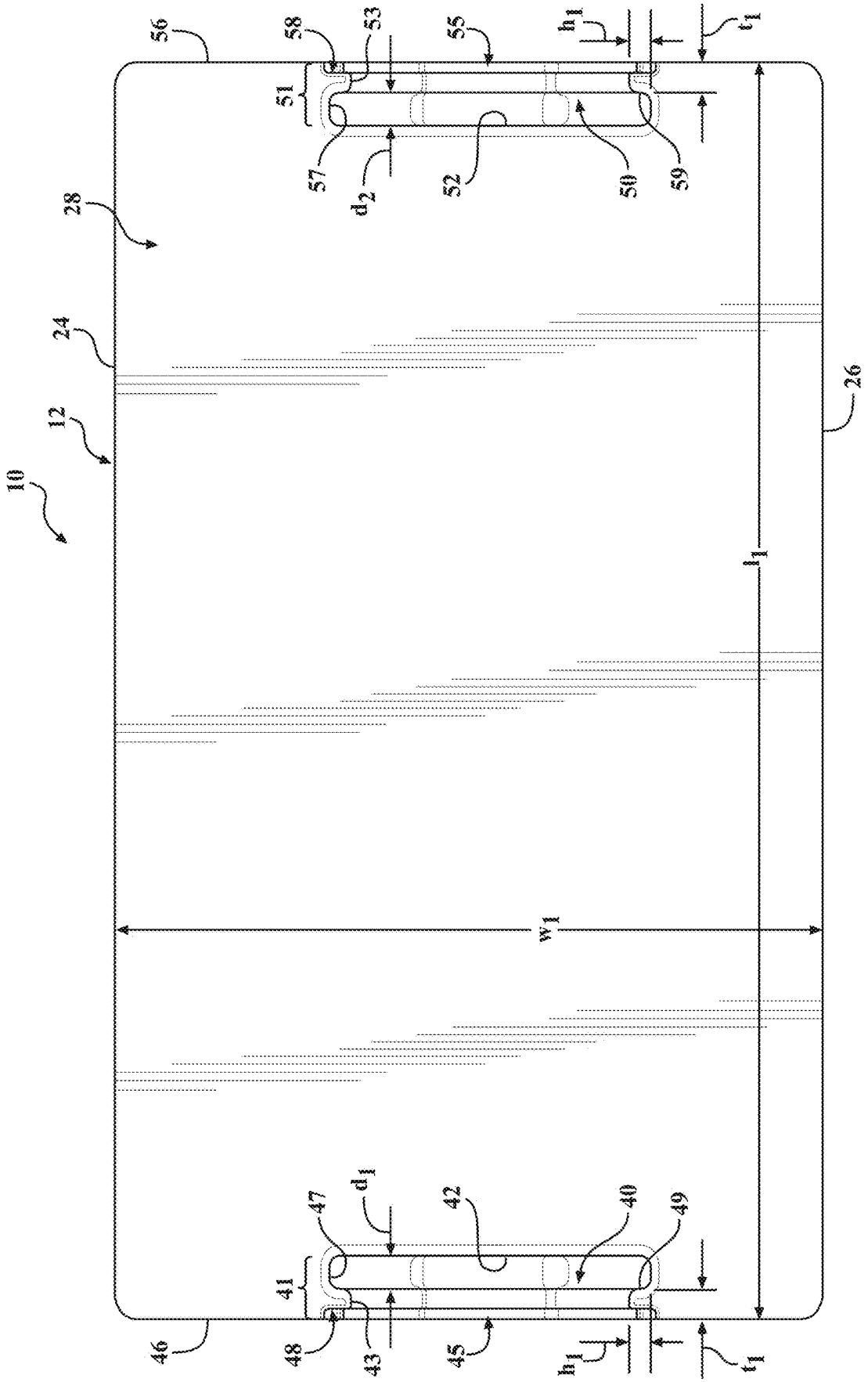
10
12
24
26
28
46
56
58
53
55
51
57
d_2
52
50
59
h_1
t_1
l_1
w_1
47
d_1
42
40
49
41
48
43
45
h_1
t_1

FIG. 3

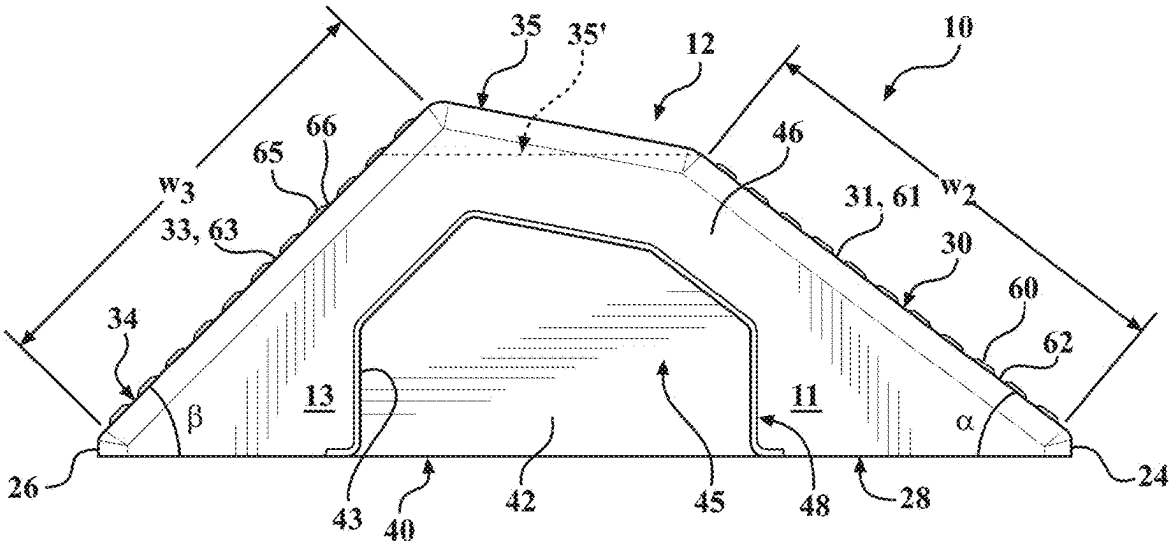
35
35'
12
10
66
65
46
w3
w2
33, 63
31, 61
30
60
34
62
13
11
β
α
26
24
43
40
42
45
48
28

FIG. 4

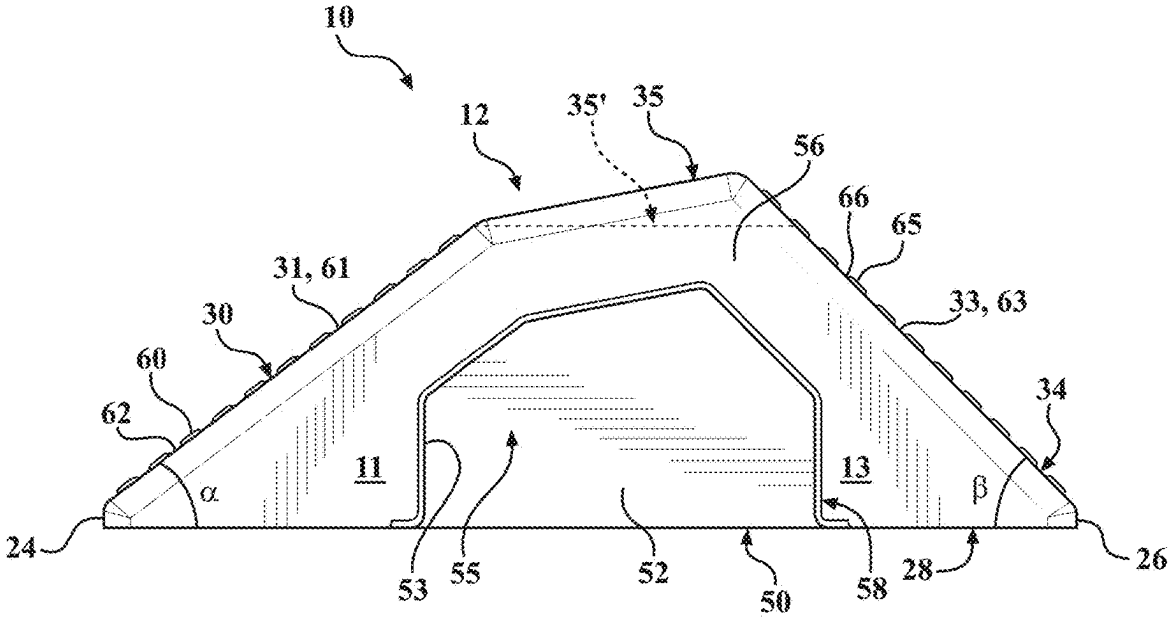
10
12
35'
35
56
66
65
31, 61
30
33, 63
60
62
34
11
13
α
β
24
26
53
55
52
50
58
28

FIG. 5

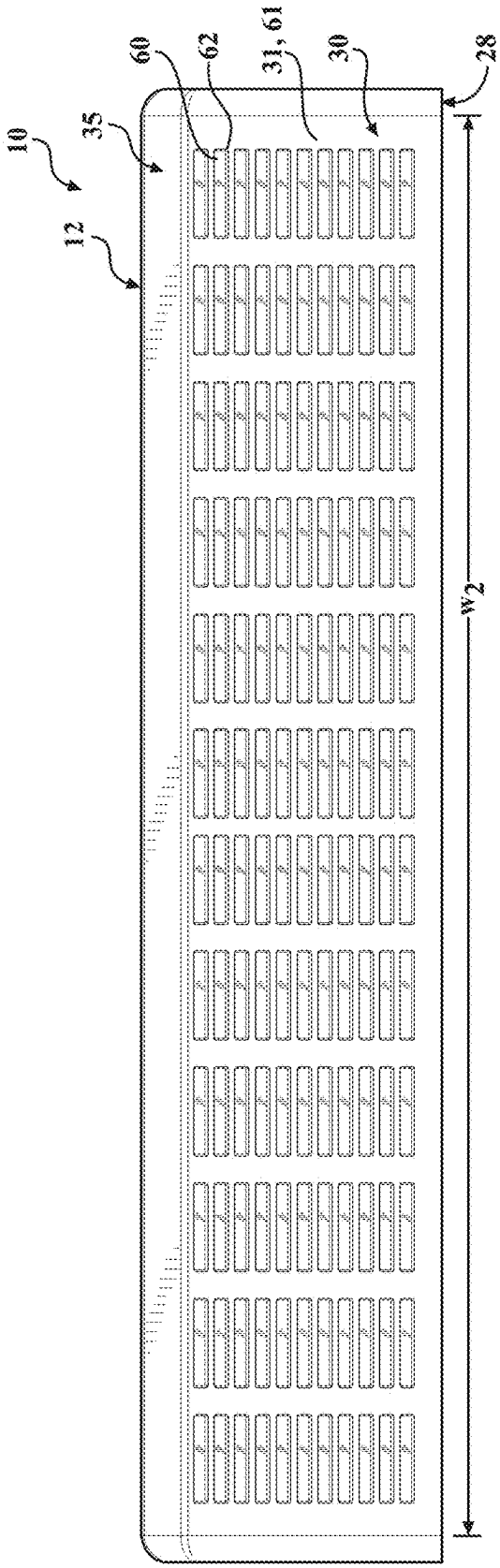

FIG. 6

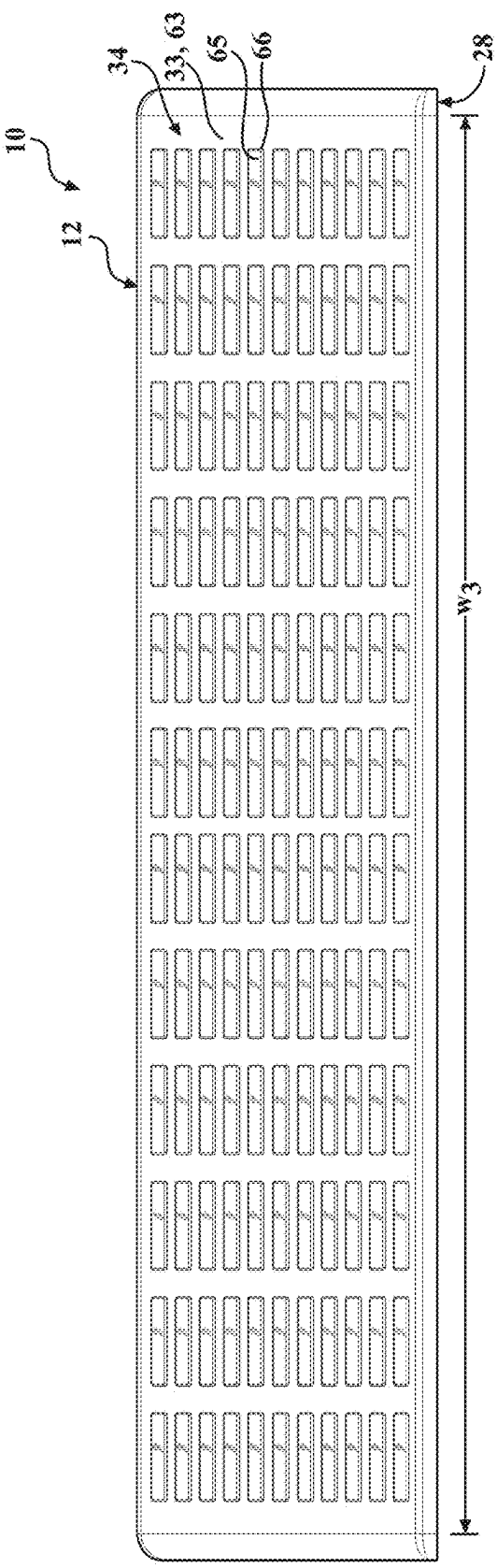

FIG. 7

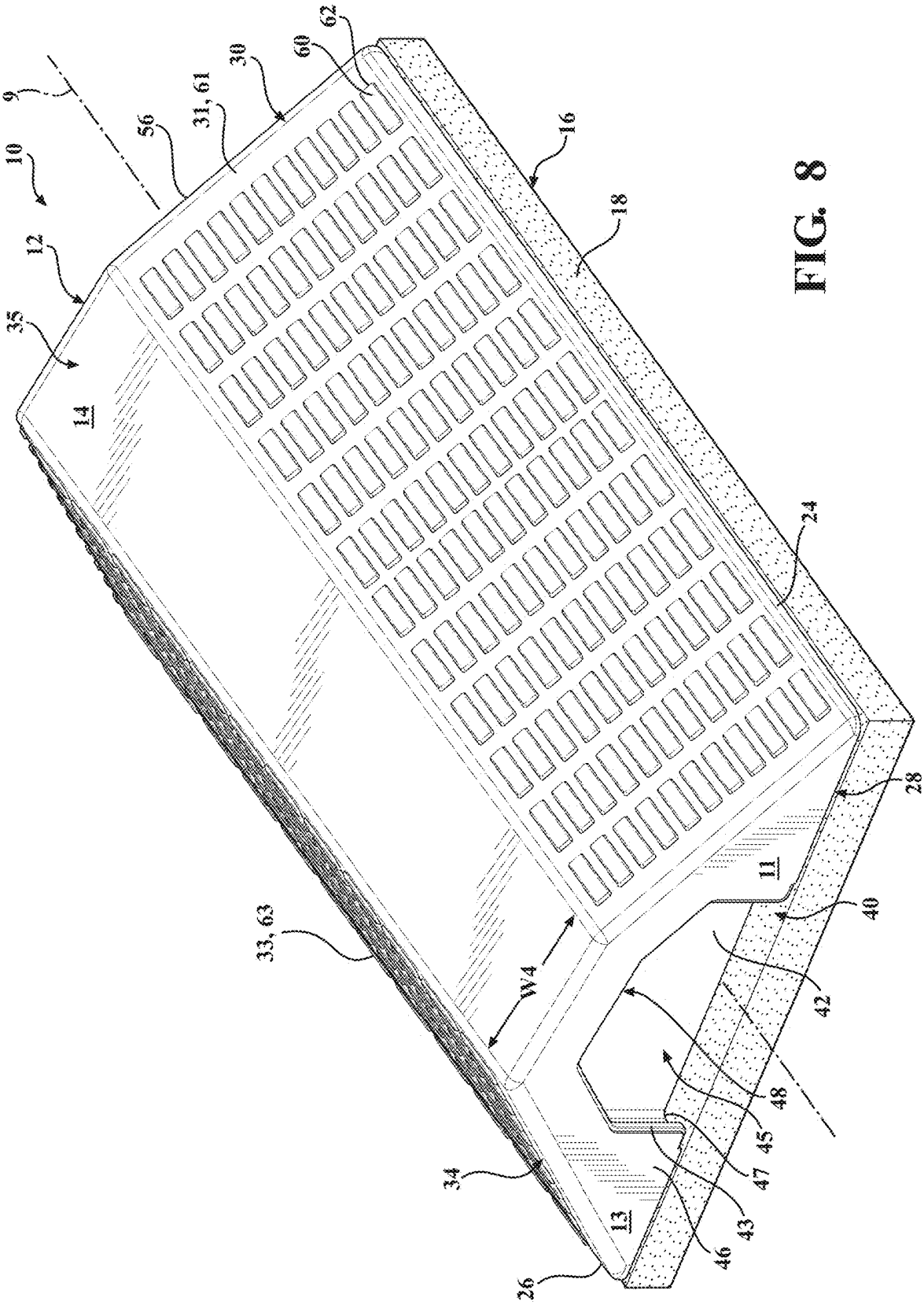
9
10
12
35
14
56
31, 61
30
60
62
16
18
24
28
11
40
42
48
45
47
43
46
13
26
34
33, 63
W4

FIG. 8

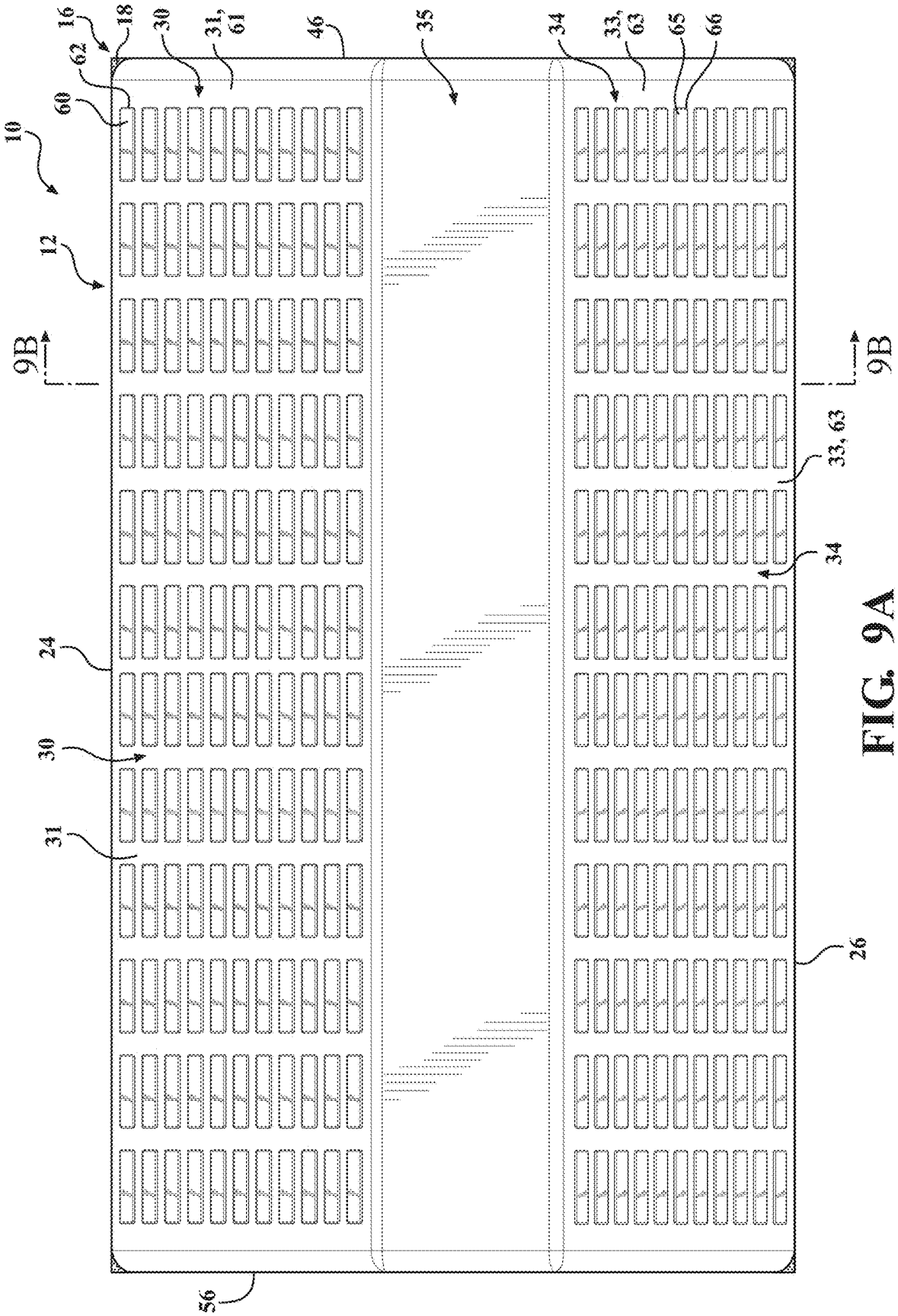
16
18
30
31, 61
46
35
34
33, 63
65
66
62
60
10
12
9B
9B
33, 63
34
24
30
31
26
56

FIG. 9A

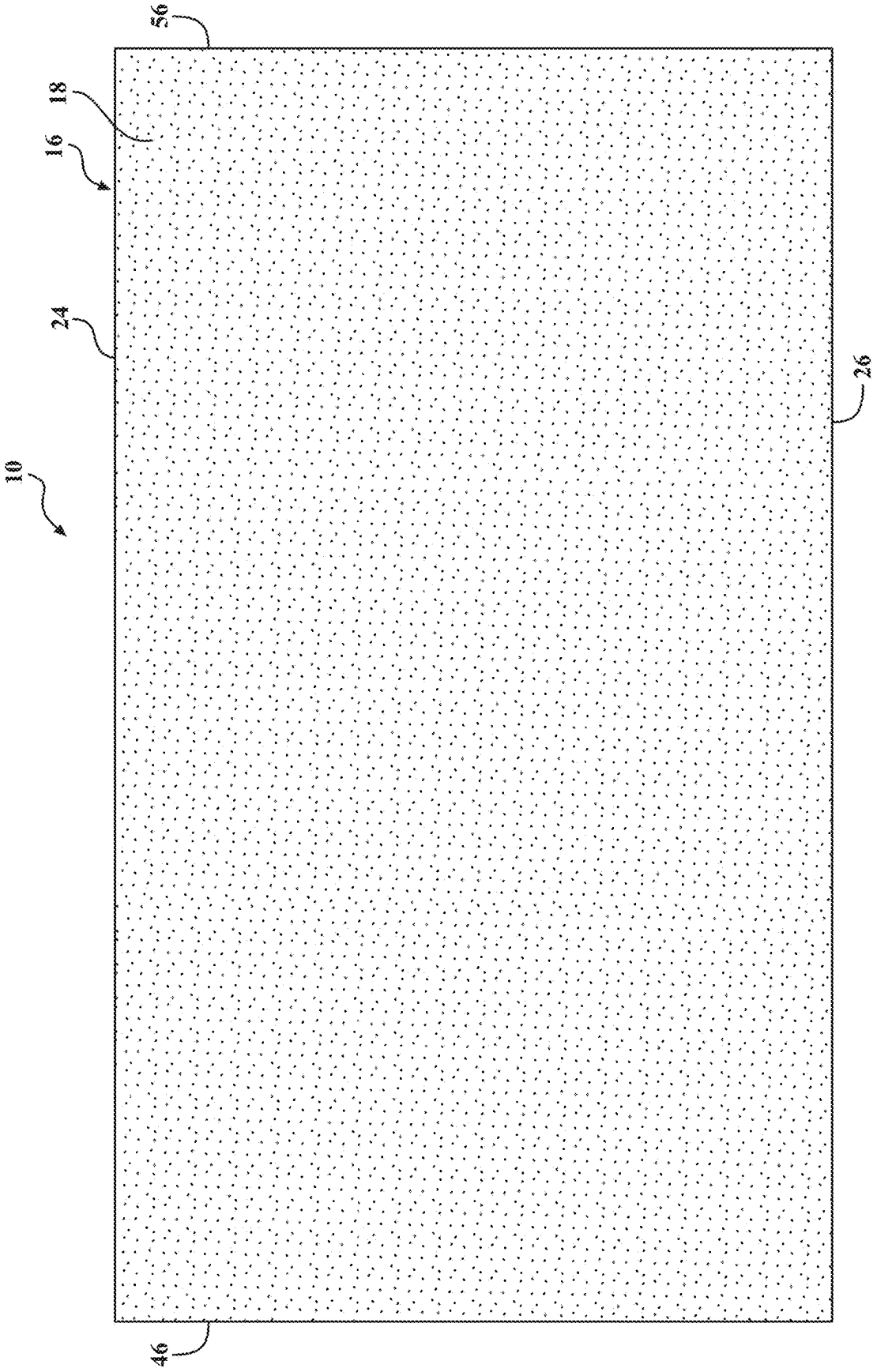

FIG. 10

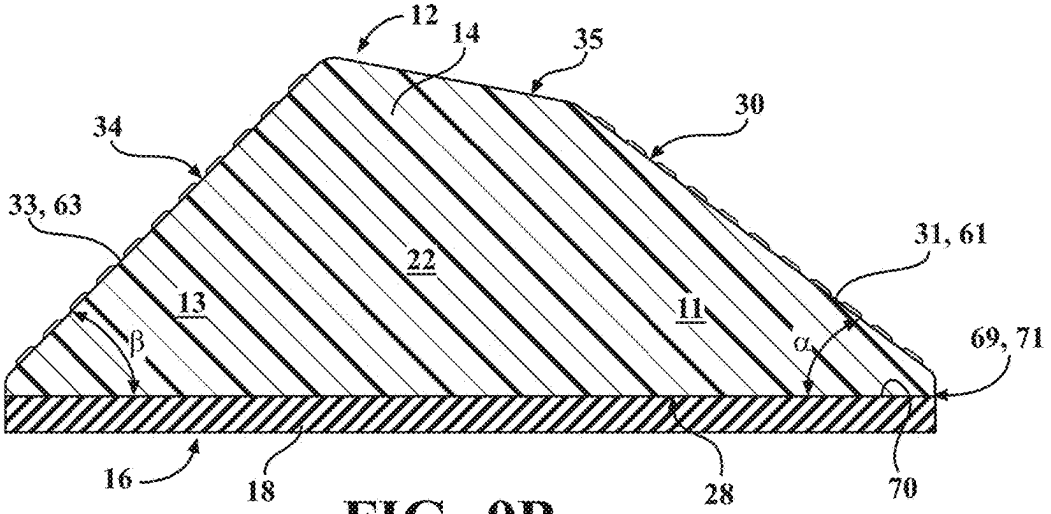

FIG. 9B

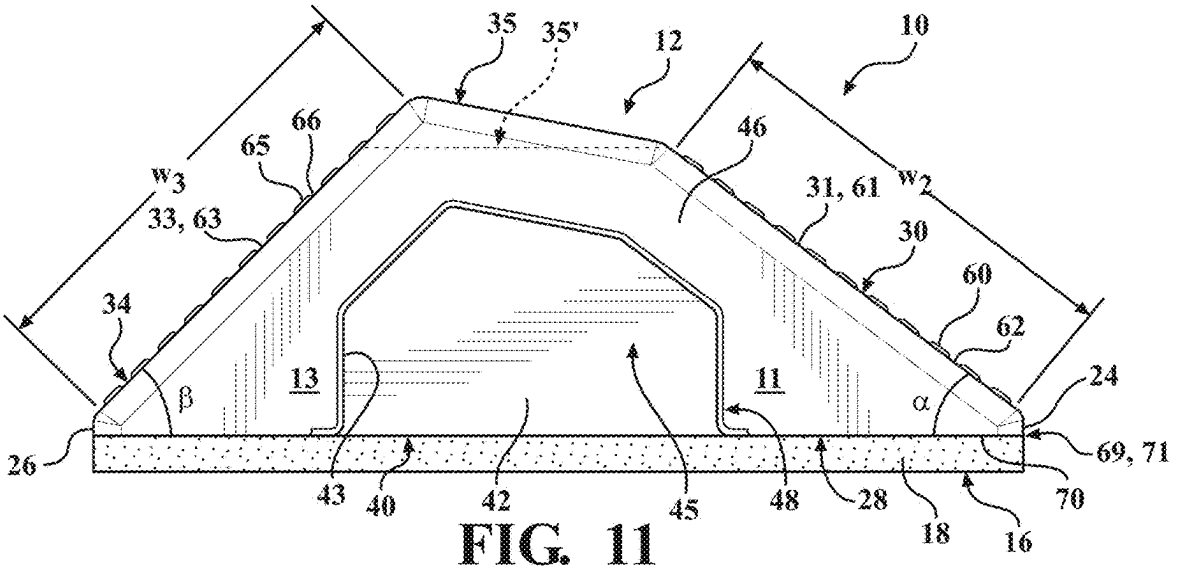

FIG. 11

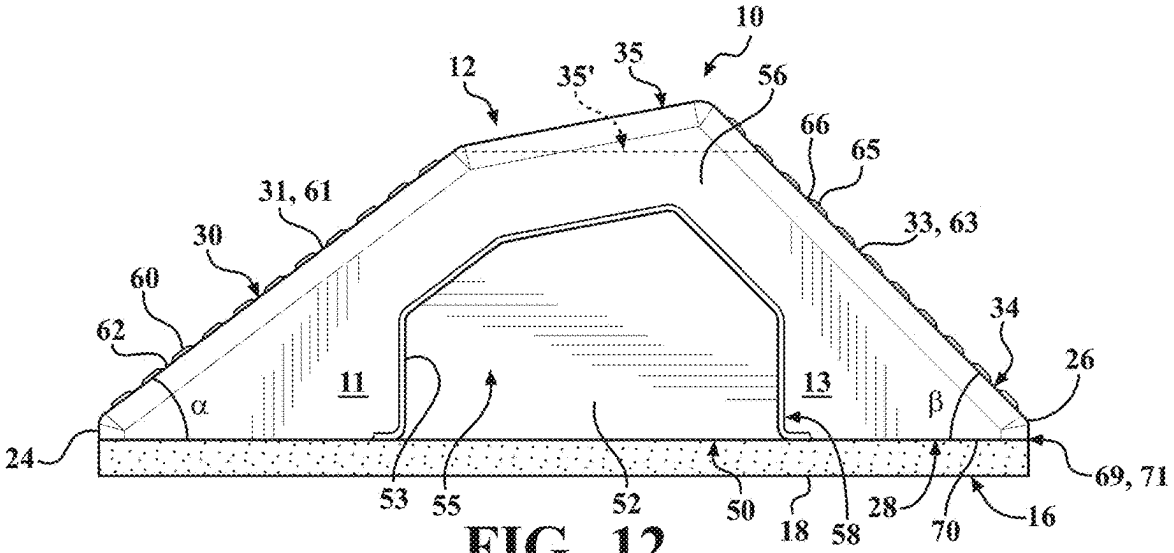

FIG. 12

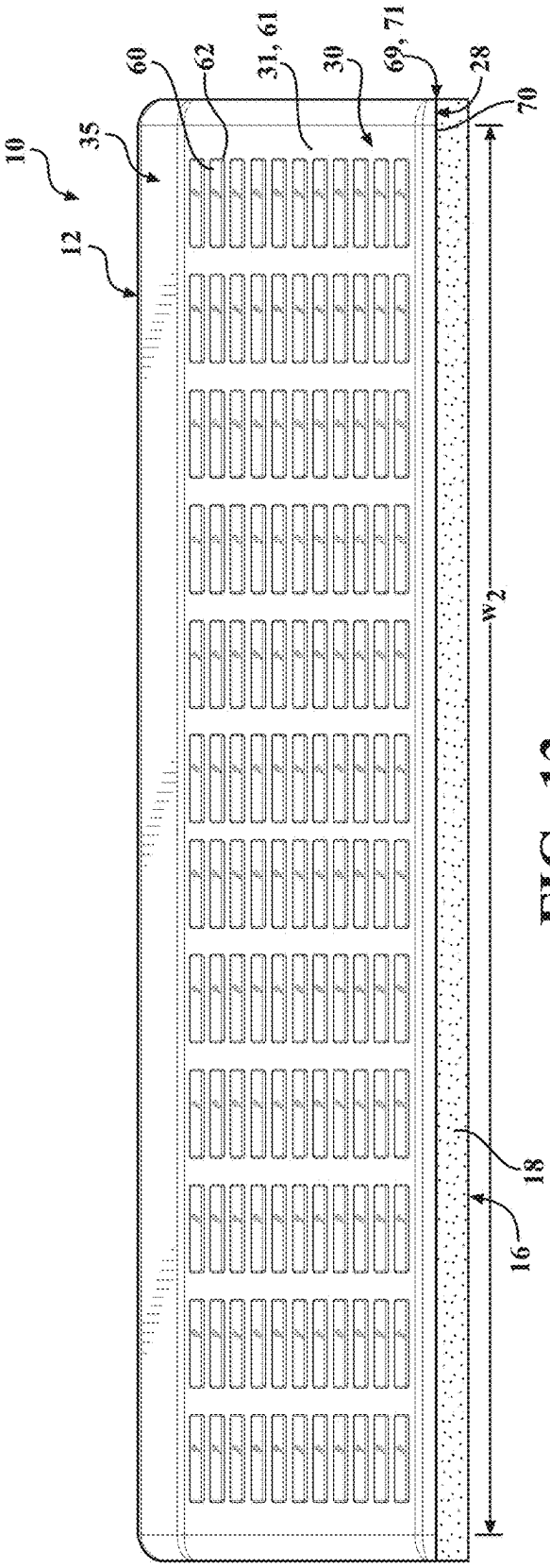
10
12
35
60
62
31, 61
30
69, 71
28
70
w_2
18
16

FIG. 13

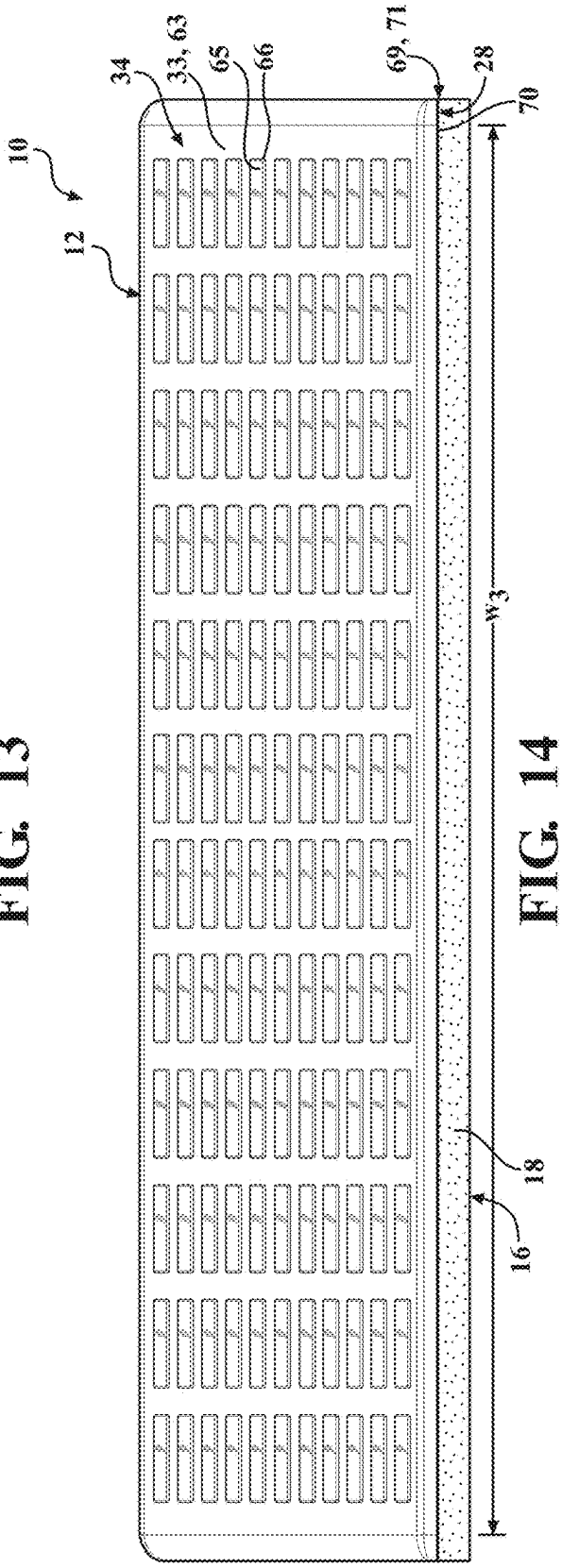
10
12
34
33, 63
65
66
69, 71
28
70
w_3
18
16

FIG. 14

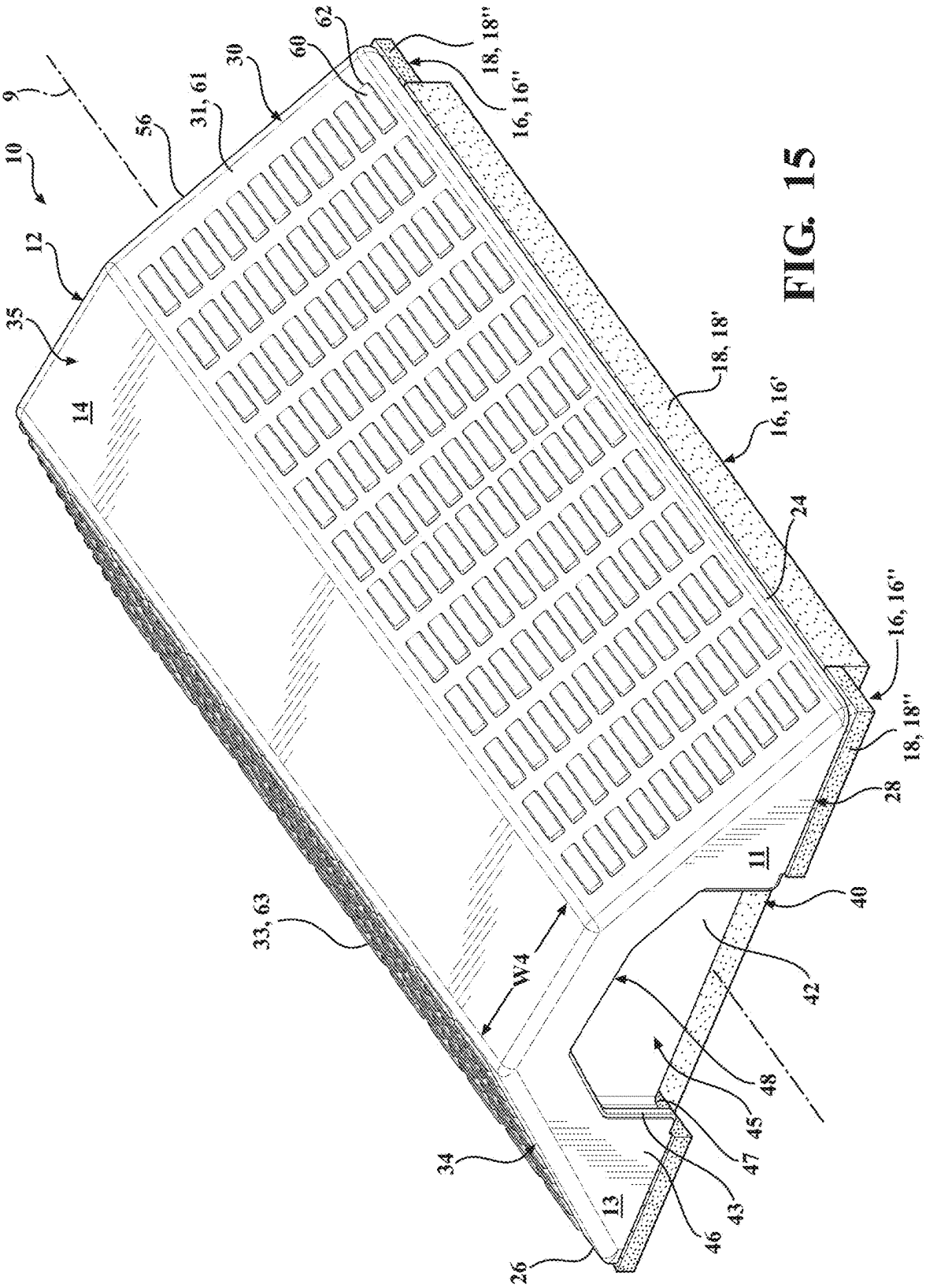
9
10
12
35
14
56
31, 61
30
60
62
18, 18''
16, 16''
18, 18'
16, 16'
24
16, 16''
18, 18''
28
11
40
42
48
45
47
43
46
13
26
34
33, 63
W4

FIG. 15

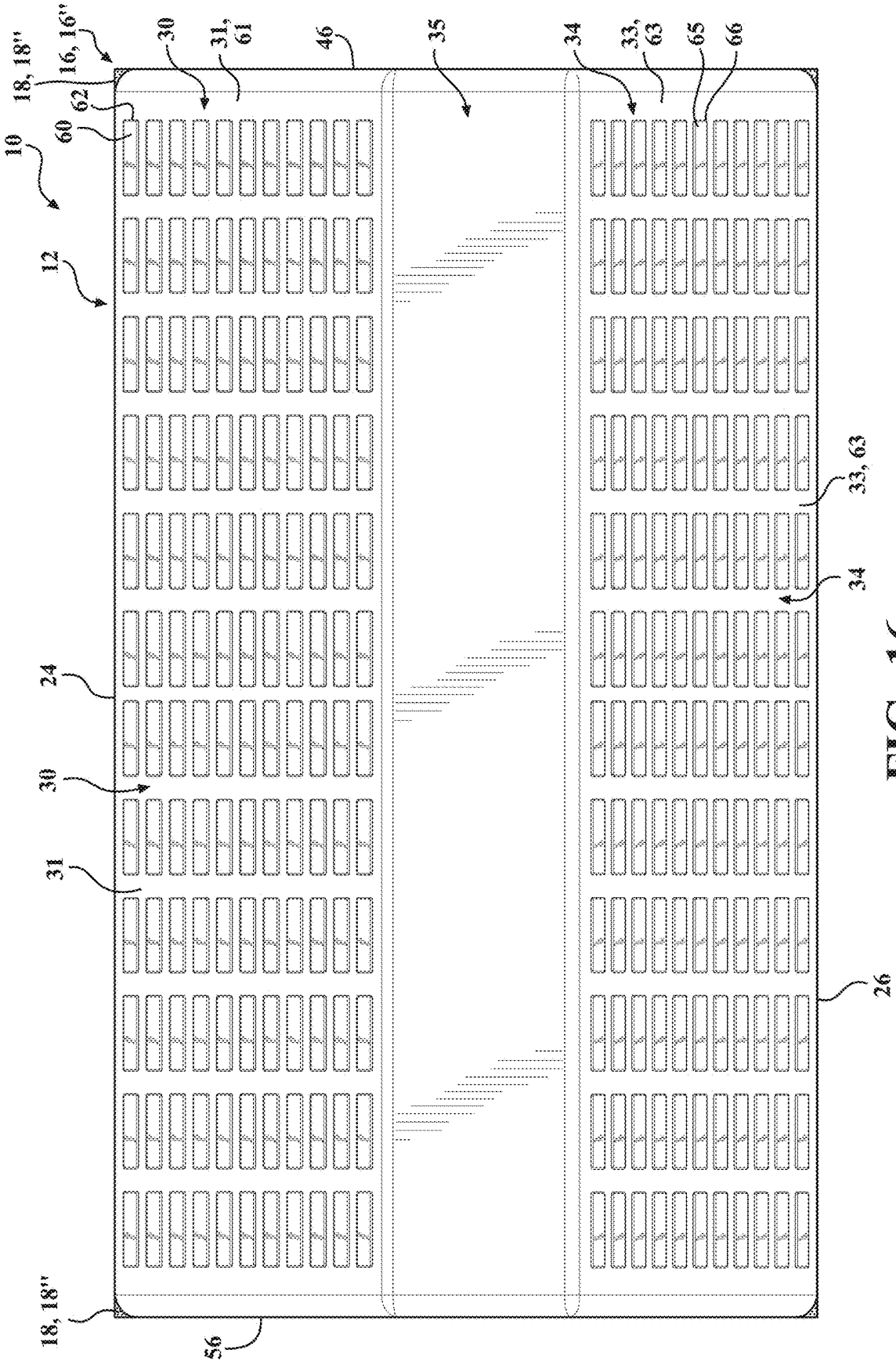
18, 18''
16, 16''
10
12
24
30
31
18, 18''
56
62
60
30
31, 61
46
35
34
33, 63
65
66
33, 63
34
26

FIG. 16

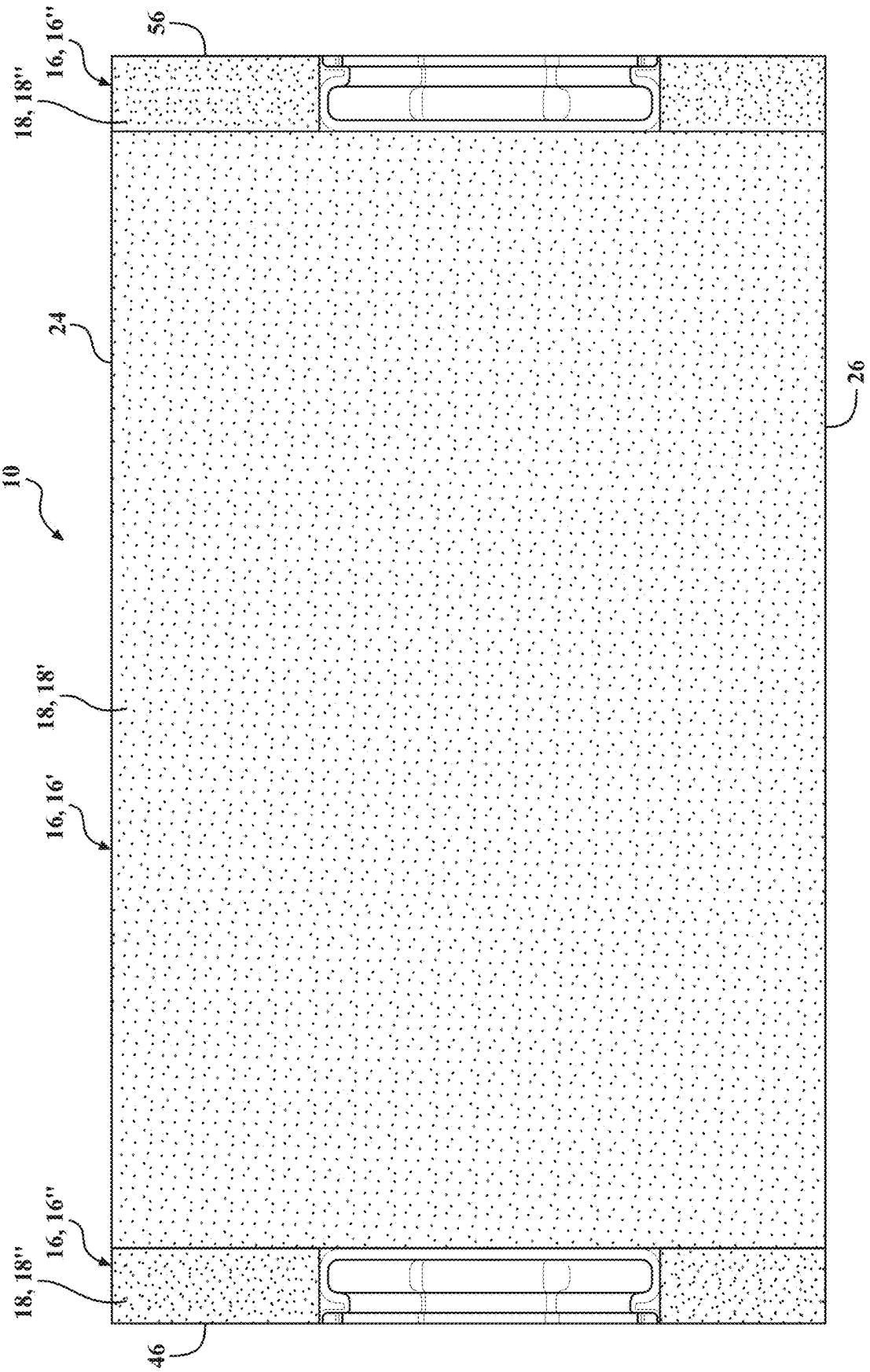

FIG. 17

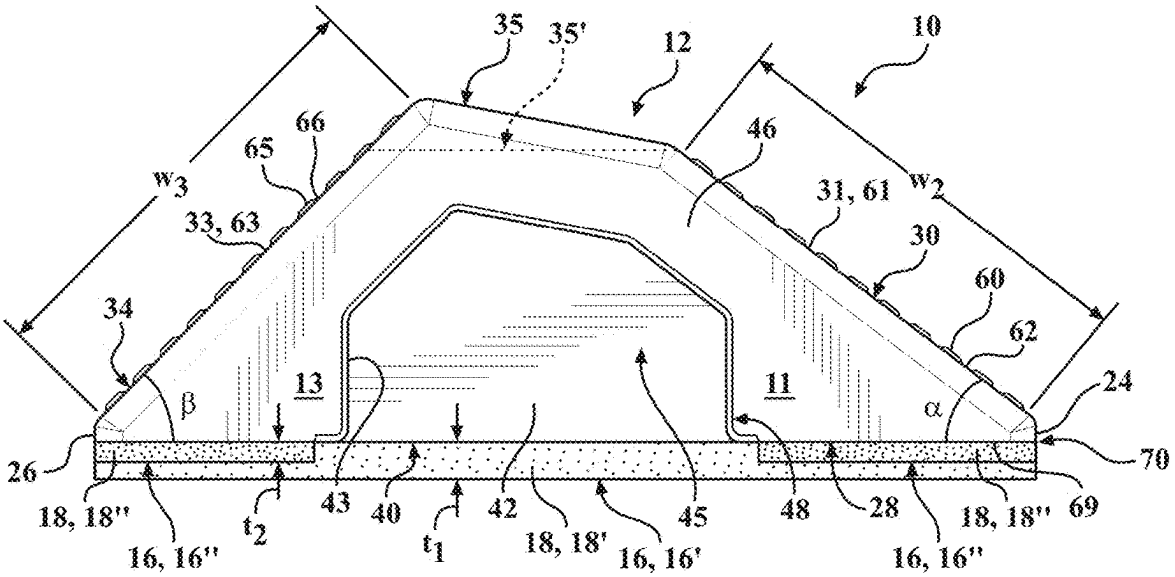
35
35'
12
10
66
65
46
w_3
w_2
33, 63
31, 61
30
60
34
62
13
11
24
β
α
26
70
18, 18''
16, 16''
t_2
43
40
t_1
42
18, 18'
16, 16'
45
48
28
18, 18''
16, 16''
69

FIG. 18

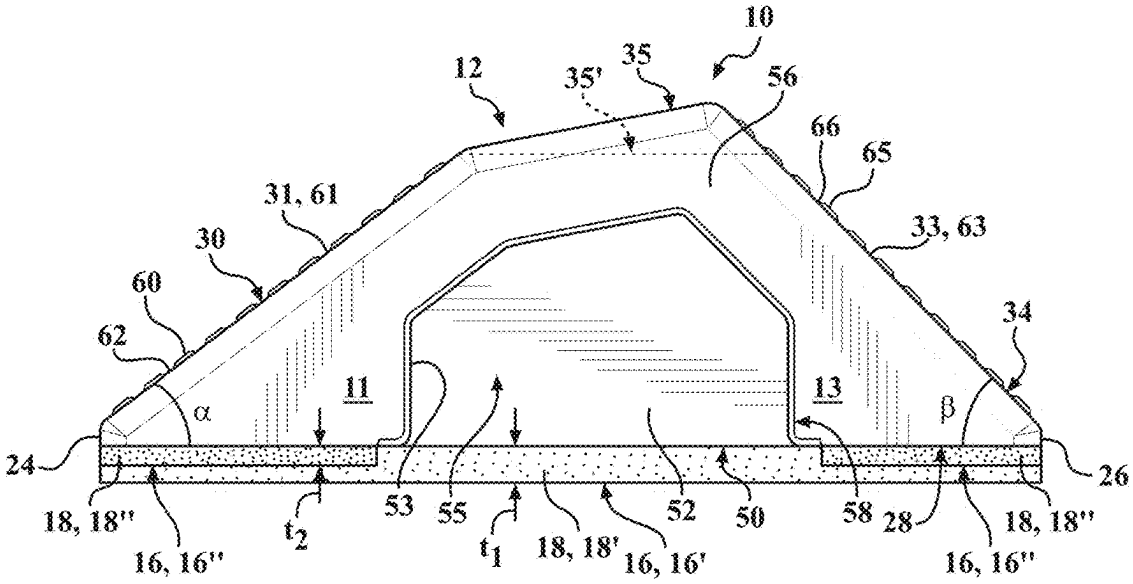
10
12
35'
35
56
66
65
31, 61
33, 63
30
60
34
62
11
13
α
β
24
26
18, 18''
16, 16''
t_2
53
55
t_1
18, 18'
16, 16'
52
50
58
28
18, 18''
16, 16''

FIG. 19

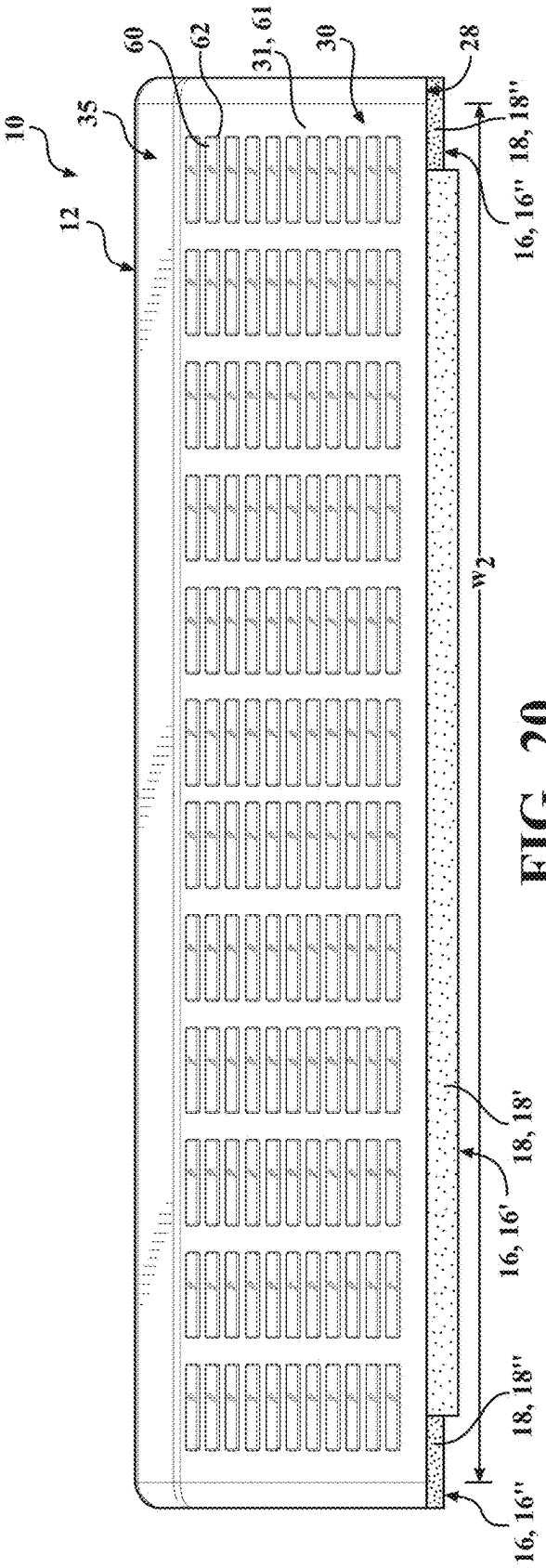
10
12
35
60
62
31, 61
30
28
16, 16''
18, 18''
w_2
16, 16'
18, 18'
18, 18''
16, 16''

FIG. 20

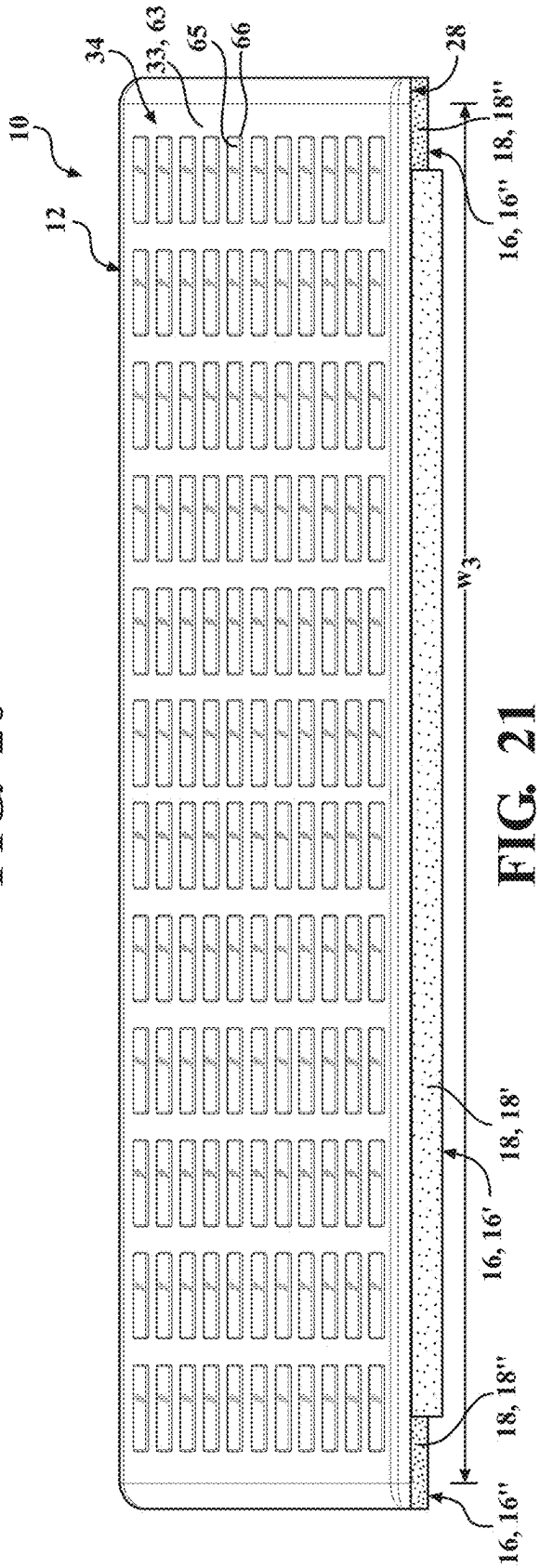
10
12
34
33, 63
65
66
28
16, 16''
18, 18''
w_3
16, 16'
18, 18'
18, 18''
16, 16''

FIG. 21

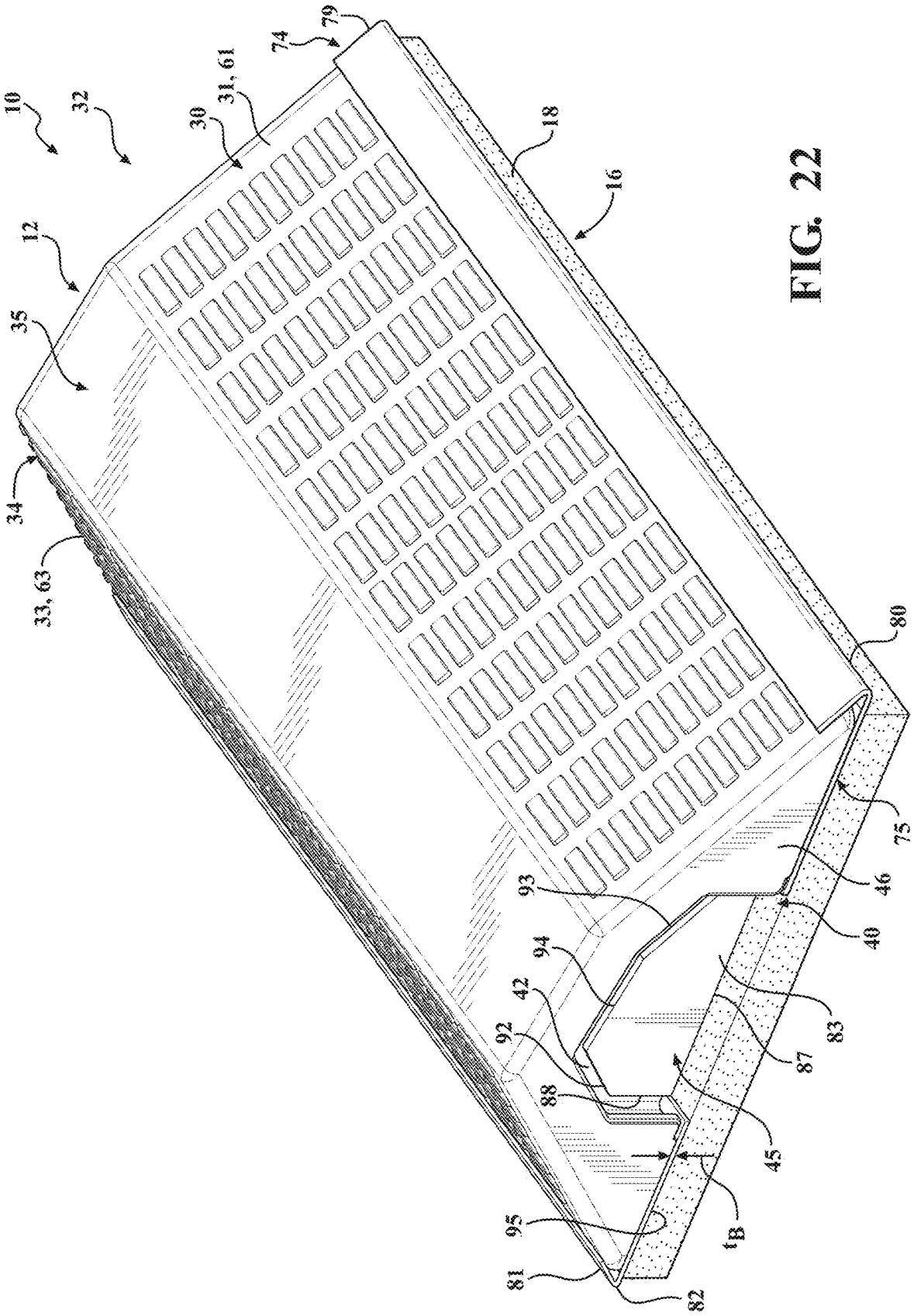
10
32
12
35
34
33, 63
30
31, 61
74
79
18
16
80
75
46
40
83
87
45
t_B
82
81
95
88
92
42
94
93

FIG. 22

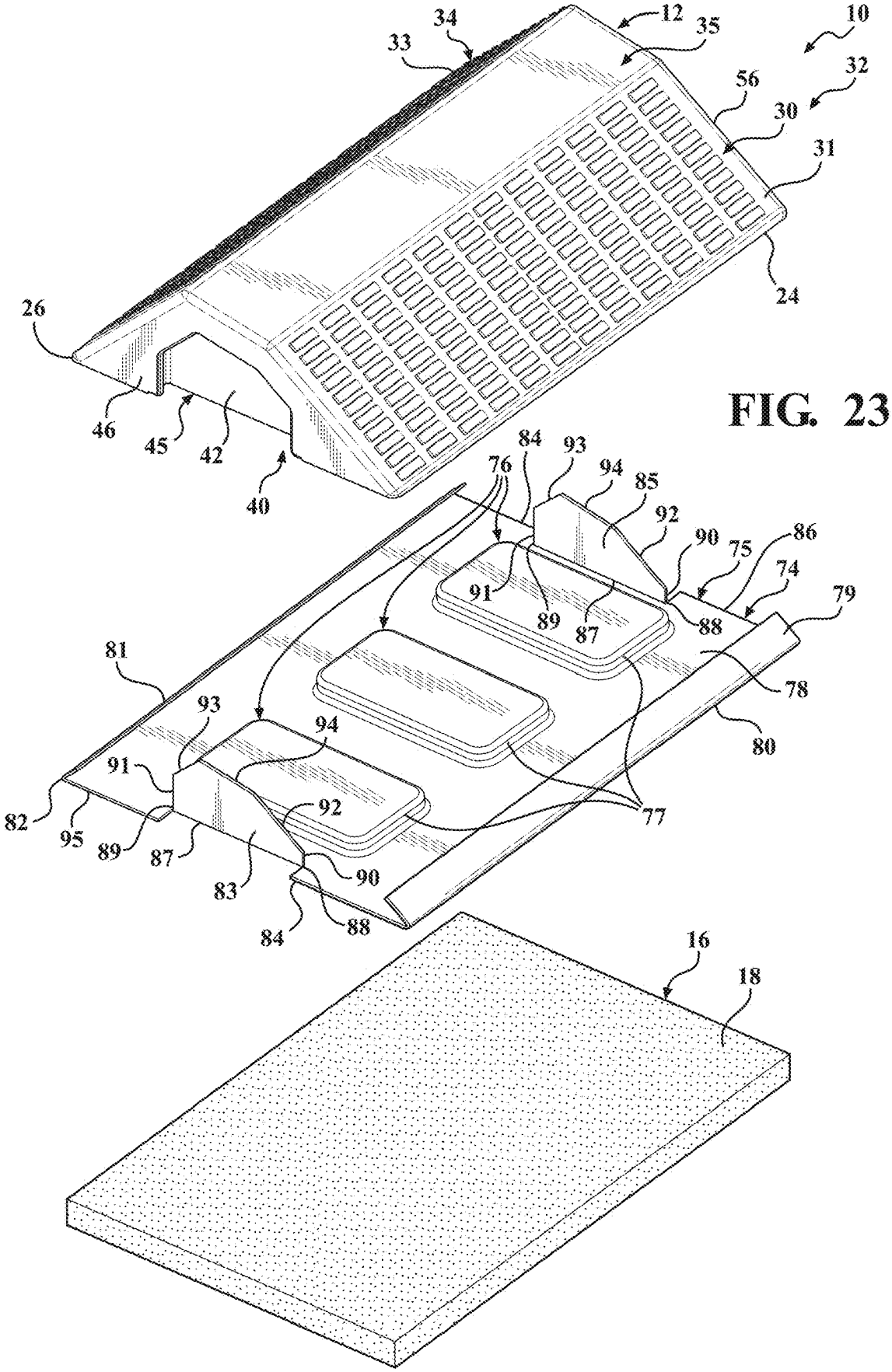
10
12
32
33
34
35
56
30
31
24
26
46
45
42
40
76
84
93
94
85
92
90
75
86
74
79
91
89
87
88
81
78
80
93
94
91
82
95
89
87
92
77
83
90
84
88
16
18

FIG. 23

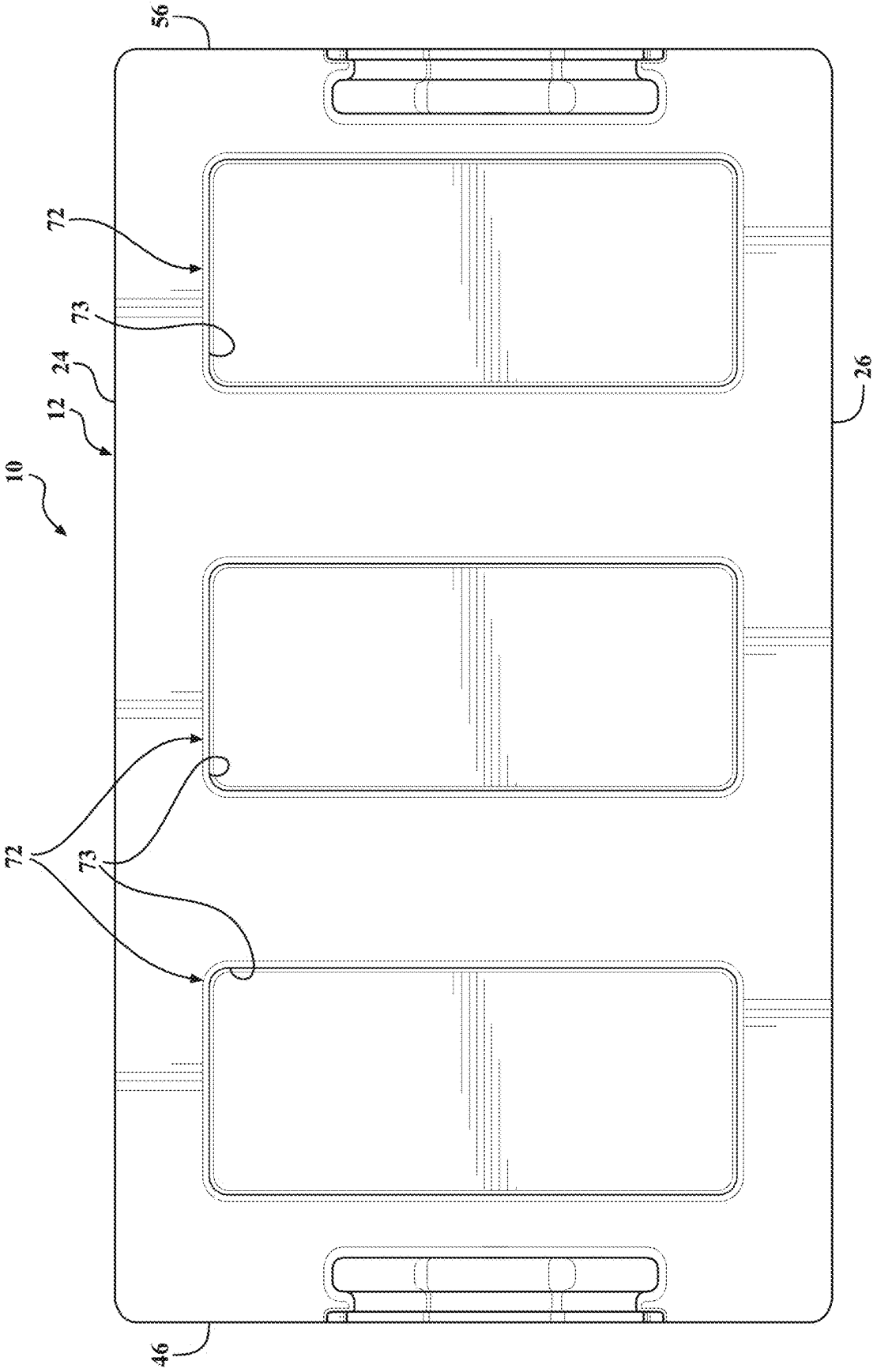

FIG. 24

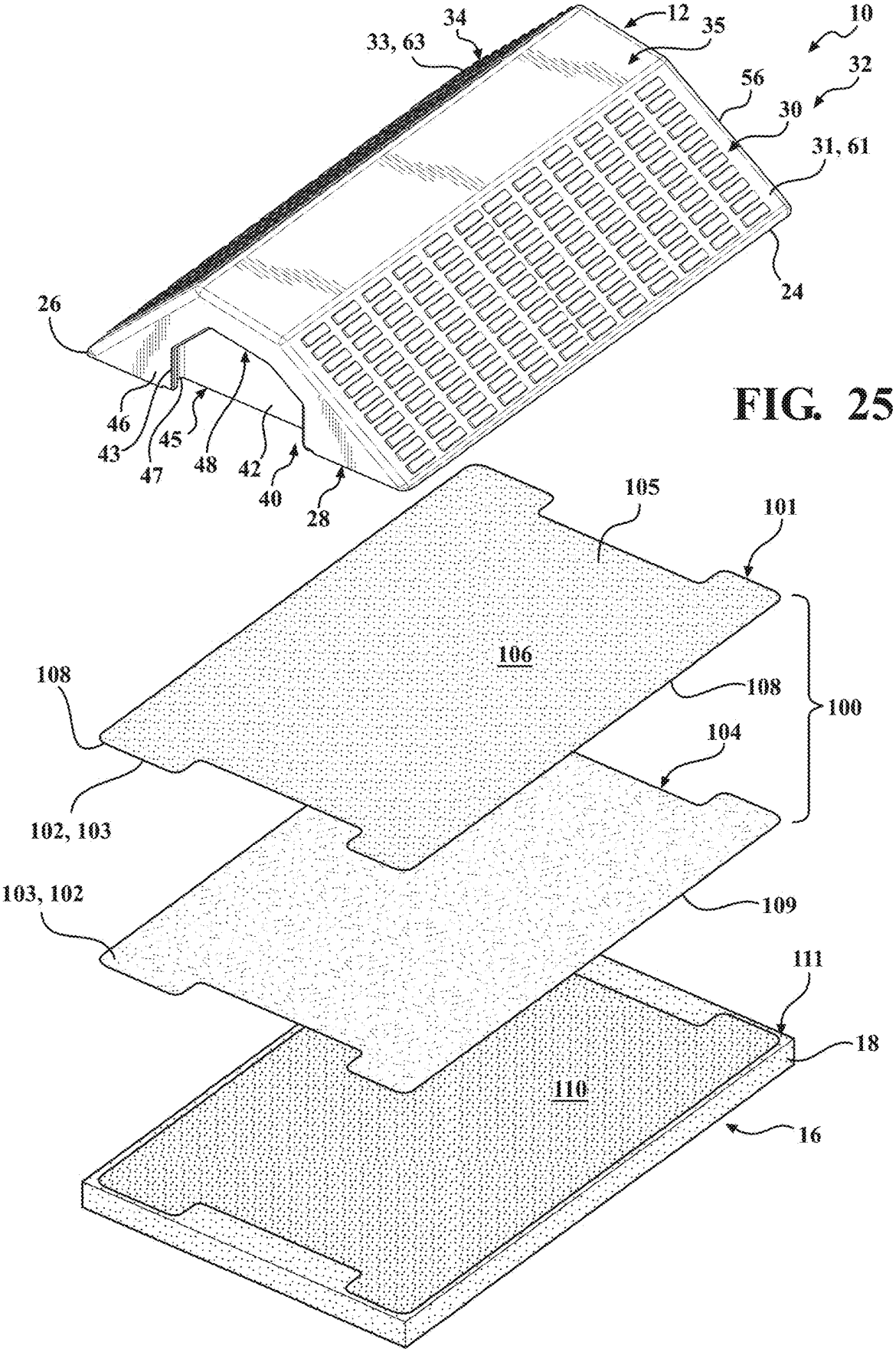
34
33, 63
12
35
10
32
56
30
31, 61
24
26
46
43
45
47
48
42
40
28
105
101
106
108
108
100
104
102, 103
103, 102
109
111
18
110
16

FIG. 25

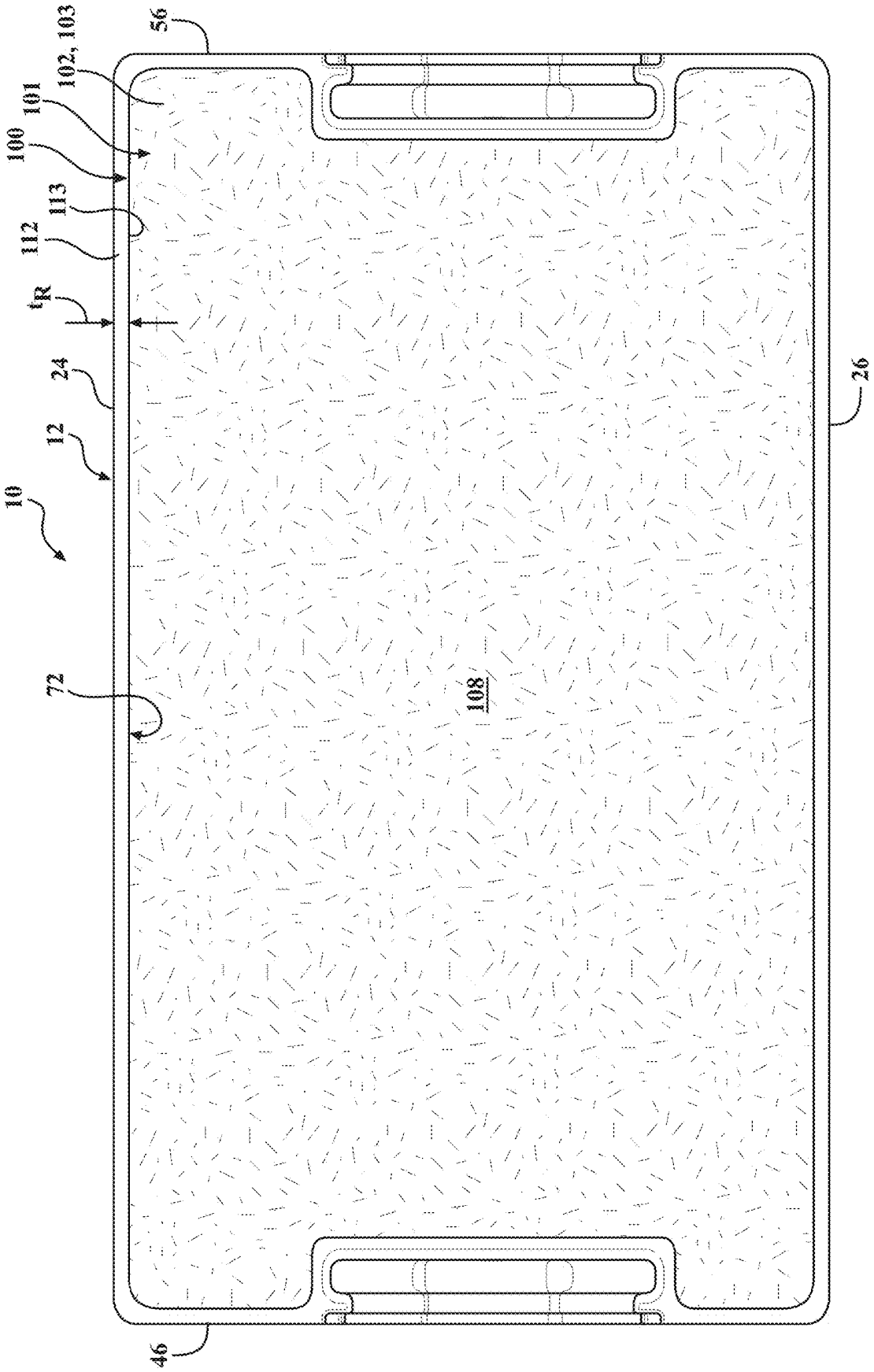

FIG. 26

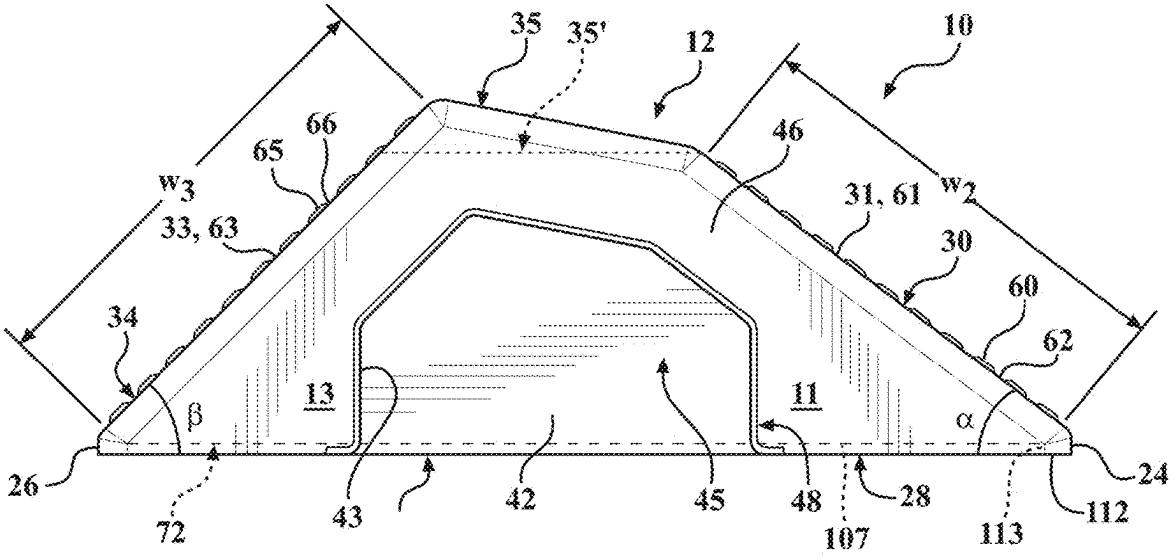
35
35'
12
10
66
65
46
w_3
w_2
31, 61
33, 63
30
60
34
62
13
11
β
α
26
24
72
43
42
45
48
28
107
113
112

FIG. 27

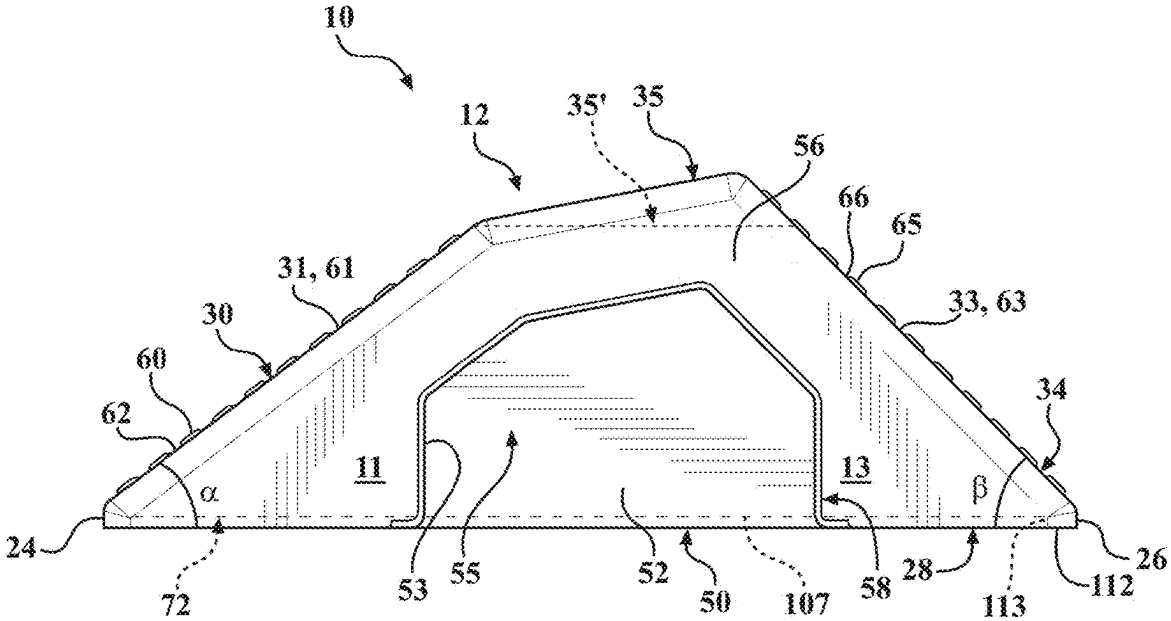
10
12
35'
35
56
66
65
31, 61
33, 63
30
60
34
62
11
13
α
β
24
26
72
53
55
52
50
107
58
28
113
112

FIG. 28

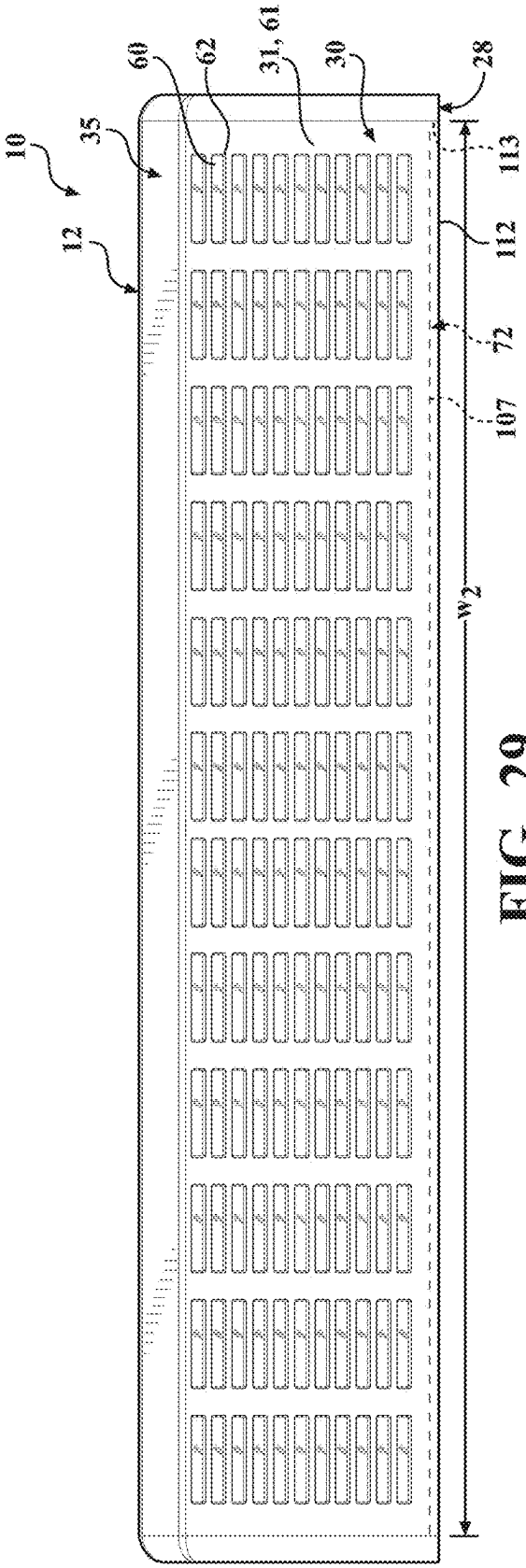
10
12
35
60
62
31, 61
30
28
113
112
72
107
w_2

FIG. 29

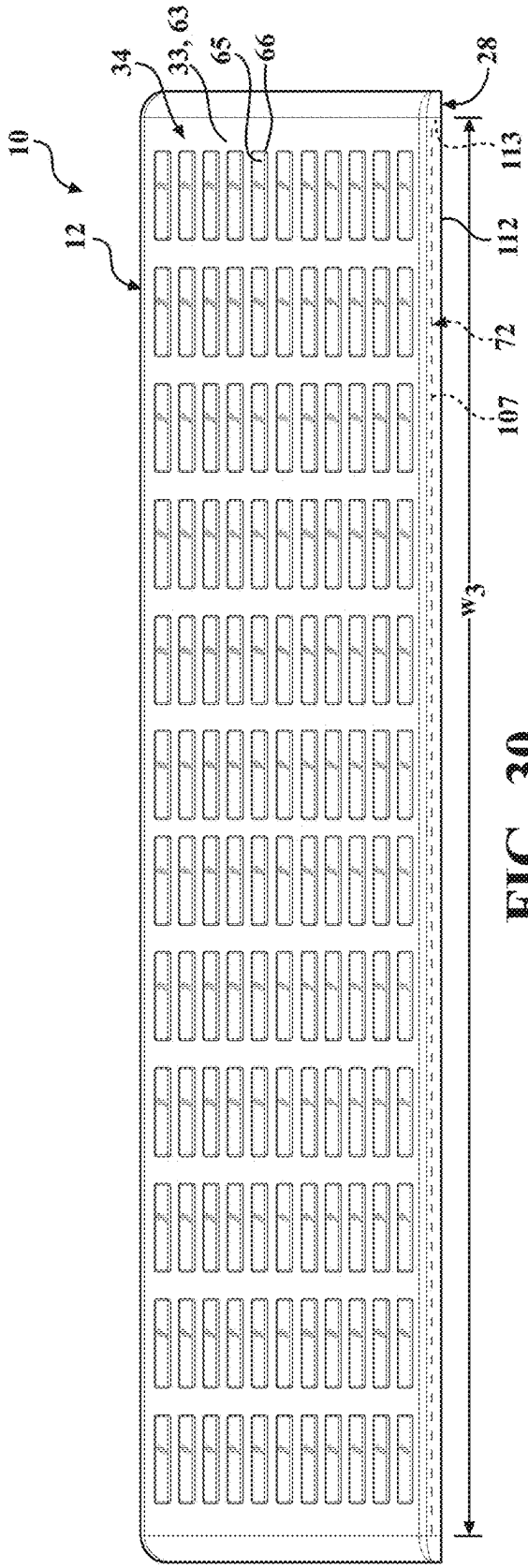
10
12
34
33, 63
65
66
28
113
112
72
107
w_3

FIG. 30

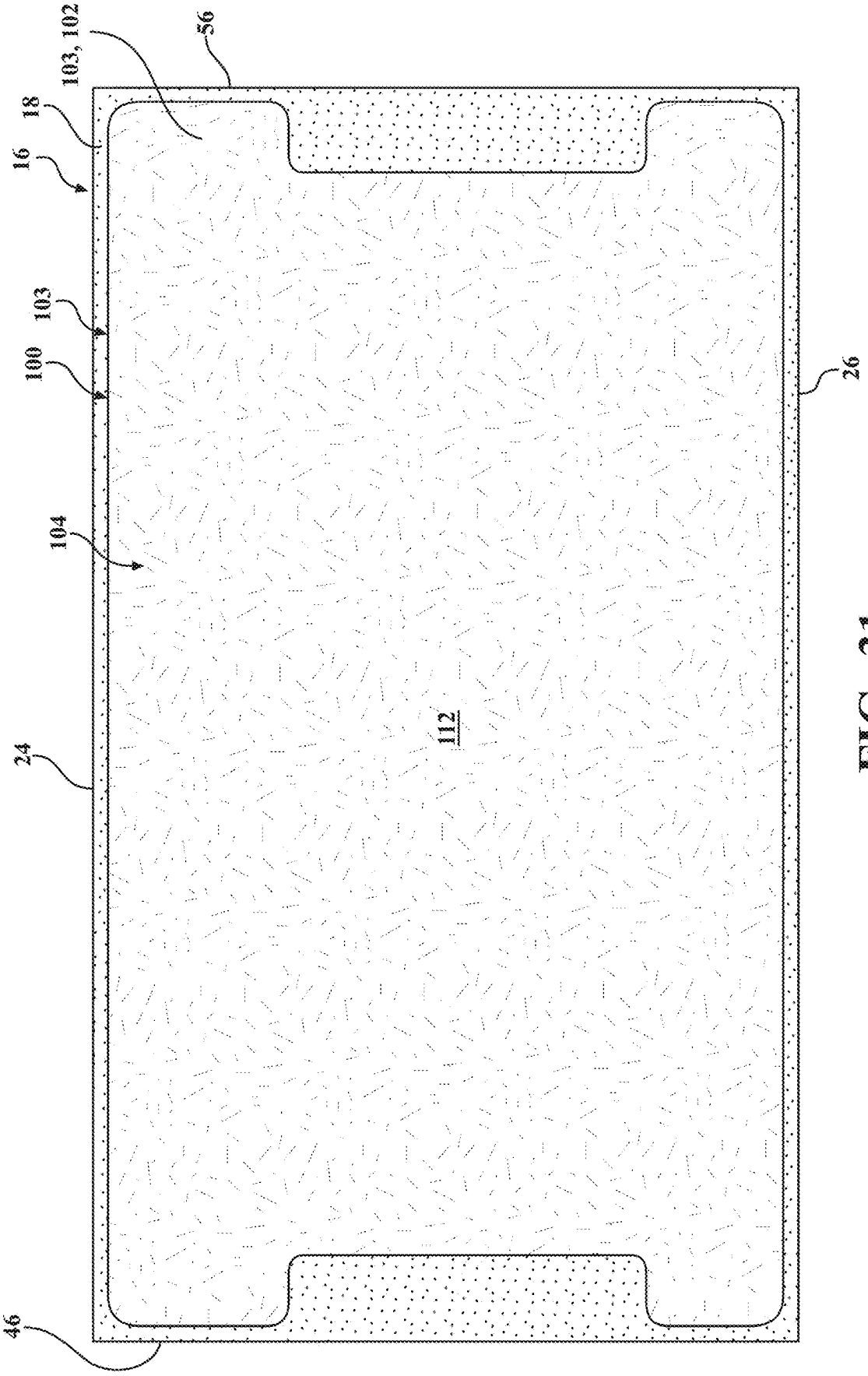

FIG. 31

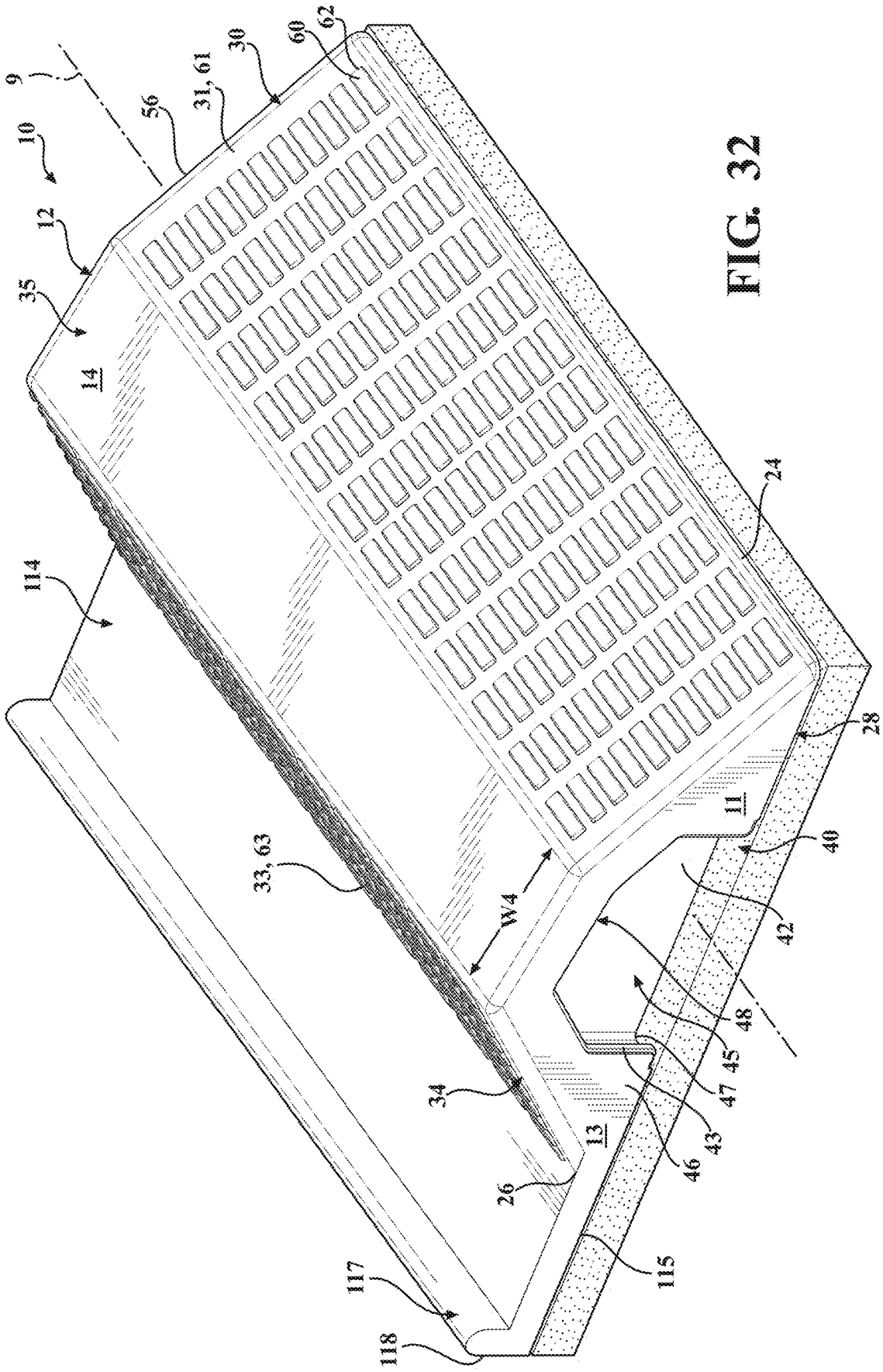
9
10
12
35
14
114
56
31, 61
30
60
62
24
28
11
40
42
48
45
47
43
46
33, 63
W4
34
13
26
117
118
115

FIG. 32

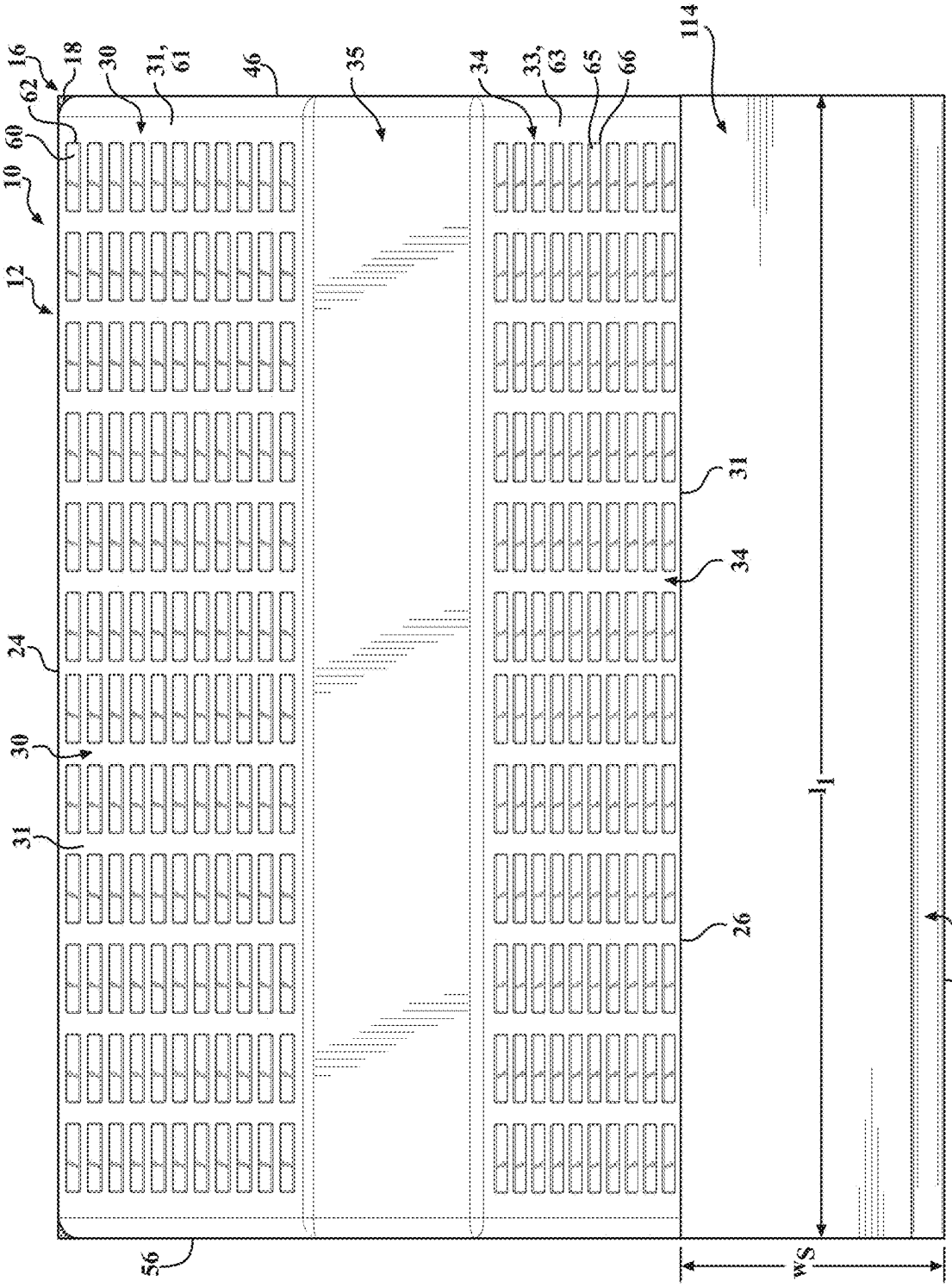
16
18
62
60
10
12
24
30
31
56
30
31,
61
46
35
34
33,
63
65
66
114
31
34
26
l_1
w_S
117
118

FIG. 33

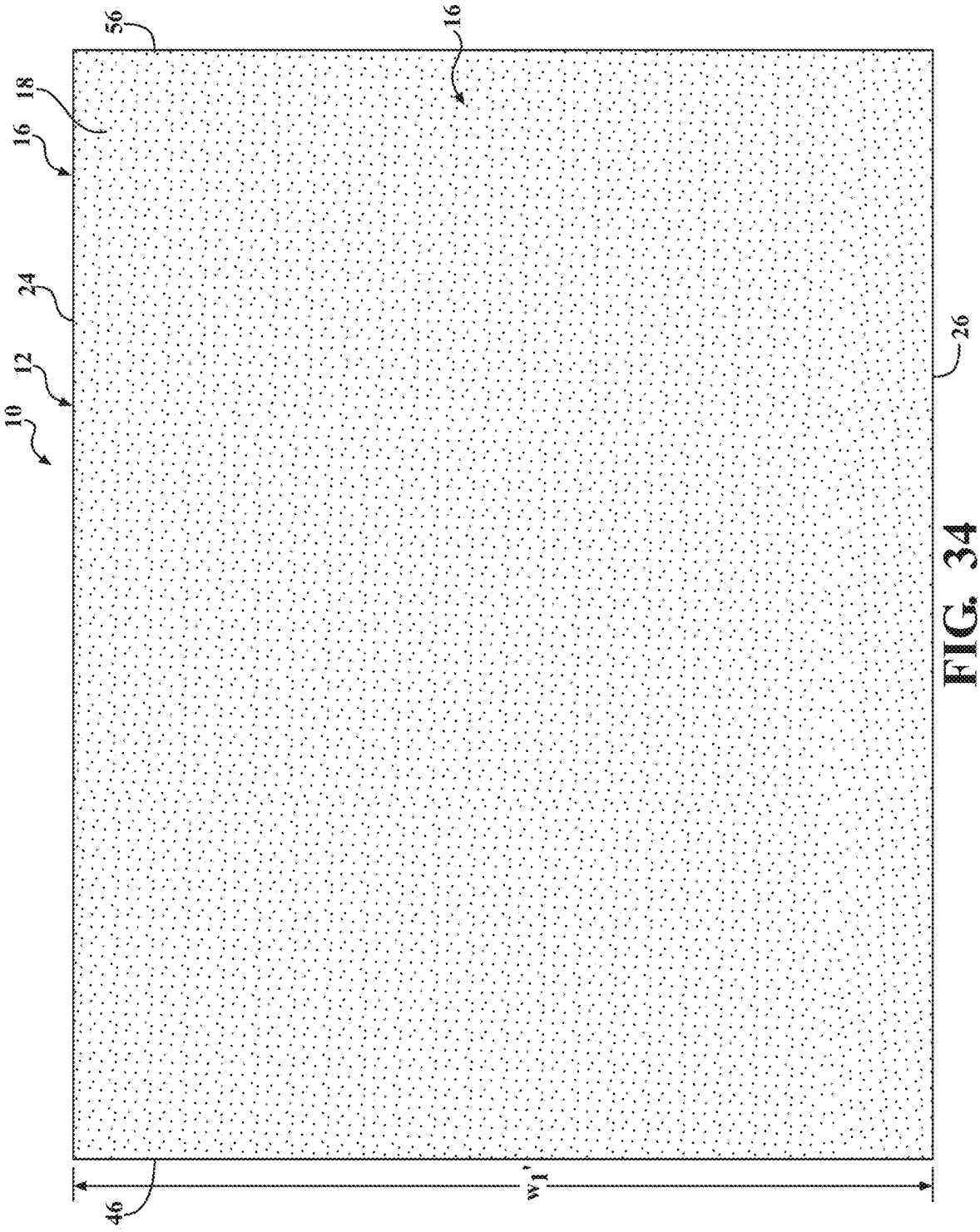

FIG. 34

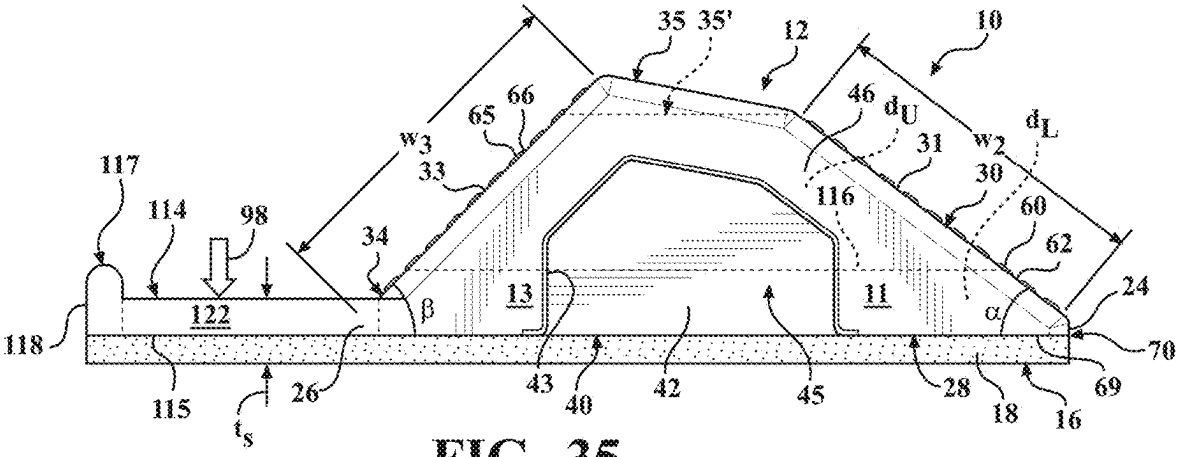
35
35'
12
10
46
d_U
d_L
w_3
65
66
33
31
w_2
30
117
114
98
116
60
62
34
24
122
β
13
11
α
118
70
115
26
43
40
42
45
28
18
16
69
t_s

FIG. 35

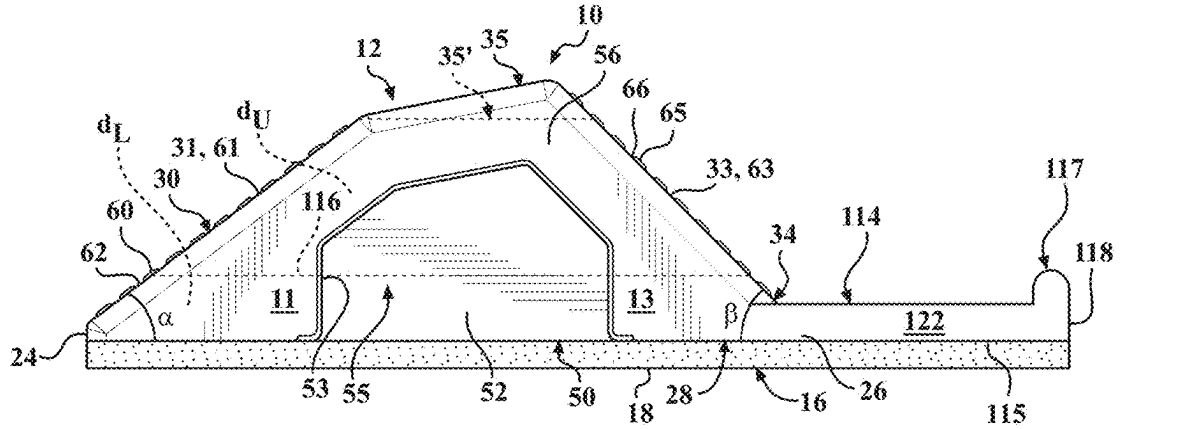
10
12
35'
35
56
66
65
d_L
d_U
31, 61
33, 63
117
30
116
114
60
34
118
62
11
13
α
β
122
24
53
55
52
50
18
28
16
26
115

FIG. 36

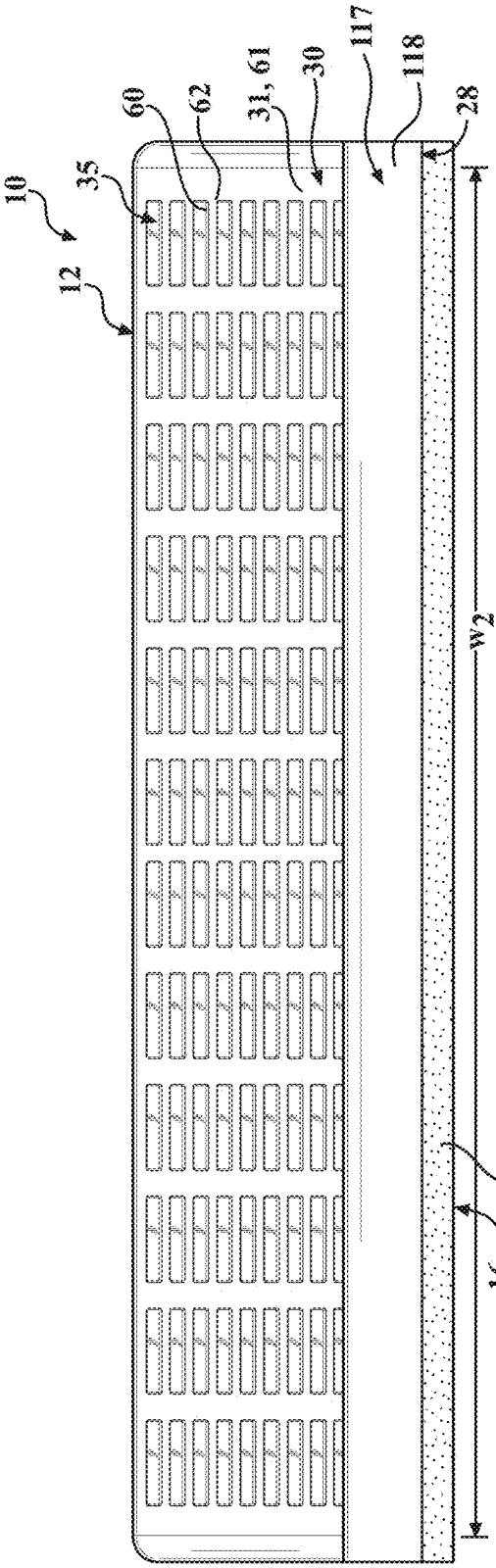
10
12
35
60
62
31, 61
30
117
118
28
w2
16
18

FIG. 37

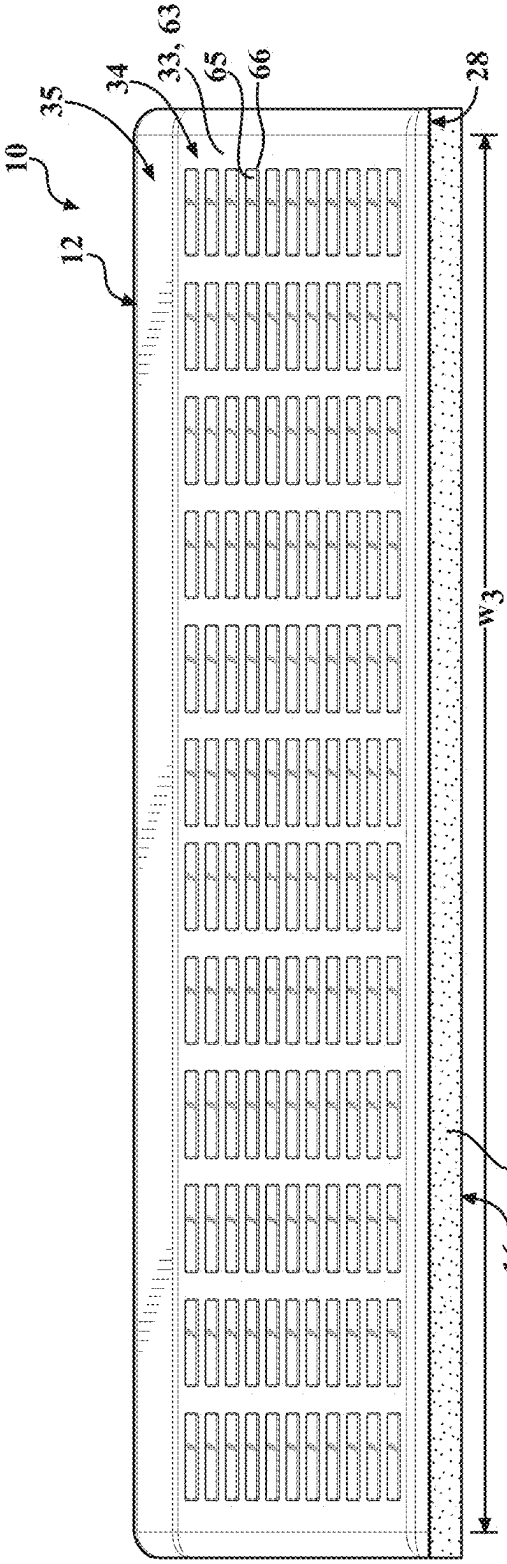
10
12
35
34
33, 63
65
66
28
w3
16
18

FIG. 38

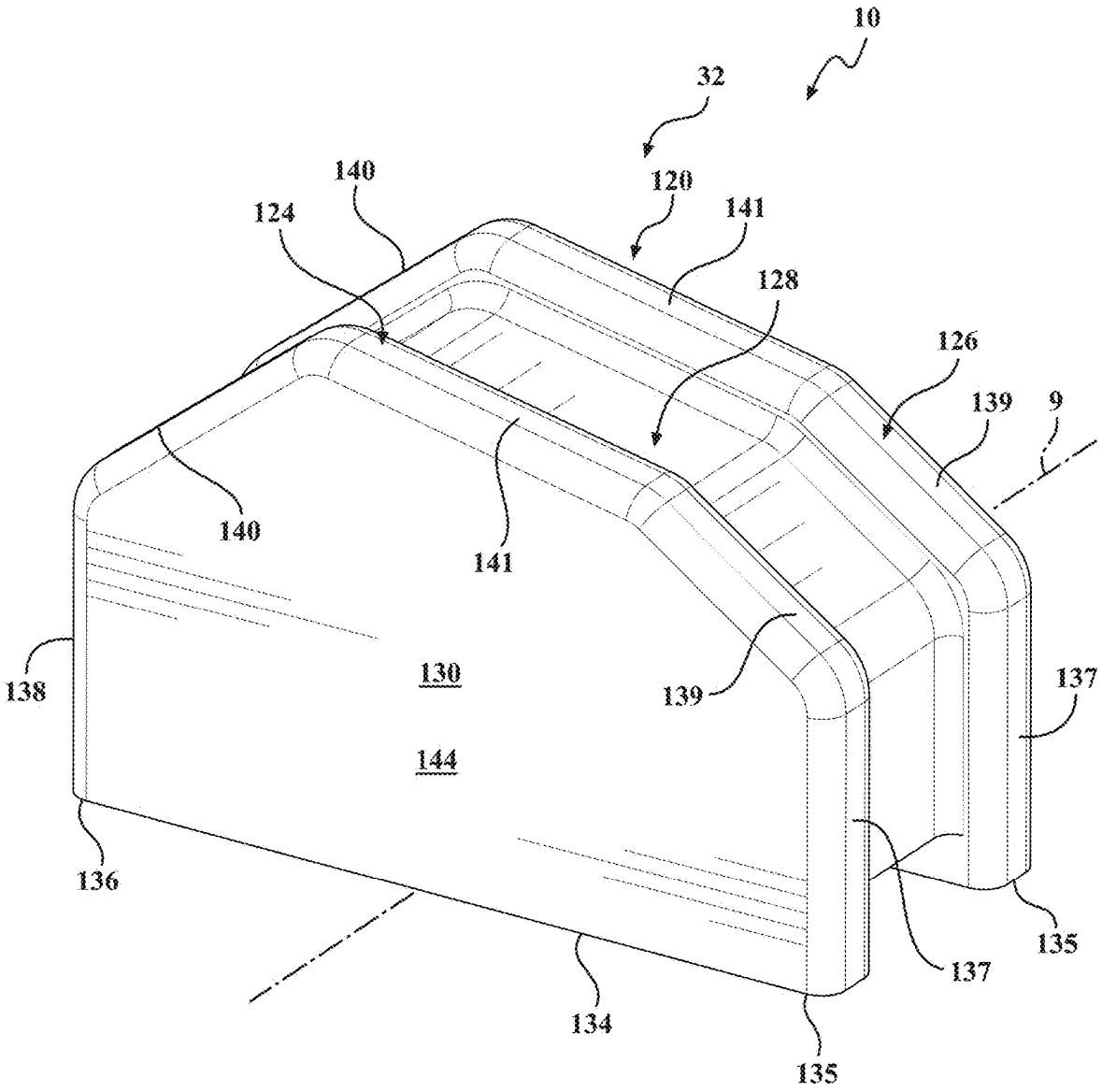
10
32
120
140
124
141
128
126
139
9
140
141
138
130
139
137
144
136
135
137
134
135

FIG. 39

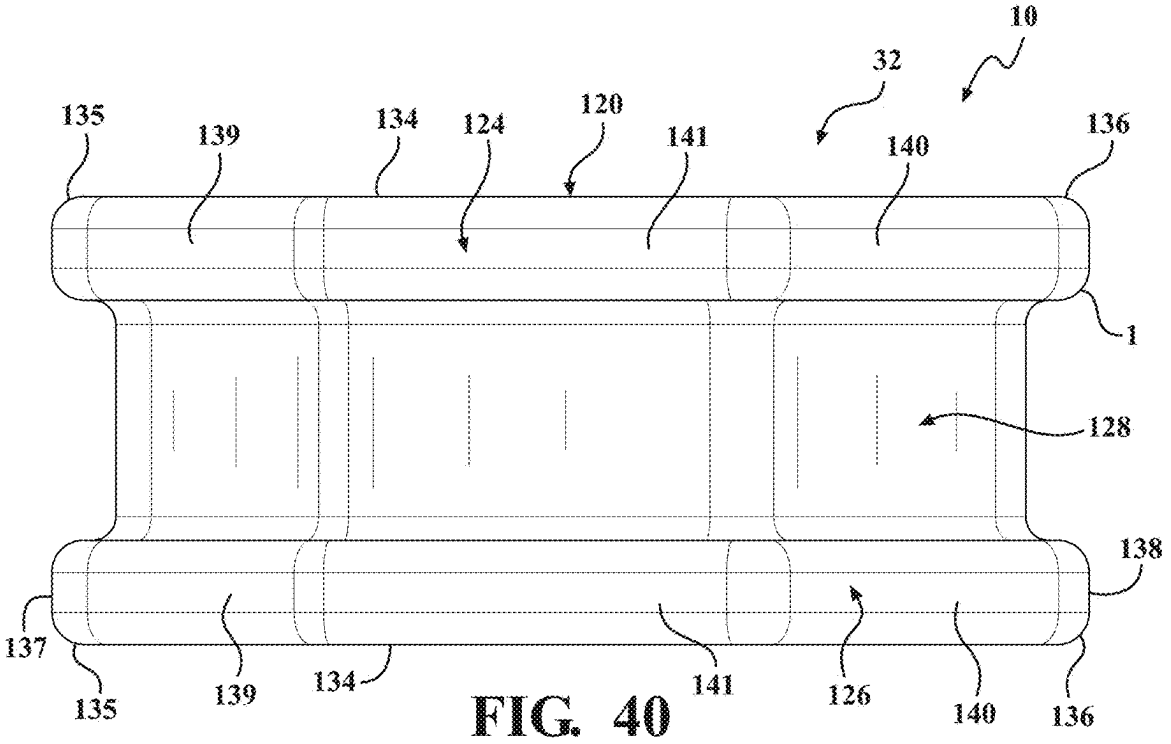
10
32
135
139
134
124
120
141
140
136
1
128
138
137
135
139
134
141
126
140
136

FIG. 40

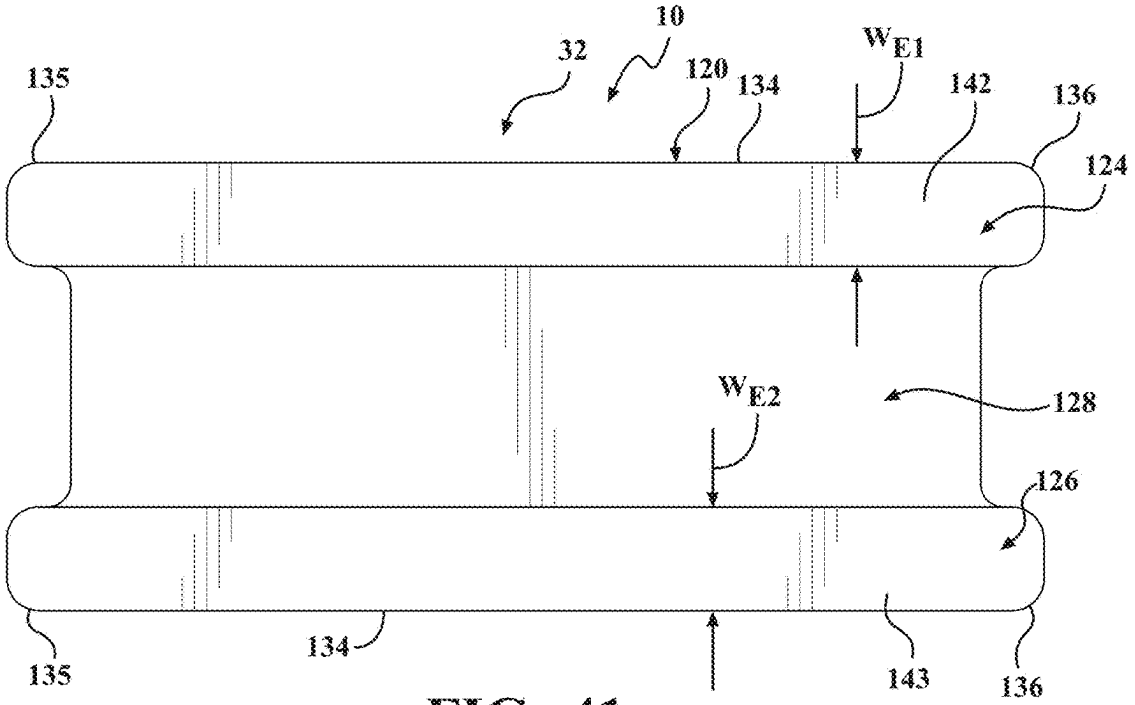
10
32
120
134
W_{E1}
142
136
135
124
W_{E2}
128
126
135
134
143
136

FIG. 41

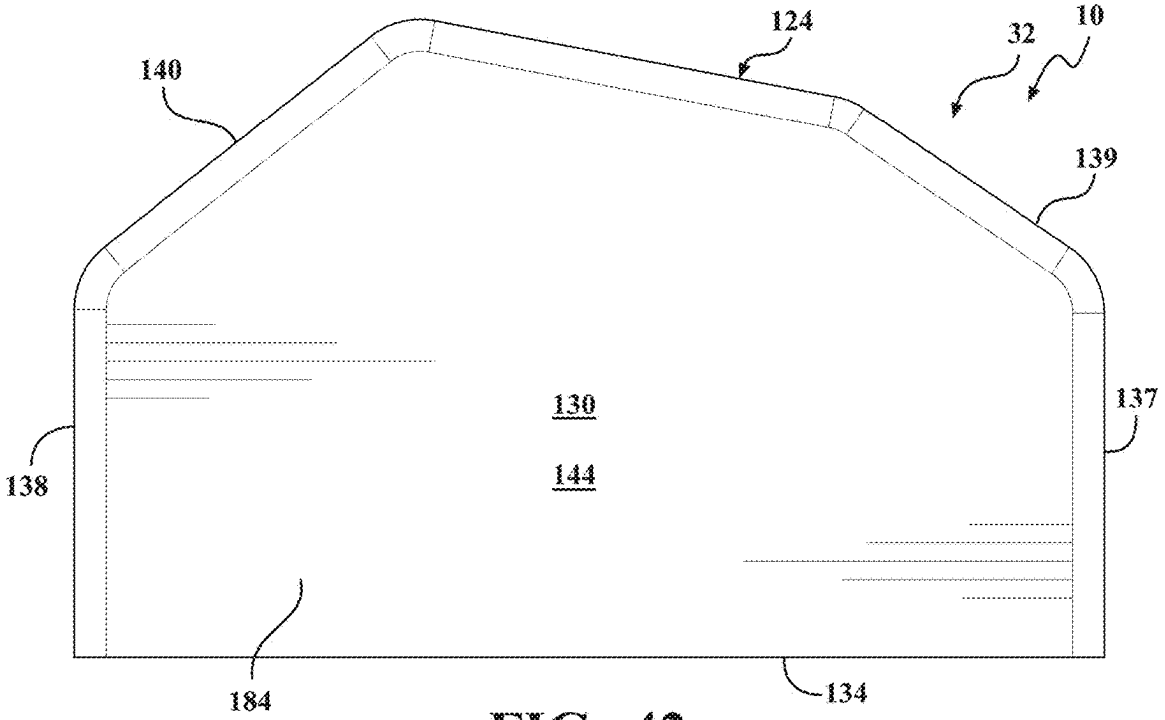
124
32
10
140
139
130
137
138
144
184
134

FIG. 42

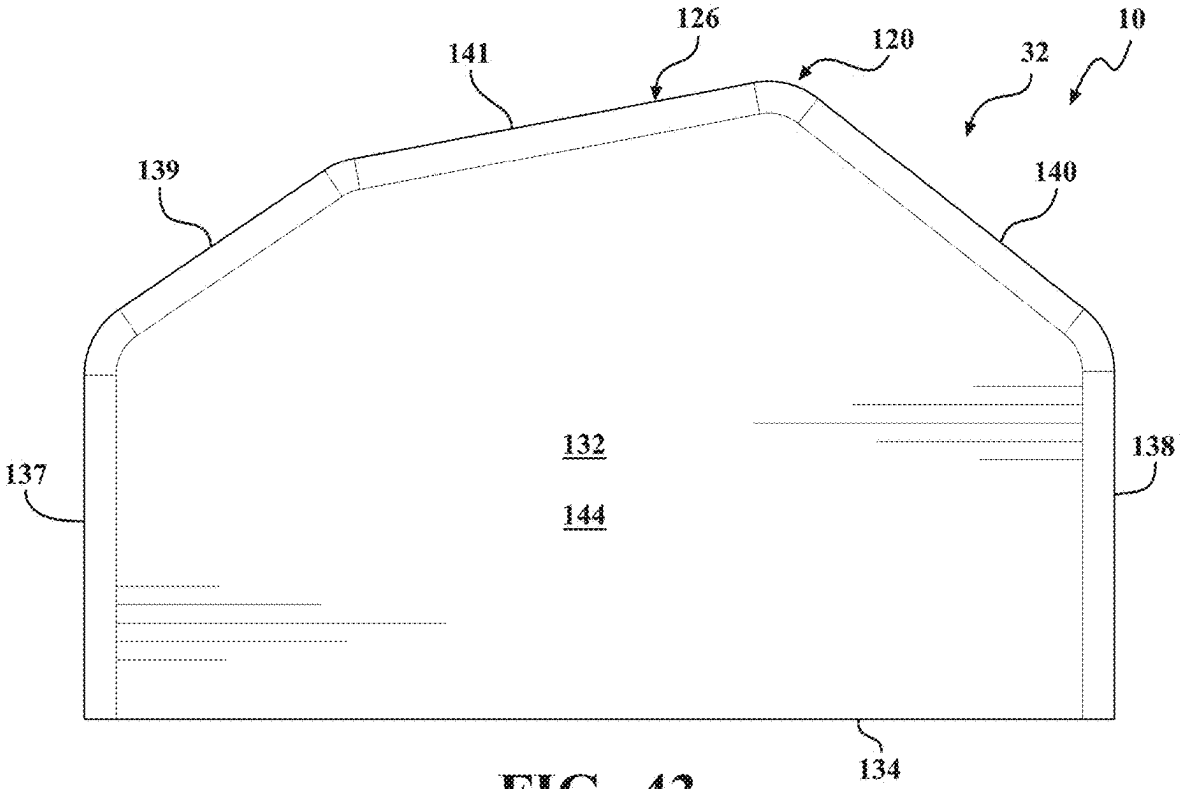
126
10
141
120
32
139
140
132
138
137
144
134

FIG. 43

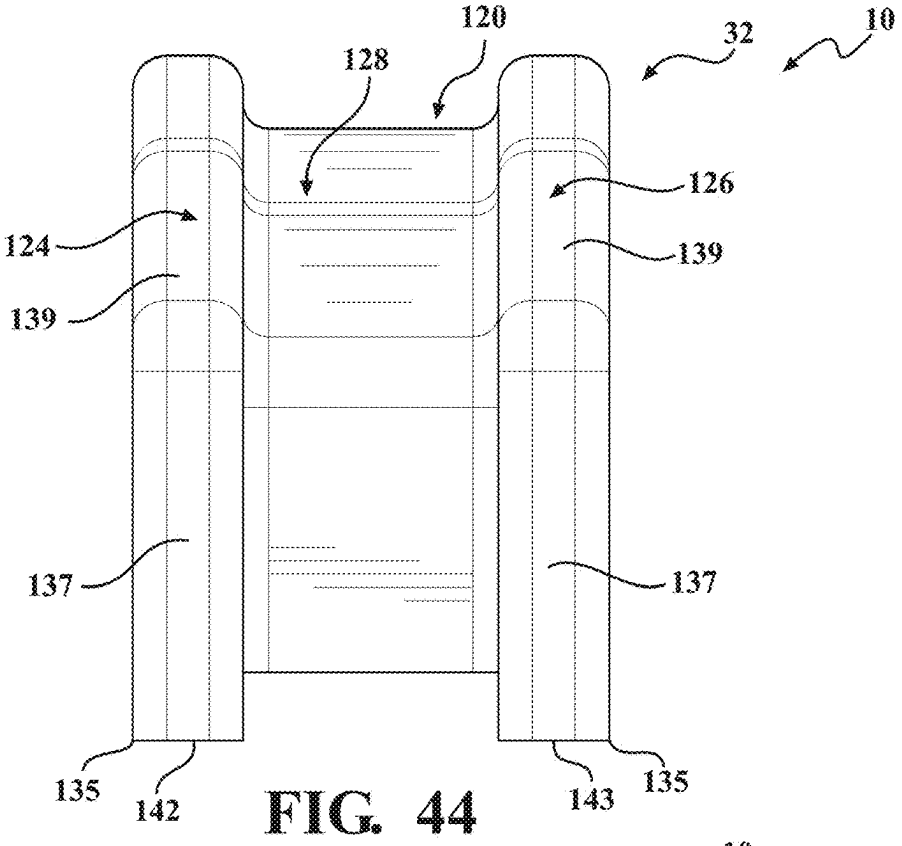
120
32
10
128
126
124
139
139
137
137
135
142
143
135

FIG. 44

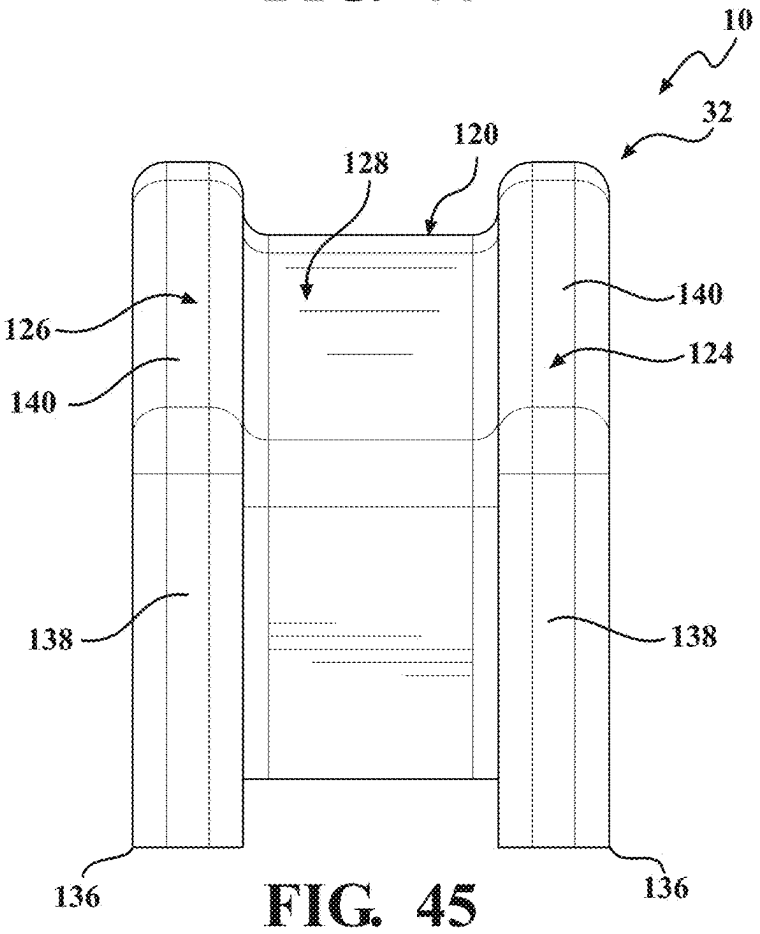
10
32
120
128
140
126
124
140
138
138
136
136

FIG. 45

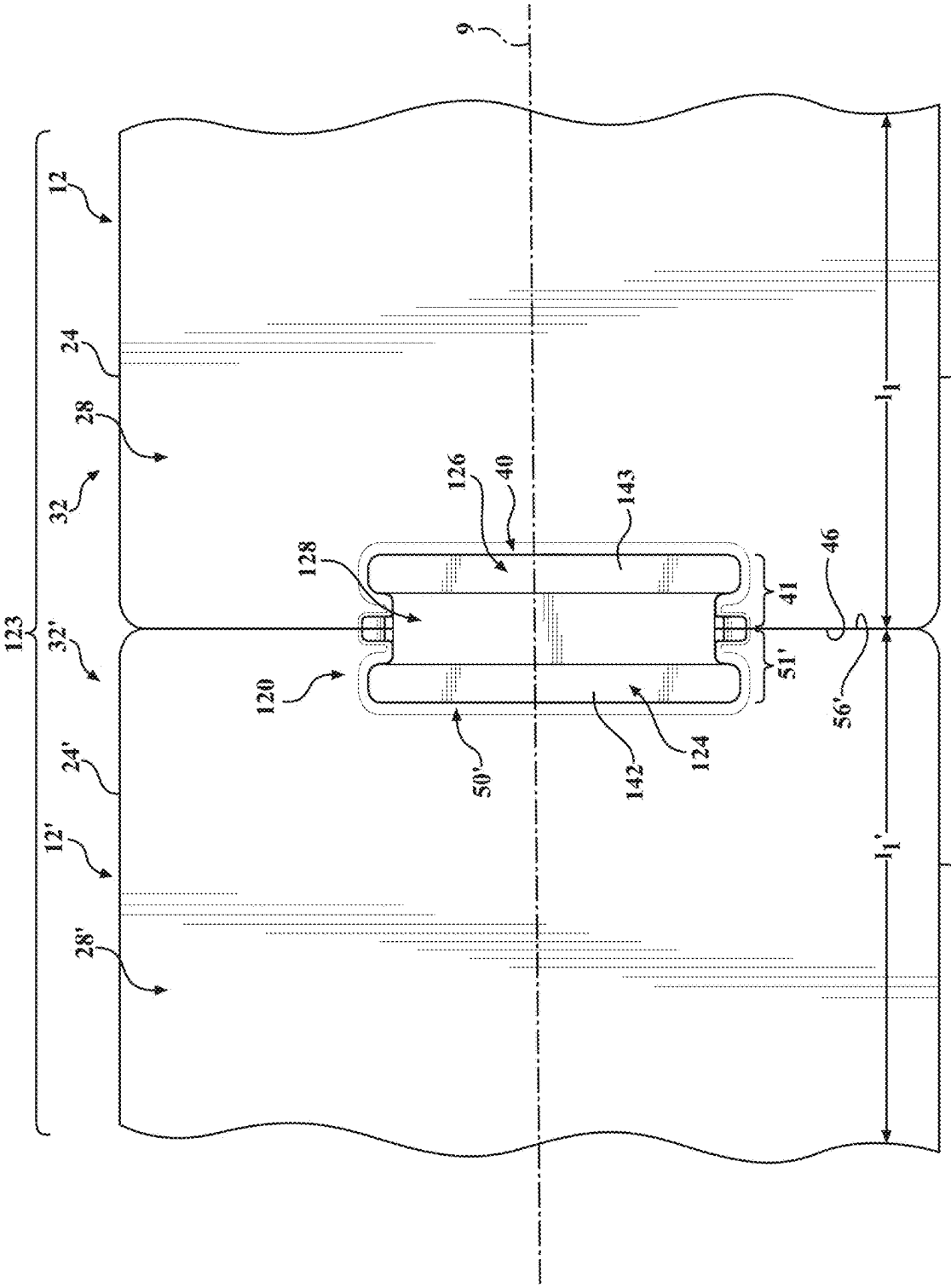
9
12
24
28
32
123
32'
24'
12'
28'
126
40
143
128
120
50'
142
124
41
51'
46
56'
l_1
l_1'
26
26'

FIG. 46

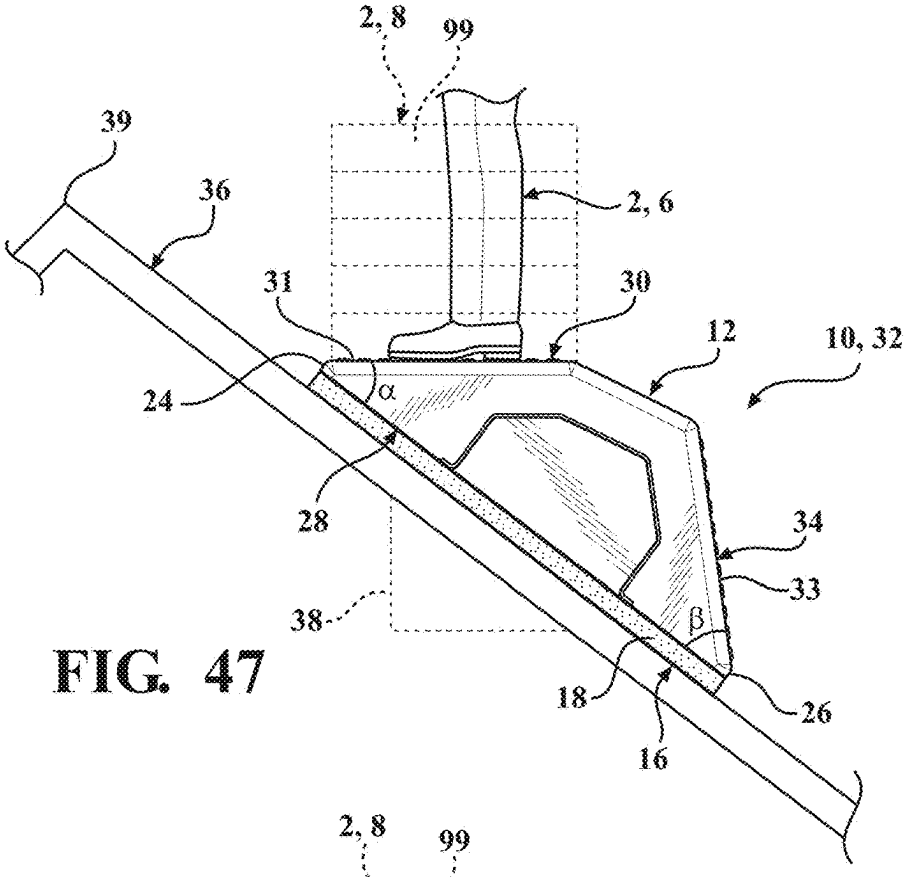
2, 8
99
39
36
2, 6
31
30
12
10, 32
24
α
28
34
33
38
β
18
26
16

FIG. 47

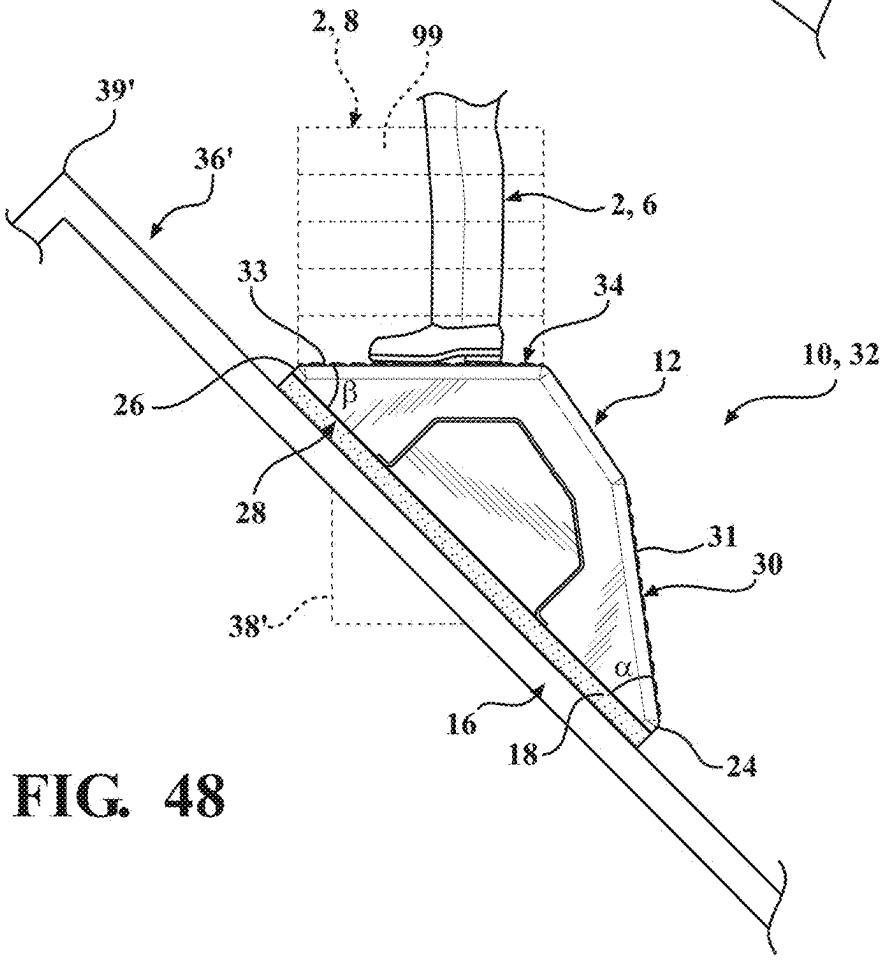
2, 8
99
39'
36'
2, 6
33
34
12
10, 32
26
β
28
31
30
38'
α
16
18
24

FIG. 48

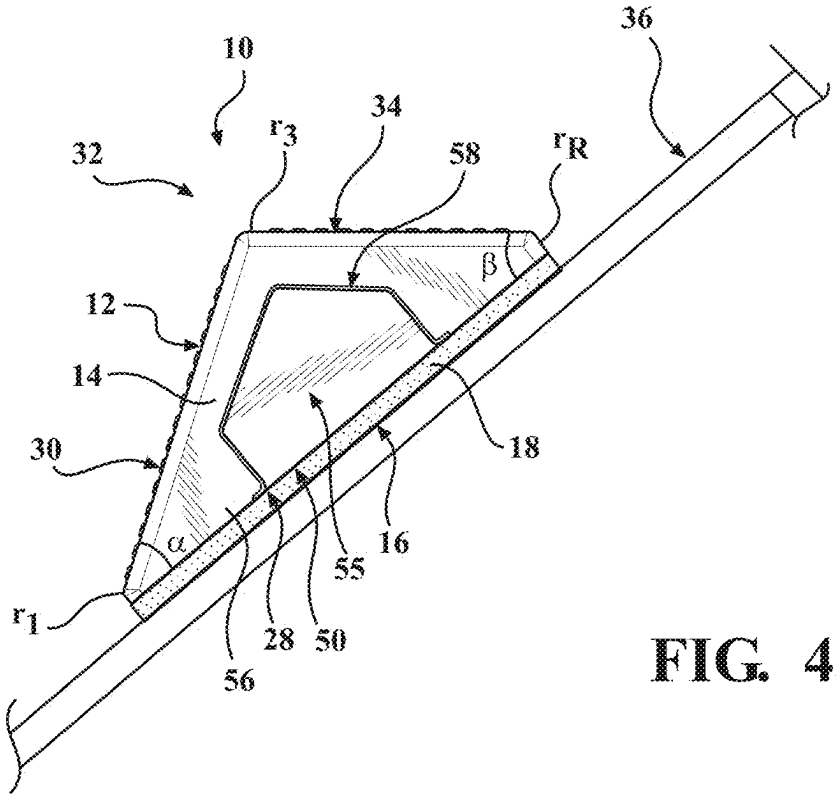
10
32
34
36
58
r_3
r_R
β
12
14
30
18
α
16
55
r_1
28
50
56

FIG. 49

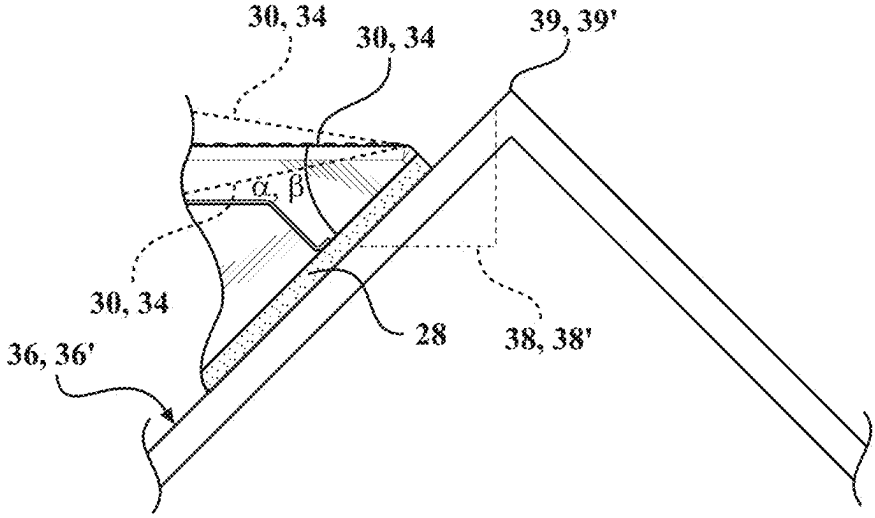
30, 34
30, 34
39, 39'
α, β
30, 34
28
38, 38'
36, 36'

FIG. 50

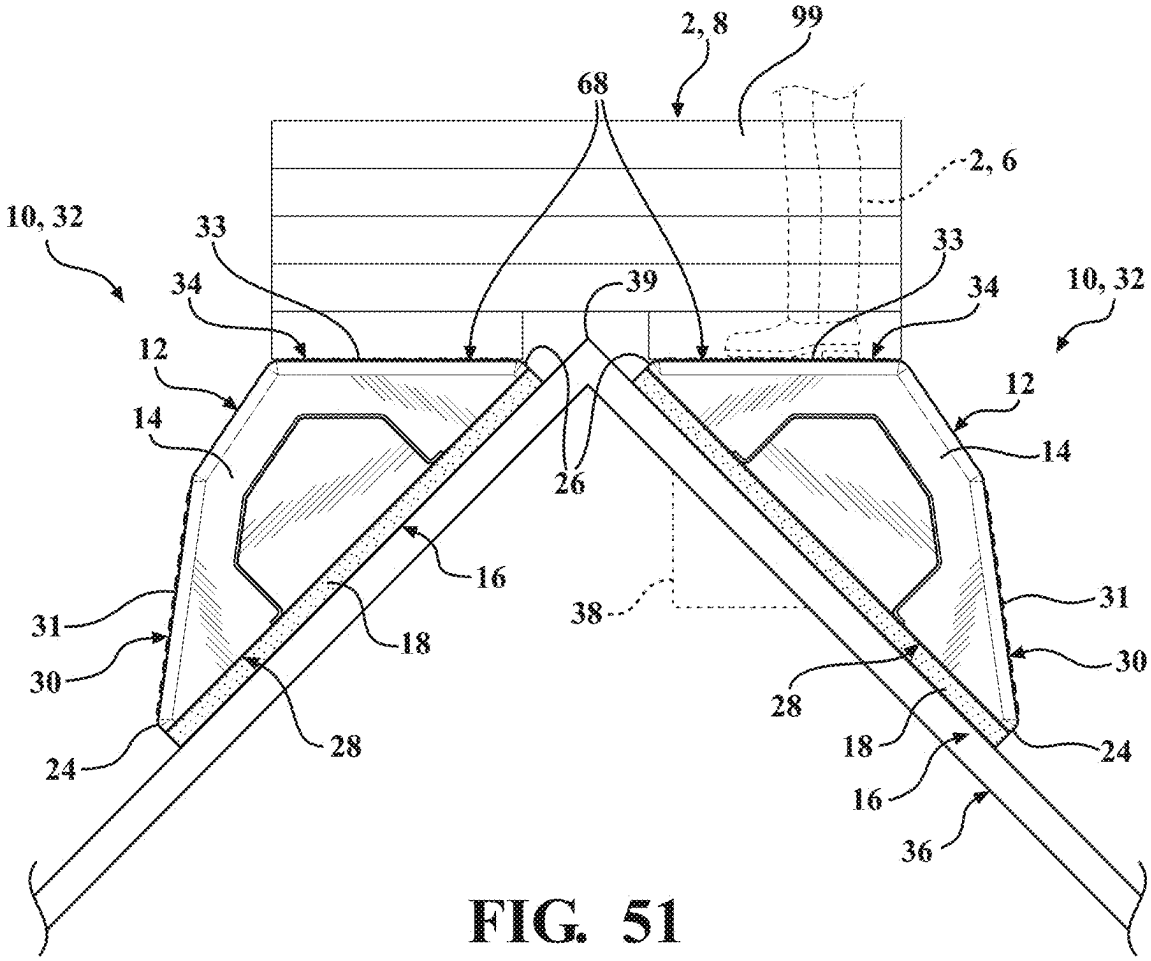
2, 8
99
68
2, 6
10, 32
33
33
34
39
34
10, 32
12
12
14
14
26
16
38
31
31
18
30
30
28
28
24
18
24
16
36

FIG. 51

PHYSICAL PROPERTY	TEST METHOD	UNITS	TEST RESULTS						
Density	ASTM-D3575	grams/liter	20	30	45	60	67	82	90
Compressive Strength	ASTM-D3575	MPa							
@25% Strain			0.10	0.16	0.28	0.39	0.44	0.60	0.69
@50% Strain			0.16	0.23	0.37	0.53	0.58	0.80	0.93
@75% Strain			0.31	0.44	0.77	1.07	1.26	1.80	2.08
Compression Set	ASTM-D3575	%	14	12	12	11	11	10	10
Tensile Strength	ASTM-D3575	MPa	0.26	0.38	0.46	0.62	0.71	0.87	0.97
Tensile Elongation	ASTM-D3575	%	15	15	14	14	13	13	12
Tear Strength	ASTM-D3575	KN/m	1.74	2.13	2.73	3.25	3.51	4.07	4.35
Flexural Strength	ASTM-D790	MPa	.21	.38	.54	.72	.86	1.08	1.16
Flexural Modulus		MPa	9.8	11.6	14.5	19.0	22.2	28.9	31.1
Coefficient of Linear Thermal Expansion	ASTM-D696	mm/mm/°C x 10^{-5}							
20°C to -40°C			6.8	5.9	5.5	4.3	4.1	3.9	3.7
20°C to 80°C			10.8	10.2	9.8	8.7	7.9	7.5	6.8
Water Absorption	ASTM-C272	gms/cc x 10^{-3}	10.4	8.1	6.2	5.1	4.5	4.2	3.5
Flammability	FMVSS 302	< 100 mm/min.	Pass	Pass	Pass	Pass	Pass	Pass	Pass
Chemical Resistance (Auto fuels, fluids, solvents)	Various	1 hr exposure	Pass	Pass	Pass	Pass	Pass	Pass	Pass

FIG. 52

EMR1 POLYETHER POLYURETHANE FOAM				
PHYSICAL PROPERTIES*	TEST VALUES*			
	U.S. STANDARD		METRIC	
	MINIMUM	AVERAGE	MINIMUM	AVERAGE
Density	1.50 ± 10% lbs./ft.^{3}		24.0 ± 10% kg/M^3	
Tensile Strength	15.0 psi	20.0 psi	103 kPa	138 kPa
Elongation	150%	250%	150%	250%
Tear Resistance	1.30pli	2.00pli	228 N/M	350 N/M
Indentation Force Deflection				
25% Deflection	35 lbs./50 in.^{2}	45 lbs./50 in.^{2}	156 N/323 cm^2	200 N/323 cm^2
65% Deflection	70 lbs./50 in.^{2}	90 lbs./50 in.^{2}	311 N/323 cm^2	400 N/323 cm^2
Retention of Tensile Strength after 5 hours, 120°C, steam autoclave	Min. 70%			

Flammability Characteristics:

- Meets the requirements of S4.3 of Federal Motor Vehicle Safety Standard No. 302 ‡

Features:

- This product contains additives to retard microbial growth and degradation.
- Restriction of Hazardous Substances European Union Directive [ROHS3] - (2015/863/EU) Meets the Requirements of SVHC through today's date.
- Compliant with European union REACH (Registration, Evaluation and Authorization of Chemical Substances - EC1907/2006
- Minimum IFD at 20mm (0.79 in) thickness 23 lbs./50 sq. in.

FIG. 53

* Test Methods: ASTM-D3574-[latest version]. Standard Methods of Testing Flexible Cellular Materials - Slab, Bonded, and Molded Urethane Foam.

LIGHTWEIGHT COMPOSITE ROOFING SUPPORT SYSTEM

CROSS REFERENCE TO RELATED APPLICATIONS

[0001] This application is a continuation of and claims priority to US Non-Provisional Utility patent application Ser. No. 17/163,200 filed on Jan. 29, 2021, which is a continuation-in-part of and claims priority to US Non-Provisional Utility patent application Ser. No. 17/101,330 filed on Nov. 23, 2020, which is a continuation of and claims priority to US Non-Provisional Utility patent application Ser. No. 15/981,491 filed on May 16, 2018, which claims priority to U.S. Provisional Patent Application No. 62/506,835 filed on May 16, 2017 and is a continuation of and claims priority to US Non-Provisional Design patent application Ser. No. 29/741,731 filed on Jul. 15, 2020, the contents of which are incorporated herein by reference in their entirety.

FIELD OF THE INVENTION

[0002] The subject invention relates generally to a lightweight roofing support system. More particularly, it relates to a lightweight composite roofing support system that is configured to provide a level, stable, self-supporting platform for roofing workers, roofing tools, roofing materials, or a combination thereof, on a pitched or sloped roof.

BACKGROUND

[0003] The removal and/or application of roofing systems and roofing materials on sloped or pitched roofs presents long-standing problems, particularly on relatively steeply pitched roofs, such as those having a pitch above 8/12 (i.e., 8 feet of vertical rise for every 12 feet of horizontal run), problems that are particularly acute on steeply pitched roofs with pitches ranging from 10/12 to 16/12. Steeply pitched roofs are exceedingly difficult for roofing workers to work on, particularly to move, walk, stand, crouch, kneel, sit, or lie on, or otherwise, whether working to to remove an old roof or to construct a new roof, and including to distribute or store roofing tools or equipment or roofing materials for these purposes.

[0004] Various support systems and structures have been proposed to provide a platform for roofing workers, roofing tools, roofing materials, or a combination thereof, on pitched or sloped roofs. One common support structure comprises a plurality of spaced apart roof jacks that are used to support a jack board between them. The jack board generally provides a substantially horizontal surface on which roofing workers can move horizontally across the roof surface, and on which they may store roofing tools and roofing materials. A problem associated with this system is that the jack stands and jack boards are heavy and require a substantial expenditure of time and effort in order to locate, and in order to reposition as the deconstruction and/or construction of the roof systems proceed. In addition, attachment of the jack stands and the jack boards generally disadvantageously require anchoring to the roof deck by the insertion of nails or screws, or the resulting perforation of the upper portion of the shingles, underlayment material, or wooden roof deck, which are all known leakage paths for water from condensation, rain, and/or ice, for example.

[0005] Polymer based roof blocks have been proposed but have generally been unsuitable. In some cases, polymer roof blocks have been too rigid, such that the blocks are not non-skid and unstable and thus have a tendency to slide downwardly in the downslope direction over the surface of the pitched roof, particularly if the roof is steeply pitched.

[0006] Therefore, it would be very desirable provide a lightweight composite roofing support system that avoids the limitations described above, and a provides a level, stable, self-supporting platform for roofing workers, roofing tools, roofing materials, or a combination thereof, on pitched or sloped roofs, and particularly steeply pitched or sloped roofs.

SUMMARY OF THE INVENTION

[0007] In one embodiment, a lightweight composite roofing support system is disclosed. The lightweight composite roofing support system comprises a longitudinally-extending core member comprising a longitudinally-extending first roof contact side comprising a longitudinally-extending first edge and an opposed longitudinally-extending second edge, a longitudinally-extending second side comprising a second side working surface having a second width and a second length that is greater than the second width, the second side tapering toward the first edge at a first acute angle (a) from the first roof contact side, and a longitudinally-extending third side comprising a third side working surface having a third width and a third length that is greater than the third width, the third side tapering toward the second edge at a second acute angle (B) from the first contact side that is different than the first acute angle (a), a laterally-extending first end comprising an integral first recess defining a first handle or grip, and an opposed laterally-extending second end comprising an integral second recess defining a second handle or grip, the core member comprising a core material and a wedge-shaped lateral cross-section, the core member configured for disposition of a longitudinally-extending resiliently compressible cover layer comprising a resiliently compressible cover material on the first roof contact side to provide a first roofing support.

[0008] In another embodiment, a lightweight composite roofing support system is disclosed. The lightweight composite roofing support system comprises a longitudinally-extending core member comprising a longitudinally-extending first roof contact side comprising a longitudinally-extending first edge and an opposed longitudinally-extending second edge, a longitudinally-extending second side comprising a second side working surface having a second width and a second length that is greater than the second width, the second side tapering toward the first edge at a first acute angle (a) from the first roof contact side, and a longitudinally-extending third side comprising a third side working surface having a third width and a third length that is greater than the third width, the third side tapering toward the second edge at a second acute angle (B) from the first contact side that is different than the first acute angle (a), a laterally-extending first end comprising an integral first recess defining a first handle or grip, and an opposed laterally-extending second end comprising an integral second recess defining a second handle or grip, the core member comprising a core material and a wedge-shaped lateral cross-section. The lightweight composite roofing support system also comprises a resiliently compressible cover layer comprising a resiliently compressible cover

material, the cover layer disposed on and covering the first roof contact side, the core member and cover layer comprising a first roofing support.

[0009] In yet another embodiment, a lightweight composite roofing support system connector is disclosed. The lightweight composite roofing support system connector comprises a longitudinally-extending connector comprising a first connector end and an opposed second connector end joined together by a longitudinally-extending intermediate portion, the first connector end configured for selective attachment to or detachment from a first roof support and the second connector end configured for selective attachment to or detachment from a second roof support, wherein upon attachment the connector is configured to connect the first roof support and the second roof support.

[0010] The above features and advantages and other features and advantages of the invention are readily apparent from the following detailed description of the invention when taken in connection with the accompanying drawings.

BRIEF DESCRIPTION OF THE DRAWINGS

[0011] Other features, advantages and details appear, by way of example only, in the following detailed description of embodiments, the detailed description referring to the drawings in which:

[0012] FIG. **1** is a perspective view of an embodiment of a roofing support system and roof support as disclosed herein illustrating an embodiment of a core member as described herein;

[0013] FIG. **2** is a top view of the roofing support system and roof support of FIG. **1**;

[0014] FIG. **3** is a bottom view of the roofing support system and roof support of FIG. **1**;

[0015] FIG. **4** is a left side view of the roofing support system and roof support of FIG. **1**;

[0016] FIG. **5** is a right side view of the roofing support system and roof support of FIG. **1**;

[0017] FIG. **6** is a front view of the roofing support system and roof support of FIG. **1**;

[0018] FIG. **7** is a rear view of the roofing support system and roof support of FIG. **1**;

[0019] FIG. **8** is a perspective view of another embodiment of a roofing support system and roof support as disclosed herein illustrating a core member and attached resiliently compressible cover layer as described herein;

[0020] FIG. **9**A is a top view of the roofing support system and roof support of FIG. **8**;

[0021] FIG. **9**B is a cross-sectional view of FIG. **9**A along Section B-B;

[0022] FIG. **10** is a bottom view of the roofing support system and roof support of FIG. **8**;

[0023] FIG. **11** is a left side view of the roofing support system and roof support of FIG. **8**;

[0024] FIG. **12** is a right side view of the roofing support system and roof support of FIG. **8**;

[0025] FIG. **13** is a front view of the roofing support system and roof support of FIG. **8**;

[0026] FIG. **14** is a rear view of the roofing support system and roof support of FIG. **8**;

[0027] FIG. **15** is a perspective view of another embodiment of a roofing support system and roof support as disclosed herein illustrating a core member and resiliently compressible cover layer comprising a first resiliently compressible cover material and a second resiliently compressible cover material as described herein;

[0028] FIG. **16** is a top view of the roofing support system and roof support of FIG. **15**;

[0029] FIG. **17** is a bottom view of the roofing support system and roof support of FIG. **15**;

[0030] FIG. **18** is a left side view of the roofing support system and roof support of FIG. **15**;

[0031] FIG. **19** is a right side view of the roofing support system and roof support of FIG. **15**;

[0032] FIG. **20** is a front view of the roofing support system and roof support of FIG. **15**;

[0033] FIG. **21** is a rear view of the roofing support system and roof support of FIG. **15**;

[0034] FIG. **22** is a perspective view of another embodiment of a roofing support system and roof support as disclosed herein illustrating a core member, selectively attachable/detachable base, and resiliently compressible cover layer attached to the base as described herein;

[0035] FIG. **23** is an exploded perspective view of the embodiment of a roofing support system and roof support of FIG. **22**;

[0036] FIG. **24** is a bottom view of the core member of the roofing support system and roof support of FIG. **22**;

[0037] FIG. **25** is an exploded perspective view of another embodiment of a roofing support system and roof support as disclosed herein illustrating a core member, a selectively attachable/detachable hook and loop attachment device comprising a first sheet of hook material or loop material and second sheet of a loop material or a hook material, respectively, and a resiliently compressible cover layer that is selectively attachable and detachable by the attachment device as described herein;

[0038] FIG. **26** is a bottom view of the core member of the roofing support system and roof support of FIG. **25** and the first sheet of hook material or loop material attached thereto;

[0039] FIG. **27** is a left side view of the core member of FIG. **26**;

[0040] FIG. **28** is a right side view of the core member of FIG. **26**;

[0041] FIG. **29** is a front view of the core member of FIG. **26**;

[0042] FIG. **30** is a rear view of the core member of FIG. **26**;

[0043] FIG. **31** is a top view of the resiliently compressible cover layer of the roofing support system and roof support of FIG. **25** and the second sheet of hook material or loop material attached thereto;

[0044] FIG. **32** is a perspective view of another embodiment of a roofing support system and roof support as disclosed herein illustrating a core member with an integral longitudinally-extending shelf and attached resiliently compressible cover layer as described herein;

[0045] FIG. **33** is a top view of the roofing support system and roof support of FIG. **32**;

[0046] FIG. **34** is a bottom view of the roofing support system and roof support of FIG. **32**;

[0047] FIG. **35** is a left side view of the roofing support system and roof support of FIG. **32**;

[0048] FIG. **36** is a right side view of the roofing support system and roof support of FIG. **32**;

[0049] FIG. **37** is a rear view of the roofing support system and roof support of FIG. **32**;

[0050] FIG. **38** is a front view of the roofing support system and roof support of FIG. **32**;

[0051] FIG. **39** is a perspective view of an embodiment of a lightweight roofing support system connector as described herein;

[0052] FIG. **40** is a top view of the roofing support system connector of FIG. **39**;

[0053] FIG. **41** is a bottom view of the roofing support system connector of FIG. **39**;

[0054] FIG. **42** is a left side view of the roofing support system connector of FIG. **39**;

[0055] FIG. **43** is a right side view of the roofing support system connector of FIG. **39**;

[0056] FIG. **44** is a front view of the roofing support system connector of FIG. **39**;

[0057] FIG. **45** is a rear view of the roofing support system connector of FIG. **39**;

[0058] FIG. **46** is a bottom view of an embodiment of a roofing support system connector of FIGS. **39-45** connecting two roof supports to form an extended or extendable roofing support system and roof support as described herein;

[0059] FIG. **47** is a schematic side view of a roofing support system and roof support as described herein (e.g., FIG. **8**) in use on a first sloped roof with a first roof pitch and the second side and second working surface facing upslope and providing a horizontal or substantially horizontal second working surface and a portable platform for support of a roofing working or roofing load;

[0060] FIG. **48** is a schematic side view of a roofing support system and roof support as described herein (e.g., FIG. **8**) in use on a second sloped roof with a second roof pitch and the third side and third working surface facing upslope and providing a horizontal or substantially horizontal third working surface and a portable platform for support of a roofing working or roofing load;

[0061] FIG. **49** is a side view of an embodiment of a roofing support system and roof support as disclosed herein illustrating an embodiment of a core member with an acute rounded triangular cross-section shape on a sloped roof with a roof pitch and the third side and third working surface facing upslope and providing a horizontal or substantially horizontal third working surface and a portable platform for support of a roofing working or roofing load;

[0062] FIG. **50** is a schematic illustration of a roofing support system and roof support as disclosed herein illustrating that the second side or third side may be oriented on sloped roofs with a plurality of roof pitches to provide a horizontal or substantially horizontal working surface on these sloped roofs;

[0063] FIG. **51** is a schematic side view of two roofing support systems and roof supports (e.g., FIG. **8**) in use on a sloped roof with a roof pitch disposed proximate and on opposing sides of the roof peak with the third sides and third working surfaces facing upslope and providing a horizontal or substantially horizontal third working surfaces and a peak platform for support of a roofing worker or roofing load at the roof peak;

[0064] FIG. **52** is a table illustrating representative properties of a core material comprising expanded polypropylene (EPP);

[0065] FIG. **53** is a table illustrating representative properties of a cover material comprising a flexible polyurethane foam (FPF).

DESCRIPTION OF THE EMBODIMENTS

[0066] This invention comprises a lightweight composite roofing support system comprising a reversible dual or double-wedge that supports, or acts as a support for, a load placed on a sloped or pitched roof. The load may include a roofing worker (person), or workers, or various roofing materials or equipment, or a combination thereof. The lightweight composite roofing support system may be used without the requirement of fasteners to hold it in place. As used herein, roofing workers includes any person performing work on the roof of a house or other building for any purpose, including those that repair, remove, or install roofing materials, as well as painters, carpenters, siding installers, seasonal light installers, satellite installers, HVAC equipment installers, homeowners, and any other person that has occasion to perform work upon a sloped or pitched roof, particularly a steeply sloped or pitched roof, as described herein. As used herein, roofing material may include any material or equipment or tool placed on the roof of a house or other building either temporarily or permanently, including roofing construction or repair materials, such as shingles, metal panels, boards, wooden or composite sheet or board underlayment, rolled roofing products, solar panels, vents, nails, staples, or screws, or materials or equipment that are placed on or in or protrude from a roof, such as various antennas, satellite dishes, chimney materials, skylights, windows, air conditioning components, and the like. The lightweight composite roofing support system represents an improvement over existing roofing support systems, sloped roof article holders and roof leveling platforms. The lightweight composite roofing support system can be used by roofing workers as a stable, non-skid platform to walk, stand, crouch, kneel, sit, or lie on, or stack, place or otherwise stage or store roofing materials or equipment on. The design allows the dual or double wedge to be manufactured at different lengths and for roofing workers as users to move freely along the length of the wedge analogous to the manner in which roofing workers would move along a traditional jack board that is used in combination with a plurality of roof jacks that are anchored to the roof with attachments such as nails or screws. The lightweight composite roofing support system advantageously does not require that it be anchored to the roof deck by the insertion of nails or screws with the resultant perforation of the upper portion of the shingles, underlayment, or wooden roof deck, which are all known leakage paths for water that occurs on the roof as a result of condensation, rain, hail, snow, or ice, for example. In one embodiment, the lightweight composite roofing support system or dual or double-wedge comprises a molded polymer support or core member with a plurality of support sides configured to provide a level working surface for at least two different specific roof slopes or pitches, and a substantially level work surface over a range of similar roof slopes that are greater than and less than the specific roof slopes, that has an attached cover layer or roof contact layer attached to a roof contact side that is configured to contact and provide compliance and adhesion to a steeply sloped roof surface. The core member also has integral handles or grips formed on opposed ends that may be used to easily lift or carry the roofing support system onto the sloped roof (e.g., up a ladder) or while working on the sloped roof.

[0067] In one embodiment, the lightweight composite roofing support system or dual wedge comprises a molded

plastic support or core member with a plurality of support sides and a selectively attachable/detachable cover layer or roof contact layer and integral handles or grips formed on opposed ends.

[0068] In one embodiment, the lightweight composite roofing support system or wedge comprises a molded plastic support or core member with a plurality of support sides and a selectively attachable/detachable base and cover layer or roof contact layer and integral handles or grips formed on opposed ends.

[0069] The cross-sectional shape of the molded plastic support or core member may be configured with a triangular (e.g., scalene triangular), truncated triangular, scalene trapezoid, or irregular quadrilateral shape, for example, to provide a level working surface to move, walk, stand, crouch, kneel, sit, or lie on, or stack, place or otherwise store roofing materials or equipment on for two different specific roof slopes (e.g. 10/12 and 12/12), and a substantially level work surface over a range of roof slopes that are slightly less than or greater than the specific roof slopes, by merely rotating the base or roof contact surface of the wedge 180 degrees. The cover layer or roof contact layer includes a cover or roof contact material, such as various open-cell or closed-cell foams, including polyurethane foam, and natural or synthetic sponge rubber, and the like that advantageously provide a non-skid attachment or adhesion to most roof surfaces, particularly asphalt or fiberglass shingle roof surfaces, and including common roofing underlayment materials (e.g. asphalt felt, rubberized felt, and polymer or synthetic underlayment) or roof deck materials (e.g. dimensional lumber, plywood, and oriented strand board (OSB)). The cover or roof contact material may be configured to provide a coefficient of sliding friction, particularly when loaded, that in some embodiments prevents sliding movement down the roof, and other embodiments substantially prevents or resists sliding movement down the roof. Cost and weight are kept at a minimum while maintaining robustness by eliminating moving parts and the need for fasteners, such as nails and screws, found in related art devices.

[0070] In one embodiment, a triangular, truncated triangular, scalene trapezoidal, or irregular quadrilateral cross-sectional shape may be configured to provide dual or double-wedge lateral cross-sectional shape and a level working surface for two different roof slopes by merely rotating the wedge 180 degrees. In one embodiment, the level working surfaces of the support sides comprise a non-slip material, or include a surface roughness, texture, or pattern of protruding traction elements (e.g. raised rectangular, chevron, or wavy bars, or circular buttons) that provide a non-slip surface. The lightweight composite roofing support system or dual or double-wedge may include integral handles or grips, including integrally molded handles or grips, for easy transportation, including lifting or carrying the system onto a roof, and repositioning of the system or wedge on the roof while working.

[0071] As used herein, longitudinal or along the length refers to a direction that extends along an article centerline or axis, and may also be used in reference to a direction that is generally parallel to a roof peak. The term lateral or along the width or left-right refers to a direction that is orthogonal, or substantially orthogonal, to the longitudinal direction. The terms up or upward or down or downward refer to the top or bottom of the article, or to a direction substantially toward the top or bottom of the article, respectively, and may also be used in context in reference to a direction that is generally upward toward a roof peak or downward toward the ground. The terms in or inward refer to a direction toward the center of the article, and out or outward refers to the opposite direction away from the center or central portion of the article. The term upslope or up-roof refers to a direction or placement toward or closer to the peak or apex of a sloped roof and, conversely, the term downslope or down-roof refers to a direction or placement away from or farther from the peak or apex of a sloped roof and closer to the ground.

[0072] Referring to the figures, and particularly FIGS. **1-14** and **47-51**, for example, a lightweight composite roofing support system **10** is disclosed. The lightweight composite roofing support system **10** is a roofing support or platform that supports a roofing load **2**. The roofing load may be any static or dynamic roofing load **2** placed on a sloped or pitched roof **36**, including a load from the weight of a roofing worker **6** or workers, or a roofing material **8**, such as shingles **99** (e.g. asphalt or fiberglass shingles), rolled roofing material (e.g. tar paper, adhesive polymer snow and ice shield), structural members (e.g. dimensional lumber), underlayment (e.g. sheets of oriented strand board (OSB) and/or plywood), wood or clay or ceramic roofing tiles, metal roofing panels, solar shingles (e.g. solar panels applied directly to the roof and also serving as the roof covering) or solar roof panels (e.g. solar panels disposed onto or above the roofing material) and/or fasteners, or loads associated with any other construction materials (e.g. paint containers, siding, all manner of construction tools and/or equipment, and the like) placed thereon. In certain embodiments, the lightweight composite roofing support system **10** may also be referred to as a roof step or roof platform because it provides a platform for a worker, or workers, to move, walk, stand, crouch, kneel, sit, or lie on, or otherwise use as a level work surface while working on a sloped or pitched roof **36**. The lightweight composite roofing support system **10** may be used without the requirement of fasteners to hold it in place. In these embodiments, the weight of a roofing load **2** placed on the lightweight composite roofing support system **10** together with the coefficient of friction of the contact surface of the support system in contact on the surface of the sloped or pitched roof **36** provides sufficient adhesion to secure the system to the roof. In one embodiment, the system **10** comprises a composite because it comprises a longitudinally-extending core member **12** made from a core material **14** and a longitudinally-extending cover layer **16** made from a cover material **18**. Referring to the figures, and particularly FIGS. **8-14**, in one embodiment, the lightweight composite roofing support system **10** described herein comprising longitudinally-extending core member **12** and longitudinally-extending cover layer **16** comprises a length of 24 inches and weighs 60-100 oz., more particularly 70-90 oz., and more particularly 75-85 oz. In another embodiment, the lightweight composite roofing support system **10** described herein comprising longitudinally-extending core member **12** and a longitudinally-extending cover layer **16** comprises a length of 32 inches and weighs 80-134 oz., more particularly 93-120 oz., and more particularly 100-113 oz.

[0073] As illustrated, for example, in FIGS. **1-14** and **47-51**, in one embodiment, the lightweight composite roofing support system **10** includes a longitudinally-extending core member **12** comprising a dual or double-wedge lateral cross-section **22** shape, more particularly a reversible, dual

or double-wedge cross-section **22** shape having different acute wedge angles (α, β) that comprises two opposed wedges **11**, **13** in an opposed dual or double-wedge lateral cross-section **22** shape configuration having different acute wedge angles with the thin edges of the opposed wedges **11**, **13** facing outwardly. The dual or double-wedge lateral cross-section **22** shape may be understood from the end views as shown, for example, in FIGS. **4** and **5** and the cross-sectional view of FIG. **9**B. The thin edges of the wedges **11**, **13** need not taper to a sharp edge or line as in a traditional wedge, but rather may taper to blunted or rounded edges or shoulders, such as longitudinally-extending first edge **24** and a longitudinally-extending second edge **26** as shown in FIGS. **1**, **4** and **5**, for example. The blunted or rounded edges or shoulders are advantageous because they are damage-resistant and less susceptible to damage during use by chipping or breaking off while being used by roofing workers **6** on a sloped roof **36** in the manner described herein or when being transported or stored off-roof together with other roofing equipment and/or materials as is typical in the roofing industry.

[0074] In one embodiment, the longitudinally-extending core member **12** comprises a longitudinally-extending first roof contact side **28** or roof facing side **28**. The first roof contact side **28** or roof facing side of the core member is the side of the core member that is oriented to directly or indirectly contact or face the sloped or pitched roof **36** or whatever other surface the lightweight composite roofing support system **10** is to be placed on. While the core member **12** itself is not generally placed in direct contact with the roof surface or other contact surface, although in some configurations it could be, the term first roof contact side **28** or roof facing side refers to the orientation of this side toward or closest to the sloped or pitched roof **36**, or whatever other surface the lightweight composite roofing support system **10** is to be placed on. The first roof contact side **28** is configured to receive the cover layer **16** made from a cover material **18** that also faces and is in direct contact with the sloped or pitched roof **36**. The roof contact side **28** is generally rectangular or rounded rectangular and comprises a longitudinally-extending first edge **24** and an opposed longitudinally-extending second edge **26** and has a first width (w_1) and a first length (l_1) that is greater than the first width. In one embodiment, the first roof contact side **28** has a generally flat planar shape. In one embodiment, the longitudinally-extending first roof contact side includes a first slot opening **40** comprising a first slot or pocket **41** that is defined by the first inner slot wall **42** and a first recess lip **43** that protrudes inwardly toward the longitudinally axis **9** and extends around the periphery of the first recess **45** that is formed in the first end **46** of the longitudinally-extending core member **12**. The first recess lip **43** may be spaced apart from the first inner slot wall **42** by any suitable spacing (d_1), which in one embodiment is 0.5-2.0 inches, more particularly 0.75-1.25 inches. The first recess lip **43** protrudes inwardly from the first slot base **47**, and may protrude inwardly any suitable height (h_1), which in one embodiment is 0.3-1.0 inches, and more particularly 0.4-0.75 inches, and have any suitable thickness (t_1) measured from the first end **46** and the first outer slot wall **49**, which in one embodiment is 0.3-1.0 inches, and more particularly 0.4-0.75 inches. The first slot base **47** also extends around the periphery of the first recess **45**. The first slot or pocket **41** and first recess lip **43** define a first handle or grip **48** that may be gripped by a hand of a roofing worker **6**, for example, for carrying or movement of the roof support **32**. In one embodiment, the longitudinally-extending first roof contact side includes an opposed second slot opening **50** proximate the opposed second end **56** that may comprise a mirror image of the first slot opening **40**. The opposed second slot opening **50** comprising a second slot or pocket **51** that is defined by the second inner slot wall **52** and a second recess lip **53** that protrudes inwardly toward the longitudinally axis **9** and extends around the periphery of the second grip recess **55** that is formed in the second end **56** of the longitudinally-extending core member **12**. The second recess lip **53** and second outer slot wall **59** may be spaced apart from the second inner slot wall **52** by any suitable spacing (d_2), which in one embodiment is 0.5-2.0 inches, more particularly 0.75-1.25 inches. The second recess lip **53** protrudes inwardly from the second slot base **57**, and may protrude inwardly any suitable height (h_2), which in one embodiment is 0.3-1.0 inches, and more particularly 0.4-0.75 inches, and have any suitable thickness (t_2) measured from the second end **56** and the second outer slot wall **59**, which in one embodiment is 0.3-1.0 inches, and more particularly 0.4-0.75 inches. The second slot base **57** also extends around the periphery of the second handle or grip recess **55**. The second slot or pocket **51** and second recess lip **53** define a second handle or grip **58** that may be gripped by the hand of a roofing worker **6**, for example, for carrying or movement of the roof support **32**.

[0075] The longitudinally-extending core member **12** also comprises a longitudinally-extending second side **30** comprising a second side working surface **31** having a second width (w_2) and a second length (l_2) that is greater than the second width, and tapering toward the longitudinally-extending first edge **24** at a first predetermined acute angle (α) from the first roof contact side **28**. The longitudinally-extending first side **28** and the longitudinally-extending second side **30** taper toward one another at the longitudinally-extending first edge **24**. The longitudinally-extending second side **30** may also be referred to as the second load-bearing side **30** and is configured to receive and support the roofing load **2** depending on the orientation of the lightweight composite roofing support system **10** on the roof **36** and which of the longitudinally-extending second side **30** or longitudinally-extending third side **34** is oriented upslope as shown in FIGS. **47** and **48**. The longitudinally-extending second side **30** comprising a second side working surface **31** is a generally flat, planar, continuous surface, that is configured for use as described herein by a roofing worker, and in a preferred embodiment will not include any raised or recesses features or other surface discontinuities, other than non-skid or traction elements described herein, that would be recognized by those of ordinary skill in the roofing arts as a potential safety hazard, such as a potential stumbling or tripping hazard to a roofing worker.

[0076] The longitudinally-extending core member **12** also comprises a longitudinally-extending third side **34** comprising a third side working surface **33** having a third width (w_3) and a third length (l_3) that is greater than the third width, and tapering toward the longitudinally-extending second edge **26** at a second predetermined acute angle (B) from the longitudinally-extending first roof contact side **28**. The longitudinally-extending third side **34** may also be referred to as the third load-bearing side **34** and is also configured to alternately receive and support the roofing load **2** depending

on the orientation of the lightweight composite roofing support system **10** on the roof **36** and which of the longitudinally-extending second side **30** or longitudinally-extending third side **34** is oriented upslope as shown in FIGS. **47** and **48**. The longitudinally-extending third side **34** comprising a second side working surface **33** is a generally flat, planar, continuous surface, that is configured for use as described herein by a roofing worker, and in a preferred embodiment will not include any raised or recesses features or other surface discontinuities, other than non-skid or traction elements described herein, that would be recognized by those of ordinary skill in the roofing arts as a potential safety hazard, such as a potential stumbling or tripping hazard to a roofing worker.

[0077] In one embodiment, as illustrated in FIG. **47**, in a first configuration or orientation where the longitudinally-extending first edge **24** is defined by the intersection of the longitudinally-extending first side **28** and longitudinally-extending second side **30** and the predetermined first acute angle (α) between these sides is configured for placement facing up-roof closest to the peak **39** or apex of the sloped roof **36** with the longitudinally-extending first roof contact side **28** facing and cover layer **16** in pressing contact against the sloped roof **36** and the longitudinally-extending first edge **24** substantially parallel or parallel to the peak. In this configuration, the predetermined first acute angle (α) may be selected to be the same as a common first roof angle or pitch **38** (e.g., a 10/12 pitch) of the sloped roof **36**, which in the case of a 10/12 pitch (39.81°) roof **36** means that the predetermined first angle (α) is also 39.81°, so that the second side **30** extends in the direction of the first peak **39** as a substantially horizontal or horizontal first platform, which advantageously provides a very useful substantially level or level longitudinally-extending second side working surface **31** on the sloped roof **36** for use as described herein. As used herein, substantially parallel includes minor misorientations of the longitudinally-extending first edge **24** with the line defined by the first peak **39** such that they are non-parallel, and the longitudinally-extending second side **30** is not level, but rather substantially level although it may be slightly inclining or declining as compared to the first peak **39** of the first sloped roof **36**. One of ordinary skill in the roofing arts will understand that substantially parallel orientations still provide a very advantageous and useful longitudinally-extending second side working surface **31** of longitudinally-extending second side **30** as compared to the alternative of using the steeply first pitched roof **36** as the working surface. One of ordinary skill in the roofing arts will also understand that the orientation with the longitudinally-extending first edge **24** at the intersection of longitudinally-extending first side **28** and longitudinally-extending second side **30** and defining predetermined first acute angle (α) is placed facing up-roof closest to the peak **39**, and substantially parallel or parallel to the peak, that the lightweight composite roofing support system **10** also provides a very advantageous and useful longitudinally-extending second side working surface **31** (i.e. second side **30**) for first sloped or pitched roofs **36** with a range of similar roof pitches that are greater than and less than the predetermined first acute angle (α) and the first predetermined roof angle or pitch **38** (e.g. a 10/12 pitch) as illustrated schematically in FIG. **50**. In one embodiment, where the predetermined first acute angle (α) is 39.81° corresponding to a 10/12 first predetermined roof angle or pitch **38**, the range of similar roof pitches may comprise a range of 14/12 to 7/12 (excluding 10/12), or more particularly 12/12 to 8/12 (excluding 10/12), even though the longitudinally-extending second side working surface **31** of second side **30** is only substantially horizontal, not completely horizontal, or level on these roofs. This is because the slight inward or outward slope of the second side working surface **31** of longitudinally-extending second side **30** over this range of similar roof pitches is still very advantageous and much preferred compared to working without the lightweight composite roof support system **10** and using the actual roof surfaces of these steeply pitched roofs **36** as the working surface to support roofing loads **2**, particularly in the case of roofing workers **6** trying to move, walk, stand, crouch, kneel, sit, or lie on, or to stack, place or otherwise stage or store roofing materials **8** or equipment on, the sloped roof **36** as shown in FIG. **50**. In one embodiment, the second side working surface **31** comprises a second side non-skid surface **61** over all, or a portion or portions, of the second side working surface **31**. In one embodiment, the second side non-skid surface **61** comprises a second side surface texture or surface roughness, or a predetermined second side pattern, such as an embossed pattern. The second side non-skid surface **61** may be formed by adding a non-skid material after molding, or integrating a non-skid material or materials to the second side working surface **31** during molding, to provide a second side surface texture or pattern, or may be integrally formed in the core material of the second side working surface **31** by molding the same into the surface as an embossed pattern, for example. In one embodiment, the second side working surface **31** comprises a second side non-skid surface **61** comprising a plurality of integrally formed second side protrusions **60** projecting upwardly from the second side working surface **31** as second side traction elements **62**. The protrusions may have any suitable shape or profile as viewed from above, including various circular, rectangular, chevron, herringbone, or whorl shapes. In one embodiment, the second side protrusions **60** have a protruding rectangular shape and are disposed in an array or pattern comprising a plurality of spaced apart columns and rows and comprise a plurality of second side traction bars or elements **62**.

[0078] As illustrated in FIGS. **47** and **48**, in one embodiment the lightweight composite roofing support system **10** is also reversible and configured for an alternate use in a second configuration or orientation on another sloped roof or sloped roofs **36'** having a second predetermined roof pitch **38'**, or range of pitches, that is different from the first predetermined roof pitch **38** or range of pitches. Alternately, in this embodiment, as will easily be understood by one of ordinary skill both from FIGS. **1-14** and **47-50**, the second configuration or orientation (FIG. **48**) of lightweight composite roofing support system **10** may be reversed, rotated or otherwise changed by 180° from the first orientation (FIG. **47**) so that predetermined second acute angle (β) is placed facing up-roof closest to the second peak **39'** or apex of another or second steeply pitched roof **36'** or roofs having a second predetermined roof pitch **38'**, or range of pitches, that is different than the first predetermined roof pitch **38**. In the second configuration or orientation, the longitudinally-extending second edge **26** is defined by the intersection of the longitudinally-extending third side **34** and the longitudinally-extending first roof contact side **28** and the predetermined second acute angle (β) between these sides is configured for placement facing up-roof closest to the second

peak **39'** or apex of the second sloped roof **36'** with the longitudinally-extending first side **28** facing and cover layer **16** in pressing contact against the sloped roof **16** and the longitudinally-extending second edge **26** substantially parallel or parallel to the peak. In this configuration, the predetermined second acute angle (β) may be selected to be the same as a second predetermined roof angle or pitch **38'** (e.g., a 12/12 pitch) of the sloped roof **36**, which in the case of a 12/12 pitch (45°) roof **36** means that the predetermined second acute angle (β) is also 45°, so that the longitudinally-extending third side **34** extends in the direction of the second peak **39'** as a substantially horizontal or horizontal second platform, which advantageously provides a very useful substantially level or level longitudinally-extending third side working surface **33** on the second sloped roof **36'** for use as described herein. As used herein, substantially parallel includes minor misorientations of the longitudinally-extending second edge **26** with the line defined by the second peak **39'** such that they are non-parallel, and third side **34** is not level, but rather substantially level although it may be slightly inclining or declining as compared to the second peak **39'** of the second steeply sloped roof **36'**. One of ordinary skill in the roofing arts will understand that substantially parallel orientations still provide a very advantageous and useful longitudinally-extending third side working surface **33** of longitudinally-extending third side **34** as compared to the alternative of using the second steeply pitched roof **36'** as the working surface. One of ordinary skill in the roofing arts will also understand that the orientation with the longitudinally-extending second edge **26** at the intersection of longitudinally-extending third side **34** and longitudinally-extending first side **28** and defining predetermined second acute angle (β) is placed facing up-roof closest to the peak **39**, and substantially parallel or parallel to the peak, that the lightweight composite roofing support system **10** also provides a very advantageous and useful longitudinally-extending third side working surface **33** (i.e. third side **34**) for second sloped or pitched roofs **36'** with a range of similar roof pitches that are greater than and less than the predetermined second acute angle (β) and the second predetermined roof angle or pitch **38'** (e.g. a 12/12 pitch). In one embodiment, where the predetermined second acute angle (β) is 45° corresponding to a 12/12 second predetermined roof angle or pitch **38'**, the range of similar roof pitches may comprise a range of 16/12 to 9/12 (excluding 12/12), or more particularly 14/12 to 10/12 (excluding 12/12), even though the longitudinally-extending third side working surface **33** of longitudinally-extending third side **34** is only substantially horizontal, not completely horizontal, or level on these roofs. This is because the slight inward or outward slope of the third side working surface **33** of the longitudinally-extending third side **34** for these roof pitches is still very advantageous and much preferred compared to working without the roof support system and using the roof surfaces of these steeply pitched roofs **36'** as the working surface to support roofing loads **2**, particularly in the case of roofing workers **6** trying to move, walk, stand, crouch, kneel, or sit on the roof as shown in FIG. **50**. In one embodiment, the third side working surface **33** comprises a third side non-skid surface **63** over all, or a portion or portions, of the third side working surface **33**. In one embodiment, the third side non-skid surface **63** comprises a third side surface texture or surface roughness, or a predetermined third side pattern, such as an embossed pattern, which may the same or different than the second side non-skid surface **61**. The third side non-skid surface **63** may be formed by adding a non-skid material after molding, or integrating a non-skid material or materials to the third side working surface **33** during molding, to provide a third side surface texture or pattern, or may be integrally formed in the core material **14** of the third side working surface **33** by molding the same into the surface as an embossed pattern. In one embodiment, the third side working surface **33** comprises a third side non-skid surface **63** comprising a plurality of integrally formed third side protrusions **65** projecting upwardly from the third side working surface **33** as third side traction elements **66**. The protrusions may have any suitable shape or profile as viewed from above, including various circular, rectangular, chevron, herringbone, or whorl shapes. In one embodiment, the third side protrusions **65** have a protruding rectangular shape and are disposed in an array or pattern comprising a plurality of spaced apart columns and rows and comprise a plurality of third side traction bars or elements **66**.

[0079] In one embodiment, even though the second side working surface **31** may incorporate first non-skid surface **61** that may include traction elements **62** and third side working surfaces **33** may incorporate second non-skid surface **63** that may include traction elements **66**, these working surfaces are generally planar and only include features that enhance the working surface for use by a roofing worker **6** (e.g., enhance traction or provide a non-skid surface), including the ability to move, walk, stand, crouch, kneel, sit, or lie on the surface safely, and will not include raised elements or features that protrude above the non-skid surface **63** or traction elements **66**, such as raised trays or raised edges, or alternately recessed features, such as recessed trays or recessed features, that would make these surfaces non-planar and that one of ordinary skill in the art would understand to represent potential tripping or loss-of-balance hazards or otherwise comprise a safety hazard, since it is understood that the steeply sloped roofs **36** where lightweight composite roofing support system **10** are particularly advantageous require the avoidance and/or elimination of all such hazards.

[0080] In one embodiment the longitudinally-extending core member **12** comprises a dual or double-wedge lateral cross-section **22** shape that is substantially uniform or the same along the longitudinal axis **9**, and in other embodiments that is substantially uniform or the same along the longitudinal axis except in the regions proximate the opposed first end **46** and second end **56**, which include first slot opening **40** and first handle or grip recess **45** and second slot opening **50** and second handle or grip recess **55**, respectively (e.g., FIGS. **1-14**). In one embodiment, the dual or double-wedge lateral cross-section **22** comprises a scalene triangular cross-section shape that is substantially uniform or uniform along the longitudinal axis **9**, and in other embodiments is a scalene triangle that is substantially uniform or uniform along the longitudinal axis except in the regions proximate the opposed ends, such as second end **56** (e.g. FIG. **49**), which, for example, includes second slot opening **50** and second handle or grip recess **55**, and has identical end features to those shown in FIGS. **1-14**. The longitudinally-extending first roof contact side **28** is the hypotenuse of the scalene triangular cross-section shape and the shorter sides of the scalene triangle comprise the of the

longitudinally-extending second side **30** and longitudinally-extending third side **34** as shown in FIG. **49**.

[0081] In another embodiment, the lateral cross-section **22** comprises an irregular convex quadrilateral shape and/or trapezium shape (where none of the sides are of equal length) and/or a truncated scalene triangle (that is truncated proximate what would otherwise be the obtuse angle of the scalene triangle) that is substantially uniform or the same size along the longitudinal axis, and in other embodiments is substantially uniform or the same along the longitudinal axis except in the regions proximate the opposed first end **46** and second end **56**, which include first slot opening **40** and first handle or grip recess **45** and second slot opening **50** and second handle or grip recess **55**, respectively (e.g., FIGS. **1-14**). The longest side of the irregular convex quadrilateral and/or trapezium and/or truncated scalene triangle comprises the longitudinally-extending first roof contact side **28**, and the sides adjacent to the longitudinally-extending first side **28** comprise the longitudinally-extending second side **30**, and longitudinally-extending third side **34**. The irregular convex quadrilateral and/or trapezium and/or truncated scalene triangle also comprises a fourth side **35** as shown in FIGS. **1-14**. In this embodiment, where the lateral cross-section **22** comprises an irregular convex quadrilateral and/or trapezium and/or truncated scalene triangle the longitudinally-extending fourth side **35** is not parallel to the longitudinally-extending first side **28**. The longitudinally-extending fourth side **35** is generally not a working surface because of the rather extreme slope (e.g., FIGS. **47**, **48**), but rather a transition surface that extends between the second side **30** and the third side **34**. However, in one embodiment, the fourth side **35** may optionally include a plurality of optional recesses or pockets **60** (e.g., FIG. **1**) formed therein that may be used to temporarily hold and/or store any predetermined item, including various construction or roofing materials or equipment described herein, such as replacement nails for a nailing gun, for example. In one embodiment illustrated schematically in FIGS. **4** and **5**, the dual or double-wedge lateral cross-section **22** shape may comprise a scalene trapezoidal shape and the longitudinally-extending fourth side **35'** is parallel to the longitudinally-extending first side **28**. While useful, a scalene trapezoidal lateral cross-section **22** generally reduces the width (w_2 or w_3) of the second side **30** or third side **34** and the respective size of the second side working surface **31** or third side working surface **33** as may be understood in FIGS. **4** and **5**.

[0082] The longitudinally-extending core member **12** may have any suitable configuration and any suitable size. In one embodiment, the longitudinally-extending core member **12** has an integral one-piece configuration, which may be produced by molding or forming the core material **14** into the shape of the core member as illustrated in FIGS. **1-14**, for example. While the size of the core member **12** may be characterized with regard to any of the sides thereof, in one embodiment, it is characterized by the size of the longitudinally-extending first contact side **28**. The longitudinally-extending first contact side **28** may comprise any suitable length (l_1) and width (w_1). In one embodiment, the size may comprise a length (l_1) that ranges from 20 to 144 inches, more particularly 24 to 72 inches, even more particularly 24 to 48 inches, and yet more particularly 24-36 inches. In one embodiment, the size may comprise a width (w_1) that ranges from 18 to 48 inches, more particularly 20 to 40 inches, even more particularly 20 to 30 inches, and yet more particularly 22-28 inches. In one embodiment, the length (l_1) is greater than the width (w_1). In one embodiment, the second side length (l_2) and third side length (l_3) are the same as the first roof contact side length (l_1), the second side width (w_2) and third side width (w_3) will scale geometrically with the first roof contact side width (w_1) and the selection of acute angles (α) and (β) together with the position, including width (w_4) and angulation from horizontal of longitudinally extending fourth **35**. In one embodiment, the length (l_1) ranges from 24-48 inches, the width (w_1) ranges from 17-36 inches, the second side length (l_2) and third side length (l_3) are the same as the first roof contact side length (l_1), the second side width (w_2) ranges from 8-18 inches, α=39.81° (e.g., an 10/12 pitch), the third side width (w_3) ranges from 8-18 inches, and β=45° (e.g., a 12/12 pitch).

[0083] The longitudinally-extending core member may be formed from any suitable core material **14**, including various metals, engineering thermoplastic or thermoset polymers, or composites thereof. In one embodiment, the core material **14** comprises a rigid or substantially rigid engineering thermoplastic or thermoset polymer. In one embodiment, the core material **14** comprises a rigid or substantially rigid engineering thermoplastic or thermoset polymer comprising polystyrene (PS), polyethylene (PE), polypropylene (PP), polyurethane (PU), or ethylene-vinyl acetate (EVA), or a combination thereof, and more particularly an expanded foam comprising polystyrene (EPS), polyethylene (EPE), polypropylene (EPP), polyurethane (EPU), or ethylene-vinyl acetate (EEVA), or a combination thereof, which, as used herein, includes chemical or physical combinations thereof, including copolymers thereof. In one embodiment, the core material **14** comprises a rigid or substantially rigid expanded foam of EPP having the properties set forth in FIG. **52**, or another expanded polymer foam having properties within the ranges set forth in FIG. **52**, more particularly a density, compressive strength, compression set, tensile strength, and flexural strength within the ranges set forth in FIG. **52**. In one embodiment, the expanded foam comprises EPP or EEVA comprising a density of 1.25-12 lb./ft^3, and more particularly 2-8 lb./ft^3, and more particularly 3-7 lb./ft^3, and yet more particularly 3-6 lb./ft^3. The core member **12** may be molded as an integral or one-piece component to include all of the elements described herein by any suitable molding or forming method, including various conventional molding methods employed to mold rigid or substantially rigid engineering thermoplastic or thermoset polymers, particularly rigid or substantially rigid expanded engineering thermoplastic or thermoset polymer foams, including injection molding. In one embodiment, as used herein, a rigid or substantially rigid core material **14** may be defined by the material properties, particularly a compressive strength, compression set, tensile strength and flexural strength within the ranges set forth in FIG. **52**. In another embodiment, as used herein, a rigid or substantially rigid core material may be defined as substantially non-compressible (i.e. experiences only a minor amount of elastic deformation) under a predetermined roofing load **2** (l), including less than 10% elastic deformation under the predetermined roofing load (l), more particularly less than 5% deformation, and even more particularly less than 1% deformation, and includes ranges of 0.1-10% deformation, more particularly 0.1-5% deformation, and even more particularly 0.1-3% deformation. In one embodiment, the predetermined roofing load **2** may include the weight of at least one person, which

in one embodiment ranges from 100 to 350 lbs., or the weight of at least one bundle of shingles, which in one embodiment ranges from 40-80 lbs., or the weight of at least one roll of underlayment, which in one embodiment ranges from 16-100 lbs., or a combination thereof. In other embodiments, the predetermined roofing load **2** may include a plurality of the above items.

[0084] As illustrated in FIG. **49** in one embodiment, the roofing support system **10** and first roofing support **32** comprises a longitudinally-extending third side **34**, and the dual or double-wedge shape lateral cross-section comprises a triangular lateral cross-section, including a generally or substantially scalene triangular lateral cross-section, with the longitudinally-extending third side **34** opposite the first predetermined angle (α) formed by the convergence, including the intersection, of the longitudinally-extending third side **34** and the longitudinally-extending second side **30**. As used herein, generally or substantially with reference to the cross-sectional shape includes embodiments where the converging sides do not actually intersect to form a vertex, but rather shapes that include one or more blunted edge or radii (e.g., r_1, r_2, r_3 in FIG. **49**) in place of the vertices (e.g., a blunted or rounded triangular shape), but where one of ordinary skill would readily recognize a generally or substantially triangular lateral cross-sectional shape or form.

[0085] Referring to FIGS. **1-14** and **47-51**, particularly FIGS. **8-14**, in one embodiment, the lightweight composite roofing support system **10** comprises a longitudinally-extending core member **12** comprising a core material **14** as described herein and a longitudinally-extending resiliently compressible cover layer **16** comprising a resiliently compressible cover material **18** that is disposed on and covering the longitudinally-extending first roof contact side **28**. In one embodiment, the longitudinally-extending core member **12** and the longitudinally-extending resiliently compressible cover layer **16** comprise lightweight composite roofing support system **10** and first roofing support **32**. As used herein, the term "covering" in the context of the longitudinally-extending cover layer **16** covering the longitudinally-extending first roof contact side **28** comprises covering all or any portion of the longitudinally-extending first roof contact side. The term "covering" includes in certain embodiments covering at least a portion of the longitudinally-extending first roof contact side **28**, and in certain other embodiments includes covering all or substantially all of longitudinally-extending first side **28**, and in certain other embodiments may extend outwardly beyond the edges of the longitudinally-extending first side **28**, such as, for example, extending slightly outwardly of the longitudinally-extending first side **28**, including in the corners as shown in FIG. **9**A, for example.

[0086] The longitudinally-extending resiliently compressible cover layer **16** may comprise any suitable resiliently compressible cover material **18**. In one embodiment, the resiliently compressible cover material comprises a resiliently compressible elastomer, including thermoset and thermoplastic elastomers. In one embodiment, the resiliently compressible cover material comprises a resiliently or reversibly compressible polymer, including a resiliently compressible polymer foam, and including a resiliently or reversibly compressible elastomeric foam. The resiliently or reversibly compressible elastomeric foam may include resiliently or reversibly compressible thermoset and/or thermoplastic elastomeric foams, and may include both open-cell and closed-cell foams. In one embodiment, the cover material **18** comprises a resiliently or reversibly compressible polymer, such as a resiliently or reversibly compressible elastomeric foam, and comprises polyurethane (PU), polystyrene (PS), polyisocyanurate (PIR), polyethylene (PE), polypropylene (PP), poly(ethylene-vinyl acetate) (EVA), poly(vinyl chloride) (PVC), or a natural or synthetic rubber, silicone, or a combination thereof which, as used herein, includes chemical or physical combinations thereof, including copolymers thereof. In one embodiment, the polyurethane (PU) foams may include both open-cell and closed-cell polyether polyurethane and polyester polyurethane foams. In one embodiment, the cover material **18** comprises a resiliently or reversibly compressible open-cell polyether polyurethane foam. In one embodiment, the cover material **18** comprises a viscoelastic, low-resilience, foam or memory foam, particularly various polyurethane (PU) memory foams. In one embodiment, the resiliently compressible cover material comprises a resiliently or reversibly compressible foam comprising a flexible foam, particularly a flexible polyurethane foam (FPF). In one embodiment, the cover material **18** comprises a resiliently or reversibly compressible flexible open-cell polyether polyurethane foam (FPF) having properties within the ranges specified in FIG. **53**, or other resiliently or reversibly compressible open-cell foam having properties within the ranges specified in FIG. **53**.

[0087] In one embodiment, the resiliently compressible cover material **18** may be selected as a function of the material comprising the surface of the sloped roof **36**. In one embodiment, in the case of sloped roofs comprising asphalt and plastic rolled roofing materials, asphalt or fiberglass shingles, wood (e.g., cedar shakes), which generally have high surface roughness and high abrasiveness, the cover material **18** may comprise a resiliently compressible polymer foam, such as a flexible open-cell polyether polyurethane foam (FPF) as described herein. In another embodiment, in the case of sloped roofs comprising ceramic shingles or tiles, metal sheets, glass sheets, and polymer sheets, which generally have low surface roughness and low abrasiveness, the cover material **18** may comprise a resiliently compressible polymer or polymer foam, such as natural or synthetic rubber and rubber foams, as well as silicone and silicone foams. In another embodiment, in the case of sloped roofs comprising shingles, tiles, sheets, or panels comprising ceramic, metal, glass, and polymer, which generally have low surface roughness and low abrasiveness, the cover material **18** may comprise a resiliently compressible polymer or polymer foam, such as natural or synthetic rubber and rubber foams, as well as silicone and silicone foams. In another embodiment, in the case of sloped roofs comprising shingles, tiles, sheets, or panels comprising ceramic, metal, glass, and polymer, which generally have low surface roughness and low abrasiveness, but which have been formed to include a shape or texture of another material (e.g., glass solar tiles or shingles formed to resemble scalloped ceramic tiles or natural slate tiles, or cedar shakes), the cover material **18** may comprise a resiliently compressible composite such as an upper layer of a resiliently compressible polymer foam as described herein, such as a polyurethane foam, which may be relatively thicker, attached to a lower layer (i.e. roof contact layer) of a resiliently compressible polymer or polymer foam, such as natural or synthetic rubber and rubber foams, as well as silicone and

silicone foams, which may be relatively thinner. The composite provides an upper foam to enable conformity to the shape and larger texture features of the roof material (e.g., the shape of a curved or scalloped tile or flat with texture variation like a slate tile) and a lower layer of resiliently compressible polymer or polymer foam, such as natural or synthetic rubber and rubber foams, as well as silicone and silicone foams to ensure adhesion to the surface (e.g., glass).

[0088] The resiliently compressible cover layer **16** may comprise any suitable shape and size, including in the embodiment of FIGS. **8-14**, substantially the same or the same shape and size (e.g., area) as the longitudinally-extending first roof contact side **28**, and in other embodiments (not shown) a different size and shape as described herein. In one embodiment, the resiliently compressible cover layer **16** comprises a rectangular shape, which includes various rounded rectangular shapes, and comprises the same length and width, including the same ranges of length and width, disclosed herein for the longitudinally-extending first roof contact side **28**. In one embodiment, the resiliently compressible cover layer **16** covers the first slot opening **40** and the second slot opening **50** in the longitudinally-extending first roof contact side **28**. The cover layer **16** may have any suitable thickness. In one embodiment, the resiliently compressible cover layer **16** has a thickness in the range of 0.020 to 2.5 inches, more particularly 0.5 to 1.5 inches, more particularly 0.5 to 1.0 inches.

[0089] In the embodiment of FIGS. **1-14**, the longitudinally-extending core member **12** extends in the direction of axis **9**, and the longitudinally-extending cover layer **16** is configured to be attached to and cover the core member. The longitudinally-extending resiliently compressible cover layer **16** may be attached to longitudinally-extending first roof contact side **28** by any suitable attachment **69** or attachment mechanism, including in one embodiment an adhesive **70** disposed between them to form an adhesive joint **71** as the attachment **69**. Any suitable adhesive **70** may be used as the adhesive to form the adhesive joint **71**, including those that are configured to provide a physical bond, or a chemical bond, or both, between the longitudinally-extending cover layer **16** and longitudinally-extending first roof contact side **28** layer. In one embodiment, the adhesive **70** comprises a hot-melt adhesive, particularly a formulated hotmelt adhesive that is designed for adhesion to hard-to-adhere substrates that has a medium set speed, high heat resistance, and excellent low temperature bond performance, such as ADH, Hot Melt Adhesive M535-100N.1 sold by Sonoco®. The adhesive **70** may be applied in any suitable conventional manner and method to the upper surface of the longitudinally-extending cover layer **16** and/or to the longitudinally-extending first roof contact side **28** layer, including in one embodiment as a layer that covers the entirety of one or both of these surfaces, and including in another embodiment as a pattern of adhesive applied to one or both of these surfaces as described herein. The longitudinally-extending resiliently compressible cover layer **16** and resiliently compressible cover material **18** may also be molded directly onto the longitudinally-extending core member **12** and core material **14**, or vice versa, such as by co-molding where both elements are formed in a single mold, or by insert molding where one of the elements is formed separately and inserted into a mold for molding of the other element onto it, and the attachment comprises an integrally molded joint **71** comprising a physical and/or chemical bond formed at the interface between them, analogous to an integral adhesive joint. The attachment, such as an adhesive joint **71** or chemical bond as an attachment will have an adhesive shear strength that is greater than the shear forces at the interface between the longitudinally-extending cover layer **16** and the longitudinally-extending first roof contact side **28** upon application of a roofing load **2** as described herein.

[0090] In one embodiment, the longitudinally-extending core member **12** may be configured to receive a plurality of different longitudinally-extending cover layers **16** and cover layer materials **18**. In one embodiment, the longitudinally-extending cover layers **16** and cover materials **18** may be configured to provide adhesion for use of the lightweight composite roofing support system **10** on a plurality of different slope or pitched roof **36** types, including different roof decks comprising different deck materials, such as wood (e.g. OSB, plywood, or cedar shakes), various asphalt and plastic rolled roofing materials, asphalt or fiberglass shingles, plastic/composite/ceramic shingles or tiles, metal sheets, glass sheets, polymer sheets and other conventional roofing materials, as well as the glass surface of various solar shingles and panels.

[0091] As shown in FIG. **51**, in one embodiment the lightweight composite roofing support system **10** further includes a two roofing supports **32** that are substantially identical and may include the features in the embodiments described above. The roofing supports **32** may be positioned on opposite sides of the peak **39** of a sloped roof as mirror images of one another with the longitudinally-extending second edges **26** of the wedges facing one another with their respective longitudinally-extending first roof contact sides **28**, longitudinally-extending second sides **30**, and longitudinally-extending third sides **34** all facing in the same directions. When placed in the positions shown proximate the peak **39** of a sloped roof **36**, the lightweight composite roofing support system **10** comprising a plurality of opposed roofing supports **32** may be very advantageously used to provide a peak platform **68** that may be used by roofing workers **6**, or to store the roofing materials **8**, as described herein, such as a plurality of bundles **99** of shingles, proximate the roof peak **39**. A peak platform **68** is very desirable and advantageous location for storage of roofing materials **8** as they can be easily distributed downslope to roofing workers **6** that are progressively applying these materials upslope generally from the eaves to the peak **39** of a sloped roof **36**. A peak platform **68** is also very desirable as it provides a stable platform at the roof peak **39** for vendors of roofing materials **8** to use automated equipment to lift the materials to and unload the materials on the roof peak, without the need to manually unload the materials and make makeshift platforms at the roof peak generally using the construction materials themselves and make makeshifts or temporary platforms (e.g., using bundles of shingles), so that the roofing materials are available for distribution downslope during the construction of the sloped roof.

[0092] In one embodiment, the pressing engagement of the longitudinally-extending first side **28** and the attached longitudinally-extending cover layer **16** is sufficient to secure or attach the lightweight composite roofing support system **10** to the sloped roof **36** and prevent the system and a roofing load **2** (once applied) from sliding down the sloped roof **36** without the use of fasteners.

[0093] Referring to FIGS. **15-21**, in one embodiment, the lightweight composite roofing support system **10** comprises a longitudinally-extending core member **12** as described herein and resiliently compressible cover layer **16** comprises a plurality of resiliently compressible cover layers **16** of resiliently compressible cover materials **18**, which may be the same cover material **18** differing in some aspect, such as a material property or characteristic (e.g., thickness, density, or the like), or different cover materials **18**. While described with reference to FIGS. **15-21**, this embodiment of cover layers **16** and cover materials **18** may be used in any of the embodiments of lightweight composite roofing support system **10** described herein in FIGS. **1-53**. A plurality of resiliently compressible cover layers **16** and resiliently compressible cover materials **18** may be employed, for example, to provide variable or different material properties at different locations on longitudinally-extending first roof contact side **28**. For example, during construction, the surface of sloped roofs **16** may be very abrasive, from the innermost portion comprising a plywood and/or OSB roof deck to the outermost portion comprising asphalt or fiberglass shingles, and it may be desirable to employ a different resiliently compressible cover material **18** in the higher wear areas of the cover layer **16**, such as the areas proximate the laterally-extending first end **46** and/or opposed second end **56**, or along all or a portion of the longitudinally-extending first edge **24** and/or the longitudinally-extending second edge **26**, since the edges associated with these locations may experience more abrasion and wear as the roof supports **32** are moved (e.g. lifted up and down, dragged, tossed, thrown, slid, scraped, etc.) because they frequently are the last point of prior contact and the first point of new contact or impact during a move. Any of the resiliently compressible cover materials **18** described herein may be used to provide a plurality of resiliently compressible cover layers **16** of resiliently compressible cover materials **18**. Thus, for example, in one embodiment, it is desirable to place one resiliently compressible cover layer **16** of resiliently compressible cover material **18** with higher wear resistance in the locations that are subject to higher wear (e.g., high wear areas), and another resiliently compressible cover layer **16** of resiliently compressible cover material **18** at other locations that are subject to lower wear (e.g., low wear areas). In one embodiment, for example, the cover layer **16** comprises a plurality of resiliently compressible cover layers **16** comprising a first resiliently compressible cover layer **16'** comprising a first resiliently compressible cover material disposed in a central portion of the first roof contact side and second resiliently compressible cover layers **16"** comprising second resiliently compressible cover materials **18"** disposed proximate the first end **46** and the opposed second end **56** that are different from the first resiliently compressible cover material **18'**. The difference in the first and second cover layers **16'**, **16"** and first and second cover materials **18'**, **18"** may be any measurable difference in the cover materials, including the density, the thickness, the wear resistance, the coefficient of sliding friction on the roof deck material, the cell type (e.g., closed-cell, and open-cell), the cell size or porosity, a physical property (e.g., elastic modulus, tensile strength, compressive strength, compression set, indentation force deflection (IFD), flex fatigue, tear resistance, or the like). In one embodiment, the first resiliently compressible cover layer **16'** comprising the first resiliently compressible cover material **18'** has a first thickness and comprises polyurethane (PU) and the second resiliently compressible cover layers **16"** and second resiliently compressible cover materials **18"** have a second thickness (t_2) that is less than or equal to the first thickness and comprises polyurethane (PU), poly(ethylene-vinyl) acetate (EVA), natural rubber, or synthetic rubber, or a combination thereof.

[0094] Referring to FIGS. **22-24**, in one embodiment, the lightweight composite roofing support system **10** comprises a longitudinally-extending core member **12** as described herein, wherein the longitudinally-extending first roof contact side **28** further comprises a plurality of longitudinally spaced apart first side recesses **72** (FIG. **24**). The plurality of longitudinally spaced apart first side recesses **72** may include any suitable number of first side recesses, which in one embodiment comprises a range of 2-10, more particularly 2-8, and even more particularly 3-6. The first side recesses **72** may have any suitable shape or size, including various geometric shapes, including circular, elliptical, triangular, rectangular, and other polygonal shapes. In one embodiment, the first side recesses comprise three longitudinally spaced apart rectangular shape recesses with the longer sides of the rectangles oriented laterally across the width of the longitudinally-extending first roof contact side **28**. The first side recesses **72** may have any suitable recess depth including a range of 0.25 to 1.5 inches, more particularly 0.5 to 1.25 inches, and even more particularly 0.5-1.0 inches. The first side recesses **72** may have any suitable recess sidewall **73** shape, including vertical recess sidewall, as well as inwardly (e.g., toward the center of the recess) and outwardly tapering recess sidewalls, as well as curved or angled sidewalls, including concave or convex curved or angled sidewalls that are configured to provide a snap lock engagement as described herein, or any combination of these sidewall shapes.

[0095] In the embodiment of FIGS. **22-24**, in addition to longitudinally-extending core member **12**, the lightweight composite roofing support system **10** further comprises a flexible, longitudinally-extending integral or one-piece base **74** and cover layer **14** configured to be disposed on a bottom surface **95** of the base. The base **74** is configured to be disposed between the core member **12** and the cover layer **14** and is selectively attachable to and detachable from the core member on the first roof contact side **28**. The base **74** comprises a generally planar longitudinally-extending base member **75**, a plurality of longitudinally spaced apart base protrusions **76** having protrusion sidewalls **77** extending upwardly from an upper surface **78** of the base member and corresponding for purposes of close fit, interference fit, or snap-fit engagement in number, shape, size, and protrusion sidewall **77** shape with the first side recesses **72** and recess sidewall **73** shape. The base **74** and base member **75** also comprises a longitudinally-extending first tapered retainer lip **79** attached at a first base member edge **80** and configured to extend inwardly and upwardly along the longitudinally-extending first base edge **24** and a portion of second side **30**, a second tapered retainer lip **81** attached at a second base member edge **82** and configured to extend inwardly and upwardly along the longitudinally-extending second base edge **26** and a portion of third side **34**, an upwardly-extending first recess insert **83** attached at a first base member end **84** and configured to be disposed along the first end **46** of core member **12** within first recess **45** adjacent to first inner slot wall **42** by insertion through first slot opening **40**, and an upwardly-extending second recess insert **85**

attached at a second base member end **86** and configured to be disposed along the second end **56** of core member **12** within second recess **55** adjacent to second inner slot wall **52** by insertion through second slot opening **50**. The flexible, longitudinally-extending base **74** may be formed from any suitable lightweight flexible material, including various metals (e.g., aluminum, or magnesium alloys, or combinations thereof), or engineering thermoplastic or thermoset polymers, or a combination thereof. Engineering thermoplastic or thermoset polymers may comprise polystyrene (PS), polyester (PEST), polycarbonate (PC), polyethylene (PE), polypropylene (PP), polyurethane (PU), or ethylene-vinyl acetate (EVA), or a combination thereof, and more particularly an expanded foam comprising polystyrene (EPS), polyethylene (EPE), polypropylene (EPP), polyurethane (EPU), or ethylene-vinyl acetate (EEVA), or a combination thereof, which, as used herein, includes chemical or physical combinations thereof, including copolymers thereof. Base **74**, and particularly base member **75**, may have any suitable size and shape, but will generally have the same general shape and size (e.g., length and width) as the first roof contact side **28** because it is designed and selected to be applied to and to be selectively attachable to and detachable from, and cover, the first roof contact side **28**. Thus, the ranges of sizes and shapes described herein for first roof contact side **28** are also generally applicable to the base **74** and base member **75**. Base member **75** may have any suitable thickness, which in order to retain flexibility as described herein, will depend on the material selected, particularly the mechanical properties including the elastic modulus, to be configured, both laterally and longitudinally, to be flexed or elastically bent or deformed outwardly by a human user of average strength to allow the first tapered retainer lip **79** to be inserted over and engage the longitudinally-extending first base edge **24** and a portion of the second side **30**, the longitudinally-extending second tapered retainer lip **81** to be inserted over and engage the longitudinally-extending second base edge **26** and a portion of the longitudinally-extending third side **34**, the upwardly-extending first recess insert **83** to be disposed along the first end **46** and engage the first recess **45** and first inner slot wall **42** through first slot opening **40**, and the upwardly-extending second recess insert **85** to be disposed along the opposed second end **56** and engage the second recess **55** and second inner slot wall **52** through second slot opening **50**, while at the same time the spaced apart base protrusions **76** and protrusion sidewalls **77** engage the respective corresponding first side recesses **72** and first recess sidewalls **73**, which in one embodiment may comprise a press fit engagement, a slight interference fit engagement, or a snap-lock or snap-fit engagement with the first roof contact side **28** and the upper surface **78** of base member **75** in substantially or near touching contact or touching contact. In one embodiment, the base thickness (t_B), may comprise 0.010 to 1.0 inches, more particularly 0.1 to 0.75 inches, and more particularly 0.25 to 0.50 inches. Base member **75** will generally have a flat planar lower surface **81** that is configured for disposition of the resiliently compressible cover layer **16** thereon. In one embodiment, core member **12** does not include first side recesses **72** and base member **75** does not include protrusions **76**, but all other feature of the core member **12** of FIGS. **1-7** and base **74** remain the same.

[0096] The first tapered retainer lip **79** may be configured to taper at any suitable angle, including in one embodiment first acute angle (α), and extend inwardly and upwardly along the longitudinally-extending first edge **24** and a portion of second side **30** to any suitable extent or distance, which in one embodiment may include 0.25 to 1.5 inches, more particularly 0.5 to 1.0 inches. The uppermost edge of first tapered retainer lip **79** may also be tapered down to the second side **30** to provide close continuity with the first side working surface **31**. The second tapered retainer lip **81** may be configured to taper at any suitable angle, including in one embodiment second acute angle (β), and extend inwardly and upwardly along the longitudinally-extending second base edge **26** and a portion of third side **34** to any suitable extent or distance, which in one embodiment may include 0.25 to 1.5 inches, more particularly 0.5 to 1.0 inches. The uppermost edge of second tapered retainer lip **81** may also be tapered down to the third side **34** to provide close continuity with the second side working surface **34**.

[0097] The upwardly-extending first recess insert **83** to be disposed along the first end **46** and engage the first recess **45** and first inner wall **42** through first slot opening **40** may comprise any suitable shape configured for disposition and engagement as described. In one embodiment, the first recess insert **83** has the same shape as the opening shape of first recess **45**, namely, an irregular hexagon shape comprising a lateral edge **87** having a second side end **88** and an opposed third side end **89**, a second side vertical edge **90** extending from the second side end **88** upwardly toward second side **30**, a third side vertical edge **91** extending from the third side end **89** upwardly toward third side **34**, a tapered second side edge **92** configured to extend upwardly parallel to second side **30**, a tapered third side edge **93** configured to extend upwardly parallel to third side **34**, a tapered fourth side edge **94** configured to extend parallel to fourth side **35** between second side edge **92** and third side edge **93**.

[0098] The upwardly-extending second recess insert **85** to be disposed along the second end **56** and engage the second recess **55** and second inner slot wall **52** through first slot opening **50** may comprise any suitable shape configured for disposition and engagement as described. In one embodiment, the second recess insert **85** has the same shape as the opening shape of second recess **55**, namely, an irregular hexagon shape and comprises a mirror image of first recess insert **83**, and may be described as having the same elements.

[0099] In an attached position and condition the base **74** comprising base member **75** is disposed against the first roof contact side **28**, the first tapered retainer lip **79** is disposed over and retains the first edge **24**, the second tapered retainer lip **81** is disposed over and retains the second edge **26**, the first recess insert **83** is disposed in the first recess **45**, the second recess insert **85** is disposed in the second recess **55**, and the plurality of spaced apart base protrusions **76** are disposed in and engage the spaced apart first side recesses **72**, and the cover layer **16** is attached to the bottom surface **95** of the base. The first side recesses **72**/base protrusions **76** and recess inserts **83**, **85** serve to index the core member **12** and base **74** during attachment of the base to the core member.

[0100] In the embodiment of FIGS. **22-24**, the cover layer(s) **16** and cover material(s) **18** may comprise those described in any of the embodiments of lightweight composite roofing support system **10** described herein. The cover layer(s) **16** may be disposed on the base **74** in any suitable

matter using any suitable attachment, including using any cover layer attachment described in any of the embodiments of lightweight composite roofing support system **10** described herein.

[0101] Referring to FIGS. **25-31**, in one embodiment, the lightweight composite roofing support system **10** comprises a longitudinally-extending core member **12** as described herein, wherein the longitudinally-extending first roof contact side **28** further comprises a first side recess **72** (FIG. **26**). In one embodiment, the first side recess **72** comprises a single recess **72**, but in other embodiments may comprise a plurality of longitudinally spaced apart first side recesses **72** (e.g., FIG. **24** with **3** recesses) in any suitable number as described herein. The first side recesses **72** may have any suitable shape or size, including various geometric shapes, including circular, elliptical, triangular, rectangular, and other polygonal shapes. In one embodiment (FIG. **26**), the first side recess **72** comprises an I-shaped recess. In these embodiments, the first side recesses **72** may have any suitable recess depth including a range of 0.01 to 0.5 inches, more particularly 0.025 to 0.375 inches, and even more particularly 0.05 to 0.25 inches. The first side recesses **72** may have any suitable recess sidewall **73** shape, including vertical recess sidewall, as well as inwardly (e.g., toward the center of the recess) and outwardly tapering recess sidewalls, as well as curved sidewalls, including concave or convex curved sidewalls, or any combination of these sidewall shapes. In this embodiment, the first side recess **72** lowers the attachment interface below the plane of longitudinally-extending first roof contact side **28** such that the shear forces applied to the attachment during use of lightweight composite roofing support system **10** advantageously do not occur in the plane of the first roof contact side.

[0102] In the embodiment of FIGS. **25-31**, in addition to longitudinally-extending core member **12**, the lightweight composite roofing support system **10** further comprises a hook and loop attachment device **100** disposed between the core member and the cover layer **16**. The attachment device **100** comprising a first sheet **101** of a loop material **102** comprising a plurality of hooks or a hook material **103** comprising a plurality of loops that is disposed in and attached to the first side recess **72** and a second sheet **104**, respectively, of hook material **103** comprising a plurality of loops or loop material **102** comprising a plurality of hooks that is attached to the cover layer **16**, wherein in an attached position and condition the first sheet **101** and the second sheet **104** are in pressed interlocking engagement with the respective plurality of hooks lockingly engaging the plurality of loops, and wherein the cover layer **16** is selectively attachable to and detachable from the core member **12** using the attachment device **100**. The first sheet **101** and second sheet **104** may have any suitable size and shape, including the same size and shape as the shape of the first side recess **72**, which in one embodiment may be I-shaped. The attachment device **100** may be described as a hook and loop attachment device **100** and also as a selectively attachable and detachable attachment device **100** that provides a selectively attachable and detachable attachment of the cover layer **16** to the core member **12**. The use of selectively attachable and detachable attachment device **100** allows for the easy removal and replacement of a worn cover layer **16** with a new replacement cover layer by peeling the first sheet **101** and second sheet apart **103** as the cover layer becomes worn during use on a sloped roof **36** or roofs. This also enables the lightweight composite roofing support system **10** to include kitting of a plurality of replacement cover layers **16** as described below that include the second sheet **108** attached thereto with a core member **12** that has the first sheet attached thereto to extend the service life of the lightweight composite roofing support system **10** by selectively removing cover layers **16** as they become worn in use and replacing the worn cover layers with new cover layers **16** from the kit. Alternately, it allows the kitting of a plurality of cover layers **16** as described below that include the second sheet **108** attached thereto as a replacement pack of cover layers **16** to also extend the service life of the lightweight composite roofing support system **10** indefinitely by buying additional kits of the cover layers **16** and replacing the cover layers as they become worn during use.

[0103] The first sheet **102** comprises the loop material **102** comprising the plurality of hooks or the hook material **103** comprising the plurality of loops and is disposed within and attached to the first side recess **72**. The first sheet **101** has an adhesive side **105** that is configured to receive an adhesive **106**, which may be applied directly to the adhesive side **105** or to the recess surface **107** of the first side recess **72**. The adhesive **106** attaches the first sheet **101** to the recess surface **107** within the first side recess **72**. The first sheet **101** has an opposed side **108** that comprises the loop material **102** comprising the plurality of hooks or the hook material **103** comprising the plurality of loops. Any adhesive **106** suitable to permanently adhere the first sheet **101** to the recess surface **107** may be used, including the adhesives **70** described herein.

[0104] The second sheet **104** comprising, respectively with regard to the selection first sheet **101** and whether it includes a hook material or loop material to be the opposite or mating material, the hook material **103** comprising a plurality of loops or the loop material **102** comprising the plurality of loops is disposed on and attached to the cover layer **16**. The second sheet **103** has an adhesive side **109** that is configured to receive an adhesive **110**, which may be applied directly to the adhesive side **109** or to the attachment surface **111** of the cover layer **16** in the shape of the second sheet. The adhesive **110** attaches the second sheet **103** to the attachment surface **111** of the cover layer **16**, generally by pressing the second sheet **103** against the cover layer **16**. The second sheet **103** has an opposed side **112** that comprises, respectively, the hook material **103** comprising the plurality of loops or the loop material **102** comprising the plurality of hooks. Any adhesive **110** suitable to permanently adhere the second sheet **103** to the attachment surface **111** may be used, including the adhesive **106** or adhesive **70** described herein.

[0105] In the embodiment of FIGS. **25-31**, the longitudinally-extending first roof contact side **28** comprises a peripherally-extending rim **112** that encloses and defines a sidewall **113** of the first side recess **72**. The peripherally-extending rim may have any suitable rim thickness (t_R). The thickness will be selected to maximize the area of the first side recess while also reducing the potential for chipping or breakout of the rim **112** and sidewall **113** during use of the lightweight composite roofing support system **10**. In one embodiment, rim thickness (t_R) comprises a range of 0.25 to 1.0 inches, more particularly 0.25 to 0.75 inches, and even more particularly 0.375 to 0.5 inches.

[0106] Referring to FIGS. **32-38**, in one embodiment, the lightweight composite roofing support system **10** comprises a longitudinally-extending core member **12** as described

herein, which further comprises an integral longitudinally-extending shelf **114** that also extends outwardly and laterally away from at least one of the second side **30** or the third side **34** and comprises a lower surface **115** that is coplanar with and by virtue of being integral with forms a part of the first roof contact side **28** and that, respectively, subsumes at least one of the second edge **24** or third edge **26**. The longitudinally-extending core member **12** comprising the integral longitudinally-extending shelf **114** may be formed from the same core materials **14** described herein and may have the same sizes and same lateral cross-section **22** shapes of the core members described herein apart from the integration of the lateral cross-section **122** shape of the shelf **114**. The lateral cross-section shape **122** of the shelf **114** may be understood from the left and right end views (FIGS. **35** and **36**) to be substantially rectangular in embodiments without the integral upwardly-protruding longitudinally-extending rim **117** (as demarcated by the vertical phantom lines), and generally L-shaped with the integral upwardly-protruding longitudinally-extending rim **117**. The longitudinally-extending core member **12** comprising the integral longitudinally-extending shelf **114** may have the same ranges of lengths described herein. The integral longitudinally-extending shelf **114** may have any suitable width (w_s), which in one embodiment ranges from 6 to 20 inches, more particularly 8 to 18 inches, and more particularly 10 to 18 inches, and yet more particularly (12 to 16 inches). The integral longitudinally-extending shelf **114** may have any suitable shelf thickness (t_s), which in one embodiment ranges from 0.5 to 2.0 inches, more particularly 0.75 to 1.75 inches, and more particularly 0.75 to 1.50 inches. It is desirable to make the shelf **114** as thin and strong as possible while maintaining flexural and tensile strength sufficient to support the desired shelf loads **98** and avoid failure of the shelf in bending due to application of these loads. In this regard, in one embodiment, the longitudinally-extending core member **12** comprising the integral longitudinally-extending shelf **114** may be molded with a variable density which is a lower density in the upper portions (d_U) of core member away from the shelf and higher density (d_L) in the integral longitudinally-extending shelf **114** and portions of the longitudinally-extending core member **12** proximate the shelf as illustrated schematically in FIGS. **35** and **36** as demarcated by optional interface **116**. Variable density of the core material **14** within the core member **12** may be employed in any of the embodiments of core member **12** described herein, and the density may be infinitely variable or discretely variable throughout all or any portion of the core member **16** cross-section **22**, and be lower in the upper portions and higher in the lower portions, or vice versa, and may also be varied longitudinally, laterally, or both, within core member **12**. The shelf **114** is configured to hold roofing material **8** as described herein, including various tools and equipment, particularly roofing tools and equipment, and particularly a bundle or bundles of shingles **99** for use by a roofing working **6** that is disposed on and using the lightweight composite roofing support system **10** that includes the integral shelf **114**. The integral shelf **114** may be very advantageously used to provide a portable platform that may be used to store the roofing materials **8** as described herein, such as a bundle or bundles of shingles **99**, in a plurality of locations on the sloped roof **36** as the roofing materials are being installed and may be easily moved upslope or downslope or side-to-side from the eaves to the peak **39** of a sloped roof **36** to facilitate installation. This is a very desirable and advantageous location for storage of roofing materials **8** as they can also be easily distributed upslope or downslope or side-to-side to roofing workers **6** that are also installing materials on the sloped roof **36**. In one embodiment, the integral longitudinally-extending shelf **114** further comprises an integral upwardly-protruding longitudinally-extending rim **117** on a distal edge or end **118** of the shelf to assist in retaining items that are placed on the shelf.

[0107] Referring again to FIGS. **32-38**, the lightweight composite roofing support system **10** comprises a longitudinally-extending core member **12** as described herein and the longitudinally-extending cover layer **16** comprising cover material **18** will be sized to also cover all or substantially all of the first roof contact surface, including the portion associated with the lower surface **115** of the shelf **114**. Representative ranges of the width (w_1') of the first roof contact side **28** comprising the shelf **114** and associated cover layer **16** may be obtained by adding their representative ranges as described herein without the shelf (w_1) to the representative ranges of the width (w_s) of the shelf described herein, for example, (18 to 48 inches)+ (6 to 20) inches=w_1'=(24 to 68 inches), more particularly (20 to 40) inches+ (8 to 18) inches=w_1'=(28 to 58 inches), even more particularly (20 to 30 inches)+ (10 to 18 inches)=w_1'=(30 to 48 inches), and yet more particularly (22 to 28 inches)+ (12 to 16 inches)=w_1'=(32 to 44 inches).

[0108] In the embodiment of FIGS. **32-38**, the cover layer **16** and cover material **18** may comprise those described in any of the embodiments of lightweight composite roofing support system **10** described herein. The cover layer **16** may be disposed on the first roof contact side in any suitable manner using any suitable attachment, including using any cover layer attachment and associated features in the first roof contact side **28** required for implementation of any of the embodiments of the lightweight composite roofing support systems **10** described herein, including the embodiments of FIGS. **1-31**.

[0109] Referring to FIGS. **1-46**, and particularly FIGS. **1-14** and **39-46**, the lightweight composite roofing support system **10** and roof support **32** may comprise a lightweight composite roofing support system connector **120**. The lightweight composite roofing support system connector **120** is configured to connect the first end **46** of one roofing support **32** to the second end of another roofing support **32**. Using a plurality of roofing connectors **120** and roofing supports **32**, the length of lightweight composite roofing support system **10** may be extended to any desired length, including a length that extends entirely from side-to-side across the length of any sloped roof. Thus, the connectors **120** and roof supports **32** can provide an extended roof platform **123** that extends entirely from side-to-side across any sloped roof **36**, allowing roofing workers to freely move, walk, stand, crouch, kneel, sit, or lie on, or otherwise use the extended roof platform and to distribute or store roofing tools or roofing materials across all or any portion of the length of any sloped roof, as well as to store or stage roofing materials across all or any portion of the length of any sloped roof. The extended roof platform **123** also allows very advantageous and easier distribution of roofing materials **8** from a central peak platform **68** across the sloped roof **36** near the roof peak **39** where they can be distributed downslope to areas where the materials are being applied to the roof deck.

[0110] Referring to FIGS. **1-14** and FIGS. **39-46**, the longitudinally-extending connector **120** comprises a laterally-extending first connector end **124** and an opposed laterally-extending second connector end **126** joined together by a longitudinally-extending intermediate portion **128**. The first connector end **124** is configured for selective engagement/disengagement or insertion/removal within the second slot **51'** of the second core member **12'** and second roof support **32'** and the second connector end **126** is configured for selective engagement/disengagement or insertion/removal within the first slot **41** of the first core member **12** and first roof support **32**, wherein upon engagement, the connector **120** is configured to connect the first roof support **32** and the second roof support **32'**. FIG. **46** illustrates the first core member **12** and the second core member **12'** with their compressible cover layers **16**, **16'** removed for purpose of illustrating the connection or joint formed by the connector **120**. In normal use, the portions of the compressible cover layers **16**, **16'** that extend over first slot opening **40** and second slot opening **50'** would be longitudinally and/or laterally manually compressed to reveal the first slot opening **40** and second slot opening **50'** and enable insertion of the connector **120** with the second connector end **126** inserted into the first slot **41** and the first connector end **124** inserted into the second slot **51'**. Upon insertion of the connector **120**, the portions of the compressible cover layers **16**, **16'** that would extend over first slot opening **40** and second slot opening **50'** would be released and spring back over and cover the first slot opening **40** and second slot opening **50'**. The portions of the compressible cover layers **16**, **16'** that extend over first slot opening **40** and second slot opening **50'** act as a retainer and prevent the connector from coming back out of the first slot **41** through the first slot opening **40** and/or the second slot **51'** through second slot opening **50'** during use.

[0111] The laterally-extending first connector end **124** and an opposed laterally-extending second connector end **126** may have any suitable lateral cross-section shapes or sizes. In one embodiment, the first end lateral cross-section **130** shape of the first connector end **124** comprises an irregular hexagon and the shape of the second slot **51'** also comprises a mating irregular hexagon cross-section shape, and second end lateral cross-section **132** shape of the second connector end **126** comprises an irregular hexagon that is a mirror image of the first connector end **124** and the shape of the first slot **40** also comprises a mating irregular hexagon cross-section shape that is a mirror image of the second slot **51'**. The size, particularly the first end width (w_{E1}), of the first connector end **124** should be the same as, or slightly greater than, the width (d_2) of the second slot **51'** to provide, respectively, touching contact or an interference fit between them in order to promote retention of the first connector end **124** within the second slot **51'**. The size, particularly the second end width (w_{E2}), of the second connector end **126** should be the same as, or slightly greater than, the width (d_1) of the first slot **40** to provide, respectively, touching contact or an interference fit between them in order to promote retention of the second connector end **126** within the first slot **40**. In one embodiment, the first connector end **124** has the same first end lateral cross-section **130** shape as the opening shape of first recess **45**, namely, an irregular hexagon cross-section shape comprising a lateral edge **134** having a second side edge end **135** and an opposed third side edge end **136**, a second side vertical edge **137** extending from the second side edge end **135** upwardly toward second side **30**, a third side vertical edge **138** extending from the third side edge end **136** upwardly toward third side **34**, a tapered second side edge **139** configured to extend upwardly parallel to second side **30**, a tapered third side edge **140** configured to extend upwardly parallel to the third side **34**, a tapered fourth side edge **141** configured to extend parallel to fourth side **35** between second side edge **139** and third side edge **140**.

[0112] The second connector end **126** may comprise any suitable second end lateral cross-section **132** shape configured for disposition and engagement as described. In one embodiment, the second connector end **126** has the same second end lateral cross-section **132** shape as the opening of the second recess **55**, namely, an irregular hexagon shape and comprises a mirror image of the first end lateral cross-section **130** shape of the first connector end **124**, and may be described as having the same elements as the first connector end **124**.

[0113] The first connector end **124** also comprises a first base **142**. In one embodiment, the first base **142** comprises a flat planar base and is configured in the inserted or installed condition and position to be coplanar with the first roof contact side **28'**. The second connector end **126** also comprises a second base **143**. In one embodiment, the second base **143** comprises a flat planar base and is configured in the engaged, inserted or installed condition and position to be coplanar with the first roof contact side **28**.

[0114] The lightweight composite roofing support system connector **120** also comprises the longitudinally-extending intermediate portion **128**. The intermediate portion **128** may have any suitable intermediate portion cross-section shape, which in one embodiment is the same as first end lateral cross-section **130** shape and second end lateral cross-section **132** shape with a reduced size as shown in FIGS. **39-46**.

[0115] The lightweight composite roofing support system connector **120** is formed from and comprises connector material **144**. Connector material **144** may comprise any of the core materials **14** described herein, and may be selected to be the same material as core material **14** or different than core material **14**. Since the cross-section area or size of the intermediate portion **128** is less than the lateral cross-section **22** of the core members **12**, **12'**, in one embodiment the connector **120** will comprise connector material **144** that has one or more of a higher density, compressive strength, compression set, tensile strength, or flexural strength as the core material **14** to ensure consistent strength of the extended platform **123** along its length, and more particularly that the strength is at least as high in the connector **120** at the interface between roof supports **32** and **32'** at first end and second end **51'** as it is in the intermediate portions of the supports.

[0116] Referring to FIGS. **8-14**, and **46**, in one embodiment, the lightweight composite roofing support system connector **120** is configured for use with a first roof support **32** and the second roof support **32'** (the first and second roof supports **32**, **32'** being identical or having the same essential feature and differing, if at all, only in length (e.g., (**11**, **11'**) with the (') used only to differentiate between them), each comprising: a longitudinally-extending core member **12**, **12'** comprising a longitudinally-extending first roof contact side **28**, **28'** comprising a longitudinally-extending first edge **24**, **24'** and an opposed longitudinally-extending second edge **26**, **26'**, a longitudinally-extending second side **30**, **30'**

comprising a second side working surface **31**, **31'** having a second width (w_2 w_2') and a second length (l_2, l_2') that is greater than the second width, the second side **30**, **30'** tapering toward the first edge **24**, **24'** at a first predetermined acute angle (α) from the first roof contact side **28**, **28'**, and a longitudinally-extending third side **34**, **34'** comprising a third side working surface **33**, **33'** having a third width and a third length that is greater than the third width, the third side **34**, **34'** tapering toward the second edge **26**, **26'** at a second predetermined acute angle (β, β') from the first contact side **28**, **28'** that is different than the first predetermined acute angle (α, α'), a laterally-extending first end **46**, **46'** comprising an integral first recess **45**, **45'** defining a first handle or grip **48**, **48'**, and an opposed laterally-extending second end **56**, **56'** comprising an integral second recess **55**, **55'** defining a second handle or grip **58**, **58'**, the core member **12**, **12'** comprising a core material **14**, **14'** and a wedge-shaped lateral cross-section **22**, **22'** shape. The first roof support **32** and the second roof support **32'** also each comprise a cover layer **16**, **16'** comprising a compressible cover material **18**, **18'**, the cover layer **16**, **16'** disposed on and covering the first roof contact side **28**, **28'**, wherein the first recess **45**, **45'** defines a first slot **41**, **41'** that opens into the longitudinally-extending first roof contact side **28**, **28'** proximate the first end **46**, **46'** and the second recess **55**, **55'** defines a second slot **51**, **51'** that opens into the first roof contact side **28**, **28'** proximate the second end **56**, **56'**, the first connector end **124** is configured for mating engagement within the second slot **51'** of the second roof support **12'**, the second connector end **126** configured for mating engagement within the first slot **41**, respectively, of the first roof support **32**. FIG. **46** illustrates an installed or inserted position and condition of the connector **120** within the first roof support **32** and the second roof support **32'**. In one embodiment, the first connector end **124** comprises an irregular hexagonal first end lateral cross-section **130** shape and second connector end **126** comprises an irregular hexagonal second end lateral cross-section **132** shape, and the first slot **41** comprises an irregular hexagonal lateral first slot cross-section **130** shape illustrated by the shape of recess **45** opening and the second slot **51'** comprises an irregular hexagonal lateral second slot cross-section shape illustrated by the shape of recess **55'** opening. In one embodiment, irregular hexagonal first end lateral cross-section **130** shape and irregular hexagonal second end lateral cross-section **132** shape are mirror images of one another.

[0117] In other embodiments, the connector **120** may have another first end lateral cross-section **130** shape and another second end lateral cross-section **132** shape. For example, referring to the embodiment of a core member **12** comprising a triangular lateral cross-section **22**, more particularly a rounded or blunted scalene triangular lateral cross-section, as described herein and illustrated in FIG. **49**, a suitable connector **120** would have the irregular pentagon cross-section shape of the periphery of the handle or grip **58**, and could be described using the same elements as set for herein for connector **120**, except that there would be no tapered fourth side edge **141** configured to extend parallel to fourth side **35** between second side edge **139** and third side edge **140**, rather second side edge **139** and third side edge **139** would taper to and intersect one another. This lightweight composite roofing support system connector **120** also comprises the longitudinally-extending intermediate portion **128**. The intermediate portion **128** may have any suitable intermediate portion cross-section shape, which in one embodiment is the same as first end lateral cross-section **130** shape and second end lateral cross-section **132** shape, namely, an irregular pentagon with a size or cross-sectional area smaller than the first end lateral cross-section **130** and the second end lateral cross-section **132**.

[0118] The terms "a" and "an" herein do not denote a limitation of quantity, but rather denote the presence of at least one of the referenced items, and may include a plurality of the referenced items. The modifier "about" used in connection with a quantity is inclusive of the stated value and has the meaning dictated by the context (e.g., includes the degree of error associated with measurement of the particular quantity). Furthermore, unless otherwise limited all ranges disclosed herein are inclusive and combinable (e.g., ranges of "up to about 25 weight percent (wt. %), more particularly about 5 wt. % to about 20 wt. % and even more particularly about 10 wt. % to about 15 wt. %" are inclusive of the endpoints and all intermediate values of the ranges, e.g., "about 5 wt. % to about 25 wt. %, about 5 wt. % to about 15 wt. %", etc.). The use of "about" in conjunction with a listing of items is applied to all of the listed items, and in conjunction with a range to both endpoints of the range. Finally, unless defined otherwise, technical and scientific terms used herein have the same meaning as is commonly understood by one of skill in the art to which this invention belongs. The suffix "(s)" as used herein is intended to include both the singular and the plural of the term that it modifies, thereby including one or more of that term (e.g., the metal(s) includes one or more metals). Reference throughout the specification to "one embodiment", "another embodiment", "an embodiment", and so forth, means that a particular element (e.g., feature, structure, and/or characteristic) described in connection with the embodiment is included in at least one embodiment described herein, and may or may not be present in other embodiments.

[0119] It is to be understood that the use of "comprising" in conjunction with the components or elements described herein specifically discloses and includes the embodiments that "consist essentially of" the named components (i.e., contain the named components and no other components that significantly adversely affect the basic and novel features disclosed), and embodiments that "consist of" the named components (i.e., contain only the named components).

[0120] While the invention has been described in detail in connection with only a limited number of embodiments, it should be readily understood that the invention is not limited to such disclosed embodiments. Rather, the invention can be modified to incorporate any number of variations, alterations, substitutions or equivalent arrangements not heretofore described, but which are commensurate with the spirit and scope of the invention. Additionally, while various embodiments of the invention have been described, it is to be understood that aspects of the invention may include only some of the described embodiments. Accordingly, the invention is not to be seen as limited by the foregoing description, but is only limited by the scope of the appended claims.

What is claimed is:

1. A lightweight composite roofing support system, comprising:

a longitudinally-extending core member comprising a longitudinally-extending first roof contact side comprising a longitudinally-extending first edge and an

opposed longitudinally-extending second edge, a longitudinally-extending second side comprising a second side working surface having a second width and a second length that is greater than the second width, the second side tapering toward the first edge at a first acute angle (α) from the first roof contact side, and a longitudinally-extending third side comprising a third side working surface having a third width and a third length that is greater than the third width, the third side tapering toward the second edge at a second acute angle (β) from the first contact side that is different than the first acute angle (α), a laterally-extending first end comprising an integral first recess defining a first handle or grip, and an opposed laterally-extending second end comprising an integral second recess defining a second handle or grip, the core member comprising a core material and a wedge-shaped lateral cross-section, the core member configured for disposition of a longitudinally-extending resiliently compressible cover layer comprising a resiliently compressible cover material on the first roof contact side to provide a first roofing support.

2. The roofing support system of claim **1**, wherein the core material comprises a rigid or substantially rigid engineering thermoset or thermoplastic polymer.

3. The roofing support system of claim **1**, wherein the core material comprises an expanded foam comprising polystyrene (EPS), polyethylene (EPE), polypropylene (EPP), polyurethane (EPU), or ethylene-vinyl acetate (EEVA), or a combination thereof.

4. The roofing support system of claim **1**, wherein the wedge-shaped lateral cross-section comprises a triangular, scalene trapezoidal, irregular quadrilateral, or truncated triangular shape.

5. The roofing support system of claim **1**, wherein the second side working surface and third side working surface each comprise a non-skid surface.

6. A lightweight composite roofing support system, comprising:

a longitudinally-extending core member comprising a longitudinally-extending first roof contact side comprising a longitudinally-extending first edge and an opposed longitudinally-extending second edge, a longitudinally-extending second side comprising a second side working surface having a second width and a second length that is greater than the second width, the second side tapering toward the first edge at a first acute angle (α) from the first roof contact side, and a longitudinally-extending third side comprising a third side working surface having a third width and a third length that is greater than the third width, the third side tapering toward the second edge at a second acute angle (β) from the first contact side that is different than the first acute angle (α), a laterally-extending first end comprising an integral first recess defining a first handle or grip, and an opposed laterally-extending second end comprising an integral second recess defining a second handle or grip, the core member comprising a core material and a wedge-shaped lateral cross-section; and

a resiliently compressible cover layer comprising a resiliently compressible cover material, the cover layer disposed on and covering the first roof contact side, the core member and cover layer comprising a first roofing support.

7. The roofing support system of claim **6**, wherein the core material comprises a rigid or substantially rigid engineering thermoset or thermoplastic polymer and the cover material comprises a resiliently compressible polymer.

8. The roofing support system of claim **6**, wherein the core material comprises a rigid or substantially rigid expanded foam comprising polystyrene (EPS), polyethylene (EPE), polypropylene (EPP), polyurethane (EPU), or ethylene-vinyl acetate (EEVA), or a combination thereof, and the cover material comprises polyurethane (PU), polystyrene (PS), polyisocyanurate (PIR), polyethylene (PE), polypropylene (PP), poly(ethylene-vinyl acetate) (EVA), poly(vinyl chloride) (PVC), or a natural or synthetic rubber, or a combination thereof.

9. The roofing support system of claim **6**, wherein the wedge-shaped lateral cross-section shape comprises a triangular, scalene trapezoidal, irregular quadrilateral, or truncated triangular shape.

10. The roofing support system of claim **6**, wherein the second side working surface and third side working surface each comprise a non-skid surface.

11. The roofing support system of claim **6**, wherein the cover layer comprises a plurality of cover layers comprising a first resiliently compressible cover layer comprising a first resiliently compressible cover material disposed in a central portion of the first roof contact side and second resiliently compressible cover layers comprising second resiliently compressible cover materials disposed proximate the first end and the second end that are different from the first resiliently compressible cover material.

12. The roofing support system of claim **11**, wherein the first resiliently compressible cover layer comprising the first resiliently compressible cover material has a first thickness and comprises polyurethane (PU) and the second resiliently compressible cover layers and second resiliently compressible cover materials have a second thickness that is less than or equal to the first thickness and comprise polyurethane (PU), poly(ethylene-vinyl) acetate (EVA), natural rubber, or synthetic rubber, or a combination thereof.

13. The roofing support system of claim **6**, wherein the first roof contact side comprises a plurality of spaced apart first side recesses, and further comprising a flexible, longitudinally-extending base disposed between the core member and the cover layer that is selectively attachable to and detachable from the core member on the first roof contact side, the base comprising a planar base member, a plurality of spaced apart base protrusions extending upwardly from an upper surface of the base member, a first tapered retainer lip extending inwardly and upwardly along a longitudinally-extending first base edge, a second tapered retainer lip extending inwardly and upwardly along a longitudinally-extending second base edge, an upwardly-extending first recess insert disposed along a first base end, and an upwardly-extending second recess insert disposed along an opposed second base end, wherein in an attached position and condition the base member is disposed against the first roof contact side, the first tapered retainer lip is disposed over and retains the first edge, the second tapered retainer lip is disposed over and retains the second edge, the first recess insert is disposed in the first recess, the second recess insert is disposed in the second recess, and the plurality of spaced

apart base protrusions are disposed in and engage the spaced apart first side recesses, and wherein the cover layer is attached to a bottom surface of the base and the base and cover layer are disposed on and covering the first roof contact side.

14. The roofing support system of claim **6**, wherein the first roof contact side comprises a first side recess, and further comprising a hook and loop attachment device disposed between the core member and the cover layer, the attachment device comprising a first sheet of a hook material comprising a plurality of hooks or a loop material comprising a plurality of loops that is disposed in and attached to the first side recess and a second sheet, respectively, of loop material comprising a plurality of loops or hook material comprising a plurality of hooks that is attached to the cover layer, wherein in an attached position and condition the first sheet and the second sheet are in pressed engagement with the plurality of hooks engaging the plurality of loops, and wherein the cover layer is selectively attachable to and detachable from the core member using the attachment device.

15. The roofing support system of claim **14**, wherein the first side comprises a peripherally-extending rim that encloses and defines a sidewall of the first side recess.

16. The roofing support system of claim **6**, wherein the core member further comprises an integral longitudinally-extending shelf that also extends outwardly and laterally away from at least one of the second side or the third side and comprises a lower surface that is coplanar with the first roof contact side and that, respectively, subsumes at least one of the second edge or third edge.

17. The roofing support system of claim **16**, wherein the integral longitudinally-extending shelf further comprises an integral upwardly-protruding rim on a distal edge thereof.

18. A lightweight composite roofing support system connector comprising a longitudinally-extending connector comprising a first connector end and an opposed second connector end joined together by a longitudinally-extending intermediate portion, the first connector end configured for selective engagement/disengagement within a first roof support and the second connector end configured for selective engagement/disengagement within a second roof support, wherein upon engagement the connector is configured to connect the first roof support and the second roof support.

19. The lightweight composite roofing support system connector of claim **18**, wherein the first roof support and the second roof support each comprise: a longitudinally-extending core member comprising a longitudinally-extending first roof contact side comprising a longitudinally-extending first edge and an opposed longitudinally-extending second edge, a longitudinally-extending second side comprising a continuous second side working surface having a second width and a second length that is greater than the second width, the second side tapering toward the first edge at a first acute angle (α) from the first roof contact side, and a longitudinally-extending third side comprising a continuous third side working surface having a third width and a third length that is greater than the third width, the third side tapering toward the second edge at a second acute angle (β) from the first contact side that is different than the first acute angle (α), a laterally-extending first end comprising an integral first recess defining a first handle or grip, and an opposed laterally-extending second end comprising an integral second recess defining a second handle or grip, the core member comprising a core material and a wedge-shaped lateral cross-section shape; and a cover layer comprising a compressible cover material, the cover layer disposed on and covering the first roof contact side, the core member and cover layer, wherein the first recess defines a first slot that opens into the first roof contact side proximate the first end and the second recess defines a second slot that opens into the first roof contact side proximate the second end, the first connector end configured for mating engagement within one of the first slot or second slot of the first roof support, the second connector end configured for mating engagement within one of the second slot or first slot, respectively, of the second roof support.

20. The lightweight composite roofing support system connector of claim **19**, wherein the first connector end comprises an irregular pentagonal or hexagonal first end lateral cross-section shape and the second connector end comprises an irregular pentagonal or hexagonal second end lateral cross-section shape, and wherein, respectively, the first slot comprises an irregular pentagonal or hexagonal first slot lateral cross-section shape and the second slot comprises an irregular pentagonal or hexagonal second slot lateral cross-section shape.

* * * * *