US012392211B2

(12) **United States Patent**
Rairigh et al.

(10) **Patent No.: US 12,392,211 B2**
(45) **Date of Patent: *Aug. 19, 2025**

(54) **EXPLOSIVE DOWNHOLE TOOLS HAVING IMPROVED WELLBORE CONVEYANCE AND DEBRIS PROPERTIES, METHODS OF USING THE EXPLOSIVE DOWNHOLE TOOLS IN A WELLBORE, AND EXPLOSIVE UNITS FOR EXPLOSIVE COLUMN TOOLS**

(71) Applicants: **W.T. Bell International, Inc.**, Houston, TX (US); **James G. Rairigh**, Houston, TX (US)

(72) Inventors: **James G. Rairigh**, Houston, TX (US); **Walter Stam**, Amsterdam (NL)

(73) Assignee: **W.T. Bell International, Inc.**, Houston, TX (US)

(*) Notice: Subject to any disclaimer, the term of this patent is extended or adjusted under 35 U.S.C. 154(b) by 0 days.

This patent is subject to a terminal disclaimer.

(21) Appl. No.: **18/603,983**

(22) Filed: **Mar. 13, 2024**

(65) **Prior Publication Data**

US 2024/0209706 A1 Jun. 27, 2024

Related U.S. Application Data

(60) Continuation-in-part of application No. 18/371,908, filed on Sep. 22, 2023, which is a division of (Continued)

(51) **Int. Cl.**
E21B 29/02 (2006.01)
E21B 23/04 (2006.01)

(52) **U.S. Cl.**
CPC ***E21B 29/02*** (2013.01); ***E21B 23/0414*** (2020.05)

(58) **Field of Classification Search**
CPC E21B 43/117; E21B 43/105; E21B 29/00; E21B 29/02; E21B 29/08
See application file for complete search history.

(56) **References Cited**

U.S. PATENT DOCUMENTS

2,214,226 A 9/1940 English
2,684,030 A 7/1954 Morris et al.
(Continued)

FOREIGN PATENT DOCUMENTS

EP 0079716 B1 3/1987
FR 1155464 A 5/1958
(Continued)

OTHER PUBLICATIONS

International Search Report and Written Opinion of the International Searching Authority, issued by the U.S. Patent & Trademark Office in PCT/2019/046920 on Jan. 9, 2020 (57 pages).
(Continued)

Primary Examiner — David Carroll
(74) *Attorney, Agent, or Firm* — McCutcheon Joseph, PLLC

(57) **ABSTRACT**

An explosive downhole tool includes a housing having an upper housing part on one side of a window section and a lower housing part on an opposite side of the window section. An explosive charge is provided within the housing for cutting or expanding the wall of the tubular. The majority of outer surface of at least one of the upper and lower housing part in cross-section is rounded so as to be devoid of corners. The rounded surface eliminates the presence of sharp corners that may catch on restrictions or protrusions in a wellbore so that the downhole tool is more easily conveyable within a wellbore. Another explosive downhole tool includes fins extending from the housing. The fins have a height that decreases in a direction away from the housing.
(Continued)

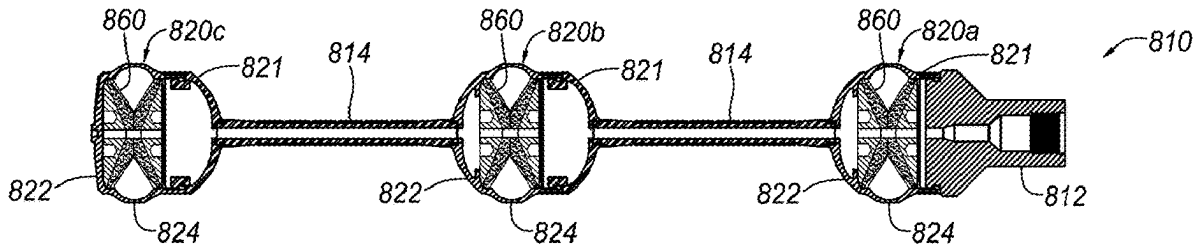

The shape of the fins enables the downhole tool to be more easily conveyable within the wellbore.

25 Claims, 42 Drawing Sheets

Related U.S. Application Data

application No. 17/512,899, filed on Oct. 28, 2021, now Pat. No. 11,781,393, which is a continuation-in-part of application No. 17/313,828, filed on May 6, 2021, now Pat. No. 11,536,104, which is a continuation-in-part of application No. 17/126,982, filed on Dec. 18, 2020, now Pat. No. 11,480,021, which is a continuation-in-part of application No. 16/970,602, filed as application No. PCT/US2019/046920 on Aug. 16, 2019, now Pat. No. 11,002,097.

(60) Provisional application No. 62/764,858, filed on Aug. 16, 2018.

(56) **References Cited**

U.S. PATENT DOCUMENTS

3,013,333	A	12/1961	Burke	
3,167,122	A	1/1965	Lang	
3,590,877	A	7/1971	Leopold et al.	
4,184,430	A	1/1980	Mock	
4,449,280	A	5/1984	Schroeder	
4,585,374	A	4/1986	Regalbuto et al.	
4,672,832	A	6/1987	Merker	
4,724,767	A	2/1988	Aseltine	
4,850,438	A	7/1989	Regalbuto	
4,966,237	A	10/1990	Swanson et al.	
5,038,683	A *	8/1991	Baker	F42B 1/02 102/501
5,753,850	A *	5/1998	Chawla	F42B 1/02 102/307
7,104,326	B2	9/2006	Grattan et al.	
8,939,210	B2	1/2015	Bell et al.	
9,022,116	B2	5/2015	Bell et al.	
9,038,713	B1 *	5/2015	Bell	E21B 29/02 166/55.7
10,316,627	B2	6/2019	Brisco et al.	
2002/0092793	A1 *	7/2002	Barker	F42B 39/14 53/445
2002/0157830	A1	10/2002	Simpson	
2003/0221579	A1 *	12/2003	Grattan	F42B 1/02 102/306
2004/0154492	A1	8/2004	Barnhart	
2004/0251034	A1	12/2004	Kendziora et al.	
2004/0256112	A1	12/2004	Harrall et al.	
2005/0061506	A1 *	3/2005	Grove	E21B 21/085 166/162
2006/0075888	A1 *	4/2006	Yang	F42B 3/08 89/1.14
2006/0086501	A1	4/2006	Creel et al.	
2011/0094406	A1 *	4/2011	Marya	F42B 1/02 102/305
2012/0312561	A1	12/2012	Hallundbæk et al.	
2013/0299194	A1	11/2013	Bell et al.	
2014/0076550	A1	3/2014	Pelletier et al.	
2014/0338910	A1	11/2014	Bell et al.	
2015/0198000	A1	7/2015	Bell et al.	
2015/0233219	A1	8/2015	Bell et al.	
2015/0361774	A1	12/2015	Flores	
2015/0376992	A1 *	12/2015	Grattan	E21B 43/117 175/4.57
2016/0010423	A1 *	1/2016	Myhre	E21B 43/117 166/285
2016/0032706	A1	2/2016	Bornaz et al.	
2016/0123122	A1	5/2016	Van Dongen et al.	
2016/0130902	A1 *	5/2016	Wright	F42C 19/02 89/1.15
2017/0145778	A1	5/2017	Zijsling et al.	
2017/0145797	A1	5/2017	Stam et al.	
2017/0191328	A1	7/2017	Sokolove et al.	
2018/0094504	A1	4/2018	Hearn et al.	
2018/0187528	A1	7/2018	Di Crescenzo et al.	
2018/0216437	A1	8/2018	Shafer	
2018/0252507	A1	9/2018	Collier	
2018/0298720	A1	10/2018	Billingham et al.	
2022/0003085	A1	1/2022	Loehken	

FOREIGN PATENT DOCUMENTS

JP	4017111	B2	12/2007
NO	20180152	A1	4/2018
WO	WO2014/108431	A2	7/2014
WO	2014148913	A1	9/2014
WO	2014202419	A1	12/2014
WO	WO2020/016169	A1	1/2020

OTHER PUBLICATIONS

International Preliminary report on Patentability, issued by the U.S. Patent & Trademark Office in PCT/2019/046920 on Jun. 25, 2020 (12 pages).

International Search Report and Written Opinion of the International Searching Authority, issued by the U.S. Patent & Trademark Office in PCT/2019/046692 on Nov. 6, 2019 (80 pages).

Written Opinion of the International Preliminary Examining Authority, issued by the U.S. Patent & Trademark Office in PCT/2019/046692 on Aug. 11, 2020 (5 pages).

Office Action issued by the U.S. Patent & Trademark Office on Nov. 2, 2020 in U.S. Appl. No. 16/970,605 (15 pages).

Office Action issued by the U.S. Patent & Trademark Office on Nov. 24, 2020 in U.S. Appl. No. 16/970,602 (23 pages).

Office Action issued by the Canadian Intellectual Property Office on Mar. 10, 2021 in CA Patent Application No. 3,109,219 (7 pages).

Office Action issued by the Canadian Intellectual Property Office on Mar. 18, 2021 in CA Patent Application No. 3,109,407 (4 pages).

Office Action issued by the U.S. Patent & Trademark Office on Mar. 8, 2022 in U.S. Appl. No. 17/126,982 (25 pages).

European Extended Search Report cited in EP 19849212.6 on Apr. 7, 2022 (7 pages).

European Extended Search Report cited in EP 19849454.4 on Apr. 19, 2022 (10 pages).

Office Action issued by the U.S. Patent & Trademark Office on Jun. 23, 2022 in U.S. Appl. No. 17/240,611 (28 pages).

Notice of Allowance issued by the U.S. Patent & Trademark Office on Sep. 29, 2022 in U.S. Appl. No. 17/313,828 (35 pages).

* cited by examiner

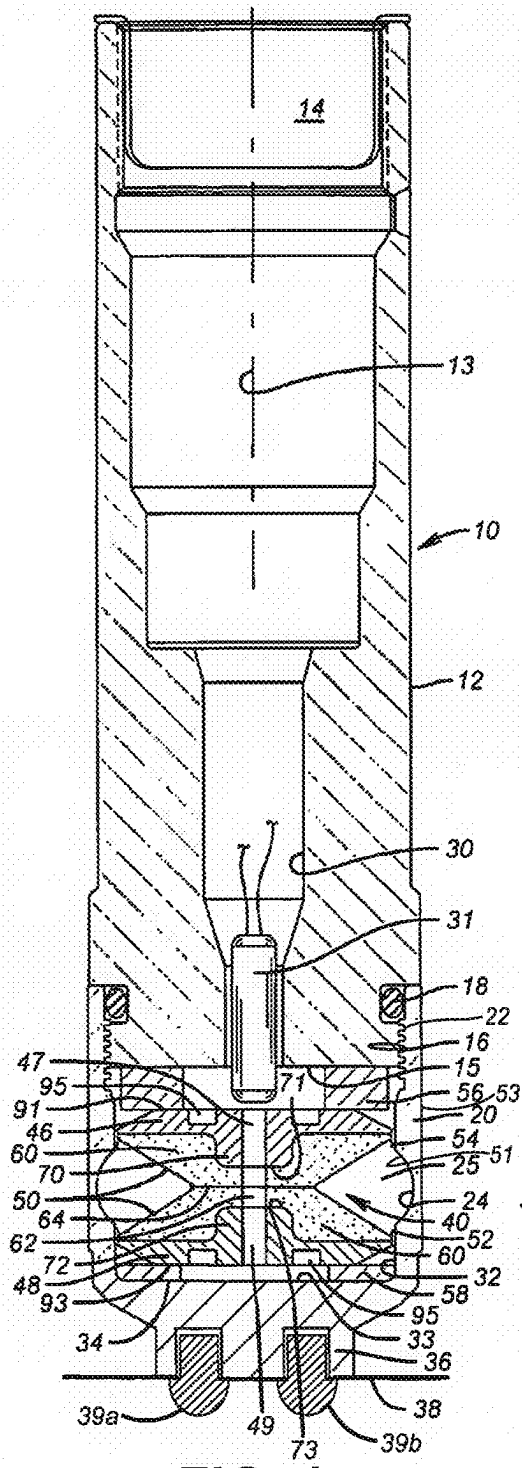
14
13
10
12
30
31
18
22
16
15
56
53
20
54
51
25
24
40
52
60
32
58
95
33
36
38
39b
73
49
39a
47
95
91
46
60
70
50
64
62
72
48
93
34
71

FIG. 1

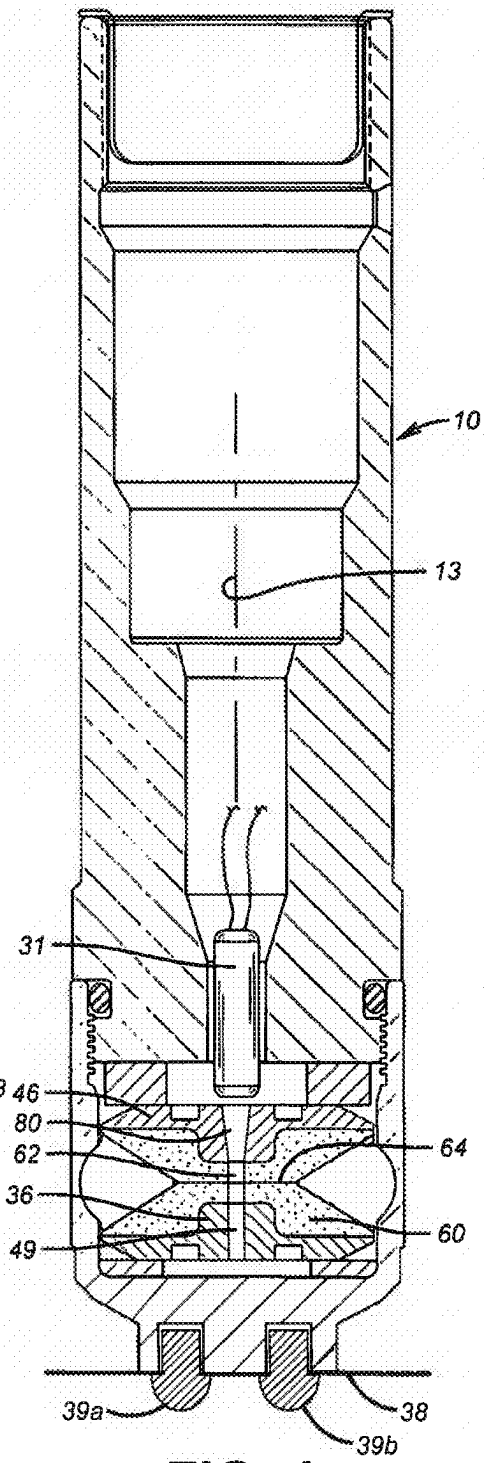
10
13
31
46
80
62
36
49
64
60
39a
38
39b

FIG. 4

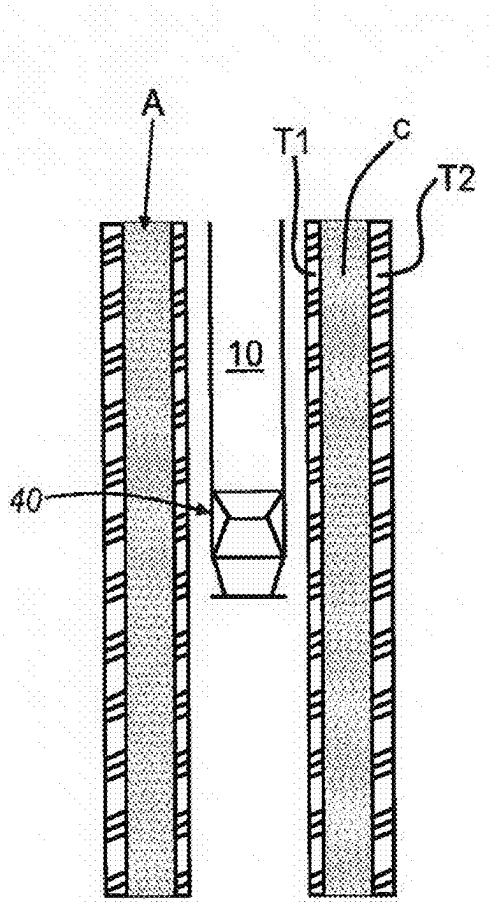
A
T1
C
T2
10
40

FIG. 2A

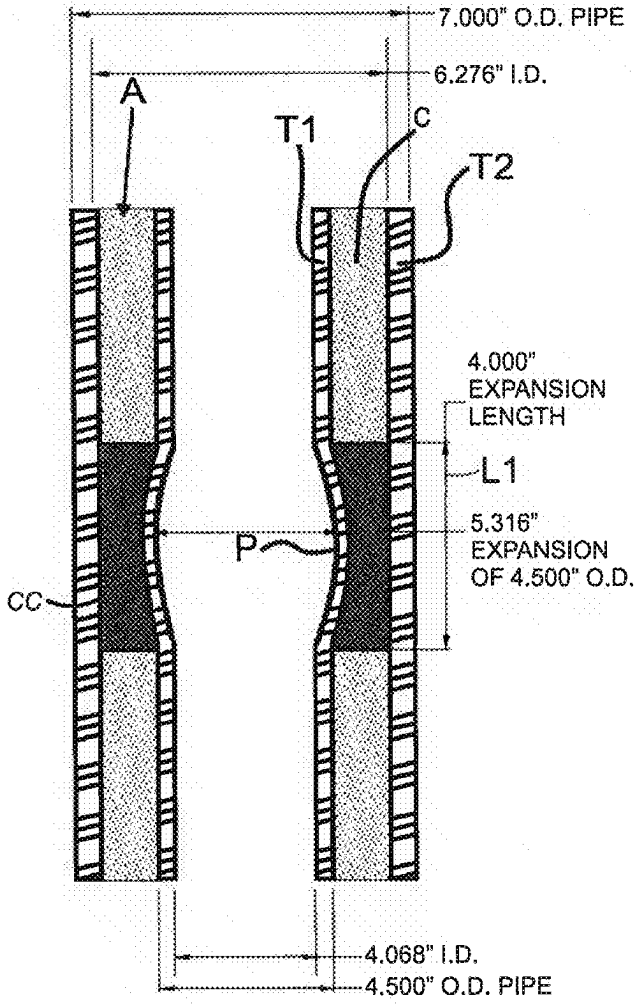
7.000" O.D. PIPE
6.276" I.D.
A
T1
C
T2
4.000"
EXPANSION
LENGTH
L1
5.316"
EXPANSION
OF 4.500" O.D.
P
CC
4.068" I.D.
4.500" O.D. PIPE

FIG. 2B

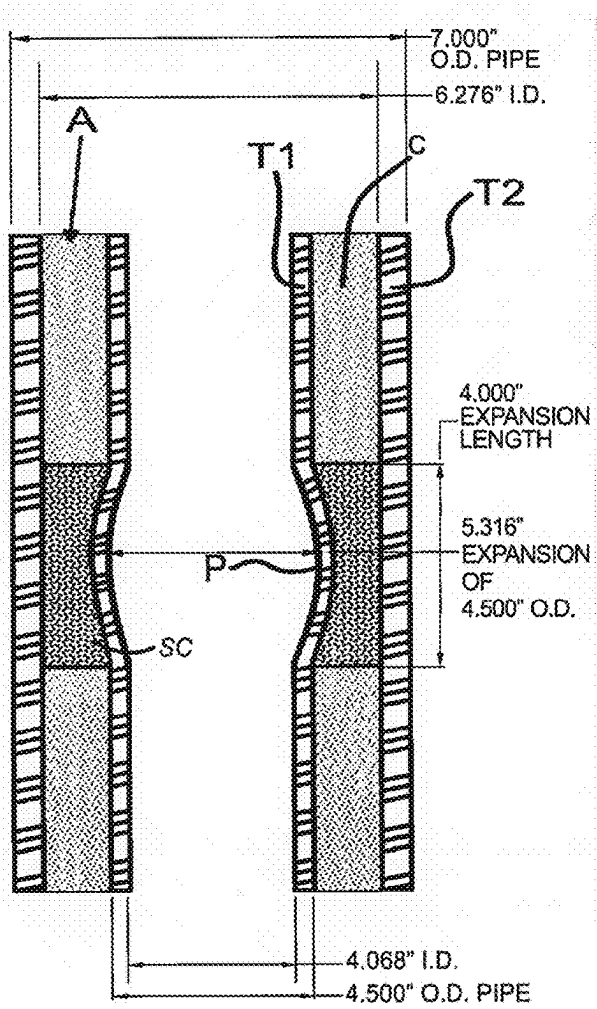
7.000"
O.D. PIPE
6.276" I.D.
A
T1
C
T2
4.000"
EXPANSION
LENGTH
5.316"
EXPANSION
OF
4.500" O.D.
P
SC
4.068" I.D.
4.500" O.D. PIPE

FIG. 2C

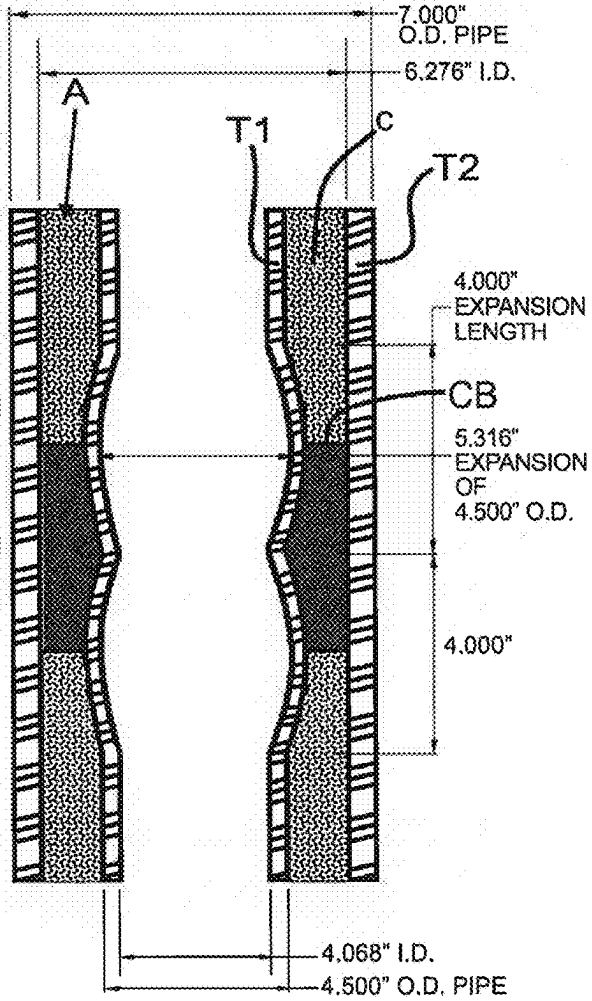
7.000"
O.D. PIPE
6.276" I.D.
A
T1
C
T2
4.000"
EXPANSION
LENGTH
CB
5.316"
EXPANSION
OF
4.500" O.D.
4.000"
4.068" I.D.
4.500" O.D. PIPE

FIG. 2D

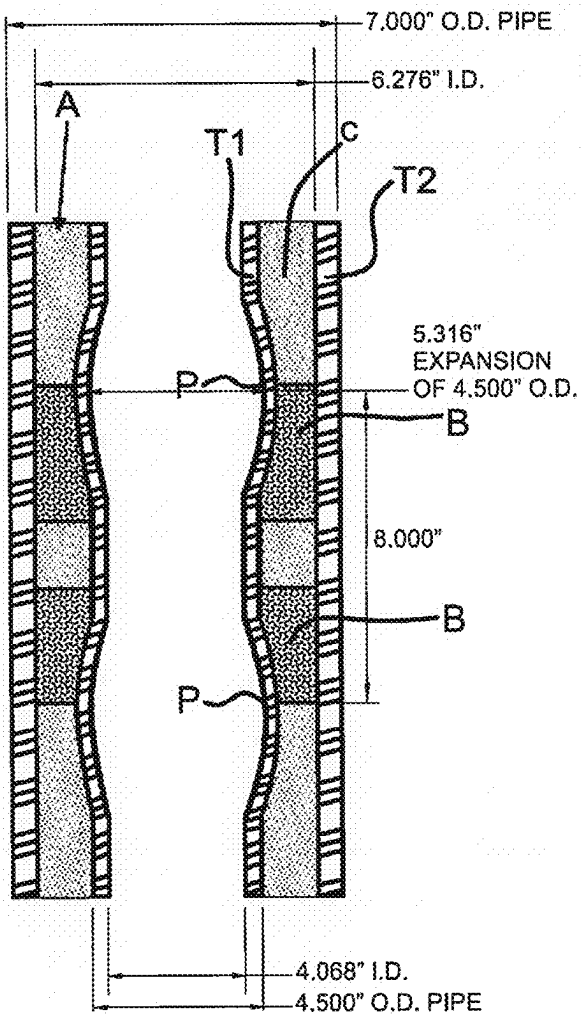
7.000" O.D. PIPE
6.276" I.D.
A
T1
C
T2
5.316"
EXPANSION
OF 4.500" O.D.
P
B
8.000"
B
P
4.068" I.D.
4.500" O.D. PIPE

FIG. 2E

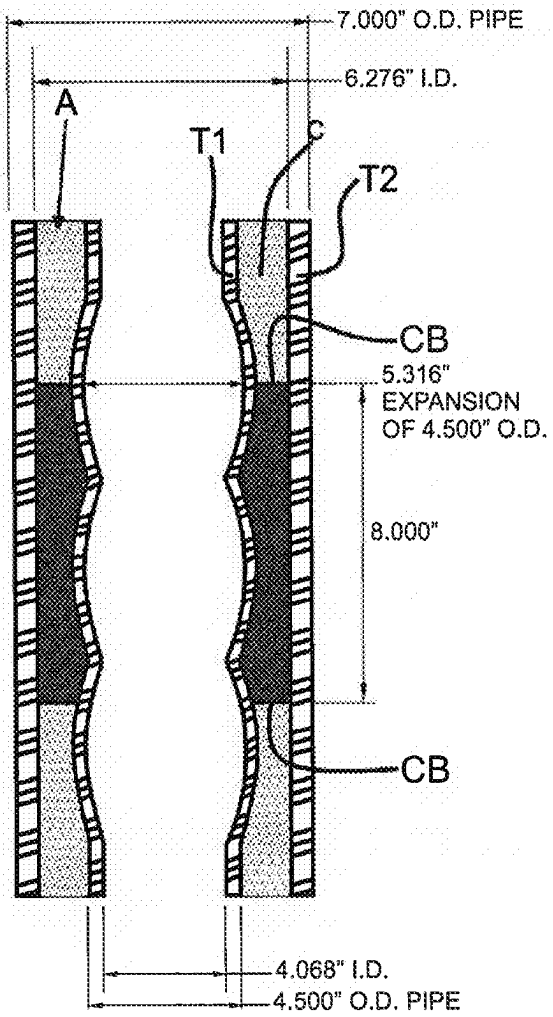
7.000" O.D. PIPE
6.276" I.D.
A
T1
C
T2
CB
5.316"
EXPANSION
OF 4.500" O.D.
8.000"
CB
4.068" I.D.
4.500" O.D. PIPE

FIG. 2F

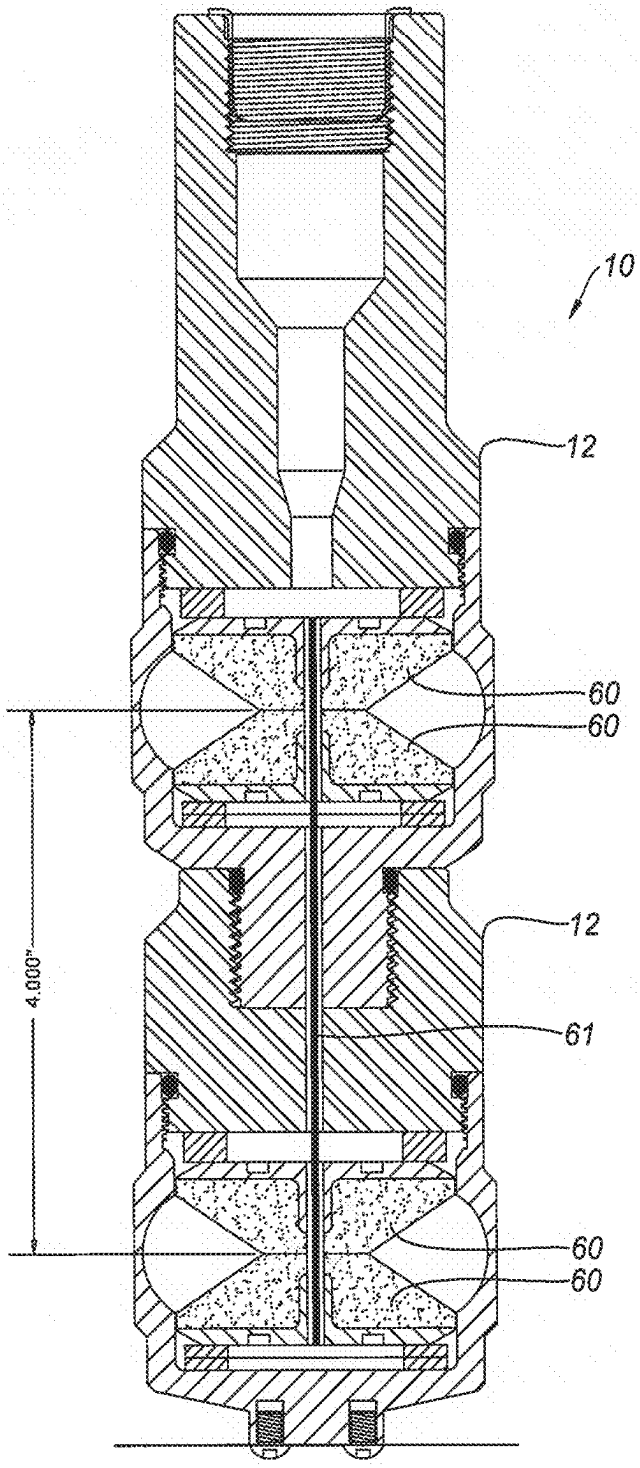

FIG. 2G

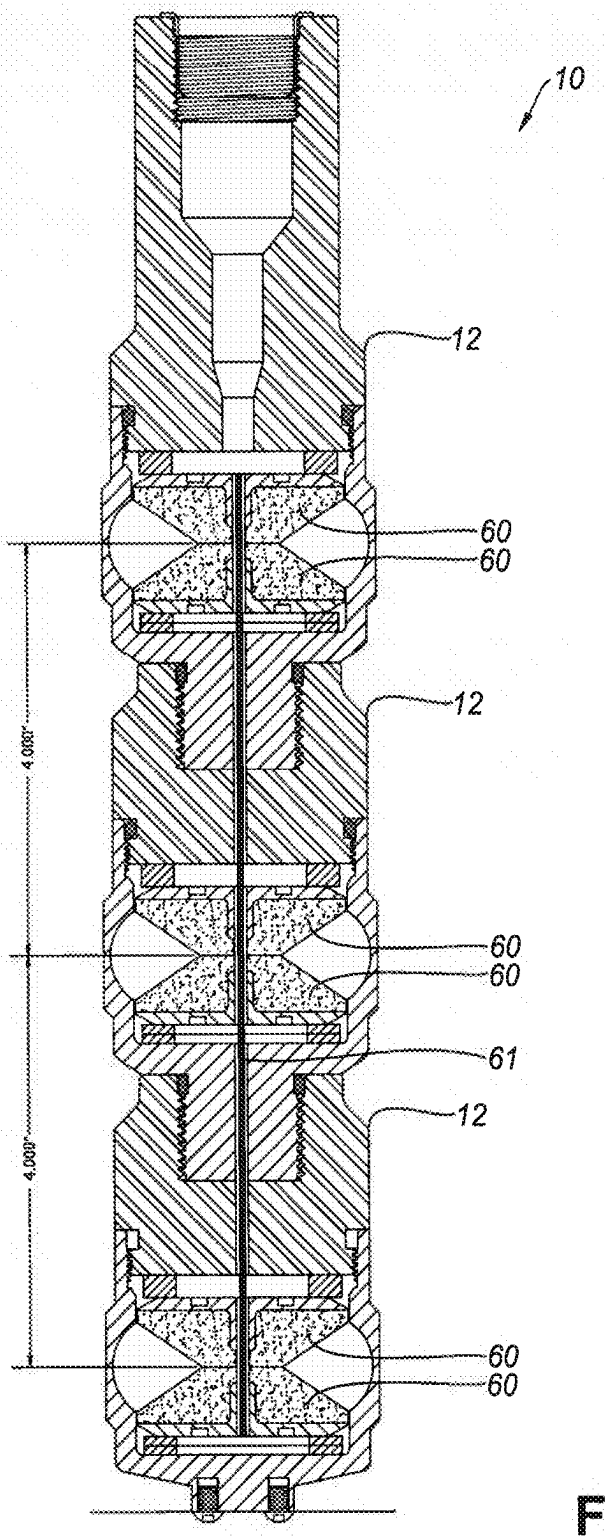

FIG. 2H

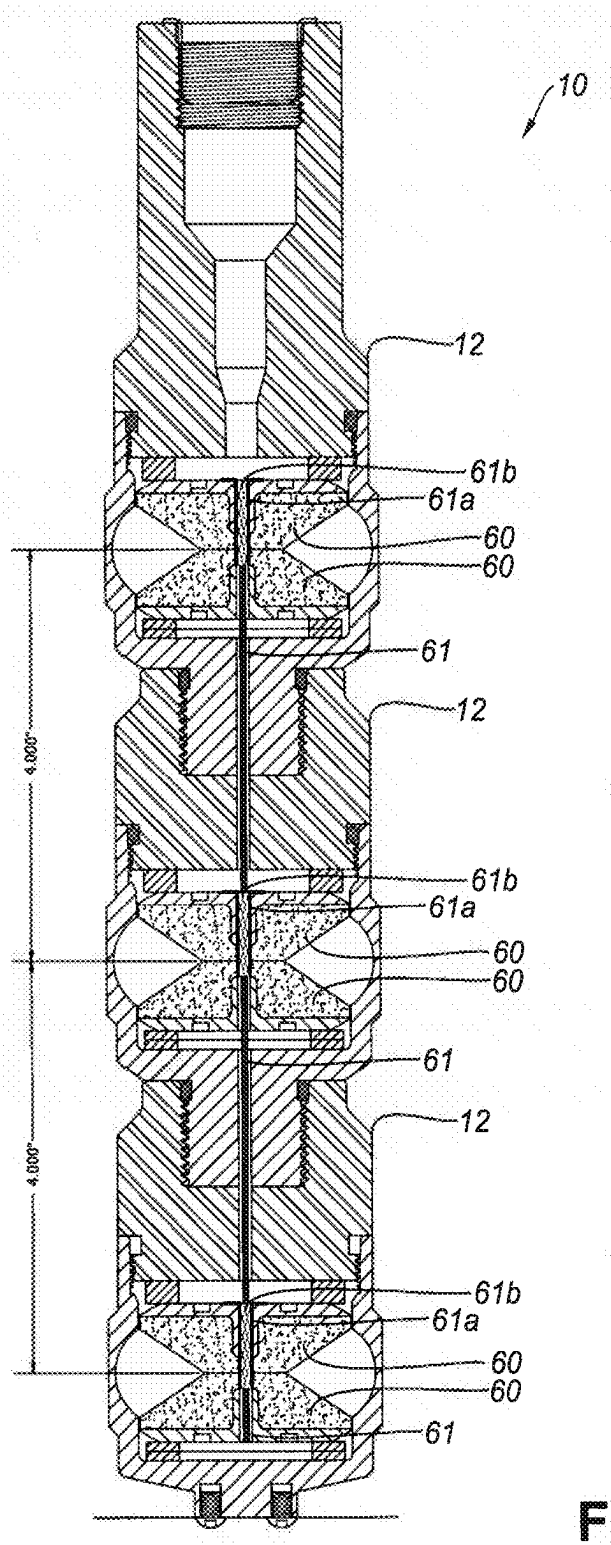
10
12
61b
61a
60
60
61
12
4.000"
61b
61a
60
60
61
12
4.000"
61b
61a
60
60
61

FIG. 2I

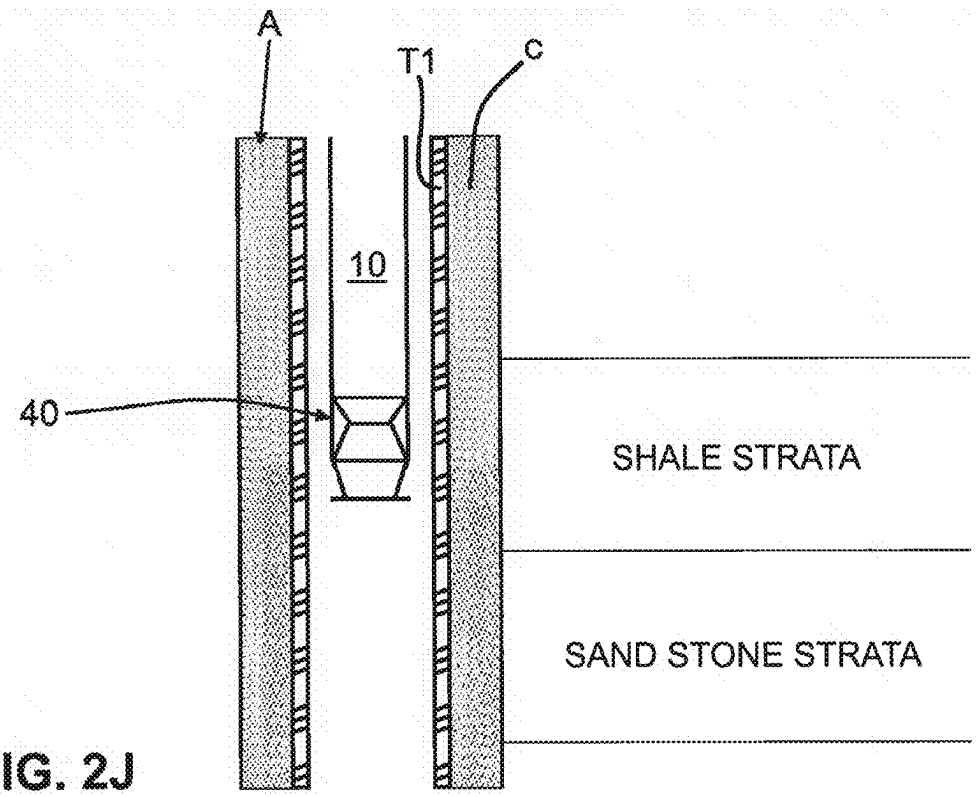
A
T1
C
10
40
SHALE STRATA
SAND STONE STRATA

FIG. 2J

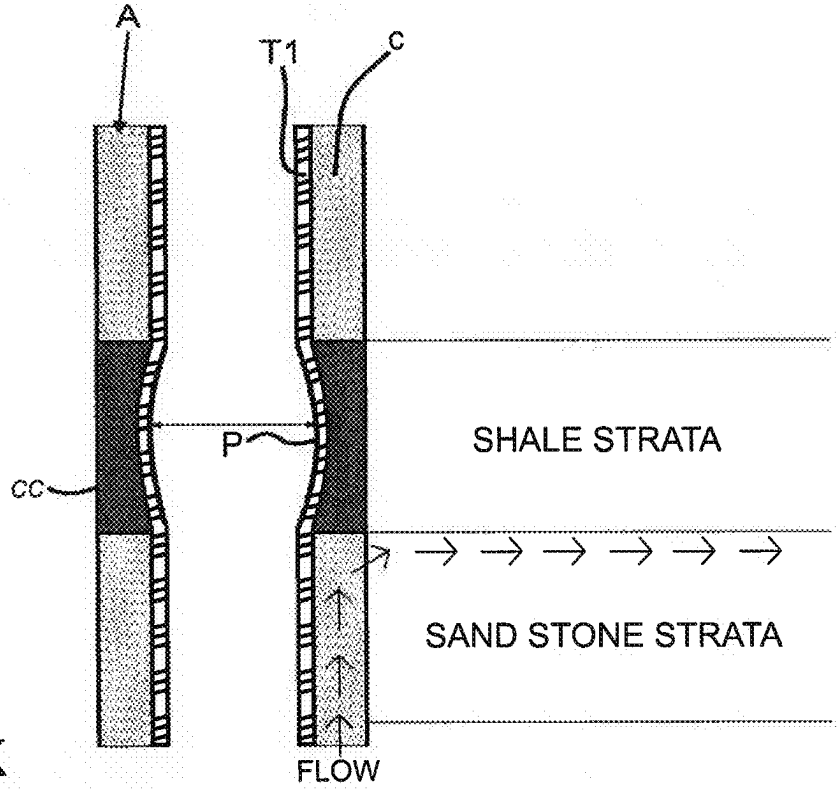
A
T1
C
P
CC
SHALE STRATA
SAND STONE STRATA
FLOW

FIG. 2K

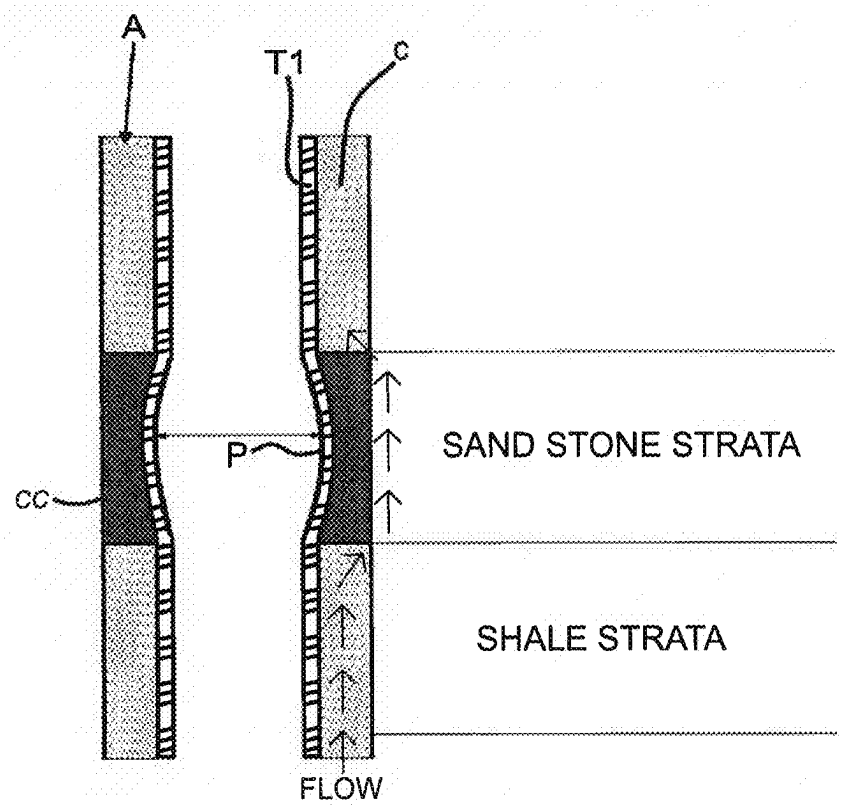

FIG. 2L

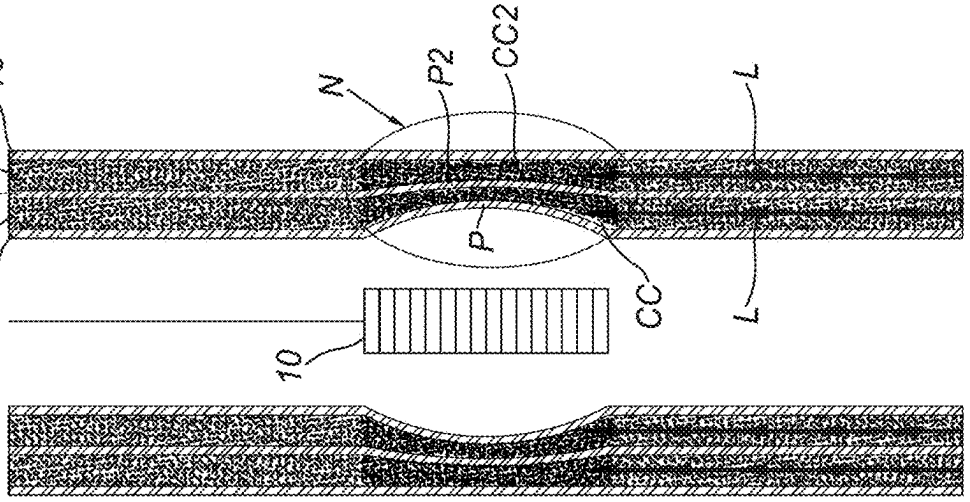

FIG. 2N

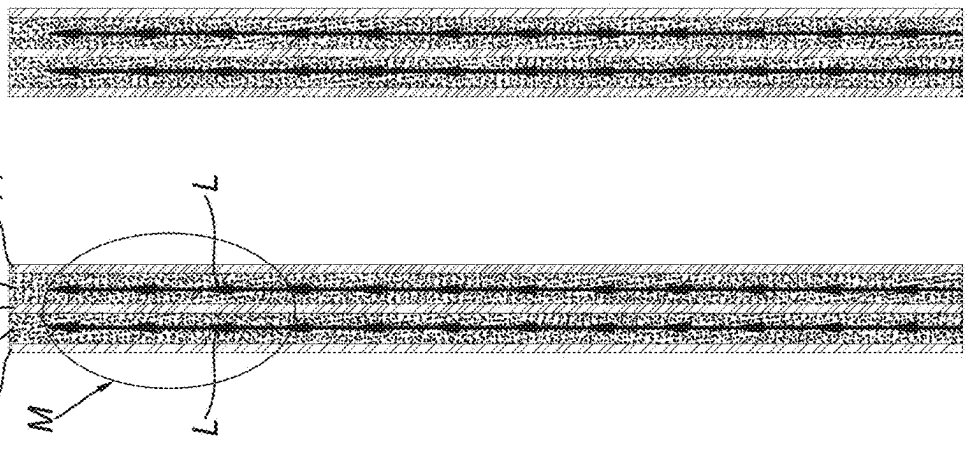

FIG. 2M

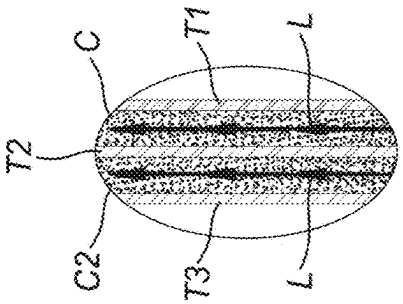

M

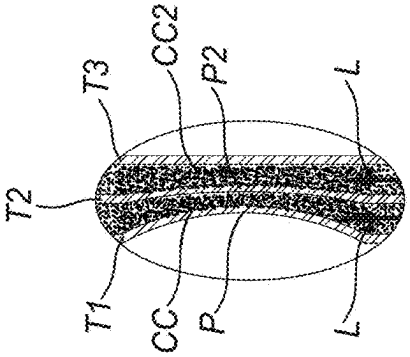

N

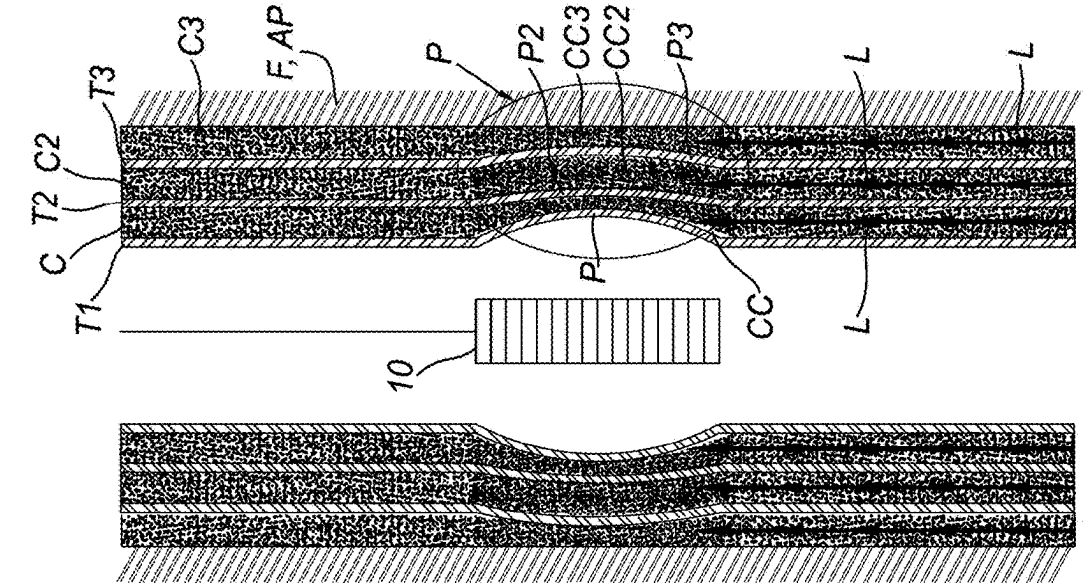

FIG. 2P

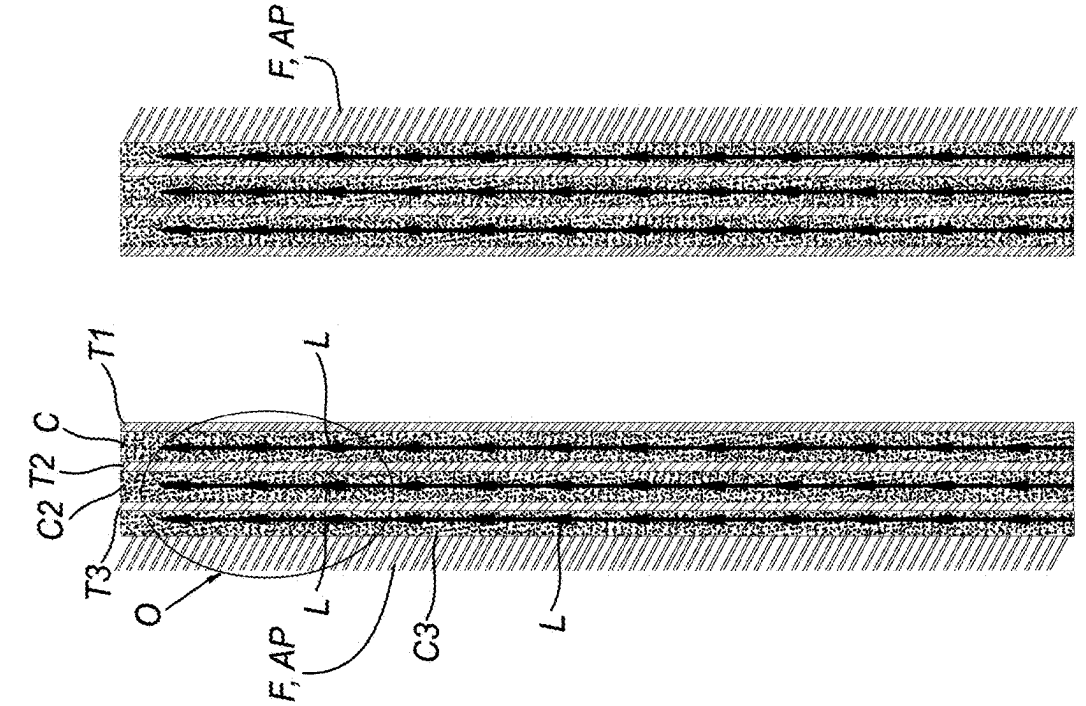

FIG. 2O

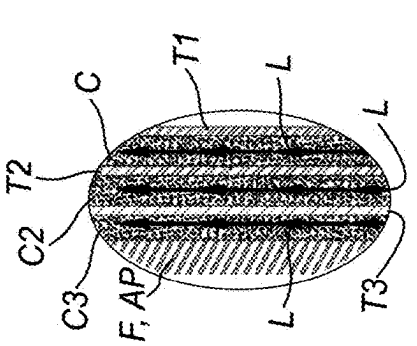

O

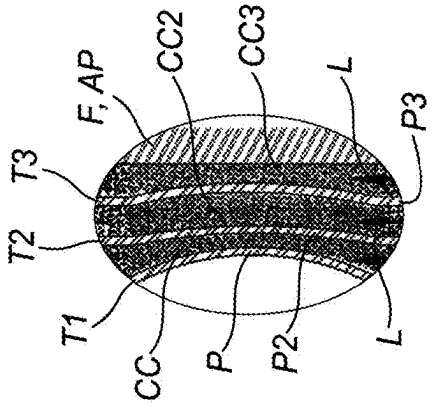

P

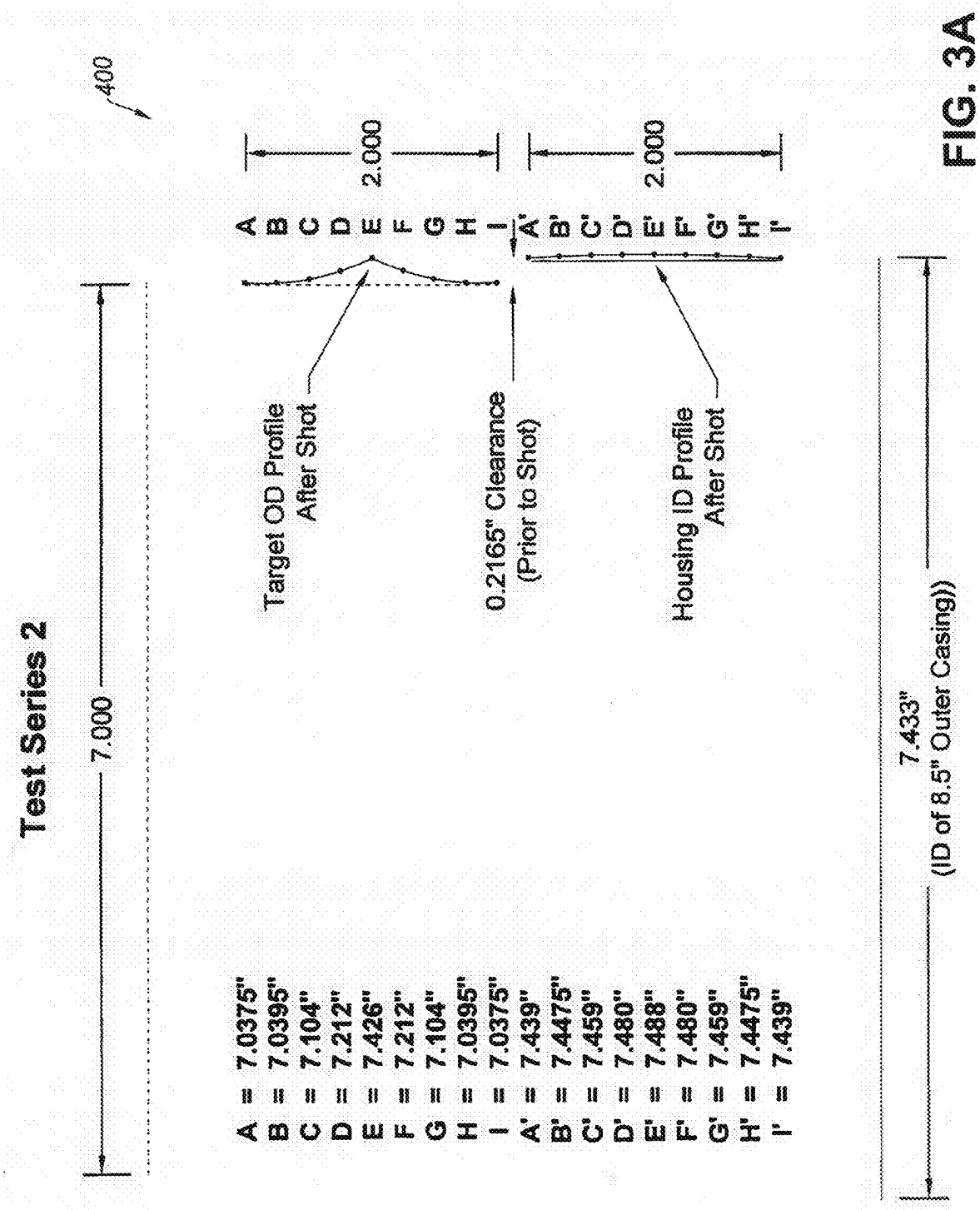
Test Series 2
400
7.000
2.000
2.000
A B C D E F G H I
A' B' C' D' E' F' G' H' I'
Target OD Profile After Shot
0.2165" Clearance (Prior to Shot)
Housing ID Profile After Shot
7.433" (ID of 8.5" Outer Casing))
A = 7.0375"
B = 7.0395"
C = 7.104"
D = 7.212"
E = 7.426"
F = 7.212"
G = 7.104"
H = 7.0395"
I = 7.0375"
A' = 7.439"
B' = 7.4475"
C' = 7.459"
D' = 7.480"
E' = 7.488"
F' = 7.480"
G' = 7.459"
H' = 7.4475"
I' = 7.439"

FIG. 3A

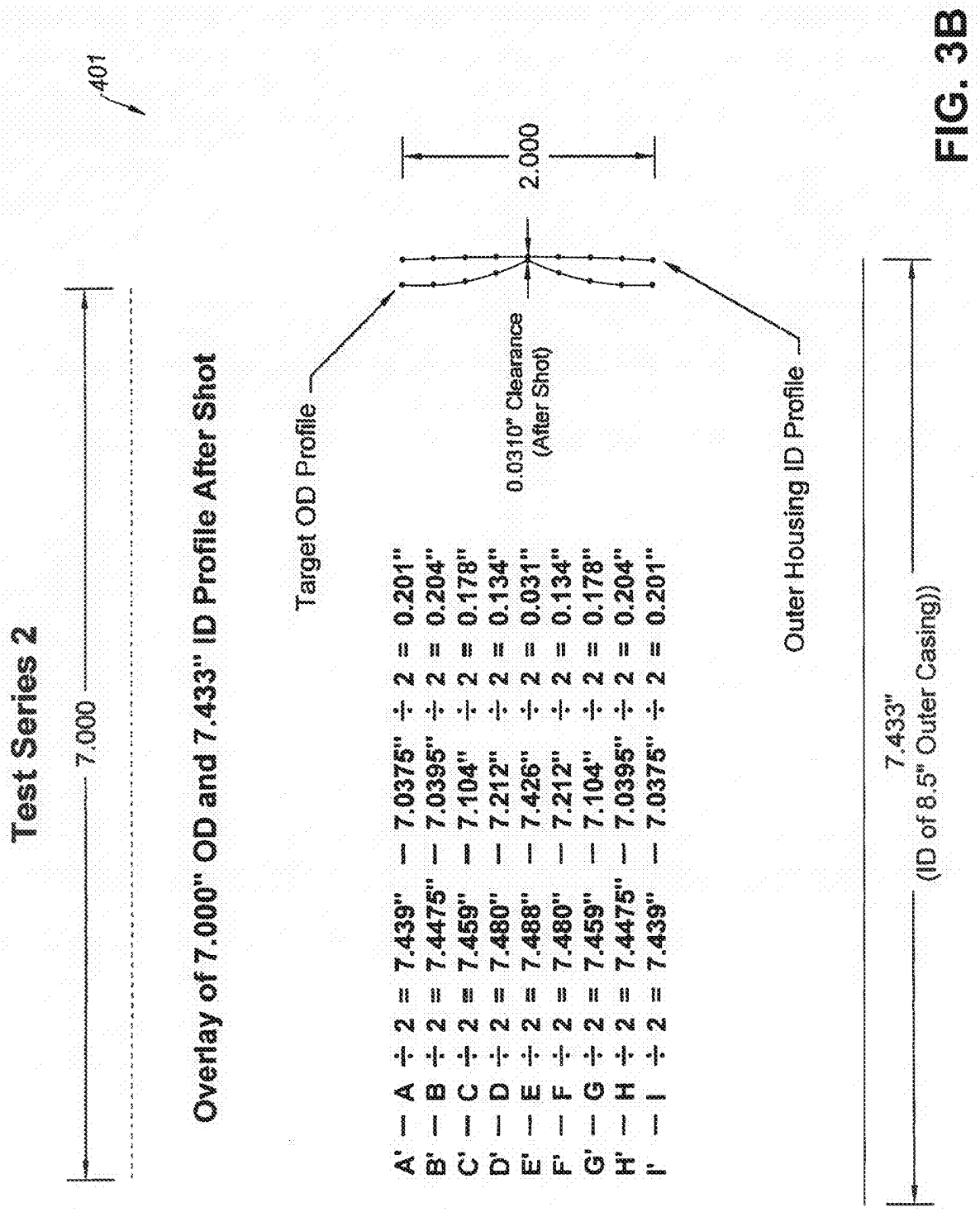
401
Test Series 2
7.000
Overlay of 7.000" OD and 7.433" ID Profile After Shot
Target OD Profile
2.000
0.0310" Clearance
(After Shot)
Outer Housing ID Profile
A' — A ÷ 2 = 7.439" — 7.0375" ÷ 2 = 0.201"
B' — B ÷ 2 = 7.4475" — 7.0395" ÷ 2 = 0.204"
C' — C ÷ 2 = 7.459" — 7.104" ÷ 2 = 0.178"
D' — D ÷ 2 = 7.480" — 7.212" ÷ 2 = 0.134"
E' — E ÷ 2 = 7.488" — 7.426" ÷ 2 = 0.031"
F' — F ÷ 2 = 7.480" — 7.212" ÷ 2 = 0.134"
G' — G ÷ 2 = 7.459" — 7.104" ÷ 2 = 0.178"
H' — H ÷ 2 = 7.4475" — 7.0395" ÷ 2 = 0.204"
I' — I ÷ 2 = 7.439" — 7.0375" ÷ 2 = 0.201"
7.433"
(ID of 8.5" Outer Casing))

FIG. 3B

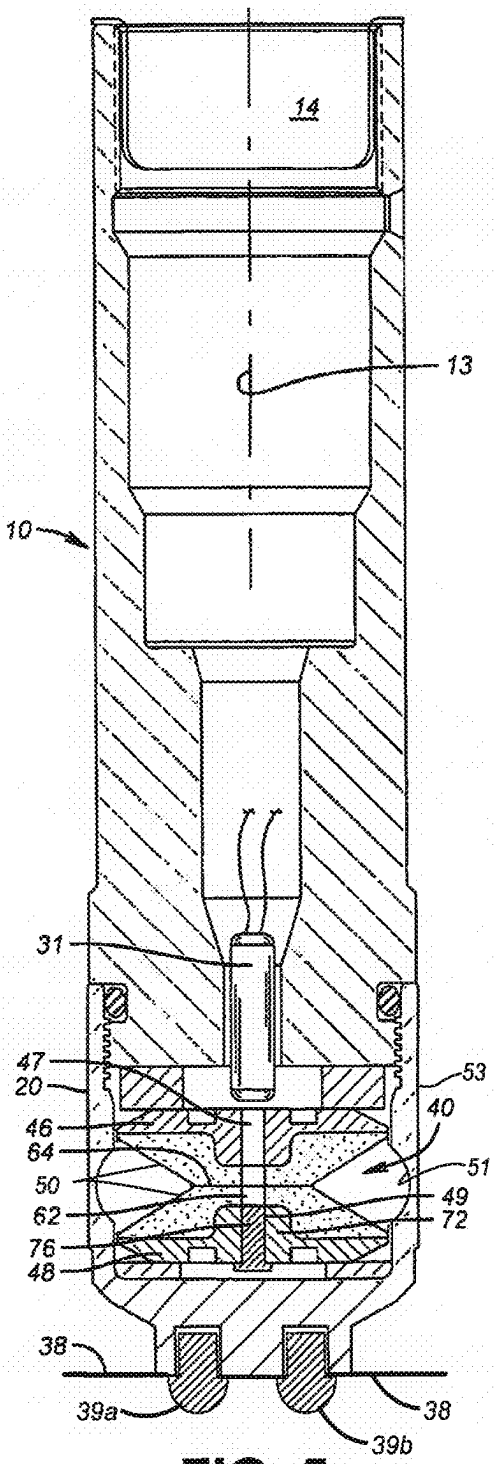
14
13
10
31
47
20
46
64
50
62
76
48
53
40
51
49
72
38
39a
38
39b

FIG. 5

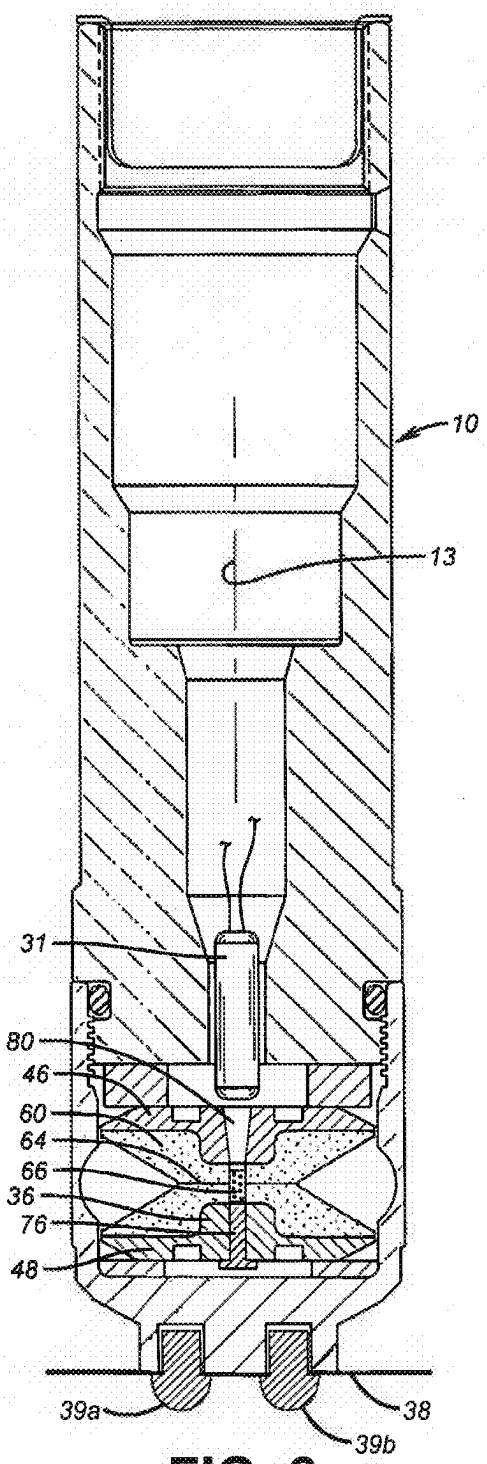
10
13
31
80
46
60
64
66
36
76
48
39a
38
39b

FIG. 6

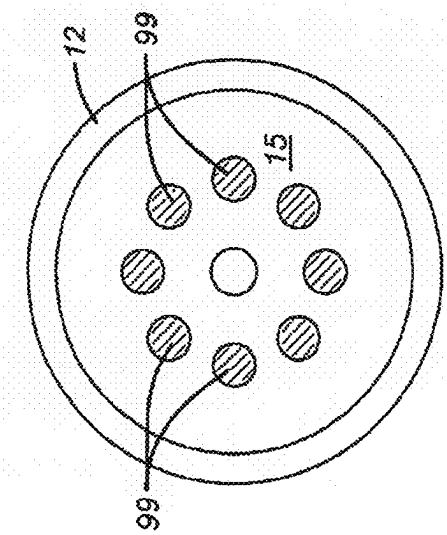

FIG. 9

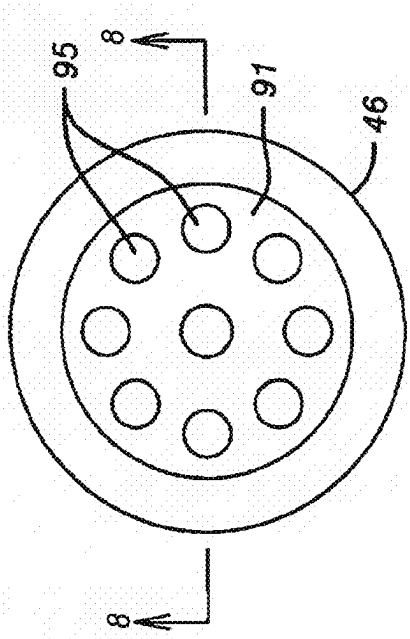

FIG. 7

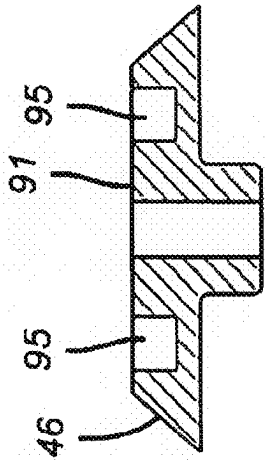

FIG. 8

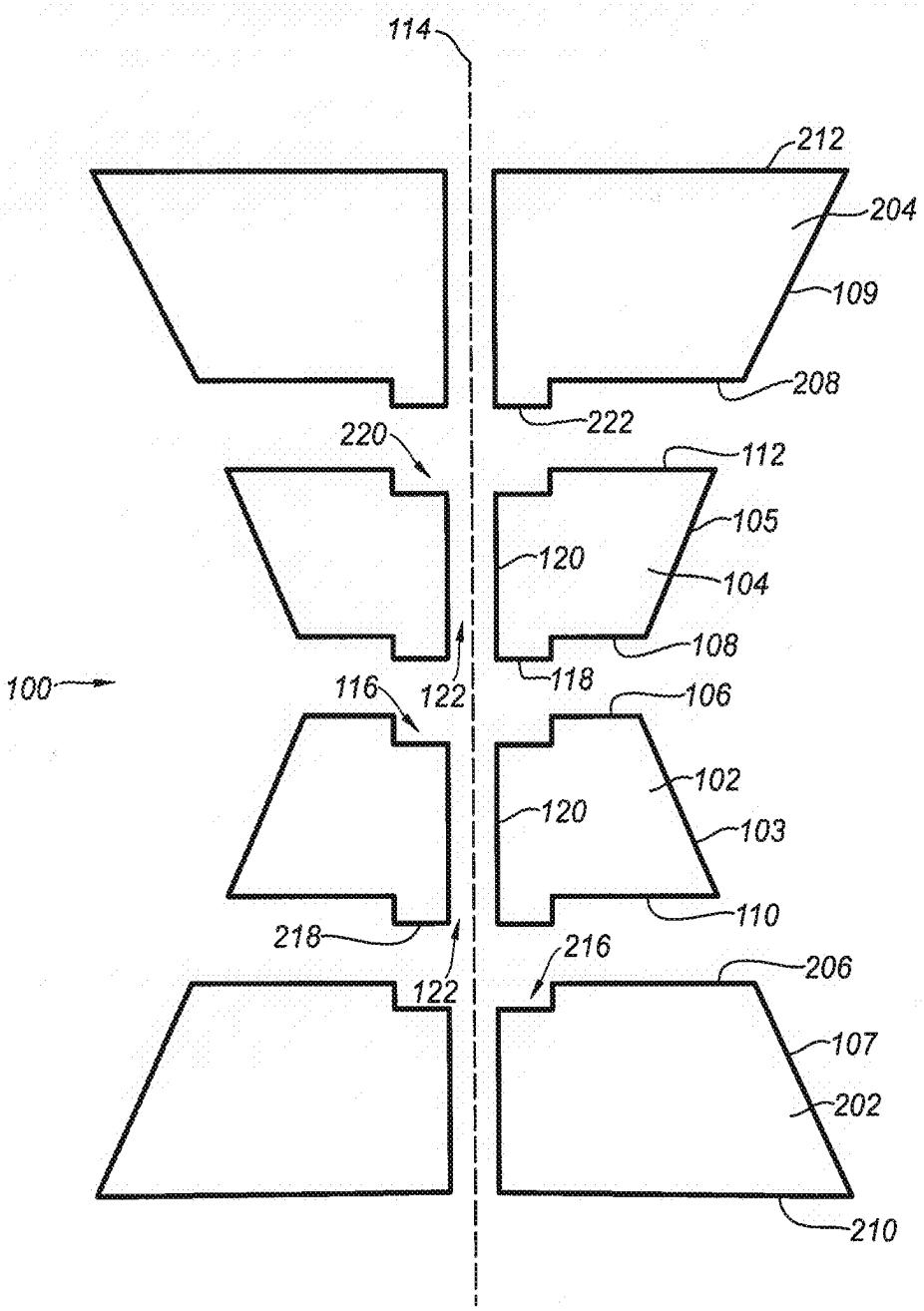
114
212
204
109
208
222
220
112
105
120
104
108
100
116
122
118
106
102
120
103
110
218
216
206
122
107
202
210

FIG. 10

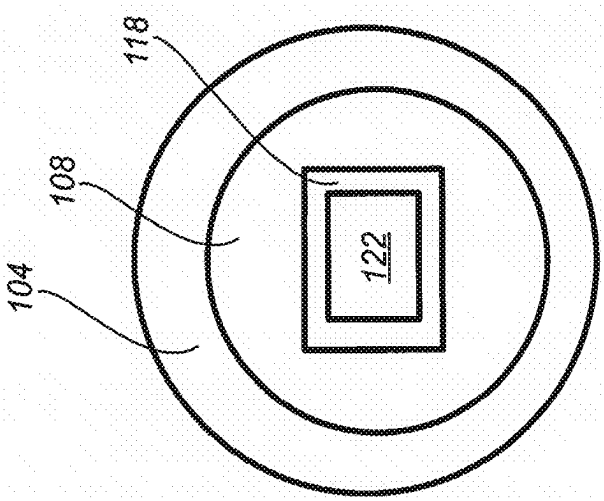

FIG. 13

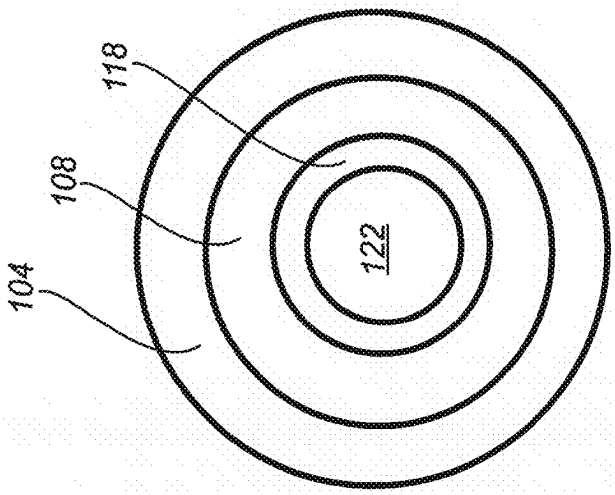

FIG. 12

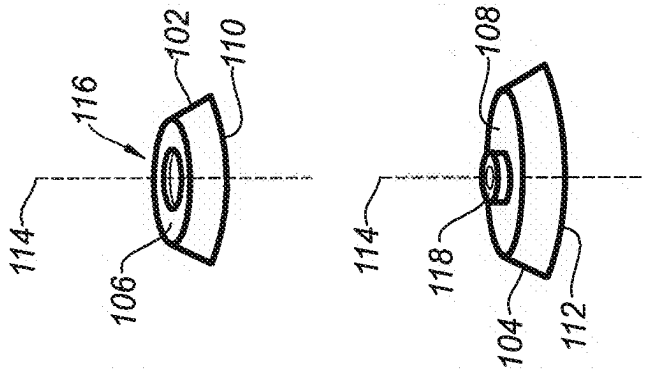

FIG. 11

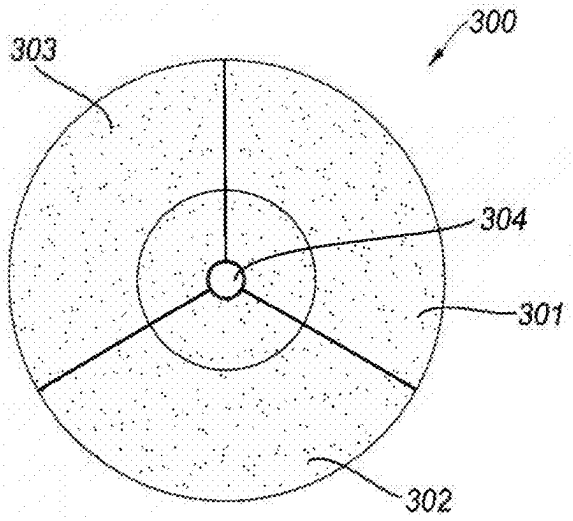

FIG. 14

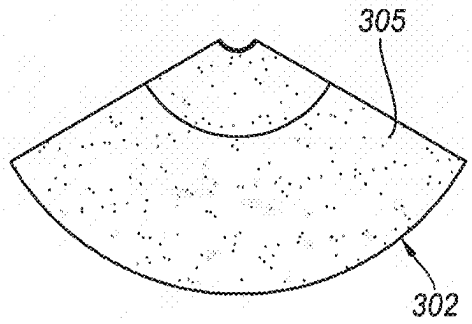

FIG. 15

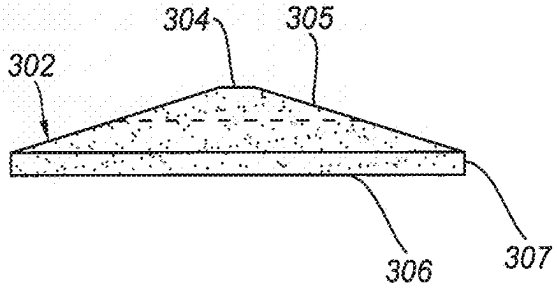

FIG. 16

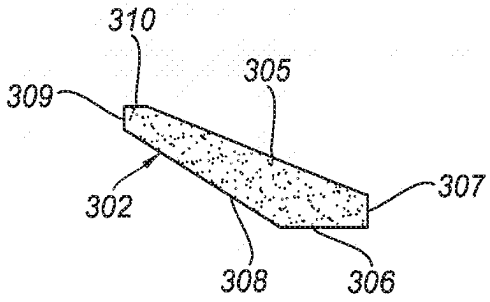

FIG. 17

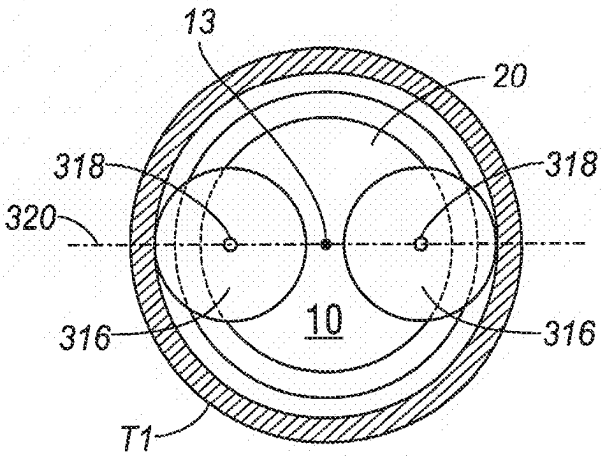

FIG. 18

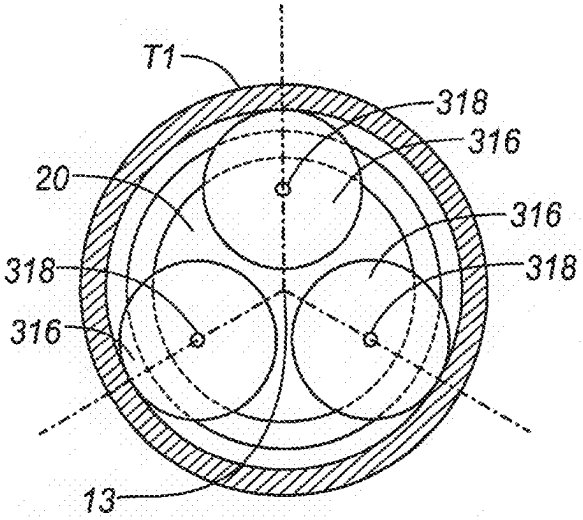

FIG. 19

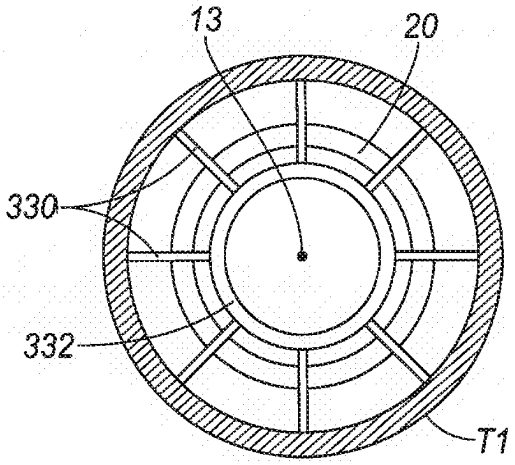

FIG. 20

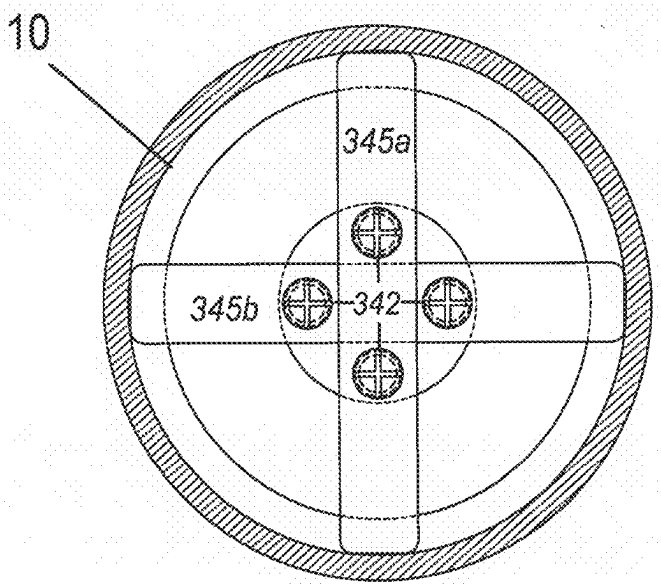

FIG. 21

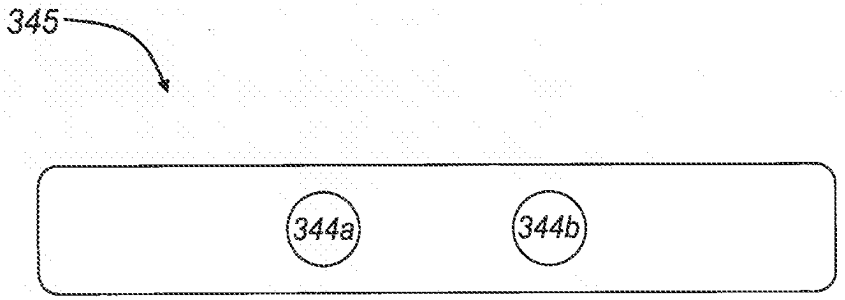

FIG. 22

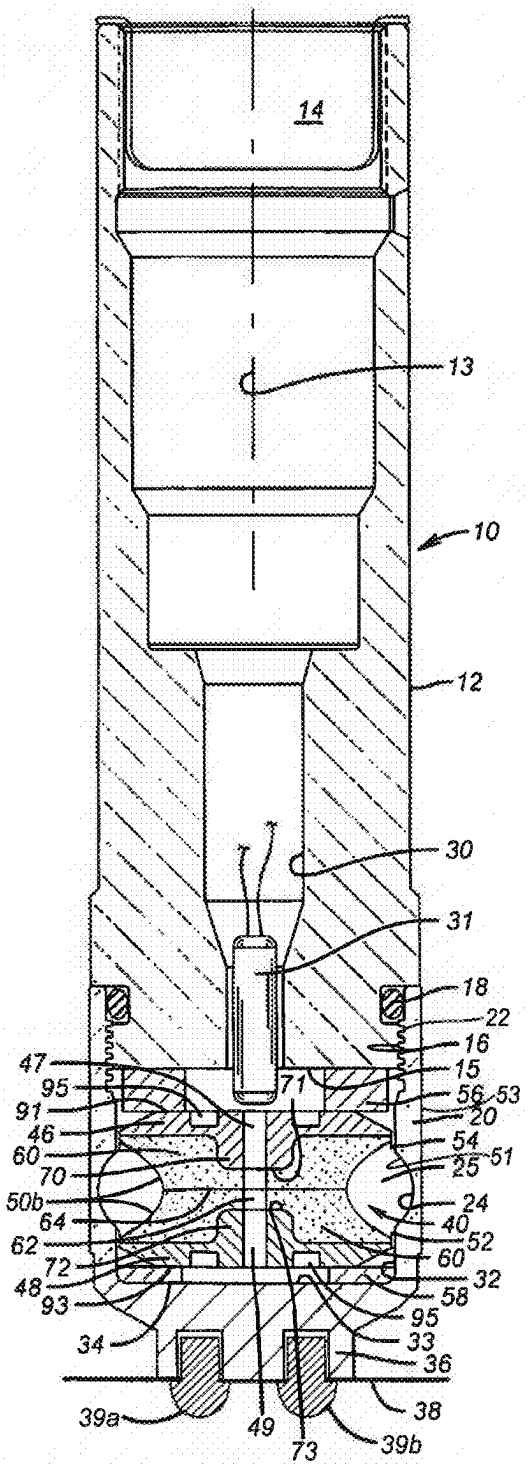
14
13
10
12
30
31
18
22
16
15
56
53
20
54
51
25
24
40
52
60
32
58
95
33
36
38
39b
73
49
39a
34
93
48
72
62
64
50b
70
60
46
91
95
47
71

FIG. 23

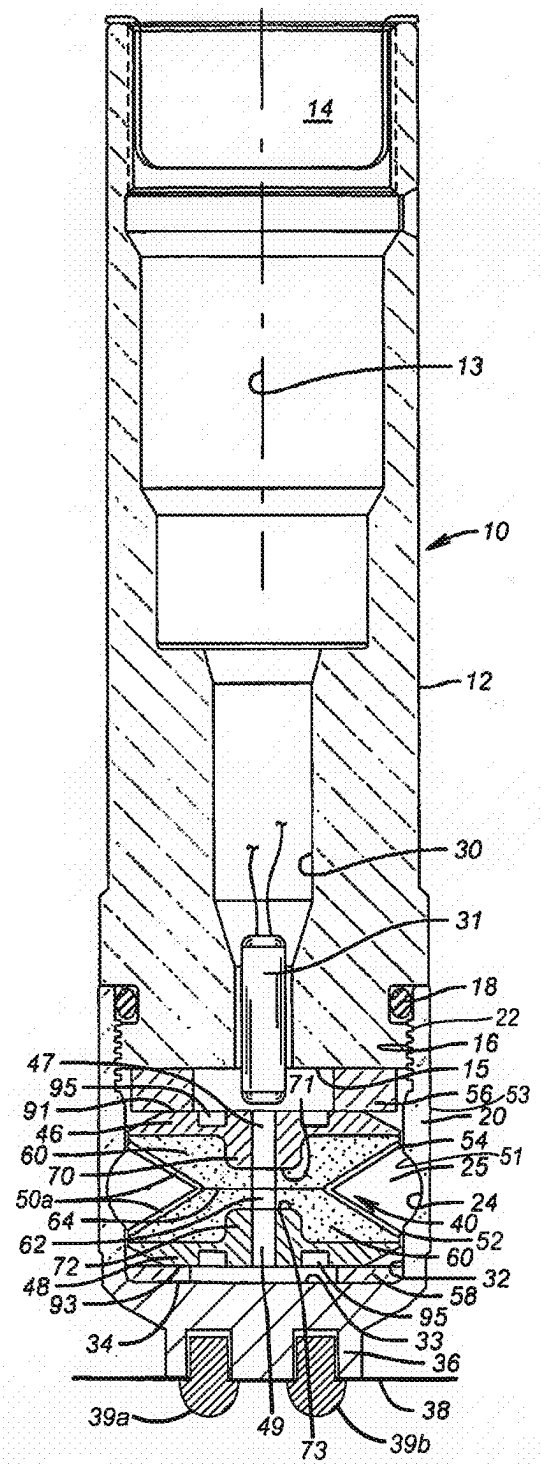
14
13
10
12
30
31
18
22
16
15
56
53
20
54
51
25
24
40
52
60
32
58
95
33
36
38
39b
73
49
39a
34
93
48
72
62
64
50a
70
60
46
91
95
47
71

FIG. 24

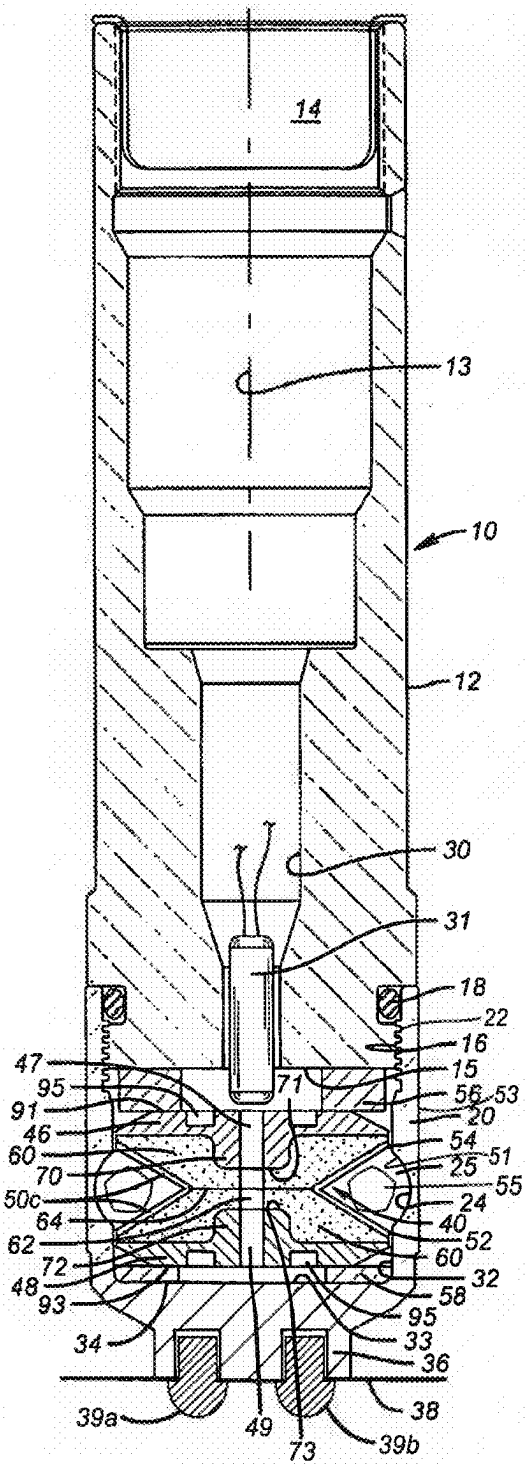
14
13
10
12
30
31
18
22
16
15
56
53
20
54
51
25
55
24
40
52
60
32
58
95
33
36
38
39b
73
49
39a
34
93
48
72
62
64
50c
70
60
46
91
95
47
71

FIG. 25

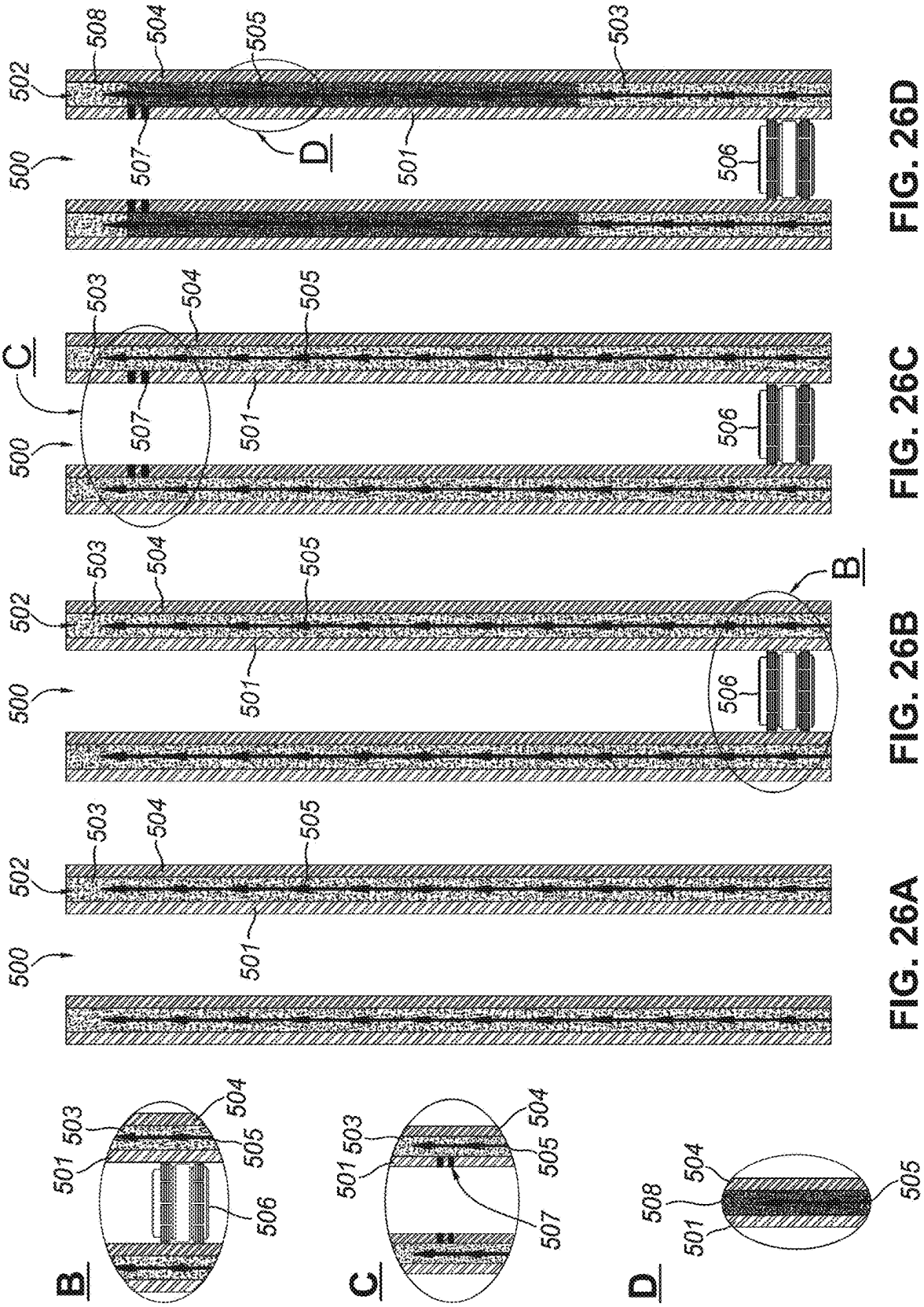

FIG. 26A

FIG. 26B

FIG. 26C

FIG. 26D

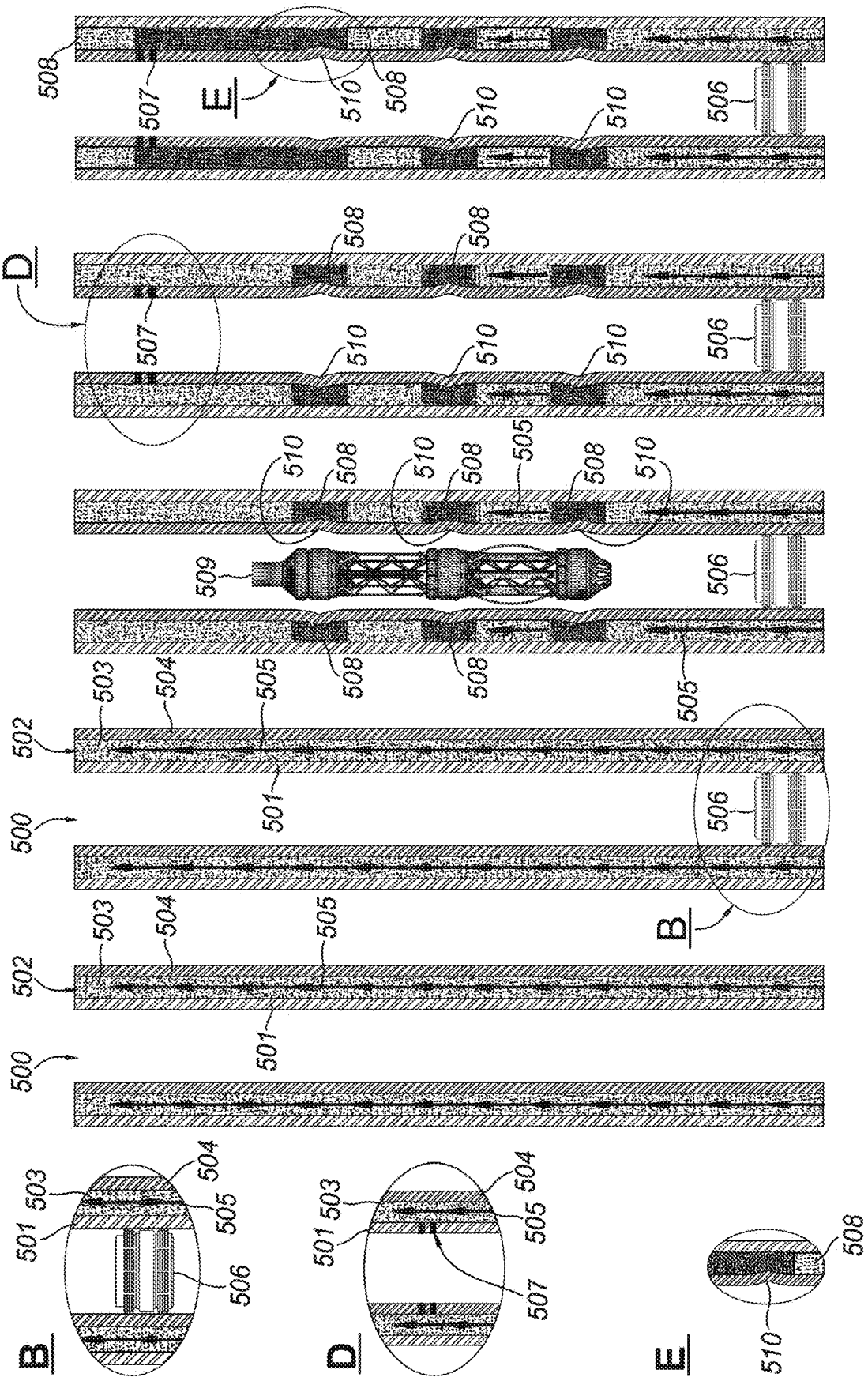

FIG. 27A FIG. 27B FIG. 27C FIG. 27D FIG. 27E

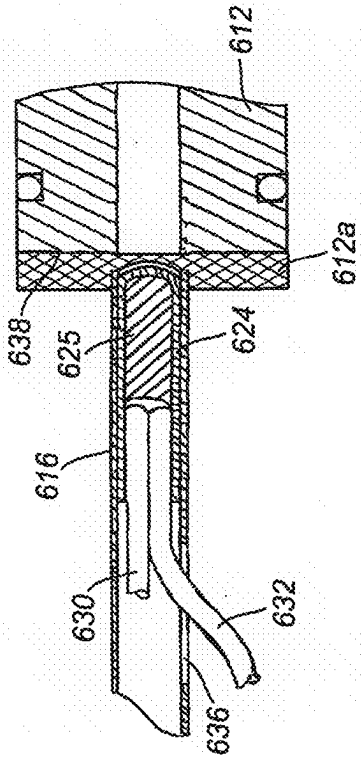

DETAIL A
FIG. 29

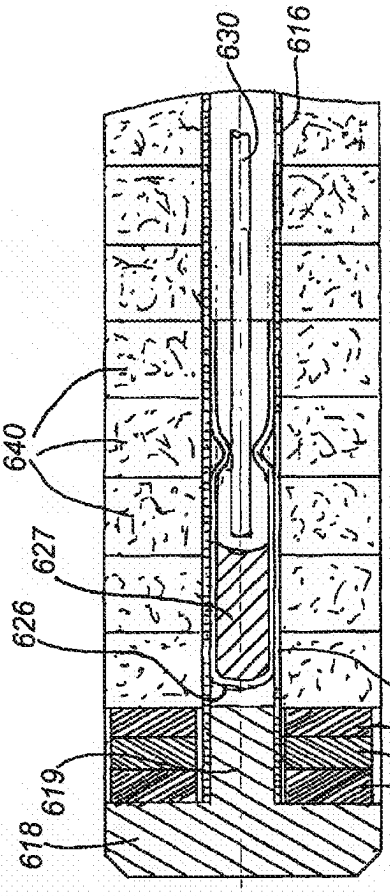

DETAIL B
FIG. 30

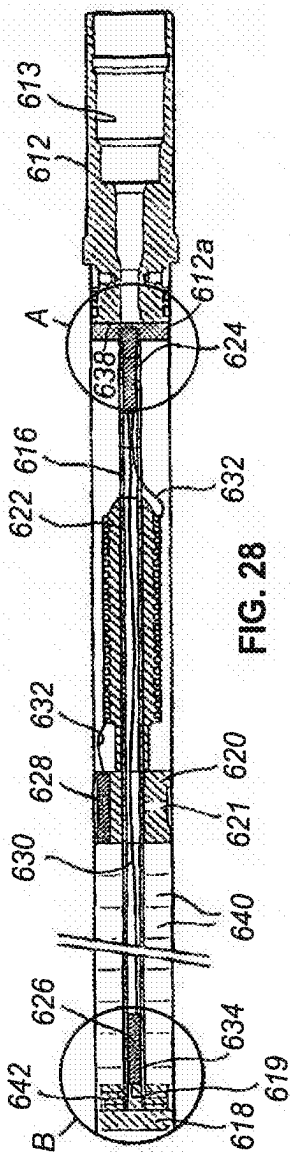

FIG. 28

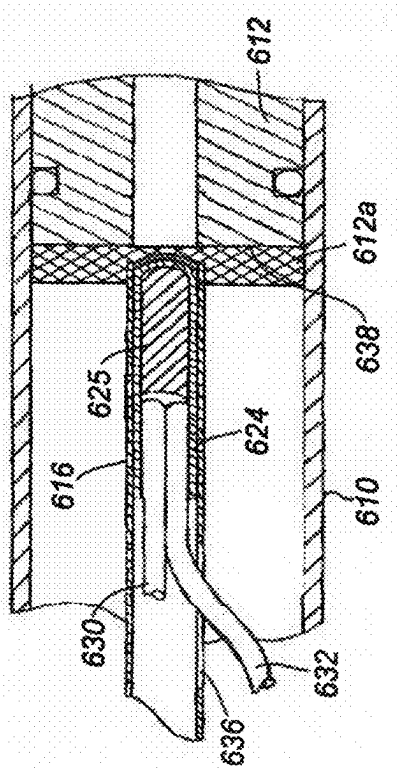

DETAIL A
FIG. 32

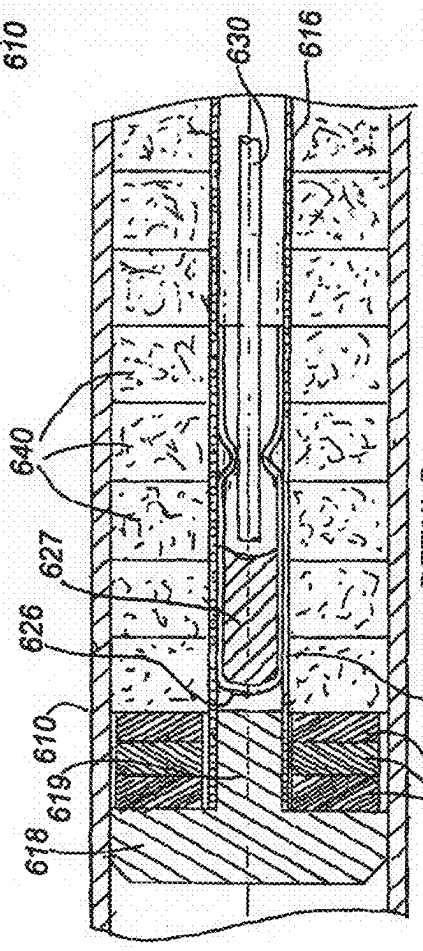

DETAIL B
FIG. 33

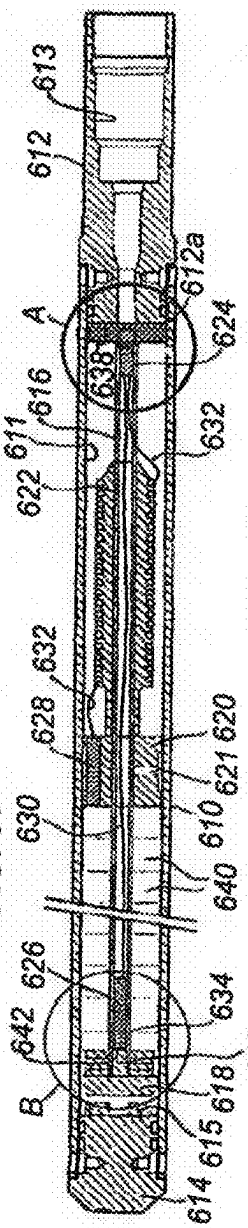

FIG. 31

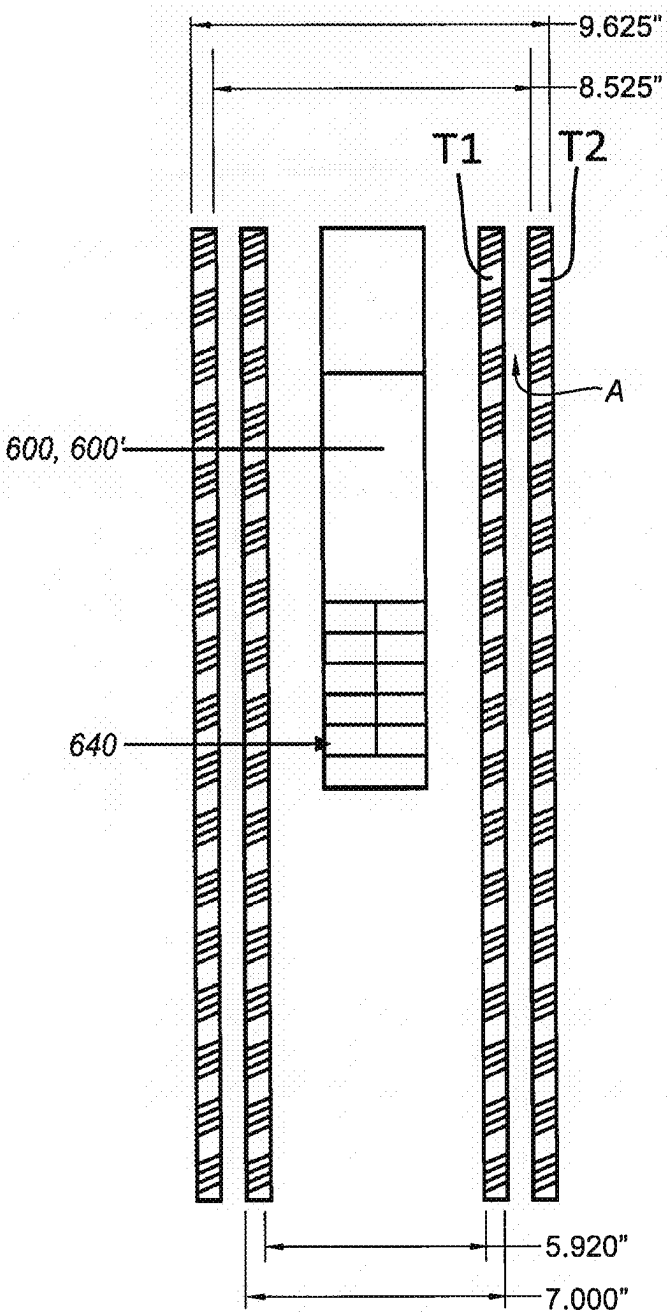

FIG. 34A

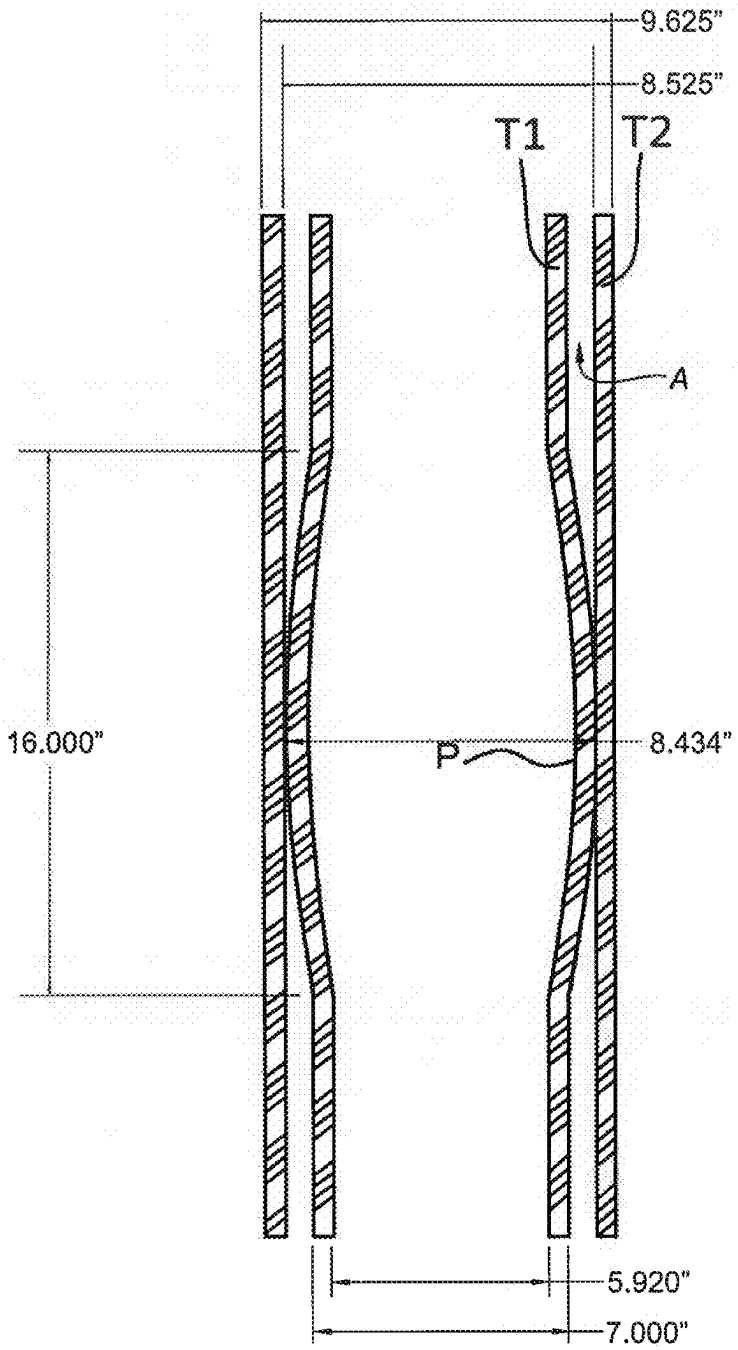

FIG. 34B

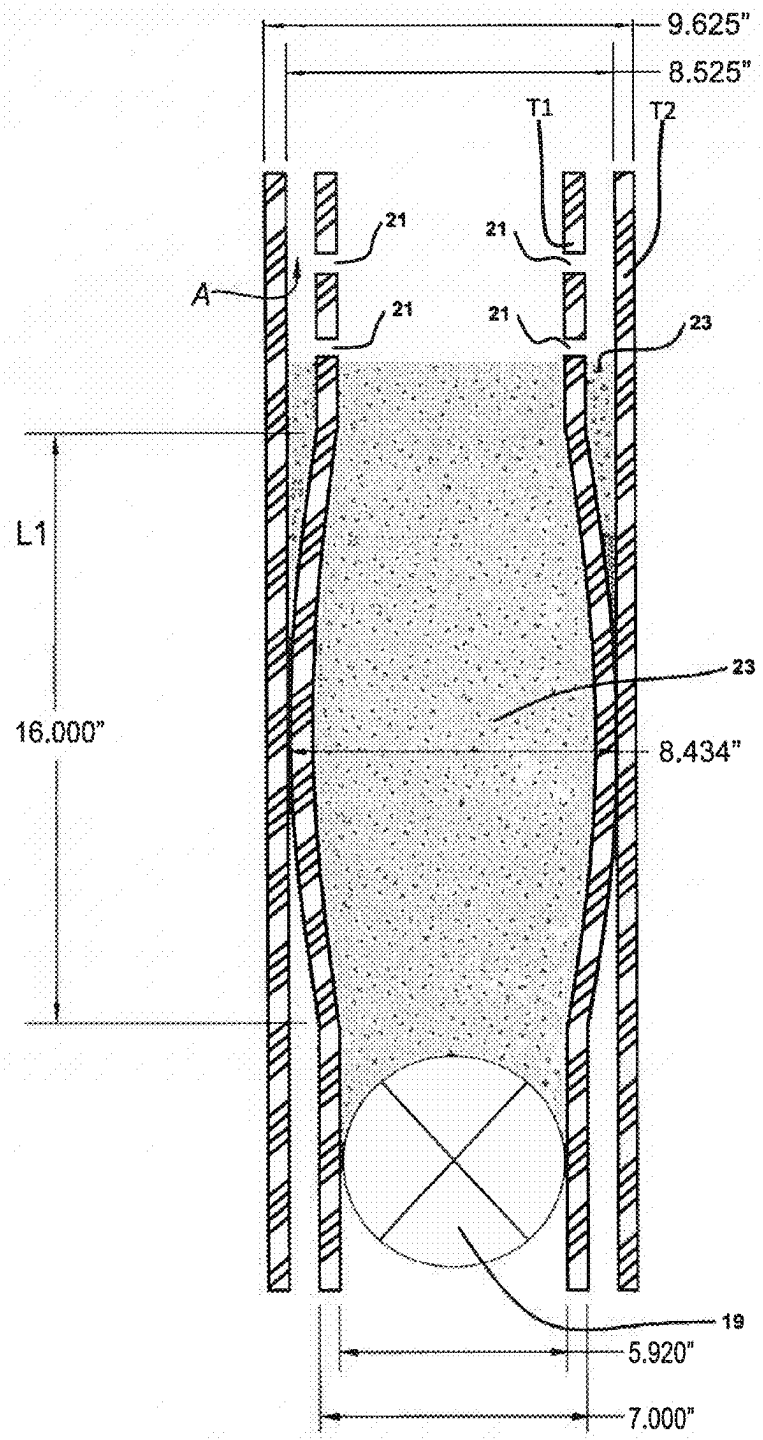

FIG. 34C

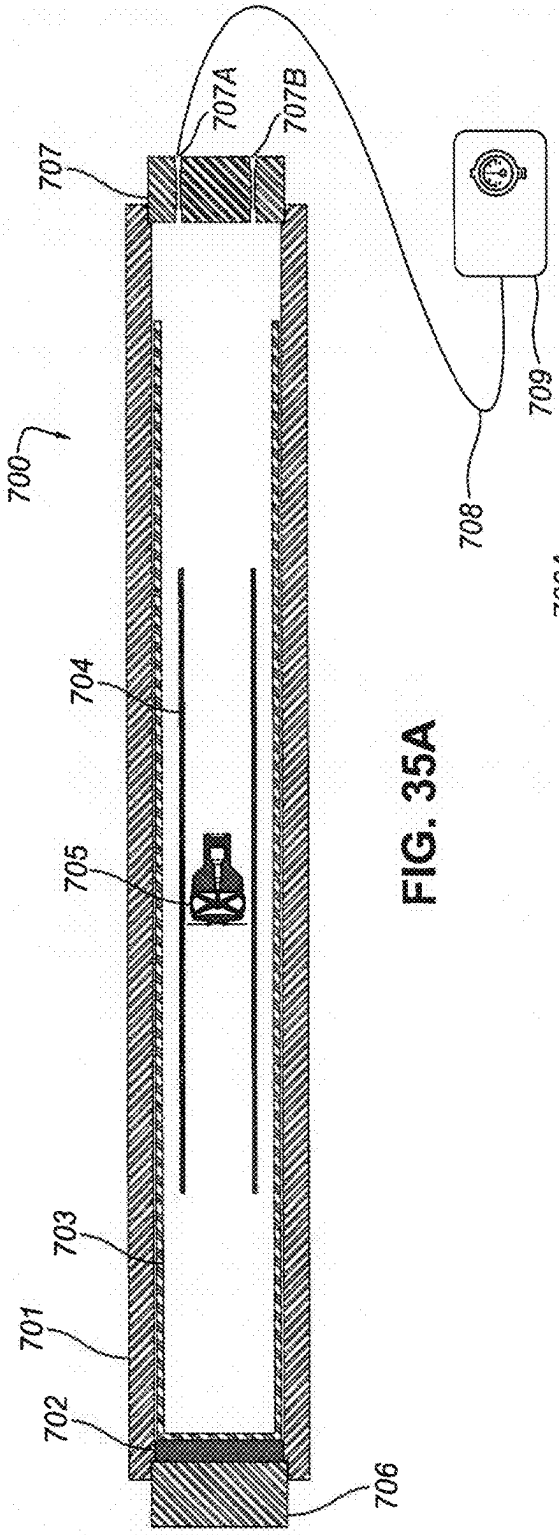

FIG. 35A

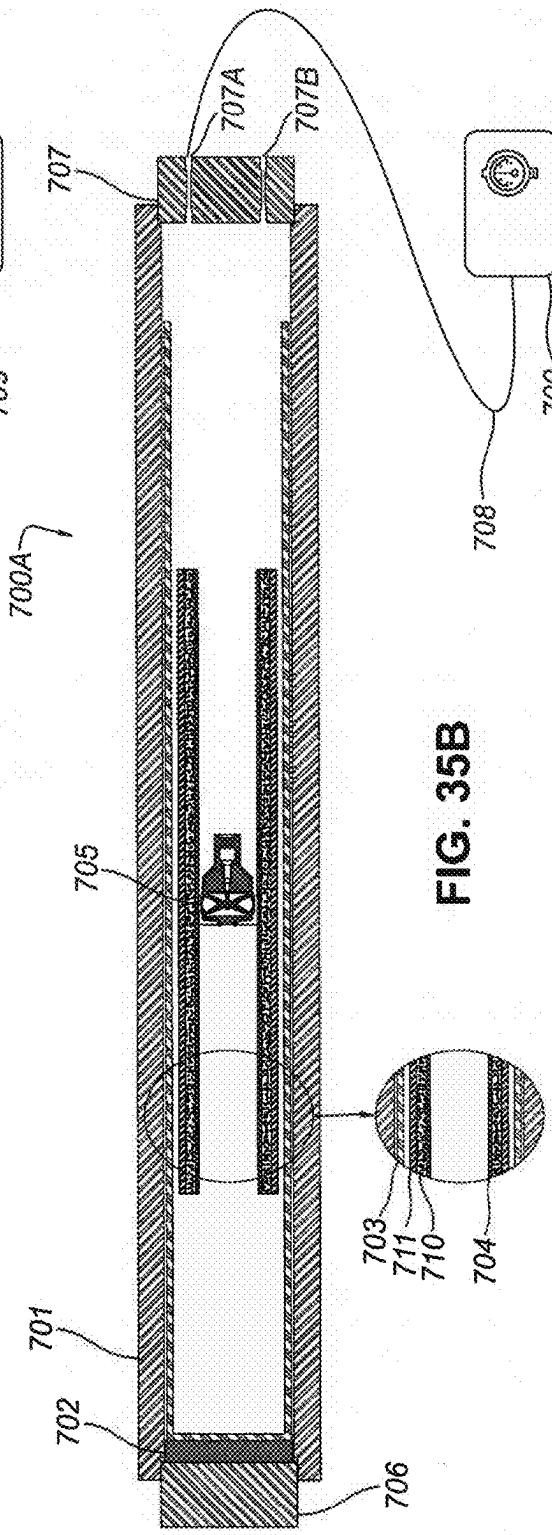

FIG. 35B

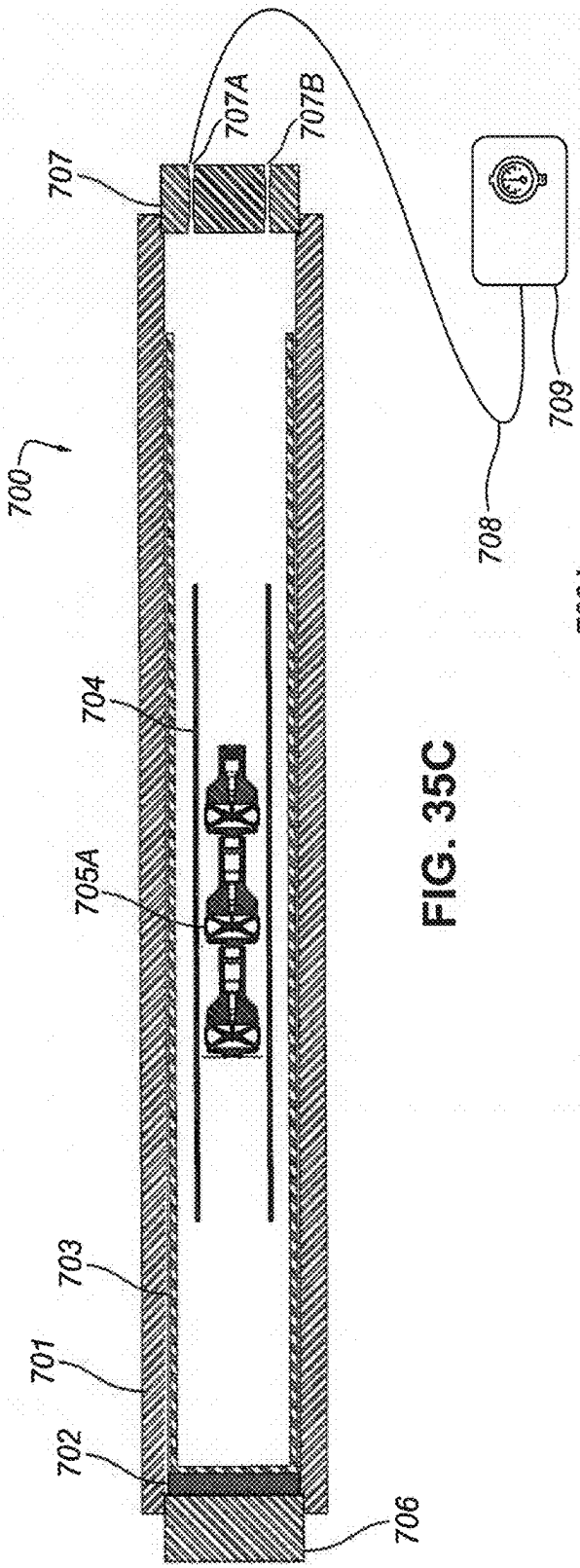

FIG. 35C

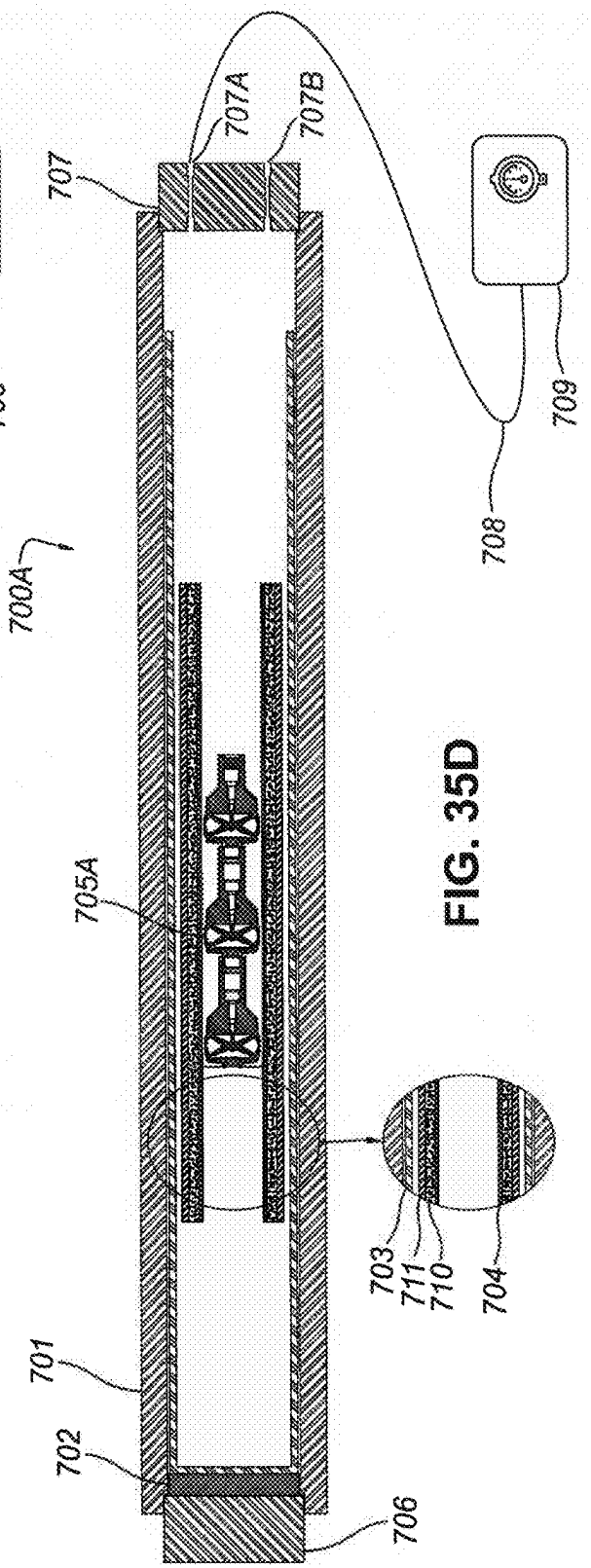

FIG. 35D

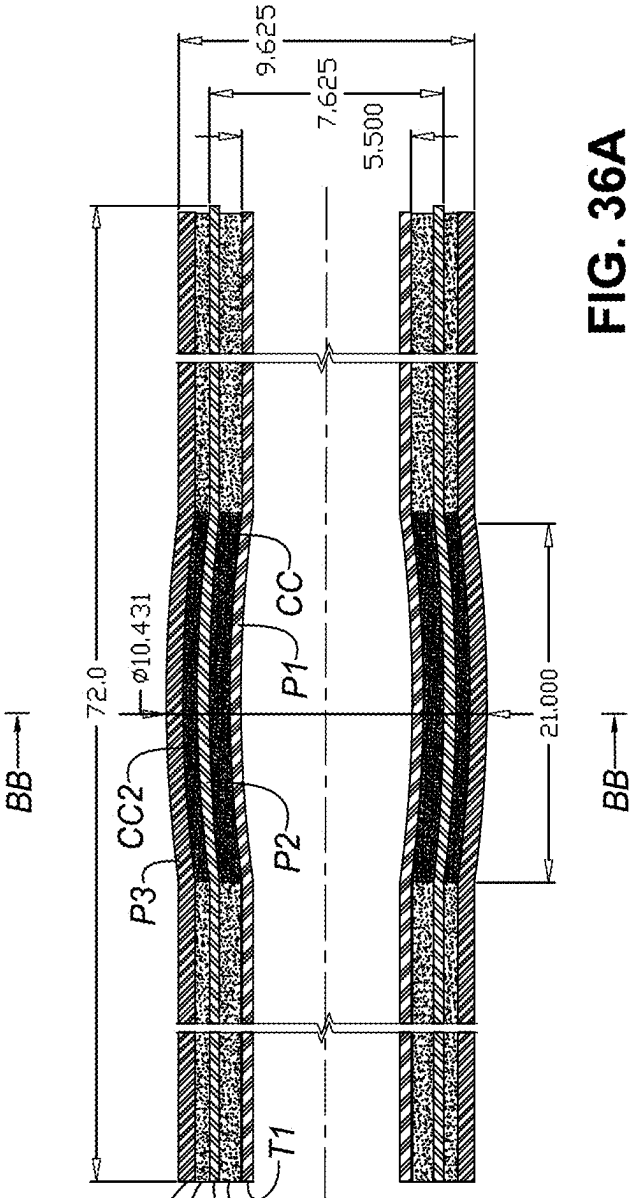

FIG. 36A

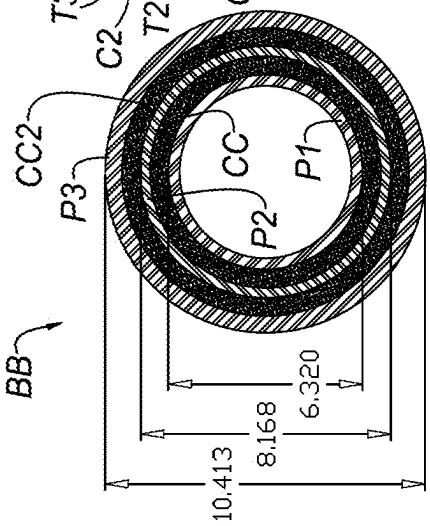

FIG. 36B

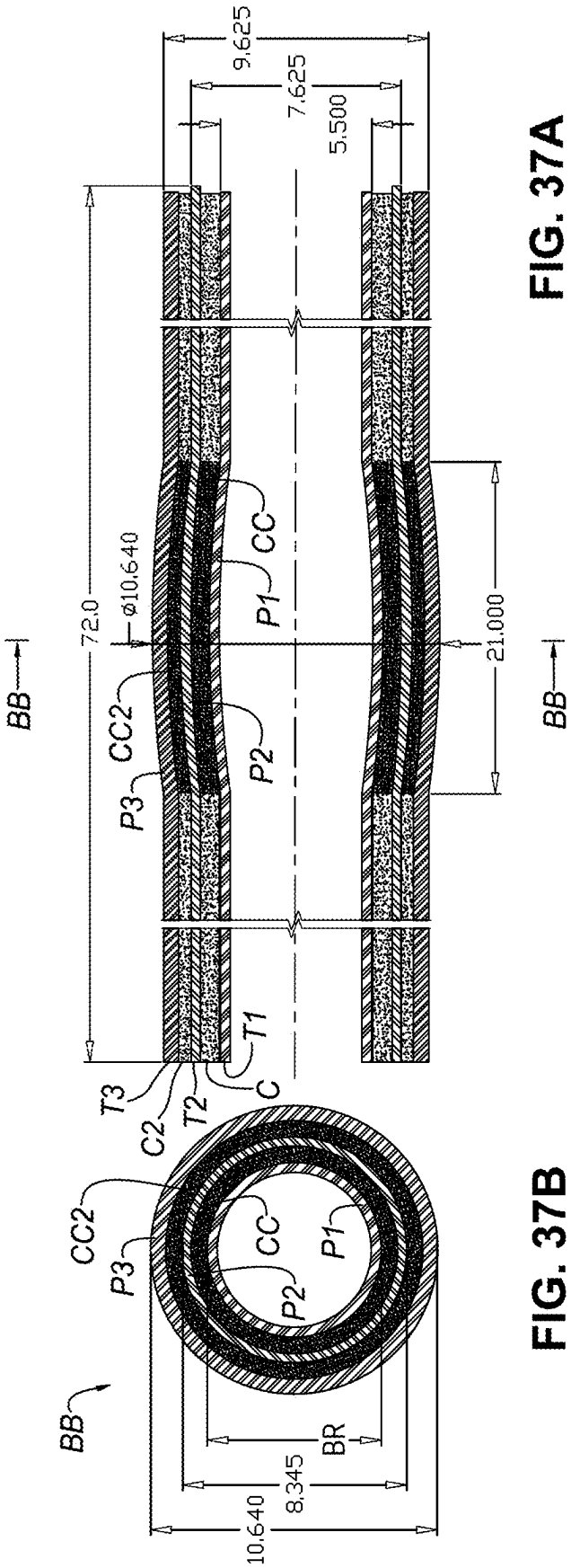

FIG. 37A

FIG. 37B

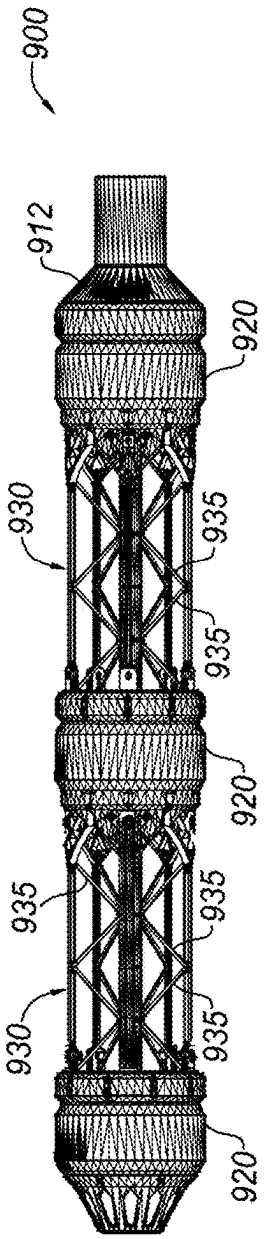

FIG. 38

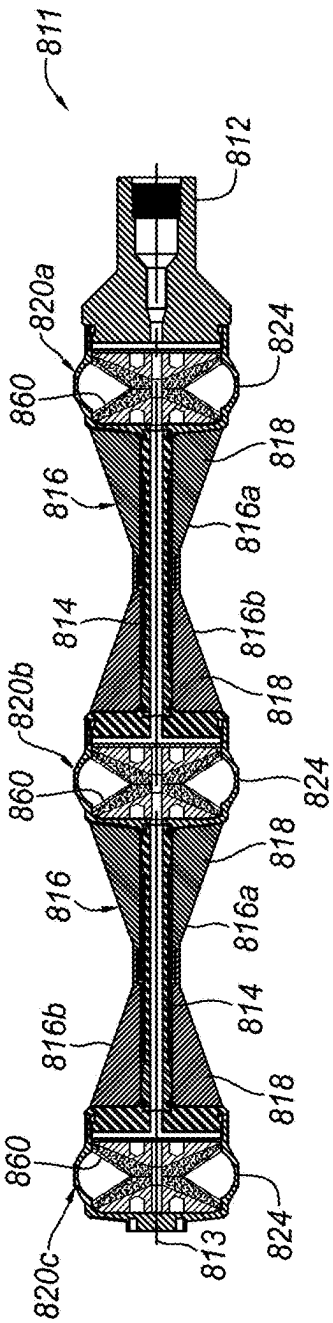

FIG. 39A

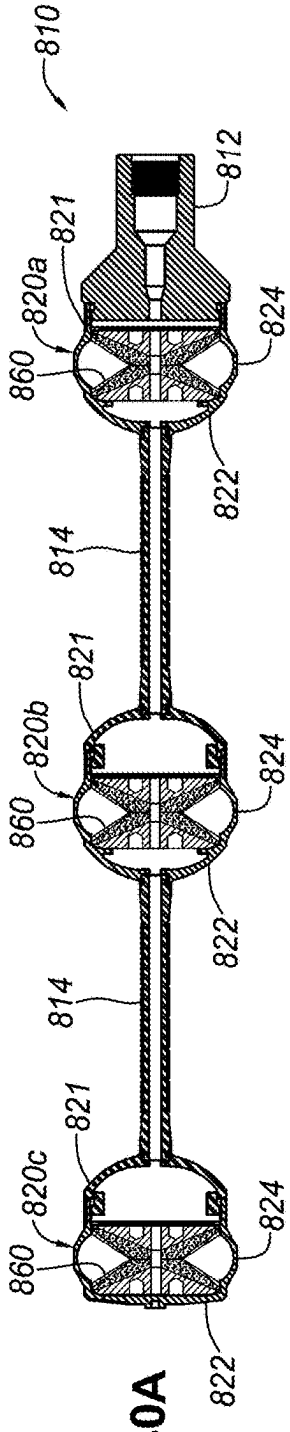

FIG. 40A

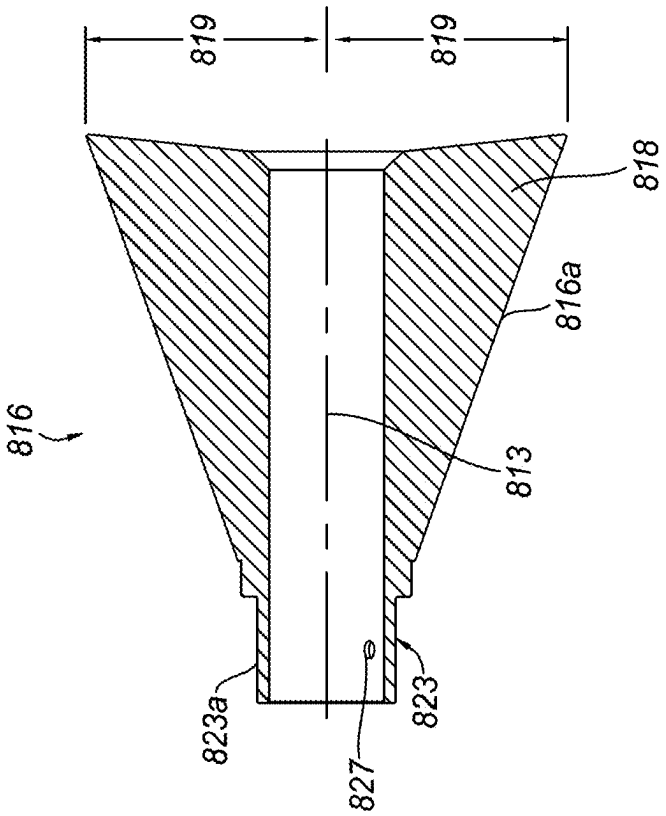

FIG. 39B

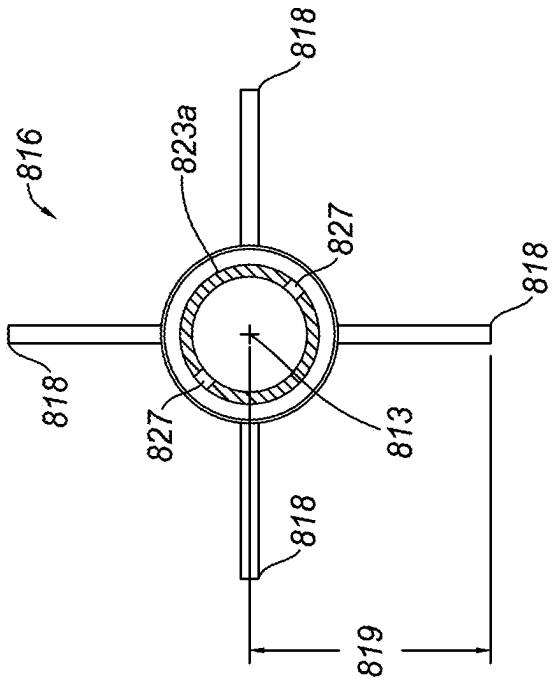

FIG. 39C

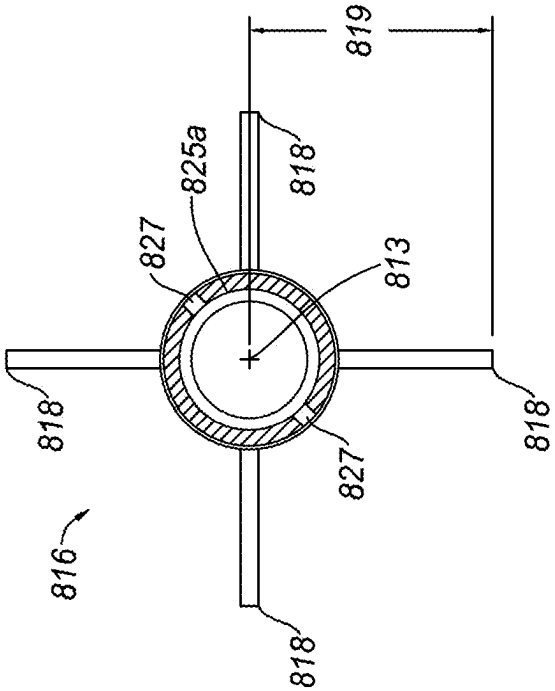

FIG. 39E

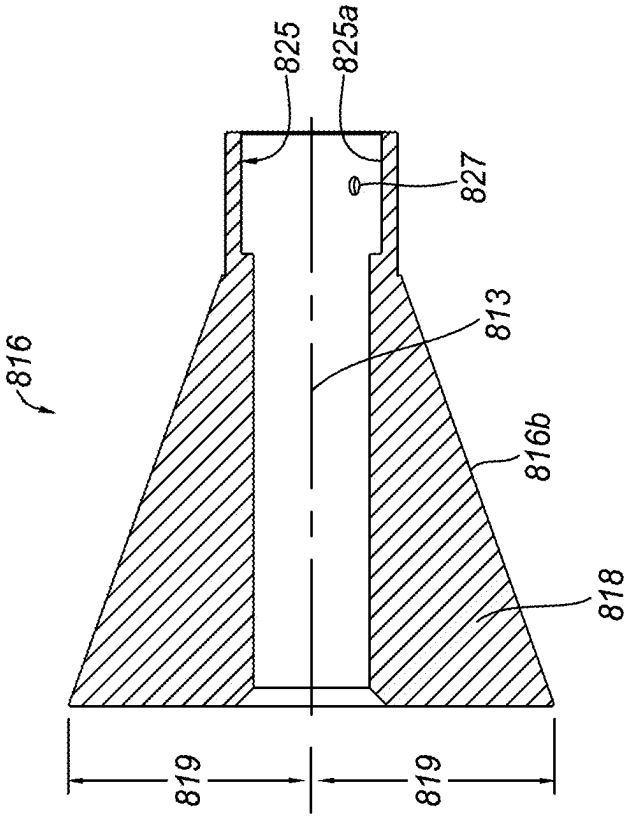

FIG. 39D

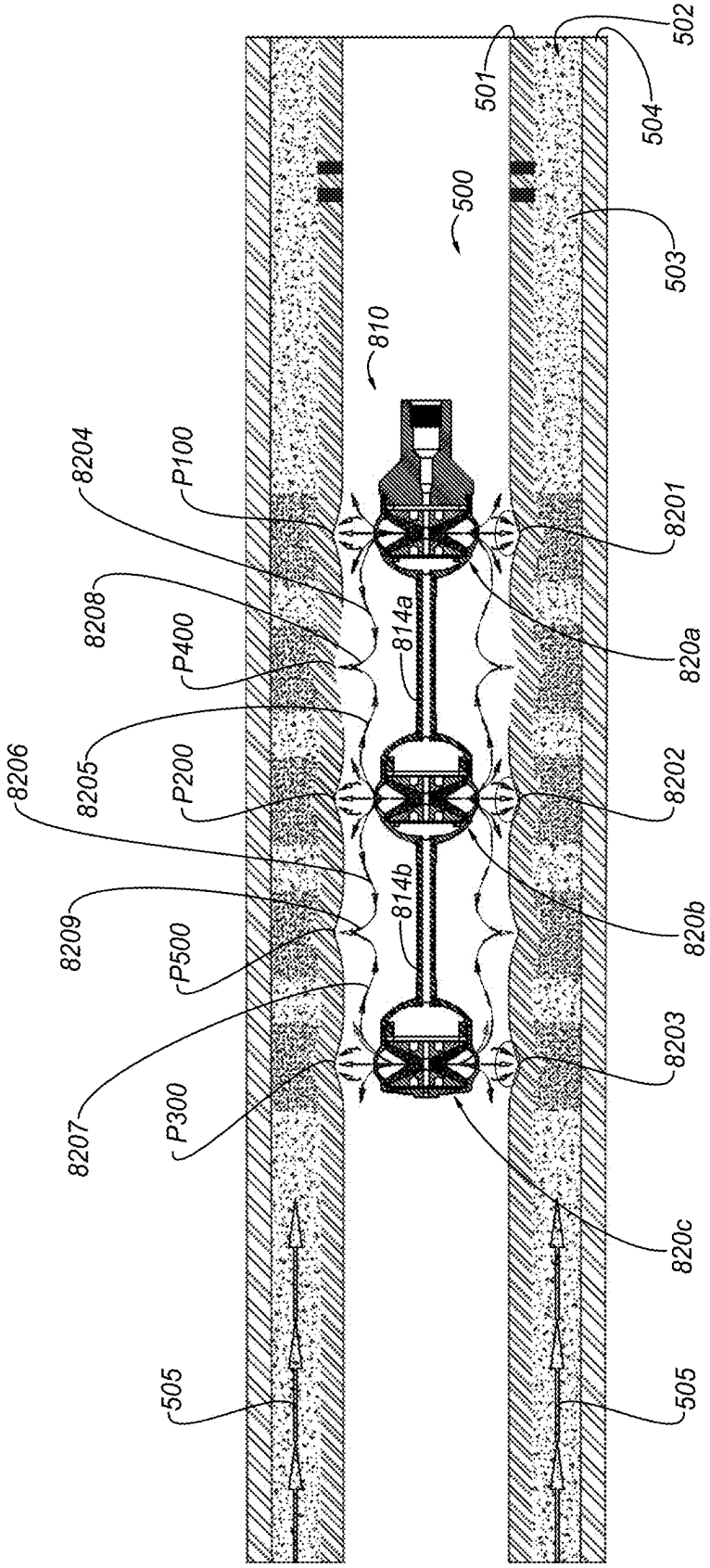
502
501
504
500
503
810
8204
P100
8201
8208
814a
P400
820a
8205
8206
P200
8202
814b
8209
P500
820b
8203
8207
P300
820c
505
505

FIG. 40B

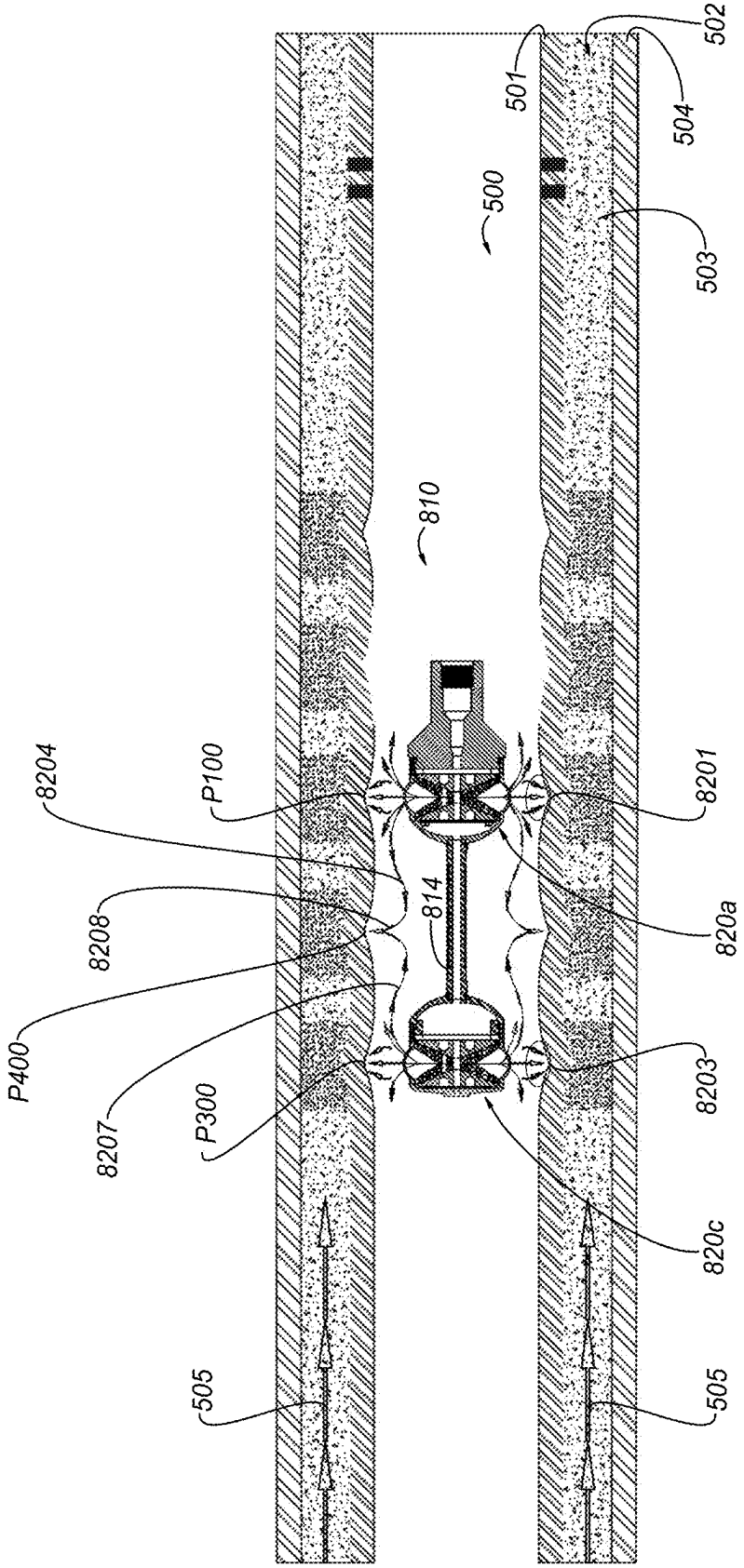
502
501
504
500
503
810
8204
P100
8201
8208
814
820a
P400
8207
P300
8203
820c
505
505

FIG. 40C

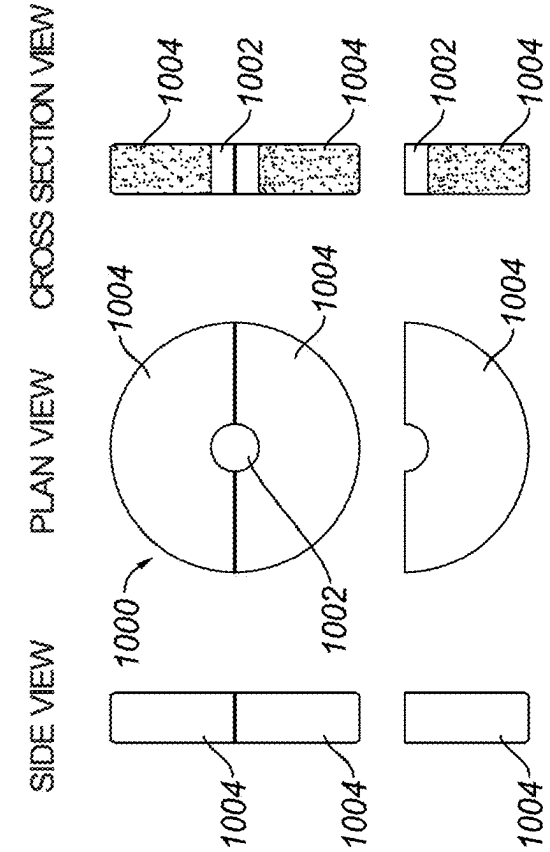

FIG. 41B

FIG. 41C

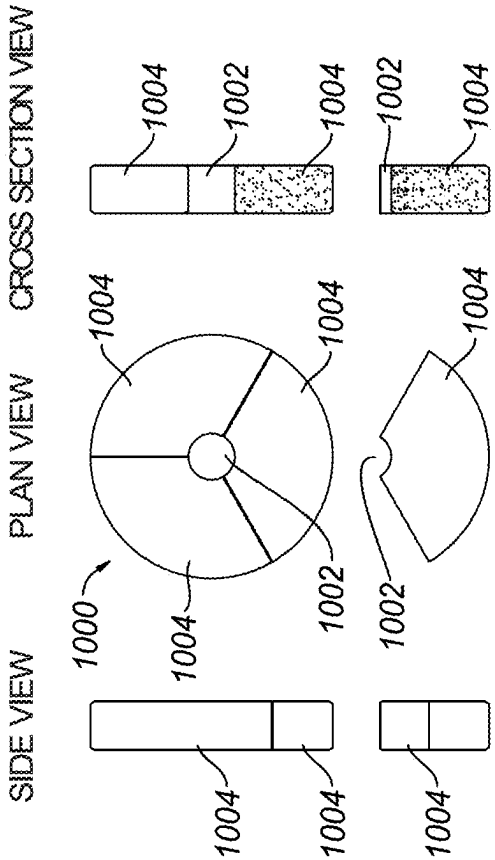

FIG. 41D

FIG. 41E

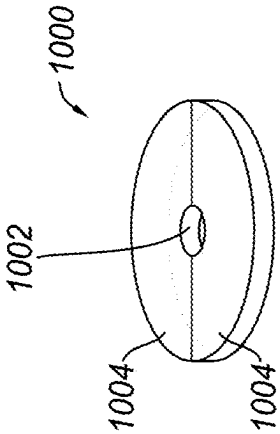

FIG. 41A

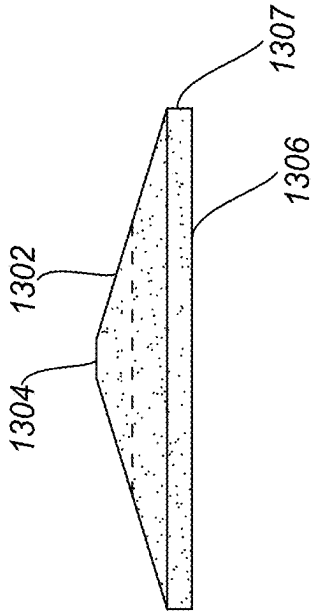

FIG. 42B

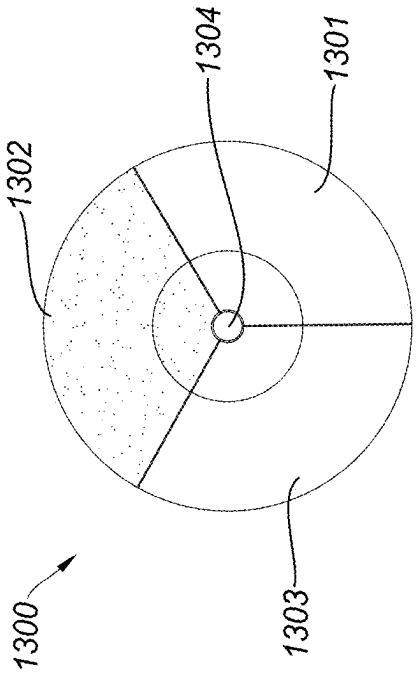

FIG. 42A

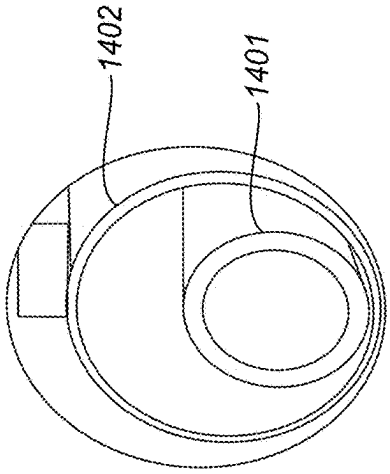

FIG. 42C

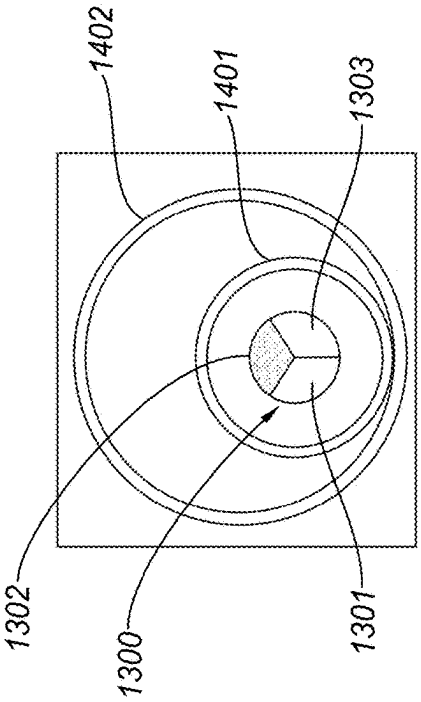

FIG. 42D

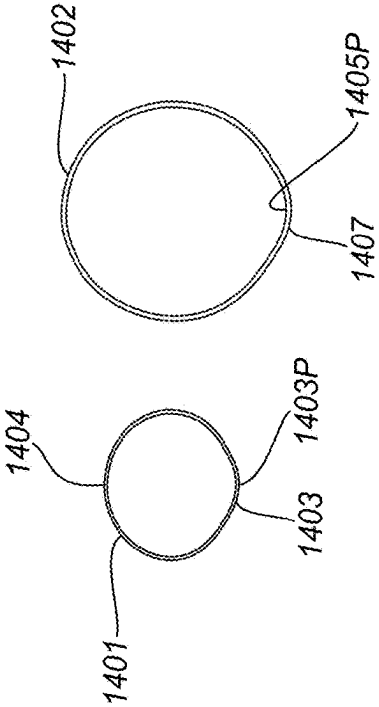

FIG. 42E

EXPLOSIVE DOWNHOLE TOOLS HAVING IMPROVED WELLBORE CONVEYANCE AND DEBRIS PROPERTIES, METHODS OF USING THE EXPLOSIVE DOWNHOLE TOOLS IN A WELLBORE, AND EXPLOSIVE UNITS FOR EXPLOSIVE COLUMN TOOLS

CROSS REFERENCE TO RELATED APPLICATIONS

The present application is a continuation-in-part of pending U.S. patent application Ser. No. 18/371,908, filed on Sep. 22, 2023; which is a divisional of U.S. patent application Ser. No. 17/512,899, filed on Oct. 28, 2021, now U.S. Pat. No. 11,781,393; which is a continuation-in-part of U.S. patent application Ser. No. 17/313,828, filed on May 6, 2021, now U.S. Pat. No. 11,536,104; which is a continuation-in-part of U.S. patent application Ser. No. 17/126,982, filed on Dec. 18, 2020, now U.S. Pat. No. 11,480,021; which is a continuation-in-part of U.S. patent application Ser. No. 16/970,602, filed on Aug. 17, 2020, now U.S. Pat. No. 11,002,097; which is a national phase of International Application PCT/2019/046920, filed on Aug. 16, 2019; which claims priority to U.S. Provisional Patent Application No. 62/764,858, having a title of "Shaped Charge Assembly, Explosive Units, and Methods for Selectively Expanding Wall of a Tubular," filed on Aug. 16, 2018. The contents of the prior applications are hereby incorporated by reference herein in their entirety.

FIELD

Embodiments of the present invention relate, generally, to explosive downhole tools having improved wellbore conveyance properties. In particular, the explosive downhole tools have a configuration that allows the tools to be more easily run in and out of a wellbore. The configuration may be useful when the wellbore geometry includes restrictions from, e.g., seats, tool joints, and other inner diameter restrictions, which form ledges on which sharp corners of the tool profile would otherwise catch or get stuck. Embodiments of the present invention also relate, generally, to explosive downhole tools having improved debris reducing properties. In particular, the explosive downhole tools may have a configuration and/or be formed of a material that minimizes or eliminates debris from the tool in the wellbore after the explosive downhole tool is actuated. The explosive downhole tools may be cutting tools for cutting or severing a tubular, or may be expansion tools for selectively expanding a wall of a tubular. Expansion tools, such as shaped charge tools, may be used for selectively expanding a wall of a tubular to compress micro annulus pores and reduce micro annulus leaks, collapse open channels in a cemented annulus adjacent the tubular, minimize other inconstancies or defects in the cemented annulus, and to form a restriction. The tubular may include, but is not limited to, pipe, tube, casing and/or casing liner. Embodiments of the present invention further relate, generally, to explosive units for explosive column downhole tools. The explosive units may be divided into sections having a predetermined mass that makes the sections safer to handle and comply with government transportation safety regulations.

BACKGROUND

It can be important in the oilfield industry for wellbore tools, such as explosive cutters and explosive expansion

tools, to be easily run in and sometimes out of a well, as doing so can save time and money during wellbore operations. Wellbores may have an inner geometry that includes restrictions from such elements as seats, tool joints, and/or other inner diameter restrictions. The restrictions may form ledges or internal diameters in the wellbore on which sharp corners of a conventional explosive downhole tool may catch or get stuck. Once stuck, attempts to free or retrieve the explosive downhole tool may damage the tool and render it inoperable. In addition, attempts to free or retrieve the explosive downhole tool may cause the tool to be separated from the conveyance device, (such as a wireline, coiled tubing, etc.), which then creates a large debris issue or unspent explosives in the wellbore and expensive fishing operations which may not always be successful. A need thus exists for an explosive downhole tool having a configuration that allows the tool to be more easily conveyed into and out of a wellbore.

It can be desirable in the oilfield industry to minimize the amount of debris, such as pieces of an actuated explosive device or downhole tool, left in a well. This is because the debris can not only restrict other tools from being subsequently run in the wellbore, but also flow and the circulation of fluids in the wellbore during the production of oil and gas. Debris can be a problem even when the well is to be plugged and abandoned, as it can be necessary to run another tool into the wellbore after the plug and abandonment and the debris could block or otherwise restrict the next tool from being run. The importance of reducing or even eliminating debris is amplified in producing wells where debris could not only restrict other tools being run but can also cause the production of oil and gas to be delayed or stopped. Therefore, a need exists for an explosive downhole tool having a configuration and/or being formed of a material that minimizes or eliminates debris from the tool in the wellbore after the explosive downhole tool is actuated.

Explosive column downhole tools can include a series of explosive units as the explosive material for cutting, severing or selectively expanding a wall of a tubular in a wellbore. A predetermined number of explosive units may be loaded onto explosive column downhole tools. The number, size and/or explosive volume (weight) of explosive units required to perform the cutting or expansion operation may depend on the physical properties of the tubular and the downhole conditions in the wellbore. The units may thus be transported separately from the assembled explosive column downhole tool and loaded onto the explosive column downhole tool at the wellsite. Government regulations may limit the size of explosive units that can be transported in a vehicle or stored. Accordingly, a need exists for providing relatively larger explosive units that can be transported in compliance with government regulations.

The embodiments of the present invention meet the above needs.

SUMMARY

An object of the present disclosure is to provide an explosive downhole tool having a configuration that allows the explosive downhole tool to be more easily conveyed into and out of a wellbore. The configuration helps the explosive downhole tool avoid catching or getting stuck on restrictions in a wellbore in form of ledges protruding from, e.g., seats, tool joints, and other inner diameter restrictions. Another object of the present disclosure is to provide explosive downhole tools, such as cutting tools for cutting or severing a tubular, or expansion tools for selectively expanding a wall

of a tubular, having a configuration and/or being formed of a material that minimizes or eliminates debris from the tool in the wellbore after the explosive downhole tool is actuated. A further object of the present disclosure is to provide explosive downhole tools, such as cutting tools for cutting or severing a tubular, or expansion tools for selectively expanding a wall of a tubular, having a configuration that generates several protrusions in the wall of a tubular, wherein the number of protrusions is greater than the number of explosives charges. Yet another object of the present disclosure is to provide an expansion charge formed of a first section of explosive material and a second section of inert material, wherein the second section of inert material reduces an amount of explosive energy transmitted in a radial direction away from the second section when the explosive material is ignited. Yet a further object of the present disclosure is to provide a method of moving a decentralized inner tubular radially away from a portion of an inner surface of an outer tubular that contains the inner tubular using the expansion charge containing inert material.

According to one embodiment, an explosive downhole tool for at least one of cutting and selectively expanding a wall of a tubular comprises: a first housing comprising a first explosive charge comprising a predetermined amount of explosive material for generating at least a first radial explosive wave front that: (i) cuts the wall of the tubular; or (ii) expands, without puncturing, the wall of the tubular into a first protrusion extending outward into an annulus adjacent the wall of the tubular; a second housing spaced axially from the first housing along a length of the explosive downhole tool, the second housing comprising a second explosive charge comprising a predetermined amount of explosive material for generating at least a second radial explosive wave front that: (i) cuts the wall of the tubular; or (ii) expands, without puncturing, the wall of the tubular into a second protrusion extending outward into the annulus adjacent the wall of the tubular; and an intermediate connector axially connecting the first housing to the second housing, wherein the explosive material of the first explosive charge further generates a first axial explosive wave front that travels axially from the first housing, the explosive material of the second explosive charge further generates a second axial explosive wave front that travels axially from the second housing toward the first axial explosive wave front to collide with the first axial explosive wave front, and a collision of the first axial explosive wave front with the second axial explosive wave front generates a third radial explosive wave front that: (i) cuts the wall of the tubular; or (ii) expands, without puncturing, the wall of the tubular into a third protrusion between the first protrusion and the second protrusion, the third protrusion extending outward into the annulus adjacent the wall of the tubular. In this embodiment, each of the first housing and the second housing comprises: a window section, an upper housing part on one side of the window section, and a lower housing part on an opposite side of the window section, wherein each of the upper housing part and the lower housing part comprises an outer surface that faces away from the housing, and a majority of the outer surface of at least one of the upper housing part and the lower housing part in cross-section is rounded so as to be devoid of corners.

In an embodiment, at least one of the first explosive charge and the second explosive charge is a shaped charge.

In an embodiment, at least one of the first housing and the second housing is formed of a dissolvable material.

In an embodiment, the dissolvable material comprises a magnesium alloy.

In an embodiment, the intermediate connector is formed of a dissolvable material.

In an embodiment, a method of cutting or selectively expanding a wall of a tubular via the explosive downhole tool comprises: positioning the explosive downhole tool within the tubular; and actuating the explosive downhole tool to simultaneously ignite the first explosive charge and the second explosive charge.

In an embodiment, a method of cutting or selectively expanding a wall of a tubular via the explosive downhole tool comprises: positioning the explosive downhole tool within the tubular; and actuating the explosive downhole tool to sequentially ignite the first explosive charge and the second explosive charge.

According to another embodiment, an explosive downhole tool for at least one of cutting and selectively expanding a wall of a tubular, comprises: a first housing comprising a first explosive charge comprising a predetermined amount of explosive material for generating at least a first radial explosive wave front that: (i) cuts the wall of the tubular; or (ii) expands, without puncturing, the wall of the tubular into a first protrusion extending outward into an annulus adjacent the wall of the tubular; a second housing spaced axially from the first housing along a length of the explosive downhole tool, the second housing comprising a second explosive charge comprising a predetermined amount of explosive material for generating at least a second radial explosive wave front that: (i) cuts the wall of the tubular; or (ii) expands, without puncturing, the wall of the tubular into a second protrusion extending outward into the annulus adjacent the wall of the tubular; and a third housing spaced axially from the second housing along the length of the explosive downhole tool, the third housing comprising a third explosive charge comprising a predetermined amount of explosive material for generating at least a third radial explosive wave front that: (i) cuts the wall of the tubular; or (ii) expands, without puncturing, the wall of the tubular into a third protrusion extending outward into the annulus adjacent the wall of the tubular. The explosive tool further includes: a first intermediate connector axially connecting the first housing to the second housing, and a second intermediate connector axially connecting the second housing to the third housing. The explosive material of the first explosive charge further generates a first axial explosive wave front that travels axially from the first housing, and the explosive material of the second explosive charge further generates a second axial explosive wave front that travels axially from the second housing in a first direction toward the first axial explosive wave front to collide with the first axial explosive wave front, and further generates a third axial explosive wave front that travels axially from the second housing in a direction opposite the first direction. The explosive material of the third explosive charge further generates a fourth axial explosive wave front that travels axially from the third housing toward the third axial explosive wave front to collide with the third axial explosive wave front, and a collision of the first axial explosive wave front with the second axial explosive wave front generates a fourth radial explosive wave front that: (i) cuts the wall of the tubular; or (ii) expands, without puncturing, the wall of the tubular into a fourth protrusion between the first protrusion and the second protrusion, wherein the fourth protrusion extends outward into the annulus adjacent the wall of the tubular, and a collision of the third axial explosive wave front with the fourth axial explosive wave front generates a fifth radial explosive wave front that: (i) cuts the wall of the tubular; or (ii) expands, without puncturing, the wall of the

tubular into a fifth protrusion between the second protrusion and the third protrusion, wherein the fifth protrusion extends outward into the annulus adjacent the wall of the tubular. The explosive downhole tool further comprises a first housing, a second housing and a third housing, wherein each of the first, second and third housings comprises: a window section, an upper housing part on one side of the window section, and a lower housing part on an opposite side of the window section, wherein each of the upper housing part and the lower housing part comprises an outer surface that faces away from the housing, and a majority of the outer surface of at least one of the upper housing part and the lower housing part in cross-section is rounded so as to be devoid of corners.

In an embodiment, at least one of the first explosive charge, the second explosive charge and the third explosive charge is a shaped charge.

In an embodiment, at least one of the first housing, the second housing and the third housing is formed of a dissolvable material.

In an embodiment, the dissolvable material comprises a magnesium alloy.

In an embodiment, least one of the first intermediate connector and the second intermediate connector is formed of a dissolvable material.

In an embodiment, a method of cutting or selectively expanding a wall of a tubular via the explosive downhole tool comprises: positioning the explosive downhole tool within the tubular; and actuating the explosive downhole tool to simultaneously ignite the first explosive charge, the second explosive charge and third explosive charge.

In an embodiment, a method of cutting or selectively expanding a wall of a tubular via the explosive downhole tool comprises: positioning the explosive downhole tool within the tubular; and actuating the explosive downhole tool to sequentially ignite the first explosive charge, the second explosive charge and third explosive charge.

According to another embodiment, an expansion charge for an explosive downhole tool comprises: a first section of explosive material provided around a portion of the expansion charge; and a second section of inert material provided around a remainder of the expansion charge, wherein the second section of inert material reduces an amount of explosive energy transmitted in a radial direction away from the second section when the explosive material is ignited as compared to an amount of explosive energy in a direction radially away from the first section of explosive material.

In an embodiment, the first section of explosive material constitutes two-thirds of the expansion charge, and the second section of inert material constitutes one-third of the expansion charge.

In an embodiment, the expansion charge has a circular shape in plan view.

In an embodiment, an explosive downhole tool comprises the expansion.

According to another embodiment, a method of moving a decentralized inner tubular radially away from a portion of an inner surface of an outer tubular that contains the decentralized inner tubular comprises: positioning explosive downhole tool comprising at least one expansion charge into the decentralized inner tubular; actuating the explosive downhole tool to ignite the explosive charge to expand, without puncturing, a first portion wall of the decentralized inner tubular into a protrusion that contacts the portion of the inner surface of the outer tubular, wherein a second portion of the wall of the decentralized inner tubular that is opposite the first portion is not punctured by the actuating of the explosive downhole tool, and contact of the protrusion with the portion of the inner surface of the outer tubular causes the decentralized inner tubular to move radially away from the portion of the inner surface of the outer tubular.

In an embodiment, actuating the explosive downhole tool to ignite the explosive charge does not form a protrusion in the second portion of the wall of the inner tubular.

In an embodiment, the at least one expansion charge comprises: a first section of explosive material provided around a portion of the expansion charge; and a second section of inert material provided around a remainder of the expansion charge, wherein the second section of inert material reduces an amount of explosive energy transmitted in a radial direction away from the second section when the explosive material is ignited as compared to an amount of explosive energy in a direction radially away from the first section of explosive material.

In an embodiment, the explosive downhole tool is positioned in the inner tubular so that the first section of explosive material faces the first portion of the wall of the inner tubular that forms the protrusion, and the second section of inert material faces the second portion of the wall of the inner tubular.

BRIEF DESCRIPTION OF THE DRAWINGS

Various embodiments are hereafter described in detail and with reference to the drawings wherein like reference characters designate like or similar elements throughout the several figures and views that collectively comprise the drawings.

FIG. **1** is a cross-section of an embodiment of a tool, including a shaped charge assembly, for selectively expanding at least a portion of a wall of a tubular.

FIG. **2**A to FIG. **2**F illustrate methods of selectively expanding at least a portion of the wall of a tubular using the tool.

FIG. **2**G to FIG. **2**I illustrate embodiments of a tool that may be used in some of the methods illustrated in FIG. **2**A to FIG. **2**F.

FIGS. **2**J to **2**L illustrate methods of selectively expanding at least a portion of the wall of a tubular surround by formation.

FIGS. **2**M and **2**N illustrate a method of selectively expanding the walls of two nested tubulars.

FIGS. **2**O and **2**P illustrate a method of selectively expanding the walls of three nested tubulars.

FIG. **3**A and FIG. **3**B illustrate graphs showing swell profiles resulting from tests of a pipe and an outer housing.

FIG. **4** is a cross-section of an embodiment of the tool, including a shaped charge assembly.

FIG. **5** is a cross-section of an embodiment of the tool, including a shaped charge assembly.

FIG. **6** is a cross-section of an embodiment of the tool, including a shaped charge assembly.

FIG. **7** is a plan view of an embodiment of an end plate showing marker pocket borings.

FIG. **8** is a cross-section view of an embodiment of an end plate along plane **8-8** of FIG. **7**.

FIG. **9** is a bottom plan view of an embodiment of a top sub after detonation of the explosive material.

FIG. **10** illustrates an embodiment of a set of explosive units.

FIG. **11** illustrates a perspective view of explosive units in the set.

FIG. **12** shows a planform view of an explosive unit in the set.

FIG. **13** shows a planform view of an alternative embodiment of an explosive unit in the set.

FIGS. **14-17** illustrate another embodiment of an explosive unit that may be included in a set of several similar units.

FIG. **18** illustrates an embodiment of a centralizer assembly.

FIG. **19** illustrates an alternative embodiment of a centralizer assembly.

FIG. **20** illustrates another embodiment of a centralizer assembly.

FIGS. **21** and **22** illustrate a further embodiment of a centralizer assembly.

FIG. **23** is a cross-section of another embodiment of a tool, including a shaped charge assembly, for selectively expanding at least a portion of a wall of a tubular.

FIG. **24** is a cross-section of further embodiment of a tool, including a shaped charge assembly, for selectively expanding at least a portion of a wall of a tubular.

FIG. **25** is a cross-section of further embodiment of a tool, including a shaped charge assembly, for selectively expanding at least a portion of a wall of a tubular.

FIGS. **26**A-**26**D illustrate a method of reducing an annulus leak in a wellbore, according to an embodiment.

FIGS. **27**A-**27**E illustrate another method of reducing an annulus leak in a wellbore, according to an embodiment.

FIG. **28** is a cross-section of an embodiment of a dual firing end explosive column tool, as assembled for operation, for selectively expanding at least a portion of a wall of a tubular.

FIG. **29** is an enlargement of Detail A in FIG. **28**.

FIG. **30** is an enlargement of Detail B in FIG. **28**.

FIG. **31** is a cross-section of an embodiment of a dual end firing explosive column tool, as assembled for operation, for selectively expanding at least a portion of a wall of a tubular.

FIG. **32** is an enlargement of Detail A in FIG. **31**.

FIG. **33** is an enlargement of Detail B in FIG. **31**.

FIGS. **34**A to **34**C illustrate a method of selectively expanding at least a portion of the wall of a tubular using the dual end firing explosive column tool.

FIGS. **35**A-**35**D illustrate systems for pre-testing an expansion charge on a test tubular according to some embodiments.

FIGS. **36**A and **36**B illustrate the results of a pre-test on nested tubulars in an open tank according to an embodiment.

FIGS. **37**A and **37**B illustrate the results of another pre-test on the nested tubulars in an open tank according to an embodiment.

FIG. **38** illustrates an explosive downhole tool having a conventional design for attempting to minimize debris in a wellbore.

FIGS. **39**A to **39**E illustrate an embodiment of an explosive downhole tool having an improved design for minimizing debris and better conveyance of the explosive downhole tool in a wellbore.

FIG. **40**A illustrates another embodiment of an explosive downhole tool having an improved design for minimizing debris and better conveyance of the explosive downhole tool in a wellbore.

FIG. **40**B illustrates an embodiment of an explosive downhole tool implemented to produce several protrusions in the wall of a tubular.

FIG. **40**C illustrates another embodiment of an explosive downhole tool implemented to produce several protrusions in the wall of a tubular.

FIGS. **41**A to **41**E illustrate embodiments of an explosive unit for an explosive column downhole tool.

FIGS. **42**A and **42**B illustrate an embodiment of an explosive charge for an expansion tools.

FIGS. **42**C to **42**E illustrate an embodiment of the explosive charge in FIGS. **42**A and **42**B being implemented in an inner tubular that is decentralized within an outer tubular.

DETAILED DESCRIPTION OF THE INVENTION

Before explaining the disclosed embodiments in detail, it is to be understood that the present disclosure is not limited to the particular embodiments depicted or described, and that the invention can be practiced or carried out in various ways. The disclosure and description herein are illustrative and explanatory of one or more presently preferred embodiments and variations thereof, and it will be appreciated by those skilled in the art that various changes in the design, organization, means of operation, structures and location, methodology, and use of mechanical equivalents may be made without departing from the spirit of the invention.

As well, it should be understood that the drawings are intended to illustrate and plainly disclose presently preferred embodiments to one of skill in the art, but are not intended to be manufacturing level drawings or renditions of final products and may include simplified conceptual views to facilitate understanding or explanation. Further, the relative size and arrangement of the components may differ from that shown and still operate within the spirit of the invention.

Moreover, as used herein, the terms "up" and "down", "upper" and "lower", "upwardly" and downwardly", "upstream" and "downstream"; "above" and "below"; and other like terms indicating relative positions above or below a given point or element are used in this description to more clearly describe some embodiments discussed herein. However, when applied to equipment and methods for use in wells that are deviated or horizontal, such terms may refer to a left to right, right to left, or other relationship as appropriate. In the specification and appended claims, the terms "pipe", "tube", "tubular", "casing" and/or "other tubular goods" are to be interpreted and defined generically to mean any and all of such elements without limitation of industry usage. Because many varying and different embodiments may be made within the scope of the concept(s) herein taught, and because many modifications may be made in the embodiments described herein, it is to be understood that the details herein are to be interpreted as illustrative and non-limiting.

FIG. **1** shows a tool **10** for selectively expanding at least a portion of a wall of a tubular. The tool **10** comprises a top sub **12** having a threaded internal socket **14** that axially penetrates the "upper" end of the top sub **12**. The socket thread **14** provides a secure mechanism for attaching the tool **10** with an appropriate wire line or tubing suspension string (not shown). The tool **10** can have a substantially circular cross-section, and the outer configuration of the tool **10** can be substantially cylindrical. The "lower" end of the top sub **12**, as shown, can include a substantially flat end face **15**. As shown, the flat end face **15** perimeter of the top sub can be delineated by an assembly thread **16** and an O-ring seal **18**. The axial center **13** of the top sub **12** can be bored between the assembly socket thread **14** and the end face **15** to provide a socket **30** for an explosive detonator **31**. In some embodiments, the detonator may comprise a bi-directional booster with a detonation cord.

A housing **20** can be secured to the top sub **12** by, for example, an internally threaded housing sleeve **22**. The O-ring **18** can seal the interface from fluid invasion of the

interior housing volume. A window section **24** of the housing interior is an inside wall portion of the housing **20** that bounds a cavity **25** around the shaped charge between the outer or base perimeters **52** and **54**. In an embodiment, the upper and lower limits of the window **24** are coordinated with the shaped charge dimensions to place the window "sills" at the approximate mid-line between the inner and outer surfaces of the explosive material **60**. The housing **20** may be a frangible steel material of approximately 55-60 Rockwell "C" hardness.

As shown, below the window **24**, the housing **20** can be internally terminated by an integral end wall **32** having a substantially flat internal end-face **33**. The external end-face **34** of the end wall may be frusto-conical about a central end boss **36**. A hardened steel centralizer assembly **38** can be secured to the end boss by assembly bolts **39***a*, **39***b*, wherein each blade of the centralizer assembly **38** is secured with a respective one of the assembly bolts **39***a*, **39***b* (i.e., each blade has its own assembly bolt).

A shaped charge assembly **40** can be spaced between the top sub end face **15** and the internal end-face **33** of the housing **20** by a pair of resilient, electrically non-conductive, ring spacers **56** and **58**. In some embodiments, the ring spacers may comprise silicone sponge washers. An air space of at least 0.25 centimeters (0.1 inches) is preferred between the top sub end face **15** and the adjacent face of a thrust disc **46**. Similarly, a resilient, non-conductive lower ring spacer **58** (or silicone sponge washer) provides an air space that can be at least 0.25 centimeters (0.1 inches) between the internal end-face **33** and an adjacent assembly lower end plate **48**.

Loose explosive particles can be ignited by impact or friction in handling, bumping or dropping the assembly. Ignition that is capable of propagating a premature explosion may occur at contact points between a steel, shaped charge thrust disc **46** or end plate **48** and a steel housing **20**. To minimize such ignition opportunities, the thrust disc **46** and lower end plate **48** can be fabricated of non-sparking brass. In an embodiment, the thrust disc **46** and lower end plate **48** may be formed of zinc, or a zinc alloy material. For instance, the thrust disc **46** and lower end plate **48** may be formed of zinc powder or powder including zinc. Upon detonation of the explosive material **60**, the zinc is consumed by the resulting explosion such that there is very little, if any, debris left over from the thrust disc **46** and lower end plate **48**. As a result, there may be less debris in the well that could later obstruct the running of other tools in the well. For the same reasons, i.e., to minimize the amount of debris after detonation of the explosive material **60**, the housing **20** may also be formed of zinc, or a zinc alloy material.

The outer faces **91** and **93** of the end plates **46** (upper thrust disc or back up plates) and **48**, as respectively shown by FIG. **1**, can be blind bored with marker pockets **95** in a prescribed pattern, such as a circle with uniform arcuate spacing between adjacent pockets as illustrated by FIGS. **7** and **8**. The pockets **95** in the outer faces **91**, **93** are shallow surface cavities that are stopped short of a complete aperture through the end plates to form selectively weakened areas of the end plates. When the explosive material **60** detonates, the marker pocket walls are converted to jet material. The jet of fluidized end plate material scar the lower end face **15** of the top sub **12** with impression marks **99** in a pattern corresponding to the original pockets as shown by FIG. **9**. When the top sub **12** is retrieved after detonation, the uniformity and distribution of these impression marks **99** reveal the quality and uniformity of the detonation and hence, the quality of the explosion. For example, if the top sub face **15** is marked with only a half section of the end plate pocket pattern, it may be reliability concluded that only half of the explosive material **60** correctly detonated.

The explosive material **60** may be formed into explosive units **60**. The explosive units **60** traditionally used in the composition of shaped charge tools comprises a precisely measured quantity of powdered, high explosive material, such as RDX, HNS or HMX. The explosive material **60** may be formed into units **60** shaped as a truncated cone by placing the explosive material in a press mold fixture. A precisely measured quantity of powdered explosive material, such as RDX, HNS or HMX, is distributed within the internal cavity of the mold. Using a central core post as a guide mandrel through an axial aperture **47** in the upper thrust disc **46**, the thrust disc is placed over the explosive powder and the assembly subjected to a specified compression pressure. This pressed lamination comprises a half section of the shaped charge assembly **40**. The explosive units **60** may be symmetric about a longitudinal axis **13** extending through the units **60**.

The lower half section of the shaped charge assembly **40** can be formed in the same manner as described above, having a central aperture **62** of about 0.3 centimeters (0.13 inches) diameter in axial alignment with thrust disc aperture **47** and the end plate aperture **49**. A complete assembly comprises the contiguous union of the lower and upper half sections along the juncture plane **64**. Notably, the thrust disc **46** and end plate **48** are each fabricated around respective annular boss sections **70** and **72** that provide a protective material mass between the respective apertures **47** and **49** and the explosive material **60**. These bosses are terminated by distal end faces **71** and **73** within a critical initiation distance of about 0.13 centimeters (0.05 inches) to about 0.25 centimeters (0.1 inches) from the assembly juncture plane **64**. The critical initiation distance may be increased or decreased proportionally for other sizes. Hence, the explosive material **60** is insulated from an ignition wave issued by the detonator **31** until the wave arrives in the proximity of the juncture plane **64**.

The apertures **47**, **49** and **62** for the FIG. **1** embodiment remain open and free of boosters or other explosive materials. Although an original explosive initiation point for the shaped charge assembly **40** only occurs between the boss end faces **71** and **73**, the original detonation event is generated by the detonator **31** outside of the thrust disc aperture **47**. The detonation wave can be channeled along the empty thrust disc aperture **47** to the empty central aperture **62** in the explosive material. Typically, an explosive load quantity of 38.8 grams (1.4 ounces) of HMX compressed to a loading pressure of 20.7 Mpa (3,000 psi) may require a moderately large detonator **31** of 420 mg (0.02 ounces) HMX for detonation.

The FIG. **1** embodiment obviates any possibility of orientation error in the field while loading the housing **20**. A detonation wave may be channeled along either boss aperture **47** or **49** to the explosive material **60** around the central aperture **62**. Regardless of which orientation the shaped charge assembly **40** is given when inserted in the housing **20**, the detonator **31** will initiate the explosive material **60**.

In this embodiment, absent from the explosive material units **60** is a liner that is conventionally provided on the exterior surface of the explosive material and used to cut through the wall of a tubular. Instead, the exterior surface of the explosive material is exposed to the inner surface of the housing **20**. Specifically, the housing **20** comprises an outer surface **53** facing away from the housing **20**, and an opposing inner surface **51** facing an interior of the housing **20**. The explosive units **60** each comprise an exterior surface **50** that

faces and is exposed to the inner surface **51** of the housing **20**. Describing that the exterior surface **50** of the explosive units **60** is exposed to the inner surface **51** of the housing **20** is meant to indicate that the exterior surface **50** of the explosive units **60** is not provided with a liner, as is the case in conventional cutting devices. The explosive units **60** can comprise a predetermined amount of explosive material sufficient to expand at least a portion of the wall of the tubular into a protrusion extending outward into an annulus adjacent the wall of the tubular. For instance, testing conducted with a 72 grams (2.54 ounces) HMX, 6.8 centimeter (2.7 inches) outer diameter expansion charge on a tubular having a 11.4 centimeter (4.5 inch) outer diameter and a 10.1 centimeter (3.98 inch) inner diameter resulted in expanding the outer diameter of the tubular to 13.5 centimeters (5.32 inches). The expansion was limited to a 10.2 centimeter (4 inch) length along the outer diameter of the tubular. It is important to note that the expansion is a controlled outward expansion of the wall of the tubular, and does not cause puncturing, breaching, penetrating or severing of the wall of the tubular. The annulus may be formed between an outer surface of the wall of the tubular being expanded and an inner wall of an adjacent tubular or a formation. Cement located in the annulus is compressed by the protrusion, reducing the porosity of the cement by reducing the number of micro annulus pores in the cement or other sealing agents. The reduced-porosity cement provides a seal against moisture seepage that would otherwise lead to cracks, decay and/or contamination of the cement, casing and wellbore. The compressed cement may also collapse and/or compress open channels in a cemented annulus, and/or may compress the cemented annulus to cure other defects or inconsistencies in the cement (such as due to inconsistent viscosity of the cement, and/or a pressure differential in the formation).

A method of selectively expanding at least a portion of the wall of a tubular using the tool **10** described herein may be as follows. The tool **10** is assembled including the housing **20** containing explosive material **60** adjacent two end plates **46**, **48** on opposite sides of the explosive material **60**. As discussed in the embodiment above, the housing **20** comprises an inner surface **51** facing an interior of the housing **20**, and the explosive material **60** comprises an exterior surface **50** that faces the inner surface **51** of the housing **20** and is exposed to the inner surface **51** of the housing **20** (i.e., there is no liner on the exterior surface **50** of the explosive material **60**).

A detonator **31** (see FIG. **1**) can be positioned adjacent to one of the two end plates **46**, **48**. The tool **10** can then be positioned within an inner tubular T**1** that is to be expanded, as shown in FIG. **2**A. The inner tubular T**1** may be within an outer tubular T**2**, such that an annulus "A" exists between the outer diameter of the inner tubular T**1** and the inner diameter of the outer tubular T**2**. A sealant, such as cement "C" may be provided in the annulus "A". When the tool **10** reaches the desired location in the inner tubular T**1**, the detonator **31** is actuated to ignite the explosive material **60**, causing a shock wave that travels radially outward to impact the inner tubular T**1** at a first location and expand at least a portion of the wall of the inner tubular T**1** radially outward without perforating or cutting through the portion of the wall, to form a protrusion "P" of the inner tubular T**1** at the portion of the wall as shown in FIG. **2**B. The protrusion "P" extends into the annulus "A". The protrusion "P" compresses the cement "C" to reduce the porosity of the cement by reducing the number of micro pores. The compressed cement is shown in FIG. **2**B with the label "CC". The reduced number of micro pores in the compressed cement "CC" reduces the risk of seepage into the cement. Further, the protrusion "P" creates a ledge or barrier that helps seal that portion of the wellbore from seepage of outside materials. Note that the pipe dimensions shown in FIGS. **2**A to **2**F are exemplary and for context, and are not limiting to the scope of the invention.

The protrusion "P" may impact the inner wall of the outer tubular T**2** after detonation of the explosive material **60**. In some embodiments, the protrusion "P" may maintain contact with the inner wall of the outer tubular T**2** after expansion is complete. In other embodiments, there may be a small space between the protrusion "P" and the inner wall of the outer tubular T**2**. For instance, the embodiment of FIG. **3**B shows that the space between the protrusion "P" and the inner wall of the outer tubular T**2** may be 0.07874 centimeters (0.0310 inches). However, the size of the space will vary depending on several factors, including, but not limited to, the size (e.g., thickness), strength and material of the inner tubular T**1**, the type and amount of the explosive material in the explosive units **60**, the physical profile of the exterior surface **50** of the explosive units **60**, the hydrostatic pressure bearing on the inner tubular T**1**, the desired size of the protrusion, and the nature of the wellbore operation. The small space between the protrusion "P" and the inner wall of the other tubular T**2** may still be effective for blocking flow of cement, barite, other sealing materials, drilling mud, etc., so long as the protrusion "P" approaches the inner diameter of the outer tubular T**2**. This is because the viscosity of those materials generally prevents seepage through such a small space. That is, the protrusion "P" may form a choke that captures (restricts flow of) the cement long enough for the cement to set and form a seal. Expansion of the inner tubular T**1** at the protrusion "P" causes that portion of the wall of the inner tubular T**1** to be work-hardened, resulting in greater yield strength of the wall at the protrusion "P". The portion of the wall having the protrusion "P" is not weakened. In particular, the yield strength of the inner tubular T**1** increases at the protrusion "P", while the tensile strength of the inner tubular T**1** at the protrusion "P" decreases only nominally. Expansion of the inner tubular T**1** at the protrusion "P" thus strengthens the tubular without breaching the inner tubular T**1**.

The magnitude of the protrusion in the embodiment discussed above depends on several factors, including the amount of explosive material in the explosive units **60**, the type of explosive material, the physical profile of the exterior surface **50** of the explosive units **60**, the strength of the inner tubular T**1**, the thickness of the tubular wall, the hydrostatic pressure bearing on the inner tubular T**1**, and the clearance adjacent the tubular being expanded, i.e., the width of the annulus "A" adjacent the tubular that is to be expanded. In the embodiment if FIG. **1**, the physical profile of the exterior surface **50** of the explosive units **60** is shaped as a side-ways "V". The angle at which the legs of the "V" shape intersect each other may be varied to adjust the size and/or shape of the protrusion. Generally, a smaller angle will generate a larger protrusion "P". Alternatively, the physical profile of the exterior surface **50** may be curved to define a generally hemispherical shape, such as shown in the example of FIG. **23**. In that embodiment, the exterior surface **50***b* of the explosive units **60** is shaped with a curve or curves, instead of the sideways "V" shape having an intersection at the convergence of two linear lines as shown in FIGS. **1**, **2**G, **2**H, **2**I, **4**-**6**, **24** and **25**. As used herein, the phrase "generally hemispherical shape" means that the exterior surface **50** of the explosive units **60** may have a perfect hemispherical shape, a flattened hemispherical shape, an

oblong hemispherical shape, or a shape formed only of curves or curved lines. In some embodiments, the "generally hemispherical shape" may also mean that the exterior surface **50** of the explosive units **60** may be composed of a series of three or more linear lines that together form a concave shape towards the cavity **25** around the shaped charge. In further embodiments, the "generally hemispherical shape" may include a sideways "U" shape. Generally speaking, the "generally hemispherical shape" of the explosive units **60** results in such explosive units **60** producing, upon ignition, a jet that is not as focused as the "V" shape explosive units **60**. Accordingly, even when the explosive units **60** having the generally hemispherical exterior surface **50***b* include a liner, according to one embodiment herein, the shape of the exterior surface **50***b* may controlled so that the collapsed liner forms a jet that is not focused enough to penetrate the inner tubular T**1**. That is, the generally hemispherical exterior surface **50***b* may be shaped, upon ignition of the explosive units **60**, to form the protrusion "P" discussed herein without puncturing the inner tubular T**1**.

The method of selectively expanding at least a portion of the wall of a tubular T**1** using the shaped charge tool **10** described herein may be modified to include determining the following characteristics of the tubular T**1**: a material of the tubular T**1**, a thickness of a wall of the tubular T**1**; an inner diameter of the tubular T**1**, an outer diameter of the tubular T**1**, a hydrostatic pressure bearing on the tubular T**1**, and a size of a protrusion "P" to be formed in the wall of the tubular T**1**. Next, the explosive force necessary to expand, without puncturing, the wall of the tubular T**1** to form the protrusion "P", is calculated, or determined via testing, based on the above determined material characteristics. As discussed above, the determinations and calculation of the explosive force can be performed via a software program executed on a computer. Physical hydrostatic testing of the explosive expansion charges yields data which may be input to develop computer models. The computer implements a central processing unit (CPU) to execute steps of the program. The program may be recorded on a computer-readable recording medium, such as a CD-ROM, or temporary storage device that is removably attached to the computer. Alternatively, the software program may be downloaded from a remote server and stored internally on a memory device inside the computer. Based on the necessary force, a requisite amount of explosive material for the one or more explosive material units **60** to be added to the shaped charge tool **10** is determined. The requisite amount of explosive material can be determined via the software program discussed above.

The one or more explosive material units **60**, having the requisite amount of explosive material, is then added to the shaped charge tool **10**. The loaded shaped charge tool **10** is then positioned within the tubular T**1** at a desired location. Next, the shaped charge tool **10** is actuated to detonate the one or more explosive material units **60**, resulting in a shock wave, as discussed above, that expands the wall of the tubular T**1** radially outward, without perforating or cutting through the wall, to form the protrusion "P". The protrusion "P" extends into the annulus "A" adjacent an outer surface of the wall of the tubular T**1**.

A first series of tests was conducted to compare the effects of sample explosive units **60**, which did not have a liner, with a comparative explosive unit that included a conventional liner on the exterior surface thereof. The explosive units in the first series had 15.88 centimeter (6.25 inch) outer housing diameter, and were each tested separately in a respective 17.8 centimeter (7 inch) outer diameter test pipe. The test pipe had a 16 centimeter (6.3 inch) inner diameter, and a 0.89 centimeter (0.35 inch) Wall Thickness, L-80.

The comparative sample explosive unit had a 15.88 centimeter (6.25 inch) outside housing diameter and included liners. Silicone caulk was added to foul the liners, leaving only the outer 0.76 centimeters (0.3 inches) of the liners exposed for potential jetting. 77.6 grams (2.7 ounces) of HMX main explosive was used as the explosive material. The sample "A" explosive unit had a 15.88 centimeter (6.25 inch) outside housing diameter and was free of any liners. 155.6 grams (5.5 ounces) of HMX main explosive was used as the explosive material. The sample "B" explosive unit had a 15.88 centimeter (6.25 inch) outside housing diameter and was free of any liners. 122.0 grams (4.3 ounces) of HMX main explosive was used as the explosive material.

The test was conducted at ambient temperature with the following conditions. Pressure: 20.7 Mpa (3,000 psi). Fluid: water. Centralized Shooting Clearance: 0.06 centimeters (0.03 inches). The Results are provided below in Table 1.

TABLE 1

Test Summary in 17.8 centimeters (7 inch) O.D. × 0.89 centimeters (0.350 inch) wall L-80

Sample	Main Load HMX (grams) (ounces)	Swell (centimeters) (inches)
Comparative (with liner)	77.6 g (2.7 oz)	18.5 cm (7.284 inches)
A	155.6 g (5.5 oz)	19.3 cm (7.600 inches)
B	122.0 g (4.3 oz)	18.6 cm (7.317 inches)

The comparative sample explosive unit produced an 18.5 centimeter (7.28 inch) swell, but the jetting caused by the explosive material and liners undesirably penetrated the inside diameter of the test pipe. Samples "A" and "B" resulted in 19.3 centimeter (7.6 inch) and 18.6 centimeter (7.32 inch) swells (protrusions), respectively, that were smooth and uniform around the inner diameter of the test pipe.

A second test was performed using the Sample "A" explosive unit in a test pipe having similar properties as in the first series of tests, but this time with an outer housing outside the test pipe to see how the character of the swell in the test pipe might change and whether a seal could be effected between the test pipe and the outer housing. The test pipe had a 17.8 centimeter (7 inch) outer diameter, a 16.1 centimeter (6.32 inch) inner diameter, a 0.86 centimeter (0.34 inch) wall thickness, and a 813.6 Mpa (118 KSI) tensile strength. The outer housing had an 21.6 centimeter (8.5 inch) outer diameter, a 18.9 centimeter (7.4 inch) inner diameter, a 1.35 centimeter (0.53 inch) wall thickness, and a 723.95 Mpa (105 KSI) tensile strength.

The second test was conducted at ambient temperature with the following conditions. Pressure: 20.7 Mpa (3,000 psi). Fluid: water. Centralized Shooting Clearance: 0.09 centimeters (0.04 inches). Clearance between the 17.8 centimeter (7 inch) outer diameter of the test pipe and the inner diameter of the housing: 0.55 centimeters (0.22 inches). After the sample "A" explosive unit was detonated, the swell on the 17.8 centimeter (7 inch) test pipe measured at 18.9 centimeters (7.441 inches)×18.89 centimeters (7.44 inches), indicating that the inner diameter of the outer housing (18.88 centimeters (7.433 inches)) somewhat retarded the swell (19.3 centimeters (7.6 inches)) observed in the first test series involving sample "A". There was thus a "bounce back" of the swell caused by the inner diameter of the outer

housing. In addition, the inner diameter of outer housing increased from 18.88 centimeters (7.433 inches) to 18.98 centimeters (7.474 inches). The clearance between the outer diameter of the test pipe and the inner diameter of the outer housing was reduced from 0.55 centimeters (0.22 inches) to 0.08 centimeters (0.03 inches). FIG. **3**A shows a graph **400** illustrating the swell profiles of the test pipe and the outer housing. FIG. **3**B is a graph **401** illustrating an overlay of the swell profiles showing the 0.08 centimeter (0.03 inch) resulting clearance.

A second series of tests was performed to compare the performance of a shaped charge tool **10** (with liner-less explosive units **60**) having different explosive unit load weights. In the second series of tests, the goal was to maximize the expansion of a 17.8 centimeter (7 inch) outer diameter pipe having a wall thickness of 1.37 centimeters (0.54 inches), to facilitate operations on a Shell North Sea Puffin well. Table 2 shows the results of the tests.

TABLE 2

Test	Explosive Weight	Explosive Unit Load Weight/1"	Centralized Shooting Clearance	Max Swell of 7" O.D. Pipe
1	175 g HMX (6.17 oz.)	125 g (4.4 oz.)	0.26 cm (0.103 inches)	18.8 cm (7.38 inches)
2	217 g HMX (7.65 oz.)	145 g (5.11 oz.)	0.26 cm (0.103 inches)	19.04 cm (7.49 inches)
3	350 g HMX (12.35 oz.)	204 g (7.2 oz.)	0.26 cm (0.103 inches)	20.2 cm (7.95 inches)

Tests #1 to #3 used the shaped charge tool **10** having liner-less explosive units **60** with progressively increasing explosive weights. In those tests, the resulting swell of the 17.8 centimeter (7 inch) outer diameter pipe continued to increase as the explosive weight increased. However, in test #3, which utilized 350 grams (12.35 ounces) HMX resulting in a 204 gram (7.2 ounces) unit loading, the focused energy of the expansion charged breached the 17.8 centimeter (7 inch) outer diameter pipe. Thus, to maximize the expansion of this pipe without breaching the pipe would require the amount of explosive energy in test #3 to be delivered with less focus.

Returning to the method discussed above, the relatively short expansion length (e.g., 10.2 centimeters (4 inches)) may advantageously seal off micro annulus leaks or cure the other cement defects discussed herein. It may be the case that the cement density between the outer diameter of the inner tubular T**1** and the inner diameter of the outer tubular T**2** was inadequate to begin with, such that a barrier may not be formed and/or the cement "C" present between the inner tubular T**1** and the outer tubular T**2** may simply be forced above and below the expanded protrusion "P" (see, e.g., FIG. **2**C). While there may still be a semi compression "SC" of the cement and reduction in porosity, it might not be adequate to slow a micro annulus leak in a manner that would conform to industry and/or regulatory standards. In such a case, instead of detonating just one explosive unit **60**, multiple explosive units **60** may be detonated, sequentially and in close proximity to each other, or simultaneously and in close proximity to each other. For example, if two explosive units **60** were detonated sequentially or simultaneously, 10.16 centimeters (4.0 inches) apart in a zone where there is an inadequate cement job, the compression effect of the cement from the first explosive unit **60** being forced down, and from the second explosive unit **60** being forced up, may result in an adequate barrier "CB", as shown in FIG. **2**D, that conforms to industry and/or regulatory standards. An example of a shaped charge tool **10** comprising a top sub **12** and having two explosive units **60** positioned, e.g., 10.16 centimeters (4.0 inches), apart from each other is shown in FIG. **2**G.

Multiple explosive units **60** can be selectively detonated at different times while the tool **10**, such as shown in FIGS. **2**G, **2**H and **2**I is positioned in the inner tubular T**1**. For instance, three or more explosive units **60** may be detonated sequentially, or individually in any order desired by an operator. In another example, three explosive units **60** may be detonated as follows. To begin with, first and second explosive units **60** may be simultaneously detonated 20.3 centimeters (8 inches) apart from each other to create two spaced apart protrusions "P," as shown in FIG. **2**E. The two detonations form two barriers "B" shown in FIG. **2**E, with the first explosive unit **60** forcing the cement "C" downward and the second explosive unit **60** forcing cement "C" upward. A third explosive unit **60** is then subsequently detonated between the first and second explosive units **60**. Detonation of the third explosive unit **60** further compresses the cement "C" that was forced downward by the first explosive unit **60** and the cement "C" that was forced upward by the second explosive unit **60**, to form two adequate barriers "CB" as shown in FIG. **2**F. Alternatively, detonation of the third explosive unit **60** may result on one barrier above or below the third explosive unit **60** depending on the cement competence in the respective zones. Either scenario (one or two barriers) may further restrict/seal off micro annulus leaks, or cure the other cement defects discussed herein, to conform with industry and/or regulatory standards. Thus, the upper and lower explosive units **60** of the tool **10** in FIG. **2**H can be simultaneously detonated, and then the middle explosive unit **60** can be subsequently detonated to result in the protrusions shown in FIG. **2**F. An example of a shaped charge tool **10** comprising a top sub **12** and having three explosive units **60** positioned, e.g., 10.16 centimeters (4.0 inches), apart from each other is shown in FIG. **2**H. In another embodiment, three or more explosive units **60** may be detonated simultaneously. "Simultaneously" means that the explosive units **60** are intended to fire at the same time, even though actual ignition of the explosive units **60** serially disposed along an expansion tool may occur, for example, 5 to 8 miles per second apart, due to, for instance, the length of a detonation cord between the explosive units **60**.

FIGS. **2**G and **2**H illustrate an embodiment in which a detonation cord **61** for initiating the tool is run through the length of the tool **10**. Another way to configure the detonation cord **61** is to install separate sections of detonation cords **61** between boosters **61***a*, as shown in FIG. **2**I. Each booster **61***a* can be filled with explosive material **61***b*, such as HMX. That is, a first booster **61***a*, provided with a first explosive unit **60**, may be associated with a first section of detonation cord **61**, which first section of detonation cord **61** connects to a second booster **61***a* located further down the tool **10** and provided with a second explosive unit **60**. A second section of detonation cord **61** is provided between the second booster **61***a* and a third booster **61***a*, as shown in FIG. **2**I. If further explosive units **60** are provided, the sequence of a section of detonation cord **61** between consecutive boosters **61***a* may be continued.

The contingencies discussed with respect to FIGS. **2**C through **2**F may address the situation in which, even when cement bond logs suggest a cement column is competent in

a particular zone, there may still be a variation in the cement volume and density in that zone requirement is more than one expansion charge.

In the methods discussed above, expansion of the inner tubular T1 causes the sealant displaced by the expansion to compress, reducing the number of micro pores in the cement or the number of other cement defects discussed herein. The expansion may occur after the sealant is pumped into the annulus "A". Alternatively, the cement or other sealant may be provided in the annulus "A" on the portion of the wall of the inner tubular T1, after the portion of the wall is expanded. The methods may include selectively expanding the inner tubular T1 at a second location spaced from the first location to create a pocket between the first and second locations. The sealant may be provided in the annulus "A" before the pocket is formed. In an alternative embodiment, expansion at the first location may occur before the sealant is provided, and expansion at the second location may occur after the sealant is provided.

FIGS. 2J to 2L illustrate methods of selectively expanding at least a portion of the wall of a tubular surround by formation (earth). FIG. 2J shows that the tool 10 is positioned within the tubular T1 that is cemented into a formation that includes shale strata and sandstone strata. The cement "C" abuts the outer surface of the tubular T1 on one side, and abuts the strata on the opposite side, as shown in FIG. 2J. Shale is one of the more non-permeable earthen materials, and may be referred to as a cap rock formation. To the contrary, sandstone is known to be permeable. Accordingly, when the tool 10 is used to in a tubular/earth application to consolidate cement adjacent a formation, such as shown in FIG. 2J, it is preferable to expand the wall of the tubular T1 that is adjacent the cap rock formation (e.g., shale strata) because the non-permeable cap rock formation seals off the annulus flow, as shown in FIG. 2K. On the other hand, if the tool 10 was used to expand the wall of the tubular T1 that was adjacent the sandstone strata, as shown in FIG. 2L, even if the cement "C" is consolidated to seal against annulus flow through the consolidated cement "C", annulus flow can bypass the consolidated cement "C" and migrate or flow through the permeable sandstone strata (see FIG. 2L), defeating the objective of expanding a wall of the tubular T1.

FIGS. 2M and 2N illustrate a method of selectively expanding the walls of two nested tubulars T1 and T2 according to an embodiment. "Nested" is used herein to mean that at least a portion of one tubular is inside of at least a portion of another tubular. In some cases, such "nested" tubulars may be concentric, i.e., having the same axial center. In other cases, the "nested" tubulars may be substantially concentric, but not share the same axial center. The "nested" embodiments discussed herein encompass both perfectly concentric tubulars, substantially concentric tubulars, and non-concentric tubulars in which the outer surface of the inner tubular may be very close to or contact the inner surface of the nested outer tubular. In the nested embodiment of FIG. 2M, inner tubular T1 is surrounded by an outer tubular T2, and an annulus between the inner tubular T1 and the outer tubular T2 that includes a sealant, such as cement "C". A third tubular T3, or formation, surrounds the outer tubular T2. The annulus between the outer tubular T2 and the third tubular T3 or formation also includes a sealant, such as cement "C2". In the embodiment, annulus flow "L" may be present through in the cement "C" and "C2" in both annuli. A tool, such as a shaped charge tool or a dual end fired explosive column tool discussed herein, may be positioned within the inner tubular T1 (see FIG. 2N) to selectively expand the walls of both tubulars T1 and T2 with a single actuation of the tool. That is, detonation of the explosive material in the tool creates a force that travels radially outward to impact the inner tubular T1 and expand at least a portion of the wall of the inner tubular T1 radially outward without perforating or cutting through the portion of the wall, to form a protrusion "P" of the inner tubular T1 as shown in FIG. 2N. The tool may contain an amount of explosive material based at least in part on a hydrostatic pressure bearing on one or more of the inner tubular T1, the outer tubular T2, and the tool itself. The protrusion "P" extends into the annulus between the inner tubular T1 and the outer tubular T2 to compresses the cement "C" to reduce the porosity of the cement "C" by reducing the number of pores, channels, or other cement imperfections allowing annulus leaks. The compressed cement is shown in FIG. 2N with the label "CC". Additionally, the radially traveling force of the detonated explosive material, and/or expansion of the protrusion "P", impacts the outer tubular T2 and expands at least a portion of the wall of the outer tubular T2 radially outward without perforating or cutting through the portion of the wall, to form a protrusion "P2" of the outer tubular T2, as shown in FIG. 2N. The protrusion "P2" extends into the annulus between the outer tubular T2 and the third tubular T3, or formation, to compresses the cement "CC2" in that annulus. The compression reduces the porosity of the cement "CC2" by reducing the number of pores, channels, or other cement imperfections allowing annulus leaks. Thus, compressed cement "CC", "CC2" is consolidated in both annuli with one detonation of the explosive material contained in the tool. In the embodiment of FIG. 2N, a single charge is used to form the protrusions "P", "P2". However, multiple charges serially oriented in the tool could also be used to form multiple sets of the nested protrusions "P", "P2" along the axis of the wellbore.

The reduced number of pores, channels, or other cement imperfections allowing annulus leaks in the compressed cement "CC", "CC2" reduces the risk of seepage into the cement and helps seal against annulus flow through the consolidated cement. Further, the protrusions "P", "P2" may create a ledge or barrier that helps seal that portion of the wellbore from seepage of outside materials. The size and shape of the protrusions "P", "P2" may vary depending on several factors, including, but not limited to, the size (e.g., thickness), strength and material of the inner and outer tubulars T1, T2, the type and amount of the explosive material, the hydrostatic pressure bearing on the inner and outer tubulars T1, T2, the desired size of the protrusions "P", "P2", and the nature of the wellbore operation.

FIGS. 2O and 2P illustrate a method of selectively expanding the walls of three nested tubulars T1, T2 and T3 according to an embodiment. FIG. 2O shows an innermost tubular T1 surrounded by an intermediate tubular T2, and an annulus between the innermost tubular T1 and the intermediate tubular T2 that includes a sealant, such as cement "C". A third tubular T3 surrounds the intermediate tubular T2. The annulus between the intermediate tubular T2 and the third tubular T3 also includes a sealant, such as cement "C2". In addition, another tubular "AP" or formation "F" surrounds the third tubular T3. The annulus between the third tubular T3 and the other tubular "AP" or formation "F" also includes a sealant, such as cement "C3". In the embodiment, annulus flow "L" may be present through in the cement "C", "C2" and "C3" in each annuli. A tool, such as a shaped charge tool or a dual end fired explosive column tool discussed herein, may be positioned within the innermost tubular T1 (see FIG. 2P) to selectively expand the walls

of all three tubulars T1, T2 and T3 with a single actuation of the tool. That is, detonation of the explosive material in the tool creates a force that travels radially outward to impact the innermost tubular T1 and expand at least a portion of the wall of the innermost tubular T1 radially outward without perforating or cutting through the portion of the wall, to form a protrusion "P" of the innermost tubular T1 as shown in FIG. 2P. The tool may contain an amount of explosive material based at least in part on a hydrostatic pressure bearing on one or more of the innermost tubular T1, the intermediate tubular T2, the third tubular T3, and the tool itself. The protrusion "P" extends into the annulus between the innermost tubular T1 and the intermediate tubular T2 to compresses the cement "C" to reduce the porosity of the cement "C" by reducing the number of pores, channels, or other cement imperfections allowing annulus leaks. The compressed cement is shown in FIG. 2P with the label "CC". Additionally, the radially traveling force of the detonated explosive material, and/or expansion of the protrusion "P", impacts the intermediate tubular T2 and expands at least a portion of the wall of the intermediate tubular T2 radially outward without perforating or cutting through the portion of the wall, to form a protrusion "P2" of the intermediate tubular T2, as shown in FIG. 2P. The protrusion "P2" extends into the annulus between the intermediate tubular T2 and the third tubular T3 to compresses the cement "CC2" in that annulus. The compression reduces the porosity of the cement "CC2" by reducing the number of pores, channels, or other cement imperfections allowing annulus leaks. Further, the radially traveling force of the detonated explosive material, and/or expansion of the protrusions "P" and "P2", impacts the third tubular T3 and expands at least a portion of the wall of the third tubular T3 radially outward without perforating or cutting through the portion of the wall, to form a protrusion "P3" of the third tubular T3, as shown in FIG. 2P. The protrusion "P3" extends into the annulus between the third tubular T3 and the other tubular "AP" or formation "F" to compresses the cement "CC3" in that annulus. The compression reduces the porosity of the cement "CC3" by reducing the number of pores, channels, or other cement imperfections allowing annulus leaks. Thus, compressed cement "CC", "CC2" and "CC3" is consolidated in the three annuli with one single detonation of the explosive material contained in the tool, or via one single actuation of the tool. In the embodiment of FIG. 2P, a single charge is used to form the protrusions "P", "P2" and "P3". However, multiple charges serially oriented in the tool could also be used to form multiple sets of the nested protrusions "P", "P2" and "P3" along the axis of the wellbore. Those charges could be detonated simultaneously or separately to form each set of nested protrusions "P", "P2" and "P3" simultaneously or separately along the axis of the wellbore.

The reduced number of pores, channels, or other cement imperfections allowing annulus leaks in the compressed cement "CC", "CC2" and "CC3" reduces the risk of seepage into the cement and helps seal against annulus flow through the consolidated cement. Further, the protrusions "P", "P2" and "P3" may create a ledge or barrier that helps seal that portion of the wellbore from seepage of outside materials. The size and shape of the protrusions "P", "P2" and "P3" may vary depending on several factors, including, but not limited to, the size (e.g., thickness), strength and material of the tubulars T1, T2 and T3, the type and amount of the explosive material, the hydrostatic pressure bearing on the tubulars T1, T2 and T3, the desired size of the protrusions "P", "P2" and "P3", and the nature of the wellbore operation.

For illustrative simplicity in FIGS. 2O and 2P, three nested tubulars T1, T2 and T3 and the other nested tubular "AP" or formation "F" are shown. However, the method may include more than one intermediate tubular T2, such that the wall of the innermost tubular T1, the walls of multiple intermediate tubulars T2, and the wall of the third tubular T3 are expanded radially outward with one single detonation of the explosive material contained in the tool without perforating or cutting through any of the nested tubulars thus arranged. The single detonation would form a nested protrusion in each tubular that extends into the annulus between the adjacent nested tubulars. That is, method discussed herein is not limited to selectively expanding the wall of three nested tubulars with a single dentation of the explosive material contained in the tool, but may include selectively expanding the wall of four or more nested tubulars with a single dentation of the explosive material.

A variation of the shape charge tool **10** is illustrated in FIG. **4**. In this embodiment, the axial aperture **80** in the thrust disc **46** is tapered with a conically convergent diameter from the disc face proximate of the detonator **31** to the central aperture **62**. The thrust disc aperture **80** may have a taper angle of about 10 degrees between an approximately 0.2 centimeters (0.08 inches) inner diameter to an approximately 0.32 centimeters (0.13 inches) diameter outer diameter. The taper angle, also characterized as the included angle, is the angle measured between diametrically opposite conical surfaces in a plane that includes the conical axis **13**.

Original initiation of the FIG. **4** charge **60** occurs at the outer plane of the tapered aperture **80** having a proximity to a detonator **31** that enables/enhances initiation of the charge **60** and the concentration of the resulting explosive force. The initiation shock wave propagates inwardly along the tapered aperture **80** toward the explosive junction plane **64**. As the shock wave progresses axially along the aperture **80**, the concentration of shock wave energy intensifies due to the progressively increased confinement and concentration of the explosive energy. Consequently, the detonator shock wave strikes the charge units **60** at the inner juncture plane **64** with an amplified impact. Comparatively, the same explosive charge units **60**, as suggested for FIG. **1** comprising, for example, approximately 38.8 grams (1.4 ounces) of HMX compressed under a loading pressure of about 20.7 Mpa (3,000 psi) and when placed in the FIG. **4** embodiment, may require only a relatively small detonator **31** of HMX for detonation. Significantly, the conically tapered aperture **80** of FIG. **4** appears to focus the detonator energy to the central aperture **62**, thereby igniting a given charge with much less source energy. In FIGS. **1** and **4**, the detonator **31** emits a detonation wave of energy that is reflected (bounce-back of the shock wave) off the flat internal end-face **33** of the integral end wall **32** of the housing **20** thereby amplifying a focused concentration of detonation energy in the central aperture **62**. Because the tapered aperture **80** in the FIG. **4** embodiment reduces the volume available for the detonation wave, the concentration of detonation energy becomes amplified relative to the FIG. **1** embodiment that does not include the tapered aperture **80**.

The variation of the tool **10** shown in FIG. **5** relies upon an open, substantially cylindrical aperture **47** in the upper thrust disc **46** as shown in the FIG. **1** embodiment. However, either no aperture is provided in the end plate boss **72** of FIG. **5** or the aperture **49** in the lower end plate **48** is filled with a dense, metallic plug **76**, as shown in FIG. **5**. The plug **76** may be inserted in the aperture **49** upon final assembly or pressed into place beforehand. As in the case of the FIG. **4**

embodiment, the FIG. **5** tool **10** comprising, for example, approximately 38.8 grams (1.4 ounces) of HMX compressed under a loading pressure of about 20.7 Mpa (3,000 psi), also may require only a relatively small detonator **31** of HMX for detonation. The detonation wave emitted by the detonator **31** is reflected back upon itself in the central aperture **62** by the plug **76**, thereby amplifying a focused concentration of detonation energy in the central aperture **62**.

The FIG. **6** variation of the tool **10** combines the energy concentrating features of FIG. **2** and FIG. **5**, and adds a relatively small, explosive initiation pellet **66** in the central aperture **62**. In this case, the detonation wave of energy emitted from the detonator **31** is reflected off of explosive initiation pellet **66**. The reflection from the off of explosive initiation pellet **66** is closer to the juncture plane **64**, which results in a greater concentration of energy (enhanced explosive force). The explosive initiation pellet **66** concept can be applied to the FIG. **1** embodiment, also.

Transporting and storing the explosive units may be hazardous. There are thus safety guidelines and standards governing the transportation and storage of such. One of the ways to mitigate the hazard associated with transporting and storing the explosive units is to divide the units into smaller component pieces. The smaller component pieces may not pose the same explosive risk during transportation and storage as a full-size unit may have. Each of the explosive units **60** discussed herein may thus be provided as a set of units that can be transported unassembled, where their physical proximity to each other in the shipping box would prevent mass (sympathetic) detonation if one explosive component was detonated, or if, in a fire, would burn and not detonate. The set is configured to be easily assembled at the job site.

FIG. **10** shows an exemplary embodiment of a set **100** of explosive units. Embodiments of the explosive units discussed herein may be configured as the set **100** discussed below. The set **100** comprises a first explosive unit **102** and a second explosive unit **104**. Each of the first explosive unit **102** and the second explosive unit **104** comprises the explosive material discussed herein. Each explosive unit **102**, **104** may be frusto-conically shaped. In this configuration, the first explosive unit **102** includes a smaller area first surface **106** and a greater area second surface **110** opposite to the smaller area first surface **106**. Similarly, the second explosive unit **104** includes a smaller area first surface **108** and a greater area second surface **112** opposite to the smaller area first surface **108**. Each of the first explosive unit **102** and the second explosive unit **104** may be symmetric about a longitudinal axis **114** extending through the units, as shown in the perspective view of FIG. **11**. Each of the first explosive unit **102** and the second explosive unit **104** comprises a center portion **120** having an aperture **122** that extends through the center portion **120** along the longitudinal axis **114**.

In the illustrated embodiment, the smaller area first surface **106** of the first explosive unit **102** includes a recess **116**, and the smaller area first surface **108** of the second explosive unit **104** comprises a protrusion **118**. The first explosive unit **102** and the second explosive unit **104** are configured to be connected together with the smaller area first surface **106** of the first explosive unit **102** facing the second explosive unit **104**, and the smaller area first surface **108** of the second explosive unit **104** facing the smaller area first surface **106** of the first explosive unit **102**. The protrusion **118** of the second explosive unit **104** fits into the recess **116** of the first explosive unit **102** to join the first explosive unit **102** and the second explosive unit **104** together. The first explosive unit **102** and the second explosive unit **104** can thus be easily connected together without using tools or other materials.

In the embodiment, the protrusion **118** and the recess **116** have a circular shape in planform, as shown in FIGS. **11** and **12**. In other embodiments, the protrusion **118** and the recess **116** may have a different shape. For instance, FIG. **13** shows that the shape of the protrusion **118** is square. The corresponding recess (not shown) on the other explosive unit in this embodiment is also square to fitably accommodate the protrusion **118**. Alternative shapes for the protrusion **118** and the recess **116** may be triangular, rectangular, pentagonal, hexagonal, octagonal or other polygonal shape having more than two sides.

Referring back to FIG. **10**, the set **100** of explosive units can include a first explosive sub unit **202** and a second explosive sub unit **204**. The first explosive sub unit **202** is configured to be connected to the first explosive unit **102**, and the second explosive sub unit **204** is configured to be connected to the second explosive unit **104**, as discussed below. Similar to the first and second explosive units **102**, **104** discussed above, each of the first explosive sub unit **202** and the second explosive sub unit **204** can be frusto-conical so that the sub units define smaller area first surfaces **206**, **208** and greater area second surfaces **210**, **212** opposite to the smaller area first surfaces **206**, **208**, as shown in FIG. **10**.

In the embodiment shown in FIG. **10**, the larger area second surface **110** of the first explosive unit **102** includes a first projection **218**, and the smaller area first surface **206** of the first explosive sub unit **202** includes a first cavity or recessed area **216**. The first projection **218** fits into the first cavity or recessed area **216** to join the first explosive unit **102** and the first explosive sub unit **202** together. Of course, instead of having the first projection **218** on the first explosive unit **102** and the first cavity or recessed area **216** on the first explosive sub unit **202**, the first projection **218** may be provided on the smaller area first surface **206** of the first explosive sub unit **202** and the first cavity **216** may be provided on the larger area second surface **110** of the first explosive unit **102**.

FIG. **10** also shows that the larger area second surface **112** of the second explosive unit **104** comprises a first cavity or recessed area **220**, and the smaller area first surface **208** of the second explosive sub unit **204** comprises a first projection **222**. The first projection **222** fits into the first cavity or recessed area **220** to join the second explosive unit **102** and the second explosive sub unit **204** together. Of course, instead of having the first projection **222** on the second explosive sub unit **204** and the first cavity **220** on the second explosive unit **104**, the first projection **222** may be provided on the larger area second surface **112** of the second explosive unit **104** and the first cavity **220** may be provided on the smaller area first surface **208** of the second explosive sub unit **204**. The first and second explosive sub units **202**, **204** may also include the aperture **122** extending along the longitudinal axis **114**.

FIGS. **10** and **11** show that the first explosive unit **102** includes a side surface **103** connecting the smaller area first surface **106** and the greater area second surface **110**. Similarly, the second explosive unit **104** includes a side surface **105** connecting the smaller area first surface **108** and the greater area second surface **112**. Each side surface **103**, **105** may consist of only the explosive material, so that the explosive material is exposed at the side surfaces **103**, **105**. In other words, the liner that is conventionally applied to the explosive units is absent from the first and second explosive units **102**, **104**. The side surfaces **107**, **109** of the first and second explosive sub units **202**, **204**, respectively, can

consist of only the explosive material, so that the explosive material is exposed at the side surfaces **107**, **109**, and the liner is absent from the first and second explosive sub units **202**, **204**.

FIGS. **14-17** illustrate another embodiment of an explosive unit **300** that may be included in a set of several similar units **300**. The explosive unit **300** may be positioned in a tool **10** at a location and orientation that is opposite a similar explosive unit **300**, in the same manner as the explosive material units **60** in FIGS. **1** and **4-6** discussed herein. FIG. **14** is a plan view of the explosive unit **300**. FIG. **15** is a plan view of one segment **302** of the explosive unit **300**, and FIG. **16** is a side view thereof. FIG. **17** is a cross-sectional side view of FIG. **15**. In the embodiment, the explosive unit **300** is in the shape of a frustoconical disc that is formed of three equally-sized segments **301**, **302**, and **303**. The explosive unit **300** may include a central opening **304**, as shown in FIG. **14**, for accommodating the shaft of an explosive booster (not shown). The illustrated embodiment shows that the explosive unit **300** is formed of three segments **301**, **302**, and **303**, each accounting for one third (i.e., 120 degrees) of the entire explosive unit **300** (i.e., 360 degrees). However, the explosive unit **300** is not limited to this embodiment, and may include two segments or four or more segments depending nature of the explosive material forming segments. For instance, a more highly explosive material may require a greater number of (smaller) segments in order to comply with industry regulations for safely transporting explosive material. For instance, the explosive unit **300** may be formed of four segments, each accounting for one quarter (i.e., 90 degrees) of the entire explosive unit **300** (i.e., 360 degrees); or may be formed of six segments, each accounting for one sixth (i.e., 60 degrees) of the entire explosive unit **300** (i.e., 360 degrees). According to one embodiment, each segment should include no more than 38.8 grams (1.4 ounces) of explosive material. In another embodiment, each segment could include 38.8 grams (1.4 ounces) or more of explosive material.

In one embodiment, the explosive unit **300** may have a diameter of about 8.38 centimeters (3.3 inches). FIGS. **15** and **16** show that the segment **302** has a top surface **305** and a bottom portion **306** having a side wall **307**. The top surface **305** may be slanted an angle of 17 degrees from the central opening **304** to the side wall **307** in an embodiment. According to one embodiment, the overall height of the segment **302** may be about 1.905 centimeters (0.75 inches), with the side wall **307** being about 0.508 centimeters (0.2 inches) of the overall height. The overall length of the segment **302** may be about 7.24 centimeters (2.85 inches) in the embodiment. FIG. **17** shows that the inner bottom surface **308** of the segment **302** may be inclined at an angle of 32 degrees, according to one embodiment. The width of the bottom portion **306** may be about 1.37 centimeters (0.54 inches) according to an embodiment with respect to FIG. **17**. The side wall **309** of the central opening **304** may have a height of about 0.356 centimeters (0.14 inches) in an embodiment, and the uppermost part **310** of the segment **302** may have a width of the about 0.381 centimeters (0.15 inches). The above dimensions are not limiting, as the segment size and number may be different in other embodiments. A different segment size and/or number may have different dimensions. The explosive units **300** may be provided as a set of units divided into segments, so that the explosive units **300** can be transported as unassembled segments **301**, **302**, **303**, as discussed above.

The set of segments is configured to be easily assembled at the job site. Thus, a method of selectively expanding at least a portion of a wall of a tubular at a well site via a shaped charge tool **10** may include first receiving an unassembled set of explosive units **300** at the well site, wherein each explosive unit **300** comprising explosive material, is divided multiple segments **301**, **302**, **303** that, when joined together, form an explosive unit **300**. The method includes assembling the tool **10** (see, e.g., FIG. **1**) comprising a shaped charge assembly comprising a housing **20** and two end plates **46**, **48**. The housing **20** comprises an inner surface **51** facing an interior of the housing **20**. At the well site, the segments **301**, **302**, **303** of each explosive unit **300** are together to form the assembled explosive unit **300**. The explosive units **300** are then positioned between the two end plates **46**, **48**, for instance each explosive unit **300** is adjacent one of the end plates **46**, **48**, so that an exterior surface of the explosive material of explosive units **300** faces the inner surface **51** of the housing **20**. In an embodiment, the explosive material is exposed to the inner surface **51** of the housing **20**. Next, a detonator **31** is positioned adjacent to one of the two end plates **46**, **48**, and the shaped charge tool **10** is positioned within the tubular. The detonator **31** is then actuated to ignite the explosive material causing a shock wave that travels radially outward to impact the tubular at a first location and expand at least a portion of the wall of the tubular radially outward without perforating or cutting through the portion of the wall, to form a protrusion of the tubular at the portion of the wall. The protrusion extends into an annulus between an outer surface of the wall of the tubular and an inner surface of a wall of another tubular or a formation.

FIGS. **18-22** show embodiments of a centralizer assembly that may be attached to the housing **20**. The centralizer assembly centrally confines the tool **10** within the inner tubular T**1**. In the embodiment shown in FIG. **18**, a planform view of the centralizer assembly is shown in relation to the longitudinal axis **13**. The tool **10** is centralized by a pair of substantially circular centralizing discs **316**. Each of the centralizing discs **316** are secured to the housing **20** by individual anchor pin fasteners **318**, such as screws or rivets. In the FIG. **18** embodiment, the discs **316** are mounted along a diameter line **320** across the housing **20**, with the most distant points on the disc perimeters separated by a dimension that is preferably at least corresponding to the inside diameter of the inner tubular T**1**. In many cases, however, it will be desirable to have a disc perimeter separation slightly greater than the internal diameter of the inner tubular T**1**.

In another embodiment shown by FIG. **19**, each of the three discs **316** are secured by separate pin fasteners **318** to the housing **20** at approximately 120 degree arcuate spacing about the longitudinal axis **13**. This configuration is representative of applications for a multiplicity of centering discs on the housing **20**. Depending on the relative sizes of the tool **10** and the inner tubular T**1**, there may be three or more such discs distributed at substantially uniform arcs about the tool circumference.

FIG. **20** shows, in planform, another embodiment of the centralizers that includes spring steel centralizing wires **330** of small gage diameter. A plurality of these wires is arranged radially from an end boss **332**. The wires **330** can be formed of high-carbon steel, stainless steel, or any metallic or metallic composite material with sufficient flexibility and tensile strength. While the embodiment includes a total of eight centralizing wires **330**, it should be appreciated that the plurality may be made up of any number of centralizing wires **330**, or in some cases, as few as two. The use of centralizing wires **330** rather than blades or other machined pieces, allows for the advantageous maximization of space in the flowbore around the centralizing system, compared to

previous spider-type centralizers, by minimizing the cross-section compared to systems featuring flat blades or other planar configurations. The wires **330** are oriented perpendicular to the longitudinal axis **13** and engaged with the sides of the inner tubular, which is positioned within an outer tubular T**2**. The wires **330** may be sized with a length to exert a compressive force to the tool **10**, and flex in the same fashion as the cross-section of discs **316** during insertion and withdrawal.

Another embodiment of the centralizer assembly is shown in FIG. **21**. This configuration comprises a plurality of planar blades **345***a*, **345***b* to centralize the tool **10**. The blades **345***a*, **345***b* are positioned on the bottom surface of the tool **10** via a plurality of fasteners **342**. The blades **345***a*, **345***b* thus flex against the sides of the inner tubular T**1** to exert a centralizing force in substantially the same fashion as the disc embodiments discussed above. FIG. **18** illustrates an embodiment of a single blade **345**. The blade **345** comprises a plurality of attachment points **344***a*, **344***b*, through which fasteners **342** secure the blade **345** in position. Each fastener **342** can extend through a respective attachment point to secure the blade **345** into position. While the embodiment in FIG. **21** is depicted with two blades **345***a*, **345***b*, and each blade **345** comprises two attachment points, for a total of four fasteners **342** and four attachment points (**344***a*, **344***b* are pictured in FIG. **22**), it should be appreciated that the centralizer assembly may comprise any number of fasteners and attachment points.

The multiple attachment points **344***a*, **344***b* on each blade **345**, being spaced laterally from each other, prevent the unintentional rotation of individual blades **345**, even in the event that the fasteners **342** are slightly loose from the attachment points **344***a*, **344***b*. The fasteners **342** can be of any type of fastener usable for securing the blades into position, including screws. The blades **345** can be spaced laterally and oriented perpendicular to each other, for centralizing the tool **10** and preventing unintentional rotation of the one or more blades **345**.

While the disclosure above discusses embodiments in which there is no liner on the exterior surface **50** of the explosive units **60** (i.e., the exterior surface **50** of the explosive units **60** is exposed to the inner surface **51** of the housing **20**), alternative embodiments of the present disclosure may include a liner **50***a* on the exterior surface of the explosive units **60**, as shown in FIG. **24**, and may be able to achieve similar results as the liner-less explosive units **60** according to the following criteria. Conventionally, liners for explosive units were formed of material with relatively high density and ductility so that, when collapsed by a detonation wave of the ignited explosive units, the liners form a jet that is strong enough to penetrate the pipe or tubular in a cutting or perforating operation. Conventional materials for such liners included copper, nickel, zinc, zinc alloy, iron, tin, bismuth, and tungsten.

On the other hand, a liner formed of a relatively low density and brittle material would not jet as well as the conventional materials discussed above. The present inventor has determined that a formed of a material that is less dense and ductile than copper, nickel, zinc, zinc alloy, iron, tin, bismuth, and tungsten, individually or in combination, (i.e., formed of a material that is brittle and has low density), may be effective in expanding, without puncturing, the wall of the tubular T**1** to form the protrusion "P" discussed herein. In this regard, an embodiment of the liner **50***a* may have a density of 6 g/cc or less, and may be less ductal than copper, nickel, zinc, zinc alloy, iron, tin, bismuth, and tungsten, individually or in combination. In an embodiment, the liner **50***a* may be formed of glass material. In another embodiment, the liner **50***a* may be formed of a plastic material.

Another way to reduce the potency of the liner jet, so that the jet may expand, without puncturing, the wall of the tubular T**1** to form the protrusion "P" discussed herein, is to perforate the liner **50***a*. In addition, or in the alternative, the liner **50***a* may be formed so that a density, wall thickness, and/or composition of the liner **50***a* is asymmetric around at least one of the explosive units **60**. In addition, or in the alternative, the explosive units **60** may be formed so that a density, wall thickness, and/or composition of the explosive units **60** is asymmetric around at least one of the explosive units **60**. Further, the liner **50***a* of at least one of the explosive units **60** may be geometrically asymmetric. Asymmetric explosive units **60** may reduce the potency of explosive units **60** so that detonation of the explosive units **60** may expand, without puncturing, the wall of the tubular T**1** to form the protrusion "P" discussed herein. Similarly, asymmetric liners may reduce the potency of the jet formed by the liners, so that the jet may expand, without puncturing, the wall of the tubular T**1** to form the protrusion "P" discussed herein.

FIG. **25** illustrates another embodiment of a tool **10** for selectively expanding at least a portion of a wall of a tubular. The tool **10** in this embodiment comprises a liner **50***c* on the outer surface of the explosive units **60**. The liner **50***c* may be a liner formed of the conventional materials discussed above (e.g., copper, nickel, zinc, zinc alloy, iron, tin, bismuth, and tungsten). The tool **10** further comprises an extraneous object **55** located between the inner surface of the housing **20** and the liner **50***c*. The extraneous object **55** fouls the jet formed by the liner **50***c* so that the jet expands, without puncturing, a portion of the wall of the tubular T**1** to form a protrusion "P" extending outward into an annulus adjacent the wall of the tubular T**1**, as discussed herein. The extraneous object **55** may be one of a foam object, a rubber object, a wood object, and a liquid object, among other things.

FIGS. **26**A-**26**D illustrate a method of reducing a leak **505**, such as a micro annulus leak as discussed herein, in an annulus **502** adjacent a tubular **501** in a wellbore **500**. The method may also be implemented, for example, in a plug-and-abandonment operation. FIG. **26**A shows an example of a wellbore **500** that includes an annulus **502** disposed between an inner tubular **501** and an outer tubular, or formation, **504**. The tubular **501** may be the same or akin to the tubular(s) discussed herein. The annulus **502** may contain a sealant **503**, such as cement. A leak **505** may exist in the annulus **502**. The leak **505** may be an oil leak, a gas leak, or a combination thereof. The method may begin with setting a plug **506** at a location within the tubular **501** as shown in FIG. **26**B to prevent fluid, gases, and/or other wellbore materials from traveling up the tubular **501** past the plug **506**. The plug **506** may be a cast iron bridge plug, a cement plug, or any plug which isolates the lower portion of the well from the upper portion of the well. The plug **506** may also be used to seal the tubular **501** and/or provide a stop for a sealant, such as cement, that may be pumped into the annulus **502** from the tubular **501** in the following manner. One or more puncher charges (not shown) may be inserted into the tubular **501** and actuated to punch holes **507** in the wall of the tubular **501** at a location uphole of the plug **506**, as shown in FIG. **26**C. The puncher charges may be any commercially available shaped charges that when detonated form a jet of limited length to "punch" a hole in the target pipe without damaging any member beyond the target pipe.

The holes **507** can serve as passages for a sealant, such as cement, that can be subsequently pumped, or otherwise provided, into the tubular **501** and squeezed through the holes **507** into the annulus **502**. As shown in FIG. **26**D, the sealant (e.g., cement) is squeezed through the holes **507** and into the annulus **502** to densify the sealant (see densified sealant **508**) that is already present in the annulus **502**, or otherwise to fill the annulus **502**, for sealing or reducing the leak **505**. By some estimates, the method of reducing the leak **505** in the annulus **502**, as discussed with respect to FIGS. **26**A to **26**D, may be only 35% successful.

A more successful method of reducing a leak **505** in the annulus **502** adjacent a tubular **501** in a wellbore **500** is shown in FIGS. **27**A to **27**E. FIG. **27**A illustrates a scenario, as discussed above, in which a leak **505** exists in the annulus **502** adjacent a tubular **501** in a wellbore **500**. As before, a plug **506** may be set at a location within the tubular **501**, as shown in FIG. **27**B. The plug **506** may be the same as the plug **506** discussed above. Next, an expansion tool **509** containing an amount of explosive material is inserted into the tubular **501** uphole of the plug **506** as shown in FIG. **27**C. The expansion tool **509** may be any one of the expansion tools and their variations as discussed herein. The explosive material may be any of the explosive materials discussed herein or other HMX, RDX or HNS material. Other characteristics of the tubular and/or the wellbore may also be determined and/or accounted for, as discussed above, as necessary or as desired to determine the amount of explosive material in the expansion tool **509**. The amount of explosive material in the expansion tool **509** may be based at least in part on a hydrostatic pressure bearing on the tubular **501** in the wellbore **500**, as discussed herein. The amount of explosive material produces an explosive force sufficient to expand, without puncturing, the wall of the tubular **501**. The expansion tool **509** may then be actuated to expand the wall of the tubular **501** radially outward, without perforating or cutting through the wall of the tubular **501**, to form one or more protrusions **510** as shown in FIG. **27**C. Each protrusion **510** extends into the annulus **502** adjacent an outer surface of the wall of the tubular **501**, in the manner(s) discussed herein. The protrusions **510** may seal off, or may help seal off, the annulus **502** by protruding toward or against the outer pipe **504** (or formation) surrounding the annulus **502**. For instance, FIG. **27**C shows that the protrusions **510** may densify the sealant (see densified sealant **508**) already present in the annulus **502**, or otherwise fill the annulus **502**, to seal or reduce the leak **505**. The protrusions **510** may seal off, or may help seal off, the annulus **502** against leaks in the sealant **503** by compressing any voids in the sealant **503** and/or collapsing open channels in a cemented annulus **502**. In some cases, the protrusions **510** extending into the annulus may be enough to provide an acceptable seal against the leak **505** moving uphole beyond the protrusions **510**, and no further remedial action may be required. By some estimates, the manner of reducing the leak **505** in the annulus **502** as discussed with respect to FIGS. **27**A to **27**C may be at least 70% successful. To increase the success rate, if needed, additional steps to reduce the leak **505** in the annulus **502** are shown in FIGS. **27**D and **27**E.

In particular, one or more puncher charges (not shown) may be subsequently inserted into the tubular **501** and actuated to punch holes **507** in the wall of the tubular **501** as shown in FIG. **27**D. The puncher charges may be the same as those discussed above. As discussed above, the holes **507** serve as passages for a sealant, such as cement, to subsequently be pumped, or otherwise provided, into the tubular **501** and squeezed through the holes **507** into the annulus **502**, at least down to the upper protrusion **510**. As shown in FIG. **27**E, the sealant (e.g., cement) can be squeezed through the holes **507** into the annulus **502** to densify the sealant (see densified sealant **508**) already present in the annulus **502**, or otherwise to fill the annulus **502**, for sealing or reducing the leak **505**, at least down to the upper protrusion **510**. In some cases, however, the cement squeezed through the holes **507** may travel down beyond the upper protrusion **510** if any voids or channels in the densified sealant **508** are large enough to permit such flow. In addition, the protrusions **510** may form a restriction or a ledge below where the cement **507** will be introduced into the annulus **502**. If the sealant is viscous enough, the protrusion **510** may provide the annulus seal by itself. By some estimates, the method of reducing the leak **505** in the annulus **502** as discussed with respect to FIGS. **27**D and **27**E may be at least 90% successful.

In the embodiments discussed above, expansion tools including one or more expansion charges have been discussed. The expansion charges may be shaped charges as discussed above. However, a dual end firing tool or single end firing tool may also be used to expand, without puncturing, the wall of the tubular to form a protrusion extending outward into the annulus adjacent the wall of the tubular as discussed herein. Dual end fired and single end fired cylindrical explosive column tools (e.g., modified pressure balanced or pressure bearing severing tools) produce a focused energetic reaction, but with much less focus than from shaped charge expanders. In dual end fired explosive column tools, the focus is achieved via the dual end firing of the explosive column, in which the two explosive wave fronts collide in a middle part of the column, amplifying the pressure radially. In single end fired explosive column tools, the focus is achieved via the firing of the explosive column from one end which generates one wave front producing comparatively less energy. The single wave front may form a protrusion in the wall of the tubular, without perforating or cutting through the wall. The protrusion formed by a single end fired explosive column tool may be asymmetric as compared with a protrusion formed by a dual end fired explosive column tool. The length of the selective expansion in both types of explosive column tools is a function of the length of the explosive column, and may generally be about two times the length of the explosive column. With a relatively longer expansion length, for example, 40.64 centimeters (16.0 inches) as compared to a 10.16 centimeter (4.0 inch) expansion length with a shaped charge explosive device, a much more gradual expansion is realized. The more gradual expansion allows a greater expansion of any tubular or pipe prior to exceeding the elastic strength of the tubular or pipe, and failure of the tubular or pipe (i.e., the tubular or pipe being breeched).

An embodiment of an expansion tool **600** for selectively expanding at least a portion of a wall of a tubular is shown in FIGS. **28**-**30**. The expansion tool **600**, as shown in this embodiment, is a dual end firing explosive column tool, and can be used for applications involving relatively large and thicker tubulars, such as pipes having a 6.4 centimeter (2.5 inch) wall thickness, an inner diameter of 22.9 centimeters (9.0 inches) or more and an outer diameter of 35.6 centimeters (14.0 inches) or more. However, the dual end firing explosive column tool **600** is not limited to use with such larger tubulars, and may effectively be used to expand the wall of smaller diameter tubulars and tubulars with thinner walls than discussed above, or with larger diameter tubulars and tubulars with thicker walls than discussed above.

FIG. **28** shows a cross-sectional view of an embodiment of the dual end firing explosive column tool **600**. In this

embodiment, the dual end firing explosive column tool **600** is a modified pressure balanced tool. FIGS. **29** and **30** show details of particular portions of the dual end firing explosive column tool **600**. As shown, the dual end firing explosive column tool **600** can include a top sub **612** at a proximal end thereof. An internal cavity **613** in the top sub **612** can be formed to receive a firing head (not shown). A guide tube **616** can be secured to the top sub **612** to project from an inside face **638** of the top sub **612** along an axis of the tool **600**. The opposite distal end of guide tube **616** can support a guide tube terminal **618**, which can be shaped as a disc. A threaded boss **619** can secure the terminal **618** to the guide tube **616**. One or more resilient spacers **642**, such as silicon foam washers, can be positioned to encompass the guide tube **616** and bear against the upper face of the terminal **618**.

The dual end firing explosive column tool **600** can be arranged to serially align a plurality of high explosive pellets **640** along a central tube to form an explosive column. The pellets **640** may be pressed at forces to keep well fluid from migrating into the pellets **640**. In addition, or in the alternative, the pellets **640** may be coated or sealed with glyptal or lacquer, or other compound(s), to prevent well fluid from migrating into the pellets **640**. The dual end firing explosive column tool **600**, as shown, is provided without an exterior housing so that the explosive pellets **640** can be exposed to an outside of the dual end firing explosive column tool **600**, meaning that there is no housing of the dual end firing explosive column tool **600** covering the pellets **640**. That is, when the dual end firing explosive column tool **600** is inserted into a pipe or other tubular, the explosive pellets **640** can be exposed to an inner surface of the pipe or other tubular. Alternatively, a sheet of thin material, or "scab housing" (not shown) may be provided with the dual end firing explosive column tool **600** to cover the pellets **640**, for protecting the explosive material during running into the well. The material of the "scab housing" can be thin enough so that its effect on the explosive impact of the pellets **640** on the surface of the pipe or other tubular is immaterial. Moreover, the explosive force can vaporize or pulverize the "scab housing" so that no debris from the "scab housing" is left in the wellbore. In some embodiments, the "scab housing" may be formed of Teflon, PEEK, ceramic materials, or highly heat treated thin metal above 40 Rockwell "C". Bi-directional detonation boosters **624**, **626** are positioned and connected to detonation cords **630**, **632** for simultaneous detonation at opposite ends of the explosive column. Each of the pellets **640** can comprise about 22.7 grams (0.801 ounces) to about 38.8 grams (1.37 ounces) of high order explosive, such as RDX, HMX or HNS. The pellet density can be from, e.g., about 1.6 g/cm^3 (0.92 oz/in^3) to about 1.65 g/cm^3 (0.95 oz/in^3), to achieve a shock wave velocity greater than about 9,144 meters/sec (30,000 ft/sec), for example.

A shock wave of such magnitude can provide a pulse of pressure in the order of 27.6 Gpa (4×10^6 psi). It is the pressure pulse that expands the wall of the tubular. The pellets **640** can be compacted at a production facility into a cylindrical shape for serial, juxtaposed loading at the jobsite, as a column in the dual end firing explosive column tool **600**. The dual end firing explosive column tool **600** can be configured to detonate the explosive pellet column at both ends simultaneously, in order to provide a shock front from one end colliding with the shock front to the opposite end within the pellet column at the center of the column length. On collision, the pressure is multiplied, at the point of collision, by about four to five times the normal pressure cited above. To achieve this result, the simultaneous firing of the bi-directional detonation boosters **624**, **626** can be timed precisely in order to assure collision within the explosive column at the center. In an alternative embodiment, the expansion tool **600** may be a single end firing explosive column tool that includes a detonation booster at only one end of the explosive pellet column, so that the explosive column is detonated from only the one end adjacent the detonation booster, as discussed above, and so the configuration of the single end firing explosive column tool is similar to that of the dual end firing explosive column tool discussed herein.

Toward the upper end of the guide tube **616**, an adjustably positioned partition disc **620** can be secured by a set screw **621**. Between the partition disc **620** and the inside face **638** of the top sub **612** can be a timing spool **622**, as shown in FIG. **28**. A first bi-directional booster **624** can be located inside of the guide tube bore **616** at the proximal end thereof. One end of the first bi-directional booster **624** may abut against a bulkhead formed as an initiation pellet **612***a*. The first bi-directional booster **624** can have enough explosive material to ensure the requisite energy to breach the bulkhead. The opposite end of the first bi-directional booster **624** can comprise a pair of mild detonating cords **630** and **632**, which can be secured within detonation proximity to a small quantity of explosive material **625** (See FIG. **29**). Detonation proximity is that distance between a particular detonator and a particular receptor explosive within which ignition of the detonator will initiate a detonation of the receptor explosive. The detonation cords **630** and **632** can have the same length so as to detonate opposite ends of the explosive column of pellets **640** at the same time. As shown in FIGS. **28** and **30**, the first detonating cord **630** can continue along the guide tube **616** bore to be secured within a third bi-directional booster **626** that can be proximate of the explosive material **627**. A first window aperture **634** in the wall of guide tube **616** can be cut opposite of the third bi-directional booster **626**, as shown. As shown in FIGS. **28** and **29**, from the first bi-directional booster **624**, the second detonating cord **632** can be threaded through a second window aperture **636** in the upper wall of guide tube **616** and around the helical surface channels of the timing spool **622**. The timing spool, which is outside the cylindrical surface, can be helically channeled to receive a winding lay of detonation cord with insulating material separations between adjacent wraps of the cord. The distal end of second detonating cord **632** can terminate in a second bi-directional booster **628** that is set within a receptacle in the partition disc **620**. The position of the partition disc **620** can be adjustable along the length of the guide tube **616** to accommodate the anticipated number of explosive pellets **640** to be loaded.

To load the dual end firing explosive column tool **600**, the guide tube terminal **618** can be removed along with the resilient spacers **642** (See FIG. **30**). The pellets **640** of powdered, high explosive material, such as RDX, HMX or HNS, can be pressed into narrow wheel shapes. The pellets **640** may be coated/sealed, as discussed above. A central aperture can be provided in each pellet **640** to receive the guide tube **616** therethrough. Transportation safety may limit the total weight of explosive in each pellet **640** to, for example, less than 38.8 grams (600 grains) (1.4 ounces). When pressed to a density of about 1.6 g/cm^3 (0.92 oz/in^3) to about 1.65 g/cm^3 (0.95 oz/in^3), the pellet diameter may determine the pellet thickness within a determinable limit range.

The pellets **640** can be loaded serially in a column along the guide tube **616** length with the first pellet **640**, in juxtaposition against the lower face of partition disc **620** and in detonation proximity with the second bi-directional

booster **628**. The last pellet **640** most proximate of the terminus **618** is positioned adjacent to the first window aperture **634**. The number of pellets **640** loaded into the dual end firing explosive column tool **600** can vary along the length of the tool **600** in order to adjust the size of the shock wave that results from igniting the pellets **640**. The length of the guide tube **616**, or of the explosive column formed by the pellets, may depend on the calculations or testing discussed below. Generally, the expansion length of the wall of the tubular can be about two times the length of the column of explosive pellets **640**. In testing performed by the inventor, a 19.1 centimeters (7.5 inch) column of pellets **640** resulted in an expansion length of the wall of a tubular of 40.6 centimeters (16 inches) (i.e., a ratio of column length to expansion length of 1 to 2.13). Any space remaining between the face of the bottom-most pellet **640** and the guide tube terminal **618** due to fabrication tolerance variations may be filled, e.g., with resilient spacers **642**.

FIGS. **31-33** illustrate another embodiment of an expansion tool **600'**. The expansion tool **600'** in this embodiment is a modified pressure bearing pellet tool, and differs from the modified pressure balanced pellet tool of FIGS. **28-30** in that the modified pressure bearing pellet tool **600'** includes a housing **610** having an internal bore **611**, in which the guide tube **616** and explosive pellets **640** are provided. The internal bore **611** can be sealed at its lower end by a bottom nose **614**. The interior face of the bottom nose **614** can be cushioned with a resilient padding **615**, such as a silicon foam washer. In other respects, the modified pressure bearing pellet tool **600'** is similar to the modified pressure balanced pellet tool **600**, and so like components are similarly labeled in FIGS. **31-33**.

A method of selectively expanding at least a portion of the wall of a pipe or other tubular using the expansion tool described herein may be as follows. The expansion tool may be either the modified pressure balanced tool **600** of FIGS. **28-30**, or the modified pressure bearing tool **600'** of FIGS. **31-33**. The expansion tool is assembled by arranging a predetermined number of explosive pellets **640** on the guide tube **616**, which can to be in a serially-arranged column between the second and third bi-directional boosters **628**, **626**, so that the explosive pellets **640** are exposed to an outside of the expansion tool. The expansion tool is then positioned within a tubular T**1** that is to be expanded, as shown in FIG. **34**A.

As shown in FIG. **34**A, the tubular T**1** may be an inner tubular that is located within an outer tubular T**2**, such that an annulus "A" is formed between the outer diameter of the inner tubular T**1** and the inner diameter of the outer tubular T**2**. In some cases, the annulus "A" may contain material, such as cement, barite, other sealing materials, mud and/or debris. In other cases, the annulus "A" may not have any material therein. When the expansion tool **600**, **600'** reaches the desired location in the tubular T**1**, the bi-directional boosters **624**, **626**, **628** are detonated to simultaneously ignite opposing ends of the serially-arranged column of pellets **640** to form two shock waves that collide to create an amplified shock wave that travels radially outward to impact the inner tubular T**1** at a first location, and expand at least a portion of the wall of the tubular T**1** radially outward, as shown in FIG. **34**B, without perforating or cutting through the portion of the wall, to form a protrusion "P" of the tubular T**1** at the portion of the wall. The protrusion "P" extends into the annulus "A" between an outer surface of the wall of the inner tubular T**1** and an inner surface of a wall of the outer tubular T**2**. Note that the pipe dimensions shown in FIGS. **34**A to **34**C are exemplary and for context, and are not limiting to the scope of the invention.

The protrusion "P" may impact the inner wall of outer tubular T**2** after detonation of the explosive pellets **640**. In some embodiments, the protrusion "P" may maintain contact with the inner wall of the outer tubular T**2** after expansion is completed. In other embodiments, there may be a small space between the protrusion "P" and the inner wall of the outer tubular T**2**. Expansion of the tubular T**1** at the protrusion "P" can cause that portion of the wall of the tubular T**1** to be work-hardened, resulting in greater strength of the wall at the protrusion "P". Embodiments of the methods of the present invention show that the portion of the wall having the protrusion "P" is not weakened. In particular, the yield strength of the tubular T**1** increases at the protrusion "P", while the tensile strength of the tubular T**1** at the protrusion "P" decreases only nominally. Therefore, according to these embodiments, expansion of the tubular T**1** at the protrusion "P" thus strengthens the tubular without breaching the tubular T**1**.

The magnitude of the protrusion "P" can depend on several factors, including the length of the column of explosive pellets **640**, the outer diameter of the explosive pellets **640**, the amount of explosive material in the explosive pellets **640**, the type of explosive material, the strength of the tubular T**1**, the thickness of the wall of the tubular T**1**, the hydrostatic force bearing on the tubular T**1**, and the clearance adjacent the tubular T**1** being expanded, i.e., the width of the annulus "A" adjacent the tubular T**1** that is to be expanded.

One way to manipulate the magnitude of the protrusion "P" is to control the amount of explosive force acting on the pipe or other tubular member T**1**. This can be done by changing the number of pellets **640** aligned along the guide tube **616**. For instance, the explosive force resulting from the ignition of a total of ten pellets **640** is larger than the explosive force resulting from the ignition of a total of five similar pellets **640**. As discussed above, the length "L**1**" (see FIG. **34**C) of the expansion of the wall of the tubular T**1** may be about two times the length of the column of explosive pellets **640**. Another way to manipulate the magnitude of the protrusion "P" is to use pellets **640** with different outside diameters. The expansion tool discussed herein can be used with a variety of different numbers of pellets **640** in order to suitably expand the wall of pipes or other tubular members of different sizes. Determining a suitable amount of explosive force (e.g., the number of pellets **640** to be serially arranged on the guide tube **616**), to expand the wall of a given tubular T**1** in a controlled manner, can depend on a variety of factors, including: the length of the column of explosive pellets **640**, the outer diameter of the explosive pellets **640**, the material of the tubular T**1**, the thickness of a wall of the tubular T**1**, the inner diameter of the tubular T**1**, the outer diameter of the tubular T**1**, the hydrostatic force bearing on the tubular T**1**, the type of the explosive (e.g., HMX, HNS) and the desired size of the protrusion "P" to be formed in the wall of the tubular T**1**.

The above method of selectively expanding at least a portion of a wall of the tubular T**1** via an expansion tool may be modified to include determining the following characteristics of the tubular T**1**: a material of the tubular T**1**; a thickness of a wall of the tubular T**1**; an inner diameter of the tubular T**1**; an outer diameter of the tubular T**1**; a hydrostatic force bearing on the tubular T**1**; and a size of a protrusion "P" to be formed in the wall of the tubular T**1**. Next, the explosive force necessary to expand, without puncturing, the wall of the tubular T**1** to form the protrusion "P", is

calculated, or determined via testing, based on the above determined material characteristics.

The determinations and calculation of the explosive force can be performed via a software program, and providing input, which can then be executed on a computer. Physical hydrostatic testing of the explosive expansion charges yields data which may be input to develop computer models. The computer implements a central processing unit (CPU) to execute steps of the program. The program may be recorded on a computer-readable recording medium, such as a CD-ROM, or temporary storage device that is removably attached to the computer. Alternatively, the software program may be downloaded from a remote server and stored internally on a memory device inside the computer. Based on the necessary force, a requisite number of explosive pellets **640** to be serially added to the guide tube **616** of the expansion tool is determined. The requisite number of explosive pellets **640** can be determined via the software program discussed above.

The requisite number of explosive pellets **640** is then serially added to the guide tube **616**. After loading, the loaded expansion tool can be positioned within the tubular T**1**, with the last pellet **640** in the column being located adjacent the detonation window **634**. Next, the expansion tool can be actuated to ignite the pellets **640**, resulting in a shock wave as discussed above that expands the wall of the tubular T**1** radially outward, without perforating or cutting through the wall, to form the protrusion "P". The protrusion "P" can extend into the annulus "A" between an outer surface of the tubular T**1** and an inner surface of a wall of another tubular T**2**.

In a test conducted by the inventors using the dual end firing explosive column tool **600** to radially expand a pipe having a 6.4 centimeter (2.5 inch) wall thickness, an inner diameter of 22.9 centimeters (9.0 inches) and an outer diameter of 35.6 centimeters (14.0 inches), the expansion resulted in a radial protrusion measuring 45.7 centimeters (18.0 inches) in diameter. That is, the outer diameter of the pipe increased from 35.6 centimeters (14.0 inches) to 45.7 centimeters (18.0 inches) at the protrusion. The protrusion is a gradual expansion of the wall of the tubular T**1**. The more gradual expansion allows a greater expansion of the tubular T**1** prior to exceeding the elastic strength of the tubular T**1**, and failure of the tubular T**1** (i.e., the tubular being breeched).

The column of explosive pellets **640** can comprise a predetermined (or requisite) amount of explosive material sufficient to expand at least a portion of the wall of the pipe or other tubular into a protrusion extending outward into an annulus adjacent the wall of the pipe or other tubular. It is important to note that the expansion can be a controlled outward expansion of the wall of the pipe or other tubular, which does not cause puncturing, breaching, penetrating or severing of the wall of the pipe or other tubular. The annulus may be reduced between an outer surface of the wall of the pipe or other tubular and an outer wall of another tubular or a formation.

The protrusion "P" creates a ledge or barrier into the annulus that helps seal that portion of the wellbore during plug and abandonment operations in an oil well. For instance, a sealant, such as cement or other sealing material, mud and/or debris, may exist in the annulus "A" on the ledge or barrier created by the protrusion "P". The embodiments above involve using one column of explosive pellets **640** to selectively expand a portion of a wall of a tubular into the annulus. One option is to use two or more columns of explosive pellets **640**. The explosive columns may be spaced at respective expansion lengths which, as noted previously, can vary as a function of the length of the explosive column unique to each application. After the first protrusion is formed by the first explosive column, the additional explosive column is detonated at a desired location, to expand the wall of the tubular T**1** at a second location that is spaced from the first location and in a direction parallel to an axis of the expansion tool, to create a pocket outside the tubular T**1** between the first and second locations. The pocket is thus created by sequential detonations of explosive columns. In another embodiment, the pocket may be formed by simultaneous detonations of explosive columns. For instance, two explosive columns may be spaced from each other at first and second locations, respectively, along the length of the tubular T**1**. The two explosive columns are detonated simultaneously at the first and second locations to expand the wall of the tubular T**1** at the first and second locations to create the pocket outside the tubular T**1**, between the first and second locations.

Whether one or multiple columns of explosive pellets **640** are utilized, the method may further include setting a plug **19** below the deepest selective expansion zone, and then shooting perforating puncher charges through the wall of the inner tubular T**1** above the top of the shallowest expansion zone, so that there can be communication ports **21** from the inner diameter of the inner tubular T**1** to the annulus "A" between the inner tubular T**1** and the outer tubular T**2**, as shown in FIG. **34**C. Cement **23**, or other sealing material, may then be pumped to create a seal in the inner diameter of the inner tubular T**1** and in the annulus "A" through the communication ports **21** between the inner tubular T**1** and the outer tubular T**2**, as shown in FIG. **34**C. The cement **23** is viscus enough that, even if there is only a ledge/restriction (formed by the protrusion P**1**), the cement **23** should be slowed down long enough to set up and seal. When the cement **23** is pumped into the annulus "A", any and all material, (e.g., cement, mud, debris), will likely help effect the seal. One reason multiple columns of explosive pellets **640** may be used is the hope that if a seal is not achieved in the annulus "A" at the first ledge/restriction (formed by the protrusion P**1**), the seal may be provided by the additional ledge/restriction (formed by the additional protrusion). If the seal in the annulus "A" cannot be effected, the operator must cut the inner tubular T**1** and retrieve it to the surface, and then go through the same plug and pump cement procedure for the outer tubular T**2**. Those procedures can be expensive.

The methods discussed herein have involved selectively expanding a wall of tubular while the tubular is inside of a wellbore. A variation of the embodiments discussed herein includes a method of selectively expanding a wall of tubular outside of the wellbore before the tubular is inserted into the wellbore. This variation may be carried out with the various expansion tools discussed herein. The various expansion tools discussed herein can be used to selectively expand the wall of tubular outside of the wellbore. The amount of explosive material used in this variation may be based upon the physical aspects of the tubular, the nature and conditions of the wellbore in which the tubular will subsequently be inserted, and upon the type of function the selectively expanded tubular is to perform in the wellbore. The selective expansion of the tubular may occur, for example, at a facility offsite from the location of the actual wellbore. The selectively expanded tubular may be inspected to confirm dimensional aspects of the expanded tubular, and then be transported to the wellsite for insertion into the wellbore. For instance, a method of selectively expanding a wall of a tubular may involve positioning an expansion tool within the

tubular, wherein the expansion tool contains an amount of explosive material for producing an explosive force sufficient to expand, without puncturing, the wall of the tubular. Next, the expansion tool may be actuated to expand the wall of the tubular radially outward, without perforating or cutting through the wall of the tubular, to form a protrusion that extends outward from the central bore of the tubular. The selectively expanded tubular may then be subsequently inserted into a wellbore.

Because wellbore conditions and the physical properties of the tubular within the wellbore vary from wellbore to wellbore, it may be desirable to tailor the physical or compositional make-up (e.g., type, amount, size) of an expansion charge to the specific tubular and conditions in the wellbore at which the expansion charge is to be used. Pre-testing expansion charges to be deployed based on the specific conditions that exist in a wellbore and/or physical properties of the tubular in the wellbore is helpful to ensure beforehand that the expansion charge will provide an adequate or desired wall expansion (e.g., protrusion) of the wellbore tubular, without perforating or cutting through, when the expansion charge is actuated in the wellbore.

FIGS. **35**A-**35**D illustrate systems for pre-testing an expansion charge on a test tubular **704** according to some embodiments. Each system may be situated at a location other than the actual wellbore in the field. For instance, the systems may be provided at a test facility. FIG. **35**A shows a pre-testing system **700** that includes a cylindrically-shaped pressure vessel **701**. In an exemplary embodiment, the pressure vessel **701** may be 14 inch outer diameter, 9 inch inner diameter, 10 foot long P**110** tubular. A bottom end of the pressure vessel **701** may include a cushion element **702**, and a bottom high pressure head **706** as illustrated in FIG. **35**A. The cushion element **702** may help protect the bottom of a junk basket **703** (discussed below), and may be a 2.5 inch solid rubber disc according to one embodiment. Other types of plugs may be used to plug the pressure vessel **701**. The top end of the pressure vessel **701** may include an upper high pressure head **707** that includes a high pressure autoclave port **707**A and a fluid-to-air connector **707**B. The high pressure autoclave port **707**A receives a high pressure hose **708** that is connected to an autoclave high pressure pump **709** for pressurizing the pressure vessel **701**. The high pressure hose **708** may have a rating of 60,000 psi. A junk basket **703** may be provided within the pressure vessel **701** to contain debris after testing is completed. A test tubular **704** may be inserted into the pressure vessel **701** to be centrally positioned mid-vessel and within the junk basket **703**. An expansion charge **705** of an expansion charge tool (not shown) may be inserted into the test tubular **704** that is within the pressure vessel **701**, and may be positioned centrally in the middle of the test tubular **704**. In some embodiments, the expansion charge **705** may be positioned to be decentralized in the test tubular **704** if centralization is not possible, or if decentralization is desired. The pre-testing system **700** may be used to test whether the expansion charge **705** will sufficiently expand, without perforating or cutting through, the wall of the test tubular **704** before a similar expansion charge **705** is used to selectively expand the wall of a tubular in a wellbore in the field.

In this regard, the pre-testing system **700** may be used to simulate or reproduce conditions that exist in the onsite wellbore, namely the hydrostatic pressure and the fluid/gas medium present, so that the tested expansion charge **705** can be designed and manufactured to have a similar or the same effect when used on a tubular in the onsite wellbore. For instance, the pressure vessel **701** may be filled with air, water, nitrogen, drilling fluid, completion fluid, acidizing fluid, salt water, and/or fresh water to match or represent the environment (e.g., air, water, nitrogen, drilling fluid, completion fluid, acidizing fluid, salt water, and/or fresh water) that exists in onsite wellbore. The autoclave high pressure pump **709** may then pressurize the pressure vessel **701** (e.g., using the same material) to a hydrostatic pressure that exists at a depth in the onsite wellbore where the wall of the wellbore tubular is to be expanded. In addition, the physical characteristics the test tubular **704** may, in some cases, be the same or similar to those of the actual tubular in the onsite wellbore. In a preferred embodiment, a new tubular having the same or similar physical characteristics, such as material type, size, grade, weight, wall thickness, outer diameter, and inner diameter, to the actual tubular in the onsite wellbore may be used as the test tubular **704**. As an example, test tubular **704** may be a 5.5 inch outer diameter, 0.244 inch thick, 14.0 ppf, J-55 tubular. In addition, the pre-testing system **700** may be used under conditions that are transferrable to a downhole application. For instance, pre-testing in a pressure vessel **701** or in a water tank or open water with different conditions than exist downhole in the onsite wellbore can produce results that, with manipulation to the design of the expansion charge **705** or other conditions based on the test results, can transferred to the downhole application. That is, the manipulated expansion charge or other conditions can have the same or similar effect, or other desired effect, when used on a tubular in the onsite wellbore of the downhole application.

The pre-testing system **700** illustrated in FIG. **35**A may be characterized as an "unconfined" system because the outer surface of the test tubular **704** is exposed to the fluid/gas medium within the pressure vessel **701**, rather than being encased in cement, sand, another solid material, and/or another tubular, in the pressure vessel **701**. In an embodiment, an as-new tubular as the test tubular **704** is tested in an "unconfined" system as a safety factor against breaching the actual tubular in the onsite wellbore. If the expansion charge **705** does not rupture the as-new test tubular **704** in the "unconfined" system (i.e., with no confinement), then the same expansion charge **705** should not rupture the actual tubular which has some confinement in the onsite wellbore (e.g., confinement by cement, sand, another material, and/or another tubular, in the onsite wellbore). This is especially the case if the mechanical properties of the actual tubular in the onsite wellbore have not been significantly reduced by corrosion, etc. In addition, if the expansion charge does not rupture the test tubular that is at zero or relatively low pressure, then the same expansion charge should not rupture the actual tubular in the wellbore that is subject to relatively large pressure.

FIG. **35**B illustrates an example of a "confined" pre-testing system **700**A. The "confined" pre-testing system **700**A differs from the "unconfined" pre-testing system **700** in that the test tubular **704** is encased in the pressure vessel **701** with a material **710** such as cement, sand, or other material that encases the actual tubular in the onsite wellbore. Further, the material **710** may be surrounded by a second tubular **711** to simulate or represent conditions of the material **710** in the onsite wellbore. In an embodiment, the material **710** may be Portland Cement having a **100**/**44** cement to water ratio or another ratio. However, a material other than Portland Cement can be used to confine the test tubular **704**. Moreover, the test tubular **704** can be confined 100% or less as required to simulate or represent downhole wellbore conditions. In the embodiment of FIG. **35**B, the test tubular **704** may be a 3.5 inch outer diameter, 0.254 inch

thick, 9.2 ppf, L-80 tubular that is 4 feet long. The second tubular **711** may be a 7.0 inch outer diameter, 0.237 inch thick, 26 ppf, L-80 tubular that is 4 feet long. However, the test tubular **704** and the second tubular **711** may have different sizes than discussed above as needed to better represent conditions in the onsite wellbore. The "confined" pre-testing system **700**A may be used when it is determined that the "unconfined" test is radically different than the actual downhole environment (i.e., the fluid/gas medium downhole). In another embodiment, the "confined" pre-testing system **700**A may be used when the pressure acting on the tubular in the onsite wellbore is less than or equal to 5000 psi. This may be the case for onsite wellbores having a gaseous environment, such a nitrogen, or gases having a similar atomic weight as nitrogen. In a further embodiment, the "confined" pre-testing system **700**A may be used to determine how much explosive material is needed to close one or more channels that exist in a cemented annulus adjacent the tubular in the onsite wellbore. This may be the case in, for example, in a highly deviated or horizontal well, in which gravity prevents adequate cement flow at the top portion of the horizontal annulus. The lack of adequate cement flow may result in formation of a channel in the cement at the top portion.

FIG. **35**C shows an embodiment of an "unconfined" pre-testing system **700** in which multiple expansion charges **705** are tested on the test tubular **704** simultaneously or sequentially, for jobs in which more than one expansion charge (or explosive units **60**) are to be used as discussed herein (see, e.g., FIGS. **2**G to **2**I). FIG. **35**D shows an embodiment of a "confined" pre-testing system **700**A in which multiple expansion charges **705** are tested on the test tubular **704** simultaneously or sequentially, for jobs in which more than one expansion charge (or explosive units **60**) are to be used as discussed herein (sec, e.g., FIGS. **2**G to **2**I).

The pre-testing systems **700**, **700**A discussed above may be used to implement a method of determining an expansion charge able to selectively expand, without perforating or cutting through, a portion of a wall of a tubular in an onsite wellbore. The method may include determining conditions in the onsite wellbore. The conditions may include, among other things, the fluid/gas medium in the wellbore, hydrostatic pressure bearing on the tubular in the onsite wellbore, and at least one physical characteristic of the tubular. For instance, the method may include determining whether the fluid/gas medium in the onsite wellbore comprises air, water, nitrogen, drilling fluid, completion fluid, acidizing fluid, salt water, fresh water and/or combinations thereof. The determined conditions may be reproduced, simulated, accounted for, or otherwise factored into the pre-testing systems **700**, **700**A discussed herein. As an example, if the fluid/gas medium in the onsite wellbore includes acidizing fluid, then the pressure vessel **701** may be filled with acidizing fluid to help simulate in the pressure vessel **701** the conditions existing in the onsite wellbore. Physical characteristics of the tubular in the onsite wellbore that may be determined can include the material of the tubular, the grade, the weight, the inner diameter, and the outer diameter. The test tubular **704** in the pre-testing systems **700**, **700**A may have the same or similar physical characteristics as the actual tubular in the onsite wellbore, and may be new. In some embodiments, the test tubular **704** in the pre-testing systems **700**, **700**A may be a used tubular from the onsite wellbore, if available. As discussed above, using a new tubular in the "unconfined" testing system **700** may serve as a safety factor against breaching the actual tubular in the onsite wellbore because if the expansion charge **705** does not rupture the new test tubular **704**, then the same expansion charge **705** should not rupture the actual tubular in the onsite wellbore, which actual tubular will likely have at least some confinement (or greater pressure), so long as the mechanical properties of the actual tubular are not significantly reduced by corrosion, etc.

When the pressure acting on the tubular in the onsite wellbore is relatively low, for example, less than or equal to 5000 psi, the method may involve providing the test tubular **704** in the "confined" pre-testing system **700**A configuration discussed above. This may be the case for onsite wellbores having a gaseous environment, such a nitrogen, or gases having a similar atomic weight as nitrogen. As discussed above, the test tubular **704** in the "confined" pre-testing system **700**A may be encased in the pressure vessel **701** with a material **710** such as cement, sand, or other material that encases the actual tubular in the onsite wellbore. That is, the annulus adjacent an outer surface of the test tubular **704** contains a solid material, such as cement, sand, or other material that encases the actual tubular in the onsite wellbore. Further, the material **710** may be surrounded by a second tubular **711** as discussed above. When the pressure acting on the tubular in the onsite wellbore is greater than 5000 psi, the method may involve providing the test tubular **704** in the "unconfined" pre-testing system **700** configuration discussed above. In that case, the test tubular **704** may be unconfined such that the outer surface of the test tubular **704** is exposed to the fluid/gas medium within the pressure vessel **701**. That is, the annulus adjacent the outer surface of the test tubular **704** contains no solid material, rather than being encased in cement, sand, another solid material, and/or another tubular, in the pressure vessel **701**.

In some cases, the method may include determining beforehand the size of a protrusion to be formed in the wall of the tubular in the onsite wellbore. This determination may be based on the type of the onsite wellbore and/or the oilfield job (e.g., plug and abandon) to be performed on tubular in the onsite wellbore. Knowing beforehand the size of the protrusion to be formed in the wall of the tubular may help determine the size, explosive gram weight, material, and/or other physical characteristic discussed herein of the expansion charge **705** to be used in the pre-testing systems **700**, **700**A, and eventually in the tubular of the onsite wellbore. For instance, relatively larger protrusions may require a relatively larger size and higher explosive gram weight expansion charge. The expansion charge **705** may be a shaped charge for use in a shaped charged expansion tool, and may comprise embodiments of the shaped charges discussed herein. For relatively larger tubulars (i.e., having thicker walls), and/or multiple nested pipes, a dual-end firing explosive column tool may be used.

The method further includes determining a test expansion charge **705** that is able to expand, without perforating or cutting through, the wall of the test tubular **704**, based on at least one of the conditions determined in the wellbore. In some embodiments, determining a test expansion charge **705** may include determining a size and an explosive gram weight of test expansion charge **705** that is able to expand, without perforating or cutting through, the wall of the test tubular **704**. Determining a test expansion charge **705** may also include determining a shape, or other characteristic of expansion charges discussed herein. In some embodiments, these determinations may be made based on tests, or a history of tests, that are conducted in trial-and-error processes. For instance, a record of tests (such as Tests #1 to #16 discussed below) can be stored in a library of test data used to forecast or predict expansion results. The record may include test results that are organized and/or retrievable

according to wellbore type, wellbore conditions, oilfield job type, tubular size and type, expansion charge type, expansion charge size, expansion charge explosive gram weight, type of explosive material, and other characteristic discussed herein. The test expansion charge **705** may be determined by reviewing the library of test data and focusing on a test result having one or more similar conditions (e.g., with respect to the fluid/gas medium in the wellbore, hydraulic pressure in the wellbore, and physical characteristics of the tubular in the wellbore, among other conditions discussed herein) as the onsite wellbore for which the test expansion charge **705** is being designed.

Once the test expansion charge **705** is determined, the test expansion charge **705** may be positioned within the test tubular **704** in the pressure vessel **701**. The test expansion charge **705** is then actuated, in a manner discussed herein, to expand the wall of the test tubular **704** radially outward, without perforating or cutting through the wall of the test tubular **704**, to form a test protrusion in the wall of the test tubular **704**. Depending on the size, shape or other physical characteristic of the test protrusion, the test expansion charge **705** may be selected as the expansion charge for expanding, without perforating or cutting through, the portion of the wall of the actual tubular in the onsite wellbore. Or, if the size, shape or other physical characteristic of the test protrusion was determined to be a failure (e.g., a breach of the tubular on one hand or not enough expansion on the other hand), a different expansion charge may be selected for expanding, without perforating or cutting through, the portion of the wall of the actual tubular in the onsite wellbore. As discussed above, the test expansion charge **705** may be selected based on a particular size and/or explosive gram weight of the test expansion charge **705**, or on another characteristic of the test expansion charge **705** evident from testing the test expansion charge. In some embodiments, a particular size and/or explosive gram weight for the actual expansion charged used to expand the actual tubular in the onsite wellbore may be selected based on the performance of the test expansion charge **705**. The methods discussed above may further include, using the principles discussed above, determining a test expansion charge **705** that is able to expand, without perforating or cutting through, both the wall of the test tubular **704** and the wall of the second tubular **711**, with a single actuation of the test expansion charge **705**, to provided nested protrusions as discussed with respect to FIGS. **2**M to **2**P above.

The following describes some tests that were conducted by the inventor to determine an expansion charge able to expand, without perforating or cutting through, the wall of a particular tubular. Specifically, Tests #1 to #16 were conducted to determine the size (e.g., outer diameter, "O.D.") and explosive gram weight required in an expansion charge to expand a 3.5 inch O.D., 9.20 ppf, L-80 tubular to the targeted diameter of 4.000 inch in different environments (e.g. air, water, nitrogen). The sizes (O.D.) and explosive gram weights of the expansion charges that were tested were: (a) 2.188 inch O.D.; 34-50 grams HMX; and (b) 2.125 inch O.D.; 22-40 grams HMX. The target expansion diameter for the 3.5 inch O.D. tubular was 0.25 inches on the radius. The tests were conducted in ambient temperature. A 10 foot pressure vessel and a 42 inch pressure vessel were used in the tests. The set up for each pressure vessel was as follows:

The 10 foot pressure vessel: (a) 14 inch O.D.×9 inch I.D.×10 foot long, P**110** pressure vessel; (b) 3.5 inch O.D.× 0.254 inch wall thickness, 9.2 ppf, L-80 target tubular, 4 foot long positioned mid vessel and centralized; (c) 2.188 inch or 2.125 inch expansion charge centralized in the middle of the 3.5 inch O.D. tubular; (d) 102 inch working length inside the of the pressure vessel; and (e) junk baskets that were (i) 8⅝ inch O.D.×8 inch I.D.×8 feet long; and (ii) 8⅝ inch O.D.×6 inch I.D.×8 feet long.

The 42 inch pressure vessel: (a) 14 inch O.D.×9 inch I.D.×42 inch long, P**110** pressure vessel; (b) 3.5 inch O.D.× 0.254 inch wall thickness, 9.2 ppf, L-80 target tubular, 24 inches long positioned mid vessel and centralized; (c) 2.125 inch expansion charge centralized in the middle of the 3.5 inch O.D. tubular; (d) 24 inch working length inside the vessel; and (e) junk baskets that were (iii) 8⅝ inch O.D.×6 inch I.D.×24 inches long; and (iv) 8⅝ inch O.D.×4½ inch I.D.×24 inches long.

To begin with, three pre-tests were conducted at 0 psi in a spent 14 inch O.D.×9 inch I.D.×10 foot long pressure vessel with a 2.188 inch expansion charge, with the following results.

TABLE 3

Wall Thickness (in)	Test #	Explosive Subassembly	Explosive Gram Weight	Housing O.D. (in)	Expansion Diameter (in)	Target Length (in)	PSI	Atmosphere	Junk Basket
0.254	1	2188TEXP	50	2.188	Failed	48	0	Water	(i)
0.254	2	2188TEXP	34	2.188	4.196	48	0	Water	(i)
0.254	3	2188TEXP	34	2.188	Failed	48	0	Air	(ii)

The results of these tests show that at 0 psi in water (Test #2), the test tubular was expanded to 4.196 inches O.D. In addition, the 14 inch×9 inch×10 foot long reusable vessel can be used to conduct the 1,000 psi nitrogen test, as the vessel stayed intact during Test #3 (0 psi in air). Test #3 showed that the 34 gram, 2.188 inch expansion charge breached (i.e., split) the tubular such that the expansion "failed". Loading a smaller expansion charge, for example, a 2.125 inch expansion, with 18 grams to 22 grams of explosive, instead of 34 grams, may reach the target expansion at 1,000 psi in nitrogen. Further tests were conducted to optimize the expansion in air at 0 psi with a 2.125 inch expansion charge and different explosive gram weights.

TABLE 4

Wall Thickness (in)	Test #	Explosive Subassembly	Explosive Gram Weight	Housing O.D. (in)	Expansion Diameter (in)	Target Length (in)	PSI	Atmosphere	Junk Basket
0.254	4	2125TEXP	22	2.125	3.814	48	0	Air	(ii)
0.254	5	2125TEXP	26	2.125	Failed	48	0	Air	(ii)
0.254	6	2125TEXP	24	2.125	3.883	48	0	Air	(ii)
0.254	7	2125TEXP	25	2.125	Failed	48	0	Air	(ii)

These test results show that the 3.838 inch O.D. expansion in air at 0 psi is not far from the 4.000 inch expansion target, but not so close to the 4.196 inch O.D. expansion achieved when tested in water at 0 psi. It is noted that water as the atmosphere offers some confinement and would slow down the speed of the pressure wave front of the expansion charge. More tests were conducted, this time with a nitrogen atmosphere at 1,000 psi and with a 24 gram expansion charge, with the following results.

TABLE 5

Wall Thickness (in)	Test #	Explosive Subassembly	Explosive Gram Weight	Housing O.D. (in)	Expansion Diameter (in)	Target Length (in)	PSI	Atmosphere	Junk Basket
0.254	8	2125TEXP	24	2.125	Failed	24	1000	Nitrogen	(iii)
0.254	9	2125TEXP	24	2.125	3.887	48	1000	Nitrogen	(ii)
0.254	10	2125TEXP	24	2.125	Failed	24	1000	Nitrogen	(iv)
0.254	11	2125TEXP	25	2.125	Failed	48	1000	Nitrogen	(ii)

Test #8 was conducted in the shorter 42 inch pressure vessel in order to minimize the volume of nitrogen, and the expansion failed. Test #9 was conducted in the 10 foot pressure vessel, and the expansion was similar to the expansion in Test #6 in air at 0 psi. Test #10 was conducted in the 42 inch pressure vessel with a 4.5 inch I.D. junk basket, and the expansion also failed. In Test #11, the 25 gram weight expansion charge failed in nitrogen at 0 psi.

Tests #12 to #16 were conducted with the 3½ inch target tubular cemented, with Portland cement (100/44 cement to water ratio), inside of 7 inch O.D.×6.526 inch I.D.×4 foot long, 26 ppf, L-80 tubular. No significant voids existed in the cement as the 4 foot targets were poured in the vertical position. After the test shots the 7 inch O.D. outer tubular was cut off with a torch to retrieve the 3½" O.D. tubular for measurements. After the test shots, the 7 inch O.D. outer tubular showed no expansion. On each end the cement in the annulus had extruded around ⅛ inches.

TABLE 6

Wall Thickness (in)	Test #	Explosive Subassembly	Explosive Gram Weight	Housing O.D. (in)	Expansion Diameter (in)	Target Length (in)	PSI	Atmosphere	Junk Basket
0.254	12	2188TEXP	34	2.188	4.000	48	0	Water	(i)
0.254	13	2125TEXP	24	2.125	3.680	48	1000	Nitrogen	(i)
0.254	14	2125TEXP	28	2.125	3.706	48	1000	Nitrogen	(i)
0.254	15	2125TEXP	34	2.125	3.788	48	1000	Nitrogen	(i)
0.254	16	2125TEXP	40	2.125	3.817	48	1000	Nitrogen	(i)

The above described test procedures and processes may be helpful in determining beforehand, based on the specific conditions that exist in a wellbore and/or physical properties of the tubular set in the onsite wellbore, a specific expansion charge that is to be used on the tubular in that onsite wellbore. A specific expansion charge can be designed based on those conditions to ensure that the expansion charge sufficiently expands, without perforating or cutting through, the wall of the tubular in the onsite wellbore. As the actual conditions determined in the onsite wellbore can be simulated, reproduced, factored in, or otherwise accounted for, the above-described pre-testing may help ensure that the expansion charge provides an adequate or desired wall expansion (e.g., protrusion) of the wellbore tubular when the expansion charge is actuated in the onsite wellbore.

The pre-testing discussed above with respect to FIGS. **35**A to **35**D involved positioning the test tubular **704** inside of a pressure vessel **701** to determine the maximum explosive load that can be used to generate the largest outer diameter expansion without breaching the tubular. To reduce costs and the amount of resources associated with testing inside of the pressure vessel **701**, as well any anomalous effects of simulated testing within a sealed vessel which may skew actual results downhole in the wellbore, a tubular may be tested in an open tank or in an open body of water. Typically, when there is a need to expand relatively heavy wall pipe, larger diameter pipes, and multiple pipes cemented together, the hydrostatic pressures downhole are relatively low, e.g., 2,000 psi or less. Testing in an open water tank at 0 psi may reflect a similar expansion to what one might expect in the downhole application. Under hydrostatic pressure downhole, the expansion may be slightly less. Thus, testing in the open water tank may represent another "safety factor" as discussed herein, because the actual downhole expansion should not exceed that observed from a test in the open water tank.

FIGS. **36**A and **36**B illustrate the results of a first test of nested tubulars T**1**, T**2**, T**3** submerged in 2.5 feet of water in an open tank at ambient temperature. Innermost tubular T**1**

was a 5.5 inch, #20, P-110 pipe with a 0.361 inch wall thickness. Intermediate tubular T2 was a 7.625 inch, #26, L-80 pipe with a 0.328 inch wall thickness. Outermost tubular T3 was a 9.625 inch, #52.5, P-110 pipe with a 0.545 inch wall thickness. Intermediate tubular T2 was cemented between the innermost tubular T1 and the outermost tubular T3 via Portland cement C, C2 as shown in FIG. 36A. The expansion tool used in the test was a 1.750 inch (outer diameter) by 9 inch long explosive column Dual End Fired Expansion Charge (DEFEC). The total explosive weight was 493 grams HMX. The DEFEC was inserted into the central bore of the innermost tubular T1 of the submerged, nested tubulars in the open tank, and actuated one single time to determine whether detonating the explosive column would expand, without perforating or cutting through, portions of the walls of the nested tubulars T1, T2, T3 in a manner as discussed herein.

As a result of the single detonation of the 1.750 inch (outer diameter) by 9 inch long explosive column, protrusion P1 was formed in the wall of the innermost tubular T1 without perforating or cutting through the innermost tubular T1. FIG. 36B is a cross-sectional view of the nested tubulars T1, T2, T3 along line BB in FIG. 36A after the detonation, and shows that the outer diameter of the innermost tubular T1 at the protrusion P1 was increased from 5.5 inches to 6.320 inches. Protrusion P2 was formed in the wall of the intermediate tubular T2 without perforating or cutting through the intermediate tubular T2. FIG. 36B shows that the outer diameter of the intermediate tubular T2 at the protrusion P2 was increased from 7.625 inches to 8.168 inches. Protrusion P3 was formed in the wall of the outermost tubular T3 without perforating or cutting through the outermost tubular T3. FIG. 36B shows that the outer diameter of the outermost tubular T3 at the protrusion P3 was increased from 9.625 inches to 10.413 inches. In addition, the cement "C" in the annulus between the innermost tubular T1 and the intermediate tubular T2 was compressed "CC" by the protrusion P1 of the innermost tubular T1. The compression reduced the porosity of the cement "CC" by reducing the number of pores, channels, or other cement imperfections allowing annulus leaks, as discussed herein. Further, the cement "C2" in the annulus between the intermediate tubular T2 and the outermost tubular T3 was compressed "CC2" by the protrusion P2 of the intermediate tubular T2. The compression reduced the porosity of the cement "CC2" by reducing the number of pores, channels, or other cement imperfections allowing annulus leaks, as discussed herein. The pre-testing of the nested tubulars T1, T2, T3 in FIGS. 36A and 36B was thus successful.

FIGS. 37A and 37B illustrate the results of a second test of nested tubulars T1, T2, T3 also submerged in 2.5 feet of water in an open tank at ambient temperature. Like the in the first test, the innermost tubular T1 was a 5.5 inch, #20, P-110 pipe with a 0.361 inch wall thickness. Intermediate tubular T2 was a 7.625 inch, #26, L-80 pipe with a 0.328 inch wall thickness. Outermost tubular T3 was a 9.625 inch, #52.5, P-110 pipe with a 0.545 inch wall thickness. Intermediate tubular T2 was cemented between the innermost tubular T1 and the outermost tubular T3 via Portland cement C, C2 as shown in FIG. 37A. The difference between the second test and the first test was that the second test used a 2.000 inch (outer diameter) by 9 inch long explosive column DEFEC having a total explosive weight of 655 grams HMX. In the second test, the DEFEC was inserted into the central bore of the innermost tubular T1 of the submerged, nested tubulars in the open tank, and actuated one single time to determine whether detonating the explosive column would expand, without perforating or cutting through, portions of the walls of the nested tubulars T1, T2, T3 in a manner as discussed herein.

As a result of the single detonation of the 2.000 inch (outer diameter) by 9 inch long explosive column, protrusion P1 was formed in the wall of the innermost tubular T1, but the wall at the protrusion P1 was breached. This indicates a pre-testing failure with respect to the innermost tubular T1. FIG. 37B is a cross-sectional view of the nested tubulars T1, T2, T3 along line BB in FIG. 37A after the detonation, and shows that the outer diameter of the innermost tubular T1 at the protrusion P1 was breached "BR". Protrusion P2 was formed in the wall of the intermediate tubular T2 without perforating or cutting through the intermediate tubular T2. FIG. 37B shows that the outer diameter of the intermediate tubular T2 at the protrusion P2 was increased from 7.625 inches to 8.345 inches. Protrusion P3 was formed in the wall of the outermost tubular T3 without perforating or cutting through the outermost tubular T3. FIG. 37B shows that the outer diameter of the outermost tubular T3 at the protrusion P3 was increased from 9.625 inches to 10.640 inches. In addition, the cement "C" in the annulus between the innermost tubular T1 and the intermediate tubular T2 was compressed "CC" by the breached protrusion P1 of the innermost tubular T1. Further, the cement "C2" in the annulus between the intermediate tubular T2 and the outermost tubular T3 was compressed "CC2" by the protrusion P2 of the intermediate tubular T2. The compression reduced the porosity of the cement "CC2" by reducing the number of pores, channels, or other cement imperfections allowing annulus leaks, as discussed herein.

FIG. 38 illustrates an explosive downhole tool 900 having a conventional design for attempting to minimize debris in a wellbore. The explosive downhole tool 900 has a top sub 912 and three explosive units 920 spaced axially from each other along the length of the explosive downhole tool 900. Adjacent explosive units 920 are connected to each other via a truss-like structure formed of web braces 935 having a relatively small mass. The relatively small mass is designed to result in less material that forms debris after the explosive downhole tool 900 is actuated. The material forming the web braces 935 is in some cases high strength S7 steel or equivalent in order to withstand bending forces or torsional loads on the explosive downhole tool 900 from conveyance into or out of the wellbore. While the truss-like structure is designed to more easily break apart upon detonation of the explosive units 920 into smaller pieces, the amount of the debris from the broken web braces 935 may still accumulate or cause an obstruction that restricts other tools from being subsequently run in the wellbore, or may obstruct the flow of oil and gas up the wellbore in a producing well.

FIGS. 39A to 39E illustrate an explosive downhole tool 811 comprising an improved design for minimizing debris in a wellbore, according to an embodiment. The design of the explosive downhole tool 811 also helps improve conveyance of the explosive downhole tool 811 in a wellbore. The explosive downhole tool 811 includes a first explosive housing 820*a* connected to a top sub 812. The top sub 812 may be similar to and/or include the features and associated components of the top sub 12 of the tool 10 discussed herein above. The first explosive housing 820*a* includes an explosive charge 860 designed and including a predetermined amount of explosive to selectively expand, without puncturing, a wall of a tubular into a protrusion extending outward into an annulus adjacent the wall of the tubular as discussed herein above. In another embodiment, the explosive charge 860 may have a design (e.g., with a liner) and

include a predetermined amount of explosive for cutting or severing a wall of a tubular. In either case, the explosive charge **860** may be a shaped charged as discussed herein above. Alternatively, the explosive charge **860** may have a design and a predetermined amount of explosive for both cutting a wall on one side of a tubular and expanding the wall on another side or opposite side of the tubular. In this regard, it is understood that the explosive charges **860** discussed herein are of the type that can cut a wall of a tubular or selectively expand a wall of tubular, but are not of the type used for perforating a wall of a tubular or other function in a tubular. As discussed herein above, the top sub **812** may include components, such as a detonator or other explosive component, for igniting the explosive charge **860** in the first housing **820***a*

A second housing **820***b* may be spaced axially from the first housing **820***a* along a length of the explosive downhole tool **811**, and a third housing **820***c* spaced axially from the second housing **820***b* along the length of the downhole tool **811**, as shown in FIG. **39**A. The spacing between the housings may be equal (a shown in FIG. **39**A) or varied along the length of the downhole tool **811**. The second housing **820***b* and the third housing **820***c* may be the same or similar in design as the first housing **820***a*, and may each include the same or similar explosive charge **860** as the first housing **820***a*. In an embodiment, the distance between the first housing **820***a* and the second housing **820***b* and between the second housing **820***b* and the third housing **820***c* is about 10 inches as measured between the center of the window section **824** (or apex of the explosive charge **860**) had by each of the first, second and third housings **820***a*, **820***b*, **820***c*. However, the distance between the first housing **820***a* and the second housing **820***b* and between the second housing **820***b* and the third housing **820***c* is not particularly limiting, and may be more or less than about 10 inches. The length of the downhole tool **811** as measured from the top end of the top sub **812** to the bottom of the third housing **820***c* may be about 27 inches, according to one embodiment. However, length of the downhole tool **811** as measured from the top end of the top sub **812** to the bottom of the third housing **820***c* may be more or less than 27 inches. The downhole tool **811** may include an intermediate connector **814** between the first housing **820***a* and the second housing **820***b* and between the second housing **820***b* and the third housing **820***c*. The intermediate connector **814** may have the shape of a hollow tube to accommodate components, such as a detonation cord, for igniting the explosive charge **860** in each of the second housing **820***b* and the third housing **820***c*. In another embodiment, the intermediate connector **814** may have another polygonal or geometric shape with an internal cavity to accommodate the components for igniting the explosive charge **860**. The intermediate connector **814** may be formed of a dissolvable material that is designed to dissolve in fresh water and brine solutions that are common in oil and gas wellbores. As an example, the dissolvable material may be a magnesium alloy, such as TervAlloy™ 3241 manufactured by Terves Inc. Each of the first, second and third housings **820***a*, **820***b*, **820***c* may also be formed of dissolvable material. The dissolvable material may be a magnesium alloy, such as TervAlloy™ **3241** manufactured by Terves Inc. Forming the intermediate connector **814** and/or first, second and third housings **820***a*, **820***b*, **820***c* of dissolvable material provides that very little to zero debris from the intermediate connector **814** and/or the housings **820***a*, **820***b*, **820***c* remain in the well after detonation of the explosive charges **860**. Further, the first, second and third housings **820***a*, **820***b*, **820***c* may be formed of a frangible material that is designed to easily break into relatively small pieces for reducing debris after the explosive downhole tool **811** is actuated.

The explosive downhole tool **811** further includes an intermediate guide **816** between the first housing **820***a* and the second housing **820***b*. Another intermediate guide **816** may be provided between the second housing **820***b* and the third housing **820***c*, as shown in FIG. **39**A. As shown in FIGS. **39**A, **39**B and **39**C, the intermediate guide **816** may comprise a plurality of fins **818** spaced radially from each other around an axis **813** of the explosive downhole tool **811** and/or of the intermediate guide **816**. In the illustrated embodiment, the intermediate guide **816** includes four fins **818**. However, the number of fins **818** is not particularly limiting, and the intermediate guide **816** in other embodiments may include two, three, or five or more fins **818**. Each of the plurality of fins **818** may extend from one of the housings **820***a*, **820***b*, **830***c*, and may comprise a height **819** relative to the axis **813** that decreases in a direction away from the respective first housing **820***a*, **820***b*, **820***c*. For instance, the fins **818** may each be triangular shaped. In another embodiment, the fins **818** may have a parabolic shape, or other geometric shape having a height that decreases in a direction away from the respective first housing **820***a*, **820***b*, **820***c*. The decreasing height **819** of the fins **818** provides a smooth taper of the intermediate guide **816** at portions along the length of the explosive downhole tool **811**. The smooth taper allows the explosive downhole tool **811** to be more easily conveyed into and out of a wellbore because the taper helps the explosive downhole tool **811** avoid catching or getting stuck on restrictions in a wellbore in form of ledges protruding from, e.g., seats, tool joints, and other inner diameter restrictions. The taper may also help the explosive downhole tool **811** more easily slide against or past such restrictions in the wellbore. Moreover, the empty spaces radially provided between the fins **818** around the circumference of the explosive downhole tool **811** create voids in the body of the explosive downhole tool **811** where no wellbore restrictions will catch against the explosive downhole tool **811**. That is, there is less of the explosive downhole tool **811** that might otherwise catch or get stuck on restrictions in a wellbore.

FIGS. **39**A to **39**E show that the intermediate guide **816** may be formed of a first intermediate guide portion **816***a* extending from the first housing **820***a* and a second intermediate guide portion **816***b* extending from the second housing **820***b* toward the first intermediate guide portion **816***a*. The intermediate guide **816** may also be formed of a first intermediate guide portion **816***a* extending from the second housing **820***b* and a second intermediate guide portion **816***b* extending from the third housing **820***c* toward the second intermediate guide portion **816***a*. FIGS. **39**B and **39**C are enlarged sectional views of the first intermediate guide portion **816***a*. FIGS. **39**D and **39**E are enlarged sectional views of the second intermediate guide portion **816***b*. FIG. **39**B shows that the first intermediate guide portion **816***a* may include a first (male) connector **823** that connects with a second (female) connector **825** of the second intermediate guide portion **816***b* shown in FIG. **39**D. The first connector **823** and the second connector **825** may each include one or more pin holes **827** or screw holes that align to accommodate a pin or screw (not shown) for securing the first connector **823** to the second connector **825**. Another type of fastener for connecting the first connector **823** and the second connector **825** may also be used. For example, the first connector **823** and the second connector **825** may be glued to each other. Alternatively, the outer surface **823***a* of

the first connector **823** may have threads that engage with corresponding threads on the inner surface **825***a* of the second connector **825**. FIGS. **39**C and **39**E are enlarged cross-sectional views of the first intermediate guide portion **816***a* and the second intermediate guide portion **816***b*, respectively, and show that the radial location of the fins **818** around the axis **813** of the explosive downhole tool **811**. The empty spaces or voids discussed above are provided between the fins **818** around the circumference of the explosive downhole tool **811** are apparent in FIGS. **39**C and **39**E. In one embodiment, the length the first intermediate guide portion **816***a* in a direction along the length of the explosive downhole tool **811** is 4.0 inches. The height of each fin **818** at its largest is 1.7 inches from the central axis **813** of the first intermediate guide portion **816***a* (which may be the same as the axis **813** of the explosive downhole tool **811**). The length of each fin **818** along the central axis **813** may be 3.0 inches. The length of the first (male) connector **823** may be 0.75 inches, and the outer diameter of the first (male) connector **823** may be around 0.975 inches. The inner diameter of the first intermediate guide portion **816***a* may be 0.810 inches. The back part of the fins **818**, which may abut one of the housings **820***a*, **820***b*, **820***c* may be angled away from the housing at, for example, 6 degrees, to accommodate a corresponding angle of the outer surface of the housing. Each of the fins **818** may be 0.125 inches thick. However, the above-mentioned dimensions are only exemplary, and not limiting to the disclosure. Larger and smaller dimensions are with the scope of this disclosure and may be selected based on conditions and nature of the tubular and/or the wellbore As shown in FIG. **39**C, when the first intermediate guide portion **816***a* has a total of four fins **818**, the fins **818** may be positioned radially at 90 degree intervals from each other. When the first intermediate guide portion **816***a* has a different number of total fins **818**, the fins **818** may be positioned radially at equal angular distances from each other. The second intermediate guide portion **816***b* and fins **818** may have the same dimensions as the first intermediate guide portion **816***a* and fins **818**.

To improve the debris properties of the intermediate guide **816** and its component parts (e.g., the first intermediate guide portion **816***a* and fins **818** and the second intermediate guide portion **816***b* and fins **818**), the intermediate guide **816** may in one embodiment be formed of a porous material. Examples of such material include, but are not limited to, cast iron or other sand casted metals, or other materials with relatively high porosity. The porosity of these materials weakens the strength of the materials so that the materials break more easily upon detonation of the explosive charges **860**. These porous materials can be broken into granules or fine particles that result in very little debris, if any, that do not present an obstruction in the wellbore.

A method of cutting or selectively expanding a wall of a tubular using the explosive downhole tool **811** may include positioning the explosive downhole tool **811** within the tubular, and then actuating the explosive downhole tool **811** to ignite the explosive charges **860** causing shock waves that travel radially outward to impact the tubular, as discussed herein above.

FIG. **40**A illustrates another embodiment of an explosive downhole tool **810** having an improved design for minimizing debris and better conveyance of the explosive downhole tool **810** in a wellbore. The explosive downhole tool **810** may include a first housing **820***a*, a second housing **820***b* spaced axially from the first housing **820***a* along a length of the explosive downhole tool **810**, and a third housing **820***c* spaced axially from the second housing **820***b* along the length of the downhole tool **810**. An explosive charge **860** may be provided within each of the first, second and third housings **820***a*, **820***b*, **820***c*. As discussed above, each explosive charge **860** may be designed to include a predetermined amount of explosive to selectively expand, without puncturing, a wall of a tubular into a protrusion extending outward into an annulus adjacent the wall of the tubular. In another embodiment, the explosive charge **860** may have a design (e.g., with a liner) and include a predetermined amount of explosive for cutting a wall of a tubular. In either case, the explosive charge **860** may be a shaped charged as discussed herein above. Alternatively, the explosive charge **860** may have a design and a predetermined amount of explosive for both cutting a wall on one side of a tubular and expanding the wall on another side or opposite side of the tubular. It is understood that the explosive charges **860** discussed herein are of the type that can cut a wall of a tubular or selectively expand a wall of tubular, but are not of the type used for perforating a wall of a tubular.

A first intermediate connector **814** connects the first housing **820***a* to the second housing **820***b*, and a second intermediate connector **814** connects the second housing **820***b* to the third housing **820***c*. The intermediate connector **814** may have the shape of a hollow tube to accommodate components, such as a detonation cord, for igniting the explosive charge **860** in each of the second housing **820***b* and the third housing **820***c*. In another embodiment, the intermediate connector **814** may have another polygonal or geometric shape with an internal cavity to accommodate the components for igniting the explosive charge **860**. The explosive downhole tool **810** may include a top sub **812** comprising components, such as a detonator, for igniting the explosive charges **860** as discussed herein above. The explosive charge **860** in the first housing **820***a* may be ignited by a detonating cord, a booster, or other mechanism for initiating ignition of the explosive charge **860**. In an embodiment, the distance between the first housing **820***a* and the second housing **820***b* and between the second housing **820***b* and the third housing **820***c* is about 11.5 inches as measured between the center of the window section **824** (or apex of the explosive charge **860**) had by each of the first, second and third housings **820***a*, **820***b*, **820***c*. However, the distance between the first housing **820***a* and the second housing **820***b* and between the second housing **820***b* and the third housing **820***c* is not particularly limiting, and may be more or less than about 11.5 inches. The length of the explosive downhole tool **810** as measured from the top end of the top sub **812** to the bottom of the third housing **820***c* may be about 29.5 inches, according to one embodiment. However, length of the downhole tool **810** as measured from the top end of the top sub **812** to the bottom of the third housing **820***c* may be more or less than 29.5 inches.

A primary difference between the explosive downhole tool **810** illustrated in FIG. **40**A and the one discussed above with respect to FIGS. **39**A to **39**E is the omission of the intermediate guide **816**, and the shape of the first, second and third housings **820***a*, **820***b*, **820***c*. In the explosive downhole tool **810** of FIG. **40**A, each of the first, second and third housings **820***a*, **820***b*, **820***c* includes a window section **824**, an upper housing part **821** on one side of the window section **824**, and a lower housing part **822** on an opposite side of the window section **824**. Each of the upper housing part **821** and the lower housing part **822** comprises an outer surface that faces away from its respective housing **820***a*, **820***b* or **820***c*.

To improve the conveyance properties of the explosive downhole tool **810** within the wellbore, the outer surface of at least one of the upper housing part **821** and the lower

housing part **822** is rounded or curved so as to be devoid of corners. In the embodiment shown in FIG. **40**A, a majority of the lower housing part **822** of the first housing **820***a* in cross-section is formed of rounded or curved outer surface, while the upper housing part **821** is connected to the top sub **812**. A "majority" in the present application means greater than 50 percent. On the other hand, a majority of both of the upper housing part **821** and the lower housing part **822** of the second housing **820***b* are formed of rounded or curved outer surfaces as viewed in cross-section. Meanwhile, a majority of the upper housing part **821** of the third housing **820***c* as viewed in cross-section is formed of rounded or curved outer surface, while the lower housing part **822** may be connected to a centralizer (not shown). The lower housing part **822** of the third housing **820***c* may be rounded or curved like the lower housing part **822** of the second housing **820***b*. The rounded or curved outer surfaces of the respective upper housing part **821** and lower housing part **822** eliminates sharp corners or shoulders that would otherwise catch or get stuck on restrictions in a wellbore in form of ledges protruding from, e.g., seats, tool joints, and other inner diameter restrictions. The rounded or curved outer surfaces may also help the explosive downhole tool **810** more easily slide against or past such restrictions in the wellbore. Thus, the rounded or curved outer surfaces help the explosive downhole tool **810** to be more easily conveyed into and out of a wellbore.

In addition, the amount of debris produced by the explosive downhole tool **810** after detonation of the explosive charges **860** is greatly reduced or eliminated because there is little to no material outside of the housings **820***a*, **820***b*, **820***c* and intermediate connectors **814**. That is, the explosive downhole tool **810** does not have the truss-like structure formed of web braces **935** between the housings **820***a*, **820***b*, **820***c* as found in conventional explosive downhole tools (see, e.g., FIG. **38**). And, the explosive downhole tool **810** is without the intermediate guides **816** of FIGS. **39**A to **39**E.

Moreover, the debris properties of the explosive downhole tool **810** may be further improved by forming the intermediate connectors **814** of a dissolvable material that is designed to dissolve in brine solutions that are common in oil and gas wellbores. As an example, the dissolvable material may be a magnesium alloy, such as TervAlloy™ **3241** manufactured by Terves Inc. Each of the first, second and third housings **820***a*, **820***b*, **820***c* may also be formed of dissolvable material. The dissolvable material may be a magnesium alloy, such as TervAlloy™ 3241 manufactured by Terves Inc. Forming the intermediate connector **814** and/or first, second and third housings **820***a*, **820***b*, **820***c* of dissolvable material provides that very little to zero debris from intermediate connectors **814** and/or housings **820***a*, **820***b*, **820***c* remain in the well after detonation of the explosive charges **860**. Whether or not the first, second and third housings **820***a*, **820***b*, **820***c* are formed of dissolvable material, the material of the housings may be formed of a reduced wall thickness that is frangible to break into relatively smaller pieces of debris.

A method of cutting or selectively expanding a wall of a tubular using the explosive downhole tool **810** may include positioning the explosive downhole tool **810** within a tubular **501** as discussed herein, and then actuating the explosive downhole tool **810** to ignite the explosive charges **860** causing shock waves that impact the tubular, as discussed herein. The explosive downhole tool **810** may be actuated to sequentially ignite the explosive charge **860** in the first housing **820***a*, the explosive charge **860** in the second housing **820***b*, and the explosive charge **860** in the third housing **820***c* so that the explosive charges **860** are ignited at different times from each other. In some embodiments, the explosive charges **860** of two of the first housing **820***a*, the second housing **820***b* and the third housing **820***c* may be ignited simultaneously, and the explosive charge **860** of the remaining other housing may be ignited at a different time. Alternatively, the explosive downhole tool **810** may be actuated to simultaneously ignite the explosive charge **860** in the first housing **820***a*, the explosive charge **860** in the second housing **820***b*, and the explosive charge **860** in the third housing **820***c*. As discussed above, "simultaneously" means that the explosive units **860** are intended to fire at the same time, even though actual ignition of the explosive units **860** serially disposed along the explosive downhole tool **810** may occur, for example, 5 to 8 miles per second apart, due to, for instance, the length of a detonation cord between the explosive units **860**.

FIG. **40**B illustrates how the construction of an explosive downhole tool **810** with the components discussed herein may be implemented to produce several protrusions P**100** to P**500** in the wall of a tubular **501** when the explosive charges **860** in the first to third housings **820***a* to **820***c* of the explosive downhole tool **810** are ignited simultaneously. As discussed herein, the first housing **820***a* includes a first explosive charge **860** containing a predetermined amount of explosive material for generating at least a first radial explosive wave front **8201** that may cut the wall of the tubular **501** or expand, without puncturing, the wall of the tubular **501** into a first protrusion P**100** extending outward into an annulus **502** adjacent the wall of the tubular **501**. The second housing **820***b* is spaced axially from the first housing **820***a* along a length of the explosive downhole tool **810**. The second housing **820***b* includes a second explosive charge **860** containing a predetermined amount of explosive material for generating at least a second radial explosive wave front **8202** that may cut the wall of the tubular **501** or expand, without puncturing, the wall of the tubular **501** into a second protrusion P**200** extending outward into the annulus **502** adjacent the wall of the tubular **501**. The third housing **820***c* is spaced axially from the second housing **820***b* along the length of the explosive downhole tool **810**. The third housing **820***c* includes a third explosive charge **860** containing a predetermined amount of explosive material for generating at least a third radial explosive wave front **8203** that may cut the wall of the tubular **501** or expand, without puncturing, the wall of the tubular **501** into a third protrusion P**300** extending outward into the annulus **502** adjacent the wall of the tubular **501**. A first intermediate connector **814***a* axially connects the first housing **820***a* to the second housing **820***b*, and a second intermediate connector **814***b* axially connects the second housing **820***b* to the third housing **820***c*. The first and second intermediate connectors **814***a*, **814***b* may include some or all of the features of the intermediate connector **814** discussed above with respect to FIGS. **39**A and **40**A. Furthermore, the first housing **820***a*, the second housing **820***b* and the third housing **820***c* may include some or all of the features of the first through third housings **820***a* to **820***c* discussed above with respect to FIGS. **39**A and **40**A.

When ignited, the explosive material of the explosive charge **860** in the first housing **820***a*, in addition to the first radial explosive wave front **8201**, further generates at least a first axial explosive wave front **8204** that travels axially from the first housing **820***a* as shown in FIG. **40**B. Similarly, the explosive material of the explosive charge **860** in the second housing **820***b*, in addition to the second radial explosive wave front **8202**, further generates at least a second axial explosive wave front **8205** that travels axially

from the second housing **820***b* in a first direction toward the first axial explosive wave front **8204** to collide with the first axial explosive wave front **8204**. And, the explosive material of the explosive charge **860** in the second housing **820***b*, in addition to the second axial explosive wave front **8205**, further generates at least a third axial explosive wave front **8206** that travels axially from the second housing **820***b* in a direction opposite the first direction. The explosive material of the explosive charge **860** in the third housing **820***c*, in addition to the third radial explosive wave front **8203**, further generates at least a fourth axial explosive wave front **8207** that travels axially from the third housing **820***c* toward the third axial explosive wave front **8206** to collide with the third axial explosive wave front **8206**.

The collision of the first axial explosive wave front **8204** with the second axial explosive wave front **8205** generates a fourth radial explosive wave front **8208** that may cut the wall of the tubular **501** or expand, without puncturing, the wall of the tubular **501** into a fourth protrusion P**400** between the first protrusion P**100** and the second protrusion P**200**. The fourth protrusion P**400** extends outward into the annulus **502** adjacent the wall of the tubular **501** as shown in FIG. **40**B. The precise location of the fourth protrusion P**400** between the protrusion P**100** and the second protrusion P**200** may depend on factors such as: any slight difference in the timing between the ignition of the explosive charges **860** in the first and second housings **820***a* and **820***b* (even if the explosive charges **860** are ignited "simultaneously"); the shape, size and/or type of the explosive charges **860** in the first and second housings **820***a*, **820***b*; and the relative amounts of explosive material in the explosive charges **860**. Assuming that: (i) the velocity of the first axial explosive wave front **8204** and the second axial explosive wave front **8205** are the same or substantially the same; (ii) that the amount of explosive material in each explosive charges **860** is the same; and (iii) the explosive charges **860** are ignited simultaneously, the collision of the first axial explosive wave front **8204** with the second axial explosive wave front **8205** may occur at or near a middle point (equidistant) between the first and second housings **820***a* and **820***b* and the fourth protrusion P**400** may be located at or near a middle point (equidistant) between the first protrusion P**100** and the second protrusion P**200** as shown in FIG. **40**B. It is noted that even when the explosive charges **860** are intended to fire at the same time, actual ignition of the explosive units **860** serially disposed along the explosive downhole tool **810** may occur, for example, 5 to 8 miles per second apart, due to, for instance, the length of a detonation cord between the explosive units **860**. Thus, actual collision of the first axial explosive wave front **8204** with the second axial explosive wave front **8205** may occur at a location slightly offset from the middle point (equidistant) between the first and second housings **820***a* and **820***b*, with the actual offset location being biased toward (i.e., closer to) the second housing **820***b*. Likewise, the resulting fourth protrusion P**400** may be located at a position slightly offset from the middle point (equidistant) between the first protrusion P**100** and the second protrusion P**200**. Modifying any of the above factors may cause the collision of the first axial explosive wave front **8204** with the second axial explosive wave front **8205**, and the resulting fourth protrusion P**400**, to occur at a location other than at or near a middle point (equidistant) between the first and second housings **820***a* and **820***b* and first the second protrusions P**100**, P**200**. For instance, providing the explosive charge **860** of the first housing **820***a* with a relatively greater amount of the explosive material than the explosive charge **860** of the second housing **820***b* may result in the first axial explosive wave front **8204** having a greater magnitude than the second axial explosive wave front **8205** such that the first axial explosive wave front **8204** passes the middle point (equidistant) between the first and second housings **820***a* and **820***b* before colliding with the second axial explosive wave front **8205**. In such a case, the location of the resulting fourth protrusion P**400** may be closer to the second protrusion P**200** than the first protrusion. Furthermore, modifying the shape, size and/or type of the explosive charge **860** of the first housing **820***a* relative to that of the explosive charge **860** of the second housing **820***b* may also change the magnitude and/or velocity of the first axial explosive wave front **8204** relative to the second axial explosive wave front **8205** such that the first axial explosive wave front **8204** collides with the second axial explosive wave front **8205** at a location other than at a middle point (equidistant) between the first and second housings **820***a* and **820***b*.

The collision of the third axial explosive wave front **8206** with the fourth axial explosive wave front **8207** generates a fifth radial explosive wave front **8209** that may cut the wall of the tubular **501** or expand, without puncturing, the wall of the tubular **501** into a fifth protrusion P**500** between the second protrusion P**200** and the third protrusion P**300**. The fifth protrusion P**500** extending outward into the annulus **502** adjacent the wall of the tubular **501** as shown in FIG. **40**B. As discussed above, the precise location of the fifth protrusion P**500** between the second protrusion P**200** and the third protrusion P**300** may depend on factors such as: ignition timing difference between the explosive charges **860** in the second and third housings **820***b*, **820***c*; the shape, size and/or type of the explosive charges **860** in the second and third housings **820***b*, **820***c*; and/or the relative amounts of explosive material in the explosive charges **860**.

In view of the foregoing discussion with respect to FIGS. **40**A and **40**B, the explosive downhole tool **810** may generate five or more protrusions in the wall of the tubular **501** with only three explosive charges **860** (e.g., respectively provided in the first through third housings **820***a* to **820***c* as discussed herein).

Each of the first housing **820***a*, the second housing **820***b* and the third housing **820***c* may include the window section **824**, the upper housing part **821** on one side of the window section **824**, and the lower housing part **822** on an opposite side of the window section **824**, as discussed above with respect to FIG. **40**A and shown in FIGS. **40**A and **40**B. And, to improve the conveyance properties of the explosive downhole tool **810** within the wellbore as discussed above, a majority of the outer surface of at least one of the upper housing part **821** and the lower housing part **822** in cross-section is rounded so as to be devoid of corners, as discussed above and shown in FIGS. **40**A and **40**B. The rounded or curved outer surfaces of the respective upper housing part **821** and lower housing part **822** eliminate sharp corners or shoulders that would otherwise catch or get stuck on restrictions in a wellbore, in the form of ledges protruding from, e.g., seats, tool joints, and other inner diameter restrictions. The rounded or curved outer surfaces may also help the explosive downhole tool **810** more easily slide against or past such restrictions in the wellbore, and avoid jarring of the explosive downhole tool **810** against such restrictions that could damage the explosive charges **860** (such as by chipping the explosive material of the explosive charges **860**) and cause the explosive charges **860** to fail upon ignition. Accordingly, the rounded or curved outer surfaces help the explosive downhole tool **810** to be more easily conveyed into and out of a wellbore and protect the explo-

sive charges **860** from damage. In the embodiment shown in FIG. **40**B, a majority of the lower housing part **822** of the first housing **820***a* in cross-section is formed of rounded or curved outer surface, while the upper housing part **821** is connected to the top sub **812**, shown in FIG. **40**A. On the other hand, a majority of both of the upper housing part **821** and the lower housing part **822** of the second housing **820***b* are formed of rounded or curved outer surfaces as viewed in cross-section. Meanwhile, a majority of the upper housing part **821** of the third housing **820***c*, as viewed in cross-section, is formed of a rounded or curved outer surface, while the lower housing part **822** may be connected to a centralizer (not shown). The lower housing part **822** of the third housing **820***c* may be rounded or curved like the lower housing part **822** of the second housing **820***b*.

FIG. **40**C illustrates an embodiment of an explosive downhole tool **810** formed of the first housing **820***a* and the third housing **820***c*, and how this explosive downhole tool **810** may be implemented to produce several protrusions P**100** to P**300** in the wall of a tubular **501** when the explosive charges **860** in the first and third housings **820***a*, **820***c* are ignited simultaneously. It is noted, however that in other embodiments the explosive charges **860** in the first and third housings **820***a*, **820***c* may be ignited sequentially. As shown in FIG. **40**C, the first housing **820***a* includes a first explosive charge **860** containing a predetermined amount of explosive material for generating at least a first radial explosive wave front **8201** that may cut the wall of the tubular **501** or expand, without puncturing, the wall of the tubular **501** into a first protrusion P**100** extending outward into the annulus **502** adjacent the wall of the tubular **501**. The third housing **820***c* is spaced axially from the first housing **820***a* along a length of the explosive downhole tool **810**. The third housing **820***c* includes an explosive charge **860** containing a predetermined amount of explosive material for generating at least a second radial explosive wave front **8203** that may cut the wall of the tubular **501** or expand, without puncturing, the wall of the tubular **501** into a second protrusion P**300** extending outward into the annulus **502** adjacent the wall of the tubular **501**. An intermediate connector **814** axially connects the first housing **820***a* to the third housing **820***c*. The intermediate connector **814** may include some or all of the features of the intermediate connector **814** discussed above with respect to FIGS. **39**A, **40**A and **40**B. Furthermore, the first housing **820***a* and the third housing **820***c* may include some or all of the features of the first through third housings **820***a* to **820***c* discussed above with respect to FIGS. **39**A, **40**A and **40**B.

FIG. **40**C shows that the explosive material of the first explosive charge **860** further generates at least a first axial explosive wave front **8204** that travels axially from the first housing **820***a*. The explosive material of the explosive charge **860** in the third housing **820***c* further generates a second axial explosive wave front **8207** that travels axially from the third housing **820***c* toward the first axial explosive wave front **8204** to collide with the first axial explosive wave front **8204**. The collision of the first axial explosive wave front **8204** with the second axial explosive wave front **8207** generates a third radial explosive wave front **8208** that may cut the wall of the tubular **501** or expand, without puncturing, the wall of the tubular **501** into a third protrusion P**400** between the first protrusion P**100** and the second protrusion P**300**. The third protrusion P**400** extends outward into the annulus **502** adjacent the wall of the tubular **50**. The explosive downhole tool **810** of FIG. **40**C may generate three or more protrusions in the wall of the tubular **501** with only two explosive charges **860** (e.g., respectively provided in the first and third housings **820***a*, **820***c* as discussed herein). As discussed above, the precise location of the third protrusion P**400** between the first protrusion P**100** and the second protrusion P**200** may depend on factors such as: ignition timing difference between the explosive charges **860** in the first and third housings **820***a*, **820***c*; the shape, size and/or type of the explosive charges **860** in the first and third housings **820***a*, **820***c*; and/or the relative amounts of explosive material in the explosive charges **860**.

Each of the first housing **820***a* and the third housing **820***c* may include the window section **824**, the upper housing part **821** on one side of the window section **824**, and the lower housing part **822** on an opposite side of the window section **824**, as discussed above and shown in FIGS. **40**A and **40**B. And, to improve the conveyance properties of the explosive downhole tool **810** within the wellbore as discussed above, a majority of the outer surface of at least one of the upper housing part **821** and the lower housing part **822** in cross-section is rounded so as to be devoid of corners as discussed above and shown in FIGS. **40**A and **40**B.

FIGS. **41**A to **41**E illustrate embodiments of an explosive unit **1000** for an explosive column downhole tool. The explosive unit **1000** may include all of the features of the explosive pellets **640** discussed herein above, and may be used with the dual end firing tool or the single end firing tool discussed herein above. For instance, the explosive unit **1000** may comprise high order explosive material, such as RDX, HMX or HNS. The explosive unit density can be from, e.g., about 1.6 g/cm^3 (0.92 oz/in^3) to about 1.65 g/cm^3 (0.95 oz/in^3), to achieve a shock wave velocity greater than about 9,144 meters/sec (30,000 ft/sec), for example. And, the explosive unit **1000** can be pressed into a narrow wheel (or circular) shape, and may be coated/scaled, as discussed herein above. The explosive unit **1000** may thus have a doughnut shape in one embodiment. In other embodiments, the explosive unit **1000** may have another polygonal or geometric shape, such as square, rectangular, triangular, pentagonal, hexagonal, heptagonal, octagonal, etc. According to one embodiment, the explosive unit **1000** may include a central aperture **1002** through which a loading rod or guide tube **616** of the explosive column tool passes for loading the explosive unit **1000** onto the explosive column tool, as discussed herein above. In other embodiments, the explosive unit **1000** may be loaded onto the explosive column tool by gluing adjacent explosive units **1000** to each other. In addition, the explosive unit **1000** may be loaded onto the explosive column tool by shrink wrapping together adjacent explosive units **1000**. In another embodiment, the explosive unit **1000** may be loaded onto the explosive column tool by being held in the "scab housing" discussed herein. In some embodiments where the explosive column tool does not have a guide tube **616**, the explosive unit **1000** may not have central aperture **1002**.

Because transporting and storing the explosive units **1000** may be hazardous, government regulations or other entities may limit the size of explosive units **1000** that can be transported in a vehicle and/or stored. One regulation limits the total mass of explosive units **1000** to 38.8 grams (600 grains) or less, which will historically pass United Nations Tests **6**A to **6**D. The United Nations Recommendations on the Transport of Dangerous Goods, which is incorporated herein by reference, provides Series 6 Tests used to determine which division, amongst Divisions 1.1, **1.2**, **1.3**, and 1.4, corresponds most closely to the behavior of the explosive product if a load is involved in a fire resulting from internal or external sources, or an explosion from internal sources. The Series 6 Tests also are incorporated herein by

reference. The results of the Series 6 Tests assess whether the explosive product can be assigned to Division 1.4 and whether or not it should be excluded from Class **1**. An assignment to Division 1.4 based on the Series 6 Tests meets safety criteria for transporting the explosive product. In other words, the United Nations Recommendations on the Transport of Dangerous Goods indicates that an explosive product can be safely transported if assigned to Division 1.4 based on the Series 6 Tests. However, it may be beneficial in some wellbore operations to provide explosive units **1000** that have a mass greater than 38.8 grams (600 grains), or that are outside the designation to Division 1.4 based on the Series 6 Tests (e.g., that are deemed too dangerous to transport according to the United Nations Recommendations on the Transport of Dangerous Goods. In this regard, the explosive unit **1000** of the present embodiment may be divided into two or more sections **1004** that are attachable to each other as shown in FIGS. **41**B to **41**E. For instance, FIG. **41**B illustrates an embodiment in which the explosive unit **1000** is divided into two equal sections **1004** that are attachable to each other. FIG. **41**B shows a plan view of the two-section explosive unit **1000**, a side view of the same, and a cross section view of the two-section explosive unit **1000**. FIG. **41**C shows a plan view of one half section **1004** of the two-section explosive unit **1000**, a side view of the same, and a cross section view of the half section **1004**. In another embodiment, FIG. **41**D illustrates an explosive unit **1000** that is divided into three equal sections **1004** that are attachable to each other. FIG. **41**D shows a plan view of the three-section explosive unit **1000**, a side view of the same, and a cross section view of the three-section explosive unit **1000**. FIG. **41**E shows a plan view of a one-third section **1004** of the three-section explosive unit **1000**, a side view of the same, and a cross section view of the one-third section **1004**. Of course, the explosive unit **1000** may be divided into two or more unequal sections **1004** in other embodiments. That is, the sections **1004** may be equal to each other in size and shape, or may be unequal in size and shape, and the explosive unit **1000** may be divided into halves, thirds, fourths, fifths, sixths, etc. To comply with the United Nations Recommendations on the Transport of Dangerous Goods, each of the two or more sections **1004** may pass the Series 6 Tests so as to be assigned to Division 1.4 and thus be deemed safe for transport. In another embodiment, a total mass of each of the two or more sections **1004** may be 38.8 grams (600 grains) or less. The sections **1004** may be attachable to each other via an adhesive. In a further embodiment (not shown), the explosive unit **1000** may comprise a first central section **1004** and a second outer section **1004** that surrounds a circumference of the first central section **1004**.

The explosive unit **1000** may be provided as a set of sections **1004** that can be transported unassembled, where their physical proximity to each other in the shipping box would prevent mass (sympathetic) detonation if one explosive component was detonated, or if, in a fire, would burn and not detonate. The explosive unit **1000** could be easily assembled at the job site.

A method of assembling an explosive column tool with one or more of the explosive units **1000** may include receiving the explosive units **1000** that are each divided into the two or more sections **1004**, attaching the two or more sections **1004** to each other, and loading the explosive unit(s) **1000** onto the explosive column. A method of actuating the loaded explosive column tool in a wellbore may include positioning the loaded explosive column tool within the wellbore, and actuating the explosive column tool to ignite the explosive unit(s) **1000**.

In some embodiments, a sheet of thin material, or "scab housing" (not shown) may be provided to cover the explosive units **1000**, for protecting the explosive units **1000** during running into the well. The material of the "scab housing", which may be carbon fiber or phenolic, can be thin enough so that its effect on the explosive impact of the explosive units **1000** on the surface of the pipe or other tubular is immaterial. Moreover, the explosive force can vaporize or pulverize the "scab housing" so that no debris from the "scab housing" is left in the wellbore, or can fracture the "scab housing" so that the fractured debris from the "scab housing" can easily float in the wellbore. In some embodiments, the "scab housing" may be formed of Teflon, PEEK, ceramic materials, or highly heat treated thin metal above 40 Rockwell "C".

FIGS. **42**A and **42**B illustrate an embodiment of an explosive charge **1300** that may be implemented in the expansion tools, including the explosive downhole tools, discussed herein. The explosive charge **1300** may be positioned in an expansion tool at a location and orientation that is opposite a similar explosive charge **1300**, in the same manner as the explosive material units **60** in FIGS. **1** and **4-6** discussed herein and/or explosive charges **860** in FIGS. **40**A to **40**B. FIG. **42**A is a plan view of the explosive charge **1300** which shows that the explosive charge **1300** has a circular shape in plan view. FIG. **42**B is a side view thereof, and shows a bottom portion **1306** and side wall **1307** of the explosive charge **1300**. In the embodiment, the explosive charge **1300** is in the shape of a frustoconical disc that is formed of two or more sections **1301** to **1303**. The explosive charge **1300** may include a central opening **1304**, as shown in FIG. **42**A, for accommodating the shaft of an explosive booster (not shown). The illustrated embodiment shows that the explosive charge **1300** is formed of three sections **1301**, **1302**, and **1303**, each accounting for one third (i.e., 120 degrees) of the entire explosive charge **1300** (i.e., 360 degrees). However, the explosive charge **1300** is not limited to this embodiment, and may include only two sections or four or more sections depending on the nature of the explosive material forming the sections. For instance, in a case where the explosive charge **1300** includes only two sections, the first section **1301** may constitute two-thirds of the expansion charge **1300**, and the second section **1302** may constitute one-third of the expansion charge **1300**.

The first section **1301** and the third section **1303** (which together may be one solid unitary section in some embodiments) of the expansion charge **1300** may be formed of explosive material. On the other hand, the second section **1302** of the expansion charge **1300** may be formed of an inert material rather than explosive material. The inert material in one embodiment may be soap. However, the present disclosure is not limited to any one particular inert material. In other embodiments, the inert material may be one or more of: plastic, Teflon, wax, and clay. The inert material comprises a binder which allows the inert material to be pressed or molded into a desired needed shape, such as the shape of the second section **1302** shown in FIG. **42**A. The inert material of the second section **1302** reduces the amount of explosive energy transmitted in a radial direction away from the second section **1302** when the explosive material is ignited as compared to the amount of explosive energy in a direction radially away from the first section **1301** (and third section **1303**) of explosive material. In one embodiment, the expansion charge **1300** may have an outer

diameter of less than 2.690 inches so as to fit within a housing, and the explosive material of the first section **1301** and third section **1303**, constituting two-thirds of the expansion charge **1300**, may together be, e.g., a 55 gram HMX. The inert material of the second section **1302**, constituting one-third of the expansion charge **1300**, may be, e.g., about 27 grams of soap.

The expansion charge **1300** of FIGS. **42**A and **42**B discussed above may be useful in a situation in which an inner tubular **1401** (e.g., a 4.5 inch O.D. pipe, 12.6 #L-80) undesirably rests against the inner surface of an outer tubular **1402** (e.g., 7.625 O.D. pipe, 25.59 #, L-80) that contains the inner tubular **1401**, such that the inner tubular **1401** is "decentralized" within the outer tubular **1402**, as shown in FIGS. **42**C and **42**D. For instance, contact of the inner tubular **1401** with the inner surface of the outer tubular **1402** may undesirably block or constrict the annulus between the inner tubular **1401** and the outer tubular **1402** on the contacting side of the inner tubular **1401**. The expansion charge **1300** of FIGS. **42**A and **42**B may be implemented to lift the decentralized inner tubular **1401** radially away from a portion **1407** of an inner surface of an outer tubular **1402** to open at least a portion of the annulus and/or move the inner tubular **1401** toward the interior center of the outer tubular **1402** in the following manner.

An explosive downhole tool containing the expansion charge **1300** may be positioned into the inner tubular **1401** so that the first section **1301** of explosive material faces a portion **1403** of the wall of the inner tubular **1401** that contacts the inner surface of outer tubular **1402** as shown in FIG. **42**D. In this position of the expansion charge **1300**, the second section **1302** of inert material faces a second portion **1404** of the wall of the inner tubular **1401** that is opposite the first portion **1403**. For instance, FIG. **42**D shows that the second portion **1404** is 180 degrees away from the first portion **1403**. Once the downhole tool and expansion charge **1300** are disposed in this position, the explosive downhole tool may be activated to ignite the explosive charge **1300** to expand, without puncturing, the first portion **1403** wall of the inner tubular **1401** into a protrusion **1403**P that contacts the portion **1407** of the inner surface of the outer tubular **1402** (see FIG. **42**E). In one embodiment, the protrusion **1403**P may be a 0.275 inch expansion of the first portion **1403** wall of the inner tubular **1401**. Contact of the protrusion **1403**P with the portion **1407** of the inner surface of the outer tubular **1402** causes the inner tubular **1401** to lift radially away from the portion **1407** of the outer tubular **1402** to open at least a portion of the annulus and/or move the inner tubular **1401** toward the interior center the outer tubular **1402**. That is, the inner tubular **1401** moves radially away from the portion **1407** of the inner surface of the outer tubular **1402**. The contact of the protrusion **1403**P with the portion **1407** of the outer tubular **1402** may also subsequently maintain the inner tubular **1401** in a more centralized position within the outer tubular **1402** to keep the annulus between the inner tubular **1401** and the portion **1407** of the outer tubular **1402** open. In some cases, a protrusion **1405**P may also be formed in the portion **1407** of the inner surface of the outer tubular **1402** via explosive energy from the ignition of the expansion charge **1300**. In one embodiment, the protrusion **1405**P may be a 0.115 inch expansion of the portion **1407** wall of the outer tubular **1402**.

Notably, the second portion **1404** of the wall of the inner tubular **1401** is not punctured by the ignition of the explosive material of the expansion charge **1300** because of the inert material of the second section **1302** of the expansion charge **1300**. That is, the inert material of the second section **1302**, which faces the second portion **1404** during ignition, reduces the amount of explosive energy transmitted toward the second portion **1404**, as compared to the amount of explosive energy of the first section **1301** (and third section **1303**) of explosive material toward the first portion **1403** of the inner tubular that is formed into the protrusion **1403**P. In some embodiments, the inert material may even prevent a protrusion from being formed in the second portion **1404** of the wall of the inner tubular **1401** when the explosive charge **1300** is ignited (see FIG. **42**E).

Although several preferred embodiments have been illustrated in the accompanying drawings and describe in the foregoing specification, it will be understood by those of skill in the art that additional embodiments, modifications and alterations may be constructed from the principles disclosed herein. These various embodiments have been described herein with respect to selectively expanding a "pipe" or a "tubular." Clearly, other embodiments of the tool of the present invention may be employed for selectively expanding any tubular good including, but not limited to, pipe, tubing, production/casing liner and/or casing. Accordingly, use of the term "tubular" in the following claims is defined to include and encompass all forms of pipe, tube, tubing, casing, liner, and similar mechanical elements.

What is claimed is:

1. An explosive downhole tool for at least one of cutting and selectively expanding a wall of a tubular, comprising:

a first housing comprising a first explosive charge comprising a predetermined amount of explosive material for generating at least a first radial explosive wave front that: (i) cuts the wall of the tubular; or (ii) expands, without puncturing, the wall of the tubular into a first protrusion extending outward into an annulus adjacent the wall of the tubular;

a second housing spaced axially from the first housing along a length of the explosive downhole tool, the second housing comprising a second explosive charge comprising a predetermined amount of explosive material for generating at least a second radial explosive wave front that: (i) cuts the wall of the tubular; or (ii) expands, without puncturing, the wall of the tubular into a second protrusion extending outward into the annulus adjacent the wall of the tubular; and

an intermediate connector axially connecting the first housing to the second housing, wherein the explosive material of the first explosive charge further generates a first axial explosive wave front that travels axially from the first housing, wherein

the explosive material of the second explosive charge further generates a second axial explosive wave front that travels axially from the second housing toward the first axial explosive wave front to collide with the first axial explosive wave front, and wherein

a collision of the first axial explosive wave front with the second axial explosive wave front generates a third radial explosive wave front that: (i) cuts the wall of the tubular; or (ii) expands, without puncturing, the wall of the tubular into a third protrusion between the first protrusion and the second protrusion, wherein the third protrusion extends outward into the annulus adjacent the wall of the tubular, and wherein

each of the first housing and the second housing comprises: a window section, an upper housing part on one side of the window section, and a lower housing part on an opposite side of the window section, wherein each of the upper housing part and the lower housing part comprises an outer surface that faces away from the

housing, and wherein a majority of the outer surface of at least one of the upper housing part and the lower housing part in cross-section is rounded so as to be devoid of corners.

2. The explosive downhole tool according to claim **1**, wherein at least one of the first explosive charge and the second explosive charge is a shaped charge.

3. The explosive downhole tool according to claim **1**, wherein at least one of the first housing and the second housing is formed of a dissolvable material.

4. The explosive downhole tool according to claim **1**, wherein the intermediate connector is formed of a dissolvable material.

5. A method of cutting or selectively expanding a wall of a tubular via the explosive downhole tool of claim **1**, comprising:

positioning the explosive downhole tool within the tubular; and

actuating the explosive downhole tool to simultaneously ignite the first explosive charge and the second explosive charge.

6. A method of cutting or selectively expanding a wall of a tubular via the explosive downhole tool of claim **1**, comprising:

positioning the explosive downhole tool within the tubular; and

actuating the explosive downhole tool to sequentially ignite the first explosive charge and the second explosive charge.

7. An explosive downhole tool for at least one of cutting and selectively expanding a wall of a tubular, comprising:

a first housing comprising a first explosive charge comprising a predetermined amount of explosive material for generating at least a first radial explosive wave front that: (i) cuts the wall of the tubular; or (ii) expands, without puncturing, the wall of the tubular into a first protrusion extending outward into an annulus adjacent the wall of the tubular;

a second housing spaced axially from the first housing along a length of the explosive downhole tool, the second housing comprising a second explosive charge comprising a predetermined amount of explosive material for generating at least a second radial explosive wave front that: (i) cuts the wall of the tubular; or (ii) expands, without puncturing, the wall of the tubular into a second protrusion extending outward into the annulus adjacent the wall of the tubular;

a third housing spaced axially from the second housing along the length of the explosive downhole tool, the third housing comprising a third explosive charge comprising a predetermined amount of explosive material for generating at least a third radial explosive wave front that: (i) cuts the wall of the tubular; or (ii) expands, without puncturing, the wall of the tubular into a third protrusion extending outward into the annulus adjacent the wall of the tubular;

a first intermediate connector axially connecting the first housing to the second housing; and

a second intermediate connector axially connecting the second housing to the third housing, wherein the explosive material of the first explosive charge further generates a first axial explosive wave front that travels axially from the first housing, wherein

the explosive material of the second explosive charge further generates a second axial explosive wave front that travels axially from the second housing in a first direction toward the first axial explosive wave front to collide with the first axial explosive wave front, and further generates a third axial explosive wave front that travels axially from the second housing in a direction opposite the first direction, wherein

the explosive material of the third explosive charge further generates a fourth axial explosive wave front that travels axially from the third housing toward the third axial explosive wave front to collide with the third axial explosive wave front, wherein

a collision of the first axial explosive wave front with the second axial explosive wave front generates a fourth radial explosive wave front that: (i) cuts the wall of the tubular; or (ii) expands, without puncturing, the wall of the tubular into a fourth protrusion between the first protrusion and the second protrusion, wherein the fourth protrusion extends outward into the annulus adjacent the wall of the tubular, wherein

a collision of the third axial explosive wave front with the fourth axial explosive wave front generates a fifth radial explosive wave front that: (i) cuts the wall of the tubular; or (ii) expands, without puncturing, the wall of the tubular into a fifth protrusion between the second protrusion and the third protrusion, wherein the fifth protrusion extends outward into the annulus adjacent the wall of the tubular, and wherein

each of the first housing, the second housing and the third housing comprises: a window section, an upper housing part on one side of the window section, and a lower housing part on an opposite side of the window section, wherein each of the upper housing part and the lower housing part comprises an outer surface that faces away from the housing, and wherein a majority of the outer surface of at least one of the upper housing part and the lower housing part in cross-section is rounded so as to be devoid of corners.

8. The explosive downhole tool according to claim **7**, wherein at least one of the first explosive charge, the second explosive charge and the third explosive charge is a shaped charge.

9. The explosive downhole tool according to claim **8**, wherein at least one of the first intermediate connector and the second intermediate connector is formed of a dissolvable material.

10. The explosive downhole tool according to claim **7**, wherein at least one of the first housing, the second housing and the third housing is formed of a dissolvable material.

11. A method of cutting or selectively expanding a wall of a tubular via the explosive downhole tool of claim **7**, comprising:

positioning the explosive downhole tool within the tubular; and

actuating the explosive downhole tool to simultaneously ignite the first explosive charge, the second explosive charge and third explosive charge.

12. A method of cutting or selectively expanding a wall of a tubular via the explosive downhole tool of claim **7**, comprising:

positioning the explosive downhole tool within the tubular; and

actuating the explosive downhole tool to sequentially ignite the first explosive charge, the second explosive charge and third explosive charge.

13. An explosive unit for an explosive expansion downhole tool, wherein the explosive unit comprises:

a circular shape having a center;

a first section comprising explosive material provided on a first side of the center; and

a second section comprising inert material provided on a second side of the center, wherein

the second section reduces an amount of explosive energy transmitted in a radial direction with respect to the center away from the second section when the explosive material is ignited as compared to an amount of explosive energy in a direction radially away from the first section.

14. The explosive unit according to claim **13**, wherein the first section constitutes two-thirds of the explosive unit, and wherein the second section constitutes one-third of the explosive unit.

15. The explosive unit according to claim **13**, wherein the first section partially extends around the center on the first side of the explosive unit, and wherein the second section partially extends around the center on the second side of the explosive unit.

16. An explosive expansion downhole tool comprising the explosive unit of claim **13**.

17. The explosive unit of claim **13** further comprising a truncated cone shape.

18. A method of moving a decentralized inner tubular radially away from a portion of an inner surface of an outer tubular that contains the decentralized inner tubular, the method comprising:

positioning an explosive downhole tool comprising at least one expansion charge into the decentralized inner tubular;

actuating the explosive downhole tool to ignite the explosive charge to expand, without puncturing, a first portion of a wall of the decentralized inner tubular into a protrusion that contacts the portion of the inner surface of the outer tubular, wherein

a second portion of the wall of the decentralized inner tubular that is opposite the first portion is not punctured by the actuating of the explosive downhole tool, and

contact of the protrusion with the portion of the inner surface of the outer tubular causes the decentralized inner tubular to move radially away from the portion of the inner surface of the outer tubular.

19. The method of claim **18**, wherein

actuating the explosive downhole tool to ignite the explosive charge does not form a protrusion in the second portion of the wall of the inner tubular.

20. The method of claim **18**, wherein the at least one expansion charge comprises:

a first section of explosive material provided around a portion of the expansion charge; and

a second section of inert material provided around a remainder of the expansion charge, wherein

the second section of inert material reduces an amount of explosive energy transmitted in a radial direction away from the second section when the explosive material is ignited as compared to an amount of explosive energy in a direction radially away from the first section of explosive material.

21. The method of claim **20**, wherein the explosive downhole tool is positioned in the decentralized inner tubular so that the first section of explosive material faces the first portion of the wall of the decentralized inner tubular that forms the protrusion, and the second section of inert material faces the second portion of the wall of the decentralized inner tubular.

22. A method of at least one of cutting and selectively expanding a wall of a tubular located within a wellbore, comprising:

conveying within the wellbore an explosive downhole tool comprising:

a first explosive assembly comprising a first explosive charge disposed within a first housing; and

a second explosive assembly comprising a second explosive charge disposed within a second housing, wherein the first explosive assembly and the second explosive assembly are separated by a predetermined axial distance;

actuating the explosive downhole tool to ignite the first explosive charge and the second explosive charge thereby causing:

the first explosive charge to generate: (i) a first radial explosive wave front that cuts the wall of the tubular or expands, without puncturing, the wall of the tubular at a first axial location along the tubular; and (ii) a first axial explosive wave front that travels axially within the tubular; and

the second explosive charge to generate: (i) a second radial explosive wave front that cuts the wall of the tubular or expands, without puncturing, the wall of the tubular at a second axial location along the tubular; and (ii) a second axial explosive wave front that travels axially within the tubular, wherein actuating the explosive downhole tool causes the first explosive charge and the second explosive charge to ignite simultaneously or at slightly different times such that the first axial explosive wave front and second axial explosive wave front collide at a third axial location along the tubular between the first axial location and the second axial location to generate a third radial explosive wave front that cuts the wall of the tubular or expands, without puncturing, the wall of the tubular at the third axial location.

23. The method of claim **22** wherein each of the first explosive charge and the second explosive charge comprises:

a first explosive charge unit having a truncated cone shape; and

a second explosive charge unit having a truncated cone shape, wherein the first explosive charge unit and the second explosive charge unit are disposed against each other to form a shaped charge assembly.

24. The method of claim **22** further comprising controlling the relative axial location of the third axial location with respect to the first axial location and the second axial location by controlling a time span between the ignition of the first explosive charge and the second explosive charge.

25. The method of claim **24** wherein controlling the time span between the ignition of the first explosive charge and the second explosive charge comprises selecting a length of a detonation cord between the first explosive charge and the second explosive charge.

* * * * *