US 20250259491A1

(19) United States
(12) Patent Application Publication
YOUSEFI et al.
(10) Pub. No.: US 2025/0259491 A1
(43) Pub. Date: Aug. 14, 2025

(54) **MULTI-LEVEL VIDEO PROCESSING WITHIN A VEHICULAR COMMUNICATION NETWORK**

(71) Applicant: **Avago Technologies International Sales Pte. Limited**, Singapore (SG)

(72) Inventors: **Nariman YOUSEFI**, Dana Point, CA (US); **Yongbum KIM**, Los Altos Hills, CA (US); **John WALLEY**, Ladera Ranch, CA (US); **Xuemin CHEN**, Rancho Santa Fe, CA (US); **Wael W. DIAB**, San Francisco, CA (US); **Nicholas ILYADIS**, Merrimack, NH (US)

(73) Assignee: **Avago Technologies International Sales Pte. Limited**, Singapore (SG)

(21) Appl. No.: **19/194,601**

(22) Filed: **Apr. 30, 2025**

Related U.S. Application Data

(63) Continuation of application No. 18/627,084, filed on Apr. 4, 2024, which is a continuation of application No. 17/948,461, filed on Sep. 20, 2022, now Pat. No. 11,985,073, which is a continuation of application No. 16/950,842, filed on Nov. 17, 2020, now Pat. No. 11,496,412, which is a continuation of application No. 16/580,546, filed on Sep. 24, 2019, now Pat. No. 10,848,438, which is a continuation of application No. 14/832,837, filed on Aug. 21, 2015, now Pat. No. 10,469,408, which is a continuation of application No. 13/171,629, filed on Jun. 29, 2011, now abandoned.

(60) Provisional application No. 61/409,904, filed on Nov. 3, 2010.

Publication Classification

(51) **Int. Cl.**
G07C 5/08 (2006.01)
B60L 50/00 (2019.01)
(Continued)

(52) **U.S. Cl.**
CPC ***G07C 5/0866*** (2013.01); ***B60L 50/00*** (2019.02); ***B60R 16/023*** (2013.01); ***B60R 16/03*** (2013.01); ***B60R 16/0315*** (2013.01); ***B60R 19/03*** (2013.01); ***G06F 1/26*** (2013.01); ***G06F 1/266*** (2013.01); ***G08G 1/16*** (2013.01); ***H04B 1/3822*** (2013.01); ***H04L 12/46*** (2013.01); ***H04L 12/56*** (2013.01); ***H04L 45/74*** (2013.01); ***H04L 47/2433*** (2013.01); ***H04L 47/6275*** (2013.01); ***H04L 47/76*** (2013.01); ***H04L 47/821*** (2013.01); ***H04L 49/25*** (2013.01); ***H04L 67/12*** (2013.01); ***H04L 69/22*** (2013.01); ***H04N 7/181*** (2013.01); ***H04N 7/183*** (2013.01); ***H04N 19/102*** (2014.11); ***H04W 4/40*** (2018.02); ***H04W 4/44*** (2018.02); ***H04W 4/46*** (2018.02); ***H04W 24/08*** (2013.01); ***H04W 28/08*** (2013.01); ***H04W 72/541*** (2023.01); ***H04W 72/56*** (2023.01); *G06F 7/76* (2013.01); *H04L 12/10* (2013.01); *H04L 12/4625* (2013.01); *H04W 88/02* (2013.01); *Y02D 30/70* (2020.08); *Y04S 40/18* (2018.05)

(57) **ABSTRACT**

A system for controlling power distribution within a vehicular communication network, including a power source equipment comprising a first port in communication with a network node module of a device, and a Power over Ethernet (POE) management module. The POE management module is configured to enable POE to the device via the first port, monitor a current draw of the device, determine whether the current draw of the device exceeds a threshold, and disable POE to the device, responsive to determining that the current draw exceeds the threshold.

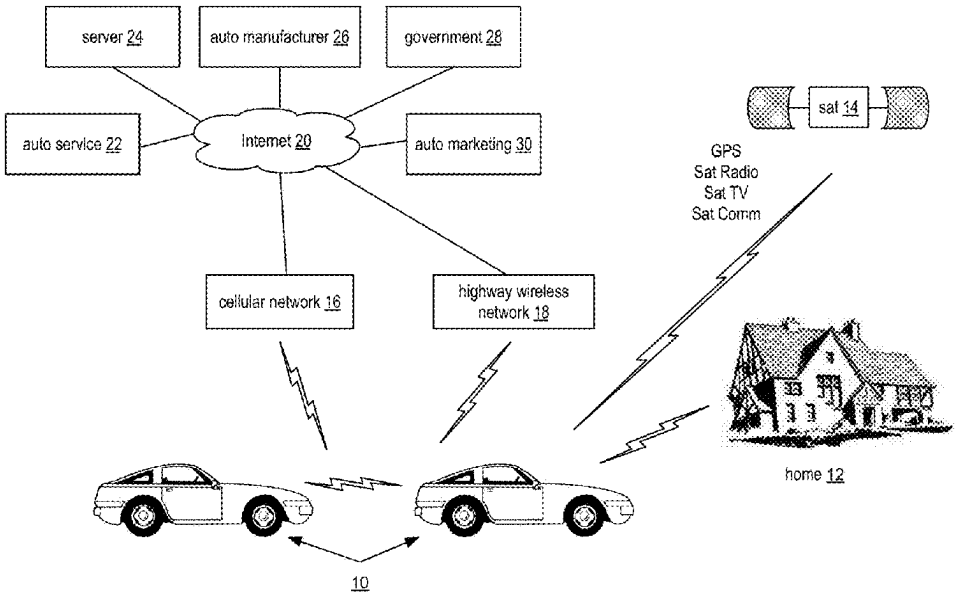

Publication Classification

(51) **Int. Cl.**

B60R 16/023	(2006.01)
B60R 16/03	(2006.01)
B60R 19/03	(2006.01)
G06F 1/26	(2006.01)
G06F 7/76	(2006.01)
G08G 1/16	(2006.01)
H04B 1/3822	(2015.01)
H04L 12/10	(2006.01)
H04L 12/46	(2006.01)
H04L 12/54	(2022.01)
H04L 45/74	(2022.01)
H04L 47/2425	(2022.01)
H04L 47/6275	(2022.01)
H04L 47/70	(2022.01)
H04L 47/76	(2022.01)
H04L 49/25	(2022.01)
H04L 67/12	(2022.01)
H04L 69/22	(2022.01)
H04N 7/18	(2006.01)
H04N 19/102	(2014.01)
H04W 4/40	(2018.01)
H04W 4/44	(2018.01)
H04W 4/46	(2018.01)
H04W 24/08	(2009.01)
H04W 28/08	(2023.01)
H04W 72/541	(2023.01)
H04W 72/56	(2023.01)
H04W 88/02	(2009.01)

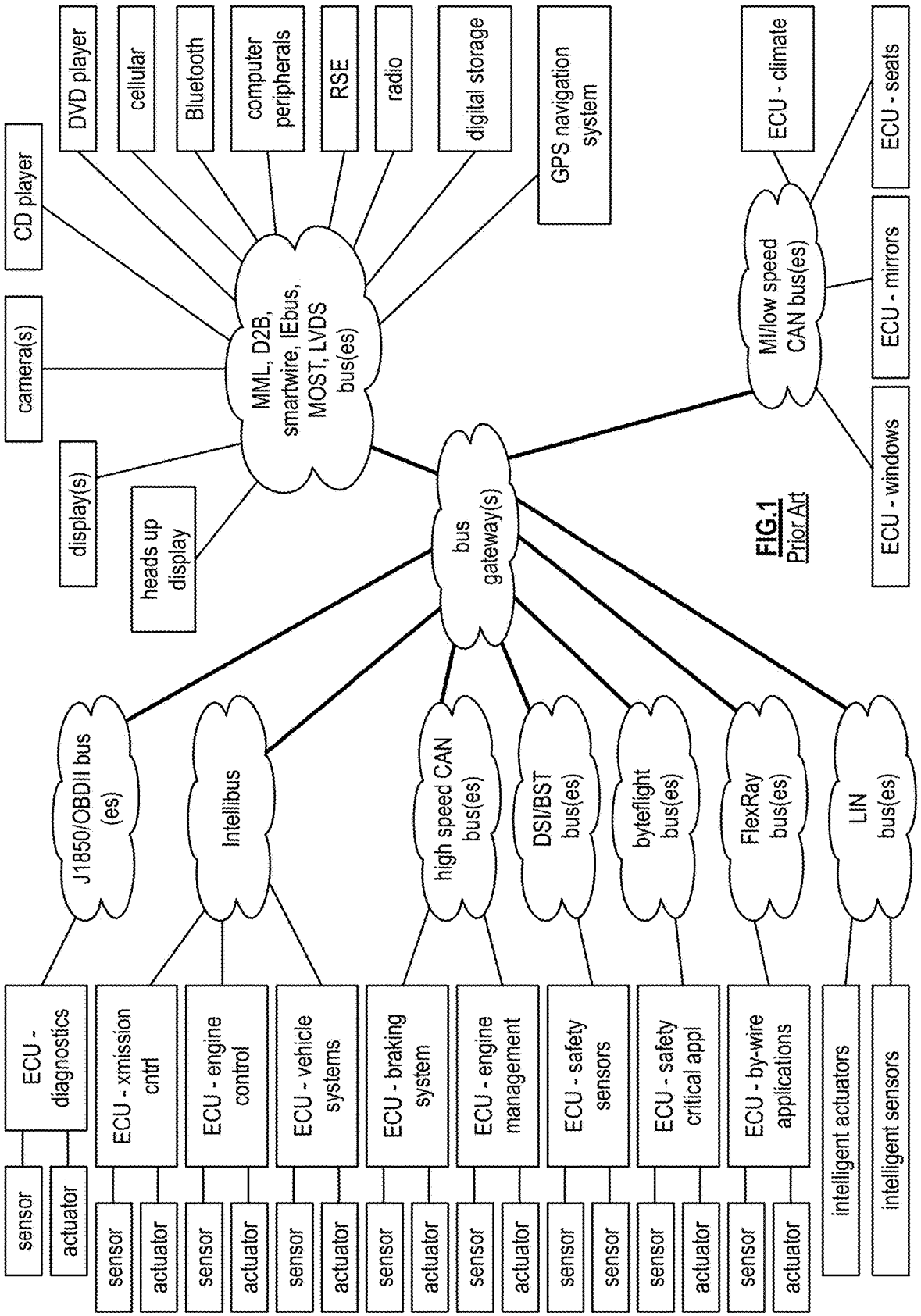

FIG 1
Prior Art

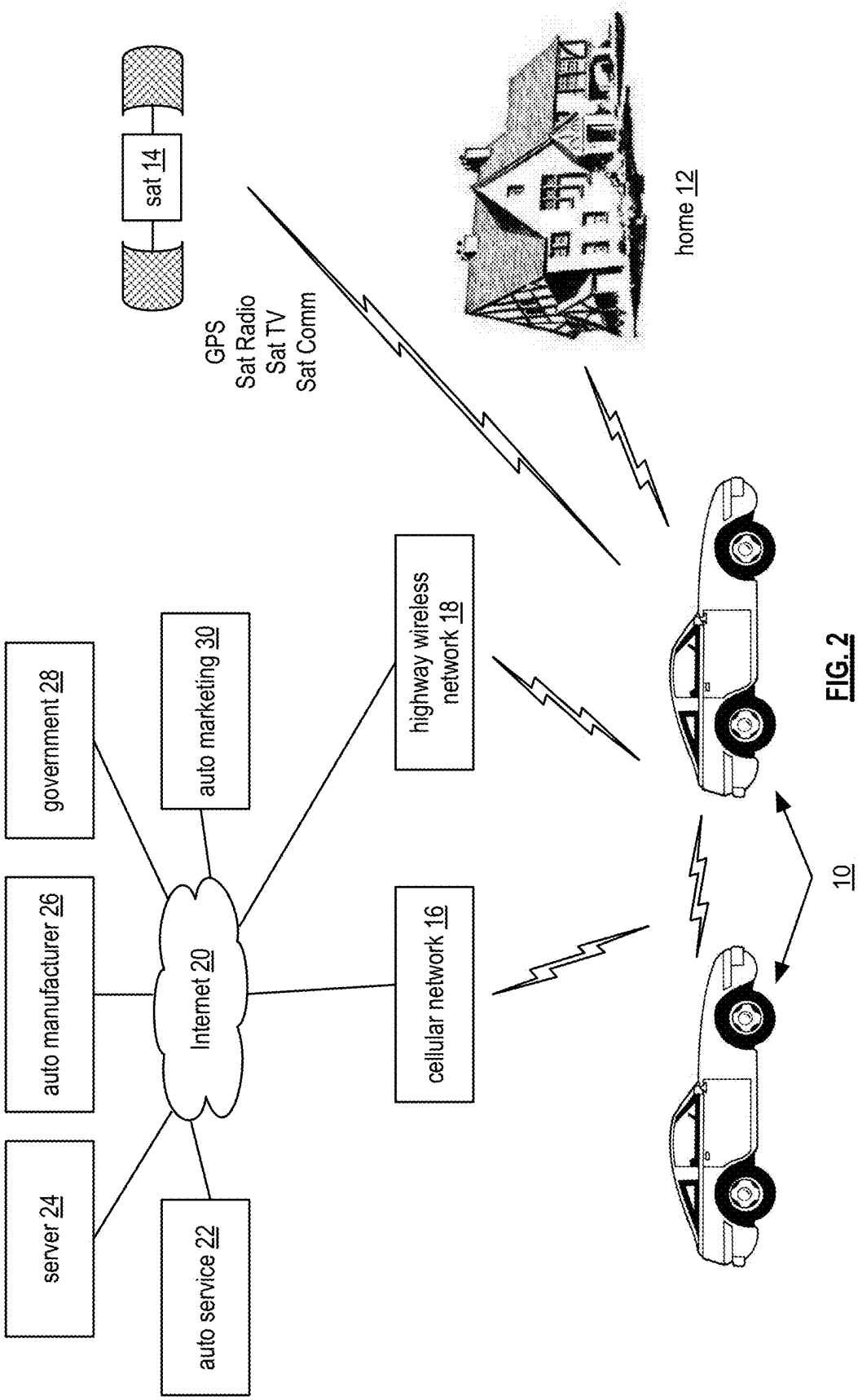
sat 14
GPS
Sat Radio
Sat TV
Sat Comm
home 12
government 28
auto marketing 30
highway wireless network 18
auto manufacturer 26
Internet 20
cellular network 16
server 24
auto service 22
10

FIG. 2

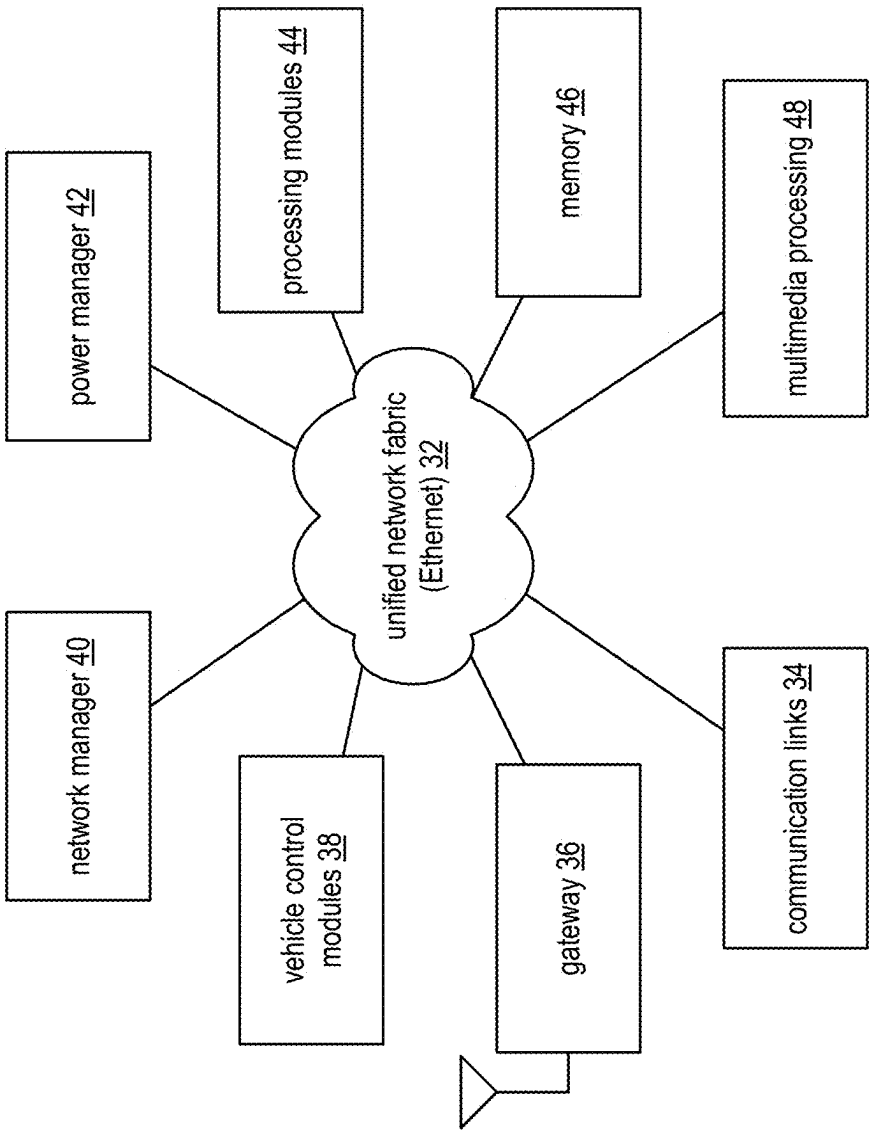

FIG. 3
Unified Automotive Environment (AE) N/W Structure

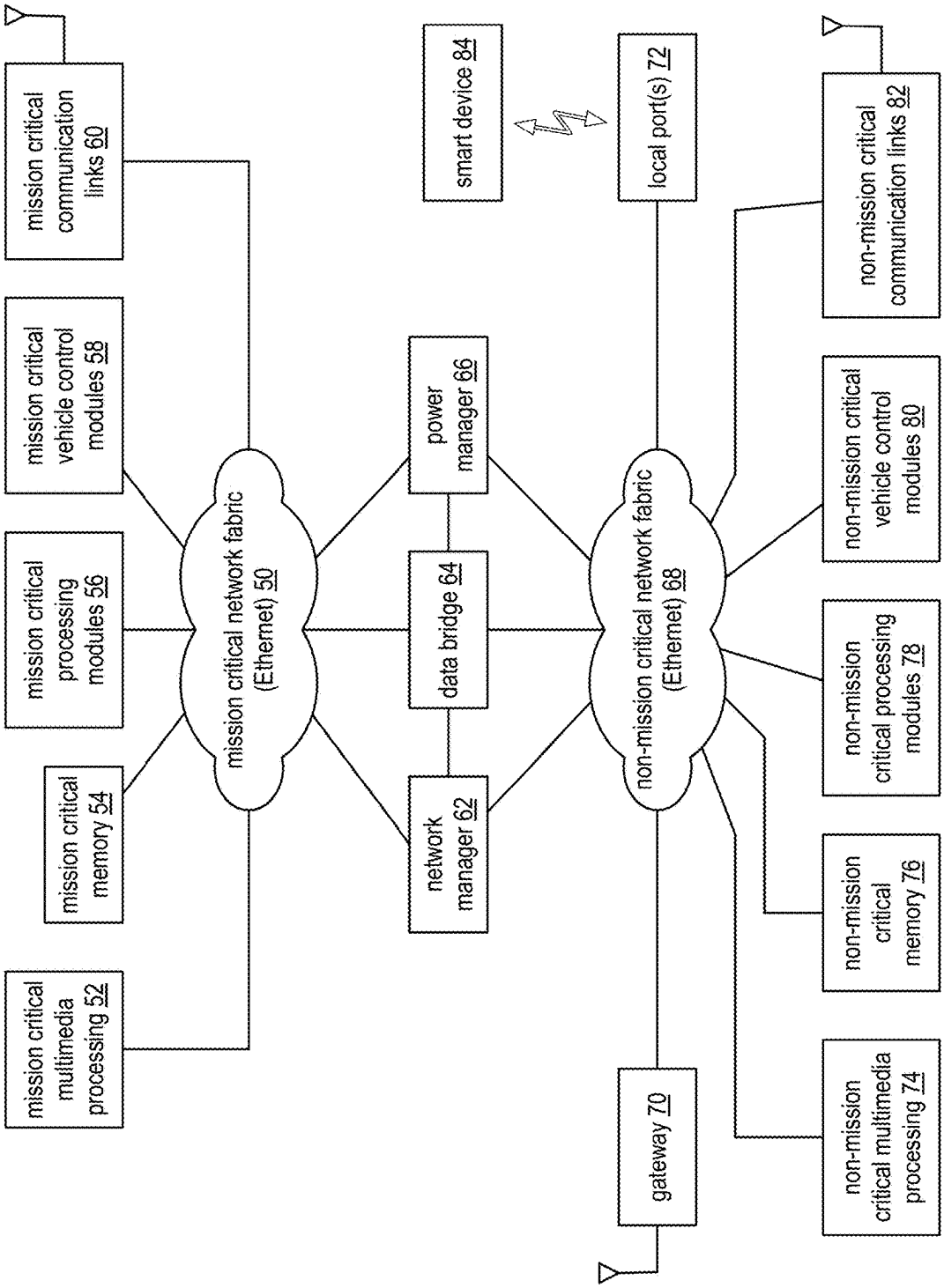
mission critical communication links 60
mission critical vehicle control modules 58
mission critical processing modules 56
mission critical memory 54
mission critical multimedia processing 52
mission critical network fabric (Ethernet) 50
smart device 84
power manager 66
data bridge 64
network manager 62
local port(s) 72
non-mission critical network fabric (Ethernet) 68
gateway 70
non-mission critical communication links 82
non-mission critical vehicle control modules 80
non-mission critical processing modules 78
non-mission critical memory 76
non-mission critical multimedia processing 74

FIG. 4

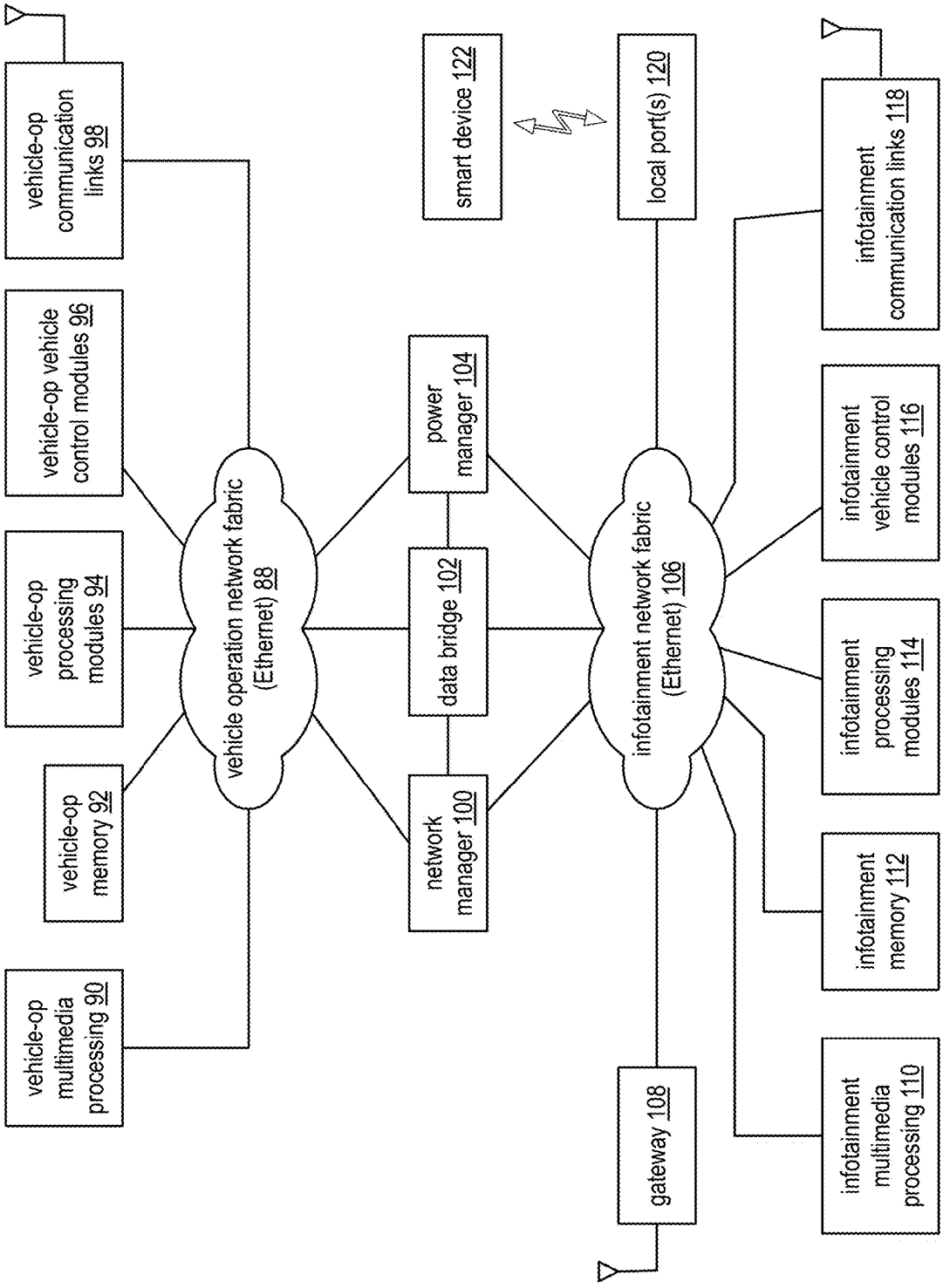
vehicle-op communication links 98
vehicle-op vehicle control modules 96
vehicle-op processing modules 94
vehicle-op memory 92
vehicle-op multimedia processing 90
vehicle operation network fabric (Ethernet) 88
power manager 104
data bridge 102
network manager 100
smart device 122
local port(s) 120
infotainment network fabric (Ethernet) 106
gateway 108
infotainment communication links 118
infotainment vehicle control modules 116
infotainment processing modules 114
infotainment memory 112
infotainment multimedia processing 110

FIG. 5

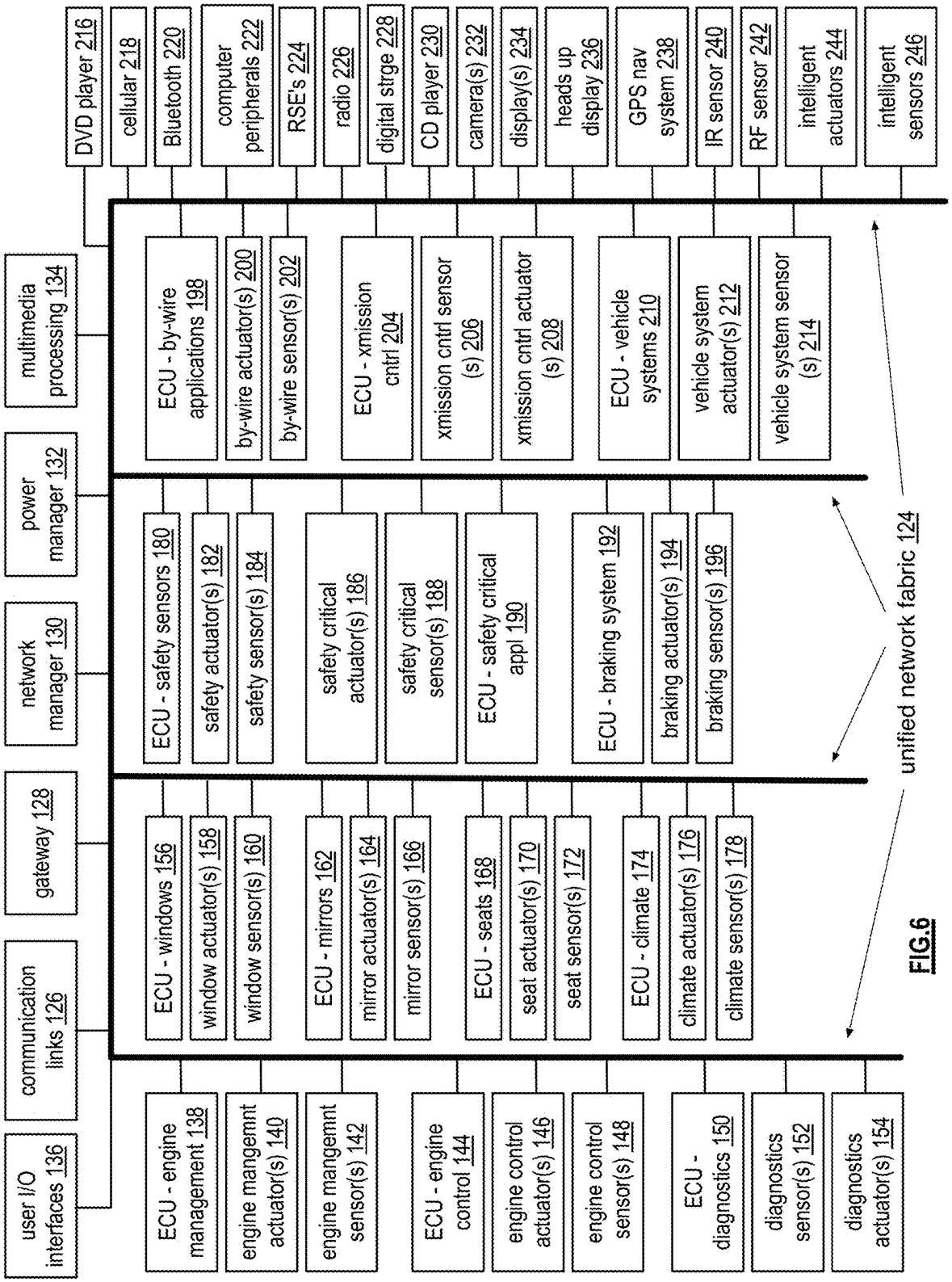
DVD player 216
cellular 218
Bluetooth 220
computer peripherals 222
RSE's 224
radio 226
digital strge 228
CD player 230
camera(s) 232
display(s) 234
heads up display 236
GPS nav system 238
IR sensor 240
RF sensor 242
intelligent actuators 244
intelligent sensors 246
multimedia processing 134
power manager 132
network manager 130
gateway 128
communication links 126
user I/O interfaces 136
ECU - by-wire applications 198
by-wire actuator(s) 200
by-wire sensor(s) 202
ECU - xmission cntrl 204
xmission cntrl sensor (s) 206
xmission cntrl actuator (s) 208
ECU - vehicle systems 210
vehicle system actuator(s) 212
vehicle system sensor (s) 214
ECU - safety sensors 180
safety actuator(s) 182
safety sensor(s) 184
safety critical actuator(s) 186
safety critical sensor(s) 188
ECU - safety critical appl 190
ECU - braking system 192
braking actuator(s) 194
braking sensor(s) 196
ECU - windows 156
window actuator(s) 158
window sensor(s) 160
ECU - mirrors 162
mirror actuator(s) 164
mirror sensor(s) 166
ECU - seats 168
seat actuator(s) 170
seat sensor(s) 172
ECU - climate 174
climate actuator(s) 176
climate sensor(s) 178
ECU - engine management 138
engine mangemnt actuator(s) 140
engine mangemnt sensor(s) 142
ECU - engine control 144
engine control actuator(s) 146
engine control sensor(s) 148
ECU - diagnostics 150
diagnostics sensor(s) 152
diagnostics actuator(s) 154
unified network fabric 124

FIG.6

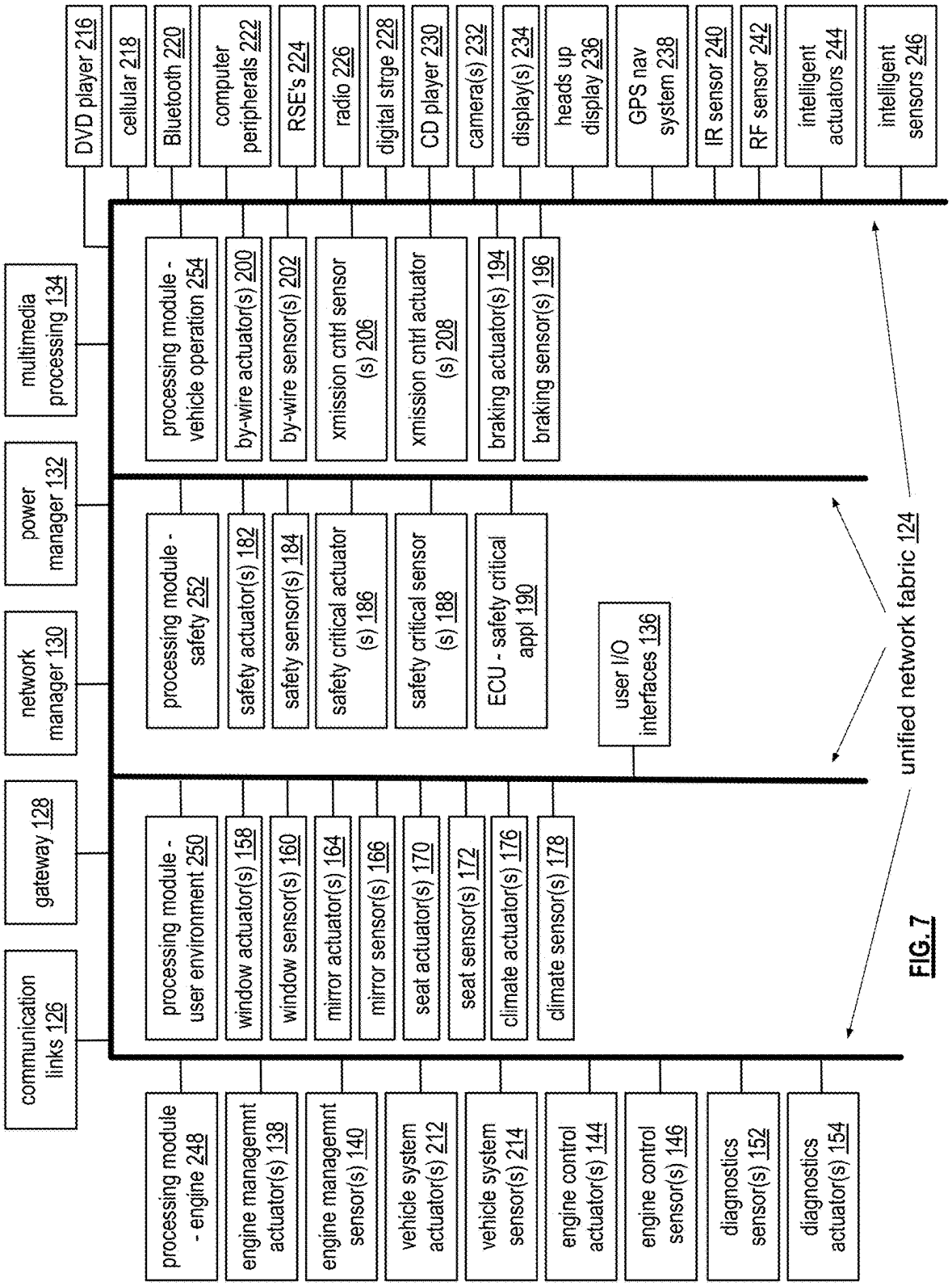
DVD player 216
cellular 218
Bluetooth 220
computer peripherals 222
RSE's 224
radio 226
digital strge 228
CD player 230
camera(s) 232
display(s) 234
heads up display 236
GPS nav system 238
IR sensor 240
RF sensor 242
intelligent actuators 244
intelligent sensors 246
multimedia processing 134
power manager 132
network manager 130
gateway 128
communication links 126
processing module - vehicle operation 254
by-wire actuator(s) 200
by-wire sensor(s) 202
xmission cntrl sensor (s) 206
xmission cntrl actuator (s) 208
braking actuator(s) 194
braking sensor(s) 196
processing module - safety 252
safety actuator(s) 182
safety sensor(s) 184
safety critical actuator (s) 186
safety critical sensor (s) 188
ECU - safety critical appl 190
user I/O interfaces 136
processing module - user environment 250
window actuator(s) 158
window sensor(s) 160
mirror actuator(s) 164
mirror sensor(s) 166
seat actuator(s) 170
seat sensor(s) 172
climate actuator(s) 176
climate sensor(s) 178
processing module - engine 248
engine managemnt actuator(s) 138
engine managemnt sensor(s) 140
vehicle system actuator(s) 212
vehicle system sensor(s) 214
engine control actuator(s) 144
engine control sensor(s) 146
diagnostics sensor(s) 152
diagnostics actuator(s) 154
unified network fabric 124

FIG. 7

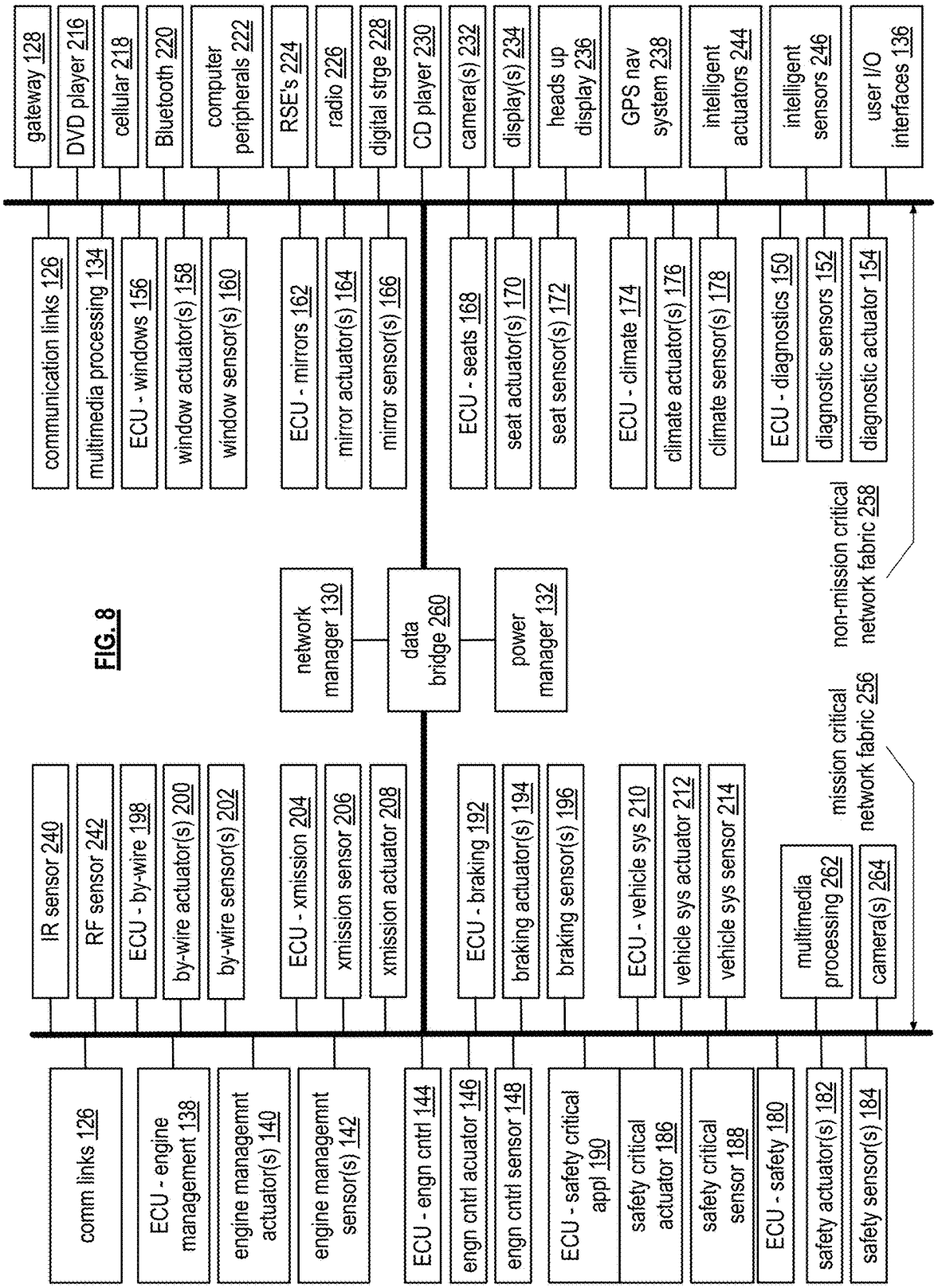
gateway 128
DVD player 216
cellular 218
Bluetooth 220
computer peripherals 222
RSE's 224
radio 226
digital strge 228
CD player 230
camera(s) 232
display(s) 234
heads up display 236
GPS nav system 238
intelligent actuators 244
intelligent sensors 246
user I/O interfaces 136
communication links 126
multimedia processing 134
ECU - windows 156
window actuator(s) 158
window sensor(s) 160
ECU - mirrors 162
mirror actuator(s) 164
mirror sensor(s) 166
ECU - seats 168
seat actuator(s) 170
seat sensor(s) 172
ECU - climate 174
climate actuator(s) 176
climate sensor(s) 178
ECU - diagnostics 150
diagnostic sensors 152
diagnostic actuator 154
non-mission critical network fabric 258
network manager 130
data bridge 260
power manager 132
mission critical network fabric 256
IR sensor 240
RF sensor 242
ECU - by-wire 198
by-wire actuator(s) 200
by-wire sensor(s) 202
ECU - xmission 204
xmission sensor 206
xmission actuator 208
ECU - braking 192
braking actuator(s) 194
braking sensor(s) 196
ECU - vehicle sys 210
vehicle sys actuator 212
vehicle sys sensor 214
multimedia processing 262
camera(s) 264
comm links 126
ECU - engine management 138
engine managemnt actuator(s) 140
engine managemnt sensor(s) 142
ECU - engn cntrl 144
engn cntrl acuator 146
engn cntrl sensor 148
ECU - safety critical appl 190
safety critical actuator 186
safety critical sensor 188
ECU - safety 180
safety actuator(s) 182
safety sensor(s) 184

FIG. 8

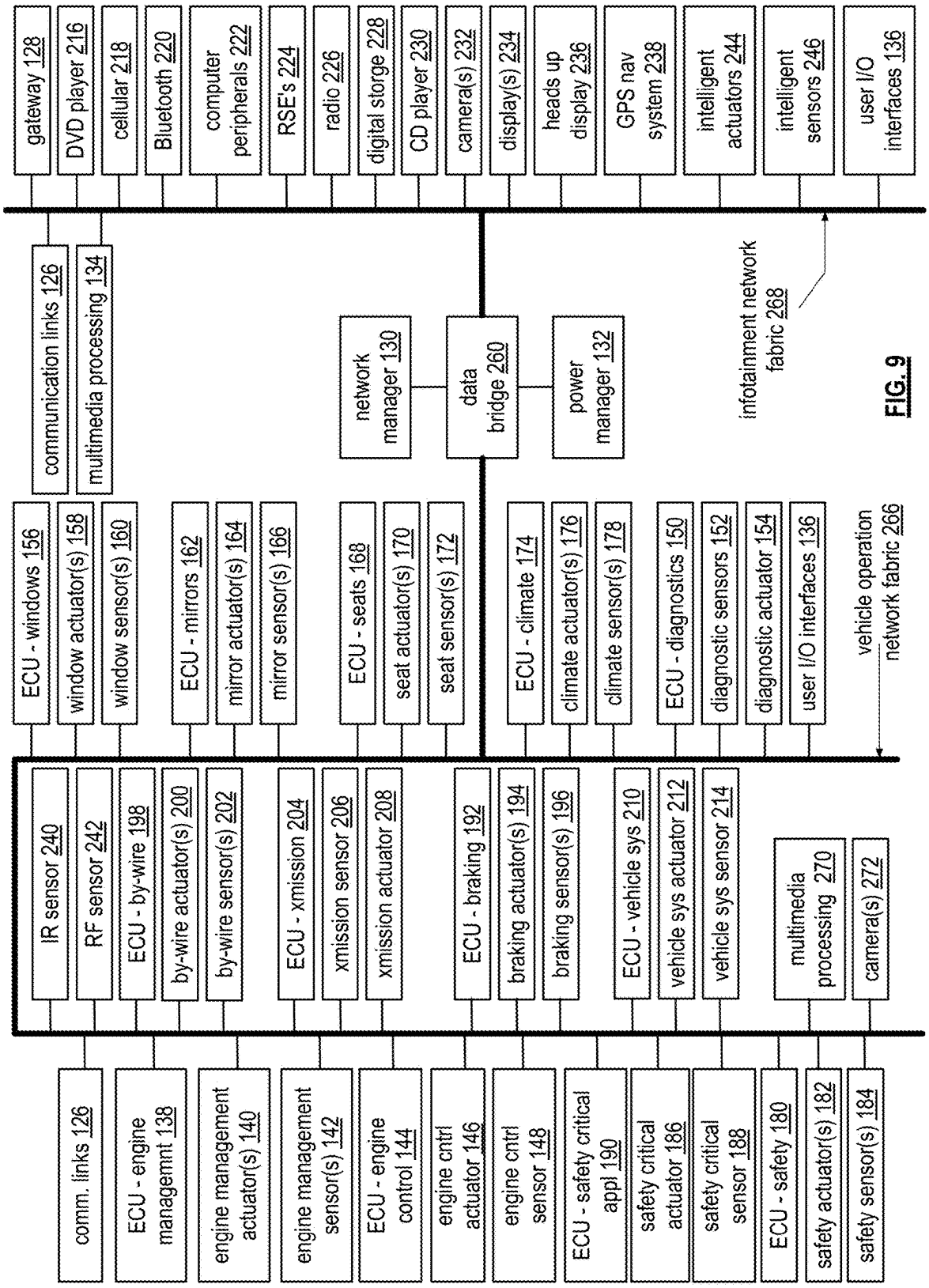
gateway 128
DVD player 216
cellular 218
Bluetooth 220
computer peripherals 222
RSE's 224
radio 226
digital storge 228
CD player 230
camera(s) 232
display(s) 234
heads up display 236
GPS nav system 238
intelligent actuators 244
intelligent sensors 246
user I/O interfaces 136
communication links 126
multimedia processing 134
network manager 130
data bridge 260
power manager 132
infotainment network fabric 268
ECU - windows 156
window actuator(s) 158
window sensor(s) 160
ECU - mirrors 162
mirror actuator(s) 164
mirror sensor(s) 166
ECU - seats 168
seat actuator(s) 170
seat sensor(s) 172
ECU - climate 174
climate actuator(s) 176
climate sensor(s) 178
ECU - diagnostics 150
diagnostic sensors 152
diagnostic actuator 154
user I/O interfaces 136
vehicle operation network fabric 266
IR sensor 240
RF sensor 242
ECU - by-wire 198
by-wire actuator(s) 200
by-wire sensor(s) 202
ECU - xmission 204
xmission sensor 206
xmission actuator 208
ECU - braking 192
braking actuator(s) 194
braking sensor(s) 196
ECU - vehicle sys 210
vehicle sys actuator 212
vehicle sys sensor 214
multimedia processing 270
camera(s) 272
comm. links 126
ECU - engine managemnt 138
engine management actuator(s) 140
engine management sensor(s) 142
ECU - engine control 144
engine cntrl actuator 146
engine cntrl sensor 148
ECU - safety critical appl 190
safety critical actuator 186
safety critical sensor 188
ECU - safety 180
safety actuator(s) 182
safety sensor(s) 184

FIG. 9

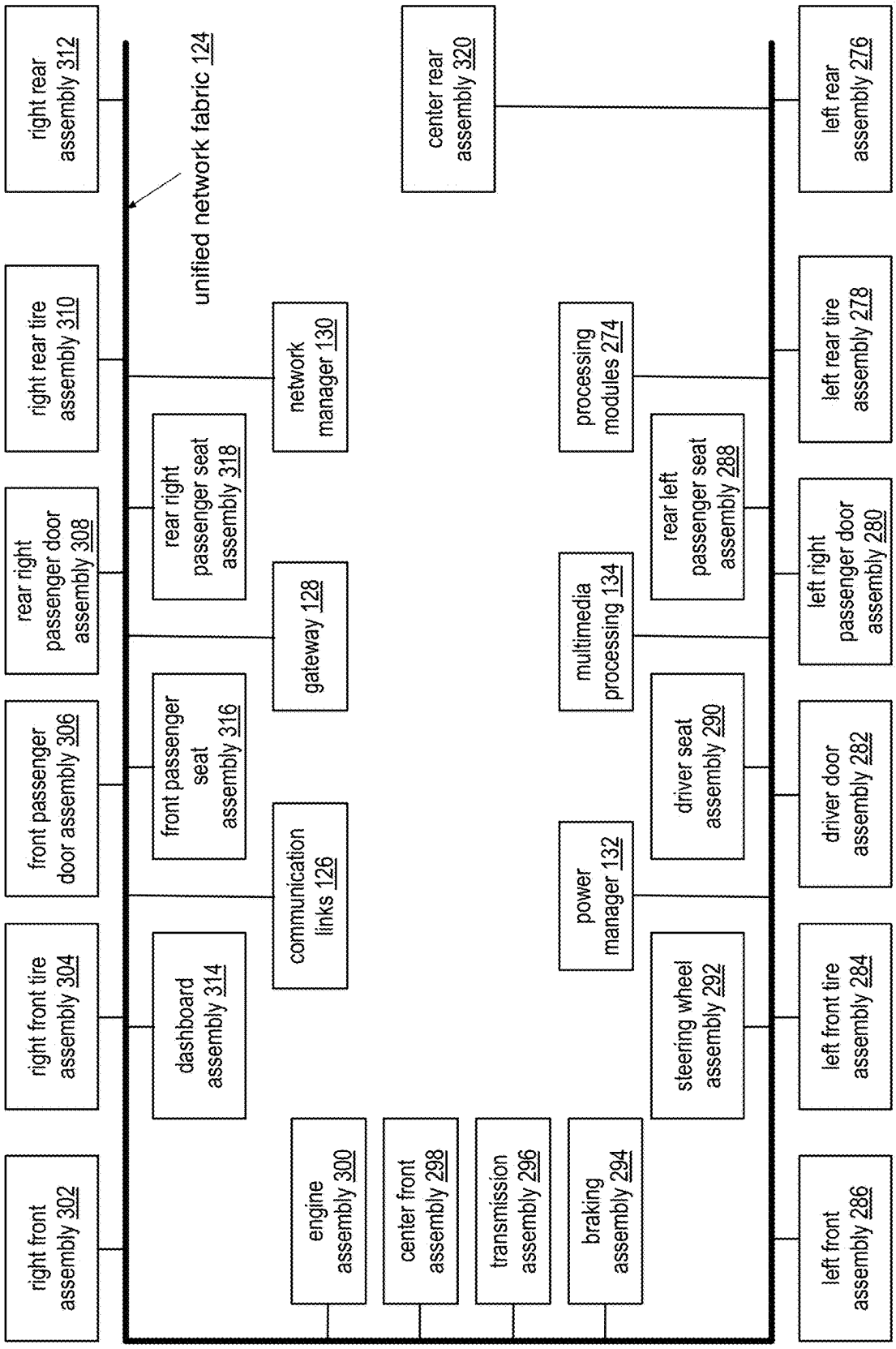
right front assembly 302
right front tire assembly 304
front passenger door assembly 306
rear right passenger door assembly 308
right rear tire assembly 310
right rear assembly 312
dashboard assembly 314
front passenger seat assembly 316
rear right passenger seat assembly 318
unified network fabric 124
communication links 126
gateway 128
network manager 130
engine assembly 300
center front assembly 298
transmission assembly 296
braking assembly 294
steering wheel assembly 292
driver seat assembly 290
rear left passenger seat assembly 288
power manager 132
multimedia processing 134
processing modules 274
center rear assembly 320
left front assembly 286
left front tire assembly 284
driver door assembly 282
left right passenger door assembly 280
left rear tire assembly 278
left rear assembly 276

FIG.10

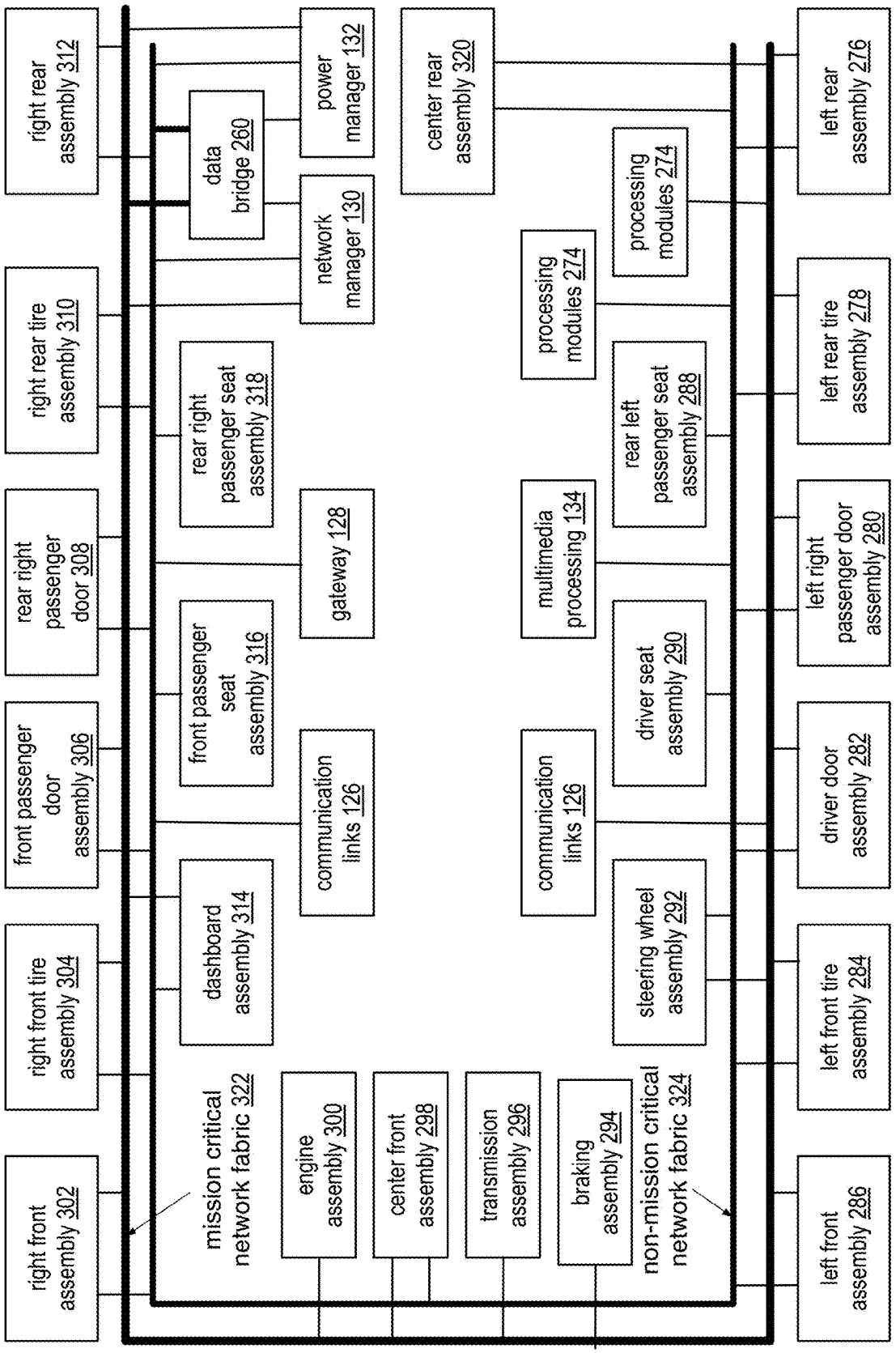
right front assembly 302
right front tire assembly 304
front passenger door assembly 306
rear right passenger door 308
right rear tire assembly 310
right rear assembly 312
mission critical network fabric 322
dashboard assembly 314
front passenger seat assembly 316
rear right passenger seat assembly 318
data bridge 260
power manager 132
network manager 130
communication links 126
gateway 128
engine assembly 300
center front assembly 298
transmission assembly 296
braking assembly 294
non-mission critical network fabric 324
steering wheel assembly 292
driver seat assembly 290
rear left passenger seat assembly 288
processing modules 274
multimedia processing 134
communication links 126
processing modules 274
center rear assembly 320
left front assembly 286
left front tire assembly 284
driver door assembly 282
left right passenger door assembly 280
left rear tire assembly 278
left rear assembly 276

FIG. 11

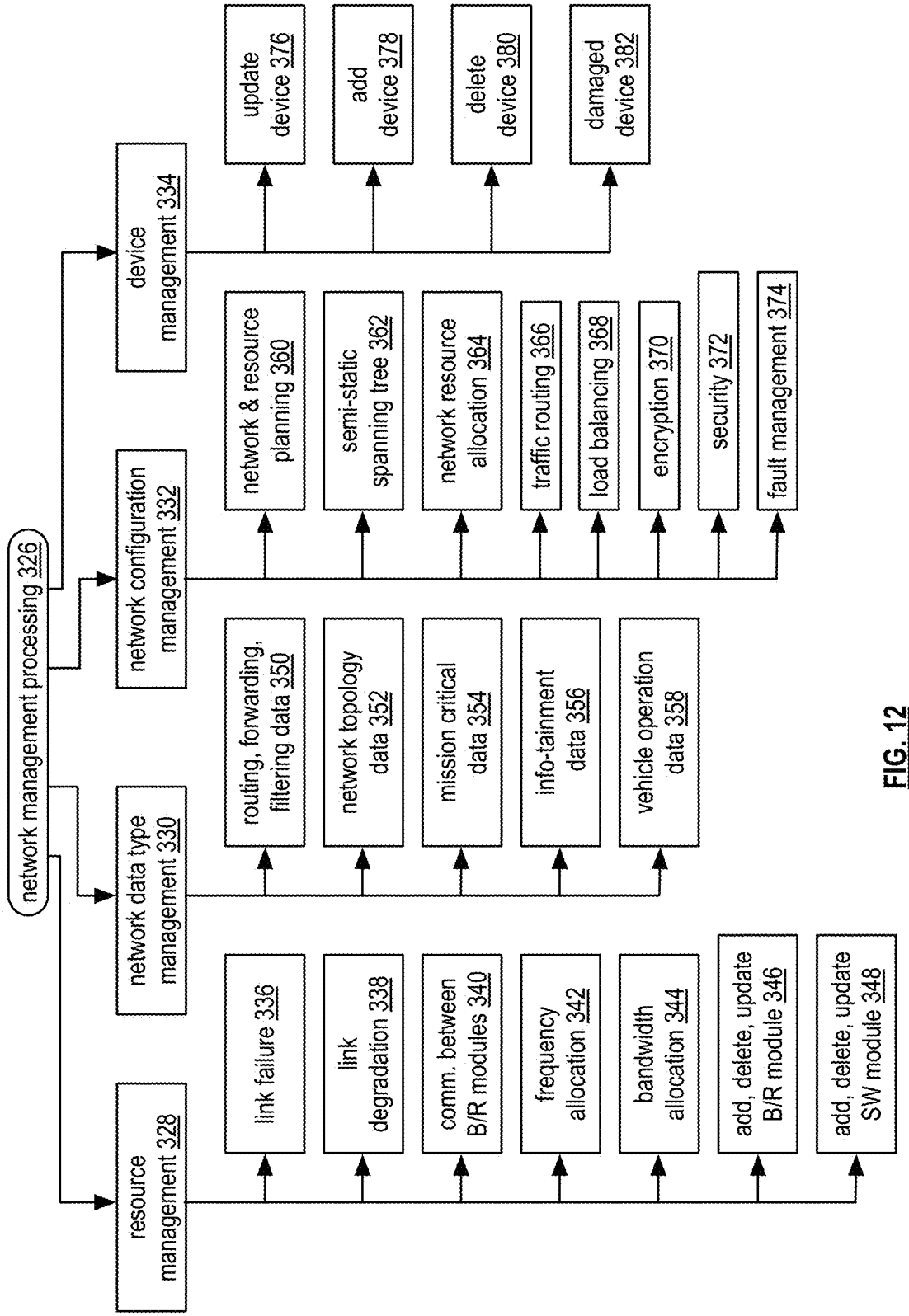
network management processing 326
resource management 328
network data type management 330
network configuration management 332
device management 334
link failure 336
link degradation 338
comm. between B/R modules 340
frequency allocation 342
bandwidth allocation 344
add, delete, update B/R module 346
add, delete, update SW module 348
routing, forwarding, filtering data 350
network topology data 352
mission critical data 354
info-tainment data 356
vehicle operation data 358
network & resource planning 360
semi-static spanning tree 362
network resource allocation 364
traffic routing 366
load balancing 368
encryption 370
security 372
fault management 374
update device 376
add device 378
delete device 380
damaged device 382

FIG. 12

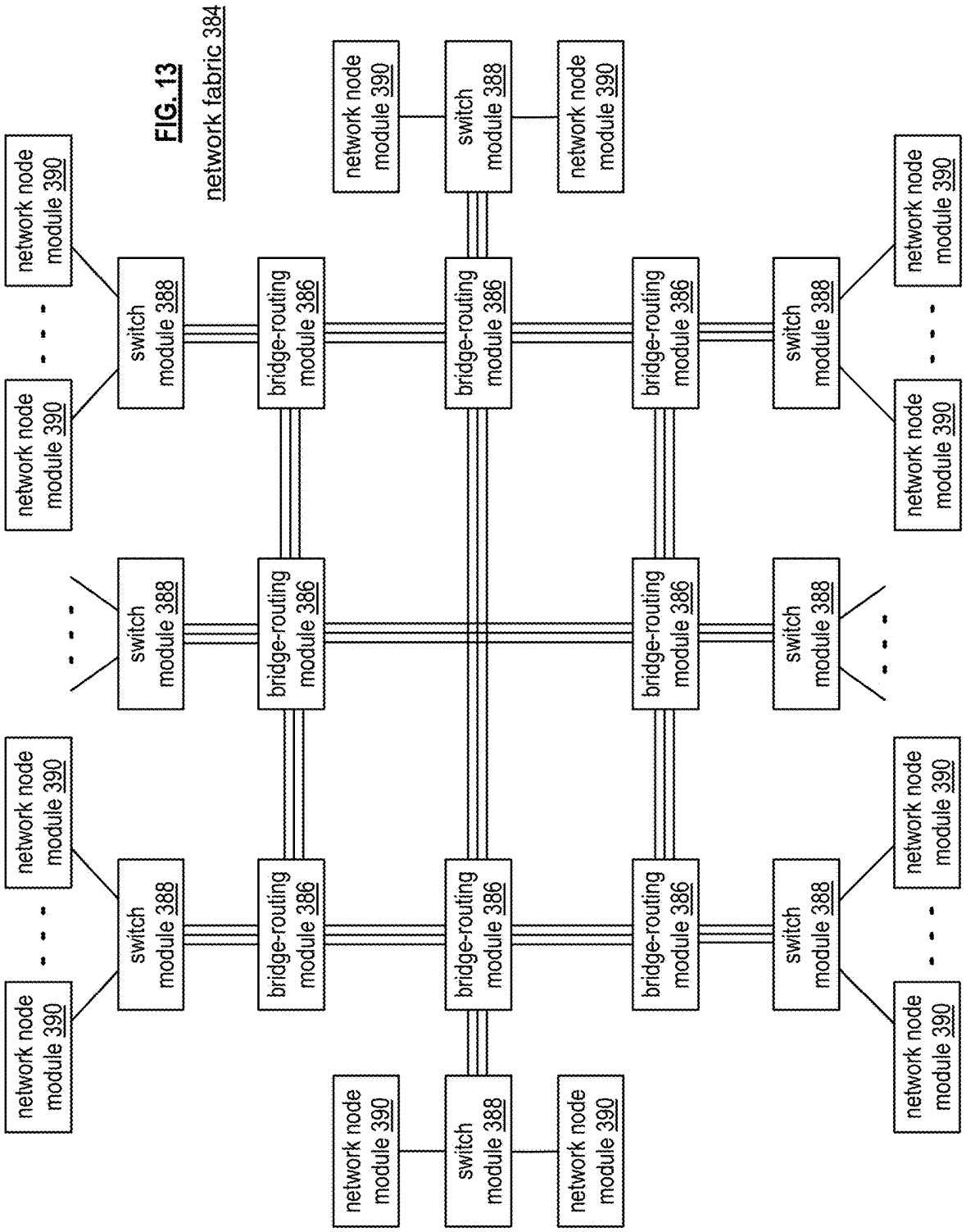

FIG. 13

network fabric 384

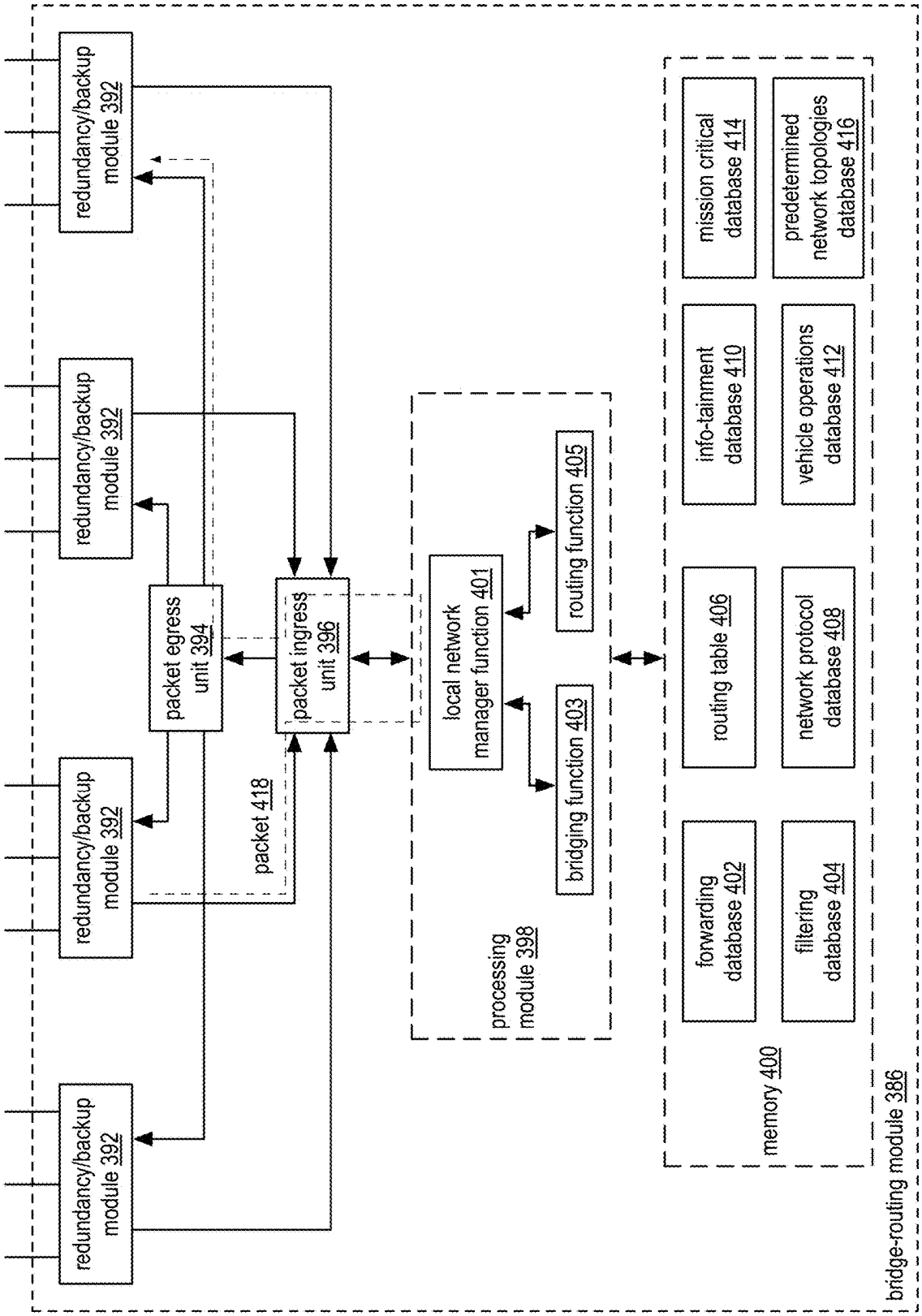
redundancy/backup module 392
redundancy/backup module 392
redundancy/backup module 392
redundancy/backup module 392
packet egress unit 394
packet ingress unit 396
packet 418
local network manager function 401
routing function 405
bridging function 403
processing module 398
mission critical database 414
predetermined network topologies database 416
info-tainment database 410
vehicle operations database 412
routing table 406
network protocol database 408
forwarding database 402
filtering database 404
memory 400
bridge-routing module 386

FIG. 14

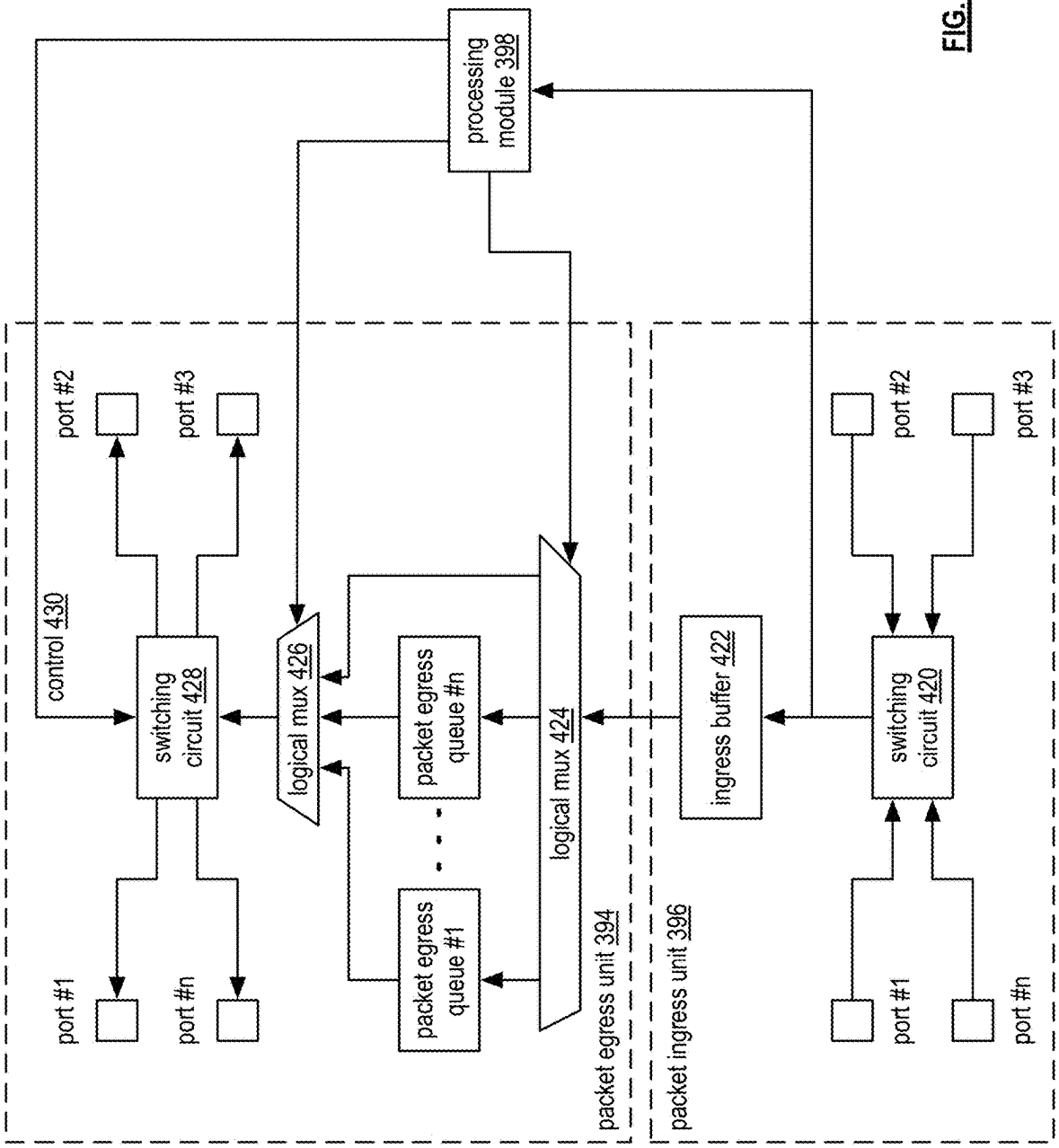
processing module 398
control 430
switching circuit 428
port #1
port #2
port #3
port #n
logical mux 426
packet egress queue #1
packet egress queue #n
logical mux 424
packet egress unit 394
ingress buffer 422
switching circuit 420
port #1
port #2
port #3
port #n
packet ingress unit 396

FIG. 15

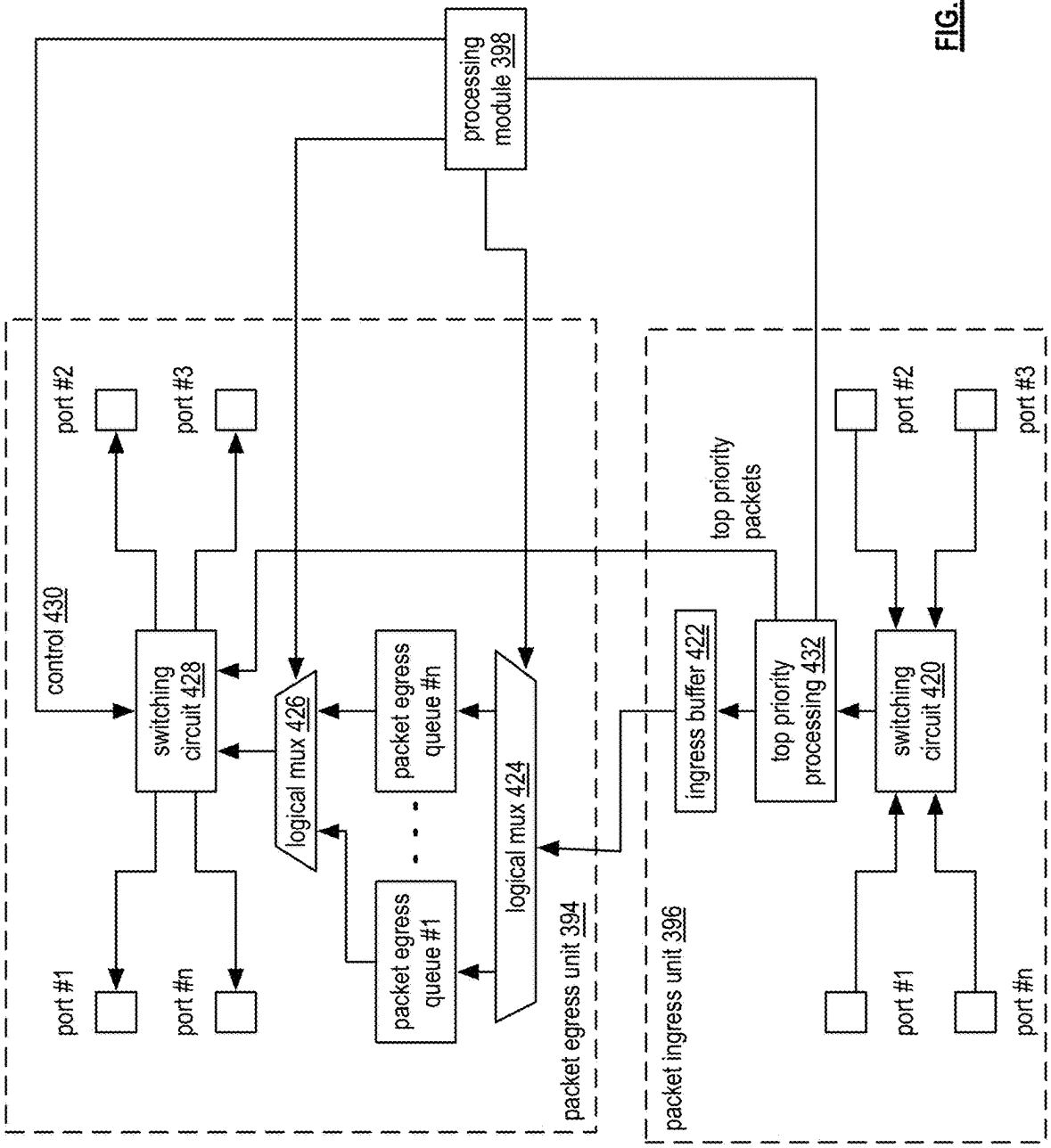
processing module 398
control 430
switching circuit 428
port #1
port #2
port #3
port #n
logical mux 426
packet egress queue #1
packet egress queue #n
logical mux 424
packet egress unit 394
top priority packets
ingress buffer 422
top priority processing 432
switching circuit 420
port #1
port #2
port #3
port #n
packet ingress unit 396

FIG. 16

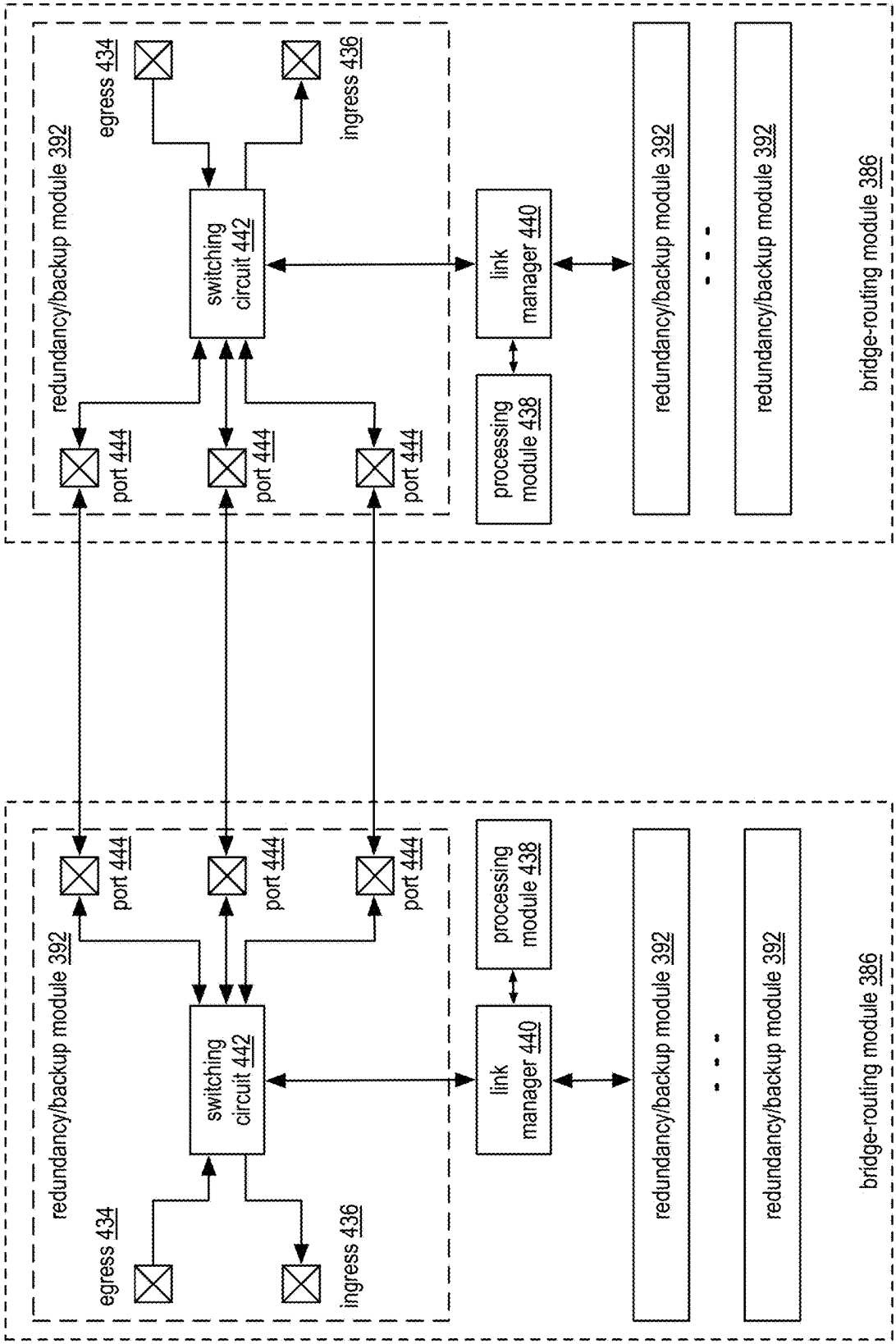
redundancy/backup module 392
egress 434
ingress 436
switching circuit 442
port 444
port 444
port 444
link manager 440
processing module 438
redundancy/backup module 392
redundancy/backup module 392
bridge-routing module 386
redundancy/backup module 392
egress 434
ingress 436
switching circuit 442
port 444
port 444
port 444
link manager 440
processing module 438
redundancy/backup module 392
redundancy/backup module 392
bridge-routing module 386

FIG. 17

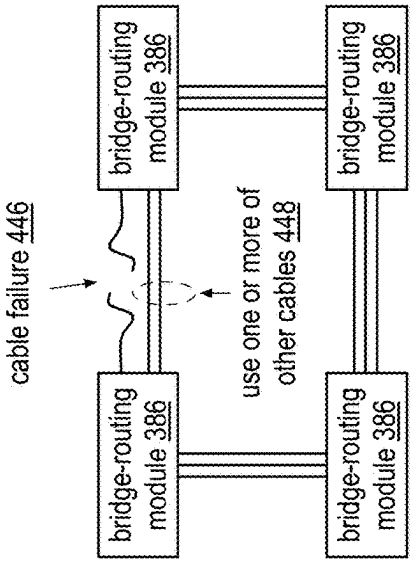
cable failure 446
bridge-routing module 386
bridge-routing module 386
use one or more of other cables 448
bridge-routing module 386
bridge-routing module 386

FIG. 18

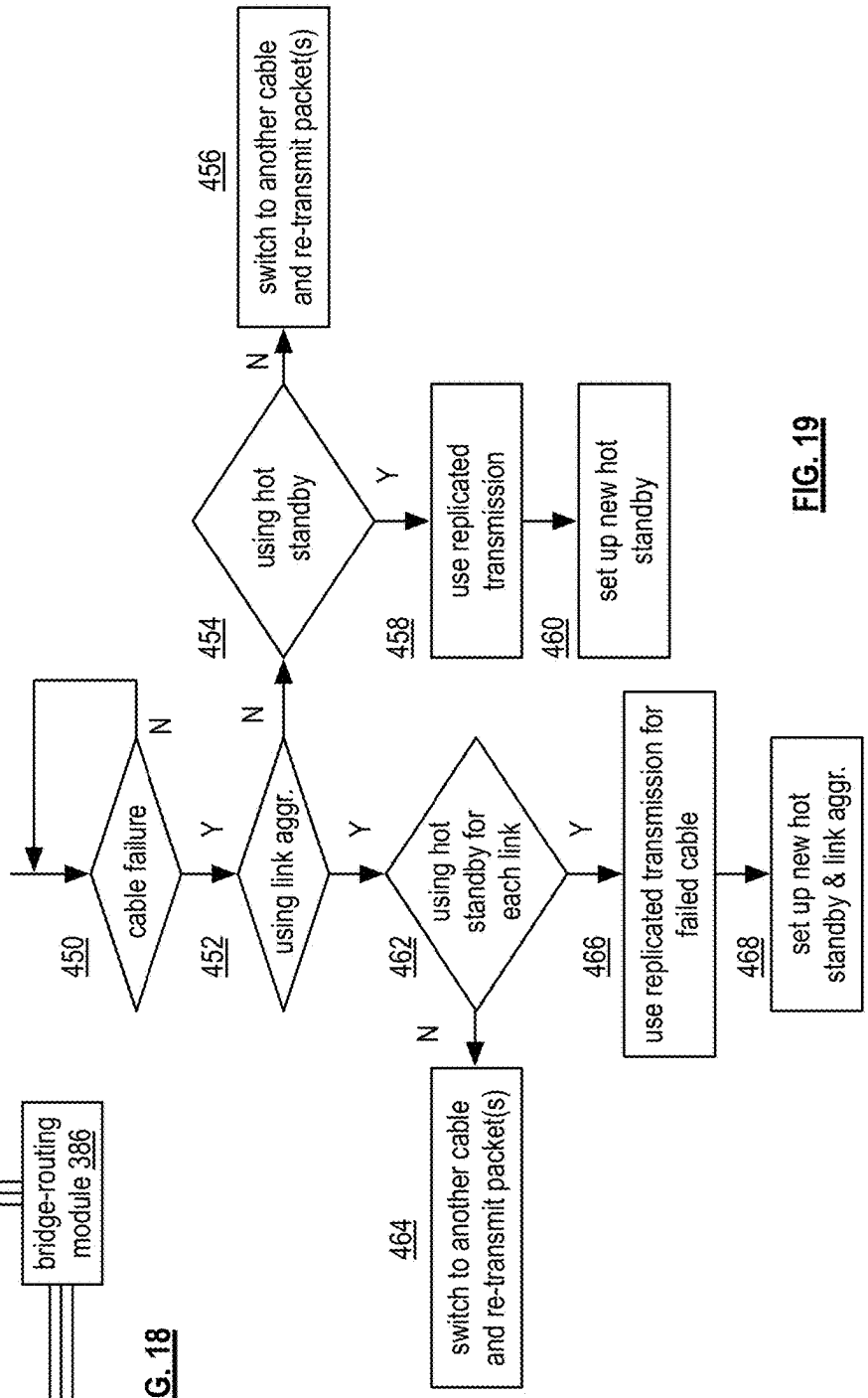
450
cable failure
N
Y
452
using link aggr.
N
Y
454
using hot standby
N
Y
456
switch to another cable and re-transmit packet(s)
458
use replicated transmission
460
set up new hot standby
462
using hot standby for each link
N
Y
464
switch to another cable and re-transmit packet(s)
466
use replicated transmission for failed cable
468
set up new hot standby & link aggr.

FIG. 19

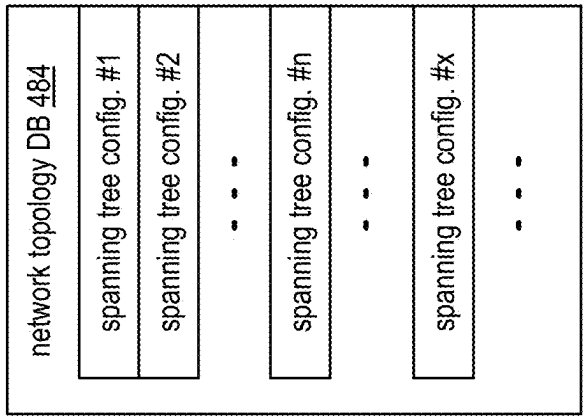

FIG. 22

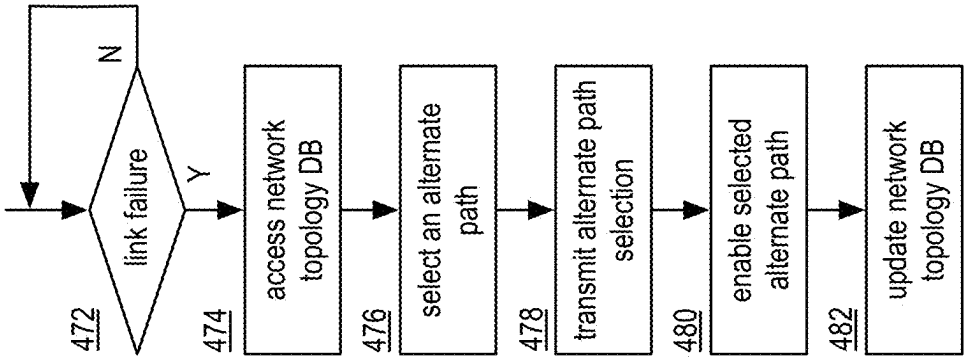

FIG. 21

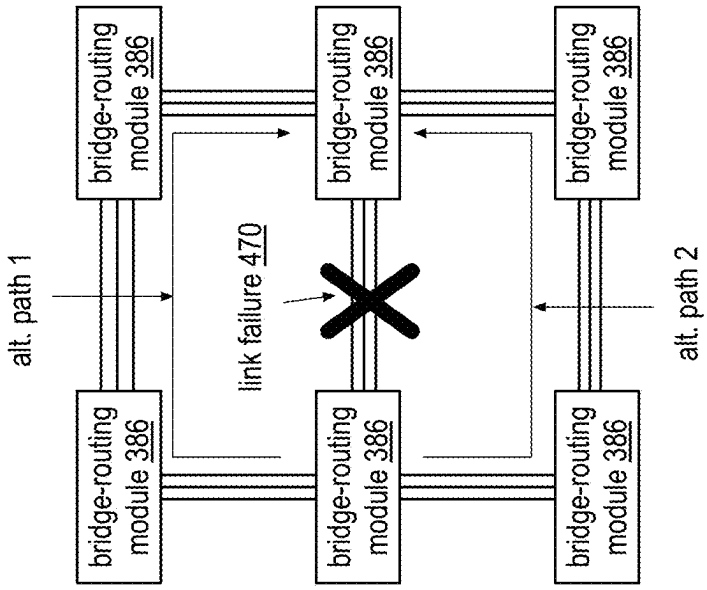

FIG. 20

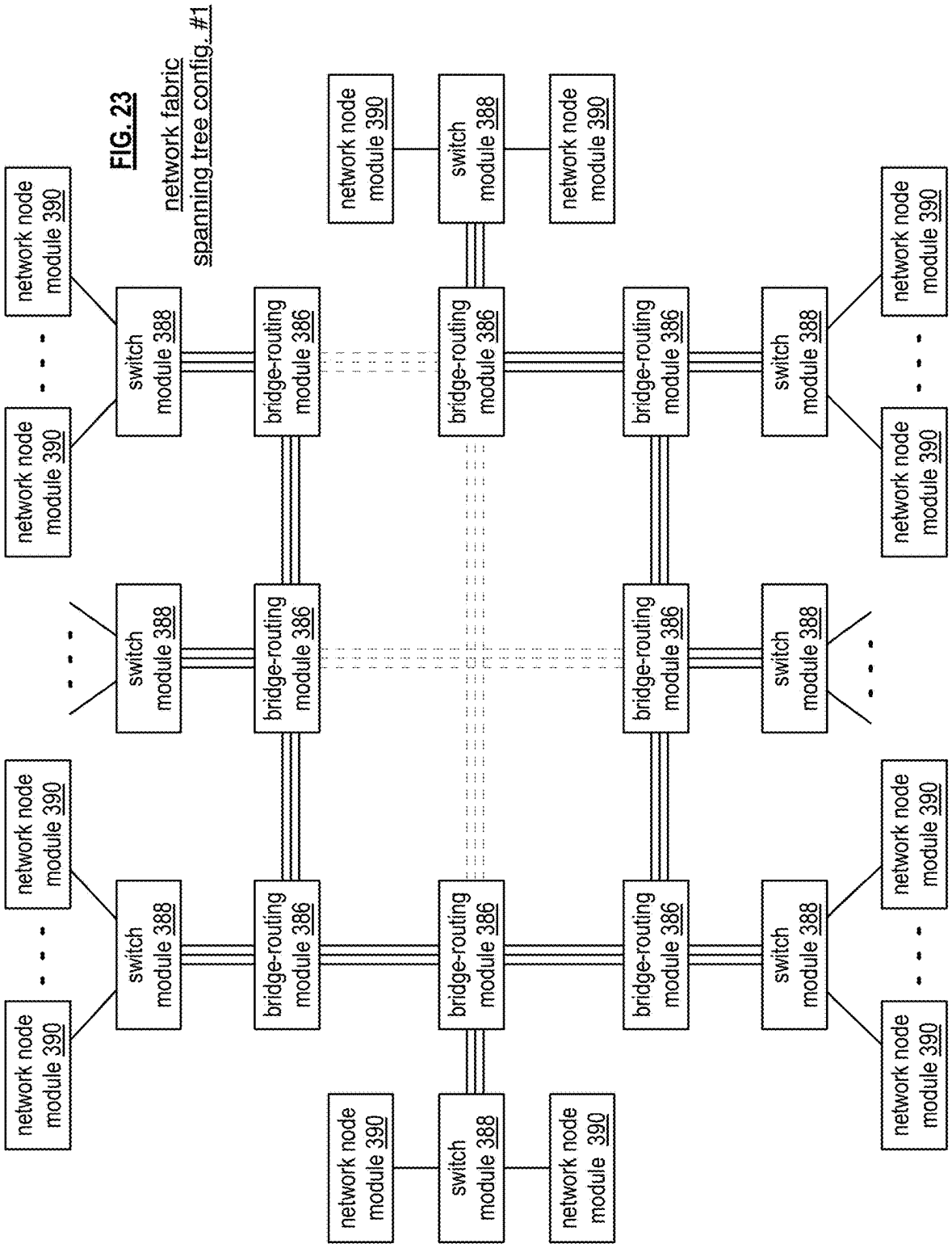

FIG. 23
network fabric
spanning tree config. #1

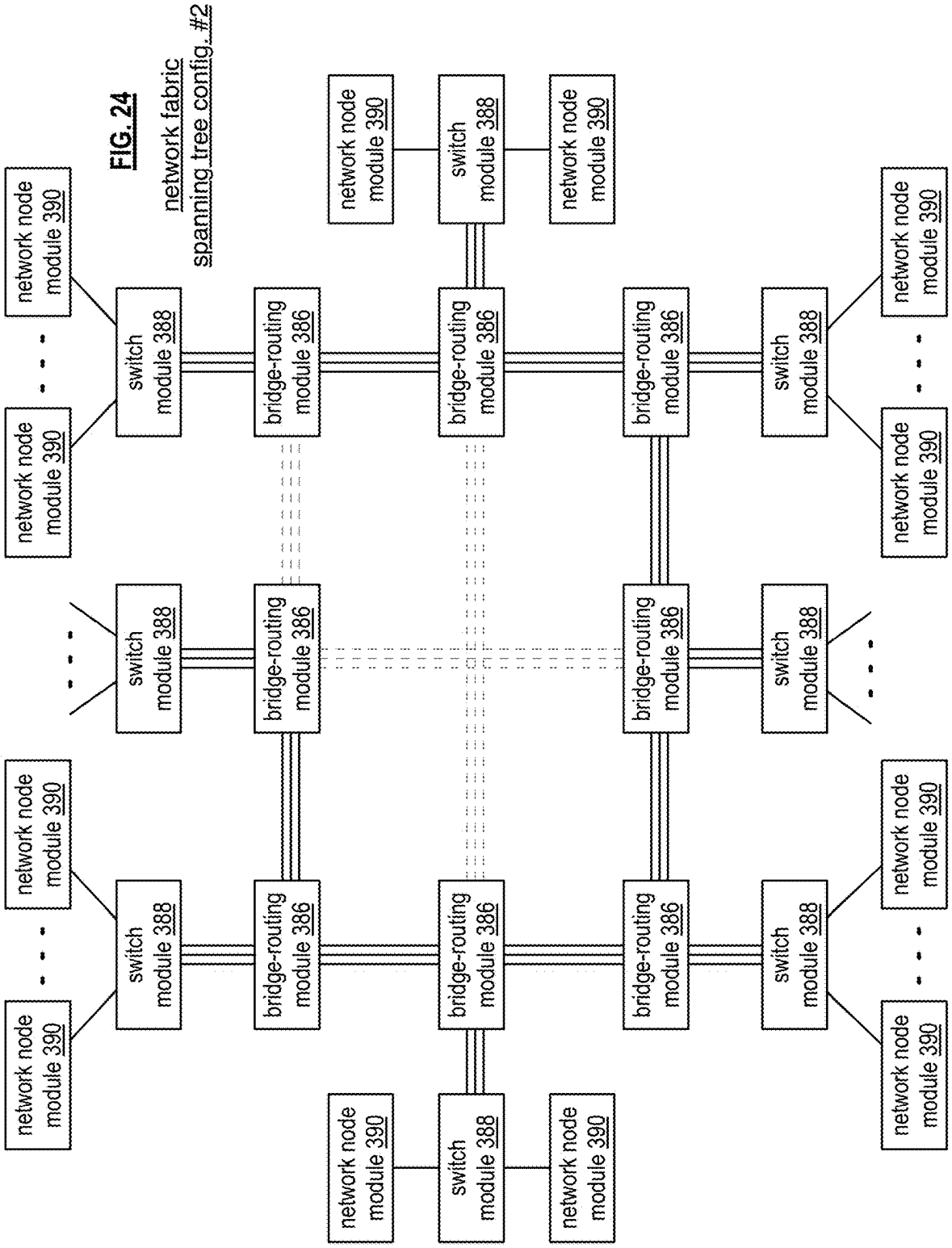

FIG. 24
network fabric
spanning tree config. #2

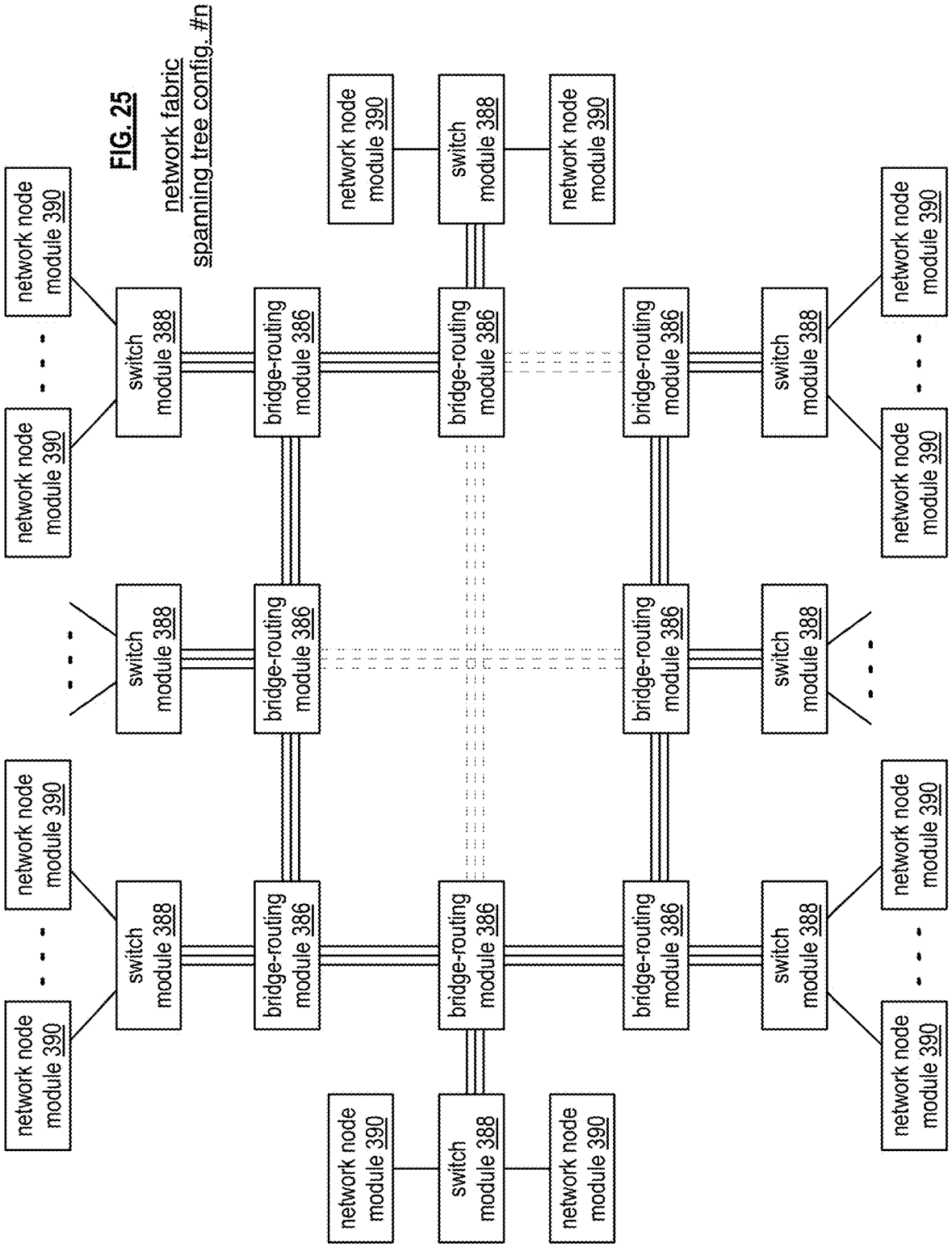

FIG. 25
network fabric
spanning tree config. #n

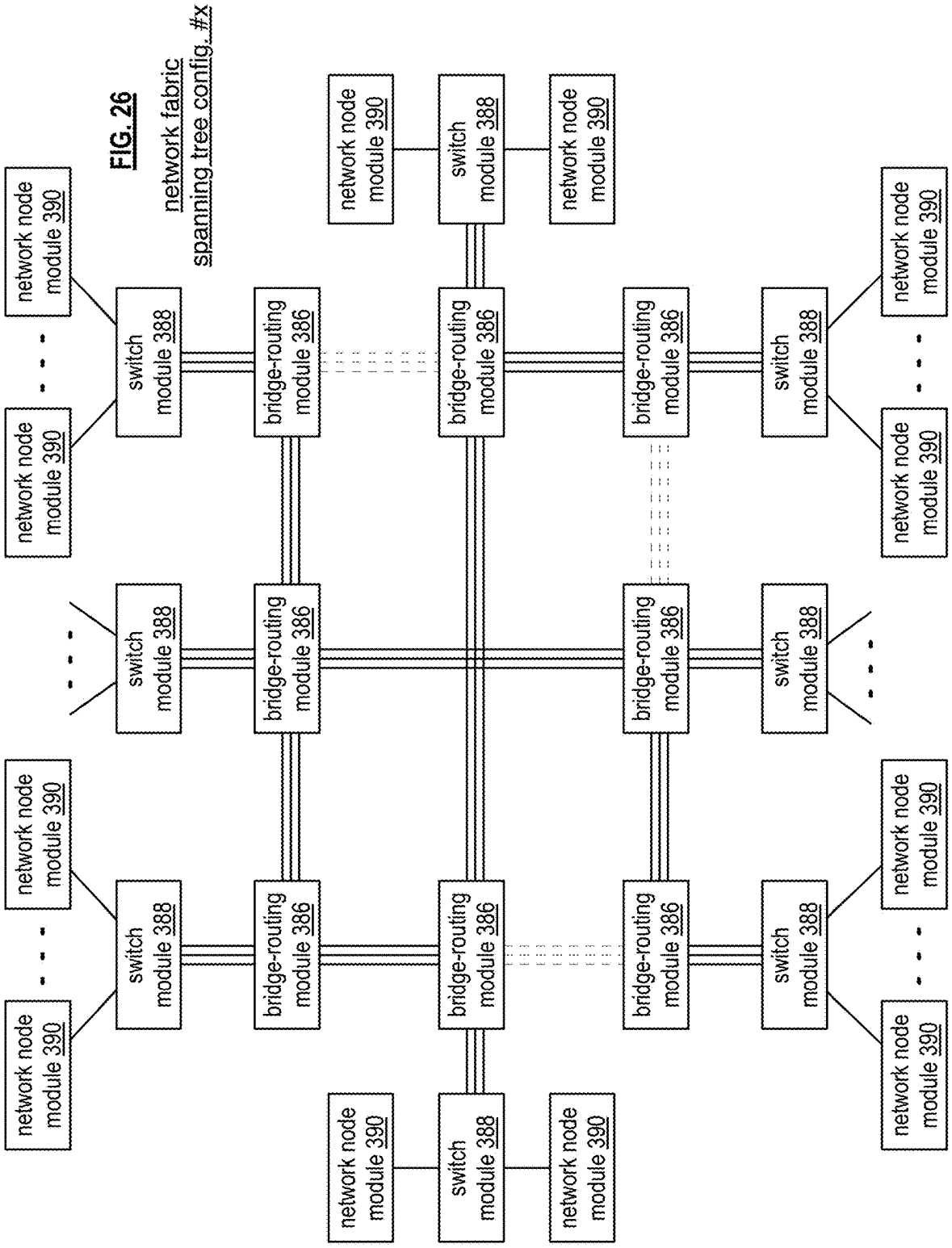

FIG. 26
network fabric
spanning tree config. #x

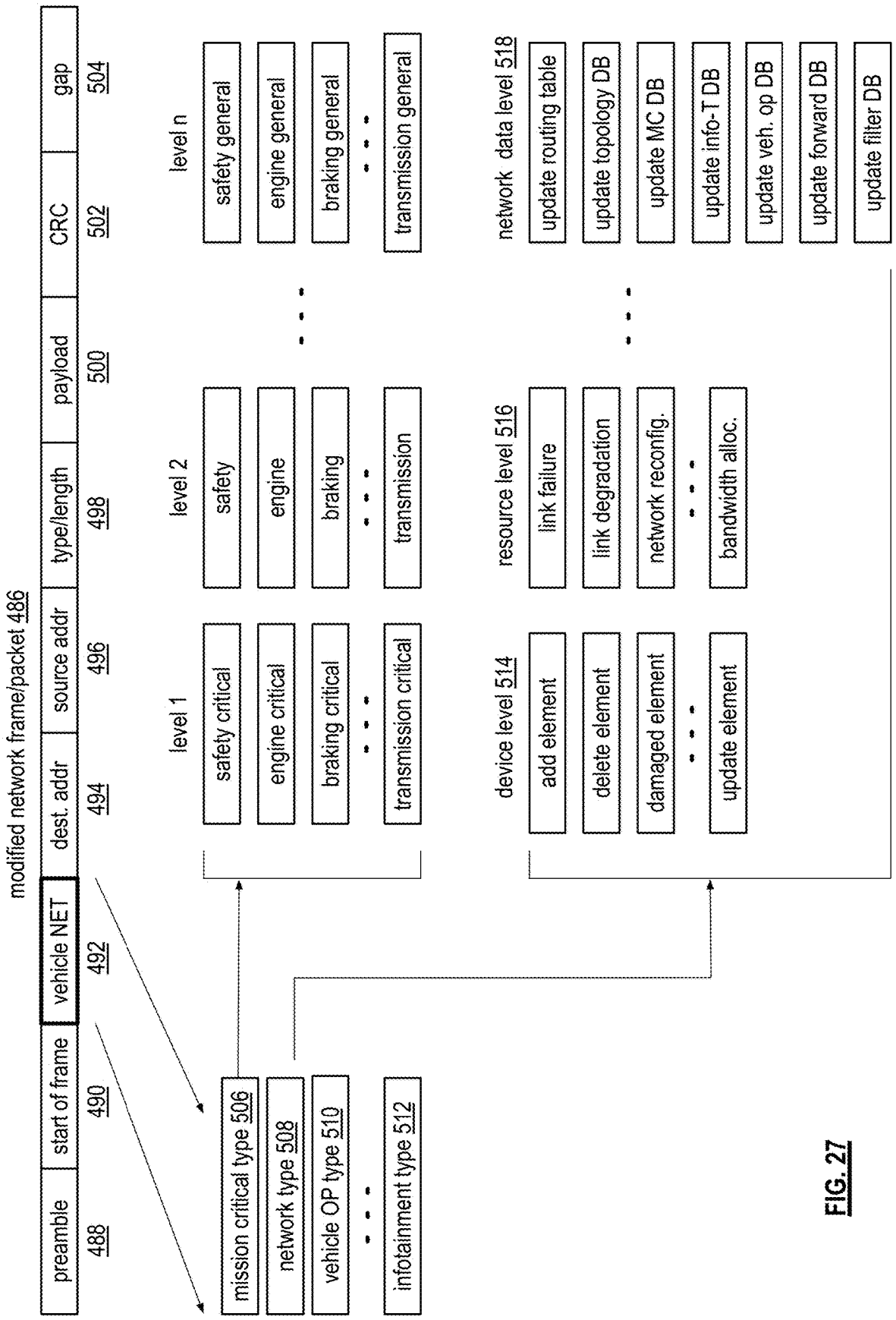
modified network frame/packet 486
preamble
start of frame
vehicle NET
dest. addr
source addr
type/length
payload
CRC
gap
488
490
492
494
496
498
500
502
504
mission critical type 506
network type 508
vehicle OP type 510
infotainment type 512
level 1
safety critical
engine critical
braking critical
transmission critical
level 2
safety
engine
braking
transmission
level n
safety general
engine general
braking general
transmission general
device level 514
add element
delete element
damaged element
update element
resource level 516
link failure
link degradation
network reconfig.
bandwidth alloc.
network data level 518
update routing table
update topology DB
update MC DB
update info-T DB
update veh. op DB
update forward DB
update filter DB

FIG. 27

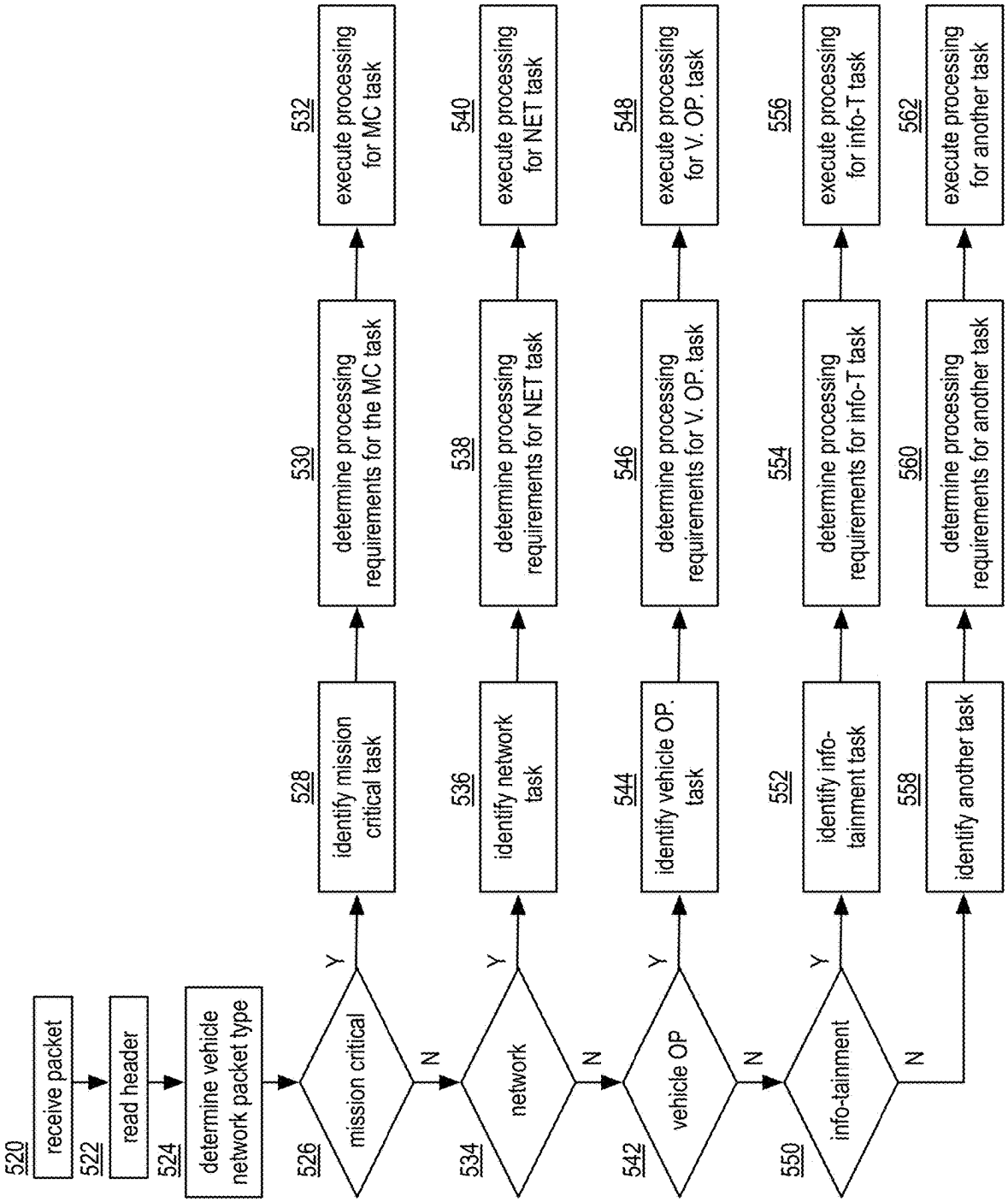
520
receive packet
522
read header
524
determine vehicle network packet type
526
mission critical
Y
N
528
identify mission critical task
530
determine processing requirements for the MC task
532
execute processing for MC task
534
network
Y
N
536
identify network task
538
determine processing requirements for NET task
540
execute processing for NET task
542
vehicle OP
Y
N
544
identify vehicle OP. task
546
determine processing requirements for V. OP. task
548
execute processing for V. OP. task
550
info-tainment
Y
N
552
identify info-tainment task
554
determine processing requirements for info-T task
556
execute processing for info-T task
558
identify another task
560
determine processing requirements for another task
562
execute processing for another task

FIG. 28

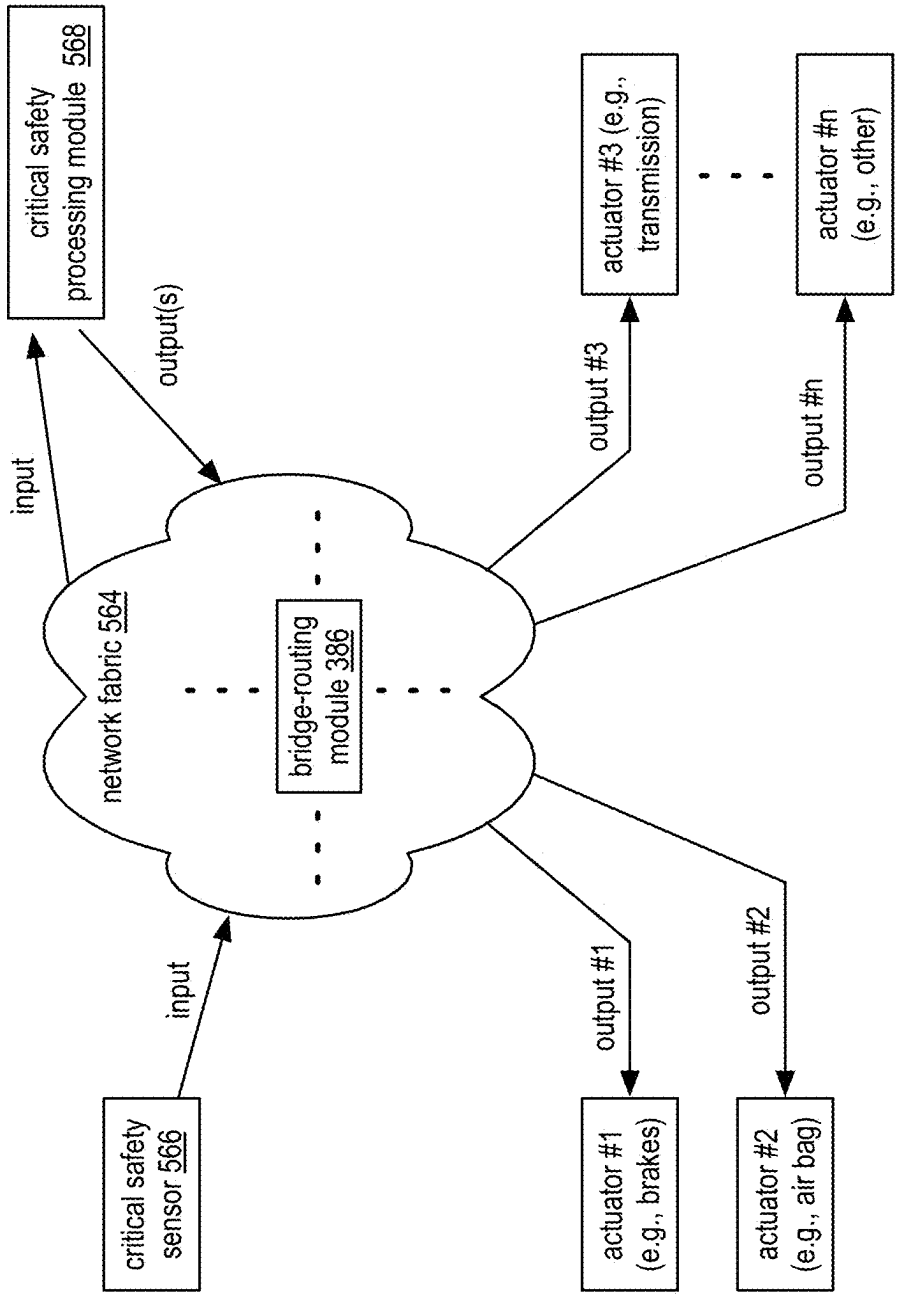
critical safety processing module 568
input
output(s)
network fabric 564
bridge-routing module 386
critical safety sensor 566
input
output #1
output #2
output #3
output #n
actuator #1 (e.g., brakes)
actuator #2 (e.g., air bag)
actuator #3 (e.g., transmission)
actuator #n (e.g., other)

FIG. 29

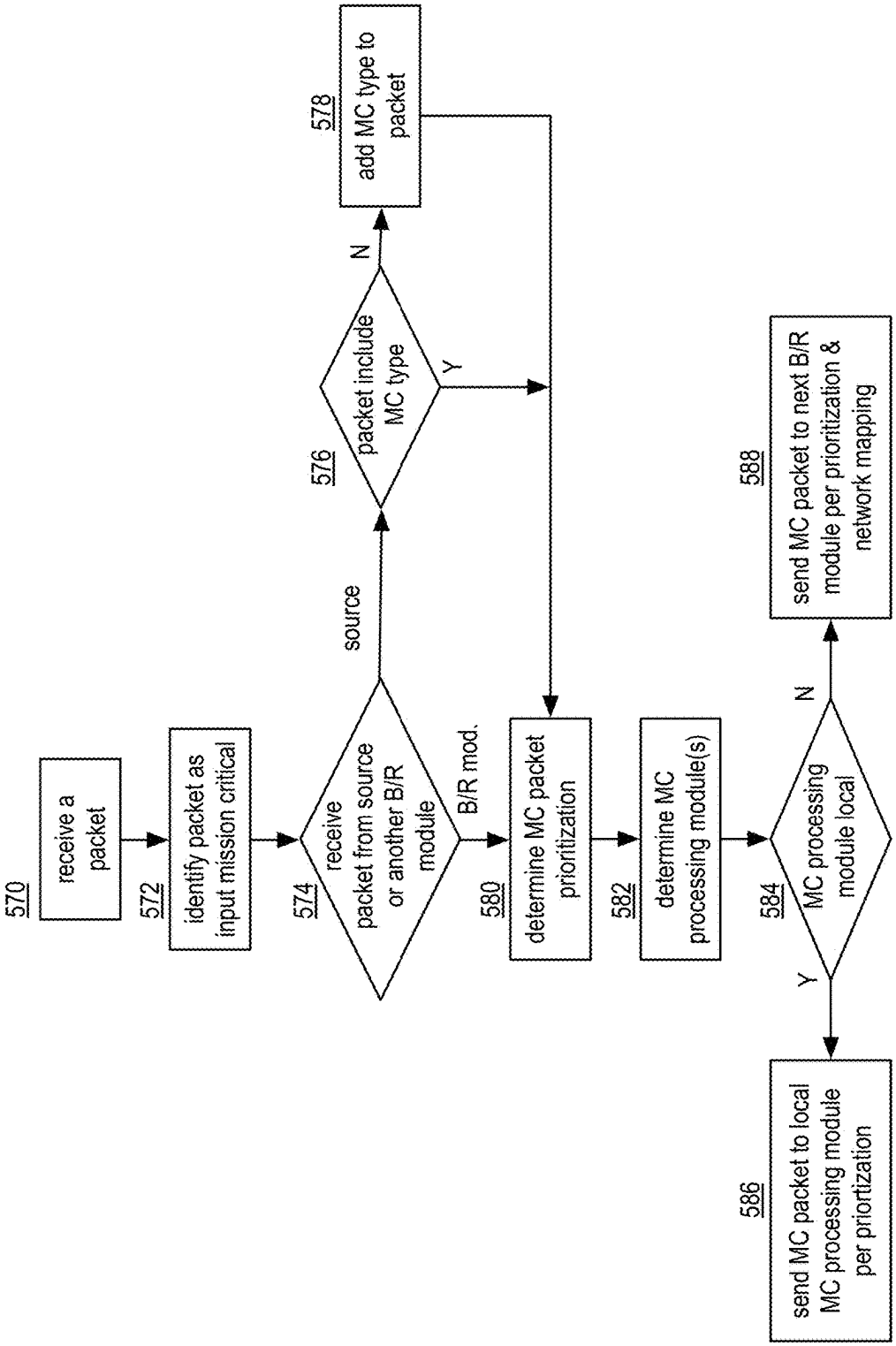
570
receive a packet
572
identify packet as input mission critical
574
receive packet from source or another B/R module
source
B/R mod.
576
packet include MC type
N
Y
578
add MC type to packet
580
determine MC packet prioritization
582
determine MC processing module(s)
584
MC processing module local
Y
N
586
send MC packet to local MC processing module per priortization
588
send MC packet to next B/R module per prioritization & network mapping

FIG. 30

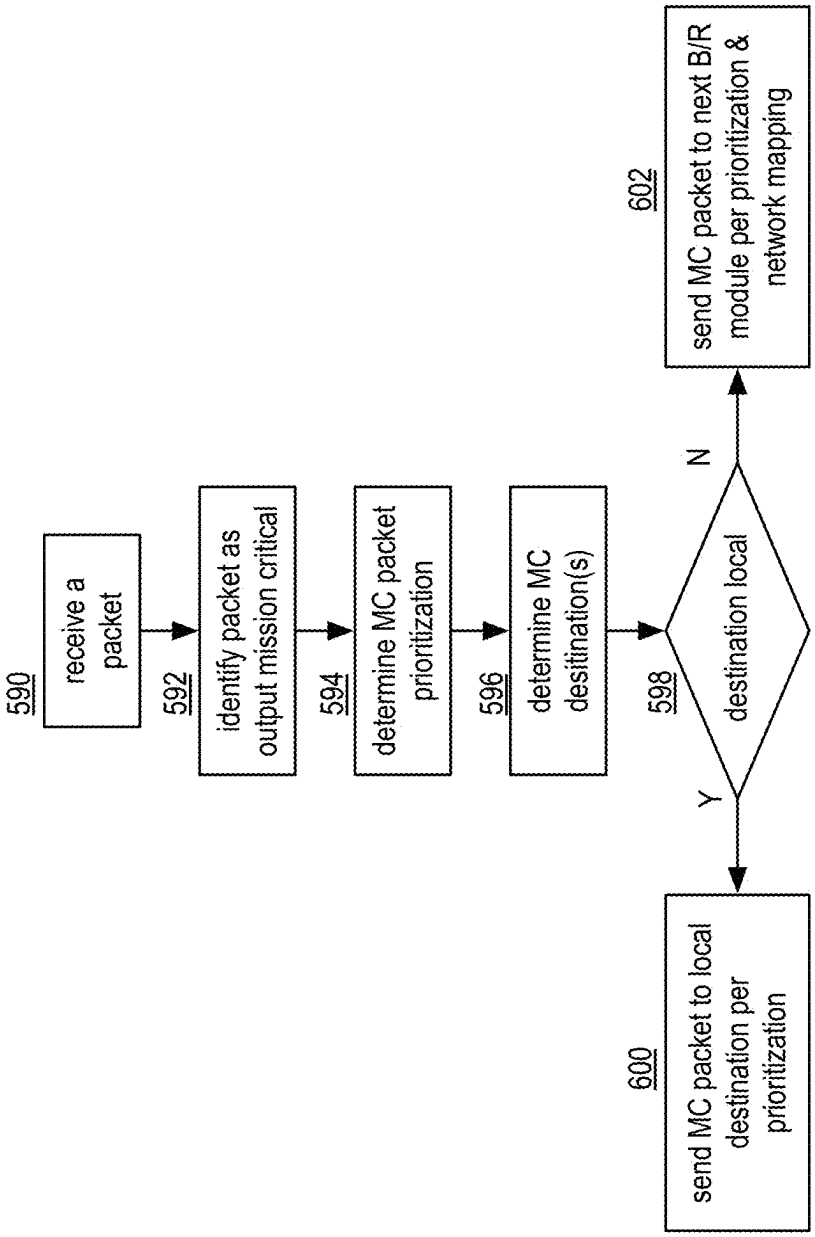
590
receive a packet
592
identify packet as output mission critical
594
determine MC packet prioritization
596
determine MC desitination(s)
598
destination local
Y
N
600
send MC packet to local destination per prioritization
602
send MC packet to next B/R module per prioritization & network mapping

FIG. 31

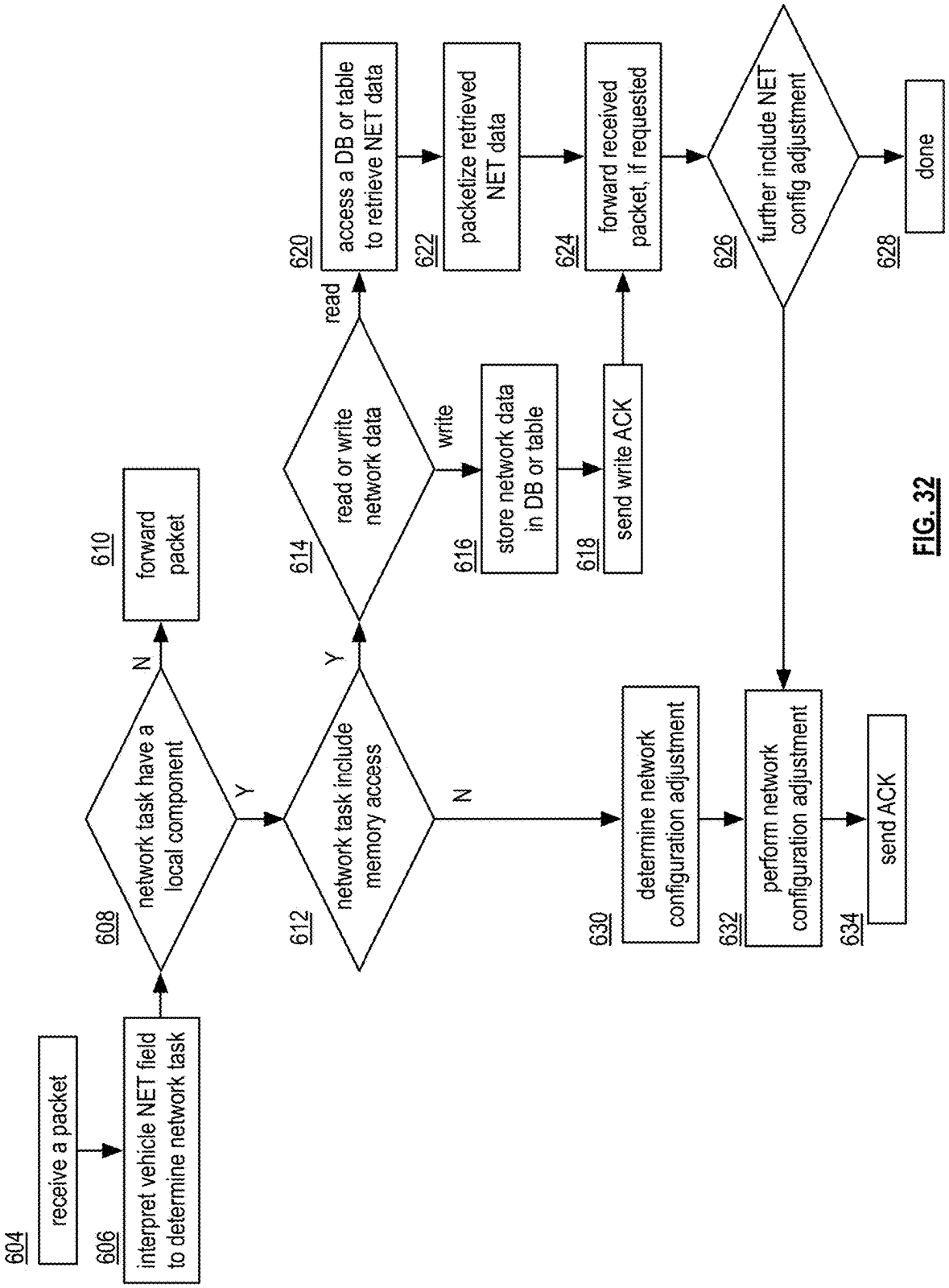
604
receive a packet
606
interpret vehicle NET field to determine network task
608
network task have a local component
N
610
forward packet
Y
612
network task include memory access
Y
614
read or write network data
read
620
access a DB or table to retrieve NET data
622
packetize retrieved NET data
write
616
store network data in DB or table
618
send write ACK
624
forward received packet, if requested
N
630
determine network configuration adjustment
632
perform network configuration adjustment
626
further include NET config adjustment
634
send ACK
628
done

FIG. 32

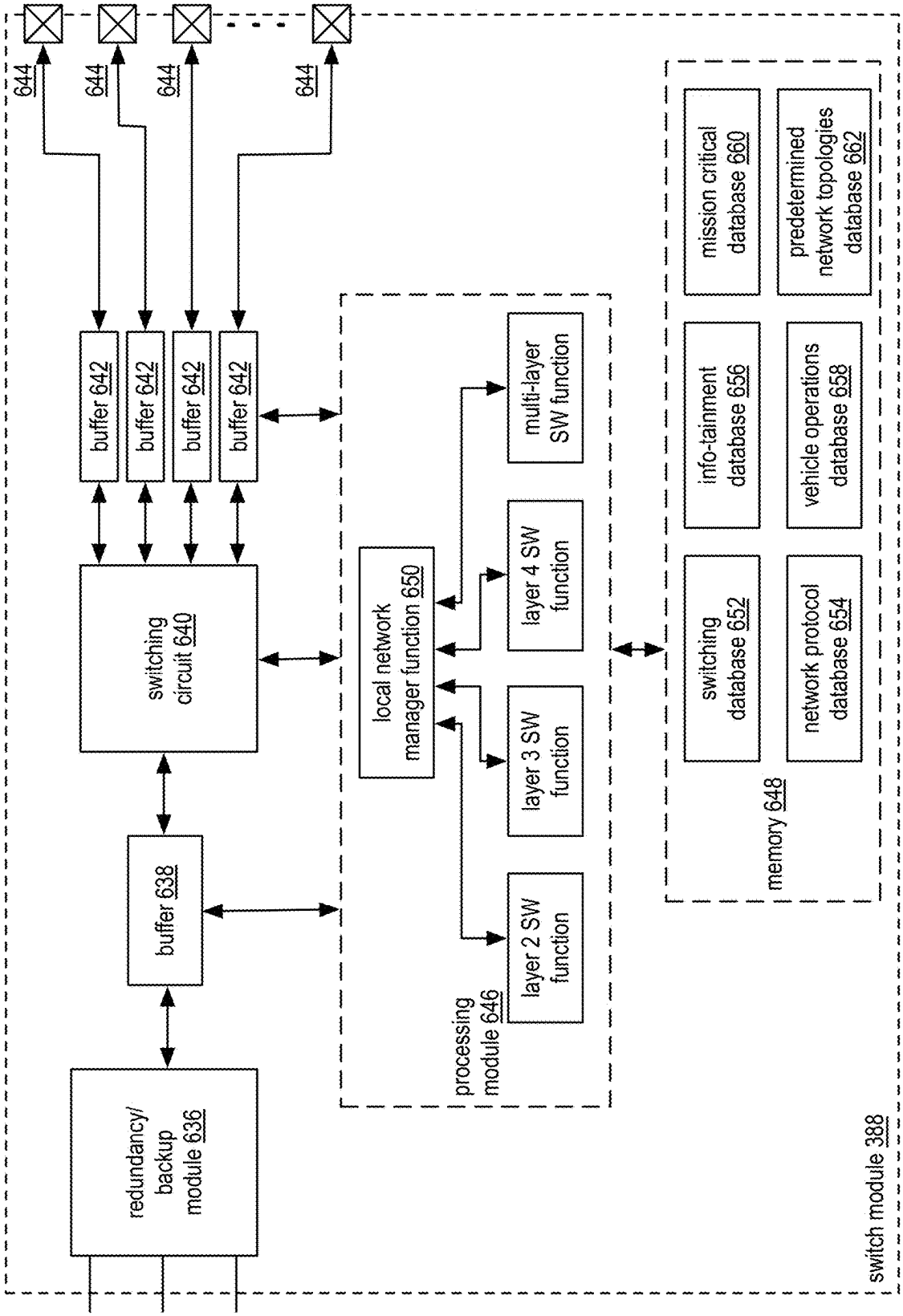
644
644
644
644
buffer 642
buffer 642
buffer 642
buffer 642
switching circuit 640
buffer 638
redundancy/ backup module 636
local network manager function 650
multi-layer SW function
layer 4 SW function
layer 3 SW function
layer 2 SW function
processing module 646
mission critical database 660
predetermined network topologies database 662
info-tainment database 656
vehicle operations database 658
switching database 652
network protocol database 654
memory 648
switch module 388

FIG. 33

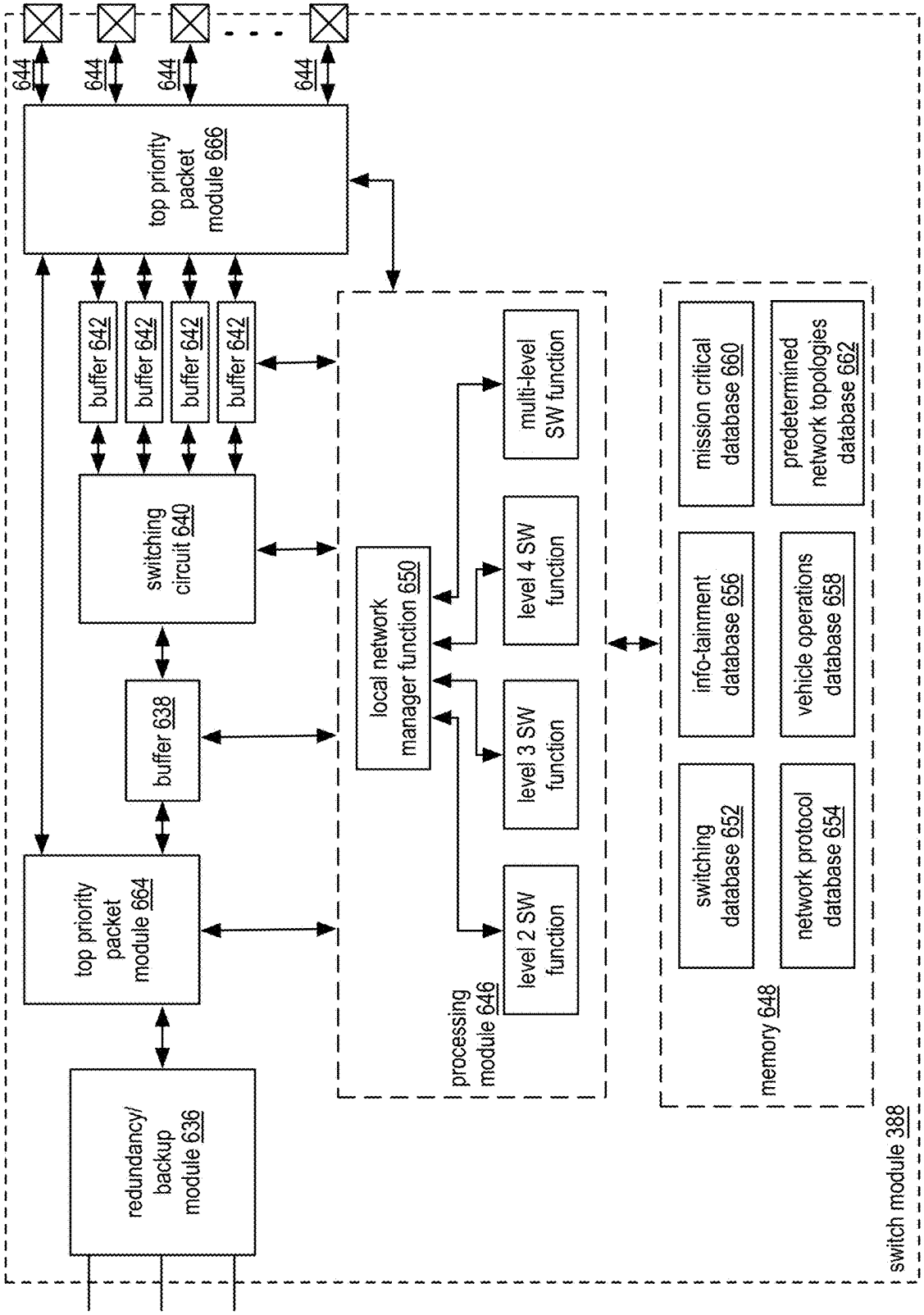
644
644
644
644
top priority packet module 666
buffer 642
buffer 642
buffer 642
buffer 642
switching circuit 640
buffer 638
top priority packet module 664
redundancy/ backup module 636
local network manager function 650
multi-level SW function
level 4 SW function
level 3 SW function
level 2 SW function
processing module 646
mission critical database 660
predetermined network topologies database 662
info-tainment database 656
vehicle operations database 658
switching database 652
network protocol database 654
memory 648
switch module 388

FIG. 34

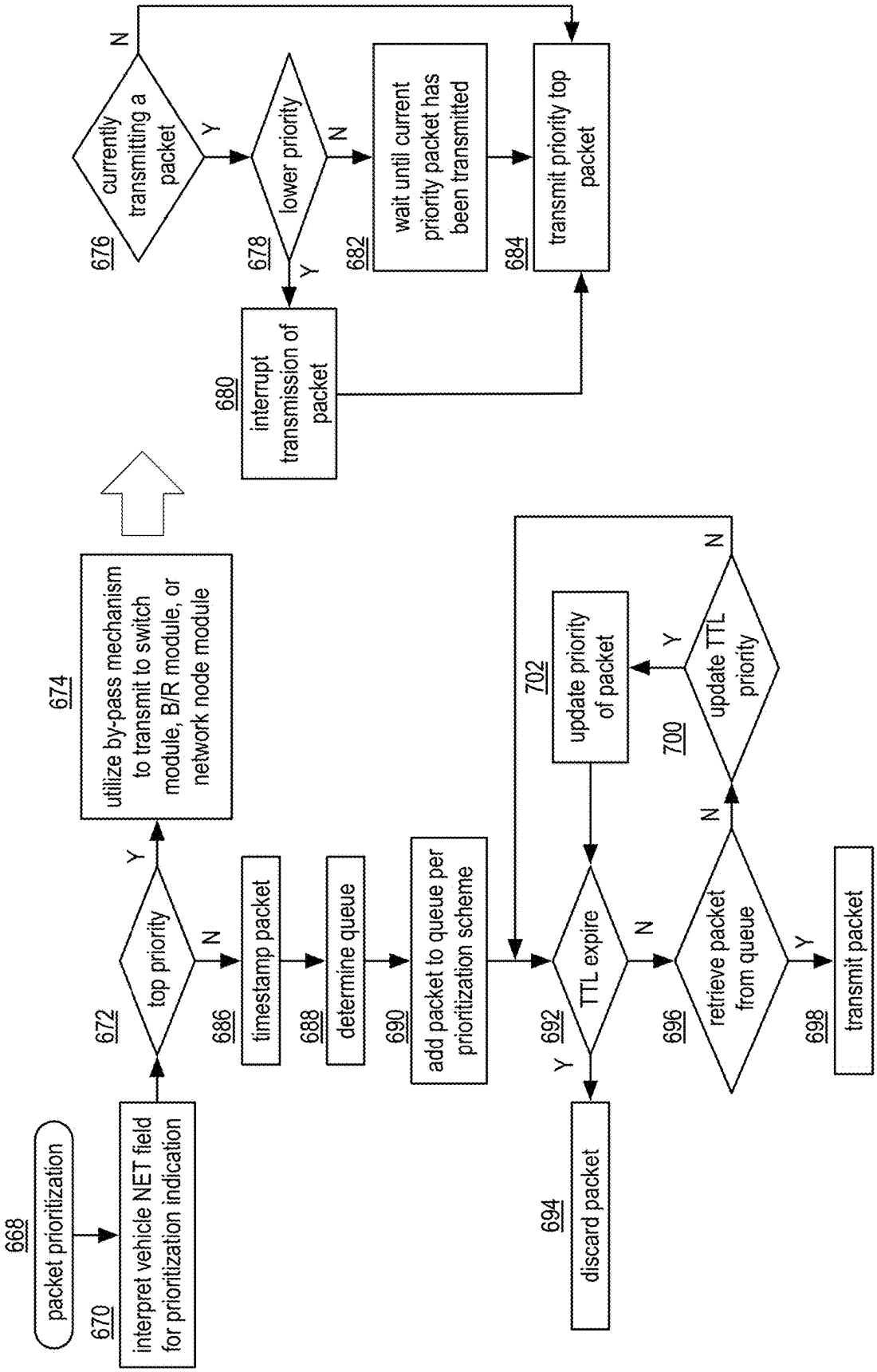
668
packet prioritization
670
interpret vehicle NET field for prioritization indication
672
top priority
Y
N
674
utilize by-pass mechanism to transmit to switch module, B/R module, or network node module
686
timestamp packet
688
determine queue
690
add packet to queue per prioritization scheme
692
TTL expire
Y
N
694
discard packet
696
retrieve packet from queue
N
Y
698
transmit packet
700
update TTL priority
Y
N
702
update priority of packet
676
currently transmitting a packet
Y
N
678
lower priority
Y
N
680
interrupt transmission of packet
682
wait until current priority packet has been transmitted
684
transmit priority top packet

FIG. 35

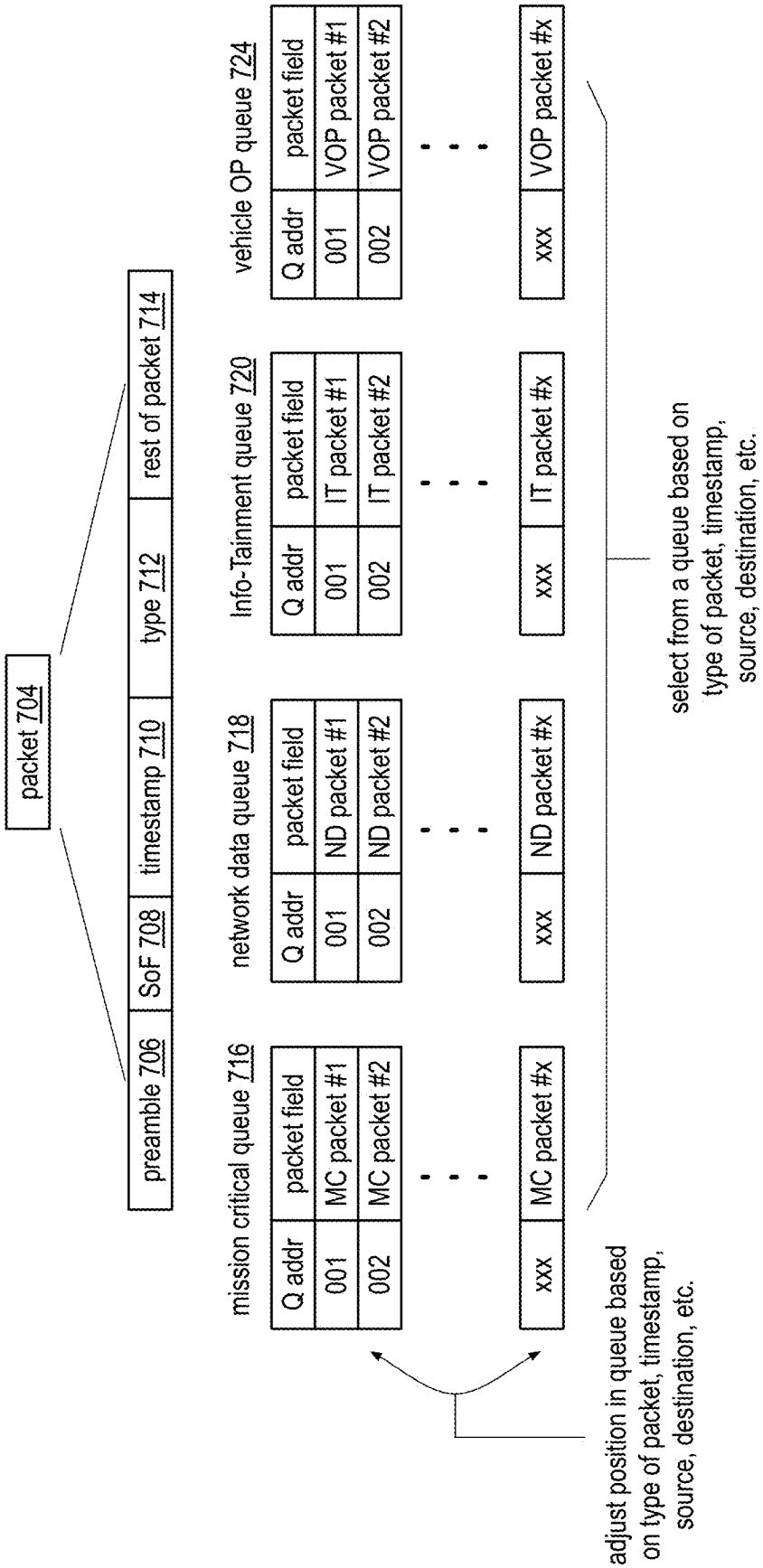
packet 704
preamble 706
SoF 708
timestamp 710
type 712
rest of packet 714
mission critical queue 716
Q addr
packet field
001
MC packet #1
002
MC packet #2
xxx
MC packet #x
network data queue 718
Q addr
packet field
001
ND packet #1
002
ND packet #2
xxx
ND packet #x
Info-Tainment queue 720
Q addr
packet field
001
IT packet #1
002
IT packet #2
xxx
IT packet #x
vehicle OP queue 724
Q addr
packet field
001
VOP packet #1
002
VOP packet #2
xxx
VOP packet #x
adjust position in queue based on type of packet, timestamp, source, destination, etc.
select from a queue based on type of packet, timestamp, source, destination, etc.

FIG. 36

time tx

OUT

Q addr	packet field 726
001	MC packet #1
002	MC packet #2
003	ND packet #1
004	MC packet #x
005	VOP packet #1
006	VOP packet #2
007	IT packet #1
008	IT packet #2
009	ND packet #2
⋮	
x-2	ND packet #x
x-1	IT packet #x
x	VOP packet #x

IN

FIG. 37

time tx+1

OUT

Q addr	packet field 726
001	ND packet #1
002	MC packet #x
003	VOP packet #1
004	VOP packet #2
005	IT packet #1
006	IT packet #2
007	ND packet #2
⋮	
x-2	ND packet #x
x-1	IT packet #x
x	VOP packet #x

IN

FIG. 38

time tx+2

OUT

Q addr	packet field 726
001	MC packet #x
002	VOP packet #1
003	VOP packet #2
004	ND packet #x
005	IT packet #1
006	IT packet #2
007	ND packet #2
⋮	
x-1	IT packet #x
x	VOP packet #x
x+1	IT packet #y

IN

FIG. 39

reprioritized

time tx+3

OUT

Q addr	packet field 726
001	VOP packet #1
002	VOP packet #2
new 003	MC packet #y
004	ND packet #x
005	IT packet #1
006	IT packet #2
007	ND packet #2
⋮	
x-1	IT packet #x
x	VOP packet #x
x+1	IT packet #y

IN

FIG. 40

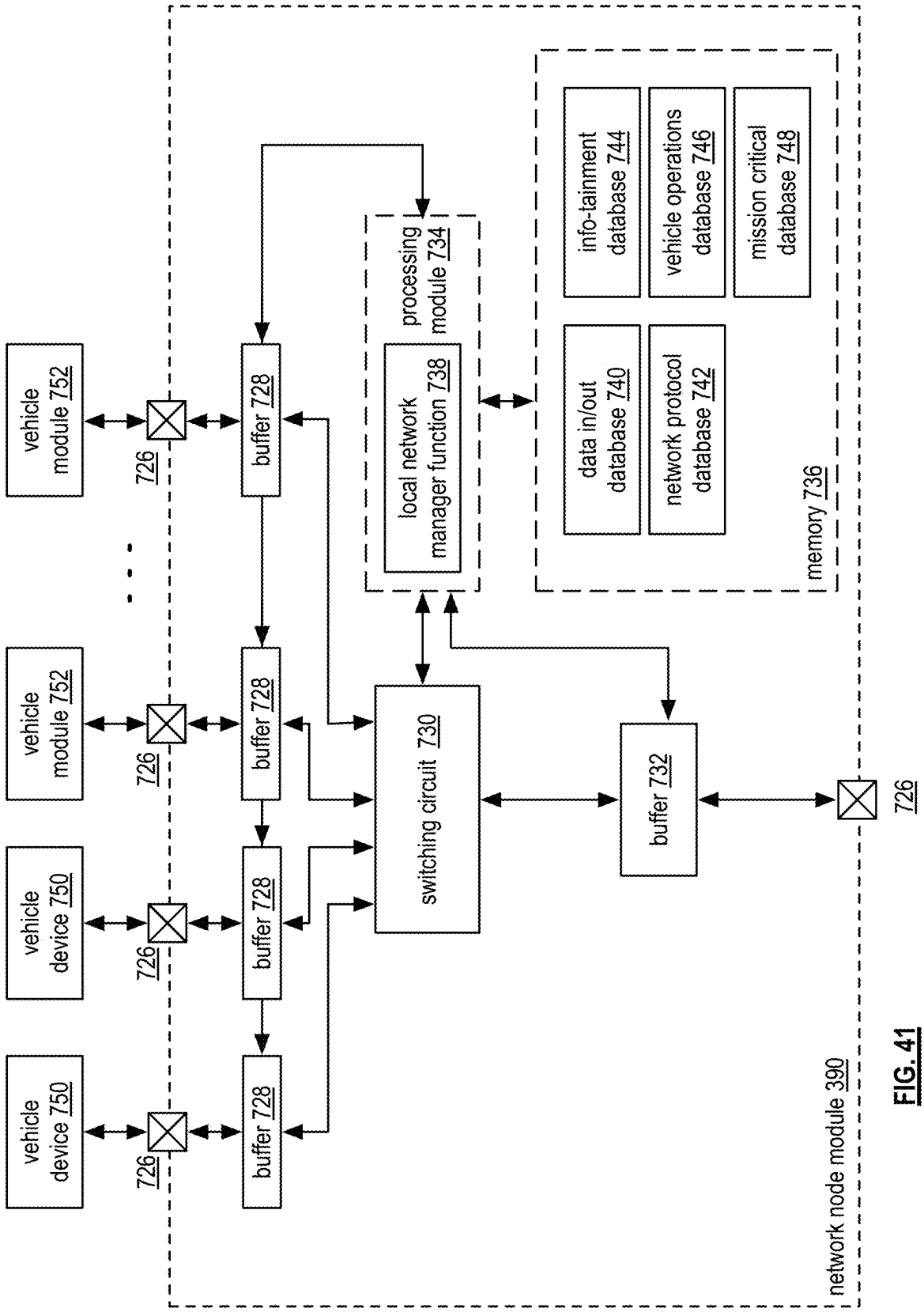
vehicle module 752
vehicle module 752
vehicle device 750
vehicle device 750
726
726
726
726
buffer 728
buffer 728
buffer 728
buffer 728
processing module 734
local network manager function 738
switching circuit 730
buffer 732
726
info-tainment database 744
vehicle operations database 746
mission critical database 748
data in/out database 740
network protocol database 742
memory 736
network node module 390

FIG. 41

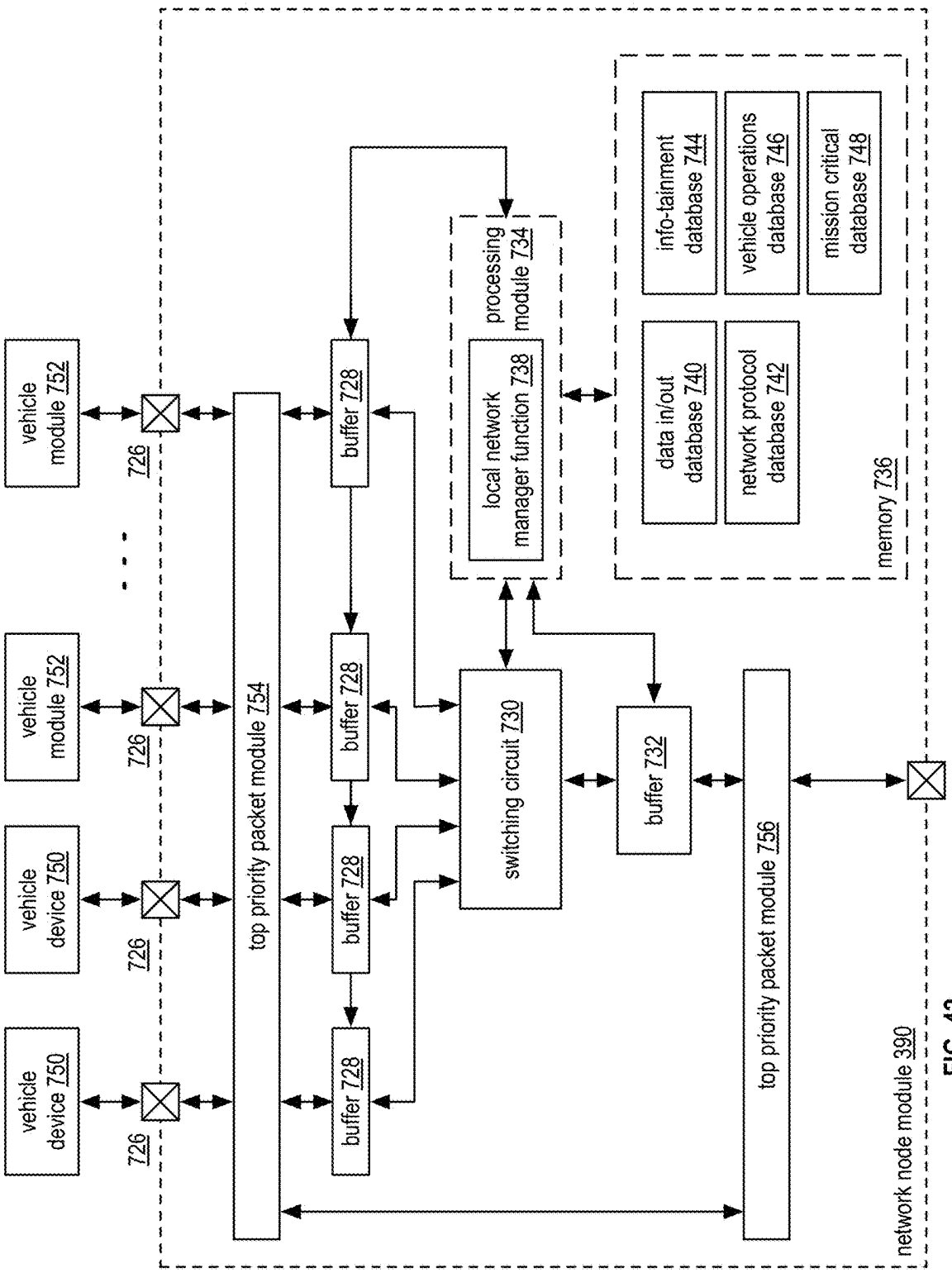
vehicle module 752
vehicle module 752
vehicle device 750
vehicle device 750
726
726
726
726
top priority packet module 754
buffer 728
buffer 728
buffer 728
buffer 728
processing module 734
local network manager function 738
switching circuit 730
buffer 732
info-tainment database 744
vehicle operations database 746
mission critical database 748
data in/out database 740
network protocol database 742
memory 736
top priority packet module 756
network node module 390

FIG. 42

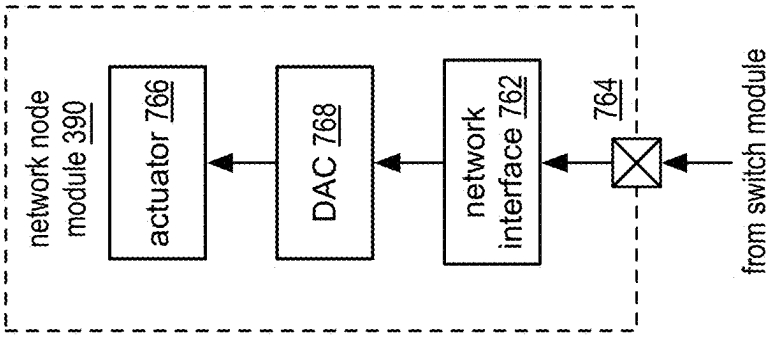

FIG. 43

FIG. 44

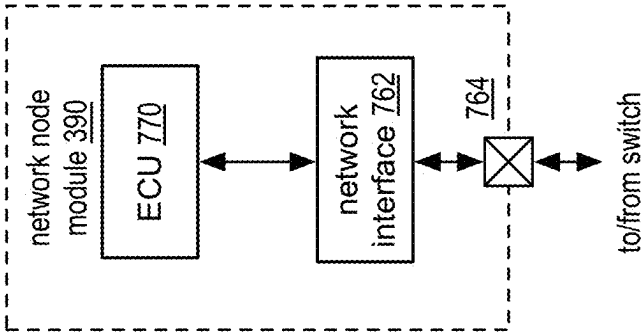

FIG. 45

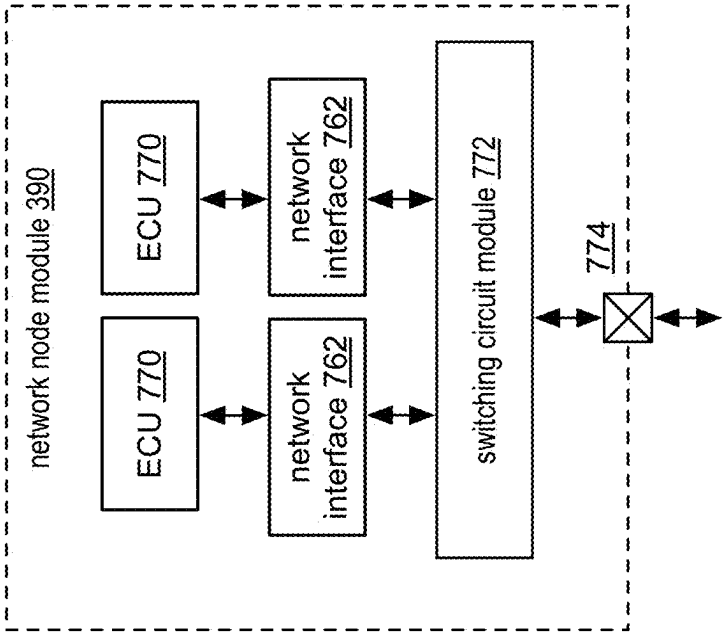
network node module 390
ECU 770
ECU 770
network interface 762
network interface 762
switching circuit module 772
774

FIG. 47

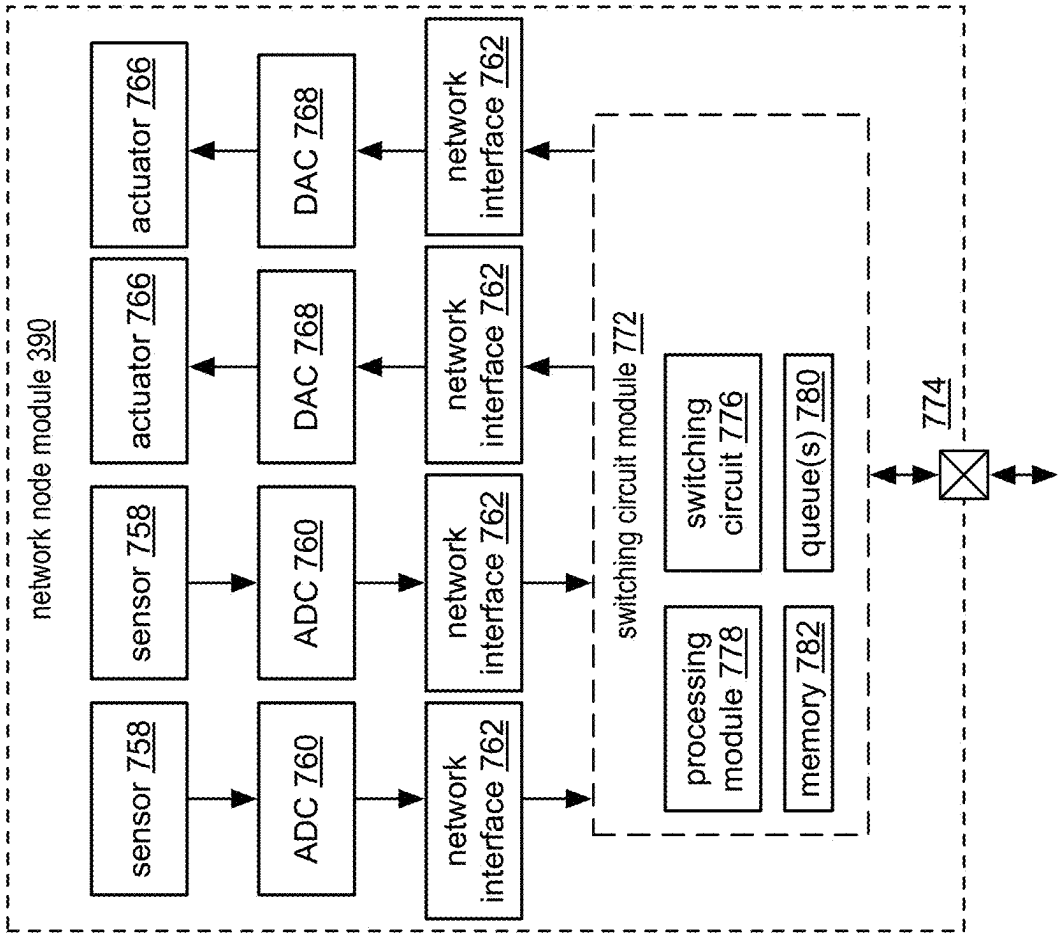
network node module 390
sensor 758
sensor 758
actuator 766
actuator 766
actuator 766
ADC 760
ADC 760
DAC 768
DAC 768
DAC 768
network interface 762
network interface 762
network interface 762
network interface 762
switching circuit module 772
processing module 778
switching circuit 776
memory 782
queue(s) 780
774

FIG. 46

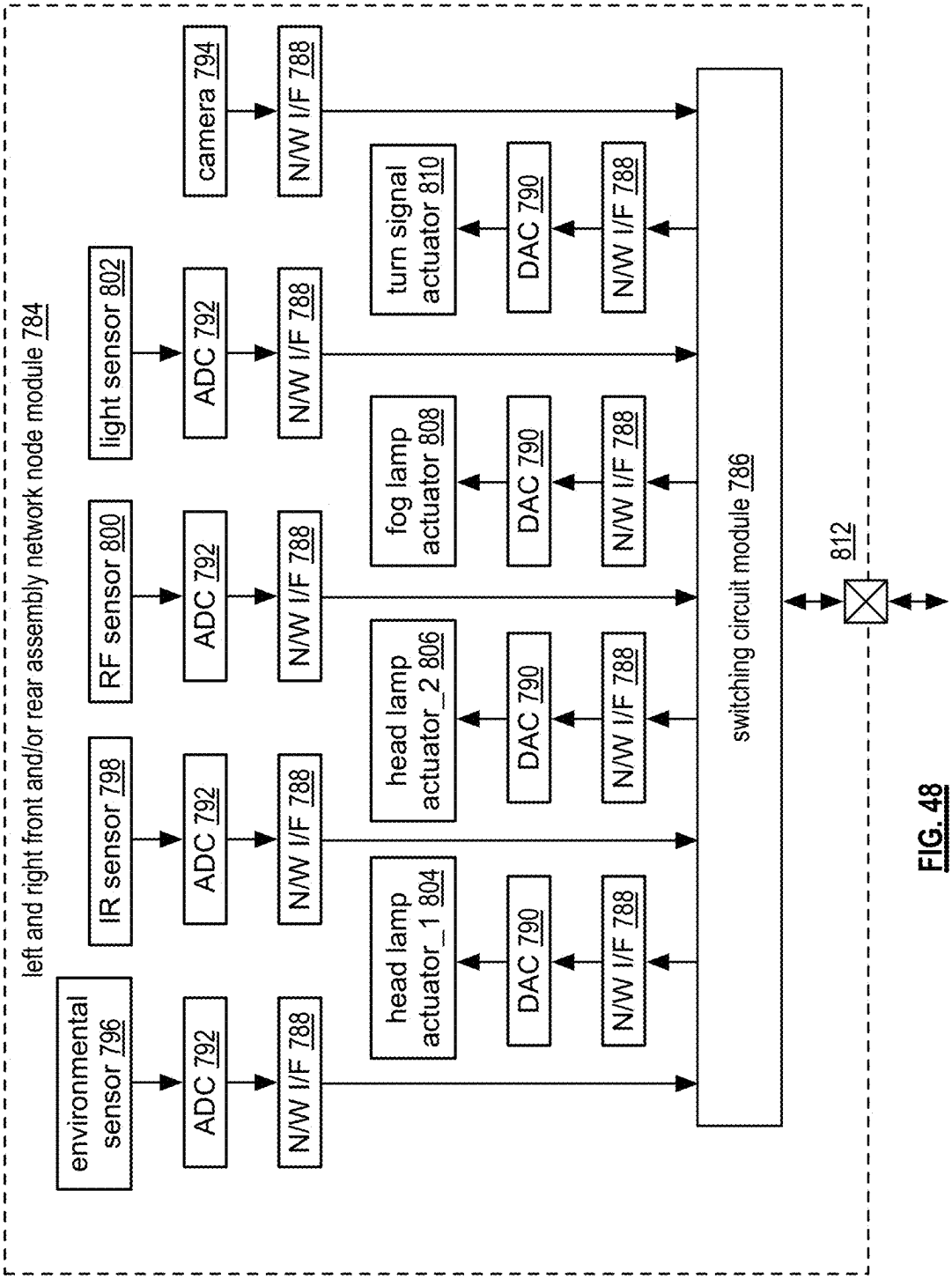
left and right front and/or rear assembly network node module 784
environmental sensor 796
IR sensor 798
RF sensor 800
light sensor 802
camera 794
ADC 792
N/W I/F 788
head lamp actuator_1 804
head lamp actuator_2 806
fog lamp actuator 808
turn signal actuator 810
DAC 790
switching circuit module 786
812

FIG. 48

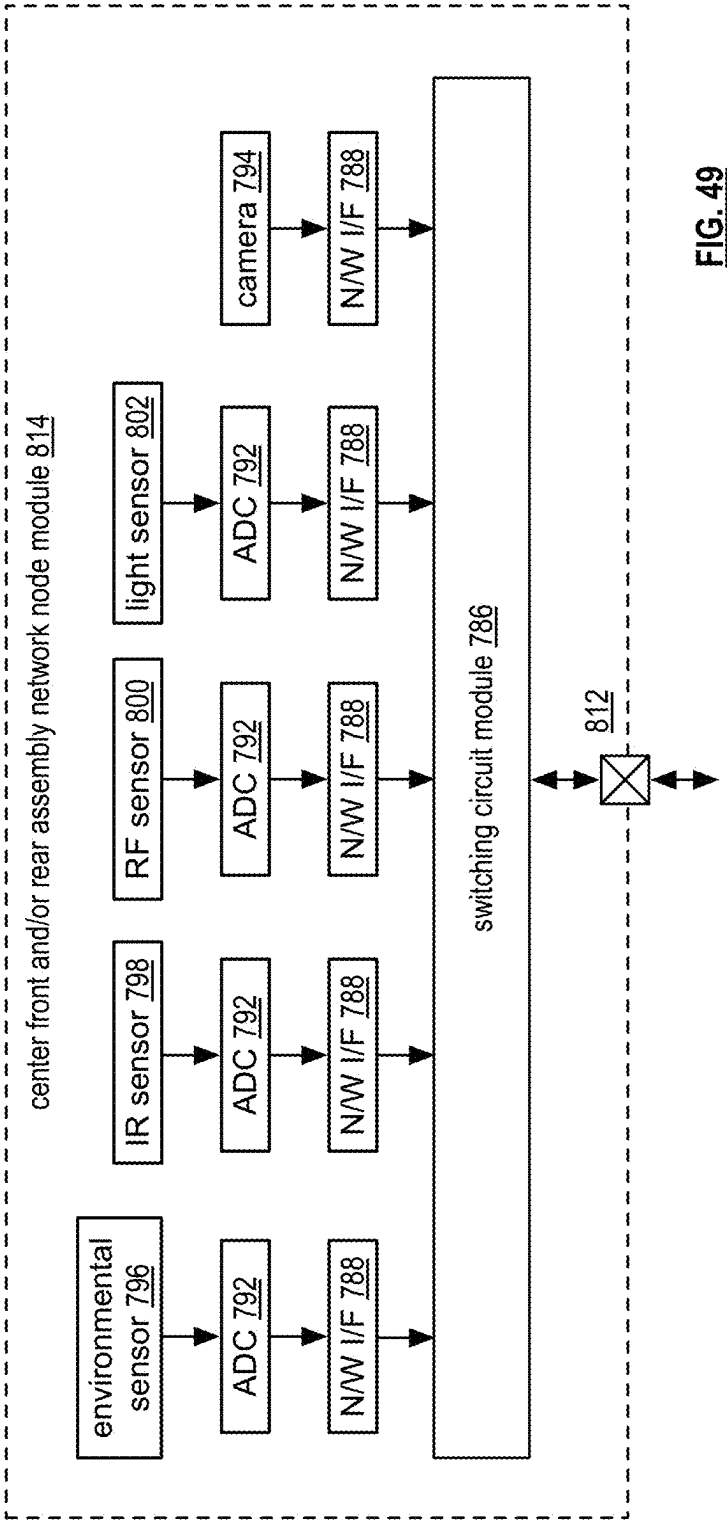
center front and/or rear assembly network node module 814
environmental sensor 796
IR sensor 798
RF sensor 800
light sensor 802
camera 794
ADC 792
ADC 792
ADC 792
ADC 792
N/W I/F 788
N/W I/F 788
N/W I/F 788
N/W I/F 788
N/W I/F 788
switching circuit module 786
812

FIG. 49

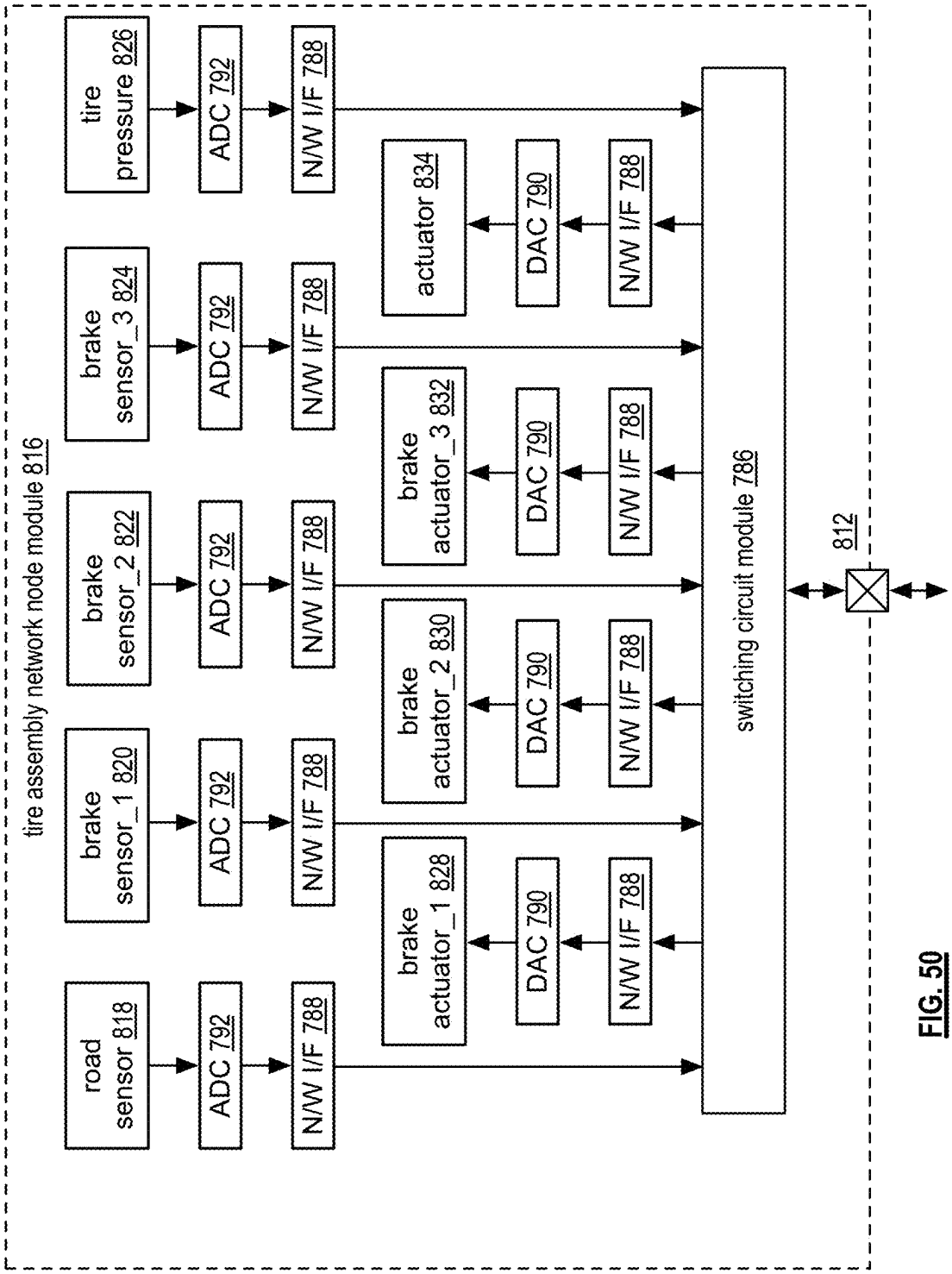
tire assembly network node module 816
road sensor 818
brake sensor_1 820
brake sensor_2 822
brake sensor_3 824
tire pressure 826
ADC 792
N/W I/F 788
brake actuator_1 828
brake actuator_2 830
brake actuator_3 832
actuator 834
DAC 790
switching circuit module 786
812

FIG. 50

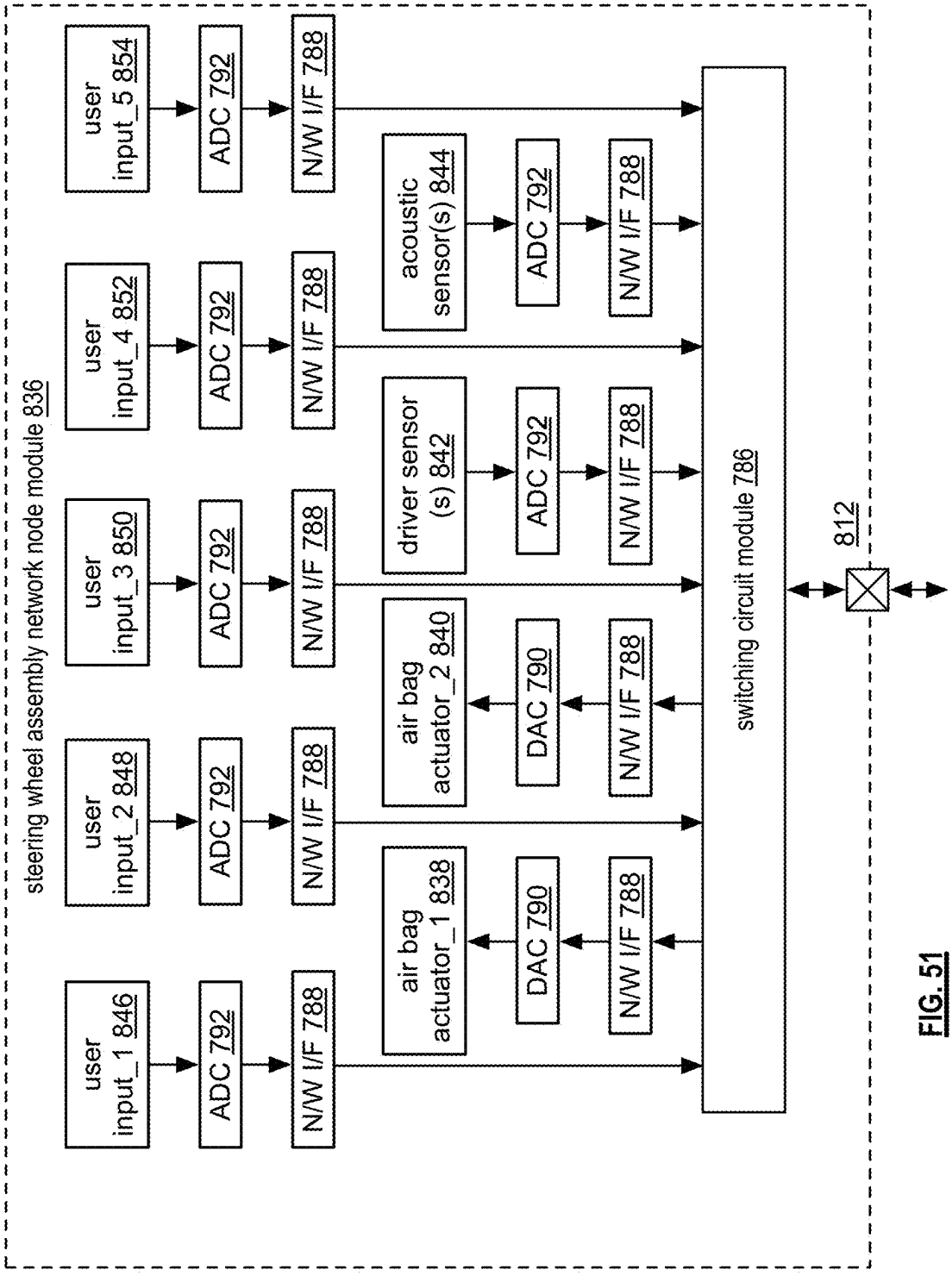
steering wheel assembly network node module 836
user input_1 846
user input_2 848
user input_3 850
user input_4 852
user input_5 854
ADC 792
N/W I/F 788
air bag actuator_1 838
air bag actuator_2 840
DAC 790
driver sensor (s) 842
acoustic sensor(s) 844
switching circuit module 786
812

FIG. 51

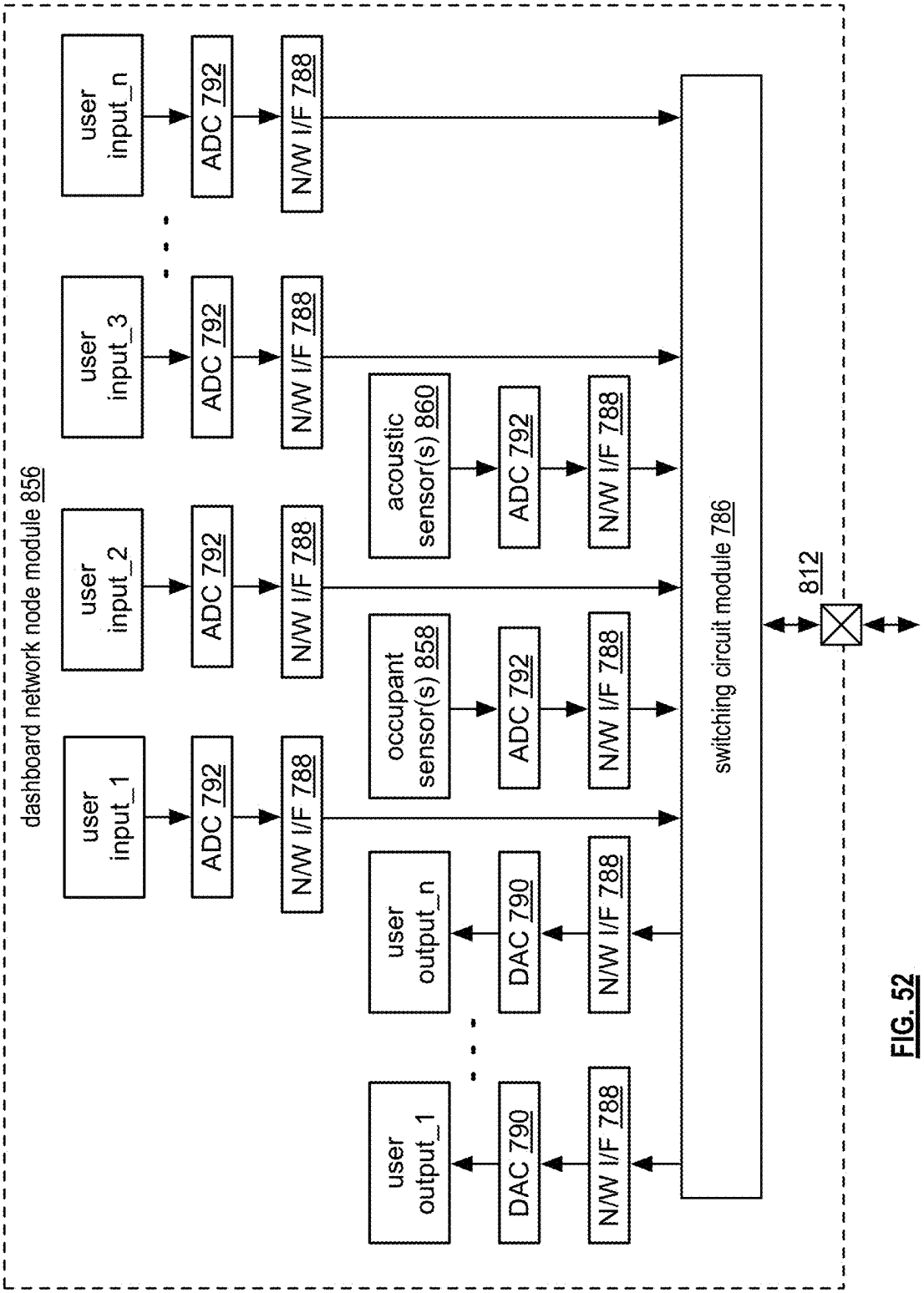
dashboard network node module 856
user input_1
user input_2
user input_3
user input_n
ADC 792
N/W I/F 788
occupant sensor(s) 858
acoustic sensor(s) 860
DAC 790
user output_1
user output_n
switching circuit module 786
812

FIG. 52

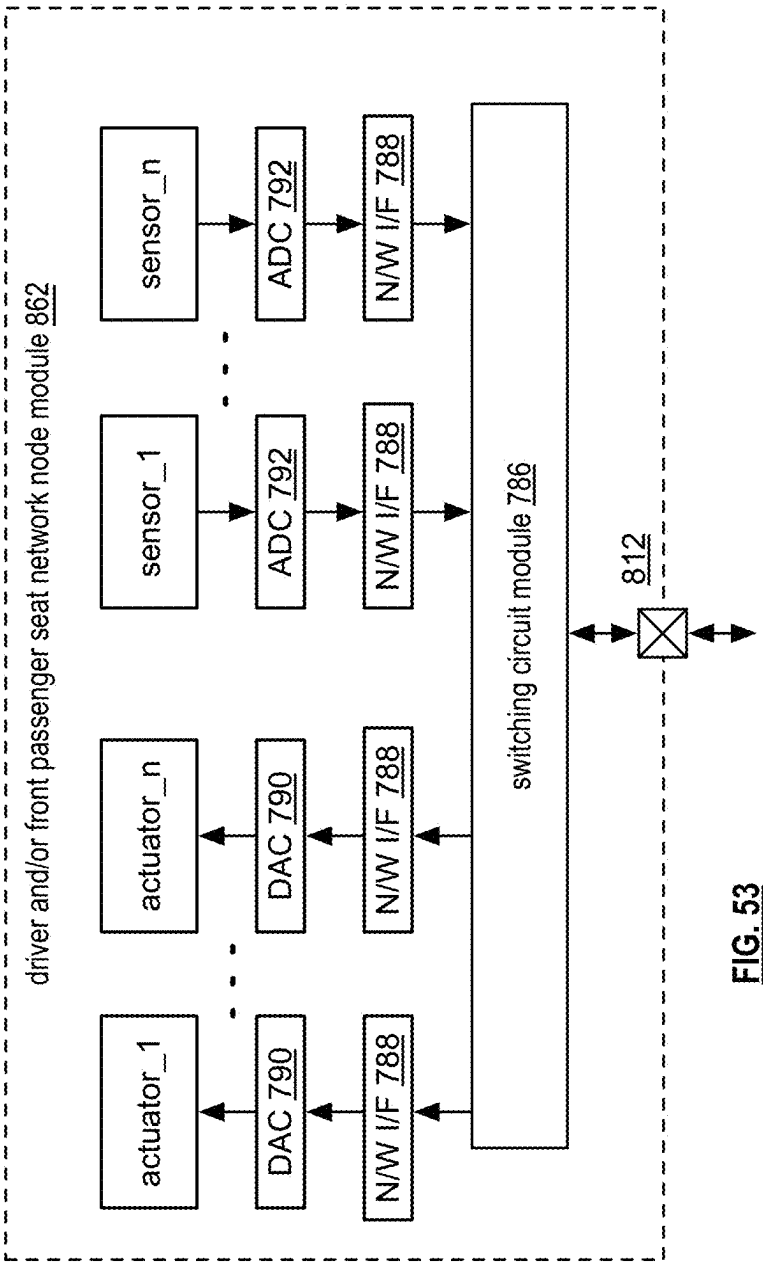
driver and/or front passenger seat network node module 862
actuator_1
actuator_n
DAC 790
DAC 790
N/W I/F 788
N/W I/F 788
N/W I/F 788
sensor_1
sensor_n
ADC 792
ADC 792
N/W I/F 788
N/W I/F 788
switching circuit module 786
812

FIG. 53

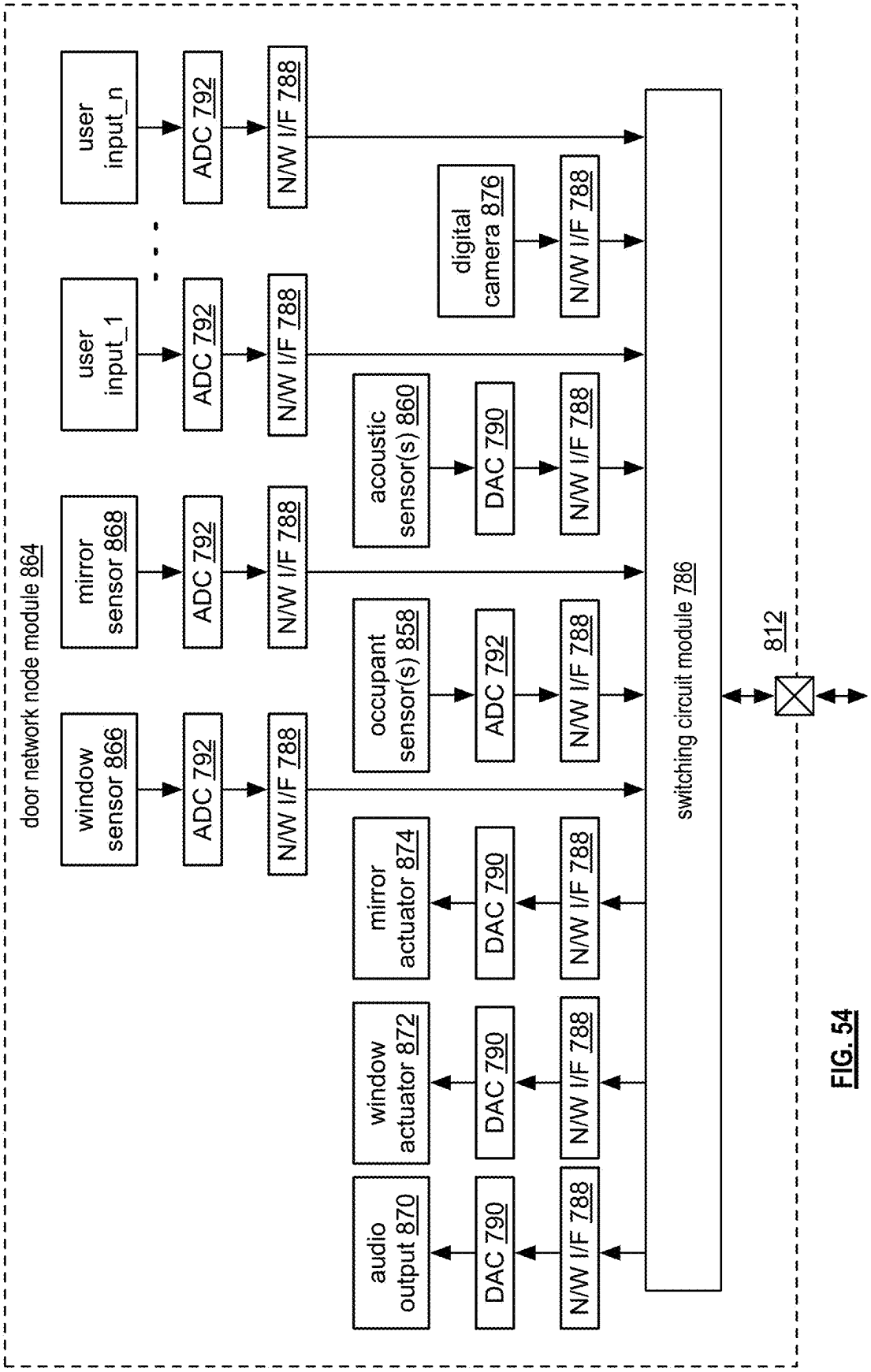
door network node module 864
window sensor 866
mirror sensor 868
user input_1
user input_n
ADC 792
N/W I/F 788
occupant sensor(s) 858
acoustic sensor(s) 860
digital camera 876
DAC 790
mirror actuator 874
window actuator 872
audio output 870
switching circuit module 786
812

FIG. 54

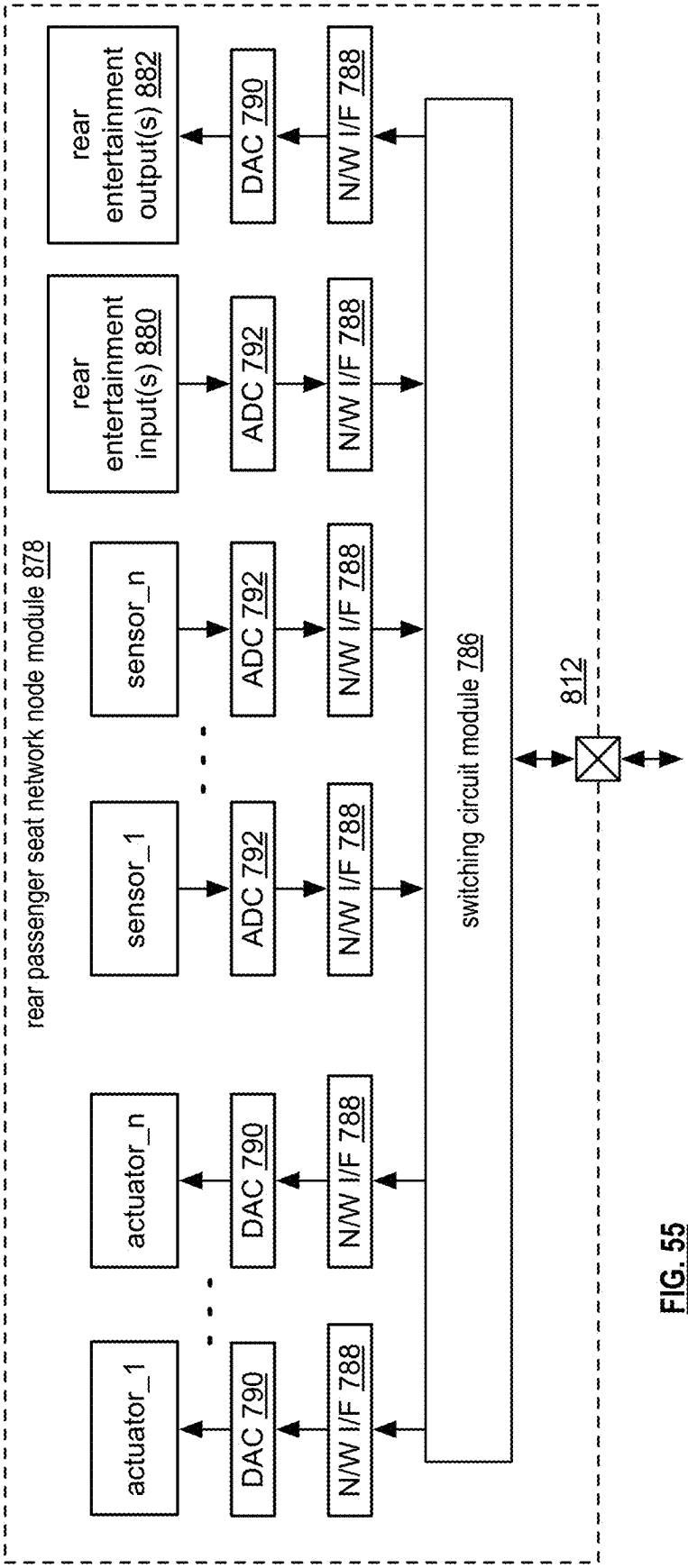
rear passenger seat network node module 878
actuator_1
actuator_n
sensor_1
sensor_n
rear entertainment input(s) 880
rear entertainment output(s) 882
DAC 790
ADC 792
N/W I/F 788
switching circuit module 786
812

FIG. 55

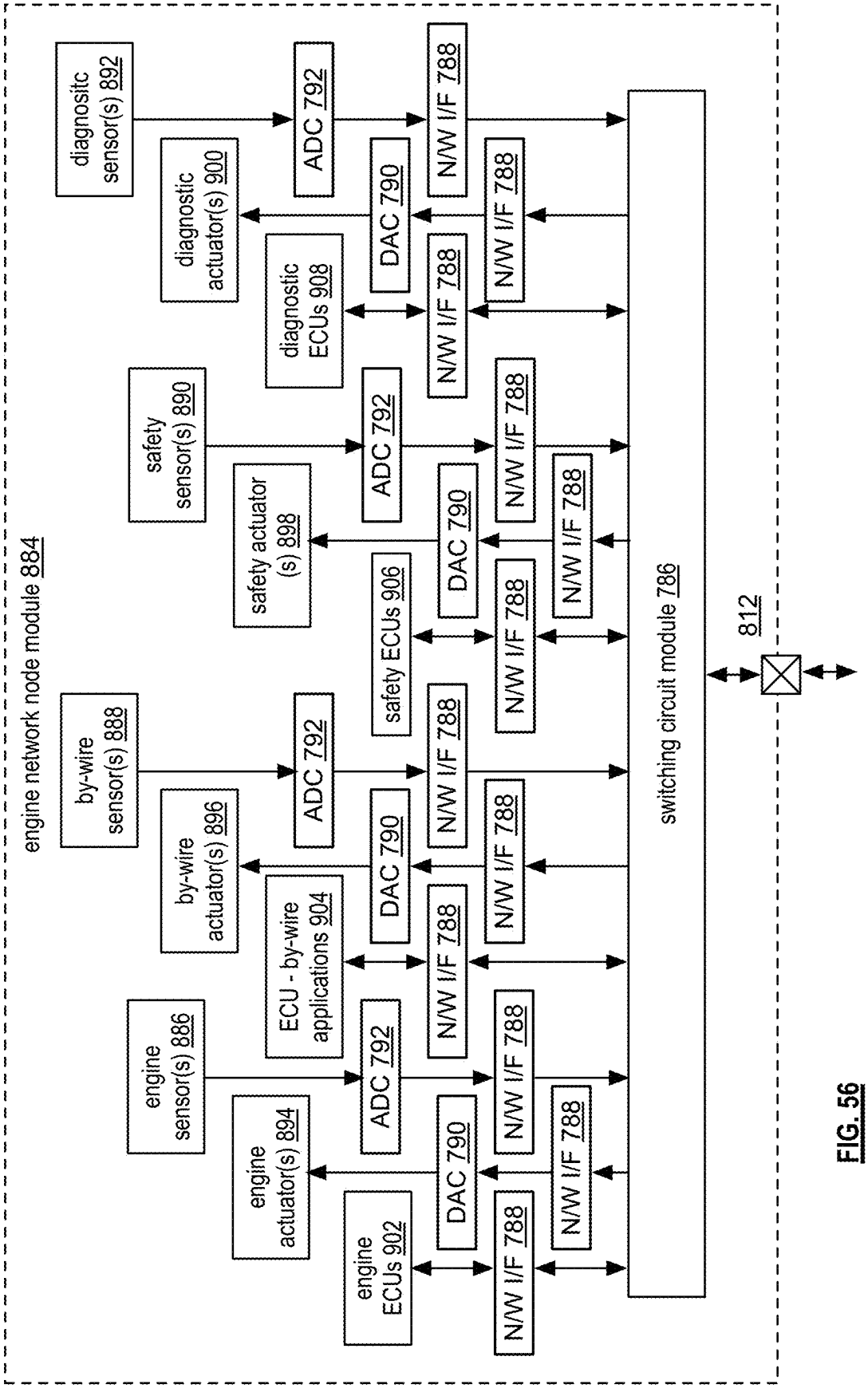
engine network node module 884
diagnositc sensor(s) 892
diagnostic actuator(s) 900
ADC 792
DAC 790
N/W I/F 788
diagnostic ECUs 908
safety sensor(s) 890
safety actuator (s) 898
safety ECUs 906
by-wire sensor(s) 888
by-wire actuator(s) 896
ECU - by-wire applications 904
engine sensor(s) 886
engine actuator(s) 894
engine ECUs 902
switching circuit module 786
812

FIG. 56

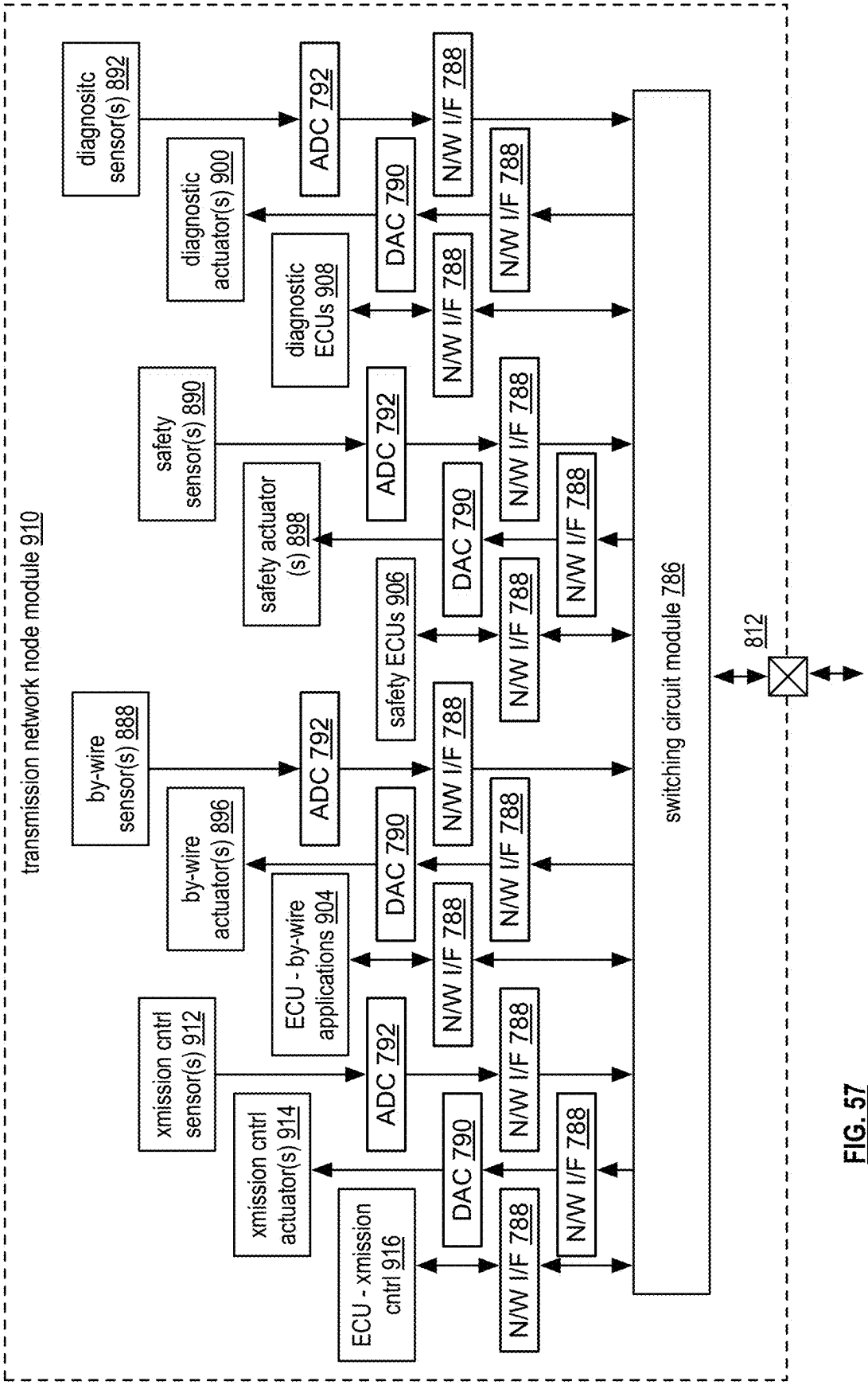
transmission network node module 910
diagnositc sensor(s) 892
diagnostic actuator(s) 900
safety sensor(s) 890
safety actuator (s) 898
by-wire sensor(s) 888
by-wire actuator(s) 896
xmission cntrl sensor(s) 912
xmission cntrl actuator(s) 914
ECU - xmission cntrl 916
ECU - by-wire applications 904
safety ECUs 906
diagnostic ECUs 908
ADC 792
DAC 790
N/W I/F 788
switching circuit module 786
812

FIG. 57

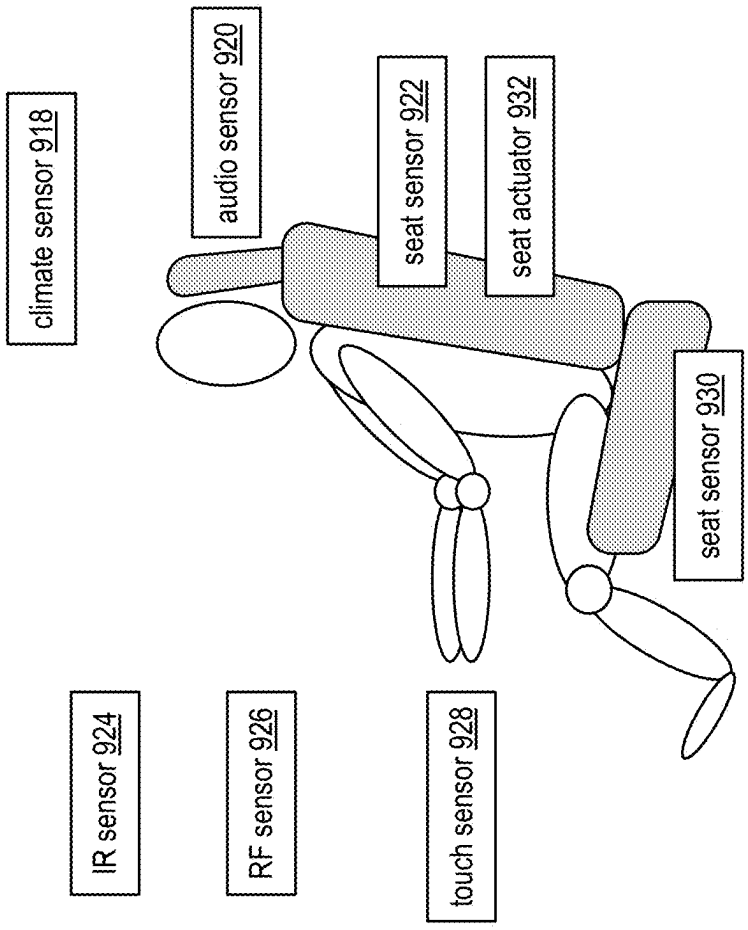
climate sensor 918
audio sensor 920
seat sensor 922
seat actuator 932
seat sensor 930
IR sensor 924
RF sensor 926
touch sensor 928

FIG. 58

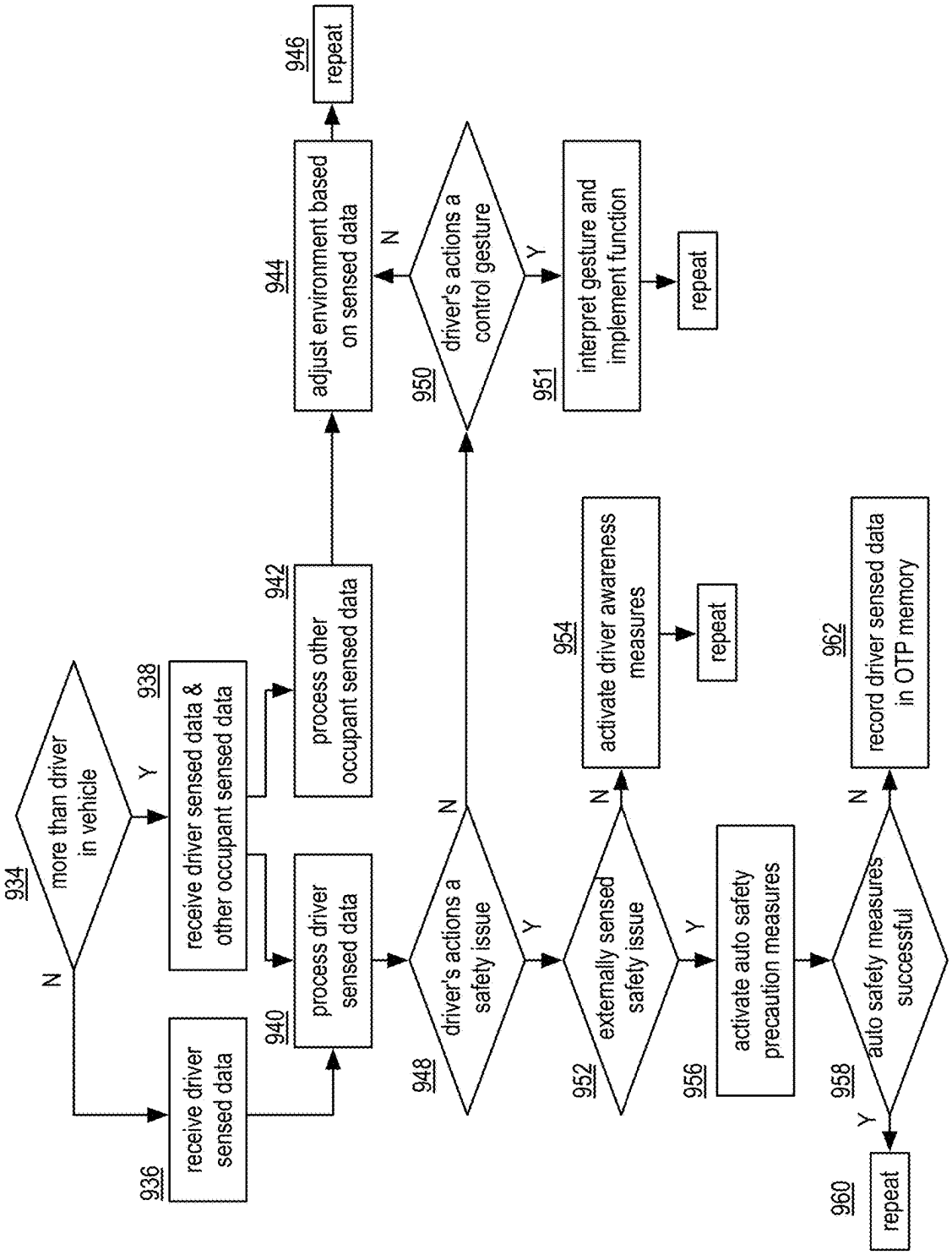
934
more than driver in vehicle
N
Y
936
receive driver sensed data
938
receive driver sensed data & other occupant sensed data
940
process driver sensed data
942
process other occupant sensed data
944
adjust environment based on sensed data
946
repeat
948
driver's actions a safety issue
N
Y
950
driver's actions a control gesture
N
Y
951
interpret gesture and implement function
repeat
952
externally sensed safety issue
N
Y
954
activate driver awareness measures
repeat
956
activate auto safety precaution measures
958
auto safety measures successful
N
Y
960
repeat
962
record driver sensed data in OTP memory

FIG. 59

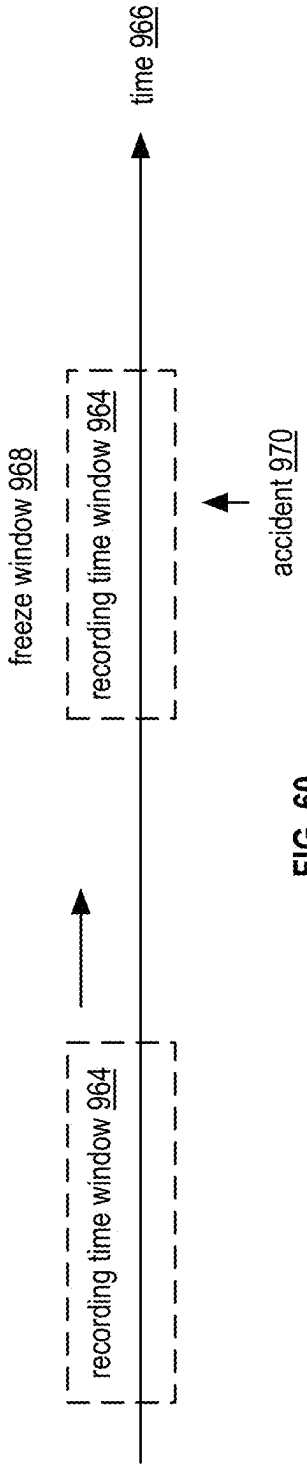
time 966
freeze window 968
recording time window 964
recording time window 964
accident 970

FIG. 60

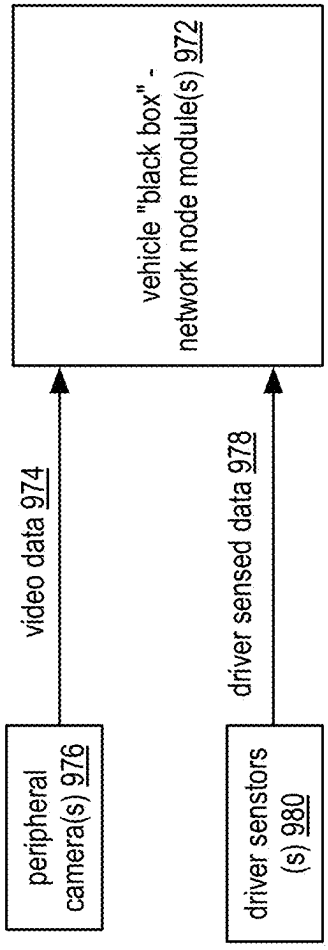
vehicle "black box" - network node module(s) 972
video data 974
driver sensed data 978
peripheral camera(s) 976
driver senstors (s) 980

FIG. 61

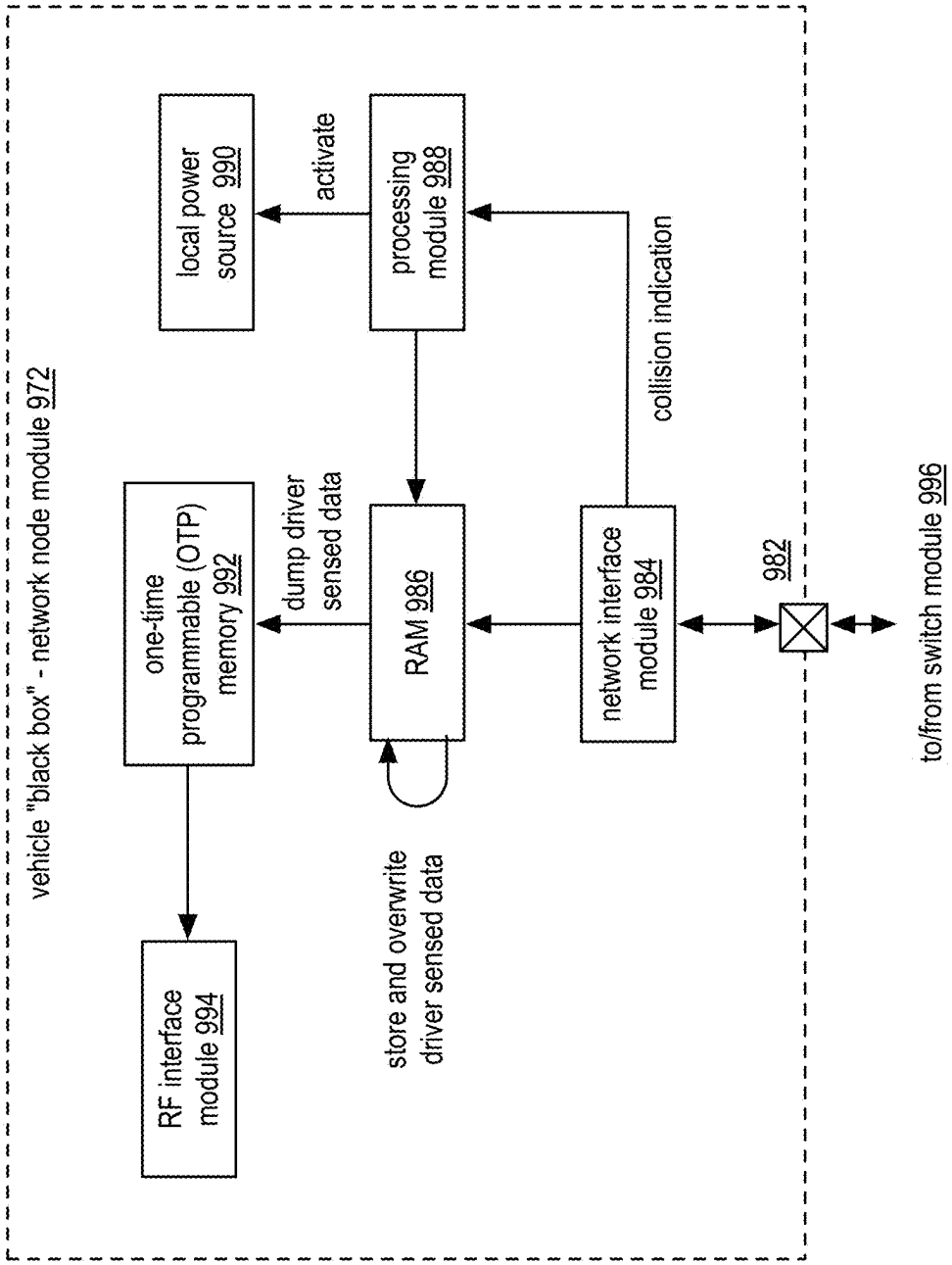
vehicle "black box" - network node module 972
local power source 990
activate
processing module 988
collision indication
one-time programmable (OTP) memory 992
dump driver sensed data
RAM 986
network interface module 984
982
to/from switch module 996
RF interface module 994
store and overwrite driver sensed data

FIG. 62

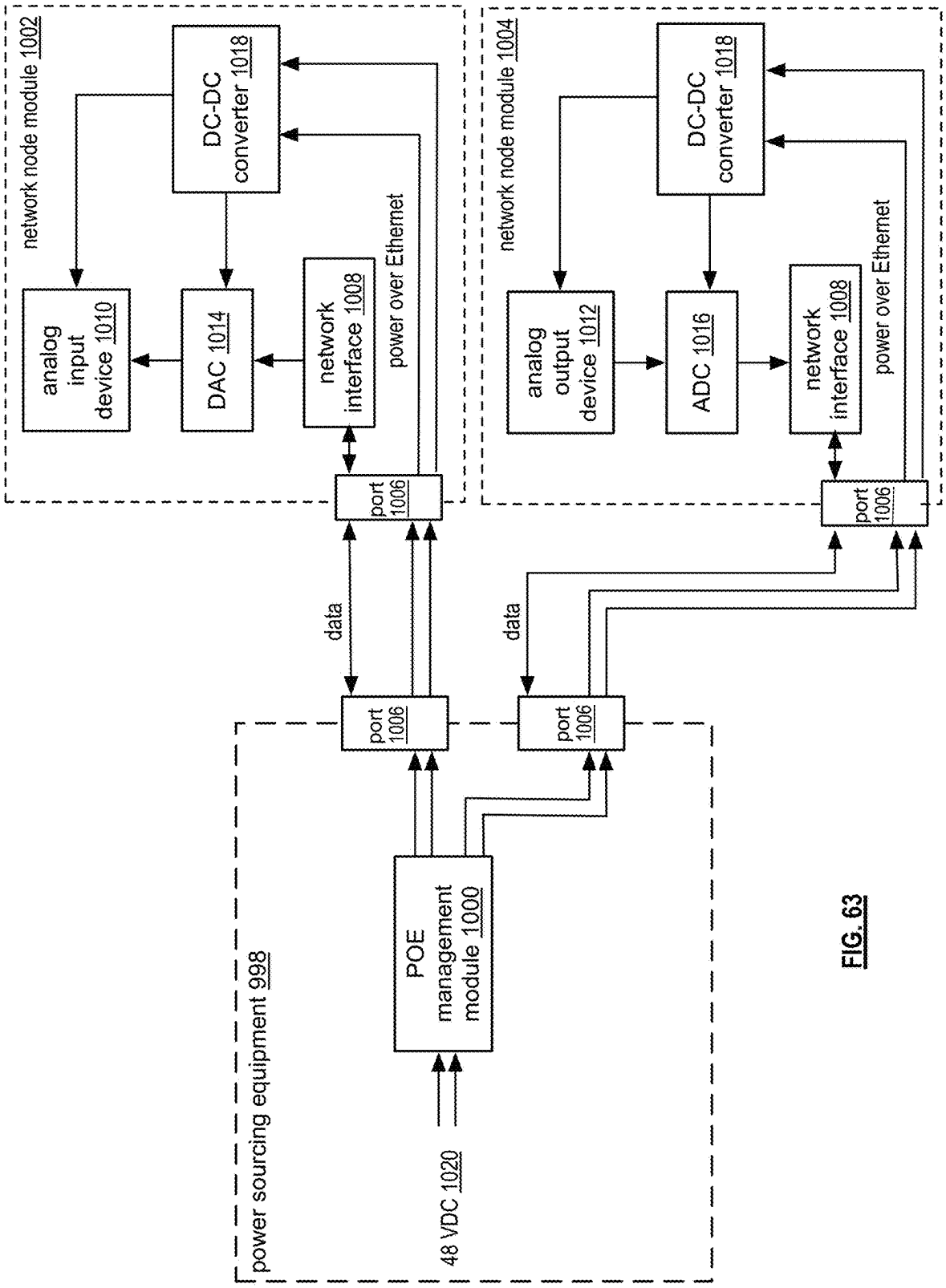
network node module 1002
DC-DC converter 1018
analog input device 1010
DAC 1014
network interface 1008
power over Ethernet
port 1006
network node module 1004
DC-DC converter 1018
analog output device 1012
ADC 1016
network interface 1008
power over Ethernet
port 1006
data
data
port 1006
port 1006
power sourcing equipment 998
POE management module 1000
48 VDC 1020

FIG. 63

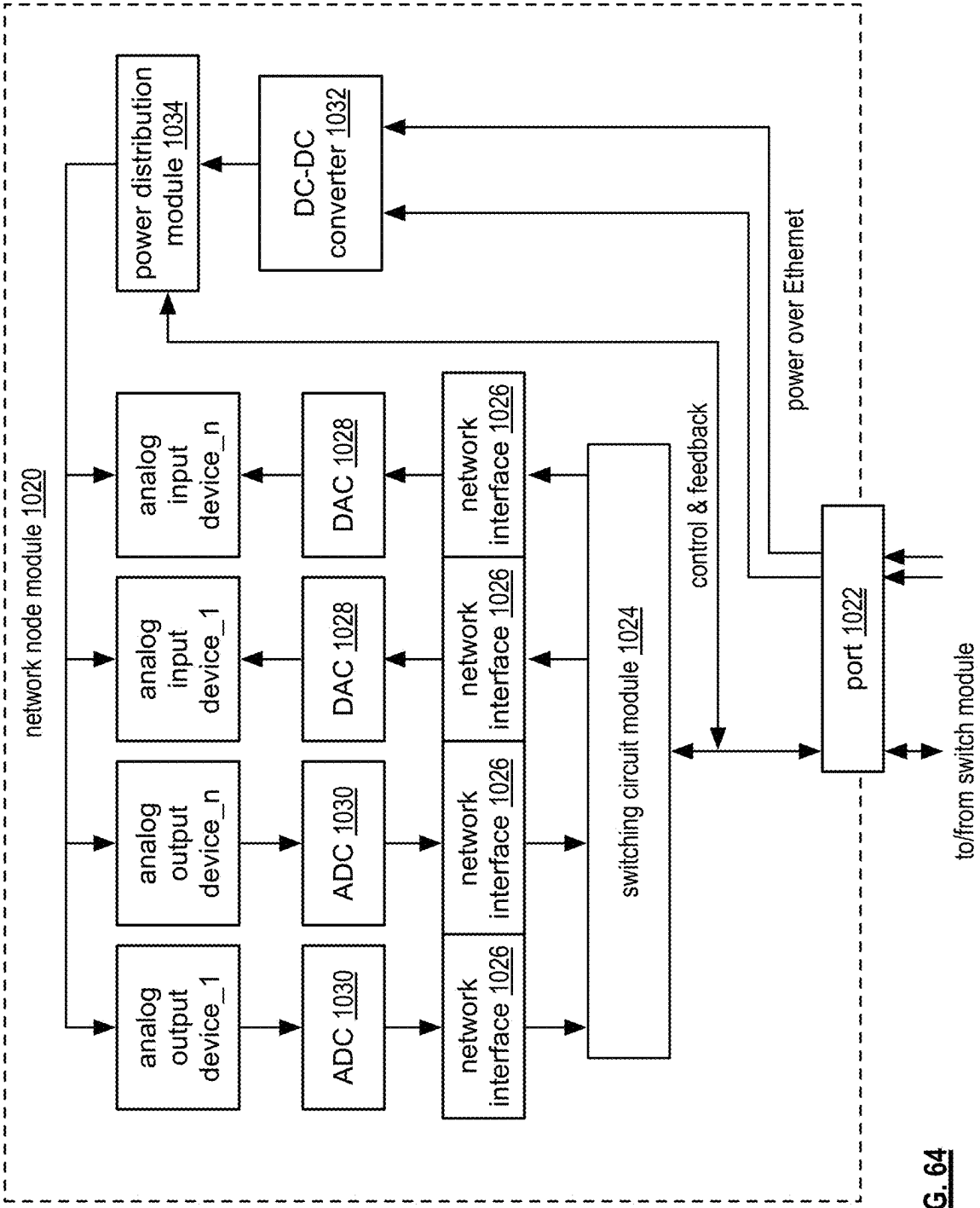
network node module 1020
power distribution module 1034
DC-DC converter 1032
analog output device_1
analog output device_n
analog input device_1
analog input device_n
ADC 1030
ADC 1030
DAC 1028
DAC 1028
network interface 1026
network interface 1026
network interface 1026
network interface 1026
switching circuit module 1024
control & feedback
power over Ethernet
port 1022
to/from switch module

FIG. 64

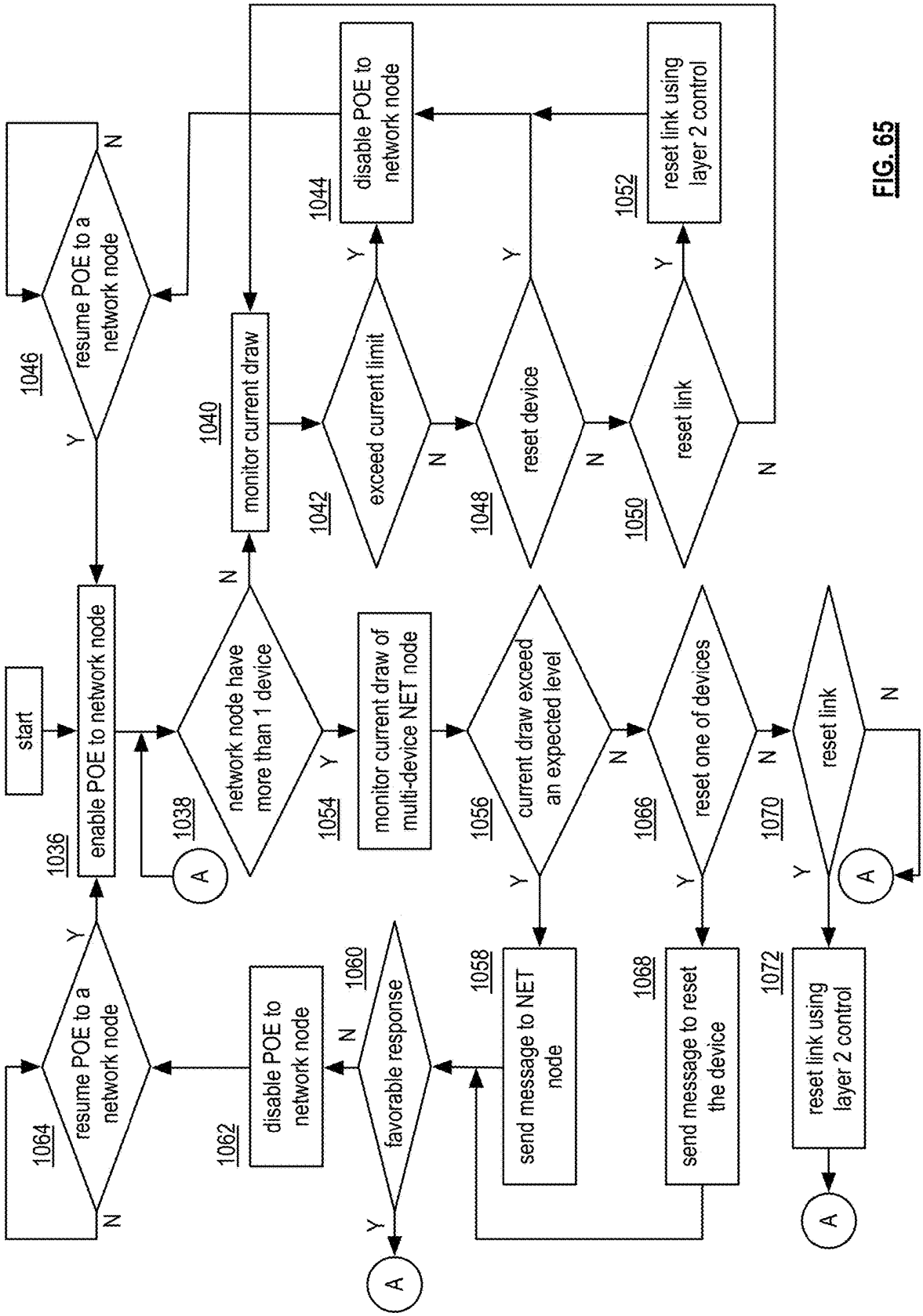
start
1036
enable POE to network node
1038
A
network node have more than 1 device
Y
N
1040
monitor current draw
1042
exceed current limit
1044
disable POE to network node
1046
resume POE to a network node
1048
reset device
1050
reset link
1052
reset link using layer 2 control
1054
monitor current draw of multi-device NET node
1056
current draw exceed an expected level
1058
send message to NET node
1060
favorable response
1062
disable POE to network node
1064
resume POE to a network node
1066
reset one of devices
1068
send message to reset the device
1070
reset link
1072
reset link using layer 2 control

FIG. 65

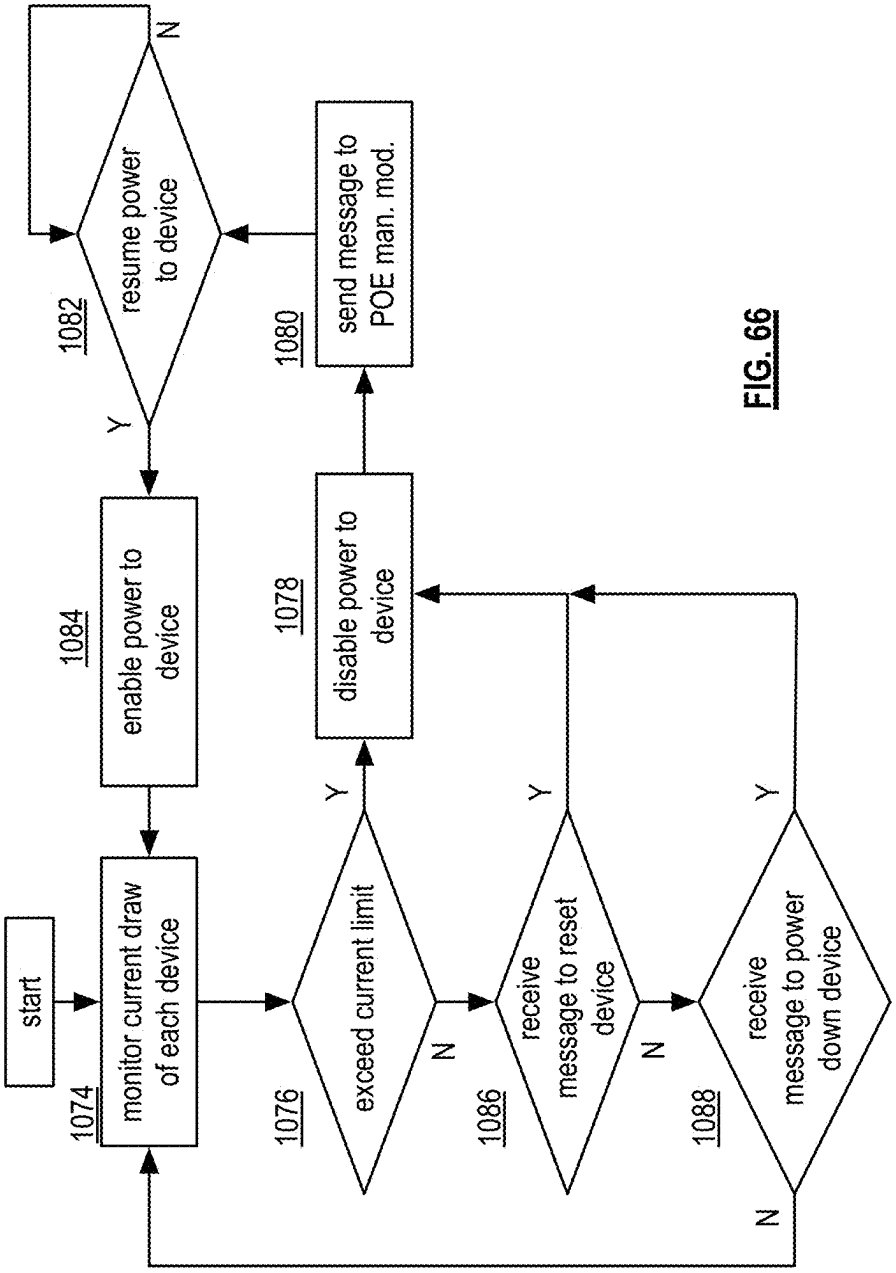
start
1074
monitor current draw of each device
1076
exceed current limit
Y
N
1078
disable power to device
1080
send message to POE man. mod.
1086
receive message to reset device
Y
N
1088
receive message to power down device
Y
N
1084
enable power to device
1082
resume power to device
Y
N

FIG. 66

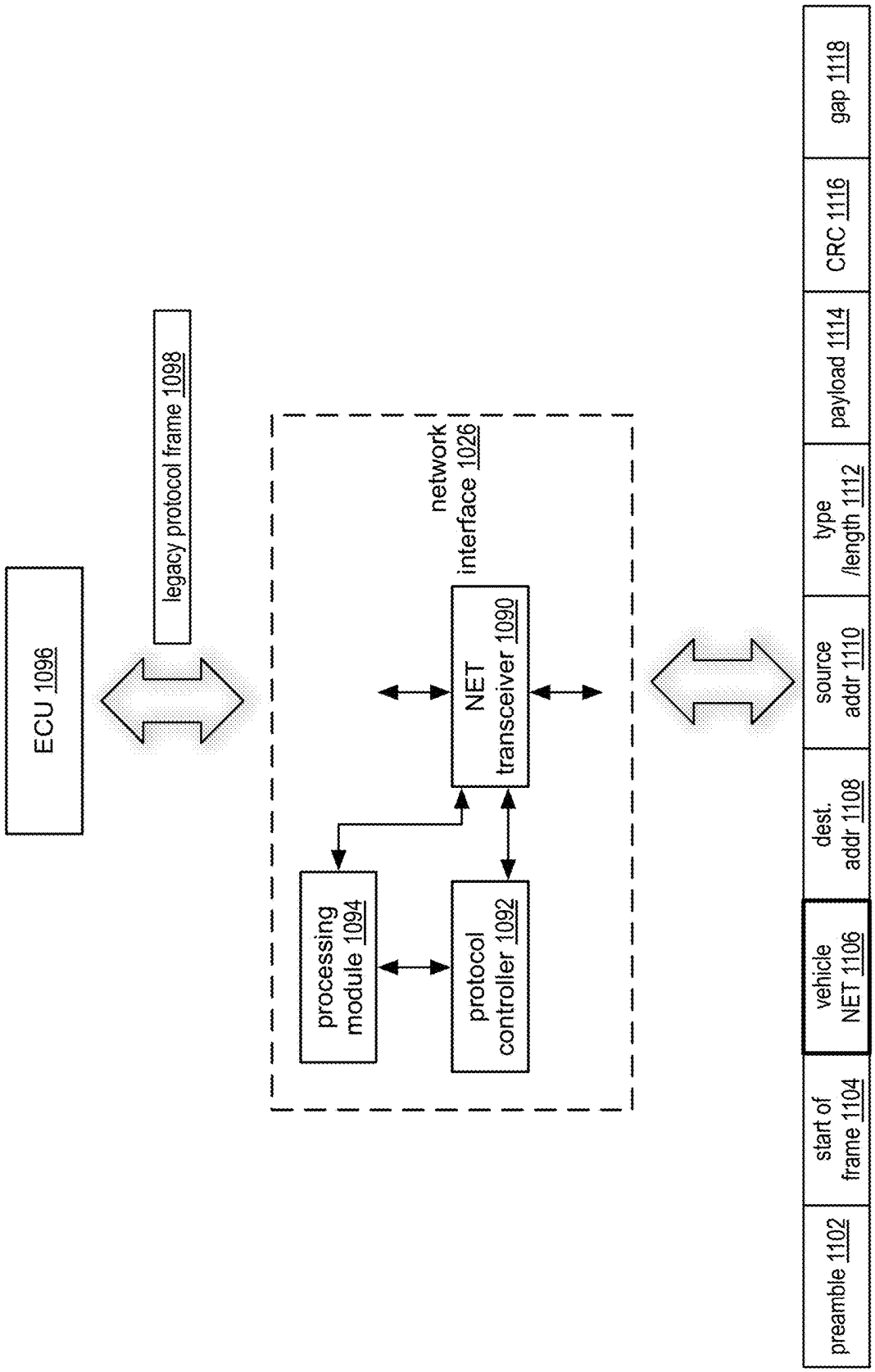
ECU 1096
legacy protocol frame 1098
network interface 1026
processing module 1094
protocol controller 1092
NET transceiver 1090
preamble 1102
start of frame 1104
vehicle NET 1106
dest. addr 1108
source addr 1110
type /length 1112
payload 1114
CRC 1116
gap 1118
modified network frame/packet 1100

FIG. 67

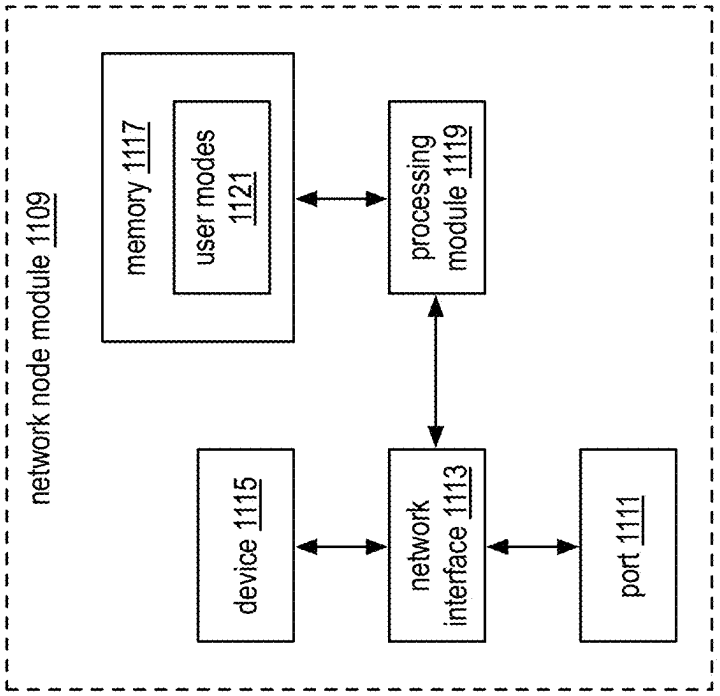

FIG. 68B

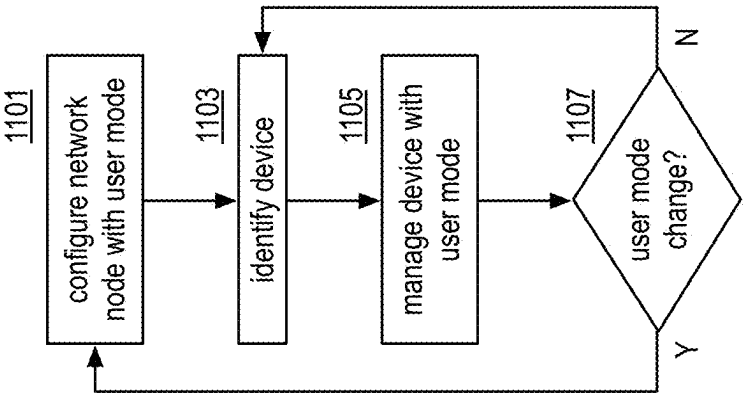

FIG. 68A

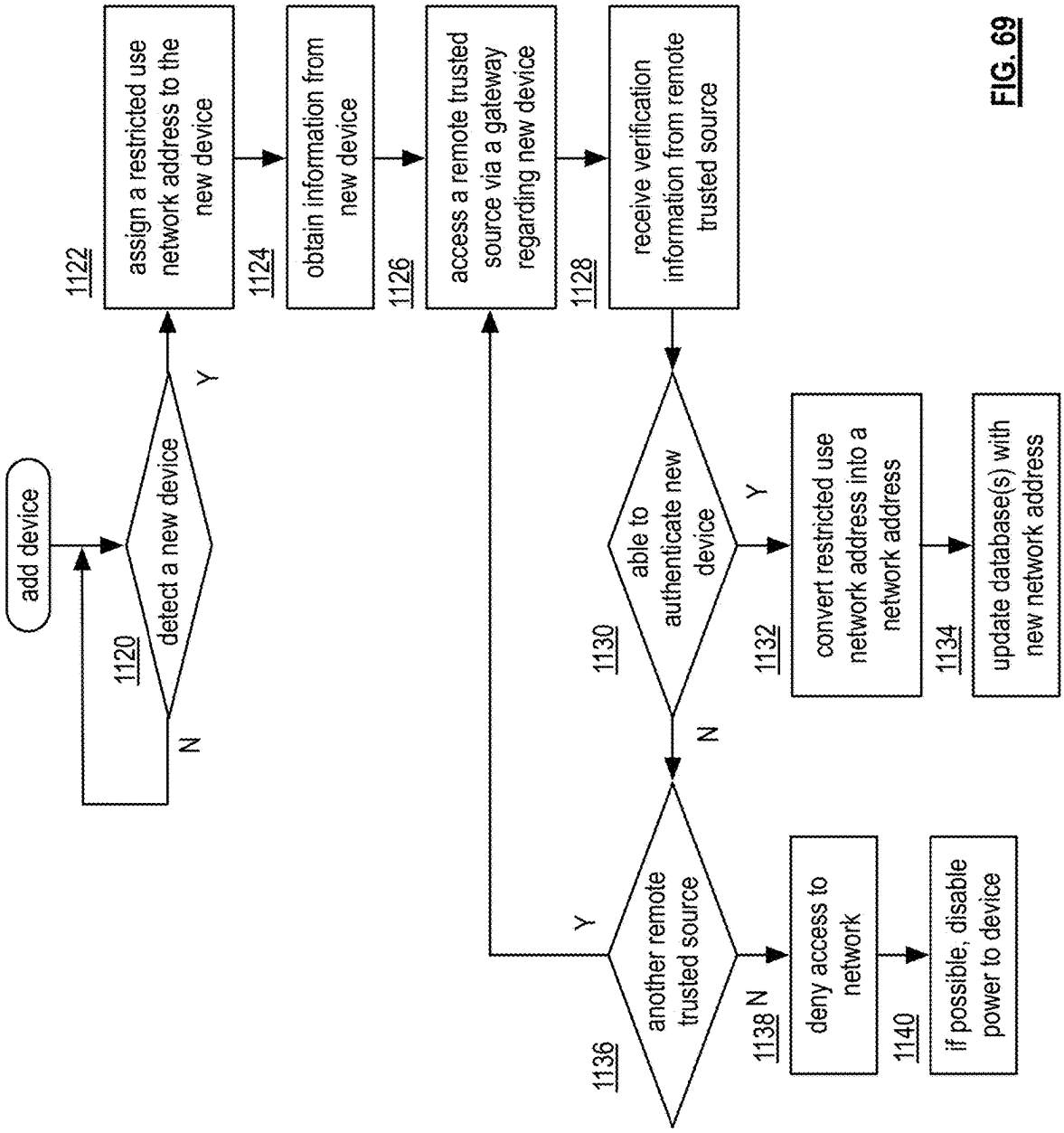
add device
1120
detect a new device
N
Y
1122
assign a restricted use network address to the new device
1124
obtain information from new device
1126
access a remote trusted source via a gateway regarding new device
1128
receive verification information from remote trusted source
1130
able to authenticate new device
Y
N
1132
convert restricted use network address into a network address
1134
update database(s) with new network address
1136
another remote trusted source
Y
N
1138
deny access to network
1140
if possible, disable power to device

FIG. 69

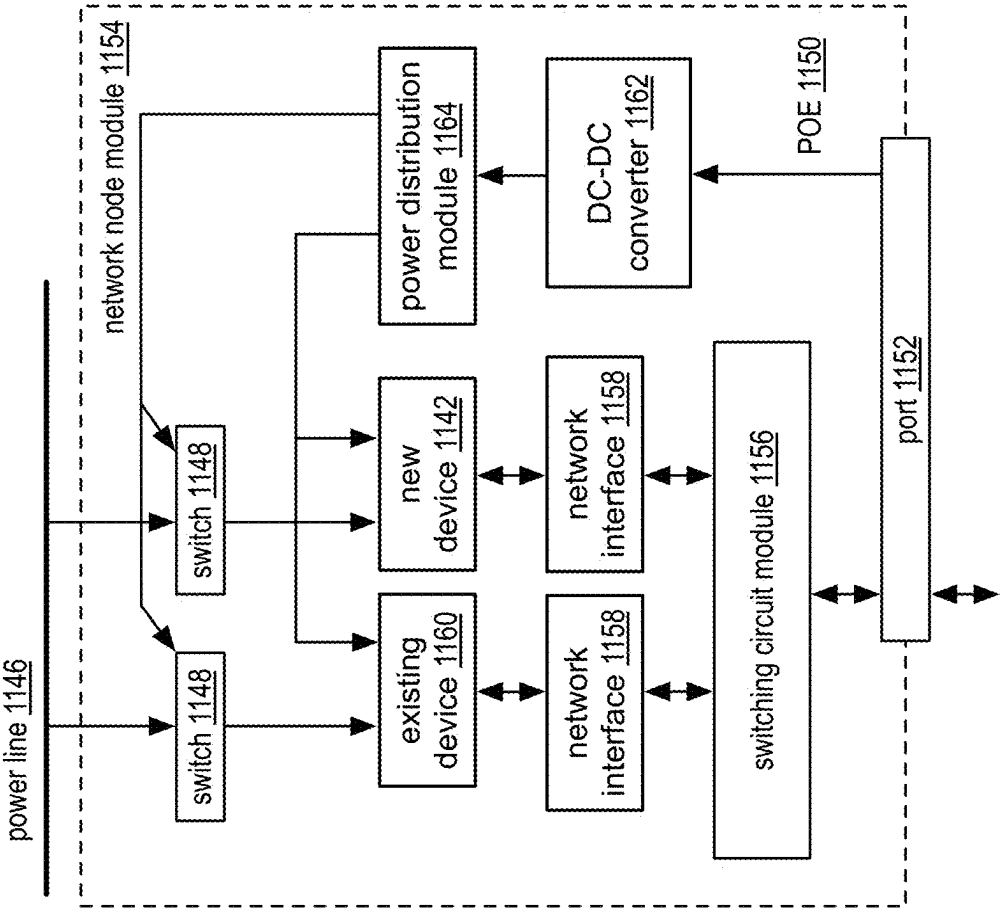

FIG. 70B

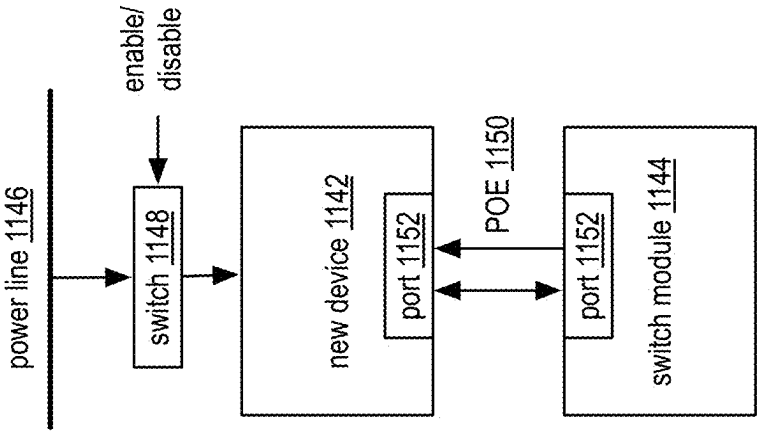

FIG. 70A

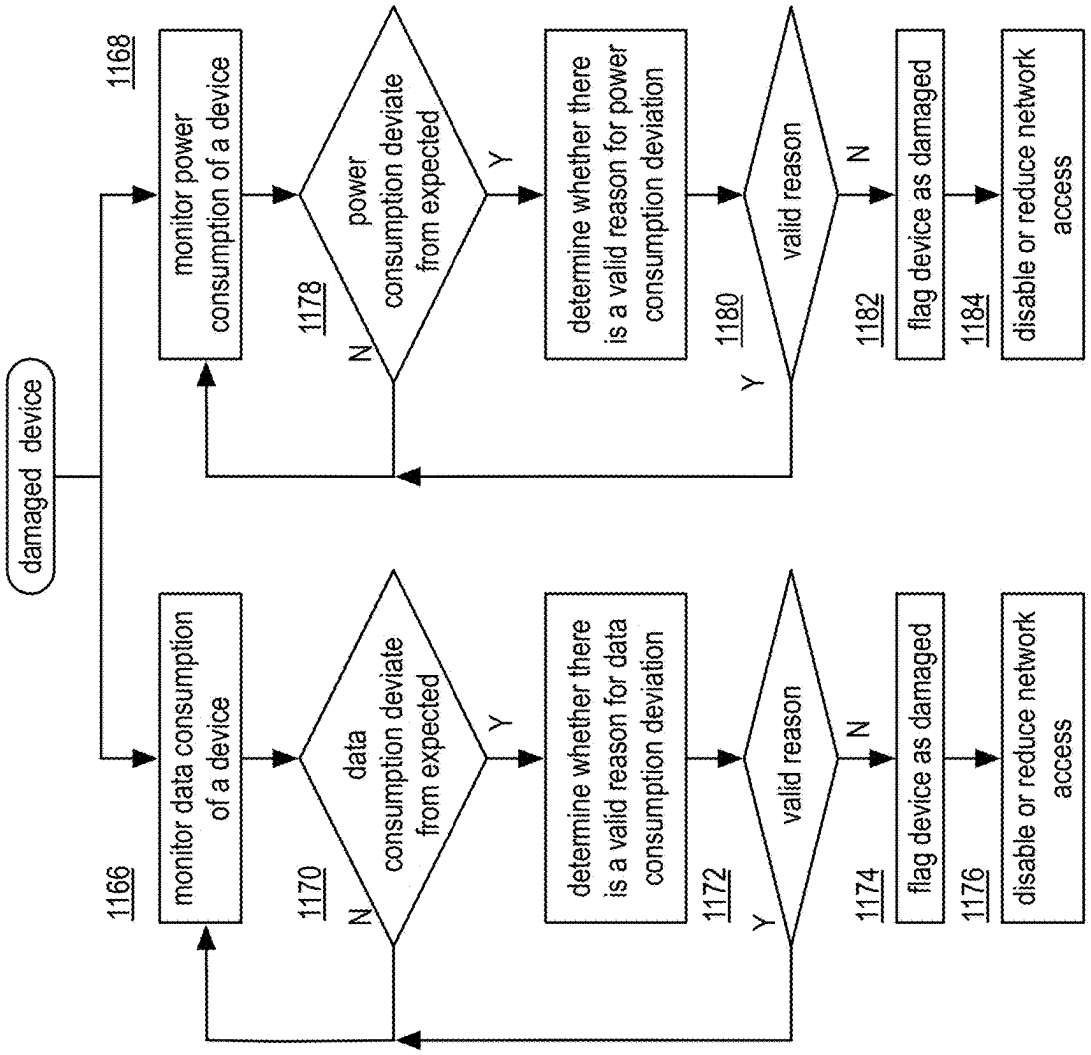
damaged device
1166
monitor data consumption of a device
1170
data consumption deviate from expected
N
Y
determine whether there is a valid reason for data consumption deviation
1172
valid reason
Y
N
1174
flag device as damaged
1176
disable or reduce network access
1168
monitor power consumption of a device
1178
power consumption deviate from expected
N
Y
determine whether there is a valid reason for power consumption deviation
1180
valid reason
Y
N
1182
flag device as damaged
1184
disable or reduce network access

FIG. 71

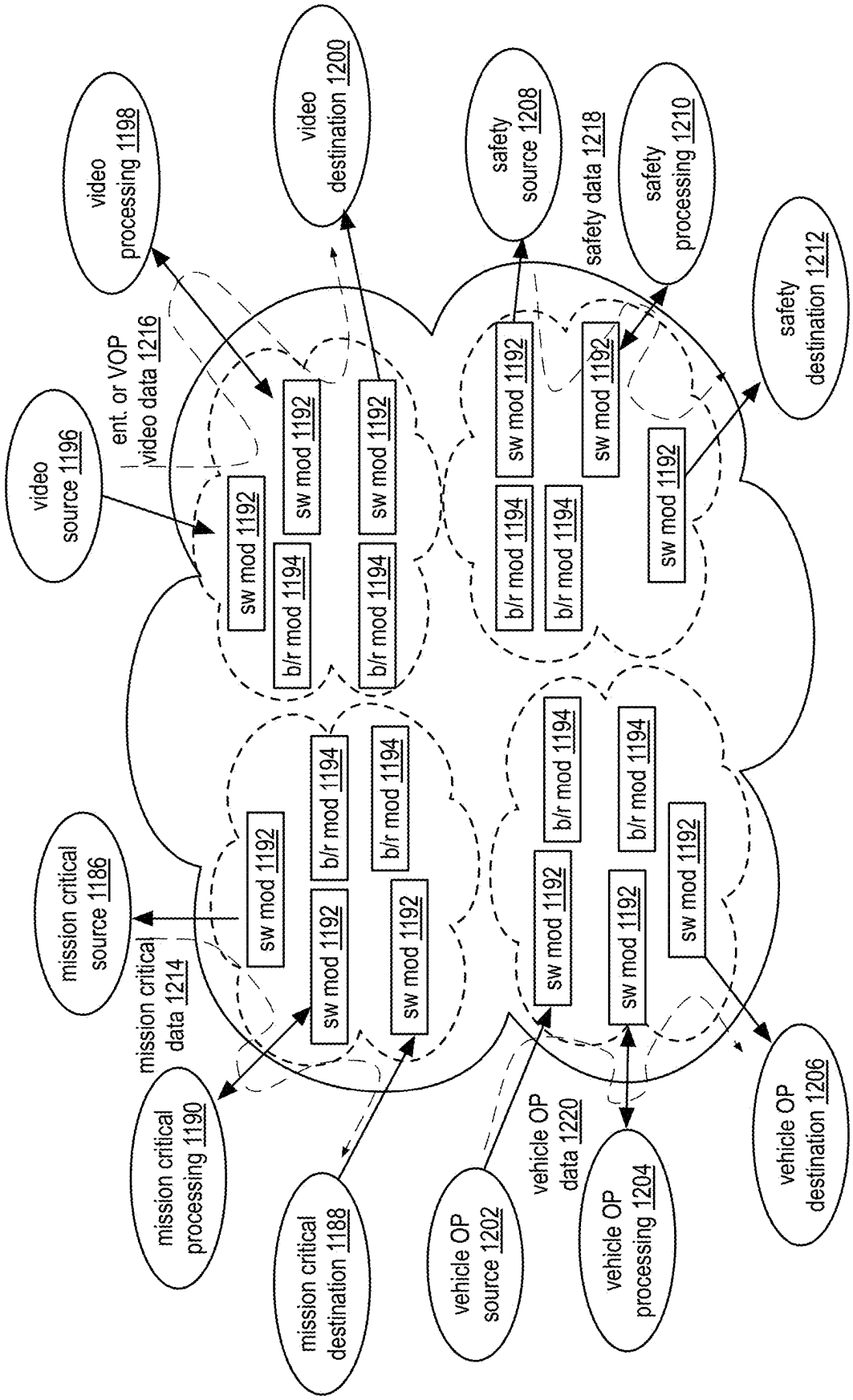
video processing 1198
video destination 1200
safety source 1208
safety data 1218
safety processing 1210
safety destination 1212
ent. or VOP video data 1216
video source 1196
sw mod 1192
b/r mod 1194
mission critical source 1186
mission critical data 1214
mission critical processing 1190
mission critical destination 1188
vehicle OP source 1202
vehicle OP data 1220
vehicle OP processing 1204
vehicle OP destination 1206

FIG. 72

OUT

Q addr 1222	packet field 1224	source 1226	destination 1228	NET resources 1230
001	MC packet #1	MC sensor_1	MC PM_3	SW 2&3, BR 1
002	MC packet #2	MC sensor_4	MC PM_5	SW 2&4, BR 2
003	ND packet #1	ND source 1	ND destin. 3	SW 7&8, BR 4
004	MC packet #x	MC PM_3	MC act._3	SW 2&3, BR 1
005	VOP packet #1	VOP sens_3	VOP PM_1	SW 1&2, BR 1
006	VOP packet #2	VOP sens_2	VOP PM_1	SW 1&2, BR 1
007	IT packet #1	IT source_6	IT PM_1	SW 5&6, BR 5&6
008	IT packet #2	IT PM_1	IT dest_2	SW 9&6, BR5&7
009	ND packet #2	ND source 1	ND destin. 3	SW 7&8, BR 4
⋮				
x-2	ND packet #x	ND source 3	ND destin 1	SW 7&8, BR 4
x-1	IT packet #x	IT source_6	IT PM_1	SW 5&6, BR 5&6
x	VOP packet #x	VOP sens_3	VOP PM_2	SW 1&2, BR1

using different network resource, can concurrently transmit

IN

FIG. 73

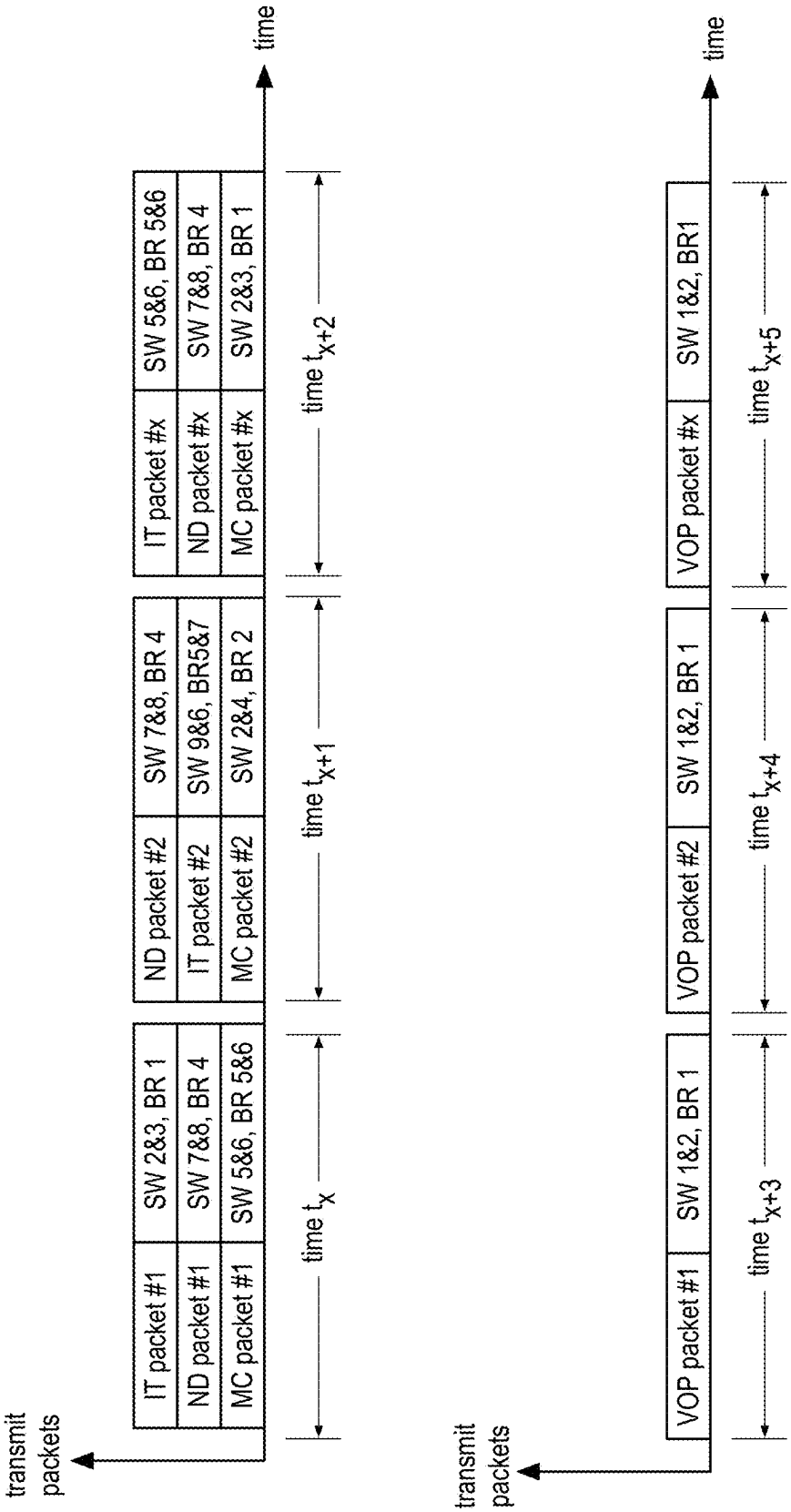
transmit packets
time
IT packet #1
ND packet #1
MC packet #1
SW 2&3, BR 1
SW 7&8, BR 4
SW 5&6, BR 5&6
ND packet #2
IT packet #2
MC packet #2
SW 7&8, BR 4
SW 9&6, BR5&7
SW 2&4, BR 2
IT packet #x
ND packet #x
MC packet #x
SW 5&6, BR 5&6
SW 7&8, BR 4
SW 2&3, BR 1
time t_x
time t_{x+1}
time t_{x+2}
transmit packets
time
VOP packet #1
VOP packet #2
VOP packet #x
SW 1&2, BR 1
SW 1&2, BR 1
SW 1&2, BR1
time t_{x+3}
time t_{x+4}
time t_{x+5}

FIG. 74

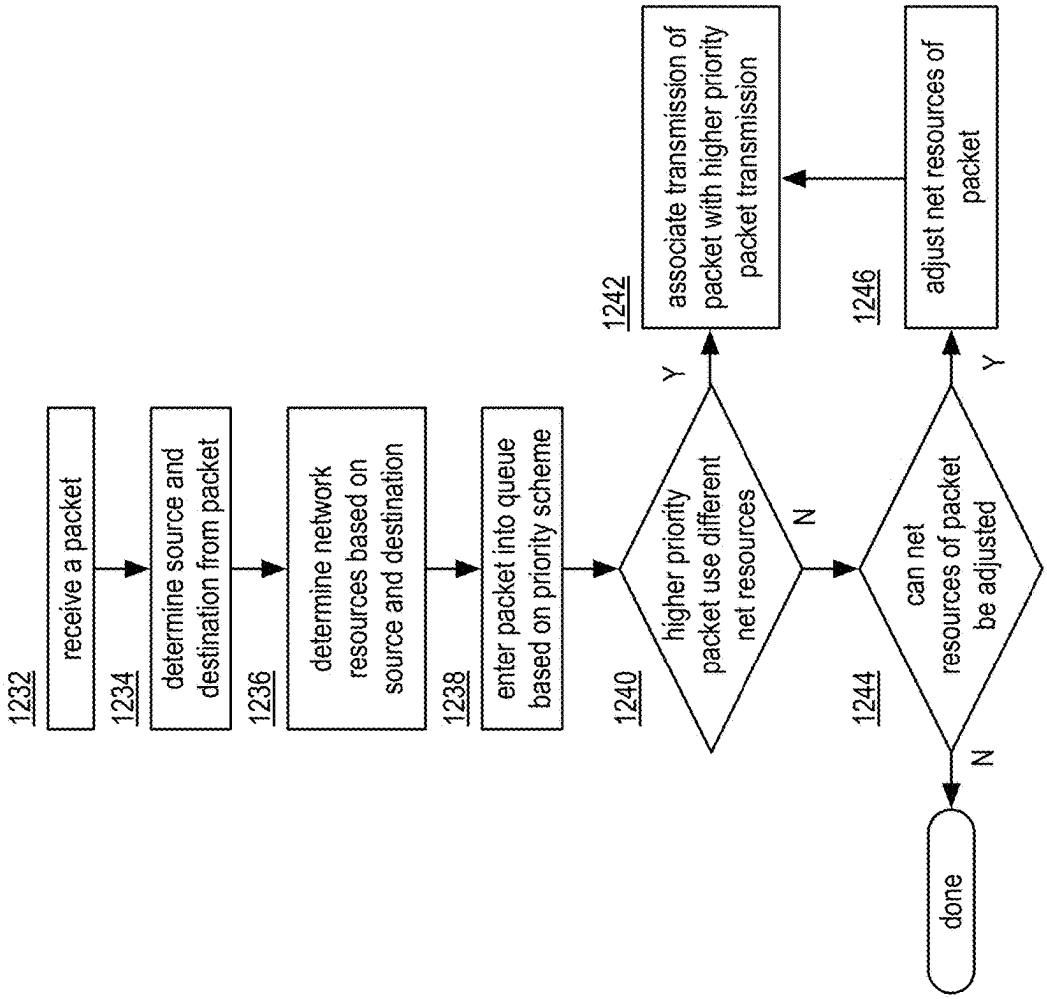
1232
receive a packet
1234
determine source and destination from packet
1236
determine network resources based on source and destination
1238
enter packet into queue based on priority scheme
1240
higher priority packet use different net resources
Y
N
1242
associate transmission of packet with higher priority packet transmission
1244
can net resources of packet be adjusted
Y
N
1246
adjust net resources of packet
done

FIG. 75

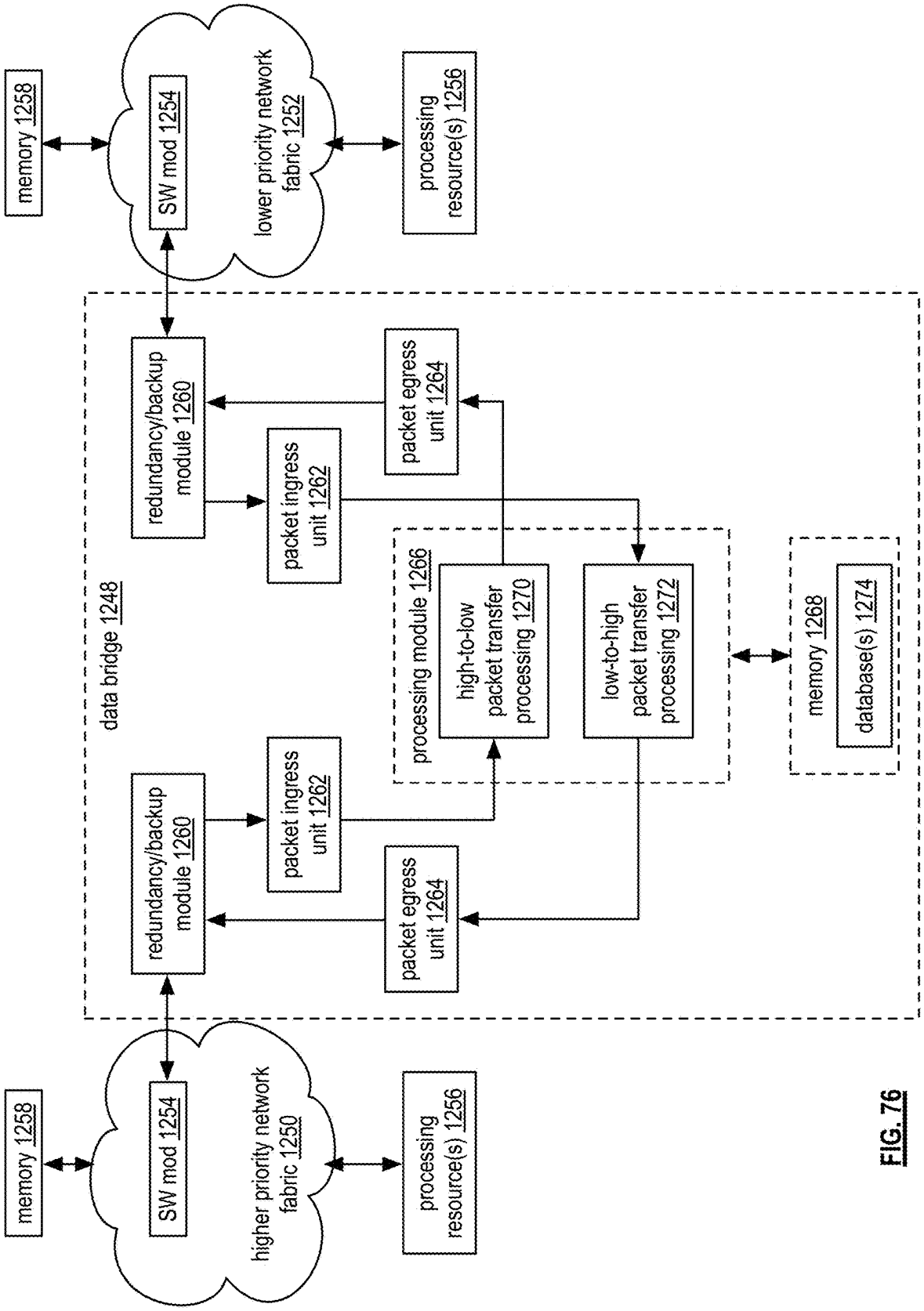
memory 1258
SW mod 1254
lower priority network fabric 1252
processing resource(s) 1256
data bridge 1248
redundancy/backup module 1260
packet ingress unit 1262
packet egress unit 1264
processing module 1266
high-to-low packet transfer processing 1270
low-to-high packet transfer processing 1272
memory 1268
database(s) 1274
redundancy/backup module 1260
packet ingress unit 1262
packet egress unit 1264
memory 1258
SW mod 1254
higher priority network fabric 1250
processing resource(s) 1256

FIG. 76

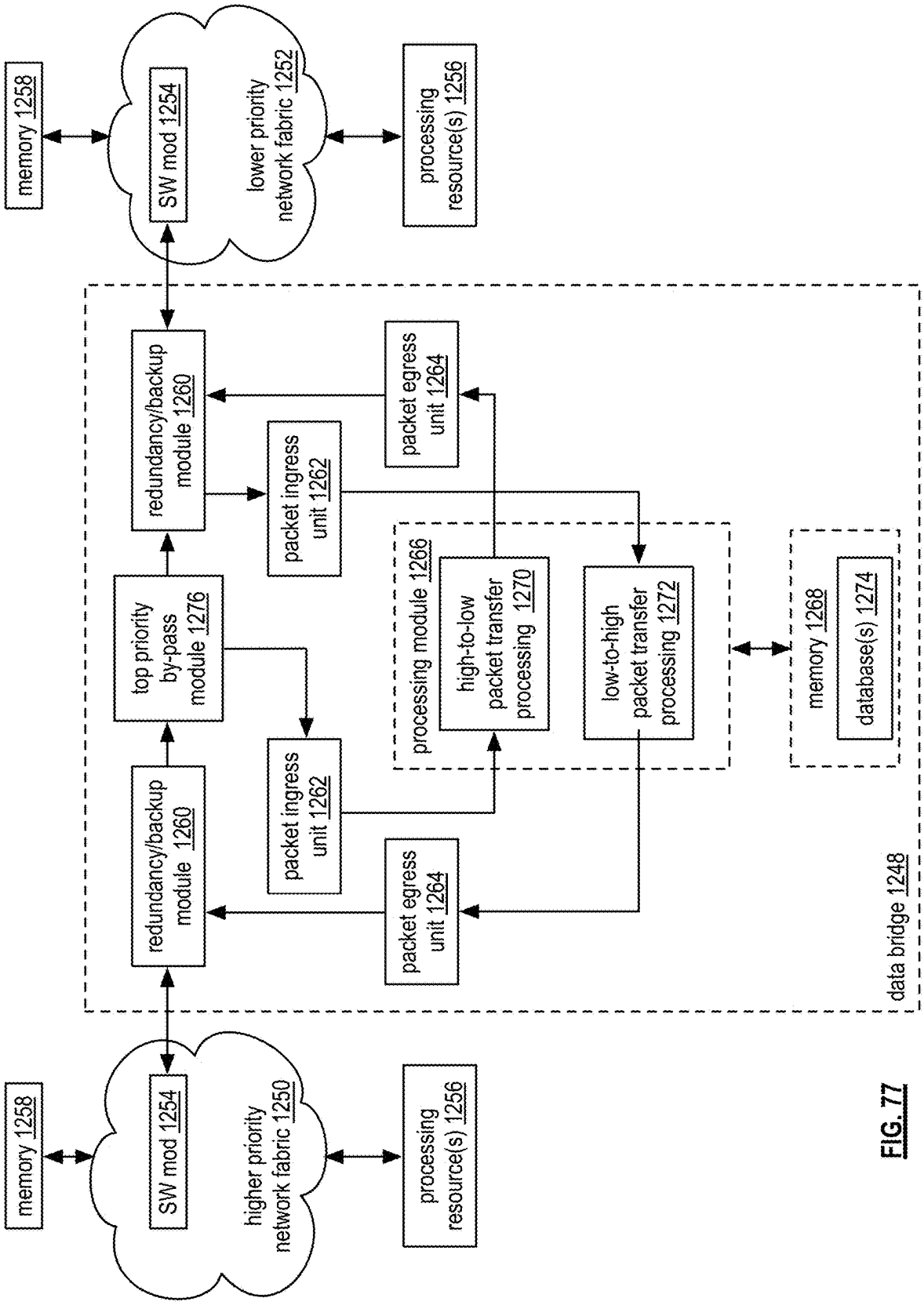
memory 1258
SW mod 1254
higher priority network fabric 1250
processing resource(s) 1256
redundancy/backup module 1260
top priority by-pass module 1276
redundancy/backup module 1260
packet ingress unit 1262
packet ingress unit 1262
packet egress unit 1264
packet egress unit 1264
processing module 1266
high-to-low packet transfer processing 1270
low-to-high packet transfer processing 1272
memory 1268
database(s) 1274
data bridge 1248
memory 1258
SW mod 1254
lower priority network fabric 1252
processing resource(s) 1256

FIG. 77

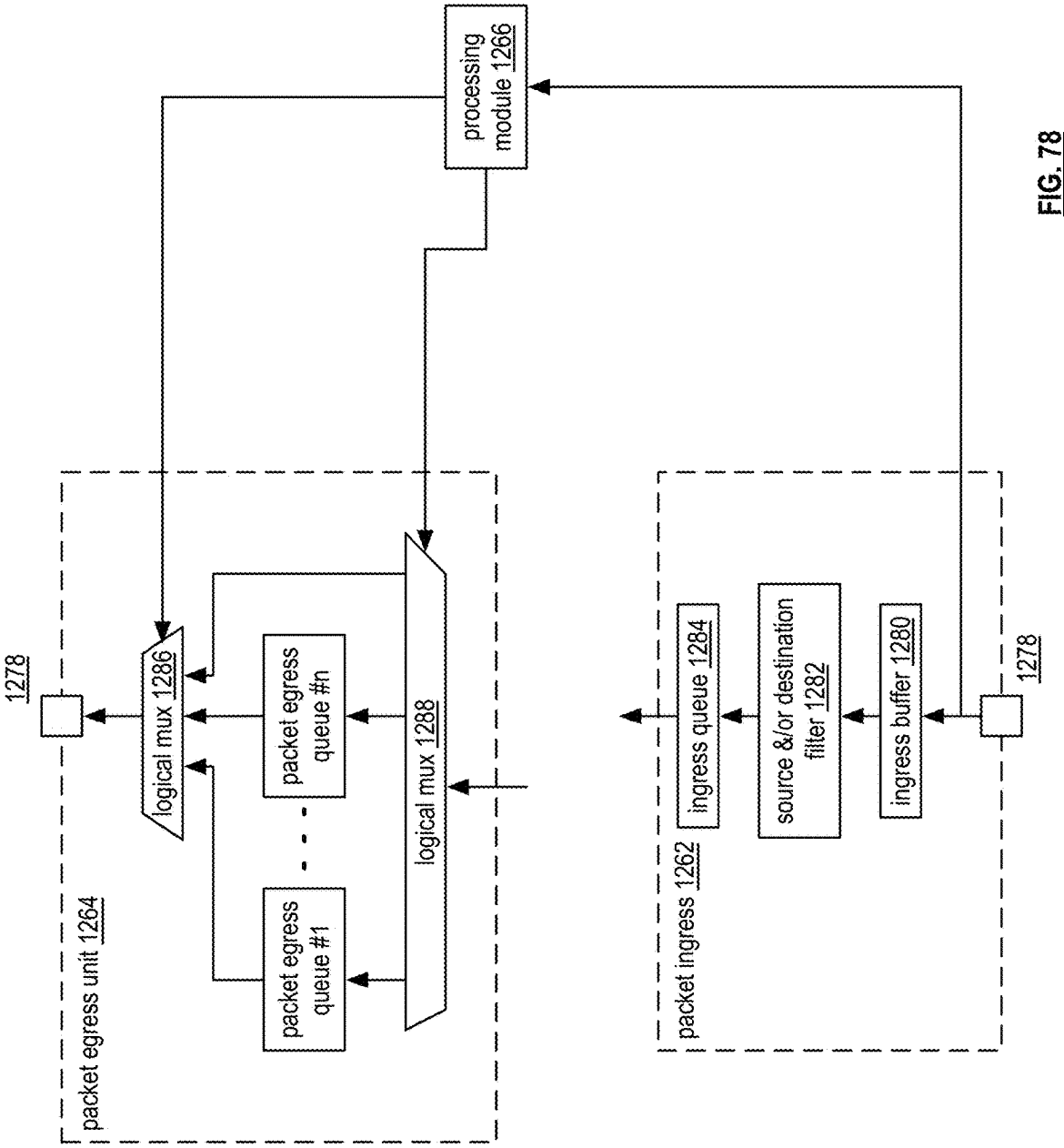
processing module 1266
packet egress unit 1264
1278
logical mux 1286
packet egress queue #1
packet egress queue #n
logical mux 1288
packet ingress 1262
ingress queue 1284
source &/or destination filter 1282
ingress buffer 1280
1278

FIG. 78

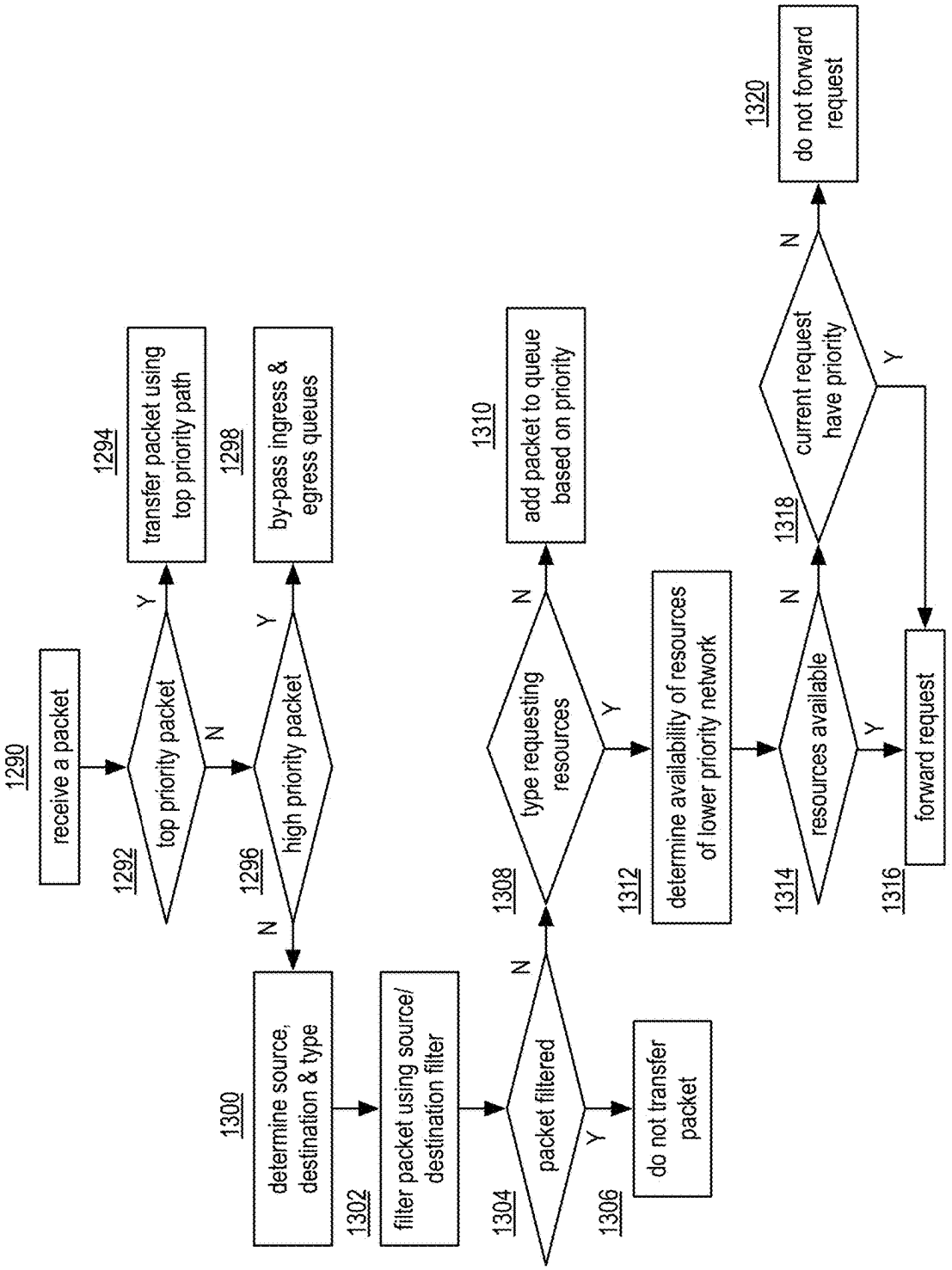
1290
receive a packet
1292
top priority packet
Y
N
1294
transfer packet using top priority path
1296
high priority packet
Y
N
1298
by-pass ingress & egress queues
1300
determine source, destination & type
1302
filter packet using source/ destination filter
1304
packet filtered
Y
N
1306
do not transfer packet
1308
type requesting resources
Y
N
1310
add packet to queue based on priority
1312
determine availability of resources of lower priority network
1314
resources available
Y
N
1316
forward request
1318
current request have priority
Y
N
1320
do not forward request

FIG. 79

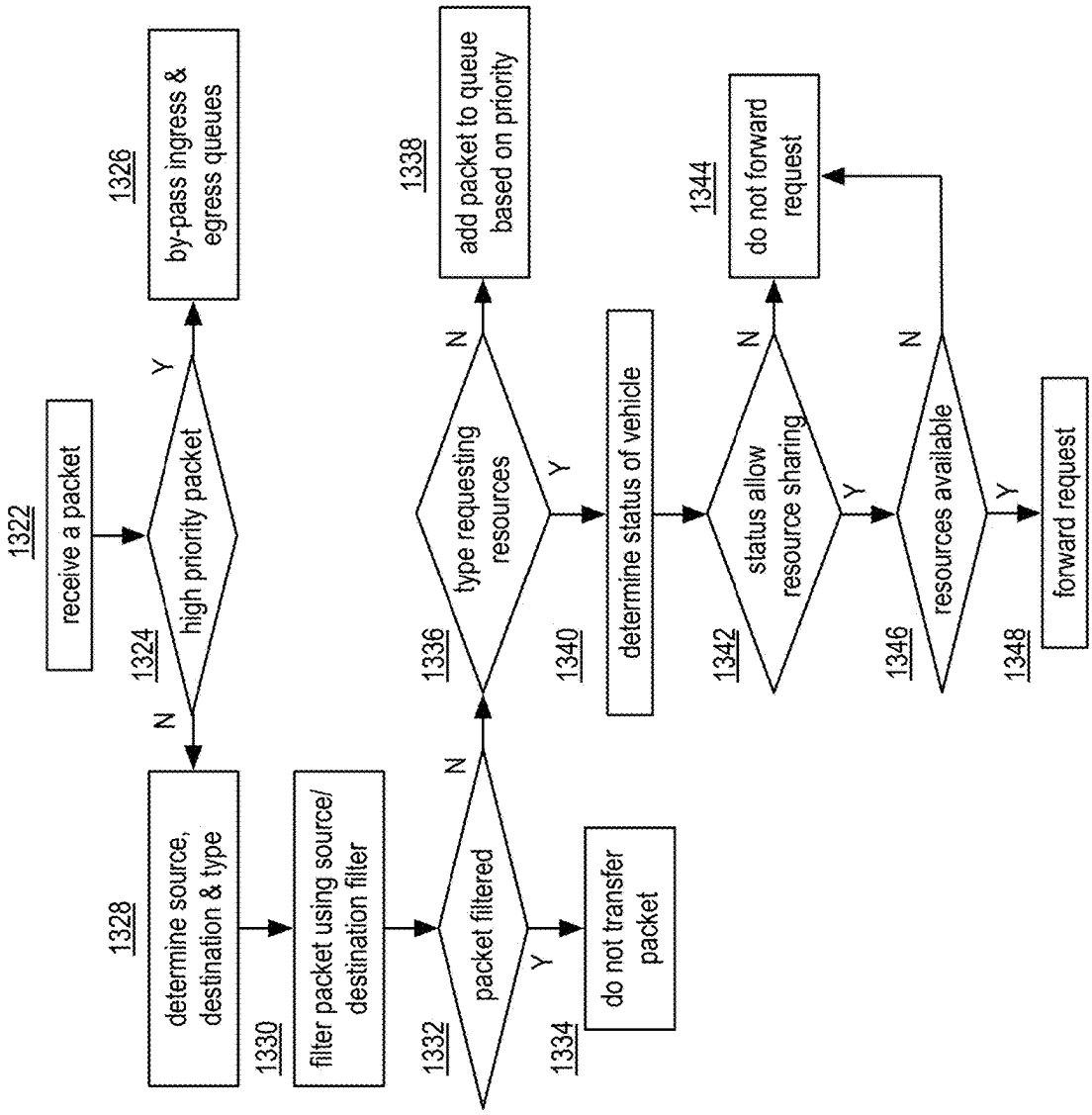
1322
receive a packet
1324
high priority packet
Y
1326
by-pass ingress & egress queues
N
1328
determine source, destination & type
1330
filter packet using source/ destination filter
1332
packet filtered
Y
1334
do not transfer packet
N
1336
type requesting resources
N
1338
add packet to queue based on priority
Y
1340
determine status of vehicle
1342
status allow resource sharing
N
1344
do not forward request
Y
1346
resources available
N
Y
1348
forward request

FIG. 80

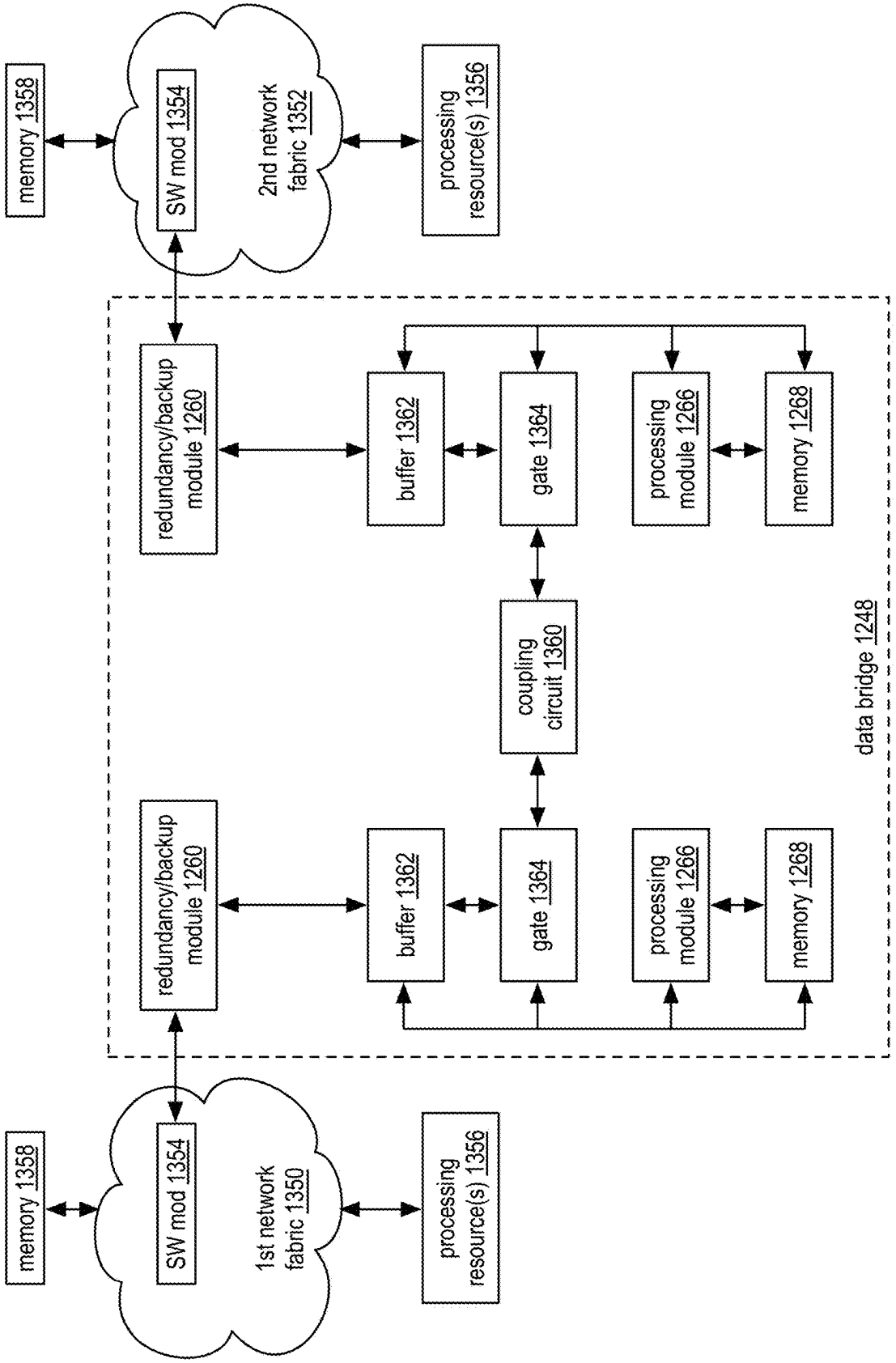
memory 1358
SW mod 1354
2nd network fabric 1352
processing resource(s) 1356
redundancy/backup module 1260
buffer 1362
gate 1364
processing module 1266
memory 1268
coupling circuit 1360
data bridge 1248
redundancy/backup module 1260
buffer 1362
gate 1364
processing module 1266
memory 1268
memory 1358
SW mod 1354
1st network fabric 1350
processing resource(s) 1356

FIG. 81

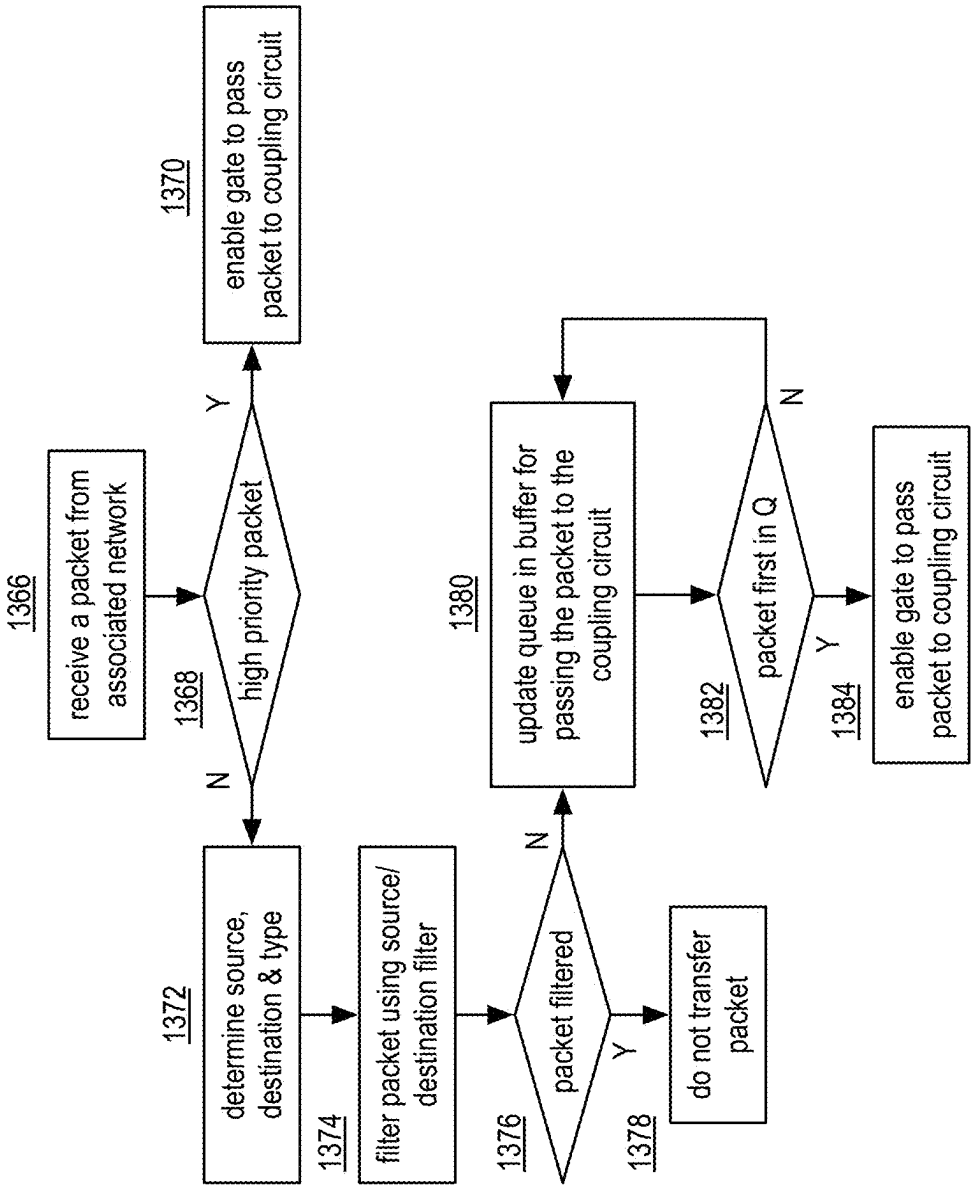
1366
receive a packet from associated network
1368
high priority packet
Y
N
1370
enable gate to pass packet to coupling circuit
1372
determine source, destination & type
1374
filter packet using source/ destination filter
1376
packet filtered
Y
N
1378
do not transfer packet
1380
update queue in buffer for passing the packet to the coupling circuit
1382
packet first in Q
N
Y
1384
enable gate to pass packet to coupling circuit

FIG. 82

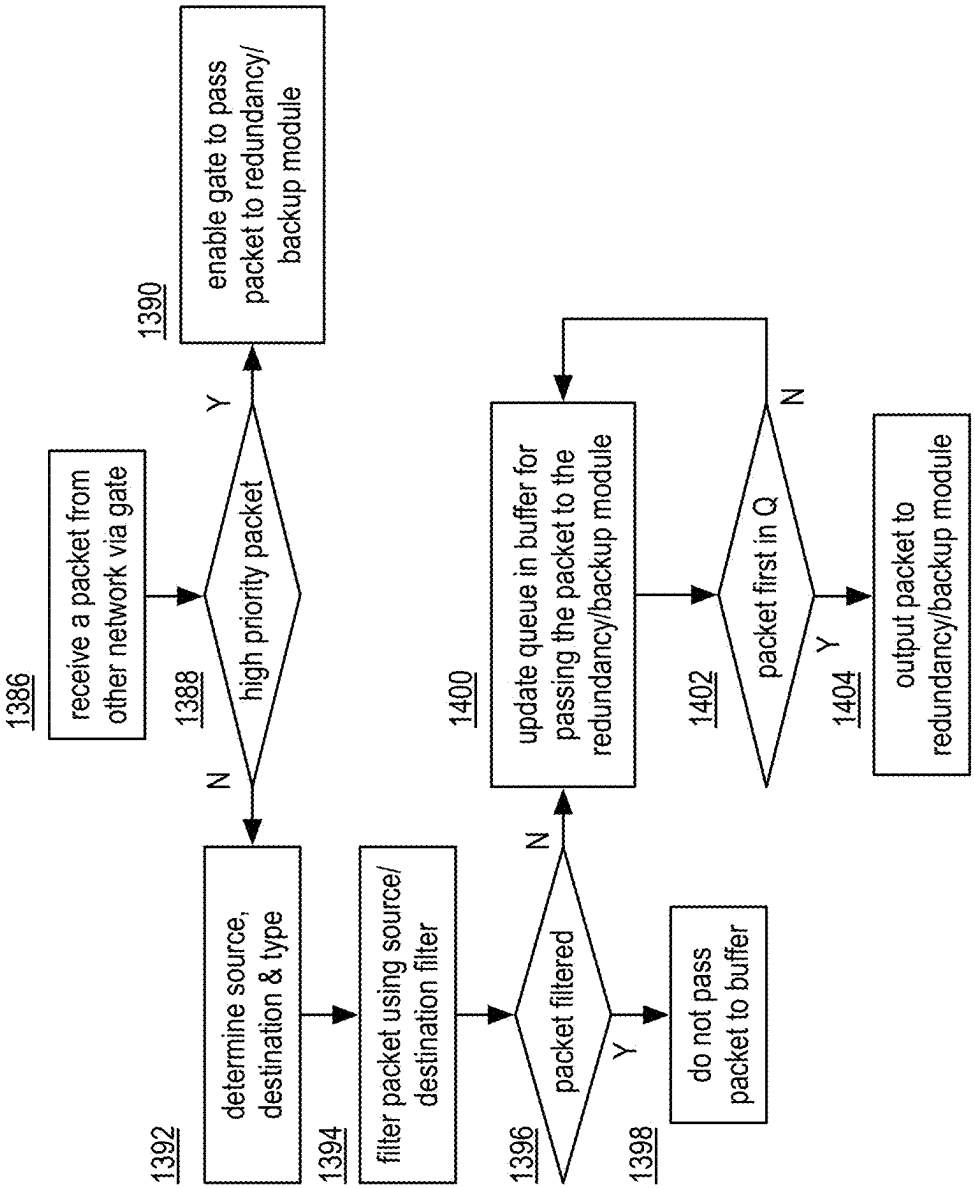
1386
receive a packet from other network via gate
1388
high priority packet
Y
1390
enable gate to pass packet to redundancy/ backup module
N
1392
determine source, destination & type
1394
filter packet using source/ destination filter
1396
packet filtered
Y
1398
do not pass packet to buffer
N
1400
update queue in buffer for passing the packet to the redundancy/backup module
1402
packet first in Q
N
Y
1404
output packet to redundancy/backup module

FIG. 83

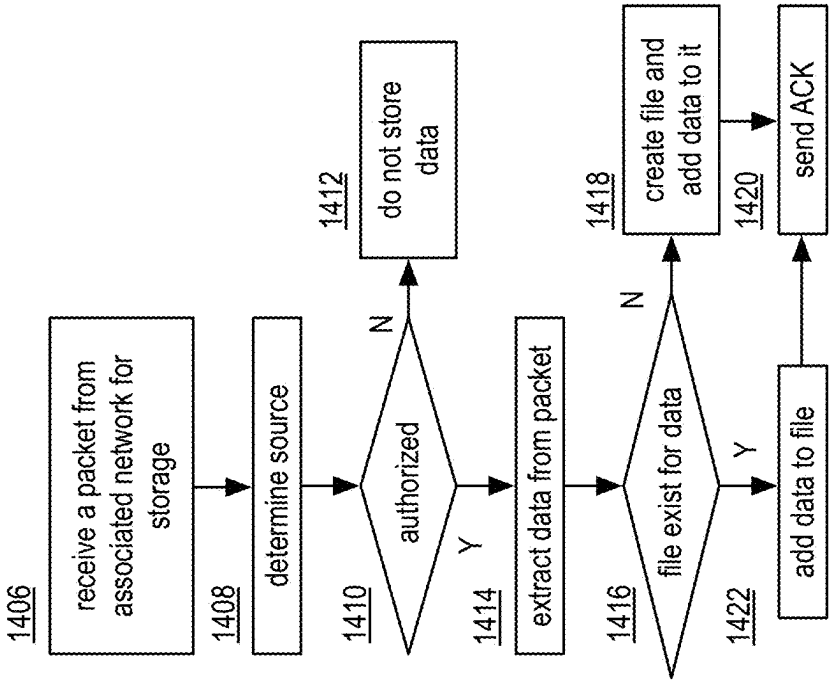
1406
receive a packet from associated network for storage
1408
determine source
1410
authorized
N
1412
do not store data
Y
1414
extract data from packet
1416
file exist for data
N
1418
create file and add data to it
Y
1422
add data to file
1420
send ACK

FIG. 84

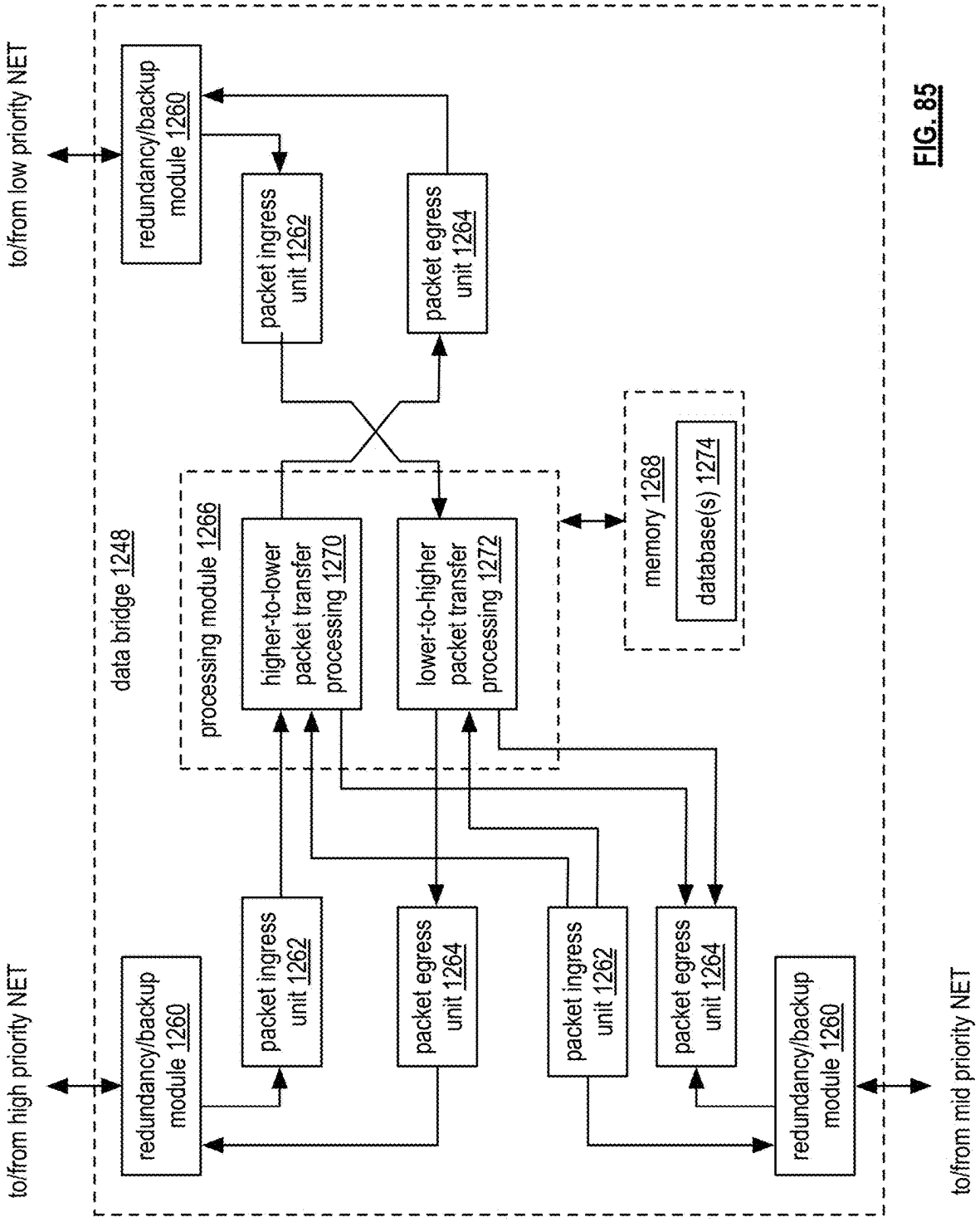
to/from low priority NET
redundancy/backup module 1260
packet ingress unit 1262
packet egress unit 1264
data bridge 1248
processing module 1266
higher-to-lower packet transfer processing 1270
lower-to-higher packet transfer processing 1272
memory 1268
database(s) 1274
to/from high priority NET
redundancy/backup module 1260
packet ingress unit 1262
packet egress unit 1264
packet ingress unit 1262
packet egress unit 1264
redundancy/backup module 1260
to/from mid priority NET

FIG. 85

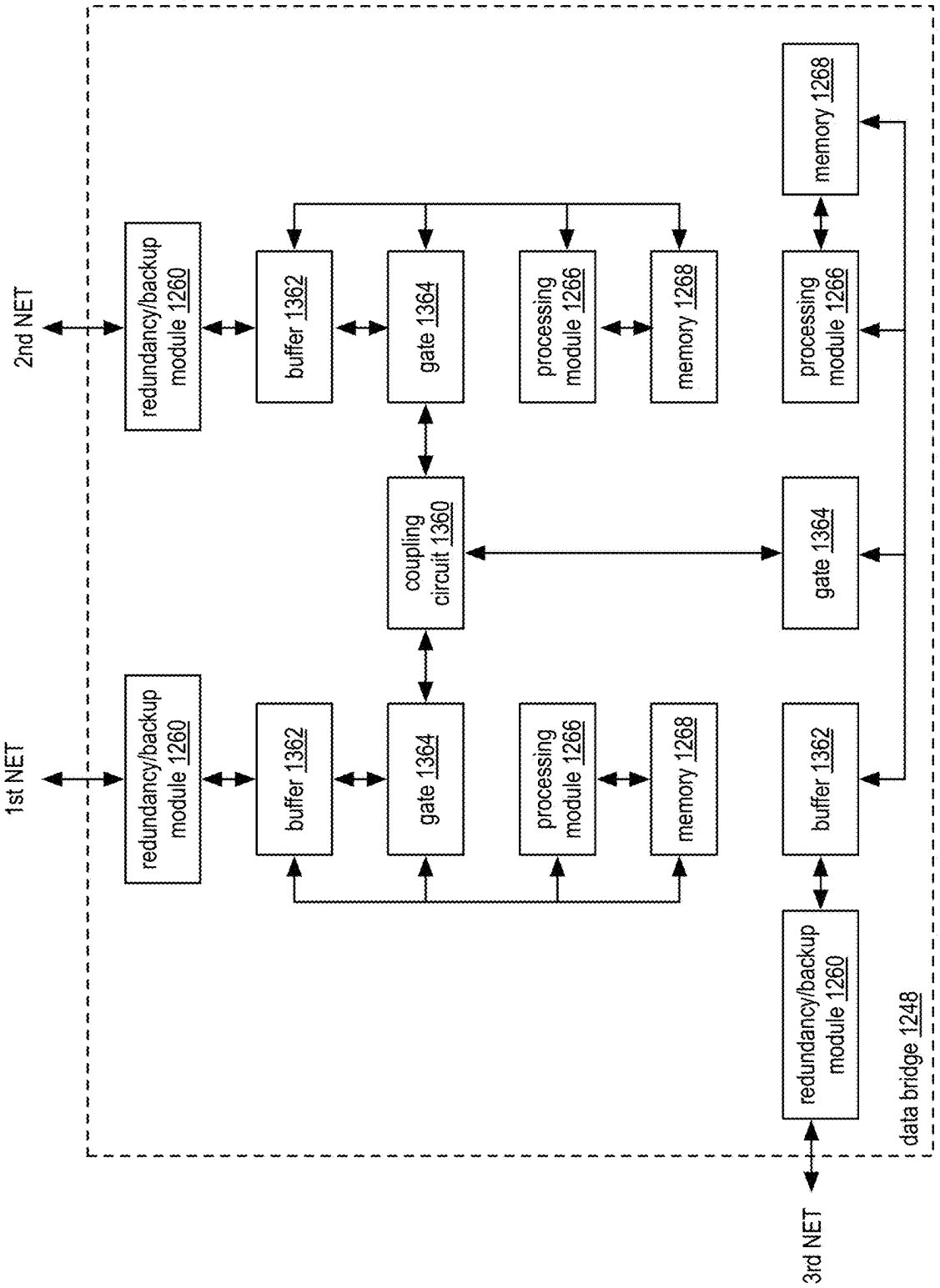
1st NET
2nd NET
3rd NET
redundancy/backup module 1260
redundancy/backup module 1260
redundancy/backup module 1260
buffer 1362
buffer 1362
buffer 1362
gate 1364
gate 1364
gate 1364
processing module 1266
processing module 1266
processing module 1266
memory 1268
memory 1268
memory 1268
coupling circuit 1360
data bridge 1248

FIG. 86

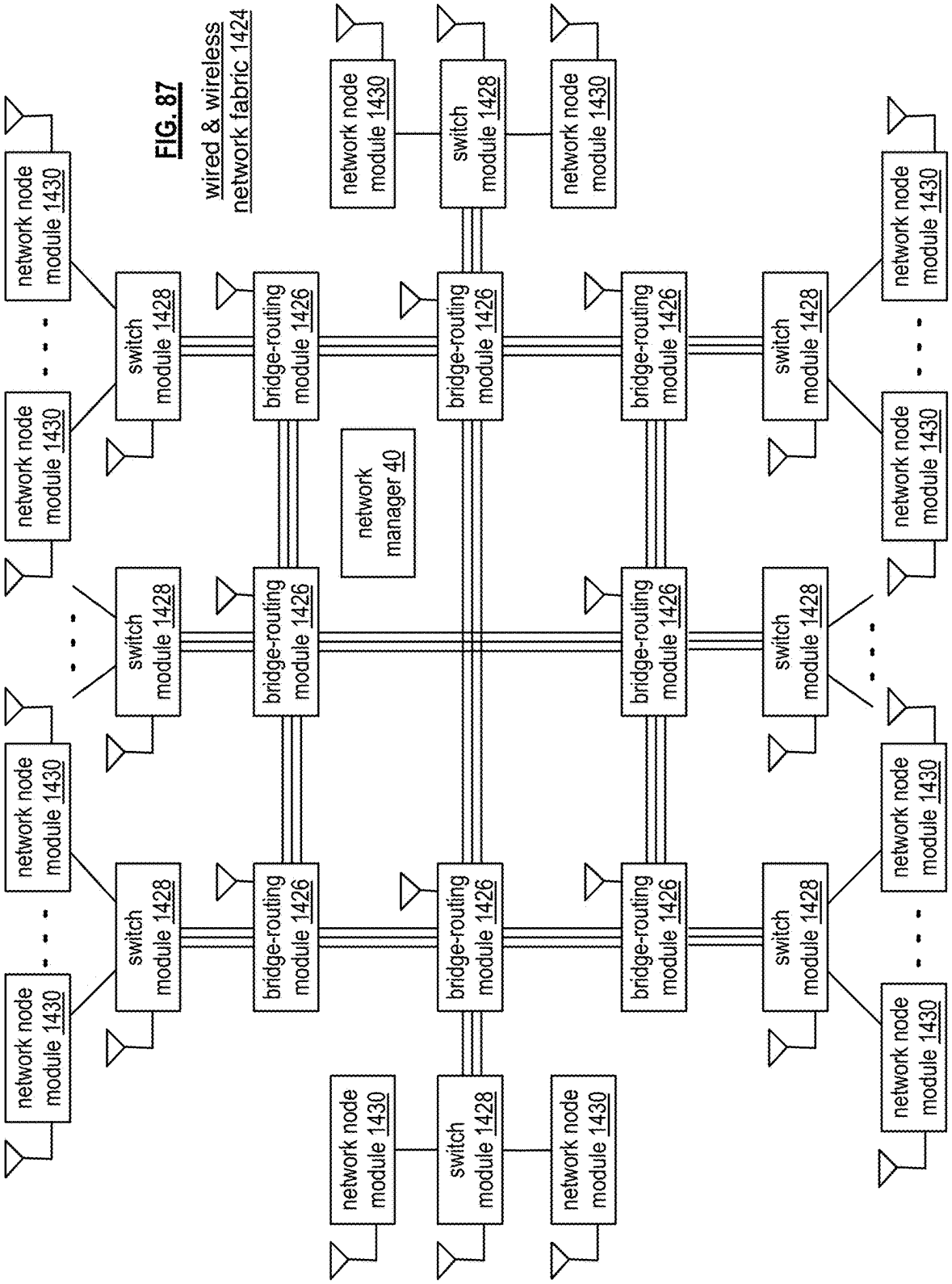
wired & wireless network fabric 1424
network node module 1430
switch module 1428
bridge-routing module 1426
network manager 40

FIG. 87

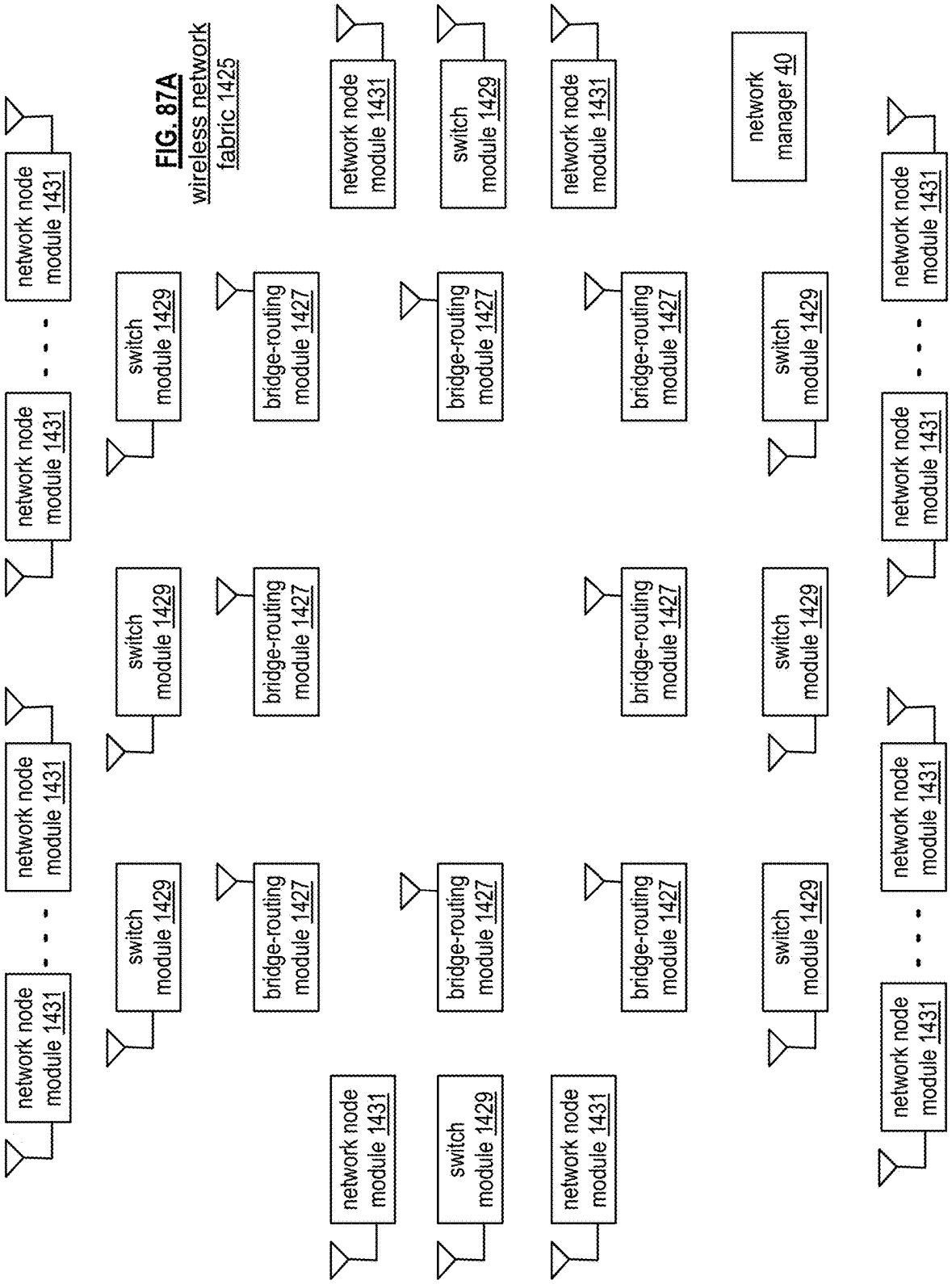

FIG. 87A
wireless network fabric 1425

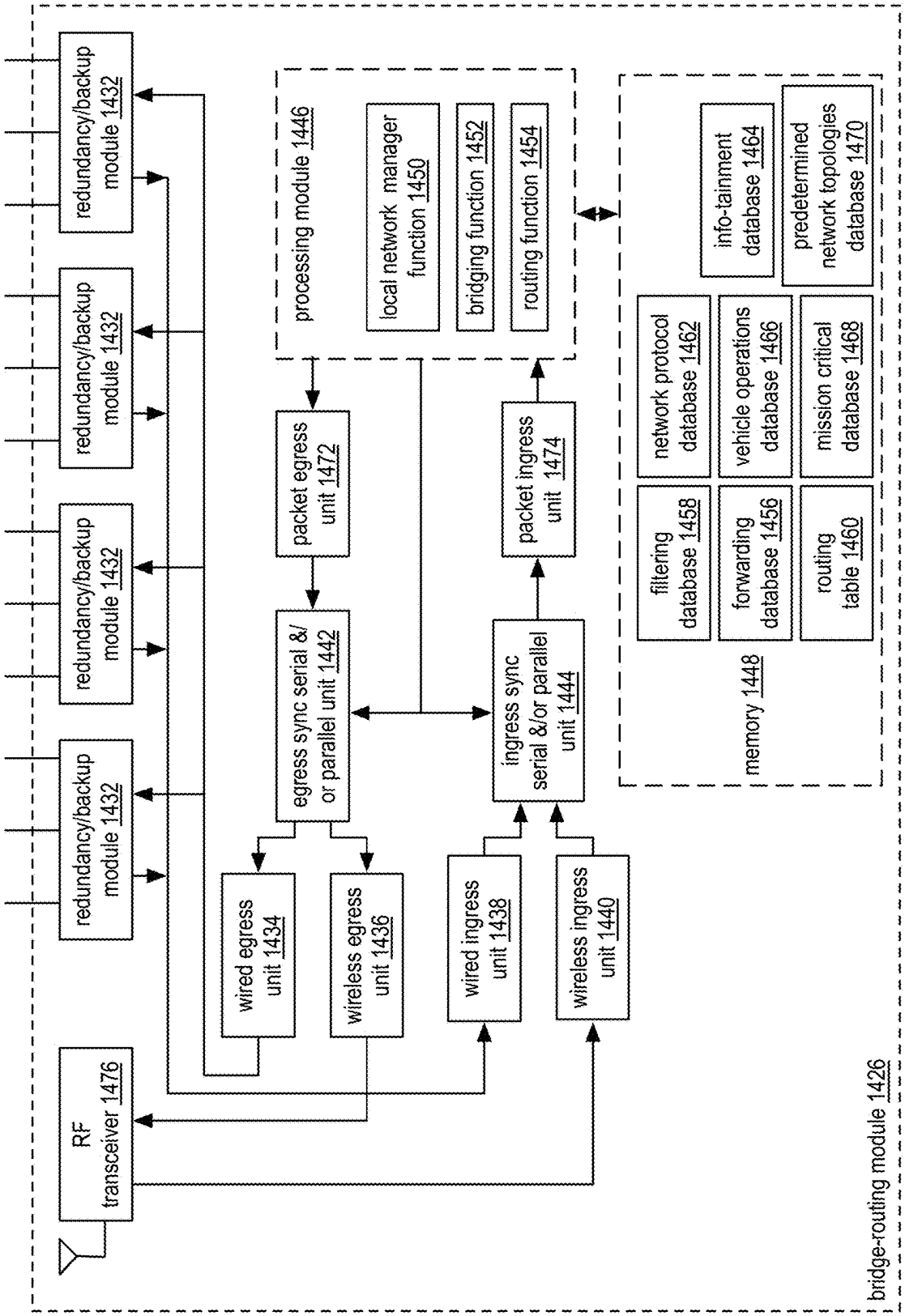
redundancy/backup module 1432
redundancy/backup module 1432
redundancy/backup module 1432
redundancy/backup module 1432
processing module 1446
local network manager function 1450
bridging function 1452
routing function 1454
packet egress unit 1472
packet ingress unit 1474
egress sync serial &/ or parallel unit 1442
ingress sync serial &/or parallel unit 1444
wired egress unit 1434
wireless egress unit 1436
wired ingress unit 1438
wireless ingress unit 1440
RF transceiver 1476
memory 1448
network protocol database 1462
vehicle operations database 1466
mission critical database 1468
info-tainment database 1464
predetermined network topologies database 1470
filtering database 1458
forwarding database 1456
routing table 1460
bridge-routing module 1426

FIG. 88

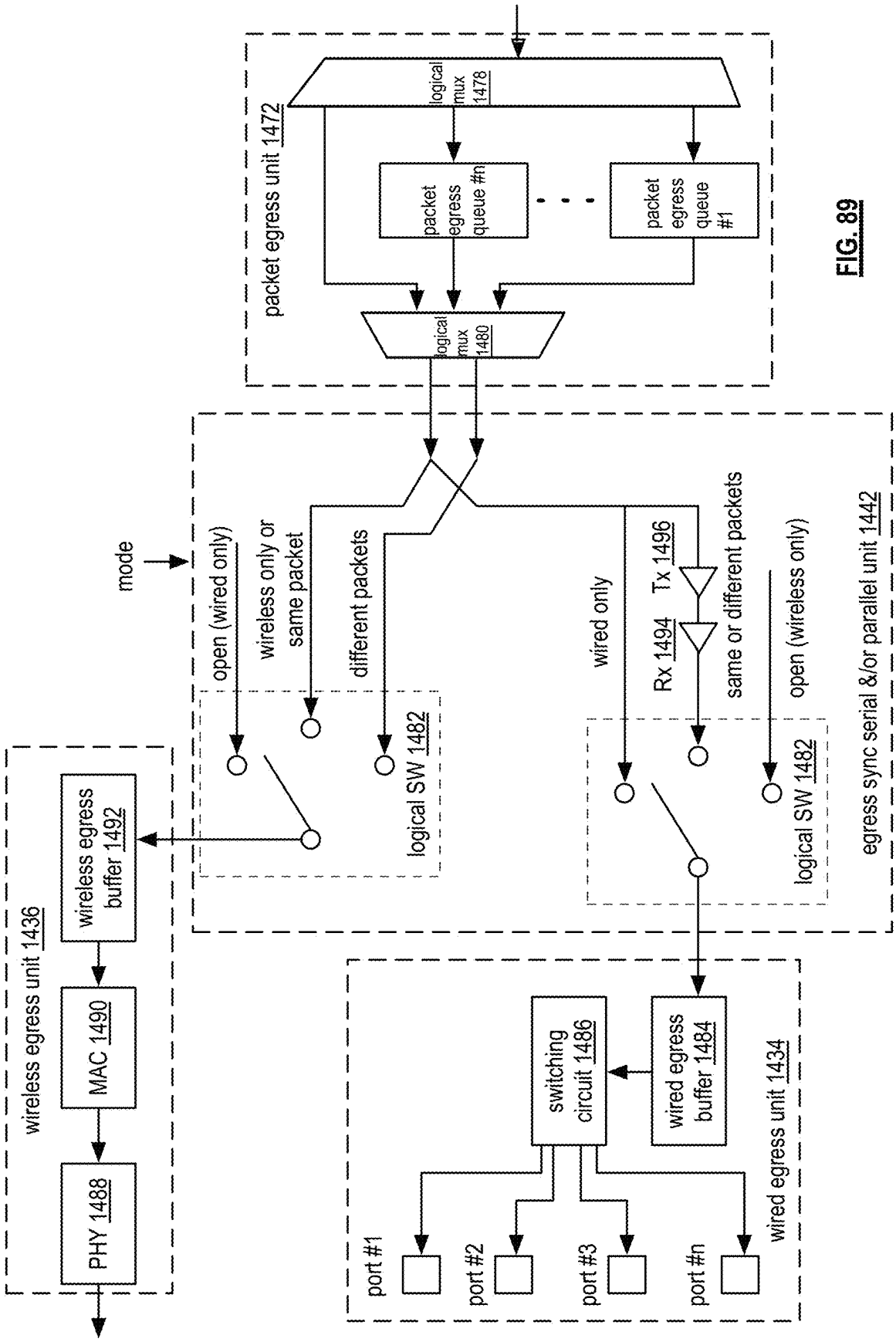
packet egress unit 1472
logical mux 1478
packet egress queue #n
packet egress queue #1
logical mux 1480
mode
open (wired only)
wireless only or same packet
different packets
logical SW 1482
wired only
Rx 1494
Tx 1496
same or different packets
open (wireless only)
logical SW 1482
egress sync serial &/or parallel unit 1442
wireless egress unit 1436
wireless egress buffer 1492
MAC 1490
PHY 1488
switching circuit 1486
wired egress buffer 1484
wired egress unit 1434
port #1
port #2
port #3
port #n

FIG. 89

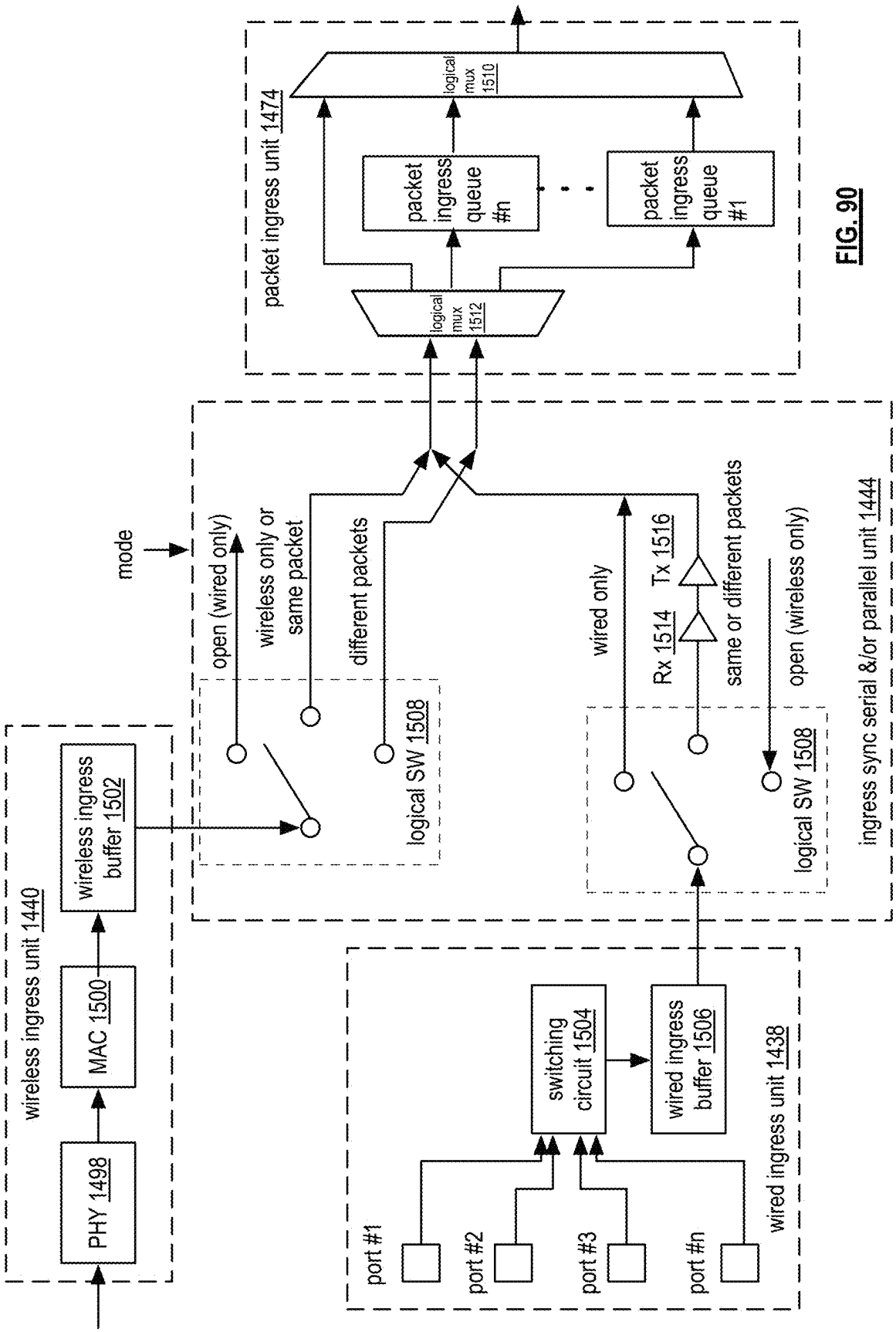
wireless ingress unit 1440
PHY 1498
MAC 1500
wireless ingress buffer 1502
mode
open (wired only)
wireless only or same packet
different packets
logical SW 1508
wired only
Rx 1514
Tx 1516
same or different packets
open (wireless only)
logical SW 1508
ingress sync serial &/or parallel unit 1444
packet ingress unit 1474
logical mux 1512
packet ingress queue #n
packet ingress queue #1
logical mux 1510
port #1
port #2
port #3
port #n
switching circuit 1504
wired ingress buffer 1506
wired ingress unit 1438

FIG. 90

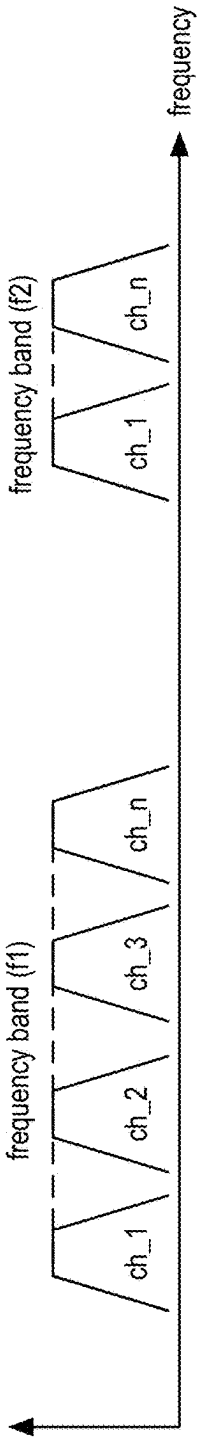
frequency
frequency band (f2)
ch_1
ch_2
ch_3
ch_n
frequency band (f1)
ch_1
ch_n

FIG. 91

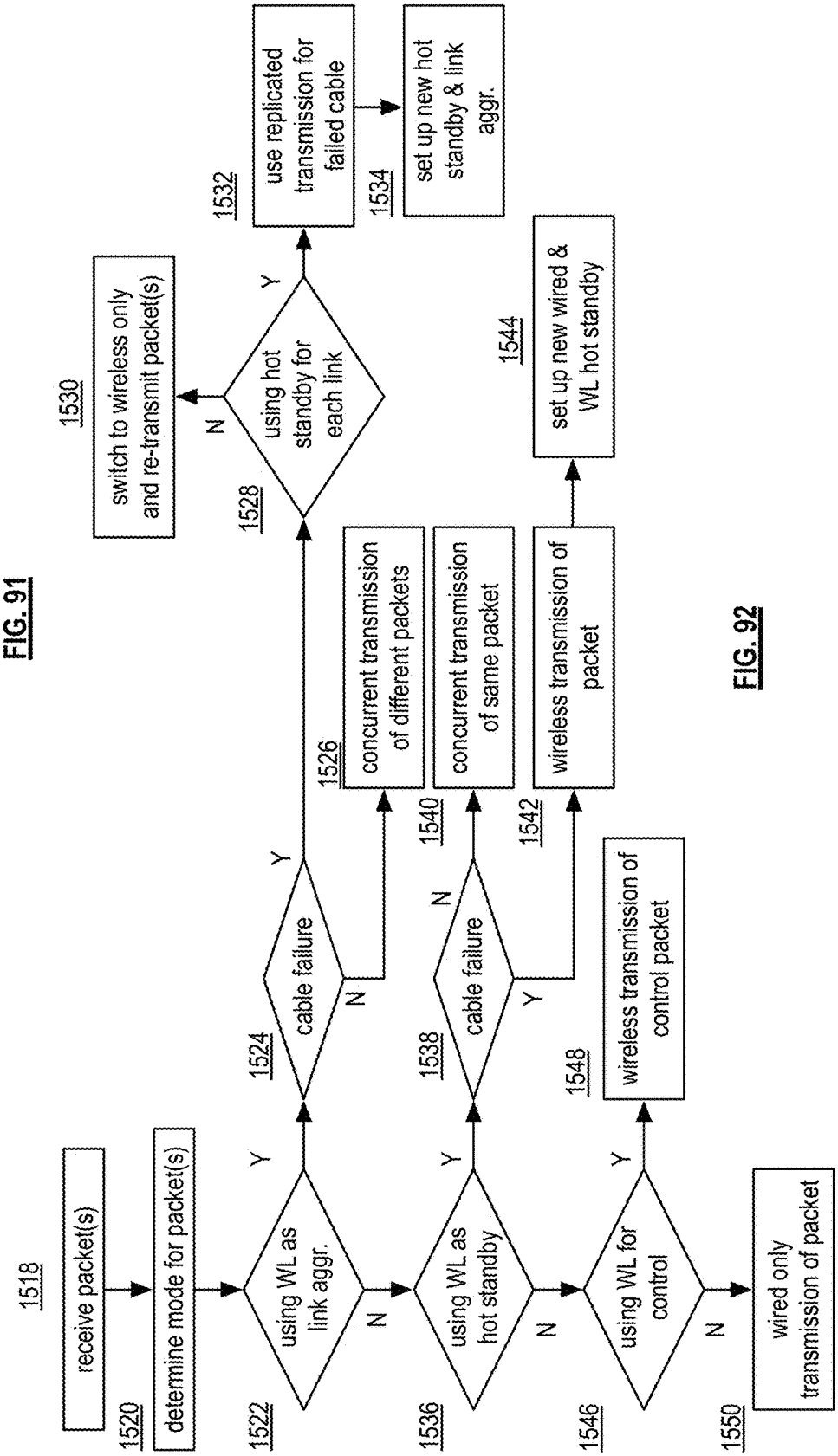
1518
receive packet(s)
1520
determine mode for packet(s)
1522
using WL as link aggr.
Y
N
1524
cable failure
Y
N
1526
concurrent transmission of different packets
1528
using hot standby for each link
Y
N
1530
switch to wireless only and re-transmit packet(s)
1532
use replicated transmission for failed cable
1534
set up new hot standby & link aggr.
1536
using WL as hot standby
Y
N
1538
cable failure
N
Y
1540
concurrent transmission of same packet
1542
wireless transmission of packet
1544
set up new wired & WL hot standby
1546
using WL for control
Y
N
1548
wireless transmission of control packet
1550
wired only transmission of packet

FIG. 92

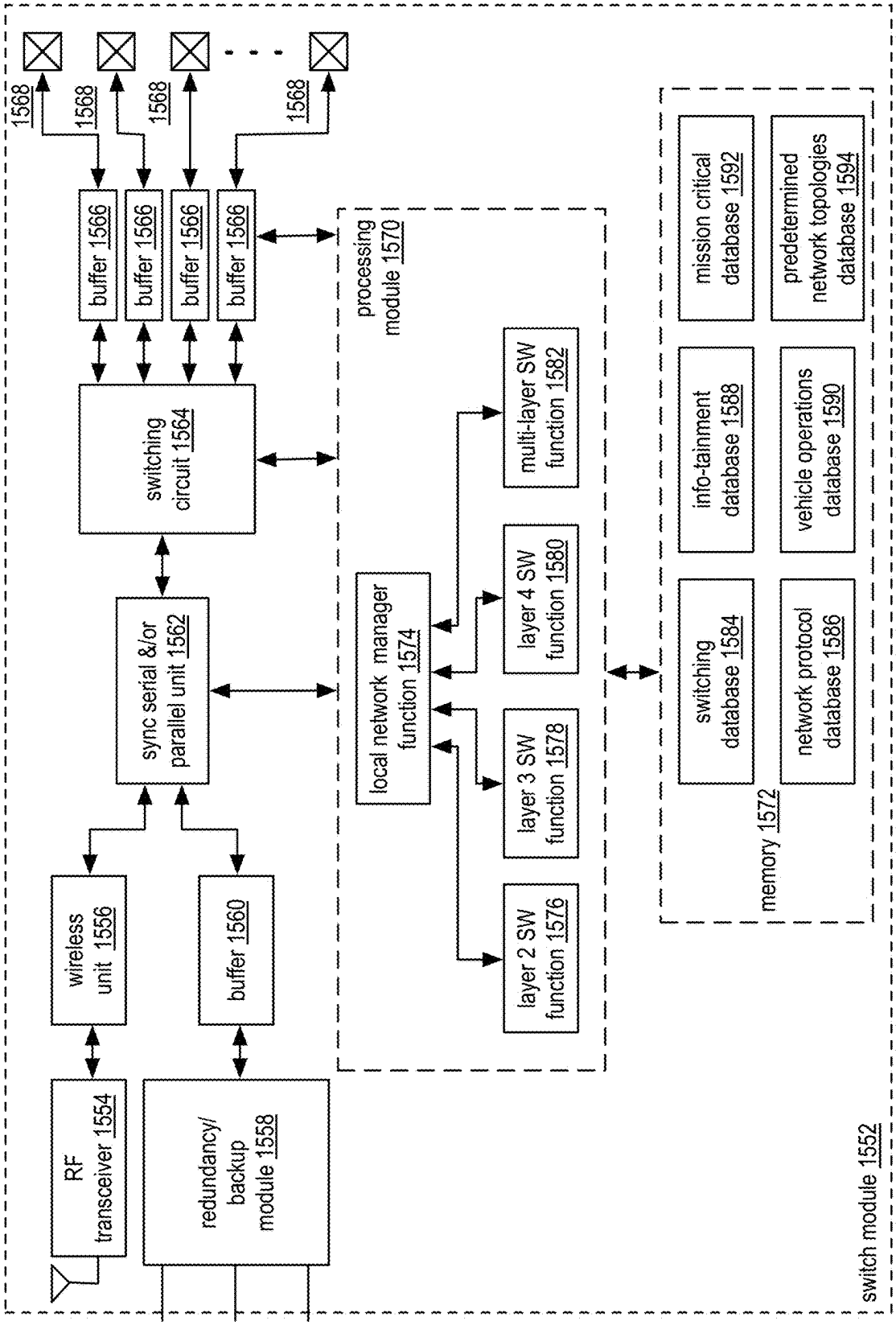
1568
1568
1568
1568
buffer 1566
buffer 1566
buffer 1566
buffer 1566
switching circuit 1564
sync serial &/or parallel unit 1562
wireless unit 1556
buffer 1560
RF transceiver 1554
redundancy/ backup module 1558
processing module 1570
local network manager function 1574
layer 2 SW function 1576
layer 3 SW function 1578
layer 4 SW function 1580
multi-layer SW function 1582
memory 1572
switching database 1584
network protocol database 1586
info-tainment database 1588
vehicle operations database 1590
mission critical database 1592
predetermined network topologies database 1594
switch module 1552

FIG. 93

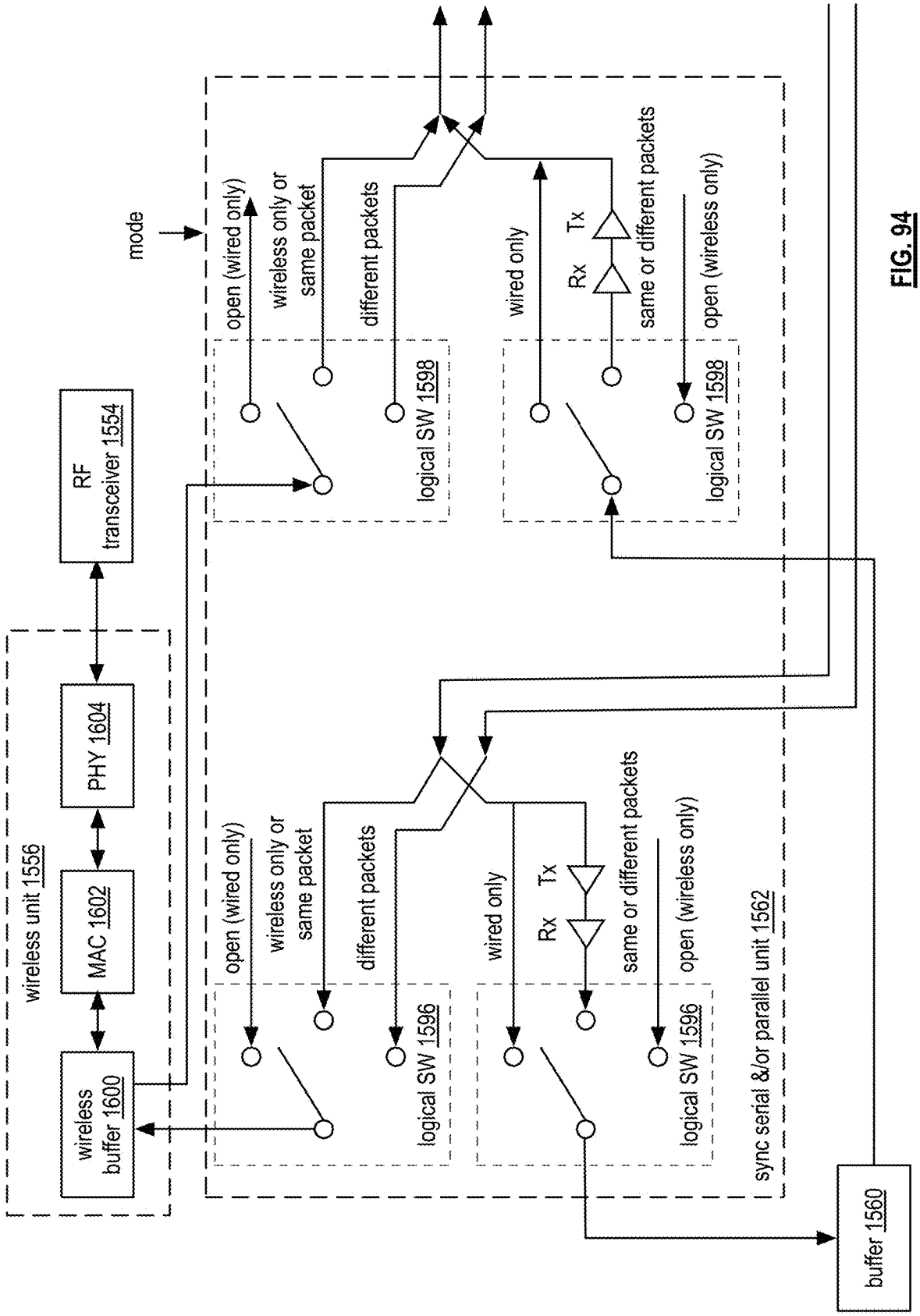
wireless unit 1556
wireless buffer 1600
MAC 1602
PHY 1604
RF transceiver 1554
mode
open (wired only)
wireless only or same packet
different packets
logical SW 1598
wired only
Rx
Tx
same or different packets
open (wireless only)
logical SW 1598
open (wired only)
wireless only or same packet
different packets
logical SW 1596
wired only
Rx
Tx
same or different packets
open (wireless only)
logical SW 1596
sync serial &/or parallel unit 1562
buffer 1560

FIG. 94

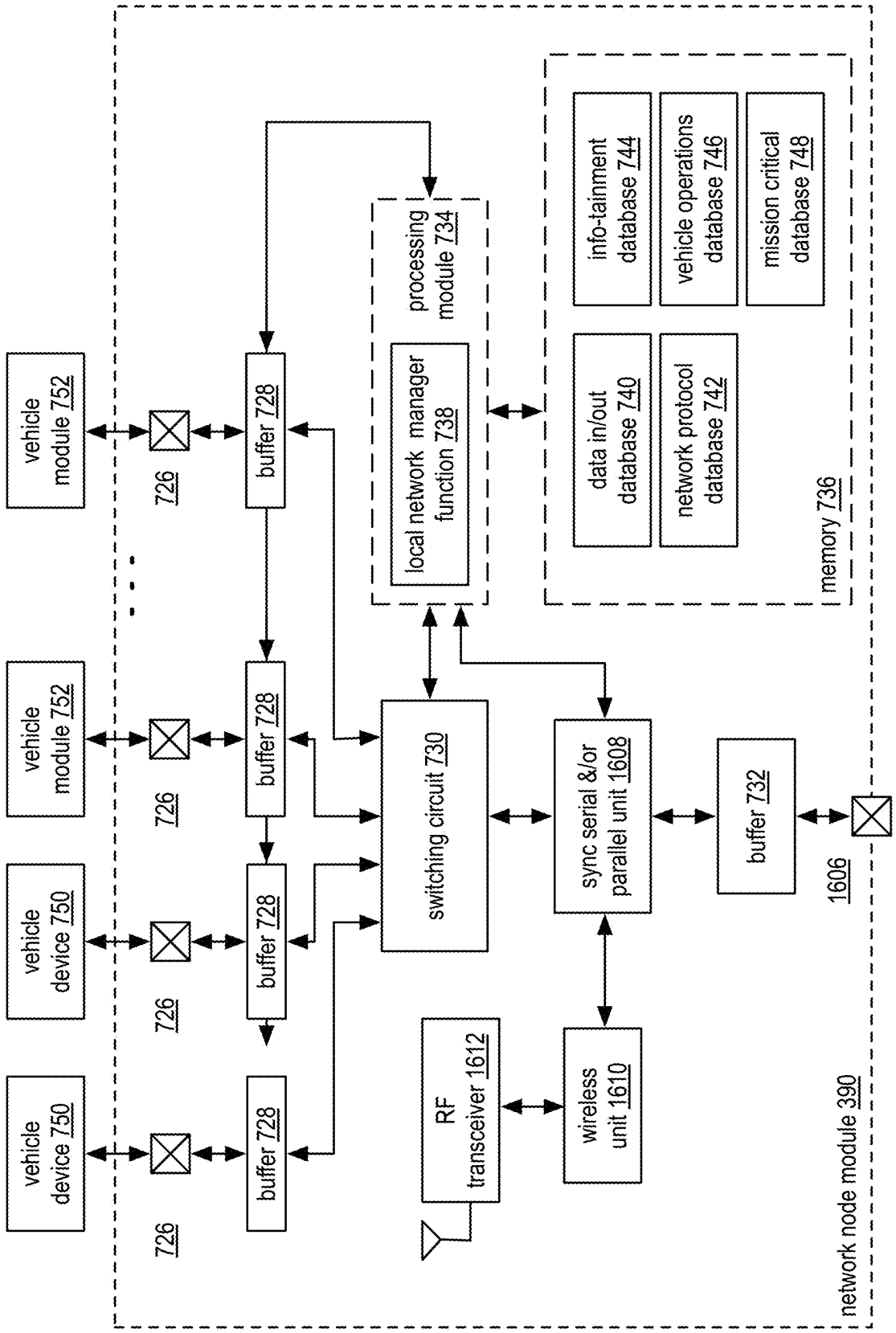
vehicle module 752
vehicle module 752
vehicle device 750
vehicle device 750
726
726
726
726
buffer 728
buffer 728
buffer 728
buffer 728
processing module 734
local network manager function 738
switching circuit 730
sync serial &/or parallel unit 1608
buffer 732
1606
RF transceiver 1612
wireless unit 1610
info-tainment database 744
vehicle operations database 746
mission critical database 748
data in/out database 740
network protocol database 742
memory 736
network node module 390

FIG. 95

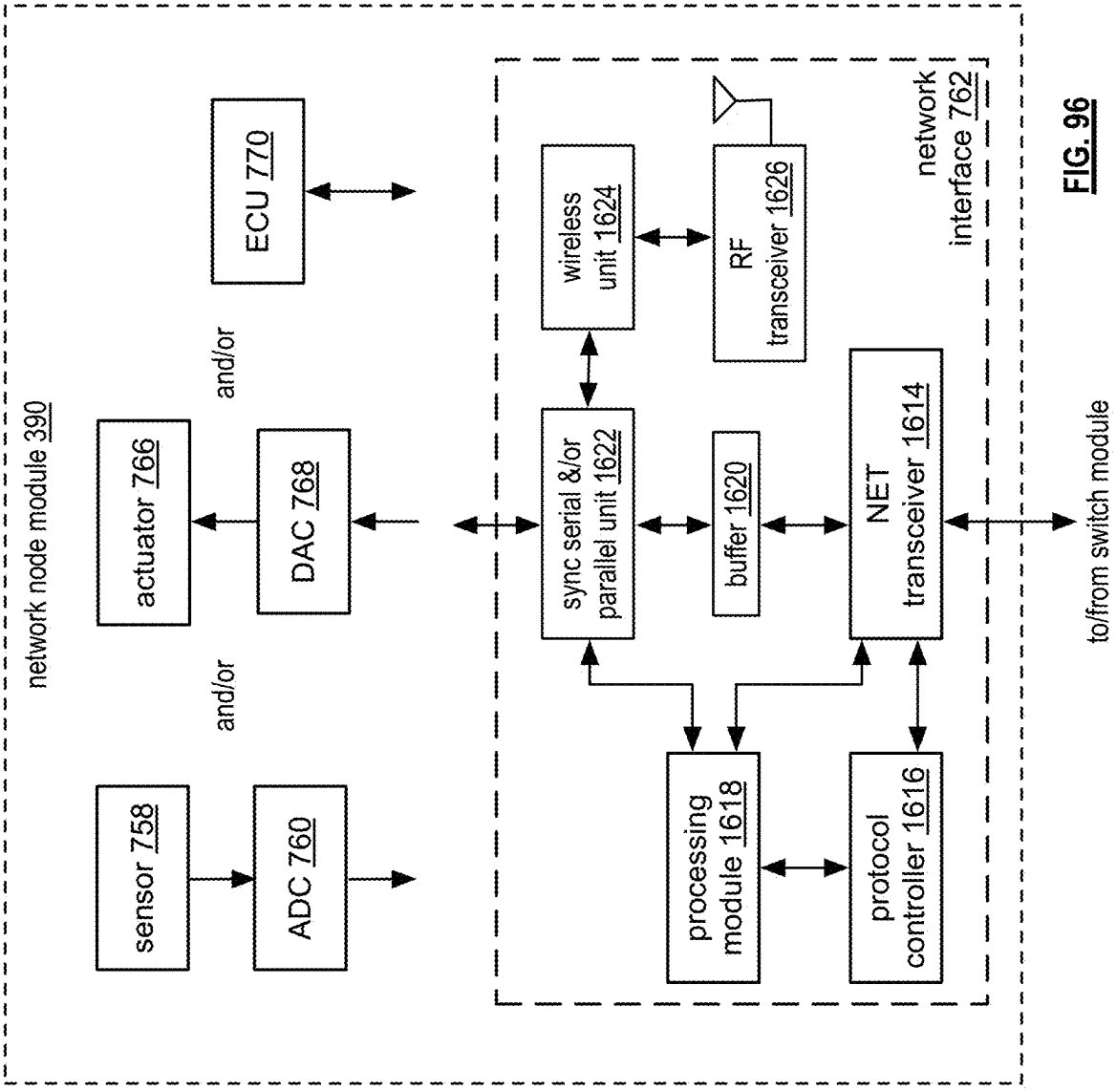
network node module 390
sensor 758
ADC 760
and/or
actuator 766
DAC 768
and/or
ECU 770
processing module 1618
protocol controller 1616
sync serial &/or parallel unit 1622
buffer 1620
NET transceiver 1614
wireless unit 1624
RF transceiver 1626
network interface 762
to/from switch module

FIG. 96

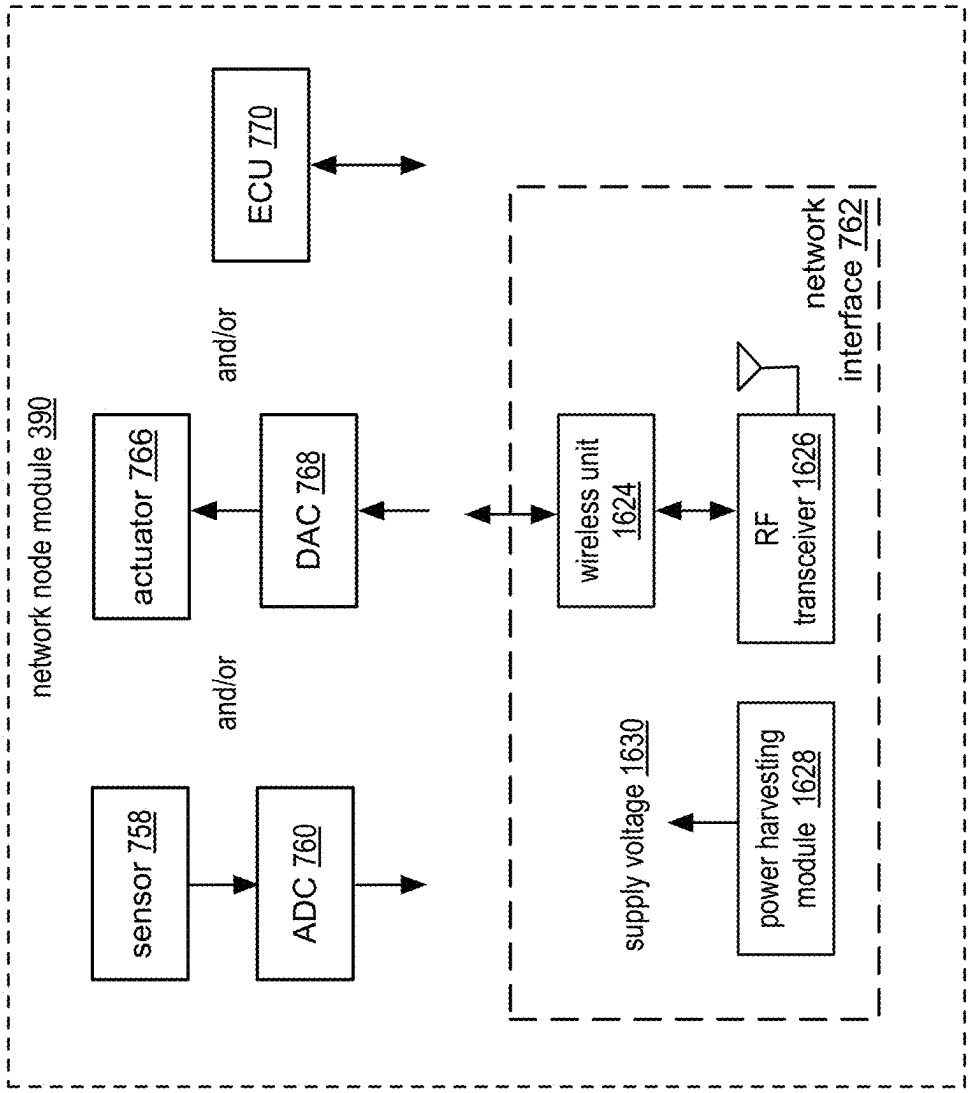
network node module 390
sensor 758
ADC 760
and/or
actuator 766
DAC 768
and/or
ECU 770
supply voltage 1630
power harvesting module 1628
wireless unit 1624
RF transceiver 1626
network interface 762

FIG. 97

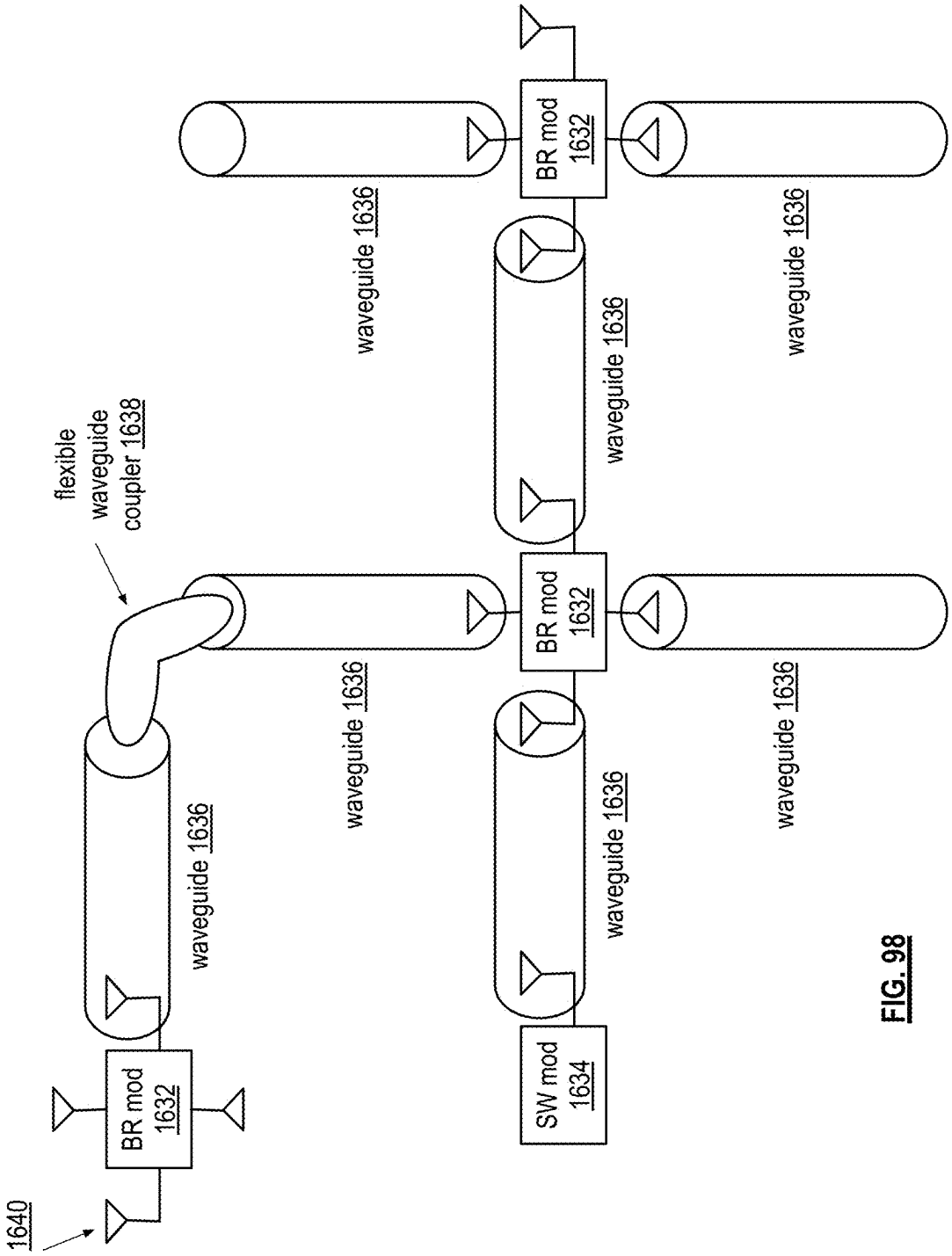
1640
BR mod 1632
waveguide 1636
flexible waveguide coupler 1638
waveguide 1636
BR mod 1632
waveguide 1636
waveguide 1636
waveguide 1636
SW mod 1634
waveguide 1636
BR mod 1632
waveguide 1636
waveguide 1636

FIG. 98

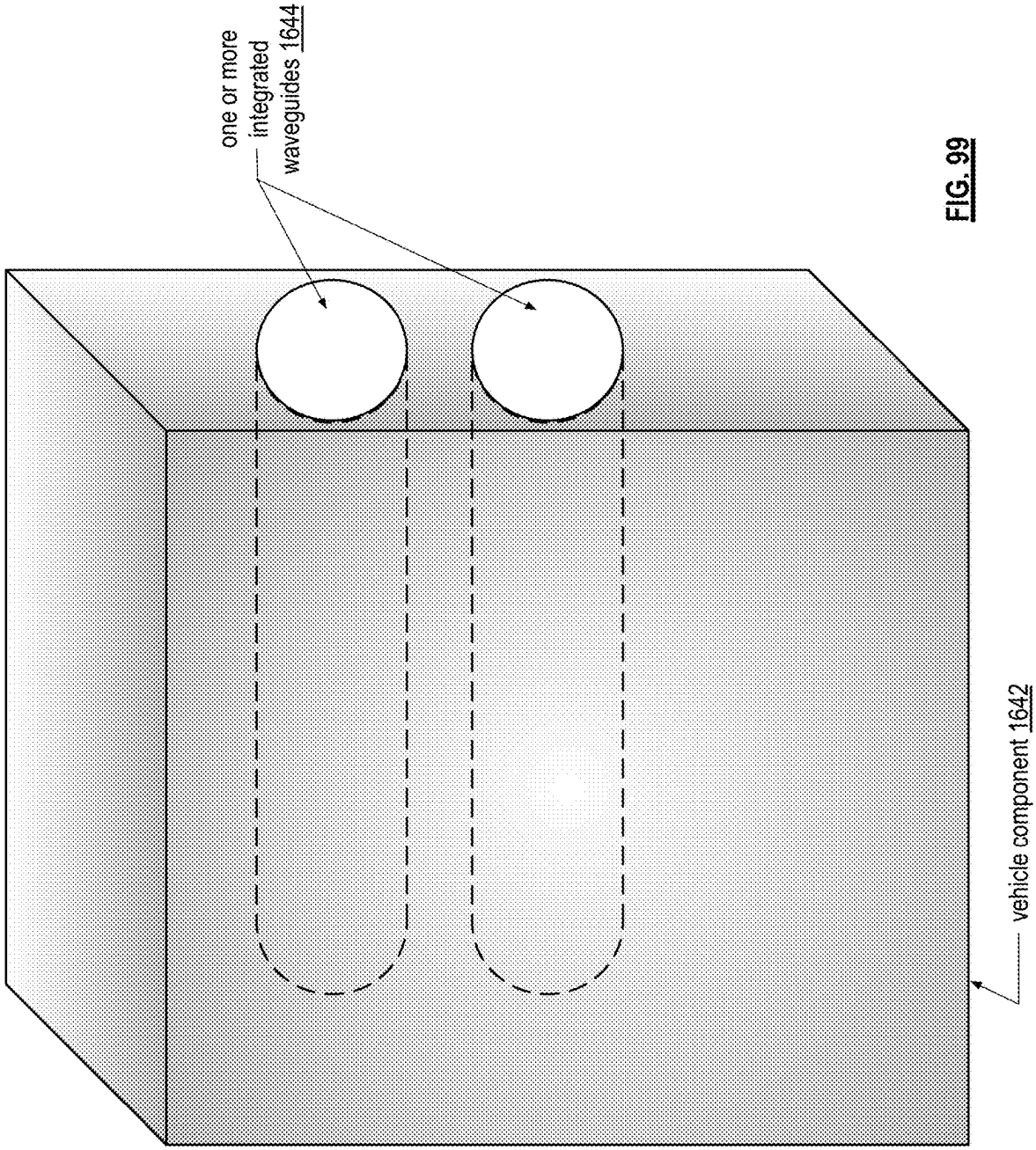
one or more integrated waveguides 1644
vehicle component 1642

FIG. 99

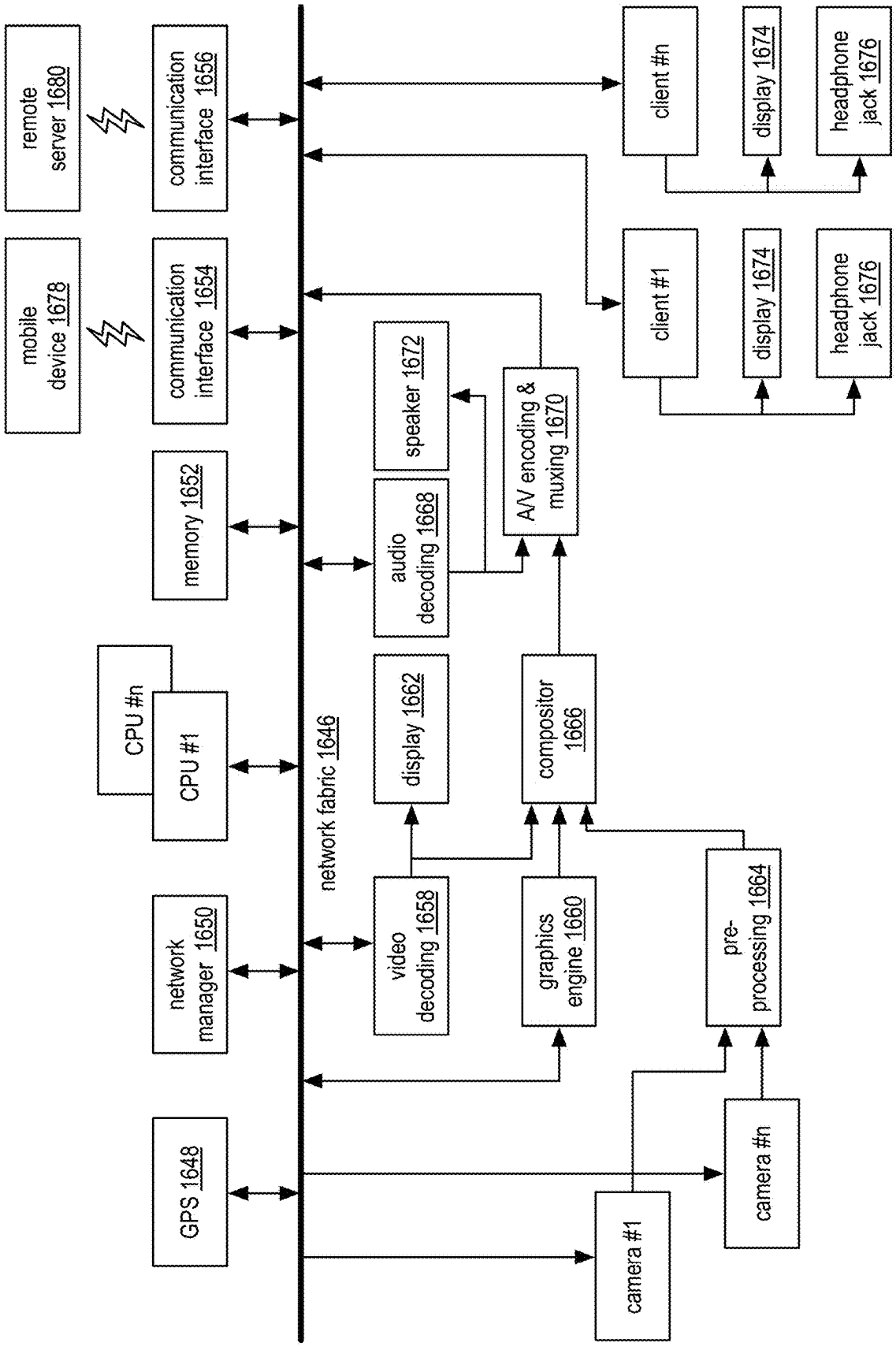
remote server 1680
mobile device 1678
communication interface 1656
communication interface 1654
memory 1652
CPU #n
CPU #1
network manager 1650
GPS 1648
network fabric 1646
speaker 1672
audio decoding 1668
A/V encoding & muxing 1670
display 1662
compositor 1666
video decoding 1658
graphics engine 1660
pre-processing 1664
camera #1
camera #n
client #n
client #1
display 1674
display 1674
headphone jack 1676
headphone jack 1676

FIG. 100

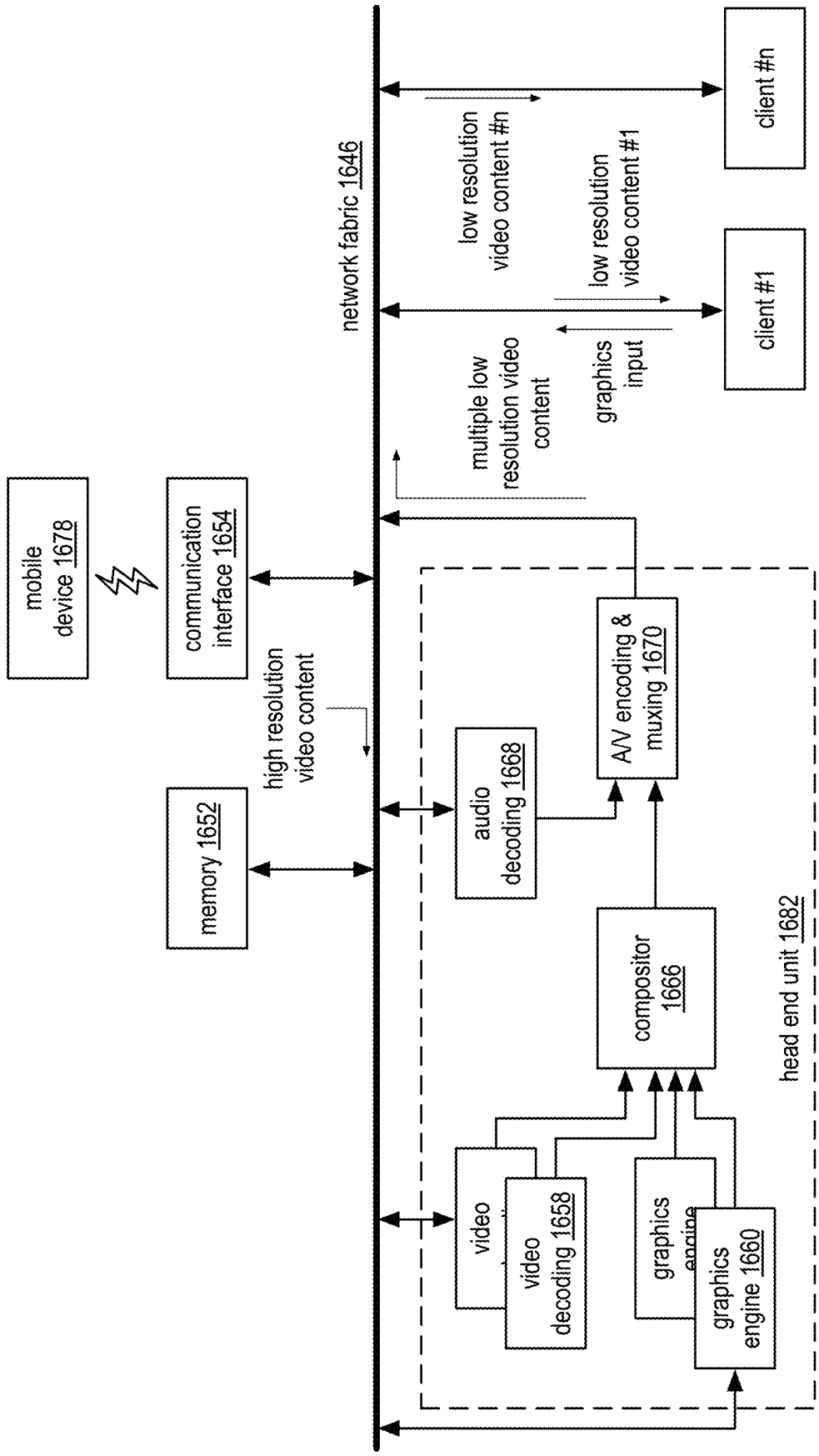
mobile device 1678
communication interface 1654
memory 1652
high resolution video content
network fabric 1646
multiple low resolution video content
graphics input
low resolution video content #1
low resolution video content #n
client #1
client #n
audio decoding 1668
A/V encoding & muxing 1670
compositor 1666
video
video decoding 1658
graphics engine 1660
head end unit 1682

FIG. 101

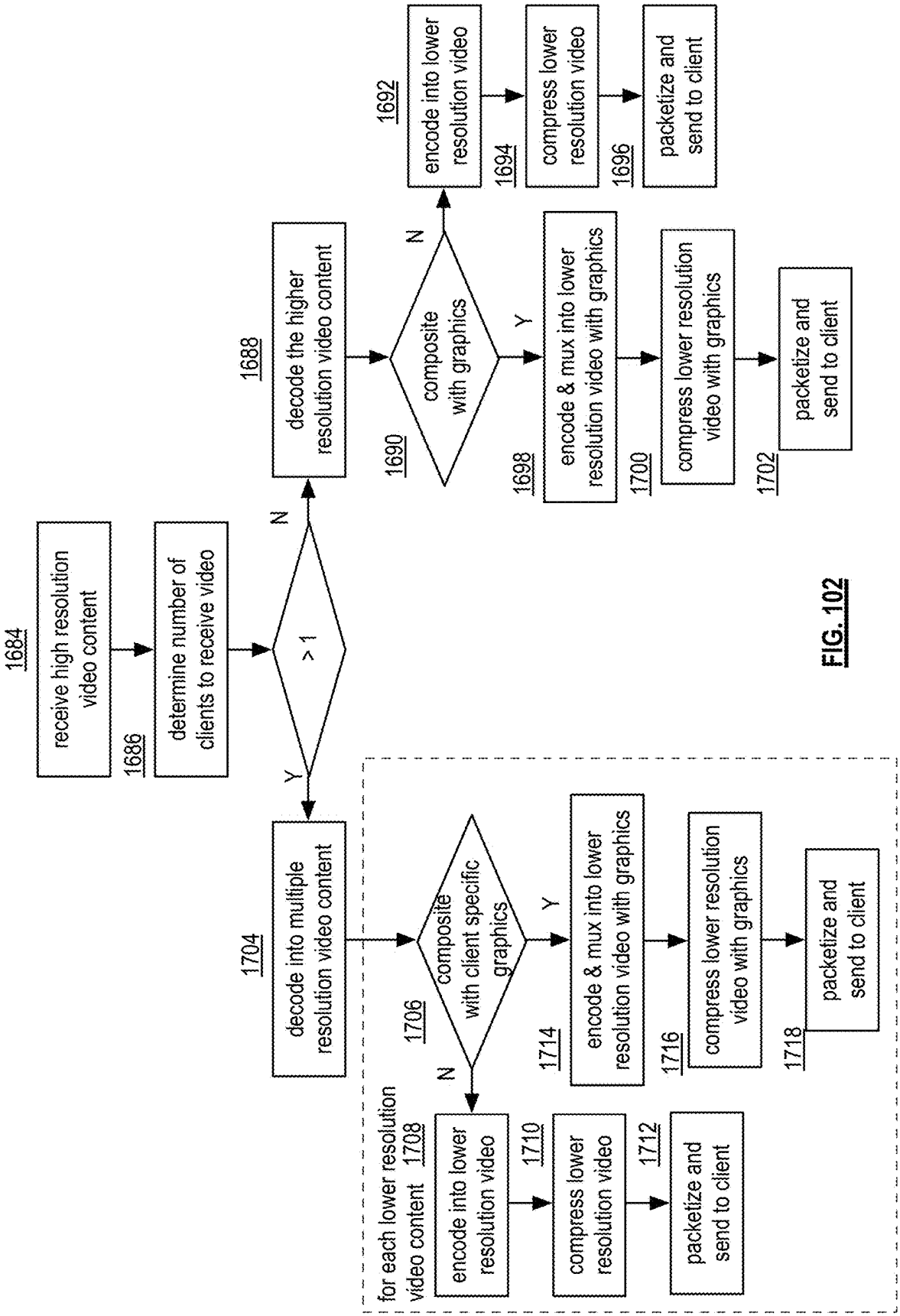
1684
receive high resolution video content
1686
determine number of clients to receive video
> 1
Y
N
1688
decode the higher resolution video content
1690
composite with graphics
N
Y
1692
encode into lower resolution video
1694
compress lower resolution video
1696
packetize and send to client
1698
encode & mux into lower resolution video with graphics
1700
compress lower resolution video with graphics
1702
packetize and send to client
1704
decode into multiple resolution video content
1706
composite with client specific graphics
N
Y
for each lower resolution video content 1708
encode into lower resolution video
1710
compress lower resolution video
1712
packetize and send to client
1714
encode & mux into lower resolution video with graphics
1716
compress lower resolution video with graphics
1718
packetize and send to client

FIG. 102

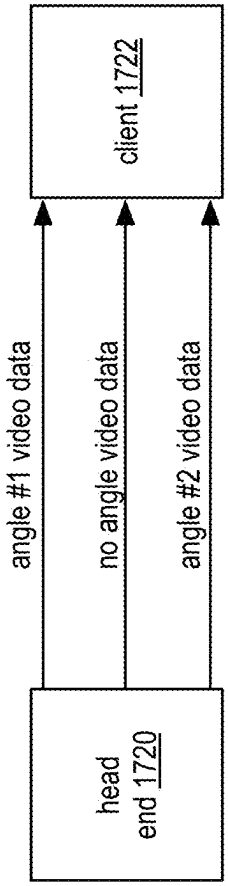

FIG. 103

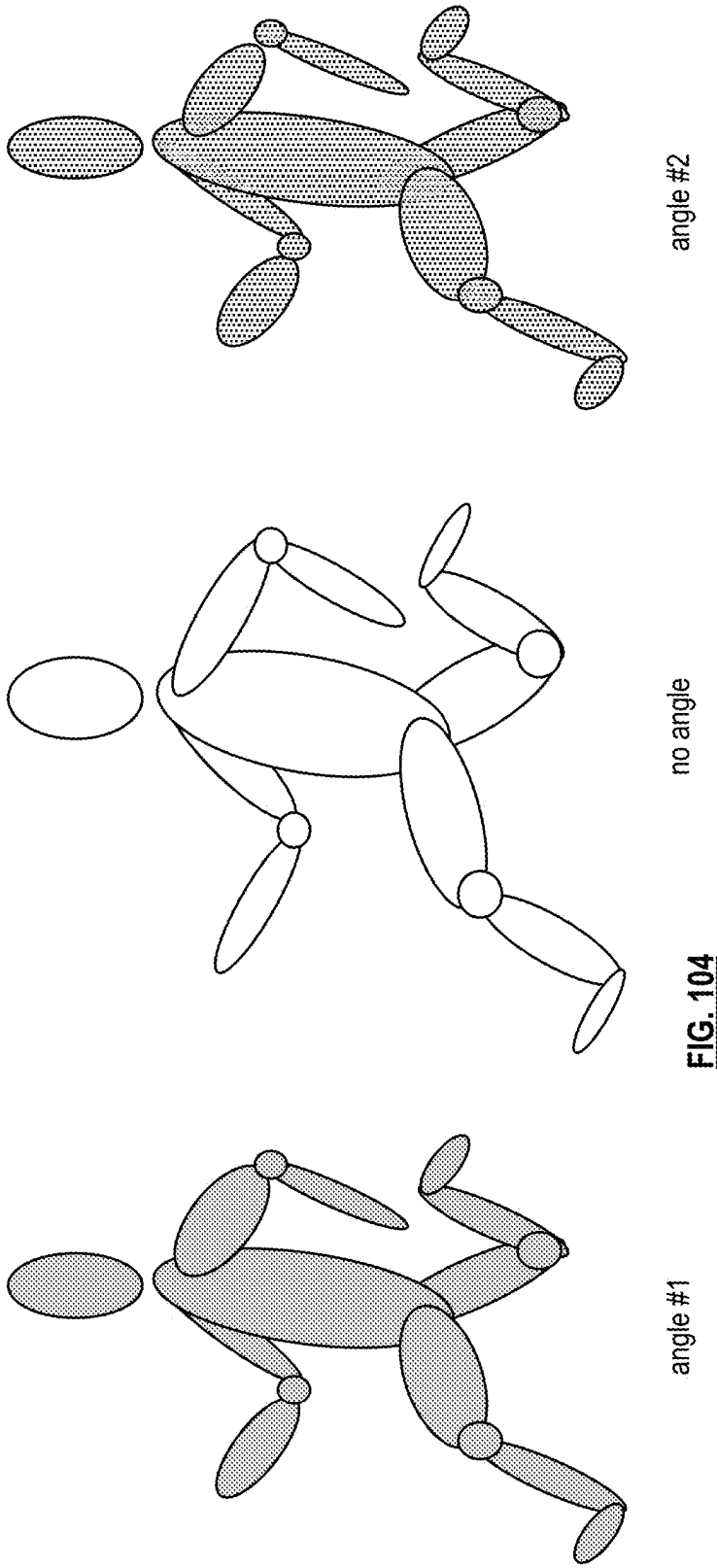

FIG. 104

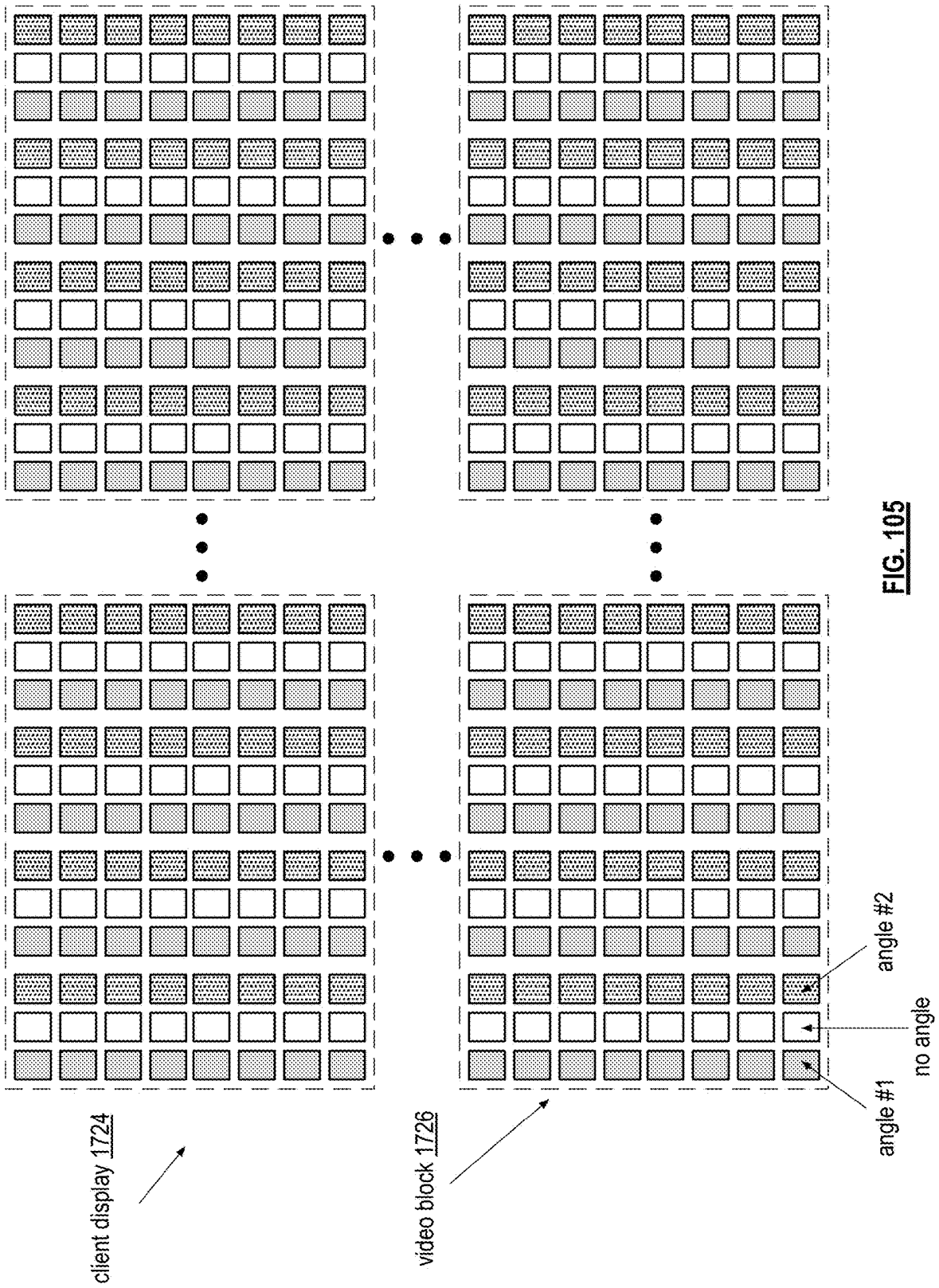
client display 1724
video block 1726
angle #1
no angle
angle #2

FIG. 105

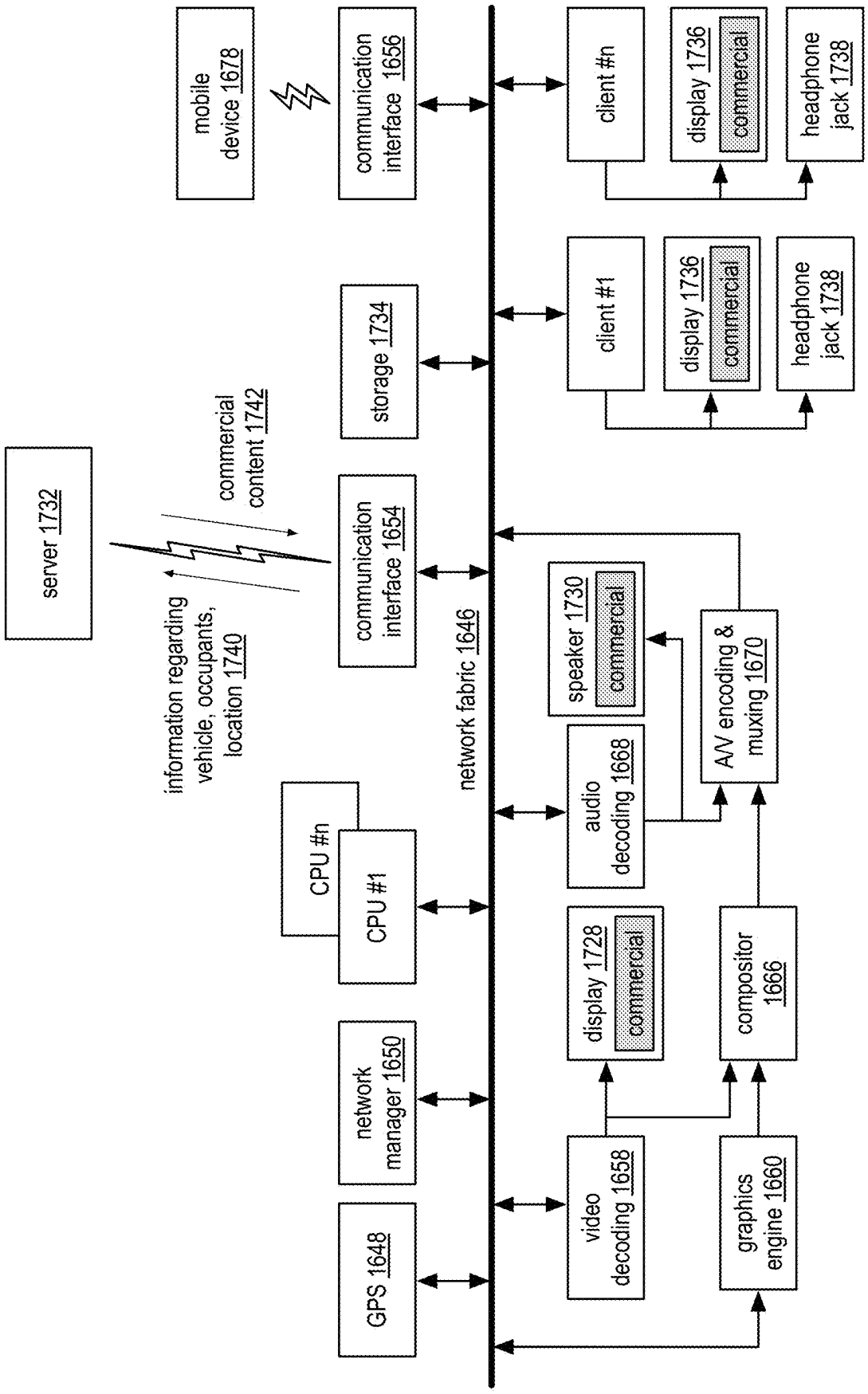
server 1732
information regarding vehicle, occupants, location 1740
commercial content 1742
mobile device 1678
communication interface 1654
communication interface 1656
storage 1734
network fabric 1646
GPS 1648
network manager 1650
CPU #1
CPU #n
video decoding 1658
display 1728
commercial
audio decoding 1668
speaker 1730
commercial
graphics engine 1660
compositor 1666
A/V encoding & muxing 1670
client #1
display 1736
commercial
headphone jack 1738
client #n
display 1736
commercial
headphone jack 1738

FIG. 106

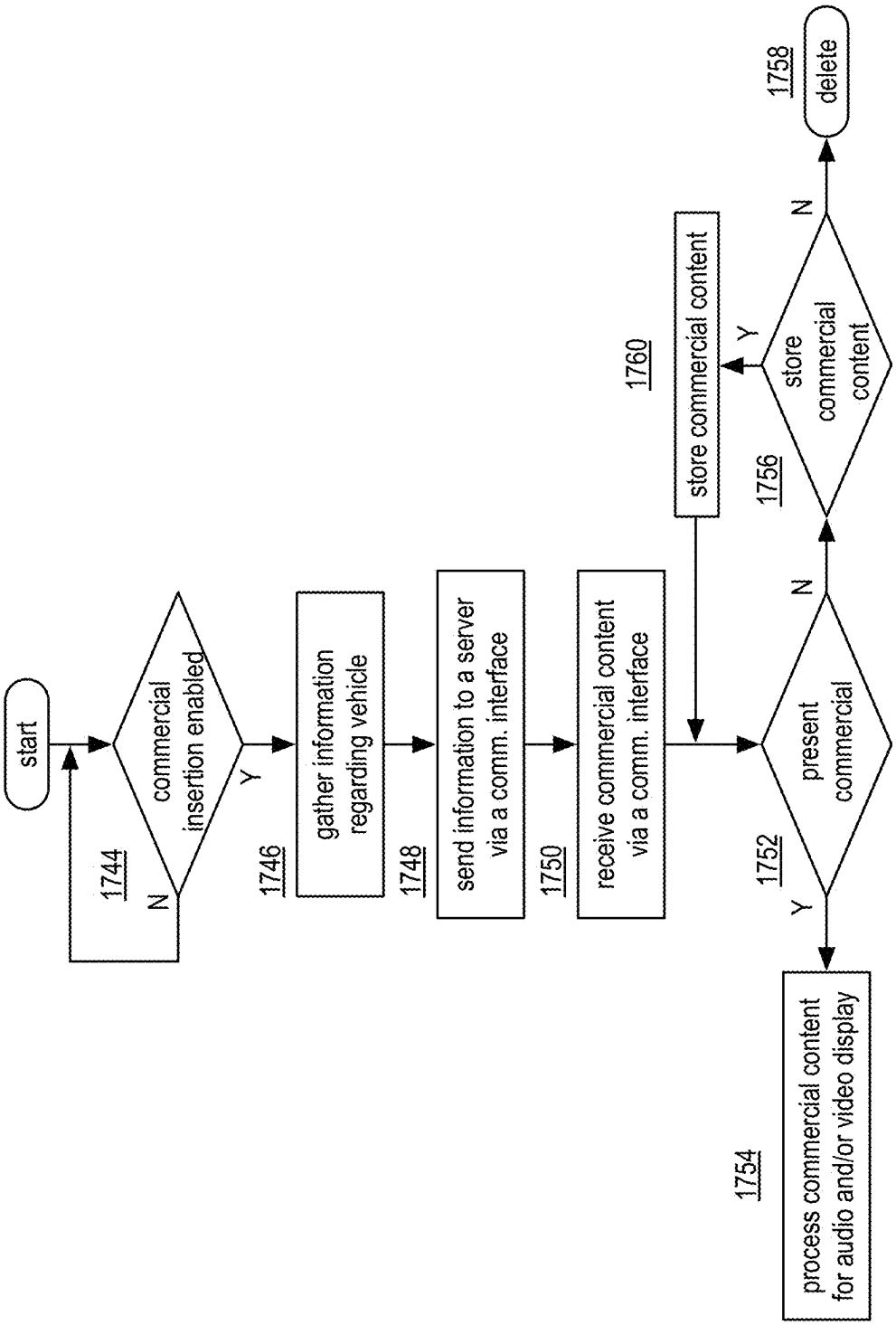
start
commercial insertion enabled
1744
N
Y
1746
gather information regarding vehicle
1748
send information to a server via a comm. interface
1750
receive commercial content via a comm. interface
1752
present commercial
Y
N
1754
process commercial content for audio and/or video display
1756
store commercial content
Y
N
1760
store commercial content
1758
delete

FIG. 107

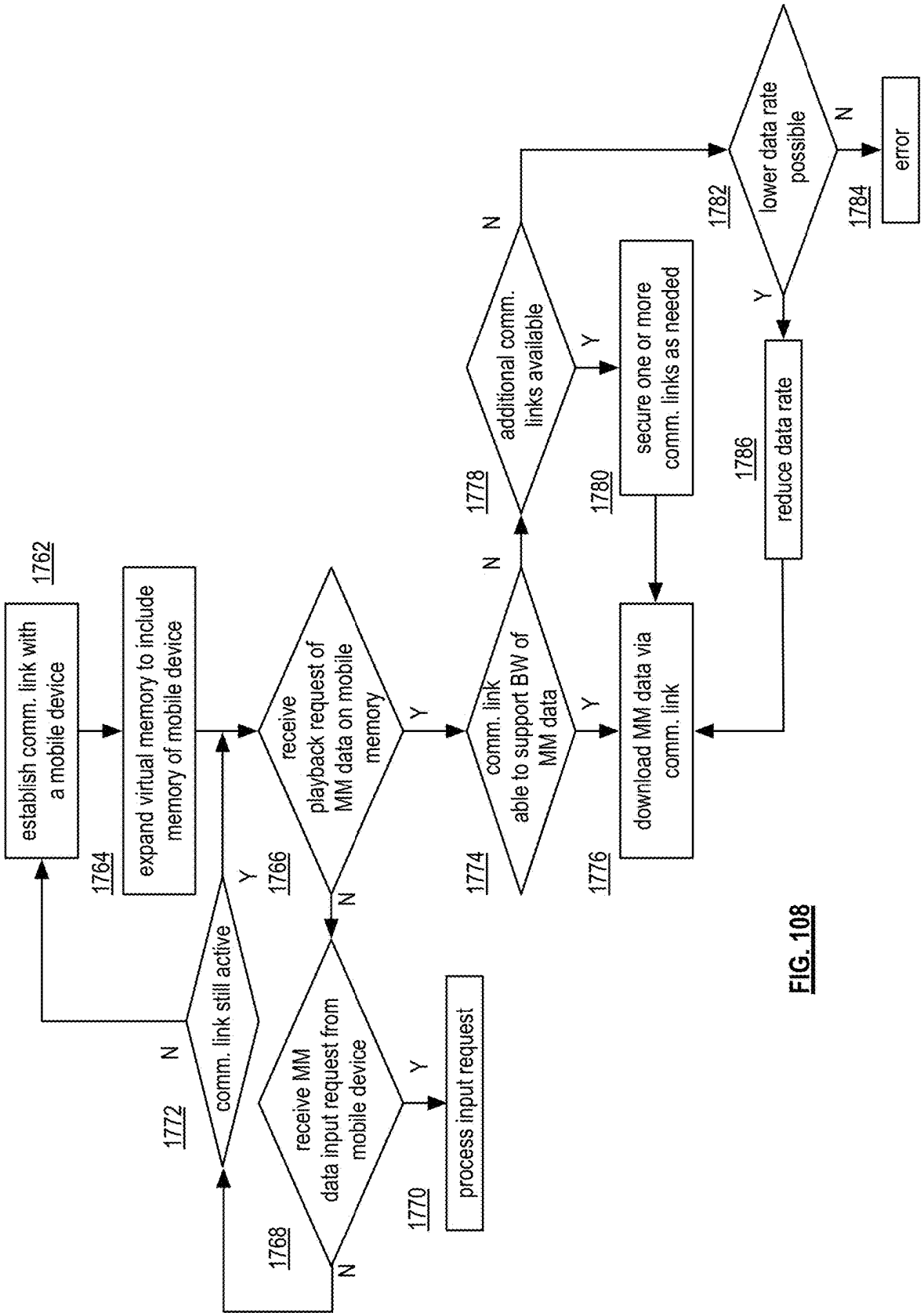
establish comm. link with a mobile device
1762
expand virtual memory to include memory of mobile device
1764
receive playback request of MM data on mobile memory
1766
Y
N
comm. link still active
1772
Y
N
receive MM data input request from mobile device
1768
Y
N
process input request
1770
comm. link able to support BW of MM data
1774
Y
N
additional comm. links available
1778
Y
N
secure one or more comm. links as needed
1780
download MM data via comm. link
1776
lower data rate possible
1782
Y
N
reduce data rate
1786
error
1784

FIG. 108

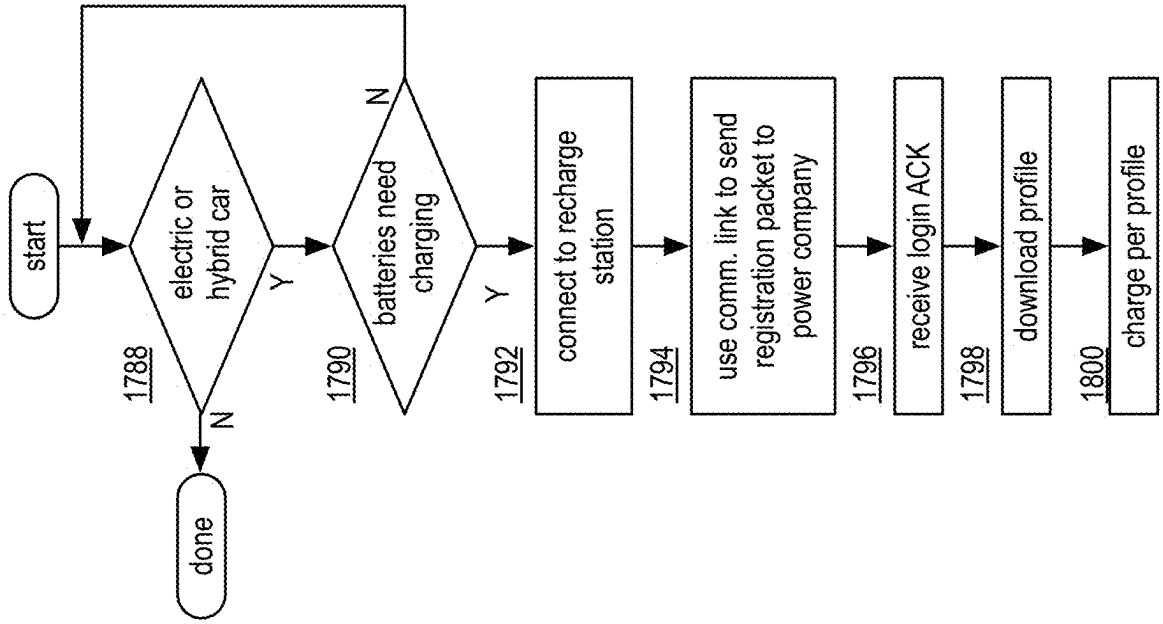
start
1788
electric or hybrid car
N
done
Y
1790
batteries need charging
N
Y
1792
connect to recharge station
1794
use comm. link to send registration packet to power company
1796
receive login ACK
1798
download profile
1800
charge per profile

FIG. 109

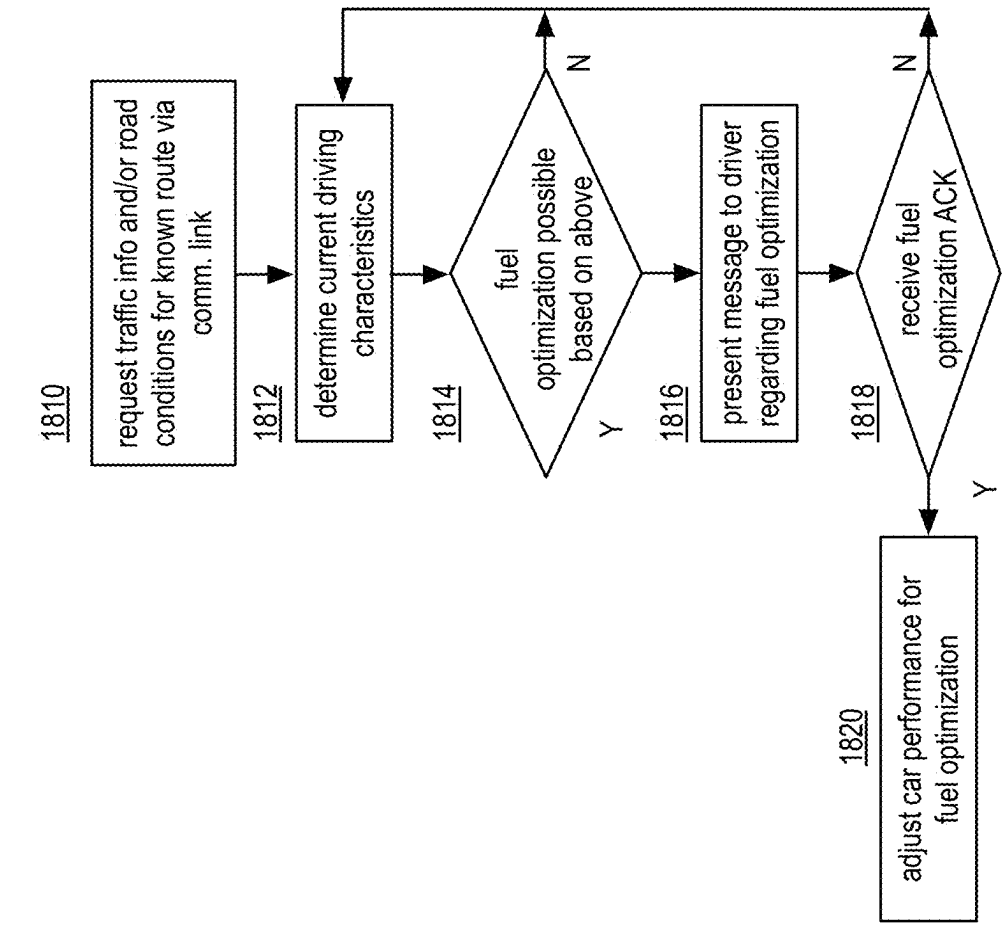

FIG. 111

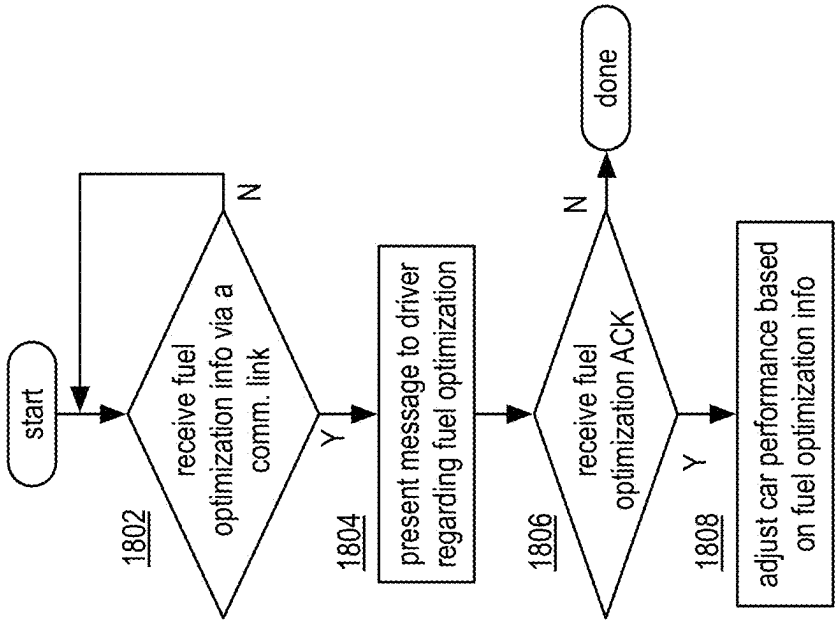

FIG. 110

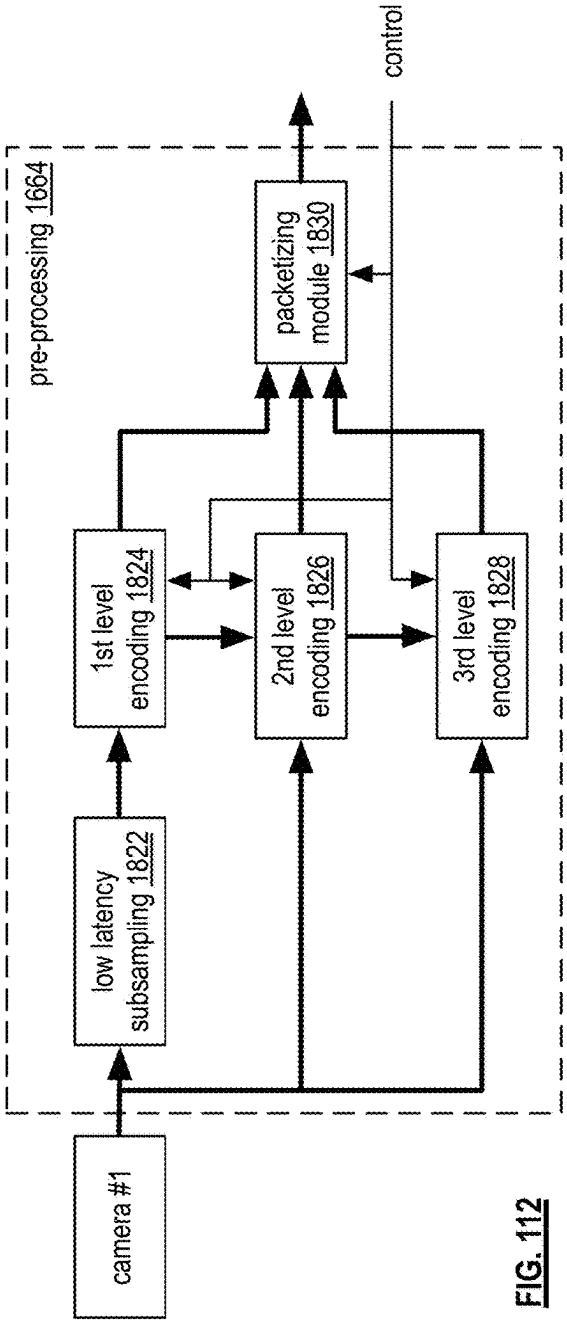

FIG. 112

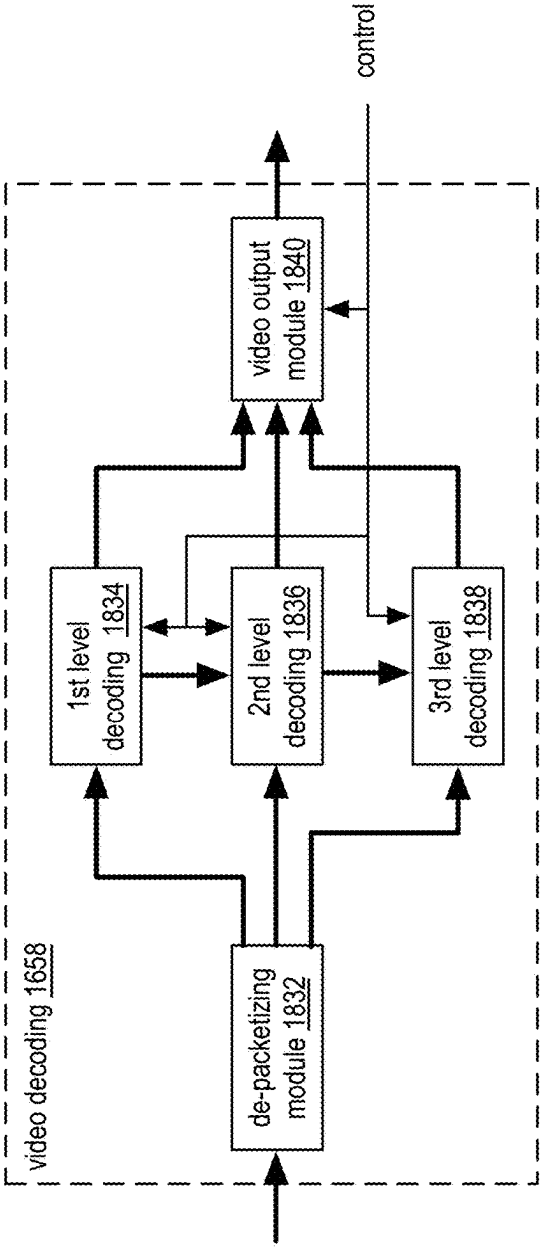

FIG. 113

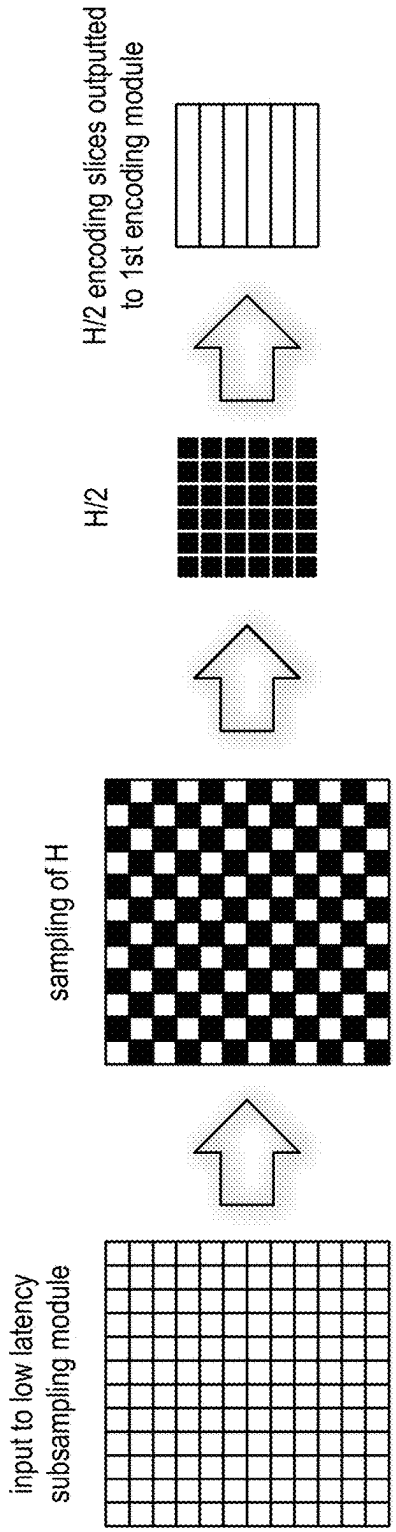

FIG. 114

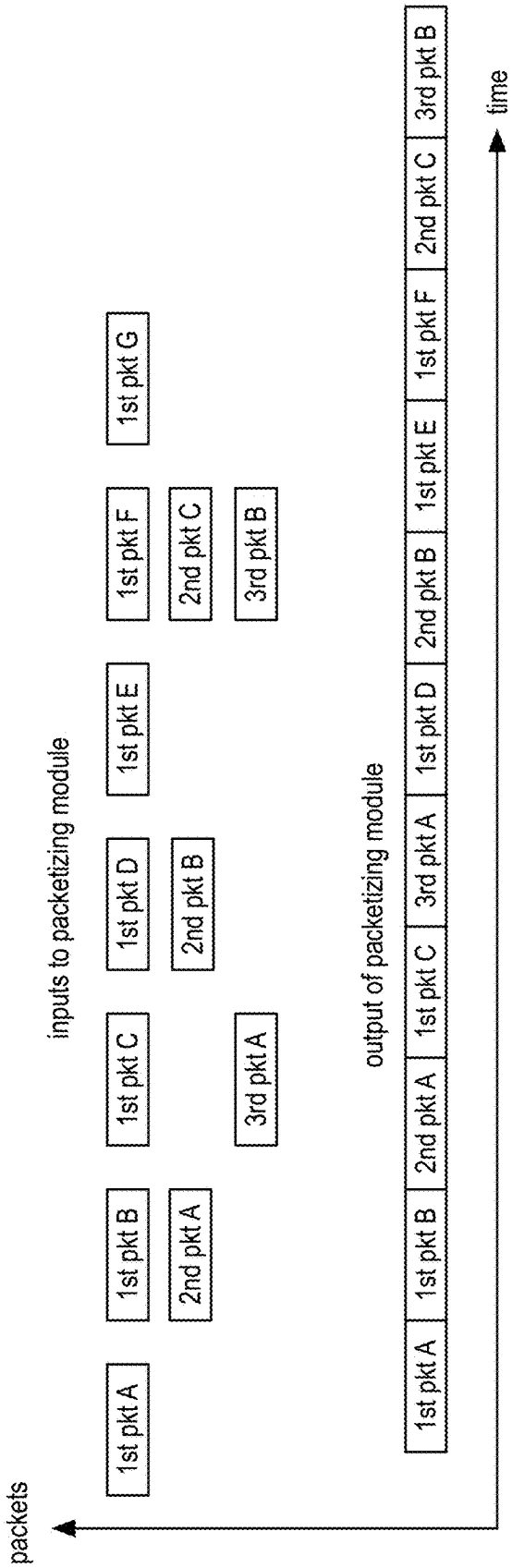

FIG. 115

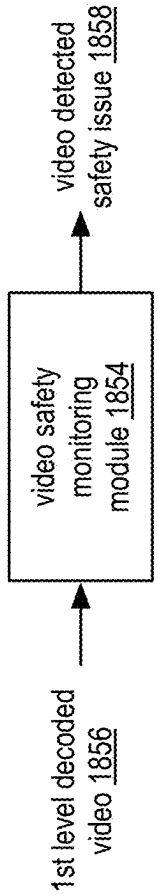

FIG. 117

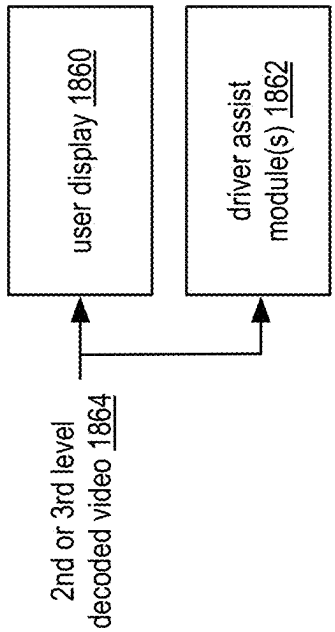

FIG. 118

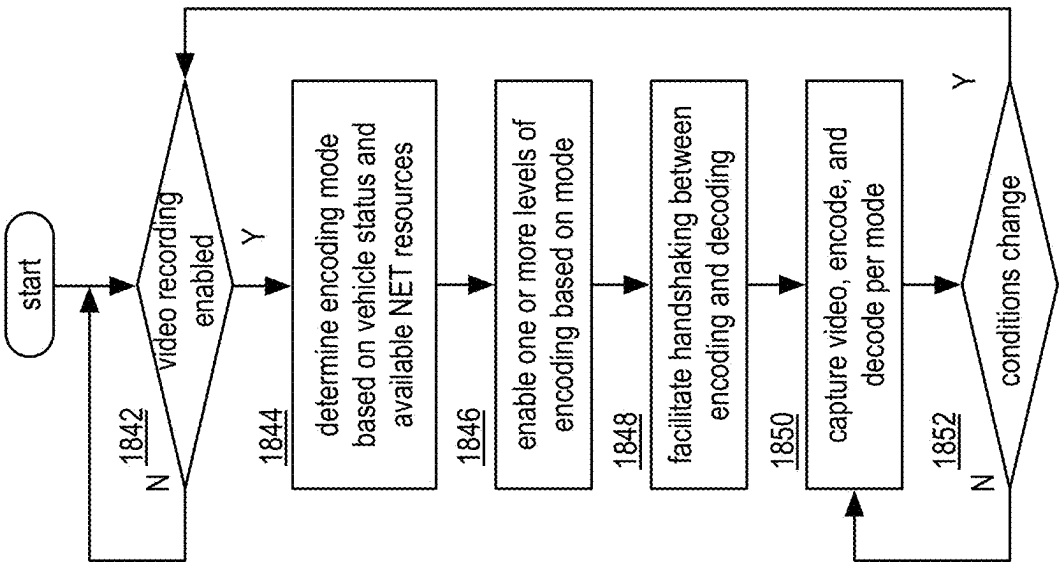

FIG. 116

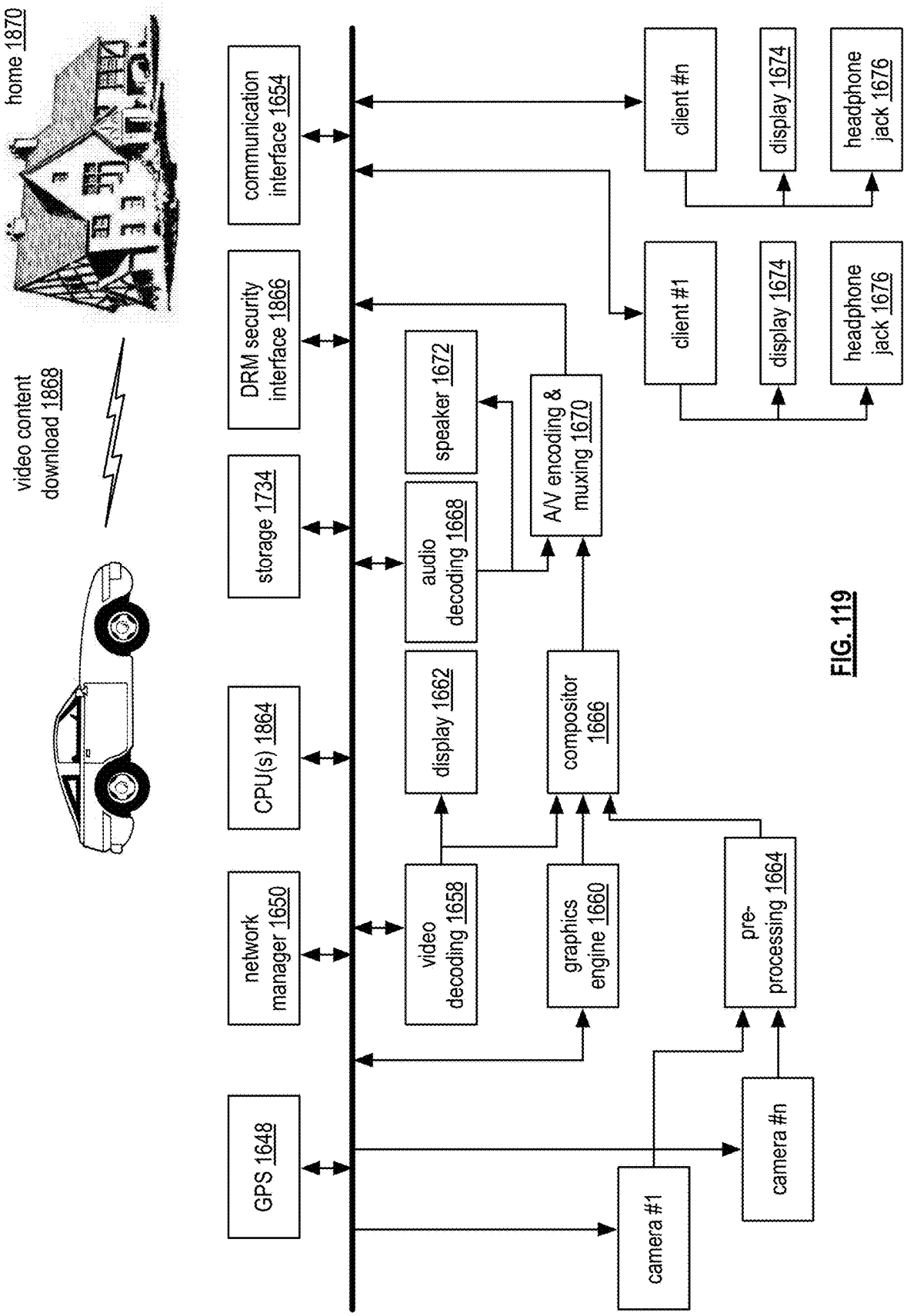
home 1870
video content download 1868
GPS 1648
network manager 1650
CPU(s) 1864
storage 1734
DRM security interface 1866
communication interface 1654
video decoding 1658
display 1662
graphics engine 1660
compositor 1666
audio decoding 1668
speaker 1672
A/V encoding & muxing 1670
pre-processing 1664
camera #1
camera #n
client #1
client #n
display 1674
display 1674
headphone jack 1676
headphone jack 1676

FIG. 119

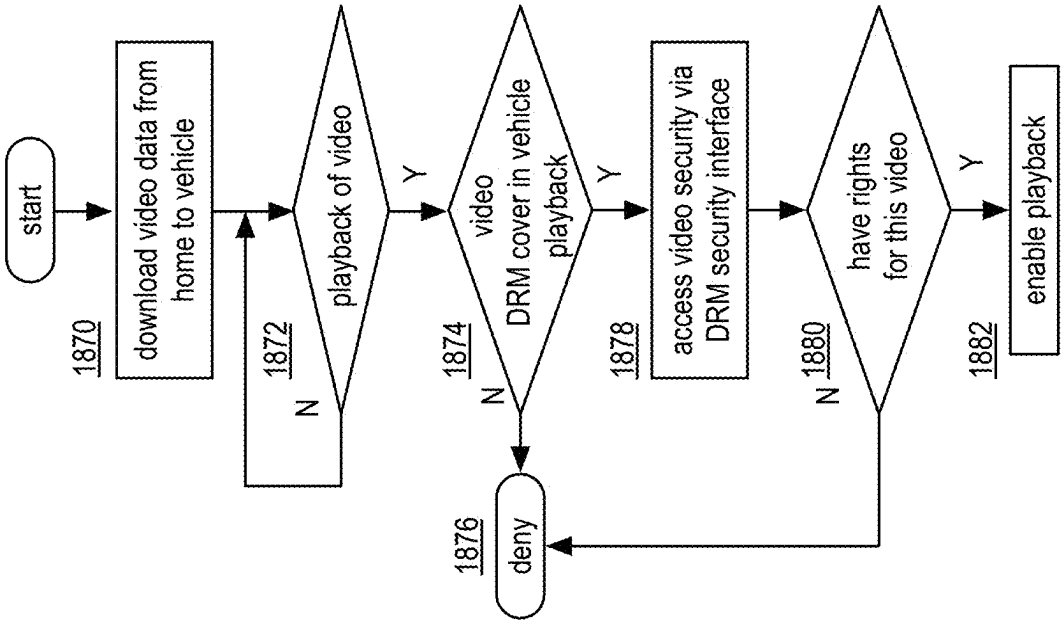
start
1870
download video data from home to vehicle
1872
playback of video
N
Y
1874
video DRM cover in vehicle playback
N
Y
1876
deny
1878
access video security via DRM security interface
1880
have rights for this video
N
Y
1882
enable playback

FIG. 120

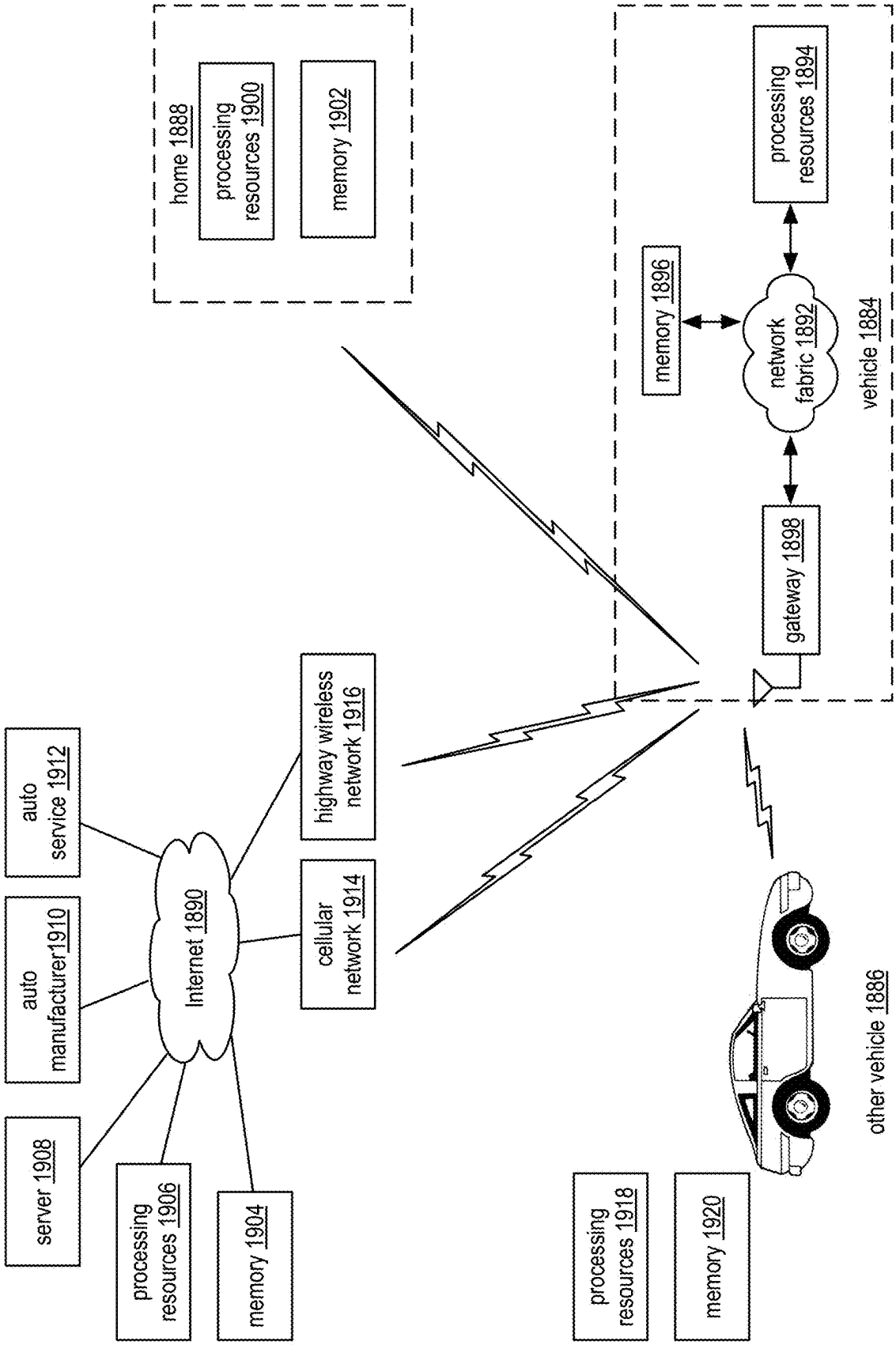
home 1888
processing resources 1900
memory 1902
processing resources 1894
memory 1896
network fabric 1892
vehicle 1884
gateway 1898
highway wireless network 1916
cellular network 1914
auto service 1912
auto manufacturer1910
Internet 1890
server 1908
processing resources 1906
memory 1904
processing resources 1918
memory 1920
other vehicle 1886

FIG. 121

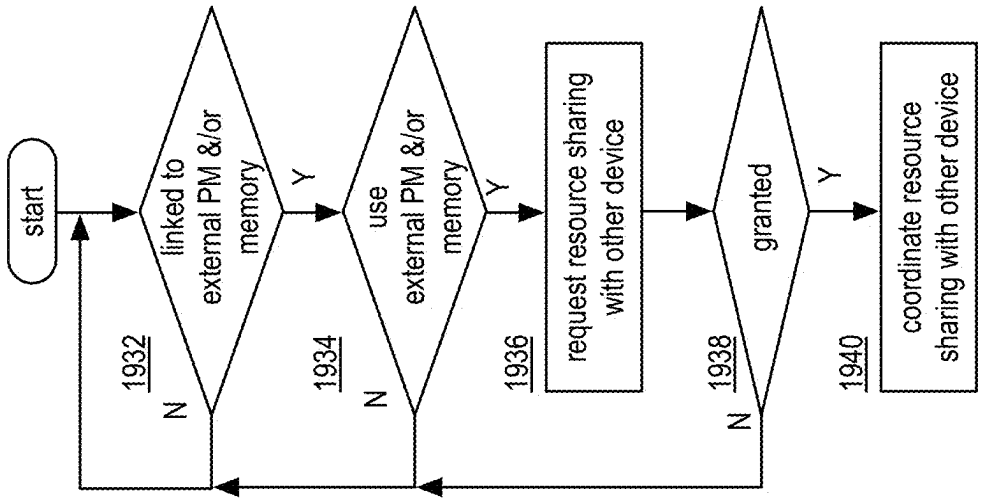

FIG. 123

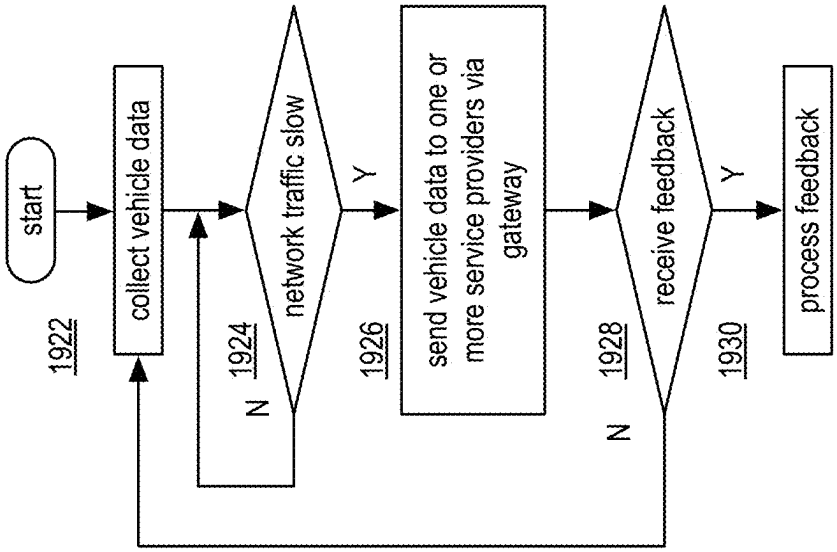

FIG. 122

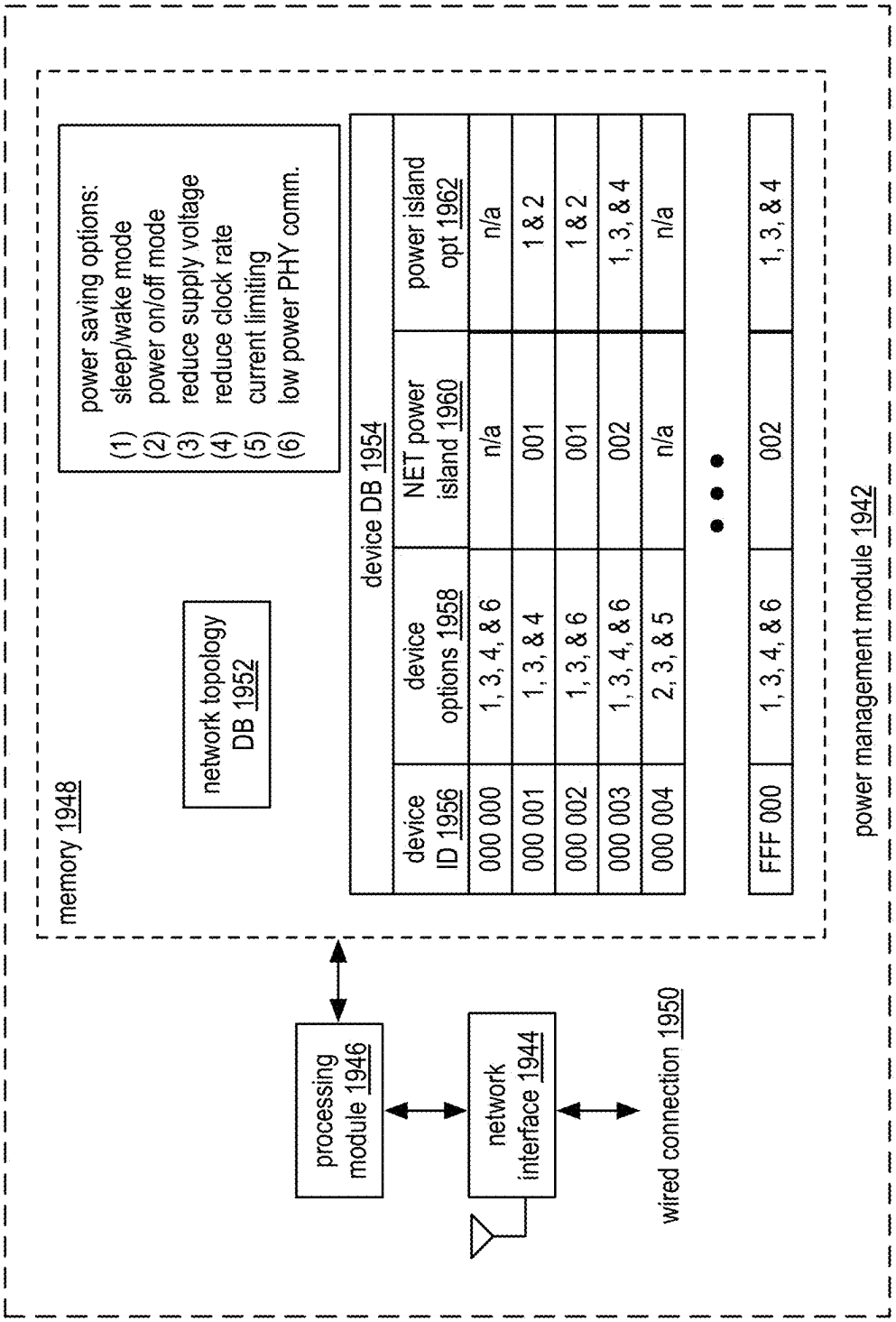
memory 1948
network topology DB 1952
power saving options:
(1) sleep/wake mode
(2) power on/off mode
(3) reduce supply voltage
(4) reduce clock rate
(5) current limiting
(6) low power PHY comm.
device DB 1954
device ID 1956
device options 1958
NET power island 1960
power island opt 1962
000 000
1, 3, 4, & 6
n/a
n/a
000 001
1, 3, & 4
001
1 & 2
000 002
1, 3, & 6
001
1 & 2
000 003
1, 3, 4, & 6
002
1, 3, & 4
000 004
2, 3, & 5
n/a
n/a
FFF 000
1, 3, 4, & 6
002
1, 3, & 4
processing module 1946
network interface 1944
wired connection 1950
power management module 1942

FIG. 124

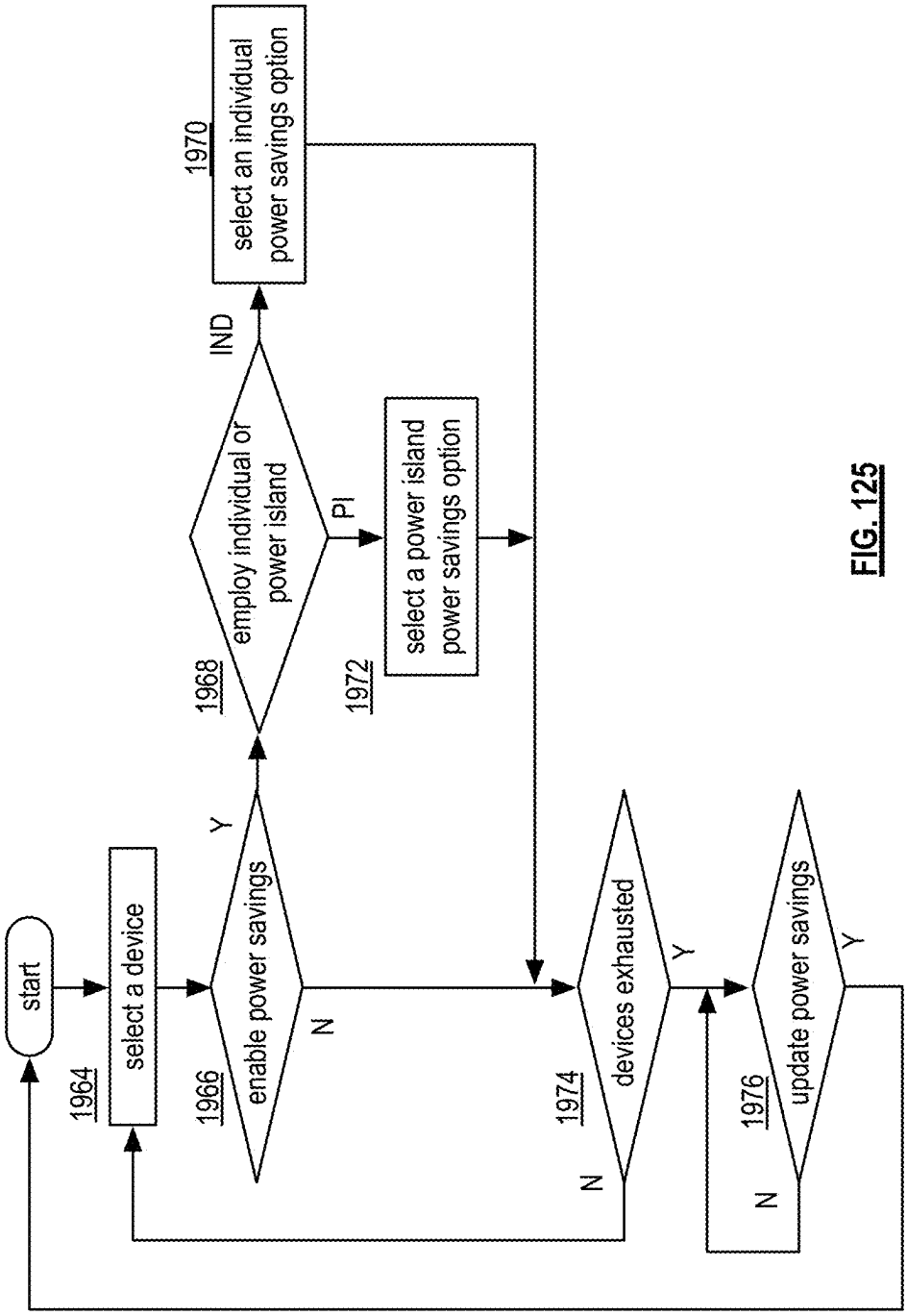
start
1964
select a device
1966
enable power savings
Y
N
1968
employ individual or power island
IND
PI
1970
select an individual power savings option
1972
select a power island power savings option
1974
devices exhausted
Y
N
1976
update power savings
Y
N

FIG. 125

MULTI-LEVEL VIDEO PROCESSING WITHIN A VEHICULAR COMMUNICATION NETWORK

CROSS-REFERENCE TO RELATED PATENTS/PATENT APPLICATIONS

[0001] The present U.S. Utility patent application claims the benefit of and priority pursuant to 35 U.S.C. § 120 as a continuation of U.S. Utility application Ser. No. 18/627,084, entitled "Multi-level video processing within a vehicular communication network," filed Apr. 4, 2024, which claims the benefit of and priority pursuant to 35 U.S.C. § 120 as a continuation of U.S. Utility application Ser. No. 17/948,461, entitled "Multi-level video processing within a vehicular communication network," filed Sep. 20, 2022, which claims priority pursuant to 35 U.S.C. § 120 as a continuation of U.S. Utility application Ser. No. 16/950,842, entitled "Multi-level video processing within a vehicular communication network," filed Nov. 17, 2020, which claims priority pursuant to 35 U.S.C. § 120 as a continuation of Ser. No. 16/580,546, entitled "Multi-level video processing within a vehicular communication network," filed Sep. 24, 2019, which claims priority pursuant to 35 U.S.C. § 120 as a continuation of U.S. Utility application Ser. No. 14/832,837, entitled "Multi-level video processing within a vehicular communication network," filed Aug. 21, 2015, which claims priority pursuant to 35 U.S.C. § 120 as a continuation of U.S. Utility application Ser. No. 13/171,629, entitled "Multi-level video processing within a vehicular communication network," filed Jun. 29, 2011, which claims priority pursuant to 35 U.S.C. § 119(e) to U.S. Provisional Application No. 61/409,904, entitled "Vehicle Communication Network," filed Nov. 3, 2010, all of which are hereby incorporated herein by reference in their entirety and made part of the present U.S. Utility patent application for all purposes.

TECHNICAL FIELD

[0002] This disclosure relates generally to communication and more particularly to data and multimedia communication within a vehicle.

BACKGROUND

[0003] A vehicle (e.g., automobile, truck, bus, an agricultural vehicle, ship, and/or aircraft) includes a vehicle communication network. The complexity of the vehicle communication network varies depending on the amount of electronic devices within the vehicle. For example, many more advanced vehicles include electronic modules for engine control, transmission control, antilock braking, body control, emissions control, etc. To support the various electronic devices within the vehicle, the automotive industry has generated numerous communication protocols.

[0004] FIG. **1** is a schematic block diagram of a prior art vehicular communication network that illustrates the various bus protocols and the electronic devices that utilize such protocols. The bus protocols include: (1) J1850 and/or OBDII, which are typically used for vehicle diagnostic electronic components; (2) Intellibus, which is typically used for electronic engine control, transmission control other vehicle systems such as climate control, and it may also be used for drive-by-wire electronic control units (ECU); (3) high-speed controller area network (CAN), which is typically used for braking systems and engine management systems; (4) distributed system interface (DSI) and/or Bosch-Siemens-Temic (BST), which is typically used for safety related electronic devices; (5) byteflight, which is typically used for safety critical electronic device applications; (6) local interconnect network (LIN), which is typically used for intelligent actuators and/or intelligent sensors; (7) low-speed controller area network (CAN) and/or Motorola® interconnect (MI), which are typically used for low-speed electronic devices such as Windows, mirrors, seats and/or climate control; (8) mobile media link (MML), domestic digital data (D2B), smartwireX, inter-equipment bus (IEBus), and/or media oriented systems transport (MOST), which are typically used to support multimedia electronic devices within a vehicle such as a audio head unit and amplifiers, CD player, a DVD player, a cellular connection, a Bluetooth connection, peripheral computer connections, rear seat entertainment (RSE) units, a radio, digital storage, and/or a GPS navigation system; (9) Low-Voltage Differential Signaling (LVDS), which are typically used to support, heads up display, instrument panel displays, other digital displays, driver assist digital video cameras, and (10) FlexRay, which may be used for safety critical features and/or by-wire applications.

[0005] To enable electronic components using different bus protocols to communicate with each other, one or more bus gateways may be included in the vehicle network. For example, in a safety related issue, a safety ECU may need to communicate with a braking ECU, and engine control ECU, and/or a transmission control ECU. In this example, the bus gateway performs some degree of protocol conversion to facilitate the communication between the ECUs of differing communication protocols.

[0006] In addition to providing multiple vehicle network protocols to support a variety of electronic devices within a vehicle, most vehicle manufacturers are striving for improved fuel efficiency. In this regard, a reduction in weight of 400 pounds is approximately equivalent to reducing continuous power consumption by 100 Watts. As such, by removing weight from a vehicle, fuel efficiency may be improved. A typical vehicle includes 400 to 600 pounds of wiring, which is the second heaviest component in a vehicle; the engine is the heaviest.

BRIEF DESCRIPTION OF THE SEVERAL VIEWS OF THE DRAWINGS

[0007] FIG. **1** is a schematic block diagram of a prior art vehicular communication network;

[0008] FIG. **2** is a schematic block diagram of an embodiment of a communication infrastructure in accordance with some implementations;

[0009] FIG. **3** is a schematic block diagram of an embodiment of a vehicular communication network in accordance with some implementations;

[0010] FIG. **4** is a schematic block diagram of another embodiment of a vehicular communication network in accordance with some implementations;

[0011] FIG. **5** is a schematic block diagram of another embodiment of a vehicular communication network in accordance with some implementations;

[0012] FIG. **6** is a schematic block diagram of another embodiment of a vehicular communication network in accordance with some implementations;

[0013] FIG. **7** is a schematic block diagram of another embodiment of a vehicular communication network in accordance with some implementations;

[0014] FIG. **8** is a schematic block diagram of another embodiment of a vehicular communication network in accordance with some implementations;

[0015] FIG. **9** is a schematic block diagram of another embodiment of a vehicular communication network in accordance with some implementations;

[0016] FIG. **10** is a schematic block diagram of another embodiment of a vehicular communication network in accordance with some implementations;

[0017] FIG. **11** is a schematic block diagram of another embodiment of a vehicular communication network in accordance with some implementations;

[0018] FIG. **12** is a logical diagram of network managing processes for a vehicular communication network in accordance with some implementations;

[0019] FIG. **13** is a schematic block diagram of an embodiment of a network fabric in accordance with some implementations;

[0020] FIG. **14** is a schematic block diagram of an embodiment of a bridge-routing module in accordance with some implementations;

[0021] FIG. **15** is a schematic block diagram of an embodiment of a packet egress unit and a packet ingress unit in accordance with some implementations;

[0022] FIG. **16** is a schematic block diagram of another embodiment of a packet egress unit and a packet ingress unit in accordance with some implementations;

[0023] FIG. **17** is a schematic block diagram of an embodiment of a redundancy/backup module in accordance with some implementations;

[0024] FIG. **18** is a schematic block diagram of an example of a cable failure within a network fabric in accordance with some implementations;

[0025] FIG. **19** is a logic diagram of an embodiment of a method for processing a cable failure within a network fabric in accordance with some implementations;

[0026] FIG. **20** is a schematic block diagram of another example of a cable failure within a network fabric in accordance with some implementations;

[0027] FIG. **21** is a logic diagram of another embodiment of a method for processing a cable failure within a network fabric in accordance with some implementations;

[0028] FIG. **22** is an example diagram of a network topology database in accordance with some implementations;

[0029] FIGS. **23-26** are examples of network fabric spanning tree configurations in accordance with some implementations;

[0030] FIG. **27** is a diagram of an embodiment of a modified network frame/packet in accordance with some implementations;

[0031] FIG. **28** is a logic diagram of an embodiment of a method for processing a packet in the vehicular communication network in accordance with some implementations;

[0032] FIG. **29** is an example diagram of processing a mission critical packet within a vehicle communication network in accordance with some implementations;

[0033] FIG. **30** is a logic diagram of an embodiment of a method for processing a mission critical packet in the vehicular communication network in accordance with some implementations;

[0034] FIG. **31** is a logic diagram of another embodiment of a method for processing a mission critical packet in the vehicular communication network in accordance with some implementations;

[0035] FIG. **32** is a logic diagram of another embodiment of a method for processing a packet in the vehicular communication network in accordance with some implementations;

[0036] FIG. **33** is a schematic block diagram of an embodiment of a switch module in accordance with some implementations;

[0037] FIG. **34** is a schematic block diagram of another embodiment of a switch module in accordance with some implementations;

[0038] FIG. **35** is a logic diagram of an embodiment of a method for processing a packet in the vehicular communication network in accordance with some implementations;

[0039] FIG. **36** is an example diagram of packet queues within a vehicle communication network in accordance with some implementations;

[0040] FIGS. **37-40** are example diagrams of packet queue processing within a vehicle communication network in accordance with some implementations;

[0041] FIG. **41** is a schematic block diagram of an embodiment of a network node module in accordance with some implementations;

[0042] FIG. **42** is a schematic block diagram of another embodiment of a network node module in accordance with some implementations;

[0043] FIG. **43** is a schematic block diagram of another embodiment of a network node module in accordance with some implementations;

[0044] FIG. **44** is a schematic block diagram of another embodiment of a network node module in accordance with some implementations;

[0045] FIG. **45** is a schematic block diagram of another embodiment of a network node module in accordance with some implementations;

[0046] FIG. **46** is a schematic block diagram of another embodiment of a network node module in accordance with some implementations;

[0047] FIG. **47** is a schematic block diagram of another embodiment of a network node module in accordance with some implementations;

[0048] FIG. **48** is a schematic block diagram of another embodiment of a network node module in accordance with some implementations;

[0049] FIG. **49** is a schematic block diagram of another embodiment of a network node module in accordance with some implementations;

[0050] FIG. **50** is a schematic block diagram of another embodiment of a network node module in accordance with some implementations;

[0051] FIG. **51** is a schematic block diagram of another embodiment of a network node module in accordance with some implementations;

[0052] FIG. **52** is a schematic block diagram of another embodiment of a network node module in accordance with some implementations;

[0053] FIG. **53** is a schematic block diagram of another embodiment of a network node module in accordance with some implementations;

[0054] FIG. **54** is a schematic block diagram of another embodiment of a network node module in accordance with some implementations;

[0055] FIG. **55** is a schematic block diagram of another embodiment of a network node module in accordance with some implementations;

[0056] FIG. **56** is a schematic block diagram of another embodiment of a network node module in accordance with some implementations;

[0057] FIG. **57** is a schematic block diagram of another embodiment of a network node module in accordance with some implementations;

[0058] FIG. **58** is a schematic block diagram of an example of an occupant environment in accordance with some implementations;

[0059] FIG. **59** is a logic diagram of an embodiment of a method for processing occupant sensed data in accordance with some implementations;

[0060] FIG. **60** is a diagram of an example of a moving recording time window in accordance with some implementations;

[0061] FIG. **61** is a schematic diagram of an embodiment of a vehicle black box in accordance with some implementations;

[0062] FIG. **62** is a schematic diagram of another embodiment of a vehicle black box in accordance with some implementations;

[0063] FIG. **63** is a schematic diagram of an embodiment of power distribution within a vehicular communication network in accordance with some implementations;

[0064] FIG. **64** is a schematic diagram of another embodiment of power distribution within a vehicular communication network in accordance with some implementations;

[0065] FIG. **65** is a logic diagram of an embodiment of a method for controlling power distribution within a vehicular communication network in accordance with some implementations;

[0066] FIG. **66** is a logic diagram of another embodiment of a method for controlling power distribution within a vehicular communication network in accordance with some implementations;

[0067] FIG. **67** is a schematic diagram of an embodiment of a network interface within a vehicular communication network in accordance with some implementations;

[0068] FIG. **68**A is a logic diagram of an embodiment of a method for managing devices coupled to a vehicular communication network in accordance with some implementations;

[0069] FIG. **68**B is a schematic diagram of a network node module for managing devices coupled to a vehicular communication network in accordance with some implementations;

[0070] FIG. **69** is a logic diagram of an embodiment of a method for adding a device to a vehicular communication network in accordance with some implementations;

[0071] FIG. **70**A is a schematic diagram of an embodiment of a new device coupled to a switch module within a vehicular communication network in accordance with some implementations;

[0072] FIG. **70**B is a schematic diagram of an embodiment of a new device added to a network node module in accordance with some implementations;

[0073] FIG. **71** is a logic diagram of an embodiment of a method for processing a damaged device of a vehicular communication network in accordance with some implementations;

[0074] FIG. **72** is an example diagram of an embodiment of network and/or resource planning within a vehicular communication network in accordance with some implementations;

[0075] FIG. **73** is an example diagram of an embodiment of a packet queue for concurrent packet transmissions within a vehicular communication network in accordance with some implementations;

[0076] FIG. **74** is an example diagram of concurrent packet transmissions within a vehicular communication network in accordance with some implementations;

[0077] FIG. **75** is a logic diagram of an embodiment of a method for concurrent packet transmissions within a vehicular communication network in accordance with some implementations;

[0078] FIG. **76** is a schematic diagram of an embodiment of a data bridge within a vehicular communication network in accordance with some implementations;

[0079] FIG. **77** is a schematic diagram of another embodiment of a data bridge within a vehicular communication network in accordance with some implementations;

[0080] FIG. **78** is a schematic diagram of an embodiment of a packet egress unit and a packet ingress unit of a data bridge in accordance with some implementations;

[0081] FIG. **79** is a logic diagram of an embodiment of a method for transferring packets between network fabrics within a vehicular communication network in accordance with some implementations;

[0082] FIG. **80** is a logic diagram of another embodiment of a method for transferring packets between network fabrics within a vehicular communication network in accordance with some implementations;

[0083] FIG. **81** is a schematic diagram of another embodiment of a data bridge within a vehicular communication network in accordance with some implementations;

[0084] FIG. **82** is a logic diagram of another embodiment of a method for transferring packets between network fabrics within a vehicular communication network in accordance with some implementations;

[0085] FIG. **83** is a logic diagram of another embodiment of a method for transferring packets between network fabrics within a vehicular communication network in accordance with some implementations;

[0086] FIG. **84** is a logic diagram of an embodiment of a method for storing data by a data bridge within a vehicular communication network in accordance with some implementations;

[0087] FIG. **85** is a schematic diagram of another embodiment of a data bridge within a vehicular communication network in accordance with some implementations;

[0088] FIG. **86** is a schematic diagram of another embodiment of a data bridge within a vehicular communication network in accordance with some implementations;

[0089] FIG. **87** is a schematic diagram of an embodiment of a wired and wireless network fabric of a vehicular communication network in accordance with some implementations;

[0090] FIG. **87**A is a schematic diagram of an embodiment of a wireless network fabric of a vehicular communication network in accordance with some implementations;

[0091] FIG. **88** is a schematic diagram of another embodiment of a bridge/routing module within a vehicular communication network in accordance with some implementations;

[0092] FIG. **89** is a schematic diagram of an embodiment of egress units, an egress sync module, and a packet egress unit of a bridge/routing module in accordance with some implementations;

[0093] FIG. **90** is a schematic diagram of an embodiment of ingress units, an ingress sync module, and a packet ingress unit of a bridge/routing module in accordance with some implementations;

[0094] FIG. **91** is a diagram of an example of frequency bands and channels of a vehicular communication network in accordance with some implementations;

[0095] FIG. **92** is a logic diagram of an embodiment of a method for wired and wireless packet processing within a vehicular communication network in accordance with some implementations;

[0096] FIG. **93** is a schematic diagram of another embodiment of a switch module within a vehicular communication network in accordance with some implementations;

[0097] FIG. **94** is a schematic diagram of another embodiment of a switch module within a vehicular communication network in accordance with some implementations;

[0098] FIG. **95** is a schematic diagram of another embodiment of a network node module within a vehicular communication network in accordance with some implementations;

[0099] FIG. **96** is a schematic diagram of another embodiment of a network node module within a vehicular communication network in accordance with some implementations;

[0100] FIG. **97** is a schematic diagram of another embodiment of a network node module within a vehicular communication network in accordance with some implementations;

[0101] FIG. **98** is a schematic diagram of an embodiment of a wireless waveguide network fabric of a vehicular communication network in accordance with some implementations;

[0102] FIG. **99** is a schematic diagram of an embodiment of a vehicle component having an integrated waveguide of a wireless network fabric of a vehicular communication network in accordance with some implementations;

[0103] FIG. **100** is a schematic diagram of an embodiment of infotainment modules coupled to a network fabric of a vehicular communication network in accordance with some implementations;

[0104] FIG. **101** is a schematic diagram of another embodiment of an infotainment modules coupled to a network fabric of a vehicular communication network in accordance with some implementations;

[0105] FIG. **102** is a logic diagram of an embodiment of a method for processing high resolution video content of a vehicular communication network in accordance with some implementations;

[0106] FIGS. **103-105** are example diagrams of an embodiment of processing 3D video within a vehicular communication network in accordance with some implementations;

[0107] FIG. **106** is a schematic diagram of an embodiment of commercial insertion within a vehicular communication network in accordance with some implementations;

[0108] FIG. **107** is a logic diagram of an embodiment of a method for commercial insertion within a vehicular communication network in accordance with some implementations;

[0109] FIG. **108** is a logic diagram of an embodiment of a method for expanding memory of a vehicular communication network in accordance with some implementations;

[0110] FIG. **109** is a logic diagram of an embodiment of a method for vehicular charging in accordance with some implementations;

[0111] FIG. **110** is a logic diagram of an embodiment of a method for fuel consumption optimization in accordance with some implementations;

[0112] FIG. **111** is a logic diagram of an embodiment of a method for fuel consumption optimization in accordance with some implementations;

[0113] FIG. **112** is a schematic diagram of an embodiment of a multi-level pre-processing module of a vehicular communication network in accordance with some implementations;

[0114] FIG. **113** is a schematic diagram of an embodiment of a multi-level video decoding module of a vehicular communication network in accordance with some implementations;

[0115] FIG. **114** is a diagram of an example of a pre-processing video in accordance with some implementations;

[0116] FIG. **115** is a diagram of an example of a low latency video packet organization in accordance with some implementations;

[0117] FIG. **116** is a logic diagram of an embodiment of a method for multi-level video processing in accordance with some implementations;

[0118] FIG. **117** is a diagram of an example of a using multi-level video in accordance with some implementations;

[0119] FIG. **118** is a diagram of another example of a using multi-level video in accordance with some implementations;

[0120] FIG. **119** is a diagram of an example of video content authorization in accordance with some implementations;

[0121] FIG. **120** is a logic diagram of an embodiment of a method for video content authorization in accordance with some implementations;

[0122] FIG. **121** is a diagram of an example of resource sharing in accordance with some implementations;

[0123] FIG. **122** is a logic diagram of an embodiment of a method for resource sharing in accordance with some implementations;

[0124] FIG. **123** is a logic diagram of another embodiment of a method for resource sharing in accordance with some implementations;

[0125] FIG. **124** is a schematic diagram of an embodiment of a power management module in accordance with some implementations; and

[0126] FIG. **125** is a logic diagram of an embodiment of method for power management in accordance with some implementations.

DETAILED DESCRIPTION OF THE DISCLOSURE

[0127] FIG. **2** is a schematic block diagram of an embodiment of a communication system that includes vehicles **10**, a home network **12**, a satellite transceiver **14**, a cellular network **16**, a highway wireless network **18**, the Internet **20**, an automobile service provider **22**, a server **24**, an automo-

bile manufacturer **26**, government **28**, and/or automobile marketing **30**. In this system, each vehicle **10** includes a packet/frame-based communication network that enables it to communicate with other vehicles, with its home network **12**, with the satellite transceiver **14** (GPS, satellite radio, satellite TV, satellite communication, etc.), with the cellular network **16**, and/or with the highway wireless network **18**. Note that the highway wireless network **18** may include a plurality of wireless transceivers located proximal to highways, roads, rest areas, etc.

[0128] In an example of operation, a vehicle **10** may communicate with an automobile service provider **22** (e.g., engine tune-up, brake system, a transmission system, etc.) via the cellular network **16**, the highway wireless network **18**, and/or its home network **12**. Such a communication includes the vehicle **10** transmitting data regarding its operational status (e.g., number of hours since last engine tune-up, wear & tear on the break system, brake fluid level, oil level, transmission fluid level, etc.). The automobile service provider **22** interprets the operational status data to determine if the vehicle **10** is in need of service and/or if a component failure is likely to occur in the near future. Based on this interpretation, the automobile service provider **22** sends data to the vehicle indicating whether service is needed and may further include data to schedule an appointment for such service.

[0129] In another example of operation, a vehicle **10** collects data regarding its performance (e.g., fuel efficiency, component wear & tear, real-time engine control, real-time braking system control, real-time transmission control, etc.), which it transmits to the auto manufacturer **26**. The auto manufacturer **26** utilizes the data for a variety of purposes, such as improving future designs, determining need for recalls, etc.

[0130] In yet another example of operation, a vehicle **10** may communicate with a server to upload data and/or download data. As a more specific example, the server may provide streaming video of television shows, movies, etc. For a subscription fee, the vehicle **10** downloads the streaming video for display on rear seat entertainment systems and/or other displays within the vehicle. As another specific example, the vehicle **10** may upload data (e.g., video taken by cameras of the car, user data contained on a laptop computer, video game inputs and/or controls, etc.) to the server.

[0131] In a further example of operation, the vehicle **10** may communicate with a government agency **28** (e.g., driver motor vehicle) to update registration information, insurance information, etc. As another example, the vehicle **10** may communicate specific performance information (e.g., general vehicle operation, emissions test, etc.) with the government agency **28** for compliance with different government programs (e.g., emissions control, safety check, etc.).

[0132] In a still further example of operation, the vehicle **10** may receive marketing information from an auto-marketing provider **30**. For instance, the vehicle **10** may receive commercial information based on the vehicle's location, driver's interests, recent communications to and/or from the vehicle, etc.

[0133] FIG. **3** is a schematic block diagram of an embodiment of a vehicular communication network that includes a unified network fabric **32** (e.g., Ethernet-based), one or more communication links **34**, a gateway **36**, a plurality of vehicle control modules **38**, a network manager **40**, a power manager **42**, one or more processing modules **44**, memory **46**, and/or one or more multimedia processing modules **48**. The communication links **34** may include wired and/or wireless interfaces to support connectivity with cellular devices, Bluetooth devices, infrared devices, and/or computer peripheral devices. For example, a Bluetooth transceiver may be coupled to the unified network fabric **32** to support Bluetooth communications with a portable audio/video unit, with a headset, etc.

[0134] The network fabric **32** includes a plurality of bridge-routing modules and a plurality of switch modules (examples of which are shown in FIGS. **13** and **87**). Within the network fabric **32**, a bridge-routing module is redundantly coupled to one or more adjacent bridge-routing modules and a switch module is redundantly coupled to one or more bridge-routing modules. The network fabric **32** may be divided into sub-network fabrics that are coupled together via a data bridge. As an example, the network fabric includes a data bridge, a first sub-network fabric operably coupled to first sub-set of the vehicle control modules, and a second sub-network fabric operably coupled to second sub-set of the vehicle control modules. The data bridge facilitates (e.g., initiates, issues an instruction, performs, etc.) communication of a sub-set of the packets between the first and second sub-network fabrics. Further examples of the network fabric being partitioned into sub-network fabrics are shown in FIGS. **4**, **5**, and one or more of the remaining subsequent figures.

[0135] The gateway **36** may include one or more wireless transceivers to support communication with the highway network, with a home network, and/or to support diagnostic ports for communication with the automobile service providers, the automobile manufacturers, etc. Such a wireless transceiver includes a network interface, which enables it to connect to the unified network fabric **32**.

[0136] A vehicle control module **38** may be one or more processing modules, a network node module, an electronic control unit, and/or a vehicle assembly. As an example, a vehicle control module **38** (which may also be referred to as a network node module) includes a network interface and at least one device. If the device is an analog device, the vehicle control module **38** further includes an analog to digital converter and/or a digital to analog converter. Such devices may include a sensor, an actuator, an intelligent sensor, an intelligent actuator, an electronic control unit (ECU), and/or a control device. As another example, a vehicle assembly includes a switching circuit module, a plurality of network interfaces operably coupled to the switch circuit module, and a plurality of devices operably coupled to the plurality of network interfaces. Various examples of vehicle control modules will be discussed in greater detail with reference to FIGS. **41-57**.

[0137] The network manager **40** performs a variety of functions to coordinate packet communication within the vehicle communication network and to facilitate network resource management. For example, the network manager **40** coordinate communication of packets, via the network fabric **32**, among the vehicle control modules **38**, the memory **46**, and the multimedia processing module(s) **48** based on individual content of the packets and in accordance with a global vehicle network communication protocol. The global vehicle network communication protocol includes information regarding a network fabric formatting of the packets, (e.g., packet format as shown in FIG. **26**), infor-

mation regarding packet transmission prioritization schemes (e.g., mission critical packets having a higher priority, infotainment (information and/or entertainment) packets having a lower priority, etc.), information regarding network management processing (e.g., network fabric resources and devices coupled to the network fabric), and information regarding vehicle network operation parameters (e.g., network configuration management). FIGS. **28-32** illustrate one or more examples of packet communication in accordance with the global network communication protocol.

[0138] As another example, the network manager **40** facilitates (e.g., initiates, issues an instruction, performs, etc.) network resource management to support the communication of packets via the network fabric in accordance with the global vehicle network communication protocol. For instance, the network manager **40** performs access prioritization management, bandwidth allocation management, packet redundancy management, link redundancy management, data transmission latency management, link diagnostics, network security, virtual local area network setup, legacy packet/frame management, adding and/or deleting devices from access to the network, etc.

[0139] The power manager **42** functions in concert with the network manager **40** to optimize power consumption of the unified network fabric **32** and/or the devices coupled thereto. For instance, the power manager **42** may manage the devices individually, may manage and island of devices, and/or may manage power to network interfaces. Such power management includes a sleep-wake mode, an on-off power mode, in-use power consumption reduction techniques (e.g., reduce power supply voltage, reduced clock rate, current limit, etc.), and/or utilizing low power communication links at the physical layer.

[0140] The processing modules **44** may implement one or more electronic control units (ECU), one or more control units, one or more steer by wire controllers, one or more drive by wire controllers, one or more central processing units, one or more co-processing units, and/or one or more other controllers. The processing module **44** may be a single processing device or a plurality of processing devices. Such a processing device may be a microprocessor, micro-controller, digital signal processor, microcomputer, central processing unit, field programmable gate array, programmable logic device, state machine, logic circuitry, analog circuitry, digital circuitry, and/or any device that manipulates signals (analog and/or digital) based on hard coding of the circuitry and/or operational instructions. The processing module **44** may have an associated memory and/or memory element, which may be a single memory device, a plurality of memory devices, and/or embedded circuitry of the processing module. Such a memory device may be a read-only memory, random access memory, volatile memory, non-volatile memory, static memory, dynamic memory, flash memory, cache memory, and/or any device that stores digital information. Note that if the processing module **44** includes more than one processing device, the processing devices may be centrally located (e.g., directly coupled together via a wired and/or wireless bus structure) or may be distributedly located (e.g., cloud computing via indirect coupling via a local area network and/or a wide area network). Further note that when the processing module **44** implements one or more of its functions via a state machine, analog circuitry, digital circuitry, and/or logic circuitry, the memory and/or memory element storing the corresponding operational instructions may be embedded within, or external to, the circuitry comprising the state machine, analog circuitry, digital circuitry, and/or logic circuitry. Still further note that, the memory element stores, and the processing module **44** executes, hard coded and/or operational instructions corresponding to at least some of the steps and/or functions illustrated in one or more of the Figures.

[0141] The memory **46** may be a variety of memory devices such as nonvolatile memory, volatile memory, disk drive, memory, solid-state memory, and/or any other type of memory. The memory **46** may be used for storing multimedia files (e.g., video files, audio files, etc.), electronic control unit applications, multimedia applications, diagnostic data, performance data, and/or any other data associated with the use and/or performance of the vehicle.

[0142] The multimedia processing module **48** provides audio, video, text, and/or graphics processing for the vehicle. For instance, the multimedia processing module **48** supports a GPS navigation system, provides rendered video and/or graphic images to displays, processes digital images received by cameras, and/or provides images to other audio/video equipment within the vehicle. The multimedia processing module **48** may be a single processing device or a plurality of processing devices. Such a processing device may be a microprocessor, micro-controller, digital signal processor, microcomputer, central processing unit, field programmable gate array, programmable logic device, state machine, and/or any device that manipulates signals (analog and/or digital) based on hard coding of the circuitry and/or operational instructions. The multimedia processing module **48** may have an associated memory and/or memory element, which may be a single memory device, a plurality of memory devices, and/or embedded circuitry of the processing module. Such a memory device may be a read-only memory, random access memory, volatile memory, non-volatile memory, static memory, dynamic memory, flash memory, cache memory, and/or any device that stores digital information. Note that if the multimedia processing module **48** includes more than one processing device, the processing devices may be centrally located (e.g., directly coupled together via a wired and/or wireless bus structure) or may be distributedly located (e.g., cloud computing via indirect coupling via a local area network and/or a wide area network). Further note that when the multimedia processing module **48** implements one or more of its functions via a state machine, analog circuitry, digital circuitry, and/or logic circuitry, the memory and/or memory element storing the corresponding operational instructions may be embedded within, or external to, the circuitry comprising the state machine, analog circuitry, digital circuitry, and/or logic circuitry. Still further note that, the memory element stores, and the multimedia processing module **48** executes, hard coded and/or operational instructions corresponding to at least some of the steps and/or functions illustrated in one or more of the Figures.

[0143] In an example of operation, a vehicle control module (e.g., a sensor) generates a packet in accordance with the global vehicle network communication protocol (e.g., formats the packet in accordance with the information regarding a network fabric formatting of the packets, (e.g., packet format as shown in FIG. **26**)). The vehicle control module then transmits the packet via the network fabric in accordance with the global vehicle network communication protocol. For instance, the network fabric routes the packet

based on content type of the packet (and the destination address) to another vehicle control module and/or to the multimedia processing module.

[0144] The multimedia processing module may also generate a packet in accordance with the global vehicle network communication protocol and subsequently transmits it via the network fabric in accordance with the global vehicle network communication protocol. The network fabric routes the packet based on content type of the packet (and the destination address) to the vehicle control module, the other vehicle control module, and/or to the multimedia processing module.

[0145] In such a vehicle communication network, the unified network fabric **32** has an Ethernet bus structure (or other packet/frame structure) that enables packet/frame-based communication among the plurality of electronic devices within a vehicle. In addition, the vehicle communication network is a semi-static network thereby allowing preconfigured spanning trees to be utilized for fast reconfiguration of the network; has configured dedicated bandwidth allocation for at least some of the devices to ensure a particular level of data throughput for mission critical and some non-mission critical applications; supports virtualized local area networks; supports a centralized and/or distributed bus monitoring system; utilizes a new class of packets for car control; supports security and authentication of device replacement and or new device installment; supports lossless Ethernet transmissions through redundant paths; supports a low latency protocol for mission-critical packets; and/or supports fast link fail-over.

[0146] FIG. **4** is a schematic block diagram of another embodiment of a vehicular communication network that is divided into two sub-networks coupled together via a data bridge **64**. The first sub-network supports mission-critical devices and mission-critical functions (e.g., safety related devices and/or functions, engine control devices and/or functions, braking devices and/or functions, video imaging devices and or functions related to safety and/or critical operation of the vehicle, etc.). In this example, the mission-critical network fabric **50** is coupled to a mission-critical multimedia processing module **52**, mission-critical memory **54**, one or more mission-critical processing modules **56**, one or more mission-critical vehicle control modules **58**, one or more mission-critical communication links **60**, the network manager **62**, the data bridge **64**, and the power manager **66**.

[0147] The second sub-network supports non-mission critical devices and/or functions (e.g., video game, GPS navigation, audio/video playback, window operation, seat operation, climate control, etc.). In this example, the non-mission critical network fabric **68** is coupled to a gateway **70**, one or more local ports **72**, non-critical process multimedia processing module **74**, non-mission-critical memory **76**, one or more non-mission-critical processing modules **78**, one or more non-mission-critical vehicle control modules **80**, one or more non-mission-critical communication links **82**, the network manager **62**, the data bridge **64**, and the power manager **66**. Note that the local port **72** provides wireless and/or wired connectivity to one or more smart devices **84** (e.g., a cell phone, a laptop computer, a tablet computer, etc.).

[0148] The data bridge **64** (which will be described in greater detail with reference to FIG. **76-86**) provides coupling between the two network fabrics. For instance, if a mission-critical packet is to be broadcast throughout the network (e.g., both the mission-critical network fabric **50** and the non-mission-critical fabric **68**), the data bridge **64** receives the packet from the mission-critical network fabric **50**, interprets it to determine that is a broadcast packet and is of a mission-critical nature. Based on this interpretation, the data bridge **64** forwards the mission-critical packet to the non-mission critical network fabric **68** for transmission therein. The data bridge **64** also processes packets from the non-mission critical network fabric **68** for transmission within the mission-critical network fabric **50**. In this instance, the data bridge **64** interprets the non-mission critical packet to determine whether it should be provided to the mission-critical network fabric **50**. If so, the data bridge **64** forwards the packet to the mission-critical network fabric **50**.

[0149] The network manager **62** and power manager **66** generally function as described with reference to FIG. **3** and as subsequently described in one or more of the following figures. Note that the data bridge **64**, network manager **62**, and power manager **66** may be separate devices, may be within a common device, or a combination thereof. Further note that while the vehicle communication network is divided into two network fabrics, it may be divided into three or more network fabrics based on functional relationships.

[0150] FIG. **5** is a schematic block diagram of another embodiment of a vehicular communication network that is divided into two sub-networks coupled together via a data bridge **102**. The first sub-network supports vehicle operation devices and functions and the second sub-network supports info-tainment devices and functions. For instance, the vehicle operation network fabric **88** is coupled to one or more vehicle operation multimedia processing modules **90** (e.g., GPS, collision detection/avoidance, etc.), one or more vehicle operation memory devices **92**, one or more vehicle operation processing modules **94**, one more vehicle operation control modules **94**, one of more vehicle operation communication links **98**, the network manager **100**, the data bridge **102**, and the power manager **104**.

[0151] The second sub-network fabric is coupled to a gateway **108**, then information/entertainment multimedia processing module **110**, and information/entertainment memory **112**, and information/entertainment processing module **114**, one or more information/entertainment control modules **116**, one or more information/entertainment communication links **118**, the network manager **100**, the data bridge **102**, and the power manager **104**. The information/entertainment may include audio and/or video playback of audio/video files, recording images captured by the vehicle's cameras, video games, etc.

[0152] FIG. **6** is a schematic block diagram of another embodiment of a vehicular communication network that includes a unified network fabric **124**, one or more communication links **126**, a gateway **128**, the network manager **130**, the power manager **132**, one of more multimedia processing modules **134**, a plurality of user input and/or output interfaces **136** (e.g., seat adjust, windowed control, radio control, mirror control, GPS control, cruise control, etc.), and a plurality of network node modules. Each of the network node modules includes a network interface for coupling to the unified network fabric and at least one device.

[0153] The devices may include one or more of each of an engine management electronic control unit **138**, an engine management actuator **140**, an engine management sensor

142, an engine control electronic control unit **144**, an engine control actuator **146**, an engine control sensor **148**, a diagnostic electronic control unit **150**, a diagnostic sensor **152**, a diagnostic actuator **154**, a window electronic control unit **156**, a window actuator **158**, a window sensor **160**, a mirror electronic control unit **162**, a mirror actuator **164**, a mirror sensor **166**, a seat electronic control unit **168**, a seat actuator **170**, a seat sensor **172**, a climate electronic control unit **174**, a climate actuator **176**, a climate sensor **178**, a safety sensor electronic control unit **180**, a safety actuator **182**, a safety sensor **184**, a safety critical application electronic control unit **186**, a safety critical actuator **188**, a safety critical sensor **190**, a braking system electronic control unit **192**, a breaking actuator **194**, a breaking sensor **196**, a by-wire application electronic control unit **198**, a by-wire actuator **200**, a by-wire sensor **202**, a transmission control electronic control unit **204**, a transmission sensor **206**, a transmission actuator **208**, a vehicle system electronic control unit **210**, a vehicle system actuator **212**, a vehicle system Sensor **214**, a DVD player **216**, a cellular telephone interface **218**, a Bluetooth interface **220**, a computer peripheral interface **222**, a rear seat entertainment interface and/or unit **224**, a radio **226**, digital storage **228**, a CD player **230**, a camera **232**, a display **234**, a heads-up display **236**, a GPS navigation system **238**, an infrared sensor **240**, a radio frequency sensor **242**, an intelligent actuator **244**, and/or an intelligent sensor **246**.

[0154] FIG. **7** is a schematic block diagram of another embodiment of a vehicular communication network that includes a unified network fabric **124**, one or more communication links **126**, a gateway **128**, the network manager **130**, the power manager **132**, one of more multimedia processing modules **134**, a plurality of processing modules **248-254**, and a plurality of network node modules. Each of the processing modules and each of the network node modules include a network interface for coupling to the unified network fabric **124** and at least one device. The network node modules may be similar to the modules of FIG. **6**.

[0155] Each of the processing modules performs one or more functions. For instance, one of the processing modules may perform the electronic control functions for the engine, which include, but are not limited to, engine management, vehicle system operations, engine control, and engine diagnostics. Another processing module may perform user environment electronic control functions, which include, but are not limited to, window operation, seat operation, mirror operation, and climate control. Yet another processing module may perform safety related electronic control functions, which include, but are not limited to, critical safety issues (e.g., air bags) and general safety issues (e.g., turn signal, brake lights, etc.). Still another processing module may perform vehicle operation electronic control functions, which include, but are not limited to, by-wire operations, transmission control, braking control, etc.

[0156] FIG. **8** is a schematic block diagram of another embodiment of a vehicular communication network that includes a mission critical network fabric **256**, a non-mission critical network fabric **258**, the data bridge **260**, the network manager **130**, and the power manager **132**. The mission-critical network fabric **256** is coupled to a plurality of mission-critical network node modules, which include one or more communication links **126**, an engine management electronic control unit **138**, one or more engine management actuators **140**, one or more engine management sensors **142**, an engine control electronic control unit **144**, one or more engine control actuators **146**, one or more engine control sensors **148**, a safety critical applications electronic control unit **190**, one or more safety critical actuators **186**, one or more safety critical sensors **188**, a safety electronic control unit **180**, one or more safety actuators **182**, one or more safety sensors **184**, one or more infrared sensors **240**, one more RF sensors **242**, a by-wire or electronic control unit **198**, one or more by-wire actuators **200**, one or more by-wire sensors **202**, a transmission electronic control unit **204**, one or more transmission sensors **206**, one or more transition actuators **208**, a braking system electronic control unit **192**, one or more breaking actuators **194**, one more breaking sensors **196**, a vehicle system electronic control unit **210**, one or more vehicle system actuators **212**, one or more vehicle system sensors **214**, a mission-critical multi-media processing module **262**, and/or one more mission-critical cameras **264**.

[0157] The non-mission critical network fabric **258** is coupled to a plurality of non-mission critical network node modules, which include one or more communication links **126**, one or more multimedia processing modules **134**, a window electronic control unit **156**, one or more window actuators **158**, one or more window sensors **160**, a mirror electronic control units **162**, one or more mirror actuators **164**, one or more mirror sensors **166**, a seat electronic control unit **168**, one or more seat actuators **170**, one or more seat sensors **172**, a climate electronic control unit **174**, one or more climate actuators **176**, one or more climate sensors **178**, a diagnostic electronic control unit **150**, one or more diagnostic sensors **152**, one or more diagnostic actuators **154**, a gateway **128**, a DVD player **216**, a cellular telephone interface **218**, a Bluetooth interface **220**, one or more computer peripheral interfaces **222**, a rear seat entertainment unit and/or interface **224**, a radio **226**, digital storage **228**, a CD player **230**, one or more cameras **232**, one or more displays **234**, a heads-up display **236**, a GPS navigation system **238**, one or more intelligent actuators **244**, one or more intelligent sensors **246**, and/or one or more user input and/or output interfaces **136**.

[0158] FIG. **9** is a schematic block diagram of another embodiment of a vehicular communication network that includes a vehicle operation network fabric **266**, an information/entertainment (infotainment) network fabric **268**, the data bridge **260**, the network manager **130**, and the power manager **132**. The vehicle operation network fabric **266** is coupled to a plurality of vehicle operation network node modules, which include one or more communication links **126**, an engine management electronic control unit **138**, one or more engine management actuators **140**, one or more engine management sensors **142**, an engine control electronic control unit **144**, one or more engine control actuators **146**, one or more engine control sensors **148**, a safety critical applications electronic control unit **190**, one or more safety critical actuators **186**, one or more safety critical sensors **188**, a safety electronic control unit **180**, one or more safety actuators **182**, one or more safety sensors **184**, one or more infrared sensors **240**, one more RF sensors **242**, a by-wire or electronic control unit **198**, one or more by-wire actuators **200**, one or more by-wire sensors **202**, a transmission electronic control unit **204**, one or more transmission sensors **206**, one or more transition actuators **208**, a braking system electronic control unit **192**, one or more breaking actuators **194**, one more breaking sensors **196**, a vehicle

system electronic control unit **210**, one or more vehicle system actuators **212**, one or more vehicle system sensors **214**, a vehicle operation multi-media processing module **270**, one more vehicle operation cameras **272**, a window electronic control unit **156**, one or more window actuators **158**, or more window sensors **160**, a mirror electronic control units **162**, one or more mirror actuators **164**, one or more mirror sensors **166**, a seat electronic control unit **168**, one or more seat actuators **170**, one or more seat sensors **172**, a climate electronic control unit **174**, one or more climate actuators **176**, one or more climate sensors **178**, a diagnostic electronic control unit **150**, one or more diagnostic sensors **152**, one or more diagnostic actuators **154**.

[0159] The infotainment critical network fabric **268** is coupled to a plurality of infotainment network node modules, which include one or more communication links **126**, one or more multimedia processing modules **134**, a gateway **128**, a DVD player **216**, a cellular telephone interface **218**, a Bluetooth interface **220**, one or more computer peripheral interfaces **222**, a rear seat entertainment unit and/or interface **224**, a radio, digital storage **226**, a CD player **230**, one or more cameras **232**, one or more displays **234**, a heads-up display **236**, a GPS navigation system **238**, one or more intelligent actuators **244**, one or more intelligent sensors **246**, and/or one or more user input and/or output interfaces **136**.

[0160] FIG. **10** is a schematic block diagram of another embodiment of a vehicular communication network that includes a unified network fabric **124**, a plurality of assemblies, one or more communication links **126**, a gateway **128**, a network manager **130**, one or more processing modules **274**, one or more of multimedia processing modules **134**, and a power manager **132**. The plurality of assemblies include a left rear assembly **276**, a left rear tire assembly **278**, a left right passenger door assembly **280**, a driver door assembly **282**, a left front tire assembly **284**, a left front assembly **286**, a rear left passenger seat assembly **288**, a driver's seat assembly **290**, a steering wheel assembly **292**, a braking assembly **294**, a transmission assembly **296**, a center front assembly **298**, an engine assembly **300**, a right front assembly **302**, a right front tire assembly **304**, a front passenger door assembly **306**, a rear right passenger door assembly **308**, a right rear tire assembly **310**, a right rear assembly **312**, a dashboard assembly **314**, a front passenger seat assembly **316**, a right rear passenger seat assembly **318**, and a rear center assembly **320**.

[0161] An assembly includes a switching circuit, a plurality of network interfaces, and a plurality of devices. For example, the left front, right front, left rear and right rear assemblies each may include a switching circuit, a plurality of network interfaces, a plurality of digital to analog converters, a plurality of analog to digital converters, one or more headlamp actuators, one or more taillight actuators, one or more cameras, were more like sensors, were more RF sensors, one or more IR sensors, and or one or more environmental sensors. The various assemblies will be described in greater detail with reference to FIGS. **48-57**. Note that more or less assemblies may be coupled to the unified network fabric **124**.

[0162] FIG. **11** is a schematic block diagram of another embodiment of a vehicular communication network that includes a mission-critical network fabric **322**, a non-mission critical network fabric **324**, the network manager **130**, the power manager **132**, and the data bridge **260**. The mission-critical network fabric **322** is coupled to one of more communication links **126**, one or more processing modules **274**, and a plurality of assemblies. The non-mission critical network fabric **322** is coupled to the gateway **128**, one or more communication links **126**, one or more multimedia processing modules **134**, one or more processing modules **274**, and a plurality of assemblies.

[0163] Of the plurality of assemblies, some are coupled to the mission-critical network fabric **322**, some are coupled to the non-mission critical network fabric **324**, and some are coupled to both network fabrics. For instance, the left rear assembly **276**, the left rear tire assembly **278**, the left right passenger door assembly **280**, the driver door assembly **282**, the left front tire assembly **284**, the left front assembly **286**, the dashboard assembly **314**, the steering wheel assembly **392**, the center front assembly **298**, the right front assembly **302**, the right front tire assembly **304**, the front passenger door assembly **306**, the right rear passenger door assembly **308**, the right rear tire assembly **310**, and the right rear assembly **312**, and the center rear assembly **320** are each coupled to both network fabrics. In this embodiment, each of these assemblies includes one or more mission-critical devices (e.g., airbag sensor, airbag actuator, collision indication, collision avoidance, etc.) and one or more non-mission critical devices (e.g., tire pressure sensor, window user interface, etc.).

[0164] The engine assembly **300**, transmission assembly **296**, and braking assembly **294** are coupled to the mission-critical network fabric **322**. The rear left passenger seat assembly **288**, the driver seat assembly **290**, the front passenger seat assembly **316**, and the right rear passenger seat assembly **318** are coupled to the non-mission critical network fabric **324**.

[0165] FIG. **12** is a diagram of network managing processes **326** for a vehicular communication network that includes four high-level management functions: resource management **328**, network data type management **330**, network configuration management **332**, and device management **334**. Resource management **328** includes, but is not limited to, link failure management **336**, link degeneration management **338**, management of communication between bridge/routing modules **340**, management of communication between bridge/routing modules and switching modules, management of communication switching modules and network node modules, frequency allocation **342**, bandwidth allocation **344**, adding deleting or updating a bridge/routing module **346**, adding deleting or updating a network node module, and/or adding deleting or updating a switch module **348**. The resource management **328** tasks will be discussed in greater detail with reference to one or more of the subsequent figures.

[0166] The network data type management **330** includes, but is not limited to, managing classification, routing, forwarding, and/or filtering of a packets between modules of the network fabric **350**, managing the network topology and packet transmissions thereof **352**, managing transmission of mission-critical packets **354**, managing transmission of information/entertainment packets **356**, and managing transmission of vehicle operation packets **358**. The networking data type management tasks will be discussed in greater detail with reference to one or more of the subsequent figures.

[0167] The network configuration management **332** includes, but is not limited to, network and resource plan-

ning **360**, managing semi-static spanning tree configurations **362**, network resource allocation **364**, managing traffic routing **366**, managing load-balancing **368**, managing encryption **370**, managing security **372**, and fault tolerance management **374**. The network configuration management tasks will be discussed in greater detail with reference to one or more of the subsequent figures.

[0168] The device management **334** includes, but is not limited to, updating devices **376**, adding devices to the network **378**, deleting devices from the network **380**, and managing the damage devices coupled to the network **382**. The device management tasks will be discussed in greater detail with reference to one or more of the subsequent figures.

[0169] FIG. **13** is a schematic block diagram of an embodiment of a network fabric **384** that includes a plurality of bridge-routing modules **386** and a plurality of switch modules **388**. The switch modules **388** are coupled to one or more network node modules **390** and to at least one bridge-routing module **386**. Each of the bridge-routing modules **386** are coupled to at least one switching module **388** and at least one other bridge-routing module **386**. The coupling between bridge-routing modules **386** and between bridge-routing modules **386** and switch modules **388** includes multiple cables (e.g., unshielded twisted pair, shielded twisted pair, coaxial cable, category 5 or 6 cables, fiber optics, etc.).

[0170] The network fabric **384** may be used within the unified network fabric **384** or the multiple network fabric communication networks of the preceding figures. Note that more or less switching modules **388** and bridge-routing modules **386** may be included in the network fabric **384**. Further note that the multiple connections between switching modules **388** and bridge-routing modules **386** may include two or more cables where one of the cables is active and the other is used for fail over or redundancy. Still further note that a network node module **390** may be directly connected to a bridge-routing module **386**.

[0171] FIG. **14** is a schematic block diagram of an embodiment of a bridge-routing module **386** that includes a plurality of interface circuits, e.g. redundancy/backup modules **392**, a packet egress unit **394**, a packet ingress unit **396**, a processing module **398**, and memory **400**. The processing module **398** is configured to implement a local network management function **401**, a bridging function **403**, and or a routing function **405**. The memory **400** stores network information in one or more tables and/or databases. For instance, the memory **400** may store a forwarding database **402**, a filtering database **404**, a routing table **406**, a network protocol database **408**, and information/entertainment database **410**, a vehicle operations database **412**, a mission-critical database **414**, and a predetermined network topology database **416**.

[0172] In an example of operation, one of the redundancy/backup modules **392** receives a packet **418**. The packet **418** is routed to the packet ingress unit **396**, where the local network management function **401** interprets the packet **418**. Such an interpretation includes determining the type of packet (e.g., mission critical, network data, info-entertainment, vehicle operation, etc.). Determining the type of packet can include determining the type of content carried by the packet, i.e. the packet content type. Having identified the packet **418**, and the packet content type, the local network management function **401** determines the processing for the packet **418** and then processes the packet **418** accordingly. Determining the processing for the packet **418** includes, in some embodiments, determining packet routing parameters based on the packet content type.

[0173] As a specific example, when the local network management function **401** determines that the packet **418** is related to a vehicle operation, it accesses the vehicle operation database **412** to determine if any specific processing is to be performed and/or priority of the packet **418**, source, and/or destination. If no specific processing is to be performed, the processing module **398** evokes the bridging function **403** and/or the routing function **405** to forward or route the packet **418** to another bridge-routing module, to a switch module, or locally via one of the redundancy/backup modules **392** in accordance with its priority level. Note that the bridging, which uses the forwarding database **402**, is done at a data link layer using MAC addresses of physical devices and the routing, which uses the routing table **406**, is done at the network layer and uses IP addresses, which may not be tied to a physical device. Further note that the bridging and/or routing function may use the filtering database **404** to preclude forwarding of a packet to a particular device or IP address identified in the filtering database **404**.

[0174] If the local network management function **401** determines that the packet **418** does have specific performance requirements (e.g., store the data in memory **400**, forward to the gateway for transmission to an external device, etc.), the local network management function **401** processes the packet **418** accordingly. Depending on the nature of the specific performance requirements, the processing module **398** may also evoke the bridging function **403** and/or routing function **405** to route the packet **418** to another bridge-routing module **386**, to a switch module, and/or locally to another redundant/backup module **392**.

[0175] Prior to forwarding the packet **418** to another bridge-routing module **386**, or switch module, the local network management function **401** may access the network protocol database **408** to determine if a particular type of communication with the other bridge-routing module **386** or switching module is used. For example, most communications within the network fabric will use a default communication protocol (e.g., 100 Mbps or 1 Gbps Ethernet), however, some communications within the network fabric may deviate from the default communication protocol. For instance, between two bridge-routing modules, 10 Gb Ethernet may be used or non-standard speeds such as 200 Mbps, or 2.5 Gbps Ethernet may be used between a particular bridge-routing module **386** and a particular switch module.

[0176] As another specific example, the packet **418** may relate to a mission-critical function. In this instance, the processing module **398** accesses the mission-critical database **414** to determine its mission-critical priority level and other routing and/or forwarding aspects and parameters. Based on this information, the local network management function **401** processes the packet **418**.

[0177] If the packet **418** relates to network data, the processing module **398** accesses the predetermined network topology database **416**, which may include a listing of preconfigured spanning tree network topologies. In this instance, the network packet is sent due to a link failure, which requires reconfiguration of the network. By accessing the network topology database **416**, the bridge-routing module **386** quickly reconfigures based on the spanning tree network topology selected.

[0178] After the processing module **398** has processed the packet **418**, the packet egress unit **394** receives the processed packet. Based on information received from the processing module **398**, the packet ingress unit **396** places the packet **418** in a queue for subsequent transmission via one of the redundancy-backup modules **392**.

[0179] FIG. **15** is a schematic block diagram of an embodiment of a packet egress unit **394** and a packet ingress unit **396**, which are coupled to the processing module **398**. The packet ingress unit **396** includes a plurality of ports, a switching circuit **420**, and an ingress buffer **422**. The packet egress unit **394** includes a first logical multiplexer **424**, one or more packet egress queues, a second logical multiplexer **246**, a switching circuit **428**, and a plurality of ports.

[0180] In an example of operation, the packet ingress unit **396** receives a packet via one of the ports, which are coupled to the redundancy/backup modules. The switching circuit **420**, which may include a plurality of switches and a control unit to couple one of the ports to be switching circuit output, outputs the packet to the ingress buffer **422** and to the processing module **398**. The processing module **398** interprets the packet to determine its priority within the ingress buffer **422** and to determine its priority within the packet egress unit **394**. For example, if the packet is determined to be a high priority packet, the processing module **398** will place the packet at the front of the ingress buffer **422** such that it is the next packet to be provided to the packet egress unit **394**.

[0181] The first logical multiplexer **424** of the packet egress unit **394** receives a packet from the packet ingress unit **396**. Based on a control signal **430** from the processing module **398**, the first logical multiplexer **424** routes the packets to one of a plurality of packet egress queues. Each of the packet egress queues may be used for a specific type of packets, or packets having a specific type of content. For example, a first packet egress queue may be used for mission-critical packets, a second packet egress queue may use for vehicle operation packets, a third packet egress queue may be used for entertainment packets, etc. In the alternative, the packet egress unit may omit the first logical multiplexer **424** by using a single packet egress queue.

[0182] The processing module **398** controls the packet's prioritization placement in the selected queue based on the priority level of the packet. For example, if the packet is a safety related mission-critical packet, it may be placed at the front of the mission critical packet egress queue such that it is the next packet to be outputted by the packet egress unit **394**.

[0183] With multiple packets in the packet egress queues, the processing module **398** selects one of the packets to be outputted via the second logical multiplexer **426** to the switching circuit **428**. For example, the processing module **398** may access one or more of the databases to determine a prioritization scheme to determine the packet having the current highest priority. The packet with the current highest priority is outputted via the second logical multiplexer **428** to the switching circuit **428**, which outputs the packet to one of the egress ports.

[0184] FIG. **16** is a schematic block diagram of another embodiment of a packet egress unit **394** and a packet ingress unit **396**, which are coupled to the processing module **398**. The packet ingress unit **396** includes a plurality of ports, a switching circuit **420**, a top priority processing unit **432**, and an ingress buffer **422**. The packet egress unit **394** includes a first logical multiplexer **424**, one or more packet egress queues, a second logical multiplexer **426**, a switching circuit **428**, and a plurality of ports.

[0185] In an example of operation, the packet ingress unit **396** receives a packet via one of the ports, which are coupled to the redundancy/backup modules. The switching circuit **420** outputs the packet to the top priority processing unit **432**. The top priority processing unit **432** interprets the packet to determine its priority. If the packet is a top priority packet (e.g., a packet of the highest priority), the top priority processing unit **432** forwards the packet directly to the switching circuit **428** of the packet egress unit **394** for immediate transmission via one of the ports. In this instance, if the switching circuit **428** is currently outputting a packet, the top priority packet may interrupt the packet.

[0186] In addition, the top priority processing units **432** provides its interpretation of the packets to the processing module **398**. For top priority packets, the processing module **398** takes a snapshot of the current ingress buffer **422** and the packet egress queues such that if the top priority interrupts a current packet transmission, the packet transmission may be resumed once the top priority packet has been transmitted. If the current packet is not a top priority packet, the processing module **398** processes it as previously discussed with reference to FIG. **15**.

[0187] FIG. **17** is a schematic block diagram of an embodiment of a vehicle network link module within a bridge-routing module **396** (and/or it could be within a switching module). The vehicle network link module includes a plurality of network fabric ports **444**, a module port (e.g., ingress port **436** and/or egress port **434**), a switching circuit **442**, and a link manager processing module (e.g., link manager **440** and/or a processing module **438**). Each of the interconnecting network fabric ports **444** are coupled via a cable with interconnecting ports **444** of a redundancy/back up module **392** of another bridge-routing module **386** or of a switch module. The ingress port **436** is coupled to the packet ingress unit of the bridge-routing module **386** (or of a switch module) and the egress port **434** is coupled to the packet egress unit of the bridge-routing module **386** (or of a switch module).

[0188] In an example of operation, one of the interconnecting ports **444** is active to receive or transmit a packet to/from the other bridge-routing module **386** or to/from a switch module. For inbound packets, the active port provides the packet to the switching circuit **442**, which provides the inbound packet to the ingress port **436** for forwarding to the packet ingress unit. For outbound packets, the egress port **434** provides a packet from the packet egress unit to the switching circuit **442**, which couples the egress port **434** to the active interconnecting port. The active interconnecting port **444** then outputs the outbound packet.

[0189] The link manager **440**, alone or in combination with the processing module **438**, monitors the "health" of the transmissions and receptions of packets via the active interconnecting port **444**. For example, if the data rate of transmissions via the active interconnecting port **444** is lower than a desired threshold due to errors, other factors, or the cable is broken, then the link may be flagged as being in a degenerative state. If the degenerative state compares unfavorably to a threshold, the link manager **440** may deactivate the current active interconnecting port and activate another interconnecting port **444**.

[0190] In addition to monitoring the health of a link, the link manager **440** also determines a use mode such as backup transmissions and/or backup receptions of packets via a second interconnecting port **444**. In this instance, the link manager **440** communicates with the switching circuit **442** to enable multiple interconnecting ports **444** to be coupled to the egress port **434** or to the ingress port **436** such that parallel transmissions of a packet or parallel receptions of the packets may occur. The link manager **440** also indicates which of the links is the primary link and which is the backup link. Typically, packets will be processed via the primary link. If, however, the primary link has a failure (e.g., an unacceptable degenerative state or is broken), the packet can be processed from the backup link without loss of data.

[0191] The link manager **440** is further operable to support various network protocols as established by the processing module **438**. For example, if the processing module **438** issues a control signal to change the coupling to a difference bridge-routing module **386**, the link manager **440** of the current redundancy/backup module **382** deactivates the interconnecting port **444**, or ports, and a link manager **440** of another redundancy/backup module **382** activates one or more interconnecting ports **444** to connect to the new bridge-routing module **386**. Note that the redundancies/backup modules **392** of a bridge-routing module **386** may each have its own link manager **440**, may share a common link manager **440**, or a link manager **440** may support a subset of the redundancy/backup modules **392**.

[0192] In another example of operation, the link manager processing module determines that the packet conveyance via a network link has degenerated below the threshold due to data bandwidth of a communication medium coupling the active network fabric port to a corresponding active network fabric port of the other vehicle network fabric link module being below a desired data bandwidth level. In other words, the link cannot support the data rate that is currently being requested to transmit. In this instance, the link manager processing module changes the use mode to an aggregation mode such that the active network fabric port and the new active network port are coupled to the port via the switching circuit for aggregate packet transmissions. In this manner, two or more connections are used in parallel to convey packets between the bridge routing modules and/or switch modules.

[0193] The link manager processing module may determine whether vehicle network packet conveyance has degenerated below the threshold in a variety of ways. For example, the manager processing module determines that a communication medium coupling the active network fabric port to a corresponding active network fabric port of the other vehicle network fabric link module is broken (e.g., cable broke, HW failure, SW failure of port). As another example, the link manager processing module determines that the communication medium coupling the active network fabric port to the corresponding active network fabric port of the other vehicle network fabric link module has an undesired bit error rate. In yet another example, the link manager processing module determines that the communication medium coupling the active network fabric port to the corresponding active network fabric port of the other vehicle network fabric link module has a data bandwidth below a desired data bandwidth level.

[0194] The link manager **440** may also keep a history of the performance of each link to further aid in network reconfiguration decisions, fast failover decisions, etc. To facilitate tracking the performance of each link, the link manager **440** may periodically test a link during idle times. The link manager **440** may employ a variety of testing techniques to test the performance of the links and may use the performance history of each link and/or port to select the active network port.

[0195] While the present illustration of a redundancy/backup module **392** includes one egress port **434**, one ingress port **436**, and three interconnecting ports **444**, each redundancy/backup module **392** may include multiple ingress ports **436**, multiple egress ports **434**, and/or more or less than three interconnecting ports **444**. For example, the redundancy/backup module **392** may include two egress ports **434** and two ingress ports **436** to support concurrent transmission of packets. In this instance, the switching circuit **442** couples two of the interconnecting ports **444** to the two egress ports **434** or to the two ingress ports **436** as directed by the link manager **440**.

[0196] FIG. **18** is a schematic block diagram of an example of a cable failure **446** within a network fabric. The cable failure **446** may result from a physical break of the cable, from significant degeneration of performance of the cable (i.e., an unacceptable degenerative state), a hardware failure within one or both of the bridge-routing modules **386** and/or a software failure within one or both of the bridge-routing modules **386**. When a cable failure **446** occurs, the bridge-routing modules **386** select one or more of the other cables **448** to function as the active link.

[0197] FIG. **19** is a logic diagram of an embodiment of a method for processing a cable failure within a network fabric by a vehicle network link module. The method begins with the processing module and/or a link manager determining whether a cable failure has occurred **450**. When a cable failure is detected, the method continues by determining whether link aggregation **452** (e.g., a use mode in which multiple ports to achieve higher data rates) is currently in use. If not, the method continues by determining whether hot standby **454** (e.g., another use mode in which a backup link is used to convey the same packets as the active link) is active. If hot standby is not active, the processing module and/or link manager activates another port and retransmits any packets that may have been lost due to the link failure **456**.

[0198] If hot standby is active, the method continues by using the replicated transmission **458** (i.e., the backup transmission). The method continues by setting up a new hot standby link for a newly activated link **460**.

[0199] If link aggregation is active, the method continues by determining whether each link has an active hot standby **462**. When the hot-standby port is not enabled, the link manager processing module determines whether conveyance of a vehicle network packet was corrupted when the vehicle network packet conveyance has degenerated below the threshold. When the conveyance of the vehicle network packet was corrupted, the link manager processing module determines content type of the vehicle network packet (e.g., mission critical, network data, vehicle operation, and/or infotainment). The link manager processing module then determines network traffic conditions (e.g., how congested the network is). The link manager processing module then determines whether to initiate reconveyance the vehicle network packet based on the content type and network traffic conditions. For example, retransmit the packet or request

retransmission packet by the other vehicle network fabric link module based on a sliding scale of content type and traffic conditions (e.g., retransmit everything but entertainment under normal traffic conditions, only mission critical packets when network is very busy, etc.). During the retransmission of lost packets of the failed cable, the other link aggregation cable may be in active to allow synchronization to be reestablished.

[0200] If hot standby is active for the link aggregation, the method continues by using the replicated transmission for the failed cable **466** (i.e., the backup transmission on the hot standby link). The method continues by setting up a new hot standby for a newly activated link **468**.

[0201] FIG. **20** is a schematic block diagram of another example of a link failure **470** (e.g., all cables between modules are in failure) within a network fabric. The link failure **470** may result from a physical break of the cables, from significant degeneration of performance of the cables (i.e., an unacceptable degenerative state), a hardware failure within one or both of the bridge-routing modules **386** and/or a software failure within one or both of the bridge-routing modules **386**. When a link failure **470** occurs, the bridge-routing modules **386** select an alternate path in accordance with a pre-determined network topology.

[0202] FIG. **21** is a logic diagram of another embodiment of a method for processing a link failure within a network fabric as may be performed by a processing module and/or link manager of a bridge-routing module. The method begins by determining whether a link failure has occurred **472**. If yes, the process continues by accessing a network topology database as may be instructed by a network manager **474**. In this network, since the network fabric is a semi-static architecture, it allows for a variety of predetermined configurations to be identified and stored. As such, when a link failure occurs and to avoid loops, a preconfigured network topology may be identified and readily implemented in a very short period of time (e.g., less than a few tens of milliseconds). The network topology database will be described in greater detail with reference to FIGS. **22-26**.

[0203] The method continues by selecting an alternate path between the bridge routing modules having the link failure **476**. The selection of an alternative path may be based on a variety of decision points. For instance, the network topology database may be organized in a first in first out manner where the configuration in the first entry of the database is used. Alternatively, the decision may be based on which link failed, which bridge-routing modules are involved, network traffic, load balancing, etc. As an example and with reference to FIG. **20**, alternative path one may be selected due to one or more of the decision points.

[0204] Returning to the discussion of FIG. **21**, the method continues by transmitting the alternative path selection to other modules within the network fabric **478**. This may be done by the network manager, the processing module of one or more of the bridge-routing modules, or the link manager of one or more of the bridge-routing modules. The method continues by enabling the selected alternative path **480**. The method continues by updating the network topology database **482**. For example, the selected network topology is now the active network topology and the previous topology is flagged as inactive.

[0205] FIG. **22** is an example diagram of a network topology database **484** that includes a plurality of spanning tree configuration entries. A spanning tree configuration entry includes a mapping of interconnections between network nodes, switching modules, and bridge-routing modules of the vehicle communication network. Each configuration is predetermined to avoid loops, and it may be further predetermine to balance loading, reduce packet traffic, and/or allow for more concurrent (e.g., link aggregation, plural virtual LAN with plural spanning tree configurations) packet transmissions.

[0206] FIGS. **23-26** are examples of network fabric spanning tree configurations that may be stored in the network topology database. In each of the figures, the solid triple lines represent active links between the modules and the light dashed lines represent inactive links between the modules. In each of these configurations, loops are avoided. Note that the network fabric may include more or less switch modules **388**, network node modules **390** and/or bridge-routing modules **386** than illustrated in the figures. Regardless of the number of modules within the network fabric, the network topologies can be predetermined to avoid loops and may further be predetermined for load balancing, reducing packet traffic, and/or for allowing more concurrent packet transmission.

[0207] FIG. **27** is a diagram of an embodiment of a modified network frame/packet **486** that includes a preamble field **488**, a start of frame field **490**, a vehicle network field **492**, a destination address field **494**, a source address field **496**, a type/length field **498**, a payload field **500**, a cyclic redundancy check (CRC) field **502** (or frame check field), and it may further include a gap field **504**. The preamble **488**, start a frame **490**, destination address **494**, source address **496**, type/length **498**, payload **500**, CRC **502**, and gap fields **504** may be similarly formatted to one or more Ethernet protocols.

[0208] The vehicle network field **492** may include a variety of information to identify the content type of packet, priority level of the packet, and/or other network related matters. For instance, the vehicle network **492** field may include coding to identify a mission-critical type packet **506**, a network type packet **508**, a vehicle operation type packet **510**, an information/entertainment type packet **512**, and/or any other type of packet. The vehicle network field **492** may further include coding to identify sub-type information. For example, the mission-critical type packet **506** may include multiple levels of mission-critical sub-types. For instance, a first level of mission-critical packets are of the most important, a second level of mission-critical packets are of a next level of importance, etc.

[0209] As another example, a network type packet **508** may include sub types of device level packets **514**, resource level packets **516**, network data level packets **518**, and/or any other type of network control and/or information packets. As a more specific example, the device level packets **514** may pertain to adding an element (e.g., module, component, device, etc.) to the network, deleting an element from the network, processing a damaged element of the network, updating an element of the network, etc.

[0210] A network node module and/or an associated switch module typically generate the content of the vehicle network field **492**. For example, when a network node module has a packet to transmit, it may access one or more databases to determine its priority level, the type of network packet, etc. to generate the coding for the vehicle network field **492**. Alternatively, the network node module may have

the vehicle network field **492** information locally stored for insertion into the packets it produces. As another alternative, the network node module may generate a packet with the vehicle network field **492** blank (e.g., including null information) and the switching module determines the appropriate coding for the vehicle network field **492**. The network node modules will be described in greater detail with reference to FIGS. **41-57** and the switching module will be described in greater detail with reference to FIGS. **33-40**.

[0211] In an example of operation, a network node module (which includes a processing module and memory) communicates via the unified vehicle communication network in accordance with a global vehicle network communication protocol. For instance, the global vehicle network communication protocol (or global vehicle network protocol) prescribes the formatting of frames (or packets), prescribes frame transmission prioritization schemes (e.g., locally managed prioritization schemes, globally managed prioritization schemes), prescribes network management processing (e.g., resource management, network data type management, network configuration management, and/or device management); and/or other vehicle network operation parameters.

[0212] To communicate via the unified vehicle communication network (e.g., as discussed with reference to FIGS. **2-13**), the processing module of the network node generates a header section of a frame to include a preamble, a vehicle network field, and routing information. The header section may further include a frame length field and a start of frame field.

[0213] The routing information includes a source address field and/or a destination address field. In one instance, the source and/or destination field include an Internet protocol (IP) address for the source and/or destination, respectively. For example, each device (e.g., as shown in or more of FIGS. **2-13**) may have one or more IP addresses allocated to it. In another instance, the source and/or destination field include a physical device address of the source and/or destination, respectively. For example, each device of the vehicle system has a physical address assigned to it.

[0214] The vehicle network field includes information that identifies a type of the frame. For example, the vehicle network filed may include a content type of the frame (e.g., a mission-critical data type, a network data type, a vehicle operation data type, and/or an information/entertainment data type) and/or a priority level of the frame (e.g., top priority or subordinate levels of priority). Note that the processing module may generate the vehicle network field by retrieving frame information (e.g., type, priority, etc.) from the memory, which may store one or more of databases regarding priority level of the frame, type of the frame, coding of the frame.

[0215] The vehicle network field may further include one or more levels of sub-type information. For example, there may be several levels for safety (e.g., critical, general, etc.). Other examples are discussed above.

[0216] The processing module may alternatively generate the vehicle network field to include null information. In this instance, a module of the vehicle network fabric recognizes the null information and determines, on behalf of the device, the appropriate information for the vehicle network field and populates it accordingly.

[0217] The processing module continues generating the frame by generating a payload section. The payload section includes data payload and an integrity check field (e.g., CRC). Once the frame is generated, the processing module transmits it, via a vehicle network interface, to the unified vehicle communication network in accordance with a global vehicle network communication protocol.

[0218] FIG. **28** is a logic diagram of an embodiment of a method for processing a packet in the vehicular communication network by a bridge-routing module, a switch module, and/or other module of the network fabric in accordance with a global vehicle network communication protocol. A network management module of the vehicle communication network, which includes a network interface, memory, and a processing module, manages the global vehicle network communication protocol. For example, managing the global vehicle network communication protocol includes instituting a content-based network packet processing protocol and managing the vehicle communication network to support the network packet processing protocol. The content-based network packet processing protocol includes determining and classifying content type of a packet (e.g., mission critical content, network data content, vehicle operation content, and/or infotainment content), determining a processing requirement of the packet, and prioritizing execution of the processing requirement based on the content type.

[0219] As another example, the network management module manages packet routing within the vehicle communication network based on a content-based priority scheme and a configuration of the network fabric. Further, the network management module selects the configuration of the network fabric from one of a plurality of predetermined configurations of the network fabric based on vehicle communication network information and manages the vehicle communication network information.

[0220] The method begins by receiving a packet **520** and reading the header information of the packet **522**. In particular, reading the vehicle network field to determine the type of vehicle network packet **524**. The method continues by determining whether the type of packet is a mission critical packet **526**. If yes, the method continues by identifying a mission-critical task (e.g., braking, engine control, safety actuation (airbag deployment), transmission control, etc.) **528**. The method continues by determining processing requirements for the mission-critical task **530**, which will be discussed in greater detail with reference to FIGS. **29-31**. The method continues by executing the processing requirements for the mission-critical task **532**.

[0221] If the vehicle network packet type is not mission-critical, the method continues by determining whether the packet type is network related **534**. If yes, the method continues by identifying the particular network task **536** (e.g., update one or more databases, change network configuration, change prioritization, change mutation protocol, etc.). The method continues by determining processing requirements for the particular network task **538**, which we describe in greater detail with reference to FIG. **32**. The method continues by executing the processing requirements for the network task **540**.

[0222] If the vehicle network packet type is not network related, the method continues by determining whether the packet type is vehicle operation **542**. If yes, the method continues by identifying the particular vehicle operation task **544** (e.g., adjust climates, adjust seat, headlight operation, engine diagnostics, etc.). The method continues by determining processing requirements for the vehicle operation task, which may include forward in the packet, routing the

packet, and/or updating tables and/or databases regarding the packet **546**. The method continues by executing the processing requirements for the vehicle operation task **548**.

[0223] If the vehicle network packet type is not vehicle operation, the method continues by determining whether the packet is an information/entertainment packet **550**. If yes, the method continues by identifying the particular information/entertainment task **552** (e.g., display audio/video data, store audio/video data, process graphics, etc.). The method continues by determining processing requirements for the particular information/entertainment task, which may include forwarding the packet, routing the packet, and/or updating tables and/or databases regarding the packet **554**. The method continues by executing the processing requirements for the information/entertainment task **556**.

[0224] If the vehicle network packet type is not information/entertainment, the method continues by identifying another task **558**. The processing continues by determining processing requirements for the other task **560**. The method the method continues by executing the processing requirements for the other task **562**.

[0225] FIG. **29** is an example diagram of processing a mission critical packet within a vehicle communication network. In this example, a critical safety sensor **566** (e.g., collision detection, driver sensor, etc.) is coupled to the network fabric **564** and provides and input packet to the network fabric **564**. A bridge-routing module **386** within the network fabric **564** receives the input packet and performs the methods of FIGS. **28** and **30** to determine that the input packet is a mission-critical packet. In addition, the bridge-routing module **386** determines the destination of the mission-critical packet and routes it thereto.

[0226] In this example, the destination of the mission-critical packet is a critical safety processing module **568**. Upon receiving the mission-critical packet, the critical safety processing module **568** performs a function to generate one or more output packets. In this example, the critical safety processing module **568** is generating multiple output packets, which are provided to the network fabric **564**.

[0227] The bridge-routing module **386** within the network fabric **564** receives the output packets and processes them in accordance with the methods of FIGS. **28** and **31** to determine their destinations. Based on this processing, the bridge-routing module **386** routes the packets to the corresponding destinations. The destinations may be a plurality of actuators such as a brake actuator, an airbag actuator, a transmission adjust actuator, and/or any other actuator that performs a safety function.

[0228] FIG. **30** is a logic diagram of an embodiment of a method for processing a mission critical packet in the vehicular communication network. The method begins by receiving a packet **570** and identifying it as an input mission-critical packet **572**. This may be done by interpreting the identity of the source, the identity of the destination, and/or interpreting the vehicle network field. For example, if the source is a collision detection sensor, packets that it generates are, by default, determined to be mission-critical.

[0229] The method continues by determining whether the received packet is from the source of the packet or from another bridge-routing module **574**. If the packet is from the source, the method continues by determining whether the packet includes the mission critical type identifier in the vehicle network field of the packet **576**. If not, the bridge-routing module adds the mission-critical type identifier to the packet, which may be done by a database lookup process **578**.

[0230] With the mission-critical type identifier in the packet, the method continues by determining the mission-critical packet prioritization **580**. This can be done by accessing a prioritization database based on the source, destination the type of mission-critical task, or a combination thereof. The level of prioritization for the mission-critical packet may be an interrupt level (i.e., interrupt the transmission of the current packet for the mission-critical packet), placing the mission-critical packet at the front of a first in first out queue, transmitting the packets via dedicated bandwidth to another bridge-routing module and/or to a switch module, or broadcasting the packet over the network, which may be done in an override manner or when the network is available.

[0231] The method continues by determining the mission-critical processing module destination, or destinations **582**. The method continues by determining whether one or more of the mission-critical processing modules are local **584** (i.e., couple to the bridge-routing module or to the switch module executing this function). If yes, the mission-critical packets are sent to the local mission-critical processing module(s) in accordance with the determined prioritization **586**. If the mission-critical processing modules are not local, the mission-critical packets are sent to the next bridge-routing module or switch module in accordance with the determined prioritization and known network mapping **588**.

[0232] FIG. **31** is a logic diagram of another embodiment of a method for processing a mission critical packet in the vehicular communication network. The method begins by receiving a packet **590** and identifying it as an output mission-critical packet **592**. This may be done by interpreting the vehicle network field of the packet, accessing a database based on the source and/or destination of the packet, and/or other factors.

[0233] The method continues by determining the mission-critical packet prioritization **594**. Such prioritization may include interrupting transmission of a current packet, placing the packet at the top of an ingress queue and/or egress queue, using dedicated bandwidth of the vehicle communication network, and/or transmitting the packet via network broadcast that overrides a current transmission or when the network becomes available.

[0234] The method continues by determining whether one or more of the destinations are local **598**. For each local destination, the bridge-routing module sends the mission-critical packet to the local destination per the prioritization **600**. For each non-local destination, the bridge-routing module sends the mission-critical packet to the next bridge-routing module per the prioritization and the network mapping, which may be a current version of the network or a prioritization mapping of the network **602**. For instance, the network mapping may have one network topology configuration and the prioritization mapping may have a different network topology that optimizes communication between mission-critical devices.

[0235] FIG. **32** is a logic diagram of another embodiment of a method for processing a packet in the vehicular communication network. The method begins by receiving a packet **604** and interpreting it to determine that it is a network data type packet **606**. For instance, the bridge-routing module (or switch module) interprets the vehicle

network field of the packet to identify the nature of the packet. The method continues by determining whether the network task has a local component **608**. In other words, does the packet contain a task to be performed by the current bridge-routing module (or switch module). If not, the bridge-routing module forwards packet to the next bridge-routing module or to a switch module **610**.

[0236] If the network task has a local component, the method continues by determining whether the network task includes a memory access request **612**. If yes, the method continues by determining whether the network task is a read request or a write request **614**. For a write request, the method continues by storing network data in a database or table **616**. For example, the network packet may include network data for updating a network topology database, a forwarding database, a routing table, a filtering table, a mission-critical database, etc. Having stored the data, the method continues by sending a write acknowledgment **618**.

[0237] If the network task is a read network data request, the method continues by accessing a database or table to retrieve the requested network data **620**. The method continues by packetizing the retrieved network data **622** and forwarding the packet per the request **624**. The method continues by determining whether the network task further includes a network configuration adjustment **626**. If not, the method is finished for this packet **628**.

[0238] If the network task does not include a memory access request, the method continues by determining a network configuration adjustment **630**. The network configuration adjustment may be to add a device to the network, delete a device from the network, process a damaged device, update a device, respond to a link failure, respond to degeneration of a link, to establish or change a communication protocol between bridge-routing modules, to adjust frequency allocation, to adjust bandwidth allocation, to change network configuration, change resource allocation, adjust traffic routing, adjust load-balancing, activate redundant link or path upon any failures, etc. The method continues by performing the network configuration adjustment **632** and sending an acknowledgement of its completion **634**.

[0239] FIG. **33** is a schematic block diagram of an embodiment of a switch module that includes a redundancy/backup module **636**, a network buffer **638**, a switching circuit **640**, a plurality of port buffers **642**, a plurality of ports **644**, a processing module **646**, and memory. The processing module **648** may be configured to implement a local network management function **650**, a layer 2 switching function, a layer 3 switching function, a layer 4 switching function, and/or a multilayer switching function. The memory **648** stores one or more of a switching database **653**, a network protocol database **654**, an information/entertainment database **656**, a vehicle operations database **658**, a mission-critical database **660**, and a predetermined network topology database **662**.

[0240] Each of the ports **644** is coupled to a network node module and the redundancy/backup module **636** is coupled to a bridge-routing module. The switch module **388** may include more than one redundancy/backup module **636** for connectivity to more than one bridge-routing modules and/or to another switch module.

[0241] In an example of operation, one of the ports **644** receives a packet including a particular type of content, from its corresponding network node module. The packet is buffered via the corresponding port buffer **642** and is interpreted, e.g. to determine the packet content type, by the local network manager function **650** as will be discussed in greater detail with reference to figure is 35. The processing module **646** evokes one of the switching functions (e.g., layer 2, layer 3, layer 4, or multi-layer) to control the switching and processing of the packet. The selection of the particular switching function is dependent on the current network topology and/or the current network protocol. For instance, if packets are routed using MAC addresses, the processing module **646** may implement a layer 2 switching function.

[0242] The network buffer **638** may include one or more queues to temporarily store the packet. The processing module **646** controls the organization and management of the queues based on data contained in one or more of the databases stored in memory **648**. The queues will be described in greater detail with reference to FIGS. **36-40**. In accordance with the organization and management of the queues, packets are outputted to be redundancy/backup module **636** for transmission to a bridge-routing module or to another switch module. The redundancy/backup module **636** functions similarly to the redundancy/backup module of a bridge-routing module.

[0243] In another example of operation, the redundancy/backup module **636** receives a packet from a bridge-routing module or another switch module. Under the control of the processing module **646**, the packet is placed in one of the network buffer's queues. When the packet reaches the top of its queue, it is provided to one of the port buffers **642** via the switching circuit **388** and subsequently provided to the corresponding port for transmission to a network node module.

[0244] FIG. **34** is a schematic block diagram of another embodiment of a switch module **388** that includes a redundancy/backup module **636**, a first top priority packet module **664**, a network buffer **638**, a switching circuit **640**, a plurality of port buffers **642**, a second top priority packet module **666**, a plurality of ports **644**, a processing module **646**, and memory **648**. The processing module **646** may be configured to implement a local network management function **650**, a layer 2 switching function, a layer 3 switching function, a layer 4 switching function, and/or a multilayer switching function. The memory **648** stores one or more of a switching database **652**, a network protocol database **654**, an information/entertainment database **656**, a vehicle operations database **658**, a mission-critical database **660**, and a predetermined network topology database **662**.

[0245] Each of the ports **644** is coupled to a network node module and the redundancy/backup module **636** is coupled to a bridge-routing module. The switch module **388** may include more than one redundancy/backup module **636** for connectivity to more than one bridge-routing module and/or to another switch module.

[0246] In an example of operation, when the redundancy/backup module **636** receives a packet, the top priority packet module **664** interprets the packet content type to determine whether it is a top priority packet. Such an interpretation may be based on the content of the vehicle network field of the packet, the identity of the source, etc. If the packet is a top priority packet, it is routed to the other top priority packet module **666**, which provides the top priority packet to the appropriate port for transmission to the corresponding network node module.

[0247] Similarly, when a port **644** provides a packet to the second top priority packet module **666**, it interprets the packet, including the packet content type, to determine whether it is a top priority packet. If so, it forwards the packet to the other top priority packet module **664**, which provides it to the redundancy/backup module **636** for immediate (e.g., interrupt) or near-immediate transmission (e.g., next available transmission slot) into the network fabric. If a packet is not a top priority packet, the switch module **388** processes it as previously discussed with reference to FIG. **33**.

[0248] FIG. **35** is a logic diagram of an embodiment of a method for processing a prioritized packet in the vehicular communication network (i.e., a local network manager function) that may be executed by a network node module, a switching module, and/or a bridge-routing module. The method begins by determining packet prioritization **668** of a packet by interpreting the vehicle network field of the packet **670**. The method continues by determining whether the packet is a top priority packet **672** (e.g., to/from a critical safety device, etc.). If yes, the method continues by using the top priority by-pass mechanism within the switch module and/or bridge-routing module to transmit the top priority packet to a switch module, a bridge-routing module, or a network node module **674**.

[0249] The top priority by-pass mechanism includes determining whether the switch or bridge-routing module is currently transmitted another packet or whether the network fabric is currently transmitted a packet. If not, the top priority is transmitted. If there is a packet currently being transmitted **676**, the method continues by determining whether the current packet is of a lower priority **678**. If yes (i.e., the top priority packet is of a higher priority), the transmission of the current packet is interrupted for transmission of the top priority packet **680**. If not (i.e., the current packet is of equal or higher priority), the method continues by waiting until the current packet has been transmitted **682** and then transmitting the top priority packet **684**.

[0250] If the packet is not a top priority packet, the method continues by time stamping the packet, which may be done by the network node module, a switch module, and/or a bridge-module **686**. The method continues by determining where in a queue (e.g., a single ingress or egress queue or one of a plurality ingress or egress queues) to place the packet **688**. The method continues by adding the packet to the queue based on its prioritization and time stamp **690**.

[0251] The method continues by determining whether the time-to-live (TTL) (e.g., a time duration from the time stamp) for the packet has expired **692**. If yes, the packet is discarded **694**. If not, the method continues by determining whether the packet is to be retrieved from the queue **696**. If the packet is to be retrieved from the queue (e.g., it is in a first position of a first-in-first-out queue), it is retrieved and transmitted (e.g., within the switch or bridge-routing module or to another switch or bridge-routing module) **698**.

[0252] If the packet is not yet being retrieved, the method continues by determining whether to update the TTL priority of the packet (e.g., the expiration time of the packet is getting close) **700**. If not, the method repeats by determining if the TTL has expired. If the TTL priority is to be updated, it is updated **702** (e.g., given a higher priority) and the method continues as shown.

[0253] FIG. **36** is an example diagram of a packet **704** and packet queues within a vehicle communication network. The packet **704** includes the preamble **706**, start of frame **708**, timestamp **710**, packet type **712**, and of the remainder of the packet **714**. Note that the timestamp **710** and packet type **712** are contained within the vehicle network field of the packet **704**. The queues may be separate based on the packet type, or other factor. For example, the queues may include a mission-critical queue **716**, a network data queue **718**, and information/entertainment queue **720**, and a vehicle operation queue **714**.

[0254] As a packet **704** is received, its type is determined, which then determines the queue it will be placed in. Having identified the queue, the packet's position within the queue is determined based on its prioritization. The prioritization of a packet **704** may be based on the source of the packet, the destination of the packet, the timestamp **710**, the nature of the packet, etc. For example, if the packet is a mission-critical packet, it will be placed within the mission critical queue **716**. Within the mission-critical queue **716**, the packet prioritization level will be compared with the mission-critical packets already in the mission-critical queue **716**. Based on this comparison, the new mission-critical packet will be placed in the queue above lower priority packets and below higher parity packets.

[0255] When a packet **704** is to be transmitted to another location within the module or to the network fabric, the packet **704** may be selected from any one of the queues based on a prioritization scheme. The prioritization scheme takes into account the type of packet, the source of the packet, the destination of the packet, its timestamp **710**, etc. For example, mission-critical packets may take priority over any other type of packet **704**. Thus, other packets will not be transmitted unless the mission-critical queue **716** is empty. As another example, the timestamp **710** of the packet **704** may drive the prioritization scheme (other than for top priority packets) such that any type of packet may have priority for transmission. As yet another example, each type of packet **704** may be allocated a certain amount of bandwidth within the network fabric such that each type of packet will be transmitted within the network fabric based on individual priority schemes for the packet type. In this latter scheme, bandwidth may be dynamically allocated based on queue size, packet type, etc.

[0256] FIGS. **37-40** are example diagrams of packet queue processing within a vehicle communication network. FIG. **37** illustrates a single packet queue that may be contained within a switch module and/or a bridge-routing module. The packet queue includes a queue address and a packet field identifier **726**. The queue address indicates the packets prioritization within the queue. For example, for a first in first out queue, the packet at address 001 is of the highest priority (e.g., the next packet to be transmitted) and the packet at the bottom of the queue has the lowest priority.

[0257] FIG. **38** illustrates the packet queue of FIG. **37** at time tx+1. At this time, the first two packets have been transmitted (e.g., MC packets #1 and 2). In the time frame from tx to tx+1, no new packets were added to the queue.

[0258] FIG. **39** illustrates the packet queue at time tx+2. At this time, the next first packet (e.g., ND packet #1) has been transmitted and a new packet (e.g., IT packet #y) has been added to the bottom of the queue. In addition, the prioritization of the packet at queue address x−2 (e.g., ND packet #x) is reprioritized within the queue to queue address #004.

[0259] FIG. **40** illustrates the packet queue at time tx+3. At this time, the next first packet (e.g., MC packet #x) has been

transmitted and a new packet (e.g., MC packet #y) has been added to the middle of the queue based on its prioritization with respect to the other packets in the queue.

[0260] FIG. **41** is a schematic block diagram of an embodiment of a network node module **390** that includes a plurality of ports **726**, a plurality of device buffers **728**, a switching circuit **730**, a network buffer **732**, a processing module **734**, and memory **736**. The processing module **734** implements a local management function **738** (which includes a locally managed prioritization scheme). The memory **736** includes one or more databases for data input/output **740**, network protocol **742**, information-entertainment **744**, vehicle operations **746**, and/or mission-critical data **748**.

[0261] Each of the ports **726** is coupled to a vehicle device **750** or vehicle module **752** and a corresponding device buffer **728**. A vehicle device **750** may be any one of the modules or components illustrated in FIGS. **6-11**. For example, a vehicle device **750** may be a sensor, and actuator, electronic control unit, the user input, a user output, a communication device, etc. A vehicle module **752** includes one or more vehicle devices **750**.

[0262] In an example of operation, a vehicle device **750** or vehicle module **752** generates an outgoing device packet (or frame) for transmission via the network fabric. In this instance, the vehicle device **750** provides the packet via a port **726** to its corresponding device buffer **728**. The buffer **728** may include an egress queue for temporarily storing the outgoing device packets and an ingress queue for temporarily storing incoming network packets. The local network management function **738** manages the inputting and outputting of packets in the buffer (e.g., a queue) based on a prioritization scheme as previously discussed (i.e., performs the local portion of the global vehicle network communication protocol). In particular, the processing module interprets the outgoing device packets and/or the incoming network packets to determine types of packets and then determines the locally managed prioritization scheme based on the types of packets (e.g., mission critical packets, network protocol packets, vehicle operation packets, and/or information-entertainment packets).

[0263] For example, the processing module may interpret a packet by interpreting a vehicle network field of the packet to identify the type of packet. As another example, the processing module may interpret a packet by identifying a source of the outgoing device packets, and, based on the source, determine the type of packet. As yet another example, the processing module may interpret a packet by identifying a destination of the outgoing device packet and, based on the destination, determine the type of packet. As a further example, the processing module may interpret a packet by identifying a source of the incoming network packet and, based on the source, determine the type of packet. As a still further example, the processing module may interpret a packet by identifying a destination of the incoming network packet and, based on the destination, determine the type of the packet.

[0264] The processing module may further determine the locally managed prioritization scheme by accessing one or more databases based on the types of packets. The databases include a data input/output database, a network protocol database, an information-entertainment database, a vehicle operations database, and/or a mission critical database.

[0265] Based on the prioritization scheme, the local network management function **738** enables the switching circuit **730** to transfer an outgoing device packet from one of the plurality of device buffers **728** to the network buffer **732** by selectively coupling the device buffer to the network buffer. The network buffer **732** may also include an ingress queue and an egress queue. In this example, the outgoing packet would be placed in the egress queue. The local network management function **738** manages the queues of the network buffer **732** based on the prioritization scheme. As such, the packet generated by the vehicle device **750** in this example will be outputted to the network fabric in accordance with the prioritization scheme.

[0266] For an incoming packet, the network buffer **732** temporarily stores it in an ingress queue under the control of the local network management function. When the incoming packet reaches the top of the ingress queue of the network buffer **732**, the local network management function **738** enables the switching circuit **730** to provide it to the corresponding device buffer **728** of the destination vehicle device **750**. The corresponding buffer **728** stores it in its egress queue and subsequently provides it to the vehicle device **750** in accordance with the prioritization scheme.

[0267] In another example of operation, a vehicle device **750** may utilize a particular communication protocol (e.g., CAN, Flex Ray, etc.), which the local network manager function **738** translates into the network protocol. For example, the local network manager function may convert the packet of the vehicle device protocol into a network protocol packet. Alternatively, the local network management function **738** may encapsulate the packet of the vehicle device **750** into a global vehicle network protocol packet.

[0268] FIG. **42** is a schematic block diagram of another embodiment of a network node module **390** that includes a plurality of ports **726**, a device (or first) top priority packet module **754**, a plurality of buffers **728**, a switching circuit **730**, a processing module **734**, a network buffer **732**, a network (or second) priority packet module **756**, and memory **736**. The processing module **734** implements a local network manager function **738** and the memory **736** includes one or more of a data input output database **740**, a network protocol database **742**, and information-entertainment database **744**, a vehicle operations database **746**, and or a mission critical database **748**.

[0269] In an example of operation, a vehicle device **750** outputs a packet to its corresponding port **726**, which is received by the first top priority packet module **754**. The first top priority packet module interprets the packet to determine whether it is a top priority packet (e.g., is of the utmost importance such as a safety related mission critical function). If the packet is a top primary packet, the first top priority packet module **754** provides the packet to the second top priority packet module **756**. The second top priority packet module **756** outputs the top priority packet to the network fabric in an immediate fashion (i.e., interrupt a current transmission on the network fabric or by the network node module **390**) or in a near-intermediate fashion (i.e., as soon as the current packet is transmitted, the top priority packet is transmitted onto the network fabric). If the packet is not a top priority packet, the first top priority packet module **754** provides the packet to the corresponding buffer **728** and it is process as previously discussed with reference to FIG. **41**.

[0270] For an incoming packet, the second top priority packet module **756** interprets the packet to determine whether it is a top priority packet. If so, the second top priority packet module **756** provide the packet to the first top priority packet module **754**, which may be done in an immediate fashion or a near immediate faction within the network node module **390**. The first is top priority packet module **754** provides the top priority packet to the appropriate vehicle device **750**. If the incoming packet is not a top priority packet, the second top priority module **756** provides the packet to the network buffer **732** and the packet is process as previously discussed with reference to FIG. **41**.

[0271] For both incoming and outgoing top priority packets, the local network manager function **738** monitors the activity of the top priority packet modules **754-756** and adjusts the queues within the buffers accordingly such that packets are not lost. For example, if a packet is being outputted via the network buffer **732** when an incoming top priority packet is received, the local network manager function **738** records the interruption of the outputting of the packet and facilitates retransmission of the packet after the incoming top priority packet has been received and provided to the appropriate vehicle device **750**.

[0272] FIG. **43** is a schematic block diagram of another embodiment of a network node module **390** that includes a vehicle device (e.g., a sensor **758**), an analog to digital converter (ADC) **760**, a network interface **762**, and a port **764**. The sensor **758** may be any one of the sensors illustrated in FIGS. **6-11** and/or another type of vehicle application sensor. Note that if the sensor **758** is a digital device, the analog to digital converter **760** may be omitted.

[0273] The network interface **762** facilitates communication regarding a vehicle function of the vehicle device between the vehicle device and a vehicle network fabric in accordance with a global vehicle network communication protocol and includes circuitry for converting digital sensed data into network protocol packets. For example, if the sensor **758** is a thermometer, it provides an analog temperature reading to the ADC **760**. The ADC **760** converts the analog temperature reading into a digital value. The network interface **762** generates a packet in accordance with the network protocol, placing the digital value of the temperature in the payload field of the packet.

[0274] FIG. **44** is a schematic block diagram of another embodiment of a network node module **390** that includes a vehicle device (e.g., an actuator **766**), a digital to analog converter (DAC) **768**, a network interface **762**, and a port **764**. The actuator **766** may be any one of the actuators illustrated in FIGS. **6-11** and/or another type of vehicle application actuator. Note that if the actuator **766** is a digital device, the digital to analog converter **768** may be omitted.

[0275] The network interface **762** provides circuitry for extracting digital data from a network protocol packet. For example, if the network interface **762** receives a packet regarding rolling up a window, it extracts the digital data from the payload field of the packet. The DAC **768** converts the digital data into an analog control signal, which it provides to the actuator **766**. In this example the actuator **766** may be a window motor actuator.

[0276] FIG. **45** is a schematic block diagram of another embodiment of a network node module **390** that includes a vehicle device (e.g., an electronic control unit (ECU) **770**), a network interface **762**, and a port **764**. The ECU **770** maybe anyone of the ECUs illustrated in FIGS. **6-11** and/or any other type of vehicle application electronic control unit. The network interface **762** functions to packet size outbound data in accordance with the network protocol and to be packetized inbound data in accordance with the network protocol.

[0277] The network node modules **390** of FIGS. **43-45** may be implemented using one or more integrated circuits. For example, the network interface **762**, the circuitry to support the physical port, and an analog to digital converter may be on one integrated circuit and the sensor **758** may be on a separate integrated circuit or it may be a stand alone component. As another example, the network interface **762**, the circuitry to support the physical port, and a digital to analog converter **768** may be on one integrated circuit and an actuator **766** may be on a separate integrated circuit or it may be a standalone component. As yet another example, the network interface **762** and the circuitry to support the physical port may be on one integrated circuit and an electronic control unit **770** may be on a separate integrated circuit. As a further example, the network interface **762**, the circuitry to support the physical port, and the electronic control unit **770** maybe on a single integrated circuit.

[0278] While the network node modules of FIGS. **43-45** illustrate specific vehicle devices, the vehicle device in each example may be any one of a mission critical vehicle operation device, a non-mission critical vehicle operation device, a mission critical safety device, a non-mission critical safety device, a mission critical electronic driving device, a non-mission critical electronic driving device, an electronic control unit, and an entertainment device.

[0279] FIG. **46** is a schematic block diagram of another embodiment of a network node module **390** that includes a plurality of sensors **758**, a plurality of actuators **766**, a plurality of analog to digital converters **760**, a plurality of digital to analog converters **768**, an assembly network node module (which includes a plurality of network interfaces **762** and a switching circuit module **772**), and a port **774**. The switching circuit module **772** includes a switching circuit **776**, a processing module **778**, one or more queues **780**, and memory **782**. The processing module **778** implements a local management function. The memory **782** includes one or more databases for data input/output, network protocol, information-entertainment, vehicle operations, and/or mission-critical data. The one or more queues **780** may include an ingress queue and/or an egress queue for temporarily storing packets to/from the network interfaces and an ingress queue and/or an egress queue for storing packets to/from the switch module **772** (network node module or bridge-routing module). As another example, the switching module **772** includes a queue **780** for each of the vehicle devices of the network node module **390** and a network queue **780** coupled to the port **774**. As a further example, the switching module **772** may include a single queue for packets to/from the network interfaces **762** and a single queue **780** coupled to the port **774**.

[0280] In an example of operation, a sensor **758** generates data, which is converted into a packet by the network interface **762** as previously discussed. The network interface **762** provides the packet to one of the queues **780** of the switching circuit module **772**. The local network management function manages the inputting of packets in the queue based on a prioritization scheme as previously discussed. For example, if the sensor **758** is a mission critical sensor,

packets it generates may be given a higher priority than packets of non-mission critical sensors.

[0281] Based on the prioritization scheme, the local network management function enables the switching circuit **776** to transfer an outgoing packet from the queue to the network queue (e.g., the network egress queue). The local network management function manages the queues of the network buffer based on the prioritization scheme. As such, the packet generated by the sensor **758** in this example will be outputted to the switch module **772**, the network node module **390**, or the bridge-routing module in accordance with the prioritization scheme.

[0282] For an incoming packet, the network queue (e.g., an ingress queue) temporarily stores it under the control of the local network management function. When the incoming packet reaches the top of the network ingress queue, the local network manager function enables the switching circuit **776** to provide it to the queue of the destination actuator. The actuators **766** queue stores the packet until it is in a priority position for transmission to the DAC **768** and actuator **766**.

[0283] Note that the network node module **390** may include more or less sensors and/or actuators than shown. Further note that the network node module **390** may be implemented as one or more integrated circuits. For example, the circuitry of the port, the switching circuit module **776**, the network interfaces **762**, the ADCs **760**, and the DACs **768** may be implemented on one IC, while the sensors **758** and actuators **766** may be implemented on one or more separate ICs or as stand alone components. As another example, the circuitry of the port, the network interfaces **762**, the ADCs **760**, and the DACs **768** may be implemented on one IC, the switching circuit module **772** one a separate IC, and the sensors **758** and actuators **766** may be implemented on one or more other ICs or as stand alone components.

[0284] FIG. **47** is a schematic block diagram of another embodiment of a network node module **390** that includes the switching circuit module **772**, a plurality of network interfaces **762** and a plurality of electronic control units (ECU) **770**. The switching circuit module functions as previously discussed. Similarly, the network interfaces **762** and the ECUs function as previously discussed.

[0285] FIG. **48** is a schematic block diagram of another embodiment of a network node module **784** that may be used as an assembly (or portion thereof) for the left front, right front, left rear, and/or right rear of a vehicle communication network. The network node module **784** includes the switching circuit module **786**, a plurality of network interfaces (N/W I/F) **788**, a plurality of ADCs **792**, a plurality of DACs **790**, one or more cameras **794**, a plurality of sensors **796-802**, and a plurality of actuators **804-810**.

[0286] The plurality of sensors **796-802** may include environmental sensors **796**, infrared sensors **798**, RF sensors **800**, light sensors **802**, and/or any other sensor for detecting driving conditions, road conditions, proximity of other vehicles and/or obstacles. For example, an environmental sensor **796** may be used to sense weather conditions, road conditions (e.g., wetness, icy conditions, snow, etc.), or other environmental conditions that may affect driving. As another example, the infrared **798** and/or radio frequency sensors **800** may be used to detect proximity of other vehicles, obstacles, barriers, and/or other physical objects that may affect driving conditions. As such, the infrared **798** and/or radio frequency sensors **800** may be used as a localized radar system for the vehicle. As yet a further example, the light sensor **802** may be used to detect ambient light conditions for automatic enablement of headlamps and/or to detect headlamps of oncoming vehicles to automatically adjust high beam to low beam settings.

[0287] The plurality of actuators **804-810** may include headlamp actuators **804-806**, fog lamp actuators **808**, turn signal actuators **810**, and/or any other actuator that may be employed in the front left, front right, rear left, or rear right portions of a vehicle. For example, a first headlights actuator **804** may be used to enable the headlights at low beam and a second headlights actuator **806** may be used to enable the headlights at high beam. As another example, the fog lamp actuator **808** could be used to enable fog lamps. As yet another example, the turn signal actuator **810** may be used to actuate a turn signal lamp.

[0288] The camera, or cameras, **794** may be used to obtain real-time digital images of the surrounding environments of the vehicle, images of operation within the vehicle, and/or other images that may assist in the performance of the vehicle and/or in driving the vehicle. For example, the cameras **794** may capture images that are displayed on a headset that's display to assist in parking, backing up, etc. As yet another example, the camera **794** may be used to capture images of objects in a proximity to the vehicle that is subsequently processed for automatic collision avoidance applications.

[0289] The network node module **784** may be implemented as one or more integrated circuits, may include more or less components than shown, and/or may be implemented as one or more network node modules. For example, the network node module **784** may be implemented using one integrated circuit to support the circuitry of the port **812**, the switching circuit module **786**, and the network interfaces **788**, the digital to analog converters **790**, and the analog digital converters **792**. The other components are implemented on a common integrated circuit, separate integrated circuits, and/or as standalone components.

[0290] FIG. **49** is a schematic block diagram of another embodiment of a network node module that may be used as an assembly (or portion thereof) for the center front and/or center rear of a vehicle communication network **814**. The network node module **814** includes the switching circuit module **786**, a plurality of network interfaces (N/W I/F) **788**, a plurality of ADCs **792**, a plurality of DACs, one or more cameras **794**, a plurality of sensors **796-802**, and may further include one or more actuators (none shown).

[0291] The plurality of sensors **796-802** may include environmental sensors **796**, infrared sensors **798**, RF sensors **800**, light sensors **802**, and/or any other sensor for detecting driving conditions, road conditions, proximity of other vehicles and/or obstacles. The plurality of actuators may include headlamp actuators, fog lamp actuators, turn signal actuators, and/or any other actuator that may be employed in the front left, front right, rear left, or rear right portions of a vehicle. The camera, or cameras **794**, may be used to obtain real-time digital images of the surrounding environments of the vehicle, images of operation within the vehicle, and/or other images that may assist in the performance of the vehicle and/or in driving the vehicle.

[0292] The sensors **796-802** of the center front and or center rear assembly **814** may work in concert with the sensors **796-802** and or actuators of the left front, right front,

left rear and right rear assemblies of FIG. **48** to provide a three-dimensional and **3600** perspective of the vehicles environment. With such data, the safety and overall performance of the vehicle may be enhanced.

[0293] The center front and/or center rear network node module **814** may be implemented as one or more integrated circuits, may include more or less components than shown, and/or may be implemented as one or more network node modules. For example, the network node module **814** may be implemented using one integrated circuit to support the circuitry of the port **812**, the switching circuit module **786**, and the network interfaces **788**, the digital to analog converters, and the analog digital converters **792**. The other components are implemented on a common integrated circuit, separate integrated circuits, and/or as standalone components.

[0294] FIG. **50** is a schematic block diagram of another embodiment of a network node module **816** that may be used as an assembly (or portion thereof) for the left front tire, right front tire, left rear tire, and/or right rear tire of a vehicle communication network. Each network node module **816** includes the switching circuit module **786**, a plurality of network interfaces (N/W I/F) **788**, a plurality of ADCs **792**, a plurality of DACs **790**, one or more cameras (not shown), a plurality of sensors **818-826**, and a plurality of actuators **828-834**.

[0295] The plurality of sensors **828-834** may include a road sensor **818**, a plurality of brake sensors **820-824**, a tire pressure sensor **826**, and/or any sensor related to the tire and the performance and/or safety of the vehicle. For example, the brake sensors **820-824** may sense brake pad wear, temperatures, antilock brake performance, etc. As another example, the road sensor **818** may sense texture of the road, slickness of the road, and/or any other characteristic of the road that may affect driving conditions. As yet another example, the tire pressure sensor **826** senses the air pressure of the tire.

[0296] The plurality of actuators **828-834** may include a plurality of braking actuators **828-832**, and/or any actuator **834** related to the tire and the performance and/or safety of the vehicle. For example, the brake actuators **828-832** may perform antilock braking, application of electronic brake force, etc.

[0297] Each of the tire network node modules **816** may be implemented as one or more integrated circuits, may include more or less components than shown, and/or may be implemented as one or more network node modules. For example, the network node module may be implemented using one integrated circuit to support the circuitry of the port **812**, the switching circuit module **786**, and the network interfaces **788**, the digital to analog converters **790**, and the analog digital converters **792**. The other components are implemented on a common integrated circuit, separate integrated circuits, and/or as standalone components.

[0298] FIG. **51** is a schematic block diagram of another embodiment of a network node module that may be used as an assembly (or portion thereof) for the steering wheel of a vehicle communication network. The network node module **836** includes the switching circuit module **786**, a plurality of network interfaces (N/W I/F) **788**, a plurality of ADCs **792**, a plurality of DACs **790**, a plurality of sensors **842-844**, a plurality of user inputs **846-854**, and a plurality of actuators **838-840**.

[0299] The user inputs **846-854** used for radio control, cruise control wiper control turn signal control, and/or other vehicle system controls. For example, a user input may be a switch to turn on or off the radio, adjust the station of the radio, and another user input may be used to increase or decrease the volume of the radio. As an alternative embodiment, a single user input they be used to turn on or off the radio, adjusted station, and adjust its volume settings.

[0300] The plurality of sensors **842-844** may include driver sensors **842**, acoustic sensors **844**, temperature sensors, and/or any other sensors that sense in-cabin conditions that may affect the vehicle's performance and/or the driver's ability to drive the vehicle. For example, one of more sensors may be used to sense the driver's attentiveness to driving. As a more specific example, one of more sensors can be used to monitor the driver's eye position to determine whether the driver is primarily focused on the road or is distracted. As another example, the driver sensors may be used to sense the driver's gestures, which may be processed into a particular command. As a more specific example, the driver may wave his/her hand to indicate increase or decrease the value of the radio. As yet another example, the acoustic sensors may be used to sense ambient noise, which may be used in a noise canceling scheme.

[0301] A plurality of actuators **838-840** may be used for airbag deployment, driver stimulus, and/or any other actuator that may be used to enhance performance of the vehicle and or the driver's ability to drive the vehicle. For example, if the data produced by the driver sensors indicate that the driver is not paying attention, a driver or stimulator within the steering wheel may be actuated to alert the driver to his/her inattentiveness.

[0302] The steering wheel network node module **836** may be implemented as one or more integrated circuits, may include more or less components than shown, and/or may be implemented as one or more network node modules. For example, the network node module may be implemented using one integrated circuit to support the circuitry of the port **812**, the switching circuit module **786**, and the network interfaces **788**, the digital to analog converters **790**, and the analog digital converters **792**. The other components are implemented on a common integrated circuit, separate integrated circuits, and/or as standalone components.

[0303] FIG. **52** is a schematic block diagram of another embodiment of a network node module **856** that may be used as an assembly (or portion thereof) for the dashboard of a vehicle communication network. The network node module **856** includes the switching circuit module **786**, a plurality of network interfaces (N/W I/F) **788**, a plurality of ADCs **792**, a plurality of DACs **790**, a plurality of sensors **858-860**, a plurality of user inputs, a plurality of user outputs, and may further include one or more actuators (none shown).

[0304] The user inputs are used for radio control, environment control (e.g., air conditioning, heater, fan speed, etc.), GPS control, and/or other vehicle system controls. For example, a user input may used to change the temperature and or fan speed within the vehicle.

[0305] The user outputs are used to inform the driver of various vehicle conditions. For example, the user outputs may include one or more displays, one or more gauges, a GPS display, a heads-up display, audible alarms, visual alarms, etc. As a more specific example, one gauge may be used for fuel level, a second gauge for battery level, a third gauge for RPMs, etc.

[0306] The plurality of sensors **858-860** may include occupant sensors **858**, acoustic sensors **860**, temperature sensors, and/or any other sensors that sense in-cabin conditions that may affect the vehicle's performance and/or the occupant's comfort and/or safety within the vehicle. For example, the acoustic sensors **860** may be used to sense ambient noise, which may be used in a noise canceling scheme. As another example, the accident sensors may detect the presence of other occupants in the vehicle, which may be used for air bag enablement/disablement, audio performance optimization (e.g., noise cancellation, surround sound, etc.), climate optimization, etc.

[0307] A plurality of actuators may be used for airbag deployment and/or any other actuator that may be used to enhance performance of the vehicle and or the occupants' comfort and/or safety within the vehicle.

[0308] The dashboard network node module **856** may be implemented as one or more integrated circuits, may include more or less components than shown, and/or may be implemented as one or more network node modules. For example, the network node module **856** may be implemented using one integrated circuit to support the circuitry of the port **812**, the switching circuit module **786**, and the network interfaces **788**, the digital to analog converters **790**, and the analog digital converters **792**. The other components are implemented on a common integrated circuit, separate integrated circuits, and/or as standalone components.

[0309] FIG. **53** is a schematic block diagram of another embodiment of a network node module that may be used as an assembly (or portion thereof) for a front seat of a vehicle communication network. The network node module **862** includes the switching circuit module **786**, a plurality of network interfaces (N/W I/F) **788**, a plurality of ADCs **792**, a plurality of DACs **790**, a plurality of sensors, and a plurality of actuators.

[0310] The plurality of sensors may be used to sense occupants' movement, position, posture etc. The plurality of actuators may be used to adjust the seat position, heating the seat, cooling the seat, providing a massage function, etc. For example, the sensors may provide information to a seat electronic control unit the other network fabric, where the seat electronic control unit interprets the data to determine an occupant's movement posture, position etc. In this instance, the seat electronic control unit generates control signals that are transmitted via the network fabric to the seat network note module **862**, which the actuators receive and adjust the seats position accordingly.

[0311] The seat network node module **862** may be implemented as one or more integrated circuits, may include more or less components than shown, and/or may be implemented as one or more network node modules. For example, the network node module **862** may be implemented using one integrated circuit to support the circuitry of the port **812**, the switching circuit module **786**, and the network interfaces **788**, the digital to analog converters **790**, and the analog digital converters **792**. The other components are implemented on a common integrated circuit, separate integrated circuits, and/or as standalone components.

[0312] FIG. **54** is a schematic block diagram of another embodiment of a network node module that may be used as an assembly (or portion thereof) for a door of a vehicle communication network. Each of the network node modules **864** includes the switching circuit module **786**, a plurality of network interfaces (N/W I/F) **788**, a plurality of ADCs **792**, a plurality of DACs **790**, a plurality of sensors **858-860** and **866-868**, a plurality of user inputs, one or more cameras **876**, one or more user outputs, and a plurality of actuators **872-874**.

[0313] The user inputs may include window control (e.g., up, down, lock, etc.), mirror control (for the driver door), seat control, etc. The user outputs may include one or more audio outputs (e.g., speaker or speaker driver), alarms, etc.

[0314] The plurality of sensors **858-860** and **866-868** may include window sensors **866** for sensing motion, interfering objects (e.g., hand, arm, etc.) and/or other window sensory functions. The sensors may also include mirror sensors **868**, activate sensors, acoustic sensors **860**, and or any other sensors that may be implemented in the door that enhance performance of the vehicle, occupants and/or driver comfort, and/or safety of the vehicle.

[0315] The plurality of actuators **872-874** may include window actuators **872**, mirror actuators **874**, and/or any other actuator that may enhance the performance of the vehicle, enhance occupant and/or driver comfort, and/or enhanced safety of the vehicle. In addition, the actuators may include airbag actuators for side airbags and/or other safety related actuators.

[0316] The camera **876** may be used to record in cabin video of the driver, occupants, etc. For example, the video may be used to detect driver distractions, which may be interpreted by an electronic control unit to generate a corresponding response to minimize the driver's distraction.

[0317] The door network node module **864** may be implemented as one or more integrated circuits, may include more or less components than shown, and/or may be implemented as one or more network node modules. For example, the network node module **864** may be implemented using one integrated circuit to support the circuitry of the port **812**, the switching circuit module **786**, and the network interfaces **788**, the digital to analog converters **790**, and the analog digital converters **792**. The other components are implemented on a common integrated circuit, separate integrated circuits, and/or as standalone components.

[0318] FIG. **55** is a schematic block diagram of another embodiment of a network node module that may be used as an assembly (or portion thereof) for a rear seat of a vehicle communication network. The network node module **878** includes the switching circuit module **786**, a plurality of network interfaces (N/W I/F) **788**, a plurality of ADCs **792**, a plurality of DACs **790**, a plurality of sensors, one or more rear seat entertainment input **880**, one or more rear seat entertainment outputs **882**, and a plurality of actuators.

[0319] The plurality of sensors may be used to sense occupants' movement, position, posture etc. The plurality of actuators may be used to adjust the seat position, heating the seat, cooling the seat, providing a massage function, etc. For example, the sensors may provide information to a seat electronic control unit the other network fabric, where the seat electronic control unit interprets the data to determine an occupant's movement posture, position etc. In this instance, the seat electronic control unit generates control signals that are transmitted via the network fabric to the seat network note module **878**, which the actuators receive and adjust the seats position accordingly.

[0320] The rear seat entertainment inputs **880** and outputs **882** relate to a rear seat entertainment unit (e.g., DVD player, CD player, videogame console, etc.). The rear seat entertainment inputs **880** may relate to source selection (e.g.,

DVD, CD, video game, etc.), channel selection, volume control, video game controller, etc. The rear seat entertainment outputs **882** may be a display, headphone jack, speakers, a 3-D display, etc. Note that if the rear seat entertainment inputs **880** and/or outputs **882** are digital devices, the corresponding ADC **792** or DAC **790** may be omitted.

[0321] The rear seat network node module **878** may be implemented as one or more integrated circuits, may include more or less components than shown, and/or may be implemented as one or more network node modules. For example, the network node module **878** may be implemented using one integrated circuit to support the circuitry of the port **812**, the switching circuit module **786**, and the network interfaces **788**, the digital to analog converters **790**, and the analog digital converters **792**. The other components are implemented on a common integrated circuit, separate integrated circuits, and/or as standalone components.

[0322] FIG. **56** is a schematic block diagram of another embodiment of a network node module that may be used as an assembly (or portion thereof) for an engine of a vehicle communication network. The network node module **884** includes the switching circuit module **786**, a plurality of network interfaces (N/W I/F) **788**, a plurality of ADCs **792**, a plurality of DACs **790**, a plurality of sensors **886-892**, a plurality of actuators **894-900**, and/or a plurality of electronic control units (ECU) **902-908**.

[0323] The plurality of electronic control units **902-908** includes one or more engine control units **902**, one or more by-wire applications **904** (e.g., drive by wire, steer by wire, brake by wire, etc.), safety related functions **906**, and/or diagnostic functions **908**. For each type of electronic control unit **902-908**, the network node module **884** may include one or more sensors and/or one or more actuators. For example, if the network node module **884** includes an engine electronic control unit **902**, the network node module **884** may also include one or more engine actuators **894** and/or one or more engine sensors **886**. As another example, if the network node module **884** includes a by-wire electronic control unit **904**, the network node module **884** may also include one or more by-wire actuators **896** and/or one or more by-wire sensors **888**. As yet another example, if the network node module **884** includes one or more safety electronic control units **906**, the network node module **884** may also include one or more safety actuators **989** and/or one or more safety sensors **890**. As a further example, if the network node module **884** includes one or more diagnostic electronic control units **908**, the network node module **884** may also include one or more diagnostic actuators **900** and/or one or more diagnostic sensors **892**.

[0324] The engine network node module **884** may be implemented as one or more integrated circuits, may include more or less components than shown, and/or may be implemented as one or more network node modules. For example, the network node module **884** may be implemented using one integrated circuit to support the circuitry of the port **812**, the switching circuit module **786**, and the network interfaces **788**, the digital to analog converters **790**, and the analog digital converters **792**. The other components are implemented on a common integrated circuit, separate integrated circuits, and/or as standalone components.

[0325] FIG. **57** is a schematic block diagram of another embodiment of a network node module that may be used as an assembly (or portion thereof) for a transmission of a vehicle communication network. The network node module **910** includes the switching circuit module **786**, a plurality of network interfaces (N/W I/F) **788**, a plurality of ADCs **792**, a plurality of DACs **790**, a plurality of sensors **888-892** and **912**, a plurality of actuators **896-900** and **914**, and/or a plurality of electronic control units (ECU) **904-908** and **916**.

[0326] The plurality of electronic control units **904-908** and **916** includes one or more transmission control units **916**, one or more by-wire applications **904** (e.g., drive by wire, steer by wire, brake by wire, etc.), safety related functions **906**, and/or diagnostic functions **908**. For each type of electronic control unit, the network node module **910** may include one or more sensors and/or one or more actuators. For example, if the network node module **910** includes a transmission electronic control unit **916**, the network node module **910** may also include one or more transmission actuators **914** and/or one or more transmission sensors **912**. As another example, if the network node module **910** includes a by-wire electronic control unit **904**, the network node module **910** may also include one or more by-wire actuators **896** and/or one or more by-wire sensors **888**. As yet another example, if the network node by includes one or more safety electronic control units **906**, the network node module **910** may also include one or more safety actuators **898** and/or one or more safety sensors **890**. As a further example, if the network node module **910** includes one or more diagnostic electronic control units **908**, the network node module **910** may also include one or more diagnostic actuators **900** and/or one or more diagnostic sensors **892**.

[0327] The transmission network node module **910** may be implemented as one or more integrated circuits, may include more or less components than shown, and/or may be implemented as one or more network node modules. For example, the network node module **910** may be implemented using one integrated circuit to support the circuitry of the port **812**, the switching circuit module **786**, and the network interfaces **788**, the digital to analog converters **790**, and the analog digital converters **792**. The other components are implemented on a common integrated circuit, separate integrated circuits, and/or as standalone components.

[0328] Note that each of the network node modules of FIGS. **43-57** may be stand-alone network node module coupled to a switch module or to a bridge-routing module. Alternatively, or in addition to, each of the network node module of FIGS. **43-57** may be a device module coupled to a network node as shown in FIGS. **41** and **42**.

[0329] FIG. **58** is a schematic block diagram of an example of an occupant environment within a vehicle. The occupant environment includes a seat, a plurality of sensors **918-930**, and a plurality of actuators **932**. The sensors **918-930** may be audio sensors **920**, climate sensors **918**, seat sensors **922**, infrared sensors **924**, radio frequency sensors **926**, and/or touch sensors **928**. The actuators **932** may be seat actuators **932**. The sensors **918-930** and actuators **932** may be in a steering wheel network node module, within a seat network node module, within a door network node module, and/or within a dashboard network node module.

[0330] The touch sensor **928** may be used to detect whether the driver has one or more hands on the steering wheel. The touch sense data is communicated via the network fabric to a processing module that interprets the data. For example, the processing module may interpret the touch sensed data to determine whether the driver has one or more hands on the steering wheel, the position of the driver's hands, the force at which the driver is grabbing the

steering wheel, etc. Based on this data, the processing module may generate one or more responses. For example, if the data indicates that the driver has his or her hands off the steering wheel for a predetermined period of time, the processing module may generate an audible and/or visual alarm. As another example, if the data indicates that the driver is grabbing the steering wheel with excessive force, the processing module may generate control signals that activate a chair massage to relax the driver.

[0331] The infrared sensors **924** and/or the RF sensors **926** may be used to track the eye movement of the driver, the driver's head position, the driver's hand and/or body movement, hand gestures, etc. The driver sensed data is communicated via the network fabric to a processing module that interprets the data. For example processing module may interpret the driver sensed data to determine whether the driver is focused on the road, is distracted, is falling asleep, is indicating a visual command, etc. Based on this data, the processing module may generate one or more responses. For example, if the driver is determined to be falling asleep, the processing module may generate an audible alarm, a visual alarm, may activate one or more seat actuators to shake the driver, etc.

[0332] The audio sensors **920** may be used to detect ambient noise, receive audible commands from a vehicle occupant, etc. The audio data is communicated via the fabric network to one or more processing modules that interpret the audio data. For example, if the sensor is detecting ambient noise, the processing module may utilize the ambient noise audio data for noise cancellation, surround sound balancing, in-cabin equalization, and/or other audio processing adjustments. As another example, if the audio relates to a voice command, a corresponding processing module interprets the voice command and generates a corresponding response. As a specific example, the voice command may be to adjust the seat position. In this specific example, the processing module generates one or more commands that it provides, via the network fabric, to one or more seat actuators, which process the commands to adjust the seat.

[0333] The climate sensors **918** may be used to detect ambient temperature, air movement, air quality, etc. The climate sensed data is provided to one or more processing modules via the network fabric. The processing modules interpret the climate sensed data and, based on this interpretation, the processing module may generate one or more responses. For example, if the climate sensed data indicates that the temperature is above a desired setting, the processing module may generate one or more commands to lower the terminal temperature, increase the fan rate, and/or other climate adjustment. Such commands are provided via the network fabric to the corresponding actuators. As another example, if the climate sensed data indicates that the air quality is below a desired setting, the processing module may generate a command to enable air filtering, switch to internal circulation of air to bringing in external air, the reverse, etc.

[0334] FIG. **59** is a logic diagram of an embodiment of a method for processing occupant sensed data that begins by determining whether one or more persons are in the vehicle **934**. If only the driver is in the vehicle, the method proceeds by a receiving driver sentenced data **936**. If, however, there are other occupants besides the driver in the vehicle, the method continues by receiving driver sensed data and other occupant sensed data **938**.

[0335] The method continues by processing the driver sensed data **940** and, if any, the other occupant sensed data **942**. For other occupant sensed data, the method continues by determining whether the occupant sensed data indicates whether an environmental adjustment should be made **944**. For example, if the ambient temperature is above a desired setting, an adjustment may be made to the temperature setting and/or to the fan rate. As another example, if the occupant sensed data relates to a change in the occupants seat position, the processing module generates the corresponding commands, which are provided via the network fabric to the appropriate actuators. At this point, with respect to the occupant sensed data, the method repeats **946**.

[0336] For driver sensitive data, the method continues by determining whether the driver's actions relate to a safety issue **948**. If not, the method continues by determining whether the driver's actions relate to a control gesture **950**. If not, the process continues by adjusting the environment based on the driver sensed data **944**. Note that the adjustment to the environment may be based on both the driver sensed data and the other occupants sensed data.

[0337] If the driver's actions relate to a safety issue, the method continues by determining whether there is also an externally sensed safety issue **952** (e.g., a potential collision detection, icy road conditions detection, tire blowout detection, etc.). If not, the processing module generates one or more control signals to activate a driver awareness measure (e.g., an audible alarm, a visual alarm, shake the seat, etc.) in response to the driver's inattentiveness to driving **954**.

[0338] If there is also an externally sensed safety issue, the method continues by activating auto safety precaution measures (e.g., auto braking, auto steering, auto transmission adjustment, etc.) **956**. The method continues by determining whether the auto safety measures were successful in avoiding an accident **958**. If yes, the method repeats **960**. If not, the method continues by recording the driver sensed data in a one-time programmable (OTP) memory device **962**.

[0339] FIG. **60** is a diagram of an example of a moving recording time window **964** for recording real-time data, such as sensor data (e.g., driver sensed data and/or occupant sensed data) captured by one or more sensors within the vehicle. The recording time window **964** may have a fixed duration, such as a few minutes in length to one or more hours in length. Provided that the vehicle is not in an accident, older driver sensed data is overwritten with newer driver sensed data as the recording time window **964** moves forward in time **966**.

[0340] When an accident **970** is detected, the recording time window **964** is frozen such that a sufficient amount of data preceding the accident **970** and following the accident **970** is stored in a one-time programmable memory device. For example, if the time window **964** is 45 minutes in duration, the 30 minutes preceding the accident **970** and the 15 minutes following the accident **970** may be frozen and provided to the one-time programmable memory device.

[0341] In addition to recording sensor data during vehicle operation, video data of the exterior and/or interior of the vehicle may be recorded in a one-time programmable memory device when an accident **970** is detected. The video data may further include audio data, if the camera is capable of capturing sound. In this instance, the exterior video data may be recorded in the same one-time programmable memory device or its own one-time programmable memory device. Note that each camera may have its own one-time

programmable memory device, share a one-time programmable memory device, and/or a combination thereof.

[0342] In addition to recording data during vehicle operation, the system may be enabled to record proximity video data when the vehicle is in a parking lot and/or when the vehicle is not in operation. In this instance, if an accident **970** happens while the vehicle is not operating (e.g., is parked in a parking lot), the recording time window **964** will be frozen around the accident **970**. In this manner, video evidence may be obtained of the vehicle or vehicles causing the accident, even if the driver of the other vehicle or vehicles leaves the scene of accident **970**.

[0343] FIG. **61** is a schematic diagram of an embodiment of one or more vehicle black boxes **972**. Each video black box **972** may receive video data **974** captured by one or more peripheral cameras **976** and sensor data **978** captured by one or more sensors **980**. In general, the video black box **972** includes memory that stores the corresponding real-time data during the recording time window and includes circuitry that when an accident is sensed, freezes the recording time window, and downloads the real-time data within the frozen recording time window in a one-time programmable memory.

[0344] FIG. **62** is a schematic diagram of another embodiment of a vehicle black box **972** that includes a port **982**, a network interface module **984**, random access memory **986**, a processing module **988**, a local power source **990**, a one-time programmable memory **992**, and a radio frequency interface module **994**. The local power source **990** may be a battery, power harvesting circuit (e.g., generates a supply voltage from radio frequency signals, heat, solar energy, etc.), a battery charger, and/or a combination thereof.

[0345] In an example of operation, the vehicle black box **972** is coupled to a network switch module **996** and receives video data and/or sensor data therefrom. The network interface module **984** provides the real-time data (video and/or sensor data) to the RAM **986** and to the processing module **988**. The processing module **988** facilitates the storage of the real-time data in the RAM **986**. The amount of storage within the RAM **986** and the amount of data per second correspond to the recording time window. For example, if the RAM **986** has a storage capacity of 250 Gb, the data rate is 10 Mb per second, the RAM **986** can store 25,000 seconds of data (e.g., approximately 7 hours). Note that the recording time window may be shorter than the capacity of the memory and corresponding data rate (e.g., it may be an hour for a 7 hour capable memory/data rate combination).

[0346] As time passes without an accident, the older data stored in the RAM **986** is overwritten with newer data. When an accident is detected, a collision indication is provided to the processing module **988**, which instructs the RAM **986** to download the real-time data within the RAM **988** to the one-time programmable memory **992**. In one embodiment, the processing module **988** instructs the RAM **986** to begin downloading data to the OTP memory **992** with the data immediately preceding and immediately following the collision indication such that the most likely relevant data is stored first. Once this data is stored, the processing module **988** may instruct the RAM **986** to download additional data. In addition, the processing module **988** may activate the local power source **990**, which provides power to the video black box **972** to enable the downloading of data to the one-time programmable memory **992**. In other embodiments, the local power source **990** may further provide power to one or more external devices within the vehicle via the vehicular communication network through port **982**.

[0347] The data stored in the one-time programmable memory **992** may be retrieved through the RF interface **994** in accordance with a one-time programmable memory **992** communication protocol. For instance, after an accident, emergency services may utilize a radio to communicate with the RF interface **994** to access the data in the one-time programmable memory **992**. To protect the data, the communication protocol is proprietary to the auto manufacturer and the emergency services such that only emergency services may access the data.

[0348] In the alternative and depending on the severity of damage to the vehicle, the one-time programmable memory **992** may be accessed via the network fabric (vehicular communication network) through port **982**. In this instance, a computer device coupled to the network fabric may access the data stored in the one-time programmable memory **992**. In this manner, an entity that is authorized to access a vehicle network fabric may retrieve the data.

[0349] FIG. **63** is a schematic diagram of an embodiment of power distribution within a vehicular communication network. In this embodiment, power sourcing equipment (e.g., a switch module, a bridge/routing module, etc.) provides power over the Ethernet (POE) to a plurality of network node modules (two shown). The power source equipment includes a POE management module, a plurality of ports, and, while not shown, the circuitry corresponding to the functionality of the power sourcing equipment (e.g., circuitry of a switch module and/or bridge-routing module). Each of the network node modules includes a port, a network interface module, and a device. In the present illustration, one network node includes a digital to analog converter and an analog input device and the other network node module includes an analog to digital converter and an analog output device. Each of the network node modules may further include a DC-DC converter.

[0350] In an example of operation, the power sourcing equipment provides a 48 V DC supply voltage (or other supply voltage as may be specified in an Ethernet protocol) to the network node modules under the control of the POE management module via the ports and interconnecting cable. The functionality of the POE management module will be described in greater detail with reference to FIG. **65**.

[0351] Each network node module receives the 48 V supply voltage via its port and provides it to a DC-DC converter. The DC-DC converter generates one or more DC voltages from the 48 V supply voltage based on supply voltage needs of the devices of the network node module. For example, if the network node module includes one or more integrated circuits, the DC-DC converter may generate a 2 V supply voltage, a 5 V applied voltage, etc. Alternatively, if the device is a relay, then the DC-DC converter may pass the 48 V. As such, the DC-DC converter generates the supply voltage needed for the various components of the network node module. Note that if that the devices of the network node module only need a 48 V supply, the DC-DC converter may be omitted. Further note that the DC-DC converter may step up to the 48 V to a higher DC voltage. Still further note that the DC-DC converter may include an inverter topology to produce and AC voltage.

[0352] FIG. **64** is a schematic diagram of another embodiment of power distribution within a vehicular communication network and, in particular, of a network node module.

The network node module includes a port, the switching circuit module, a plurality of network interfaces, a plurality of analog to digital converters, a plurality of digital to analog converters, a plurality of analog output devices (e.g., sensors, output side of ECUs, etc.), a plurality of analog input devices (e.g., actuators, input side of ECUs, etc.), a DC-DC converter, and a power distribution module. The switching circuit module, the network interfaces, the ADCs, the DACs, the analog output devices, and the analog input devices function as previously described.

[0353] In an example of operation, the DC-DC converter receives the power over Ethernet supply voltage in a manner similar to that discussed with reference to FIG. **63**. The DC-DC converter generates one or more supply voltages that are provided to the power distribution module. The power distribution module provides a supply voltage to one or more of the devices based on one or more control signals. For example, if the control signal indicates that analog output device number one is to receive power, the distribution module couples the supply voltage to the device. In this manner, each of the devices of the network node module may be individually powered on or off. With the ability to individually power on or off a device, a device may be reset, disabled, fused off, etc. via a control signal generated by a processing module coupled to the network fabric.

[0354] FIG. **65** is a logic diagram of an embodiment of a method for controlling power distribution within a vehicular communication network. The method begins by enabling power over the Ethernet (POE) to a network node, which may be done as previously discussed with reference to FIGS. **63** and **64**. The method continues by determining whether the network node includes more than one device. If not, the method continues by monitoring the current draw of the network node module.

[0355] The method continues by determining whether the current draw exceeds a current limit. If so, the device may be damaged and the POE management module disables POE to the network node. The method then continues by determining whether to resume POE to the network node module. This may include a retry mechanism where POE is reapplied to the network node and the loop of monitoring the current draw and exceeding a current limit is repeated. If the current draw continues to exceed the current limit after a predetermined number of retries, the device is flagged as damaged and the retry mechanism is stopped. Alternatively, the POE management module may determine to resume POE to the network node module after it receives an indication that a damaged device has been replaced.

[0356] If a current limit is not exceeded, the method continues by determining whether the device should be reset. The determination to reset the device may be based on a software update, routine maintenance, reboot the device, etc. If the device is to be reset, the method continues by disabling the POE to the network node module. The method then continues by determining whether to resume POE to the network node. In this instance, since the device is being reset, the POE will resume after a predetermined period of time has elapsed.

[0357] If a device is not to be reset, the method continues by determining whether the link to the network node is to be reset. If not, the method repeats at the monitor the current draw of the network node module step. If the link is to be reset, the link may be reset using a layer 2 control protocol. The process then continues by disabling POE to the network node. The method then continues by determining whether to resume POE to the network node. Since the link is being reset, POE will resume after a predetermined period of time has elapsed. In the alternative, after the decision to reset the link has been made, the link may be reset using a layer 2 control protocol without disable aim POE to the network node.

[0358] If the network node includes more than one device, the method continues by monitoring current draw of the multi-device network node module. The method continues by determining whether the current draw of the multi-device network node exceeds an expected current limit level. If so, the POE management module sends a message to the network node. The message may instruct the network node to shut down, remove power from one or more devices, provide information that the current draw is exceeding a current limit threshold, and/or to anticipate further instructions.

[0359] The method continues by receiving a response to the message. The response may indicate that the problem has been resolved, that the excessive current draw is due to an abnormally large amount of processing, etc. If the POE management module deems the response to be favorable, the method repeats as shown. If, however, the POE management module does not deem the response favorable, the method continues by disabling POE to the network node module. The method then continues by determining whether to resume POE to the network node module. Such a determination may be based on a retry mechanism, the nature of the network node module, an indication that a damaged part has been replaced, etc.

[0360] If the current draw of the network node module does not exceed the expected level, the method continues by determining whether one or more of the devices of the network node module are to be reset. If so, the method continues by sending a message to the network node module to reset the particular device, or devices. The method then continues by determining whether a favorable response (e.g., the device has been reset) to the message has been received. If so, the method repeats as shown. If not, the POE management module disables POE to the network node module and subsequently determines whether to resume POE to the network node module.

[0361] If one or more of the devices are not to be reset, the method continues by determining whether the link to the network node module is to be reset. If not, the method repeats as shown. If yes, the method continues by resetting the link using a layer 2 control protocol. The method then repeats as shown.

[0362] FIG. **66** is a logic diagram of another embodiment of a method for controlling power distribution within a vehicular communication network that may be performed by a POE distribution module within a network node module. The method begins by monitoring current draw of each device of the network node module at step **1074**. The method continues by determining whether the current draw for each device exceeds a current limit threshold at step **1076**.

[0363] If the current draw of a device exceeds the current limit, the POE distribution module disables power to the device at step **1078** and sends a corresponding message to the POE management module at step **1080**. The method then continues by determining whether to resume providing power to the device at step **1082**. Such a determination may be based on receiving a signal from the POE management

module, a retry mechanism, an indication that the device has been replaced, and/or another indication. If power to the device is to be resumed, the method continues by enabling power to the device at step **1084**. Note that the monitoring of the current draw of a device and corresponding disabling power to the device is done on a device-by-device basis.

[0364] If the current draw of the devices does not exceed a current limit, the method continues by determining whether a message to reset a device is received at step **1086**. If yes, the method continues by disabling power to the device at step **1078** and sending a corresponding message to the POE management module at step **1080**. The POE distribution module will resume providing Power to the device upon receipt of a message from the POE management module to do so.

[0365] If a message to reset a device is not received, the message continues by determining whether a message to power down a device is received at step **1088**. If not, the method repeats as shown. If so, the method continues by disabling power to the particular device at step **1078** and sending a message to the POE management module that the device has been powered down at step **1080**. The POE distribution module will resume providing Power to the device upon receipt of a message from the POE management module to do so.

[0366] FIG. **67** is a schematic diagram of an embodiment of a network interface **1026** within a vehicular communication network. The network interface **1026** of a network node module includes a network transceiver **1090** and protocol processing unit that includes a protocol controller **1092** and/or a processing module **1094**. The network transceiver **1090** provides the physical layer interface to the network fabric for the corresponding device. The controller functions to receive and store bits to/from the processing module **1094**, which functions to interpret messages and generate messages corresponding to the data to/from the network fabric.

[0367] In an example of operation, the network transceiver **1090** receives data from a device. As shown, the device is an electronic control unit (ECU) **1096** that functions in accordance with an existing vehicle communication protocol (e.g., one of the protocols referenced in FIG. **1**), but may be any vehicle device. In this example, the network transceiver **1090** receives a legacy protocol formatted frame **1098** from the ECU **1096**. The processing module **1094** and/or protocol controller **1092** interpret the frame to determine that it is a legacy protocol frame **1098**, includes raw data, or is formatted in accordance with the global vehicle network communication protocol.

[0368] For the legacy protocol, the processing module **1094** and/or controller **1092** then determines to re-packetize the frame or to encapsulate the legacy protocol frame **1098** in the payload section **1114** of a modified network frame/packet **1100**. In addition, the processing module **1094** and/or controller **1092** generates the data for the vehicle network field **1106** of the modified network frames/packet **1100**. For example, if the ECU **1096** relates to a mission-critical function, the appropriate data will be inserted into the vehicle network field **1106**.

[0369] To re-packetize a frame, the processing module **1094** and/or protocol controller **1092** interprets the legacy protocol frame **1098** to extract a destination address, source address, type/length information, payload, cyclic redundancy check, and any other relevant information of the legacy protocol frame **1098**. Having extracted this data, the processing module **1094** and/or protocol controller **1092** reconstructs the modified network packet **1100** to include a preamble **1102**, start of frame **1104**, vehicle network field **1106**, the destination address **1108**, the source address **1110**, type/length **1112**, the payload **1114**, the cyclic redundancy check **1116**, and a gap **1118** in accordance with the protocol of the vehicle network communication system.

[0370] To encapsulate the legacy protocol frame **1098** into a modified network frame **1100**, the processing module **1094** and/or protocol controller **1092** interprets the legacy frame **1098** to extract the destination address and the source address. The processing module **1094** and/or protocol controller **1092** generates a preamble **1102**, start of frame **1104**, the vehicle network field **1106**, the destination address **1108** based on the extracted destination address, a source address **1110** based on the extracted source address, a type/length **1112**, a payload **1114** that includes at least a portion of the legacy protocol frame **1098**, the CRC **1116**, and a gap **1118**. Depending on the length of the legacy protocol frame **1098**, it may be completely encapsulated in the payload **1114** of the modified network frame **1100** or divided into sections, where each section is encapsulated in the payload **1114** of a modified network frame **1100**.

[0371] For raw data (i.e., a signal stream not formatted in accordance with a legacy protocol or with the global vehicle network communication protocol), the protocol processing module converts the data into one or more packets (or frames) in accordance with the global vehicle network communication protocol. For global vehicle network communication protocol frames (or packets), the protocol processing module provides the frames (or packets) to the network transceiver in accordance with the locally managed prioritization scheme.

[0372] For an incoming packet from the network fabric, the processing module **1094** and/or protocol controller **1092** interprets the vehicle network field **1106** to determine the type of frame or packet (and its priority level). Based on this information, the processing module **1094** and/or protocol controller **1092** facilitates prioritize processing of the packet/frame **1100** as previously discussed or as may be subsequently discussed. In addition, the processing module **1094** and/or protocol controller **1092** may packetize the incoming packet **1100** into the legacy protocol frame **1098** (or multiple legacy protocol frames) or convert the incoming packet into raw data.

[0373] FIG. **68**A is a logic diagram of an embodiment of a method for managing devices coupled to the vehicular communication network that may be performed by a network node module, such as a multiple device network node module, a switching module and/or a bridge/routing module. The method begins by configuring the network node module in accordance with a particular use mode of a set of use modes **1101**. Each use mode defines the rights and privileges for devices to operate in the vehicular communication network. Each use mode may be implemented, for example, by an access control matrix or other type of access rules table that enables the network access rights to be enforced. For example, the access control matrix may indicate the rules for device detection, device authentication, identifying damaged devices and disabling damaged devices, as will be described in more detail below in connection with FIGS. **69-71**.

[0374] Upon being configured in accordance with a particular use mode of the set of use modes, the method continues by identifying a device coupled to the vehicular communication network **1103**. The device may be a newly added device or an existing device. For example, the device may be a device within a multiple device network node module or another network node module. The method continues by managing the device in accordance with the use mode (e.g., enabling the device to operate within the vehicular communication network in accordance with the use mode) **1105**. For example, the network node module can authenticate a new device based on the use mode (i.e., the use mode may indicate whether or not a particular new device is allowed and the contact information for authenticating the new device). As another example, the network node module can monitor an existing device (i.e., by comparing stored expected data and/or power consumption information to the actual consumption of an existing device) to determine whether that existing device is damaged and/or disable a damaged device based on the use mode.

[0375] The method continues by determining whether the use mode has been changed **1107**. In one embodiment, the network node module is securely reconfigurable to any use mode in the set of use modes. For example, an authorized agent may access the network node module via a direct (wireline) connection or a wireless connection to the network node module and/or the vehicular communication network to select a particular use mode. The use mode may be selected, for example, based on the make/model of the vehicle, the country to which the vehicle is destined and any other factor(s). If the use mode has changed, the method continues by reconfiguring the network node in accordance with the new use mode **1101**. If not, the method continues by managing the same or another device(s) in accordance with the current use mode **1103**.

[0376] FIG. **68**B is a schematic diagram of an embodiment of a network node module **1109** that includes a port **1111**, a network interface **1113**, a device **1115** (which may be a new device or an existing device), a memory **1117** and a processing module **1119**. The memory **1115** maintains a set of use modes **1121**, which may include, for example, a respective access control matrix for each use mode. The memory **1115** may further maintain separately or as part of the access control matrix authentication information for one or more new devices, such as contact information for a remote source to authenticate a new device, and expected data and/or power consumption information for an existing device.

[0377] In an example of operation, the network node module **1109** is coupled to the vehicular communication network via port **1111** and network interface **1113** to receive input from an authorized agent selecting a particular use mode **1121**. In another embodiment, the use mode selection may be input directly to the network node module via a direct (wired) connection or a wireless connection. Upon receiving the selected use mode, the processing module **1119** accesses the memory **1117** to retrieve the selected use mode **1121** and configures the network node module **1109** in accordance with the selected use mode **1121**. Based on the selected use mode **1121**, the processing module **1119** manages the device **1115** by enabling the device to operate within the vehicular communication network in accordance with the selected use mode **1121**.

[0378] FIG. **69** is a logic diagram of an embodiment of a method for adding a device to a vehicular communication network in accordance with a particular use mode that may be performed by a network node module, such as a multiple device network node module, a switching module and/or a bridge-routing module. The method begins by a detecting the connection of a new device, which may be a new network node module or a new device on a network node module **1120**. The method continues by assigning a restricted use network address to the new device **1122**. The restricted use network address allows the new device to communicate via the network fabric of the vehicular communication network for communication setup information only. As such, the new device is prohibited from accessing the network fabric for any other purpose until the restricted use address is replaced with a network address. To enforce this restriction, the network fabric module interprets the packets from a new device to determine whether its contents are related to communications set up. If not, the packet is discarded and not placed on the network fabric.

[0379] The method continues by obtaining authentication information (e.g., serial number, manufacturer ID code, etc.) from the new device using the restricted use network address **1124**. The method continues by accessing a remote source via the gateway (e.g., a wireless connection through the gateway) to authenticate the new device **1126**. For example, if the new device is a replacement device, the remote source may be the automobile manufacturer, an authorized service provider, etc. As another example, the new device may be a new component (e.g., a new control unit, a new interface, etc.) being added to the vehicular communication network and the remote source may be an authorized supplier or the automobile manufacturer. The network fabric module retrieves contact information for the remote source, accesses the remote source using the contact information and provides the authentication information regarding the new device to the remote source for verification of the device. The contact information for the remote source may be, for example, maintained within the internal memory of the network fabric module, stored within a memory of the vehicular communication network and retrieved into the internal memory of the network fabric module or downloaded into the internal memory of the network fabric module from another external (remote) source.

[0380] The method continues by receiving verification information from the remote source **1128**. The verification information may indicate that the new device is a device that can be reliably added to the network or may indicate that the device could not be authenticated with instructions to either not add the device to the network or allow the installer to override the verification information (e.g., using a password or other override code).

[0381] The method continues by determining whether the new device was authenticated by the remote source **1130** (or authenticated by override of the installer). If yes, the process continues by converting the restricted use network address into a network address **1132** and updating the various databases of the vehicular communication network with the new network address of the new device **1134**.

[0382] If the new device was not authenticated, the process continues by determining whether there is another source that may be accessed **1136**. If yes, the process repeats as shown. If not, the method continues by denying the new device access to the network **1138** and, if possible, disabling power to the new device **1140**. The disabling of the power may be done as previously discussed with reference to one

or more of FIGS. **63-66** or as may be discussed with reference to one or more of FIGS. **70**A and **70**B.

[0383] FIG. **70**A is a schematic diagram of an embodiment of a new device **1142** coupled to a switch module **1144** within a vehicular communication network. In this diagram, a new device **1142** (e.g., a network node with a single device or a network node with a plurality of devices where one of the devices is new or all of devices are new) receives its power from a power over Ethernet (POE) connection **1150** from a switch module **1148** and/or from a power line **1146** via a switch **1148**.

[0384] If, as discussed with reference to FIG. **69**, the new device **1142** is not authenticated, the switch module **1148** may disable the POE **1150** to the new device thereby disabling it. Alternatively, or in addition to, if the new device **1142** receives power from the power line **1146**, a processing module of the network manager may disable the switch **1148** that couples the new device **1142** to the power line **1146** thereby disabling the new device **1142**. In either configuration, a new device **1142** that is not authenticated may readily have the power removed from it thereby effectively disabling it.

[0385] FIG. **70**B is a schematic diagram of an embodiment of a new device **1142** added to a network node module **1154** that includes a port **1152**, a switching circuit module **1056**, a plurality of network interfaces **1158**, at least one existing device **1160**, at least one new device **1142**, one or more switches **1148**, a DC-DC converter **1162**, and a power distribution module **1164**. Upon detection of the new device **1142**, the power distribution module **1164** enables power to be provided to the new device **1142** either via the power line **1146** or the power over Ethernet (POE) **1150**.

[0386] If the new device **1142** is not authenticated as discussed with reference to FIG. **69**, the power distribution module **1164** removes power from the new device **1142**. This may be done by disabling the switch **1148** that couples the new device **1142** to the power line **1146** or by disabling the POE connection **1150**. In either event, the new device **1142** is powered down and thus disabled. Note that the power distribution module **1164** may receive a control signal from the switching module **1156**, or other network fabric module, to remove power from the new device **1142**.

[0387] FIG. **71** is a logic diagram of an embodiment of a method for monitoring an existing device in accordance with a particular use mode to determine whether the existing device is a damaged device within a vehicular communication network. The method of FIG. **71** may be performed by a network fabric module, such as a network node module, a switch module, and/or a bridge-routing module. The method begins with monitoring actual consumption of the existing device, where the actual consumption includes at least one of data consumption of the existing device **1166** (on one path) and power consumption of the existing device **1168** (on another path). Note that the existing device may be a network node module with one or more devices or a device of a network node module.

[0388] For the data consumption path, the method continues by determining whether the data consumption of the existing device deviates from an expected level of data consumption **1170**. Such expected consumption information (expected level of data consumption and standard deviation therefrom) may be, for example, maintained within the internal memory of the network fabric module, stored within a memory of the vehicular communication network and retrieved into the internal memory of the network fabric module or downloaded into the internal memory of the network fabric module from an external (remote) source. The expected level of data consumption and standard deviation therefrom is based on the type of device (e.g., a display, an electronic control unit, a sensor, an actuator, etc.). For example, a display that is enabled to receive a video file will consume a certain amount of data per time interval (e.g., 2 Mb per second for standard television formatting).

[0389] If an existing device is consuming data a rate that is outside of the standard deviation, the method continues by determining whether there is a valid reason for the data consumption deviation **1172**. For example, a valid reason may include a busy sensor due to driving conditions (e.g., a car on a racetrack) or a rarely used sensor due to driving conditions (e.g., stuck in traffic). If the reason is valid, the method repeats as shown.

[0390] If, however, the reason is not valid, the method continues by flagging the device is damaged **1174**. The method continues by disabling the damaged device (e.g., remove power) or reducing the damaged device's access to the network fabric **1176**. For example, the network fabric module may use a sliding scale based on type of device to reduce access to the vehicular communication network, such that mission critical devices are not prevented from accessing the vehicular communication network for mission critical operations. In addition, a service indication may be generated regarding the damaged device.

[0391] For the power consumption path, the method continues by determining whether the power consumption of the device deviates from an expected level of power consumption **1178**. Again, such expected consumption information (expected level of power consumption and standard deviation therefrom) may be, for example, maintained within the internal memory of the network fabric module, stored within a memory of the vehicular communication network and retrieved into the internal memory of the network fabric module or downloaded into the internal memory of the network fabric module from an external (remote) source. The expected level of power consumption and standard deviation therefrom is based on the type of device (e.g., a display, an electronic control unit, a sensor, an actuator, relay, etc.). For example, a display that is enabled to receive a video file will consume a certain amount of power (e.g., 2 Watts).

[0392] If an existing device is consuming power at a level that is outside of the standard deviation, the method continues by determining whether there is a valid reason for the data consumption deviation **1180**. For example, driving conditions dictate a much higher or lower rate of use and thus a much higher or lower power consumption.

[0393] If, however, the reason is not valid, the method continues by flagging the device is damaged **1182** (e.g., is shorting or is an open circuit). The method continues by disabling the damaged device (e.g., remove power) or reducing the damaged device's access to the network fabric **1184**. In addition, a service indication may be generated regarding the damaged device.

[0394] FIG. **72** is an example diagram of an embodiment of network and/or resource planning within a vehicular communication network. In this example, where possible, like devices are logically grouped together and coupled to a grouped set of network modules (e.g., switch modules, bridge-routing modules, etc.). For example, mission critical

sources (e.g., safety sensors) **1186**, mission critical destinations **1188** (e.g., safety actuators), and mission critical processing modules **1190** (e.g., safety ECUs) are coupled to a set of switch modules **1192** and bridge-routing modules **1194**. Similarly, video sources **1196** (e.g., cameras, GPS navigation system, video game consoles, etc.), video processing modules **1198** (e.g., graphics engine, video decoder, video encoder, etc.), and video destinations **1200** (e.g., displays, etc.) are coupled to a set of switch modules **1192** and bridge-routing modules **1194**. The same type of grouping may be done for vehicle operation sources **1202**, destinations **1206**, and processing resources **1204** and for safety sources **1208**, safety destinations **1210**, and safety processing resources **1212**.

[0395] By grouping the network node devices of the vehicle network communications system, the network fabric is capable of supporting multiple simultaneous packet communications. For example, vehicle operation data **1220** may be routed from a vehicle operation source **1202** to a vehicle operation processing resource **1204** concurrently with routing entertainment video data **1216** from a video processing resource **1198** to a video destination **1200** as long as the routings of the respective data do not use common resources of the network fabric.

[0396] FIG. **73** is an example diagram of an embodiment of a packet queue for concurrent packet transmissions within a vehicular communication network. The queue includes a queue address **1222**, a packet field identifier **1224**, a source identifier **1226**, a destination identifier **1228**, and network resources **1230**. From this data, a network manager (centralized or distributed) may identify packets that may be concurrently transmitted.

[0397] For example the first entry in the queue has a queue address of 001 and identifies mission-critical packet number one, which has a source of mission-critical sensor one, a destination of mission-critical processing module three and uses switching modules 2 and 3 and bridge-routing module **1** as the network resources. Since this is the first packet in the queue, it has priority for transmission. That being said, other packets that use different network resources may be concurrently transmitted without interfering with the priority of the first packet.

[0398] In this example the packet at queue address 003 and the packet at queue address 007 used different network resources that the packet at queue address 001 and used different network resources and each other. As such, these packets may be simultaneously transmitted via the network fabric with acceptably negligible interference on each other.

[0399] FIG. **74** is an example diagram of concurrent packet transmissions within a vehicular communication network based on the packets of the queue in FIG. **73**. As shown, at a given time tx, three packets can be concurrently transmitted since they use non-overlapping network fabric resources. At time tx+1, another three packets may be concurrently transmitted since they do not use overlapping network fabric resources. Similarly at time tx+2, three packets may be concurrently transmitted. For the remaining time intervals, based upon the remaining packets in the queue, each packet is singularly transmitted in a corresponding time interval to avoid the use of overlapping resources within the network fabric.

[0400] FIG. **75** is a logic diagram of an embodiment of a method for concurrent packet transmissions within a vehicular communication network that may be performed by a network manager, a switch module, a bridge-routing module, and/or a network node module. The method begins by receiving a packet from a device, network node module, a switching module, and/or a bridge-routing module **1232**. The method continues by determining the source and destination of the packet, which may be done by interpreting the respective fields of the packet **1234**. Network resources are determined based on a packet's source and destination at block **1236**.

[0401] The method continues by entering the packet into a queue based on a prioritization scheme **1238**. Various types of prioritization schemes have been discussed with reference to one or more preceding figures and may be further discussed with reference to one or more subsequent figures. In addition to prioritizing the packet within the queue based on the prioritization scheme, the network resources are recorded in the queue. The network resources may be determined from a network topographical map (or database) that includes known sources, known destinations, known redundant paths, known device states, and known network connections there between.

[0402] The method continues by determining whether a higher priority packet that uses different network resources is in the queue **1240**. If yes, the method continues by associating transmission of the present packet with the higher priority packet for concurrent transmission **1242**. The higher priority packet may be the next packet to be transmitted or it may be further down in the queue.

[0403] If there are no higher priority packets within the queue that use different network resources, the method continues by determining whether the network resources of the present packet may be adjusted **1244**. For example, there may be multiple routes between a source and destination, where one route is the primary route. If the primary route has a network resource conflict with other packets higher in the queue, then a determination is made as to whether the other potential routes may be used that avoid a network resource conflict. If not, the packet is placed in the queue and is transmitted in accordance with its priority in the queue.

[0404] If the network resources for the current packet can be adjusted, the method continues by adjusting the network resources to avoid the conflict **1246**. In this instance, the adjustment of the network resources may be a temporary adjustment for this packet and recorded within the databases as such. Alternatively, this may be a permanent adjustment in network resources, which is recorded in the appropriate network databases.

[0405] Within the network fabric, each switch module, bridge-routing module, and network node module contains one or more queues. Each of the queues may be dedicated to a particular type of packet, to a particular port, or ports, etc. Connecting modules (e.g., a switch module & bridge-routing module; two bridge-routing modules; a network node module & switch module; a network node module & a bridge-routing module) coordinate the transmission of packets there between utilizing the method of FIG. **75** and/or any other method described herein

[0406] FIG. **76** is a schematic diagram of an embodiment of a data bridge **1248** coupling a higher priority network fabric **1250** to a lower priority network fabric **1252** within a vehicular communication network. The high-priority network fabric **1250**, which typically supports higher priority packets than the lower priority network fabric, includes a plurality of switch modules (SW mod) **1254**, a plurality of

bridge-routing modules, and a plurality of network node modules, which support a plurality of resources (e.g., processing module resources **1256** and memory resources **1258**). The lower priority network fabric **1252** includes a plurality of switch modules **1254**, a plurality of bridge-routing modules, and a plurality of network node modules, which support a plurality of resources. The details of the network fabrics have been discussed in detail with reference to FIGS. **13-57** and will be discussed in greater detail with reference to FIGS. **87-99**.

[0407] The data bridge **1248** includes a plurality of redundancy/backup modules **1260** (as discussed in detail with reference to FIG. **17**), a plurality of packet ingress units **1262**, a plurality of packet egress units **1264**, a processing module **1266**, and memory **1268**. Each of the redundancy/backup modules **1260** is coupled to a switch module **1254** of a network fabric **1250-1252**, a packet egress unit **1264**, and a packet ingress unit **1262**. As an alternative, a redundancy/backup module **1260** may be coupled to a bridge-routing module within the corresponding network fabric **1250-1252**. The processing module **1266** is configured to implement a high-to-low priority transfer process **1270** and a low-to-high packet transfer process **1272**. The memory **1268** stores one or more of the databases **1274**, which include a forwarding database, a filtering database, a routing table, a network protocol database, an information/entertainment database, a vehicle operation database, a mission-critical database, and/or a network topology database.

[0408] In an example of operation, the redundancy/backup module **1260** receives a packet from the higher priority network fabric **1250**. The packet may contain data in its payload having one or more destinations coupled to the lower priority network fabric **1252** or the packet may contain a request for resources within its payload. In either case, the redundancy/backup module **1260** provides the packet to the packet ingress unit **1262**. The packet ingress unit **1262** temporarily stores and filters the packet. For example, the packet ingress unit **1262** accesses a source and/or destination filter that contains network addresses of sources of the high-priority network fabric **1250** and/or destinations of the lower priority network fabric **1252** that are currently prohibited from transmitting or receiving packets from the other network fabric. If the packet is not filtered, it is placed in an ingress queue for subsequent processing by the processing module **1266**.

[0409] The processing module **1266** performs a high-to-low packet transfer function **1270** upon the packet to determine whether the packet should be passed to the lower priority network fabric **1252** and at what priority. The high-to-low packet transfer function **1270** will be described in greater detail with reference to FIG. **79**. If the packet is to be transferred to the lower priority network fabric **1252**, it is outputted to the lower priority packet egress unit **1264**. The packet egress unit **1264** provides the packet to the redundancy/backup module **1260** in accordance with the priority of the packet for routing to the lower priority network fabric **1252**.

[0410] In another example of operation, the lower priority redundancy/backup module **1260** receives a packet from the lower priority network fabric **1252**. The packet may contain data in its payload having one or more destinations coupled to the higher priority network fabric **1250** or the packet may contain a request for resources within its payload. In either case, the lower priority redundancy/backup module **1260** provides the packet to the lower priority packet ingress unit **1262**, which temporarily stores and filters the packet. For example, the lower priority packet ingress unit **1262** accesses a source and/or destination filter that contains network addresses of sources of the lower-priority network fabric **1252** and/or destinations of the higher priority network fabric **1250** that are currently prohibited from transmitting or receiving packets from the other network fabric. If the packet is not filtered, it is placed in an ingress queue for subsequent processing by the processing module **1266**.

[0411] The processing module **1266** performs a low-to-high packet transfer function **1272** upon the packet to determine whether the packet should be passed to the higher priority network fabric **1250** and at what priority. The low-to-high packet transfer function **1272** will be described in greater detail with reference to FIG. **80**. If the packet is to be transferred to the higher priority network fabric **1250**, it is outputted to the higher priority packet egress unit **1264**. The higher priority packet egress unit **1264** provides the packet to the redundancy/backup module **1260** in accordance with the priority of the packet for routing to the higher priority network fabric **1250**.

[0412] FIG. **77** is a schematic diagram of another embodiment of a data bridge **1248** coupling a higher priority network fabric **1250** to a lower priority network fabric **1252** within a vehicular communication network. The high-priority network fabric **1250** and the lower priority network fabric **1252** are as discussed with reference to FIG. **76**.

[0413] The data bridge **1248** includes a plurality of redundancy/backup modules **1260** (as discussed in detail with reference to FIG. **17**), a plurality of packet ingress units **1262**, a plurality of packet egress units **1264**, a processing module **1266**, a top priority by-pass module **1276**, and memory **1268**. Each of the redundancy/backup modules **1260** is coupled a switch module **1254** of a network fabric **1250-1252**, the top priority by-pass module **1276**, a packet egress unit **1264**, and a packet ingress unit **1262**. As an alternative, a redundancy/backup module **1260** may be coupled to a bridge-routing module within the corresponding network fabric. The processing module **1266** is configured to implement the high-to-low priority transfer process **1270** and the low-to-high packet transfer process **1272**. The memory **1268** stores one or more of the databases **1274**, which include a forwarding database, a filtering database, a routing table, a network protocol database, an information/entertainment database, a vehicle operation database, a mission-critical database, and/or a network topology database.

[0414] In an example of operation, the redundancy/backup module **1260** receives a packet from the higher priority network fabric **1250**. The packet may contain data in its payload having one or more destinations coupled to the lower priority network fabric **1252** or the packet may contain a request for resources within its payload. In either case, the redundancy/backup module **1260** provides the packet to the top priority bypass module **1276**. The top priority bypass module **1276** interprets the packet to determine whether it has a top priority, and determines priority routing based on the determination. If so, the packet is provided to the lower priority redundancy/backup module **1260** for immediate transmission (e.g., if needed, interrupt a current packet transmission) to the lower priority network fabric **1252**. If the packet is not a top priority packet, the priority routing information may indicate that the packet is

to be processed as previously discussed with reference to FIG. **76**. Note that the top priority bypass module **1276** may perform the method illustrated in FIG. **35**. Further note that packets from the lower priority network fabric **1252** to the higher priority network fabric **1250** a process as previously discussed with reference to FIG. **76**.

[0415] FIG. **78** is a schematic diagram of an embodiment of a packet egress unit **1264** and a packet ingress unit **1262** of the data bridge of FIG. **76** or **77**. The packet ingress unit **1262** includes a port **1278**, an ingress buffer **1280**, a source and/or destination filter **1282** and an ingress queue **1284**. The packet egress unit **1264** includes a logical multiplexer **1286**, one or more packet egress queues, a second logical multiplexer **1288**, and a port **1278**.

[0416] In an example of operation, the packet ingress unit **1264** receives a packet, temporally stores it in an ingress buffer **1280**, and provides it to the processing module **1266**. The processing module **1266** interprets the packet to determine its priority level for storage within the ingress queue **1284** and for subsequent processing by the packet egress unit **1264**. In addition, the processing module **1266** may perform the source and/or destination filtering. In particular, the processing module **1266** accesses a database of sources and/or destinations that are prohibited from transmitting or receiving packets to/from another network fabric. The source and/or destination filter **1282** within the packet ingress unit **1262** uses control information from the processing module **1266** to prevent prohibited packets from being entered into the ingress queue **1284** and to pass allowed packets to the ingress queue **1284**.

[0417] The packet egress unit **1264** receives a packet and, under the control of the processing module **1266**, provides it to one of the packet egress queues or provides it directly to the output logical multiplexer **1286**. If the package is provided to one of the packet egress queues, it is placed within the queue based on a prioritization scheme. The prioritization scheme for storing a packet in a queue may be done as described with reference to one or more of the preceding figures and/or as may be described with reference to one or more of the following figures.

[0418] FIG. **79** is a logic diagram of an embodiment of a method for transferring packets from a high priority network fabric to a lower priority network fabric, which may be performed by the processing module within the data bridge of FIG. **76** or **77**. The method begins by receiving a packet from a higher priority network fabric **1290**. The method continues by determining whether the packet is a top priority packet **1292**. If yes and the data bridge includes a top priority bypass module, the method continues by transferring the packet using the top priority path **1294**. When a packet is transmitted via a top priority path, it is recorded in a database or table. Further, if the top priority bypass interrupts the transmission of a current packet, the data bridge records the interruption of the current packet such that it may be retransmitted at a later time.

[0419] If the packet is not a top priority packet or the data bridge does not include a top priority bypass module, the method continues by determining whether the packet is a high-priority packet (e.g., a mission-critical packet, a near top priority packets, etc.) **1296**. If yes, the method continues by bypassing the egress queues within the packet egress module and may also include bypassing the ingress queues within the packet ingress unit **1298**. Alternatively, the high-priority packet may be placed at the front of the egress queue within the packet egress unit and/or may be placed at the front of the ingress queue within the packet ingress unit.

[0420] If the packet is not a high priority packet, the method continues by determining the source, the destination, and the packet type, or packet content type, of the packet, which may be done by interpreting the vehicle network field, the source field, and the destination field of the packet **1300**. The method continues by filtering the packet using a source-destination filter, which identifies sources of the higher priority network fabric and/or destinations of the lower priority network fabric that are prohibited from receiving and/or transmitting packets between the network fabrics **1302**.

[0421] The method continues by determining whether the packet is filtered **1304**. If yes, the method continues by not transferring the packet to the other network fabric **1306**. If, however, the packet is not filtered, the process continues by determining whether the packet is requesting resources (e.g., processing resources and/or memory resources) from the other network for a co-processing function and/or storage functions **1308**. If not, the packet is deemed to contain data and is added to the queue of the packet ingress unit and/or queue of the packet egress unit based on its priority **1310**.

[0422] If the packet is requesting resources from the other network fabric, the method continues by determining the availability of the requested resources of the lower priority network **1312**. The method continues by determining whether the resources are available **1314**. If yes, the data bridge forwards request to the network fabric, where the network manager coordinates the allocation of the network resources to the requesting entity **1316**. In addition, the network manager may establish a virtual private network, allocate a certain amount of bandwidth, etc. to support the use of resources of the other network fabric.

[0423] If the resources are not available, the method continues by determining whether the current request has a priority level over certain activities within the lower priority network fabric **1318**. If not, the request is discarded **1320**. If yes, the method continues by forwarding the request to the network fabric **1316**.

[0424] FIG. **80** is a logic diagram of another embodiment of a method for transferring packets from a lower priority network fabric to a higher priority network fabric, which may be performed the processing module within the data bridge of FIG. **76** or **77**. The method begins by receiving a packet from a lower priority network fabric **1322**. The method continues by determining whether the packet is a high priority packet (e.g., a mission-critical packet, etc.) **1324**. If yes, the method continues by bypassing the egress queues within the packet egress module and may also include bypassing the ingress queues within the packet ingress unit **1326**. Alternatively, the high-priority packet may be placed at the front of the egress queue within the packet egress unit and/or may be placed at the front of the ingress queue within the packet ingress unit.

[0425] If the packet is not a high priority packet, the method continues by determining the source, the destination, and the packet content type of the packet **1328**. The method continues by filtering the packet using a source-destination filter, which identifies sources of the lower priority network fabric and/or destinations of the higher priority network fabric that are prohibited from receiving and/or transmitting packets between the network fabrics **1330**.

[0426] The method continues by determining whether the packet is filtered **1332**. If yes, the method continues by not transferring the packet to the higher priority network fabric **1334**. If, however, the packet is not filtered, the process continues by determining whether the packet is requesting resources (e.g., processing resources and/or memory resources) from the other network for a co-processing function and/or storage functions **1336**. If not, the packet is deemed to contain data and is added to the queue of the packet ingress unit and/or queue of the packet egress unit based on its priority **1338**.

[0427] If the packet is requesting resources from the other network fabric, the method continues by determining the status of the vehicle (e.g., driving, parked, higher priority network fabric resources being used, etc.) **1340**. The method continues by determining whether the status allows sharing (e.g., the vehicle is parked) **1342**. If not, the packet is not forwarded and is discarded **1344**. The packet may be stored for subsequent system analysis regarding sharing of resources between the network fabrics.

[0428] If the status allows resources sharing, the method continues by determining whether resources of the higher priority network are available **1346**. If not, the packet is not forwarded **1344**. If, however, resources are available, the method continues with the data bridge forwarding the request to the higher network fabric, where the network manager coordinates the allocation of the network resources to the requesting entity **1348**. In addition, the network manager may establish a virtual private network, allocate a certain amount of bandwidth, etc. to support the use of resources of the other network fabric.

[0429] As an example, when a car is parked and one or more persons are watching a video in the rear seat(s), resources of the higher priority network may be used to improve the video quality, to add 3D graphics, etc. In this example, since the vehicle is not operating, typical higher priority functions are not being processed. As such, those resources may be temporarily allocated for lower priority functions.

[0430] FIG. **81** is a schematic diagram of another embodiment of a data bridge **1248** coupling a 1st network fabric **1350** to a 2nd network fabric **1352** within a vehicular communication network. The 1st network fabric **1350** includes a plurality of switch modules (SW mod) **1354**, a plurality of bridge-routing modules, and a plurality of network node modules, which support a plurality of resources (e.g., processing module resources **1356** and memory resources **1358**). The 2nd network fabric **1352** includes a plurality of switch modules **1354**, a plurality of bridge-routing modules, and a plurality of network node modules, which support a plurality of resources. The first and second network fabrics **1350-1352** may support devices of equal priority and/or devices of differing priorities. As such, from packet to packet, the network fabrics may have equal priority or differing priorities. The details of a network fabric have been discussed in detail with reference to FIGS. **13-57** and will be discussed in greater detail with reference to FIGS. **87-99**.

[0431] The data bridge **1248** includes a first set of modules for interfacing with the first network fabric, a second set of modules for interfacing with the second network fabric, and a coupling circuit **1360**. Each of the first and second set of modules includes a redundancy/backup module **1260** (as discussed in detail with reference to FIG. **17**), a buffer **1362**, a gate module **1364**, a processing module **1266**, and memory **1268**.

[0432] In an example of operation, the redundancy/backup module **1260** of the first set of modules receives a packet from the first network fabric **1350**. The packet is provided to the buffer **1362**, which may include one or more queues. In addition, the processing module **1266** interprets the packet to determine its priority as well as to determine whether it can be forwarded to the second network fabric **1352**. The processing module **1266** determines whether the packet can be forwarded based on a source and/or destination filter of sources and/or destinations of the first network fabric. The source and/or destination filtering may further include a packet type filter such a source or destination may transmit or receive one type of packet but not another, may prohibited from any cross network packet traffic, or may be allowed to transmit or receive any type of packet with another network fabric. If the packet is to be forwarded, it is transferred from the buffer **1362** to the gate module **1364** in accordance with its priority.

[0433] The gate module **1364** may be a memory device, a switching circuit, or a combination thereof that transmits packets to the coupling circuit and receives packets from the coupling circuit. In this example, when a packet is ready for transmission, the gate module **1364** provides it to the coupling circuit **1360**. The coupling circuit **1360** may be a switch, a forwarding unit, a bus between the gate modules **1364**, a combination thereof, etc.

[0434] The coupling circuit **1364** provides the packet from the gate module **1364** of the first set of modules to the gate module **1364** of the second set of modules. The processing module **1266** of the second set of modules interprets the packet to determine its priority and whether it should be discarded or passed to the second network fabric **1352**. The processing module **1266** uses a source and/or destination filter of sources, destinations, and packet content types of the second network fabric to determine whether the packet should be discarded or passed. In this manner, each of the processing modules **1266** is rendering an independent decision on filtering the packet. Alternatively, the processing modules **1266** share a source and/or destination filter database such that a single filter step may be performed by one of the processing modules **1266**.

[0435] If the packet is to be passed to the second network fabric **1352**, it is provided to the buffer **1362** of the second set of modules and stored in one of its queues based on its prioritization and a prioritization scheme. When the packet is at the front of its queue, it is provided to the redundancy/backup module **1260** for routing to the second network fabric **1352**. Note that packets from the second network fabric **1352** to the first network fabric **1350** are processed in a similar manner but in a reverse order.

[0436] In another example of operation, a device of the first network fabric **1350** may desire to store data within the memory **1268** of the data bridge **1248**. In this instance, the data is provided in one or more packets that are received via the redundancy backup module **1260**, interpreted by the processing module **1266**, and subsequently stored in the memory **1268**. In this manner, the memory **1268** may be used for backup, history tracking etc. Note that a device of the second network fabric **1352** may store data in the memory **1268** of the second set of modules in a similar manner.

[0437] FIG. **82** is a logic diagram of another embodiment of a method for transferring packets between network fabrics by the data bridge of FIG. **81**. The method begins by receiving a packet from the associated network fabric **1366**. The packet may be temporarily stored in a buffer. The method continues by determining whether the packet is a high priority packet **1368**. If so, the method continues by enabling the gate module to pass the packet to the coupling circuit immediately (e.g., interrupt a current transmission of a packet) or near immediately (e.g., wait until the transmission of the current packet is complete and then transmit the high priority packet) **1370**.

[0438] If the packet, or packet content, is not a high-priority packet, the method continues by determining the source, destination, and packet type **1372**. The method continues by filtering the packet using a source and/or destination filter **1374**. As previous mentioned, the source and/or destination filter may include a list of sources and/or destinations of the associated network that are prohibited from packet transfers to/from another network fabric and/or may include, for each source or destination, a list of packet types, or patent content types, that are allowed and/or a list of packet types, or packet content types, that are prohibited.

[0439] The method continues by determining whether the packet is filtered (e.g., prohibited from transmission to another network fabric) **1376**. In some embodiments this filtering is based on the type of content in a packet, e.g. the packet content type. If yes, the packet is not transferred **1378**. If the packet is not filtered, the method continues by updating a queue in the buffer for subsequent passing of the packet to the coupling circuit **1380**. The method continues by determining whether the packet is first in the queue **1382**. If not, the method repeats as shown. If the packet is first in the queue, the method continues by enabling the gate module to pass the packet to the coupling circuit **1384**.

[0440] FIG. **83** is a logic diagram of another embodiment of a method for transferring packets between network fabrics by the data bridge of FIG. **81**. The method begins by receiving a packet from another network fabric via the coupling circuit **1386**. The gate module may temporarily store the packet in its own buffer or in the buffer of the associated set of modules. The method continues by determining whether the packet is a high priority packet **1388**. If the packet is a high priority packet, the method continues by enabling the gate module to pass the packet to the redundancy/backup module for immediate or near immediate transmission to the associated network fabric **1390**.

[0441] If the packet is not a high-priority packet, the method continues by determining the source, destination, and packet type, or packet content type **1392**. The method continues by filtering the packet using an associated source and/or destination filter **1394**. The method continues by determining whether the packet is filtered **1396**. If so, the packet is discarded and not passed to the redundancy/backup module **1398**. If the packet is not filtered, the method continues by updating a queue in the buffer for subsequent passing the packet to the redundancy/backup module **1400**. Once the packet is first in the queue **1402**, it is outputted to the redundancy/backup module for forwarding to the associated network fabric **1404**.

[0442] FIG. **84** is a logic diagram of an embodiment of a method for storing data by a data bridge of FIGS. **76**, **77**, and/or **81**. The method begins by receiving a packet from an associated network fabric for storage **1406**. The packet may be temporarily stored in a buffer. The method continues by determining the source of the packet **1408** and subsequently determining whether the source is authorized to store data in the memory of the data bridge **1410**. If not, the packet is discarded and the data bridge may generate a message indicating that the source is not authorized to store data **1412**.

[0443] If the source is authorized, the method continues by extracting the data from the payload of the packet **1414**. The method continues by determining whether a file in the memory already exists for storing the data **1416**. If not, the data bridge creates a file in memory and stores the data in the file **1418**. The method continues by sending an acknowledgment of data storage to the source **1420**. If the file already exists, the data is added to the existing file and an acknowledgment of data storage is sent to the source **1422**.

[0444] FIG. **85** is a schematic diagram of another embodiment of a data bridge **1248** coupling a higher priority network fabric, a middle priority network fabric, and a lower priority network fabric together within a vehicular communication network. The high-priority network fabric, which typically supports higher priority packets than the middle and lower priority network fabric, includes a plurality of switch modules (SW mod), a plurality of bridge-routing modules, and a plurality of network node modules, which support a plurality of resources (e.g., processing module resources and memory resources). The middle priority network fabric, which typically supports higher priority packets than the lower priority network fabric but lower priority packets than the higher priority network fabric, includes a plurality of switch modules, a plurality of bridge-routing modules, and a plurality of network node modules, which support a plurality of resources. The lower priority network fabric includes a plurality of switch modules, a plurality of bridge-routing modules, and a plurality of network node modules, which support a plurality of resources. The details of the network fabrics have been discussed in detail with reference to FIGS. **13-57** and will be discussed in greater detail with reference to FIGS. **87-99**.

[0445] The data bridge **1248** includes a plurality of redundancy/backup modules **1260** (as discussed in detail with reference to FIG. **17**), a plurality of packet ingress units **1262**, a plurality of packet egress units **1264**, a processing module **1266**, and memory **1268**. Each of the redundancy/backup modules **1260** is coupled to a switch module of an associated network fabric, a packet egress unit **1264**, and a packet ingress unit **1262**. As an alternative, a redundancy/backup module **1260** may be coupled to a bridge-routing module within the associated network fabric. The processing module **1266** is configured to implement a higher-to-lower priority transfer process **1270** and a lower-to-higher packet transfer process **1272**. The memory stores one or more of the databases **1274**, which include a forwarding database, a filtering database, a routing table, a network protocol database, an information/entertainment database, a vehicle operation database, a mission-critical database, and/or a network topology database.

[0446] In an example of operation, the redundancy/backup module **1260** receives a packet from the higher priority network fabric. The packet may contain data in its payload having one or more destinations coupled to the middle and/or lower priority network fabric or the packet may contain a request for resources within its payload. In either case, the redundancy/backup module **1260** provides the

packet to the packet ingress unit **1264**. The packet ingress unit **1264** temporarily stores and filters the packet. For example, the packet ingress unit **1264** accesses a source and/or destination filter that contains network addresses of sources of the high-priority network fabric and/or destinations of the middle and lower priority network fabrics that are currently prohibited from transmitting or receiving packets from the network fabrics of the current packet transaction. If the packet is not filtered, it is placed in an ingress queue for subsequent processing by the processing module **1266**.

[0447] The processing module **1266** performs a higher-to-lower packet transfer function **1270** upon the packet to determine whether the packet should be passed to the middle and/or lower priority network fabric and at what priority. The higher-to-lower packet transfer function **1270** was described with reference to FIG. **79**. If the packet is to be transferred to the middle and/or lower priority network fabric, it is outputted to the middle and/or lower priority packet egress unit. The middle and/or lower priority packet egress unit **1264** provides the packet to its associated redundancy/backup module **1260** in accordance with the priority of the packet for routing to the middle and/or lower priority network fabric.

[0448] In another example of operation, the lower priority redundancy/backup module receives a packet from the lower priority network fabric. The packet may contain data in its payload having one or more destinations coupled to the higher priority network fabric or the packet may contain a request for resources within its payload. In either case, the lower priority redundancy/backup module **1260** provides the packet to the lower priority packet ingress unit **1264**, which temporarily stores and filters the packet. For example, the lower priority packet ingress unit accesses a source and/or destination filter that contains network addresses of sources of the lower-priority network fabric and/or destinations of the middle and/or higher priority network fabric that are currently prohibited from transmitting or receiving packets from other network fabrics. If the packet is not filtered, it is placed in an ingress queue for subsequent processing by the processing module **1266**.

[0449] The processing module **1266** performs a lower-to-higher packet transfer function **1272** upon the packet to determine priority routing of the packet, e.g. whether the packet should be passed to the middle and/or higher priority network fabrics and at what priority. The lower-to-higher packet transfer function **1272** was described with reference to FIG. **80**. If the packet is to be transferred to the middle and/or higher priority network fabric, it is outputted to the middle and/or higher priority packet egress units **1264**. Each of the middle and/or higher priority packet egress units **1264** provides the packet to its associated redundancy/backup module **1260** in accordance with the priority of the packet for routing to the middle and/or higher priority network fabric.

[0450] In yet another example of operation, the middle priority redundancy/backup module **1260** receives a packet from the middle priority network fabric. The packet may contain data in its payload having one or more destinations coupled to the lower and/or higher priority network fabric or the packet may contain a request for resources within its payload. In either case, the middle priority redundancy/backup module **1260** provides the packet to the middle priority packet ingress unit **1262**, which temporarily stores and filters the packet. For example, the middle priority packet ingress unit accesses a source and/or destination filter that contains network addresses of sources of the middle-priority network fabric and/or destinations of the lower and/or higher priority network fabric that are currently prohibited from transmitting or receiving packets from other network fabrics. If the packet is not filtered, it is placed in an ingress queue for subsequent processing by the processing module **1266**.

[0451] If the packet has a destination in the higher priority network fabric, the processing module **1266** performs a lower-to-higher packet transfer function **1272** upon the packet to determine whether the packet should be passed to the higher priority network fabrics and at what priority. If the packet is to be transferred to the higher priority network fabric, it is outputted to the higher priority packet egress unit **1264**. The higher priority packet egress unit **1264** provides the packet to its associatedredundancy/backup module **1260** in accordance with the priority of the packet for routing to the higher priority network fabric.

[0452] If the packet has a destination in the lower priority network fabric, the processing module **1266** performs a higher-to-lower packet transfer function **1270** upon the packet to determine whether the packet should be passed to the lower priority network fabrics and at what priority. If the packet is to be transferred to the lower priority network fabric, it is outputted to the lower priority packet egress unit **1264**. The lower priority packet egress **1264** unit provides the packet to its associated redundancy/backup module **1260** in accordance with the priority of the packet for routing to the lower priority network fabric.

[0453] FIG. **86** is a schematic diagram of another embodiment of a data bridge **1248** coupling a 1st network fabric, a 2nd network fabric, and a 3rd network fabric together within a vehicular communication network. Each of the 1st, 2nd, and 3rd network fabrics includes a plurality of switch modules, a plurality of bridge-routing modules, and a plurality of network node modules, which support a plurality of resources (e.g., processing module resources and memory resources). In addition, each of the first, second, and third network fabrics may support devices of equal priority and/or devices of differing priorities. As such, from packet to packet, the network fabrics may have equal priority or differing priorities. The details of a network fabric have been discussed in detail with reference to FIGS. **13-57** and will be discussed in greater detail with reference to FIGS. **87-99**.

[0454] The data bridge **1248** includes a first set of modules for interfacing with the first network fabric, a second set of modules for interfacing with the second network fabric, a third set of modules for interfacing with the third network fabric, and a coupling circuit. Each of the first, second, and third set of modules includes a redundancy/backup module **1260** (as discussed in detail with reference to FIG. **17**), a buffer **1362**, a gate module **1364**, a processing module **1266**, and memory **1268**.

[0455] In an example of operation, the redundancy/backup module **1260** of the first set of modules receives a packet from the first network fabric. The packet is provided to the buffer **1362**, which may include one or more queues. In addition, the processing module **1266** interprets the packet to determine its priority as well as to determine whether it can be forwarded to the second and/or third network fabrics. The processing module **1266** determines whether the packet can be forwarded based on a source and/or destination filter

of sources and/or destinations of the first network fabric. The source and/or destination filtering may further include a packet type filter indicating that a source or destination may transmit or receive one type of packet but not another or may be allowed to transmit or receive packets (type specific or all types) with one network fabric but not with another. If the packet is to be forwarded to a particular network fabric, it is transferred from the buffer **1362** to the gate module **1364** in accordance with its priority.

[0456] The gate module **1364** may be a memory device, a switching circuit, or a combination thereof that transmits packets to the coupling circuit **1360** and receives packets from the coupling circuit **1360**. In this example, when a packet is ready for transmission, the gate module **1364** provides it to the coupling circuit **1360**. The coupling circuit **1360** may be a switch, a forwarding unit, a bus between the gate modules **1364**, a combination thereof, etc.

[0457] The coupling circuit **1360** provides the packet from the gate module **1364** of the first set of modules to the gate module **1364** of the second set of modules and/or to the gate module **1364** of the third set of modules. The processing module **1266** of the second and/or third set of modules interprets the packet to determine its priority and whether it should be discarded or passed to the second network fabric. The processing module **1266** uses a source and/or destination filter of sources, destinations, and packet types of the second and/or third network fabric, respectively, to determine whether the packet should be discarded or passed. In this manner, each of the processing modules **1266** is rendering an independent decision on filtering the packet. Alternatively, the processing modules **1266** share a source and/or destination filter database such that a single filter step may be performed by one of the processing modules **1266**.

[0458] If the packet is to be passed to the second and/or third network fabric, it is provided to the buffer **1362** of the second and/or third set of modules and stored in one of its queues based on its prioritization and a prioritization scheme. When the packet is at the front of its queue, it is provided to the associated redundancy/backup module **1260** for routing to the second and/or third network fabric. Note that packets from the other network fabrics are processed in a similar manner but in a reverse order.

[0459] In another example of operation, a device of the first network fabric may desire to store data within the memory of the data bridge **1248**. In this instance, the data is provided in one or more packets that are received via the redundancy backup module **1260**, interpreted by the processing module **1266**, and subsequently stored in the memory **1268**. In this manner, the memory may be used for backup, history tracking etc. Note that a device of the second and/or third network fabric may store data in the memory **1268** of the second and/or third set of modules in a similar manner.

[0460] FIG. **87** is a schematic diagram of an embodiment of a wired and wireless network fabric **1424** that includes vehicle network modules (e.g., a plurality of bridge-routing modules **1426** and a plurality of switch modules **1428**) and is coupled to a network manager **40**. The switch modules **1428** are coupled to one or more network node modules **1430** and to at least one bridge-routing module **1426**. Each of the bridge-routing modules **1426** are coupled to at least one switching module **1428** and at least one other bridge-routing module **1426**. Each of the network node modules **1430**, the switch modules **1428**, and the bridge-routing modules **1426** includes a wired network connection and a wireless network connection. The wired coupling between bridge-routing modules **1426**, between bridge-routing modules **1426** and switch modules **1428**, and between switch modules **1428** and network node modules **1430** includes multiple cables (e.g., twisted pair, coaxial cable, category 5 cables, fiber optics, etc.).

[0461] The wireless coupling between the same modules may be in accordance with one or more standardized wireless communication protocols in the 2.4 GHz frequency band, the 5 GHz frequency band, the 60 GHz frequency band, etc. or a may be a proprietary wireless communication protocol. Standardized wireless communication protocols includes, but are not limited to, IEEE 802.11, Bluetooth, advanced mobile phone services (AMPS), digital AMPS, global system for mobile communications (GSM), code division multiple access (CDMA), local multi-point distribution systems (LMDS), multi-channel-multi-point distribution systems (MMDS), radio frequency identification (RFID), Enhanced Data rates for GSM Evolution (EDGE), General Packet Radio Service (GPRS), WCDMA, LTE (Long Term Evolution), WiMAX (worldwide interoperability for microwave access), and/or variations thereof.

[0462] In an example of operation, the network manager **40** determines a wired packet communication mode and/or a wireless packet communication mode for the vehicle communication network. When the network is in the wireless packet communication mode, the network manager **40** coordinate wireless communication of packets among the plurality of network node modules, the plurality of switch modules, and the plurality of bridge-routing modules based on individual content of the packets (e.g., mission critical, network data, vehicle operation, and/or infotainment) and wireless channel mapping.

[0463] In one instance of the present example, the wireless channel mapping includes allocating a channel of a set of channels within a frequency band for at least a portion of conveyance of a wireless packet from a source to a destination via a wireless network node module(s), a wireless switch module(s), and/or a wireless bridge-routing module (s). As a more specific example, the channel may be allocated to wirelessly transmit the packet from the source to the destination via one or more network node modules, one or more switch modules, and/or one or more bridge-routing modules. As another more specific example, the channel may be allocated to convey the packet from the first network module, to a switch module, and to a bridge-routing module and a second channel may be allocated to convey the packet from the bridge-routing module, to a second switch module, to a second network node module.

[0464] The allocation of a channel to convey a packet may be done in a variety of ways. For example, the channel may be permanently allocated for packets of a first content type (e.g., mission critical packets, network data packets, etc.); for packets from a source of first type of device (e.g., a safety critical sensor); and/or for packets to a destination of a particular type (e.g. safety critical processor, safety critical actuator, etc.). As another example, the channel may be semi-permanent allocated (e.g., for a set time, for a number of packets, as instructed by the network manager, etc.) for packets of a second content type (e.g., network data, vehicle operation, etc.); for packets from a source of second type of device (e.g., a network manager); and/or for packets to a destination of a particular type (e.g. non-critical vehicle

operation devices, etc.). As yet another example, the channel may be dynamically allocated when the packet is of a third type (e.g., infotainment, non-critical vehicle operation, etc.); for packets from a source of third type of device (e.g., window up/down sensor, a multimedia processing, memory, etc.); and/or for packets to a destination of a particular type (e.g. window up/down actuator, multimedia display devices, etc.).

[0465] As another example of allocating channels per the wireless channel mapping, the channels within a frequency band may be allocated in cellular pattern among a plurality of regions within the wireless vehicle communication network to reduce channel interference from overlapping channel use in different ones of the plurality of regions. For example, a set of switching modules and/or bridge-routing modules in one section of the network fabric may use the same channels (or subset thereof) as another set of switching modules and/or bridge-routing modules in a different section of the network fabric.

[0466] When the network is in the wired packet communication mode, the network manager **40** coordinates wired communication of packets among the network node modules, the switch modules, and/or the bridge-routing modules based on the individual content of the packets and in accordance with a global vehicle network communication protocol. The global vehicle network communication protocol information regarding a network fabric formatting of the packets, information regarding packet transmission prioritization schemes, information regarding network management processing and/or information regarding vehicle network operation parameters.

[0467] Within the network fabric, the wired and wireless connections may be used in a variety of ways. For example, the wireless connections may be used for backup and/or redundancy transmissions to provide a fast fail over if a wired connection fails. As another example, the wireless connections may be used for network configuration and system level data, while the wired connections are used for mission critical data, vehicle operation data, and/or information-entertainment data. As a further example, the wireless connections and wired connections may be used independently to support concurrent packet transmissions.

[0468] The network fabric may be used within the unified network fabric or the multiple network fabric communication networks of the preceding figures. Note that more or less switching modules **1428** and bridge-routing modules **1426** may be included in the network fabric. Further note that the multiple wired connections between switching modules **1428** and bridge-routing modules **1426** may include two or more cables where one of the cables is active and the other is used for fail over or redundancy. Still further note that a network node module may be directly connected to a bridge-routing module **1426**.

[0469] FIG. **87**A is a schematic diagram of an embodiment of wireless vehicle communication network that includes a wireless network fabric **1425**, a network manager **40**, and network node modules **1431**. The wireless network fabric **1425** includes bridge-routing modules **1427** and switch modules **1429**. Each of the switch modules **1429** is wirelessly (e.g., RF, infrared, optical, etc.) coupled to one or more network node modules **1431** and to at least one bridge-routing module **1427**. Each of the bridge-routing modules **1427** is wirelessly coupled to at least one switching module **1429** and to at least one other bridge-routing module **1427**. Each of the network node modules **1431**, the switch modules **1429**, and the bridge-routing modules **1427** includes at least one wireless network connection (e.g., an RF transceiver, a MMW transceiver, an IR transceiver, etc.).

[0470] The network manager **40** coordinates wireless communication of packets among the wireless network node modules **1431**, the wireless switch modules **1429**, and/or the wireless bridge-routing modules **1427** based on individual content of the packets (e.g., mission critical, network data, vehicle operation, infotainment, etc.) and wireless channel mapping. In an example, the wireless channel mapping includes allocating a channel of a set of channels within a frequency band for at least a portion of conveyance of a packet from a source to a destination via a wireless network node module(s), a wireless switch module(s), and/or a wireless bridge-routing module(s).

[0471] As a more specific example, the channel may be allocated to wirelessly transmit the packet from the source to the destination via one or more network node modules, one or more switch modules, and/or one or more bridge-routing modules. As another more specific example, the channel may be allocated to convey the packet from a first network module, to a first switch module, and to a bridge-routing module and a second channel may be allocated to convey the packet from the bridge-routing module, to a second switch module, to a second network node module.

[0472] The allocation of a channel to convey a packet may be done in a variety of ways. For example, the channel may be permanently allocated for packets of a first content type (e.g., mission critical packets, network data packets, etc.); for packets from a source of first type of device (e.g., a safety critical sensor); and/or for packets to a destination of a particular type (e.g. safety critical processor, safety critical actuator, etc.). As another example, the channel may be semi-permanent allocated (e.g., for a set time, for a number of packets, as instructed by the network manager, etc.) for packets of a second content type (e.g., network data, vehicle operation, etc.); for packets from a source of second type of device (e.g., a network manager); and/or for packets to a destination of a particular type (e.g. non-critical vehicle operation devices, etc.). As yet another example, the channel may be dynamically allocated when the packet is of a third type (e.g., infotainment, non-critical vehicle operation, etc.); for packets from a source of third type of device (e.g., window up/down sensor, a multimedia processing, memory, etc.); and/or for packets to a destination of a particular type (e.g. window up/down actuator, multimedia display devices, etc.).

[0473] As another example of allocating channels per the wireless channel mapping, the channels within a frequency band may be allocated in cellular pattern among a plurality of regions within the wireless vehicle communication network to reduce channel interference from overlapping channel use in different ones of the plurality of regions. For example, a set of switching modules and/or bridge-routing modules in one section of the network fabric may use the same channels (or subset thereof) as another set of switching modules and/or bridge-routing modules in a different section of the network fabric.

[0474] The network fabric has been presented in a variety of embodiments as shown in FIGS. **13**, **87**, and **87**A. Other embodiments of the network fabric may be implemented by using combinations of the embodiments of FIGS. **13**, **87**, and **87**A. For example, some of the switch modules and/or

bridge-routing modules may be wired only (as shown in FIG. **13**), some may be wireless only (as shown in FIG. **87**A), and/or some may be wired and wireless (as shown in FIG. **87**). Similarly, some of the network node modules may be wired only (as shown in FIG. **13**), some may be wireless only (as shown in FIG. **87**A), and/or some may be wired and wireless (as shown in FIG. **87**).

[0475] FIG. **87** is a schematic diagram of an embodiment of a wired and wireless network fabric **1424** that includes a plurality of bridge-routing modules **1426** and a plurality of switch modules **1428**. The switch modules **1428** are coupled to one or more network node modules **1430** and to at least one bridge-routing module **1426**. Each of the bridge-routing modules **1426** are coupled to at least one switching module **1428** and at least one other bridge-routing module **1426**. Each of the network node modules **1430**, the switch modules **1428**, and the bridge-routing modules **1426** includes a wired network connection and a wireless network connection. The wired coupling between bridge-routing modules **1426**, between bridge-routing modules **1426** and switch modules **1428**, and between switch modules **1428** and network node modules **1430** includes multiple cables (e.g., twisted pair, coaxial cable, category 5 cables, fiber optics, etc.).

[0476] The wireless coupling between the same modules may be in accordance with one or more standardized wireless communication protocols in the 2.4 GHz frequency band, the 5 GHz frequency band, the 60 GHz frequency band, etc. or a may be a proprietary wireless communication protocol. Standardized wireless communication protocols includes, but are not limited to, IEEE 802.11, Bluetooth, advanced mobile phone services (AMPS), digital AMPS, global system for mobile communications (GSM), code division multiple access (CDMA), local multi-point distribution systems (LMDS), multi-channel-multi-point distribution systems (MMDS), radio frequency identification (RFID), Enhanced Data rates for GSM Evolution (EDGE), General Packet Radio Service (GPRS), WCDMA, LTE (Long Term Evolution), WiMAX (worldwide interoperability for microwave access), and/or variations thereof.

[0477] Within the network fabric, the wired and wireless connections may be used in a variety of ways. For example, the wireless connections may be used for backup and/or redundancy transmissions to provide a fast fail over if a wired connection fails. As another example, the wireless connections may be used for network configuration and system level data, while the wired connections are used for mission critical data, vehicle operation data, and/or information-entertainment data. As a further example, the wireless connections and wired connections may be used independently to support concurrent packet transmissions.

[0478] The network fabric may be used within the unified network fabric or the multiple network fabric communication networks of the preceding figures. Note that more or less switching modules **1428** and bridge-routing modules **1426** may be included in the network fabric. Further note that the multiple wired connections between switching modules **1428** and bridge-routing modules **1426** may include two or more cables where one of the cables is active and the other is used for fail over or redundancy. Still further note that a network node module may be directly connected to a bridge-routing module **1426**.

[0479] FIG. **88** is a schematic diagram of another embodiment of a bridge/routing module **1426** that includes a plurality of redundancy/backup modules **1432**, a wired packet egress unit **1434**, a wireless packet egress unit **1436**, a wired packet ingress unit **1438**, a wireless packet ingress unit **1440**, an egress sync serial and/or parallel unit **1442**, an ingress sync serial and/or parallel unit **1444**, a processing module **1446**, and memory **1448**. The processing module **1446** is configured to implement a local network management function **1450**, a bridging function **1452**, and or a routing function **1454**. The memory **1448** stores one or more tables and/or databases. For instance, the memory **1448** may store a forwarding database **1456**, a filtering database **1458**, a routing table **1460**, a network protocol database **1462**, and information/entertainment database **1464**, a vehicle operations database **1466**, a mission-critical database **1468**, and a predetermined network topology database **1470**.

[0480] In an example of wired operation only, one of the redundancy/backup modules **1432** receives a packet. The packet is routed to the packet ingress unit **1474** via the wired packet ingress unit **1438** and the ingress sync serial and/or parallel unit **1444**, where the local network management function **1450** interprets the packet. Such an interpretation includes determining the type of packet, or packet content type (e.g., mission critical, network data, info-entertainment, vehicle operation, etc.). Having identified the packet, the local network management function **1450** determines the processing for the packet and then processes the packet accordingly. Specific examples of this were discussed with reference to FIG. **14**.

[0481] After the processing module **1446** has processed the packet, the packet egress unit **1472** received the processed packet. Based on information received from the processing module **1446**, the packet egress unit **1472** places the packet in a queue for subsequent transmission to one of the redundancy-backup modules **1432** via the egress sync serial and/or parallel unit **1442** and the wired egress unit **1434**.

[0482] In an example of wireless operation only, the RF transceiver **1476** receives a wireless packet that it provides to the wireless ingress unit **1438**. The wireless ingress unit **1438** temporarily stores the packet and subsequently forwards it to the packet ingress unit **1474** via the ingress sync serial and/or parallel units **1444**. The processing module **1446** interprets packet as discussed above and subsequently places a process packet in the packet egress unit **1472**. The packet egress unit **1472** provides the process packet to the wireless egress unit **1436** via the egress sync serial and/or parallel unit **1442**. The wireless egress unit **1436** provides the processed packet to the RF transceiver **1476** for wireless transmission to another bridge-routing module, to a switch module, and/or to a network node module.

[0483] In an example of concurrent wired and wireless operation, the wireless communication path is used for redundancy transmissions. In this situation, the RF transceiver **1476** receives a wireless version of the packet and one of the redundancy/backup modules **1432** receives a wired version of the packet. The RF transceiver **1476** provides the wireless version of the packet to the wireless ingress unit **1440** and the redundancy/backup module **1432** provides the wired version of the packet to a wired ingress unit **1438**.

[0484] The ingress sync serial and/or parallel unit **1444** retrieves the wired and wireless versions of the packet from the respective ingress units. The ingress sync serial and/or parallel unit **1444** synchronizes the versions of the packet, analyzes the packets, and packet content, and selects one of them for outputting to the packet ingress unit **1474**. The

ingress sync serial and/or parallel unit **1444** may perform error correction on one or both of the packets based on the packets, a matched filtering function, a convergence function, etc. The processing module **1446** retrieves the packet from the packet ingress unit **1474** in accordance with its priority and processes it as previously discussed.

[0485] The processing module **1446** places the processed packet into the packet egress unit in accordance with its priority level. When the process packet has reached the top of a queue within the packet egress unit **1472**, the egress sync serial and/or parallel unit **1442** retrieves the packet and provides copies of the packet to the wired egress unit **1434** and the wireless egress unit **1436**. The wireless egress unit **1426** provides the processed packet to the RF transceiver **1476** for wireless transmission of the packet and the wired egress unit **1434** provides the processed packet to one of the redundancy/backup modules **1432** for wired transmission of the packet. Note that the egress sync serial and/or parallel unit **1442** accounts for processing differences, latency differences, etc. when it provides the process packet to the wired and wireless egress units **1434-1436** such that the wired and wireless transmitted packets reach the destination at approximately the same time.

[0486] In another example of concurrent wired and wireless operation, the wireless communication path is used for separate packet transmissions (e.g., network configuration data, system level data, etc.). In this situation, the RF transceiver **1476** receives a wireless packet and one of the redundancy/backup modules **1432** receives a wired packet. The RF transceiver **1476** provides the wireless packet to the wireless ingress unit **1440** and the redundancy/backup module **1432** provides the wired packet to a wired ingress unit **1438**.

[0487] The ingress sync serial and/or parallel unit **1444** retrieves the wired and wireless packets from the respective ingress units. The ingress sync serial and/or parallel unit **1444** synchronizes the packets, analyzes the packets, and serially outputs the packets to the packet ingress unit **1474**. The processing module **1446** retrieves the packets from the packet ingress unit **1474** in accordance with their priority and processes the packets as previously discussed.

[0488] The processing module **1446** places the processed packets into the packet egress unit **1472** in accordance with their priority level. When one of the processed packets reaches the top of a queue within the packet egress unit **1472**, the egress sync serial and/or parallel unit **1442** retrieves the packet and provides it to the wired egress unit **1434** or to the wireless egress unit **1436**. If the wireless egress unit **1436** receives the processed packet, it subsequently provides it to the RF transceiver **1476** for wireless transmission. If the wired egress unit **1436** receives the processed packet, it subsequently provides it to one of the redundancy/backup modules **1432** for wired transmission.

[0489] In yet another example of concurrent wired and wireless operation, the wireless and wired communication paths are used for packet aggregation. In this situation, the RF transceiver **1476** receives one packet and one of the redundancy/backup modules **1432** receives another packet. The RF transceiver **1476** provides the wireless packet to the wireless ingress unit **1440** and the redundancy/backup module **1432** provides the wired packet to a wired ingress unit **1438**.

[0490] The ingress sync serial and/or parallel unit **1444** retrieves the wired and wireless packets from the respective ingress units. The ingress sync serial and/or parallel unit **1444** synchronizes the packets, analyzes the packets, and serially outputs them to the packet ingress unit **1474**. The processing module **1446** retrieves the packets from the packet ingress unit **1474** in accordance with their priority and processes them as previously discussed.

[0491] The processing module **1446** places the processed packets into the packet egress unit **1472** in accordance with their priority level. When the process packets reach the top of a queue within the packet egress unit **1472**, the egress sync serial and/or parallel unit **1442** retrieves the packets and provides a wired processed packet to the wired egress unit **1434** and a wireless processed packet to the wireless egress unit **1436**. The wireless egress unit **1436** provides the wireless processed packet to the RF transceiver **1476** for wireless transmission and the wired egress unit **1434** provides the wired processed packet to one of the redundancy/backup modules **1432** for wired transmission. Note that the egress sync serial and/or parallel unit **1442** accounts for processing differences, latency differences, etc. when it provides the processed packets to the wired and wireless egress units such that the wired and wireless transmitted packets reach their respective destinations at approximately the same time.

[0492] FIG. **89** is a schematic diagram of an embodiment of egress units, an egress sync serial and/or parallel module **1442**, and a packet egress unit **1472** of a bridge/routing module. The packet egress unit **1472** includes a first logical multiplexer **1478**, one or more packet egress queues, and a second logical multiplexer **1480**. The egress sync serial and/or parallel unit **1442** includes logical switches **1482** and delay units. The wired egress unit **1434** includes a wired egress buffer **1484**, a switching circuit **1486**, and a plurality of ports, which are coupled to the plurality of redundancy/backup modules. The wireless egress unit **1436** includes a wireless egress buffer **1492**, a media access control (MAC) layer module **1490**, and a physical layer (PHY) module **1488**. The logical switches **1482** and/or the logical multiplexers **1478-1480** may each be constructed of physical switches, gates, multiplexers, sample and hold circuits, programmable logic circuits, and or a combination thereof.

[0493] In an example of operation, the first logical multiplexer **1478** of the packet egress unit **1472** receives a packet and, based on a control signal from a processing module, provides the packet to one of the packet egress queues or to the second logical multiplexer **1480**. When the packet reaches the second logical multiplexer **1480** (e.g., directly from the first logical multiplexer **1478** or from one of the packet egress queues), it is outputted to the egress sync serial and/or parallel unit **1442**.

[0494] Depending on the mode of the bridge-routing module, the egress sync serial and/or parallel module **1442** provides the packet to the wireless egress unit **1436** and/or to the wired egress unit **1434**. The modes of the bridge-router module include wired only, wireless only, concurrent transmission of the same packet (e.g., for redundancy, backup, fast failover, etc.), and concurrent transmission of different packets (e.g., packet aggregation, data segregation, etc.).

[0495] When the bridge-routing module is in a wired only mode, the egress sync serial and/or parallel unit **1442** configures the logical switches **1482** to provide the packet to the wired egress unit **1434** only. In this mode, the wireless logical switch **1482** is opened such that the wireless egress

unit **1436** does not receive the wired only packet. The wired egress buffer **1484** receives the packet and stores it in one of its queues (may only have one queue) in accordance with the priority of the packet. When the packet reaches the front of the queue, the switching circuit **1486** routes the packet to the appropriate port.

[0496] When the bridge-routing module is in a wireless only mode, the egress sync serial and/or parallel unit **1442** configures the logical switches **1482** to provide the packet to the wireless egress unit **1436** only. In this mode, the wired logical switch **1482** is opened such that the wired egress unit **1434** does not receive the wireless only packet. The wireless egress buffer **1436** receives the packet and stores it in one of its queues (may only have one queue) in accordance with the priority of the packet. When the packet reaches the front of the queue, the MAC module **1490** performs MAC layer functions and the physical layer module **1488** performs PHY functions on the packet in accordance with the one or more wireless communication protocols to produce one or more outbound symbol streams.

[0497] For example, the MAC **1490** and/or PHY modules **1488** convert outbound data (e.g., voice, text, audio, video, graphics, etc.) into one or more outbound symbol streams in accordance with one or more wireless communication standards (e.g., GSM, CDMA, WCDMA, HSUPA, HSDPA, WiMAX, EDGE, GPRS, IEEE 802.11, Bluetooth, ZigBee, universal mobile telecommunications system (UMTS), long term evolution (LTE), IEEE 802.16, evolution data optimized (EV-DO), etc.) and/or a proprietary communication protocol. Such a conversion includes one or more of: scrambling, puncturing, encoding, interleaving, constellation mapping, modulation, frequency spreading, frequency hopping, beamforming, space-time-block encoding, space-frequency-block encoding, frequency to time domain conversion, and/or digital baseband to intermediate frequency conversion. Note that the module(s) converts the outbound data into a single outbound symbol stream for Single Input Single Output (SISO) communications and/or for Multiple Input Single Output (MISO) communications and converts the outbound data into multiple outbound symbol streams for Single Input Multiple Output (SIMO) and Multiple Input Multiple Output (MIMO) communications.

[0498] A transmitter section **1496** of the RF transceiver **1494** converts the outbound symbol stream(s) into one or more outbound wireless communications signals in accordance with the one or more wireless communication protocols. For example, the transmitter section **1496** may mix the one or more outbound symbol streams with a local oscillation(s) to produce one or more up-converted signals. One or more power amplifiers and/or power amplifier drivers amplifies the one or more up-converted signals, which may be RF bandpass filtered, to produce the one or more outbound RF signals. In another embodiment, the transmitter section **1496** includes an oscillator that produces an oscillation. The outbound symbol stream(s) provides phase information (e.g., $+/-\Delta\theta$ [phase shift] and/or $\theta(t)$ [phase modulation]) that adjusts the phase of the oscillation to produce a phase adjusted RF signal(s), which is transmitted as the outbound RF signal(s). In another embodiment, the outbound symbol stream(s) includes amplitude information (e.g., A(t) [amplitude modulation]), which is used to adjust the amplitude of the phase adjusted RF signal(s) to produce the outbound RF signal(s).

[0499] In yet another embodiment, the transmitter section **1496** includes an oscillator that produces an oscillation(s). The outbound symbol stream(s) provides frequency information (e.g., $+/-\Delta f$ [frequency shift] and/or f(t) [frequency modulation]) that adjusts the frequency of the oscillation to produce a frequency adjusted RF signal(s), which is transmitted as the outbound RF signal(s). In another embodiment, the outbound symbol stream(s) includes amplitude information, which is used to adjust the amplitude of the frequency adjusted RF signal(s) to produce the outbound RF signal(s). In a further embodiment, the transmitter section **1496** includes an oscillator that produces an oscillation(s). The outbound symbol stream(s) provides amplitude information (e.g., $+/-\Delta A$ [amplitude shift] and/or A(t) [amplitude modulation) that adjusts the amplitude of the oscillation(s) to produce the outbound RF signal(s).

[0500] When the bridge-routing module is in a concurrent transmission of the same packet mode, the egress sync serial and/or parallel unit **1442** configures the logical switches **1482** as shown. In this instance, the center tap of the wireless logical switch **1482** is active as is the center tap of the wired logical switch. The center tap of the wired logical switch **1482** is coupled to one or more delay modules. For example, one delay module may be used to account for latency differences, processing differences, transmission speed differences, etc. between transmitting a packet wirelessly and transmitting the packet via wired means. Another delay may be used to account for the latency differences, processing differences, reception differences, etc. between receiving a packet wirelessly and receiving a packet via wired means.

[0501] The delay modules may be dynamically calibrated during concurrent transmission of packets and feedback from modules receiving the packets. Alternatively, the delay modules may be statically calibrated at the boot-up of the network fabric, at reset of the network fabric, and/or as the network manager may determine.

[0502] The egress sync serial and/or parallel unit **1442** provides the redundant packets to the wired egress buffer **1434** and to the wireless egress buffer **1436** in a synchronized manner such that the wired packet and the wireless packet are transmitted at substantially the same time. The wireless egress unit **1436** and the wired egress unit **1434** process their respective packets as previously discussed.

[0503] When the bridge-routing module is in a concurrent transmission of different packets mode, the second logical multiplexer **1480** of the packet egress unit **1472** outputs two packets concurrently. The egress sync serial and/or parallel unit **1442** provides one of the packets to the wireless logical switch **1482** as shown and the other packet to the wired logical switch **1482** as shown. The respective packets are provided to the wireless egress unit **1482** and wired egress unit **1434** for substantially concurrent transmission.

[0504] FIG. **90** is a schematic diagram of an embodiment of ingress units, an ingress sync module **1444**, and a packet ingress unit **1474** of a bridge/routing module. The wireless ingress unit **1440** includes a physical layer module (PHY) **1498**, a media access control layer module (MAC) **1500**, and a wireless ingress buffer **1502**. The wired ingress unit **1440** includes a plurality of ports, a switching circuit **1504**, and a wired ingress buffer **1506**. The ingress sync serial and/or parallel unit **1444** includes logical switches **1508** and one or more delay modules. The packet ingress unit **1474** includes a first logical multiplexer **1512**, one or more packet ingress queues, and a second logical multiplexer **1510**.

[0505] Depending on the mode of the bridge-routing module, the wireless ingress unit **1440** and/or to the wired ingress unit **1438** will receive one or more incoming packets. The modes of the bridge-router module includes wired only, wireless only, concurrent transmission of the same packet (e.g., for redundancy, backup, fast failover, etc.), and concurrent transmission of different packets (e.g., packet aggregation, data segregation, etc.).

[0506] When the bridge-routing module is in a wired only mode, the wired ingress unit **1438** receives an incoming packet via one of its ports and the wireless ingress unit **1440** is inactive (which may result from being disabled or from not receiving a wireless incoming packet). The switching circuit **1508** provides the incoming packet to the wired ingress buffer **1506**, which stores the packet in a queue based on the packet's priority and a prioritization scheme.

[0507] The ingress sync serial and/or parallel unit **1444** configures the logical switches such that the wireless logical switch **1508** is open and the wired logical switch **1508** is closed to the wired only tap. In this configuration, the first logical multiplexer **1512** of the packet ingress unit **1474** receives the wired only incoming packet and provides it to one of the packet ingress queues. The packet ingress queue stores the incoming packet based on its priority and a prioritization scheme. When the packet reaches the front of the queue, it is provided to the second logical multiplexer **1510**, which transmits the packet to the processing module or to another module within the bridge-routing module.

[0508] When the bridge-routing module is in a wireless only mode, the wireless ingress unit **1440** is active and the wired ingress unit **1438** is in active (e.g., disable or just not receiving a packet). In this mode, a receiver section **1514** of the RF transceiver converts one or more inbound RF signals into one or more inbound wireless symbol streams. For example, the receiver section **1514** amplifies the one or more inbound RF signals to produce one or more amplified inbound RF signals. The receiver section **1514** then mix in-phase (I) and quadrature (Q) components of the amplified inbound RF signal(s) with in-phase and quadrature components of a local oscillation(s) to produce one or more sets of a mixed I signal and a mixed Q signal. Each of the mixed I and Q signals are combined to produce one or more inbound symbol streams. In one example, each of the one or more inbound symbol streams may include phase information (e.g., $+/-\Delta\theta$ [phase shift] and/or $\theta(t)$ [phase modulation]) and/or frequency information (e.g., $+/-\Delta f$ [frequency shift] and/or $f(t)$ [frequency modulation]). In another example and/or in furtherance of the preceding example, the inbound RF signal(s) includes amplitude information (e.g., $+/-\Delta A$ [amplitude shift] and/or $A(t)$ [amplitude modulation]). To recover the amplitude information, the receiver section **1514** includes an amplitude detector such as an envelope detector, a low pass filter, etc.

[0509] The wireless ingress buffer **1440** receives the one or more inbound symbol streams. The physical layer module performs **1498** PHY functions and the MAC module **1500** performs MAC layer functions on the one or more outbound symbol streams in accordance one or more wireless communication protocols to produce one or more inbound wireless packets. For example, one or more of the MAC **1500** and PHY modules **1498** convert the one or more inbound symbol streams into inbound data (e.g., voice, text, audio, video, graphics, etc.) in accordance with one or more wireless communication standards (e.g., GSM, CDMA, WCDMA, HSUPA, HSDPA, WiMAX, EDGE, GPRS, IEEE 802.11, Bluetooth, ZigBee, universal mobile telecommunications system (UMTS), long term evolution (LTE), IEEE 802.16, evolution data optimized (EV-DO), etc.). Such a conversion may include one or more of: digital intermediate frequency to baseband conversion, time to frequency domain conversion, space-time-block decoding, space-frequency-block decoding, demodulation, frequency spread decoding, frequency hopping decoding, beamforming decoding, constellation demapping, deinterleaving, decoding, depuncturing, and/or descrambling. Note that the processing module converts a single inbound symbol stream into the inbound data for Single Input Single Output (SISO) communications and/or for Multiple Input Single Output (MISO) communications and converts the multiple inbound symbol streams into the inbound data for Single Input Multiple Output (SIMO) and Multiple Input Multiple Output (MIMO) communications.

[0510] The packet(s) are provided to the wireless ingress buffer **1502** for temporary storage in one of its queues (may only have one queue) in accordance with the priority of the packet and a prioritization scheme. When the packet reaches the front of the queue, it is provided to the ingress sync serial and/or parallel unit **1444**, which provides the packet to the first logical multiplexer **1512** of the packet ingress unit **1474**.

[0511] When the bridge-routing module is in a concurrent transmit of the same packet mode, the wireless ingress unit **1440** receives a wireless version of the packet and the wired ingress unit **1438** receives a wired version of the packet. Each of the wireless and wired ingress units **1440-1438** processes the incoming packet as previously discussed and provides them to the ingress sync serial and/or parallel unit **1444**.

[0512] In this mode, the ingress sync serial and/or parallel unit **1444** configures the logical switches **1508** to receive the wired and wireless version of the incoming packet. The ingress sync serial and/or parallel unit **1444** may provide the wired and wireless versions of the incoming packet to the packet ingress unit **1474** such that the processing module may select which packet will be further processed. Alternatively, the ingress serial and parallel unit **1444** may include processing to analyze the wired and wireless versions of the packet to determine which packet to provide to the packet ingress unit **1474**. In addition, processing within the ingress serial and/or processing unit **1444** may further perform error correction, etc. Note that the wired version of the packet may traverse one or more delay modules such as that the wired and wireless versions of the packet are substantially in sync.

[0513] When the bridge-routing module is in a concurrent transmit of the different packets mode, the wireless ingress unit **1440** receives a wireless packet and the wired ingress unit **1438** receives a wired packet. Each of the wireless and wired ingress units **1440-1438** processes their respective incoming packet as previously discussed and provides them to the ingress sync serial and/or parallel unit **1444**.

[0514] In this mode, the ingress sync serial and/or parallel unit **1444** configures the logical switches **1508** to receive the wired and wireless packets. The ingress sync serial and/or parallel unit **1444** provides the wired and wireless packets to the packet ingress. The first logical multiplexer **1512** provides the wired and wireless packets serially or in parallel to one or more of the packet ingress queues. Once the packets are in an ingress queue, they are processed as previously discussed. Note that the wired packet may traverse one or

more delay modules such as that the wired and wireless packets are substantially in sync.

[0515] FIG. **91** is a diagram of an example of frequency bands and channels of a vehicular communication network. As shown, a frequency band may include multiple channels and may be a 2.4 GHz frequency band, a 5 GHz, frequency band, 60 GHz frequency, or some other frequency band. Each of the channels of a frequency band may be used to support transmission of a wireless packet and may be allocated in a cellular pattern to avoid overlapping frequencies. For example, different channels may be used to concurrently transmit multiple wireless packets. As another example, channels may be temporarily or permanently allocated for particular types of packets (e.g., mission critical, network data, vehicle operation, information-entertainment, etc.). As yet another example, channels may be temporarily or permanently allocated to a particular device (e.g., engine control unit, etc.).

[0516] FIG. **92** is a logic diagram of an embodiment of a method for wired and wireless packet processing within a vehicular communication network that may be performed by bridge-routing module. The method begins by receiving one or more packets via the wireless egress unit and/or the wired egress unit **1518**. The method continues by determining the mode for the packet, or packets (i.e., the mode of the bridge-routing module) **1520**. The mode may be wireless only, wired only, concurrent transmission of the same packet, or concurrent transmission of different packets.

[0517] The method continues by determining whether the wireless link is being used in a link aggregation mode (i.e., for concurrent transmission of different packets) **1522**. If yes, the method continues by determining whether there is a cable failure of a wired link **1524**. If not, the method continues by a preparing the different packets for concurrent transmission on the wired link and on the wireless link **1526**.

[0518] If a cable failure has occurred, the method continues by determining whether a wired hot standby is used for the wired link **1528**. If not, the method continues by switching to a wireless only mode and retransmitting any packets that were lost due to the cable failure **1530**. If wired hot standby is being used, the method continues by using replicated wired transmission for the failed cable such that a packet is not lost **1532**. The method continues by setting up a new hot standby for an active wired link and reestablishing a link aggregation between the wireless link and the wired link **1534**.

[0519] If the wireless link is not being used for link aggregation, the method continues by determining whether the wireless link is being used as wireless hot standby **1536**. If so, the method continues by determining whether a cable failure has occurred **1538**. If not, the method continues by concurrent transmission of the same packet via the wired link and the wireless link **1540**. If, however, a cable failure has occurred, the method continues by transmitting the packet wirelessly **1542**. The method continues by setting up a new wired link and resuming the wireless hot standby for the new wired link **1544**. In this manner, the wireless link is used for hot standby and the wired link is used as the primary communication path.

[0520] If the wireless link is not being used for wireless hot standby, the method continues by determining whether the wireless link is being used for network data, system data, and/or network control data **1546**. If yes, the method continues by wirelessly transmitting packets of control data, network data, and or system data **1548**. If not, the method continues by transmitting packets in a wired manner only **1550**.

[0521] FIG. **93** is a schematic diagram of another embodiment of a switch module **1552** that includes an RF transceiver **1554**, a wireless unit **1556**, a redundancy/backup module **1558**, a buffer **1560**, a sink serial and/or parallel unit **1562**, a switching circuit **1564**, a plurality of port buffers **1566**, a plurality of ports **1568**, a processing module **1570**, and memory **1572**. The processing module **1570** may be configured to implement a local network management function **1574**, a layer 2 switching function **1576**, a layer 3 switching function **1578**, a layer 4 switching function **1580**, and or a multilayer switching function **1582**. The memory **1572** may store one or more databases, such as a switching database **1584**, network protocol database **1586**, information-entertainment database **1588**, vehicle operations database **1590**, mission-critical database **1592**, and a predetermined network topologies database **1594**. Each of the ports **1568** is coupled to a corresponding network node module, the redundancy/backup module **1558** is coupled to a bridge-routing module **1558**, and the RF transceiver **1554** is operable to communicate with a bridge-routing module **1558** and/or a network node module.

[0522] The switch module **1552** operates in one of four modes: wired only, wireless only, concurrent transmission of the same packet, and concurrent transmission of different packets. When the switch module **1552** is in a wired only mode, the RF transceiver **1554** and wireless units are in active. In this mode, the switch module **1552** functions as previously described with reference to FIGS. **33-36**.

[0523] When the switch module **1552** is in a wireless only mode, the RF transceiver **1554** and a wireless unit are active and of the redundancy/backup module **1558** and buffer are inactive. In a first version of the wireless only mode, the ports **1568** and buffers **1566** are active to transceive packets with the corresponding network node modules. In a second version of the wireless only mode, the ports **1568** and buffers **1566** are in active such that the switch module **1552** communicates with the network node modules via the RF transceiver **1554**.

[0524] When the switch module **1552** is in the concurrent transmission of the same packet mode or is in the concurrent transmission of different packets mode, the RF transceiver **1554**, the wireless unit **1556**, the redundancy/backup module **1558**, and the buffer **1566** are active. In these modes, the sync serial and/or parallel unit **1562** synchronizes transmission and reception of concurrent packets and coordinates the concurrent transmission of the same packet and concurrent transmission of different packets.

[0525] FIG. **94** is a schematic diagram of the RF transceiver **1554**, the wireless unit **1556**, the buffer **1560**, and the sync serial and/or parallel unit **1562** of a switch module. The sync serial and/or parallel unit **1562** includes ingress logical switches **1598**, egress logical switches **1596**, ingress delay units, and egress delay units. The wireless unit **1556** includes a wireless buffer **1600**, a MAC layer module **1602**, and a PHY layer module **1604**.

[0526] For an outbound packet when the switch module is in a wired only mode, the sync serial and/or parallel unit **1562** configures the logical switches **1596** to provide the packet it received from the switching circuit to the buffer **1560** only. In this mode, the wireless logical switch is open such that the wireless unit **1556** does not receive the wired

only packet. The buffer **1560** receives the packet and stores it in one of its queues (may only have one queue) in accordance with the priority of the packet. When the packet reaches the front of the queue, the buffer **1560** routes the packet to the redundancy/backup module.

[0527] For an inbound packet when the switch module is in a wired only mode, the buffer **1560** receives an incoming packet from the redundancy/backup module and the wireless unit **1556** is inactive (which may result from being disabled or from not receiving a wireless incoming packet). The sync serial and/or parallel unit **1562** configures the logical switches **1598** such that the wireless logical switch is open and the wired logical switch is closed to the wired only tap. In this configuration, when the packet reaches the front of the queue of the buffer **1560**, it is provided to the switching circuit for routing to the appropriate port.

[0528] For an outbound packet when the switch module is in a wireless only mode, the sync serial and/or parallel unit **1562** configures the logical switches **1596** to provide the packet to the wireless unit **1556** only. In this mode, the wired logical switch is opened such that the buffer **1560** does not receive the wireless only packet. The wireless buffer **1600** of the wireless unit **1556** receives the packet and stores it in one of its queues (may only have one queue) in accordance with the priority of the packet. When the packet reaches the front of the queue, the MAC module **1602** performs MAC layer functions and the physical layer module **1604** performs PHY functions on the packet in accordance with the one or more wireless communication protocols to produce one or more outbound symbol streams, which are provided to the RF transceiver **1554**.

[0529] For an inbound packet when the switch module is in a wireless only mode, the wireless unit **1556** is active and the buffer **1560** is inactive (e.g., disable or just not receiving a packet). In this mode, a receiver section of the RF transceiver **1554** converts one or more inbound RF signals into one or more inbound wireless symbol streams, which are provided to the wireless unit **1556**. The physical layer module **1604** performs PHY functions and the MAC module **1602** performs MAC layer functions on the one or more outbound symbol streams in accordance one or more wireless communication protocols to produce one or more inbound wireless packets.

[0530] The inbound wireless packet(s) are provided to the wireless buffer **1600** for temporary storage in one of its queues (may only have one queue) in accordance with the priority of the packet and a prioritization scheme. When the packet reaches the front of the queue, it is provided to the sync serial and/or parallel unit **1562**, which provides the packet to the switching circuit for routing to an appropriate port.

[0531] For an outbound packet when the switch module is in a concurrent transmission of the same packet mode, the sync serial and/or parallel unit **1562** configures the logical switches **1596** as shown. In this instance, the center tap of the outbound wireless logical switch is active as is the center tap of the outbound wired logical switch. The center tap of the wired logical switch is coupled to one or more delay modules. For example, one delay module may be used to account for latency differences, processing differences, transmission speed differences, etc. between transmitting a packet wirelessly and transmitting the packet via wired means. Another delay may be used to account for the latency differences, processing differences, reception differences, etc. between receiving a packet wirelessly and receiving a packet via wired means.

[0532] The sync serial and/or parallel unit **1562** provides the redundant packets to the buffer **1560** and to the wireless buffer **1600** of the wireless unit **1556** in a synchronized manner such that the wired packet and the wireless packet are transmitted at substantially the same time. The wireless unit **1556** and the buffer **1560** process their respective packets as previously discussed.

[0533] For an inbound packet when the switch module is in a concurrent transmit of the same packet mode, the wireless unit **1556** receives a wireless version of the packet and the buffer **1560** receives a wired version of the packet. Each processes the incoming packet as previously discussed and provides them to the sync serial and/or parallel unit **1562**.

[0534] In this mode, the sync serial and/or parallel unit **1562** configures the logical switches **1598** to receive the wired and wireless version of the incoming packet. The sync serial and/or parallel unit **1562** may provide the wired and wireless versions of the incoming packet to processing module to select which packet will be further processed. Alternatively, the sync serial and/or parallel unit **1562** may include processing to analyze the wired and wireless versions of the packet to determine which packet to provide to the switching circuit. In addition, processing within the serial and/or processing unit **1562** may further perform error correction, etc. Note that the wired version of the packet may traverse one or more delay modules such that the wired and wireless versions of the packet are substantially in sync.

[0535] For an outbound packet when the switch module is in a concurrent transmission of different packets mode, the sync serial and/or parallel unit **1562** receives two packets from the switching circuit and provides one of the packets to the wireless logical switch **1596** as shown and the other packet to the wired logical switch as shown. The respective packets are provided to the wireless unit **1556** and buffer **1560** for substantially concurrent transmission.

[0536] For an inbound packet when the switch module is in a concurrent transmit of the different packets mode, the wireless unit **1556** receives a wireless packet and the buffer **1560** receives a wired packet. Each processes their respective incoming packet as previously discussed and provides them to the sync serial and/or parallel unit **1562**.

[0537] In this mode, the sync serial and/or parallel unit **1562** configures the logical switches **1598** to receive the wired and wireless packets. The sync serial and/or parallel unit **1562** provides the wired and wireless packets to the switching circuit, which provides the packets to the appropriate ports. Note that the wired packet may traverse one or more delay modules such as that the wired and wireless packets are substantially in sync.

[0538] FIG. **95** is a schematic diagram of another embodiment of a network node module **390** that includes a network port **1606**, a network buffer **732**, a sync serial and/or parallel unit (i.e., a wired-wireless module) **1608**, a wireless communication module (which includes a wireless unit **1610** and an RF transceiver **1612**), a switching circuit **730**, a processing module **734**, a plurality of device buffers **728**, and a plurality of ports **726** that is each coupled to a vehicle device **750** or a vehicle module **752**. The processing module **734** is configured to perform a local network management function **738**. The memory **736** stores one or more databases includ-

ing a data input/output database **740**, network protocol database **742**, an information-entertainment database **744**, a vehicle operations database **746**, and a mission-critical database **748**.

[0539] The network node module **390** operates in one of four modes: wired only, wireless only, concurrent transmission of the same packet, and concurrent transmission of different packets. When the network node module **390** is in a wired only mode, the RF transceiver **1612** and wireless units **1610** are inactive. In this mode, the network node module **390** functions as previously described with reference to one or more of FIGS. **41-57**.

[0540] When the network node module **390** is in a wireless only mode, the RF transceiver **1612** and a wireless unit **1610** are active and of the network port **1606** and buffer **732** are inactive. In a first version of the wireless only mode, the ports **726** and buffers **728** are active to transceive packets with the corresponding vehicle devices **750** and/or vehicle modules **752**. In a second version of the wireless only mode, the ports **726** and buffers **728** are inactive such that the network node module **390** communicates with the vehicle devices **750** and/or vehicle modules **752** via the RF transceiver **1612**.

[0541] When the network node module **390** is in the concurrent transmission of the same packet mode or is in the concurrent transmission of different packets mode, the RF transceiver **1612**, the wireless unit **1610**, the network port **1606**, and the buffer **732** are active. In these modes, the sync serial and/or parallel unit **1608** synchronizes transmission and reception of concurrent packets and coordinates the concurrent transmission of the same packet and concurrent transmission of different packets.

[0542] In the various modes of the network node module **390**, the sync serial and/or parallel module **1608**, the buffer **732**, the wireless unit **1610**, the RF transceiver **1612**, the switching circuit **730**, the processing module **734**, the port buffers **728**, and the ports **726** function similarly to like-named components of the switch module and/or bridge-routing module.

[0543] FIG. **96** is a schematic diagram of another embodiment of a network node module **390** that includes a network interface **762** and may further include one or more of: a sensor **758** & an ADC **760**; an actuator **766** & a DAC **768**; and an electronic control unit (ECU) **770**. The network interface **762** includes a network transceiver **1614**, protocol controller **1616**, processing module **1618**, buffer **1620**, sync serial and/or parallel unit **1622**, wireless unit **1624**, and an RF transceiver **1626**.

[0544] The network interface **762** of the network node module **390** operates in one of four modes: wired only, wireless only, concurrent transmission of the same packet, and concurrent transmission of different packets. When the network interface **762** is in a wired only mode, the RF transceiver **1626** and wireless units **1624** are inactive. In this mode, the network interface **762** functions as previously described with reference to one or more of FIGS. **43-45** and **67**.

[0545] When the network interface **762** is in a wireless only mode, the RF transceiver **1626** and a wireless unit **1624** are active and the network transceiver **1614** and buffer **1620** are inactive. In this mode, the sync serial and/or parallel unit **1622** provides packets between the wireless unit **1624** and the one or more devices.

[0546] When the network interface **762** is in the concurrent transmission of the same packet mode or is in the concurrent transmission of different packets mode, the RF transceiver **1626**, the wireless unit **1624**, the network transceiver **1614**, and the buffer **1620** are active. In these modes, the sync serial and/or parallel unit **1622** synchronizes transmission and reception of concurrent packets and coordinates the concurrent transmission of the same packet and concurrent transmission of different packets.

[0547] In the various modes of the network interface **762**, the sync serial and/or parallel module **1622**, the buffer **1620**, the wireless unit **1624**, the RF transceiver **1626**, the switching circuit, and the processing module **1618** function similarly to like-named components of the switch module and/or bridge-routing module.

[0548] FIG. **97** is a schematic diagram of another embodiment of a network node module **390** that includes a network interface **762** and may further include one or more of: a sensor **758** & an ADC **760**; an actuator **766** & a DAC **768**; and an electronic control unit (ECU) **770**. The network interface **762** includes a power harvesting module **1628**, a wireless unit **1624**, and an RF transceiver **1626**.

[0549] The power harvesting module **1628** may include a power source (e.g., battery, solar panel, etc.) and circuitry to harvest power from light, heat, radio frequency signals, motion, etc. The circuitry of the power harvesting module **1628** generates one or more supply voltages **1630** that powers the other components of the network node module **390** and may be used to recharge the power source. With such a power harvesting module **1628**, the network node module **390** does not require an external power source. As such, the network node module **390** may be placed within the vehicle where it is difficult, impractical, or impossible to route wires. For example, the network node module **390** they be placed on a blade of a fan, on gears of the transmission, etc.

[0550] The wireless unit **1624** and the RF transceiver **1626** function as previously described to transmit outbound packets and to receive inbound packets. Note that if the network node module **390** only includes a sensor **758**, the RF transceiver **1626** may be replaced with an RF receiver. Further note that if a network node module **390** only includes an actuator **766**, the RF transceiver **1626** may be replaced with an RF transmitter.

[0551] FIG. **98** is a schematic diagram of an embodiment of a wireless network fabric of a vehicular communication network that includes a plurality of bridge-routing modules **1632**, a plurality of switch modules **1634**, a plurality of waveguides **1636**, and may further include one or more flexible waveguide couplers **1638**. Each of the switch modules **1634** and bridge-routing modules **1632** includes one or more antennas **1640**. Each of the antennas **1640** may be physically located proximal to a waveguide **1636**.

[0552] A waveguide **1636** may be composed of a conductive metal (e.g., copper, aluminum, gold, etc.) and have a geometric shape (e.g., circular tube, square tube, rectangular tube, oval tube, etc.). Alternatively, a waveguide **1636** may be composed of a non-conductive material (e.g., plastic, etc.) having an internal metal coating. Note that the waveguide **1636** is shown to be substantially linear, but may include a slight bend (e.g., up to 45°) to accommodate physical constraints of the vehicle. Further note that the waveguide **1636** may include multiple waveguide sections coupled together.

[0553] The flexible waveguide coupler **1638** may be a flexible microstrip fabricated on a flexible substrate (e.g., Kapton substrate). Alternatively, or in addition, the flexible microstrip includes a coplanar waveguide fabricated on a flexible substrate.

[0554] In an example of operation, the RF transceivers within the various modules utilize carrier frequencies in the 60 GHz frequency band. Accordingly, the waveguides **1636** are tuned up for 60 GHz operation. The waveguides **1636** may be positioned throughout the vehicle to support wireless communications between the various modules of the vehicle communication network. For example, a waveguide **1636** may run the length of the floor of the vehicle (and may include repeaters to boost signal strength), may be in a door, may be in the roof, may be in a fender, may be in the hood, may be in the trunk, etc.

[0555] FIG. **99** is a schematic diagram of an embodiment of a vehicle component **1642** having one or more integrated waveguides **1644**. For example, the vehicle components **1642** may be a door, a hood, a roof, a fender, a bumper, a floorboard, a dashboard, etc. The one or more integrated waveguides **1644** has a particular geometry based on the frequency band of operation as discussed with reference to FIG. **99**.

[0556] FIG. **100** is a schematic diagram of an embodiment of a multimedia processing system within a vehicle. The multimedia processing system includes, in part, the network fabric (vehicular communication network) **1646**, a GPS processing unit **1648**, the network manager **1650**, one or more processing modules (e.g., processing modules **44** from FIG. **3**, processing modules **274** from FIGS. **10** and **11** and/or multimedia processing modules **134** from FIGS. **6**, **10** and **11**), a first communication interface **1654** that provides a wireless (or wireline) connection to a mobile device **1678**, memory device **1652**, a second communication interface **1656** that provides a wireless (or wireline) connection to a remote server **1680**, a video decoder **1658**, a graphics engine **1660**, one or more displays **1662**, one or more cameras (camera #1 . . . camera #n), a pre-processing module **1664**, a compositor **1666**, an audio decoder **1668**, an audio-video encoder and multiplexer **1670**, one or more audio devices (e.g., speakers) **1672**, and one or more rear seat entertainment units that each include a respective client processing unit (client #1 . . . client #n), a respective rear seat display **1674**, and a respective headphone jack **1676**. The video decoding module **1658**, the graphics engine **1660**, the pre-processing module **1664**, the compositor **1666**, the audio decoding module **1668**, and the audio/video encoding module **1670** constitute a head end unit within the vehicle.

[0557] At any given time within a vehicle, one or more displays **1662** and **1674** may be displaying video data produced from one or more video sources. Examples of video sources include, but are not limited to, the GPS processing unit **1684**, the memory device **1652**, a remote device (e.g., mobile device **1678** or remote server **1680**), one or more cameras and one or more rear seat entertainment units. For example, one or more displays **1662** and **1674** may be displaying video produced by the GPS processing unit **1648**, video captured by one or more of the cameras, playback of an audio/video file, playback of a videogame, etc. Because of this diverse and almost constant display of video, the vehicle communication system allocates a certain amount of bandwidth to support displaying video.

[0558] For example, if the network fabric **1646** is constructed in a manner as discussed with reference to FIGS. **13-57** (e.g., wired connections only), the processing of packets ensures that a video display is not starved for video data (e.g., does not have to repeat a frame) unless the vehicle is in a critical safety state. As another example, if the network fabric **1646** is constructed in a manner as discussed with reference to FIGS. **87-99**, a combination of wired and wireless connections may be used to provide video data to one or more of the video displays **1662** and **1674**. As a specific example, the head end unit may communicate video data for playback using a wired connection to the display **1662** and a wireless connection to the rear seat entertainment units. As another specific example, the head end unit may retrieve video data for processing using a wired connection from the cameras, memory **1652**, rear seat entertainment units, and/or GPS processing unit **1648** and a wireless connection from the mobile device **1678** and remote server **1680**. It should be noted that a wireless connection could also be used to enable the head end unit to retrieve video data for processing from the cameras and rear seat entertainment units. In addition, it should be noted that a wireline connection could also be used to enable the head end unit to retrieve video data for processing from the mobile device **1678** and remote server **1680**. Furthermore, it should be noted that the head end unit could communicate video data for playback to the rear seat entertainment units using a wireline connection and to the display **1662** using a wireless connection.

[0559] In an example of operation, when or more of the cameras provides a video stream to the pre-processing module **1664**, the pre-processing module **1664** may perform one or more of the following video functions: video signal format conversion between standard definition, high-definition Blu-Ray, component video, composite video, interlaced video, progressive video, and/or the number of lines (e.g., 1080i, or 1080p, etc.); digital video processing that includes rounding considerations (e.g., truncation, conventional rounding, error feedback rounding, dynamic rounding), standard definition and high-definition transformations, display enhancements (e.g., hue, contrast, brightness, saturation, color transient improvement, sharpness), video mixing, graphic overlay processing, luma and chroma keying, video scaling (e.g., pixel dropping and/or duplication, linear interpolation, anti-aliasing resampling), scan rate conversion (e.g., frame or field dropping and/or duplication, temporal interpolation, motion compression), non-interlaced to interlaced conversion (e.g., scan line decimation, vertical filtering), interlaced to non-interlaced conversion (e.g., intra-field processing, inter-field processing, frequency response consideration), video compression (e.g., DCT, quantization, zig zag scanning, run length coding, variable length coding, etc.); NTSC, PAL, and/or SECAM processing; H.261 processing; H.263 processing; H.264 processing; MPEG encoding, decoding, compression, and decompression.

[0560] The pre-processing module **1664** provides the pre-processed video stream of one or more cameras to the compositor **1666**. The compositor **1666** combines the pre-processed video stream(s) with video graphics provided by the graphics engine **1660** or GPS navigation video and/or other video provided by the video decoder **1658** under the control of a multimedia function being performed by one or more of the processing modules. For example, the graphics engine **1660** may generate a video graphics overlay that is multiplexed with the pre-processed video stream of one or

more of the cameras. The compositor **1666** provides its output to the audio/video (A/V) encoder **1670**.

[0561] The A/V encoder **1670** may perform one or more of the above mentioned video functions to render an encoded video file of the video stream of one or more of the cameras (with or without a graphic overlay and/or with or without mixing with video from the video decoding module **1658**). The video file may be stored in memory **1652**, sent to one or more of the rear seat entertainment units for playback on the corresponding display **1674** and headphone jacks **1676**, and/or provided to the video decoder **1658** and audio decoder **1668** for playback on the vehicle display **1662** and speakers **1672**.

[0562] In another example of operation, the GPS processing module **1648** provides navigation video data to the video decoder **1658**. The video decoder **1658** performs one or more of the above mentioned video functions to produce a decoded version of the GPS navigation video data. The video decoder **1658** provides the decoded GPS navigation video data to the display **1662** for presentation to occupants of the vehicle and may further provide the decoded GPS navigation video data to the compositor **1666** for combining with a video graphics overlay from the graphics engine **1660** and/or pre-processing video from the pre-processing module **1664** to produce an enhanced GPS video stream. Note that the enhanced GPS video stream may be processed by the A/V encoder **1670** to produce a corresponding video file that may be stored in memory **1652**, decoded via the video decoder **1658** for presentation on the display **1662** and/or provided to one or more of the client modules of the rear entertainment units.

[0563] In yet another example of operation, the video decoder **1658** and audio decoder **1668** may retrieve an audio-video file from memory **1652** and/or from the mobile device **1678**, remote server **1680** or one of the rear seat entertainment units. The video decoder **1658** performs one or more of the above mentioned video functions to decode the video portion of the audio-video file and the audio decoder **1668** performs one or more of format conversion, decompression, etc. to decode the audio portion of the audio-video file. In one embodiment, the video decoder **1658** may further provide the decoded video portion to the compositor **1666** for combining with a video graphics overlay from the graphics engine **1660** and/or pre-processing video from the pre-processing module **1664** to produce an enhanced video stream. The A/V encoder and multiplexer **1670** receives the enhanced video stream and decoded audio portion and produces an encoded A/V stream therefrom that can be stored in memory **1652**, decoded via the video decoder **1658** and audio decoder **1658** for presentation on the display **1662** and speakers **1672** and/or provided to one or more of the client modules of the rear entertainment units. In another embodiment, the video decoder **1658** provides the decoded video portion of the audio-video file directly to the display **1662** without enhancement for playback thereon, and the audio decoder **1668** provides the decoded audio portion of the audio-video file to the speakers **1672** for playback thereon.

[0564] In a further example of operation, the client processing unit of a rear seat entertainment (RSE) unit may retrieve an audio-video file from memory **1652**, from an internal or externally-coupled memory and/or from the mobile device **1678** or remote server **1680**. The client processing unit may include its own video decoding module and audio decoding module, where the video decoding module performs one or more of the above mentioned video functions to decode the video portion of the audio-video file and the audio decoding module performs one or more of format conversion, decompression, etc. to decode the audio portion of the audio-video file. The RSE display **1674** presents the decoded video portion of the audio-video file and the headphone jack **1676** presents the decoded audio portion of the audio-video file.

[0565] FIG. **101** is a schematic diagram of another embodiment of a multimedia processing system within a vehicle. The multimedia processing system includes, in part, the network fabric (vehicular communication network) **1646**, the head end unit **1682**, the network manager (shown in FIG. **100**), one or more central processing units and/or processing modules (described in more detail in FIG. **100**), a first communication interface **1654** for providing a wireless (or wireline) connection to mobile device **1678**, memory **1652**, and one or more client processing units (client #1 . . . client #n) of rear seat entertainment units. The head end unit **1682** includes one or more video decoders **1658**, one or more graphics engines **1660**, the compositor **1666**, the audio decoder **1668**, and the audio/video encoder and multiplexer **1670**.

[0566] In this embodiment, the client processing units have lower processing capabilities, video decoding capabilities, video graphics processing capabilities, and/or audio decoding capabilities than those of the head end unit **1682**. As such, when a client processing unit desires to play back a high-resolution audio-video file (e.g., a 3D video or HD video), it is first processed by the head end unit **1682** to produce a lower resolution audio-video file (e.g., standard definition) for the particular client. If multiple clients are requesting playback of the same high-resolution audio-video file, the head end unit **1682** generates a lower resolution audio-video file for each of the requesting clients.

[0567] In an example of operation, a client processing unit (e.g., client #1) includes a graphics engine, a video decoder, and an audio decoder. In response to a request for playback of a high-resolution audio-video file, the graphics engine of client #1 generates a graphics input that is transmitted via the network fabric **1646** to a processing module and/or central processing unit (CPU) performing a multimedia function. The processing module interprets the graphics input as a request for playback of the high-resolution audio-video file and retrieves the file from memory **1652** and/or from the mobile device **1678** (or other remote device) via the communication interface **1654**.

[0568] The processing module then controls the head end unit **1682** to convert the high-resolution audio-video file into a lower resolution audio-video file. In particular, the video decoding module **1658** decodes the high-resolution audio-video file and provides it to the audio/video encoding module **1670** via the compositor **1666**. The audio-video encoding module **1670** performs one or more of the video functions (e.g., video scaling, video compression, format conversion, etc.) discussed with reference to FIG. **100** to produce the lower resolution audio-video file. In addition to providing the lower resolution audio-video file to the requesting client, the lower resolution audio-video file may be stored in memory **1652** for subsequent playback by a client without head end unit intervention. Note that the processing module coordinates with the network manager to

manage data flow between the head end unit **1682** and the clients utilizing techniques discussed with reference to FIGS. **28-32** and **35**.

[0569] In another example of operation, one or more of the graphics engines **1660** of the head end unit **1682** may process 3-D video graphics that are subsequently encoded by the audio/video encoding module **1670** to render a 2-D video file of the 3-D video graphics. The audio-video encoding module **1670** may provide the 2-D video file to memory **1652** for storage and/or to one or more of the client processing modules for display on an RSE display. In this manner, an RSE that does not include sufficient graphic engine resources to process high-resolution 3-D video graphics may nonetheless display high-resolution 3-D video graphics.

[0570] FIG. **102** is a logic diagram of an embodiment of a method for processing high-resolution video content within a vehicular communication network. The method begins after receiving a request for playback of high-resolution video content (e.g., 3D audio-video file, HD video file, Blu-Ray video file, etc.) from one or more clients **1684**. Upon receiving the request, the high-resolution video content is received (e.g., retrieved from memory, received from a communication interface, etc.).

[0571] The method continues by determining the number of clients requesting playback of the high resolution video content **1686**. If there is only one client requesting playback of the high-resolution video content the method continues by decoding the high-resolution video content to produce decoded video content **1688**. The method continues by determining whether the decoded video content will be combined with video graphics **1690**.

[0572] If not, the method continues by encoding **1692** and compressing the decoded video content to produce a lower resolution video file **1694**. The particular encoding and compression (and other processing) may be based on audio/video processing capabilities of the client, display size, display resolution, available bandwidth of the network fabric, etc. For example, the conversion of the high-resolution video content to a lower resolution video content may include converting a HD file to an SD file, scaling the SD file, and compressing the scaled SD file. The method continues by packetizing and segmenting the video file and sending the packets via the network fabric to the client **1696**.

[0573] If the decoded video content is to be combined with graphics, the method continues by combining the decoded video content with the video graphics and then encoding **1698** and compressing the combined video data to produce a lower resolution video file with graphics **1700**. The method continues by packetizing and segmenting the lower resolution video file with graphics and sending the packets via the network fabric to the client **1702**.

[0574] If more than one client has requested playback of the high-resolution video content, the method continues by decoding the high-resolution video content to produce one or more decoded video content streams **1704**. For each client, the method continues by determining whether or the decoded video content will be combined with video graphics **1706**. If not, the method continues by encoding **1708** and compressing the decoded video content to produce a lower resolution video file **1710**. The method continues by packetizing and segmenting the video file and sending the packets via the network fabric to the client **1712**.

[0575] If the decoded video content is to be mixed with graphics, the method continues by combining the decoded video content with the video graphics and then encoding **1714** and compressing the combined video data to produce a lower resolution video file with graphics **1716**. The method continues by packetizing and segmenting the lower resolution video file with graphics and sending the packets via the network fabric to the client **1718**.

[0576] FIGS. **103-105** are example diagrams of an embodiment of processing 3D video within a vehicular communication network. FIG. **103** illustrates the head end unit **1720** generating three video streams of a 3-D video file. The first stream corresponds to angle one of the three-dimensional video file; the second video stream corresponds to no angle of the three-dimensional video file; and the third video stream corresponds to a second angle of the three-dimensional video file. The head end unit **1720** provides the three video streams sequentially to the client to reduce processing burdens on the client **1722**.

[0577] FIG. **104** illustrates an example of the various angles for a given frame of the three-dimensional video file. In this example, a person is running where the no angle video data is shown in the middle, the first angle video data is shown on the left, and the second angle video data is shown on the right. When the three angles of video data are presented on a screen, glasses-less 3-D imaging is obtained.

[0578] FIG. **105** illustrates an example of a frame of 3D video data presented on a client's screen. The screen includes a plurality of pixels, where a box represents one or more pixels, and the pixels may be arranged in video blocks **1726** of 4×4 pixels, 8×8 pixels, 16×16 pixels etc. As shown, angle one video data is provided in a first column, no angle video data is provided in a second column, and second to video data is provided in a third column. The pattern repeats across the screen of the client display **1724**.

[0579] FIG. **106** is a schematic diagram of an embodiment of commercial insertion within a vehicular communication network. The vehicle communication system includes, in part, the network fabric **1646**, a GPS processing unit **1648**, the network manager **1650**, one or more central processing units, a communication interface **1654**, digital storage **1734**, a second communication interface **1656**, a video decoding module **1658**, a graphics engine **1660**, one of more displays **1728**, a compositor **1666**, an audio decoding module **1668**, an audio-video encoding module **1670**, one or more speakers **1730**, and one or more rear seat entertainment units that includes a client processing unit, a rear seat display **1736**, and a headphone jack **1738**.

[0580] In an example of operation, the vehicle may upload to a server via a communication interface **1654** information regarding the vehicle (e.g., performance data, fuel level, diagnostic information, etc.), information regarding the occupants of the vehicle, location of the vehicle, a driver profile, etc. **1740**. The server **1732** processes this information and generates targeted commercial content **1742**. For example, if the vehicle is low on gas, the server **1732** may generate commercial content **1742** regarding the location of several gas stations. As another example, if the drivers profile indicates a preference for a certain type of hobby, the server **1732** may generate commercial content **1742** regarding the hobby.

[0581] The server **1732** provides the commercial content **1742** to the vehicle via the communication interface **1654** (e.g., cellular communication interface, satellite communi-

cation interface, etc.). Upon receiving the commercial content **1742**, it may be stored in the digital storage **1734** for subsequent playback or provided to the video decoding module **1658** and/or the audio decoding module **1668** for immediate playback. If the commercial content **1742** is to be immediately played-back, the video decoding module **1658** decodes the commercial content **1742** in accordance with a video processing protocol (e.g., MPEG, JPEG, HTML, etc.) and provides the decoded commercial content **1742** to the display **1728** and/or to the compositor **1666**.

[0582] If provided to the compositor **1666**, the decoded commercial content **1742** may be combined with video graphics provided by the graphics engine **1660**. While the video decoding module **1658** is decoding the video portion of the commercial content **1742**, the audio decoding module **1668** is decoding the audio portion of the commercial content **1742**. The resulting decoded audio data may be provided to the speaker **1730** and/or to the A/V encoding module **1670**.

[0583] The A/V encoding module **1670** combines the decoded audio and the decoded video and encodes the combined A/V data to produce an encoded A/V file. The encoded A/V file may be stored in the digital storage **1734** and/or provided to the one or more of the rear seat entertainment units for display to a rear seat passenger.

[0584] FIG. **107** is a logic diagram of an embodiment of a method for commercial insertion within a vehicular communication network. The method begins by determining whether a commercial insertion feature is enabled **1744**. This may be enabled as a default setting by an automobile manufacturer, may be part of a satellite service or other wireless service, and/or may be a pay to disable feature of the vehicle. If the commercial insertion feature is enabled, the method continues by gathering information regarding the vehicle **1746**. Such information may include information regarding the occupants, the location of the vehicle, a GPS destination, recent searches, stored multimedia content, recent playback of multimedia content, video games, etc.

[0585] The method continues by sending the information to a server via a communication interface **1748**. The communication interface may provide communication with a satellite, another vehicle, a cellular network via a mobile phone interface, a highway wireless network, etc. The method continues by receiving commercial content via the commercial interface **1750**. The method continues by determining whether the commercial should be presented **1752**. Such a determination may be based on the nature of the commercial content, user preference settings, availability of the audio/video resources of the vehicle, etc.

[0586] If the commercial content is to be presented, the method continues by processing the commercial content for audio and or video display **1754**. Such processing may include audio decoding, video decoding, video graphic insertion, audio/video encoding and/or compression, etc. If the commercial content is not to be presented, the method continues by determining whether the commercial content should be stored **1756**. Such a determination may be based on the nature of the commercial content, user defined settings, etc. If the commercial content is not to be stored, it is discarded **1758**. If the commercial content is to be stored, it is stored in the digital storage unit **1760**.

[0587] FIG. **108** is a logic diagram of an embodiment of a method for expanding memory of a vehicular communication network. The method begins by establishing a communication link with a mobile device **1762**. The mobile device may be a cellular telephone, tablet computer, laptop computer, etc. The communication link may be a Bluetooth link, a wireless local area network link, a femto-cellular telephone mutation link, a proprietary vehicle wireless link, etc. The method continues by expanding the virtual memory of the vehicle communication system to include the memory of the mobile device **1764**.

[0588] The method continues by determining whether a playback request of multimedia data that is stored on the memory of the mobile device is received **1766**. If not, the method continues by determining whether a request to store multimedia data on the memory of the mobile device is received **1768**. If yes, the method continues by processing the request to forward data to the mobile device via the communication link for storage therein **1770**. If a request to store data in the memory of the mobile device is not received, the method continues by determining whether the communication link is still active **1772**. If the link is still active, the method repeats as shown. If the link is not active, the method repeats by attempting to reestablish the communication link **1762**.

[0589] If a playback request of multimedia data stored in the memory of the mobile device is received, the method continues by determining whether the communication link has sufficient bandwidth to support the multimedia data **1774**. If yes, the method continues by downloading the multimedia data in a communication link and processing it for display **1776**. If, however, the communication link does not have sufficient bandwidth to support the multimedia data, the method continues by determining whether additional communication links to the mobile device are available **1778**. If yes, the method continues by securing one or more of the available communication links to support the bandwidth requirements of the multimedia data **1780**.

[0590] If additional communication links are not available, the method continues by determining whether a lower data rate is possible for the multimedia data **1782**. If not, an error results and the multimedia data may not be played back at this time **1784**. If the rate of the multimedia data may be lowered, it is and subsequently downloaded via the communication link at the lower rate **1786**.

[0591] FIG. **109** is a logic diagram of an embodiment of a method for charging of an electric vehicle. The method begins by determining whether the vehicle is electric vehicle or a hybrid vehicle **1788**. If neither, the method is not performed. If the vehicle is an electric or hybrid car, the method continues by determining whether the batteries need charging **1790**. If yes, the method continues by connecting to a recharge station, which is typically not at the home of the owner of the vehicle **1792**. For example, the recharge station may be a service station that offers recharging of an electrical vehicle.

[0592] The method continues by utilizing a communication link of the vehicle communication network to send a registration packet to a power company and/or recharge service organization **1794**. The method continues by receiving a login acknowledgment **1796**. In response thereto, the method continues by downloading a recharge profile of the user and/or of the vehicle **1798**. The recharge profile may indicate a pre-negotiated rate for recharging the vehicle, accessing a particular account, utilizing a prepaid credit card, etc. The method continues by charging the vehicle in accordance with the downloaded profile **1800**.

[0593] FIG. **110** is a logic diagram of an embodiment of a method for fuel consumption optimization of a vehicle. The method begins by determining whether fuel optimization information is received via a communication link **1802**. The fuel optimization information is generated by a server that receives information regarding the car's performance, use profile, make of the car, type of gasoline used, general information regarding the vehicle, etc. Based on this information, the server generates information that may optimize fuel consumption while the vehicle is in use.

[0594] When fuel optimization information is received, the method continues by presenting a message to the driver regarding fuel optimization **1804**. The method continues by determining whether the driver has acknowledged the fuel optimization method and desires to adjust the performance of the car **1806**. If not, the method is complete for this particular fuel optimization message. If, however, the driver has provided an acknowledgment, the method continues by adjusting performance of the vehicle based on the fuel optimization information **1808**. For example, the fuel optimization information may regulate the speed at which the car is traveling, may regulate the acceleration of the vehicle, may adjust fuel mixtures, air intake, etc. to reduce fuel consumption while still maintaining an acceptable level of performance.

[0595] FIG. **111** is a logic diagram of another embodiment of a method for fuel consumption optimization of a vehicle. The method begins by requesting traffic information and/or road conditions for a known route that the vehicle will be traveling **1810**. The request may be to a remote source via one of the communication links of the vehicle communication network. The method continues by determining current driving characteristics of the vehicle (e.g., speed, acceleration, braking, and/or other driving traits) **1812**.

[0596] The method continues by determining whether fuel optimization is possible based on a comparison of the traffic information, road condition information, and the current driving characteristics **1814**. For example, by lowering the speed of the vehicle, a traffic slowdown ahead in the vehicle's route may clear prior to the vehicle arriving thereby reducing fuel consumption and improving the quality of the trip. If fuel optimization is not possible, the method repeats as shown.

[0597] If, however, fuel optimization is possible, the method continues by presenting a message to the driver regarding fuel optimization options **1816**. The method continues by determining whether the driver has acknowledged a fuel optimization option **1818**. If not, the method repeats as shown. If yes, the method continues by adjusting performance of the vehicle to optimize fuel consumption **1820**.

[0598] FIG. **112** is a schematic diagram of an embodiment of a multi-level pre-processing module **1664** of FIG. **100**. The preprocessing module **1664** includes a low latency subsampling module **1822**, a first level encoding module **1824**, a second level encoding module **1826**, a third level encoding module **1828**, and a packetizing module **1830**.

[0599] In an example of operation, one or more cameras (which can be of any type, including but not limited to, an IP camera, optical camera or IR camera) provide one or more video streams to the pre-processing module **1664**. For example, one video stream may be from one camera and/or one camera type, while another video stream may be from another camera and/or camera type. The low latency subsampling module **1822** samples the video stream(s) at a particular rate (e.g., **2**N, where N=>1) to produce one or more sub-sampled video streams. For example, if the sampling rate is two, then every other pixel is sampled thereby reducing the size of a frame of the video stream(s). The first level encoding module **1824** performs a base layer encoding of one of the sub-sampled video streams to produce a first level encoded video stream that has low latency and low quality. In one embodiment, the low latency subsampling module **1822** is not included or by-passed to provide a video stream captured in low resolution from a camera directly to the first level encoding module **1824**.

[0600] The second level encoding module **1826** performs spatial scaling encoding on the same video stream or a different video stream based on the base layer encoding of the first level encoding module **1824** to produce a second level encoded video stream. The third level encoding module **1828** performs quality scaling encoding on the same video stream or a different video stream from the first and/or second level encoding modules **1824** and **1826** based on the encoding performed by the second level encoding module **1826** to produce a third level encoded video stream. Note that a second subsampling module may be included prior to the second level encoding module **1826** to reduce latency of producing the second encoded video stream.

[0601] The packetizing module **1830** receives the three levels of encoded video streams and packetizes them to produce a single packet stream output. A processing module (not shown) generates a control signal to indicate an encoding mode to the pre-processing module **1664**. The pre-processing module **1164** enables one or more of the levels of encoding based on the encoding mode. For example, the pre-processing module **1164** may enable one or more of the levels of encoding based on a mode of operation (e.g., a mode of operation of the vehicle, camera(s) and/or pre-processing module **1664**), a vehicle status, an availability of network resources of the vehicular communication network and/or packet content. The control signal may further control (e.g., adjust encoded characteristics, etc.) the first, second, and/or third level of encoding as well as control (e.g., enable, adjust packetizing characteristics, etc.) the packetizing module **1830**. Note that the preprocessing module **1664** may include more or less levels of encoding. Further note that one or more of the layers of encoding may further include compression.

[0602] FIG. **113** is a schematic diagram of an embodiment of a multi-level video decoder **1658** of a vehicular communication network. The video decoder **1658** includes a de-packetizing module **1832**, a first level decoding module **1834**, a second level decoding module **1836**, a third level decoding module **1838**, and a video output module **1840**. The first, second, and third level video decoding modules perform the corresponding video decoding of the video encoding performed by the first, second, and third level video encoding modules of the preprocessing module.

[0603] As an example of operation, the de-packetizing module **1832** receives the single packet stream output of the pre-processing module **1664**. The de-packetizing module **1832** provides first level encoded packets to the first level decoding module **1834**, provides second level encoded packets to the second level decoding module **1836**, and provides third level encoded packets to the third level decoding module **1838**. Each of the decoding modules decodes their respective packets to produce respective first, second and third level decoded video signals.

[0604] The video output module **1840** may output one, two, or all three of the decoded video signals to produce a decoded video output based on a control signal produced by the processing module (as in FIG. **112**). In addition to indicating the encoding mode, the control signal may further indicate particular one(s) of the levels of decoding to output. Such a control signal (encoding mode) may be generated, for example, based on the packet content. For example, safety related video functions require low latency video inputs, which can be of low quality, to perform the corresponding safety-related operations; thus the video output module **1840** may only need to output the first level decoded video signal. As another example, the vehicle display and/or one or more of the RSE displays can tolerate latency but require a higher quality video input, so the video output module **1840** may output only the second or third level of decoding. Note that the video provided to an RSE display is first processed by the audio/video processing module. Further note that the encoding performed by the preprocessing module and the decoding performed by the video decoder **1658** may include one or more of the video functions discussed with reference to FIG. **100**. In addition, the control signal (encoding mode) may also be generated, for example, based on a mode of operation, such that different operation mode(s) may use video from different coding layer(s).

[0605] FIG. **114** is a diagram of an example of the pre-processing module of FIG. **112** performing first level encoding. In this example, a frame of video data is received, where a square represents a pixel, a block of pixels etc. The low latencies subsampling module samples the video input (H) to produce a sub sampled video frame. The darkened squares represent pixels, pixel blocks, etc. that were sampled and the white squares represent pixels, pixel blocks etc. that were not sampled. The low latency subsampling module provides an H/2 sub-sampled frame of video to the first level encoding module. The first level encoding module encodes slices of the H/2 frame of video to produce the first level encoded video data.

[0606] FIG. **115** is a diagram of an example of a low latency video packet organization as may be outputted by the packetizing module of the pre-processing module. In this example, the packetizing module receives packets during time intervals over a period of time. During a first time interval of the example a first level 1 packet A is received from the first level encoding module. At a second time interval, a second level 1 packet B is received from the first level encoding module and a first level 2 packet A is received from the second level encoding module. At a third time interval, a third level 1 packet C is received from the first level encoding module and a first level 3 packet A is received from the third level encoding module. In this example, the first level encoding module provides a packet at every time interval, the second level encoding module provides a packet every other time interval, and the third level encoding module provides a packet every third time.

[0607] The packetizing module outputs the packets in a serial manner with packets from the first level encoding module having priority over the other encoding modules. As such, in response to the packets received during the first time interval, the packetizing module outputs the first level one packet A (the only one it received). In response to the packets received during the second time interval, the packetizing module outputs the second level 1 packet B prior to the first level 2 packet A. In response to the packets received during the third time interval, the packetizing module outputs the third level 1 packet C prior to the first level 3 packet A; and so on.

[0608] FIG. **116** is a logic diagram of an embodiment of a method for multi-level video processing. The method begins by determining whether video recording is enabled **1842**. The video recording may be enabled based on a user input, based on sensing a trigger event (putting the car in reverse), etc. If the video recording is enabled, the method continues by determining an encoding mode based on vehicle status and availability of network resources (e.g., bandwidth of the network fabric, availability of processing modules, availability of memory, availability of video encoding, availability of video decoding, etc.) **1844**.

[0609] The method continues by enabling one or more levels of video encoding in the preprocessing module based on the determined encoding mode **1846**. The method continues by facilitating handshaking between the video encoding and video decoding in accordance with the enabled encoding mode **1848**. The method continues by capturing video, encoding it in accordance with the encoding mode, and decoding it in accordance with the encoding mode **1850**. The method continues by determining whether encoding conditions had changed **1852**. If not, the method repeats as shown. If yes, the method repeats by determining whether video recording is enabled **1850**.

[0610] FIG. **117** is a diagram of an example of a video safety monitoring module **1854** using multi-level video. In this example, a video safety monitoring module **1854** receives first level decoded (or encoded) video data **1856** and processes it to determine whether criteria for detecting a safety issue have been met. If a safety issue is detected, the video safety monitor module **1854** generates and outputs a video detected safety issue (hereinafter referred to as a safety command) **1858**. For example, the vehicle safety monitoring module **1854** may be programmed to detect the potential of a collision using video information and, if a collision seems imminent, the video safety monitor module **1854** generates one or more safety commands that may be used to enable automatic evasive maneuvers, trigger alarms, etc.

[0611] FIG. **118** is a diagram of another example of a user display **1860** and/or driver assist module **1862** using multi-level video. In this example, a user display **1860** and/or a driver assist module **1862** receives second and/or third level decoded (or encoded) video data **1864**. For example, the video data may correspond to video captured by rear cameras of a vehicle, where the video data is used for parking assistance.

[0612] FIG. **119** is a diagram of an example of processing video content authorization in a vehicle network communication system. The vehicle communication system includes, in part, the network fabric, a GPS processing unit **1648**, the network manager **1650**, one or more central processing units **1864**, a communication interface **1654**, memory (storage) **1734**, a digital rights management (DRM) interface **1866**, a video decoding module **1658**, a graphics engine **1660**, one of more displays **1662**, one or more cameras, a pre-processing module **1664**, a compositor **1666**, an audio decoding module **1668**, an audio-video encoding module **1670**, one or more speakers **1672**, and one or more rear seat entertainment units that includes a client processing unit, a rear seat display **1674**, and a headphone jack **1676**. The video decoding module **1658**, the graphics engine **1660**, the preprocessing module **1664**, the compositor **1666**, the audio decoding

module **1668**, and the audio/video encoding module **1670** constitute a head end unit within the vehicle.

[0613] In an example of operation, the vehicle downloads video content **1868** from a home **1870**, where the video content **1868** is copyright protected. In this instance, before playback of the video content **1868** within the vehicle occurs, the vehicle determines whether the occupant(s) of the vehicle are authorized to display the copyrighted video content **1868** within the vehicle. To accomplish this, an occupant of the vehicle provides digital rights management information to the DRM security interface **1866**. This can be done by using a card that is inserted into a slot within the dashboard of the vehicle, via a wireless communication between a mobile device of an occupant and the DRM security interface **1866**, etc.

[0614] A processing module or CPU **1864** interprets the DRM information received from the occupant to determine the occupant's rights for displaying copyrighted video content. When an occupant requests playback of a particular copyrighted video file, the processing module **1864** determines whether the copyrighted video file includes a watermark and or unique ID that corresponds to the DRM information of the occupant. If so, the playback of the particular copyrighted video file is allowed. If not, the playback is prohibited and a corresponding message may be provided to the occupant.

[0615] FIG. **120** is a logic diagram of an embodiment of a method for video content authorization processing within a vehicle communication network. The method begins by downloading video data from a home to vehicle **1870**. The method continues by determining whether a playback request for the downloaded video is received **1872**. If a playback request is received, the method continues by determining whether the video content includes DRM information that prevents its playback in a vehicle **1874**. If the video content includes DRM information that prevents playback in the vehicle, the playback request is denied **1876**.

[0616] If the video content does not include DRM information that prevents in vehicle playback, the method continues by accessing video security information of an occupant via a DRM security interface **1878**. The video security information may include a watermark, a video ID, accessing a third party service to determine authorization and/or to obtain authorization, etc. The method continues by determining whether the occupant has the right to play back this video content **1880**. If not, the request is denied **1876**. If so, the playback is enabled **1882**.

[0617] The method may further include checking DRM information prior to, or during, download of the video content to determine whether the video content may be downloaded to a vehicle. If not, the download request is denied. If so, the download is enabled.

[0618] FIG. **121** is a diagram of an example of resource sharing in a vehicle communication network in a distributed system. The system includes a vehicle **1884**, another vehicle **1886**, home **1888**, and Internet coupled devices. Each of the vehicle **1884** and other vehicle **1886** includes the network fabric **1892**, processing resources **1894** and **1918** (e.g., processing modules, CPUs, ECUs, video decoding modules, video encoding modules, etc.), memory **1896** and **1920**, and a gateway **1898**. The home **1888** includes processing resources **1900** and memory **1902**. The Internet coupled devices include memory **1904**, processing resources **1906**, servers **1908**, automobile meta-factor **1910** or services, and/or automobile repair services **1912**.

[0619] In an example of operation, the vehicle **1884** communicates with the home **1888**, the other vehicle **1886**, and/or the Internet **1890** to request processing resources and/or memory to augment, or off-load, processing within the vehicle **1884** and/or storage of vehicle data. As a more specific example, the vehicle **1884** may be in communication with the home **1888** and requests access to one or more processing resources **1900** to augment, or off-load, video processing within the vehicle **1884**. In this specific example, if the home **1888** has available video processing resources **1900**, and the vehicle **1884** is authorized to access them, the home **1888** may grant access to the processing resources **1900** for co-processing of video data for the vehicle **1884**.

[0620] As another more specific example, the vehicle **1884** and other vehicle **1886** may be traveling on the same road and are within wireless communication range of each other. In this instance, the vehicle **1884** requests access to one or more processing resources **1918** of the other vehicle **1886** to augment, or off-load, a process being executed within the vehicle **1884** or needing to be executed. The other vehicle **1886** receives the request, determines whether the vehicle **1884** is authorized to access its processing resources **1918** and/or memory **1920**, and, if so, determines whether to grant access to the processing resources **1918** and/or memory **1920**. If access is granted, data is exchanged via a wireless communication link between the two vehicles. The health of the link is continually monitored to ensure that data and processing thereof is accurately communicated between vehicles.

[0621] As yet another more specific example, the vehicle **1884** may request access to Internet processing resources **1906** and/or memory **1904** for augmenting, or offloading, processes within the vehicle and/or storage of vehicle data. In this instance, the vehicle **1884** sends a request via the cellular network **1914** and/or the highway wireless network **1916** to a service provider **1912** coupled to the Internet **1890**. The service provider **1912** receives a request, determines whether the vehicle **1884** is authorized to access processing resources **1906** and/or memory **1904**, and, if so, determines whether to grant access to the processing resources **1906** and/or memory **1904**. If access is granted, the vehicle **1884** utilizes the cellular network **1914** and/or highway wireless network **1916** to communicate with the allocated processing resources **1906** and/or allocated memory resources **1904**.

[0622] FIG. **122** is a logic diagram of an embodiment of a method for resource sharing within a distributed system. The method begins by collecting vehicle data, which may be data from one or more sensors of the vehicle, diagnostic data, performance data, occupant data, etc. **1922**. The method continues by determining whether the vehicle network traffic is slow **1924**. For example, the vehicle network traffic may be slow if the car is not in use, is in use but parked, and/or at a scheduled time when the car is typically not in use.

[0623] When the network traffic is slow, the method continues by sending the vehicle data to one or more of service providers via the gateway for storage and/or processing **1926**. The method continues by determining whether feedback is received (e.g., receiving a message indicating needed service, a message regarding recommended service, a message acknowledging storage, etc.) **1928**. If feedback is received, the method continues by

processing the feedback (e.g., provide a message to a user, switch to a backup component, etc.) **1930**.

[0624] FIG. **123** is a logic diagram of another embodiment of a method for resource sharing within a distributed system. The method begins by determining whether the vehicle network is linked to an external processing module and/or memory for augmenting, and/or offloading, processing and/or data storage **1932**. If yes, the method continues by determining whether to use the external processing module and/or memory **1934**. If yes, the method continues by requesting to access the resources **1936**. The method continues by determining whether the request is granted **1938**. If yes, the method continues by coordinating resource sharing **1940**.

[0625] FIG. **124** is a schematic diagram of an embodiment of a power management module **1942** that includes a network interface **1944**, a processing module **1946**, and memory **1948**. The network interface **1944** may connect to the network fabric (vehicular communication network) via a wireless connection and/or a wired connection **1950**. The memory **1948** stores a network topology database **1952**, power saving options and corresponding applications, and a device database **1954**.

[0626] The device database **1954** includes fields for a device ID **1956**, device power saving options **1958**, network power island ID **1960** (e.g., the power island in which the device resides), and power island power savings options **1962**. Note that a power island may include two or more vehicle devices and/or vehicle modules. The devices and/or modules within a power island may be related by device type, device function and/or device location within the vehicular communication network. For example, as shown in FIG. **10**, the left front assembly **286** may be a power island, which includes various devices, such as a left headlight, left blinker and left sensor.

[0627] The device power savings options **1958** for a particular device may include, for example, one or more of: placing the device in a sleep mode, reducing the supply voltage to the device, reducing the clock rate of the device, disabling power to the device, limiting the current to the device and using a lower power physical layer communication link for the device. The power island power savings options **1962** for a particular power island may include, for example, one or more of: placing each of the devices in the power island in a sleep mode, reducing the supply voltage to each of the devices in the power island, reducing the clock rate of each of the devices in the power island, disabling power to each of the devices in the power island, limiting the current to each of the devices of the power island and using a lower power physical layer communication link for each of the devices in the power island.

[0628] For example, device 000 000 is not in a power island and has power saving options one, three, four, and six. With reference to the power saving options table, power saving option one corresponds to a sleep/wake mode, power saving option two corresponds to a power on/off mode, power saving option three corresponds to reducing a supply voltage, power saving option four includes reducing a clock rate, power saving option five includes current limiting, power saving option six includes lowering power of a physical layer communication link, and may include other power saving techniques. As such, device 000 000 may have its power adjusted by placing it in a sleep mode when inactive (i.e., power saving option 1), have its supply voltage reduced (i.e., power saving option 3), have its clock rate reduced (i.e., power saving option 4), and/or use a lower power physical layer communication link (i.e., power saving option 6).

[0629] As another example, device 000 001 is in power island 001 and has individual power saving options of one, three and four. The power saving options for island 001 include power saving options one and two. As such, the device 000 001 may be individually controlled for power savings and/or controlled as part of the power island. Individually, the device 000 001 may be placed in a sleep mode when inactive (i.e., power saving option 1), have its supply voltage reduced (i.e., power saving option 3), and/or have its clock rate reduced (i.e., power saving option 4).

[0630] As yet another example, device 000 002 is in power island 001 and has individual power saving options of one, three and six. The power saving options for island 001 include power saving options one and two. As such, the device 000 002 may be individually controlled for power savings and/or controlled as part of the power island. Individually, the device 000 002 may be placed in a sleep mode when inactive (i.e., power saving option 1), have its supply voltage reduced (i.e., power saving option 3), and/or use a lower power physical layer communication link (i.e., power saving option 6).

[0631] FIG. **125** is a logic diagram of an embodiment of method for power management in a vehicle network communication system that may be performed by the processing module of the power management module. The method begins by selecting a device coupled to the network fabric **1964**. The selection may be based on a periodic checking of devices coupled to the network fabric, monitoring activity of the device, in response to a request, etc.

[0632] The method continues by determining whether to enable power savings for the particular device **1966**. Such a determination may be based on the current state of the device. For example, the current state may be an active state or an idle state. If in an active state, the current state may further indicate a present or future operation of the device, such as the current task being performed by the device, the speed at which the task needs to be performed, whether the device is currently performing a task, whether the device will be performing a task imminently, etc.

[0633] If power savings is to be enabled, the method continues by determining whether to employ an individual power saving option or a power island power saving option **1968**. For example, the method may determine whether the device belongs to a power island, and if so, determine whether to enable power savings for that power island. If the device does not belong to a power island, an individual power saving option can be applied to the device. Likewise, if the device belongs to a power island, but power savings do not need to be enabled for the power island, an individual power saving option can be applied to the device. For example, the determination of whether power savings need to be enabled for the power island can be based on the current state of one or more of the device and the power island. As mentioned above, the current state may indicate one or more of a present operation or a future operation of the device and/or power island. However, if the device belongs to a power island and a determination is made that power savings should be enabled for that power island, a power island power savings option can be applied to the power island.

[0634] If an individual power saving option is to be applied, the method continues by selecting and applying the individual power saving option **1970**. The selection may be based on, for example, the type of device, the use of the device (i.e., one or more operations performed by the device), the location of the device in the network, etc. If a power island power saving option is to be used, the method continues by selecting and applying the power saving option to be applied **1972**. The selection may be based, for example, on the type of devices within the power island, the use of the devices within the power island (i.e., one or more operations performed by one or more devices within the power island), the location of the power island in the network, etc. After applying the power saving option, the method continues by determining whether a list of devices has been exhausted **1974**. If not, the method repeats by selecting another device **1964**.

[0635] If the list of devices has been exhausted, the method continues by determining whether the power options for one or more devices should be updated **1976**. If so, the process repeats from the beginning for the particular devices. In addition, or in the alternative, the method may be continually repeated to change the power saving options for one or more devices.

[0636] As may be used herein, the terms "substantially" and "approximately" provides an industry-accepted tolerance for its corresponding term and/or relativity between items. Such an industry-accepted tolerance ranges from less than one percent to fifty percent and corresponds to, but is not limited to, component values, integrated circuit process variations, temperature variations, rise and fall times, and/or thermal noise. Such relativity between items ranges from a difference of a few percent to magnitude differences. As may also be used herein, the term(s) "operably coupled to", "coupled to", It's and/or "coupling" includes direct coupling between items and/or indirect coupling between items via an intervening item (e.g., an item includes, but is not limited to, a component, an element, a circuit, and/or a module) where, for indirect coupling, the intervening item does not modify the information of a signal but may adjust its current level, voltage level, and/or power level. As may further be used herein, inferred coupling (i.e., where one element is coupled to another element by inference) includes direct and indirect coupling between two items in the same manner as "coupled to". As may even further be used herein, the term "operable to" or "operably coupled to" indicates that an item includes one or more of power connections, input(s), output(s), etc., to perform, when activated, one or more its corresponding functions and may further include inferred coupling to one or more other items. As may still further be used herein, the term "associated with", includes direct and/or indirect coupling of separate items and/or one item being embedded within another item. As may be used herein, the term "compares favorably", indicates that a comparison between two or more items, signals, etc., provides a desired relationship. For example, when the desired relationship is that signal 1 has a greater magnitude than signal 2, a favorable comparison may be achieved when the magnitude of signal 1 is greater than that of signal 2 or when the magnitude of signal 2 is less than that of signal 1.

[0637] While the transistors in the above described figure (s) is/are shown as field effect transistors (FETs), the transistors may be implemented using any type of transistor structure including, but not limited to, bipolar, metal oxide semiconductor field effect transistors (MOSFET), N-well transistors, P-well transistors, enhancement mode, depletion mode, and zero voltage threshold (VT) transistors.

[0638] Implementations of the present disclosure have also been described above with the aid of method steps illustrating the performance of specified functions and relationships thereof. The boundaries and sequence of these functional building blocks and method steps have been arbitrarily defined herein for convenience of description. Alternate boundaries and sequences can be defined so long as the specified functions and relationships are appropriately performed. Any such alternate boundaries or sequences are thus within the scope and spirit of the claimed disclosure.

[0639] Implementations of the present disclosure have been described, at least in part, in terms of one or more embodiments. An embodiment of the present disclosure is used herein to illustrate the present disclosure, an aspect thereof, a feature thereof, a concept thereof, and/or an example thereof. A physical embodiment of an apparatus, an article of manufacture, a machine, and/or of a process that embodies the present disclosure may include one or more of the aspects, features, concepts, examples, etc. described with reference to one or more of the embodiments discussed herein. Further, from figure to figure, the embodiments may incorporate the same or similarly named functions, steps, modules, etc. that may use the same or different reference numbers and, as such, the functions, steps, modules, etc. may be the same or similar functions, steps, modules, etc. or different ones.

[0640] Implementations of the present disclosure have been described above with the aid of functional building blocks illustrating the performance of certain significant functions. The boundaries of these functional building blocks have been arbitrarily defined for convenience of description. Alternate boundaries could be defined as long as the certain significant functions are appropriately performed. Similarly, flow diagram blocks may also have been arbitrarily defined herein to illustrate certain significant functionality. To the extent used, the flow diagram block boundaries and sequence could have been defined otherwise and still perform the certain significant functionality. Such alternate definitions of both functional building blocks and flow diagram blocks and sequences are thus within the scope and spirit of the claimed disclosure. One of average skill in the art will also recognize that the functional building blocks, and other illustrative blocks, modules and components herein, can be implemented as illustrated or by discrete components, application specific integrated circuits, processors executing appropriate software and the like or any combination thereof.

What is claimed is:

1. A system comprising:

one or more processors coupled to a plurality of ports of a vehicular communication network;

a network manager configured on the one or more processors;

a queue configured to store a plurality of packets for transmission within the vehicular communication network, the queue identifying one or more network resources of a vehicular communication network to be used for each packet of the plurality of packets;

wherein the network manager is configured to determine a number of the plurality of packets of the queue that can be transmitted at a time interval based at least on

non-overlapping network resources identified to be used by the number of plurality of packets; and

wherein the network manager is configured to transmit the number of the plurality of packets both on a first port of the plurality of ports and a second port of the plurality of ports.

2. The system of claim **1**, wherein the plurality of ports comprises a plurality of ingress ports and egress ports.

3. The system of claim **1**, wherein the network manager is further configured to determine that for a second time interval a packet of the plurality of packets is transmitted only on one of the first port or the second port to avoid use of overlapping network resources.

4. The system of claim **1**, wherein the network manager is further configured to determine that a packet with a higher priority than other packets of the plurality of packets in the queue uses a different network resource.

5. The system of claim **4**, wherein the network manager is further configured to associate the transmission of the number of the plurality of packets with the packet with the higher priority.

6. The system of claim **1**, wherein the network manager is further configured to determine that a packet has a conflict with the one or more network resources used by one or more other packets with a higher priority in the queue.

7. The system of claim **6**, wherein the network manager is further configured to identify one or more other routes the packet is to use to avoid the conflict.

8. The system of claim **6**, wherein the network manager is further configured to adjust the one or more network resources used by the packet to avoid the conflict.

9. A method comprising:

entering, by a network manger configured on one or more processors, a packet of a vehicle communications network into a queue based at least on a prioritization scheme;

recording, by the network manager, in the queue one or more network resources used by the packet;

determining, by the network manager, that another packet in the queue, with a higher priority than the packet, uses a different one or more network resources than the packet;

associating, by the network manager, the packet with the another packet for concurrent transmission; and

transmitting, by the network manager, the packet with the another packet on each of a plurality of ports of the vehicle communications network.

10. The method of claim **9**, further comprising determining, by the network manager, the one or more network resources from a network topographical map.

11. The method of claim **9**, further comprising determining, by the network manager, the one or more network resources from a database.

12. The method of claim **9**, wherein the another packet is a next packet to be transmitted.

13. The method of claim **9**, wherein the queue is dedicated to a type of packet.

14. The method of claim **9**, wherein the queue is dedicated to the plurality of ports.

15. A system comprising:

one or more processors coupled to a plurality of ports of a vehicular communication network;

a queue configured to identify one or more network resources of the vehicular communication network to be used by each of a plurality of packets;

a network manager configured on the one or more processors to:

determine that one or more network resources used by a first packet of the plurality of packets has a conflict with one or more network resources used by a second packet of the plurality of packets with a higher priority;

determine that at least one network resource of one or more network resources used by the first packet is adjustable; and

adjust the at least one network resource used by the first packet to avoid the conflict with the one or more network resources used by the second packet.

16. The system of claim **15**, wherein the network manager is further configured to adjust the at least one network resource comprising a route between a source and a destination.

17. The system of claim **15**, wherein the network manager is further configured to change a route of the first packet to avoid the conflict.

18. The system of claim **15**, wherein the network manager is further configured to temporarily adjust the at least one network resource used by the first packet.

19. The system of claim **15**, wherein the network manager is further configured to determine, that another packet with a higher priority than the first packet that uses a different one or more network resources than the first packet is in the queue and associate the first packet with the another packet for concurrent transmission.

20. The system of claim **15**, wherein the network manager is further configured to transmit the first packet with the another packet on each of a plurality of ports of the vehicle communications network.

* * * * *