US012386430B2

(12) **United States Patent**
Marcolina et al.

(10) **Patent No.: US 12,386,430 B2**
(45) **Date of Patent: *Aug. 12, 2025**

(54) **SYSTEMS AND METHODS OF CREATING A REALISTIC DISPLACEMENT OF A VIRTUAL OBJECT IN VIRTUAL REALITY/AUGMENTED REALITY ENVIRONMENTS**

(71) Applicant: **ULTRAHAPTICS IP TWO LIMITED**, Bristol (GB)

(72) Inventors: **Alex Marcolina**, Los Angeles, CA (US); **David S. Holz**, San Francisco, CA (US)

(73) Assignee: **ULTRAHAPTICS IP TWO LIMITED**, Bristol (GB)

(*) Notice: Subject to any disclaimer, the term of this patent is extended or adjusted under 35 U.S.C. 154(b) by 0 days.

This patent is subject to a terminal disclaimer.

(21) Appl. No.: **18/759,735**

(22) Filed: **Jun. 28, 2024**

(65) **Prior Publication Data**

US 2024/0361843 A1 Oct. 31, 2024

Related U.S. Application Data

(63) Continuation of application No. 17/867,648, filed on Jul. 18, 2022, now Pat. No. 12,032,746, which is a

(Continued)

(51) **Int. Cl.**
G06F 3/01 (2006.01)
G02B 27/01 (2006.01)

(Continued)

(52) **U.S. Cl.**
CPC ***G06F 3/017*** (2013.01); ***G06F 1/163*** (2013.01); ***G06F 3/011*** (2013.01); ***G06F 3/0304*** (2013.01);

(Continued)

(58) **Field of Classification Search**
CPC ... G06F 3/017; G06F 3/011–015; G06T 19/20
See application file for complete search history.

(56) **References Cited**

U.S. PATENT DOCUMENTS

2,665,041 A 1/1954 Maffucci
4,175,862 A 11/1979 DiMatteo et al.

(Continued)

FOREIGN PATENT DOCUMENTS

CN 101930286 A 12/2010
CN 102117117 A 7/2011

(Continued)

OTHER PUBLICATIONS

PCT/US2016/017632—International Search Report and Written Opinion dated Jul. 27, 2016, 13 pages.

(Continued)

Primary Examiner — Patrick F Marinelli
(74) *Attorney, Agent, or Firm* — Haynes Beffel and Wolfeld, LLP; Andrew Dunlap; Paul Durdik

(57) **ABSTRACT**

The technology disclosed relates to a method of realistic displacement of a virtual object for an interaction between a control object in a three-dimensional (3D) sensory space and the virtual object in a virtual space that the control object interacts with. In particular, it relates to detecting free-form gestures of a control object in a three-dimensional (3D) sensory space and generating for display a 3D solid control object model for the control object during the free-form gestures, including sub-components of the control object and in response to detecting a 2D sub-component free-form gesture of the control object in the 3D sensory space in virtual contact with the virtual object, depicting, in the generated display, the virtual contact and resulting rotation of the virtual object by the 3D solid control object model.

16 Claims, 54 Drawing Sheets

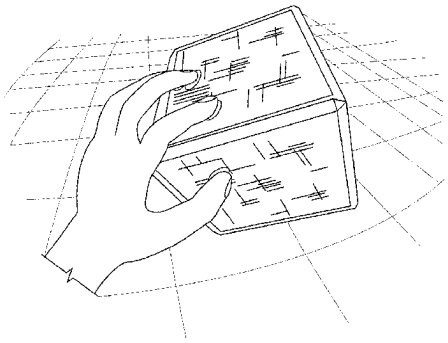

Related U.S. Application Data

continuation of application No. 17/187,676, filed on Feb. 26, 2021, now Pat. No. 11,392,212, which is a continuation of application No. 16/383,553, filed on Apr. 12, 2019, now Pat. No. 10,936,080, which is a continuation of application No. 15/587,173, filed on May 4, 2017, now Pat. No. 10,261,594, which is a continuation of application No. 14/626,898, filed on Feb. 19, 2015, now Pat. No. 9,696,795.

(60) Provisional application No. 62/116,366, filed on Feb. 13, 2015.

(51) **Int. Cl.**

G06F 1/16	(2006.01)
G06F 3/03	(2006.01)
G06F 3/04815	(2022.01)
G06T 17/10	(2006.01)
G06T 19/00	(2011.01)
G06T 19/20	(2011.01)

(52) **U.S. Cl.**

CPC ***G06F 3/04815*** (2013.01); ***G06T 17/10*** (2013.01); ***G06T 19/006*** (2013.01); ***G06T 19/20*** (2013.01); *G02B 27/017* (2013.01); *G06T 2215/16* (2013.01); *G06T 2219/2016* (2013.01)

(56) **References Cited**

U.S. PATENT DOCUMENTS

4,879,659	A	11/1989	Bowlin et al.
5,134,661	A	7/1992	Reinsch
5,282,067	A	1/1994	Liu
5,454,043	A	9/1995	Freeman
5,554,980	A	9/1996	Hashimoto et al.
5,574,511	A	11/1996	Yang et al.
5,581,276	A	12/1996	Cipolla et al.
5,594,469	A	1/1997	Freeman et al.
5,616,078	A	4/1997	Oh
5,659,475	A	8/1997	Brown
5,742,263	A	4/1998	Wang et al.
5,900,863	A	5/1999	Numazaki
5,901,170	A	5/1999	Peysakhovich et al.
6,002,808	A	12/1999	Freeman
6,031,161	A	2/2000	Baltenberger
6,031,661	A	2/2000	Tanaami
6,072,494	A	6/2000	Nguyen
6,075,892	A	6/2000	Fan et al.
6,075,895	A	6/2000	Qiao et al.
6,084,979	A	7/2000	Kanade et al.
6,090,443	A	7/2000	Eastep
6,147,678	A	11/2000	Kumar et al.
6,154,558	A	11/2000	Hsieh
6,160,899	A	12/2000	Lee et al.
6,181,343	B1	1/2001	Lyons
6,184,326	B1	2/2001	Razavi et al.
6,184,926	B1	2/2001	Khosravi et al.
6,191,773	B1	2/2001	Maruno et al.
6,195,104	B1	2/2001	Lyons
6,204,852	B1	3/2001	Kumar et al.
6,222,465	B1	4/2001	Kumar et al.
6,252,598	B1	6/2001	Segen
6,256,033	B1	7/2001	Nguyen
6,263,091	B1	7/2001	Jain et al.
6,417,866	B1	7/2002	Man et al.
6,493,041	B1	12/2002	Hanko et al.
6,498,628	B2	12/2002	Iwamura
6,603,867	B1	8/2003	Sugino et al.
6,661,918	B1	12/2003	Gordon et al.
6,702,494	B2	3/2004	Dumler et al.
6,786,877	B2	9/2004	Foxlin
6,788,809	B1	9/2004	Grzeszczuk et al.
6,798,628	B1	9/2004	Macbeth
6,804,654	B2	10/2004	Kobylevsky et al.
6,804,656	B1	10/2004	Rosenfeld et al.
6,814,656	B2	11/2004	Rodriguez
6,819,796	B2	11/2004	Hong et al.
6,842,175	B1	1/2005	Schmalstieg et al.
6,901,170	B1	5/2005	Terada et al.
6,919,880	B2	7/2005	Morrison et al.
6,943,774	B2	9/2005	Horiki
6,950,534	B2	9/2005	Cohen et al.
6,993,157	B1	1/2006	Oue et al.
7,030,861	B1	4/2006	Westerman et al.
7,071,914	B1	7/2006	Marks
7,095,401	B2	8/2006	Liu et al.
7,170,492	B2	1/2007	Bell
7,213,707	B2	5/2007	Hubbs et al.
7,215,828	B2	5/2007	Luo
7,244,233	B2	7/2007	Krantz et al.
7,257,237	B1	8/2007	Luck et al.
7,259,873	B2	8/2007	Sikora et al.
7,308,112	B2	12/2007	Fujimura et al.
7,340,077	B2	3/2008	Gokturk et al.
7,379,563	B2	5/2008	Shamaie
7,519,223	B2	4/2009	Dehlin et al.
7,532,206	B2	5/2009	Morrison et al.
7,536,032	B2	5/2009	Bell
7,542,586	B2	6/2009	Johnson
7,598,942	B2	10/2009	Underkoffler et al.
7,606,417	B2	10/2009	Steinberg et al.
7,646,372	B2	1/2010	Marks et al.
7,652,679	B2	1/2010	Aratani et al.
7,656,372	B2	2/2010	Sato et al.
7,665,041	B2	2/2010	Wilson et al.
7,692,625	B2	4/2010	Morrison et al.
7,831,932	B2	11/2010	Josephsoon et al.
7,840,031	B2	11/2010	Albertson et al.
7,849,421	B2	12/2010	Yoo et al.
7,861,188	B2	12/2010	Josephsoon et al.
7,874,917	B2	1/2011	Marks et al.
7,886,229	B2	2/2011	Pachet
7,886,236	B2	2/2011	Kolmykov-Zotov et al.
7,940,885	B2	5/2011	Stanton et al.
7,948,493	B2	5/2011	Klefenz et al.
7,971,156	B2	6/2011	Albertson et al.
7,980,885	B2	7/2011	Gattwinkel et al.
8,064,704	B2	11/2011	Kim et al.
8,073,198	B2 *	12/2011	Marti G06F 3/038 345/158
8,085,339	B2	12/2011	Marks
8,086,971	B2	12/2011	Radivojevic et al.
8,111,239	B2	2/2012	Pryor et al.
8,112,719	B2	2/2012	Hsu et al.
8,144,121	B2	3/2012	Kitaura
8,144,148	B2	3/2012	El Dokor et al.
8,144,233	B2	3/2012	Fukuyama
8,150,102	B2	4/2012	Zheng et al.
8,166,421	B2	4/2012	Magal et al.
8,185,176	B2	5/2012	Mangat et al.
8,213,707	B2	7/2012	Li et al.
8,230,852	B2	7/2012	Zhang et al.
8,235,529	B1	8/2012	Raffle et al.
8,244,233	B2	8/2012	Chang et al.
8,289,162	B2	10/2012	Mooring et al.
8,290,208	B2	10/2012	Kurtz et al.
8,311,370	B2	11/2012	Ha et al.
8,325,214	B2	12/2012	Hildreth
8,373,654	B2	2/2013	Wang et al.
8,379,101	B2	2/2013	Mathe et al.
8,457,353	B2	6/2013	Reville et al.
8,487,871	B2	7/2013	Langridge et al.
8,488,246	B2	7/2013	Border et al.
8,502,789	B2	8/2013	Tse et al.
8,514,221	B2	8/2013	King et al.
8,593,402	B2	11/2013	Stinson, III
8,631,355	B2	1/2014	Murillo et al.
8,638,989	B2	1/2014	Holz
8,659,594	B2	2/2014	Kim et al.
8,659,658	B2	2/2014	Vassigh et al.
8,693,731	B2	4/2014	Holz et al.

(56) **References Cited**

U.S. PATENT DOCUMENTS

8,817,087 B2 8/2014 Weng et al.
8,842,084 B2 9/2014 Andersson et al.
8,843,857 B2 9/2014 Berkes et al.
8,854,433 B1 10/2014 Rafii
8,856,687 B2 10/2014 Robertson et al.
8,872,914 B2 10/2014 Gobush
8,881,051 B2 11/2014 Frey et al.
8,930,852 B2 1/2015 Chen et al.
8,933,876 B2 1/2015 Galor et al.
8,963,867 B2 2/2015 Narita
9,056,396 B1 6/2015 Linnell
9,128,552 B2 9/2015 Case et al.
9,134,800 B2 9/2015 Maeda
9,213,890 B2 12/2015 Huang et al.
9,250,707 B2 2/2016 Choi et al.
9,256,282 B2 2/2016 Latta et al.
9,256,288 B2 2/2016 Lee et al.
9,298,264 B2 * 3/2016 Leithinger G06F 3/041
9,299,013 B1 3/2016 Curlander et al.
9,383,895 B1 7/2016 Vinayak et al.
9,398,243 B2 7/2016 Ryu et al.
9,436,288 B2 9/2016 Holz
9,448,634 B1 9/2016 Wakeford et al.
9,552,673 B2 * 1/2017 Hilliges G06F 3/011
9,600,078 B2 3/2017 Rafii
9,696,795 B2 * 7/2017 Marcolina G06F 3/0304
9,910,498 B2 * 3/2018 Kutliroff G06F 3/011
9,983,697 B1 5/2018 Gribetz
9,996,797 B1 * 6/2018 Holz G06F 3/011
10,042,512 B2 8/2018 Robertson et al.
10,126,823 B2 11/2018 Nahman et al.
10,261,594 B2 * 4/2019 Marcolina G06F 3/0304
10,275,039 B2 4/2019 Cohen et al.
10,281,987 B1 5/2019 Yang et al.
10,429,923 B1 * 10/2019 Johnston G02B 27/0176
10,866,632 B2 * 12/2020 Johnston G06F 3/011
10,901,518 B2 1/2021 Cohen et al.
10,936,080 B2 * 3/2021 Marcolina G06F 3/011
11,181,972 B2 * 11/2021 Matsuike G06F 3/016
11,182,685 B2 * 11/2021 Holz G06F 3/04815
11,237,625 B2 * 2/2022 Johnston G06F 1/163
11,392,212 B2 * 7/2022 Marcolina G06F 1/163
11,450,073 B1 * 9/2022 Pusch G06T 19/20
11,500,473 B2 11/2022 Cohen et al.
11,520,477 B2 12/2022 Bailey et al.
11,567,583 B2 1/2023 Cohen et al.
11,610,376 B1 * 3/2023 Smith G06F 3/016
11,875,012 B2 1/2024 Benson
2002/0008211 A1 1/2002 Kask
2002/0041327 A1 4/2002 Hildreth et al.
2002/0064382 A1 5/2002 Hildreth et al.
2002/0105484 A1 8/2002 Navab et al.
2002/0140633 A1 10/2002 Rafii et al.
2003/0053658 A1 3/2003 Pavlidis
2003/0053659 A1 3/2003 Pavlidis et al.
2003/0081141 A1 5/2003 Mazzapica
2003/0123703 A1 7/2003 Pavlidis et al.
2003/0138130 A1 7/2003 Cohen et al.
2003/0152289 A1 8/2003 Luo
2003/0202697 A1 10/2003 Simard et al.
2004/0046736 A1 3/2004 Pryor et al.
2004/0068409 A1 4/2004 Tanaka et al.
2004/0125228 A1 7/2004 Dougherty
2004/0145809 A1 7/2004 Brenner
2004/0193413 A1 9/2004 Wilson et al.
2004/0207597 A1 10/2004 Marks
2004/0212725 A1 10/2004 Raskar
2005/0068518 A1 3/2005 Baney et al.
2005/0071864 A1 3/2005 Denoue et al.
2005/0131607 A1 6/2005 Breed
2005/0168578 A1 8/2005 Gobush
2005/0236558 A1 10/2005 Nabeshima et al.
2005/0237296 A1 * 10/2005 Lee G06F 3/014
345/156
2005/0285845 A1 12/2005 Dehlin
2006/0017807 A1 1/2006 Lee et al.
2006/0035710 A1 2/2006 Festejo et al.
2006/0072105 A1 4/2006 Wagner
2006/0210112 A1 9/2006 Cohen et al.
2006/0239471 A1 10/2006 Mao et al.
2006/0252477 A1 11/2006 Zalewski et al.
2006/0290950 A1 12/2006 Platt et al.
2007/0042346 A1 2/2007 Weller
2007/0067798 A1 3/2007 Wroblewski
2007/0092118 A1 4/2007 Tachibana
2007/0120834 A1 5/2007 Boillot
2007/0126696 A1 6/2007 Boillot
2007/0130547 A1 6/2007 Boillot
2007/0206719 A1 9/2007 Suryanarayanan et al.
2007/0216894 A1 9/2007 Garcia et al.
2007/0220444 A1 9/2007 Sunday et al.
2007/0236475 A1 10/2007 Wherry
2007/0238956 A1 10/2007 Haras et al.
2008/0005703 A1 1/2008 Radivojevic et al.
2008/0013826 A1 1/2008 Hillis et al.
2008/0056561 A1 3/2008 Sawachi
2008/0056752 A1 3/2008 Denton et al.
2008/0064954 A1 3/2008 Adams et al.
2008/0106746 A1 5/2008 Shpunt et al.
2008/0113756 A1 5/2008 Williams et al.
2008/0141181 A1 6/2008 Ishigaki et al.
2008/0174547 A1 7/2008 Kanevsky et al.
2008/0244465 A1 10/2008 Kongqiao et al.
2008/0273764 A1 11/2008 Scholl
2008/0278589 A1 11/2008 Thorn
2008/0304740 A1 12/2008 Sun et al.
2008/0319356 A1 12/2008 Cain et al.
2009/0031240 A1 1/2009 Hildreth
2009/0040215 A1 2/2009 Afzulpurkar et al.
2009/0070093 A1 3/2009 Nakanishi et al.
2009/0085881 A1 4/2009 Keam
2009/0102840 A1 4/2009 Li
2009/0103780 A1 4/2009 Nishihara et al.
2009/0122146 A1 5/2009 Zalewski et al.
2009/0128564 A1 5/2009 Okuno
2009/0184920 A1 7/2009 Francis
2009/0203993 A1 8/2009 Mangat et al.
2009/0203994 A1 8/2009 Mangat et al.
2009/0217211 A1 8/2009 Hildreth et al.
2009/0228841 A1 9/2009 Hildreth
2009/0257623 A1 10/2009 Tang et al.
2009/0265671 A1 10/2009 Sachs et al.
2009/0274339 A9 11/2009 Cohen et al.
2009/0278917 A1 11/2009 Dobbins et al.
2009/0309710 A1 12/2009 Kakinami
2009/0319892 A1 12/2009 Wright et al.
2010/0020078 A1 1/2010 Shpunt
2010/0023015 A1 1/2010 Park
2010/0026963 A1 2/2010 Faulstich
2010/0027845 A1 2/2010 Kim et al.
2010/0046842 A1 2/2010 Conwell
2010/0050134 A1 2/2010 Clarkson
2010/0053164 A1 3/2010 Imai et al.
2010/0058252 A1 3/2010 Ko
2010/0066667 A1 3/2010 MacDougall et al.
2010/0083109 A1 4/2010 Tse et al.
2010/0092267 A1 4/2010 Najdovski et al.
2010/0095206 A1 4/2010 Kim
2010/0118123 A1 5/2010 Freedman et al.
2010/0125815 A1 5/2010 Wang et al.
2010/0156676 A1 6/2010 Mooring et al.
2010/0158372 A1 6/2010 Kim et al.
2010/0177049 A1 7/2010 Levy et al.
2010/0177929 A1 7/2010 Kurtz et al.
2010/0199221 A1 8/2010 Yeung et al.
2010/0201880 A1 8/2010 Iwamura
2010/0219934 A1 9/2010 Matsumoto
2010/0222102 A1 9/2010 Rodriguez
2010/0230494 A1 9/2010 Okui
2010/0231512 A1 9/2010 Perez et al.
2010/0234094 A1 9/2010 Gagner et al.
2010/0235786 A1 9/2010 Maizels et al.
2010/0261526 A1 10/2010 Anderson et al.
2010/0275159 A1 10/2010 Matsubara et al.

(56) **References Cited**

U.S. PATENT DOCUMENTS

2010/0277411 A1 11/2010 Yee et al.
2010/0278393 A1 11/2010 Snook et al.
2010/0283739 A1 11/2010 Zhang et al.
2010/0296698 A1 11/2010 Lien et al.
2010/0302015 A1 12/2010 Kipman et al.
2010/0302357 A1 12/2010 Hsu et al.
2010/0303291 A1 12/2010 Margolis
2010/0306712 A1 12/2010 Snook et al.
2010/0306713 A1 12/2010 Geisner et al.
2010/0309097 A1 12/2010 Raviv et al.
2010/0315336 A1 12/2010 Butler et al.
2011/0007072 A1 1/2011 Khan et al.
2011/0018795 A1 1/2011 Jang
2011/0026765 A1 2/2011 Ivanich et al.
2011/0035666 A1 2/2011 Geisner et al.
2011/0043806 A1 2/2011 Guetta et al.
2011/0057875 A1 3/2011 Shigeta et al.
2011/0066984 A1 3/2011 Li
2011/0080470 A1 4/2011 Kuno et al.
2011/0093820 A1 4/2011 Zhang et al.
2011/0107216 A1 5/2011 Bi
2011/0107270 A1 5/2011 Wang et al.
2011/0115486 A1 5/2011 Frohlich et al.
2011/0119640 A1 5/2011 Berkes et al.
2011/0134112 A1 6/2011 Koh et al.
2011/0148875 A1 6/2011 Kim et al.
2011/0164029 A1 7/2011 King et al.
2011/0169726 A1 7/2011 Holmdahl et al.
2011/0173204 A1 7/2011 Murillo et al.
2011/0173235 A1 7/2011 Aman et al.
2011/0173574 A1 7/2011 Clavin et al.
2011/0181509 A1 7/2011 Rautiainen et al.
2011/0193939 A1 8/2011 Vassigh et al.
2011/0205151 A1 8/2011 Newton et al.
2011/0213664 A1 9/2011 Osterhout et al.
2011/0228978 A1 9/2011 Chen et al.
2011/0234840 A1 9/2011 Klefenz et al.
2011/0251896 A1 10/2011 Impollonia et al.
2011/0254765 A1 10/2011 Brand
2011/0267259 A1 11/2011 Tidemand et al.
2011/0286676 A1 11/2011 El Dokor
2011/0289455 A1 11/2011 Reville et al.
2011/0289456 A1 11/2011 Reville et al.
2011/0291925 A1 12/2011 Israel et al.
2011/0291988 A1 12/2011 Bamji et al.
2011/0296353 A1 12/2011 Ahmed et al.
2011/0299737 A1 12/2011 Wang et al.
2011/0304650 A1 12/2011 Campillo et al.
2011/0310007 A1 12/2011 Margolis et al.
2011/0314427 A1 12/2011 Sundararajan
2012/0001938 A1 1/2012 Sandberg
2012/0013613 A1 1/2012 Vesely
2012/0038549 A1 2/2012 Mandella et al.
2012/0038637 A1 2/2012 Marks
2012/0050157 A1 3/2012 Latta et al.
2012/0053015 A1 3/2012 Esaki et al.
2012/0062489 A1 3/2012 Andersson et al.
2012/0062558 A1 3/2012 Lee et al.
2012/0065499 A1 3/2012 Chono
2012/0068914 A1 3/2012 Jacobsen et al.
2012/0069168 A1 3/2012 Huang et al.
2012/0079420 A1 3/2012 Arriola
2012/0079421 A1 3/2012 Arriola
2012/0086729 A1 4/2012 Baseley et al.
2012/0087543 A1 4/2012 Choi et al.
2012/0105613 A1 5/2012 Weng et al.
2012/0110447 A1 5/2012 Chen
2012/0113223 A1* 5/2012 Hilliges G06F 3/011 348/46
2012/0117514 A1* 5/2012 Kim G06F 3/017 345/158
2012/0121185 A1 5/2012 Zavesky
2012/0127070 A1 5/2012 Ryoo et al.
2012/0150650 A1 6/2012 Zahand
2012/0151421 A1 6/2012 Clarkson
2012/0157203 A1 6/2012 Latta et al.
2012/0162117 A1 6/2012 Wilson et al.
2012/0167134 A1 6/2012 Hendricks et al.
2012/0170800 A1 7/2012 Frazao et al.
2012/0179970 A1 7/2012 Hayes
2012/0194517 A1 8/2012 Izadi et al.
2012/0204133 A1 8/2012 Guendelman et al.
2012/0206339 A1 8/2012 Dahl
2012/0223882 A1 9/2012 Galor et al.
2012/0223959 A1 9/2012 Lengeling
2012/0250936 A1 10/2012 Holmgren
2012/0257035 A1 10/2012 Larsen
2012/0268410 A1 10/2012 King et al.
2012/0309516 A1 12/2012 Langridge et al.
2012/0313848 A1 12/2012 Galor et al.
2012/0317510 A1 12/2012 Noda et al.
2012/0320080 A1 12/2012 Giese et al.
2012/0322527 A1 12/2012 Aoki et al.
2012/0324332 A1 12/2012 Zaragoza et al.
2012/0327125 A1* 12/2012 Kutliroff G06F 3/04842 345/660
2013/0007616 A1 1/2013 Bell et al.
2013/0016896 A1 1/2013 Seida
2013/0019204 A1 1/2013 Kotler et al.
2013/0033483 A1 2/2013 Im et al.
2013/0055120 A1 2/2013 Galor et al.
2013/0127980 A1 5/2013 Haddick et al.
2013/0135218 A1 5/2013 Jain et al.
2013/0167092 A1 6/2013 Yu et al.
2013/0169594 A1 7/2013 Yi et al.
2013/0182897 A1 7/2013 Holz
2013/0182902 A1 7/2013 Holz
2013/0191911 A1 7/2013 Dellinger et al.
2013/0194238 A1 8/2013 Sakai
2013/0222640 A1 8/2013 Baek et al.
2013/0239059 A1 9/2013 Chen et al.
2013/0278499 A1 10/2013 Anderson
2013/0293454 A1 11/2013 Jeon et al.
2013/0293683 A1 11/2013 Zhou et al.
2013/0307935 A1 11/2013 Rappel et al.
2013/0321265 A1 12/2013 Bychkov et al.
2013/0321401 A1 12/2013 Piemonte et al.
2013/0335318 A1 12/2013 Nagel et al.
2013/0342459 A1 12/2013 Karakotsios et al.
2013/0342572 A1 12/2013 Poulos et al.
2014/0015831 A1 1/2014 Kim et al.
2014/0028716 A1 1/2014 Yeh
2014/0089849 A1 3/2014 Choi et al.
2014/0098018 A1 4/2014 Kim et al.
2014/0104206 A1 4/2014 Anderson
2014/0104274 A1* 4/2014 Hilliges G06F 3/017 345/424
2014/0113507 A1 4/2014 Vanzetto
2014/0118255 A1 5/2014 Billerbeck
2014/0125813 A1 5/2014 Holz
2014/0134733 A1 5/2014 Wu et al.
2014/0137039 A1 5/2014 Kroeger et al.
2014/0139641 A1 5/2014 Holz
2014/0157135 A1 6/2014 Lee et al.
2014/0157209 A1 6/2014 Dalal et al.
2014/0177913 A1 6/2014 Holz
2014/0192206 A1 7/2014 Holz
2014/0201666 A1 7/2014 Bedikian et al.
2014/0201674 A1 7/2014 Holz
2014/0201683 A1 7/2014 Holz
2014/0201684 A1 7/2014 Holz
2014/0201690 A1 7/2014 Holz
2014/0222385 A1 8/2014 Muenster et al.
2014/0223385 A1 8/2014 Ton et al.
2014/0225918 A1 8/2014 Mittal et al.
2014/0240215 A1 8/2014 Tremblay et al.
2014/0247695 A1 9/2014 Vangeel et al.
2014/0258880 A1 9/2014 Holm et al.
2014/0267019 A1 9/2014 Kuzmin
2014/0304665 A1 10/2014 Holz
2014/0306903 A1 10/2014 Huang et al.
2014/0307920 A1 10/2014 Holz
2014/0317576 A1 10/2014 Song et al.
2014/0333560 A1 11/2014 Kramer et al.

(56) **References Cited**

U.S. PATENT DOCUMENTS

2014/0340311	A1	11/2014	Holz	
2014/0344731	A1	11/2014	Holz	
2014/0344762	A1	11/2014	Grasset et al.	
2014/0375947	A1	12/2014	Park et al.	
2015/0003673	A1	1/2015	Fletcher	
2015/0016777	A1	1/2015	Abovitz et al.	
2015/0084864	A1	3/2015	Geiss et al.	
2015/0103004	A1	4/2015	Cohen et al.	
2015/0106767	A1	4/2015	Abercrombie et al.	
2015/0116214	A1	4/2015	Grunnet-Jepsen et al.	
2015/0135132	A1	5/2015	Josephson	
2015/0153832	A1	6/2015	Krepec	
2015/0153833	A1	6/2015	Pinault et al.	
2015/0169076	A1	6/2015	Cohen et al.	
2015/0169175	A1	6/2015	Cohen et al.	
2015/0169176	A1	6/2015	Cohen et al.	
2015/0220150	A1	8/2015	Plagemann et al.	
2015/0220776	A1	8/2015	Cronholm	
2015/0227795	A1	8/2015	Starner et al.	
2015/0234569	A1	8/2015	Hess	
2015/0258432	A1	9/2015	Stafford et al.	
2015/0277583	A1	10/2015	Kasahara et al.	
2015/0338998	A1	11/2015	Chathoth et al.	
2015/0346820	A1	12/2015	Poupyrev et al.	
2015/0355827	A1	12/2015	Van Der Westhuizen et al.	
2016/0093105	A1	3/2016	Rimon et al.	
2016/0210781	A1	7/2016	Thomas et al.	
2016/0239080	A1*	8/2016	Marcolina	G06F 3/017
2016/0328022	A1	11/2016	Holz	
2017/0018119	A1	1/2017	Kim et al.	
2017/0235377	A1*	8/2017	Marcolina	G06T 17/10 715/849
2017/0287214	A1	10/2017	Anderson et al.	
2017/0324841	A1	11/2017	Clement et al.	
2017/0357407	A1	12/2017	Palmaro	
2018/0025531	A1*	1/2018	Terahata	G06F 3/0346 345/421
2018/0239137	A1	8/2018	Boger et al.	
2018/0239515	A1	8/2018	Cooper et al.	
2018/0259406	A1	9/2018	Waldman	
2018/0285636	A1	10/2018	Fei et al.	
2019/0155384	A1	5/2019	Fajt et al.	
2019/0235636	A1*	8/2019	Marcolina	G06T 19/20
2019/0286252	A1	9/2019	Beach et al.	
2020/0097071	A1*	3/2020	Johnston	G06F 3/017
2021/0081036	A1*	3/2021	Johnston	G06F 1/163
2021/0181857	A1*	6/2021	Marcolina	G06F 3/0304
2022/0147137	A1*	5/2022	Johnston	G02B 7/002
2022/0357800	A1*	11/2022	Marcolina	G06T 19/20

FOREIGN PATENT DOCUMENTS

CN	102135796	A	7/2011
CN	102184020	A	9/2011
CN	102216883	A	10/2011
CN	102262438	A	11/2011
CN	102402290	A	4/2012
CN	102439538	A	5/2012
CN	102902355	A	1/2013
CN	103493106	A	1/2014
CN	105308536	A	2/2016
DE	11 2014 000 441	T5	10/2015
EP	1477924	A2	11/2004
EP	2369443	A2	9/2011
EP	2378488	A2	10/2011
GB	2419433	A	4/2006
JP	2002512069	A	4/2002
KR	20090006825	A	1/2009
WO	2010148155	A2	12/2010
WO	2013169842	A2	11/2013
WO	2014113507	A1	7/2014

OTHER PUBLICATIONS

PCT/US2016/017632—International Preliminary Report on Patentability dated Aug. 24, 2017, 12 pages.

CN 201680018136.2—Response to First Office Action dated Dec. 23, 2019 as filed May 7, 2020, 22 pages including English translation.

CN 201680018136.2—Response to Second Office Action dated Sep. 10, 2020 as filed Nov. 25, 2020, 13 pages including English translation.

CN 201680018136.2—Second Office Action dated Sep. 10, 2020, 6 pages.

CN 201680018136.2—First Office Action dated Dec. 23, 2019, 12 pages including English translation.

Bowman, "Design and Evaluation of Menu Systems for Immersive Virtual Environments", Proceedings of the Virtual Reality 2001 Conference (VR'01) 0-7695-0948-7/01 $17.00 @2001 IEEE, pp. 7-8. (Year: 2001).

Sato, "Implementation and Evaluations of Vision-based Finger Flicking Gesture Recognition for Tabletops", 978-1-4244-2898-4/08/ $25.00 2008 IEEE, pp. 2-3. (Year: 2008).

Steinicke, "Grab-and-Throw Metaphor: Adapting Desktop-based Interaction Paradigms to Virtual Reality", IEEE Symposium on 3D User Interfaces Mar. 25-26, 2006 Alexandria, Virginia, USA, pp. 1-4. (Year: 2006).

PCT/US2014/011737—International Preliminary Report on Patentability dated Jul. 21, 2016, 14 pages.

PCT/US2014/011737—International Search Report and Written Opinion dated May 30, 2014, 20 pages.

CN 201480014375.1—Response to First Office Action dated Jul. 3, 2017 filed Nov. 17, 2017, 9 pages.

CN 201480014375.1—Second Office Action dated Jan. 17, 2018, 15 pages.

CN 201480014375.1—Response to Second Office Action dated Jan. 17, 2018 filed Jun. 1, 2018, 17 pages.

CN 201480014375.1—Request for re-examination filed May 9, 2019, 11 pages including English translation.

Wu et al., Vision-Based Gesture Recognition: A Review, in Gesture-Based Communication in Human-Computer Interaction, Springer, Mar. 1999, 13 pages, pp. 103-115.

Pavlovic, V.I., et al., "Visual Interpretation of Hand Gestures for Human-Computer Interaction: A Review," IEEE Transactions on Pattern Analysis and Machine Intelligence, vol. 19, No. 7, Jul. 1997, pp. 677-695.

CN 201480014375.1—Second Board Opinion mailed Apr. 12, 2021, 14 pages.

Bowman, Doug A., et al., "3D User Interfaces: New Directions and Perspectives", Nov./Dec. 2008, IEEE Computer Society 17pages.

Bullock, Jamie, Tychonas Michailidis, and Matthieu Poyade. "Towards a live interface for direct manipulation of spatial audio." Proceedings of the international conference on live interfaces. Sussex: Reframe Books, 2016 (Year: 2016).

CN 201480014375.1—First Board Opinion mailed Oct. 10, 2020, 7 pages.

CN 201480014375.1—First Office Action dated Jul. 3, 2017, 7 pages.

CN 201480014375.1—Fourth Office Action (Rejection Decision) dated Jan. 25, 2019, 6 pages.

CN 201480014375.1—Response to First Board Opinion filed Nov. 20, 2020, 10 pages.

CN 201480014375.1—Response to Third Office Action dated Aug. 20, 2018 filed Nov. 5, 2018, 5 pages.

CN 201480014375.1—Third Office Action dated Aug. 20, 2018, 15 pages.

* cited by examiner

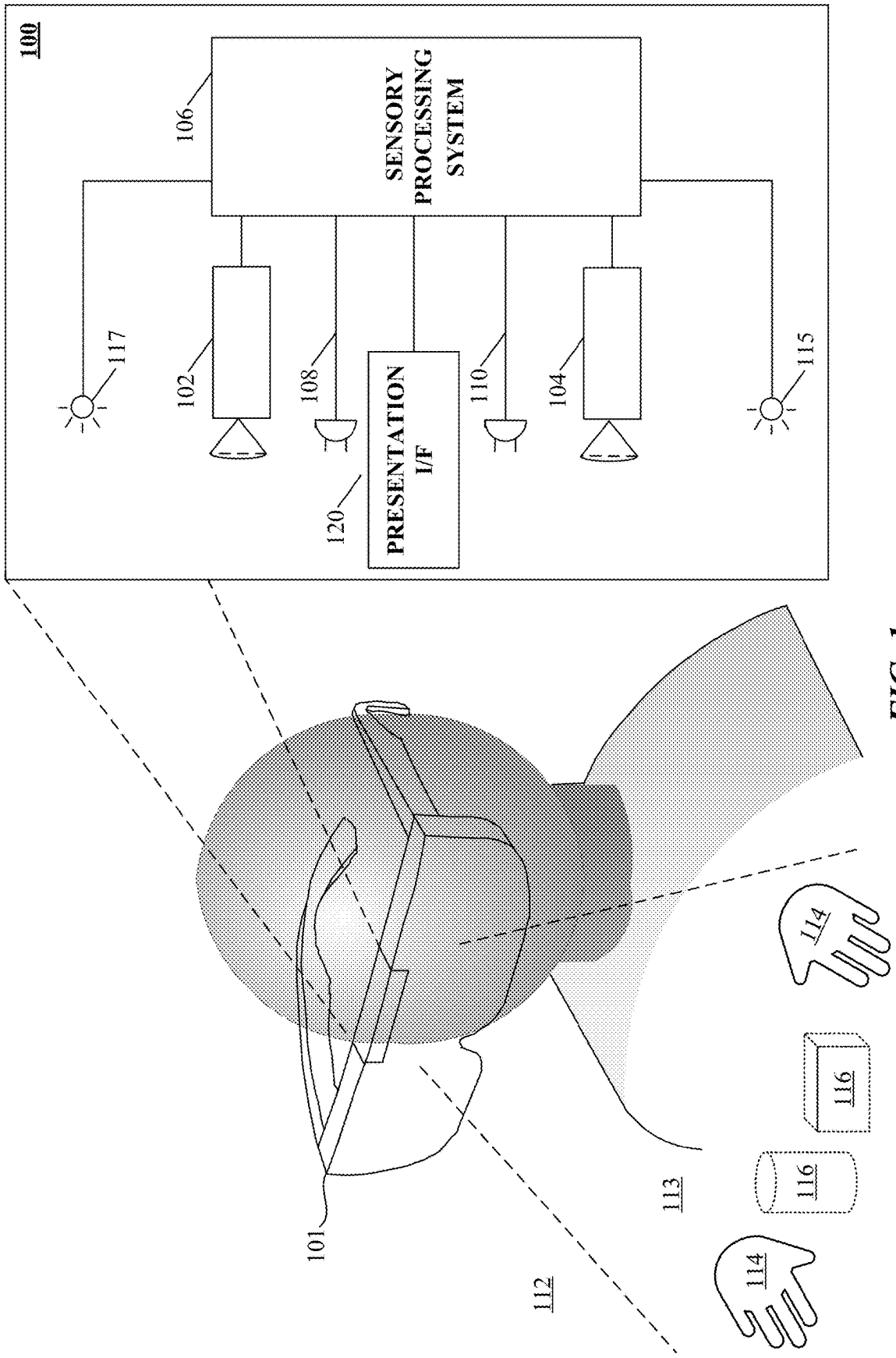
100
106
SENSORY PROCESSING SYSTEM
117
102
108
PRESENTATION I/F
120
110
104
115
101
112
113
114
116
116
114

FIG. 1

100A

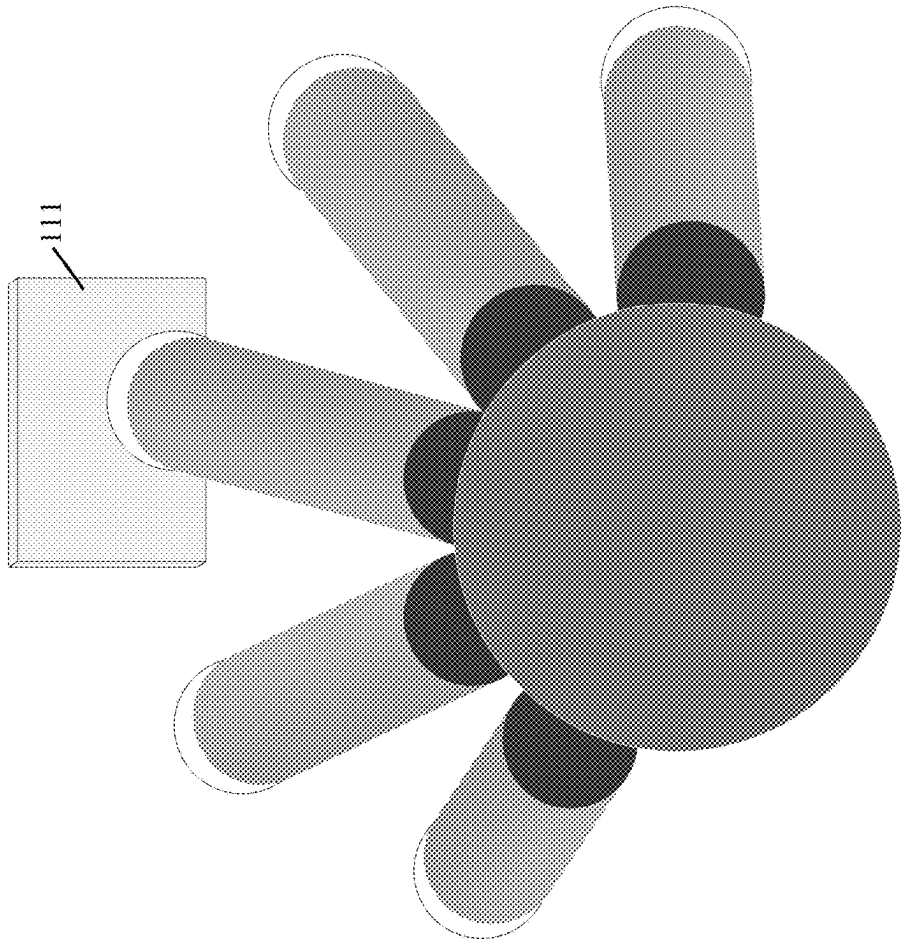

FIG. 1A

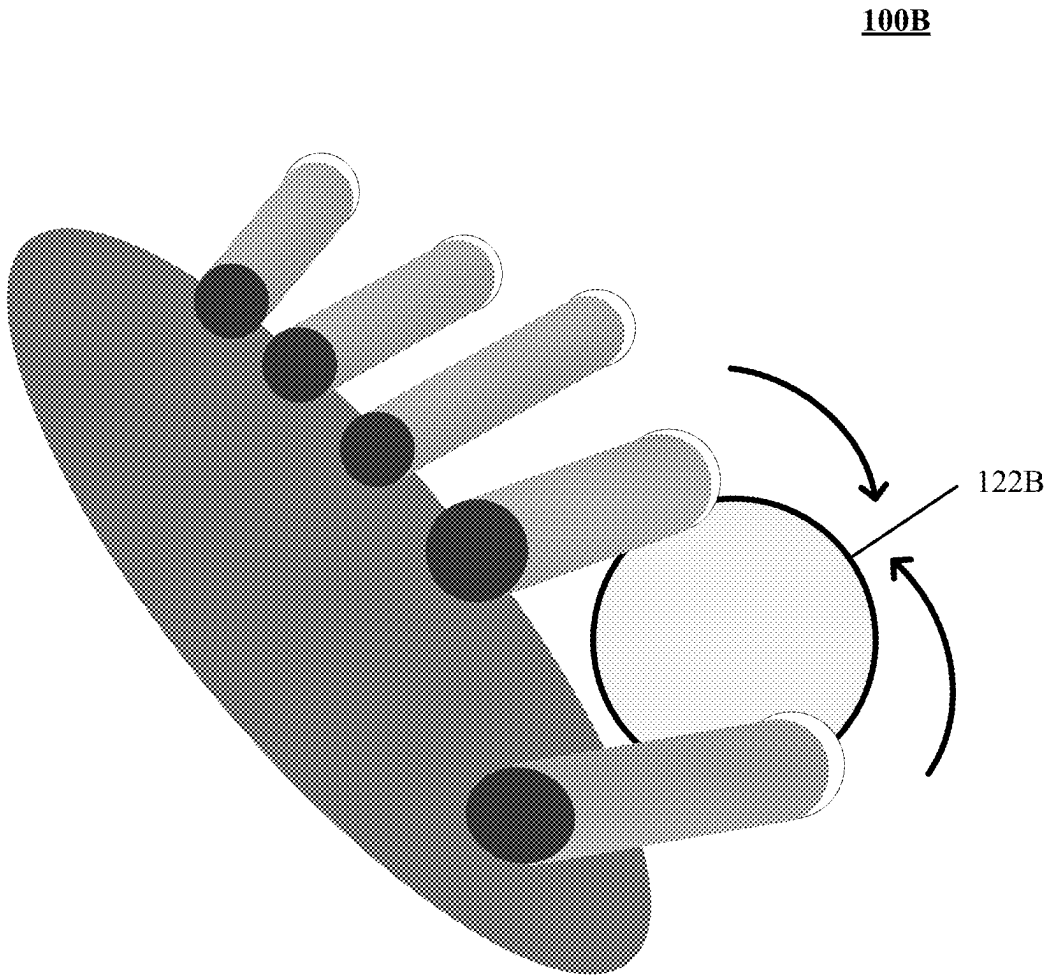

FIG. 1B

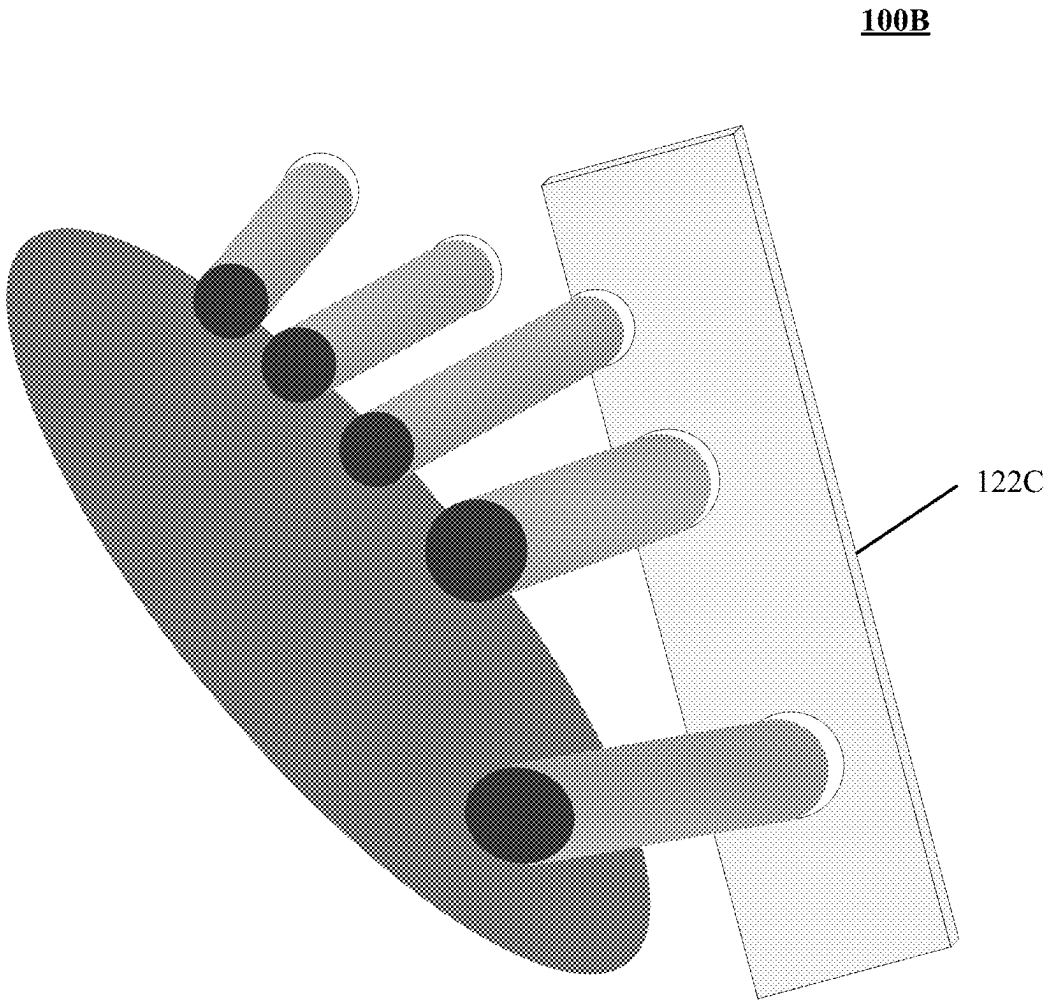

FIG. 1C

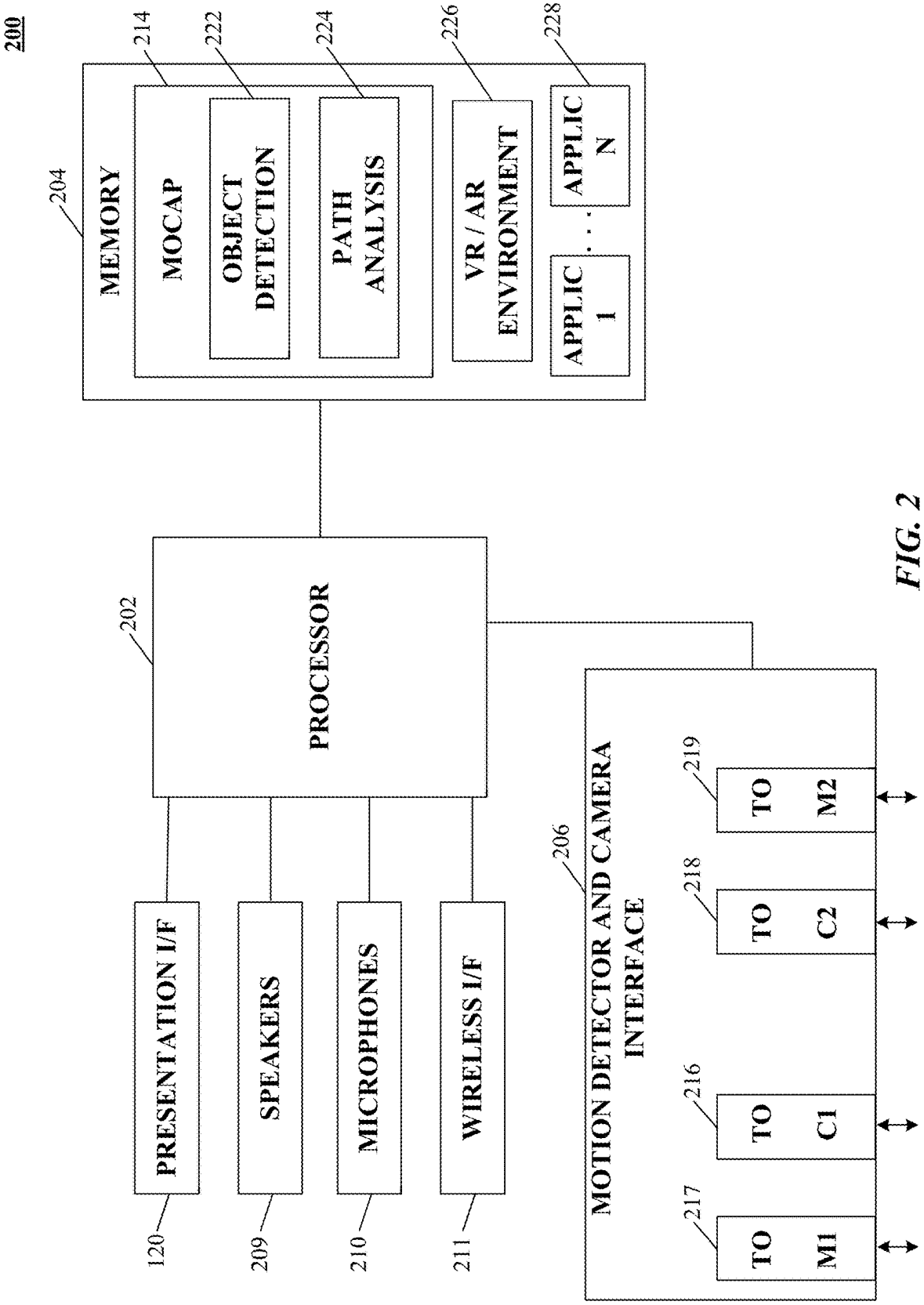
200
204
MEMORY
214
MOCAP
222
OBJECT DETECTION
224
PATH ANALYSIS
226
VR / AR ENVIRONMENT
228
APPLIC 1
. . .
APPLIC N
202
PROCESSOR
120
PRESENTATION I/F
209
SPEAKERS
210
MICROPHONES
211
WIRELESS I/F
206
MOTION DETECTOR AND CAMERA INTERFACE
217
TO
M1
216
TO
C1
218
TO
C2
219
TO
M2

FIG. 2

300A

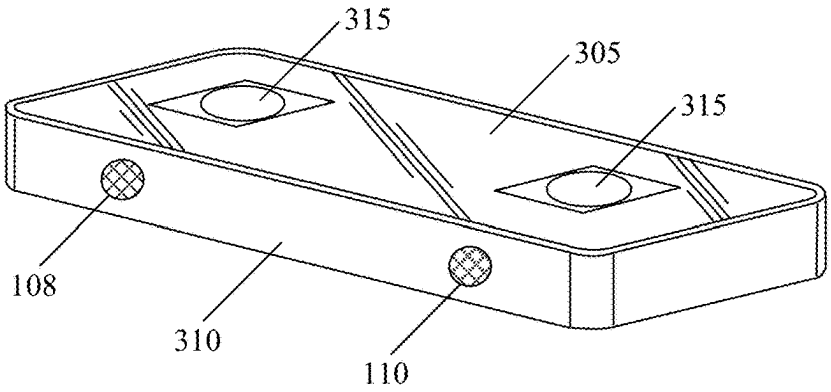

FIG. 3A

300B

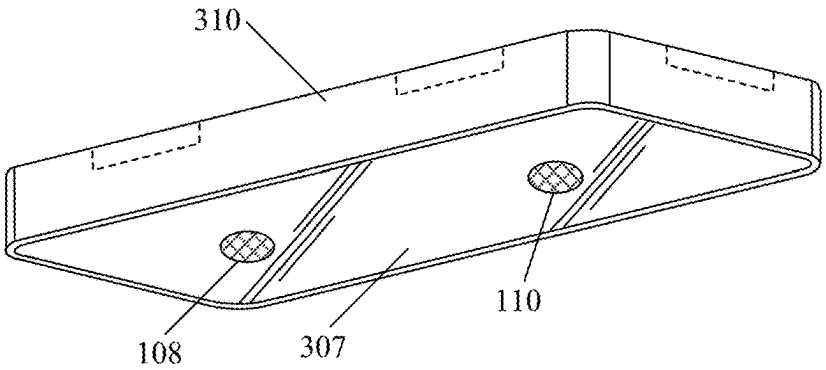

FIG. 3B

300C

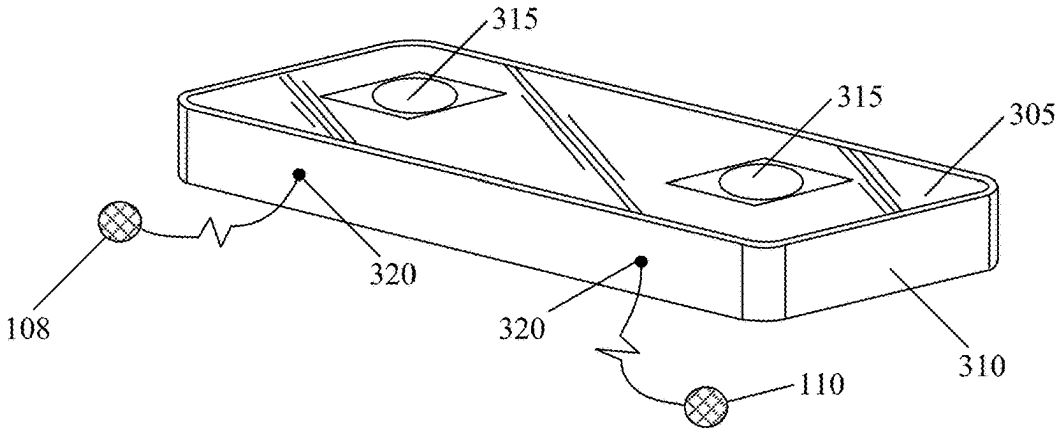

FIG. 3C

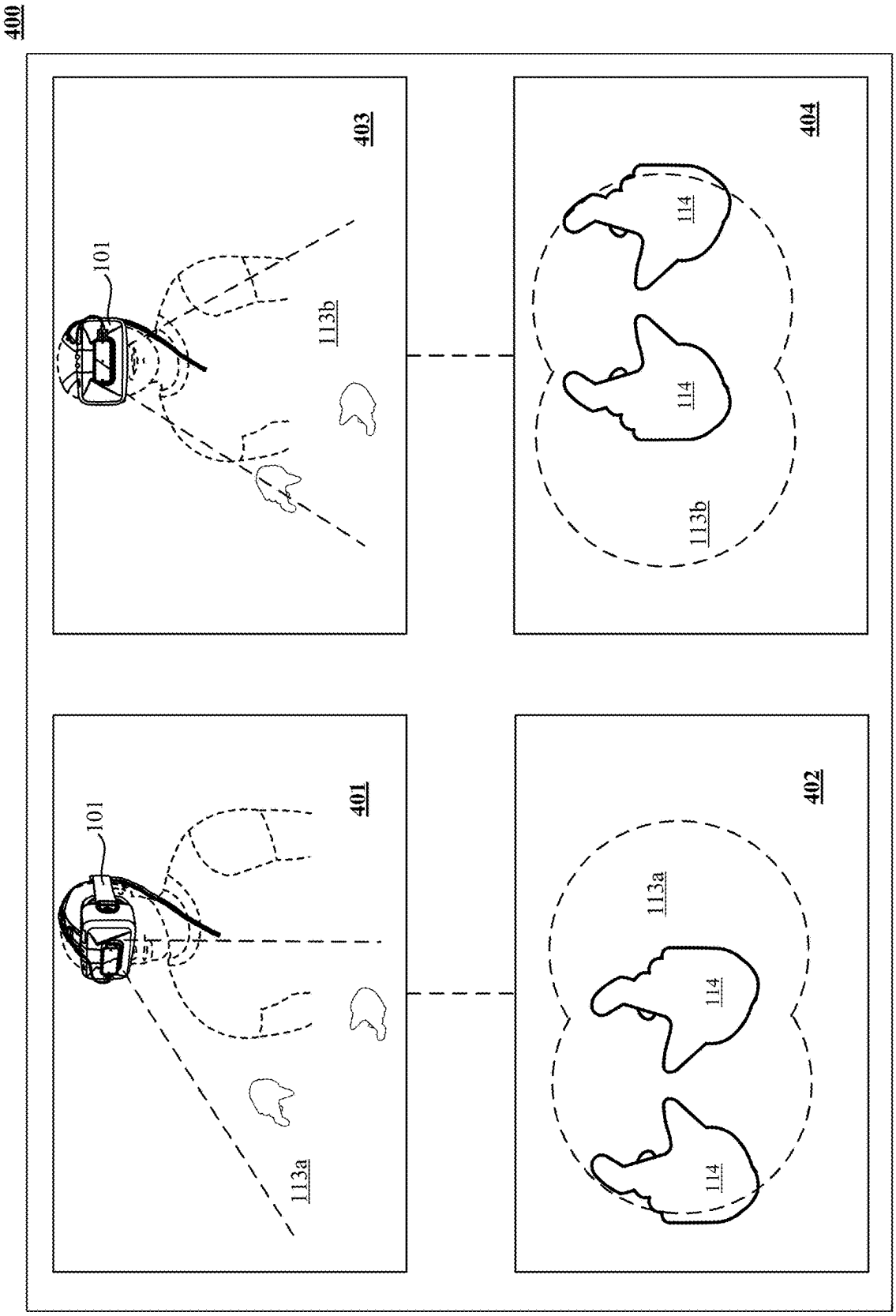

FIG. 4

500

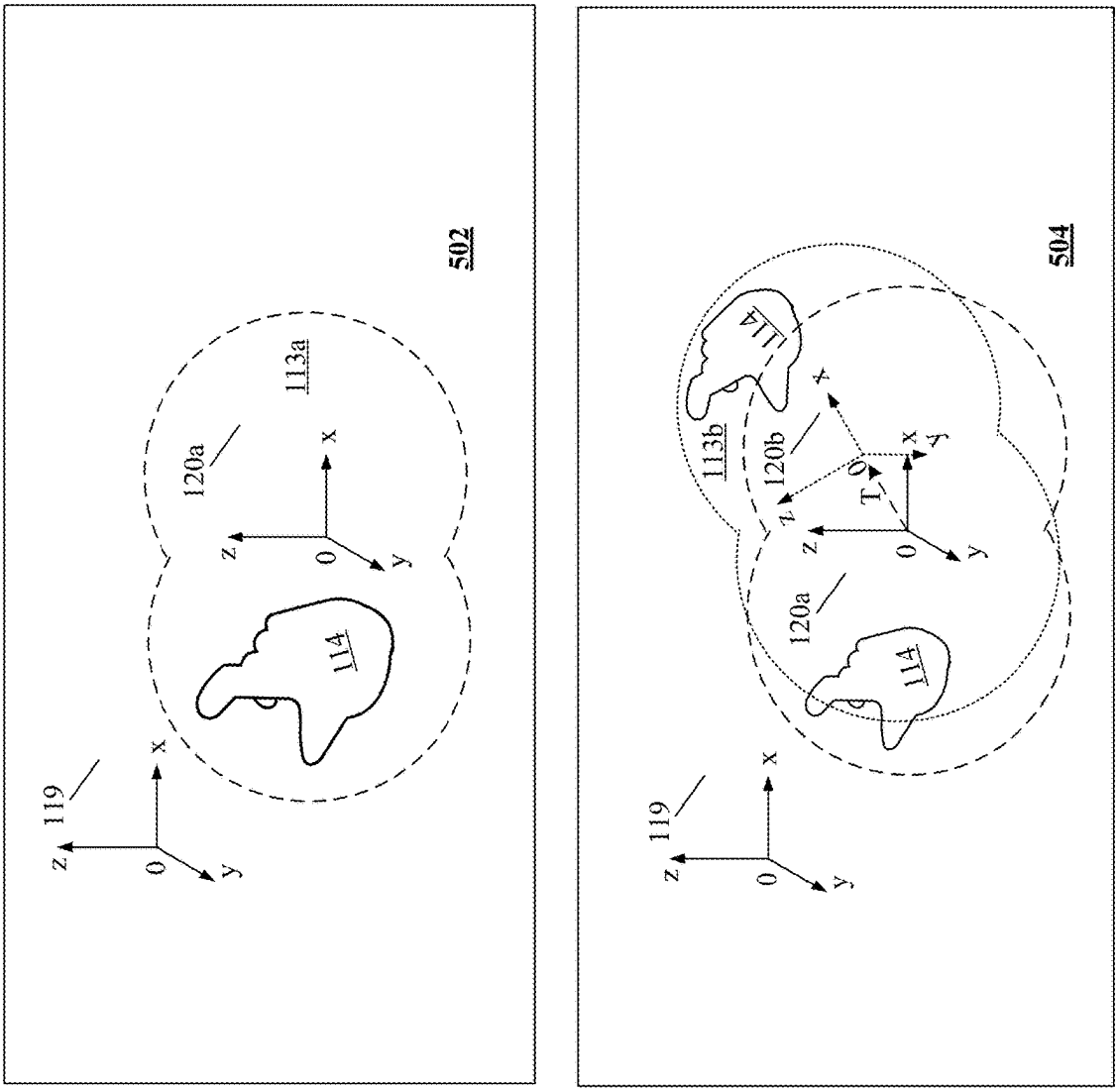
502
119
z
0
y
x
114
120a
113a
z
0
y
x
504
119
z
0
y
x
114
120a
113b
120b
z
0
y
x
T
0
z
y
x
114

FIG. 5

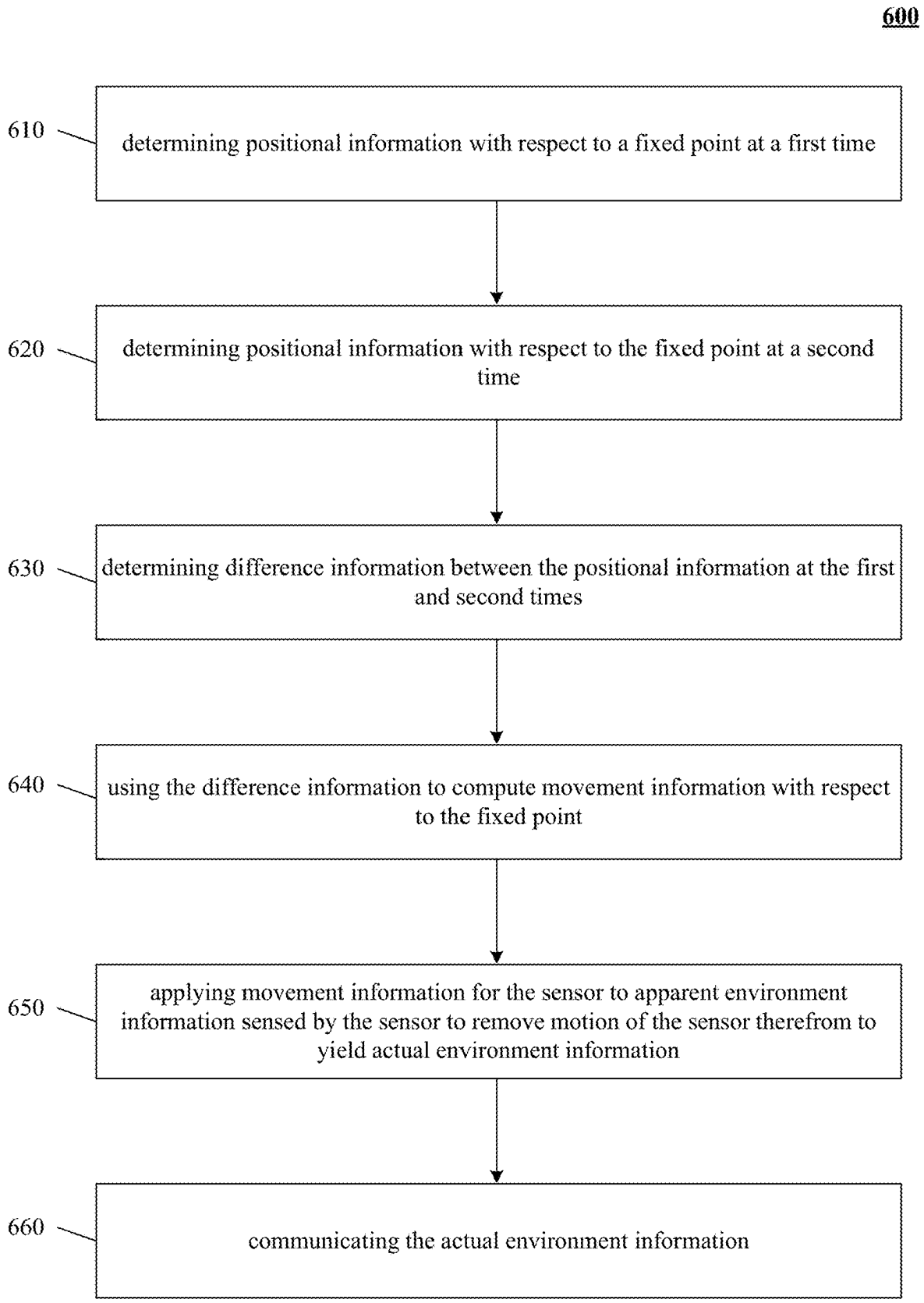
600
610
determining positional information with respect to a fixed point at a first time
620
determining positional information with respect to the fixed point at a second time
630
determining difference information between the positional information at the first and second times
640
using the difference information to compute movement information with respect to the fixed point
650
applying movement information for the sensor to apparent environment information sensed by the sensor to remove motion of the sensor therefrom to yield actual environment information
660
communicating the actual environment information

FIG. 6

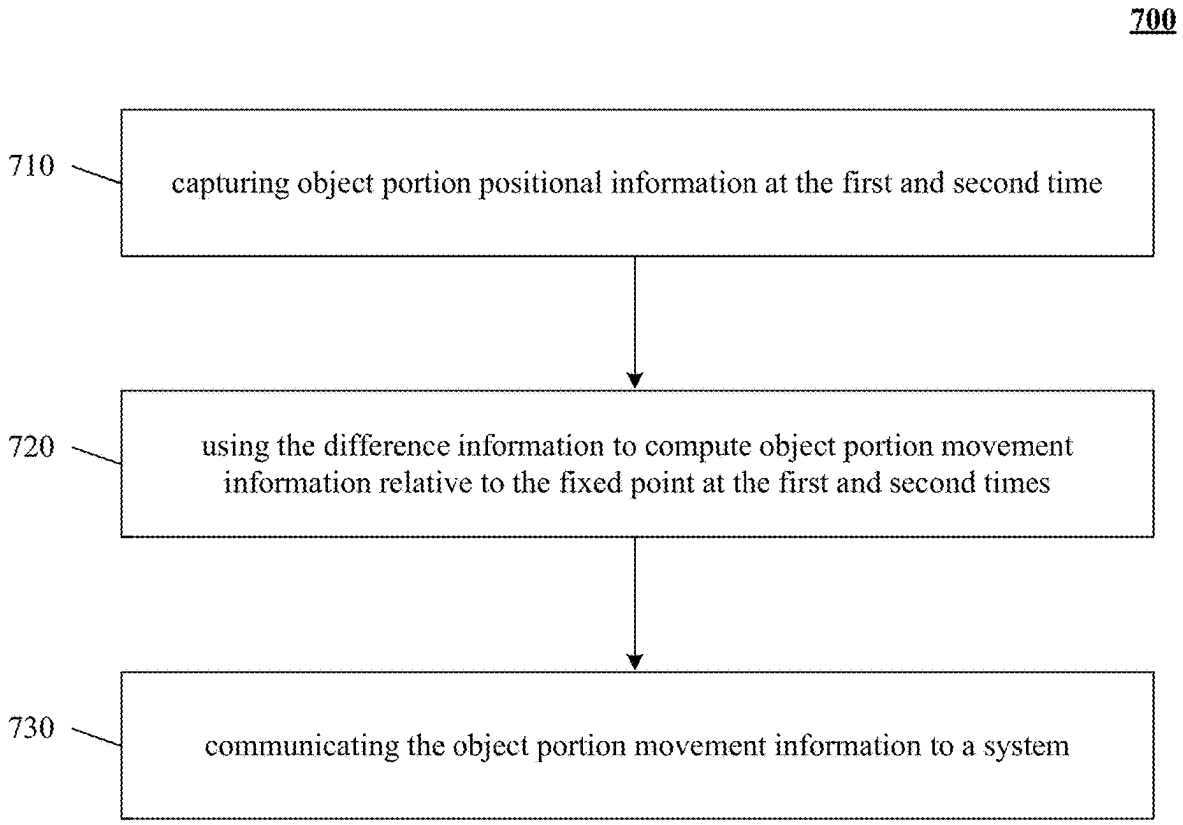
700
710
capturing object portion positional information at the first and second time
720
using the difference information to compute object portion movement information relative to the fixed point at the first and second times
730
communicating the object portion movement information to a system

FIG. 7

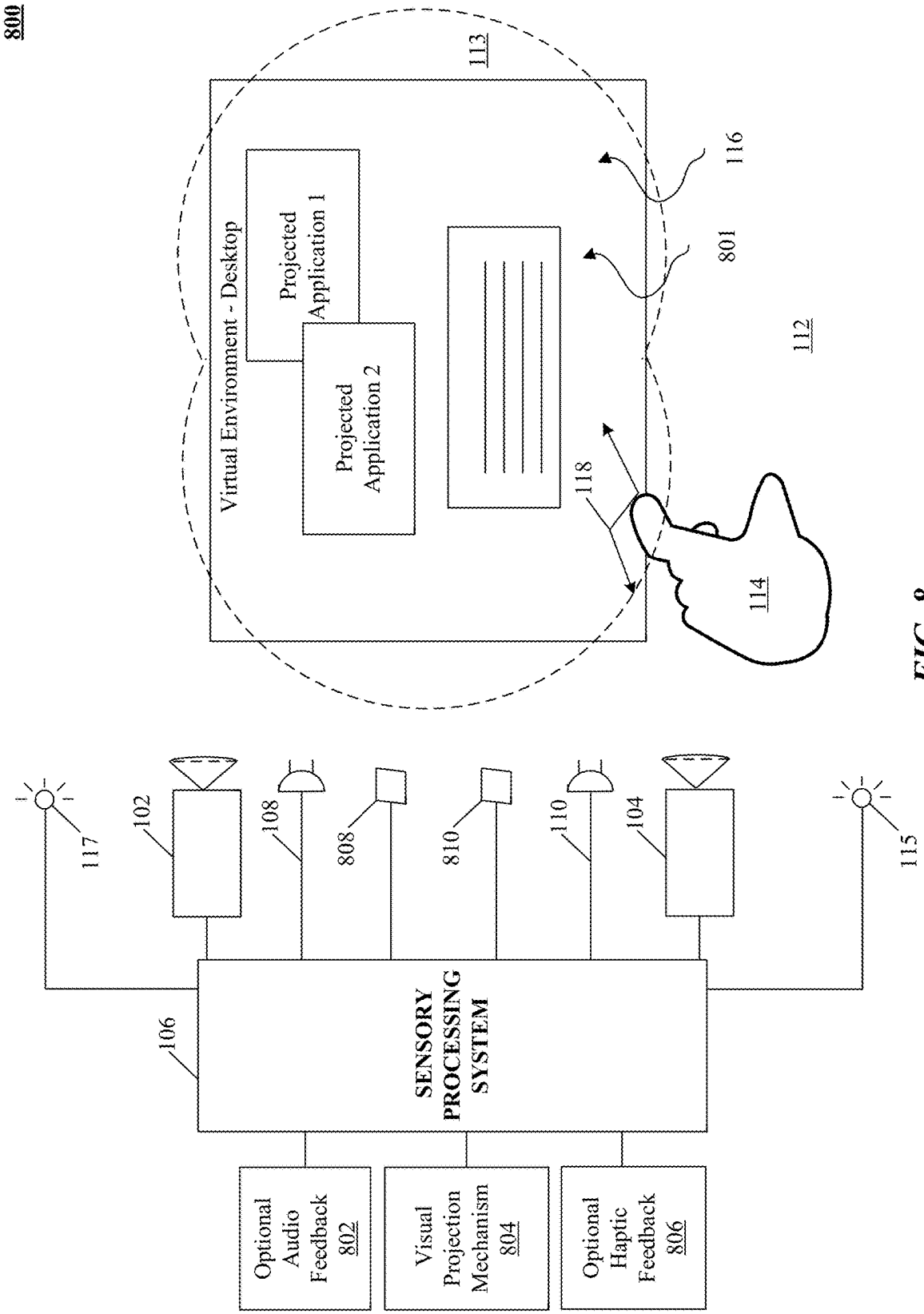
800
Virtual Environment - Desktop
Projected Application 1
Projected Application 2
113
116
801
112
118
114
117
102
108
808
810
110
104
115
106
SENSORY PROCESSING SYSTEM
Optional Audio Feedback 802
Visual Projection Mechanism 804
Optional Haptic Feedback 806

FIG. 8

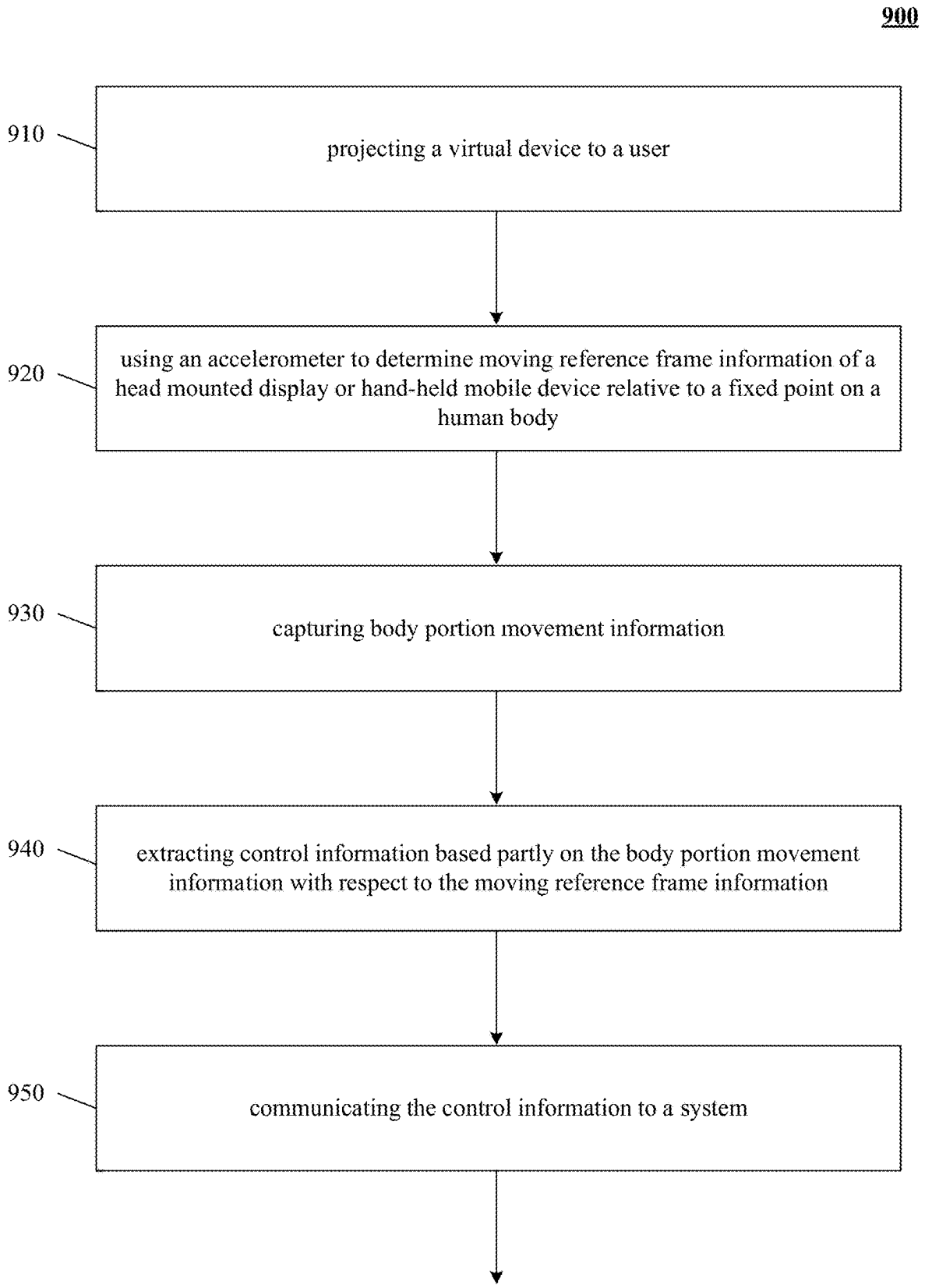
900
910
projecting a virtual device to a user
920
using an accelerometer to determine moving reference frame information of a head mounted display or hand-held mobile device relative to a fixed point on a human body
930
capturing body portion movement information
940
extracting control information based partly on the body portion movement information with respect to the moving reference frame information
950
communicating the control information to a system

FIG. 9

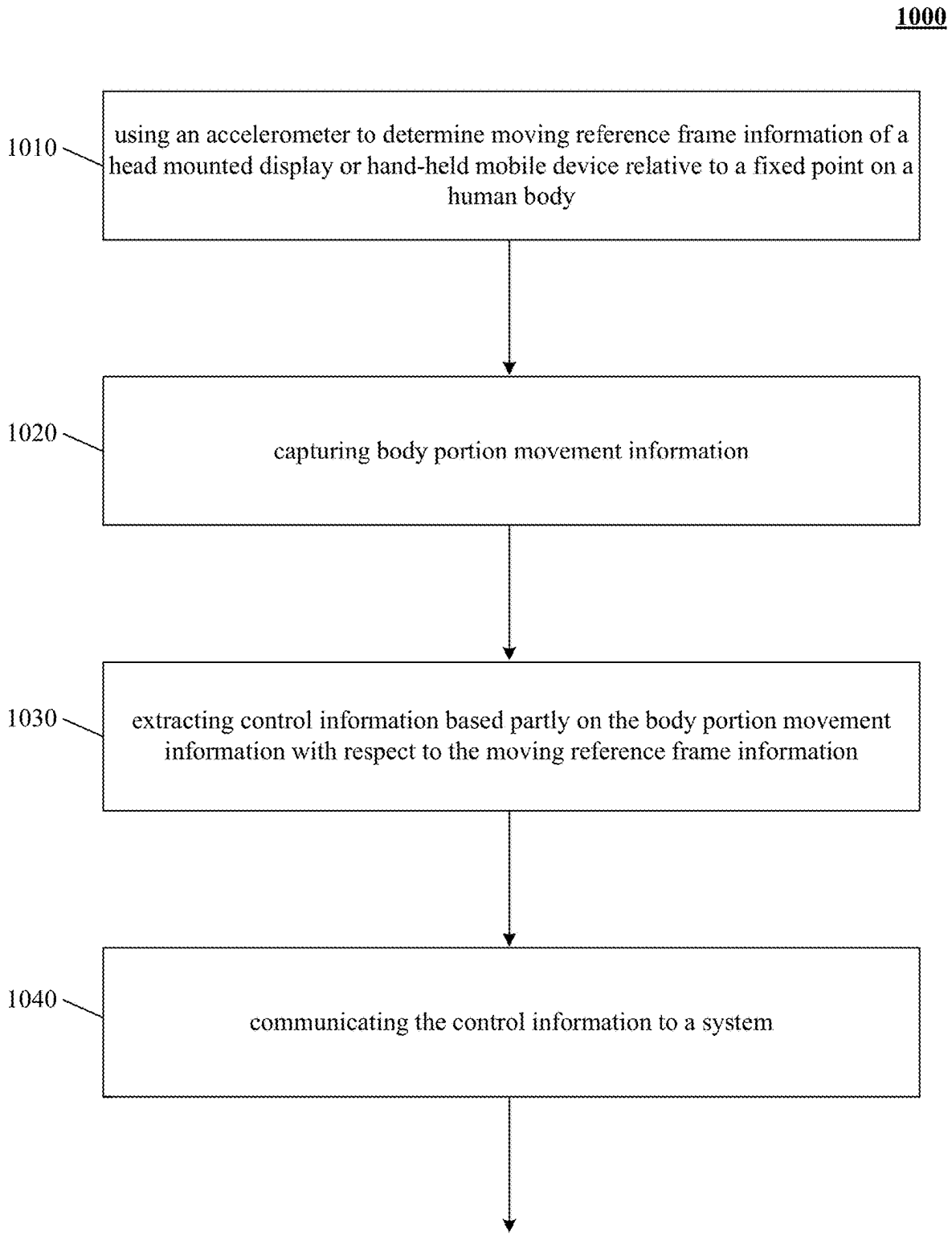
1000
1010
using an accelerometer to determine moving reference frame information of a head mounted display or hand-held mobile device relative to a fixed point on a human body
1020
capturing body portion movement information
1030
extracting control information based partly on the body portion movement information with respect to the moving reference frame information
1040
communicating the control information to a system

FIG. 10

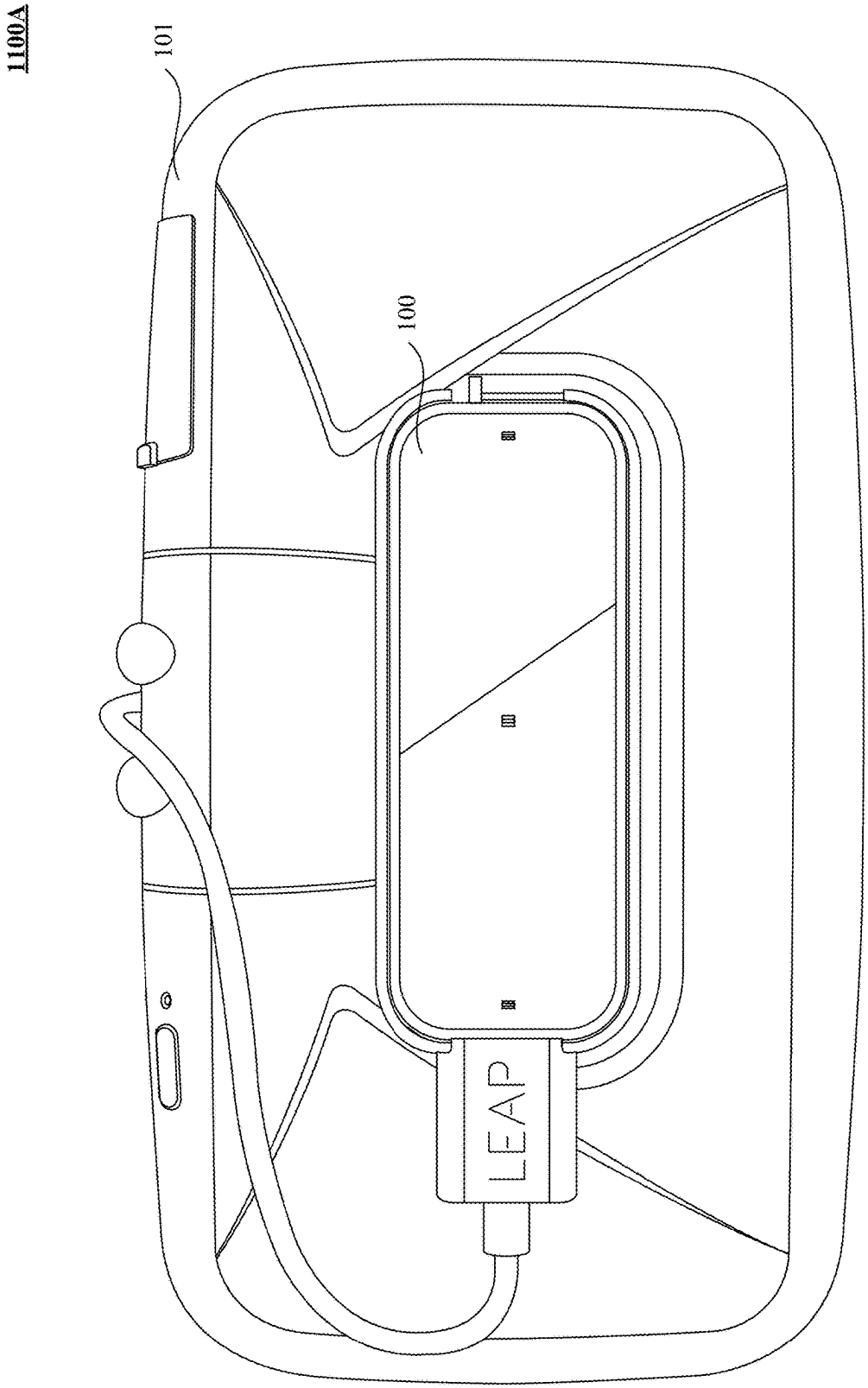

FIG. 11A

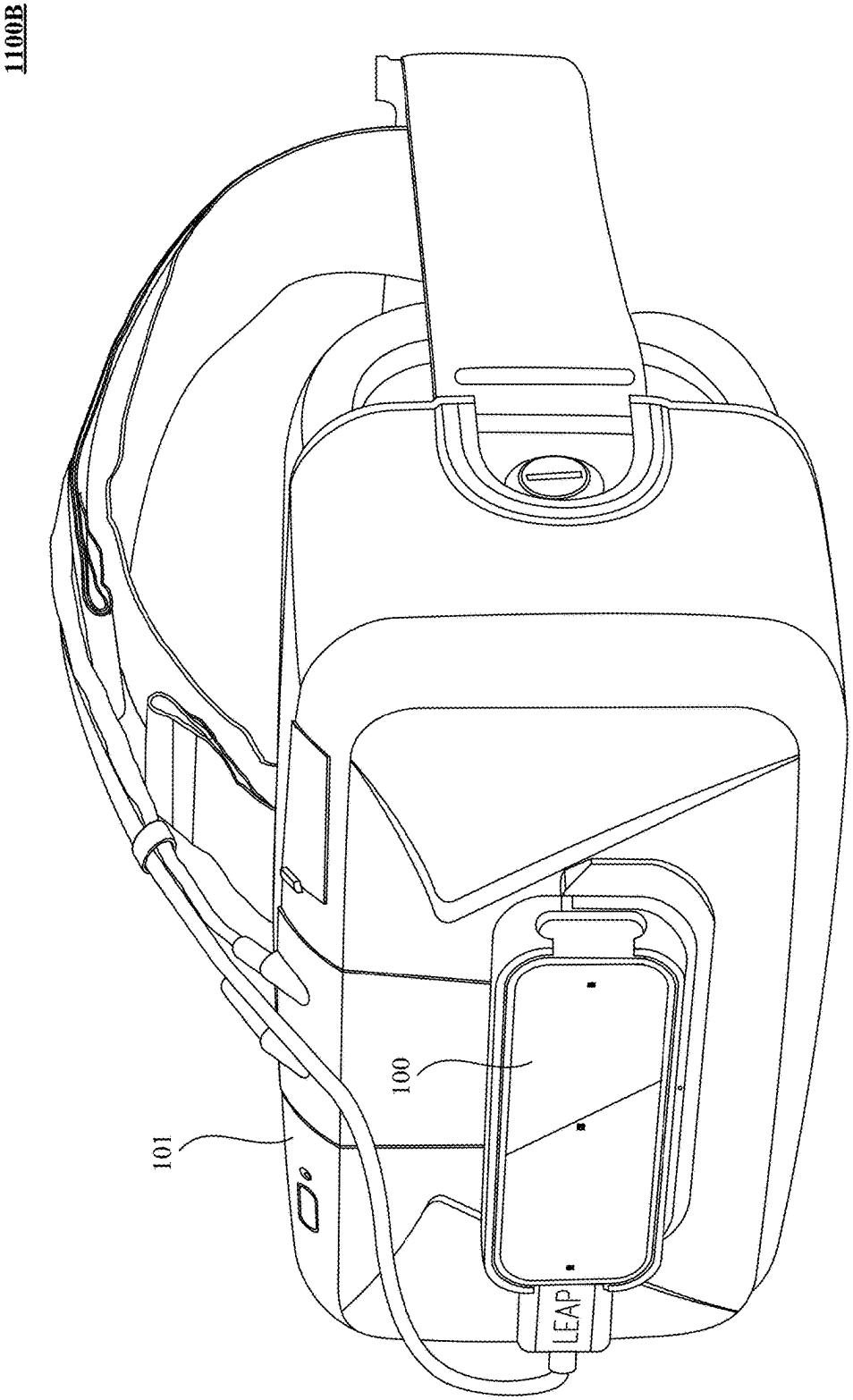

FIG. 11B

1100C

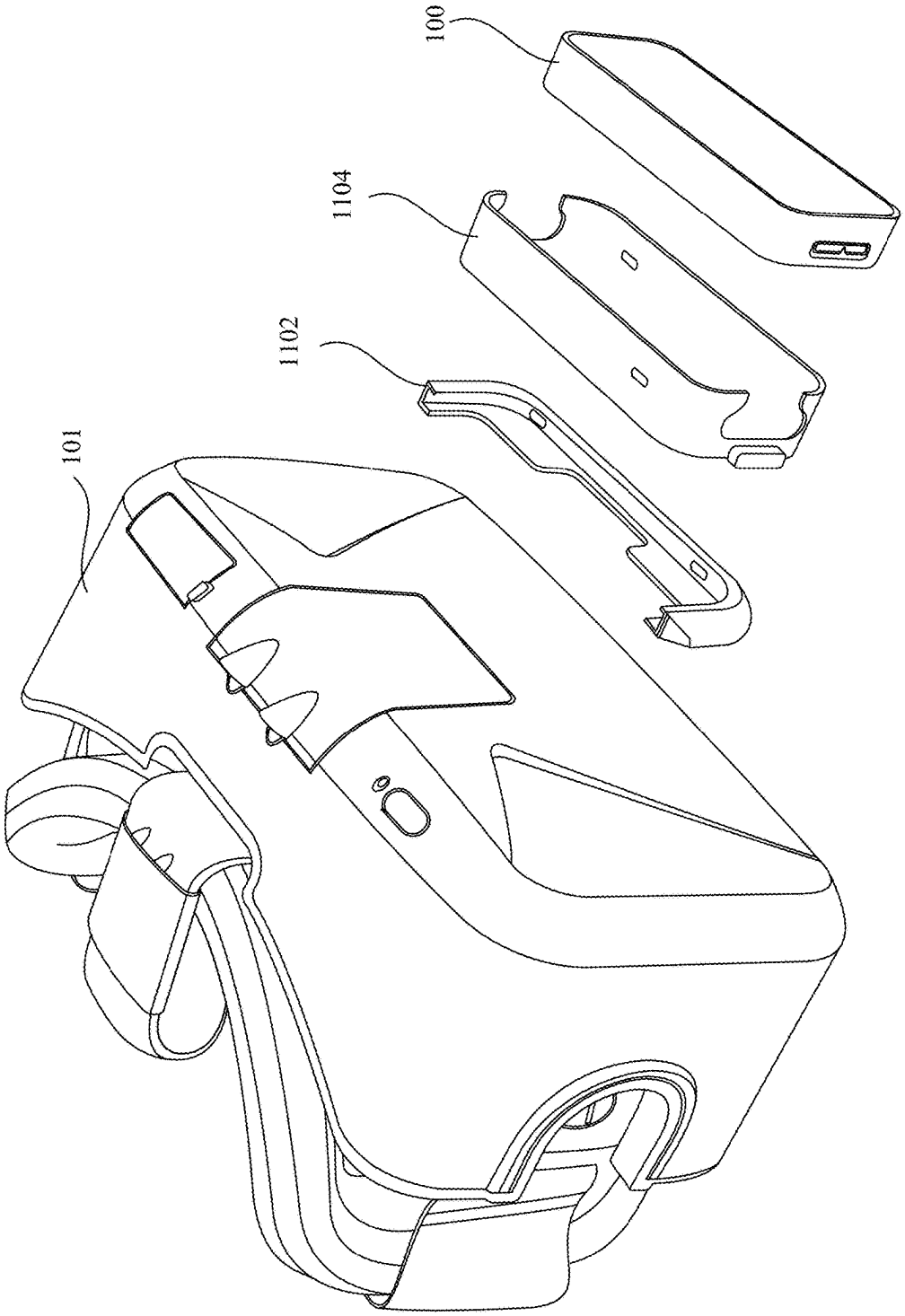

FIG. 11C

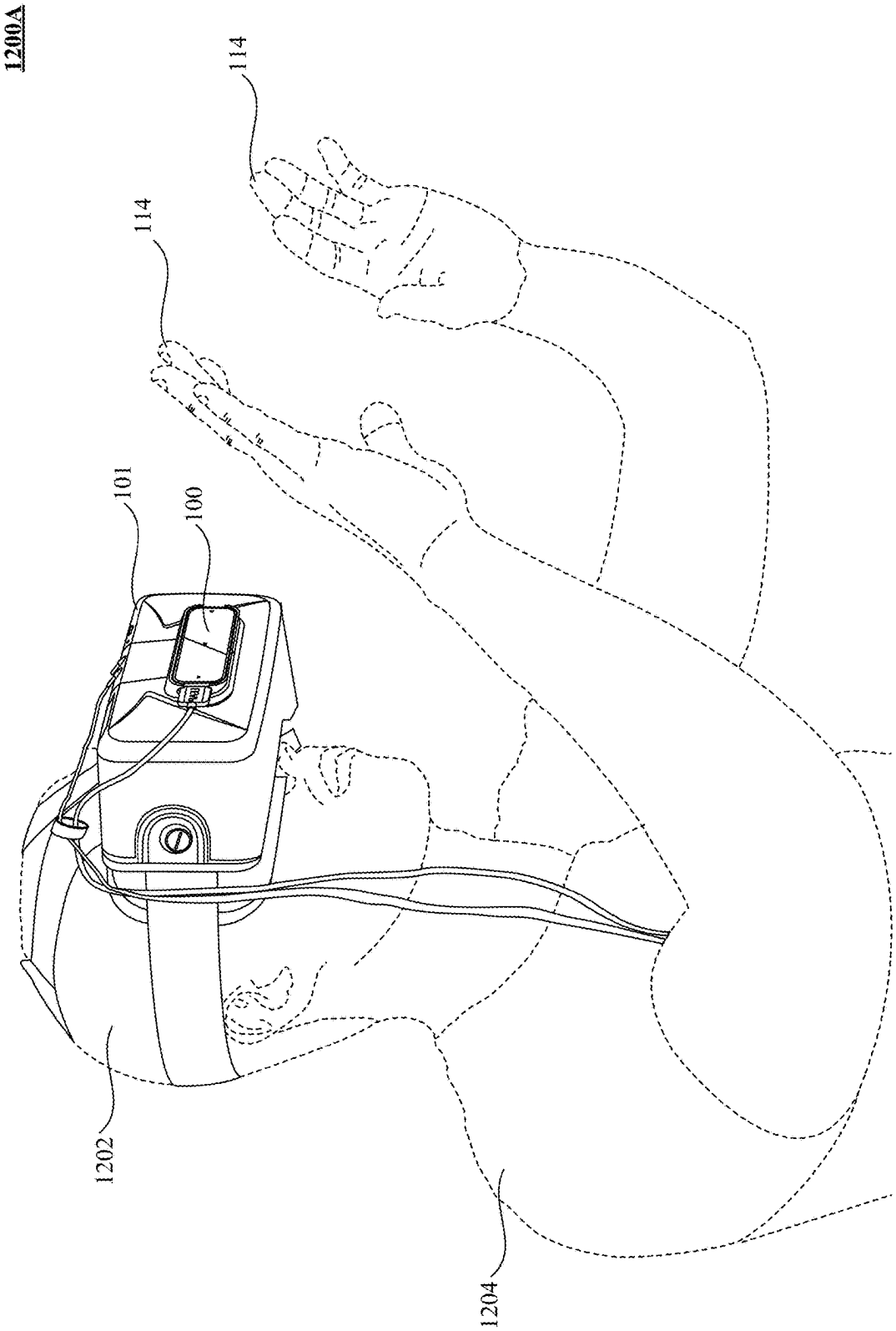

FIG. 12A

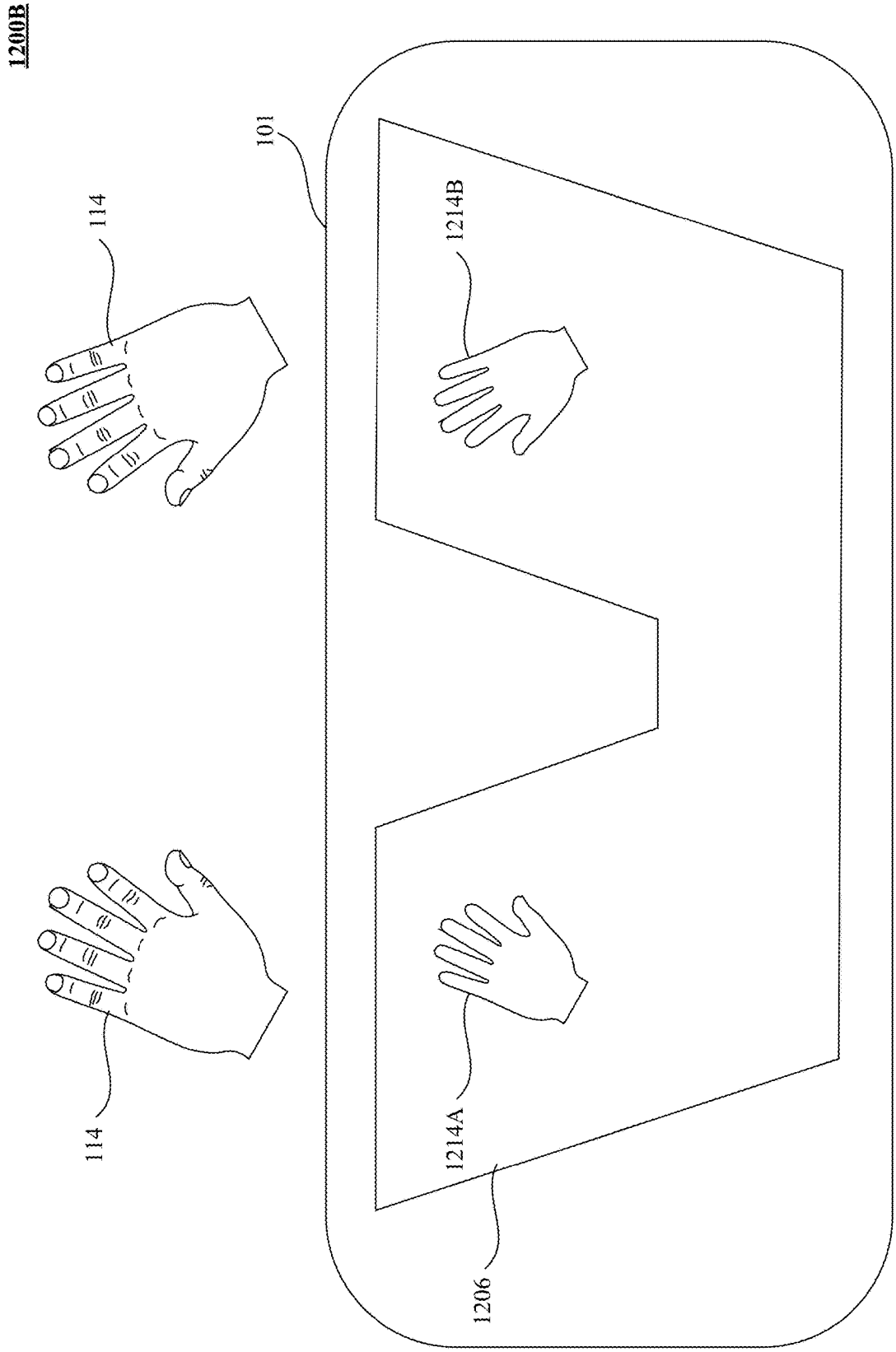

FIG. 12B

1300A

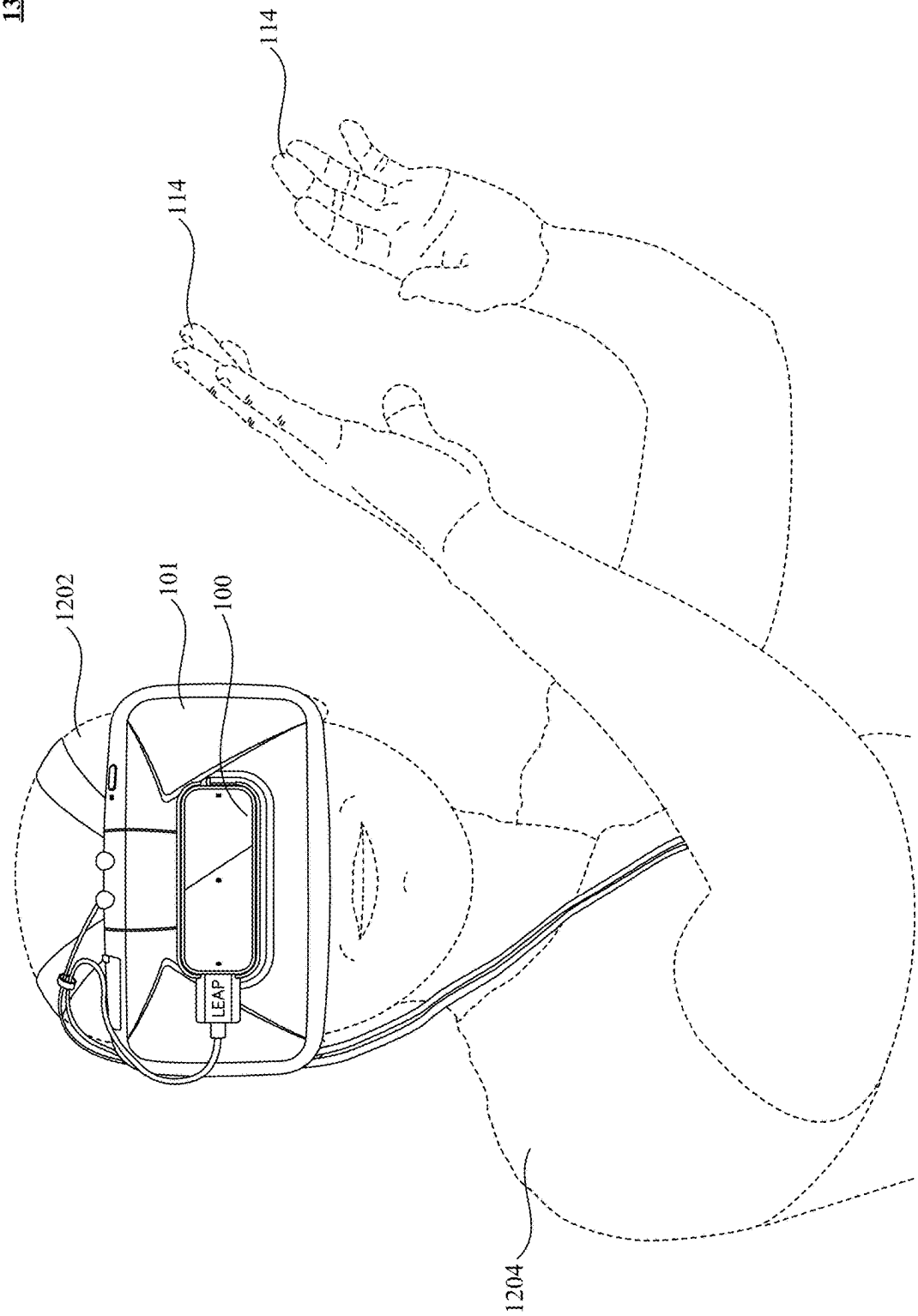

FIG. 13A

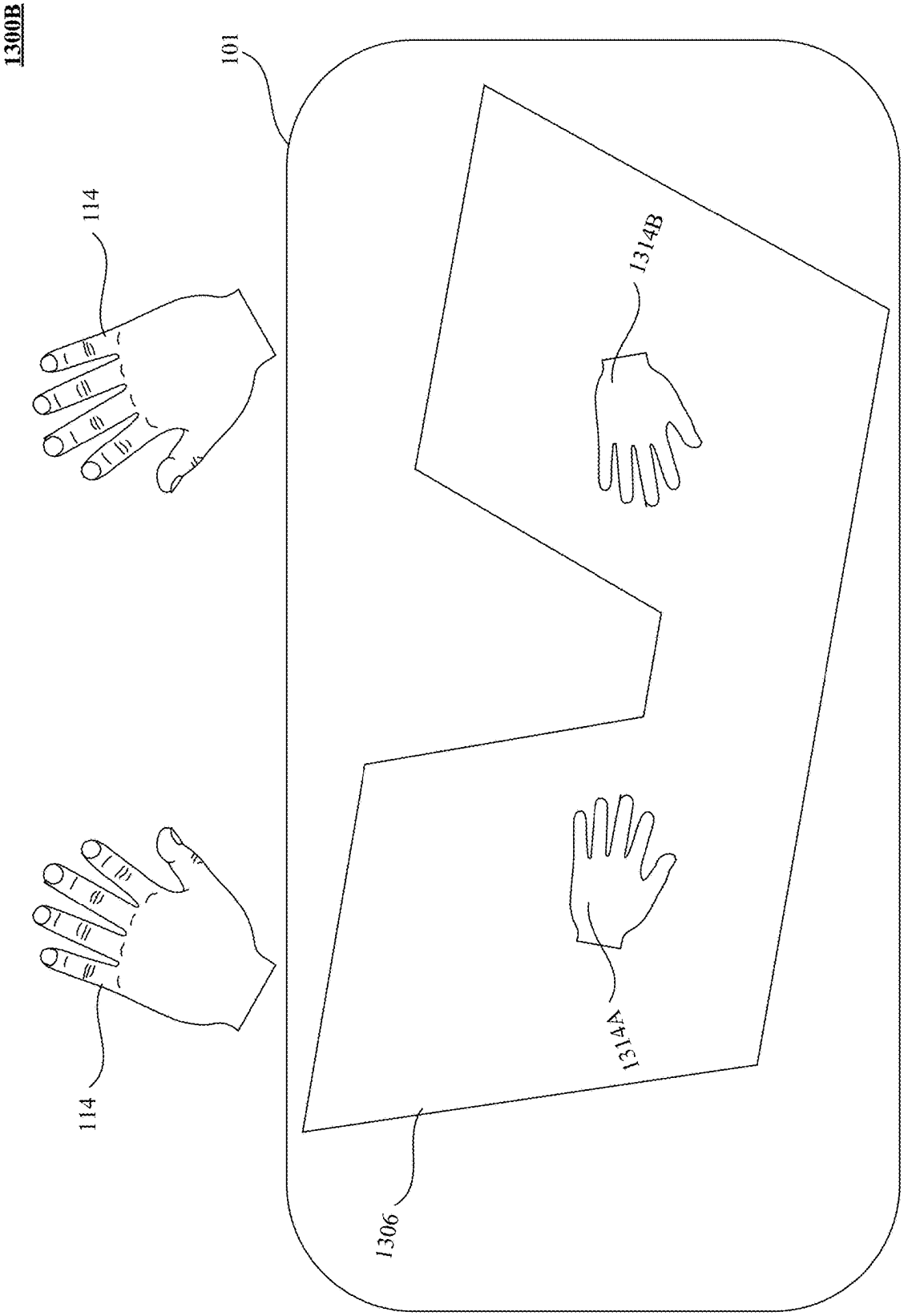

FIG. 13B

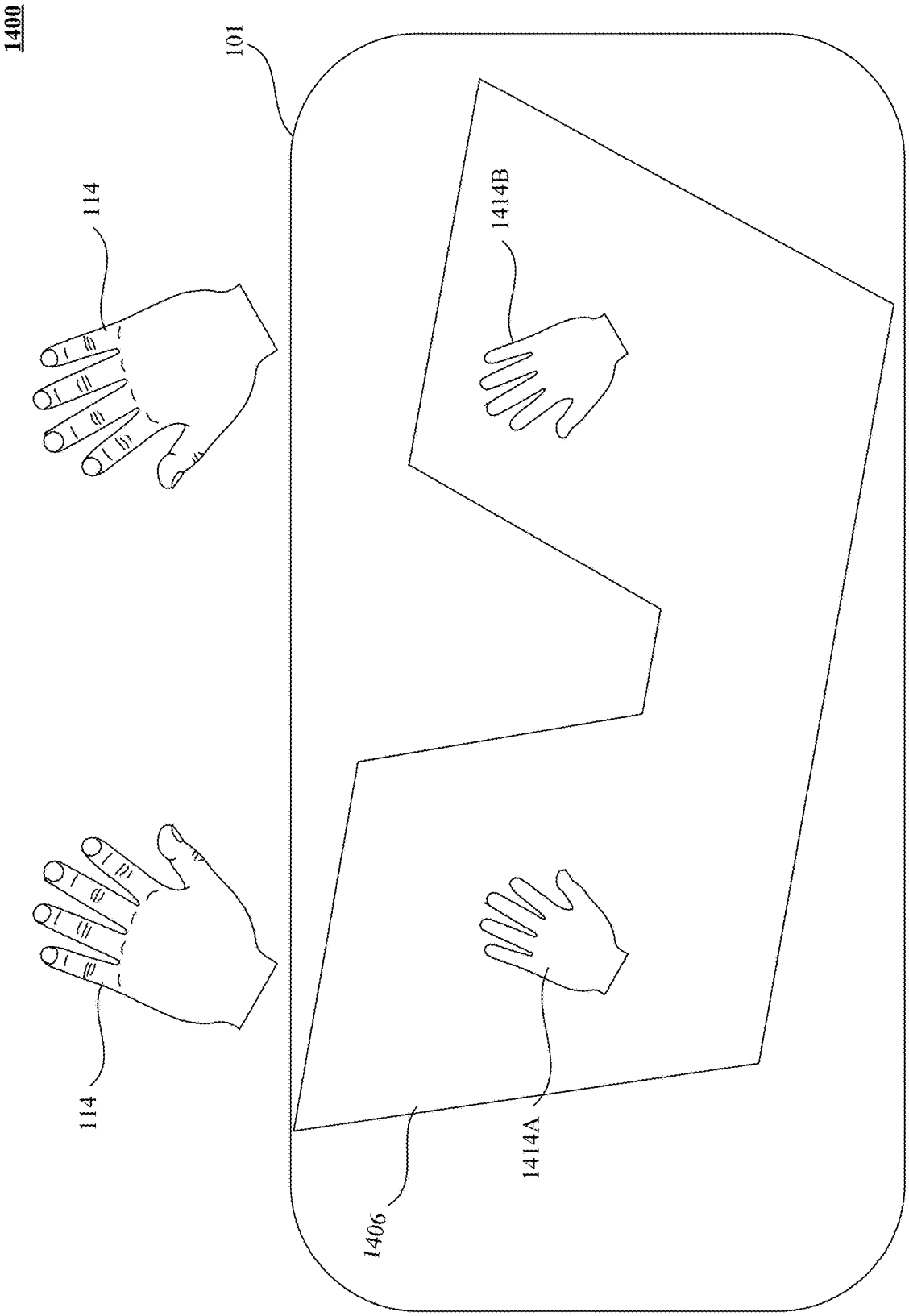

FIG. 14

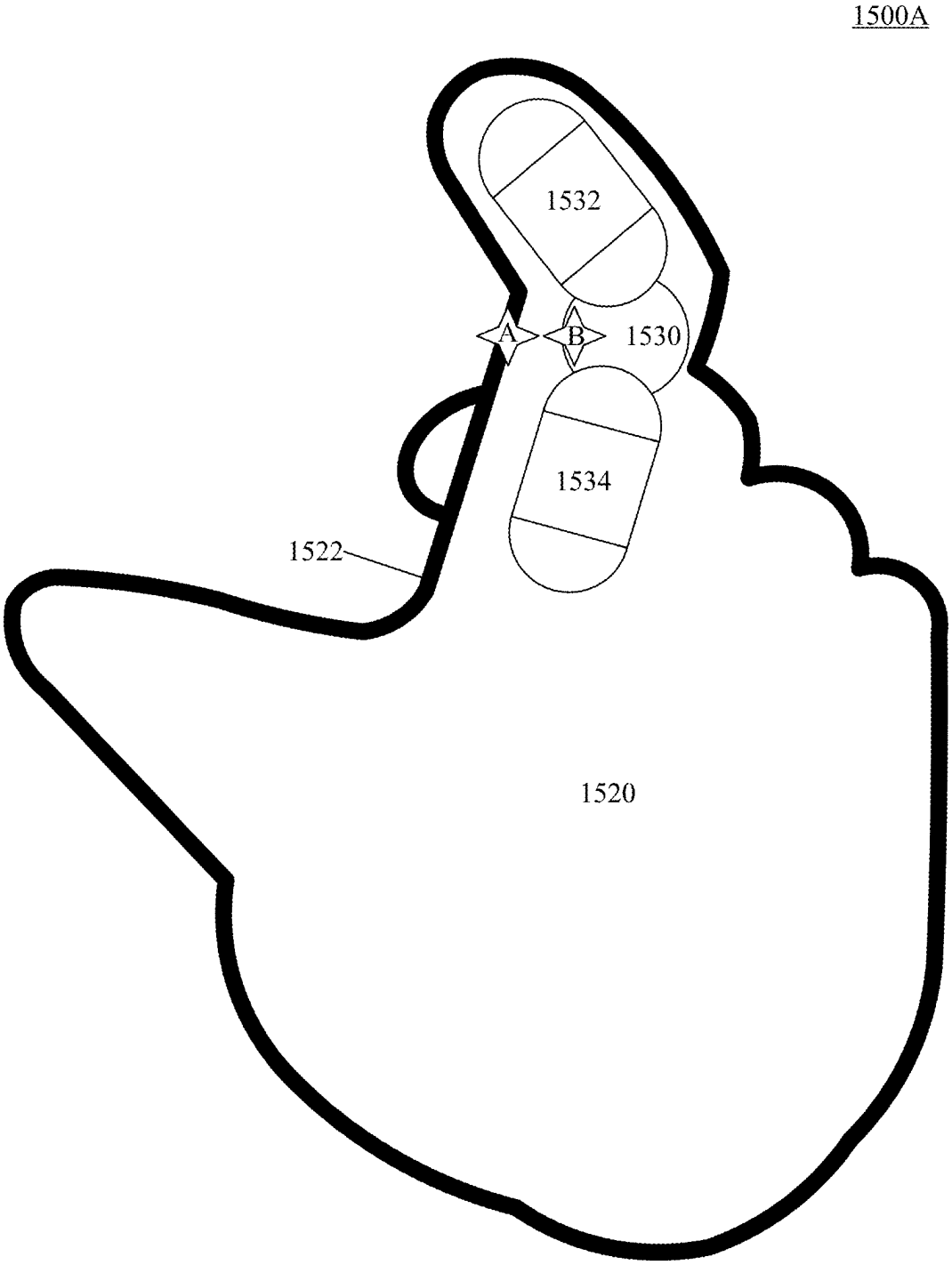

FIG. 15A

1500B

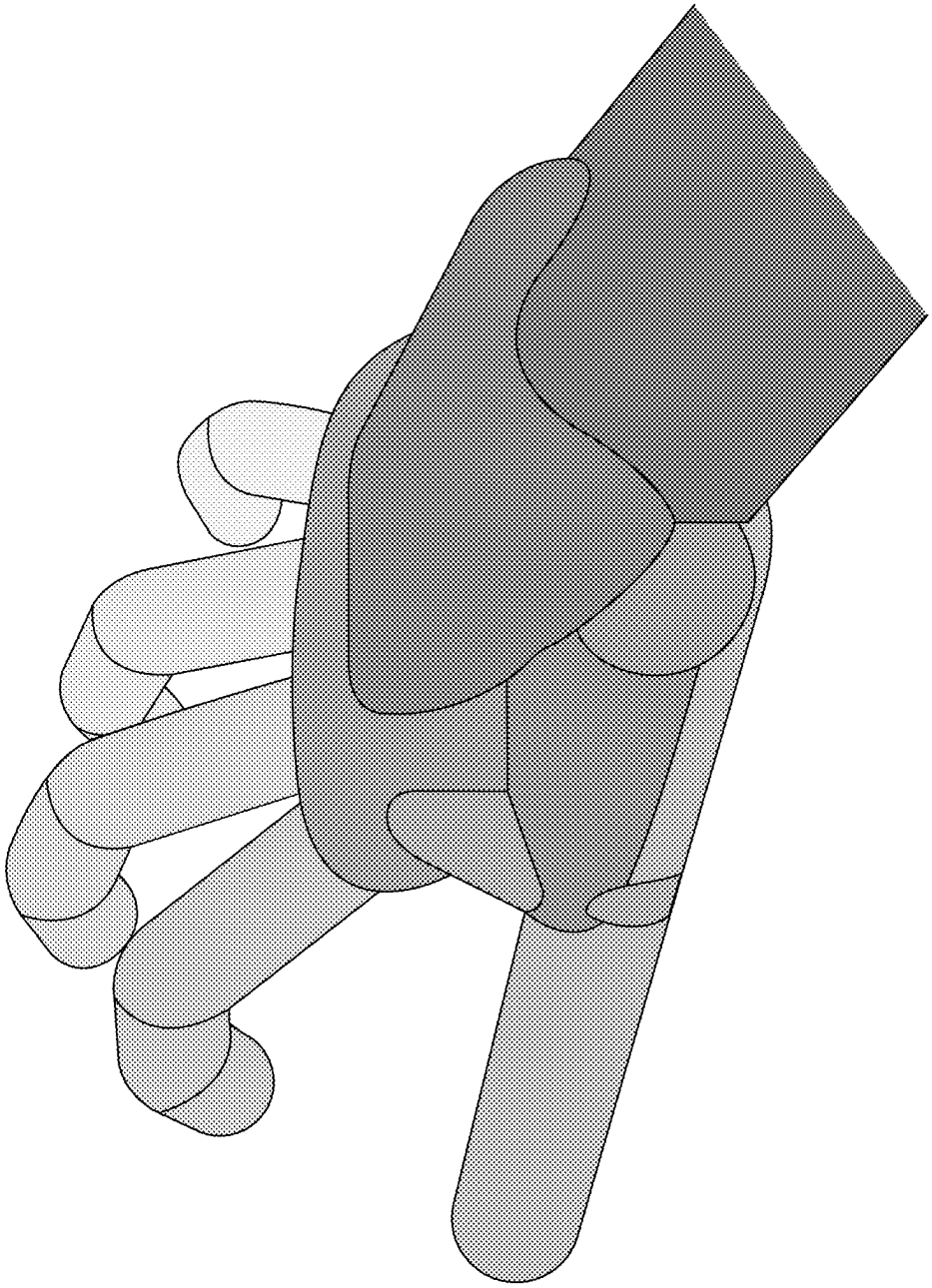

FIG. 15B

1500C

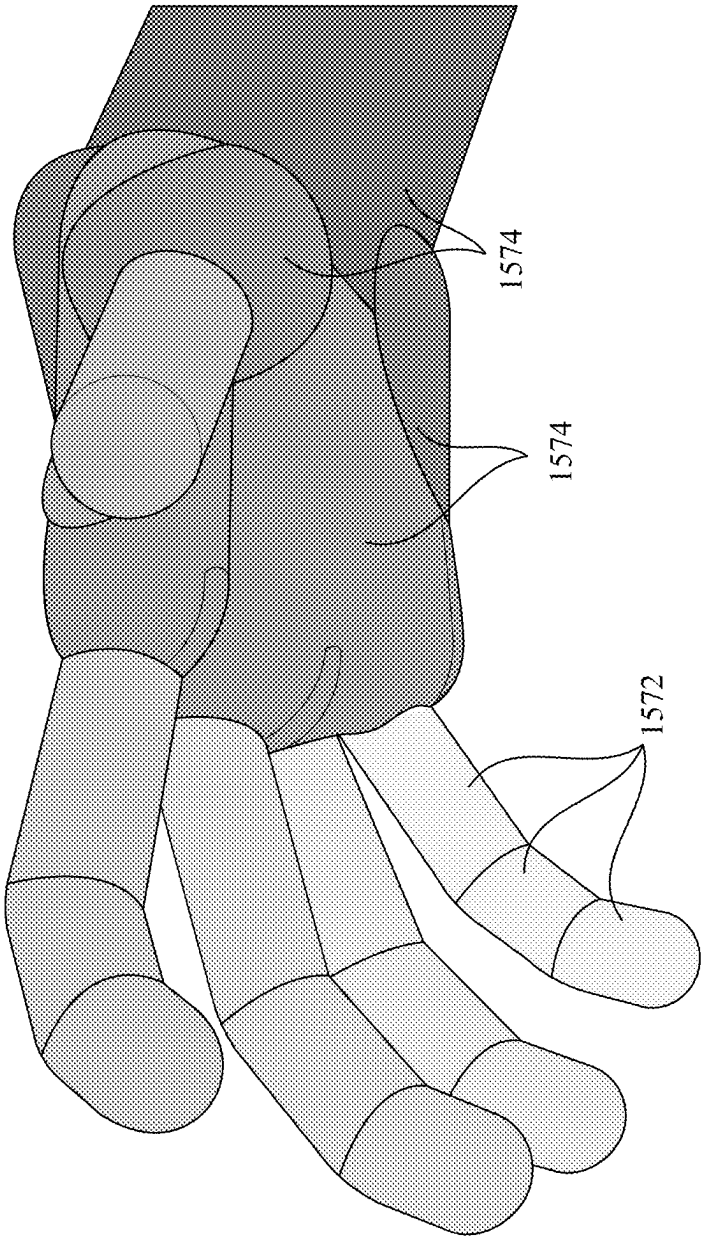

FIG. 15C

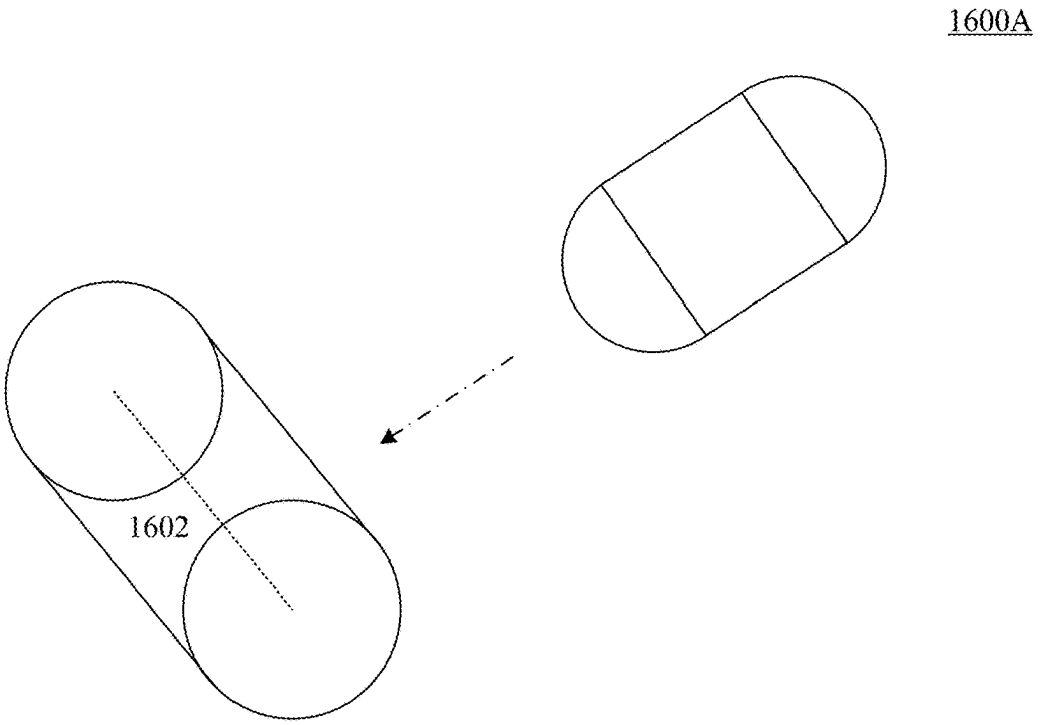

FIG. 16A

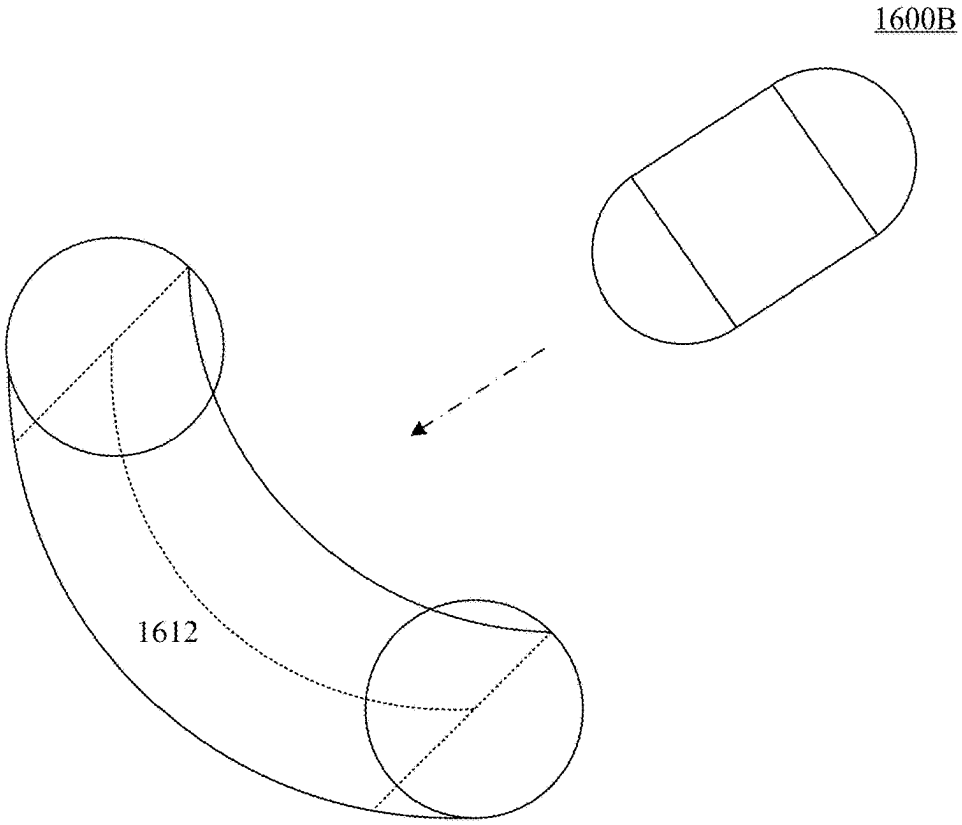

FIG. 16B

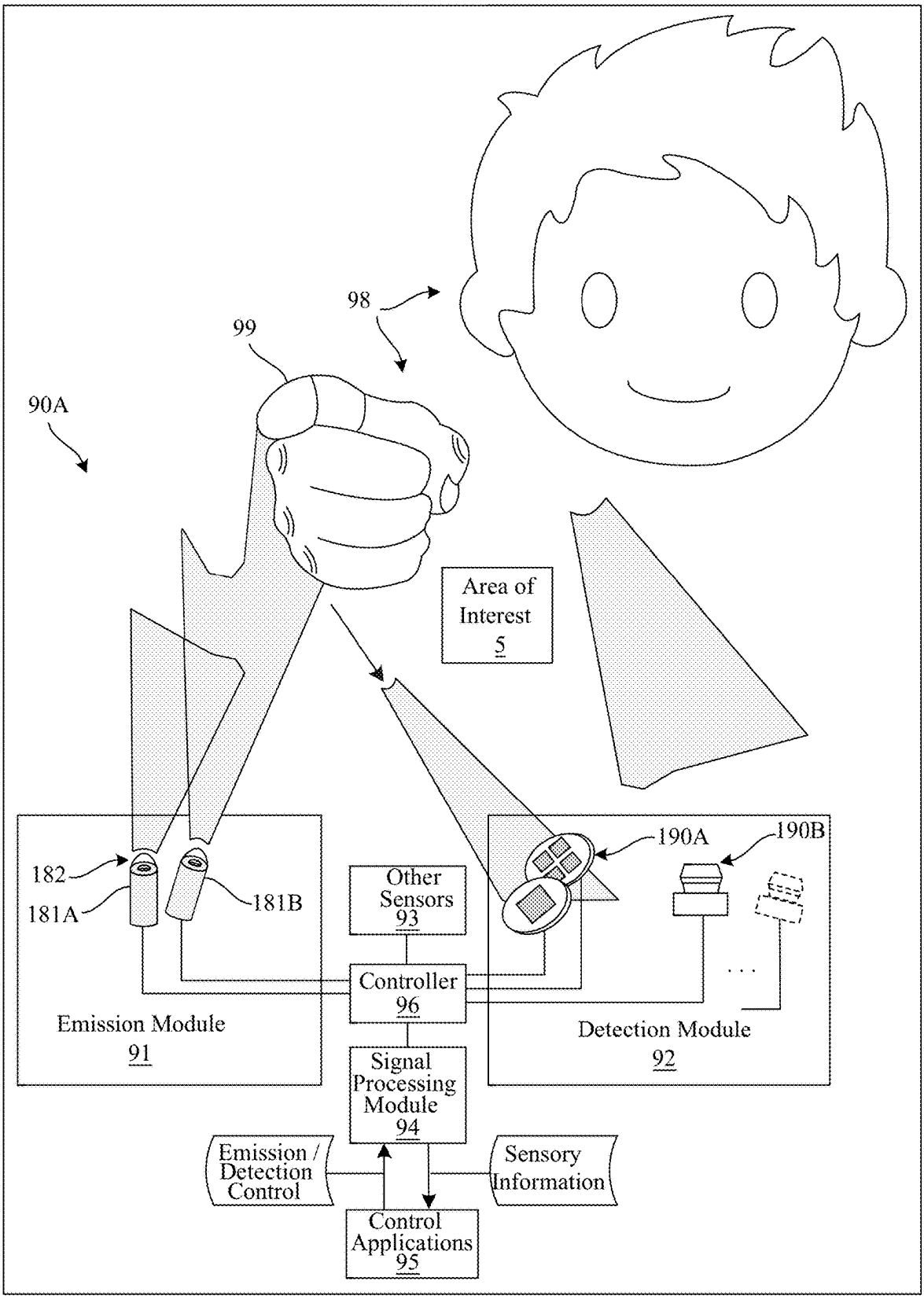
98
99
90A
Area of Interest 5
182
181A
181B
190A
190B
Other Sensors 93
Controller 96
Emission Module 91
Detection Module 92
Signal Processing Module 94
Emission / Detection Control
Sensory Information
Control Applications 95

FIG.17

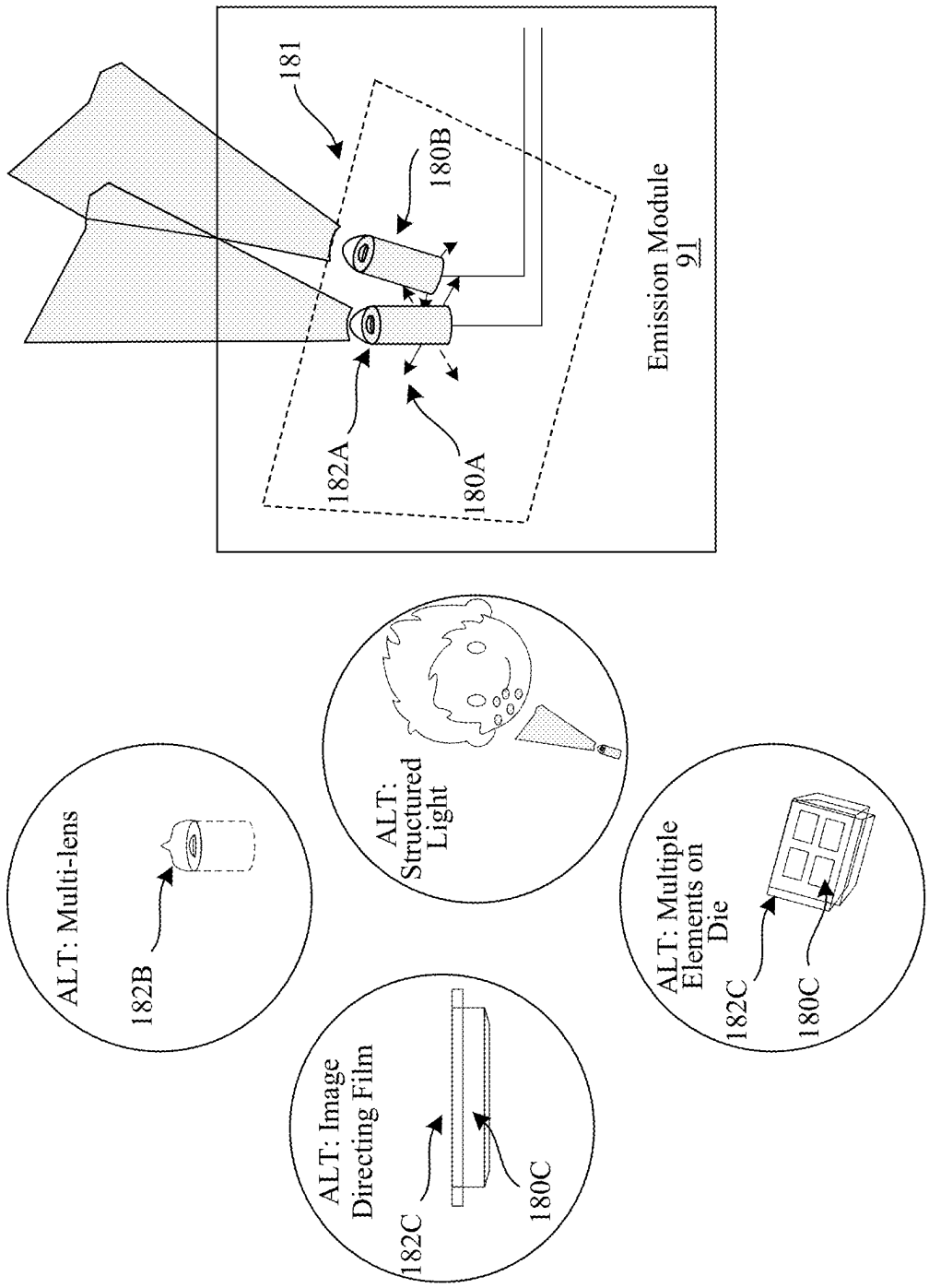
181
180B
182A
180A
Emission Module
91
ALT: Multi-lens
182B
ALT:
Structured
Light
ALT: Image
Directing Film
182C
180C
ALT: Multiple
Elements on
Die
182C
180C

FIG. 18

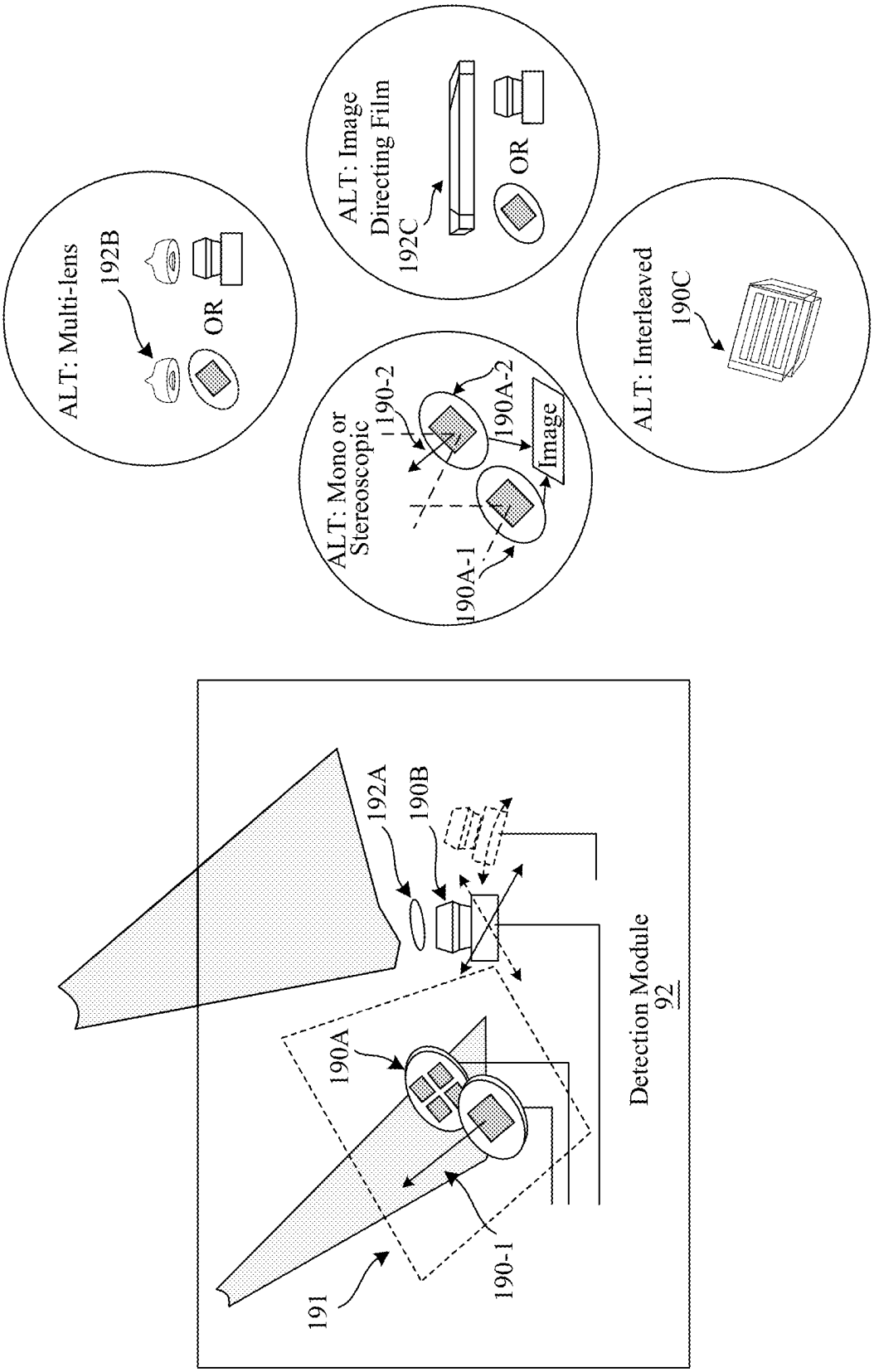
ALT: Multi-lens
192B
OR
ALT: Image Directing Film
192C
OR
ALT: Interleaved
190C
ALT: Mono or Stereoscopic
190-2
190A-2
Image
190A-1
191
190A
190-1
192A
190B
Detection Module
92

FIG. 19

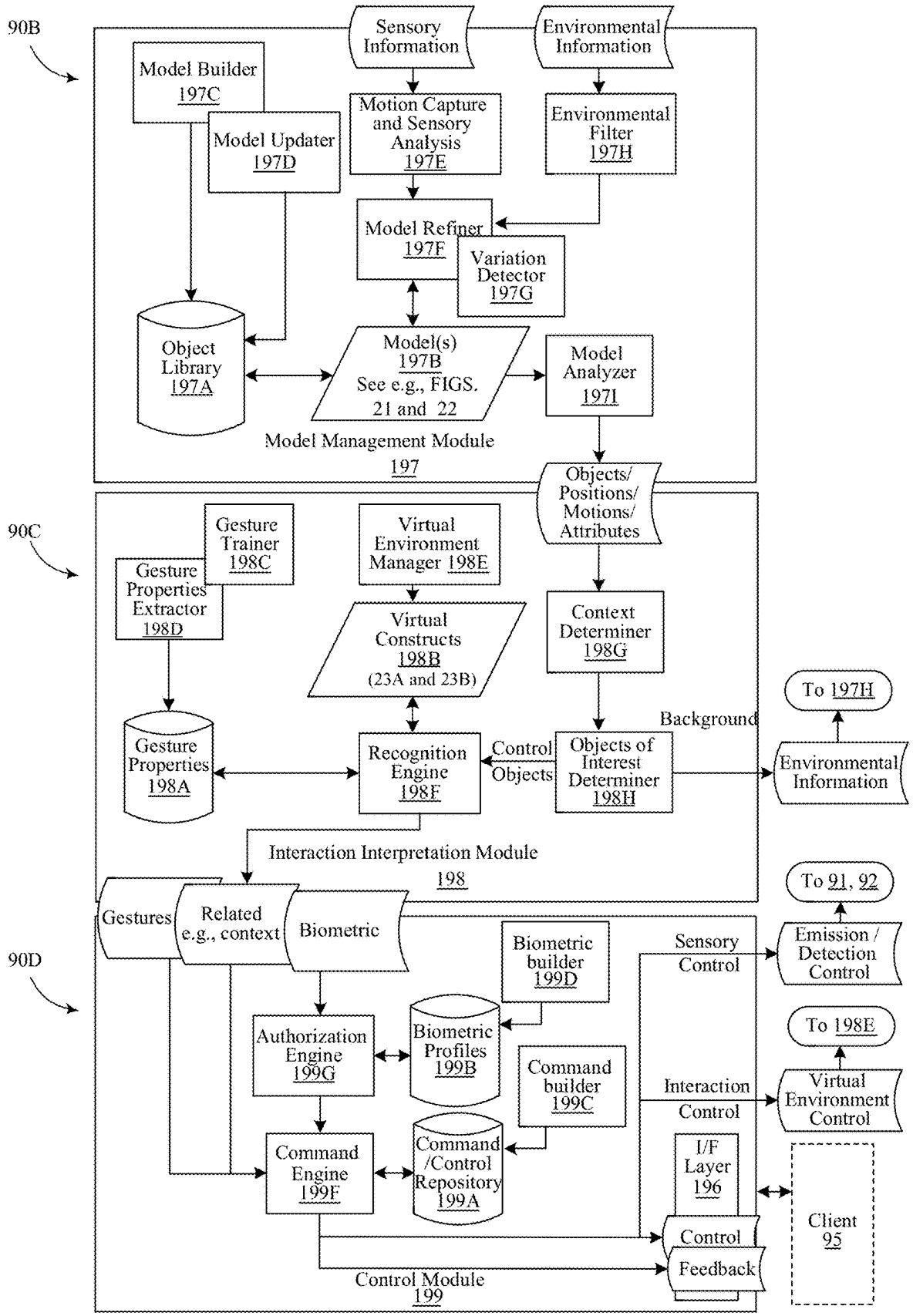
90B
Sensory Information
Environmental Information
Model Builder 197C
Model Updater 197D
Motion Capture and Sensory Analysis 197E
Environmental Filter 197H
Model Refiner 197F
Variation Detector 197G
Object Library 197A
Model(s) 197B See e.g., FIGS. 21 and 22
Model Analyzer 197I
Model Management Module 197
Objects/ Positions/ Motions/ Attributes
90C
Gesture Trainer 198C
Gesture Properties Extractor 198D
Virtual Environment Manager 198E
Virtual Constructs 198B (23A and 23B)
Context Determiner 198G
To 197H
Background
Gesture Properties 198A
Recognition Engine 198F
Control Objects
Objects of Interest Determiner 198H
Environmental Information
Interaction Interpretation Module 198
To 91, 92
Gestures
Related e.g., context
Biometric
90D
Biometric builder 199D
Sensory Control
Emission / Detection Control
Authorization Engine 199G
Biometric Profiles 199B
To 198E
Command builder 199C
Interaction Control
Virtual Environment Control
Command Engine 199F
Command /Control Repository 199A
I/F Layer 196
Client 95
Control
Feedback
Control Module 199

FIG. 20

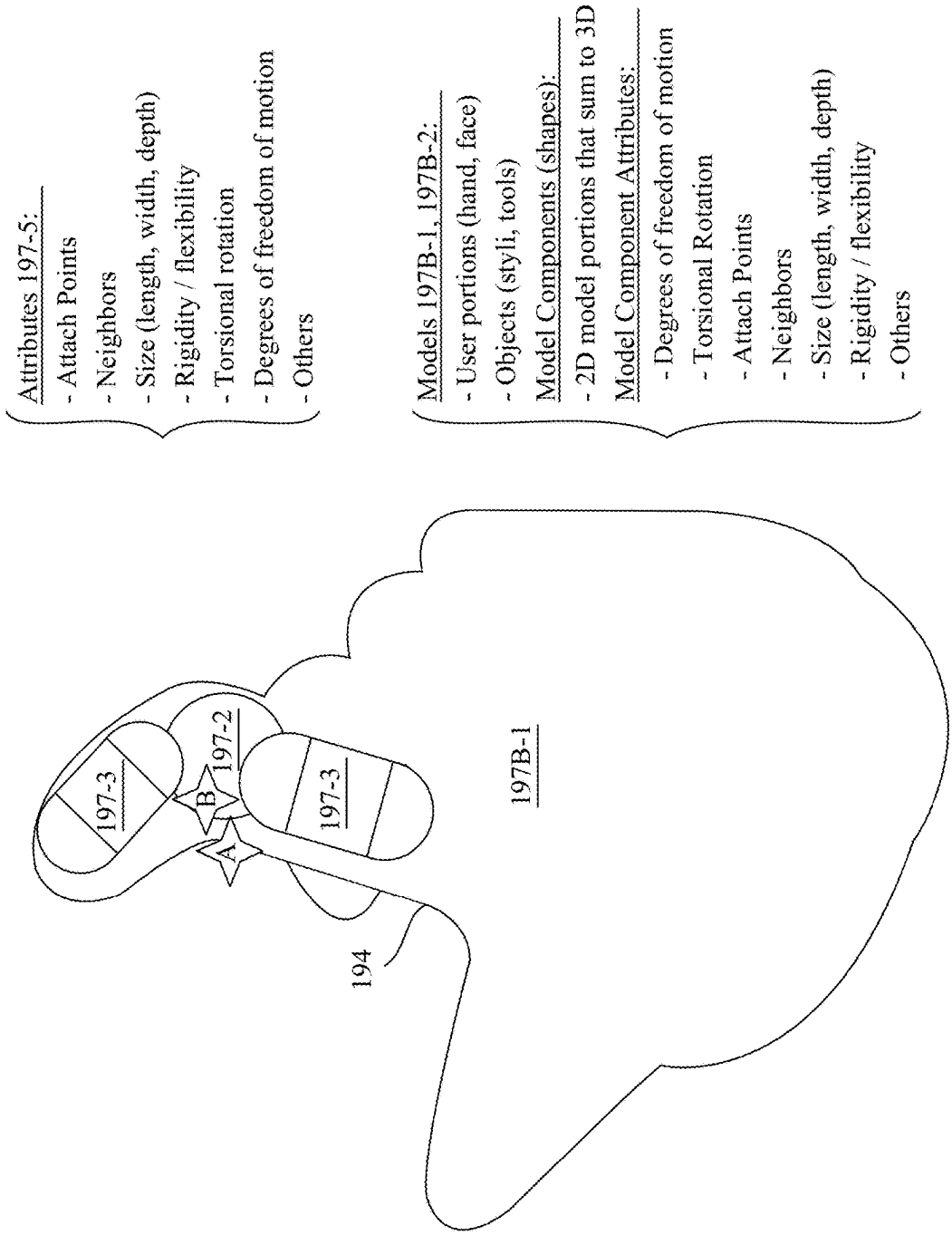
Attributes 197-5:
- Attach Points
- Neighbors
- Size (length, width, depth)
- Rigidity / flexibility
- Torsional rotation
- Degrees of freedom of motion
- Others
Models 197B-1, 197B-2:
- User portions (hand, face)
- Objects (styli, tools)
Model Components (shapes):
- 2D model portions that sum to 3D
Model Component Attributes:
- Degrees of freedom of motion
- Torsional Rotation
- Attach Points
- Neighbors
- Size (length, width, depth)
- Rigidity / flexibility
- Others
197-3
B
197-2
A
197-3
194
197B-1

FIG. 21

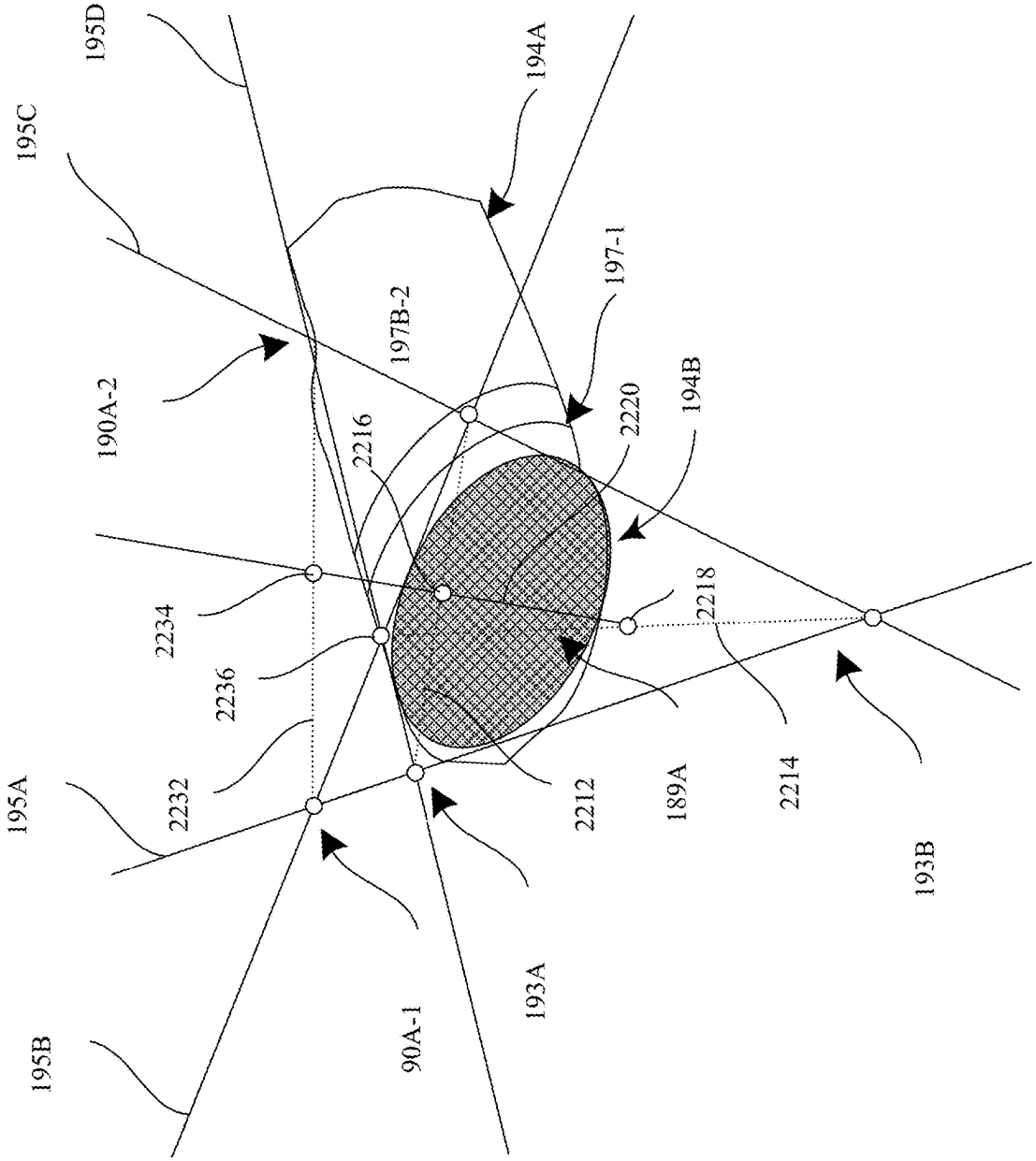
195D
195C
190A-2
195A
195B
2232
2236
2234
2216
197B-2
90A-1
193A
194A
197-1
2220
194B
2212
189A
2218
2214
193B

FIG. 22

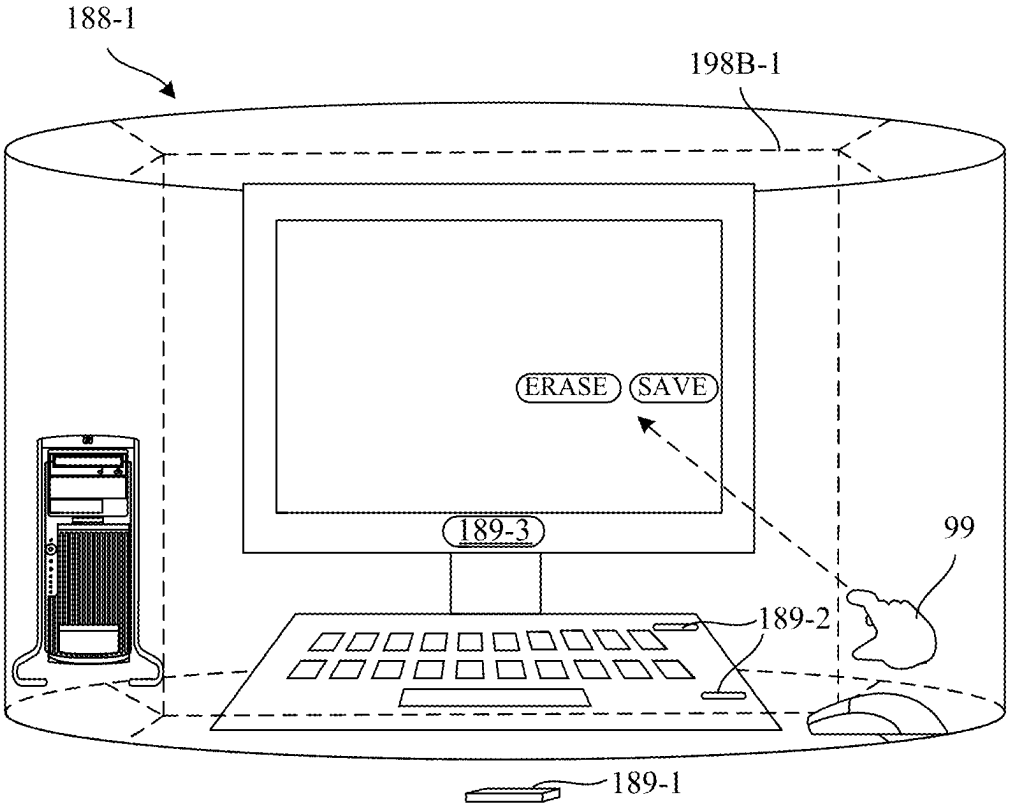

FIG. 23A

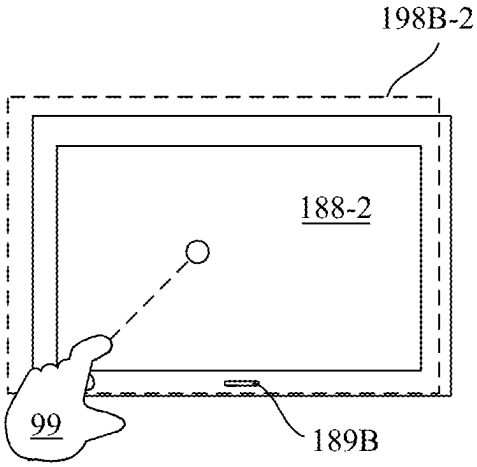

FIG. 23B

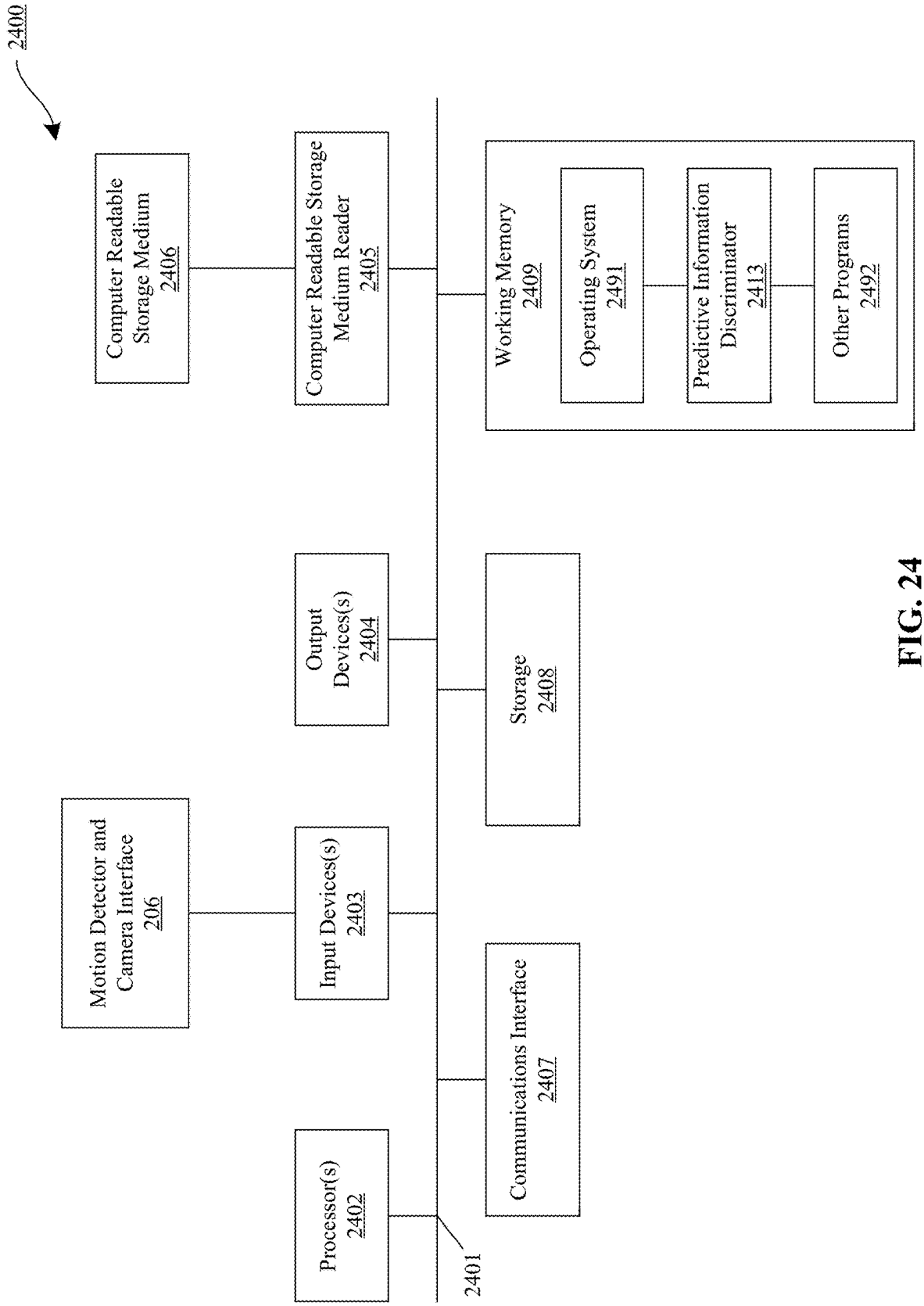
2400
Computer Readable Storage Medium 2406
Computer Readable Storage Medium Reader 2405
Working Memory 2409
Operating System 2491
Predictive Information Discriminator 2413
Other Programs 2492
Output Devices(s) 2404
Storage 2408
Motion Detector and Camera Interface 206
Input Devices(s) 2403
Communications Interface 2407
Processor(s) 2402
2401

FIG. 24

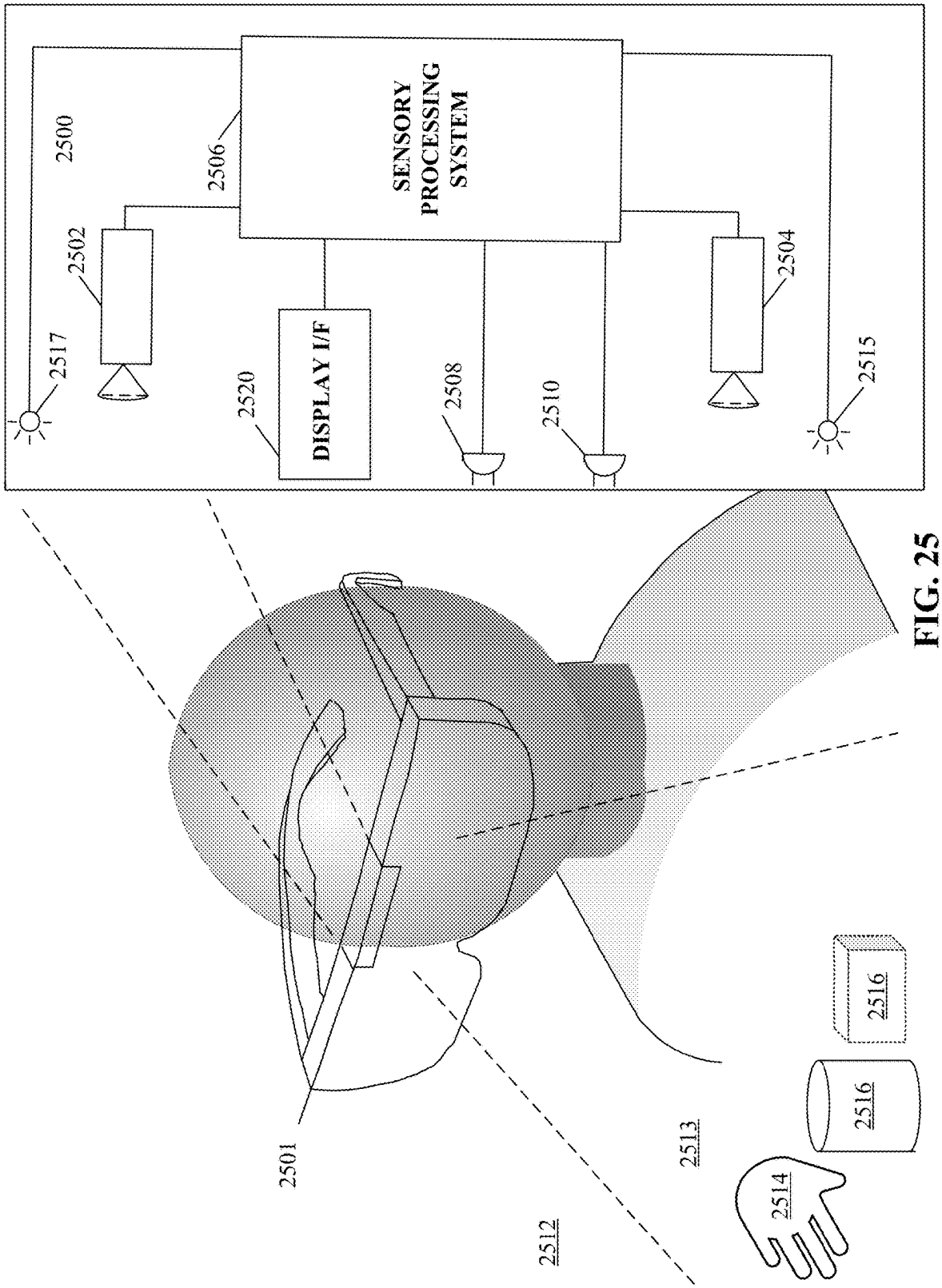
2500
2506
SENSORY PROCESSING SYSTEM
2502
2504
2517
2520
DISPLAY I/F
2508
2510
2515
2501
2512
2513
2514
2516
2516

FIG. 25

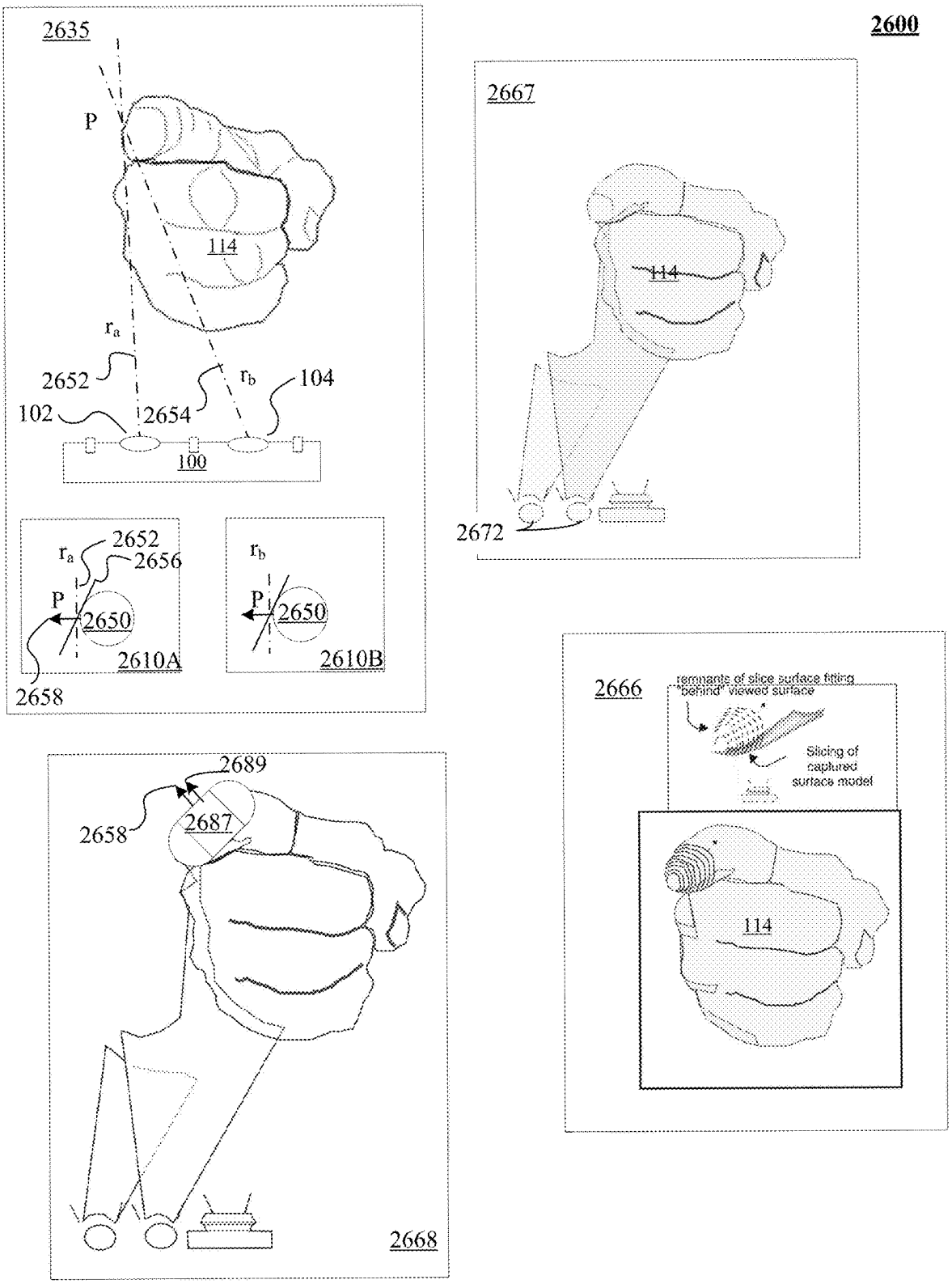
2600
2635
P
114
r_a
2652
r_b
104
102
2654
100
2652
r_a
2656
P
2650
2610A
2658
r_b
P
2650
2610B
2667
114
2672
2666
remnants of slice surface fitting "behind" viewed surface
Slicing of captured surface model
114
2689
2658
2687
2668

FIG. 26

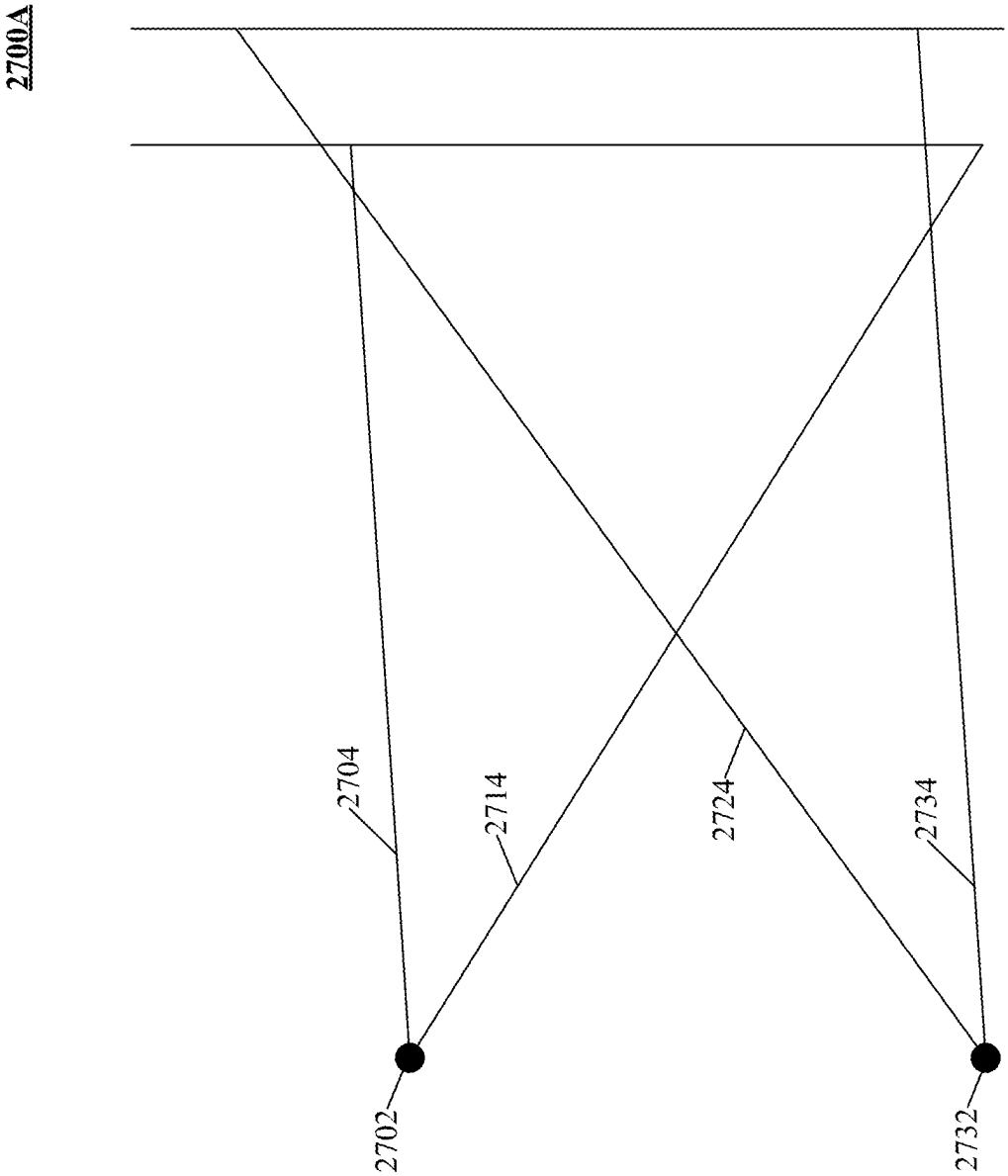

FIG. 27A

2700B

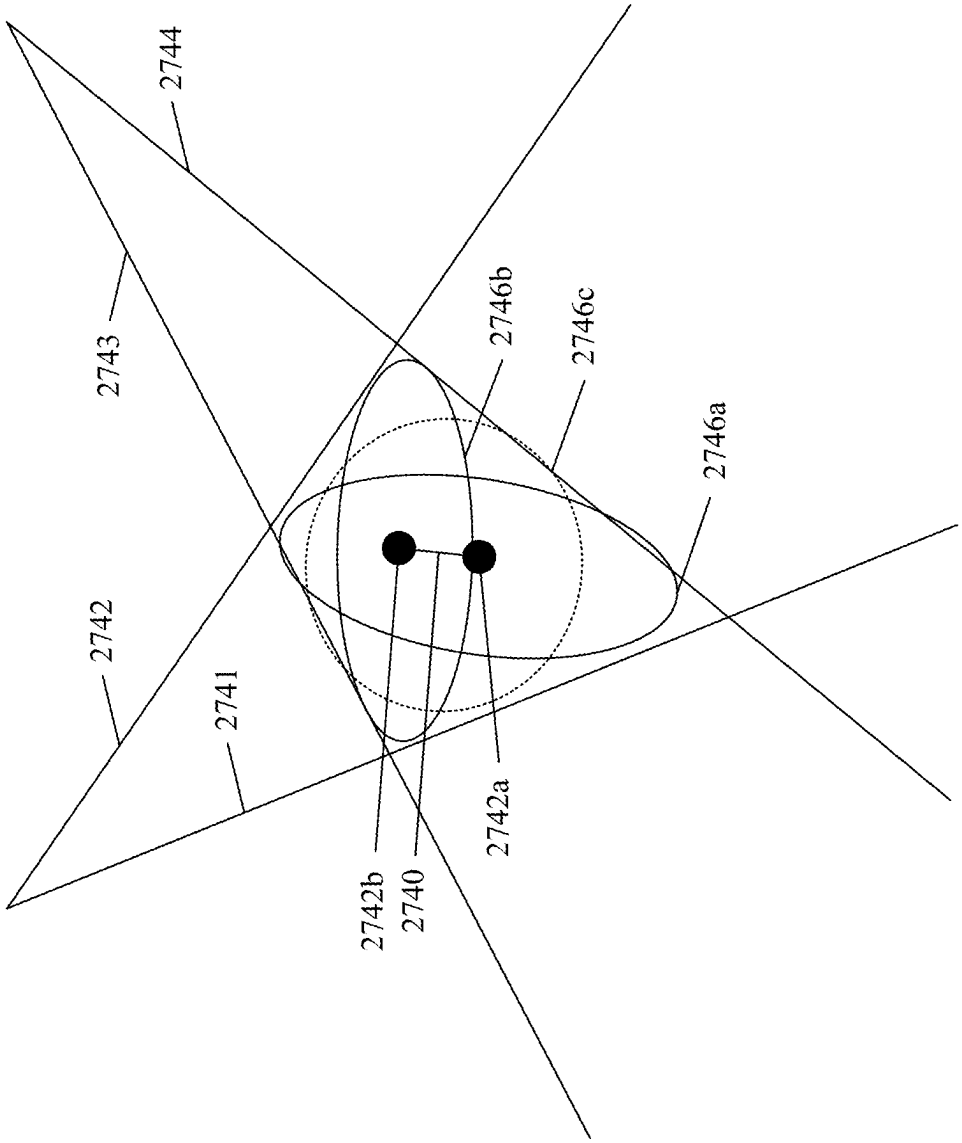

FIG. 27B

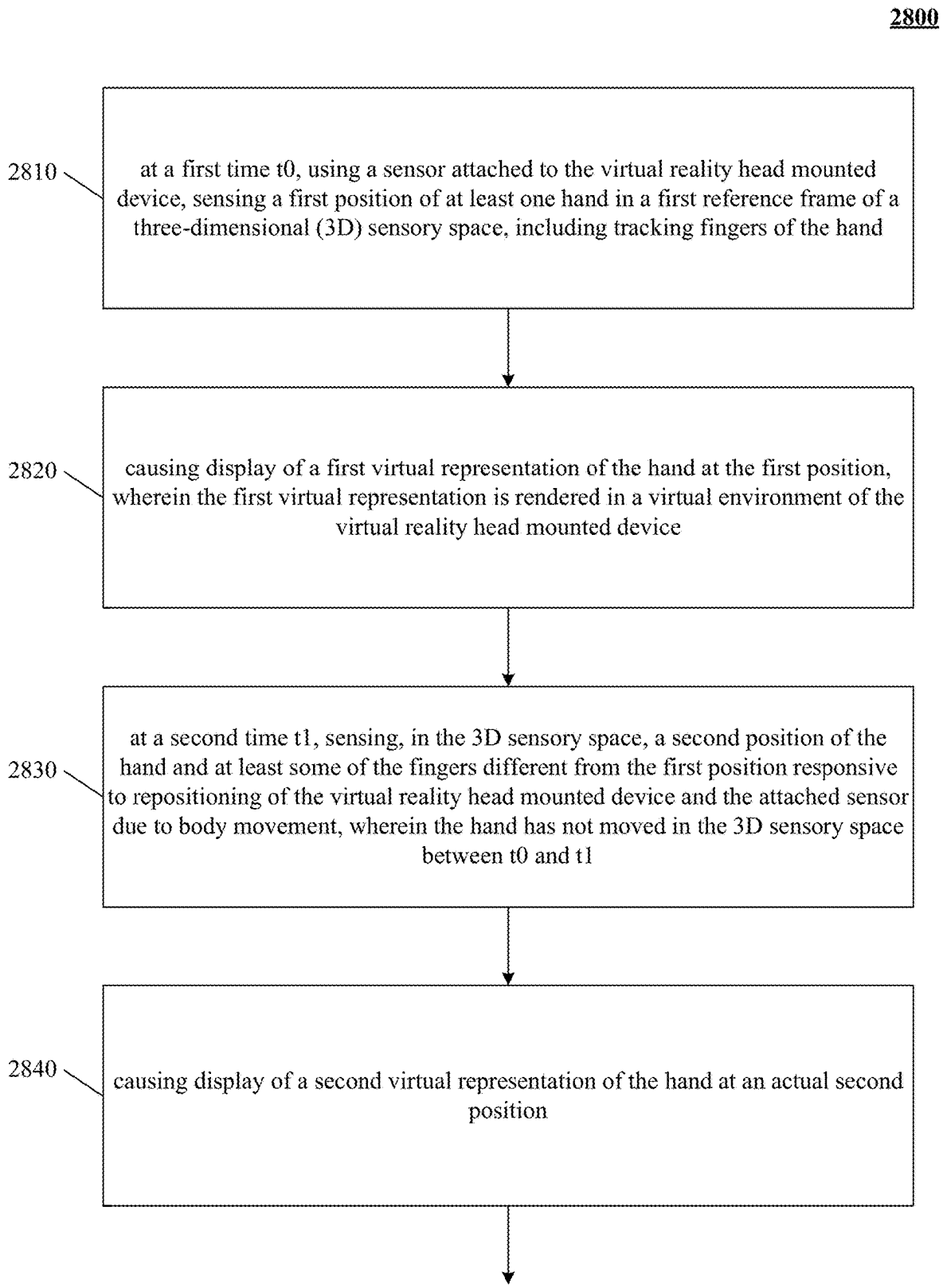
2800
2810
at a first time t0, using a sensor attached to the virtual reality head mounted device, sensing a first position of at least one hand in a first reference frame of a three-dimensional (3D) sensory space, including tracking fingers of the hand
2820
causing display of a first virtual representation of the hand at the first position, wherein the first virtual representation is rendered in a virtual environment of the virtual reality head mounted device
2830
at a second time t1, sensing, in the 3D sensory space, a second position of the hand and at least some of the fingers different from the first position responsive to repositioning of the virtual reality head mounted device and the attached sensor due to body movement, wherein the hand has not moved in the 3D sensory space between t0 and t1
2840
causing display of a second virtual representation of the hand at an actual second position

FIG. 28

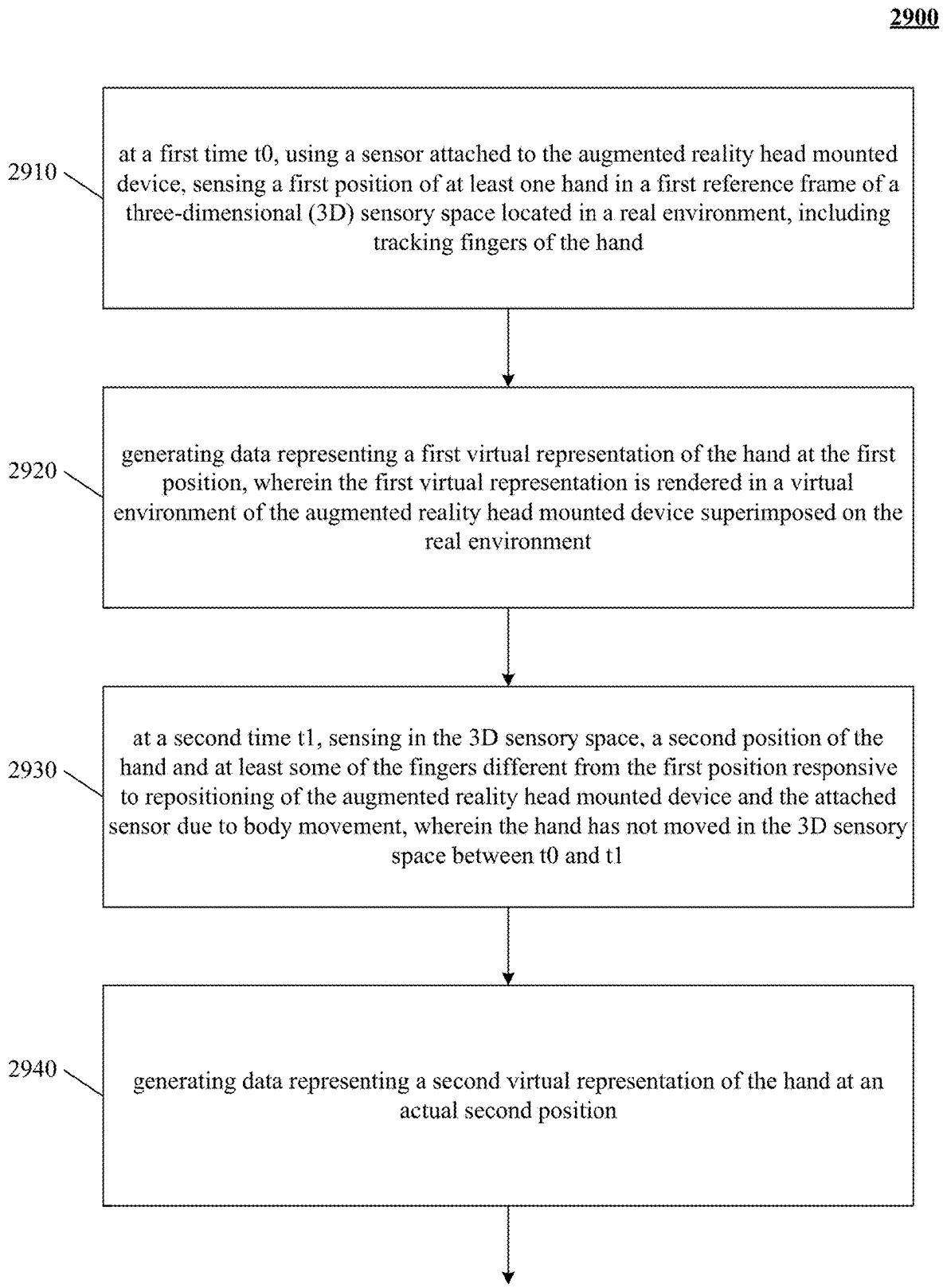
2900
2910
at a first time t0, using a sensor attached to the augmented reality head mounted device, sensing a first position of at least one hand in a first reference frame of a three-dimensional (3D) sensory space located in a real environment, including tracking fingers of the hand
2920
generating data representing a first virtual representation of the hand at the first position, wherein the first virtual representation is rendered in a virtual environment of the augmented reality head mounted device superimposed on the real environment
2930
at a second time t1, sensing in the 3D sensory space, a second position of the hand and at least some of the fingers different from the first position responsive to repositioning of the augmented reality head mounted device and the attached sensor due to body movement, wherein the hand has not moved in the 3D sensory space between t0 and t1
2940
generating data representing a second virtual representation of the hand at an actual second position

FIG. 29

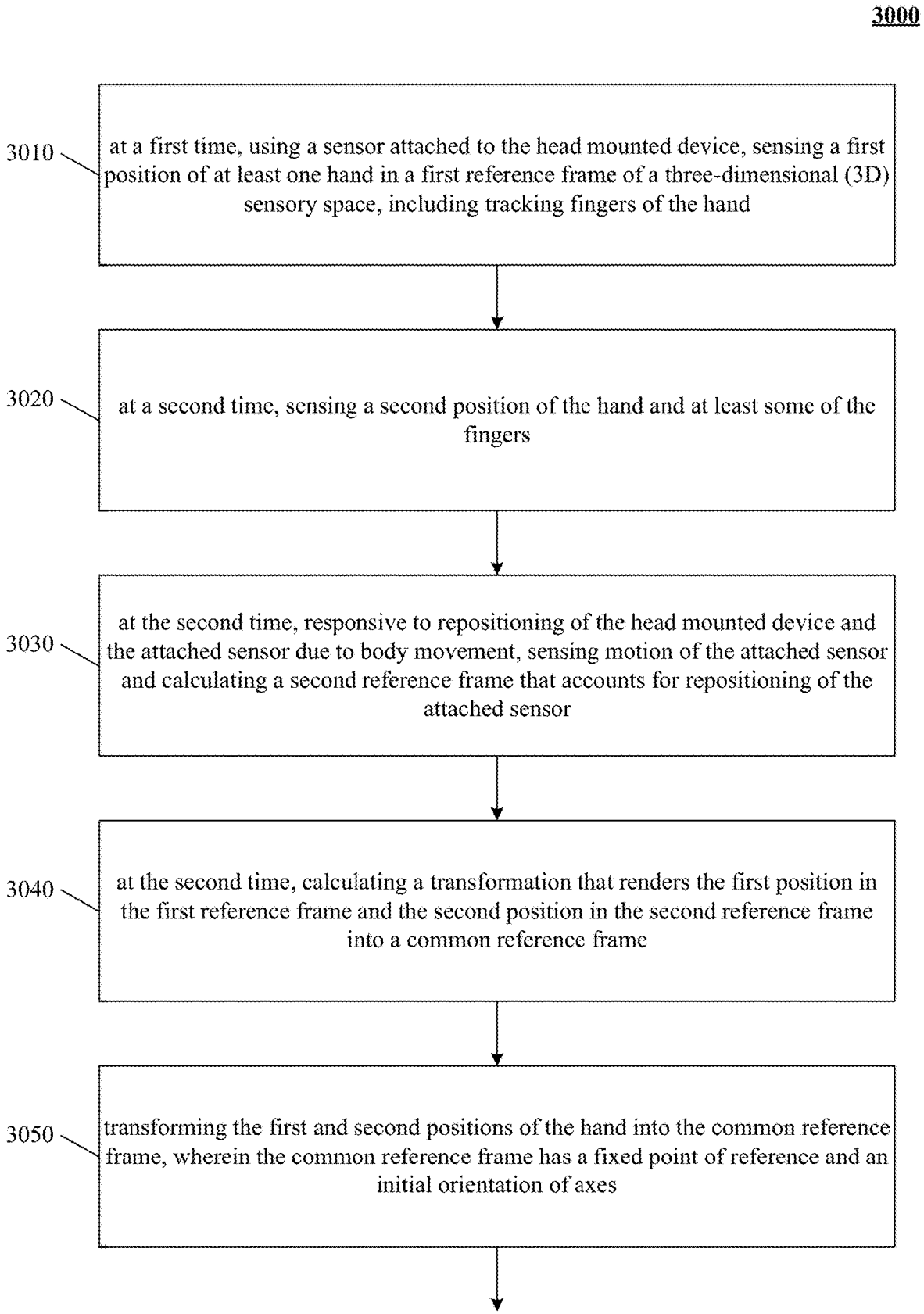
3000
3010
at a first time, using a sensor attached to the head mounted device, sensing a first position of at least one hand in a first reference frame of a three-dimensional (3D) sensory space, including tracking fingers of the hand
3020
at a second time, sensing a second position of the hand and at least some of the fingers
3030
at the second time, responsive to repositioning of the head mounted device and the attached sensor due to body movement, sensing motion of the attached sensor and calculating a second reference frame that accounts for repositioning of the attached sensor
3040
at the second time, calculating a transformation that renders the first position in the first reference frame and the second position in the second reference frame into a common reference frame
3050
transforming the first and second positions of the hand into the common reference frame, wherein the common reference frame has a fixed point of reference and an initial orientation of axes

FIG. 30

3100

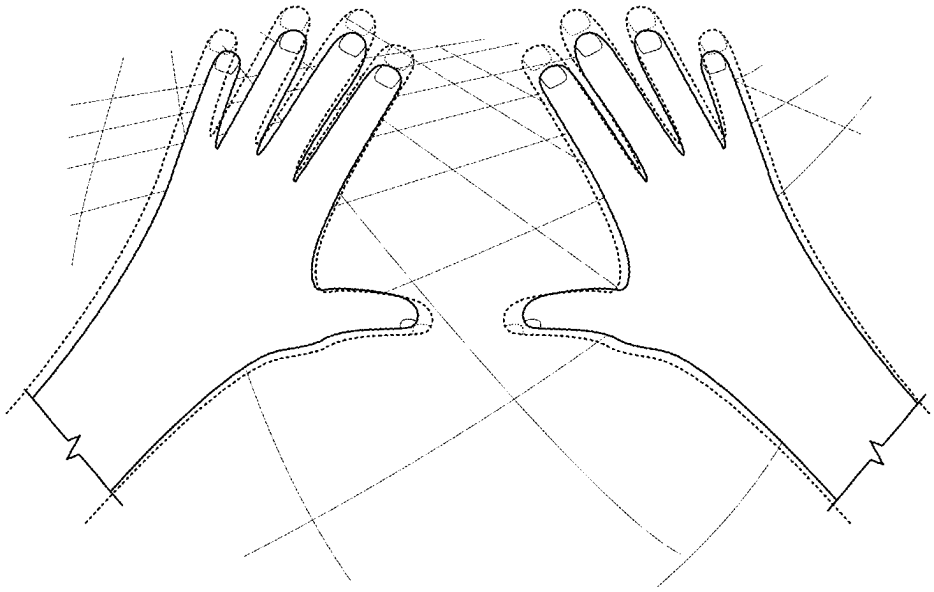

FIG. 31

3200

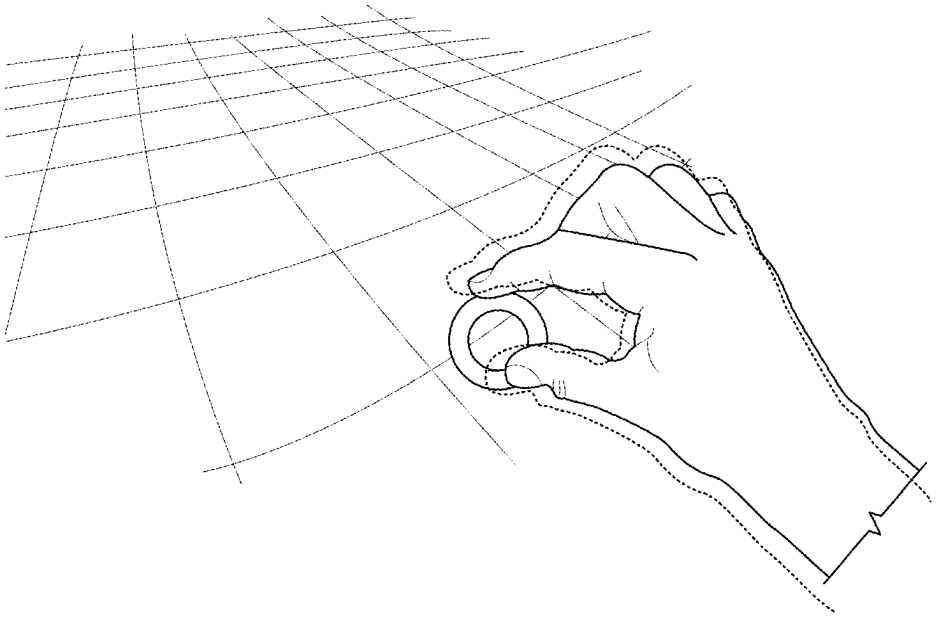

FIG. 32

3300

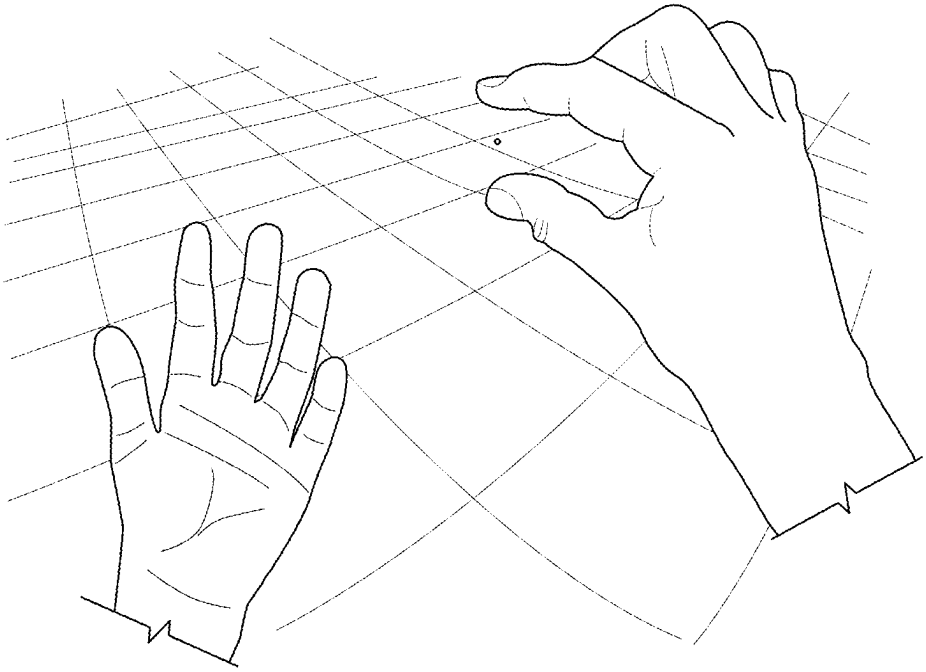

FIG. 33

3400

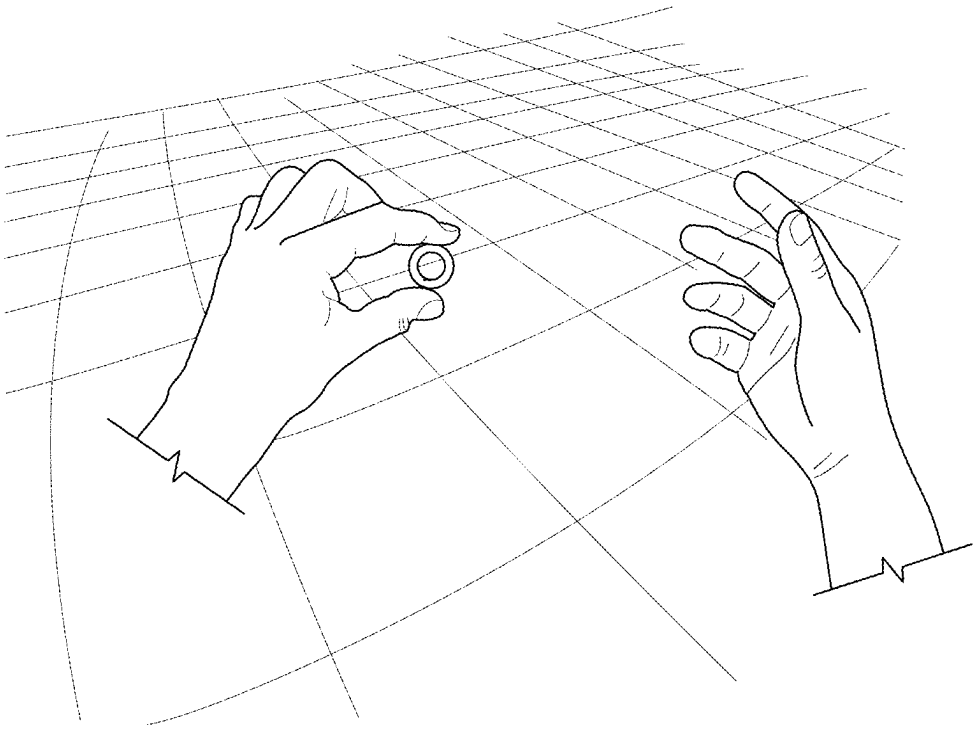

FIG. 34

3500

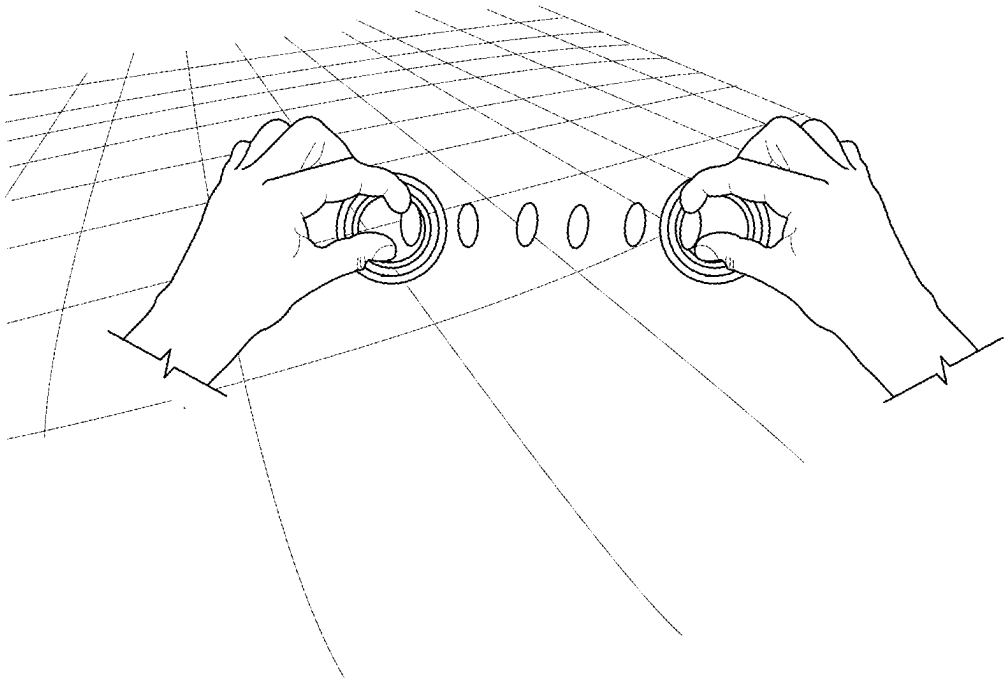

FIG. 35

3600

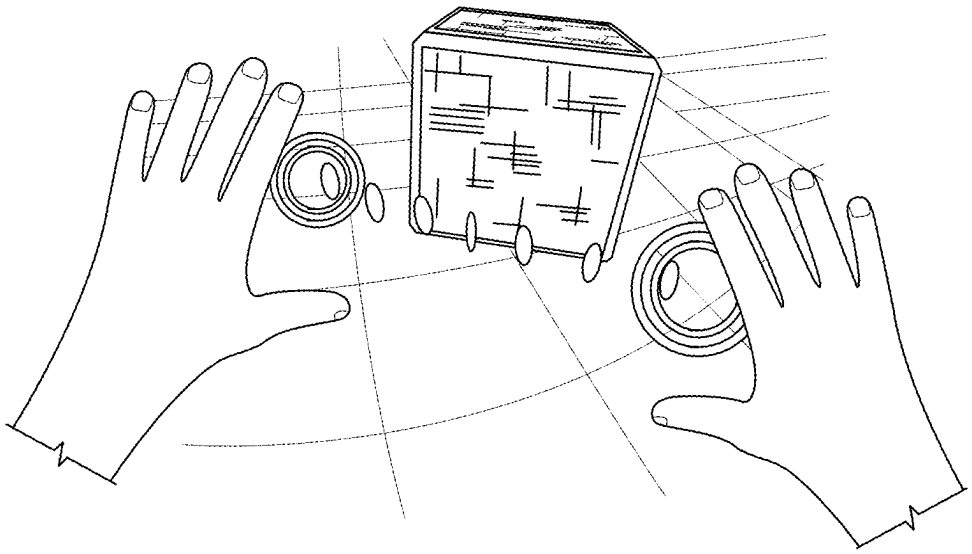

FIG. 36

3700

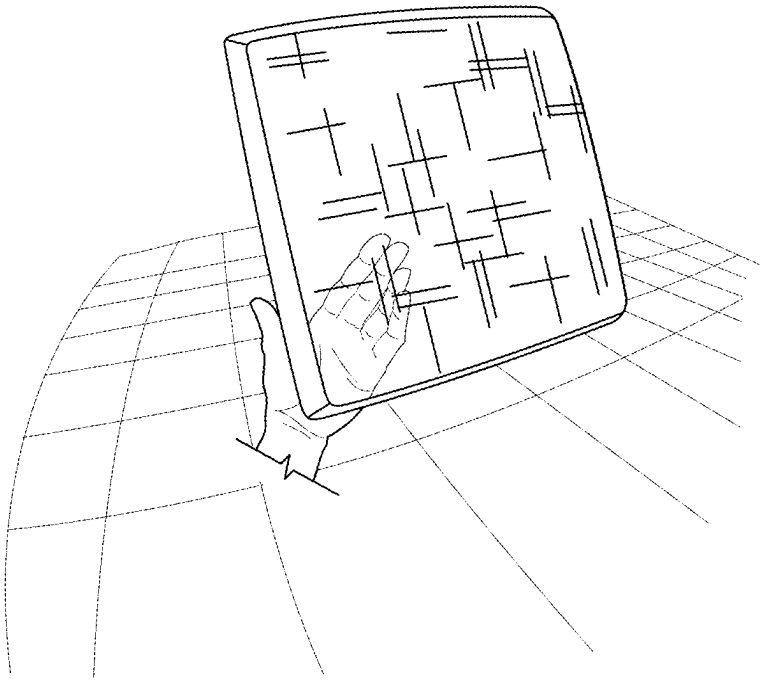

FIG. 37

3800

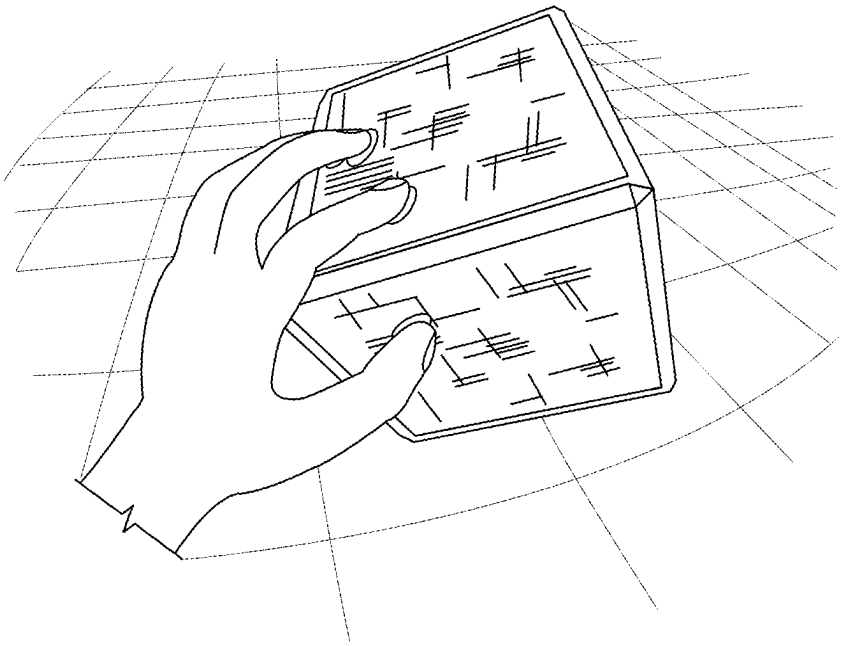

FIG. 38

3900

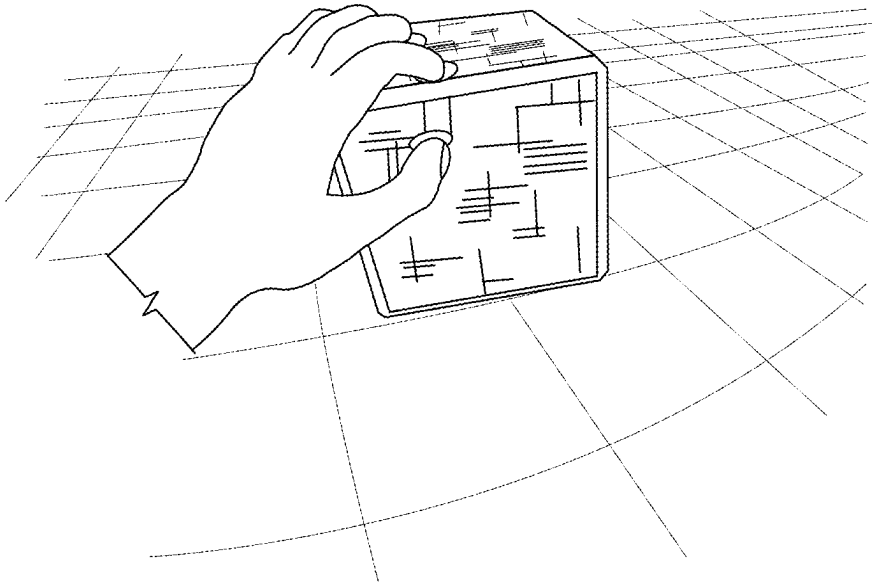

FIG. 39

4000

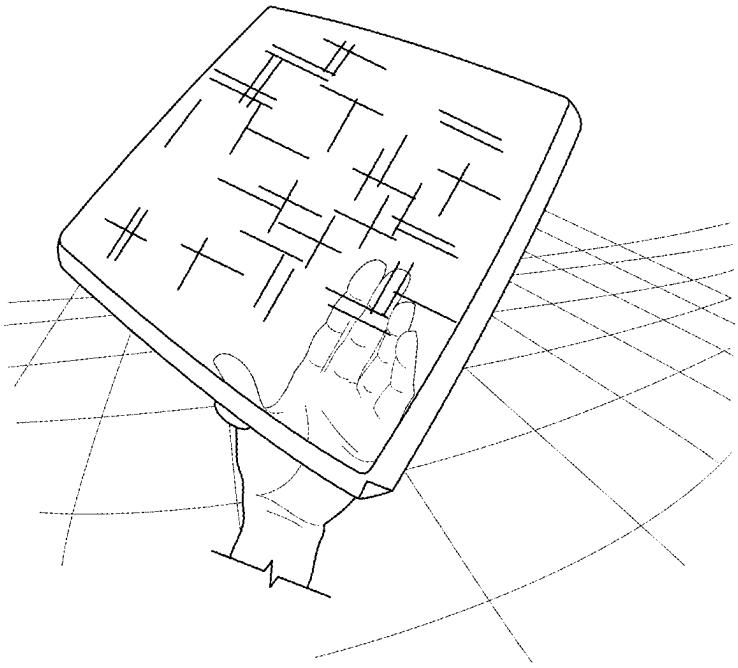

FIG. 40

4100

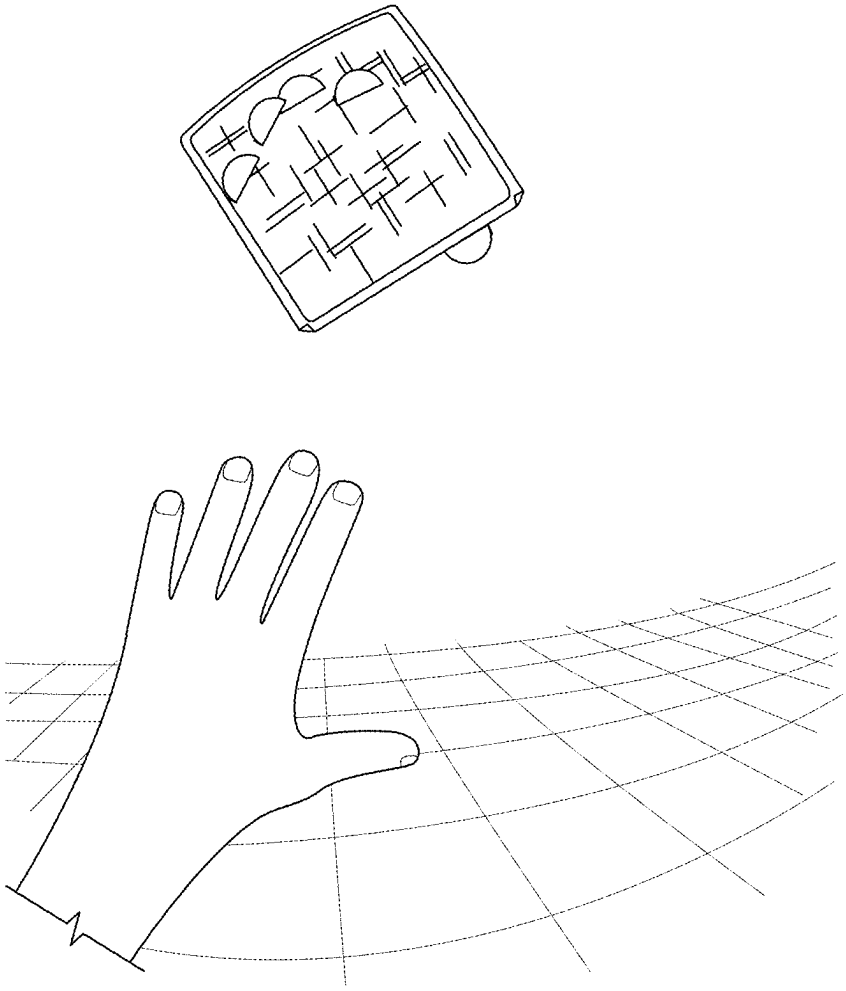

FIG. 41

4200

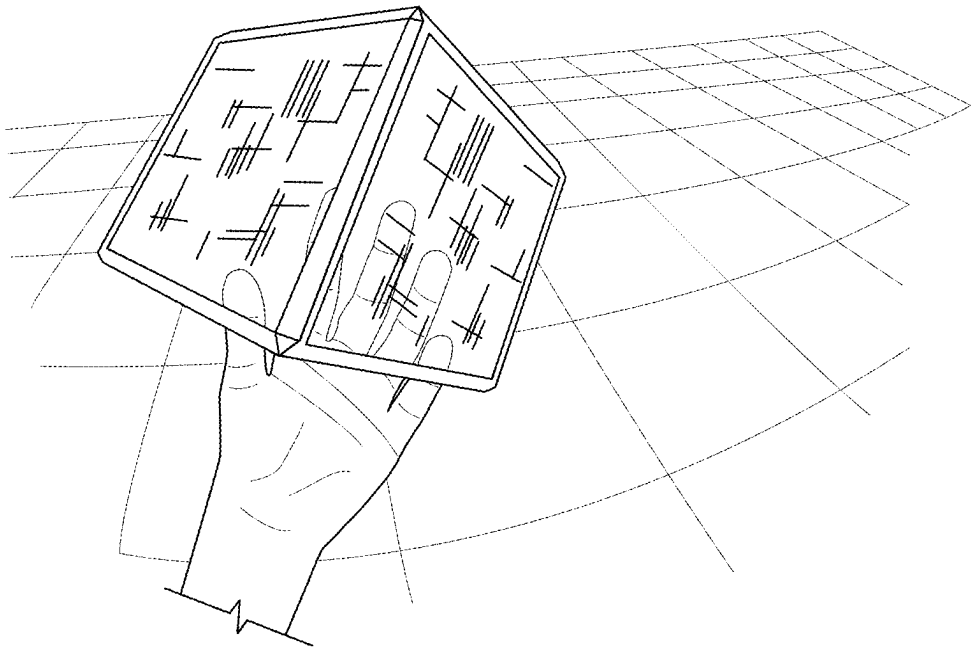

FIG. 42

4300

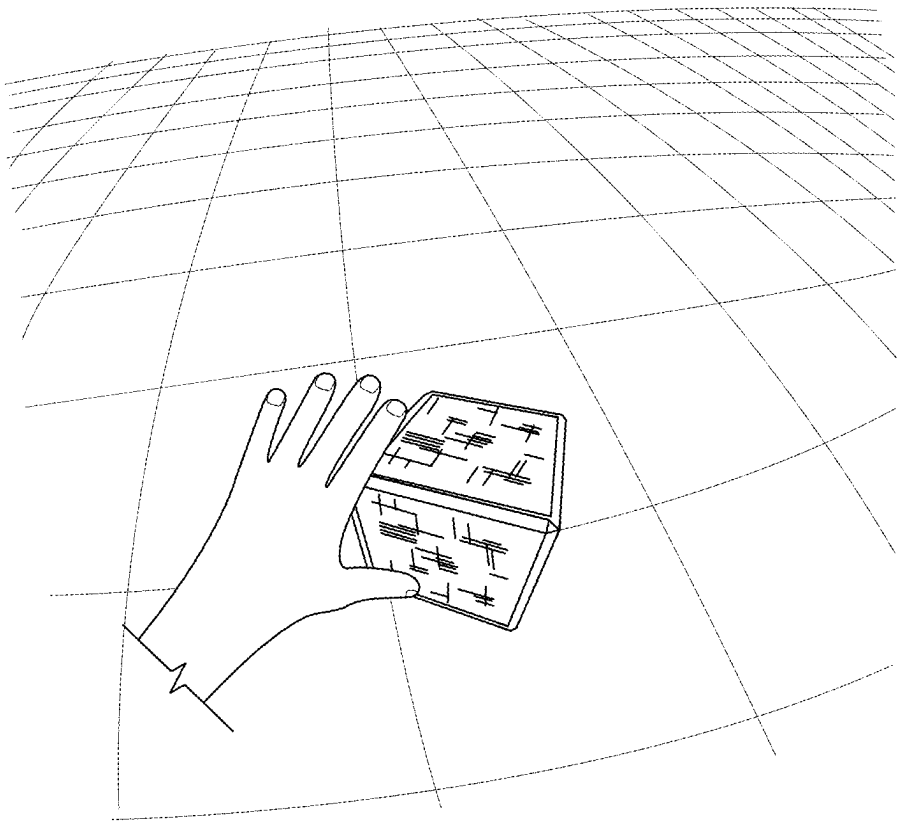

FIG. 43

4400

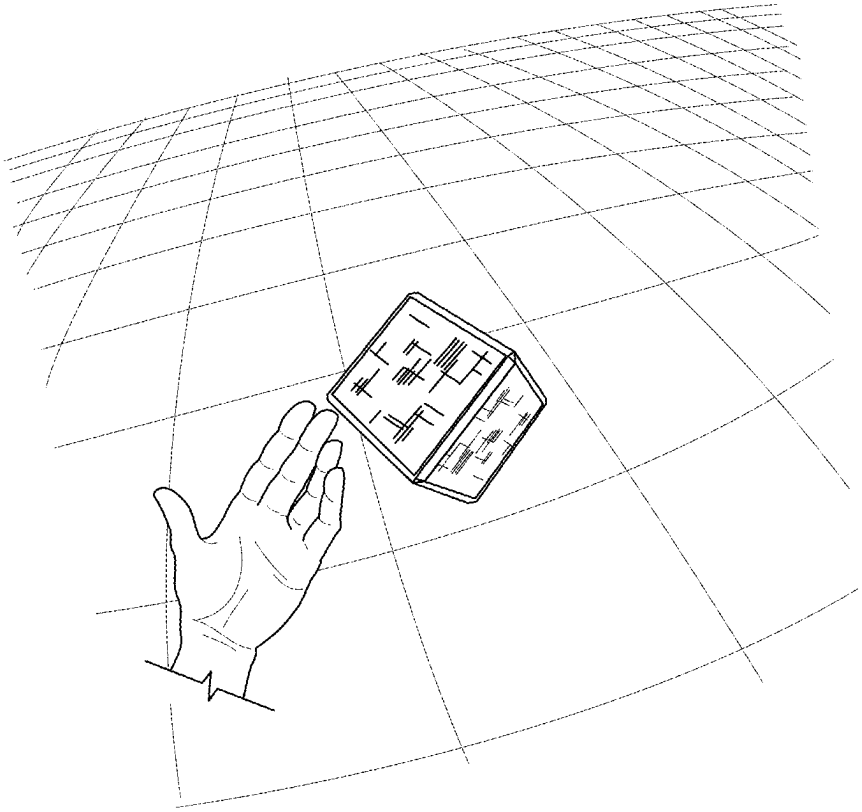

FIG. 44

SYSTEMS AND METHODS OF CREATING A REALISTIC DISPLACEMENT OF A VIRTUAL OBJECT IN VIRTUAL REALITY/AUGMENTED REALITY ENVIRONMENTS

PRIORITY DATA

This application is a continuation of U.S. patent application Ser. No. 17/867,648, entitled "SYSTEMS AND METHODS OF CREATING A REALISTIC DISPLACEMENT OF A VIRTUAL OBJECT IN VIRTUAL REALITY/AUGMENTED REALITY ENVIRONMENTS", filed Jul. 18, 2022, which is a continuation of U.S. patent application Ser. No. 17/187,676, entitled "SYSTEMS AND METHODS OF CREATING A REALISTIC DISPLACEMENT OF A VIRTUAL OBJECT IN VIRTUAL REALITY/AUGMENTED REALITY ENVIRONMENTS", filed Feb. 26, 2021, which is a continuation of U.S. patent application Ser. No. 16/383,553, entitled "SYSTEMS AND METHODS OF CREATING A REALISTIC DISPLACEMENT OF A VIRTUAL OBJECT IN VIRTUAL REALITY/AUGMENTED REALITY ENVIRONMENTS", filed Apr. 12, 2019, which is a continuation of U.S. patent application Ser. No. 15/587,173, entitled "SYSTEMS AND METHODS OF CREATING A REALISTIC DISPLACEMENT OF A VIRTUAL OBJECT IN VIRTUAL REALITY/AUGMENTED REALITY ENVIRONMENTS", filed May 4, 2017, which is a continuation of U.S. patent application Ser. No. 14/626,898, entitled, "SYSTEMS AND METHODS OF CREATING A REALISTIC GRAB EXPERIENCE IN VIRTUAL REALITY/AUGMENTED REALITY ENVIRONMENTS", filed Feb. 19, 2015, which claims the benefit of U.S. Provisional Patent Application No. 62/116,366, entitled, "SYSTEMS AND METHODS OF CREATING A REALISTIC GRAB EXPERIENCE IN VIRTUAL REALITY/AUGMENTED REALITY ENVIRONMENTS", filed Feb. 13, 2015; all of which are hereby incorporated by reference in their entirety for all intents and purposes.

INCORPORATIONS

Materials incorporated by reference in this filing include the following:

- SYSTEMS AND METHODS OF CREATING A REALISTIC GRAB EXPERIENCE IN VIRTUAL REALITY/AUGMENTED REALITY ENVIRONMENTS", U.S. Non Prov. application Ser. No. 14/626,898 filed Feb. 19, 2015,
- "SYSTEMS AND METHODS OF PROVIDING HAPTIC-LIKE FEEDBACK IN THREE-DIMENSIONAL (3D) SENSORY SPACE", U.S. Prov. App. No. 61/937,410, filed Feb. 7, 2014,
- "SYSTEMS AND METHODS OF INTERACTING WITH VIRTUAL REALITY AND AUGMENTED REALITY ENVIRONMENTS USING FREE-FORM IN-AIR GESTURES", U.S. Non Prov. application Ser. No. 14/620,183, filed Feb. 11, 2015,
- "SYSTEMS AND METHODS OF INTERACTING WITH A VIRTUAL GRID IN A THREE-DIMENSIONAL (3D) SENSORY SPACE", U.S. Prov. App. No. 62/007,885, filed Jun. 4, 2014,
- "SYSTEMS AND METHODS OF GESTURAL INTERACTION IN A PERVASIVE COMPUTING ENVIRONMENT", U.S. Prov. App. No. 62/003,298, filed May 27, 2014,

- "INITIALIZING ORIENTATION IN SPACE FOR PREDICTIVE INFORMATION FOR FREE SPACE GESTURE CONTROL AND COMMUNICATION", U.S. Nonprovisional. application Ser. No. 14/590,983, filed Jan. 6, 2015,
- "ADAPTER FOR ATTACHING A MOTION CAPTURE DEVICE TO A HEAD MOUNTED DISPLAY", U.S. Prov. App. No. 61/991,337, filed May 9, 2014,
- "CONTACTLESS CURSOR CONTROL USING FREE-SPACE MOTION DETECTION," U.S. Prov. App. No. 61/825,515, filed May 20, 2013,
- "PREDICTIVE INFORMATION FOR FREE SPACE GESTURE CONTROL AND COMMUNICATION," U.S. Prov. App. No. 61/871,790, filed Aug. 29, 2013,
- "PREDICTIVE INFORMATION FOR FREE-SPACE GESTURE CONTROL AND COMMUNICATION," U.S. Prov. App. No. 61/873,758, filed Sep. 4, 2013,
- "PREDICTIVE INFORMATION FOR FREE SPACE GESTURE CONTROL AND COMMUNICATION," U.S. Non. Prov. application Ser. No. 14/474,077, filed Aug. 29, 2014,
- "VELOCITY FIELD INTERACTION FOR FREE SPACE GESTURE INTERFACE AND CONTROL," U.S. Prov. App. No. 61/891,880, filed Oct. 16, 2013,
- "VELOCITY FIELD INTERACTION FOR FREE SPACE GESTURE INTERFACE AND CONTROL," U.S. Non. Prov. application Ser. No. 14/516,493, filed Oct. 16, 2014,
- "VIRTUAL INTERACTIONS FOR MACHINE CONTROL," U.S. Prov. App. No. 61/897,186, filed Oct. 29, 2013,
- "VIRTUAL INTERACTIONS FOR MACHINE CONTROL," U.S. Non Prov. application Ser. No. 14/527,742, filed Oct. 29, 2014,
- "INTERACTIONS WITH VIRTUAL OBJECTS FOR MACHINE CONTROL," U.S. Prov. App. No. 61/898,464, filed Oct. 31, 2013,
- "INTERACTIONS WITH VIRTUAL OBJECTS FOR MACHINE CONTROL," U.S. Non Prov. application Ser. No. 14/530,364, filed Oct. 31, 2014,
- "PREDICTIVE INFORMATION FOR FREE SPACE GESTURE CONTROL AND COMMUNICATION," U.S. Prov. App. No. 61/898,462, filed Oct. 31, 2013,
- "IMPROVING PREDICTIVE INFORMATION FOR FREE SPACE GESTURE CONTROL AND COMMUNICATION," U.S. Non Prov. application Ser. No. 14/530,690, filed Oct. 31, 2014,
- "INTERACTION STRENGTH USING VIRTUAL OBJECTS FOR MACHINE CONTROL," U.S. Prov. App. No. 61/905,103, filed Nov. 15, 2013,
- "INTERACTION STRENGTH USING VIRTUAL OBJECTS FOR MACHINE CONTROL," U.S. Non Prov. application Ser. No. 14/541,078, filed Nov. 13, 2014, "VEHICLE MOTION SENSORY CONTROL," U.S. Prov. App. No. 62/005,981, filed May 30, 2014,
- "FREE-SPACE USER INTERFACE AND CONTROL USING VIRTUAL CONSTRUCTS," U.S. Non. Prov. application Ser. No. 14/154,730, filed 14 Jan. 2014,
- "FREE-SPACE USER INTERFACE AND CONTROL USING VIRTUAL CONSTRUCTS," U.S. Prov. App. No. 61/873,351, filed Sep. 3, 2013,
- "FREE-SPACE USER INTERFACE AND CONTROL USING VIRTUAL CONSTRUCTS," U.S. Prov. App. No. 61/877,641, filed Sep. 13, 2013,
- "SYSTEMS AND METHODS FOR MACHINE CONTROL," U.S. Non. Prov. application Ser. No. 14/280,018, filed May 16, 2014,

"DYNAMIC, FREE-SPACE USER INTERACTIONS FOR MACHINE CONTROL," U.S. Non. Prov. application Ser. No. 14/155,722, filed Jan. 15, 2014,

"SYSTEMS AND METHODS FOR CAPTURING MOTION IN THREE-DIMENSIONAL SPACE," U.S. Prov. App. No. 61/724,091, filed Nov. 8, 2012,

"MOTION CAPTURE USING CROSS-SECTIONS OF AN OBJECT," U.S. application Ser. No. 13/414,485, filed Mar. 7, 2012,

"SYSTEM AND METHODS FOR CAPTURING MOTION IN THREE-DIMENSIONAL SPACE," U.S. application Ser. No. 13/742,953, filed Jan. 16, 2013,

INITIALIZING PREDICTIVE INFORMATION FOR FREE SPACE GESTURE CONTROL AND COMMUNICATION," U.S. Non. Prov. application Ser. No. 14/560,923, filed Dec. 4, 2014,

"SAFETY FOR WEARABLE VIRTUAL REALITY DEVICES VIA OBJECT DETECTION AND TRACKING," U.S. Prov. App. No. 61/981,162, filed 17 Apr. 2014, and

"BIOMETRIC AWARE OBJECT DETECTION AND TRACKING," U.S. Prov. App. No. 61/952,843, filed Mar. 13, 2014.

BACKGROUND

The subject matter discussed in this section should not be assumed to be prior art merely as a result of its mention in this section. Similarly, a problem mentioned in this section or associated with the subject matter provided as background should not be assumed to have been previously recognized in the prior art. The subject matter in this section merely represents different approaches, which in and of themselves can also correspond to implementations of the claimed technology.

Conventional motion capture approaches rely on markers or sensors worn by the subject while executing activities and/or on the strategic placement of numerous bulky and/or complex equipment in specialized and rigid environments to capture subject movements. Unfortunately, such systems tend to be expensive to construct. In addition, markers or sensors worn by the subject can be cumbersome and interfere with the subject's natural movement. Further, systems involving large numbers of cameras tend not to operate in real time, due to the volume of data that needs to be analyzed and correlated. Such considerations have limited the deployment and use of motion capture technology.

Consequently, there is a need for improved devices with greater portability and techniques for capturing the motion of objects in real time without fixed or difficult to configure sensors or markers.

SUMMARY

In one implementation, a method is described for manipulating virtual objects using real motions of one or more hands in a three-dimensional (3D) sensory space. The method includes capturing an image of the hands in the a three-dimensional (3D) sensory space and sensing a location of the hands, incorporating the image of the hands into a virtual reality scene, and outlining a modeled position of the location of the hands and incorporating the outline into the virtual reality scene.

The method described in this implementation and other implementations of the technology disclosed can include one or more of the following features and/or features described in connection with additional methods disclosed. In the interest of conciseness, the combinations of features disclosed in this application are not individually enumerated and are not repeated with each base set of features. The reader will understand how features identified in this section can readily be combined with sets of base features identified as implementations such as detecting motion using image information, drift cancellation, and particular implementations.

The method also includes changing an appearance of the outline upon detection of a discrepancy between the image of the hands and the outline.

The method further includes changing an appearance of the image of the hands upon detection of a discrepancy between the image of the hands and the outline.

This method can be implemented at least partially with a database system, e.g., by one or more processors configured to receive or retrieve information, process the information, store results, and transmit the results. Other implementations may perform the actions in different orders and/or with different, fewer or additional actions than those discussed. Multiple actions can be combined in some implementations. For convenience, this method is described with reference to the system that carries out a method. The system is not necessarily part of the method.

Other implementations of the method described in this implementation can include a non-transitory computer readable storage medium storing instructions executable by a processor to perform any of the methods described above. Yet another implementation of the method described in this implementation can include a system including memory and one or more processors operable to execute instructions, stored in the memory, to perform any of the methods described above.

In another implementation, a method is described for manipulating virtual objects using real motions of at least one hand in a three-dimensional (3D) sensory space. The method includes capturing an image of at least one hand in a three-dimensional (3D) sensory space and sensing a location of a first hand, incorporating the image of the first hand into a virtual reality scene, and sensing a pinch action between a thumb and first finger of the first hand and rendering a first virtual pinch force image positioned between the thumb and the first finger while the pinch action continues.

The method described in this implementation and other implementations of the technology disclosed can include one or more of the following features and/or features described in connection with additional methods disclosed. In the interest of conciseness, the combinations of features disclosed in this application are not individually enumerated and are not repeated with each base set of features. The reader will understand how features identified in this section can readily be combined with sets of base features identified as implementations such as detecting motion using image information, drift cancellation, and particular implementations.

The method further includes sensing a pinch action between a thumb and first finger of a second hand and rendering a second virtual pinch force image positioned between the thumb and the first finger while the pinch action continues, sensing a movement of at least one of the first and second hands that increases a separation distance between the first and second hands, while sensing continuing pinching actions of both the first and second hands, and rendering a new virtual object between the first and second pinch force

images, responsive to the increased separation distance, wherein at least a size of the new virtual object is responsive to the separation distance.

In one implementation, an orientation of the new virtual object is responsive to positions of the first and second hands.

This method can be implemented at least partially with a database system, e.g., by one or more processors configured to receive or retrieve information, process the information, store results, and transmit the results. Other implementations may perform the actions in different orders and/or with different, fewer or additional actions than those discussed. Multiple actions can be combined in some implementations. For convenience, this method is described with reference to the system that carries out a method. The system is not necessarily part of the method.

Other implementations of the method described in this implementation can include a non-transitory computer readable storage medium storing instructions executable by a processor to perform any of the methods described above. Yet another implementation of the method described in this implementation can include a system including memory and one or more processors operable to execute instructions, stored in the memory, to perform any of the methods described above.

In one implementation, a method is described for manipulating virtual objects using real motions of at least one hand in a three-dimensional (3D) sensory space. The method includes capturing an image of the hands in a three-dimensional (3D) sensory space and sensing a location of a first hand, incorporating the image of the first hand into a virtual reality scene that includes a grabable virtual object, sensing a gesture of the first hand and determining whether the gesture is intended to interact with the grabable virtual object by grabbing the virtual object, the determining further including taking into account at least an angular relationship of a normal to a palm of the first hand to a proximate surface of the virtual object, fingertip separations between the fingertips of the first hand and the proximate surface, a gesture rate at which the first hand closes on the virtual object, a hand posture, whether suitable for grasping the virtual object or incompatible with grasping, and linear velocity of the palm of the first hand relative to the virtual object, and responsive to determining that a gesture of the first hand is intended to grab the virtual object, linking motion of the first hand to manipulation of the virtual object.

The method described in this implementation and other implementations of the technology disclosed can include one or more of the following features and/or features described in connection with additional methods disclosed. In the interest of conciseness, the combinations of features disclosed in this application are not individually enumerated and are not repeated with each base set of features. The reader will understand how features identified in this section can readily be combined with sets of base features identified as implementations such as detecting motion using image information, drift cancellation, and particular implementations.

The method further includes taking into account when determining whether the gesture is intended to interact with the grabable virtual object a maximum separation between any of the fingertips of the first hand and the proximate surface.

The method further includes taking into account when determining whether the gesture is intended to interact with the grabable virtual object a rotational velocity of the palm of the first hand in the 3D sensory space.

This method can be implemented at least partially with a database system, e.g., by one or more processors configured to receive or retrieve information, process the information, store results, and transmit the results. Other implementations may perform the actions in different orders and/or with different, fewer or additional actions than those discussed. Multiple actions can be combined in some implementations. For convenience, this method is described with reference to the system that carries out a method. The system is not necessarily part of the method.

Other implementations of the method described in this implementation can include a non-transitory computer readable storage medium storing instructions executable by a processor to perform any of the methods described above. Yet another implementation of the method described in this implementation can include a system including memory and one or more processors operable to execute instructions, stored in the memory, to perform any of the methods described above.

In another implementation, a method of manipulating virtual objects using real motions of at least one hand in a three-dimensional (3D) sensory space is described. The method includes capturing an image of the hands in a three-dimensional (3D) sensory space and sensing a location of a first hand, incorporating the image of the first hand into a virtual reality scene that includes a pushable virtual object, sensing a gesture of the first hand and determining whether the gesture is intended to interact with the pushable virtual object by pushing the virtual object, the determining further including taking into account at least an angular relationship of a normal to a palm of the first hand to a proximate surface of the virtual object, fingertip separations between the fingertips of the first hand and the proximate surface, a hand posture, whether suitable for pushing the virtual object or incompatible with pushing, and linear velocity of the palm of the first hand relative to the virtual object, and responsive to determining that a gesture of the first hand is intended to push the virtual object, linking motion of the first hand to manipulation of the virtual object.

The method described in this implementation and other implementations of the technology disclosed can include one or more of the following features and/or features described in connection with additional methods disclosed. In the interest of conciseness, the combinations of features disclosed in this application are not individually enumerated and are not repeated with each base set of features. The reader will understand how features identified in this section can readily be combined with sets of base features identified as implementations such as detecting motion using image information, drift cancellation, and particular implementations.

The method further includes taking into account when determining whether the gesture is intended to interact with the pushable virtual object a gesture rate at which the first hand closes on the virtual object.

The method further includes taking into account when determining whether the gesture is intended to interact with the pushable virtual object a maximum separation between any of the fingertips of the first hand and the proximate surface.

The method further includes taking into account when determining whether the gesture is intended to interact with the pushable virtual object a rotational velocity of the palm of the first hand in the 3D sensory space.

This method can be implemented at least partially with a database system, e.g., by one or more processors configured to receive or retrieve information, process the information,

store results, and transmit the results. Other implementations may perform the actions in different orders and/or with different, fewer or additional actions than those discussed. Multiple actions can be combined in some implementations. For convenience, this method is described with reference to the system that carries out a method. The system is not necessarily part of the method.

Other implementations of the method described in this implementation can include a non-transitory computer readable storage medium storing instructions executable by a processor to perform any of the methods described above. Yet another implementation of the method described in this implementation can include a system including memory and one or more processors operable to execute instructions, stored in the memory, to perform any of the methods described above.

In yet another implementation, a method of manipulating virtual objects using real motions of one or more hands in a three-dimensional (3D) sensory space is described. The method includes capturing an image of the hands in a three-dimensional (3D) sensory space and sensing a location of the hands, incorporating at least part the image of the hands into a virtual reality scene, outlining a modeled position of the location of the hands and incorporating the outline into the virtual reality scene, detecting that at least part of the hands is obscured by a virtual object in virtual reality scene, and rendering one of the outline and the image but not both where the hands are obscured.

The method described in this implementation and other implementations of the technology disclosed can include one or more of the following features and/or features described in connection with additional methods disclosed. In the interest of conciseness, the combinations of features disclosed in this application are not individually enumerated and are not repeated with each base set of features. The reader will understand how features identified in this section can readily be combined with sets of base features identified as implementations such as detecting motion using image information, drift cancellation, and particular implementations.

The method further includes changing an appearance of the outline as the part of the hands obscured changes.

The method also includes changing an appearance of the image of the hands as the part of the hands obscured changes.

This method can be implemented at least partially with a database system, e.g., by one or more processors configured to receive or retrieve information, process the information, store results, and transmit the results. Other implementations may perform the actions in different orders and/or with different, fewer or additional actions than those discussed. Multiple actions can be combined in some implementations. For convenience, this method is described with reference to the system that carries out a method. The system is not necessarily part of the method.

Other implementations of the method described in this implementation can include a non-transitory computer readable storage medium storing instructions executable by a processor to perform any of the methods described above. Yet another implementation of the method described in this implementation can include a system including memory and one or more processors operable to execute instructions, stored in the memory, to perform any of the methods described above.

BRIEF DESCRIPTION OF THE TECHNOLOGY DISCLOSED

In conventional VR development systems, grabbing or grasping a virtual object provides an unrealistic experience. Presently, when provided with hand position information and virtual object dimensions/position information, present VR modeling software (e.g., "Unity" (http://unity3d.com/industries/sim)) decides how the virtual object reacts to the hand. When the hand closes around the object, such that the fingers are determined by Unity to have penetrated the object, Unity returns a solution that the object will fly off into space away from the hand so that the hand's fingers can close. These felt unrealistic because people don't grasp things with more than 50% hand closure.

In one implementation, the technology disclosed determines whether a grasp is intended for the virtual object based upon number of contact points (e.g., typically number of fingers) that the hand contacts the object.

When one contact point is detected, a "nudge" is inferred. The technology disclosed can compute an inertia for the virtual object and sends it skittering off into space.

When two contact points are detected, a "rotate" of the object is inferred. The technology disclosed can compute a position for the object in space in which the contact points are preserved. This allows the user to rotate something (e.g. a phone for example) by touching it with two fingers. The phone will tend to "stick" to the fingers (i.e., an "artificial gravity") until the fingers are pulled away.

When three or more contact points are detected, a "grasp" of the object is inferred. The technology disclosed can compute a position for the virtual object within the fingers that minimizes the extent that the hand's fingers penetrate the virtual object. In a present implementation, the technology disclosed can use a least squares approach applied to the contact points (e.g., square the differences between penetration of finger into object from the old position of the object and the new position of the object and add up the squares. The position of the object having a minimum sum for these square differences is the solution returned.

The technology disclosed can support a two handed grasp of the object. The first hand to grasp the object is considered dominant. Any conflicting solutions are resolved in favor of the dominant hand (e.g., two solutions equally likely will be resolved in favor of the object staying in the dominant hand).

Example: Four fingers contact a cell phone virtual object. The cell phone is grasped. If the four fingers are on two hands, both hands grasp the phone.

Stretching—if fingers for each hand of a two hand grasp remain in relative contact position but the hands are moved apart, the size of the virtual object is extended in the direction that the hands are moved apart, effectively stretching the object.

Polymorphism—same scenario as above, but when object size passes a threshold defined for the object's class, the object morphs into a larger object. The larger object can be related to the original object (e.g., stretch the smartphone until it becomes a tablet) or can be unrelated (e.g., stretch the smartphone until it becomes a dragon) or humorously related (e.g., stretch the smartphone and it becomes an antique telephone).

FIG. **1**A illustrates one implementation **100**A of a one sub-component virtual contact of a control object causing a virtual displacement of a virtual object **111**.

FIG. **1**B illustrates one implementation **100**B of a two sub-component virtual contact of a control object causing a virtual rotation of a virtual object **122**B.

FIG. **1**C illustrates one implementation **100**B of a three sub-component virtual contact of a control object causing a virtual grasping of a virtual object **122**C.

FIGS. **31**, **32**, **33**, **34**, **35**, **36**, **37**, **38**, **39**, **40**, **41**, **42**, **43**, and **44** shows various implementations **3100**, **3200**, **3300**, **3400**,

3500, **3600**, **3700**, **3800**, **3900**, **4000**, **4100**, **4200**, **4200**, and **4400** of manipulating virtual objects using real motions of one or more hands in a three-dimensional (3D) sensory space.

Other aspects and advantages of the present technology disclosed can be seen on review of the drawings, the detailed description and the claims, which follow.

BRIEF DESCRIPTION OF THE DRAWINGS

In the drawings, like reference characters generally refer to like parts throughout the different views. Also, the drawings are not necessarily to scale, with an emphasis instead generally being placed upon illustrating the principles of the disclosed technology. In the following description, various implementations of the technology disclosed are described with reference to the following drawings, in which:

FIG. **1** illustrates a system for capturing image and other sensory data according to an implementation of the technology disclosed.

FIG. **1**A illustrates one implementation of a one subcomponent virtual contact of a control object causing a virtual displacement of a virtual object.

FIG. **1**B illustrates one implementation of a two subcomponent virtual contact of a control object causing a virtual rotation of a virtual object.

FIG. **1**C illustrates one implementation of a three subcomponent virtual contact of a control object causing a virtual grasping of a virtual object.

FIG. **2** is a simplified block diagram of a computer system implementing image analysis suitable for supporting a virtual environment enabled apparatus according to an implementation of the technology disclosed.

FIG. **3**A is a perspective view from the top of a sensor in accordance with the technology disclosed, with motion sensors along an edge surface thereof.

FIG. **3**B is a perspective view from the bottom of a sensor in accordance with the technology disclosed, with motion sensors along the bottom surface thereof.

FIG. **3**C is a perspective view from the top of a sensor in accordance with the technology disclosed, with detachable motion sensors configured for placement on a surface.

FIG. **4** illustrates apparent movement of objects from the perspective of the user of a virtual environment enabled apparatus in accordance with the technology disclosed.

FIG. **5** illustrates apparent movement of objects from the perspective of the user of a virtual environment enabled apparatus in accordance with the technology disclosed.

FIG. **6** shows a flowchart of one implementation of determining motion information in a movable sensor apparatus.

FIG. **7** shows a flowchart of one implementation of applying movement information to apparent environment information sensed by the sensor to yield actual environment information in a movable sensor apparatus.

FIG. **8** illustrates one implementation of a system for providing a virtual device experience.

FIG. **9** shows a flowchart of one implementation of providing a virtual device experience.

FIG. **10** shows a flowchart of one implementation of cancelling drift in a head mounted device (HMD).

FIGS. **11**A, **11**B, and **11**C illustrate different implementations of a motion sensory integrated with a head mounted device (HMD).

FIG. **12**A shows one implementation of a user interacting with a virtual reality/augmented reality environment using a motion sensor integrated with a head mounted device (HMD).

FIG. **12**B illustrates one implementation of a virtual reality/augmented reality environment as viewed by a user in FIG. **12**A.

FIG. **13**A shows one implementation of moving a motion sensor integrated with a head mounted device (HMD) in response to body movements of a user depicted in FIG. **12**A.

FIG. **13**B illustrates one implementation of a virtual reality/augmented reality environment as viewed by a user in FIG. **13**A.

FIG. **14** illustrates one implementation of generating a drift-adapted virtual reality/augmented reality environment responsive to motions of a motion sensor integrated with a head mounted device (HMD).

FIGS. **15**A, **15**B and **15**C illustrate different views of a 3D capsule hand according to one implementation of the technology disclosed.

FIGS. **16**A and **16**B are simplified illustrations of fitting one or more 3D solid subcomponents to the observation information according to an implementation.

FIG. **17** illustrates an exemplary machine sensory and control system in one embodiment.

FIG. **18** depicts one embodiment of coupling emitters with other materials or devices.

FIG. **19** shows one embodiment of interleaving arrays of image capture device(s).

FIG. **20** shows another embodiment of an exemplary machine sensory and control system.

FIGS. **21** and **22** illustrate prediction information including models of different control objects.

FIGS. **23**A and **23**B show interaction between a control object and an engagement target.

FIG. **24** is an exemplary computing system according to an embodiment.

FIG. **25** illustrates a system for capturing image and other sensory data according to an implementation of the technology disclosed.

FIG. **26** illustrates one implementation of finding points in an image of an object being modeled.

FIGS. **27**A and **27**B graphically illustrates one implementation of determining observation information.

FIG. **28** is a representative method of integrating real three-dimensional (3D) space sensing with a virtual reality head mounted device.

FIG. **29** depicts a flowchart of integrating real three-dimensional (3D) space sensing with an augmented reality head mounted device.

FIG. **30** illustrates a flowchart of a representative method of integrating real three-dimensional (3D) space sensing with a head mounted device that renders a virtual background and one or more virtual objects is described.

FIGS. **31**, **32**, **33**, **34**, **35**, **36**, **37**, **38**, **39**, **40**, **41**, **42**, **43**, and **44** shows various implementations of manipulating virtual objects using real motions of one or more hands in a three-dimensional (3D) sensory space.

DETAILED DESCRIPTION

The traditional paradigms of indirect interactions through standard input devices such as mouse, keyboard, or stylus have their limitations, including skewed fields of view and restrictively receptive interfaces. Particularly in the VR/AR context, such traditional paradigms greatly diminish the user experience. Accordingly, the technology disclosed allows

users to interact with the virtual interfaces generated in VR/AR environment using free-form in-air gestures.

However, existing human-VR/AR systems interactions are very limited and unfeasible. Current VR/AR systems are complex as they force the user to interact with VR/AR environment using a keyboard and mouse, or a vocabulary of simply hand gestures. Further, despite strong academic and commercial interest in VR/AR systems, VR/AR systems continue to be costly and requiring expensive equipment, and thus stand unsuitable for general use by the average consumer.

An opportunity arises to provide an economical approach that provides advantages of VR/AR for enhanced and sub-millimeter precision interaction with virtual objects without the draw backs of attaching or deploying specialized hardware.

System and methods in accordance herewith generally utilize information about the motion of a control object, such as a user's hand, finger or a stylus, in three-dimensional (3D) space to operate a physical or virtual user interface and/or components thereof based on the motion information. Various implementations take advantage of motion-capture technology to track the motions of the control object in real time (or near real time, i.e., sufficiently fast that any residual lag between the control object and the system's response is unnoticeable or practically insignificant). Other implementations can use synthetic motion data (e.g., generated by a computer game) or stored motion data (e.g., previously captured or generated). References to motions in "free-form in-air", "free-space", "in-air", or "touchless" motions or gestures are used herein with reference to an implementation to distinguish motions tied to and/or requiring physical contact of the moving object with a physical surface to effect input; however, in some applications, the control object can contact a physical surface ancillary to providing input, in such case the motion is still considered a "free-form in-air" motion.

Examples of "free-form in-air" gestures include raising an arm, or making different poses using hands and fingers (e.g., 'one finger point', 'one finger click', 'two finger point', 'two finger click', 'prone one finger point', 'prone one finger click', 'prone two finger point', 'prone two finger click', 'medial one finger point', 'medial two finger point') to indicate an intent to interact. In other implementations, a point and grasp gesture can be used to move a cursor on a display of a device. In yet other implementations, "free-form" gestures can be a grip-and-extend-again motion of two fingers of a hand, grip-and-extend-again motion of a finger of a hand, holding a first finger down and extending a second finger, a flick of a whole hand, flick of one of individual fingers or thumb of a hand, flick of a set of bunched fingers or bunched fingers and thumb of a hand, horizontal sweep, vertical sweep, diagonal sweep, a flat hand with thumb parallel to fingers, closed, half-open, pinched, curled, fisted, mime gun, okay sign, thumbs-up, ILY sign, one-finger point, two-finger point, thumb point, pinkie point, flat-hand hovering (supine/prone), bunged-fingers hovering, or swirling or circular sweep of one or more fingers and/or thumb and/arm.

Further, in some implementations, a virtual environment can be defined to co-reside at or near a physical environment. For example, a virtual touch screen can be created by defining a (substantially planar) virtual surface at or near the screen of a display, such as an HMD, television, monitor, or the like. A virtual active table top can be created by defining a (substantially planar) virtual surface at or near a table top convenient to the machine receiving the input.

Among other aspects, implementations can enable quicker, crisper gesture based or "free-form in-air" (i.e., not requiring physical contact) interfacing with a variety of machines (e.g., a computing systems, including HMDs, smart phones, desktop, laptop, tablet computing devices, special purpose computing machinery, including graphics processors, embedded microcontrollers, gaming consoles, audio mixers, or the like; wired or wirelessly coupled networks of one or more of the foregoing, and/or combinations thereof), obviating or reducing the need for contact-based input devices such as a mouse, joystick, touch pad, or touch screen.

Implementations of the technology disclosed also relate to methods and systems that facilitate free-form in-air gestural interactions in a virtual reality (VR) and augmented reality (AR) environment. The technology disclosed can be applied to solve the technical problem of how the user interacts with the virtual screens, elements, or controls displayed in the VR/AR environment. Existing VR/AR systems restrict the user experience and prevent complete immersion into the real world by limiting the degrees of freedom to control virtual objects. Where interaction is enabled, it is coarse, imprecise, and cumbersome and interferes with the user's natural movement. Such considerations of cost, complexity and convenience have limited the deployment and use of AR technology.

The systems and methods described herein can find application in a variety of computer-user-interface contexts, and can replace mouse operation or other traditional means of user input as well as provide new user-input modalities. Free-form in-air control object motions and virtual-touch recognition can be used, for example, to provide input to commercial and industrial legacy applications (such as, e.g., business applications, including Microsoft Outlook™; office software, including Microsoft Office™, Windows™, Excel™, etc.; graphic design programs; including Microsoft Visio™ etc.), operating systems such as Microsoft Windows™; web applications (e.g., browsers, such as Internet Explorer™); other applications (such as e.g., audio, video, graphics programs, etc.), to navigate virtual worlds (e.g., in video games) or computer representations of the real world (e.g., Google street View™), or to interact with three-dimensional virtual objects (e.g., Google Earth™). In some implementations, such applications can be run on HMDs or other portable computer devices and thus can be similarly interacted with using the free-form in-air gestures.

A "control object" or "object" as used herein with reference to an implementation is generally any three-dimensionally movable object or appendage with an associated position and/or orientation (e.g., the orientation of its longest axis) suitable for pointing at a certain location and/or in a certain direction. Control objects include, e.g., hands, fingers, feet, or other anatomical parts, as well as inanimate objects such as pens, styluses, handheld controls, portions thereof, and/or combinations thereof. Where a specific type of control object, such as the user's finger, is used hereinafter for ease of illustration, it is to be understood that, unless otherwise indicated or clear from context, any other type of control object can be used as well.

A "virtual environment," may also referred to as a "virtual construct," "virtual touch plane," or "virtual plane," as used herein with reference to an implementation denotes a geometric locus defined (e.g., programmatically) in space and useful in conjunction with a control object, but not corresponding to a physical object; its purpose is to discriminate between different operational modes of the control object (and/or a user-interface element controlled therewith, such

as a cursor) based on whether the control object interacts the virtual environment. The virtual environment, in turn, can be, e.g., a virtual environment (a plane oriented relative to a tracked orientation of the control object or an orientation of a screen displaying the user interface) or a point along a line or line segment extending from the tip of the control object.

Using the output of a suitable motion-capture system or motion information received from another source, various implementations facilitate user input via gestures and motions performed by the user's hand or a (typically hand-held) pointing device. For example, in some implementations, the user can control the position of a cursor and/or other object on the interface of an HMD by with his index finger in the physical environment outside the HMD's virtual environment, without the need to touch the screen. The position and orientation of the finger relative to the HMD's interface, as determined by the motion-capture system, can be used to manipulate a cursor symbol. As will be readily apparent to one of skill in the art, many other ways of mapping the control object position and/or orientation onto a screen location can, in principle, be used; a particular mapping can be selected based on considerations such as, without limitation, the requisite amount of information about the control object, the intuitiveness of the mapping to the user, and the complexity of the computation. For example, in some implementations, the mapping is based on intersections with or projections onto a (virtual) plane defined relative to the camera, under the assumption that the HMD interface is located within that plane (which is correct, at least approximately, if the camera is correctly aligned relative to the screen), whereas, in other implementations, the screen location relative to the camera is established via explicit calibration (e.g., based on camera images including the screen).

Aspects of the system and methods, described herein provide for improved machine interface and/or control by interpreting the motions (and/or position, configuration) of one or more control objects or portions thereof relative to one or more virtual environments defined (e.g., programmatically) disposed at least partially within a field of view of an image-capture device. In implementations, the position, orientation, and/or motion of control object(s) (e.g., a user's finger(s), thumb, etc.; a suitable hand-held pointing device such as a stylus, wand, or some other control object; portions and/or combinations thereof) are tracked relative to the virtual environment to facilitate determining whether an intended free-form in-air gesture has occurred. Free-form in-air gestures can include engaging with a virtual control (e.g., selecting a button or switch), disengaging with a virtual control (e.g., releasing a button or switch), motions that do not involve engagement with any virtual control (e.g., motion that is tracked by the system, possibly followed by a cursor, and/or a single object in an application or the like), environmental interactions (i.e., gestures to direct an environment rather than a specific control, such as scroll up/down), special-purpose gestures (e.g., brighten/darken screen, volume control, etc.), as well as others or combinations thereof.

Free-form in-air gestures can be mapped to one or more virtual controls, or a control-less screen location, of a display device associated with the machine under control, such as an HMD. Implementations provide for mapping of movements in three-dimensional (3D) space conveying control and/or other information to zero, one, or more controls. Virtual controls can include imbedded controls (e.g., sliders, buttons, and other control objects in an application), or environmental-level controls (e.g., windowing controls, scrolls within a window, and other controls affecting the control environment). In implementations, virtual controls can be displayable using two-dimensional (2D) presentations (e.g., a traditional cursor symbol, cross-hairs, icon, graphical representation of the control object, or other displayable object) on, e.g., one or more display screens, and/or 3D presentations using holography, projectors, or other mechanisms for creating 3D presentations. Presentations can also be audible (e.g., mapped to sounds, or other mechanisms for conveying audible information) and/or haptic.

As used herein, a given signal, event or value is "responsive to" a predecessor signal, event or value of the predecessor signal, event or value influenced by the given signal, event or value. If there is an intervening processing element, step or time period, the given signal, event or value can still be "responsive to" the predecessor signal, event or value. If the intervening processing element or step combines more than one signal, event or value, the signal output of the processing element or step is considered "responsive to" each of the signal, event or value inputs. If the given signal, event or value is the same as the predecessor signal, event or value, this is merely a degenerate case in which the given signal, event or value is still considered to be "responsive to" the predecessor signal, event or value. "Responsiveness" or "dependency" or "basis" of a given signal, event or value upon another signal, event or value is defined similarly.

As used herein, the "identification" of an item of information does not necessarily require the direct specification of that item of information. Information can be "identified" in a field by simply referring to the actual information through one or more layers of indirection, or by identifying one or more items of different information which are together sufficient to determine the actual item of information. In addition, the term "specify" is used herein to mean the same as "identify."

Among other aspects, the technology described herein with reference to example implementations can provide for automatically (e.g., programmatically) cancelling out motions of a movable sensor configured to capture motion and/or determining the path of an object based on imaging, acoustic or vibrational waves. Implementations can enable gesture detection, virtual reality and augmented reality, and other machine control and/or machine communications applications using portable devices, e.g., head mounted displays (HMDs), wearable goggles, watch computers, smartphones, and so forth, or mobile devices, e.g., autonomous and semi-autonomous robots, factory floor material handling systems, autonomous mass-transit vehicles, automobiles (human or machine driven), and so forth, equipped with suitable sensors and processors employing optical, audio or vibrational detection. In some implementations, projection techniques can supplement the sensory based tracking with presentation of virtual (or virtualized real) objects (visual, audio, haptic, and so forth) created by applications loadable to, or in cooperative implementation with, the HMD or other device to provide a user of the device with a personal virtual experience (e.g., a functional equivalent to a real experience).

Some implementations include optical image sensing. For example, a sequence of images can be correlated to construct a 3-D model of the object, including its position and shape. A succession of images can be analyzed using the same technique to model motion of the object such as free-form gestures. In low-light or other situations not conducive to optical imaging, where free-form gestures cannot be recognized optically with a sufficient degree of reliability, audio

signals or vibrational waves can be detected and used to supply the direction and location of the object as further described herein.

Refer first to FIG. **1**, which illustrates a system **100** for capturing image data according to one implementation of the technology disclosed. System **100** is preferably coupled to a wearable device **101** that can be a personal head mounted display (HMD) having a goggle form factor such as shown in FIG. **1**, a helmet form factor, or can be incorporated into or coupled with a watch, smartphone, or other type of portable device or any number of cameras **102**, **104** coupled to sensory processing system **106**. Cameras **102**, **104** can be any type of camera, including cameras sensitive across the visible spectrum or with enhanced sensitivity to a confined wavelength band (e.g., the infrared (IR) or ultraviolet bands); more generally, the term "camera" herein refers to any device (or combination of devices) capable of capturing an image of an object and representing that image in the form of digital data. For example, line sensors or line cameras rather than conventional devices that capture a two-dimensional (2D) image can be employed. The term "light" is used generally to connote any electromagnetic radiation, which may or may not be within the visible spectrum, and may be broadband (e.g., white light) or narrowband (e.g., a single wavelength or narrow band of wavelengths).

Cameras **102**, **104** are preferably capable of capturing video images (i.e., successive image frames at a constant rate of at least 15 frames per second); although no particular frame rate is required. The capabilities of cameras **102**, **104** are not critical to the technology disclosed, and the cameras can vary as to frame rate, image resolution (e.g., pixels per image), color or intensity resolution (e.g., number of bits of intensity data per pixel), focal length of lenses, depth of field, etc. In general, for a particular application, any cameras capable of focusing on objects within a spatial volume of interest can be used. For instance, to capture motion of the hand of an otherwise stationary person, the volume of interest might be defined as a cube approximately one meter on a side.

As shown, cameras **102**, **104** can be oriented toward portions of a region of interest **112** by motion of the device **101**, in order to view a virtually rendered or virtually augmented view of the region of interest **112** that can include a variety of virtual objects **116** as well as contain an object of interest **114** (in this example, one or more hands) that moves within the region of interest **112**. One or more sensors **108**, **110** capture motions of the device **101**. In some implementations, one or more light sources **115**, **117** are arranged to illuminate the region of interest **112**. In some implementations, one or more of the cameras **102**, **104** are disposed opposite the motion to be detected, e.g., where the hand **114** is expected to move. This is an optimal location because the amount of information recorded about the hand is proportional to the number of pixels it occupies in the camera images, and the hand will occupy more pixels when the camera's angle with respect to the hand's "pointing direction" is as close to perpendicular as possible. Sensory processing system **106**, which can be, e.g., a computer system, can control the operation of cameras **102**, **104** to capture images of the region of interest **112** and sensors **108**, **110** to capture motions of the device **101**. Information from sensors **108**, **110** can be applied to models of images taken by cameras **102**, **104** to cancel out the effects of motions of the device **101**, providing greater accuracy to the virtual experience rendered by device **101**. Based on the captured images and motions of the device **101**, sensory processing system **106** determines the position and/or motion of object **114**.

For example, as an action in determining the motion of object **114**, sensory processing system **106** can determine which pixels of various images captured by cameras **102**, **104** contain portions of object **114**. In some implementations, any pixel in an image can be classified as an "object" pixel or a "background" pixel depending on whether that pixel contains a portion of object **114** or not. Object pixels can thus be readily distinguished from background pixels based on brightness. Further, edges of the object can also be readily detected based on differences in brightness between adjacent pixels, allowing the position of the object within each image to be determined. In some implementations, the silhouettes of an object are extracted from one or more images of the object that reveal information about the object as seen from different vantage points. While silhouettes can be obtained using a number of different techniques, in some implementations, the silhouettes are obtained by using cameras to capture images of the object and analyzing the images to detect object edges. Correlating object positions between images from cameras **102**, **104** and cancelling out captured motions of the device **101** from sensors **108**, **110** allows sensory processing system **106** to determine the location in 3D space of object **114**, and analyzing sequences of images allows sensory processing system **106** to reconstruct 3D motion of object **114** using conventional motion algorithms or other techniques. See, e.g., U.S. patent application Ser. No. 13/414,485 (filed on Mar. 7, 2012) and U.S. Provisional Patent Application Nos. 61/724,091 (filed on Nov. 8, 2012) and 61/587,554 (filed on Jan. 7, 2012), the entire disclosures of which are hereby incorporated by reference.

Presentation interface **120** employs projection techniques in conjunction with the sensory based tracking in order to present virtual (or virtualized real) objects (visual, audio, haptic, and so forth) created by applications loadable to, or in cooperative implementation with, the device **101** to provide a user of the device with a personal virtual experience. Projection can include an image or other visual representation of an object.

One implementation uses motion sensors and/or other types of sensors coupled to a motion-capture system to monitor motions within a real environment. A virtual object integrated into an augmented rendering of a real environment can be projected to a user of a portable device **101**. Motion information of a user body portion can be determined based at least in part upon sensory information received from cameras **102**, **104** or acoustic or other sensory devices. Control information is communicated to a system based in part on a combination of the motion of the portable device **101** and the detected motion of the user determined from the sensory information received from cameras **102**, **104** or acoustic or other sensory devices. The virtual device experience can be augmented in some implementations by the addition of haptic, audio and/or other sensory information projectors. For example, with reference to FIG. **8**, optional video projection mechanism **804** can project an image of a page (e.g., virtual device **801**) from a virtual book object superimposed upon a desk (e.g., surface portion **116**) of a user; thereby creating a virtual device experience of reading an actual book, or an electronic book on a physical e-reader, even though no book or e-reader is present. Optional haptic projector **806** can project the feeling of the texture of the "virtual paper" of the book to the reader's

finger. Optional audio projector **802** can project the sound of a page turning in response to detecting the reader making a swipe to turn the page.

A plurality of sensors **108**, **110** can coupled to the sensory processing system **106** to capture motions of the device **101**. Sensors **108**, **110** can be any type of sensor useful for obtaining signals from various parameters of motion (acceleration, velocity, angular acceleration, angular velocity, position/locations); more generally, the term "motion detector" herein refers to any device (or combination of devices) capable of converting mechanical motion into an electrical signal. Such devices can include, alone or in various combinations, accelerometers, gyroscopes, and magnetometers, and are designed to sense motions through changes in orientation, magnetism or gravity. Many types of motion sensors exist and implementation alternatives vary widely.

The illustrated system **100** can include any of various other sensors not shown in FIG. **1** for clarity, alone or in various combinations, to enhance the virtual experience provided to the user of device **101**. For example, in low-light situations where free-form gestures cannot be recognized optically with a sufficient degree of reliability, system **106** may switch to a touch mode in which touch gestures are recognized based on acoustic or vibrational sensors. Alternatively, system **106** may switch to the touch mode, or supplement image capture and processing with touch sensing, when signals from acoustic or vibrational sensors are sensed. In still another operational mode, a tap or touch gesture may act as a "wake up" signal to bring the image and audio analysis system **106** from a standby mode to an operational mode. For example, the system **106** may enter the standby mode if optical signals from the cameras **102**, **104** are absent for longer than a threshold interval.

It will be appreciated that the figures shown in FIG. **1** are illustrative. In some implementations, it may be desirable to house the system **100** in a differently shaped enclosure or integrated within a larger component or assembly. Furthermore, the number and type of image sensors, motion detectors, illumination sources, and so forth are shown schematically for the clarity, but neither the size nor the number is the same in all implementations.

Refer now to FIG. **2**, which shows a simplified block diagram of a computer system **200** for implementing sensory processing system **106**. Computer system **200** includes a processor **202**, a memory **204**, a motion detector and camera interface **206**, a presentation interface **120**, speaker(s) **209**, a microphone(s) **210**, and a wireless interface **211**. Memory **204** can be used to store instructions to be executed by processor **202** as well as input and/or output data associated with execution of the instructions. In particular, memory **204** contains instructions, conceptually illustrated as a group of modules described in greater detail below, that control the operation of processor **202** and its interaction with the other hardware components. An operating system directs the execution of low-level, basic system functions such as memory allocation, file management and operation of mass storage devices. The operating system may include a variety of operating systems such as Microsoft WINDOWS operating system, the Unix operating system, the Linux operating system, the Xenix operating system, the IBM AIX operating system, the Hewlett Packard UX operating system, the Novell NETWARE operating system, the Sun Microsystems SOLARIS operating system, the OS/2 operating system, the BeOS operating system, the MACINTOSH operating system, the APACHE operating system, an OPENACTION operating system, iOS, Android or other mobile operating systems, or another operating system of platform.

The computing environment may also include other removable/non-removable, volatile/nonvolatile computer storage media. For example, a hard disk drive may read or write to non-removable, nonvolatile magnetic media. A magnetic disk drive may read from or writes to a removable, nonvolatile magnetic disk, and an optical disk drive may read from or write to a removable, nonvolatile optical disk such as a CD-ROM or other optical media. Other removable/non-removable, volatile/nonvolatile computer storage media that can be used in the exemplary operating environment include, but are not limited to, magnetic tape cassettes, flash memory cards, digital versatile disks, digital video tape, solid state RAM, solid state ROM, and the like. The storage media are typically connected to the system bus through a removable or non-removable memory interface.

Processor **202** may be a general-purpose microprocessor, but depending on implementation can alternatively be a microcontroller, peripheral integrated circuit element, a CSIC (customer-specific integrated circuit), an ASIC (application-specific integrated circuit), a logic circuit, a digital signal processor, a programmable logic device such as an FPGA (field-programmable gate array), a PLD (programmable logic device), a PLA (programmable logic array), an RFID processor, smart chip, or any other device or arrangement of devices that is capable of implementing the actions of the processes of the technology disclosed.

Motion detector and camera interface **206** can include hardware and/or software that enables communication between computer system **200** and cameras **102**, **104**, as well as sensors **108**, **110** (see FIG. **1**). Thus, for example, motion detector and camera interface **206** can include one or more camera data ports **216**, **218** and motion detector ports **217**, **219** to which the cameras and motion detectors can be connected (via conventional plugs and jacks), as well as hardware and/or software signal processors to modify data signals received from the cameras and motion detectors (e.g., to reduce noise or reformat data) prior to providing the signals as inputs to a motion-capture ("mocap") program **214** executing on processor **202**. In some implementations, motion detector and camera interface **206** can also transmit signals to the cameras and sensors, e.g., to activate or deactivate them, to control camera settings (frame rate, image quality, sensitivity, etc.), to control sensor settings (calibration, sensitivity levels, etc.), or the like. Such signals can be transmitted, e.g., in response to control signals from processor **202**, which may in turn be generated in response to user input or other detected events.

Instructions defining mocap program **214** are stored in memory **204**, and these instructions, when executed, perform motion-capture analysis on images supplied from cameras and audio signals from sensors connected to motion detector and camera interface **206**. In one implementation, mocap program **214** includes various modules, such as an object analysis module **222** and a path analysis module **224**. Object analysis module **222** can analyze images (e.g., images captured via interface **206**) to detect edges of an object therein and/or other information about the object's location. In some implementations, object analysis module **222** can also analyze audio signals (e.g., audio signals captured via interface **206**) to localize the object by, for example, time distance of arrival, multilateration or the like. ("Multilateration is a navigation technique based on the measurement of the difference in distance to two or more stations at known locations that broadcast signals at known times. See Wikipedia, at http://en.wikipedia.org/w/index.php?title=Multilateration&oldid=523281858, on Nov. 16, 2012, 06:07 UTC). Path analysis module **224** can track

and predict object movements in 3D based on information obtained via the cameras. Some implementations will include a Virtual Reality (VR)/Augmented Reality (AR) environment manager **226** that provides integration of virtual objects reflecting real objects (e.g., hand **114**) as well as synthesized objects **116** for presentation to user of device **101** via presentation interface **120** to provide a personal virtual experience. One or more applications **228** can be loaded into memory **204** (or otherwise made available to processor **202**) to augment or customize functioning of device **101** thereby enabling the system **200** to function as a platform. Successive camera images are analyzed at the pixel level to extract object movements and velocities. Audio signals place the object on a known surface, and the strength and variation of the signals can be used to detect object's presence. If both audio and image information is simultaneously available, both types of information can be analyzed and reconciled to produce a more detailed and/or accurate path analysis.

VR/AR environment manager **226** can include a number of components for generating a VR/AR environment. One component can be a camera such as cameras **102** or **104** or other video input to generate a digitized video image of the real world or user-interaction region. The camera can be any digital device that is dimensioned and configured to capture still or motion pictures of the real world and to convert those images to a digital stream of information that can be manipulated by a computer. For example, cameras **102** or **104** can be digital still cameras, digital video cameras, web cams, head-mounted displays, phone cameras, tablet personal computers, ultra-mobile personal computers, and the like.

Another component can be a transparent, partially transparent, or semi-transparent user interface such as a display of HMD **101** that combines rendered 3D virtual imagery with a view of the real world, so that both are visible at the same time to a user. In some implementations, the rendered 3D virtual imagery can projected using holographic, laser, stereoscopic, auto-stereoscopic, or volumetric 3D displays.

The VR/AR environment manager **226** can generate for display the virtual objects automatically or in response to trigger events. For example, a virtual object may only appear when the user selects an icon or invokes an application presented across the VR/AR environment. In other implementations, the virtual object can be generated using a series of unique real world markers. The markers can be of any design, including a circular, linear, matrix, variable bit length matrix, multi-level matrix, black/white (binary), gray scale patterns, and combinations thereof. The markers can be two-dimensional or three-dimensional. The markers can be two- or three-dimensional barcodes, or two- or three-dimensional renderings of real world, three-dimensional objects. For example, the markers can be thumbnail images of the virtual images that are matched to the markers. The marker can also be an image of a real world item which the software has been programmed to recognize. So, for example, the software can be programmed to recognize a smart phone or other item from a video stream of a book. The software then superimposes the virtual object in place of the smart phone device. Each unique real world marker can correspond to a different virtual object, or a quality of a virtual object (e.g. the control's color, texture, opacity, adhesiveness, etc.) or both the virtual object itself and all (or a subset) of the qualities of the virtual object.

In some implementations, the VR/AR environment manager **226** can use an VR/AR library that serves as an image repository or database of interactive virtual objects, a computer **200** that can selectively search and access the library, and a display (embedded within the HMD **101**) or a projector that is dimensioned and configured to display the real world digital image captured by a camera, as well as the virtual objects retrieved from the VR/AR library. In some implementations, computer **200** includes a search and return engine that links each unique real world marker to a corresponding virtual object in the VR/AR library.

In operation, a camera (e.g. **102**, **104**) returns a digital video stream of the real world, including images of one or more of the markers described previously. Image samples are taken from the video stream and passed to the computer **200** for processing. The search and return engine then searches the VR/AR library for the virtual object that corresponds to the marker images contained in the digital video stream of the real world. Once a match is made between a real world marker contained in the digital video stream and the VR/AR library, the AR library returns the virtual object, its qualities, and its orientation for display across a screen of the HMD **101**. The virtual object is then superimposed upon the real world space that comprises a digital marker in the form of a quick response (QR) code or RFID tags, according to one example. In other implementations, multiple markers can be used to position and orient a single virtual control.

In yet other implementations, a "markerless" VR/AR experience can be generated by identifying features of the surrounding real-world physical environment via sensors such as gyroscopes, accelerometers, compasses, and GPS data such as coordinates.

Projected VR/AR allows users to simultaneously view the real word physical space and the virtual object superimposed in the space. In one implementation, a virtual object can be projected on to the real word physical space using micro-projectors embedded in wearable goggle or other head mounted display (like HMD **101**) that cast a perspective view of a stereoscopic 3D imagery onto the real world space. In such an implementation, a camera, in-between the micro-projectors can scan for infrared identification markers placed in the real world space. The camera can use these markers to precisely track the user's head position and orientation in the real word physical space, according to another implementation. Yet another implementation includes using retro-reflectors in the real word physical space to prevent scattering of light emitted by the micro-projectors and to provision multi-user participation by maintaining distinct and private user views. In such an implementation, multiple users can simultaneously interact with the same virtual object or with virtual controls that manipulate the same virtual object, such that both the users view the same virtual objects and manipulations to virtual objects by one user are seen by the other user, hence creating a collaborative environment.

In other implementations, projected VR/AR obviates the need of using wearable hardware such as goggles and other hardware like displays to create an AR experience. In such implementations, a video projector, volumetric display device, holographic projector, and/or heads-up display can be used to create a "glasses-free" AR environment. See e.g., holographic chip projectors available from Ostendo, a company headquartered in Carlsbad, California (http://online.wsj.com/articles/new-chip-to-bring-holograms-to-smartphones-1401752938). In one implementation, such projectors can be electronically coupled to user computing devices such as HMDs, smart phones and can be configured

to produce and magnify virtual object and/or augmented virtual objects that are perceived as being overlaid on the real word physical space.

The sensory processing system **106**, which captures a series of sequentially temporal images of a region of interest **112**. It further identifies any gestures performed in the region of interest **112** or objects in the region of interest **212** and controls responsiveness of the rendered 3D virtual imagery to the performed gestures by updating the 3D virtual imagery based on the corresponding gestures.

Presentation interface **120**, speakers **209**, microphones **210**, and wireless network interface **211** can be used to facilitate user interaction via device **101** with computer system **200**. These components can be of generally conventional design or modified as desired to provide any type of user interaction. In some implementations, results of motion capture using motion detector and camera interface **206** and mocap program **214** can be interpreted as user input. For example, a user can perform hand gestures or motions across a surface that are analyzed using mocap program **214**, and the results of this analysis can be interpreted as an instruction to some other program executing on processor **200** (e.g., a web browser, word processor, or other application). Thus, by way of illustration, a user might use upward or downward swiping gestures to "scroll" a webpage currently displayed to the user of device **101** via presentation interface **120**, to use rotating gestures to increase or decrease the volume of audio output from speakers **209**, and so on. Path analysis module **224** may represent the detected path as a vector and extrapolate to predict the path, e.g., to improve rendering of action on device **101** by presentation interface **120** by anticipating movement.

It will be appreciated that computer system **200** is illustrative and that variations and modifications are possible. Computer systems can be implemented in a variety of form factors, including server systems, desktop systems, laptop systems, tablets, smart phones or personal digital assistants, and so on. A particular implementation may include other functionality not described herein, e.g., wired and/or wireless network interfaces, media playing and/or recording capability, etc. In some implementations, one or more cameras and two or more microphones may be built into the computer rather than being supplied as separate components. Further, an image or audio analyzer can be implemented using only a subset of computer system components (e.g., as a processor executing program code, an ASIC, or a fixed-function digital signal processor, with suitable I/O interfaces to receive image data and output analysis results).

While computer system **200** is described herein with reference to particular blocks, it is to be understood that the blocks are defined for convenience of description and are not intended to imply a particular physical arrangement of component parts. Further, the blocks need not correspond to physically distinct components. To the extent that physically distinct components are used, connections between components (e.g., for data communication) can be wired and/or wireless as desired. Thus, for example, execution of object analysis module **222** by processor **202** can cause processor **202** to operate motion detector and camera interface **206** to capture images and/or audio signals of an object traveling across and in contact with a surface to detect its entrance by analyzing the image and/or audio data.

FIGS. **3**A, **3**B, and **3**C illustrate three different configurations of a movable sensor system **300**A-C, with reference to example implementations packaged within a single housing as an integrated sensor. In all cases, sensor **300**A, **300**B, **300**C includes a top surface **305**, a bottom surface **307**, and a side wall **310** spanning the top and bottom surfaces **305**, **307**. With reference also to FIG. **3**A, the top surface **305** of sensor **300**A contains a pair of windows **315** for admitting light to the cameras **102**, **104**, one of which is optically aligned with each of the windows **315**. If the system includes light sources **115**, **117**, surface **305** may contain additional windows for passing light to the object(s) being tracked. In sensor **300**A, motion sensors **108**, **110** are located on the side wall **310**. Desirably, the motion sensors are flush with the surface of side wall **310** so that, the motion sensors are disposed to sense motions about a longitudinal axis of sensor **300**A. Of course, the motion sensors can be recessed from side wall **310** internal to the device in order to accommodate sensor operation and placement within available packaging space so long as coupling with the external housing of sensor **300**A remains adequate. In sensor **300**B, motion sensors **108**, **110** are located proximate to the bottom surface **307**, once again in a flush or recessed configuration. The top surface of the sensor **300**B (not shown in the figure for clarity sake) contains camera windows **315** as shown in FIG. **3**A. In FIG. **3**C, motion sensors **108**, **110** are external contact transducers that connect to sensor **300**C via jacks **320**. This configuration permits the motion sensors to be located away from the sensor **300**C, e.g., if the motion sensors are desirably spaced further apart than the packaging of sensor **300**C allows. In other implementations, movable sensor components of FIG. **2** can be imbedded in portable (e.g., head mounted displays (HMDs), wearable goggles, watch computers, smartphones, and so forth) or movable (e.g., autonomous robots, material transports, automobiles (human or machine driven)) devices.

FIG. **4** illustrates apparent movement of objects from the perspective of the user of a virtual environment enabled apparatus **400** in accordance with the technology. FIG. **4** shows two views of a user of a device **101** viewing a field of view **113** at two different times. As shown in block **401**, at an initial time t_0, user is viewing field of view **113***a* using device **101** in a particular initial position to view an area **113***a*. As shown in block **402**, device **101** presents to user a display of the device field of view **113***a* that includes objects **114** (hands) in a particular pose. As shown in block **403**, subsequently at time t_1, the user has repositioned device **101**. Accordingly, the apparent position of objects **114** in the field of view **113***b* shown in block **404** has changed from the apparent position of the objects **114** in field of view **113***a*. Even in the case where the hands **114** did not move in space, the user sees an apparent movement of the hands **114** due to the change in position of the device.

Now with reference to FIG. **5**, an apparent movement of one or more moving objects from the perspective of the user of a virtual environment enabled apparatus **500** is illustrated. As shown by block **502**, field of view **113***a* presented by device **101** at time t_0 includes an object **114**. At time t_0, the position and orientation of tracked object **114** is known with respect to device reference frame **120***a*, again at time t_0. As shown by block **404**, at time t_1, the position and orientation of both device reference frame **120***b* and tracked object **114** have changed. As shown by block **504**, field of view **113***b* presented by device **101** at time t_1 includes object **114** in a new apparent position. Because the device **101** has moved, the device reference frame **120** has moved from an original or starting device reference frame **120***a* to a current or final reference frame **120***b* as indicated by transformation T. It is noteworthy that the device **101** can rotate as well as translate. Implementations can provide sensing the position and rotation of reference frame **120***b* with respect to reference frame **120***a* and sensing the position and rotation of tracked

object **114** with respect to **120***b*, at time t_1. Implementations can determine the position and rotation of tracked object **114** with respect to **120***a* from the sensed position and rotation of reference frame **120***b* with respect to reference frame **120***a* and the sensed position and rotation of tracked object **114** with respect to **120***b*.

In an implementation, a transformation R^T is determined that moves dashed line reference frame **120***a* to dotted line reference frame **120***b*, without intermediate conversion to an absolute or world frame of reference. Applying the reverse transformation $-R^T$ makes the dotted line reference frame **120***b* lie on top of dashed line reference frame **120***a*. Then the tracked object **114** will be in the right place from the point of view of dashed line reference frame **120***a*. (It is noteworthy that R^T is equivalent to R^{-1} for our purposes.) In determining the motion of object **114**, sensory processing system **106** can determine its location and direction by computationally analyzing images captured by cameras **102**, **104** and motion information captured by sensors **108**, **110**. For example, an apparent position of any point on the object (in 3D space) at time

$$t = t_0: \begin{bmatrix} x \\ y \\ z \\ 1 \end{bmatrix},$$

can be converted to a real position of the point on the object at time

$$\begin{bmatrix} R_{ref} & T_{ref} \\ 0 & 1 \end{bmatrix}$$

using an affine transform

$$t = t_1: \begin{bmatrix} x' \\ y' \\ z' \\ 1 \end{bmatrix}$$

from the frame of reference of the device. We refer to the combination of a rotation and translation, which are not generally commutative, as the affine transformation.

The correct location at time $t=t_1$ of a point on the tracked object with respect to device reference frame **120***a* is given by an inverse affine transformation, e.g.,

$$\begin{bmatrix} R_{ref}^T & -R_{ref}^T * T_{ref} \\ 0 & 1 \end{bmatrix}$$

as provided for in equation (1):

$$\begin{bmatrix} R_{ref}^T & (-R_{ref}^T) * T_{ref} \\ 0 & 1 \end{bmatrix} * \begin{bmatrix} x \\ y \\ z \\ 1 \end{bmatrix} = \begin{bmatrix} x' \\ y' \\ z' \\ 1 \end{bmatrix} \tag{1}$$

Where:

R_{ref}^T—Represents the rotation matrix part of an affine transform describing the rotation transformation from the device reference frame **120***a* to the device reference frame **120***b*.

T_{ref}—Represents translation of the device reference frame **120***a* to the device reference frame **120***b*.

One conventional approach to obtaining the Affine transform R (from axis unit vector $u=(u_x, u_y, u_z)$, rotation angle θ) method. Wikipedia, at http://en.wikipedia.org/wiki/Rotation_matrix, Rotation matrix from axis and angle, on Jan. 30, 2014, 20:12 UTC, upon which the computations equation (2) are at least in part inspired:

$$R = \begin{bmatrix} \cos\theta + u_x^2(1-\cos\theta) & u_xu_y(1-\cos\theta) - u_z\sin\theta & u_xu_z(1-\cos\theta) + u_y\sin\theta \\ u_yu_x(1-\cos\theta) + u_z\sin\theta & \cos\theta + u_y^2(1-\cos\theta) & u_yu_z(1-\cos\theta) - u_x\sin\theta \\ u_zu_x(1-\cos\theta) - u_y\sin\theta & u_zu_y(1-\cos\theta) + u_x\sin\theta & \cos\theta + u_z^2(1-\cos\theta) \end{bmatrix} \tag{2}$$

$$R^T = \begin{bmatrix} \cos\theta + u_x^2(1-\cos\theta) & u_xu_y(1-\cos\theta) + u_z\sin\theta & u_zu_x(1-\cos\theta) - u_y\sin\theta \\ u_xu_y(1-\cos\theta) - u_z\sin\theta & \cos\theta + u_y^2(1-\cos\theta) & u_zu_y(1-\cos\theta) + u_x\sin\theta \\ u_xu_z(1-\cos\theta) + u_y\sin\theta & u_yu_z(1-\cos\theta) - u_x\sin\theta & \cos\theta + u_z^2(1-\cos\theta) \end{bmatrix}$$

$$-R^T = \begin{bmatrix} -\cos\theta - u_x^2(1-\cos\theta) & -u_yu_x(1-\cos\theta) - u_z\sin\theta & -u_zu_x(1-\cos\theta) + u_y\sin\theta \\ -u_xu_y(1-\cos\theta) + u_z\sin\theta & -\cos\theta - u_y^2(1-\cos\theta) & -u_zu_y(1-\cos\theta) - u_x\sin\theta \\ -u_xu_z(1-\cos\theta) - u_y\sin\theta & -u_yu_z(1-\cos\theta) + u_x\sin\theta & -\cos\theta - u_z^2(1-\cos\theta) \end{bmatrix}$$

$$T = \begin{bmatrix} a \\ b \\ c \end{bmatrix}$$

is a vector representing a translation of the object with respect to origin of the coordinate system of the translated frame,

$$-R^T * T = \begin{bmatrix} (-\cos\theta - u_x^2(1-\cos\theta))(a) + \\ (-\cos\theta - u_y^2(1-\cos\theta))(b) + (-u_zu_x(1-\cos\theta) + u_y\sin\theta)(c) \\ (-u_xu_y(1-\cos\theta) + u_z\sin\theta)(a) + \\ (-\cos\theta - u_y^2(1-\cos\theta))(b) + (-u_zu_y(1-\cos\theta) - u_x\sin\theta)(c) \\ (-u_xu_z(1-\cos\theta) - u_y\sin\theta)(a) + \\ (-u_yu_z(1-\cos\theta) + u_x\sin\theta)(b) + (-\cos\theta - u_z^2(1-\cos\theta))(c) \end{bmatrix}$$

In another example, an apparent orientation and position of the object at time $t=t_0$: vector pair

$$\begin{bmatrix} R_{obj} & T_{obj} \\ 0 & 1 \end{bmatrix},$$

can be converted to a real orientation and position of the object at time

$$t = t_1: \begin{bmatrix} R'_{obj} & T'_{obj} \\ 0 & 1 \end{bmatrix}$$

using an affine transform

$$\begin{bmatrix} R_{ref} & T_{ref} \\ 0 & 1 \end{bmatrix}.$$

The correct orientation and position of the tracked object with respect to device reference frame at time $t=t_0$ (**120***a*) is given by an inverse affine transformation, e.g.,

$$\begin{bmatrix} R_{ref}^T & -R_{ref}^T * T_{ref} \\ 0 & 1 \end{bmatrix}$$

as provided for in equation (3):

$$\begin{bmatrix} R_{ref}^T & (-R_{ref}^T) * T_{ref} \\ 0 & 1 \end{bmatrix} * \begin{bmatrix} R_{obj} & T_{obj} \\ 0 & 1 \end{bmatrix} = \begin{bmatrix} R'_{obj} & T'_{obj} \\ 0 & 1 \end{bmatrix} \quad (3)$$

Where:

R^T_{ref}—Represents the rotation matrix part of an affine transform describing the rotation transformation from the device reference frame **120***a* to the device reference frame **120***b*.

R_{obj}—Represents a matrix describing the rotation at t_0 of the object with respect to the device reference frame **120***b*.

R'_{obj}—Represents a matrix describing the rotation at t_1 of the object with respect to the device reference frame **120***a*.

T_{ref}—Represents a vector translation of the device reference frame **120***a* to the device reference frame **120***b*.

T_{obj}—Represents a vector describing the position at t_0 of the object with respect to the device reference frame **120***b*.

T'_{obj}—Represents a vector describing the position at at t_1 of the object with respect to the device reference frame **120***a*.

In a yet further example, an apparent orientation and position of the object at time $t=t_0$: affine transform

$$\begin{bmatrix} R_{obj} & T_{obj} \\ 0 & 1 \end{bmatrix},$$

can be converted to a real orientation and position of the object at time $t=t_1$:

$$\begin{bmatrix} R'_{obj} & T'_{obj} \\ 0 & 1 \end{bmatrix}$$

using an affine transform

$$\begin{bmatrix} R_{ref} & T_{ref} \\ 0 & 1 \end{bmatrix}.$$

Furthermore, the position and orientation of the initial reference frame with respect to a (typically) fixed reference point in space can be determined using an affine transform

$$\begin{bmatrix} R_{init} & T_{init} \\ 0 & 1 \end{bmatrix}.$$

The correct orientation and position of the tracked object with respect to device reference frame at time $t=t_0$ (**120***a*) is given by an inverse affine transformation, e.g.,

$$\begin{bmatrix} R_{init}^T & (-R_{init}^T) * T_{init} \\ 0 & 1 \end{bmatrix}$$

as provided for in equation (4):

$$\begin{bmatrix} R_{init}^T & (-R_{init}^T) * T_{init} \\ 0 & 1 \end{bmatrix} \begin{bmatrix} R_{ref}^T & (-R_{ref}^T) * T_{ref} \\ 0 & 1 \end{bmatrix} * \begin{bmatrix} R_{obj} & T_{obj} \\ 0 & 1 \end{bmatrix} = \begin{bmatrix} R'_{obj} & T'_{obj} \\ 0 & 1 \end{bmatrix} \quad (4)$$

Where:

R^T_{init}—Represents a rotation matrix part of an affine transform describing the rotation transformation at to from the world reference frame **119** to the device reference frame **120***a*.

R^T_{ref}—Represents the rotation matrix part of an affine transform describing the rotation transformation from the device reference frame **120***a* to the device reference frame **120***b*.

R_{obj}—Represents a matrix describing the rotation of the object at to with respect to the device reference frame **120***b*.

R'_{obj}—Represents a matrix describing the rotation of the object at t_1 with respect to the device reference frame **120***a*.

T_{init}—Represents a vector translation at t_0 of the world reference frame **119** to the device reference frame **120***a*.

T_{ref}—Represents a vector translation at t_1 of the device reference frame **120***a* to the device reference frame **120***b*.

T_{obj}—Represents a vector describing the position at t_0 of the object with respect to the device reference frame **120***b*.

T'_{obj}—Represents a vector describing the position at t_1 of the object with respect to the device reference frame **120***a*.

Detecting Motion Using Image Information

In some implementations, the technology disclosed can build a world model with an absolute or world frame of reference. The world model can include representations of object portions (e.g. objects, edges of objects, prominent vortices) and potentially depth information when available from a depth sensor, depth camera or the like, within the viewpoint of the virtual or augmented reality head mounted sensor. The system can build the world model from image information captured by the cameras of the sensor. Points in 3D space can be determined from the stereo-image information are analyzed to obtain object portions. These points are not limited to a hand or other control object in a foreground; the points in 3D space can include stationary background points, especially edges. The model is populated with the object portions.

When the sensor moves (e.g., the wearer of a wearable headset turns her head) successive stereo-image information is analyzed for points in 3D space. Correspondences are made between two sets of points in 3D space chosen from the current view of the scene and the points in the world

model to determine a relative motion of the object portions. The relative motion of the object portions reflects actual motion of the sensor.

Differences in points are used to determine an inverse transformation

$$\left(\text{the}\begin{bmatrix} R^T & -R^T * T \\ 0 & 1 \end{bmatrix}\right)$$

between model position and new position of object portions. In this affine transform, R^T describes the rotational portions of motions between camera and object coordinate systems, and T describes the translational portions thereof.

The system then applies an inverse transformation of the object corresponding to the actual transformation of the device (since the sensor, not the background object moves) to determine the translation and rotation of the camera. Of course, this method is most effective when background objects are not moving relative to the world frame (i.e., in free space).

The model can be updated whenever we detect new points not previously seen in the model. The new points are added to the model so that it continually grows.

Of course, embodiments can be created in which (1) device cameras are considered stationary and the world model is considered to move; or (2) the device cameras are considered to be moving and the world model is considered stationary.

Drift Cancellation

The use of a world model described above does not require any gyroscopic, accelerometer or magnetometer sensors, since the same cameras in a single unit (even the same cameras) can sense both the background objects and the control object. In any view where the system can recognize elements of the model, it can re-localize its position and orientation relative to the model and without drifting from sensor data. In some embodiments, motion sensors can be used to seed the frame to frame transformation and therefore bring correspondences between the rendered virtual or augmented reality scenery closer to the sensed control object, making the result less ambiguous (i.e., the system would have an easier time determining what motion of the head had occurred to result in the change in view from that of the model). In a yet further embodiment, sensor data could be used to filter the solution above so that the motions appear to be smoother from frame to frame, while still remaining impervious to drift caused by relying upon motion sensors alone.

In some implementations, a Kabsch algorithm can be used to determine an optimal rotation matrix given two paired sets of points. Reference regarding Kabsch algorithm can be to Wikipedia, at http://en.wikpedia.org/wiki/Kabsch_algorithm, Kabsch algorithm, on Feb. 11, 2014, 07:30 UTC.

FIG. **6** shows a flowchart **600** of one implementation of determining motion information in a movable sensor apparatus. Flowchart **600** can be implemented at least partially with a computer or other data processing system, e.g., by one or more processors configured to receive or retrieve information, process the information, store results, and transmit the results. Other implementations may perform the actions in different orders and/or with different, fewer or additional actions than those illustrated in FIG. **6**. Multiple actions can be combined in some implementations. For convenience, this flowchart is described with reference to the system that carries out a method. The system is not necessarily part of the method.

At action **610**, a first positional information of a portable or movable sensor is determined with respect to a fixed point at a first time. In one implementation, first positional information with respect to a fixed point at a first time $t=t_0$ is determined from one or motion sensors integrated with, or coupled to, a device including the portable or movable sensor. For example, an accelerometer can be affixed to device **101** of FIG. **1** or sensor **300** of FIG. **3**, to provide acceleration information over time for the portable or movable device or sensor. Acceleration as a function of time can be integrated with respect to time (e.g., by sensory processing system **106**) to provide velocity information over time, which can be integrated again to provide positional information with respect to time. In another example, gyroscopes, magnetometers or the like can provide information at various times from which positional information can be derived. These items are well known in the art and their function can be readily implemented by those possessing ordinary skill. In another implementation, a second motion-capture sensor (e.g., such as sensor **300**A-C of FIG. **3** for example) is disposed to capture position information of the first sensor (e.g., affixed to **101** of FIG. **1** or sensor **300** of FIG. **3**) to provide positional information for the first sensor.

At action **620**, a second positional information of the sensor is determined with respect to the fixed point at a second time $t=t_1$.

At action **630**, difference information between the first positional information and the second positional information is determined.

At action **640**, movement information for the sensor with respect to the fixed point is computed based upon the difference information. Movement information for the sensor with respect to the fixed point is can be determined using techniques such as discussed above with reference to equations (2).

At action **650**, movement information for the sensor is applied to apparent environment information sensed by the sensor to remove motion of the sensor therefrom to yield actual environment information. Motion of the sensor can be removed using techniques such as discussed above with reference to FIGS. **4-5**.

At action **660**, actual environment information is communicated.

FIG. **7** shows a flowchart **700** of one implementation of applying movement information for the sensor to apparent environment information (e.g., apparent motions of objects in the environment **112** as sensed by the sensor) to remove motion of the sensor therefrom to yield actual environment information (e.g., actual motions of objects in the environment **112** relative to the reference frame **120***a*). Flowchart **700** can be implemented at least partially with a computer or other data processing system, e.g., by one or more processors configured to receive or retrieve information, process the information, store results, and transmit the results. Other implementations may perform the actions in different orders and/or with different, fewer or additional actions than those illustrated in FIG. **7**. Multiple actions can be combined in some implementations. For convenience, this flowchart is described with reference to the system that carries out a method. The system is not necessarily part of the method.

At action **710**, positional information of an object portion at the first time and the second time are captured.

At action **720**, object portion movement information relative to the fixed point at the first time and the second time

is computed based upon the difference information and the movement information for the sensor.

At action **730**, object portion movement information is communicated to a system.

Some implementations will be applied to virtual reality or augmented reality applications. For example, and with reference to FIG. **8**, which illustrates a system **800** for projecting a virtual device experience **801** onto a surface medium **116** according to one implementation of the technology disclosed. System **800** includes a sensory processing system **106** controlling a variety of sensors and projectors, such as for example one or more cameras **102**, **104** (or other image sensors) and optionally some illumination sources **115**, **117** comprising an imaging system. Optionally, a plurality of vibrational (or acoustical) sensors **808**, **810** positioned for sensing contacts with surface **116** can be included. Optionally projectors under control of system **106** can augment the virtual device experience **801**, such as an optional audio projector **802** to provide for example audio feedback, optional video projector **804**, an optional haptic projector **806** to provide for example haptic feedback to a user of virtual device experience **801**. For further information on projectors, reference may be had to "Visio-Tactile Projector" YouTube (https://www.youtube.com/watch?v=BbOhNMxxewg) (accessed Jan. 15, 2014). In operation, sensors and projectors are oriented toward a region of interest **112**, that can include at least a portion of a surface **116**, or free space **112** in which an object of interest **114** (in this example, a hand) moves along the indicated path **118**.

FIG. **9** shows a flowchart **900** of one implementation of providing a virtual device experience. Flowchart **900** can be implemented at least partially with a computer or other data processing system, e.g., by one or more processors configured to receive or retrieve information, process the information, store results, and transmit the results. Other implementations may perform the actions in different orders and/or with different, fewer or additional actions than those illustrated in FIG. **9**. Multiple actions can be combined in some implementations. For convenience, this flowchart is described with reference to the system that carries out a method. The system is not necessarily part of the method.

At action **910**, a virtual device is projected to a user. Projection can include an image or other visual representation of an object. For example, visual projection mechanism **804** of FIG. **8** can project a page (e.g., virtual device **801**) from a book into a virtual environment **801** (e.g., surface portion **116** or in space **112**) of a reader; thereby creating a virtual device experience of reading an actual book, or an electronic book on a physical e-reader, even though no book nor e-reader is present. In some implementations, optional haptic projector **806** can project the feeling of the texture of the "virtual paper" of the book to the reader's finger. In some implementations, optional audio projector **802** can project the sound of a page turning in response to detecting the reader making a swipe to turn the page.

At action **920**, using an accelerometer, moving reference frame information of a head mounted display (or hand-held mobile device) relative to a fixed point on a human body is determined.

At action **930**, body portion movement information is captured. Motion of the body portion can be detected via sensors **108**, **110** using techniques such as discussed above with reference to FIG. **6**.

At action **940**, control information is extracted based partly on the body portion movement information with respect to the moving reference frame information. For example, repeatedly determining movement information for the sensor and the object portion at successive times and analyzing a sequence of movement information can be used to determine a path of the object portion with respect to the fixed point. For example, a 3D model of the object portion can be constructed from image sensor output and used to track movement of the object over a region of space. The path can be compared to a plurality of path templates and identifying a template that best matches the path. The template that best matches the path control information to a system can be used to provide the control information to the system. For example, paths recognized from an image sequence (or audio signal, or both) can indicate a trajectory of the object portion such as a gesture of a body portion.

At action **950**, control information can be communicated to a system. For example, a control information such as a command to turn the page of a virtual book can be sent based upon detecting a swipe along the desk surface of the reader's finger. Many other physical or electronic objects, impressions, feelings, sensations and so forth can be projected onto surface **116** (or in proximity thereto) to augment the virtual device experience and applications are limited only by the imagination of the user.

FIG. **10** shows a flowchart **1000** of one implementation of cancelling drift in a head mounted device (HMD). Flowchart **1000** can be implemented at least partially with a computer or other data processing system, e.g., by one or more processors configured to receive or retrieve information, process the information, store results, and transmit the results. Other implementations may perform the actions in different orders and/or with different, fewer or additional actions than those illustrated in FIG. **10**. Multiple actions can be combined in some implementations. For convenience, this flowchart is described with reference to the system that carries out a method. The system is not necessarily part of the method.

At action **1010**, using an accelerometer, moving reference frame information of a head mounted display (or hand-held mobile device) relative to a fixed point on a human body is determined.

At action **1020**, body portion movement information is captured.

At action **1030**, control information is extracted based partly on the body portion movement information with respect to the moving reference frame information.

At action **1040**, the control information is communicated to a system.

In some implementations, motion capture is achieved using an optical motion-capture system. In some implementations, object position tracking is supplemented by measuring a time difference of arrival (TDOA) of audio signals at the contact vibrational sensors and mapping surface locations that satisfy the TDOA, analyzing at least one image, captured by a camera of the optical motion-capture system, of the object in contact with the surface, and using the image analysis to select among the mapped TDOA surface locations as a surface location of the contact.

Reference may be had to the following sources, incorporated herein by reference, for further information regarding computational techniques:

1. Wikipedia, at http://en.wikipedia.org/wiki/Euclidean_group, on Nov. 4, 2013, 04:08 UTC;
2. Wikipedia, at http://en.wikipedia.org/wiki/Affine_transformation, on Nov. 25, 2013, 11:01 UTC;
3. Wikipedia, at http://en.wikipedia.org/wiki/Rotation_matrix, Rotation matrix from axis and angle, on Jan. 30, 2014, 20:12 UTC;

4. Wikipedia, at http://en.wikipedia.org/wiki/Rotation-_group_SO(3), Axis of rotation, on Jan. 21, 2014, 21:21 UTC;
5. Wikipedia, at http://en.wikipedia.org/wiki/Transformation_matrix, Affine Transformations, on Jan. 28, 2014, 13:51 UTC; and
6. Wikipedia, at http://en.wikipedia.org/wiki/Axis % E2%80%93angle_representation, on Jan. 25, 2014, 03:26 UTC.
7. Wikipedia, at http://en.wikipedia.org/wiki/Kabsch_algorithm, Kabsch algorithm, on Feb. 11, 2014, 07:30 UTC.

FIGS. **11**A, **11**B, and **11**C illustrate different implementations of a motion sensor **100** attached to a head mounted display **101**. HMDs are wearable devices that contain one or more displays positioned in the field of vision of the user **1204** wearing the device **101**. HMDs hold the promise of being useful providers of virtual and augmented reality functionality. While popular conventional HMDs, such as "Google Glass" and "Oculus Rift" can be found in gaming applications, attempts to use HMDs in other, "more serious" applications have been wrought with difficulty and drawbacks. One problem is that there is no practical mechanism to provide user input to today's HMDs.

A user **1204** wearing a HMD **101** may have the desire to provide inputs to a computer system in communication with the HMD **101** in order to select among options being displayed (e.g., menus, lists, icons and so forth), select virtual objects (such as **1214**A, **1214**B, **1314**A, **1314**B, **1414**A, **1414**B) being displayed to view properties or obtain more information, add information to objects and other reasons. Unfortunately, however, addition of traditional input devices such as a mouse, joystick, touch pad, or touch screen, or the like would be cumbersome at best, robbing the portability advantages from the wearable device. Speech input holds some promise of providing non-contact based input to HMDs. Unfortunately, however, even commercial grade speech recognition systems have disappointed. Furthermore, even if the speech input system were to function flawlessly, many users would be reticent to use it for fear that it would have the appearance that they were talking to themselves when using the device. The so named "geek-chic" factor is lost.

Consequently, there is a need for enabling users of HMDs and similar devices to be able to provide input to a computer system without encumbrances.

Implementations of the technology disclosed address these and other problems by providing devices and methods for adding motion sensory capabilities to HMDs, enabling users to provide command input to the device with gestures. An example implementation includes a motion capture device **100** that is preferably attached to a wearable device **101** that can be a personal head mounted display (HMD) having a goggle form factor. Motion capture devices include systems for capturing image data that may be used for detecting gestures, motions of objects and so forth. A motion capture device such as motion sensor **100** may include any number of cameras and radiation emitters coupled to a sensory processing system, as described above. The motion capture device can be used for detecting gestures from a user which can be used as an input for a computer system coupled with the HMD. In this application, the phrase "motion sensor" and "motion capture device" are used interchangeably.

In some implementations, the motion sensor **100** can be a motion-capture device (such as for example, a dual-camera motion controller as provided by Leap Motion, Inc., San Francisco, CA or other interfacing mechanisms and/or combinations thereof) that is positioned and oriented so as to monitor a region where hand motions normally take place.

In one implementation, a motion capture device **100** is operable to be attached to or detached from an adapter **1104**, and the adapter **1104** is operable to be attached to or detached from a HMD **101**. The motion capture device **100** is attached to the HMD **101** with an adapter **1104** in a fixed position and orientation. In other implementations, the motion capture device **100** is attached to the HMD **101** using a combination of the adapter **1104** and a mount bracket **1102**. In implementations, including **1100**A, **1100**B, and **1100**C, the attachment mechanism coupling the adapter **1104** to the HMD **101** utilizes existing functional or ornamental elements of an HMD like HMD **101**. Functional or ornamental elements of the HMD include; air vents, bosses, grooves, recessed channels, slots formed where two parts connect, openings for head straps and so forth. Advantageously using existing features of the HMD to attach the adapter **1104** obviates any need to modify the design of the HMD to attach a motion capture device.

Advantageously, coupling the motion capture device **100** to the HMD **101** enables gesture recognition while the user **1204** is wearing the HMD **101**. Further, implementations can provide improved interfacing with computing systems, such as using the motion capture device **100** to detect motion of the HMD **101**. With these advantages there is a reduced need for contact-based input devices and stationary contactless input devices.

In yet other implementations, the motion capture device **100** is embedded within the HMD **101** and not separately attached to the HMD **101**, such that the HMD **101** and the motion capture device **100** are part of one system along with other components of the HMD **101**.

FIG. **12**A shows one implementation **1200** of a user **1204** interacting with a virtual reality/augmented reality environment **1206** of the HMD **101** using a motion sensor **100** integrated with a HMD **101**. In FIG. **12**A, the user **1204** wears the HMD **101** and begins interacting with the VR/AR environment **1206** presented across a display/interface of the HMD **101**. In some implementations, the display/interface of the HMD **101** can include virtual objects as part of applications, programs, operating system APIs (which mimic and are analogous to pre-existing "windows, icons, menus, pointer" (WIMP) interactions and operating system kernel) browsers, videos, images, etc.

In FIG. **12**A, the user **1204** can operate a virtual environment (such as **1206** of FIG. **12**B, **1306** of FIG. **13**B and **1406** of FIG. **14**) generated by the HMD **101** and viewed by the user **1204** in intuitive ways using free-form in-air gestures that are performed in the real word physical space. For example, gestures can be used to perform traditional manipulations of virtual files, folders, text editors, spreadsheets, databases, paper sheets, recycling bin, windows, or clipboards that represent their pre-existing counterparts. Such manipulations can include—the user picking up a virtual object and bringing it to their desired destination, running searches or flipping through with their hands and find what is need, trashing unwanted virtual items by picking them and dropping them into the virtual recycling bin, pointing towards virtual song files to be played, pulling a blank virtual paper and begin typing, pulling-down a virtual menu, selecting a virtual icon, rotating a 3D image for 360 degree inspection, moving forward into the windows envelope with a forward sweep, moving backward into the windows envelope with a backward sweep, bringing in contact a first file icon with an application or program icon

using a two-hand inward swipe to open the corresponding file with the application or program, and the like.

FIG. **12**B illustrates one implementation **1200**B of a virtual reality/augmented reality environment as viewed by a user in FIG. **12**A. In particular, FIG. **12**B shows an example of rendered 3D virtual imagery in a virtual environment **1206**. In various implementations, virtual environment **1206** is generated using real-time rendering techniques such as orthographic or perspective projection, clipping, screen mapping, and/or rasterizing and is transformed into the field of view of a live camera embedded in the motion sensor **100**, HMD **101** or another motion sensor, HMD, video projector, holographic projection system, smartphone, wearable goggle, or heads up display (HUD). In some other implementations, transforming models into the current view space of the user **1204** can be accomplished using sensor output from onboard sensors. For example, gyroscopes, magnetometers and other motion sensors can provide angular displacements, angular rates and magnetic readings with respect to a reference coordinate frame, and that data can be used by a real-time onboard rendering engine to generate the 3D virtual imagery. If the user **1204** physically moves the HMD **101**, resulting in a change of view of the embedded camera, the virtual environment **1206** and the 3D virtual imagery can be updated accordingly using the sensor data.

In some implementations, virtual environment **1206** can include a variety of information from a variety of local or network information sources. Some examples of information include specifications, directions, recipes, data sheets, images, video clips, audio files, schemas, user interface elements, thumbnails, text, references or links, telephone numbers, blog or journal entries, notes, part numbers, dictionary definitions, catalog data, serial numbers, order forms, marketing or advertising, icons associated with objects managed by an OS, and any other information that may be useful to a user. Some examples of information resources include local databases or cache memory, network databases, Websites, online technical libraries, other devices, or any other information resource that can be accessed by user computing devices either locally or remotely through a communication link.

Virtual objects (such as **1214**A, **1214**B, **1314**A, **1314**B, **1414**A, **1414**B) can include text, images, or references to other information (e.g., links). In one implementation, virtual objects can be displayed proximate to their corresponding real-world objects (e.g. hand **114**). In another implementation, virtual objects can describe or otherwise provide useful information about the objects to a user. Some other implementations include the virtual objects representing other and/or different real world products such as furniture (chairs, couches, tables, etc.), kitchen appliances (stoves, refrigerators, dishwashers, etc.), office appliances (copy machines, fax machines, computers), consumer and business electronic devices (telephones, scanners, etc.), furnishings (pictures, wall hangings, sculpture, knick knacks, plants), fixtures (chandeliers and the like), cabinetry, shelving, floor coverings (tile, wood, carpets, rugs), wall coverings, paint colors, surface textures, countertops (laminate, granite, synthetic countertops), electrical and telecommunication jacks, audio-visual equipment, speakers, hardware (hinges, locks, door pulls, door knobs, etc.), exterior siding, decking, windows, shutters, shingles, banisters, newels, hand rails, stair steps, landscaping plants (trees, shrubs, etc.), and the like, and qualities of all of these (e.g. color, texture, finish, etc.).

In operation, the technology disclosed detects presence and motion of the hands **114** in the real world physical and responsively creates corresponding virtual representations **1214**A and **1214**B in the virtual environment **1206**, which are viewable by the user **1204**. FIG. **13**A shows one implementation **1300**A in which the motion sensor **100** that is integrated with the HMD **101** moves in response to body movements of user **1204**.

In the example shown in FIG. **13**A, the user **1204** turns his head **1202** causing the HMD **101** and the attached motion sensor **100** to move. The motion of the attached motion sensor **100** causes a change in the reference frame of the HMD **101**, resulting in an updated virtual environment **1306** of the HMD **101**.

FIG. **13**B illustrates one implementation **1300**B of the updated virtual environment **1306**. It should be noted that at this juncture the hands **114** have not moved from their initial position and orientation illustrated in FIGS. **12**A and **12**B. However, the updated virtual environment **1306** generates erroneous virtual representations **1314**A and **1314**B based on the movement of the motion sensor **100**.

Dependence of the determination of the positions and orientations of the hands **114**, and in turn that of their corresponding virtual representations, on the motion of the motion sensor **100** is described with reference to FIG. **26**, **27**A, **27**B. The motion sensor **100** includes the cameras **102**, **104**, whose location is determinative factor in the calculation of the positions and orientations of the hands **114**, as described below.

FIG. **26** illustrates an implementation of finding points in an image of an object being modeled. Now with reference to block **2635** of FIG. **26**, cameras **102**, **104** are operated to collect a sequence of images (e.g., **2610**A, **2610**B) of the object **114**. The images are time correlated such that an image from camera **102** can be paired with an image from camera **104** that was captured at the same time (or within a few milliseconds). These images are then analyzed by an object detection module that detects the presence of one or more objects **2650** in the image, and an object analysis module analyzes detected objects to determine their positions and shape in 3D space. If the received images **2610**A, **2610**B include a fixed number of rows of pixels (e.g., 1080 rows), each row can be analyzed, or a subset of the rows can be used for faster processing. Where a subset of the rows is used, image data from adjacent rows can be averaged together, e.g., in groups of two or three.

Again with reference to block **2635** in FIG. **26**, one or more rays **2652** can be drawn from the camera(s) proximate to an object **114** for some points P, depending upon the number of vantage points that are available. One or more rays **2652** can be determined for some point P on a surface of the object **2650** in image **2610**A. A tangent **2656** to the object surface at the point P can be determined from point P and neighboring points. A normal vector **2658** to the object surface **2650** at the point P is determined from the ray and the tangent by cross product or other analogous technique. In block **2668**, a model portion (e.g., capsule **2687**) can be aligned to object surface **2650** at the point P based upon the vector **2658** and a normal vector **2689** of the model portion **2687**. Optionally, as shown in block **2635**, a second ray **2654** is determined to the point P from a second image **2610**B captured by a second camera. In some instances, fewer or additional rays or constraints from neighboring capsule placements can create additional complexity or provide further information. Additional information from placing neighboring capsules can be used as constraints to assist in determining a solution for placing the capsule. For example, using one or more parameters from a capsule fit to a portion of the object adjacent to the capsule being placed, e.g., angles of orientation, the system can determine a placement,

orientation and shape/size information for the capsule. Object portions with too little information to analyze can be discarded or combined with adjacent object portions.

FIGS. **27**A and **27**B graphically illustrates one implementation of determining observation information **2700**A and **2700**B. In an implementation, comparing predictive information to observation information can be achieved by selecting one or more sets of points in space surrounding or bounding the control object within a field of view of one or more image capture device(s). As shown by FIG. **27**A, points in space can be determined using one or more sets of lines **2704**, **2714**, **2724**, **2734** originating at point(s) of view **2732**, **2702** associated with the image capture device(s) (e.g., FIG. **1**: **102**, **104**) and determining therefrom one or more intersection point(s) defining a bounding region (i.e., region shown in FIG. **27**B formed by lines FIG. **27**B: **2741**, **2742**, **2743**, and **2744**) surrounding a cross-section of the control object. The bounding region can be used to define a virtual surface (see e.g., FIG. **27**B: **2746***a*, **2746***b*, **2746***c*) to which model subcomponents can be compared. In an implementation, the virtual surface can include straight portions, curved surface portions, and/or combinations thereof.

The technology disclosed solves this technical problem by applying a correction that prevents the HMD **101** from displaying such erroneous virtual representations and instead generate virtual representations that accurately corresponding to the actual positions and orientations of the hands **114** in the real world physical space.

FIG. **14** illustrates one implementation **1400** of generating a drift-adapted virtual reality/augmented reality environment **1406** of the HMD **101** responsive to motions of a motion sensor **100** integrated with the HMD **101**. In particular, FIG. **14** shows that virtual representations **1414**A and **1414**B correspond to the actual positions and orientations of the hands **114** in the real world physical space even when the HMD **101** has generated an updated virtual environment **1306** responsive to the movement of the motion sensor **100**.

A gesture-recognition system recognizes gestures for purposes of providing input to the electronic device, but can also capture the position and shape of the user's hand in consecutive video images in order to characterize a hand gesture in 3D space and reproduce it on the display screen. A 3D model of the user's hand is determined from a solid hand model covering one or more capsule elements built from the images using techniques described below with reference to FIGS. **15**A-**15**C.

FIG. **15**A shows one implementation of a 3D solid hand model **1500**A with capsule representation **1520** of predictive information of the hand. Some examples of predictive information of the hand include finger segment length, distance between finger tips, joint angles between fingers, and finger segment orientation. As illustrated by FIG. **15**A, the prediction information can be constructed from one or more model subcomponents referred to as capsules **1530**, **1532**, and **1534**, which are selected and/or configured to represent at least a portion of a surface of the hand and virtual surface portion **1522**. In some implementations, the model subcomponents can be selected from a set of radial solids, which can reflect at least a portion of the hand in terms of one or more of structure, motion characteristics, conformational characteristics, other types of characteristics of hand, and/or combinations thereof. In one implementation, radial solids are objects made up of a 1D or 2D primitive (e.g., line, curve, plane) and a surface having a constant radial distance to the 1D or 2D primitive. A closest point to the radial solid can be computed relatively quickly. As used herein, three or greater capsules are referred to as a "capsoodle."

In an implementation, observation information including observation of the control object can be compared against the model at one or more of periodically, randomly or substantially continuously (i.e., in real time). A "control object" as used herein with reference to an implementation is generally any three-dimensionally movable object or appendage with an associated position and/or orientation (e.g., the orientation of its longest axis) suitable for pointing at a certain location and/or in a certain direction. Control objects include, e.g., hands, fingers, feet, or other anatomical parts, as well as inanimate objects such as pens, styluses, handheld controls, portions thereof, and/or combinations thereof. Where a specific type of control object, such as the user's finger, is used hereinafter for ease of illustration, it is to be understood that, unless otherwise indicated or clear from context, any other type of control object can be used as well.

Observational information can include without limitation observed values of attributes of the control object corresponding to the attributes of one or more model subcomponents in the predictive information for the control object. In an implementation, comparison of the model with the observation information provides an error indication. In an implementation, an error indication can be computed by determining a closest distance determined between a first point A belonging to a set of points defining the virtual surface **1522** and a second point B belonging to a model subcomponent **1530** determined to be corresponding to the first point (e.g., nearest to the first point for example). In an implementation, the error indication can be applied to the predictive information to correct the model to more closely conform to the observation information. In an implementation, error indication can be applied to the predictive information repeatedly until the error indication falls below a threshold, a measure of conformance with the observation information rises above a threshold, or a fixed or variable number of times, or a fixed or variable number of times per time period, or combinations thereof.

In one implementation and with reference to FIGS. **15**B and **15**C, a collection of radial solids and/or capsuloids can be considered a "capsule hand." In particular, FIGS. **15**B and **15**C illustrate different views **1500**B and **1500**C of a 3D capsule hand. A number of capsuloids **1572**, e.g. five (5), are used to represent fingers on a hand while a number of radial solids **1574** are used to represent the shapes of the palm and wrist.

FIGS. **17**-**20** illustrate an exemplary machine sensory and control system (MSCS) in implementations.

In one implementation, a motion sensing and controller system provides for detecting that some variation(s) in one or more portions of interest of a user has occurred, for determining that an interaction with one or more machines corresponds to the variation(s), for determining if the interaction should occur, and, if so, for affecting the interaction. The Machine Sensory and Control System (MSCS) typically includes a portion detection system, a variation determination system, an interaction system and an application control system.

As FIG. **17** shows, one detection system **90**A implementation includes an emission module **91**, a detection module **92**, a controller **96**, a processing module **94** and a machine control module **95**. In one implementation, the emission module **91** includes one or more emitter(s) **180**A, **180**B (e.g., LEDs or other devices emitting light in the IR, visible,

or other spectrum regions, or combinations thereof; radio and/or other electromagnetic signal emitting devices) that are controllable via emitter parameters (e.g., frequency, activation state, firing sequences and/or patterns, etc.) by the controller **96**. However, other existing/emerging emission mechanisms and/or some combination thereof can also be utilized in accordance with the requirements of a particular implementation. The emitters **180**A, **180**B can be individual elements coupled with materials or devices **182** (and/or materials) (e.g., lenses **182**A, multi-lenses **182**B (of FIG. **18**), image directing film (IDF) **182**C (of FIG. **18**), liquid lenses, combinations thereof, and/or others) with varying or variable optical properties to direct the emission, one or more arrays **180**C of emissive elements (combined on a die or otherwise), with or without the addition of devices **182**C for directing the emission, or combinations thereof, and positioned within an emission region **181** (of FIG. **18**) according to one or more emitter parameters (i.e., either statically (e.g., fixed, parallel, orthogonal or forming other angles with a work surface, one another or a display or other presentation mechanism) or dynamically (e.g., pivot, rotate and/or translate) mounted, embedded (e.g., within a machine or machinery under control) or otherwise coupleable using an interface (e.g., wired or wireless)). In some implementations, structured lighting techniques can provide improved surface feature capture capability by casting illumination according to a reference pattern onto the object **98**. Image capture techniques described in further detail herein can be applied to capture and analyze differences in the reference pattern and the pattern as reflected by the object **98**. In yet further implementations, detection system **90**A may omit emission module **91** altogether (e.g., in favor of ambient lighting).

In one implementation, the detection module **92** includes one or more capture device(s) **190**A, **190**B (e.g., light (or other electromagnetic radiation sensitive devices) that are controllable via the controller **96**. The capture device(s) **190**A, **190**B can comprise individual or multiple arrays of image capture elements **190**A (e.g., pixel arrays, CMOS or CCD photo sensor arrays, or other imaging arrays) or individual or arrays of photosensitive elements **190**B (e.g., photodiodes, photo sensors, single detector arrays, multi-detector arrays, or other configurations of photo sensitive elements) or combinations thereof. Arrays of image capture device(s) **190**C (of FIG. **19**) can be interleaved by row (or column or a pattern or otherwise addressable singly or in groups). However, other existing/emerging detection mechanisms and/or some combination thereof can also be utilized in accordance with the requirements of a particular implementation. Capture device(s) **190**A, **190**B each can include a particular vantage point **190-1** from which objects **98** within area of interest **5** are sensed and can be positioned within a detection region **191** (of FIG. **19**) according to one or more detector parameters (i.e., either statically (e.g., fixed, parallel, orthogonal or forming other angles with a work surface, one another or a display or other presentation mechanism) or dynamically (e.g. pivot, rotate and/or translate), mounted, embedded (e.g., within a machine or machinery under control) or otherwise coupleable using an interface (e.g., wired or wireless)). Capture devices **190**A, **190**B can be coupled with devices **192** (and/or materials) (of FIG. **19**) (e.g., lenses **192**A (of FIG. **19**), multi-lenses **192**B (of FIG. **19**), image directing film (IDF) **192**C (of FIG. **19**), liquid lenses, combinations thereof, and/or others) with varying or variable optical properties for directing the reflectance to the capture device for controlling or adjusting resolution, sensitivity and/or contrast. Capture devices **190**A, **190**B can be designed or adapted to operate in the IR, visible, or other spectrum regions, or combinations thereof; or alternatively operable in conjunction with radio and/or other electromagnetic signal emitting devices in various applications. In an implementation, capture devices **190**A, **190**B can capture one or more images for sensing objects **98** and capturing information about the object (e.g., position, motion, etc.). In implementations comprising more than one capture device, particular vantage points of capture devices **190**A, **190**B can be directed to area of interest **5** so that fields of view **190-2** of the capture devices at least partially overlap. Overlap in the fields of view **190-2** provides capability to employ stereoscopic vision techniques (see, e.g., FIG. **19**), including those known in the art to obtain information from a plurality of images captured substantially contemporaneously.

While illustrated with reference to a particular implementation in which control of emission module **91** and detection module **92** are co-located within a common controller **96**, it should be understood that these functions will be separate in some implementations, and/or incorporated into one or a plurality of elements comprising emission module **91** and/or detection module **92** in some implementations. Controller **96** comprises control logic (hardware, software or combinations thereof) to conduct selective activation/de-activation of emitter(s) **180**A, **180**B (and/or control of active directing devices) in on-off, or other activation states or combinations thereof to produce emissions of varying intensities in accordance with a scan pattern which can be directed to scan an area of interest **5**. Controller **96** can comprise control logic (hardware, software or combinations thereof) to conduct selection, activation and control of capture device(s) **190**A, **190**B (and/or control of active directing devices) to capture images or otherwise sense differences in reflectance or other illumination. Signal processing module **94** determines whether captured images and/or sensed differences in reflectance and/or other sensor—perceptible phenomena indicate a possible presence of one or more objects of interest **98**, including control objects **99**, the presence and/or variations thereof can be used to control machines and/or other applications **95**.

In various implementations, the variation of one or more portions of interest of a user can correspond to a variation of one or more attributes (position, motion, appearance, surface patterns) of a user hand **99**, finger(s), points of interest on the hand **99**, facial portion **98** other control objects (e.g., styluses, tools) and so on (or some combination thereof) that is detectable by, or directed at, but otherwise occurs independently of the operation of the machine sensory and control system. Thus, for example, the system is configurable to 'observe' ordinary user locomotion (e.g., motion, translation, expression, flexing, deformation, and so on), locomotion directed at controlling one or more machines (e.g., gesturing, intentionally system-directed facial contortion, etc.), attributes thereof (e.g., rigidity, deformation, fingerprints, veins, pulse rates and/or other biometric parameters). In one implementation, the system provides for detecting that some variation(s) in one or more portions of interest (e.g., fingers, fingertips, or other control surface portions) of a user has occurred, for determining that an interaction with one or more machines corresponds to the variation(s), for determining if the interaction should occur, and, if so, for at least one of initiating, conducting, continuing, discontinuing and/or modifying the interaction and/or a corresponding interaction.

For example and with reference to FIG. **20**, a variation determination system **90**B implementation comprises a

model management module **197** that provides functionality to build, modify, customize one or more models to recognize variations in objects, positions, motions and attribute state and/or change in attribute state (of one or more attributes) from sensory information obtained from detection system **90**A. A motion capture and sensory analyzer **197**E finds motions (i.e., translational, rotational), conformations, and presence of objects within sensory information provided by detection system **90**A. The findings of motion capture and sensory analyzer **197**E serve as input of sensed (e.g., observed) information from the environment with which model refiner **197**F can update predictive information (e.g., models, model portions, model attributes, etc.).

A model management module **197** implementation comprises a model refiner **197**F to update one or more models **197**B (or portions thereof) from sensory information (e.g., images, scans, other sensory-perceptible phenomenon) and environmental information (i.e., context, noise, etc.); enabling a model analyzer **1971** to recognize object, position, motion and attribute information that might be useful in controlling a machine. Model refiner **197**F employs an object library **197**A to manage objects including one or more models **197**B (i.e., of user portions (e.g., hand, face), other control objects (e.g., styli, tools)) or the like (see e.g., model **197**B-**1**, **197**B-**2** of FIGS. **21**, **22**)), model components (i.e., shapes, 2D model portions that sum to 3D, outlines **194** and/or outline portions **194**A, **194**B (i.e., closed curves), attributes **197-5** (e.g., attach points, neighbors, sizes (e.g., length, width, depth), rigidity/flexibility, torsional rotation, degrees of freedom of motion and others) and so forth) (see e.g., **197**B-**1**-**197**B-**2** of FIGS. **21-22**), useful to define and update models **197**B, and model attributes **197-5**. While illustrated with reference to a particular implementation in which models, model components and attributes are co-located within a common object library **197**A, it should be understood that these objects will be maintained separately in some implementations.

In an implementation, when the control object morphs, conforms, and/or translates, motion information reflecting such motion(s) is included into the observed information. Points in space can be recomputed based on the new observation information. The model subcomponents can be scaled, sized, selected, rotated, translated, moved, or otherwise re-ordered to enable portions of the model corresponding to the virtual surface(s) to conform within the set of points in space.

In an implementation, motion(s) of the control object can be rigid transformation, in which case, points on the virtual surface(s) remain at the same distance(s) from one another through the motion. Motion(s) can be non-rigid transformations, in which points on the virtual surface(s) can vary in distance(s) from one another during the motion. In an implementation, observation information can be used to adjust (and/or recomputed) predictive information thereby enabling "tracking" the control object. In implementations, control object can be tracked by determining whether a rigid transformation or a non-rigid transformation occurs. In an implementation, when a rigid transformation occurs, a transformation matrix is applied to each point of the model uniformly. Otherwise, when a non-rigid transformation occurs, an error indication can be determined, and an error minimization technique such as described herein above can be applied. In an implementation, rigid transformations and/or non-rigid transformations can be composed. One example composition implementation includes applying a rigid transformation to predictive information. Then an error indication can be determined, and an error minimization technique such as described herein above can be applied. In an implementation, determining a transformation can include calculating a rotation matrix that provides a reduced RMSD (root mean squared deviation) between two paired sets of points. One implementation can include using Kabsch Algorithm to produce a rotation matrix. In an implementation and by way of example, one or more force lines can be determined from one or more portions of a virtual surface.

FIG. **21** illustrates prediction information including a model **197**B-**1** of a control object (e.g., FIG. **17**: **99**) constructed from one or more model subcomponents **197-2**, **197-3** selected and/or configured to represent at least a portion of a surface of control object **99**, a virtual surface portion **194** and one or more attributes **197-5**. Other components can be included in prediction information **197**B-**1** not shown in FIG. **21** for clarity sake. In an implementation, the model subcomponents **197-2**, **197-3** can be selected from a set of radial solids, which can reflect at least a portion of a control object **99** in terms of one or more of structure, motion characteristics, conformational characteristics, other types of characteristics of control object **99**, and/or combinations thereof. In one implementation, radial solids include a contour and a surface defined by a set of points having a fixed distance from the closest corresponding point on the contour. Another radial solid implementation includes a set of points normal to points on a contour and a fixed distance therefrom. In an implementation, computational technique(s) for defining the radial solid include finding a closest point on the contour and the arbitrary point, then projecting outward the length of the radius of the solid. In an implementation, such projection can be a vector normal to the contour at the closest point. An example radial solid (e.g., **197-3**) includes a "capsuloid", i.e., a capsule shaped solid including a cylindrical body and semi-spherical ends. Another type of radial solid (e.g., **197-2**) includes a sphere. Other types of radial solids can be identified based on the foregoing teachings.

One or more attributes **197-5** can define characteristics of a model subcomponent **197-3**. Attributes can include e.g., attach points, neighbors, sizes (e.g., length, width, depth), rigidity, flexibility, torsion, zero or more degrees of freedom of motion with respect to one or more defined points, which can include endpoints for example, and other attributes defining a salient characteristic or property of a portion of control object **99** being modeled by predictive information **197**B-**1**. In an implementation, predictive information about the control object can include a model of the control object together with attributes defining the model and values of those attributes.

In an implementation, observation information including observation of the control object can be compared against the model at one or more of periodically, randomly or substantially continuously (i.e., in real time). Observational information can include without limitation observed values of attributes of the control object corresponding to the attributes of one or more model subcomponents in the predictive information for the control object. In an implementation, comparison of the model with the observation information provides an error indication. In an implementation, an error indication can be computed by determining a closest distance determined between a first point A belonging to a set of points defining the virtual surface **194** and a second point B belonging to a model subcomponent **197-2** determined to be corresponding to the first point (e.g., nearest to the first point for example). In an implementation, the error indication can be applied to the predictive infor-

mation to correct the model to more closely conform to the observation information. In an implementation, error indication can be applied to the predictive information repeatedly until the error indication falls below a threshold, a measure of conformance with the observation information rises above a threshold, or a fixed or variable number of times, or a fixed or variable number of times per time period, or combinations thereof.

In an implementation and with reference to FIGS. **17**, **22**, updating predictive information to observed information comprises selecting one or more sets of points (e.g., FIG. **22**:**193**A, **193**B) in space surrounding or bounding the control object within a field of view of one or more image capture device(s). As shown by FIG. **22**, points **193** can be determined using one or more sets of lines **195**A, **195**B, **195**C, and **195**D originating at vantage point(s) (e.g., FIG. **19**: **190-1**, **190-2**) associated with the image capture device(s) (e.g., FIG. **19**: **190**A-**1**, **190**A-**2**) and determining therefrom one or more intersection point(s) defining a bounding region (i.e., region formed by lines FIG. **22**: **195**A, **195**B, **195**C, and **195**D) surrounding a cross-section of the control object. The bounding region can be used to define a virtual surface (FIG. **22**: **194**) to which model subcomponents **197-1**, **197-2**, **197-3**, and **197-4** can be compared. The virtual surface **194** can include a visible portion **194**A and a non-visible "inferred" portion **194**B. Virtual surfaces **194** can include straight portions and/or curved surface portions of one or more virtual solids (i.e., model portions) determined by model refiner **197**F.

For example and according to one implementation illustrated by FIG. **22**, model refiner **197**F determines to model subcomponent **197-1** of an object portion (happens to be a finger) using a virtual solid, an ellipse in this illustration, or any of a variety of 3D shapes (e.g., ellipsoid, sphere, or custom shape) and/or 2D slice(s) that are added together to form a 3D volume. Accordingly, beginning with generalized equations for an ellipse (1) with (x, y) being the coordinates of a point on the ellipse, (x_C, y_C) the center, a and b the axes, and θ the rotation angle. The coefficients C_1, C_2 and C_3 are defined in terms of these parameters, as shown:

$$C_1x^2 + C_2xy + C_3y^2 - (2C_1x_c + C_2y_c)x - (2C_3x_c + C_2x_c)y + (C_1x_c^2 + C_2x_cy_c + C_3y_c^2 - 1) = 0 \tag{5}$$

$$C_1 = \frac{\cos^2\theta}{a^2} + \frac{\sin^2\theta}{b^2}$$

$$C_2 = -2\cos\theta\sin\theta\left(\frac{1}{a^2} - \frac{1}{b^2}\right)$$

$$C_3 = \frac{\sin^2\theta}{a^2} + \frac{\cos^2\theta}{b^2}$$

The ellipse equation (5) is solved for θ, subject to the constraints that: (5) (x_C, y_C) must lie on the centerline determined from the four tangents **195**A, **195**B, **195**C, and **195**D (i.e., centerline **2220** of FIG. **22**) which joins midpoints **2216**, **2218** of diagonal line segments **2212**, **2214** that connect opposite corners of the bounding region determined from the tangent lines **195**A, **195**B, **195**C, and **195**D); and (6) a is fixed at the assumed value a_0. The ellipse equation can either be solved for θ analytically or solved using an iterative numerical solver (e.g., a Newtonian solver as is known in the art). An analytic solution can be obtained by writing an equation for the distances to the four tangent lines given a y_C position, then solving for the value of y_C that corresponds to the desired radius parameter $a=a_0$. Accordingly, equations (6) for four tangent lines in the x-y plane (of the slice), in which coefficients A_i, B_i and D_i(for i=1 to 4) are determined from the tangent lines **195**A, **195**B, **195**C, and **195**D identified in an image slice as described above.

$$A_1x + B_1y + D_1 = 0 \tag{6}$$

$$A_2x + B_2y + D_2 = 0$$

$$A_3x + B_3y + D_3 = 0$$

$$A_4x + B_4y + D_4 = 0$$

Four column vectors r_{12}, r_{23}, r_{14} and r_{24} are obtained from the coefficients A_i, B_i and D_i of equations (6) according to equations (7), in which the "\" operator denotes matrix left division, which is defined for a square matrix M and a column vector v such that M\v=r, where r is the column vector that satisfies Mr=v:

$$r_{13} = \begin{bmatrix} A_1 & B_1 \\ A_3 & B_3 \end{bmatrix} \backslash \begin{bmatrix} -D_1 \\ -D_3 \end{bmatrix} \tag{7}$$

$$r_{13} = \begin{bmatrix} A_2 & B_2 \\ A_3 & B_3 \end{bmatrix} \backslash \begin{bmatrix} -D_{21} \\ -D_3 \end{bmatrix}$$

$$r_{13} = \begin{bmatrix} A_1 & B_1 \\ A_4 & B_4 \end{bmatrix} \backslash \begin{bmatrix} -D_1 \\ -D_4 \end{bmatrix}$$

$$r_{13} = \begin{bmatrix} A_2 & B_2 \\ A_4 & B_4 \end{bmatrix} \backslash \begin{bmatrix} -D_2 \\ -D_4 \end{bmatrix}$$

Four component vectors G and H are defined in equations (8) from the vectors of tangent coefficients A, B and D and scalar quantities p and q, which are defined using the column vectors r_{12}, r_{23}, r_{14} and r_{24} from equations (7).

$$c1 = (r_{13} + r_{24})/2 \tag{8}$$

$$c2 = (r_{14} + r_{23})/2$$

$$\delta 1 = c2_1 - c1_1$$

$$\delta 2 = c2_2 - c1_2$$

$$p = \delta 1/\delta 2$$

$$q = c1_1 - c1_2 * p$$

$$G = Ap + B$$

$$H = Aq + D$$

Six scalar quantities v_{A2}, v_{AB}, v_{B2}, w_{A2}, w_{AB}, and w_{B2} are defined by equation (9) in terms of the components of vectors G and H of equation (8).

$$v = \begin{bmatrix} G_2^2 & G_3^2 & G_4^2 \\ (G_2H_2)^2 & (G_3H_3)^2 & (G_4H_4)^2 \\ H_2^2 & H_3^2 & H_4^2 \end{bmatrix} \cdot\backslash \begin{bmatrix} 0 \\ 0 \\ 1 \end{bmatrix} \tag{9}$$

$$w = \begin{bmatrix} G_2^2 & G_3^2 & G_4^2 \\ (G_2H_2)^2 & (G_3H_3)^2 & (G_4H_4)^2 \\ H_2^2 & H_3^2 & H_4^2 \end{bmatrix} \cdot\backslash \begin{bmatrix} 0 \\ 1 \\ 0 \end{bmatrix}$$

$$v_{A2} = (v_1A_1)^2 + (v_2A_2)^2 + (v_3A_3)^2$$

$$v_{AB} = (v_1A_1B_1)^2 + (v_2A_2B_2)^2 + (v_3A_3B_3)^2$$

-continued

$$v_{B2} = (v_1B_1)^2 + (v_2B_2)^2 + (v_3B_3)^2$$

$$w_{A2} = (w_1A_1)^2 + (w_2A_2)^2 + (w_3A_3)^2$$

$$w_{AB} = (w_1A_1B_1)^2 + (w_2A_2B_2)^2 + (w_3A_3B_3)^2$$

$$w_{B2} = (w_1B_1)^2 + (w_2B_2)^2 + (w_3B_3)^2$$

Using the parameters defined in equations (5)-(9), solving for θ is accomplished by solving the eighth-degree polynomial equation (6) for t, where the coefficients Q_i (for i=0 to 8) are defined as shown in equations (11)-(119).

$$0 = Q_8t^8 + Q_7t^7 + Q_6t^6 + Q_5t^5 + Q_4t^4 + Q_3t^3 + Q_2t^2 + Q_1t + Q_0 \quad (10)$$

The parameters A_1, B_1, G_1, H_1, v_{A2}, v_{AB}, v_{B2}, w_{A2}, w_{AB}, and w_{B2} used in equations (11)-(15) are defined as shown in equations (5)-(8). The parameter n is the assumed semi-major axis (in other words, a_0). Once the real roots t are known, the possible values of θ are defined as θ=atan(t).

$$Q_8 = 4A_1^2n^2v_{B2}^2 + 4v_{B2}B_1^2(1 - n^2v_{A2}) - (G_1(1 - n^2v_{A2})w_{B2} + n^2v_{B2}w_{A2} + 2H_1v_{B2})^2 \quad (11)$$

$$Q_7 = -(2(2n^2v_{AB}w_{A2} + 4H_1v_{AB} + 2G_1n^2v_{AB}w_{B2} + 2G_1(1 - n^2v_{A2})w_{AB}))(G_1(1 - n^2v_{A2})w_{B2} + n^2v_{B2}w_{A2} + 2H_1v_{B2}) - 8A_1B_1n^2v_{B2}^2 + 16A_1^2n^2v_{AB}v_{B2} + (4(2A_1B_1(1 - n^2v_{A2}) + 2B_1^2n^2v_{AB}))v_{B2} + 8B_1^2(1 - n^2v_{A2})v_{AB} \quad (12)$$

$$Q_6 = -(2(2H_1v_{B2} + 2H_1v_{A2} + n^2v_{A2}w_{A2} + n^2v_{B2}(-2w_{AB} + w_{B2}) + G_1(n^2v_{B2} + 1)w_{B2} + 4G_1n^2v_{AB}w_{AB} + G_1(1 - n^2v_{A2})v_{A2}))\times(G_1(1 - n^2v_{A2})w_{B2} + n^2v_{B2}w_{A2} + 2H_1v_{B2}) - (2n^2v_{AB}w_{A2} + 4H_1v_{AB} + 2G_1n^2v_{AB}w_{B2} + 2G_1(1 - n^2v_{A2})w_{AB})^2 + 4B_1^2n^2v_{B2}^2 - 32A_1B_1n^2v_{AB}v_{B2} + 4A_1^2n^2(2v_{A2}v_{B2} + 4v_{AB}^2) + 4A_1^2n^2v_{B2}^2 + (4(A_1^2(1 - n^2v_{A2}) + 4A_1B_1n^2v_{AB} + B_1^2(-n^2v_{B2} + 1) + B_1^2(1 - n^2v_{A2})))v_{B2} + (8(2A_1B_1(1 - n^2v_{A2}) + 2B_1^2n^2v_{AB}))v_{AB} + 4B_1^2(1 - n^2v_{A2})v_{A2} \quad (13)$$

$$Q_5 = -(2(4H_1v_{AB} + 2G_1(-n^2v_{B2} + 1)w_{AB} + 2G_1n^2v_{AB}v_{A2} + 2n^2v_A(-2w_{AB} + w_{B2}))(G_1(1 - n^2v_{A2})w_{B2} + n^2v_{B2}w_{A2} + 2H_1V_{B2}) - (2(2H_1v_{B2} + 2H_1v_{A2} + n^2v_{A2}w_{A2} + n^2v_{B2}(-2w_{AB} + w_{B2}) + G_1(-n^2v_{B2} + 1)w_{B2} + 4G_1n^2v_{AB}w_{AB} + G_1(1 - n^2v_{A2})v_{A2}))\times 2n^2v_{AB}w_{B2} + 4H_1v_{AB} + 2G_1n^2v_{AB}w_{B2} + 2G_1(1 - n^2v_{A2})w_{AB}) + 16B_1^2n^2v_{AB}v_{B2} - 8A_1B_1n^2(2v_{A2}v_{B2} + 4v_{AB}^2) + 16A_1^2n^2v_{A2}v_{AB} - 8A_1B_1n^2v_{B2}^2 + 16A_1^2n^2v_{AB}v_{B2} + (4(2A_1^2n^2v_{AB} + 2A_1B_1(-n^2v_{B2} + 1) + 2A_1B_1(1 - n^2v_{A2}) + 2B_1^2n^2v_{AB}))v_{B2} + (8(A_1^2(1 - n^2v_{A2}) + 4A_1B_1n^2v_{AB} + B_1^2(1 - n^2v_{B2} + 1) + B_1^2(1 - n^2v_{A2})))v_{AB} + (4(2A_1B_1(1 - n^2v_{A2}) + 2B_1^2n^2v_{AB}))v_{A2} \quad (14)$$

$$Q_4 = (4(A_1^2(-n^2v_{B2}) + A_1^2(1 - n^2v_{A2}) + 4A_1B_1n^2v_{AB} + B_1^2(-n^2v_{B2} + 1)))v_{B2} + (8(2A_1^2n^2v_{AB} + 2A_1B_1(-n^2v_{B2} + 1) + 2A_1B_1(1 - n^2v_{A2}) + 2B_1^2n^2v_{AB}))v_{AB} + (4(A_1^2(1 - n^2v_{A2}) + 4A_1B_1n^2v_{AB} + B_1^2(-n^2v_{B2} + 1) + B_1^2(1 - n^2v_{A2})))v_{A2} + 4B_1^2n^2v_{A2}^2 + 4B_1^2n^2(2v_{A2}v_{B2} + 4v_{AB}^2) - 32A_1B_1n^2v_{A2}v_{AB} + 4A_1^2n^2v_{A2}^2 + 4B_1^2n^2v_{B2}^2 - 32A_1B_1n^2v_{AB}v_{B2} + 4A_1^2n^2(2v_{A2}v_{B2} + 4v_{AB}^2) - (2(G_1(-n^2v_{B2} + 1)v_{A2} + n^2v_{A2}(-2w_{AB} + w_{B2}) + 2H_1v_{A2}))(G_1(1 - n^2v_{A2})w_{B2} + n^2v_{B2}w_{A2} + 2H_1v_{B2}) - (2(4H_1v_{AB} + 2G_1(-n^2v_{B2} + 1)w_{AB} + 2G_1n^2v_{AB}v_{A2} + 2n^2v_{AB}(-2w_{AB} + w_{B2})))\times(2n^2v_{AB}w_{A2} + 4H_1v_{AB} + 2G_1n^2v_{AB}w_{B2} + 2G_1(1 - n^2v_{A2})w_{AB}) - (2H_1v_{B2} + 2H_1v_{A2} + n^2v_{A2}w_{A2} + n^2v_{B2}(-2w_{AB} + w_{B2}) + G_1(-n^2v_{B2} + 1)w_{B2} + 4G_1n^2v_{AB}w_{AB} + G_1(1 - n^2v_{A2})v_{A2})^2 \quad (15)$$

$$Q_3 = -(2(G_1(-n^2v_{B2} + 1)v_{A2} + n^2v_{A2}(-2w_{AB} + w_{B2}) + 2H_1v_{A2}))(2n^2v_{AB}w_{A2} + 4H_1v_{AB} + 2G_1n^2v_{AB}w_{B2} + 2G_1(1 - n^2v_{A2})w_{AB} - (2(4H_1v_{AB} + 2G_1(-n^2v_{B2} + 1)w_{AB} + 2G_1n^2v_{AB}v_{A2} + 2n^2v_{AB}(-2w_{AB} + w_{B2})))\times(2H_1v_{B2} + 2H_1v_{A2} + n^2v_{A2}w_{A2} + n^2v_{B2}(-2w_{AB} + w_{B2}) + G_1(-n^2v_{B2} + 1)w_{B2} + 4G_1n^2v_{AB}w_{AB} + G_1(1 - n^2v_{A2})v_{A2}) + 16B_1^2n^2v_{A2}v_{AB} - 8A_1B_1n^2v_{A2}^2 + 16B_1^2n^2v_{AB}v_{B2} - 8A_1B_1n^2(2v_{A2}v_{B2} + 4v_{AB}^2) + 16A_1^2n^2v_{A2}v_{AB} + (4(2A_1^2n^2v_{AB} + 2A_1B_1(-n^2v_{B2} + 1)))v_{B2} + (8(A_1^2(-n^2v_{B2} + 1) + A_1^2(1 - n^2v_{A2}) + 4A_1B_1n^2v_{AB} + B_1^2(-n^2v_{AB} + B_1^2(-n^2v_{B2} + 1)))v_{AB} + (4(2A_1^2n^2v_{AB} + 2A_1B_1(-n^2v_{B2} + 1) + 2A_1B_1(1 - n^2v_{A2}) + 2B_1^2n^2v_{AB}))v_{A2} \quad (16)$$

$$Q_2 = 4A_1^2(-n^2v_{B2} + 1)v_{B2} + (8(2A_1^2n^2v_{AB} + 2A_1B_1(-n^2v_{B2} + 1)))v_{AB} + (4(A_1^2(-n^2v_{B2} + 1) + A_1^2(1 - n^2v_{A2}) + 4A_1B_1n^2v_{AB} + B_1^2(-n^2v_{B2} + 1)))v_{A2} + 4B_1^2n^2v_{A2}^2 + 4B_1^2n^2(2v_{A2}v_{B2} + 4v_{AB}^2) - 32A_1B_1n^2v_{A2}v_{AB} + 4A_1^2n^2v_{A2}^2 - (2(G_1(-n^2v_{B2} + 1)v_{A2} + n^2v_{A2}(-2w_{AB} + w_{B2}) + 2H_1v_{A2}))\times(2H_1v_{B2} + 2H_1v_{A2} + n^2v_{A2}w_{A2} + n^2v_{B2}(-2w_{AB} + w_{B2}) + G_1(-n^2v_{B2} + 1)w_{B2} + 4G_1n^2v_{AB}w_{AB} + G_1(1 - n^2v_{A2})v_{A2}) - (4H_1v_{AB} + 2G_1(-n^2v_{B2} + 1)w_{AB} + 2G_1n^2v_{AB}v_{A2} + 2n^2v_{AB}(-2w_{AB} + w_{B2}))^2 \quad (17)$$

$$Q_1 = 8A_1^2(-n^2v_{B2} + 1)v_{AB} + (4(2A_1^2n^2v_{AB} + 2A_1B_1(-n^2v_{B2} + 1)))v_{A2} + 16B_1^2n^2v_{A2}v_{AB} - 8A_1B_1n^2v_{A2}^2 - (2(G_1(-n^2v_{B2} + 1)v_{A2} + n^2v_{A2}(-2w_{AB} + w_{B2}) + 2H_1v_{A2}))(4H_1v_{AB} + 2G_1(-n^2v_{B2} + 1)w_{AB} + 2G_1n^2v_{AB}v_{A2} + 2n^2v_{AB}(-2w_{AB} + w_{B2})) \quad (18)$$

$$Q_0 = 4A_1^2(-n^2v_{B2} + 1)v_{A2} - (G_1(-n^2v_{B2} + 1)v_{A2} + n^2v_{A2}(-2w_{AB} + w_{B2}) + 2H_1v_{A2})^2 + 4B_1^2n^2v_{A2}^2 \quad (19)$$

In this exemplary implementation, equations (10)-(11) have at most three real roots; thus, for any four tangent lines, there are at most three possible ellipses that are tangent to all four lines and that satisfy the $a=a_0$ constraint. (In some instances, there may be fewer than three real roots.) For each real root θ, the corresponding values of (x_C, y_C) and b can be readily determined. Depending on the particular inputs, zero or more solutions will be obtained; for example, in some instances, three solutions can be obtained for a typical configuration of tangents. Each solution is completely char-

acterized by the parameters $\{\theta, a=a_0, b, (x_C,y_C)\}$. Alternatively, or additionally, a model builder **197**C and model updater **197**D provide functionality to define, build and/or customize model(s) **197**B using one or more components in object library **197**A. Once built, model refiner **197**F updates and refines the model, bringing the predictive information of the model in line with observed information from the detection system **90**A.

The model subcomponents **197-1**, **197-2**, **197-3**, and **197-4** can be scaled, sized, selected, rotated, translated, moved, or otherwise re-ordered to enable portions of the model corresponding to the virtual surface(s) to conform within the points **193** in space. Model refiner **197**F employs a variation detector **197**G to substantially continuously determine differences between sensed information and predictive information and provide to model refiner **197**F a variance useful to adjust the model **197**B accordingly. Variation detector **197**G and model refiner **197**F are further enabled to correlate among model portions to preserve continuity with characteristic information of a corresponding object being modeled, continuity in motion, and/or continuity in deformation, conformation and/or torsional rotations.

An environmental filter **197**H reduces extraneous noise in sensed information received from the detection system **90**A using environmental information to eliminate extraneous elements from the sensory information. Environmental filter **197**H employs contrast enhancement, subtraction of a difference image from an image, software filtering, and background subtraction (using background information provided by objects of interest determiner **198**H (see below) to enable model refiner **197**F to build, refine, manage and maintain model(s) **197**B of objects of interest from which control inputs can be determined.

A model analyzer **1971** determines that a reconstructed shape of a sensed object portion matches an object model in an object library; and interprets the reconstructed shape (and/or variations thereon) as user input. Model analyzer **1971** provides output in the form of object, position, motion and attribute information to an interaction system **90**C.

Again with reference to FIG. **20**, an interaction system **90**C includes an interaction interpretation module **198** that provides functionality to recognize command and other information from object, position, motion and attribute information obtained from variation system **90**B. An interaction interpretation module **198** implementation comprises a recognition engine **198**F to recognize command information such as command inputs (i.e., gestures and/or other command inputs (e.g., speech, etc.)), related information (i.e., biometrics), environmental information (i.e., context, noise, etc.) and other information discernable from the object, position, motion and attribute information that might be useful in controlling a machine. Recognition engine **198**F employs gesture properties **198**A (e.g., path, velocity, acceleration, etc.), control objects determined from the object, position, motion and attribute information by an objects of interest determiner **198**H and optionally one or more virtual constructs **198**B (see e.g., FIGS. **23**A, **23**B: **198**B-**1**, **198**B-**2**) to recognize variations in control object presence or motion indicating command information, related information, environmental information and other information discernable from the object, position, motion and attribute information that might be useful in controlling a machine. With reference to FIG. **23**A, **23**B, virtual construct **198**B-**1**, **198**B-**2** implement an engagement target with which a control object **99** interacts—enabling MSCS **189** to discern variations in control object (i.e., motions into, out of or relative to virtual construct **198**B) as indicating control or other useful information. A gesture trainer **198**C and gesture properties extractor **198**D provide functionality to define, build and/or customize gesture properties **198**A.

A context determiner **198**G and object of interest determiner **198**H provide functionality to determine from the object, position, motion and attribute information objects of interest (e.g., control objects, or other objects to be modeled and analyzed), objects not of interest (e.g., background) based upon a detected context. For example, when the context is determined to be an identification context, a human face will be determined to be an object of interest to the system and will be determined to be a control object. On the other hand, when the context is determined to be a fingertip control context, the finger tips will be determined to be object(s) of interest and will be determined to be a control objects whereas the user's face will be determined not to be an object of interest (i.e., background). Further, when the context is determined to be a styli (or other tool) held in the fingers of the user, the tool tip will be determined to be object of interest and a control object whereas the user's fingertips might be determined not to be objects of interest (i.e., background). Background objects can be included in the environmental information provided to environmental filter **197**H of model management module **197**.

A virtual environment manager **198**E provides creation, selection, modification and de-selection of one or more virtual constructs **198**B (see FIGS. **23**A, **23**B). In some implementations, virtual constructs (e.g., a virtual object defined in space; such that variations in real objects relative to the virtual construct, when detected, can be interpreted for control or other purposes (see FIGS. **23**A, **23**B)) are used to determine variations (i.e., virtual "contact" with the virtual construct, breaking of virtual contact, motion relative to a construct portion, etc.) to be interpreted as engagements, dis-engagements, motions relative to the construct(s), and so forth, enabling the system to interpret pinches, pokes and grabs, and so forth. Interaction interpretation module **198** provides as output the command information, related information and other information discernable from the object, position, motion and attribute information that might be useful in controlling a machine from recognition engine **198**F to an application control system **90**D.

In an implementation, predictive information can include collision information concerning two or more capsoloids. By means of illustration, several possible fits of predicted information to observed information can be removed from consideration based upon a determination that these potential solutions would result in collisions of capsoloids. In an implementation, a relationship between neighboring capsoloids, each having one or more attributes (e.g., determined minima and/or maxima of intersection angles between capsoloids) can be determined. In an implementation, determining a relationship between a first capsoloid having a first set of attributes and a second capsoloid having a second set of attributes includes detecting and resolving conflicts between first attribute and second attributes. For example, a conflict can include a capsoloid having one type of angle value with a neighbor having a second type of angle value incompatible with the first type of angle value. Attempts to attach a capsoloid with a neighboring capsoloid having attributes such that the combination will exceed what is allowed in the observed—or to pair incompatible angles, lengths, shapes, or other such attributes—can be removed from the predicted information without further consideration.

In an implementation, predictive information can be artificially constrained to capsoloids positioned in a subset of

the observed information—thereby enabling creation of a "lean model". For example, as illustrated in FIG. **21**, capsoloid **197-3** could be used to denote the portion of the observed without addition of capsoloids **197-2**. In a yet further implementation, connections can be made using artificial constructs to link together capsoloids of a lean model. In another implementation, the predictive information can be constrained to a subset of topological information about the observed information representing the control object to form a lean model.

In an implementation, a lean model can be associated with a full predictive model. The lean model (or topological information, or properties described above) can be extracted from the predictive model to form a constraint. Then, the constraint can be imposed on the predictive information thereby enabling the predictive information to be constrained in one or more of behavior, shape, total (system) energy, structure, orientation, compression, shear, torsion, other properties, and/or combinations thereof.

In an implementation, the observed can include components reflecting portions of the control object which are occluded from view of the device ("occlusions" or "occluded components"). In one implementation, the predictive information can be "fit" to the observed as described herein above with the additional constraint(s) that some total property of the predictive information (e.g., potential energy) be minimized or maximized (or driven to lower or higher value(s) through iteration or solution). Properties can be derived from nature, properties of the control object being viewed, others, and/or combinations thereof. In another implementation, as shown by FIGS. **16**A and **16**B, a deformation **1600**A, **1600**B of the predictive information subcomponents **1602** and **1612** can be allowed subject to an overall permitted value of compression, deformation, flexibility, others, and/or combinations thereof.

In an implementation, a "friction constraint" is applied on the model **197**B-**1**. For example, if fingers of a hand being modeled are close together (in position or orientation), corresponding portions of the model will have more "friction". The more friction a model subcomponent has in the model, the less the subcomponent moves in response to new observed information. Accordingly the model is enabled to mimic the way portions of the hand that are physically close together move together, and move less overall.

An environmental filter **197**H reduces extraneous noise in sensed information received from the detection system **90**A using environmental information to eliminate extraneous elements from the sensory information. Environmental filter **197**H employs contrast enhancement, subtraction of a difference image from an image, software filtering, and background subtraction (using background information provided by objects of interest determiner **198**H (see below) to enable model refiner **197**F to build, refine, manage and maintain model(s) **197**B of objects of interest from which control inputs can be determined.

A model analyzer **1971** determines that a reconstructed shape of a sensed object portion matches an object model in an object library; and interprets the reconstructed shape (and/or variations thereon) as user input. Model analyzer **1971** provides output in the form of object, position, motion and attribute information to an interaction system **90**C.

Again with reference to FIG. **20**, an interaction system **90**C includes an interaction interpretation module **198** that provides functionality to recognize command and other information from object, position, motion and attribute information obtained from variation system **90**B. An interaction interpretation module **198** implementation comprises a recognition engine **198**F to recognize command information such as command inputs (i.e., gestures and/or other command inputs (e.g., speech, etc.)), related information (i.e., biometrics), environmental information (i.e., context, noise, etc.) and other information discernable from the object, position, motion and attribute information that might be useful in controlling a machine. Recognition engine **198**F employs gesture properties **198**A (e.g., path, velocity, acceleration, etc.), control objects determined from the object, position, motion and attribute information by an objects of interest determiner **198**H and optionally one or more virtual constructs **198**B (see e.g., FIGS. **23**A, **23**B: **198**B-**1**, **198**B-**2**) to recognize variations in control object presence or motion indicating command information, related information, environmental information and other information discernable from the object, position, motion and attribute information that might be useful in controlling a machine. With reference to FIG. **23**A, **23**B, virtual construct **198**B-**1**, **198**B-**2** implement an engagement target with which a control object **99** interacts—enabling MSCS **189** to discern variations in control object (i.e., motions into, out of or relative to virtual construct **198**B) as indicating control or other useful information. A gesture trainer **198**C and gesture properties extractor **198**D provide functionality to define, build and/or customize gesture properties **198**A.

A context determiner **198**G and object of interest determiner **198**H provide functionality to determine from the object, position, motion and attribute information objects of interest (e.g., control objects, or other objects to be modeled and analyzed), objects not of interest (e.g., background) based upon a detected context. For example, when the context is determined to be an identification context, a human face will be determined to be an object of interest to the system and will be determined to be a control object. On the other hand, when the context is determined to be a fingertip control context, the finger tips will be determined to be object(s) of interest and will be determined to be a control objects whereas the user's face will be determined not to be an object of interest (i.e., background). Further, when the context is determined to be a styli (or other tool) held in the fingers of the user, the tool tip will be determined to be object of interest and a control object whereas the user's fingertips might be determined not to be objects of interest (i.e., background). Background objects can be included in the environmental information provided to environmental filter **197**H of model management module **197**.

A virtual environment manager **198**E provides creation, selection, modification and de-selection of one or more virtual constructs **198**B (see FIGS. **23**A, **23**B). In some implementations, virtual constructs (e.g., a virtual object defined in space; such that variations in real objects relative to the virtual construct, when detected, can be interpreted for control or other purposes (see FIGS. **23**A, **23**B)) are used to determine variations (i.e., virtual "contact" with the virtual construct, breaking of virtual contact, motion relative to a construct portion, etc.) to be interpreted as engagements, dis-engagements, motions relative to the construct(s), and so forth, enabling the system to interpret pinches, pokes and grabs, and so forth. Interaction interpretation module **198** provides as output the command information, related information and other information discernable from the object, position, motion and attribute information that might be useful in controlling a machine from recognition engine **198**F to an application control system **90**D.

Further with reference to FIG. **20**, an application control system **90**D includes a control module **199** that provides

functionality to determine and authorize commands based upon the command and other information obtained from interaction system **90**C.

A control module **199** implementation comprises a command engine **199**F to determine whether to issue command(s) and what command(s) to issue based upon the command information, related information and other information discernable from the object, position, motion and attribute information, as received from an interaction interpretation module **198**. Command engine **199**F employs command/control repository **199**A (e.g., application commands, OS commands, commands to MSCS, misc. commands) and related information indicating context received from the interaction interpretation module **198** to determine one or more commands corresponding to the gestures, context, etc. indicated by the command information. For example, engagement gestures can be mapped to one or more controls, or a control-less screen location, of a presentation device associated with a machine under control. Controls can include imbedded controls (e.g., sliders, buttons, and other control objects in an application), or environmental level controls (e.g., windowing controls, scrolls within a window, and other controls affecting the control environment). In implementations, controls may be displayed using 2D presentations (e.g., a cursor, cross-hairs, icon, graphical representation of the control object, or other displayable object) on display screens and/or presented in 3D forms using holography, projectors or other mechanisms for creating 3D presentations, or audible (e.g., mapped to sounds, or other mechanisms for conveying audible information) and/or touchable via haptic techniques.

Further, an authorization engine **199**G employs biometric profiles **199**B (e.g., users, identification information, privileges, etc.) and biometric information received from the interaction interpretation module **198** to determine whether commands and/or controls determined by the command engine **199**F are authorized. A command builder **199**C and biometric profile builder **199**D provide functionality to define, build and/or customize command/control repository **199**A and biometric profiles **199**B.

Selected authorized commands are provided to machine(s) under control (i.e., "client") via interface layer **196**. Commands/controls to the virtual environment (i.e., interaction control) are provided to virtual environment manager **198**E. Commands/controls to the emission/detection systems (i.e., sensory control) are provided to emission module **91** and/or detection module **92** as appropriate.

In various implementations and with reference to FIG. **23**A, **23**B, a Machine Sensory Controller System **189** can be embodied as a standalone unit(s) **189-1** coupleable via an interface (e.g., wired or wireless)), embedded (e.g., within a machine **188-1**, **188-2** or machinery under control) (e.g., FIG. **23**A: **189-2**, **189-3**, FIG. **23**B: **189**B) or combinations thereof.

FIG. **24** illustrates an example computing system that can comprise one or more of the elements shown in FIGS. **16**A and **16**B. In particular, FIG. **24** illustrates an exemplary computing system **2400**, such as a PC (or other suitable "processing" system), that can comprise one or more of the MSCS elements shown in FIGS. **17-20** according to an implementation. While other application-specific device/process alternatives might be utilized, such as those already noted, it will be presumed for clarity sake that systems **90**A-**90**D elements (FIGS. **17-20**) are implemented by one or more processing systems consistent therewith, unless otherwise indicated.

As shown, computer system **2400** comprises elements coupled via communication channels (e.g. bus **2401**) including one or more general or special purpose processors **2402**, such as a Pentium® or Power PC®, digital signal processor ("DSP"), or other processing. System **2400** elements also include one or more input devices **2403** (such as a mouse, keyboard, joystick, microphone, remote control unit, tactile, biometric or other sensors **93** of FIG. **17**, and so on), and one or more output devices **2404**, such as a suitable display, joystick feedback components, speakers, biometric or other actuators, and so on, in accordance with a particular application.

System **2400** elements also include a computer readable storage media reader **2405** coupled to a computer readable storage medium **2406**, such as a storage/memory device or hard or removable storage/memory media; examples are further indicated separately as storage device **2408** and non-transitory memory **2409**, which can include hard disk variants, floppy/compact disk variants, digital versatile disk ("DVD") variants, smart cards, read only memory, random access memory, cache memory or others, in accordance with a particular application (e.g. see data store(s) **197**A, **198**A, **199**A and **199**B of FIG. **20**). One or more suitable communication devices **2407** can also be included, such as a modem, DSL, infrared, etc. for providing inter-device communication directly or via suitable private or public networks, such as the Internet. Working memory **2409** is further indicated as including an operating system ("OS") **2491**, predictive discrepancy determiner **2413** and other programs **2492**, such as application programs, mobile code, data, or other information for implementing systems **90**A-**90**D elements, which might be stored or loaded therein during use.

System **2400** element implementations can include hardware, software, firmware or a suitable combination. When implemented in software (e.g. as an application program, object, downloadable, servlet, and so on, in whole or part), a system **900** element can be communicated transitionally or more persistently from local or remote storage to memory for execution, or another suitable mechanism can be utilized, and elements can be implemented in compiled, simulated, interpretive or other suitable forms. Input, intermediate or resulting data or functional elements can further reside more transitionally or more persistently in a storage media or memory, (e.g. storage device **2408** or memory **2409**) in accordance with a particular application.

Certain potential interaction determination, virtual object selection, authorization issuances and other aspects enabled by input/output processors and other element implementations disclosed herein can also be provided in a manner that enables a high degree of broad or even global applicability; these can also be suitably implemented at a lower hardware/software layer. Note, however, that aspects of such elements can also be more closely linked to a particular application type or machine, or might benefit from the use of mobile code, among other considerations; a more distributed or loosely coupled correspondence of such elements with OS processes might thus be more desirable in such cases.

Referring to FIG. **25**, which illustrates a system for capturing image data according to one implementation of the technology disclosed. System **2500** is preferably coupled to a wearable device **2501** that can be a personal head mounted display (HMD) having a goggle form factor such as shown in FIG. **25**, a helmet form factor, or can be incorporated into or coupled with a watch, smartphone, or other type of portable device.

In various implementations, the system and method for capturing 3D motion of an object as described herein can be

integrated with other applications, such as a head-mounted device or a mobile device. Referring again to FIG. **25**, a head-mounted device **2501** can include an optical assembly that displays a surrounding environment or a virtual environment **2513** to the user; incorporation of the motion-capture system **2500** in the head-mounted device **2501** allows the user to interactively control the displayed environment. For example, a virtual environment **2513** can include virtual objects **2516** that can be manipulated by the user's hand gestures, which are tracked by the motion-capture system **2500** and reflected in virtual environment **2513** as an image hand **2514**. In one implementation, the motion-capture system **2500** integrated with the head-mounted device **2501** detects a position and shape of user's hand and projects it on the display of the head-mounted device **2500** such that the user can see her gestures and interactively control the objects in the virtual environment. This can be applied in, for example, gaming or internet browsing.

In one embodiment, information about the interaction with a virtual object can be shared by a first HMD user with a HMD of a second user. For instance, a team of surgeons can collaborate by sharing with each other virtual incisions to be performed on a patient. In some embodiments, this is achieved by sending to the second user the information about the virtual object, including primitive(s) indicating at least one of a type, size, and/or features and other information about the calculation point(s) used to detect the interaction. In other embodiments, this is achieved by sending to the second user information about the predictive model used to track the interaction.

System **2500** includes any number of cameras **2502**, **2504** coupled to sensory processing system **2506**. Cameras **2502**, **2504** can be any type of camera, including cameras sensitive across the visible spectrum or with enhanced sensitivity to a confined wavelength band (e.g., the infrared (IR) or ultraviolet bands); more generally, the term "camera" herein refers to any device (or combination of devices) capable of capturing an image of an object and representing that image in the form of digital data. For example, line sensors or line cameras rather than conventional devices that capture a two-dimensional (2D) image can be employed. The term "light" is used generally to connote any electromagnetic radiation, which may or may not be within the visible spectrum, and may be broadband (e.g., white light) or narrowband (e.g., a single wavelength or narrow band of wavelengths).

Cameras **2502**, **2504** are preferably capable of capturing video images (i.e., successive image frames at a constant rate of at least 15 frames per second); although no particular frame rate is required. The capabilities of cameras **2502**, **2504** are not critical to the technology disclosed, and the cameras can vary as to frame rate, image resolution (e.g., pixels per image), color or intensity resolution (e.g., number of bits of intensity data per pixel), focal length of lenses, depth of field, etc. In general, for a particular application, any cameras capable of focusing on objects within a spatial volume of interest can be used. For instance, to capture motion of the hand of an otherwise stationary person, the volume of interest might be defined as a cube approximately one meter on a side.

As shown, cameras **2502**, **2504** can be oriented toward portions of a region of interest **2512** by motion of the device **2501**, in order to view a virtually rendered or virtually augmented view of the region of interest **2512** that can include a variety of virtual objects **2516** as well as contain an object of interest **2514** (in this example, one or more hands) moves within the region of interest **2512**. One or more sensors **2508**, **2510** capture motions of the device **2501**. In some implementations, one or more light sources **2515**, **2517** are arranged to illuminate the region of interest **2512**. In some implementations, one or more of the cameras **2502**, **2504** are disposed opposite the motion to be detected, e.g., where the hand **2514** is expected to move. This is an optimal location because the amount of information recorded about the hand is proportional to the number of pixels it occupies in the camera images, and the hand will occupy more pixels when the camera's angle with respect to the hand's "pointing direction" is as close to perpendicular as possible. Sensory processing system **2506**, which can be, e.g., a computer system, can control the operation of cameras **2502**, **2504** to capture images of the region of interest **2512** and sensors **2508**, **2510** to capture motions of the device **2501**. Information from sensors **2508**, **2510** can be applied to models of images taken by cameras **2502**, **2504** to cancel out the effects of motions of the device **2501**, providing greater accuracy to the virtual experience rendered by device **2501**. Based on the captured images and motions of the device **2501**, sensory processing system **2506** determines the position and/or motion of object **2514**.

For example, as an action in determining the motion of object **2514**, sensory processing system **2506** can determine which pixels of various images captured by cameras **2502**, **2504** contain portions of object **2514**. In some implementations, any pixel in an image can be classified as an "object" pixel or a "background" pixel depending on whether that pixel contains a portion of object **2514** or not. Object pixels can thus be readily distinguished from background pixels based on brightness. Further, edges of the object can also be readily detected based on differences in brightness between adjacent pixels, allowing the position of the object within each image to be determined. In some implementations, the silhouettes of an object are extracted from one or more images of the object that reveal information about the object as seen from different vantage points. While silhouettes can be obtained using a number of different techniques, in some implementations, the silhouettes are obtained by using cameras to capture images of the object and analyzing the images to detect object edges. Correlating object positions between images from cameras **2502**, **2504** and cancelling out captured motions of the device **2501** from sensors **2508**, **2510** allows sensory processing system **2506** to determine the location in 3D space of object **2514**, and analyzing sequences of images allows sensory processing system **2506** to reconstruct 3D motion of object **2514** using conventional motion algorithms or other techniques. See, e.g., U.S. patent application Ser. No. 13/414,485 (filed on Mar. 7, 2012) and U.S. Provisional Patent Application Nos. 61/724,091 (filed on Nov. 8, 2012) and 61/587,554 (filed on Jan. 7, 2012), the entire disclosures of which are hereby incorporated by reference.

Presentation interface **2520** employs projection techniques in conjunction with the sensory based tracking in order to present virtual (or virtualized real) objects (visual, audio, haptic, and so forth) created by applications loadable to, or in cooperative implementation with, the device **2501** to provide a user of the device with a personal virtual experience. Projection can include an image or other visual representation of an object.

One implementation uses motion sensors and/or other types of sensors coupled to a motion-capture system to monitor motions within a real environment. A virtual object integrated into an augmented rendering of a real environment can be projected to a user of a portable device **101**.

Motion information of a user body portion can be determined based at least in part upon sensory information received from imaging **2502**, **2504** or acoustic or other sensory devices. Control information is communicated to a system based in part on a combination of the motion of the portable device **2501** and the detected motion of the user determined from the sensory information received from imaging **2502**, **2504** or acoustic or other sensory devices. The virtual device experience can be augmented in some implementations by the addition of haptic, audio and/or other sensory information projectors. For example, an optional video projector **2520** can project an image of a page (e.g., virtual device) from a virtual book object superimposed upon a real world object, e.g., desk **2516** being displayed to a user via live video feed; thereby creating a virtual device experience of reading an actual book, or an electronic book on a physical e-reader, even though no book nor e-reader is present. Optional haptic projector can project the feeling of the texture of the "virtual paper" of the book to the reader's finger. Optional audio projector can project the sound of a page turning in response to detecting the reader making a swipe to turn the page. Because it is a virtual reality world, the back side of hand **2514** is projected to the user, so that the scene looks to the user as if the user is looking at the user's own hand(s).

A plurality of sensors **2508**, **2510** coupled to the sensory processing system **2506** to capture motions of the device **2501**. Sensors **2508**, **2510** can be any type of sensor useful for obtaining signals from various parameters of motion (acceleration, velocity, angular acceleration, angular velocity, position/locations); more generally, the term "motion detector" herein refers to any device (or combination of devices) capable of converting mechanical motion into an electrical signal. Such devices can include, alone or in various combinations, accelerometers, gyroscopes, and magnetometers, and are designed to sense motions through changes in orientation, magnetism or gravity. Many types of motion sensors exist and implementation alternatives vary widely.

The illustrated system **2500** can include any of various other sensors not shown in FIG. **25** for clarity, alone or in various combinations, to enhance the virtual experience provided to the user of device **2501**. For example, in low-light situations where free-form gestures cannot be recognized optically with a sufficient degree of reliability, system **2506** may switch to a touch mode in which touch gestures are recognized based on acoustic or vibrational sensors. Alternatively, system **2506** may switch to the touch mode, or supplement image capture and processing with touch sensing, when signals from acoustic or vibrational sensors are sensed. In still another operational mode, a tap or touch gesture may act as a "wake up" signal to bring the image and audio analysis system **2506** from a standby mode to an operational mode. For example, the system **2506** may enter the standby mode if optical signals from the cameras **2502**, **2501** are absent for longer than a threshold interval.

It will be appreciated that the figures shown in FIG. **25** are illustrative. In some implementations, it may be desirable to house the system **2500** in a differently shaped enclosure or integrated within a larger component or assembly. Furthermore, the number and type of image sensors, motion detectors, illumination sources, and so forth are shown schematically for the clarity, but neither the size nor the number is the same in all implementations.

FIG. **28** is a representative method **2800** of integrating real three-dimensional (3D) space sensing with a virtual reality head mounted device. Flowchart shown in FIG. **28** can be implemented at least partially with by one or more processors configured to receive or retrieve information, process the information, store results, and transmit the results. Other implementations may perform the actions in different orders and/or with different, varying, alternative, modified, fewer or additional actions than those illustrated in FIG. **28**. Multiple actions can be combined in some implementations. For convenience, this flowchart is described with reference to the system that carries out a method. The system is not necessarily part of the method.

At action **2810**, a sensor attached to a virtual reality head mounted device is used to sense a first position of at least one hand in a first reference frame of a three-dimensional (3D) sensory space at a first time t**0**. In some implementations, the tracking of the hand includes tracking fingers of the hand.

At action **2820**, display of a first virtual representation of the hand at the first position is caused. In one implementation, the first virtual representation is rendered in a virtual environment of the virtual reality head mounted device.

At action **2830**, a second position of the hand and at least some of the fingers is sensed in the 3D sensory space at a second time t**1** that is different from the first position. This occurs in response to repositioning of the virtual reality head mounted device and the attached sensor due to body movement. In one implementation, the hand does not move in the 3D sensory space between t**0** and t**1**.

At action **2840**, display of a second virtual representation of the hand at an actual second position is caused by sensing motion of the attached sensor and calculating a second reference frame that accounts for repositioning of the attached sensor, calculating a transformation that renders the first position in the first reference frame and the second position in the second reference frame into a common reference frame, and transforming the first and second positions of the hand into the common reference frame. In one implementation, the common reference frame has a fixed point of reference and an initial orientation of axes, whereby the sensed second position is transformed to the actual second position.

In one implementation, the common reference frame is a world reference frame that does not change as the attached sensor is repositioned. In another implementation, the common reference frame is the second reference frame.

The method further includes transforming the first and second positions of the hand into the common reference frame further includes applying an affine transformation. It also includes determining the orientation of the hand at the first position with respect to the first reference frame and causing the display of the hand accordingly. In yet another implementation, the method includes, determining the orientation of the hand at the second position with respect to the second reference frame and causing the display of the hand accordingly.

In one implementation, the determining the position of the hand at the first position further includes calculating a translation of the hand with respect to the common reference frame and causing the display of the hand accordingly. In another implementation, the determining the position of the hand at the second position further includes calculating a translation of the hand with respect to the common reference frame and causing the display of the hand accordingly.

This method and other implementations of the technology disclosed can include one or more of the following features and/or features described in connection with additional methods disclosed. In the interest of conciseness, the combinations of features disclosed in this application are not individually enumerated and are not repeated with each base

set of features. The reader will understand how features identified in this section can readily be combined with sets of base features identified as implementations in sections of this application.

Other implementations can include a non-transitory computer readable storage medium storing instructions executable by a processor to perform any of the methods described above. Yet another implementation can include a system including memory and one or more processors operable to execute instructions, stored in the memory, to perform any of the methods described above.

FIG. **29** depicts a flowchart **2900** of integrating real three-dimensional (3D) space sensing with an augmented reality head mounted device. Flowchart shown in FIG. **29** can be implemented at least partially with by one or more processors configured to receive or retrieve information, process the information, store results, and transmit the results. Other implementations may perform the actions in different orders and/or with different, varying, alternative, modified, fewer or additional actions than those illustrated in FIG. **29**. Multiple actions can be combined in some implementations. For convenience, this flowchart is described with reference to the system that carries out a method. The system is not necessarily part of the method.

At action **2910**, a sensor attached to the augmented reality head mounted device is used to sense a first position of at least one hand, at a first time t**0**, in a first reference frame of a three-dimensional (3D) sensory space located in a real environment. In one implementation, tracking the hand includes tracking fingers of the hand.

At action **2920**, data representing a first virtual representation of the hand at the first position is generated. In one implementation, the first virtual representation is rendered in a virtual environment of the augmented reality head mounted device superimposed on the real environment.

At action **2930**, a second position of the hand and at least some of the fingers is sensed in the 3D sensory space at a second time t**1**. In one implementation, the second position is different from the first position. This occurs in response to repositioning of the augmented reality head mounted device and the attached sensor due to body movement. In one implementation, the hand does not move in the 3D sensory space between t**0** and t**1**.

At action **2940**, data representing a second virtual representation of the hand at an actual second position is generated by sensing motion of the attached sensor and calculating a second reference frame that accounts for repositioning of the attached sensor, calculating a transformation that renders the first position in the first reference frame and the second position in the second reference frame into a common reference frame, and transforming the first and second positions of the hand into the common reference frame. In one implementation, the common reference frame has a fixed point of reference and an initial orientation of axes, whereby the sensed second position is transformed to the actual second position.

In one implementation, the common reference frame is a world reference frame that does not change as the attached sensor is repositioned. In another implementation, the common reference frame is the second reference frame.

In some implementations, the transforming the first and second positions of the hand into the common reference frame further includes applying an affine transformation. In other implementations, the method further includes determining the orientation of the hand at the first position with respect to the first reference frame and causing interaction between the hand and the augmented reality accordingly. In yet other implementations, the method includes determining the orientation of the hand at the second position with respect to the second reference frame and causing interaction between the hand and the augmented reality accordingly.

In one implementation, the determining the position of the hand at the first position further includes calculating a translation of the hand with respect to the common reference frame and causing interaction between the hand and the augmented reality accordingly. In another implementation, the determining the position of the hand at the second position further includes calculating a translation of the hand with respect to the common reference frame and causing interaction between the hand and the augmented reality accordingly.

This method and other implementations of the technology disclosed can include one or more of the following features and/or features described in connection with additional methods disclosed. In the interest of conciseness, the combinations of features disclosed in this application are not individually enumerated and are not repeated with each base set of features. The reader will understand how features identified in this section can readily be combined with sets of base features identified as implementations in sections of this application.

Other implementations can include a non-transitory computer readable storage medium storing instructions executable by a processor to perform any of the methods described above. Yet another implementation can include a system including memory and one or more processors operable to execute instructions, stored in the memory, to perform any of the methods described above.

FIG. **30** illustrates a flowchart **3000** of a representative method of integrating real three-dimensional (3D) space sensing with a head mounted device that renders a virtual background and one or more virtual objects is described. Flowchart shown in FIG. **30** can be implemented at least partially with by one or more processors configured to receive or retrieve information, process the information, store results, and transmit the results. Other implementations may perform the actions in different orders and/or with different, varying, alternative, modified, fewer or additional actions than those illustrated in FIG. **30**. Multiple actions can be combined in some implementations. For convenience, this flowchart is described with reference to the system that carries out a method. The system is not necessarily part of the method.

At action **3010**, a sensor attached to the head mounted device is used to sense a first position of at least one hand, at a first time, in a first reference frame of a three-dimensional (3D) sensory space. In one implementation, tracking the hand includes tracking fingers of the hand.

At action **3020**, a second position of the hand and at least some of the fingers is sensed at a second time.

At action **3030**, responsive to repositioning of the head mounted device and the attached sensor due to body movement, motion of the attached sensor is sensed and a second reference frame that accounts for repositioning of the attached sensor is calculated.

At action **3040**, a transformation is calculated, which renders the first position in the first reference frame and the second position in the second reference frame into a common reference frame.

At action **3050**, the first and second positions of the hand are transformed into the common reference frame. In one implementation, the common reference frame has a fixed point of reference and an initial orientation of axes.

In one implementation, the common reference frame is a world reference frame that does not change as the attached sensor is repositioned. In another implementation, the common reference frame is the second reference frame.

In some implementations, the attached sensor is integrated into a unit with the virtual reality head mounted device. In other implementations, the transforming the first and second positions of the hand into the common reference frame further includes applying at least one affine transformation.

This method and other implementations of the technology disclosed can include one or more of the following features and/or features described in connection with additional methods disclosed. In the interest of conciseness, the combinations of features disclosed in this application are not individually enumerated and are not repeated with each base set of features. The reader will understand how features identified in this section can readily be combined with sets of base features identified as implementations in sections of this application.

Other implementations can include a non-transitory computer readable storage medium storing instructions executable by a processor to perform any of the methods described above. Yet another implementation can include a system including memory and one or more processors operable to execute instructions, stored in the memory, to perform any of the methods described above.

While the disclosed technology has been described with respect to specific implementations, one skilled in the art will recognize that numerous modifications are possible. The number, types and arrangement of cameras and sensors can be varied. The cameras' capabilities, including frame rate, spatial resolution, and intensity resolution, can also be varied as desired. The sensors' capabilities, including sensitively levels and calibration, can also be varied as desired. Light sources are optional and can be operated in continuous or pulsed mode. The systems described herein provide images and audio signals to facilitate tracking movement of an object, and this information can be used for numerous purposes, of which position and/or motion detection is just one among many possibilities.

Threshold cutoffs and other specific criteria for distinguishing object from background can be adapted for particular hardware and particular environments. Frequency filters and other specific criteria for distinguishing visual or audio signals from background noise can be adapted for particular cameras or sensors and particular devices. In some implementations, the system can be calibrated for a particular environment or application, e.g., by adjusting frequency filters, threshold criteria, and so on.

Any type of object can be the subject of motion capture using these techniques, and various aspects of the implementation can be optimized for a particular object. For example, the type and positions of cameras and/or other sensors can be selected based on the size of the object whose motion is to be captured, the space in which motion is to be captured, and/or the medium of the surface through which audio signals propagate. Analysis techniques in accordance with implementations of the technology disclosed can be implemented as algorithms in any suitable computer language and executed on programmable processors. Alternatively, some or all of the algorithms can be implemented in fixed-function logic circuits, and such circuits can be designed and fabricated using conventional or other tools.

Computer programs incorporating various features of the technology disclosed may be encoded on various computer readable storage media; suitable media include magnetic disk or tape, optical storage media such as compact disk (CD) or DVD (digital versatile disk), flash memory, and any other non-transitory medium capable of holding data in a computer-readable form. Computer-readable storage media encoded with the program code may be packaged with a compatible device or provided separately from other devices. In addition program code may be encoded and transmitted via wired optical, and/or wireless networks conforming to a variety of protocols, including the Internet, thereby allowing distribution, e.g., via Internet download.

Thus, although the disclosed technology has been described with respect to specific implementations, it will be appreciated that the disclosed technology is intended to cover all modifications and equivalents within the scope of the following claims.

FIG. **1**A illustrates one implementation **100**A of a one sub-component virtual contact of a control object causing a virtual displacement of a virtual object **111**.

FIG. **1**B illustrates one implementation **100**B of a two sub-component virtual contact of a control object causing a virtual rotation of a virtual object **122**B.

FIG. **1**C illustrates one implementation **100**B of a three sub-component virtual contact of a control object causing a virtual grasping of a virtual object **122**C.

FIGS. **31**, **32**, **33**, **34**, **35**, **36**, **37**, **38**, **39**, **40**, **41**, **42**, **43**, and **44** shows various implementations **3100**, **3200**, **3300**, **3400**, **3500**, **3600**, **3700**, **3800**, **3900**, **4000**, **4100**, **4200**, **4200**, and **4400** of manipulating virtual objects using real motions of one or more hands in a three-dimensional (3D) sensory space.

Particular Implementations

The methods described in this section and other sections of the technology disclosed can include one or more of the following features and/or features described in connection with additional methods disclosed. In the interest of conciseness, the combinations of features disclosed in this application are not individually enumerated and are not repeated with each base set of features. The reader will understand how features identified in this section can readily be combined with sets of base features identified as implementations such as pervasive computing environment, handheld mode, wide-area mode, augmented reality, embedding architectures, rigged hand, biometrics, etc.

These methods can be implemented at least partially with a database system, e.g., by one or more processors configured to receive or retrieve information, process the information, store results, and transmit the results. Other implementations may perform the actions in different orders and/or with different, fewer or additional actions than those discussed. Multiple actions can be combined in some implementations. For convenience, these methods is described with reference to the system that carries out a method. The system is not necessarily part of the method.

Other implementations of the methods described in this section can include a non-transitory computer readable storage medium storing instructions executable by a processor to perform any of the methods described above. Yet another implementation of the methods described in this section can include a system including memory and one or more processors operable to execute instructions, stored in the memory, to perform any of the methods described above.

Some example implementations are listed below with certain implementations dependent upon the implementation to which they refer to:

1. A method of realistic displacement of a virtual object for an interaction between a hand in a three-dimen-

sional (3D) sensory space and the virtual object in a virtual space that the hand interacts with, the method including:

detecting free-form gestures of a hand in a three-dimensional (3D) sensory space and generating for display a 3D solid hand model for the hand during the free-form gestures, including fingers and thumb of the hand; and

in response to detecting a one finger or one thumb free-form gesture of the hand in the 3D sensory space in virtual contact with the virtual object, depicting, in the generated display, the virtual contact and resulting displacement of the virtual object by the 3D solid hand model.

2. A method of realistic rotation of a virtual object for an interaction between a hand in a three-dimensional (3D) sensory space and the virtual object in a virtual space that the hand interacts with, the method including, comprising:

detecting free-form gestures of a hand in a three-dimensional (3D) sensory space and generating for display a 3D solid hand model for the hand during the free-form gestures, including fingers and thumb of the hand; and

in response to detecting a two finger or one finger and one thumb free-form gesture of the hand in the 3D sensory space in virtual contact with the virtual object, depicting, in the generated display, the virtual contact and resulting rotation of the virtual object by the 3D solid hand model.

3. A method of realistic rotation of a virtual object for an interaction between a hand in a three-dimensional (3D) sensory space and the virtual object in a virtual space that the hand interacts with, the method including, comprising:

detecting free-form gestures of a hand in a three-dimensional (3D) sensory space and generating for display a 3D solid hand model for the hand during the free-form gestures, including fingers and thumb of the hand; and

in response to detecting a three finger or two finger and one thumb free-form gesture of the hand in the 3D sensory space in virtual contact with the virtual object, depicting, in the generated display, the virtual contact and resulting grasping of the virtual object by the 3D solid hand model.

4. A method of realistic displacement of a virtual object for an interaction between a control object in a three-dimensional (3D) sensory space and the virtual object in a virtual space that the control object interacts with, the method including:

detecting free-form gestures of a control object in a three-dimensional (3D) sensory space and generating for display a 3D solid control object model for the control object during the free-form gestures, including sub-components of the control object; and

in response to detecting a one sub-component gesture of the control object in the 3D sensory space in virtual contact with the virtual object, depicting, in the generated display, the virtual contact and resulting displacement of the virtual object by the 3D solid control object model.

5. A method of realistic rotation of a virtual object for an interaction between a control object in a three-dimensional (3D) sensory space and the virtual object in a virtual space that the control object interacts with, the method including:

detecting free-form gestures of a control object in a three-dimensional (3D) sensory space and generating for display a 3D solid control object model for the control object during the free-form gestures, including sub-components of the control object; and

in response to detecting a two e sub-component free-form gesture of the control object in the 3D sensory space in virtual contact with the virtual object, depicting, in the generated display, the virtual contact and resulting rotation of the virtual object by the 3D solid control object model.

6. The method of implementation 5, further including depicting, in the generated display, persisted virtual contact of the sub-component until the two sub-component free-form gesture is detected.

7. A method of realistic grasping of a virtual object for an interaction between a control object in a three-dimensional (3D) sensory space and the virtual object in a virtual space that the control object interacts with, the method including:

detecting free-form gestures of a control object in a three-dimensional (3D) sensory space and generating for display a 3D solid control object model for the control object during the free-form gestures, including sub-components of the control object; and

in response to detecting a three sub-component free-form gesture of the control object in the 3D sensory space in virtual contact with the virtual object, depicting, in the generated display, the virtual contact and resulting grasping of the virtual object by the 3D solid control object model.

8. The method of implementation 7, further including depicting, in the generated display, persisted virtual contact of the sub-component until the three sub-component free-form gesture is detected.

9. A method of realistic grasping of a virtual object for an interaction between a control object in a three-dimensional (3D) sensory space and the virtual object in a virtual space that the control object interacts with, the method including:

detecting free-form gestures of one or more control objects in a three-dimensional (3D) sensory space and generating for display 3D solid control object models for the control objects during the free-form gestures, including sub-components of the control objects;

in response to detecting a multi sub-component free-form gesture of the control objects in the 3D sensory space in virtual contact with the virtual object, depicting, in the generated display, the multi sub-component virtual contact and resulting grasping of the virtual object by the 3D solid control object models of the one or more control objects.

10. A method of realistic grasping of a virtual object for an interaction between a control object in a three-dimensional (3D) sensory space and the virtual object in a virtual space that the control object interacts with, the method including:

detecting free-form gestures of at least two control objects in a three-dimensional (3D) sensory space and generating for display 3D solid control object models for the control objects during the free-form gestures, including sub-components of the control objects;

determining a dominant control object from the two control objects based on an earliest detection of a three sub-component free-form gesture in the 3D sensory space in virtual contact with the virtual object; and depicting, in the generated display, the virtual contact and resulting grasping of the virtual object by the 3D solid control object model of the dominant control object.

11. The method of implementation 9, further including:

responsive to detecting persistence of the multi sub-component virtual contact and decreased proximity between the control objects in the 3D sensory space, depicting, in the generated display, the multi sub-component virtual contact and resulting stretching of the virtual object by the 3D solid control object models of the one or more control objects.

12. The method of implementation 11, further including:

responsive to stretching of the virtual object beyond a predetermined threshold, depicting, in the generated display, a modification of the virtual object.

13. The method of implementation 11, further including:

responsive to stretching of the virtual object beyond a predetermined threshold, depicting, in the generated display, another virtual object.

14. The method of implementations 4, 5, 7, 9, and 10, further including depicting, in the generated display, proportional penetration of the control object in the virtual object responsive to position of the virtual object relative to the one or more sub-components.

15. The method of implementations 4, 5, 7, 9, and 10, wherein the control object is a hand and the sub-components include fingers and a thumb.

16. The method of implementations 4, 5, 7, 9, and 10, wherein the control object is tool including at least one of a pen and a stylus.

17. The method of implementations 4, 5, 7, 9, and 10, wherein the control object is tool including at least one of a hammer and a screwdriver.

18. The method of implementations 4, 5, 7, 9, and 10, wherein the control object is a custom tool including a joyful.

19. A system of realistic displacement of a virtual object for an interaction between a hand in a three-dimensional (3D) sensory space and the virtual object in a virtual space that the hand interacts with, the system including:

a processor and a computer readable storage medium storing computer instructions configured for performing:

detecting free-form gestures of a hand in a three-dimensional (3D) sensory space and generating for display a 3D solid hand model for the hand during the free-form gestures, including fingers and thumb of the hand; and

in response to detecting a one finger or one thumb free-form gesture of the hand in the 3D sensory space in virtual contact with the virtual object, depicting, in the generated display, the virtual contact and resulting displacement of the virtual object by the 3D solid hand model.

20. A system of realistic rotation of a virtual object for an interaction between a hand in a three-dimensional (3D) sensory space and the virtual object in a virtual space that the hand interacts with, the system including:

a processor and a computer readable storage medium storing computer instructions configured for performing:

detecting free-form gestures of a hand in a three-dimensional (3D) sensory space and generating for display a 3D solid hand model for the hand during the free-form gestures, including fingers and thumb of the hand; and

in response to detecting a two finger or one finger and one thumb free-form gesture of the hand in the 3D sensory space in virtual contact with the virtual object, depicting, in the generated display, the virtual contact and resulting rotation of the virtual object by the 3D solid hand model.

21. A system of realistic rotation of a virtual object for an interaction between a hand in a three-dimensional (3D) sensory space and the virtual object in a virtual space that the hand interacts with, the system including:

a processor and a computer readable storage medium storing computer instructions configured for performing:

detecting free-form gestures of a hand in a three-dimensional (3D) sensory space and generating for display a 3D solid hand model for the hand during the free-form gestures, including fingers and thumb of the hand; and

in response to detecting a three finger or two finger and one thumb free-form gesture of the hand in the 3D sensory space in virtual contact with the virtual object, depicting, in the generated display, the virtual contact and resulting grasping of the virtual object by the 3D solid hand model.

22. A system of realistic displacement of a virtual object for an interaction between a control object in a three-dimensional (3D) sensory space and the virtual object in a virtual space that the control object interacts with, the system including:

a processor and a computer readable storage medium storing computer instructions configured for performing:

detecting free-form gestures of a control object in a three-dimensional (3D) sensory space and generating for display a 3D solid control object model for the control object during the free-form gestures, including sub-components of the control object; and

in response to detecting a one sub-component gesture of the control object in the 3D sensory space in virtual contact with the virtual object, depicting, in the generated display, the virtual contact and resulting displacement of the virtual object by the 3D solid control object model.

23. A system of realistic rotation of a virtual object for an interaction between a control object in a three-dimensional (3D) sensory space and the virtual object in a virtual space that the control object interacts with, the system including:

a processor and a computer readable storage medium storing computer instructions configured for performing:

detecting free-form gestures of a control object in a three-dimensional (3D) sensory space and generating for display a 3D solid control object model for the control object during the free-form gestures, including sub-components of the control object; and

in response to detecting a two e sub-component free-form gesture of the control object in the 3D sensory space in virtual contact with the virtual object, depicting, in the generated display, the virtual contact and resulting rotation of the virtual object by the 3D solid control object model.

24. A system of realistic grasping of a virtual object for an interaction between a control object in a three-dimensional (3D) sensory space and the virtual object in a virtual space that the control object interacts with, the system including:

a processor and a computer readable storage medium storing computer instructions configured for performing:

detecting free-form gestures of one or more control objects in a three-dimensional (3D) sensory space and generating for display 3D solid control object models for the control objects during the free-form gestures, including sub-components of the control objects;

in response to detecting a multi sub-component free-form gesture of the control objects in the 3D sensory space in virtual contact with the virtual object, depicting, in the generated display, the multi sub-component virtual contact and resulting grasping of the virtual object by the 3D solid control object models of the one or more control objects.

25. A system of realistic grasping of a virtual object for an interaction between a control object in a three-dimensional (3D) sensory space and the virtual object in a virtual space that the control object interacts with, the system including:

a processor and a computer readable storage medium storing computer instructions configured for performing:

detecting free-form gestures of at least two control objects in a three-dimensional (3D) sensory space and generating for display 3D solid control object models for the control objects during the free-form gestures, including sub-components of the control objects;

determining a dominant control object from the two control objects based on an earliest detection of a three sub-component free-form gesture in the 3D sensory space in virtual contact with the virtual object; and

depicting, in the generated display, the virtual contact and resulting grasping of the virtual object by the 3D solid control object model of the dominant control object.

26. One or more non-transitory computer readable media having instructions stored thereon for performing a method of realistic displacement of a virtual object for an interaction between a hand in a three-dimensional (3D) sensory space and the virtual object in a virtual space that the hand interacts with, the method including:

detecting free-form gestures of a hand in a three-dimensional (3D) sensory space and generating for display a 3D solid hand model for the hand during the free-form gestures, including fingers and thumb of the hand; and

in response to detecting a one finger or one thumb free-form gesture of the hand in the 3D sensory space in virtual contact with the virtual object, depicting, in the generated display, the virtual contact and resulting displacement of the virtual object by the 3D solid hand model.

27. One or more non-transitory computer readable media having instructions stored thereon for performing a method of realistic rotation of a virtual object for an interaction between a hand in a three-dimensional (3D) sensory space and the virtual object in a virtual space that the hand interacts with, the method including:

detecting free-form gestures of a hand in a three-dimensional (3D) sensory space and generating for display a 3D solid hand model for the hand during the free-form gestures, including fingers and thumb of the hand; and

in response to detecting a two finger or one finger and one thumb free-form gesture of the hand in the 3D sensory space in virtual contact with the virtual object, depicting, in the generated display, the virtual contact and resulting rotation of the virtual object by the 3D solid hand model.

28. One or more non-transitory computer readable media having instructions stored thereon for performing a method of realistic rotation of a virtual object for an interaction between a hand in a three-dimensional (3D) sensory space and the virtual object in a virtual space that the hand interacts with, the method including:

detecting free-form gestures of a hand in a three-dimensional (3D) sensory space and generating for display a 3D solid hand model for the hand during the free-form gestures, including fingers and thumb of the hand; and

in response to detecting a three finger or two finger and one thumb free-form gesture of the hand in the 3D sensory space in virtual contact with the virtual object, depicting, in the generated display, the virtual contact and resulting grasping of the virtual object by the 3D solid hand model.

29. One or more non-transitory computer readable media having instructions stored thereon for performing a method of realistic displacement of a virtual object for an interaction between a control object in a three-dimensional (3D) sensory space and the virtual object in a virtual space that the control object interacts with, the method including:

detecting free-form gestures of a control object in a three-dimensional (3D) sensory space and generating for display a 3D solid control object model for the control object during the free-form gestures, including sub-components of the control object; and

in response to detecting a one sub-component gesture of the control object in the 3D sensory space in virtual contact with the virtual object, depicting, in the generated display, the virtual contact and resulting displacement of the virtual object by the 3D solid control object model.

30. One or more non-transitory computer readable media having instructions stored thereon for performing a method of realistic rotation of a virtual object for an interaction between a control object in a three-dimensional (3D) sensory space and the virtual object in a virtual space that the control object interacts with, the method including:

detecting free-form gestures of a control object in a three-dimensional (3D) sensory space and generating for display a 3D solid control object model for the control object during the free-form gestures, including sub-components of the control object; and

in response to detecting a two e sub-component free-form gesture of the control object in the 3D sensory space in virtual contact with the virtual object, depicting, in the generated display, the virtual contact and resulting rotation of the virtual object by the 3D solid control object model.

31. One or more non-transitory computer readable media having instructions stored thereon for performing a method of realistic grasping of a virtual object for an interaction between a control object in a three-dimensional (3D) sensory space and the virtual object in a virtual space that the control object interacts with, the method including:

detecting free-form gestures of one or more control objects in a three-dimensional (3D) sensory space and generating for display 3D solid control object models for the control objects during the free-form gestures, including sub-components of the control objects;

in response to detecting a multi sub-component free-form gesture of the control objects in the 3D sensory space in virtual contact with the virtual object, depicting, in the generated display, the multi sub-component virtual

contact and resulting grasping of the virtual object by the 3D solid control object models of the one or more control objects.

32. One or more non-transitory computer readable media having instructions stored thereon for performing a method of realistic grasping of a virtual object for an interaction between a control object in a three-dimensional (3D) sensory space and the virtual object in a virtual space that the control object interacts with, the method including:

detecting free-form gestures of at least two control objects in a three-dimensional (3D) sensory space and generating for display 3D solid control object models for the control objects during the free-form gestures, including sub-components of the control objects;

determining a dominant control object from the two control objects based on an earliest detection of a three sub-component free-form gesture in the 3D sensory space in virtual contact with the virtual object; and

depicting, in the generated display, the virtual contact and resulting grasping of the virtual object by the 3D solid control object model of the dominant control object.

What is claimed is:

1. A method of manipulating at least one virtual object using real motions of one or more hands including at least a first hand in a three-dimensional (3D) sensory space, the method including:

obtaining one or more images of at least the first hand in the three-dimensional (3D) sensory space and sensing a location thereof;

incorporating at the location as sensed, one or more images of at least the first hand into a virtual reality scene;

detecting a multiple sub-component free-form gesture made by multiple subcomponents of at least one hand in the 3D sensory space in virtual contact with a virtual object;

determining, in response to the detecting, whether the multiple sub-component free-form gesture is a multiple sub-component virtual contact resulting in grasping or pinching of the virtual object; and

responsive to determining that the multiple sub-component free-form gesture is a multiple sub-component virtual contact resulting in grasping or pinching of the virtual object, linking motion of at least one of the hands to manipulation of the virtual object.

2. The method of claim **1**, further including outlining with an outline, a modeled position of the location of at least the first hand and incorporating the outline into the virtual reality scene.

3. The method of claim **2**, further including changing an appearance of an outline upon detection of a discrepancy between at least one image of at least the first hand and the outline.

4. The method of claim **1**, further including:

in response to detecting the pinch action of the first finger and the thumb of the first hand in the 3D sensory space in virtual contact with a virtual object in a virtual space, depicting visually, a virtual contact between a portion of the first hand and a portion of the virtual object; and

rendering a first virtual pinch force image positioned between the thumb and finger while the pinch action continues.

5. The method of claim **4**, further including:

responsive to detecting a pinch action between a thumb and finger of a second hand and rendering a second virtual pinch force image positioned between the thumb and the finger while the pinch action continues;

sensing a movement of at least one of the first and second hands that increases a separation distance between the first and second hands, while sensing continuing pinching actions of both the first and second hands; and

rendering a new virtual object between the first virtual pinch force image and second virtual pinch force image, responsive to detected increase in the separation distance, wherein at least a size of the new virtual object is responsive to the separation distance.

6. The method of claim **5**, wherein an orientation of the new virtual object is responsive to positions of the first and second hands.

7. The method of claim **1**, wherein

determining whether the multiple sub-component free-form gesture is a multiple sub-component virtual contact and resulting in grasping of the virtual object, the determining further including taking into account at least:

an angular relationship of a normal to a surface of at least one of the hands to a proximate surface of the virtual object;

separations between tips of at least one of the hands and the proximate surface;

a gesture rate at which at least one of the hands closes on the virtual object;

a posture, whether suitable for grasping the virtual object or incompatible with grasping; and

a linear velocity of a surface of at least one of the hands relative to the virtual object; and

responsive to determining that the multiple sub-component free-form gesture is a multiple sub-component virtual contact and resulting in grasping of the virtual object, linking motion of at least one of the hands to manipulation of the virtual object.

8. The method of claim **5**, further including responsive to detecting persistence of the multiple sub-component virtual contact and a decreased proximity between the first hand and the second hand in the 3D sensory space, depicting visually, the multiple sub-component virtual contact and resulting stretching of the virtual object.

9. The method of claim **8**, further including responsive to stretching of the virtual object beyond a predetermined threshold, depicting visually, a modification of the virtual object.

10. The method of claim **5**, further including responsive to stretching of the new virtual object beyond a predetermined threshold, depicting visually, another virtual object.

11. The method of claim **7**, further including determining whether the multiple sub-component free-form gesture is intended to interact with the virtual object based upon a maximum separation between tips of at least one of hand and the proximate surface.

12. The method of claim **7**, further including determining whether the multiple sub-component free-form gesture is intended to interact with the virtual object based upon a rotational velocity about a normal to a surface of at least one hand in the 3D sensory space.

13. The method of claim **1**, further including: detecting a second hand and determining a dominant hand from the hands based on an earliest detection of a three sub-component free-form gesture in the 3D sensory space in virtual contact with a virtual object; and

depicting visually, the virtual contact and resulting grasping of the virtual object by the dominant hand.

14. The method of claim **1**, further including: in response to the detecting, depicting visually, a multiple sub-component virtual contact resulting in a grasping or a pinching of the virtual object by at least one of hand.

15. A system, including:

a processor and a computer readable storage medium storing computer instructions configured to cause the processor to implement a method of:

obtaining one or more images of at least a first hand in a three-dimensional (3D) sensory space and sensing a location thereof;

incorporating at the location as sensed, one or more images of at least the first hand into a virtual reality scene;

detecting a multiple sub-component free-form gesture made by multiple subcomponents of at least one hand in the 3D sensory space in virtual contact with a virtual object;

determining, in response to the detecting, whether the multiple sub-component free-form gesture is a multiple sub-component virtual contact resulting in grasping or pinching of the virtual object; and

responsive to determining that the multiple sub-component free-form gesture is a multiple sub-component virtual contact resulting in grasping or pinching of the virtual object, linking motion of at least one of the hands to manipulation of the virtual object.

16. A non-transitory computer readable memory having instructions stored thereon, which instructions when executed by a processor implement a method of:

obtaining one or more images of at least a first hand in a three-dimensional (3D) sensory space and sensing a location thereof;

incorporating at the location as sensed, one or more images of at least the first hand into a virtual reality scene;

detecting a multiple sub-component free-form gesture made by multiple subcomponents of at least one hand in the 3D sensory space in virtual contact with a virtual object;

determining, in response to the detecting, whether the multiple sub-component free-form gesture is a multiple sub-component virtual contact resulting in grasping or pinching of the virtual object; and

responsive to determining that the multiple sub-component free-form gesture is a multiple sub-component virtual contact resulting in grasping or pinching of the virtual object, linking motion of at least one of the hands to manipulation of the virtual object.

* * * * *